Simpo PDF Merge and Split Unregistered Version - http://www.simpopdf.com

SECTION AT

CONTENTS

PRECAUTIONS AND PREPARATION 2
Supplemental Restraint System (SRS) "AIR BAG" 2
Precautions 2
Service Notice or Precautions 3
Special Service Tools 4
OVERALL SYSTEM 6
Circuit Diagram 6
Wiring Diagram 7
Cross-Sectional View 9
Hydraulic Control Circuits 10
Shift Mechanism 12
TROUBLE DIAGNOSIS — Basic Inspection 23
A/T Fluid Check 23
Stall Test 23
Line Pressure Test 26
Road Test 28
TROUBLE DIAGNOSIS — General Description 30
Symptom Chart 30
TROUBLE DIAGNOSIS FOR DTC P1550 34
Torque Converter Clutch Solenoid Valve 34
TROUBLE DIAGNOSES 36
Component Inspection 36
TROUBLE DIAGNOSES — A/T Shift Lock System 39
Description 39
Shift Lock System Electrical Parts Location 39
Wiring Diagram 40
Diagnostic Procedure 41
Shift Lock Rod 43
Component Check 44
ON-VEHICLE SERVICE 45
Control Valve Assembly and Accumulators Removal 45
Rear Oil Seal Replacement 45
Parking Components Inspection 46
Governor Valve 46
Throttle Wire Adjustment 46
Inhibitor Switch Adjustment 47
Control Cable Adjustment 47
REMOVAL AND INSTALLATION 48
Removal 49
Installation 50
MAJOR OVERHAUL 51
Oil Channel 53
Locations of Needle Bearings, Thrust Washers and Snap Rings 54
DISASSEMBLY 55
REPAIR FOR COMPONENT PARTS 66
Oil Pump 66
Control Valve Assembly 70
Control Valve Upper Body 75
Control Valve Lower Body 79
Governor Valve Assembly 81
Parking Gear 81
Reverse Clutch 82
High Clutch 86
Forward and Overrun Clutches 88
Low & Reverse Brake 92
Forward Clutch Drum Assembly 95
Rear Internal Gear and Forward Clutch Hub 97
Band Servo Piston Assembly 99
Parking Pawl Components 103
ASSEMBLY 105
Assembly (1) 105
Adjustment 113
Assembly (2) 115
SERVICE DATA AND SPECIFICATIONS (SDS) 122

When you read wiring diagrams:
- **Read GI section, "HOW TO READ WIRING DIAGRAMS".**
- **See EL section, "POWER SUPPLY ROUTING" for power distribution circuit.**

When you perform trouble diagnoses, read GI section, "HOW TO FOLLOW FLOW CHART IN TROUBLE DIAGNOSES".

Simpo PDF Merge and Split Unregistered Version - http://www.simpopdf.com

Supplemental Restraint System (SRS) "AIR BAG"

The Supplemental Restraint System "AIR BAG", used along with a seat belt, helps to reduce the risk or severity of injury to the driver and front passenger in a frontal collision. The Supplemental Restraint System consists of air bag modules (located in the center of the steering wheel and in the instrument panel on the passenger side), a diagnosis sensor unit, a crash zone sensor (4WD models), warning lamp, wiring harness, and spiral cable.

The vehicle is equipped with a passenger air bag deactivation switch. Because no rear seat exists where a rear-facing child restraint can be placed, the switch is designed to turn off the passenger air bag so that a rear-facing child restraint can be used in the front passenger seat. The switch is located in the center of the instrument panel, near the ashtray. When the switch is turned to the ON position, the passenger air bag is enabled and could inflate in a frontal collision. When the switch is turned to the OFF position, the passenger air bag is disabled and will not inflate in a frontal collision. A passenger air bag OFF indicator on the instrument panel lights up when the passenger air bag is switched OFF. The driver air bag always remains enabled and is not affected by the passenger air bag deactivation switch.

Information necessary to service the system safely is included in the **RS section** of this Service Manual.

WARNING:

- **To avoid rendering the SRS inoperative, which could increase the risk of personal injury or death in the event of a collision which would result in air bag inflation, all maintenance should be performed by an authorized NISSAN dealer.**
- **Improper maintenance, including incorrect removal and installation of the SRS, can lead to personal injury caused by unintentional activation of the system.**
- **Do not use electrical test equipment on any circuit related to the SRS unless instructed to in this Service Manual. SRS wiring harnesses are covered with yellow insulation either just before the harness connectors or on the complete harness, for easy identification.**
- **The vehicle is equipped with a passenger air bag deactivation switch which can be operated by the customer. When the air bag is switched OFF, the passenger air bag is disabled and will not inflate in a frontal collision. When the passenger air bag is switched ON, the passenger air bag is enabled and could inflate in a frontal collision. After SRS maintenance or repair, make sure the passenger air bag deactivation switch is in the same position (ON or OFF) as when the vehicle arrived for service.**

Precautions

- Before proceeding with disassembly, thoroughly clean the outside of the transmission. It is important to prevent the internal parts from becoming contaminated by dirt or other foreign matter.
- Disassembly should be done in a clean work area.
- Use lint-free cloth or towels for wiping parts clean. Common shop rags can leave fibers that could interfere with the operation of the transmission.
- Place disassembled parts in order for easier and proper assembly.
- All parts should be carefully cleaned with a general purpose, non-flammable solvent before inspection or reassembly.
- Gaskets, seals and O-rings should be replaced anytime the transmission is disassembled.
- The valve body contains precision parts and requires extreme care when parts are removed and serviced. Place removed parts in order, on a parts rack, so they can be put back in the valve body in the same positions and sequences. Care will also prevent springs and small parts from becoming scattered or lost.
- Properly installed valves, sleeves, plugs, etc. will slide along their bores in the valve body under their own weight.
- Before assembly, apply a coat of recommended ATF to all parts. Apply petroleum jelly to protect O-rings and seals, or hold small bearings and washers in place during assembly. Do not use grease.
- Extreme care should be taken to avoid damage to O-rings, seals and gaskets when assembling.
- If A/T fluid contains frictional material (clutches, bands, etc.), replace radiator and flush cooler line using cleaning solvent and compressed air after repair of A/T. Refer to LC section ("Radiator", "ENGINE COOLING SYSTEM").
- After overhaul, refill the transmission with new ATF.
- When the A/T drain plug is removed, only some of the fluid is drained. Old A/T fluid will remain in torque converter and ATF cooling system. Always follow the procedures under "Changing A/T Fluid" in the MA section when changing A/T fluid.

Simpo PDF Merge and Split Unregistered Version - http://www.simpopdf.com

Service Notice or Precautions

TORQUE CONVERTER SERVICE

The torque converter should be replaced under any of the following conditions:

- External leaks in the hub weld area.
- Converter hub is scored or damaged.
- Converter pilot is broken, damaged or fits poorly into crankshaft.
- Steel particles are found after flushing the cooler and cooler lines.
- Pump is damaged or steel particles are found in the converter.
- Vehicle has TCC shudder and/or no TCC apply. Replace only after all hydraulic and electrical diagnoses have been made. (Converter clutch material may be glazed.)
- Converter is contaminated with engine coolant containing antifreeze.
- Internal failure of stator roller clutch.
- Heavy clutch debris due to overheating (blue converter).
- Steel particles or clutch lining material found in fluid filter or on magnet when no internal parts in unit are worn or damaged — indicates that lining material came from converter.

The torque converter should not be replaced if:

- The oil has an odor, is discolored, and there is no evidence of metal or clutch facing particles.
- The threads in one or more of the converter bolt holes are damaged.
- Transaxle failure did not display evidence of damaged or worn internal parts, steel particles or clutch plate lining material in unit and inside the fluid filter.
- Vehicle has been exposed to high mileage (only). The exception may be where the torque converter clutch dampener plate lining has seen excess wear by vehicles operated in heavy and/or constant traffic, such as taxi, delivery or police use.

ATF COOLER SERVICE

If A/T fluid contains frictional material (clutches, bands, etc.), replace radiator and flush cooler line using cleaning solvent and compressed air after repair of A/T. Refer to LC section ("Radiator", "ENGINE COOLING SYSTEM").

Simpo PDF Merge and Split Unregistered Version - http://www.simpopdf.com

Special Service Tools

The actual shapes of Kent-Moore tools may differ from those of special service tools illustrated here.

Tool number (Kent-Moore No.) Tool name	Description	
(J34301-C) Oil pressure gauge set ① (J34301-1) Oil pressure gauge ② (J34301-2) Hose ③ (J34298) Joint pipe ④ (J34282-2) Adapter ⑤ (790-301-1230-A) 60° Adapter ⑥ (J34301-15) Square socket	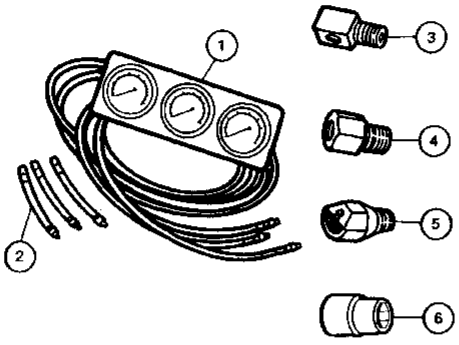 AAT546	Measuring line pressure and governor pressure
ST07870000 (J37068) Transmission case stand	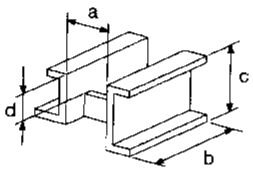 NT421	Disassembling and assembling A/T **a: 182 mm (7.17 in)** **b: 282 mm (11.10 in)** **c: 230 mm (9.06 in)** **d: 100 mm (3.94 in)**
KV31102100 (J37065) Torque converter one-way clutch check tool	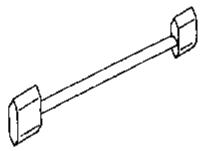 NT098	Checking one-way clutch in torque converter
ST25850000 (J25721-A) Sliding hammer	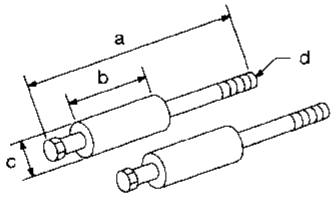 NT422	Removing oil pump assembly **a: 179 mm (7.05 in)** **b: 70 mm (2.76 in)** **c: 40 mm (1.57 in) dia.** **d: M12 x 1.75P**
KV31102400 (J34285 and J34285-87) Clutch spring compressor	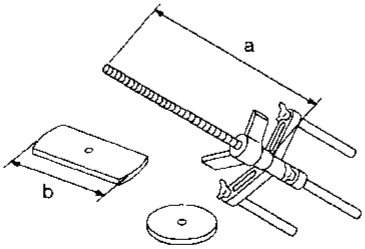 NT423	Removing and installing clutch return springs **a: 320 mm (12.60 in)** **b: 174 mm (6.85 in)**

Special Service Tools (Cont'd)

Simpo PDF Merge and Split Unregistered Version - http://www.simpopdf.com

Tool number (Kent-Moore No.) Tool name	Description	
ST33200000 (J26082) Drift	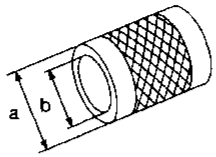 NT091	Installing oil pump housing oil seal Installing rear oil seal **a: 60 mm (2.36 in) dia.** **b: 44.5 mm (1.752 in) dia.**
(J34291) Shim setting gauge set	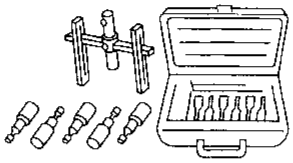 NT101	Selecting oil pump cover bearing race and oil pump thrust washer

Simpo PDF Merge and Split Unregistered Version - http://www.simpopdf.com

Circuit Diagram

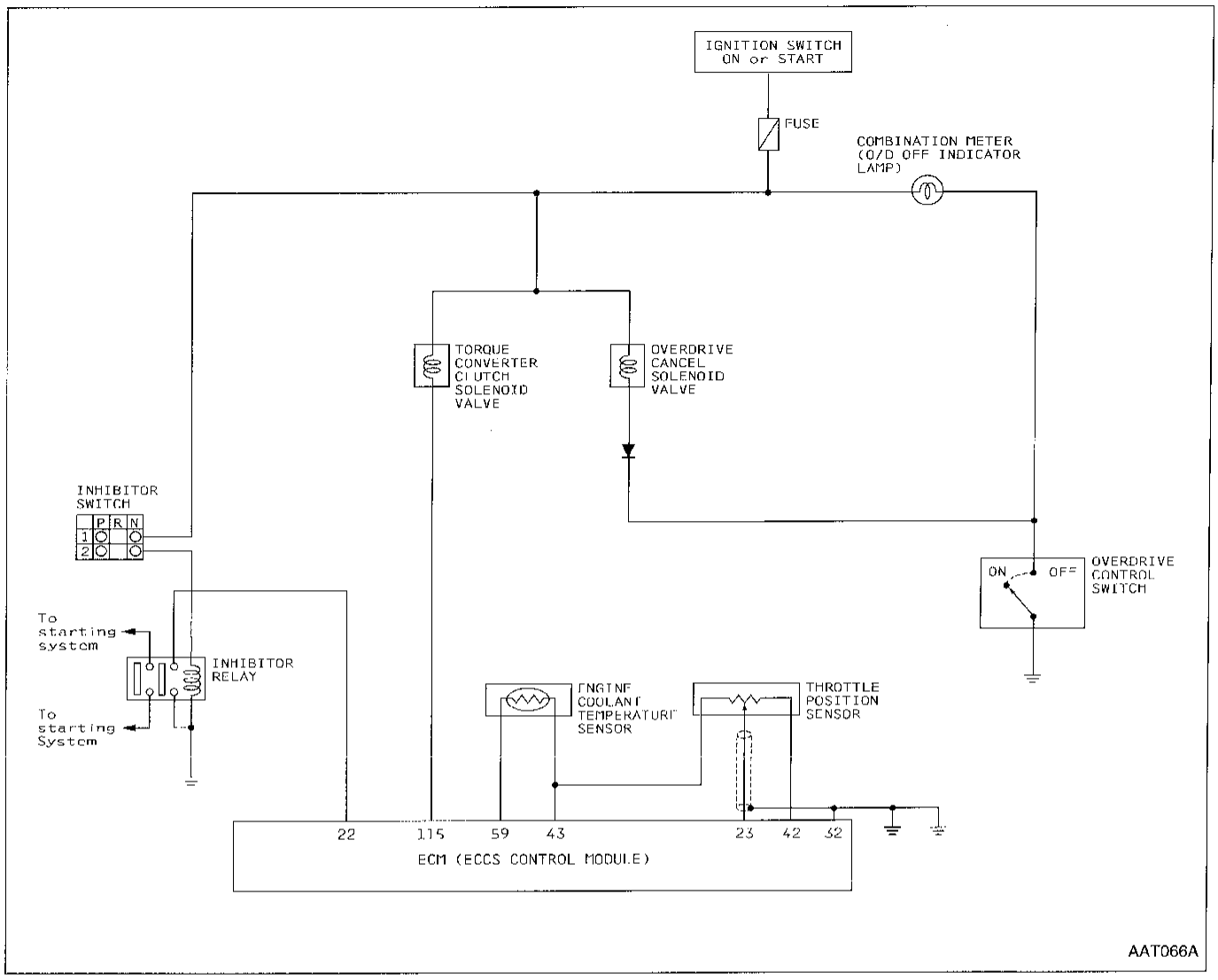

Simpo PDF Merge and Split Unregistered Version - http://www.simpopdf.com

Wiring Diagram

AT-A/T-01

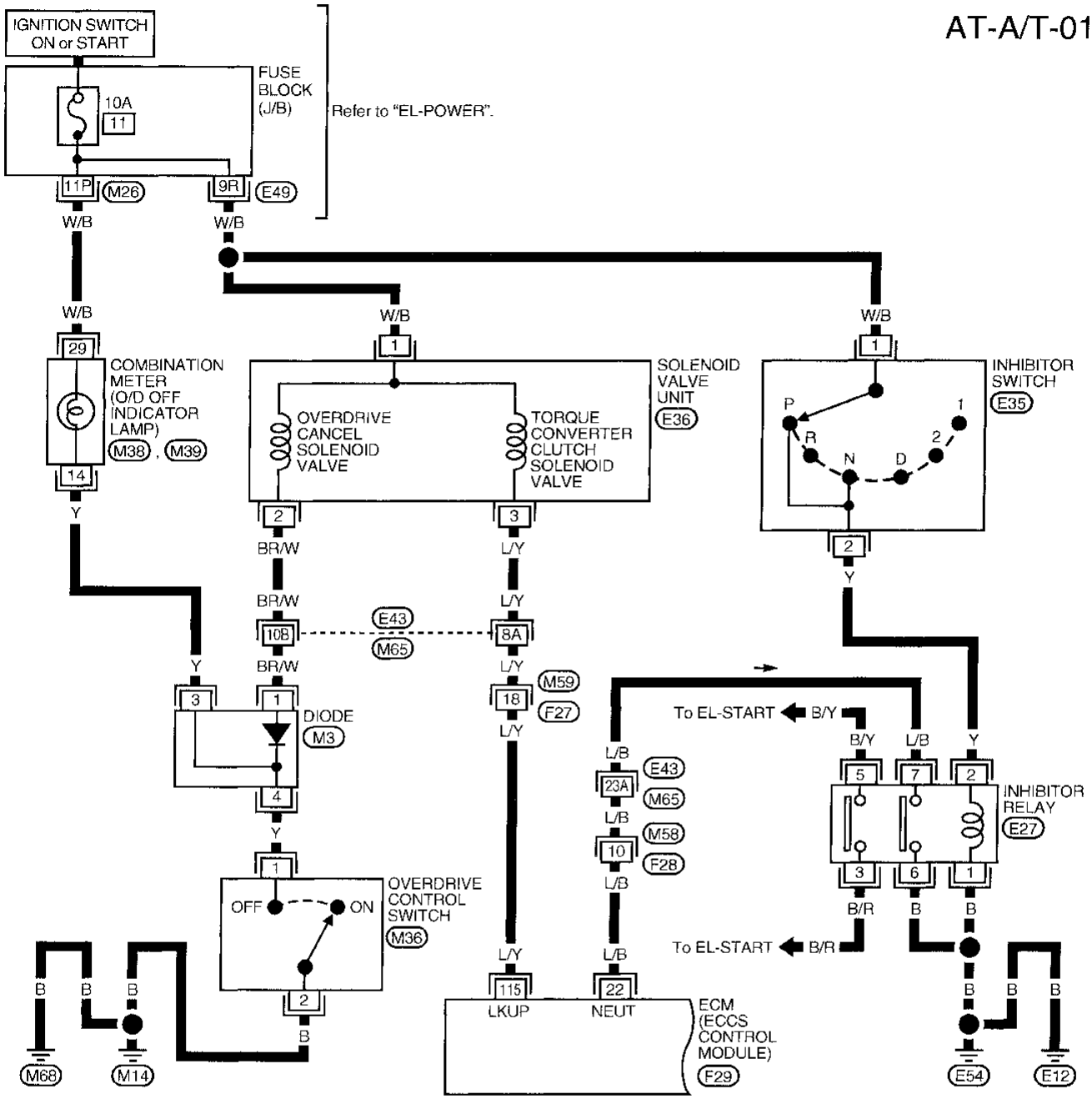

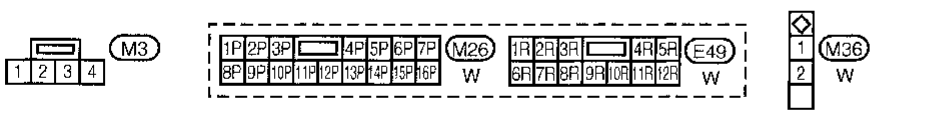

Refer to last page (Foldout page).
M65, E43
F29

AAT067A

Simpo PDF Merge and Split Unregistered Version - http://www.simpopdf.com

AT-A/T-02

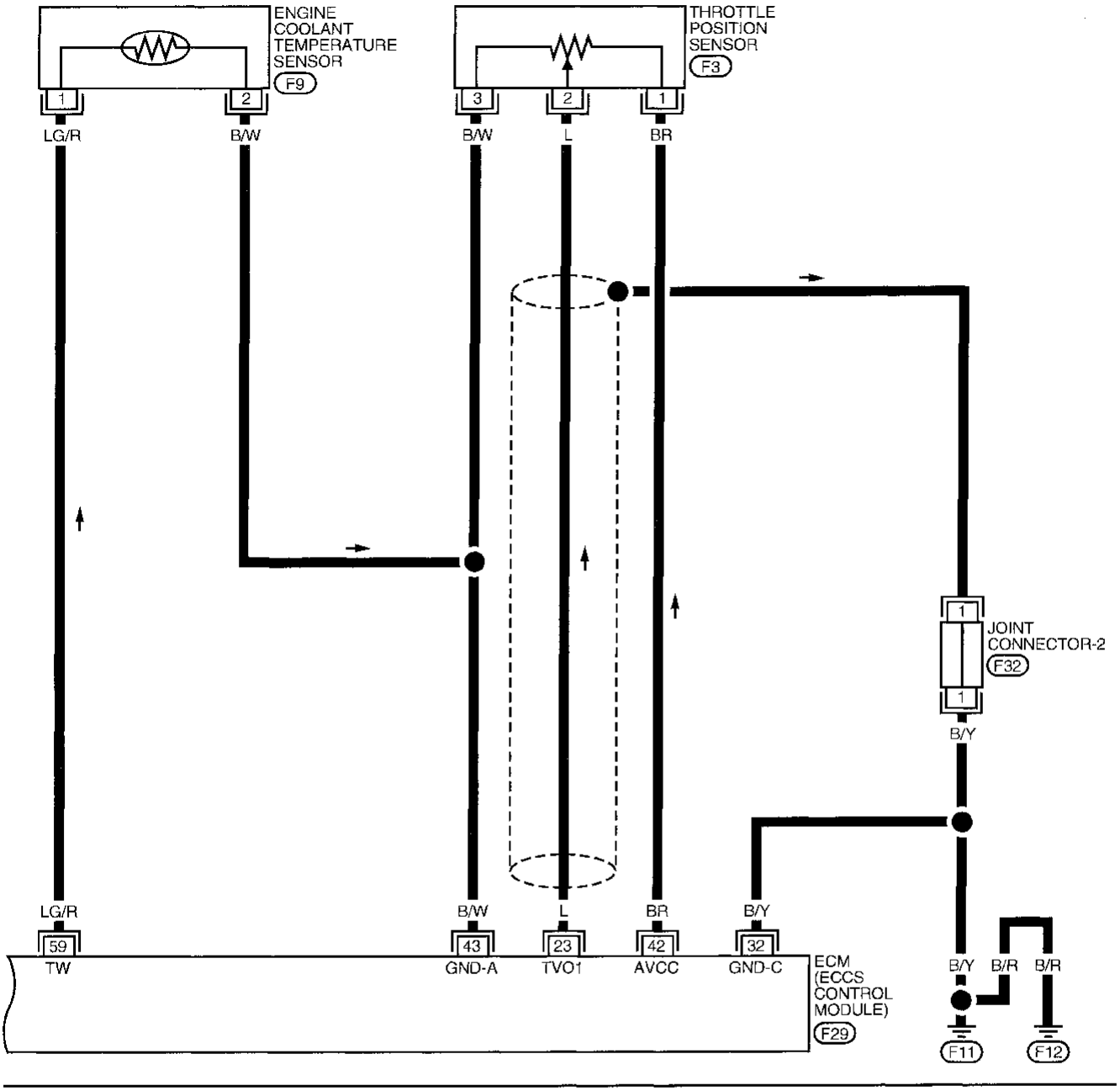

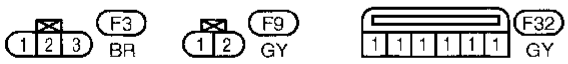

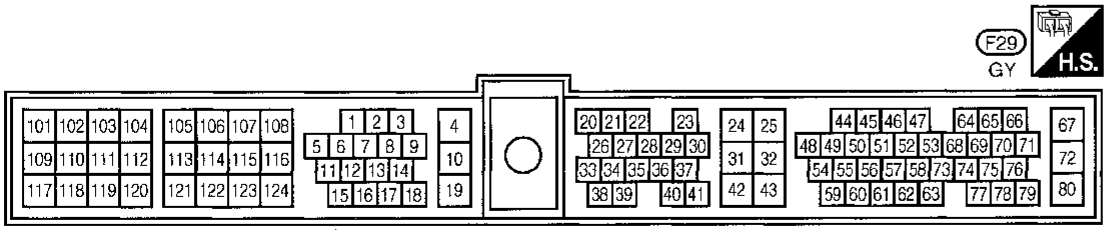

AAT068A

Simpo PDF Merge and Split Unregistered Version - http://www.simpopdf.com

Cross-Sectional View

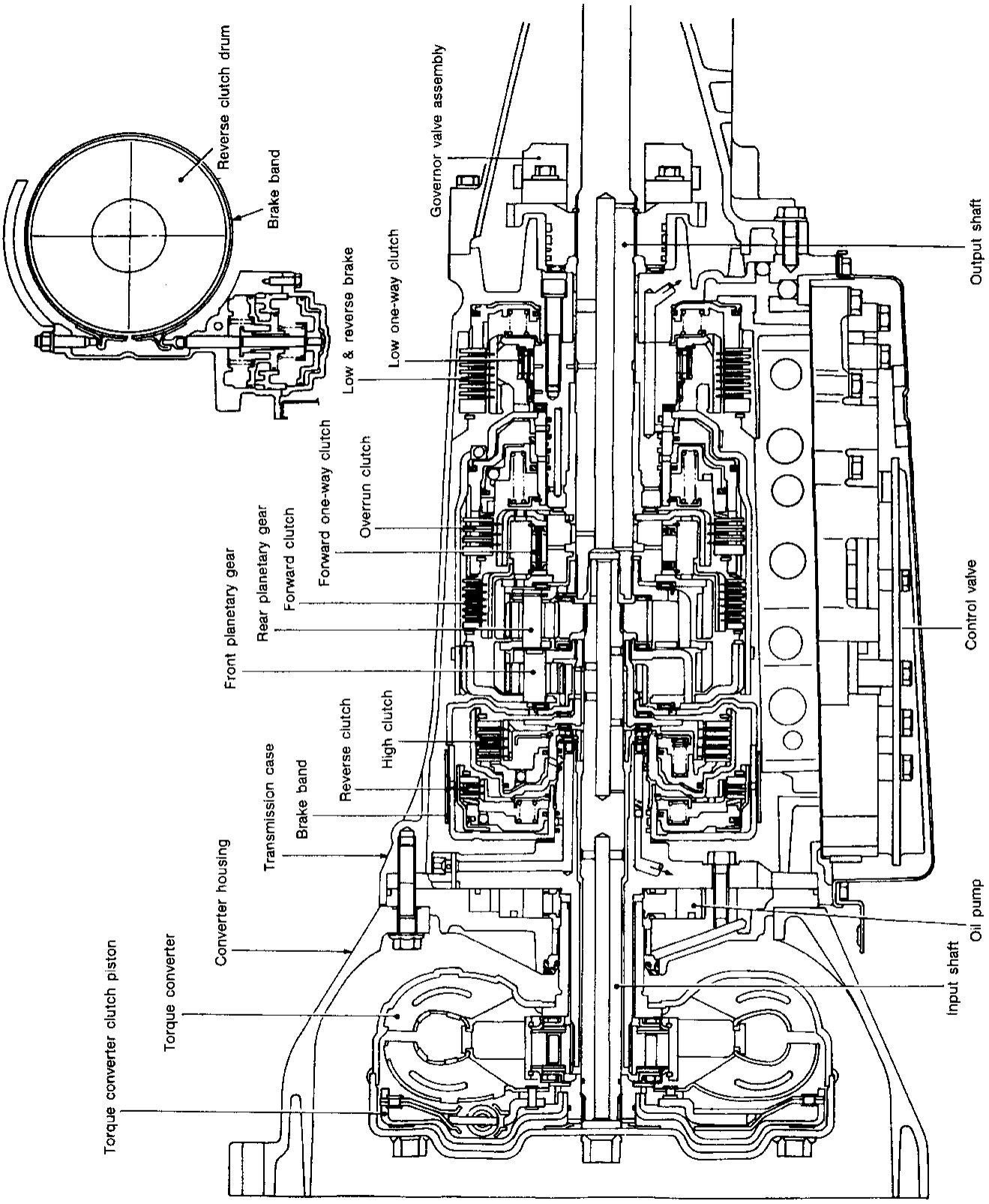

SAT117CA

Simpo PDF Merge and Split Unregistered Version - http://www.simpopdf.com

Hydraulic Control Circuits

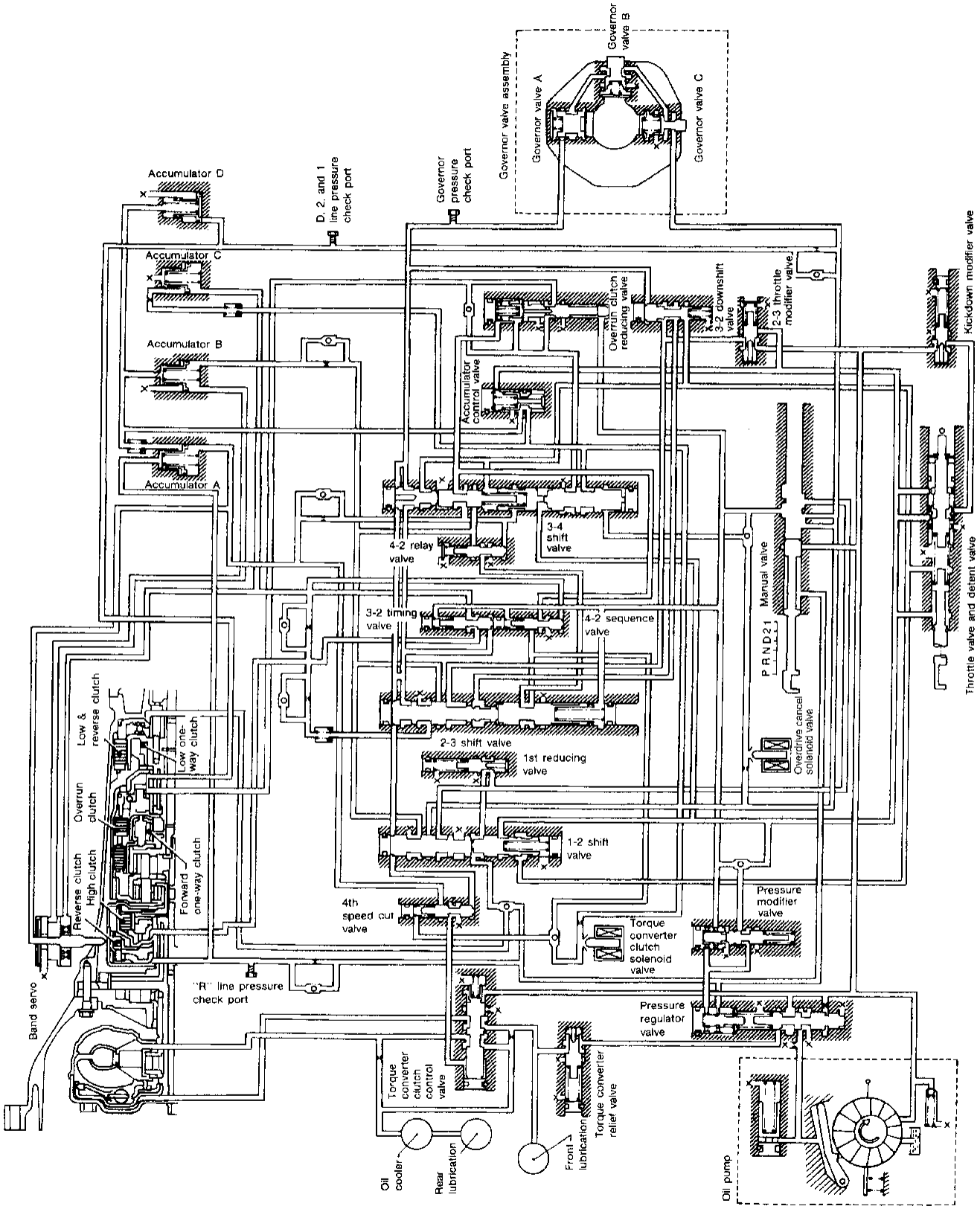

AAT033A

Simpo PDF Merge and Split Unregistered Version - http://www.simpopdf.com

NOTES

Simpo PDF Merge and Split Unregistered Version - http://www.simpopdf.com

Shift Mechanism

The automatic transmission uses compact, dual planetary gear systems to improve power-transmission efficiency, simplify construction and reduce weight.
It also employs an optimum shift control and superwide gear ratios to improve starting performance and acceleration during medium and high-speed operation.
Two one-way clutches are also employed: one is used for the forward clutch and the other for the low clutch. These one-way clutches, combined with four accumulators, reduce shifting shock to a minimum.

CONSTRUCTION

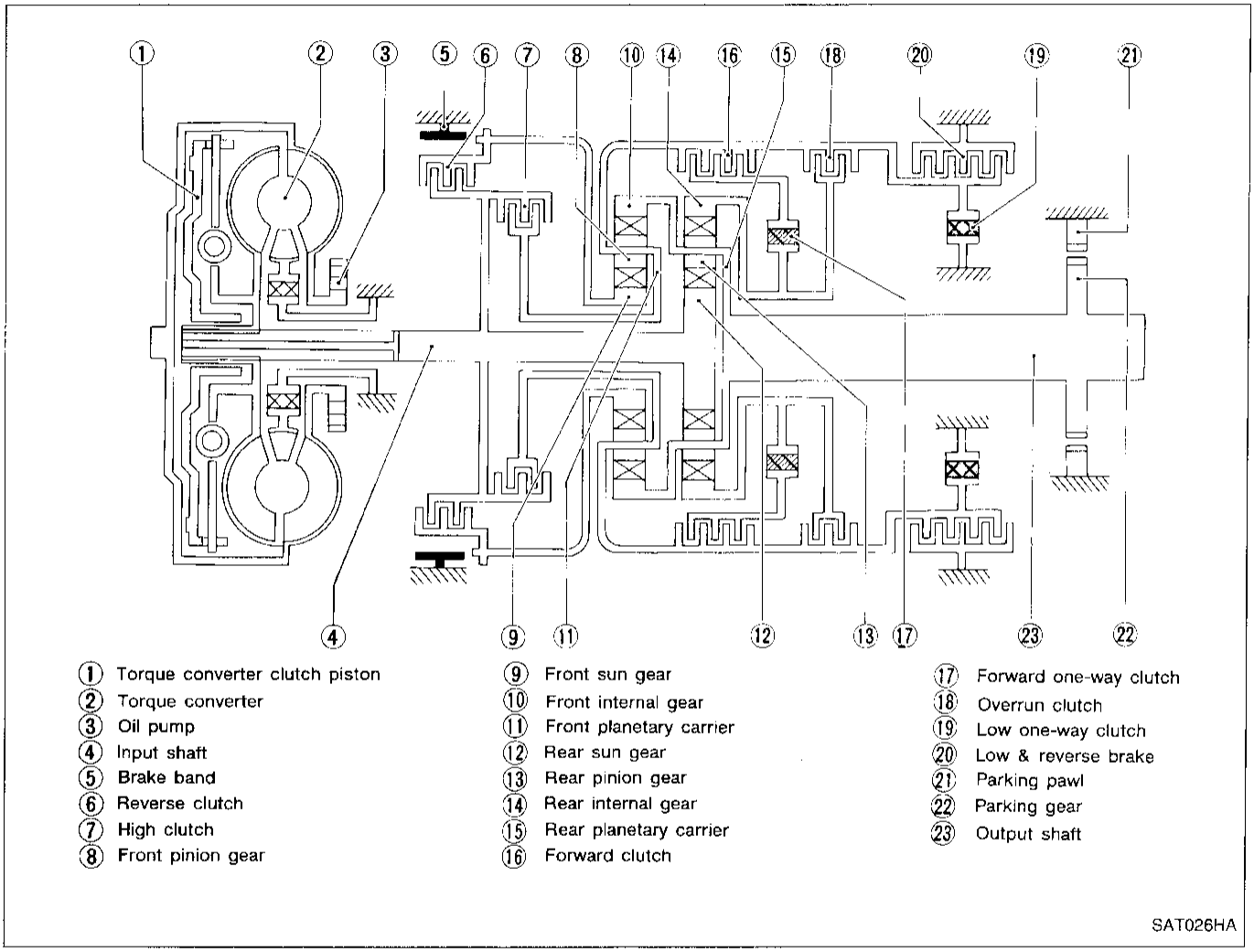

Shift Mechanism (Cont'd)

Simpo PDF Merge and Split Unregistered Version - http://www.simpopdf.com

FUNCTION OF CLUTCH AND BRAKE

Clutch and brake components	Abbr.	Function
⑥ Reverse clutch	R/C	To transmit input power to front sun gear ⑨.
⑦ High clutch	H/C	To transmit input power to front planetary carrier ⑪.
⑯ Forward clutch	F/C	To connect front planetary carrier ⑪ with forward one-way clutch ⑰.
⑱ Overrun clutch	O/C	To connect front planetary carrier ⑪ with rear internal gear ⑭.
⑤ Brake band	B/B	To lock front sun gear ⑨.
⑰ Forward one-way clutch	F/O.C	When forward clutch ⑯ is engaged, to stop rear internal gear ⑭ from rotating in opposite direction.
⑲ Low one-way clutch	L/O.C	At D_1 position, to prevent rear internal gear ⑭ from rotating in opposite direction.
⑳ Low & reverse brake	L & R/B	To lock rear internal gear ⑭ (2, 1_2 and 1_1), to lock front planetary carrier ⑪ (R position).

CLUTCH AND BAND CHART

Shift position		Reverse clutch ⑥	High clutch ⑦	Forward clutch ⑯	Overrun clutch ⑱	Band servo 2nd apply	Band servo 3rd release	Band servo 4th apply	Forward one-way clutch ⑰	Low one-way clutch ⑲	Low & reverse brake ⑳	Lock-up	Remarks
P													PARK POSITION
R		○									○		REVERSE POSITION
N													NEUTRAL POSITION
D *4	1st			○	⊗				●	●			Automatic shift 1 ↔ 2 ↔ 3 ↔ 4
	2nd			○	*1 ◎	○			●				
	3rd		○	○	◎	*2 ⊗	⊗		●				
	4th		○	⊗		*3 ⊗	⊗	○				○	
2	1st			○	⊗				●	●			Automatic shift 1 ↔ 2
	2nd			○	○	○			●				
1	1st			○	○				●		○		Locks (held stationary) in 1st speed 1 ← 2
	2nd			○	○	○			●				

*1 : Operates when overdrive control switch is set in OFF position.
*2 : Oil pressure is applied to both 2nd "apply" side and 3rd "release" side of band servo piston. However, brake band does not contract because oil pressure area on the "release" side is greater than that on the "apply" side.
*3 : Oil pressure is applied to 4th "apply" side in condition *2 above, and brake band contracts.
*4 : A/T will not shift to 4th when overdrive control switch is set to OFF position.

○ : Operates.
◎ : Operates when throttle opening is less than 3/16, activating engine brake.
● : Operates during "progressive" acceleration.
⊗ : Operates but does not affect power-transmission.
⊗ : Operates when throttle opening is less than 3/16 but does not affect engine brake.

Shift Mechanism (Cont'd)

Simpo PDF Merge and Split Unregistered Version - http://www.simpopdf.com

POWER TRANSMISSION

"N" and "P" positions

- "N" position
  No control members operate. Power from the input shaft is not transmitted to the output shaft because the clutches do not operate.
- "P" position
  Similar to the "N" position, no control members operate. The parking pawl interconnected with the select lever engages with the parking gear to mechanically hold the output shaft so that the powertrain is locked.

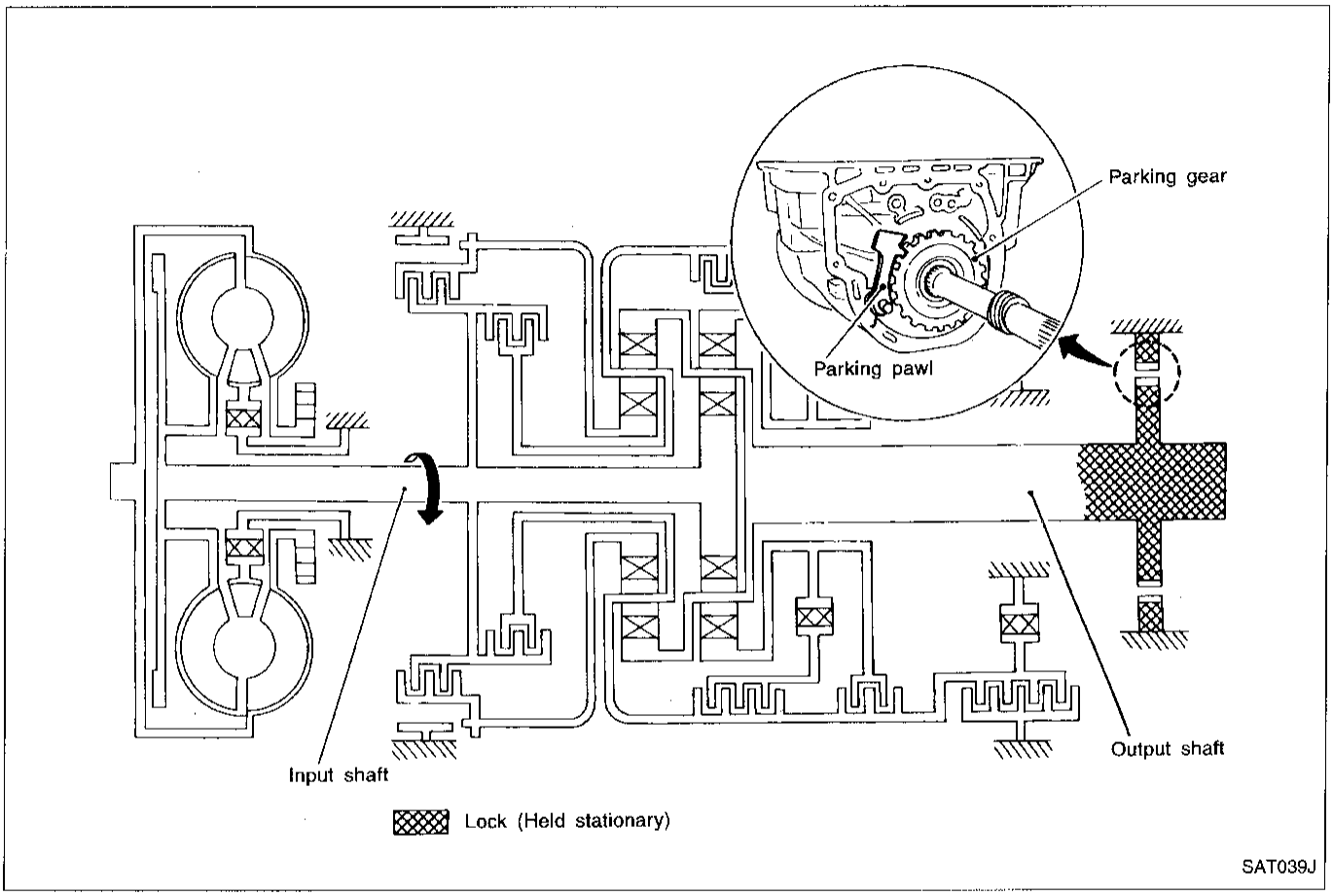

Shift Mechanism (Cont'd)

Simpo PDF Merge and Split Unregistered Version - http://www.simpopdf.com

"1_1" position

● **Forward clutch** ● **Forward one-way clutch** ● **Overrun clutch** ● **Low and reverse brake**	As overrun clutch engages, rear internal gear is locked by the operation of low and reverse brake. This is different from that of D_1 and 2_1.
Engine brake	Overrun clutch always engages, therefore engine brake can be obtained when decelerating.
Power flow	Input shaft ↓ Rear sun gear ↓ Rear planetary carrier ↓ Output shaft

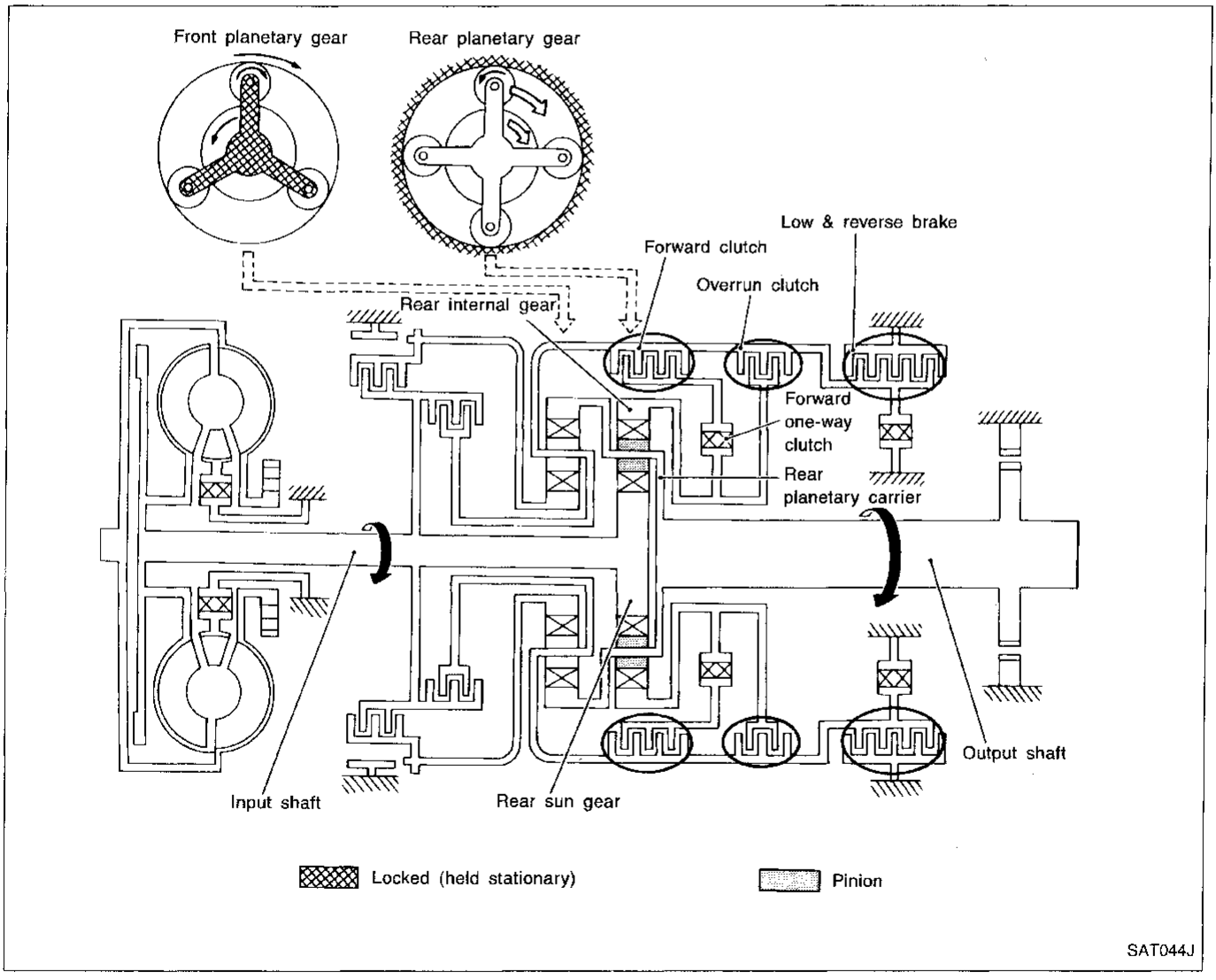

Shift Mechanism (Cont'd)

Simpo PDF Merge and Split Unregistered Version - http://www.simpopdf.com

"D_1" and "2_1" positions

• **Forward one-way clutch** • **Forward clutch** • **Low one-way clutch**	Rear internal gear is locked to rotate counterclockwise because of the functioning of these three clutches. (Start-up at D_1).
Overrun clutch engagement conditions (Engine brake)	D_1: Overdrive control switch "OFF" and throttle opening is less than 3/16 2_1: Throttle opening less than 3/16 At D_1 and 2_1 positions, engine brake is not activated due to free turning of low one-way clutch.
Power flow	Input shaft ↓ Rear sun gear ↓ Rear pinion gear ↓ Rear planetary carrier ↓ Output shaft

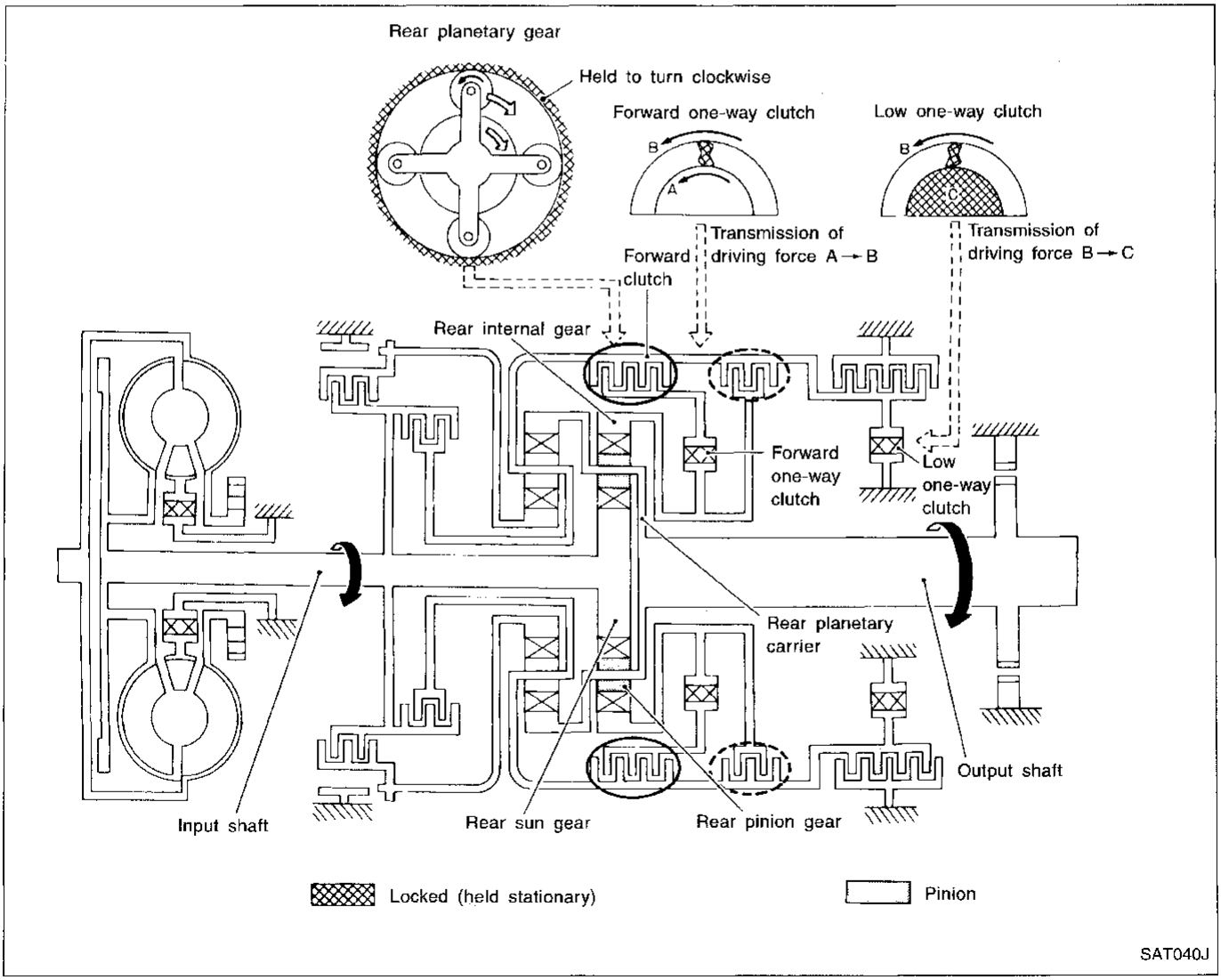

Shift Mechanism (Cont'd)

Simpo PDF Merge and Split Unregistered Version - http://www.simpopdf.com

"D_2", "2_2" and "1_2" positions

• **Forward clutch** • **Forward one-way clutch** • **Brake band**	Rear sun gear drives rear planetary carrier and combined front internal gear. Front internal gear now rotates around front sun gear accompanying front planetary carrier. As front planetary carrier transfers the power to rear internal gear through forward clutch and forward one-way clutch, this rotation of rear internal gear increases the speed of rear planetary carrier compared with that of the 1st speed.
Overrun clutch engagement conditions	D_2: Overdrive control switch "OFF" and throttle opening is less than 3/16 2_2: Throttle opening less than 3/16 1_2: Always engaged
Power flow	Input shaft → Rear sun gear Front internal gear → (Rear planetary carrier, Front internal gear) → Output Front planetary carrier Rear internal gear

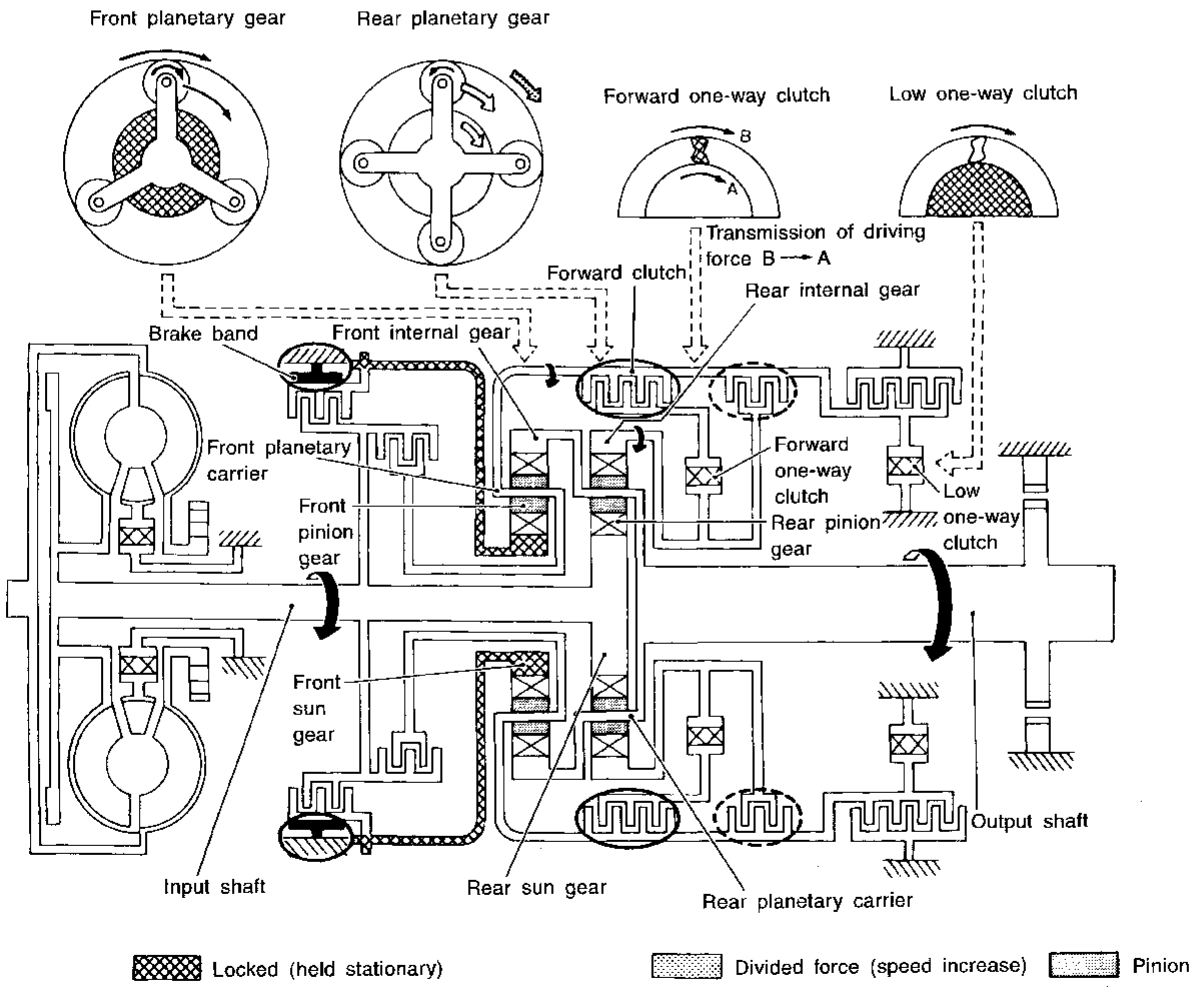

SAT041J

Shift Mechanism (Cont'd)

Simpo PDF Merge and Split Unregistered Version - http://www.simpopdf.com

"D_3" position

● **High clutch** ● **Forward clutch** ● **Forward one-way clutch**	Input power is transmitted to front planetary carrier through high clutch. And front planetary carrier is connected to rear internal gear by operation of forward clutch and forward one-way clutch. This rear internal gear rotation and another input (the rear sun gear) accompany rear planetary carrier to turn at the same speed.
Overrun clutch engagement conditions	D_3: Overdrive control switch "OFF" and throttle opening is less than 3/16 Throttle opening less than 3/16
Power flow	Input shaft → High clutch → Front planetary carrier → Forward clutch → Forward one-way clutch → Rear internal gear → Rear planetary carrier → Output Shaft Input shaft → Rear sun gear → Rear planetary carrier → Output Shaft

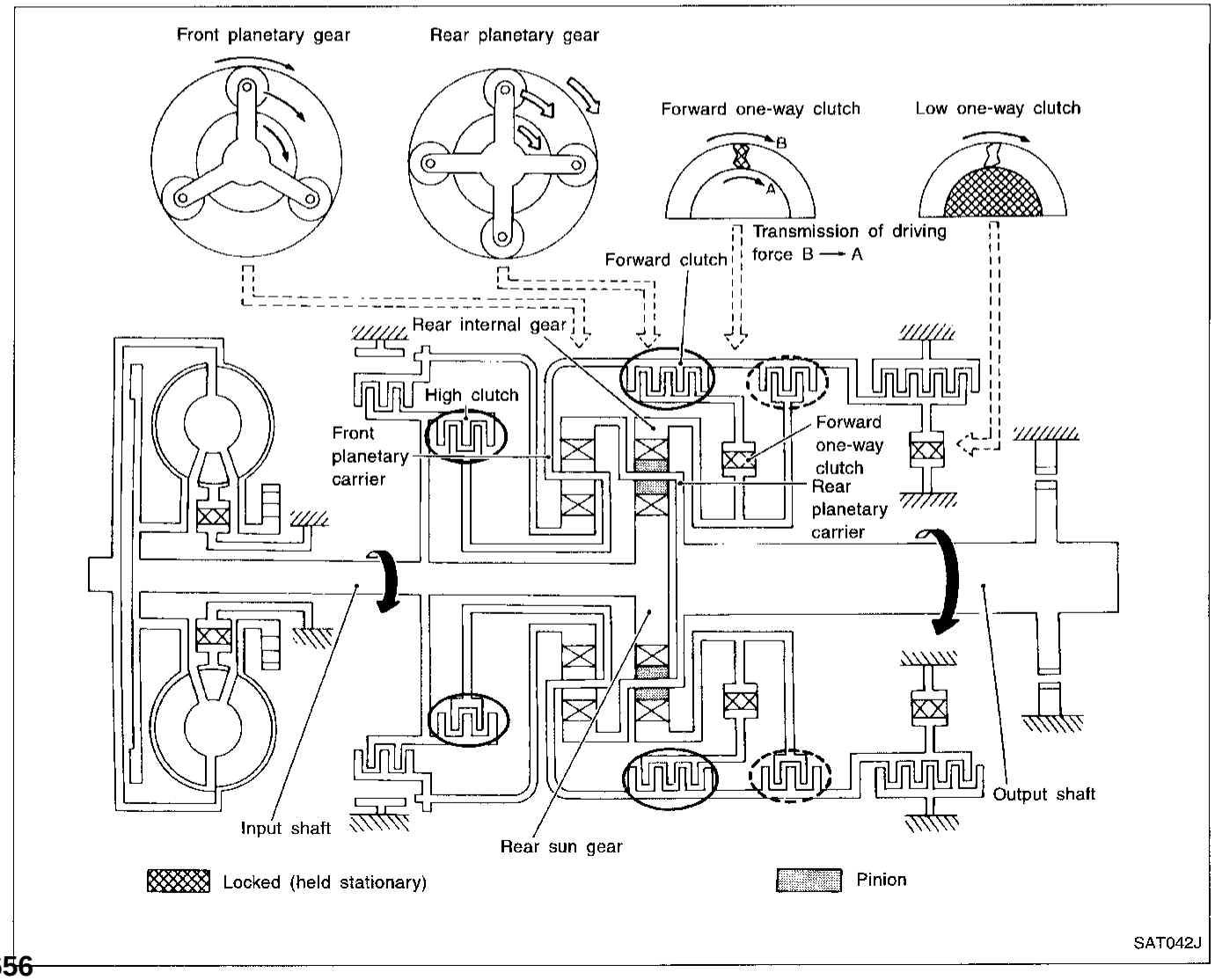

Shift Mechanism (Cont'd)

Simpo PDF Merge and Split Unregistered Version - http://www.simpopdf.com

"D_4" (OD) position

● **High clutch** ● **Brake band** ● **Forward clutch** (Does not affect power transmission)	Input power is transmitted to front carrier through high clutch. This front carrier turns around the sun gear which is fixed by brake band and makes front internal gear (output) turn faster.
Engine brake	At D_4 position, there is no one-way clutch in the power transmission line and engine brake can be obtained when decelerating.
Power flow	Input shaft ↓ High clutch ↓ Front planetary carrier ↓ Front pinion gear ↓ Front internal gear ↓ Rear planetary carrier ↓ Output shaft

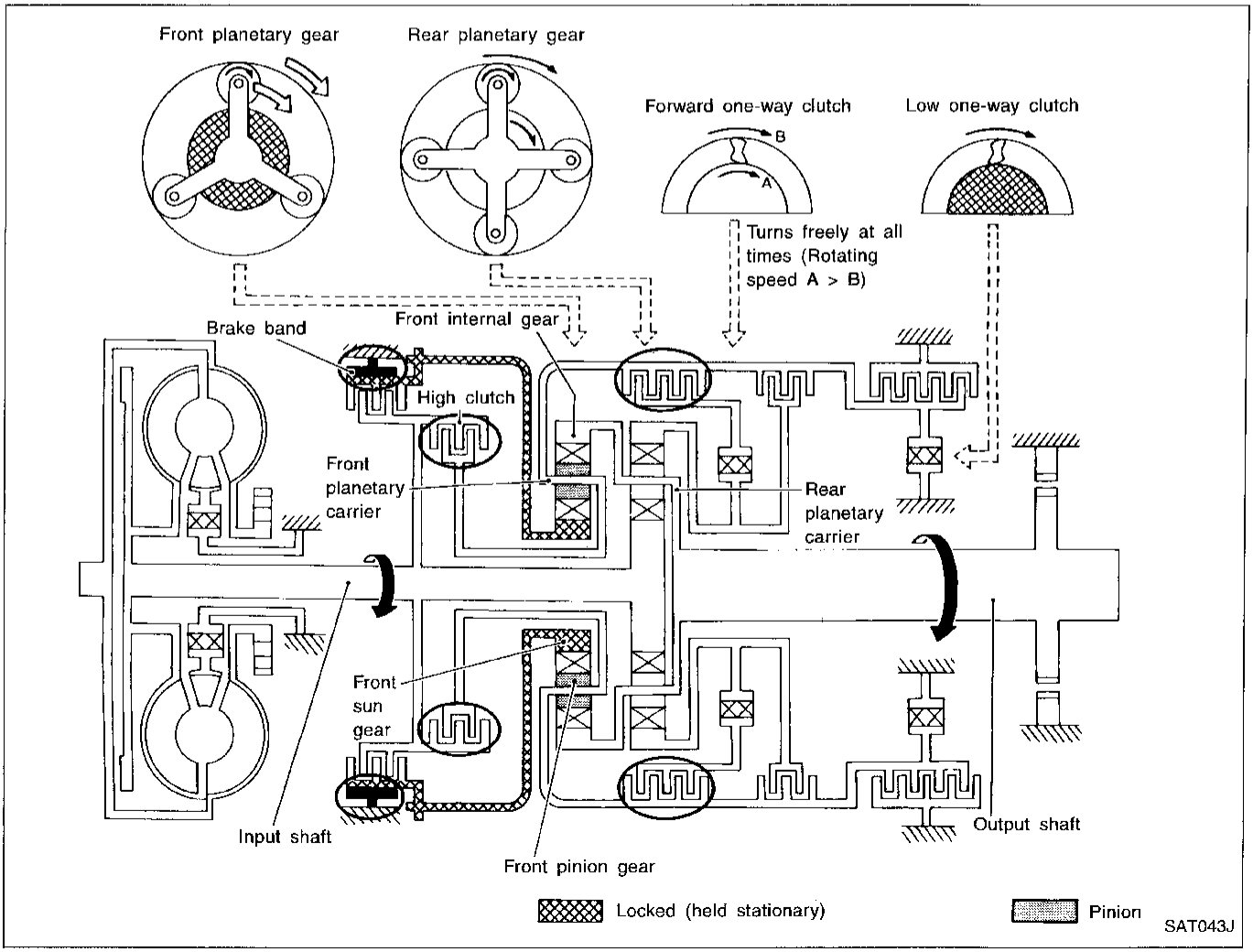

Shift Mechanism (Cont'd)

Simpo PDF Merge and Split Unregistered Version - http://www.simpopdf.com

"R" position

● **Reverse clutch** ● **Low and reverse brake**	Front planetary carrier is stationary because of the operation of low and reverse brake. Input power is transmitted to front sun gear through reverse clutch, which drives front internal gear in the opposite direction.
Engine brake	As there is no one-way clutch in the power transmission line, engine brake can be obtained when decelerating.
Power flow	Input shaft ↓ Reverse clutch ↓ Front sun gear ↓ Front pinion gear ↓ Front internal gear ↓ Output shaft

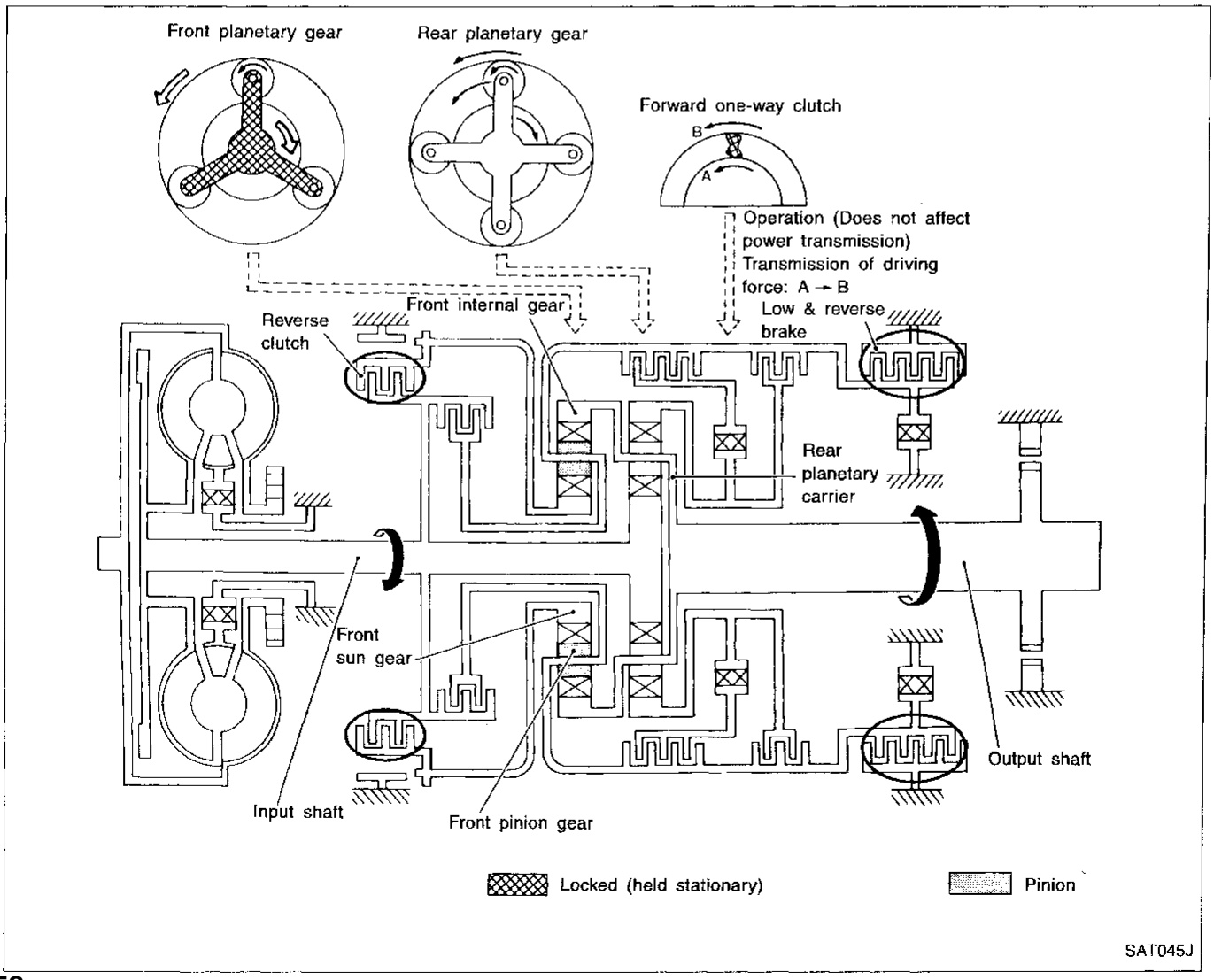

Shift Mechanism (Cont'd)

Simpo PDF Merge and Split Unregistered Version - http://www.simpopdf.com

FUNCTION OF CONTROL VALVES

Valve Name	Function
Pressure regulator valve	Optimally controls oil under pressure discharged from oil pump in response to driving conditions.
Throttle valve	Regulates line pressure to throttle pressure corresponding with throttle opening.
Detent valve	Activates throttle valve via spring in response to changes in throttle opening, thereby regulating throttle pressure.
Pressure modifier valve	Serves as an auxiliary signal valve of pressure regulator valve to control line pressure in response to driving conditions.
Accumulator control valve	Regulates accumulator pressure to pressure corresponding with driving conditions.
Manual valve	Directs line pressure to each oil circuit selected by the selector lever position. Position / Circuit ① ② ③ ④ P R ○ N D ○ 2 ○ ○ 1 ○ ○ ○ 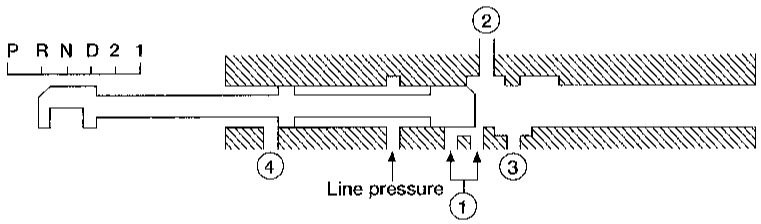 Hydraulic pressure drains when the shift lever is in N and P.
● 1-2 shift valve ● 2-3 shift valve ● 3-4 shift valve	Provides automatic shift control in response to driving conditions, such as vehicle speed, throttle opening, etc. Shift control is accomplished by activating or deactivating the clutch, brakes, brake bands, etc.
2-3 throttle modifier valve	Controls line pressure to provide optimum shifting point (2nd → 3rd) during partial-open throttle. (2-3 throttle modulator pressure)
3-2 downshift valve	Delivers throttle pressure in a direction that overcomes 2-3 shift valve's governor pressure while shifting from "3rd" to "2nd" in the "D" position.
Kickdown modifier valve	Controls line pressure to provide optimum shifting points (1st → 2nd) and (2nd → 3rd) during kickdowns. (Kickdown modifier pressure)
4-2 relay valve	Operates in conjunction with the 4-2 sequence valve to prevent downshifting from 4th to 3rd, then to 2nd while directly shifting from 4th to 2nd.
4-2 sequence valve	Prevents 4th band servo "apply" pressure from draining during direct shifting from 4th to 2nd before high clutch "apply" pressure and band servo "release" pressure in the same oil circuit are drained.

Shift Mechanism (Cont'd)

Simpo PDF Merge and Split Unregistered Version - http://www.simpopdf.com

Valve name	Function
3-2 timing valve	Engine speed increases in a short period of time at low engine speeds when accelerator is depressed during downshifts from D_3 to D_2. However, it takes longer for the engine to increase speed at high engine speeds. The 3-2 timing valve serves to delay the band servo "release" draining speed (At this point, the transmission is tentatively set in Neutral) during downshifts from D_3 to D_2 at speeds greater than those in the specifications, thereby providing smooth shifting.
1st reducing valve	Controls low & reverse brake "apply" pressure to relief shocks caused by engine brakes while shifting from 2nd to 1st in the 1 position.
Overrun clutch reducing valve	Controls pressure that operates the overrun clutch to relief shocks caused during engine braking. Line pressure acts on the overrun clutch reducing valve in the 1st or 2nd position to increase the pressure-regulating point with resultant high engine braking capabilities.
4th speed cut valve	Determines lock-up speed while operating in 4th gear.
● Torque converter clutch control valve ● Torque converter cluch solenoid valve	Activates or deactivates lock-up system.
Torque converter relief valve	Prevents abnormal increase of converter oil pressure.

Simpo PDF Merge and Split Unregistered Version - http://www.simpopdf.com

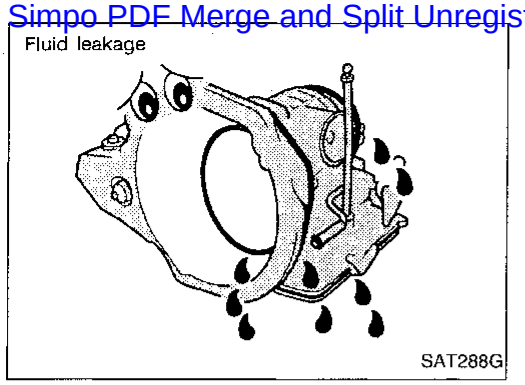

A/T Fluid Check

FLUID LEAKAGE CHECK

1. Clean area suspected of leaking, — for example, mating surface of converter housing and transmission case.
2. Start engine, apply foot brake, place selector lever in "D" position and wait a few minutes.
3. Stop engine.
4. Check for fresh leakage.

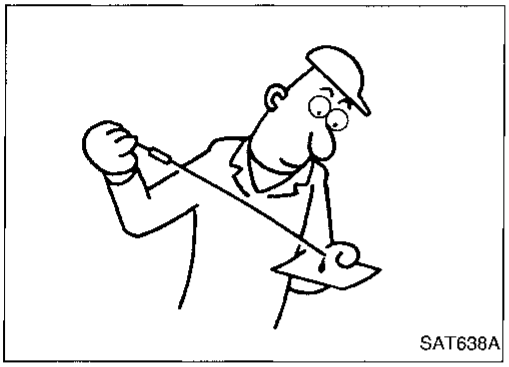

FLUID CONDITION CHECK

Fluid color	Suspected problem
Dark or black with burned odor	Wear of frictional material
Milky pink	Water contamination — Road water entering through filler tube or breather
Varnished fluid, light to dark brown and tacky	Oxidation — Over or under filling — Overheating

FLUID LEVEL CHECK

Refer to MA section ("Checking A/T Fluid", "CHASSIS AND BODY MAINTENANCE").

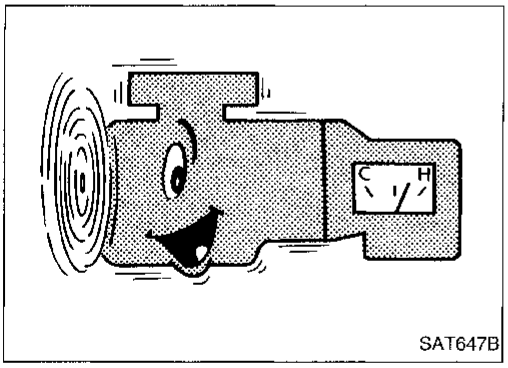

Stall Test

STALL TEST PROCEDURE

1. Check A/T and engine fluid levels. If necessary, add fluid.
2. Drive vehicle for approx. 10 minutes or until engine oil and ATF reach operating temperature.
   ATF operating temperature:
   50 - 80°C (122 - 176°F)

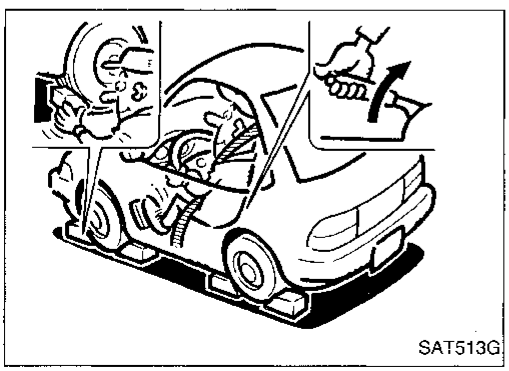

3. Set parking brake and block wheels.
4. Install a tachometer where it can be seen by driver during test.

- **It is good practice to put a mark on point of specified engine speed on indicator.**

Stall Test (Cont'd)

Simpo PDF Merge and Split Unregistered Version - http://www.simpopdf.com

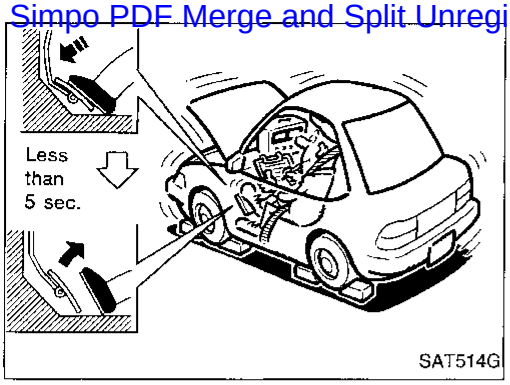

SAT514G

5. Start engine, apply foot brake, and place selector lever in "D" position.
6. Accelerate to wide open throttle gradually while applying foot brake.
   - **During test, never hold throttle wide-open for more than 5 seconds.**
7. Quickly note the engine stall revolution and immediately release throttle.
   Stall revolution standard:
   2,100 - 2,300 rpm

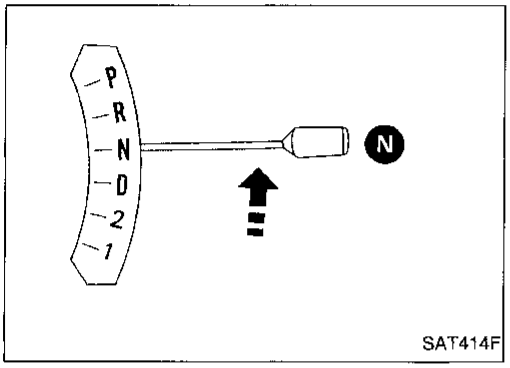

SAT414F

8. Shift selector lever to "N" position.
9. Cool off ATF.
   - **Run engine at idle for at least one minute.**
10. Repeat steps 5 through 9 with selector lever in "2", "1" and "R" positions.

Stall Test (Cont'd)

Simpo PDF Merge and Split Unregistered Version - http://www.simpopdf.com

JUDGEMENT OF STALL TEST

Selector lever position	Judgement		
D	L	O	H
2	L	O	H
1	L	O	O
R	L	H	H

O : Stall revolution is normal.
H : Stall revolution is higher than specified.
L : Stall revolution is lower than specified.

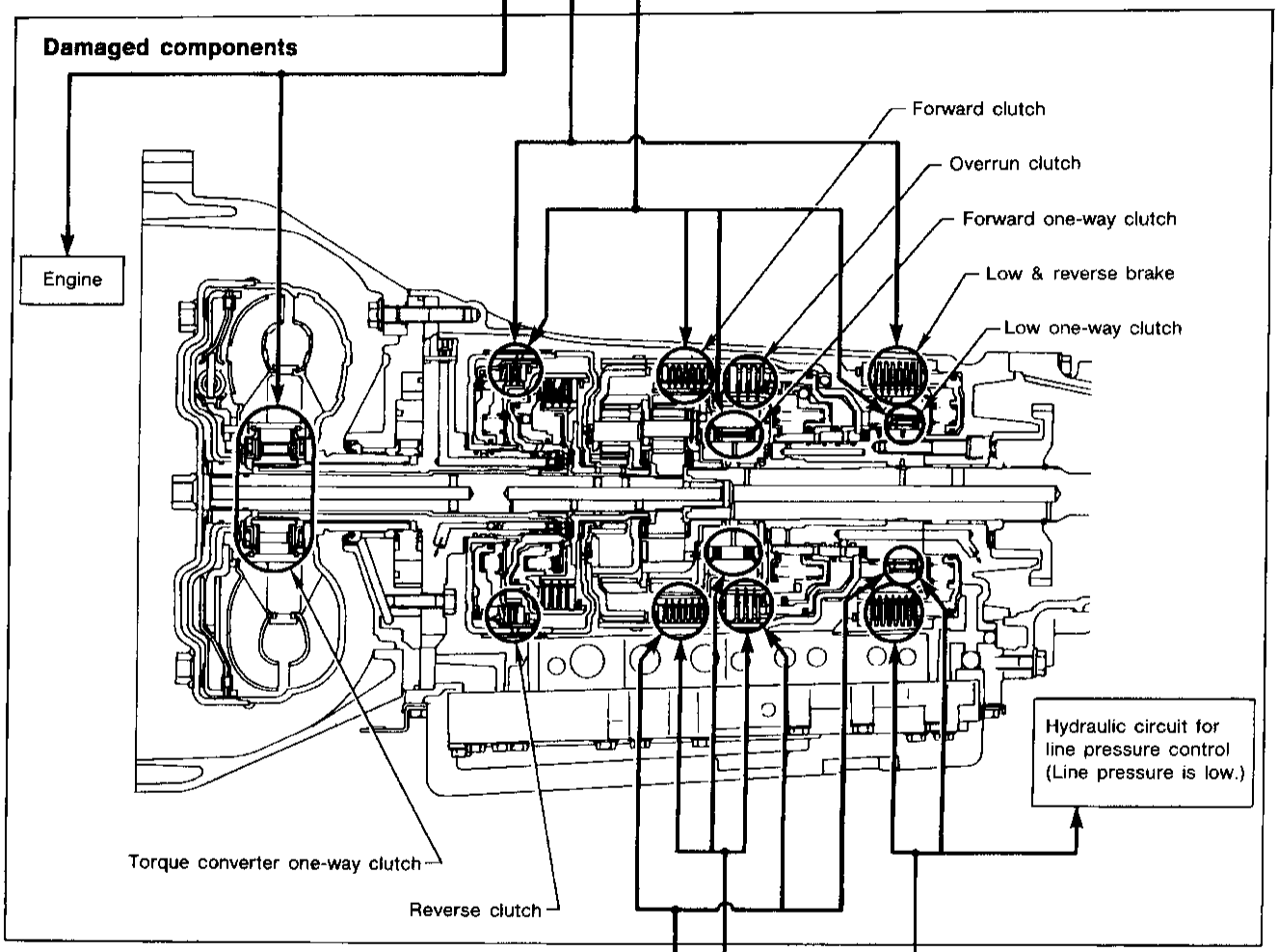

Clutches and brakes except high clutch and brake band are OK. (Condition of high clutch and brake band can not be confirmed by stall test.)

D	H	H	H	O
2	H	H	H	O
1	O	H	H	O
R	O	O	H	O
Selector lever position	Judgement			

SAT161GA

Simpo PDF Merge and Split Unregistered Version - http://www.simpopdf.com

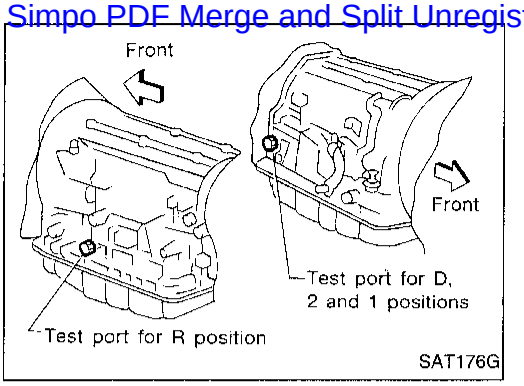

Line Pressure Test

PRESSURE TEST PORTS

Location of line pressure test ports are shown in illustration.

- **Line pressure plugs are hexagon-headed bolts.**
- **Always replace line pressure plugs as they are self-sealing bolts.**

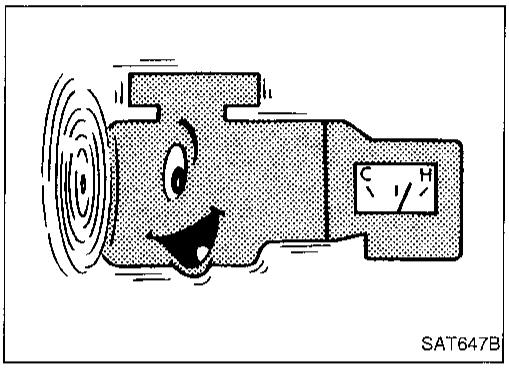

LINE PRESSURE TEST PROCEDURE

1. Check A/T and engine fluid levels. If necessary, add more fluids.
2. Drive vehicle for approx. 10 minutes or until engine oil and ATF reach operating temperature.
   ATF operating temperature:
   50 - 80°C (122 - 176°F)

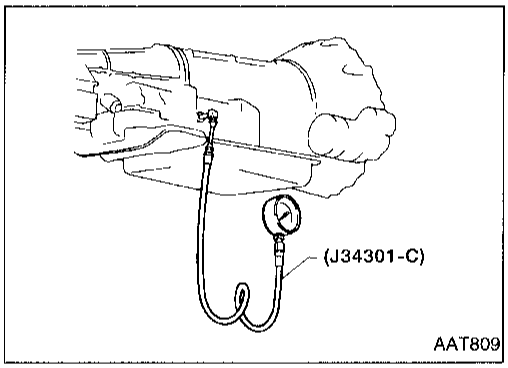

3. Install pressure gauge to line pressure port.

— D, 2 and 1 positions —

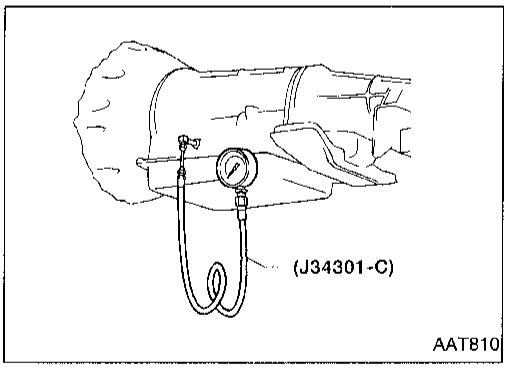

— R position —

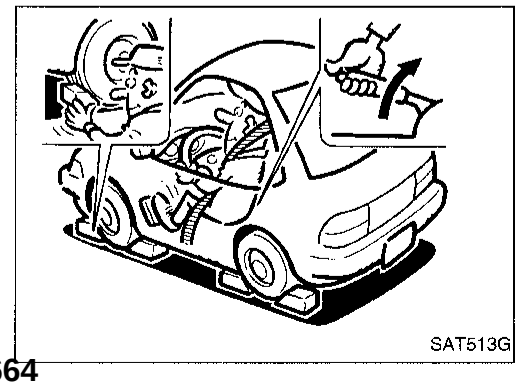

4. Set parking brake and block wheels.
- **Continue to depress brake pedal fully while performing line pressure test at stall speed.**

Line Pressure Test (Cont'd)

Simpo PDF Merge and Split Unregistered Version - http://www.simpopdf.com

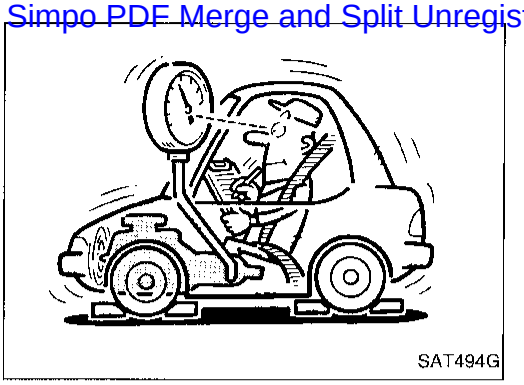
SAT494G

5. Start engine and measure line pressure at idle and stall speed.
- **When measuring line pressure at stall speed, follow the stall test procedure.**

Line pressure:

Engine speed rpm	Line pressure kPa (kg/cm^2, psi)		
	D position (Overdrive control switch ON and OFF)	2 and 1 positions	R position
Idle	471 - 510 (4.8 - 5.2, 68 - 74)	422 - 461 (4.3 - 4.7, 61 - 67)	736 - 775 (7.5 - 7.9, 107 - 112)
Stall	912 - 991 (9.3 - 10.1, 132 - 144)	883 - 961 (9.0 - 9.8, 128 - 139)	1,442 - 1,520 (14.7 - 15.5, 209 - 220)

JUDGEMENT OF LINE PRESSURE TEST

Judgement		Suspected parts
At idle	Line pressure is low in all positions.	● Oil pump wear ● Control piston damage ● Pressure regulator valve or plug sticking ● Spring for pressure regulator valve damaged ● Fluid pressure leakage between oil strainer and pressure regulator valve ● Clogged strainer
	Line pressure is low in particular position.	● Fluid pressure leakage between manual valve and particular clutch. ● For example, line pressure is: — Low in "R" and "1" positions, but — Normal in "D" and "2" positions. Therefore, fluid leakage exists at or around low & reverse brake circuit. Refer to CLUTCH AND BAND CHART, AT-13.
	Line pressure is high.	● Maladjustment of throttle position sensor ● Fluid temperature sensor damaged ● Line pressure solenoid valve sticking ● Short circuit of line pressure solenoid valve circuit ● Pressure modifier valve sticking ● Pressure regulator valve or plug sticking
At stall speed	Line pressure is low.	● Maladjustment of throttle position sensor ● Control piston damaged ● Line pressure solenoid valve sticking ● Short circuit of line pressure solenoid valve circuit ● Pressure regulator valve or plug sticking ● Pressure modifier valve sticking ● Pilot valve sticking

Simpo PDF Merge and Split Unregistered Version - http://www.simpopdf.com

Line Pressure Test (Cont'd)

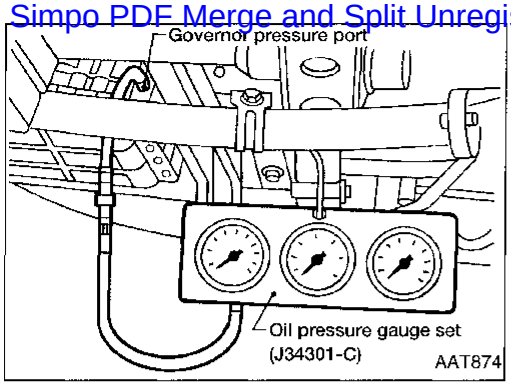

Governor pressure testing

1. Check A/T and engine fluid levels. If necessary, add fluid.
2. Drive vehicle for approx. 10 minutes or until engine oil and ATF reach operating temperature.
   ATF operating temperature:
   50 - 80°C (122 - 176°F)
3. Install pressure gauge to governor pressure port.

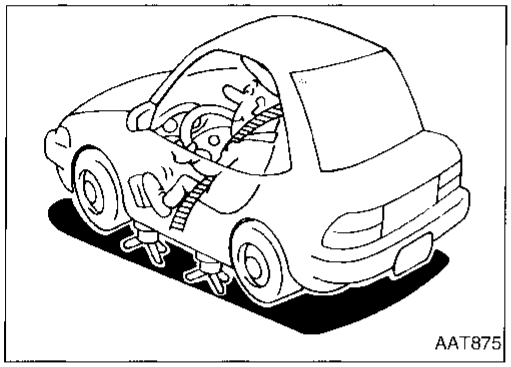

4. Jack up front and rear wheels.
5. Set selector lever in "D" position and gradually depress accelerator pedal.

- **Be careful of rotating wheels.**

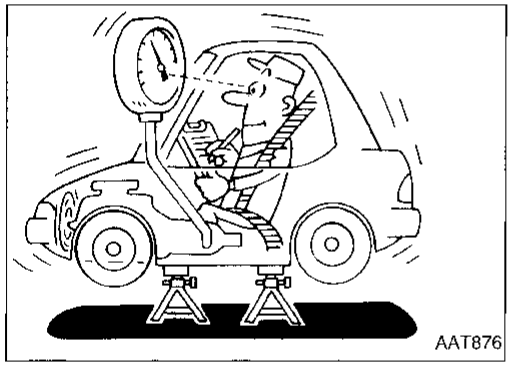

Governor pressure:

- **Governor pressure is not generated when vehicle is stopped.**
- **Governor pressure rises gradually in response to vehicle speed.**

Vehicle speed	Governor pressure kPa (kg/cm^2 psi)
0 km/h (0 MPH)	0 (0, 0)
29 km/h (18 MPH)	102.4 - 141.6 (1.22 - 1.26, 17 - 18)
57 km/h (35 MPH)	233.5 - 284.5 (2.40 - 2.90, 34 - 41)
86 km/h (53 MPH)	350.6 - 409.4 (3.58 - 4.18, 51 - 60)

If not, check governor valve assembly. Refer to AT-81.

Road Test

Perform road tests using "Symptom Chart". Refer to AT-30.

"P" POSITION

1. Place selector lever in "P" position and start the engine. Stop the engine and repeat the procedure in all positions, including "N" position.
2. Stop vehicle on a slight upgrade and place selector lever in "P" position. Release parking brake to make sure vehicle remains locked.

"R" POSITION

1. Manually move selector lever from "P" or "R", and note shift quality.
2. Drive vehicle in reverse long enough to detect slippage or other abnormalities.

Road Test (Cont'd)

Simpo PDF Merge and Split Unregistered Version - http://www.simpopdf.com

"N" POSITION

1. Manually move selector lever from "R" and "D" to "N" and note shift quality.
2. Release parking brake with selector lever in "N" position. Lightly depress accelerator pedal to make sure vehicle does not move. (When vehicle is new or soon after clutches have been replaced, vehicle may move slightly. This is not a problem.)

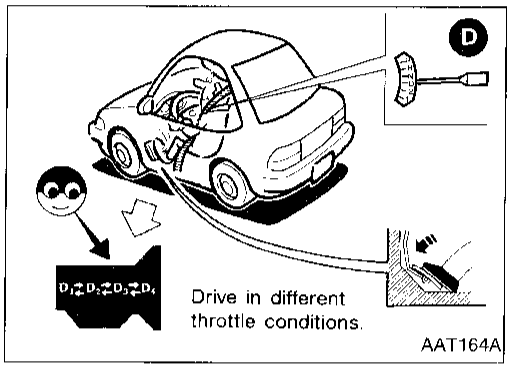

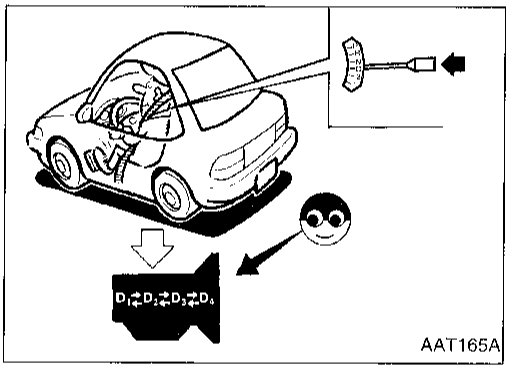

"D" POSITION

1. Manually shift selector lever from "N" to "D" position, and note shift quality.
2. Using the shift schedule as a reference, drive vehicle in "D" position. Record, on Symptom Chart, respective vehicle speeds at which up-shifting and down-shifting occur. These speeds are to be read at three different throttle positions (light, half and full), respectively. Also determine the timing at which shocks are encountered during shifting and which clutches are engaged.
3. Determine, whether lock-up properly occurs while driving vehicle in proper gear position and at proper speeds.
4. Check to determine if shifting to overdrive gear cannot be made while overdrive control switch is OFF.
5. Drive vehicle at 65 to 80 km/h (40 to 50 MPH) with half to light throttle position (D_3 position). Fully depress accelerator pedal to make sure transmission downshifts from 3rd to 2nd gear.
6. Drive vehicle at 35 to 45 km/h (22 to 28 MPH) with half to light throttle position (D_2 position). Fully depress accelerator pedal to make sure transmission downshifts from 2nd to 1st gear.

"2" POSITION

1. Shift to "2" position and make sure vehicle starts in 1st gear.
2. Increase vehicle speed to make sure transmission upshifts from 1st to 2nd gear.
3. Further increase vehicle speed. Make sure transmission does not upshift to 3rd gear.
4. Drive vehicle at 35 to 45 km/h (22 to 28 MPH) with throttle at half to light position (2_2 position). Fully depress accelerator pedal to make sure transmission downshifts from 2nd to 1st gear.
5. Drive vehicle at idle in "2" position to make sure that transmission downshifts to 1st gear.
6. Move selector lever to "D" position and drive vehicle at 40 to 50 km/h (25 to 31 MPH). Then, move selector lever to "2" position to make sure transmission downshifts to 2nd gear.

"1" POSITION

1. Place selector lever in "1" position and accelerate. Make sure transmission does not shift from 1st to 2nd gear although vehicle speed increases.
2. While driving vehicle in "1" position, release accelerator pedal to make sure that engine compression acts as a brake.
3. Place selector lever in "D" or "2" position and drive vehicle at 20 to 30 km/h (12 to 19 MPH). Then move selector lever to "1" position to make sure transmission downshifts to 1st gear.

Simpo PDF Merge and Split Unregistered Version - http://www.simpopdf.com

Symptom Chart

Numbers are arranged in order of the inspection.
Perform inspections starting with number one and work up.
Numbers in the OFF VEHICLE columns indicate that the transmission must be removed from the vehicle to perform the inspection.

: Valve suspected to be malfunctioning

		ON VEHICLE																	
		Oil level and oil quality	Control linkage	Inhibitor switch and wiring	Throttle wire	Engine idling speed	Line pressure	Control valve	4th speed cut valve	Pressure regulator valve	Pressure modifier valve	1-2 shift valve	2-3 shift valve	3-4 shift valve	Accumulator control valve	3-2 downshift valve	2-3 throttle modifier valve
Sharp shocks in shifting from "N" to "D" position		1	2	.	5	3	4	8									
Shift shocks	When shifting from 1st to 2nd or 2nd to 3rd	1	2	.	4	.	3	7									
	When shifting from 3rd to 4th	1	2	.	4	.	3	6									
	When shifting from "D" to "2" and "1" position. When overdrive control switch is set from ON to OFF	1	2	.	4	.	3	5									
	When shifting from 2nd to 1st in "1" position	1	2	.	4	.	3	5									
Shift slippage when upshifting	When shifting from 1st to 2nd	1	2	.	4	.	3	6									
	When shifting from 2nd to 3rd	1	2	.	4	.	3	6									
	When shifting from 3rd to 4th	1	2	.	4	.	3	6									
Shift slippage with accelerator pedal depressed	When shifting from 4th to 2nd	1	2	.	5	.	3	7									
	When shifting from 4th to 3rd	1	2	.	4	.	3	6									
	When shifting from 4th to 1st and shifting from 3rd to 1st	1	2	.	5	.	3	7									
Poor power/acceleration	When vehicle starts	1	2	.	5	.	3	10									
	When upshifting	1	2	.	4	.	3	8									
No engine braking	When shifting from "D" to "2" and "1" position	1	2	.	4	.	3	6									
	When overdrive control switch is set from ON to OFF	1	2	.	4	.	3	8									
	When shifting from 2nd to 1st in "1" position	1	2	.	4	.	3	6									
Shift quality	Too low a gear change point from 2nd to 3rd and from 3rd to 2nd.	1	.	.	4	.	2	5									
	Too high a gear change point from 2nd to 3rd and from 3rd to 2nd.	1	.	.	4	.	2	5									
	Too low a gear change point from 2nd to 1st in "1" position.	1	.	.	4	.	2	5									
	Too high a gear change point from 2nd to 1st in "1" position.	1	.	.	4	.	2	5									

Symptom Chart (Cont'd)

Simpo PDF Merge and Split Unregistered Version - http://www.simpopdf.com

← ON VEHICLE →																						← OFF VEHICLE →									
4-2 relay valve	Torque converter clutch control valve	Throttle valve & detent valve	Manual valve	Kickdown modifier valve	1st reducing valve	Overrun clutch reducing valve	3-2 timing valve	Torque converter relief valve	4-2 sequence valve	Governor pressure	Governor valve	Primary governor valve	Secondary governor valve ①	Secondary governor valve ②	Overdrive cancel solenoid valve	Torque converter clutch solenoid valve	Accumulator N-D	Accumulator 1-2	Accumulator 2-3	Accumulator 3-4 (N-R)	Ignition switch and starter motor overdrive control switch and wiring	Torque converter	Oil pump	Reverse clutch	High clutch	Forward clutch	Forward one-way clutch	Overrun clutch	Low one-way clutch	Low & reverse clutch	Brake band	Parking components
																	6			7				9							
																		5	6													
																				5								8		7	
																								7					6		
																												6			
																		5											7		
																			5					8					7		
																				5				8					7		
										4	11						6	8	9	7		12	13	14	15	17	18	19	20	21	26	
																		5	6	7			9		10			12		13	11	
										4	8								6						9		11				10	
																			5						7	8					
										4	8								6							9					
																			5									7			
															7				5		6							9			
																												7		8	
										3	6																				
										3	6																				
										3	6																				
										3	6																				

Symptom Chart (Cont'd)

Simpo PDF Merge and Split Unregistered Version - http://www.simpopdf.com

Numbers are arranged in order of the inspection.
Perform inspections starting with number one and work up.
Numbers in OFF VEHICLE columns indicate that the transmission must be removed from the vehicle to perform the inspection.

: Valve suspected to be malfunctioning

		ON VEHICLE															
		Oil level and oil quality	Control linkage	Inhibitor switch and wiring	Throttle wire	Engine idling speed	Line pressure	Control valve	4th speed cut valve	Pressure regulator valve	Pressure modifier valve	1-2 shift valve	2-3 shift valve	3-4 shift valve	Accumulator control valve	3-2 downshift valve	2-3 throttle modifier valve
Shift quality	Failure to change gear from 4th to 2nd with accelerator pedal depressed.	1	.	.	4	.	2	5									
	Failure to change gear from 3rd to 2nd with accelerator pedal depressed.	1	.	.	4	.	2	5									
	Failure to change gear from 1st to 2nd in "D" and "2" position.	1	.	.	4	.	2	5									
	Vehicle does not start from 1st in "D" and "2" position.	1	.	.	4	.	2	5									
	Failure to change gear to 3rd to 4th in "D" position.	1	.	.	4	.	2	7									
	Changes gear to 1st directly when selector lever is set from "D" to "1" position.	1	.	.	4	.	2	5									
	Changes gear to 2nd in "1" position.	1	.	.	4	.	2	5									
	Too high or low a change point when lock-up operates.	1	.	.	4	.	2	5									
Lock-up quality	Lock-up point is extremely high or low.	1	.	.	4	.	2	5									
	Torque converter does not lock-up.	1	.	.	4	.	2	5									
	Lock-up is not released when accelerator pedal is released.	1	.	.	.	.	.	.									
Engine does not start in "P" and "N" positions, or engine starts in positions other than "P" and "N" positions.		.	2	3	.	.	.	.									
Vehicle moves with selector lever in "P" position.		.	1	.	.	.	.	.									

Symptom Chart (Cont'd)

Simpo PDF Merge and Split Unregistered Version - http://www.simpopdf.com

	ON VEHICLE																			OFF VEHICLE						
	4-2 relay valve	Torque converter clutch control valve	Throttle valve & detent valve	Manual valve	Kickdown modifier valve	1st reducing valve	Overrun clutch reducing valve	3-2 timing valve	Torque converter relief valve	4-2 sequence valve	Governor pressure	Governor valve	Primary governor valve	Secondary governor valve ①	Secondary governor valve ②	Overdrive cancel solenoid valve	Torque converter clutch solenoid valve	Accumulator N-D	Accumulator 1-2	Accumulator 2-3	Accumulator 3-4 (N-R)	Ignition switch and starter motor	Overdrive control switch and wiring	Torque converter / Oil pump	Reverse clutch / High clutch	Forward clutch / Forward one-way clutch	Overrun clutch / Low one-way clutch	Low & reverse clutch / Brake band	Parking components
											3	6																
											3	6																
											3	6																
											3	6																
											3	8				6							5					
											3	6																
											3	6																
											3	6																
											3	6																
											3	6																
											·	·				·	2											
											·	·										1						
											·	·																2

Simpo PDF Merge and Split Unregistered Version - http://www.simpopdf.com

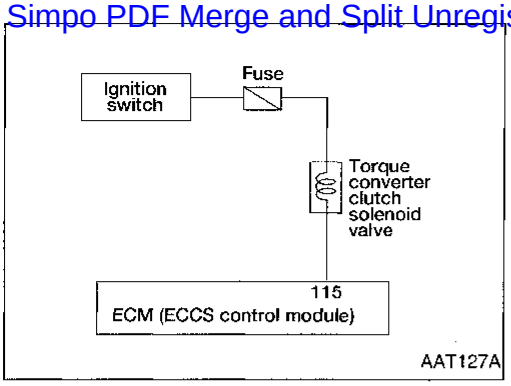

Torque Converter Clutch Solenoid Valve

When the malfunction indicator lamp indicates DTC P1550 (0904), perform "TROUBLE DIAGNOSIS FOR DTC P1550" in EC section.

A

CHECK GROUND CIRCUIT.
1. Turn ignition switch OFF.
2. Disconnect ECM harness connector and torque converter clutch solenoid valve harness connector.
3. Check resistance between solenoid valve unit harness terminal (3) and ECM harness terminal (115).

Resistance:
Approximately 0Ω

NG → Repair or replace harness between ECM and torque converter clutch solenoid valve.

OK ↓

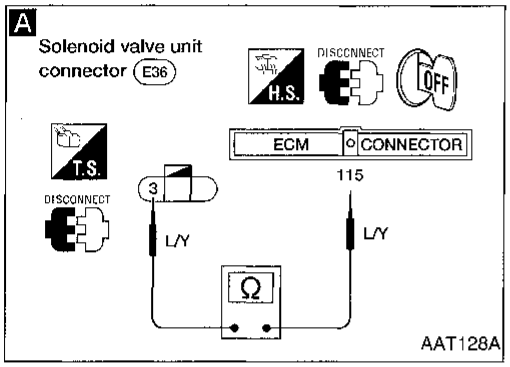

B

CHECK POWER SOURCE CIRCUIT.
1. Turn ignition switch ON.
2. Check voltage between solenoid valve unit harness terminal (1) and ground.

Voltage:
Battery voltage

NG → Check the following items:
- Ignition switch and fuse Refer to EL section ("POWER SUPPLY ROUTING").
- Harness continuity between fuse and torque converter clutch solenoid valve.

OK ↓

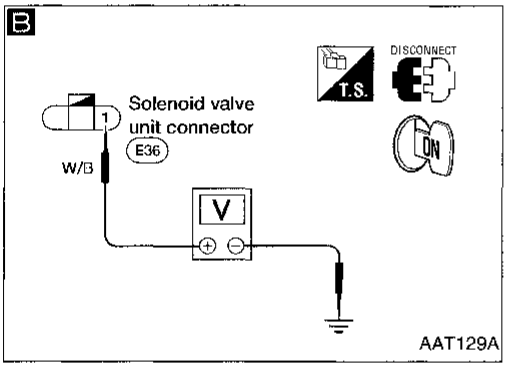

C

CHECK TORQUE CONVERTER CLUTCH SOLENOID VALVE (RESISTANCE).
Check resistance between torque converter clutch solenoid valve terminals (1) and (3).

Resistance:
Approximately 25Ω

NG → Replace torque converter clutch solenoid valve.

OK ↓

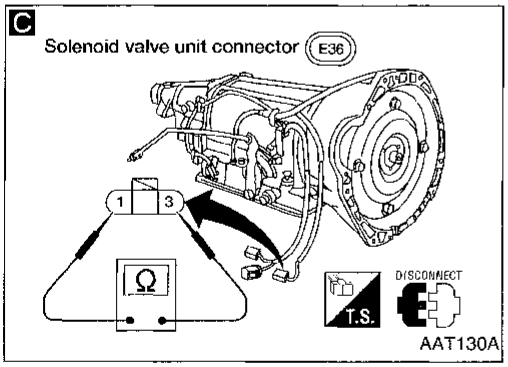

D

CHECK TORQUE CONVERTER CLUTCH SOLENOID VALVE (OPERATION).
1. Remove torque converter clutch solenoid valve. Refer to AT-45.
2. Check torque converter clutch solenoid valve operation.

NG → Replace torque converter clutch solenoid valve.

OK ↓

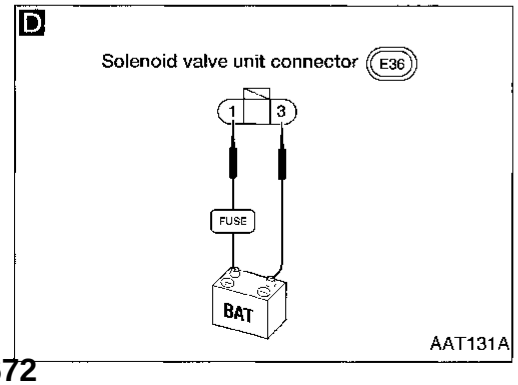

Ⓐ

(Go to next page.)

Torque Converter Clutch Solenoid Valve (Cont'd)

Simpo PDF Merge and Split Unregistered Version - http://www.simpopdf.com

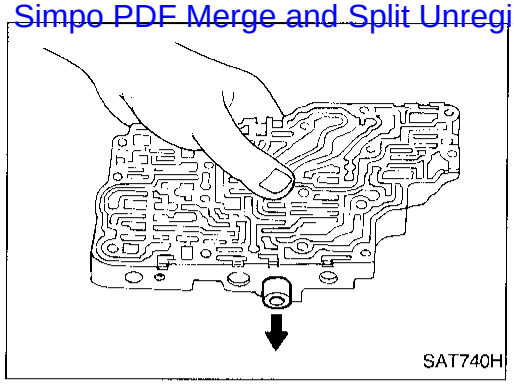

(A)

CHECK CONTROL VALVE.
1. Disassemble control valve assembly. Refer to AT-70.
2. Check torque converter clutch control valve.
- Valve, and sleeve slide along valve bore under their own weight.
- Valve, and sleeve are free from burrs, dents and scratches.
- Control valve springs are free from damage, deformation and fatigue.
- Hydraulic line is free from obstacles.

NG → Repair control valve.

OK ↓

Is malfunction eliminated?

No → Check control valve again. Repair or replace control valve assembly.

Yes ↓

INSPECTION END

Simpo PDF Merge and Split Unregistered Version - http://www.simpopdf.com

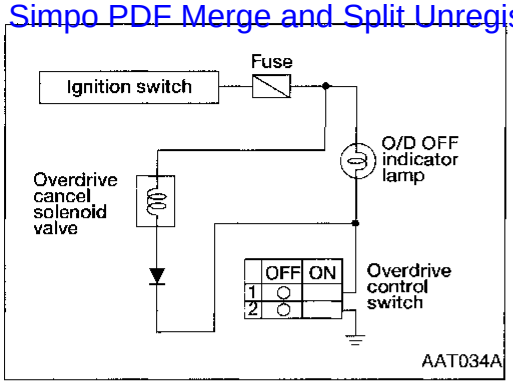

Component Inspection

OVERDRIVE CONTROL SWITCH AND OVERDRIVE CANCEL SOLENOID VALVE

A

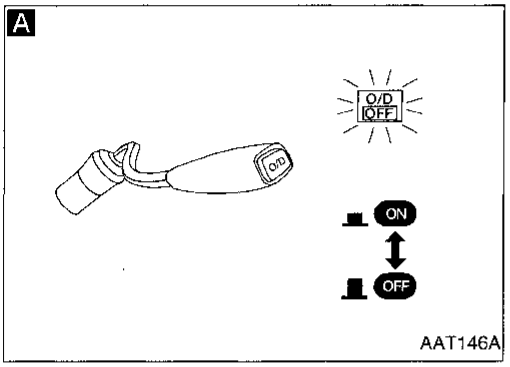

CHECK O/D OFF INDICATOR LAMP CIRCUIT.

1. Turn ignition switch ON. (Do not start engine.)
2. Set overdrive control switch OFF. **O/D OFF indicator lamp should come on.**

OK → Go to C.

NG

Check the following items:

- O/D OFF indicator lamp
  Refer to EL section ("METER AND GAUGES").
- Ignition switch and fuse
  Refer to EL section ("POWER SUPPLY ROUTING").

OK

B

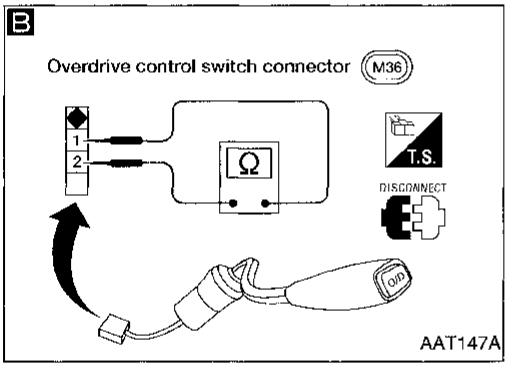

CHECK OVERDRIVE CONTROL SWITCH.

Check continuity between overdrive control switch terminals ① and ②.

Overdrive control switch position	Continuity
ON	No
OFF	Yes

NG → Replace overdrive control switch.

OK

C

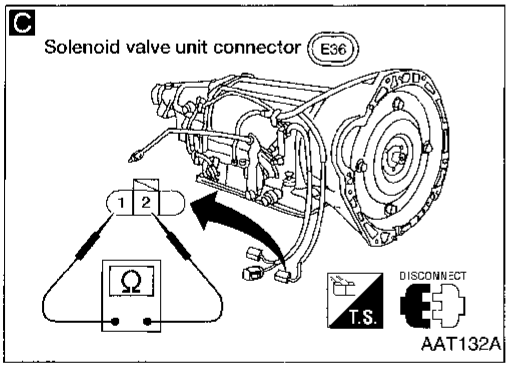

CHECK OVERDRIVE CANCEL SOLENOID VALVE.

Check resistance between overdrive cancel solenoid valve terminals ① and ②.

Resistance:
Approximately 25Ω

NG → Replace overdrive cancel solenoid valve.

OK

Check the following items:

- Harness continuity between fuse and overdrive cancel solenoid valve
- Harness continuity between overdrive cancel solenoid valve and overdrive control switch
- Condition of diode

OK

INSPECTION END

Component Inspection (Cont'd)

Simpo PDF Merge and Split Unregistered Version - http://www.simpopdf.com

INHIBITOR SWITCH

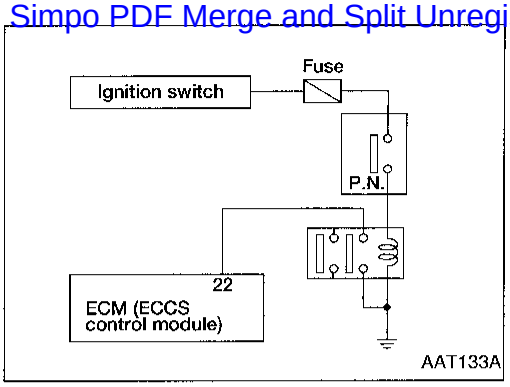

AAT133A

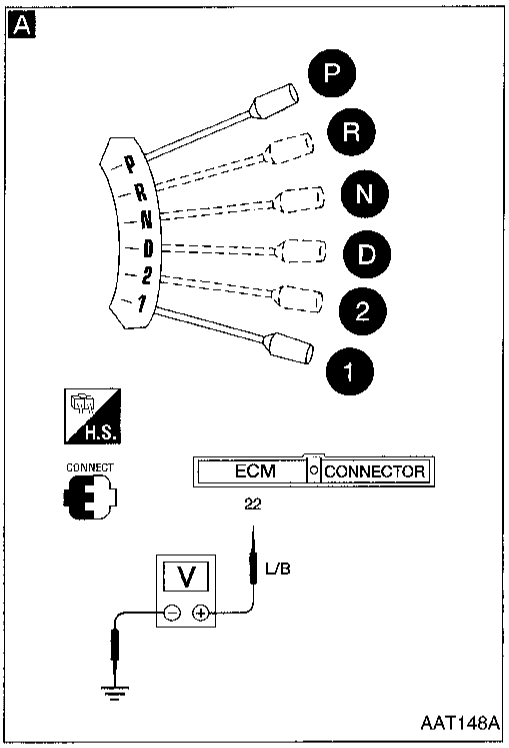

AAT148A

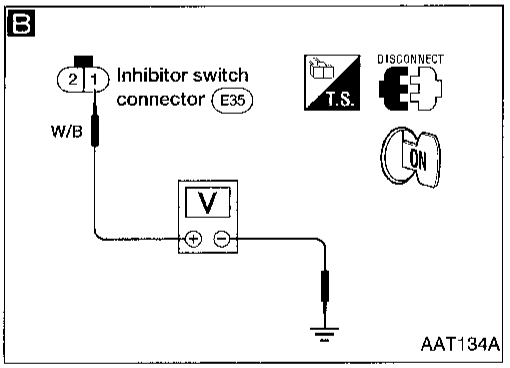

AAT134A

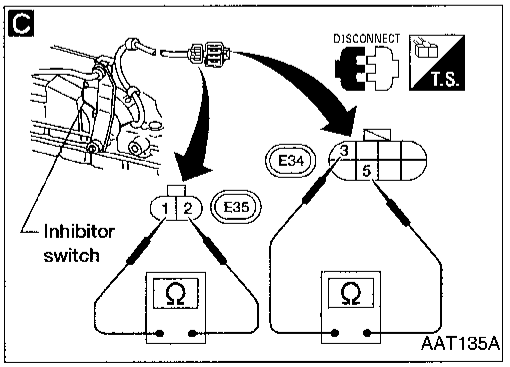

AAT135A

A

CHECK INHIBITOR SWITCH CIRCUIT.
1. Turn ignition switch ON. (Do not start engine.)
2. Check voltage between ECM terminal (22) and ground while moving selector lever through each position.
   "P", "N" position: 0V
   "R", "D", "2", "1" position: Approx. 5V

OK → INSPECTION END.

NG ↓

B

CHECK POWER SUPPLY FOR INHIBITOR SWITCH.
1. Disconnect inhibitor switch harness connector.
2. Turn ignition switch ON. (Do not start engine.)

Do approx. 12 volts exist between inhibitor switch harness terminal (1) and body ground?

No → Check 10A fuse (No. 11, located in the fuse block), harness and connector. Refer to EL section ("Wiring Diagram", "POWER SUPPLY ROUTING").

Yes ↓

C

CHECK INHIBITOR SWITCH.
- Check continuity in "N", "P" and "R" positions.
- With manual lever held in each position, turn manual shaft 1.5° in both directions. (When manual lever is in each position, continuity normally exists within 1.5° range.) If continuity does not exist equally in either direction, properly adjust inhibitor switch. Refer to AT-47.

NG → Replace inhibitor switch.

Position	Terminal No.			
	①	②	③	⑤
Park/neutral position	○	○		
R			○	○

OK ↓

Reconnect inhibitor switch harness connector.

Ⓐ
(Go to next page.)

Component Inspection (Cont'd)

Simpo PDF Merge and Split Unregistered Version - http://www.simpopdf.com

D

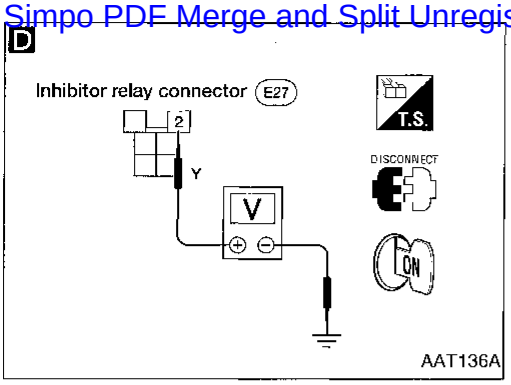

AAT136A

E

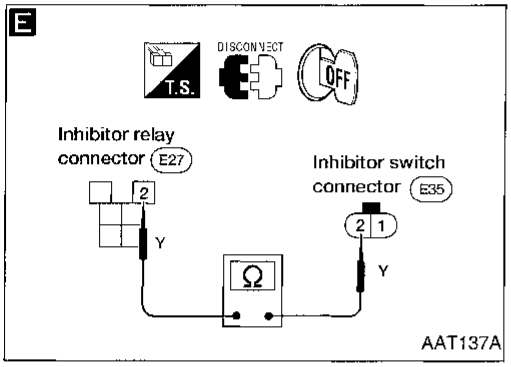

AAT137A

F

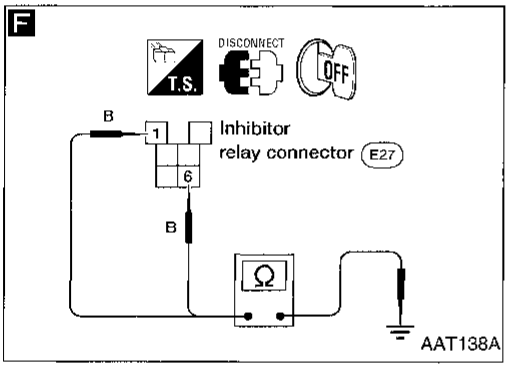

AAT138A

G

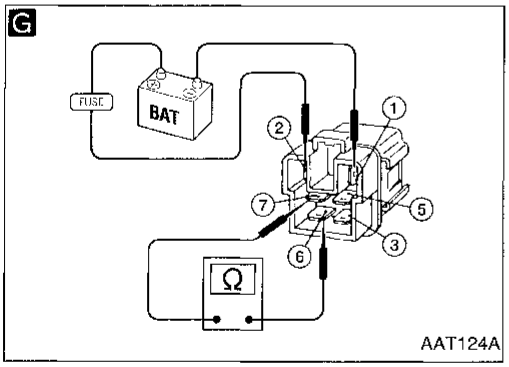

AAT124A

H

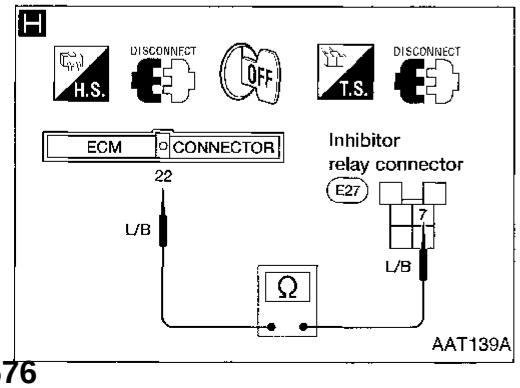

AAT139A

Ⓐ

D **CHECK POWER SUPPLY FOR INHIBITOR RELAY.**

1. Turn ignition switch ON.
2. Disconnect inhibitor relay harness connector.
3. Put selector lever in "P" or "N" position.

Do approx. 12 volts exist between inhibitor relay harness terminal ② and body ground?

No → **E**

1. Turn ignition switch OFF.
2. Disconnect inhibitor switch harness connector. Check circuit continuity between inhibitor switch harness terminal ② and inhibitor relay harness terminal ②.

Continuity should exist.

If OK, check harness for short.

Yes ↓

F **CHECK BODY GROUND CIRCUIT FOR INHIBITOR RELAY.**

1. Turn ignition switch OFF.
2. Does continuity exist between inhibitor relay terminals ①, ⑥ and body ground?

Continuity should exist.

NG → Repair harness or connector.

OK ↓

G **CHECK INHIBITOR RELAY.**

Check continuity between terminals ⑥ and ⑦.

Condition	Continuity
12V direct current supply between terminals ① and ②	Yes
No current supply	No

NG → Replace inhibitor relay.

OK ↓

H

1. Turn ignition switch OFF.
2. Check circuit continuity between ECM harness terminal ㉒ and inhibitor relay harness terminal ⑦.

Continuity should exist.

If OK, check harness for short.

NG → Repair harness or connector.

OK ↓

Replace ECM.

Simpo PDF Merge and Split Unregistered Version - http://www.simpopdf.com

Description

- The mechanical key interlock mechanism also operates as a shift lock:
  With the key switch turned to ON, the selector lever cannot be shifted from "P" (park) to any other position unless the brake pedal is depressed.
  With the key removed, the selector lever cannot be shifted from "P" to any other position.
  The key cannot be removed unless the selector lever is placed in "P".
- The shift lock and key interlock mechanisms are controlled by the ON-OFF operation of the shift lock solenoid and by the operation of the rotator and slider located inside the key cylinder, respectively.

Shift Lock System Electrical Parts Location

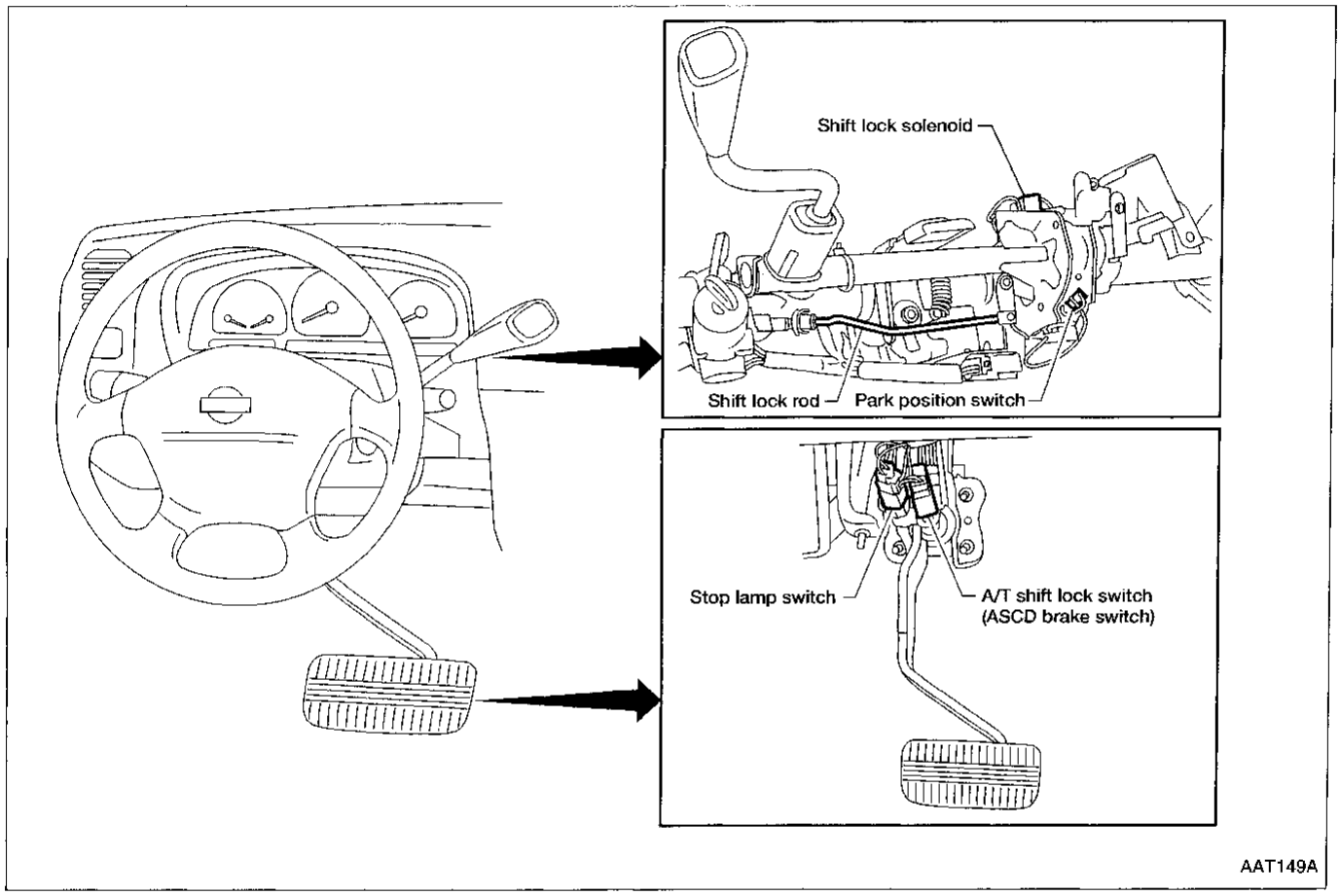

Removal — Shift Lock Solenoid

1. Remove lower instrument cover LH and knee protector.
2. Remove steering column covers.
3. Disconnect A/T device connector.
4. Remove two screws and two nuts attaching steering column.
5. Disconnect shift lock rod.
6. Remove shift control cable.
7. Remove two bolts attaching shift control tube and remove shift control tube.
8. Remove two screws from shift lock solenoid and two screws from park position switch.

Simpo PDF Merge and Split Unregistered Version - http://www.simpopdf.com

Wiring Diagram

AT-SHIFT-01

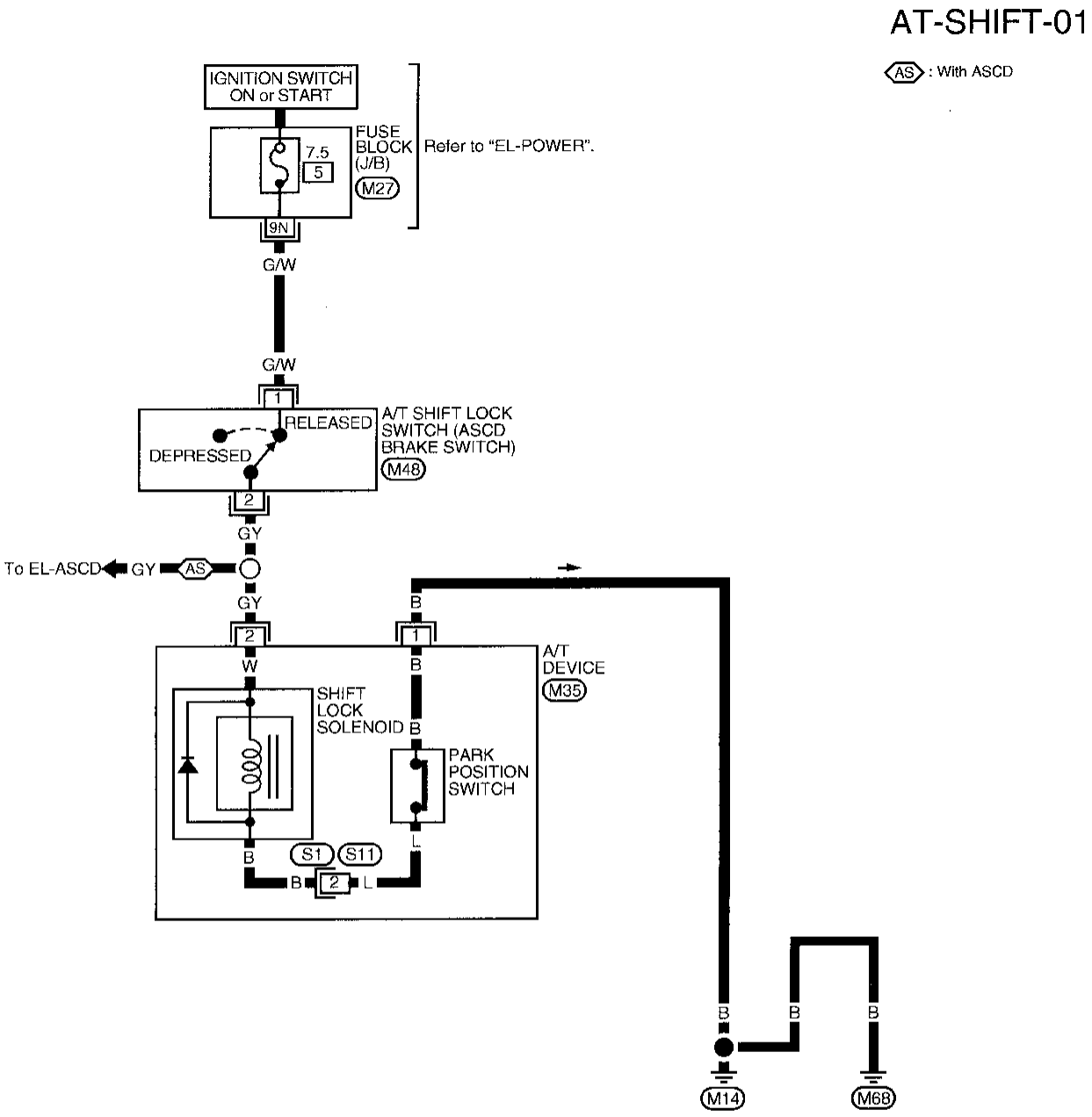

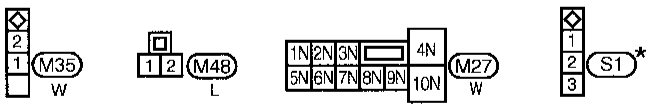

* : This connector is not shown in "HARNESS LAYOUT" of EL section.

AAT069A

Simpo PDF Merge and Split Unregistered Version - http://www.simpopdf.com

Diagnostic Procedure

SYMPTOM 1:

- **Selector lever cannot be moved from "P" position with key in ON position and brake pedal applied.**
- **Selector lever can be moved from "P" position with key in ON position and brake pedal released.**
- **Selector lever can be moved from "P" position when key is removed from key cylinder.**

SYMPTOM 2:

- **Ignition key cannot be removed when selector lever is set to "P" position.**
- **Ignition key can be removed when selector lever is set to any position except "P".**

Check selector lever position indicator and selector lever for damage.

NG → Check selector lever. Refer to "ON-VEHICLE SERVICE — Inhibitor Switch and Control Cable Adjustment", AT-47.

OK ↓

A

CHECK POWER SOURCE.

1. Turn ignition switch ON. (Do not start engine.)
2. Check voltage between A/T shift lock switch (ASCD brake switch) harness connector terminal ① and ground.

Voltage: Battery voltage

NG → Check the following items:

- 7.5A fuse (No. 5, located in the fuse block)
- Harness for short or open between fuse and A/T shift lock switch (ASCD brake switch) harness connector terminal ①
- Ignition switch (Refer to EL section.)

OK ↓

B

CHECK INPUT SIGNAL

[A/T SHIFT LOCK SWITCH (ASCD brake switch)].

1. Turn ignition switch ON. (Do not start engine.)
2. Check voltage between A/T device harness connector terminal ② and ground.

Brake pedal	Voltage
Depressed	0V
Released	Battery voltage

NG → Check the following items:

- Harness for short or open between A/T device harness connector terminal ② and A/T shift lock switch (ASCD brake switch) harness connector terminal ②
- A/T shift lock switch (ASCD brake switch) (Refer to "Component Check", AT-44.)

OK ↓

Ⓐ

(Go to next page.)

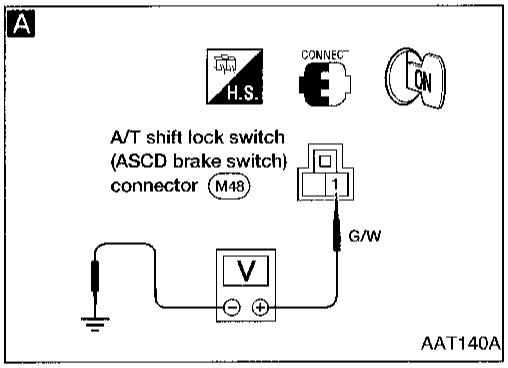

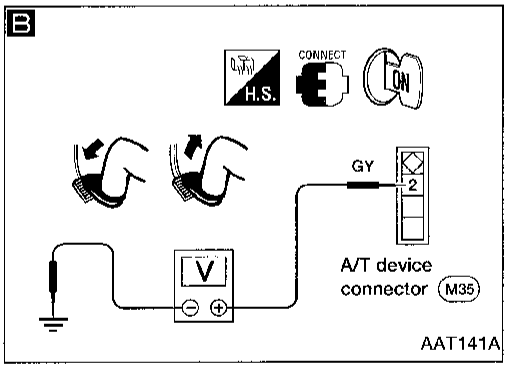

Diagnostic Procedure (Cont'd)

Simpo PDF Merge and Split Unregistered Version - http://www.simpopdf.com

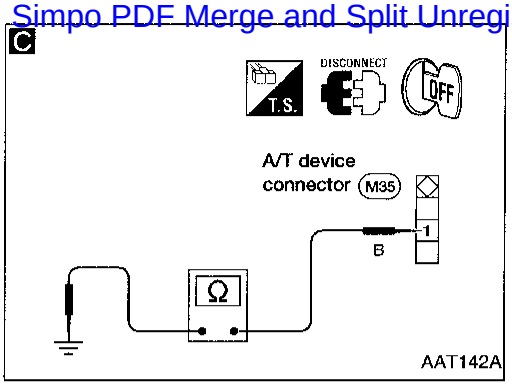

Ⓐ

C

CHECK GROUND CIRCUIT.
1. Turn ignition switch OFF.
2. Disconnect A/T device harness connector.
3. Check continuity between A/T device harness connector terminal ① and ground.
   Continuity should exist.
   If OK, check harness for short to ground and short to power.

NG → Repair harness or connector.

OK ↓

CHECK PARK POSITION SWITCH.
(Refer to "Component Check", AT-44.)

NG → Replace park position switch.

OK ↓

CHECK SHIFT LOCK SOLENOID.
(Refer to "Component Check", AT-44.)

NG → Replace shift lock solenoid.

OK ↓

Reconnect A/T device harness connector.

↓

Turn ignition switch from OFF to ON position. (Do not start engine.)

↓

Recheck shift lock operation.

NG → 1. Perform A/T device input/output signal inspection test.
2. If NG, recheck harness connector connection.

OK ↓

INSPECTION END

Simpo PDF Merge and Split Unregistered Version - http://www.simpopdf.com

Shift Lock Rod

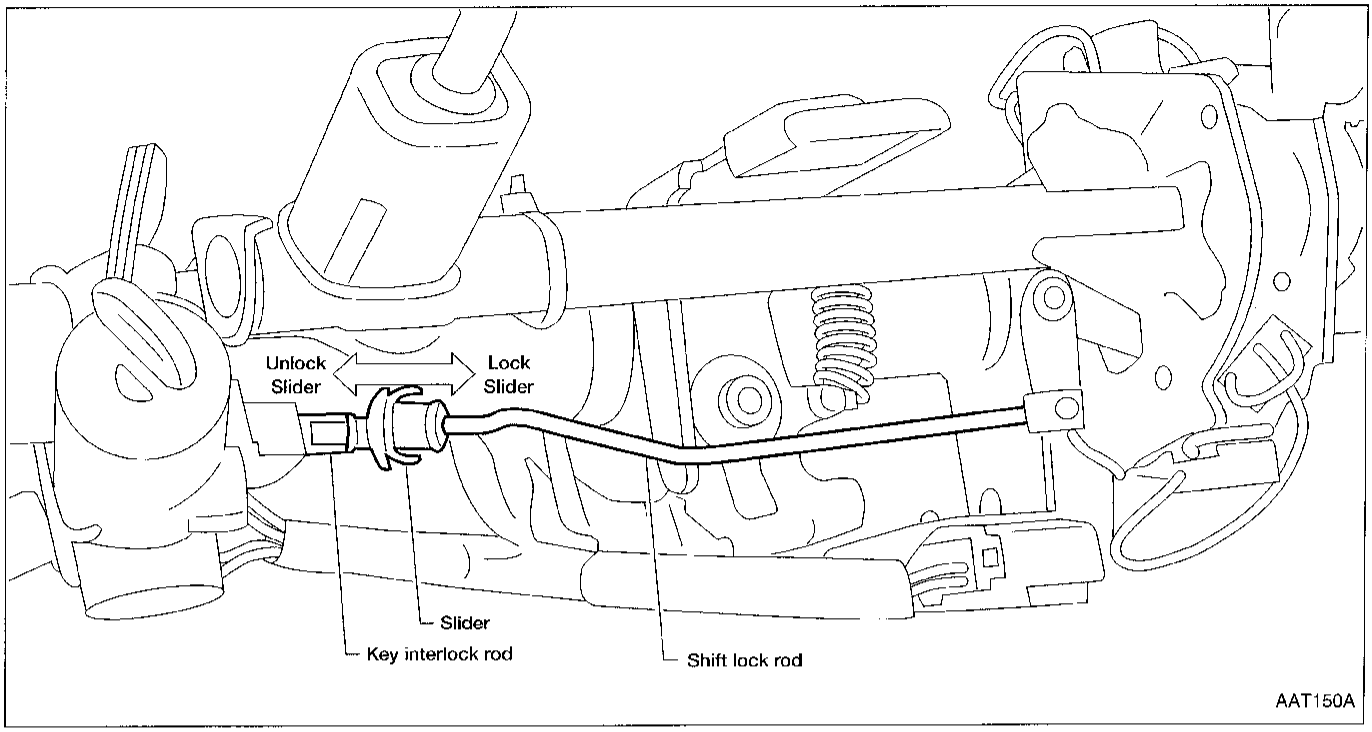

REMOVAL

1. Turn ignition key to ACC position.
2. Unlock slider by squeezing lock tabs.
3. Remove shift lock rod from key interlock rod.

- For removal of key interlock rod, refer to ST section ("Disassembly and Assembly", "STEERING WHEEL AND STEERING COLUMN".)

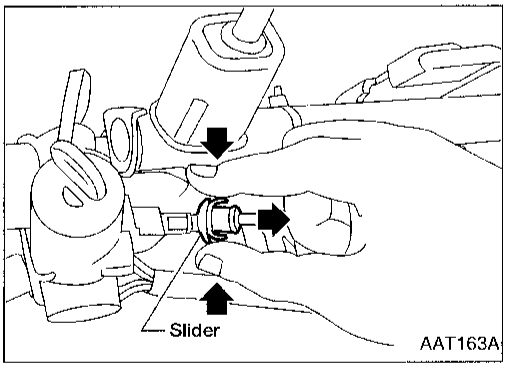

INSTALLATION AND ADJUSTMENT

1. Place selector lever in Park "P" position.
2. Turn ignition key to ACC position.
3. Insert shift lock rod into slider.
4. Grab key interlock rod and push toward shift lock rod to adjust.

Do not hold shift lock rod.

5. Lock slider into position.
6. Test shift lock operation.

Simpo PDF Merge and Split Unregistered Version - http://www.simpopdf.com

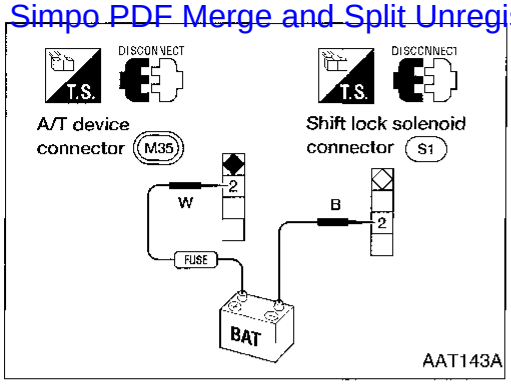

Component Check

SHIFT LOCK SOLENOID

- Check operation by applying battery voltage to A/T device harness terminal ② and shift lock solenoid harness terminal ②.

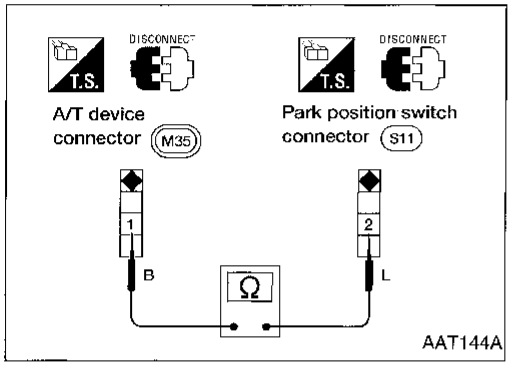

PARK POSITION SWITCH

- Check continuity between A/T device harness terminal ① and park position switch harness terminal ②

Condition	Continuity
When selector lever is set in "P" position and selector lever button is released	Yes
Except above	No

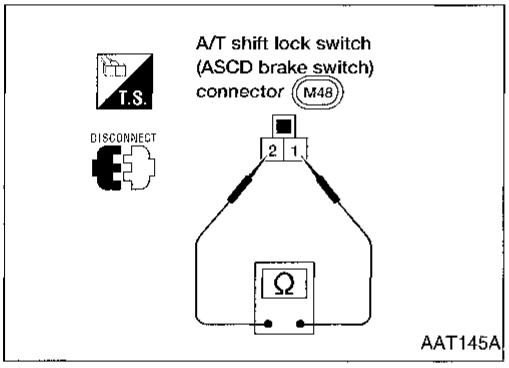

A/T SHIFT LOCK SWITCH (ASCD BRAKE SWITCH)

- Check continuity between terminals ① and ②

Condition	Continuity
When brake pedal is depressed	No
When brake pedal is released	Yes

Check A/T shift lock switch (ASCD brake switch) after adjusting brake pedal. Refer to BR section ("Adjustment", BRAKE PEDAL AND BRACKET").

Simpo PDF Merge and Split Unregistered Version - http://www.simpopdf.com

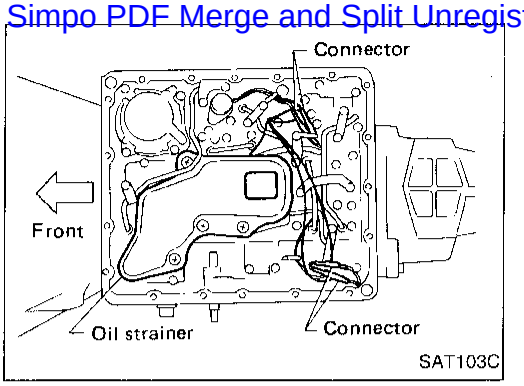

Control Valve Assembly and Accumulators

Removal

1. Drain ATF from drain plug.
2. Remove oil pan and gasket.
3. Remove oil strainer.
4. Disconnect harness connector.

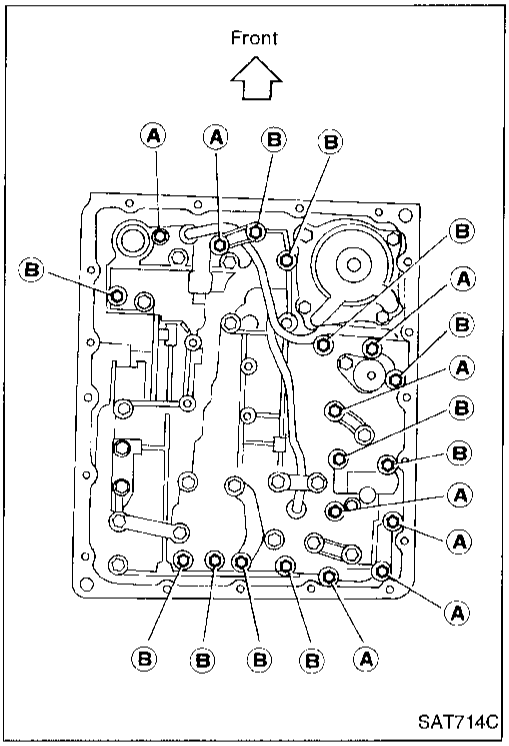

5. Remove control valve assembly by removing fixing bolts.

Bolt length and location

Bolt symbol	ℓ mm (in)
Ⓐ	33 (1.30)
Ⓑ	45 (1.77)

Be careful not to drop manual valve out of valve body.

6. Remove solenoids and valves from valve body if necessary.
7. Remove terminal cord assembly if necessary.

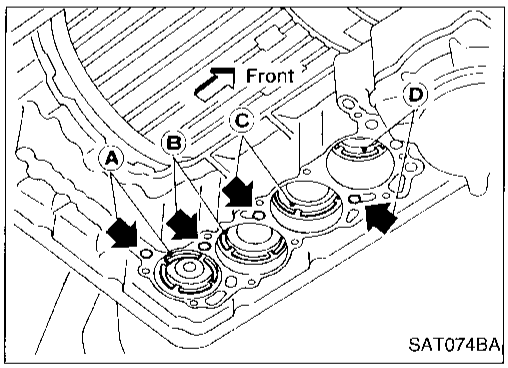

8. Remove accumulators Ⓐ, Ⓑ, Ⓒ and Ⓓ by applying compressed air if necessary.

Hold each piston with a rag.

9. Reinstall any part removed.

- **Always use new sealing parts.**
- **After installing control valve assembly, make sure that selector lever can be moved to all positions.**

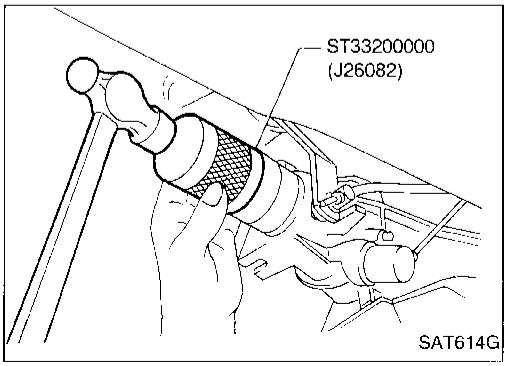

Rear Oil Seal Replacement

1. Remove propeller shaft from vehicle. Refer to PD section ("Removal and Installation", "PROPELLER SHAFT").
2. Remove rear oil seal.
3. Install rear oil seal.

- **Apply ATF before installing.**

4. Reinstall any part removed.

Simpo PDF Merge and Split Unregistered Version - http://www.simpopdf.com

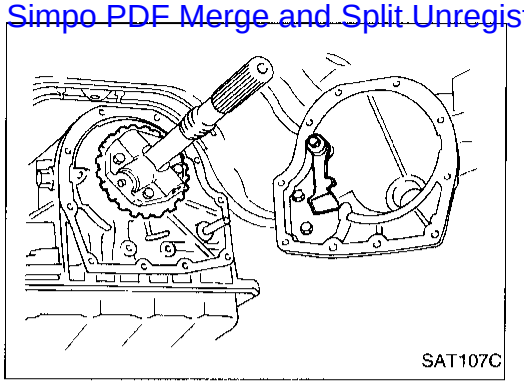
SAT107C

Parking Components Inspection

1. Remove propeller shaft from vehicle. Refer to PD section ("Removal and Installation", "PROPELLER SHAFT").
2. Support A/T assembly with a jack.
3. Remove rear engine mounting member.
4. Remove rear extension from transmission case.
5. Replace parking components if necessary.
6. Reinstall any part removed.

- **Always use new sealing parts.**

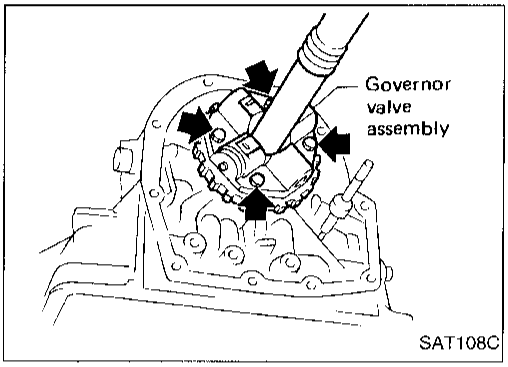

SAT108C

Governor Valve

1. Remove propeller shaft from vehicle. Refer to PD section ("Removal and Installation", "PROPELLER SHAFT").
2. Support A/T assembly with a jack.
3. Remove rear engine mounting member from A/T assembly.
4. Remove rear extension from transmission case.
5. Remove governor valve assembly.
6. Inspect and repair governor valve assembly. Refer to REPAIR FOR COMPONENT PARTS, AT-81.

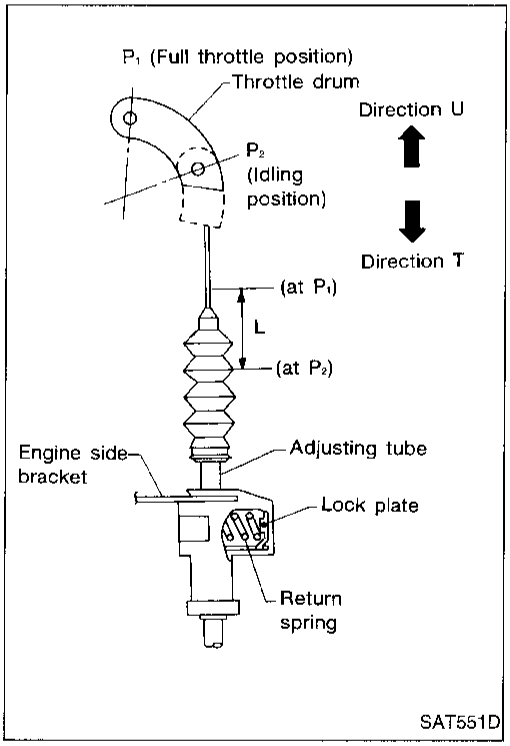

SAT551D

Throttle Wire Adjustment

1. Turn ignition switch OFF.
2. While pressing lock plate, move adjusting tube in Direction T.
3. Release lock plate. (Adjusting tube is locked at this time.)
4. Move throttle drum from P_2 (Idling position) to P_1 (Full throttle position) quickly and release.
5. Ensure that throttle wire stroke "L" is within the specified range, between full throttle and idle.

   Throttle wire stroke "L":
   39 - 43 mm (1.54 - 1.69 in)

- **Adjust throttle wire stroke after accelerator wire is installed and adjusted.**
- **When connecting throttle wire to throttle drum, do not use tools. Manually hook wire.**
- **Put mark on throttle wire for measuring wire stroke.**

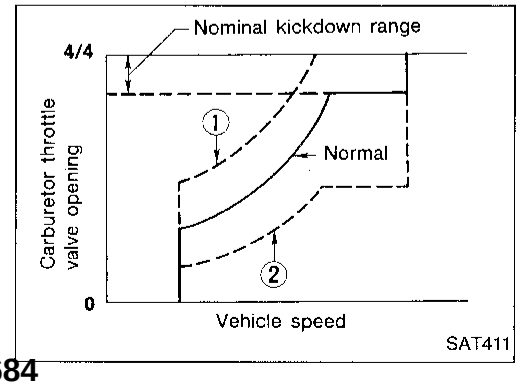

SAT411

If throttle wire stroke is improperly adjusted, the following problems may arise.

- When the throttle drum fully-open position "P_1" is too far toward Direction T, the shift schedule will be as shown by ② in the figure, and the kickdown range will greatly increase.
- When the throttle drum fully-open position "P_1" is too far toward Direction U, the shift schedule will be as shown by ① in the figure, and kickdown will not occur.

Simpo PDF Merge and Split Unregistered Version - http://www.simpopdf.com

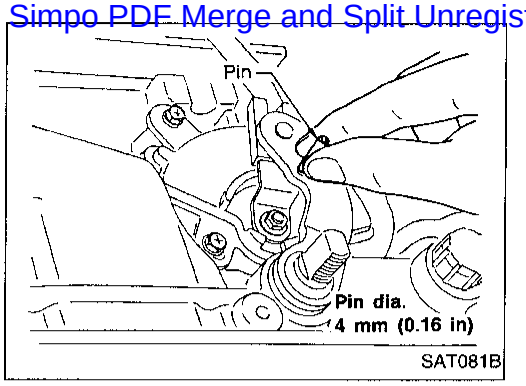

Inhibitor Switch Adjustment

1. Remove control linkage and manual lever from manual shaft.
2. Set manual shaft in "N" position.
3. Loosen inhibitor switch fixing bolts.
4. Insert pin into adjustment holes in both inhibitor switch and manual as near vertical as possible.
5. Tighten inhibitor switch fixing bolts.
6. Remove pin.
7. Reinstall any part removed.
8. Adjust control linkage. Refer to "Manual Control Linkage Adjustment".
9. Check continuity of inhibitor switch. Refer to AT-37.

Control Cable Adjustment

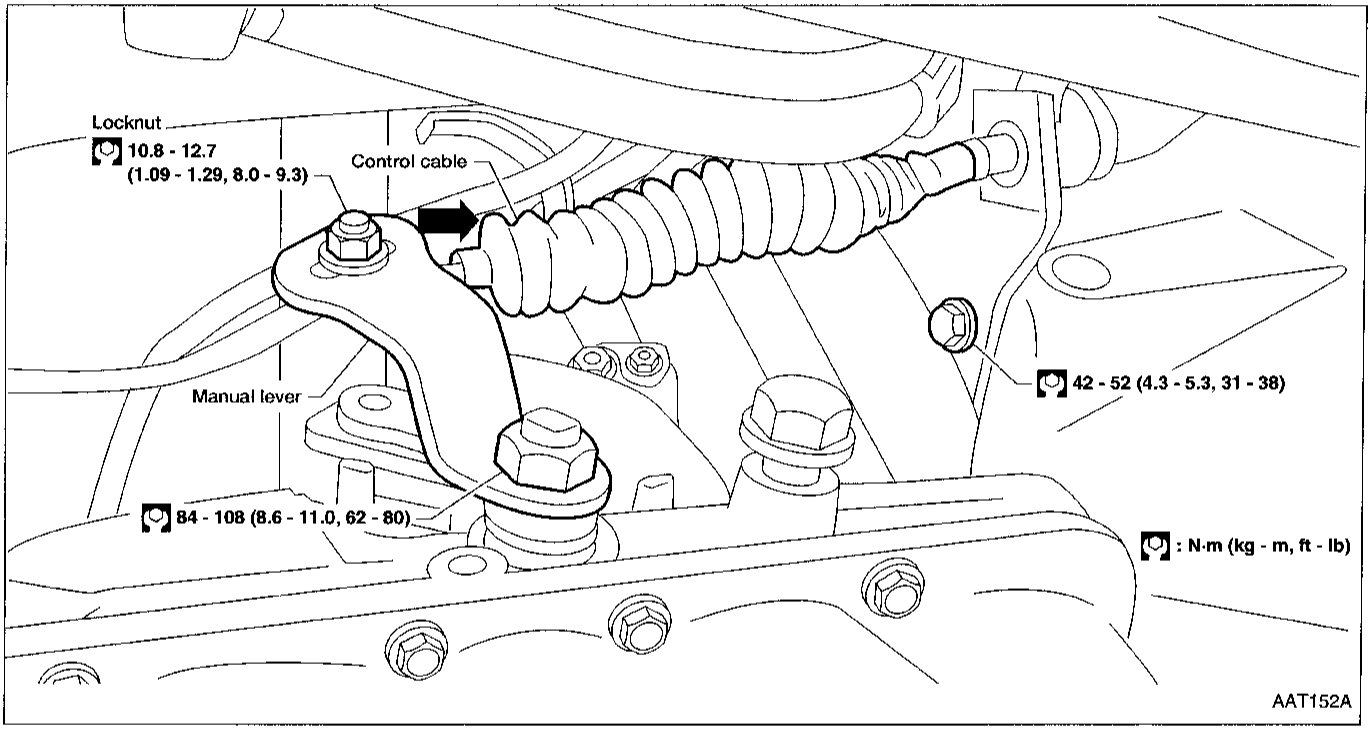

Move the selector lever from the "P" position to "1" position. You should be able to feel the detents in each position.
If the detents cannot be felt, the linkage needs adjustment.

1. Place selector lever in "P" position.
2. Loosen control cable lock nut and place manual shaft in "P" position.
3. Push control cable in the direction of the arrow shown in the illustration by specified force.
   Specified force: 19.6 N (2.0 kg, 4.4 lb)
4. Return control cable in the opposite direction of the arrow for 1.0 mm (0.039 in).
5. Tighten control cable lock nut.
6. Move selector lever from "P" to "1" position again. Make sure that selector lever moves smoothly.
7. Apply grease to contacting areas of selector lever and control cable. Install any part removed.

- **Make sure that the starter operates when the selector lever is placed in the "N" or "P" position.**
- **Make sure that the transmission is locked properly when the selector lever is placed in the "P" position.**

Simpo PDF Merge and Split Unregistered Version - http://www.simpopdf.com

SEC. 112 • 200 • 310

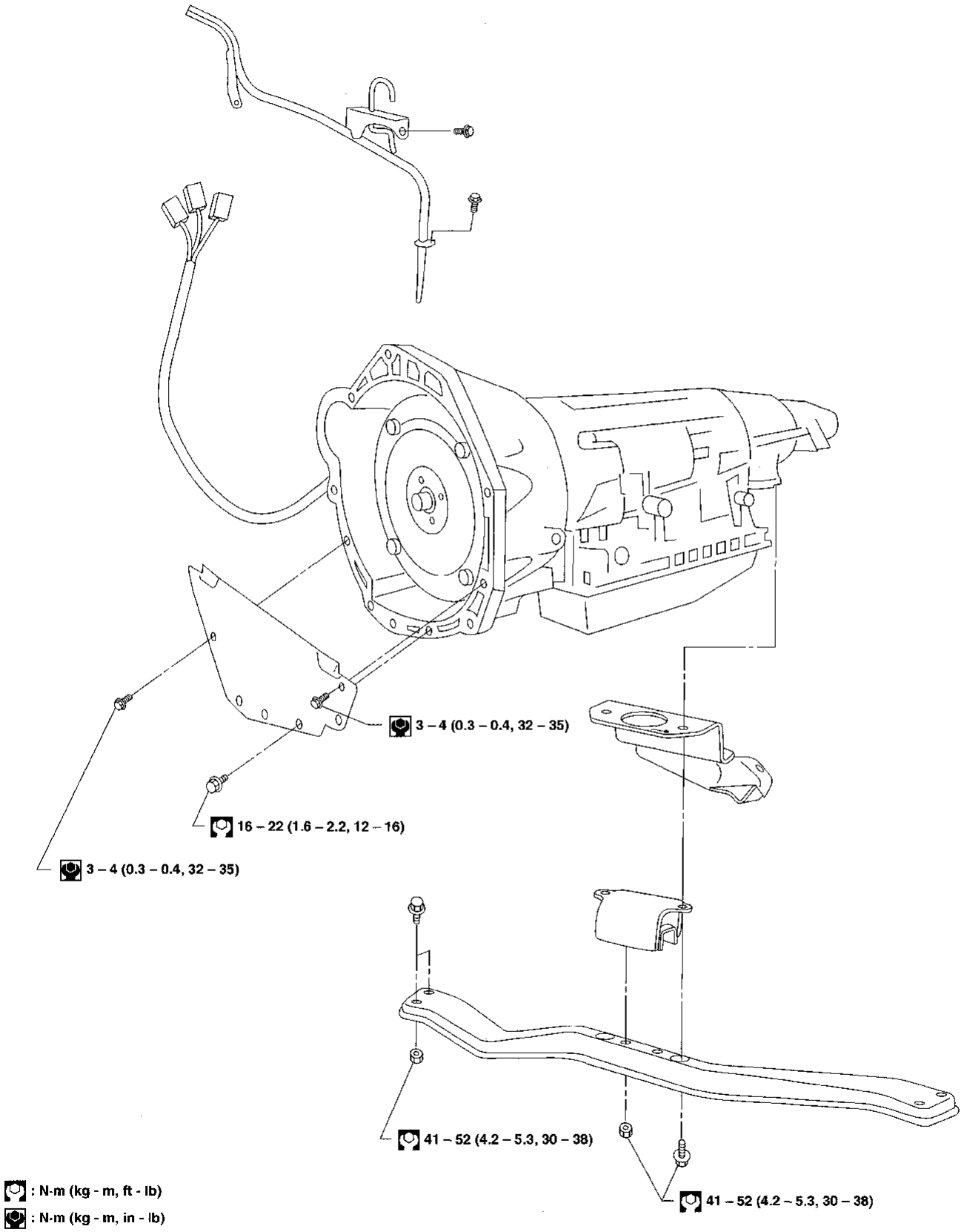

AAT151A

Simpo PDF Merge and Split Unregistered Version - http://www.simpopdf.com

Removal

CAUTION:
Before separating the A/T assembly from engine, first remove the crankshaft position sensor (OBD) from the assembly. Be careful not to damage sensor edge.
NOTE: To prevent oil spills, drain A/T fluid before removing A/T assembly or insert plug into rear oil seal after removing rear propeller shaft.

1. Disconnect battery negative terminal.
2. Remove fluid charging pipe from A/T assembly and plug opening.
3. Remove oil cooler pipe from A/T assembly and plug opening.
4. Remove A/T vent hose.
5. Remove propeller shaft.
   Refer to PD section ("Removal and Installation", "PROPELLER SHAFT").

- **Be careful not to damage spline, sleeve yoke and rear oil seal.**

6. Remove A/T control cable from manual shaft.
7. Disconnect A/T harness connectors and vehicle speed sensor harness connector.
8. Disconnect throttle wire from A/T assembly.

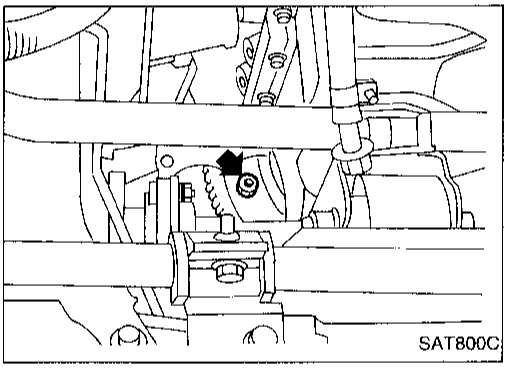
SAT800C

9. Remove starter motor.
10. Remove bolts securing torque converter to drive plate.

- **Rotate crankshaft to gain access to securing bolts.**

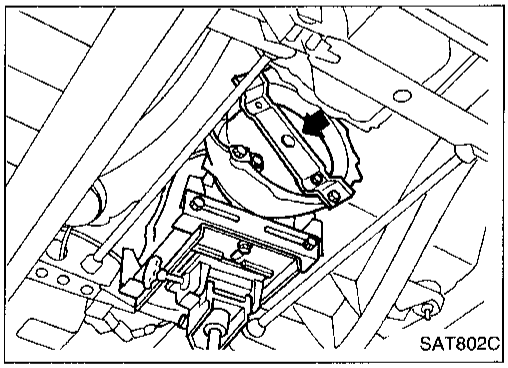
SAT802C

11. Support A/T assembly with a jack.
12. Remove rear mounting bracket from body and A/T assembly.
    Refer to EM section ("ENGINE REMOVAL").
13. Remove bolts securing A/T assembly to engine.
14. Pull A/T assembly backwards.

- **Secure torque converter to prevent it from dropping.**
- **Secure A/T assembly to a jack.**

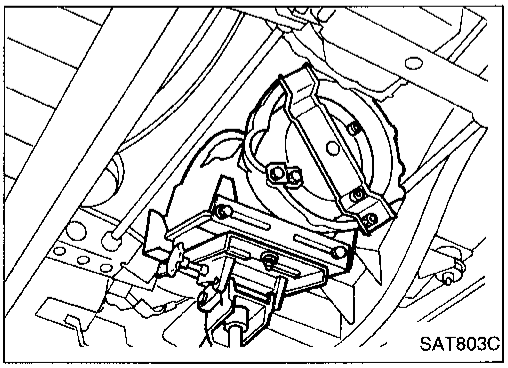
SAT803C

15. Slant and lower A/T assembly.

Simpo PDF Merge and Split Unregistered Version - http://www.simpopdf.com

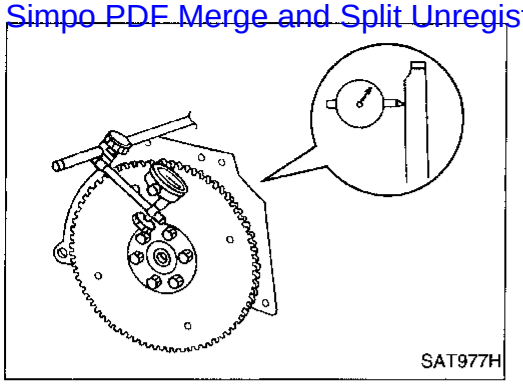
SAT977H

Installation

1. Check drive plate runout.
   CAUTION:
   Do not allow any magnetic materials to contact the ring gear teeth.
   Maximum allowable runout:
   Refer to EM section ("Inspection", "CYLINDER BLOCK").
   If this runout is out of specification, replace drive plate with ring gear.

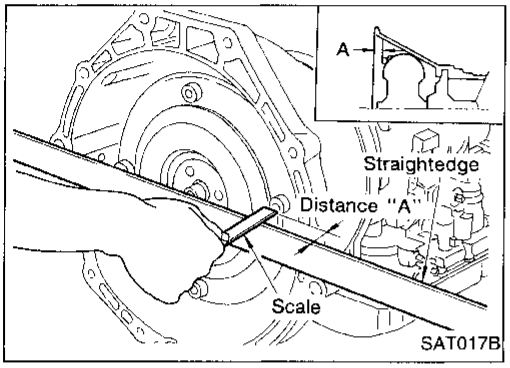

SAT017B

2. When connecting torque converter to transmission, measure distance "A" to be certain that they are correctly assembled.
   Distance "A":
   26.0 mm (1.024 in) or more

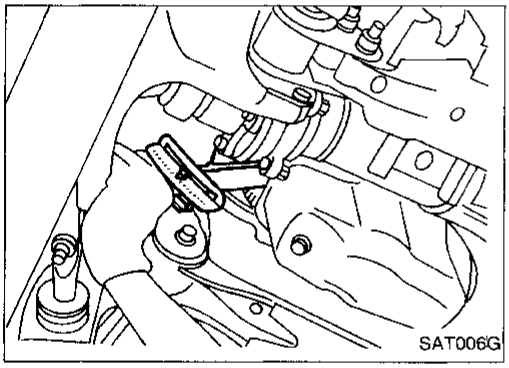
SAT006G

3. Install converter to drive plate.
- **With converter installed, rotate crankshaft several turns to check that transmission rotates freely without binding.**

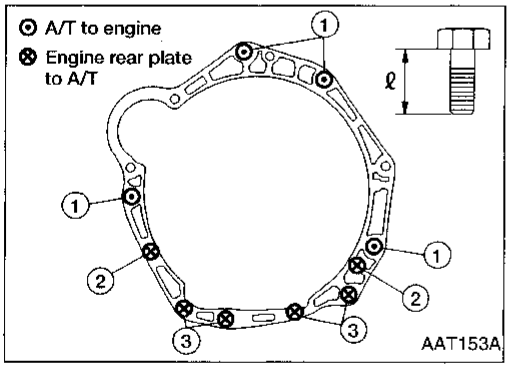

AAT153A

4. Tighten bolts securing transmission.

Bolt No.	Tightening torque N·m (kg-m, ft-lb)	Bolt length "ℓ" mm (in)
①	39 - 49 (4.0 - 5.0, 29 - 36)	43 (1.69)
②	3 - 4 (0.3 - 0.4, 2.2 - 2.9)	16 (0.63)
③	16 - 22 (1.6 - 2.2, 12 - 16)	16 (0.63)


SAT638A

5. Reinstall any part removed.
6. Adjust control cable. Refer to AT-47.
7. Adjust throttle wire. Refer to AT-46.
8. Adjust inhibitor switch. Refer to AT-47.
9. Refill transmission with ATF and check fluid level.
10. Move selector lever through all positions to be sure that transmission operates correctly.
    With parking brake applied, allow engine to idle. Move selector lever through "N" to "D", to "2", to "1" and to "R". A slight shock should be felt through hand gripping the selector each time the transmission is shifted.
11. Perform road test. Refer to "ROAD TEST", AT-28.

Simpo PDF Merge and Split Unregistered Version - http://www.simpopdf.com

SEC. 311•313•315

: N•m (kg-m, ft-lb)
: Genuine anaerobic liquid gasket Three Bond TB1215, Loctite Part No. 51813 or equivalent
(ATF) : Apply ATF.
(P) : Apply petroleum jelly.
★ : Select with proper thickness.

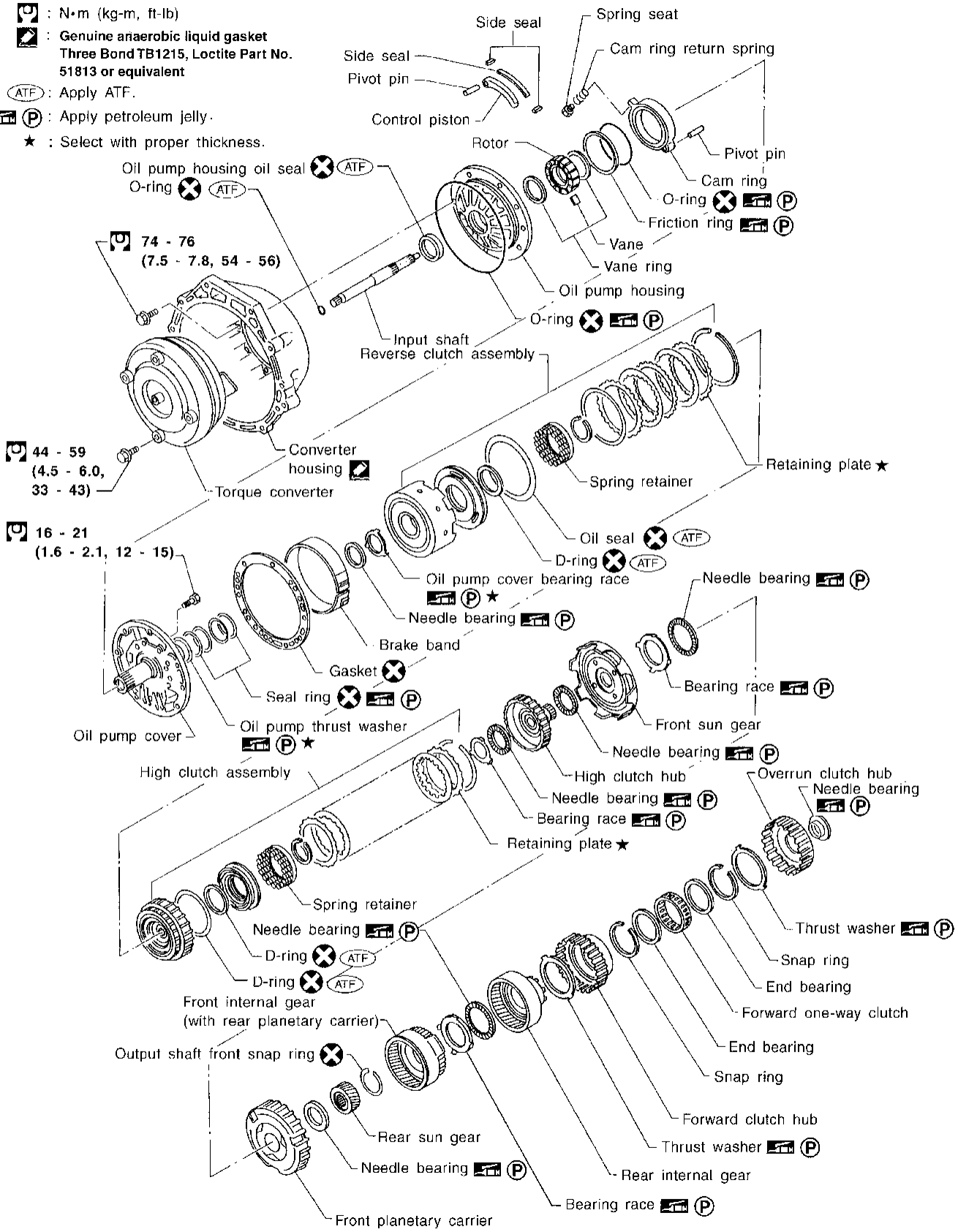

AAT103A

Simpo PDF Merge and Split Unregistered Version - http://www.simpopdf.com

SEC. 311•315•317

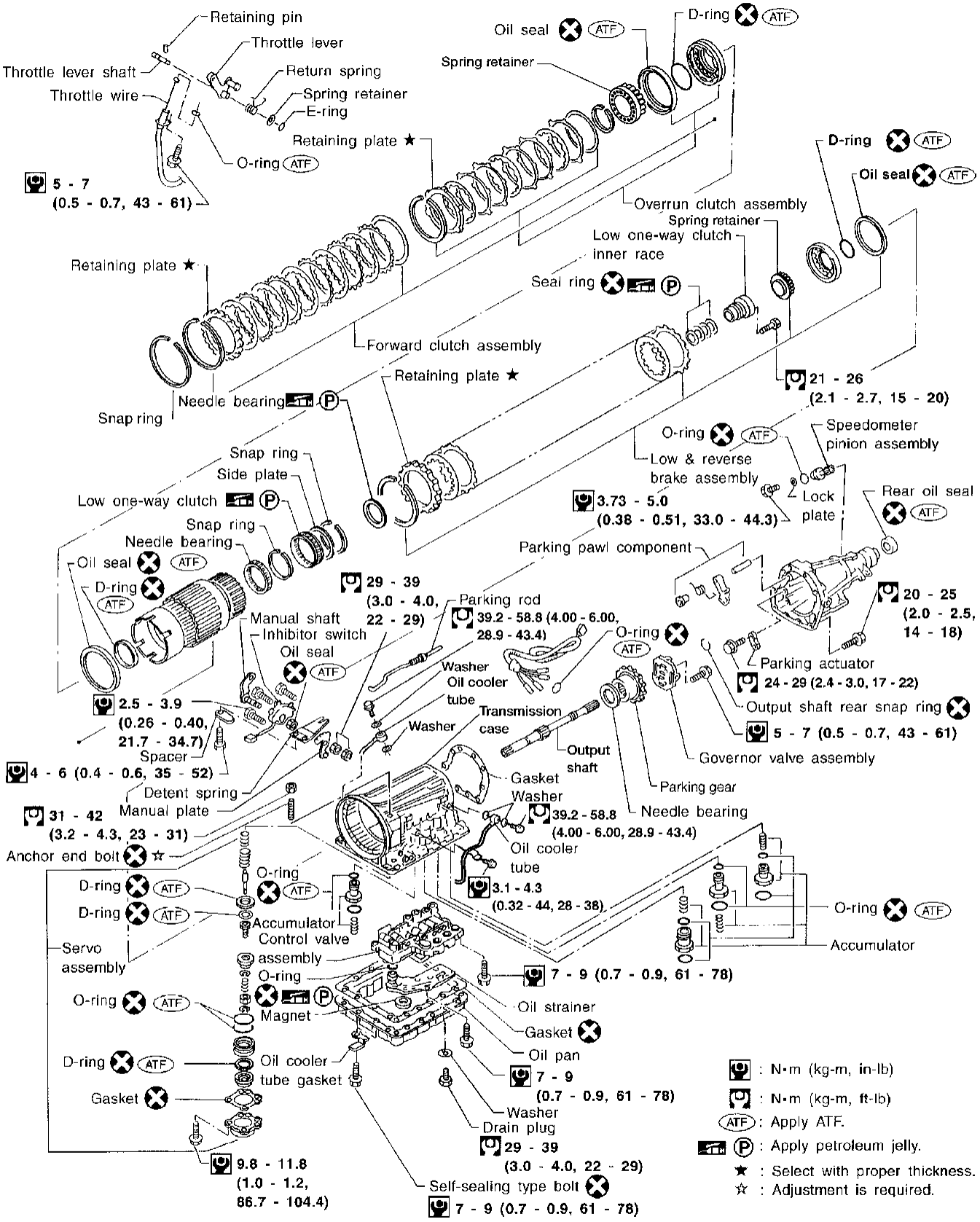

AAT104A

Simpo PDF Merge and Split Unregistered Version - http://www.simpopdf.com

Oil Channel

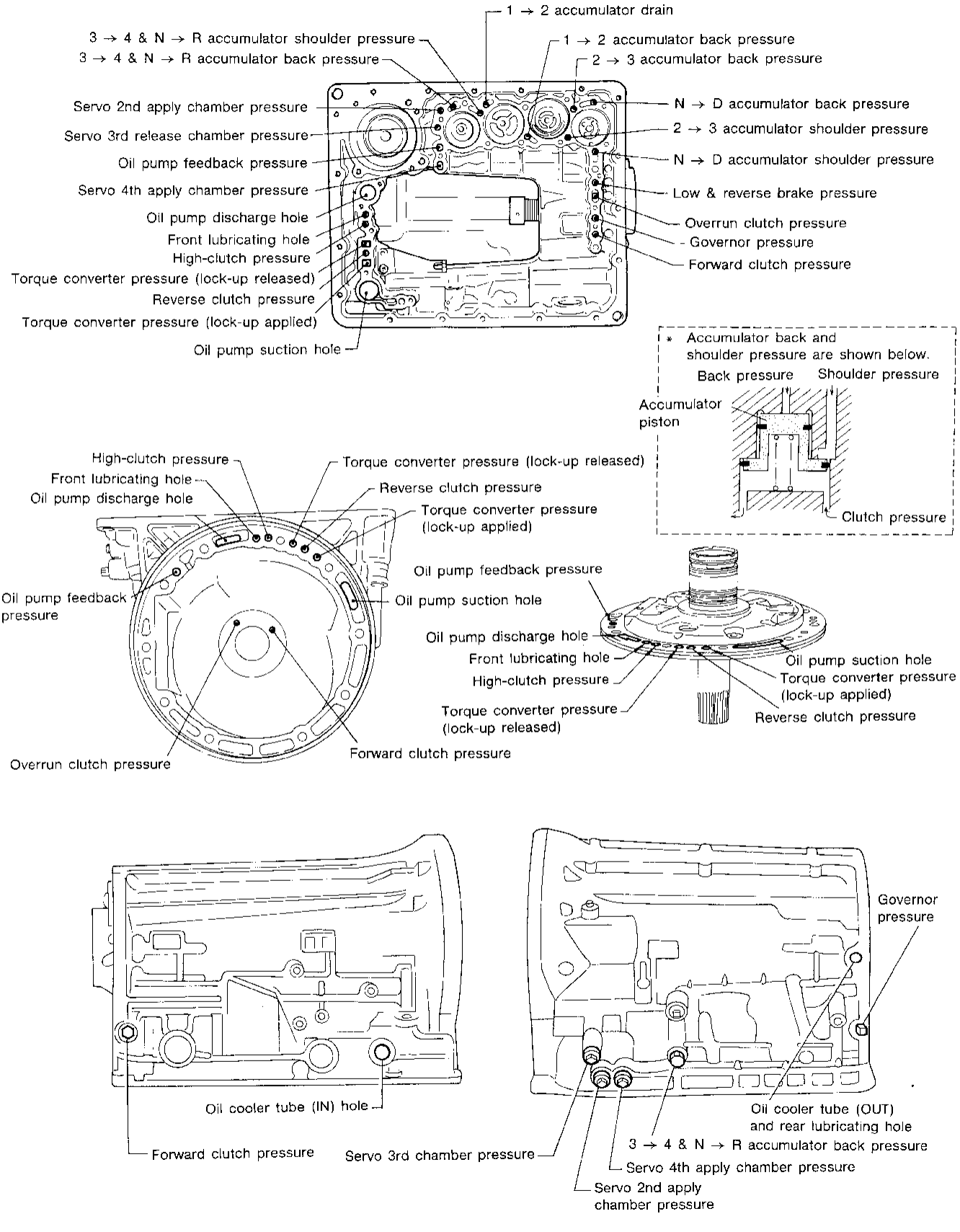

AAT105A

Simpo PDF Merge and Split Unregistered Version - http://www.simpopdf.com

Locations of Needle Bearings, Thrust Washers and Snap Rings

Outer diameter of snap rings

Item number	Outer diameter mm (in)
②	161.0 (6.34)
③	140.1 (5.52)
④	156.4 (6.16)
⑥	142.0 (5.59)
⑦	159.2 (6.27)

Inner diameter of thrust washers

Item number	Color	Inner diameter mm (in)
①★	Black	52.8 (2.08)
⑤	White	84.5 (3.33)

★: Select with proper thickness.

Outer diameter of needle bearings

Item number	Outer diameter mm (in)
⑧	47 (1.85)
⑨	53 (2.09)
⑩	53 (2.09)
⑪	78 (3.07)
⑫	53 (2.09)
⑬	78 (3.07)
⑭	57 (2.24)
⑮	78 (3.07)
⑯	64 (2.52)
⑰	53 (2.09)

Installation of one-piece bearings

Item number	Bearing race (black) location
⑫	Front
⑮	Rear side
⑯	Rear side
⑰	Rear side

Inner diameter of bearing races

Item number	Inner diameter mm (in)
⑪★	58 (2.28)
⑬	58.8 (2.315)

★: Select with proper thickness.

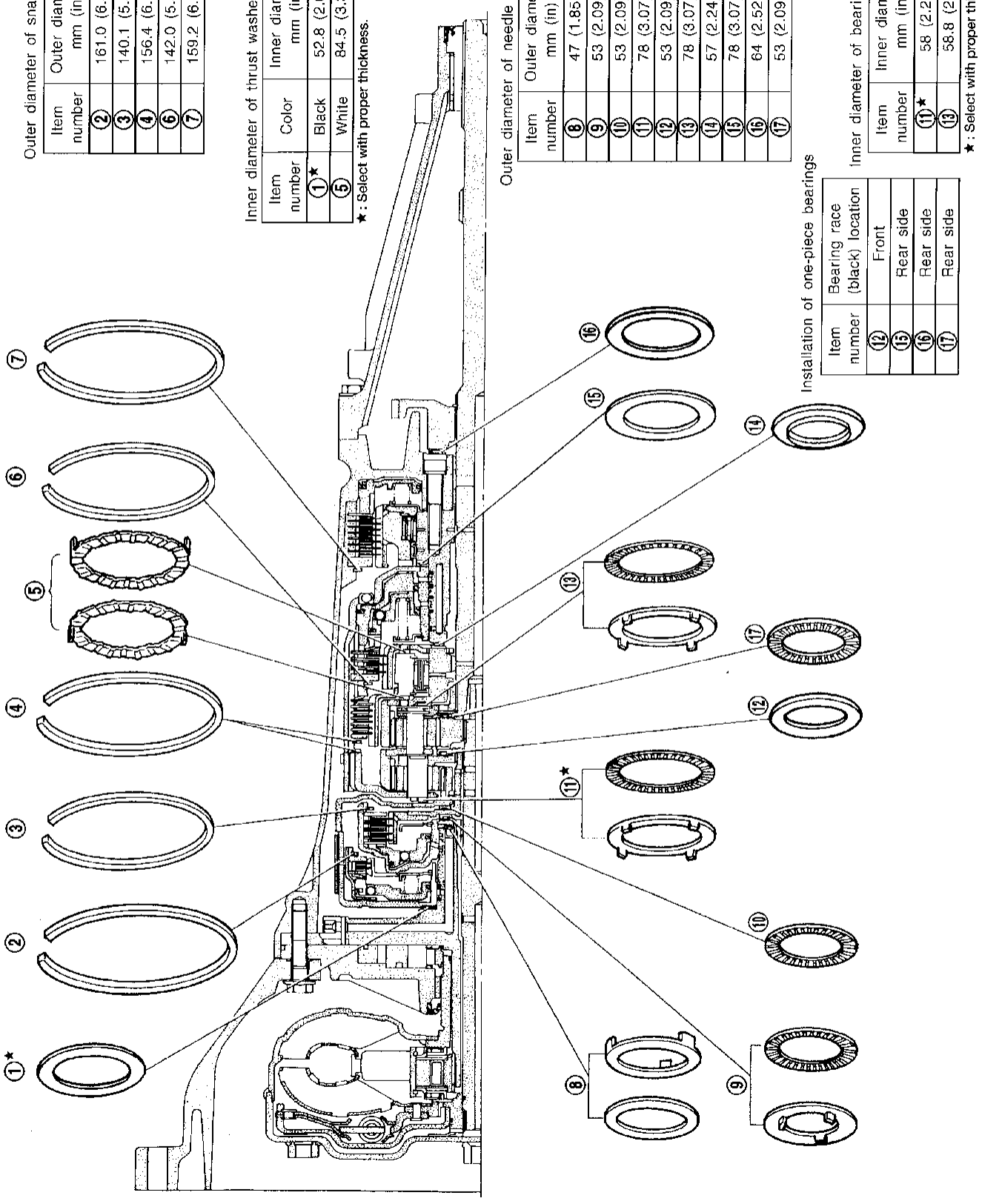

AAT126A

Simpo PDF Merge and Split Unregistered Version - http://www.simpopdf.com

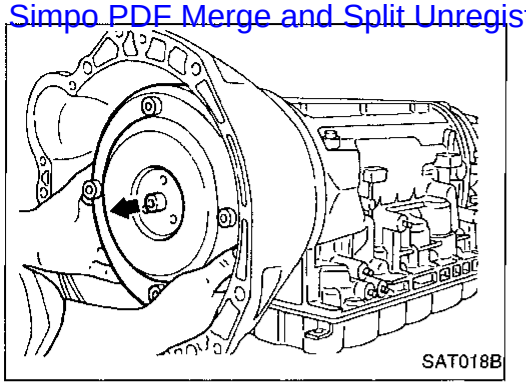
SAT018B

1. Removing torque converter by holding it firmly and turning while pulling straight out.

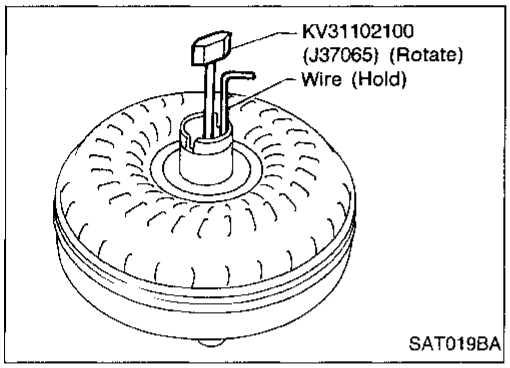

SAT019BA

2. Check torque converter one-way clutch.
a. Insert Tool into spline of one-way clutch inner race.
b. Hook bearing support unitized with one-way clutch outer race with suitable wire.
c. Check that one-way clutch inner race rotates only clockwise with Tool while holding bearing support with wire.

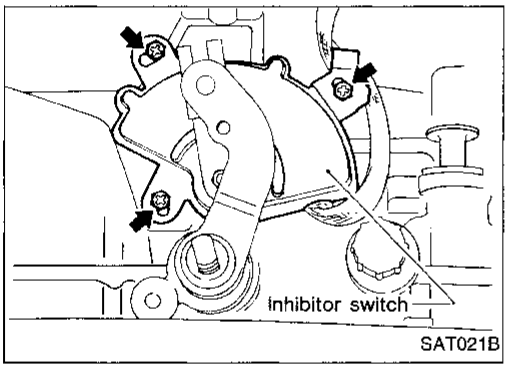

SAT021B

3. Remove inhibitor switch from transmission case.

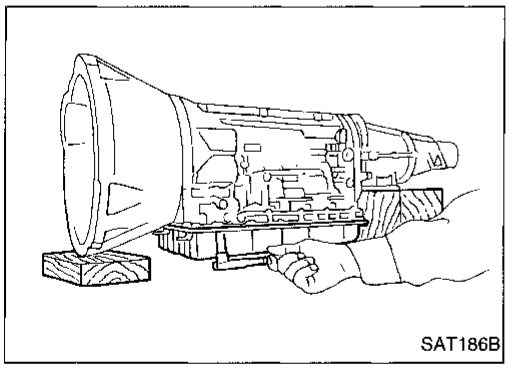
SAT186B

4. Separate the oil pan and transmission case.
a. Drain ATF from drain plug.
b. Raise oil pan by placing wooden blocks under converter housing and adapter case.
c. Remove oil pan and gasket.

- **Always place oil pan straight down so that foreign particles inside will not move.**
- **Do not reuse oil pan bolts.**

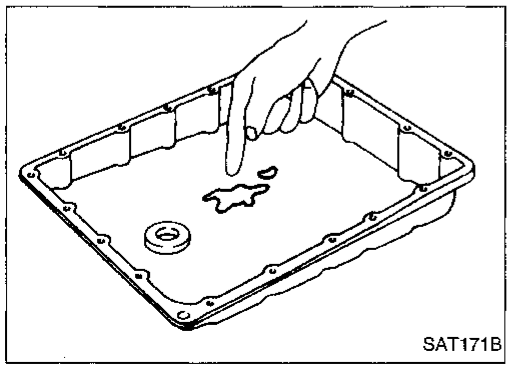
SAT171B

5. Check foreign materials in oil pan to help determine cause of malfunction. If the fluid is very dark, smells burned, or contains foreign particles, the frictional material (clutches, band) may need replacement. A tacky film that will not wipe clean indicates varnish buildup. Varnish can cause valves, servo, and clutches to stick and may inhibit pump pressure.

- **If frictional material is detected, replace radiator after repair of A/T. Refer to LC section ("Radiator", "ENGINE COOLING SYSTEM").**

Simpo PDF Merge and Split Unregistered Version - http://www.simpopdf.com

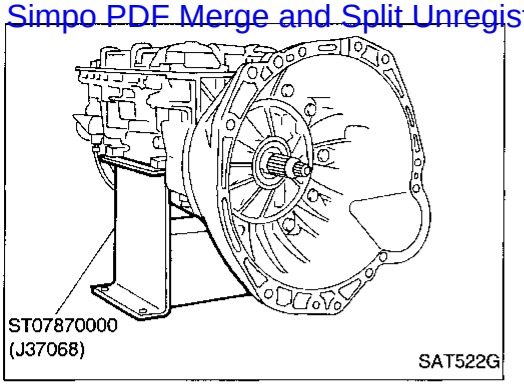

6. Place transmission into Tool with the control valve facing up.

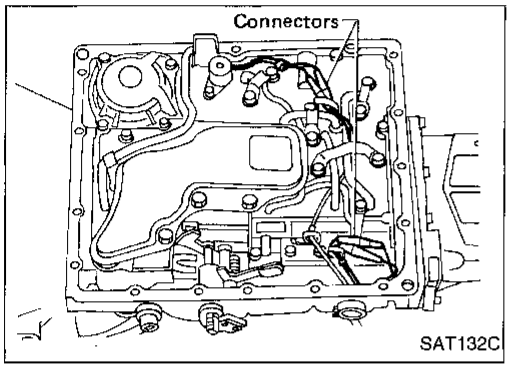

7. Remove torque converter clutch solenoid valve and overdrive cancel solenoid valve connectors.

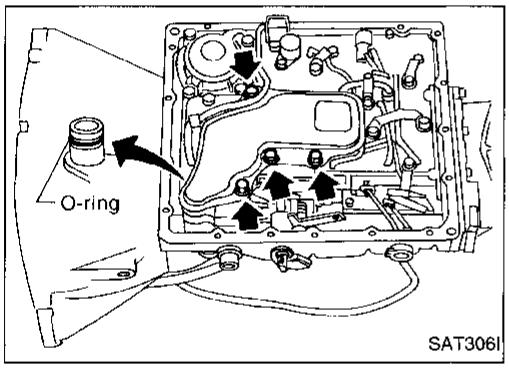

8. Remove oil strainer.
a. Remove oil strainer from control valve assembly. Then remove O-ring from oil strainer.

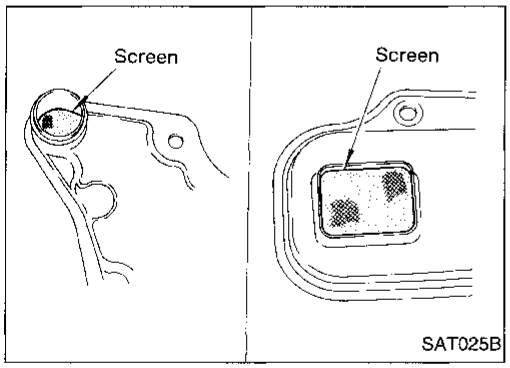

b. Check oil strainer screen for damage.

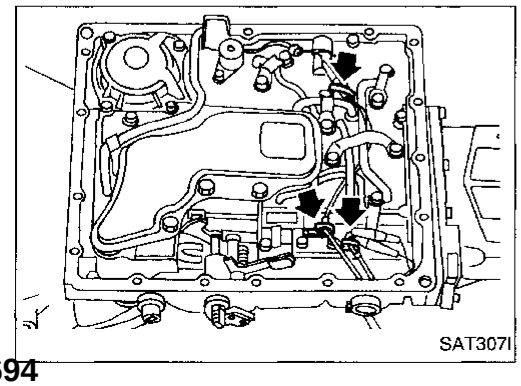

9. Remove control valve assembly.
a. Straighten terminal clips to free terminal cords then remove terminal clips.

Simpo PDF Merge and Split Unregistered Version - http://www.simpopdf.com

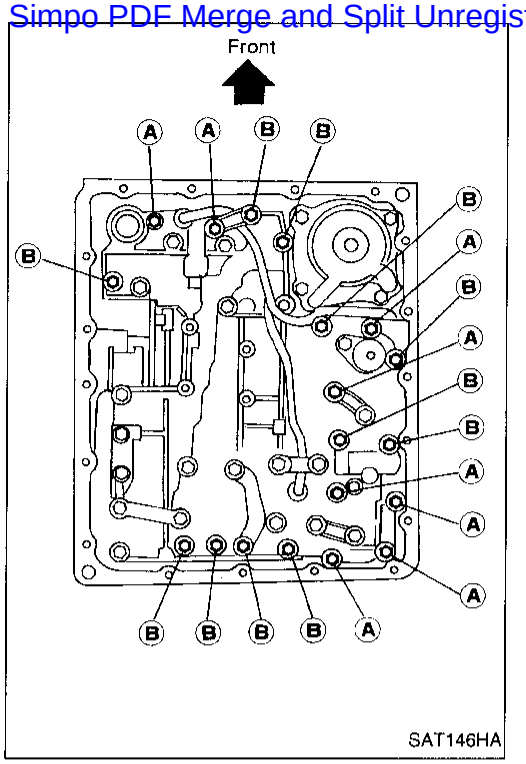

SAT146HA

b. Remove bolts Ⓐ and Ⓑ, and remove control valve assembly from transmission.

Bolt	ℓ mm (in)
Ⓐ	33 (1.30)
Ⓑ	45 (1.77)

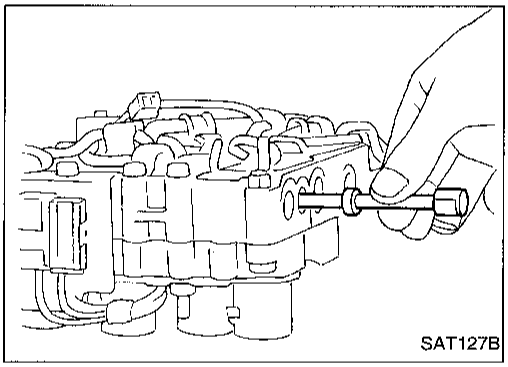
SAT127B

c. Remove manual valve from control valve assembly.

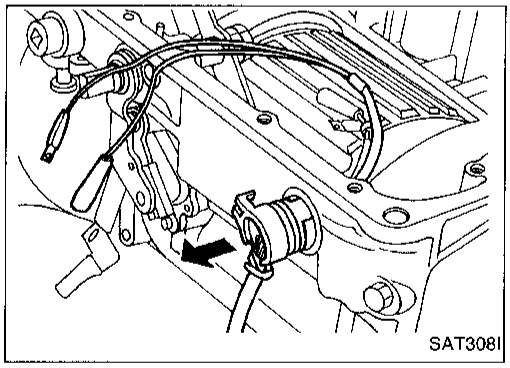
SAT308I

10. Remove terminal cord assembly from transmission case while pushing on stopper.
- **Be careful not to damage cord.**
- **Do not remove terminal cord assembly unless it is damaged.**

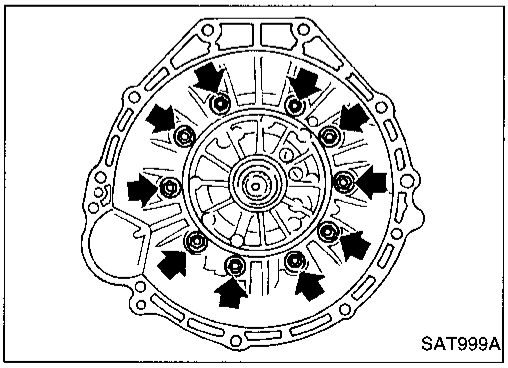
SAT999A

11. Remove converter housing.
a. Remove converter housing bolts.
b. Remove traces of sealant.
- **Be careful not to scratch converter housing.**

Simpo PDF Merge and Split Unregistered Version - http://www.simpopdf.com

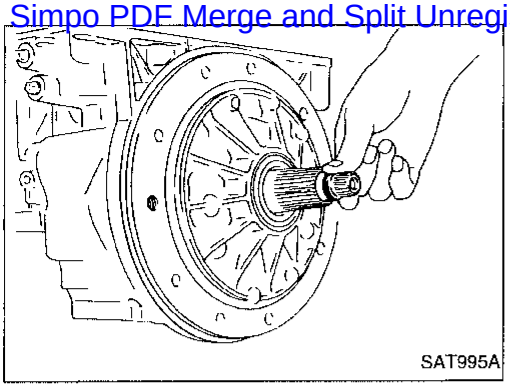
SAT995A

12. Remove O-ring from input shaft.

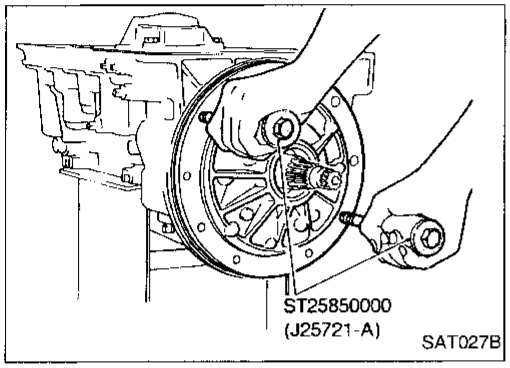

SAT027B

13. Remove oil pump assembly.
a. Attach Tool to oil pump assembly and extract it evenly from transmission case.

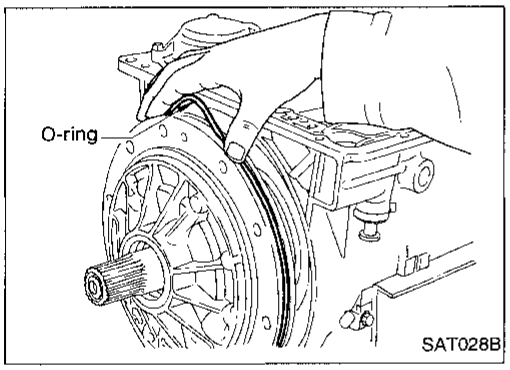

SAT028B

b. Remove O-ring from oil pump assembly.
c. Remove traces of sealant from oil pump housing.
- **Be careful not to scratch pump housing.**

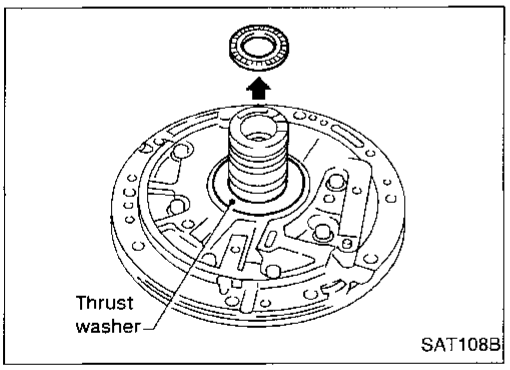

SAT108B

d. Remove needle bearing and thrust washer from oil pump assembly.

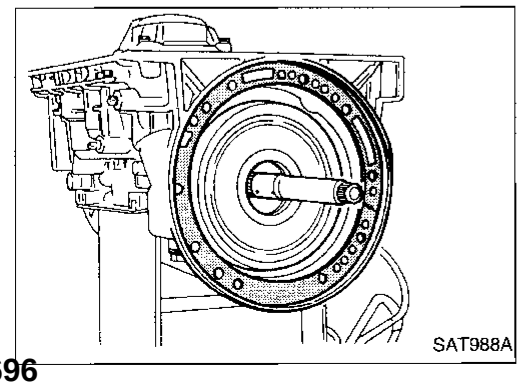
SAT988A

14. Remove input shaft and oil pump gasket.

Simpo PDF Merge and Split Unregistered Version - http://www.simpopdf.com

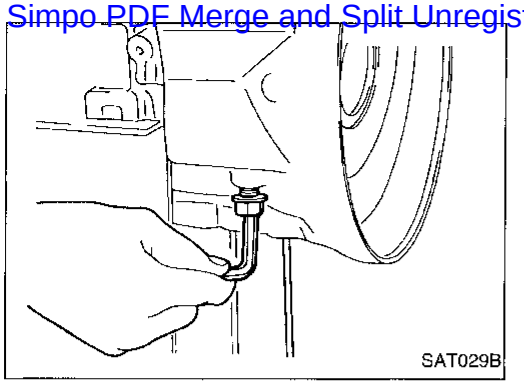
SAT029B

15. Remove brake band and band strut.
a. Loosen lock nut and remove band servo anchor end pin from transmission case.

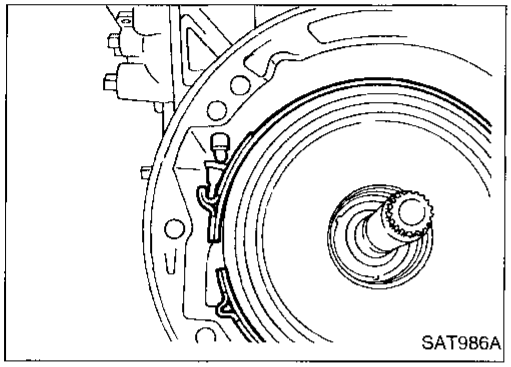
SAT986A

b. Remove brake band and band strut from transmission case.

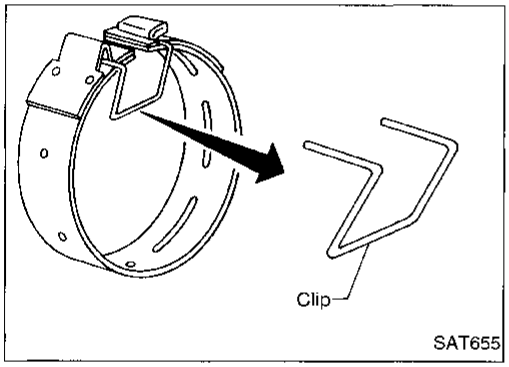

SAT655

- **To prevent brake linings from cracking or peeling, do not stretch the flexible band unnecessarily. When removing the brake band, always secure it with a clip as shown in the figure at left. Leave the clip in position after removing the brake band.**

c. Check brake band facing for damage, cracks, wear and burns.

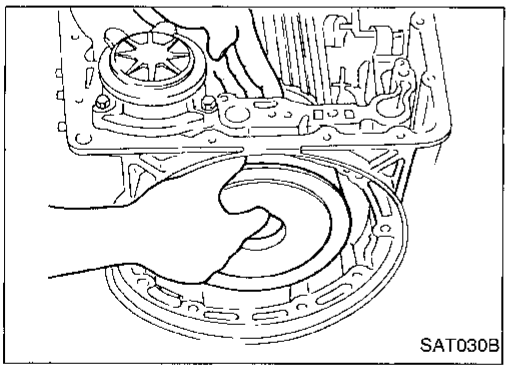
SAT030B

16. Remove front side clutch and gear components.
a. Remove clutch pack (reverse clutch, high clutch and front sun gear) from transmission case.

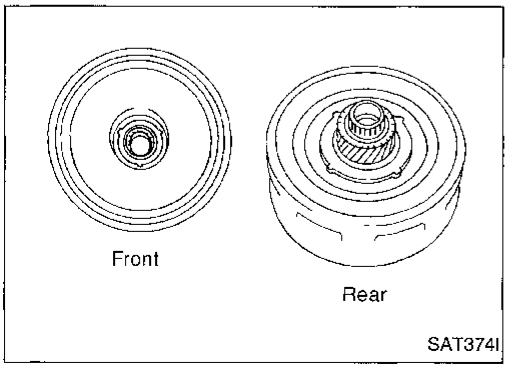

SAT374I

b. Remove front bearing race from clutch pack.
c. Remove rear bearing race from clutch pack.

Simpo PDF Merge and Split Unregistered Version - http://www.simpopdf.com

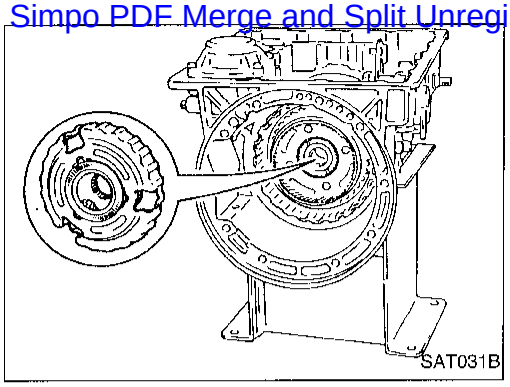

d. Remove front planetary carrier from transmission case.

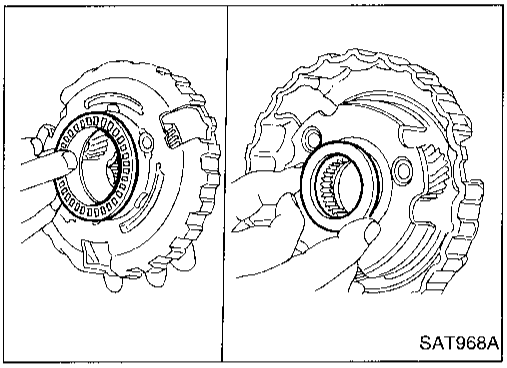

e. Remove front needle bearing from front planetary carrier.
f. Remove rear bearing from front planetary carrier.

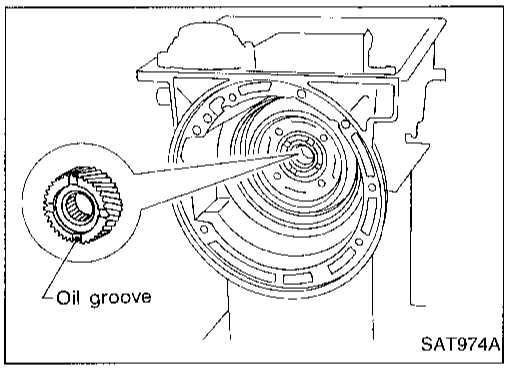

g. Remove rear sun gear from transmission case.

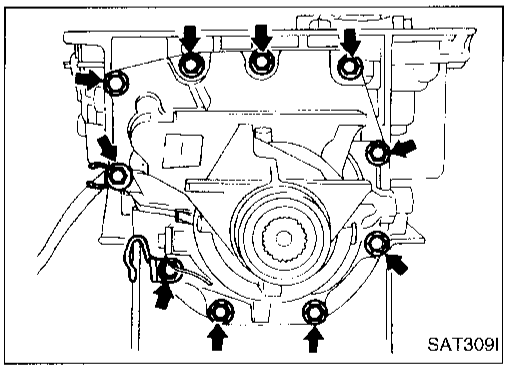

17. Remove rear extension case.
a. Remove rear extension case from transmission case.
b. Remove rear extension gasket from transmission case.

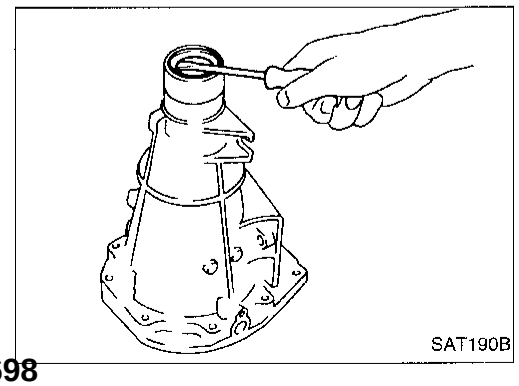

c. Remove oil seal from rear extension case.
- **Do not remove oil seal unless it is to be replaced.**

Simpo PDF Merge and Split Unregistered Version - http://www.simpopdf.com

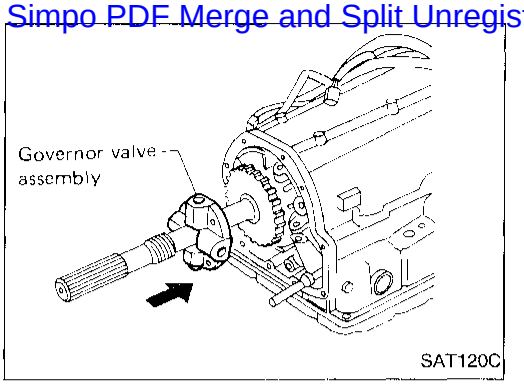

18. Remove output shaft and parking gear.
a. Remove governor valve assembly.

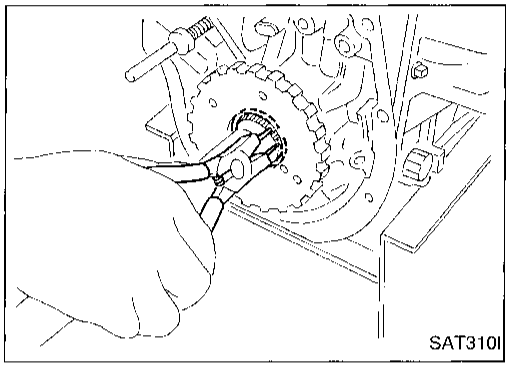

b. Remove rear snap ring from output shaft.

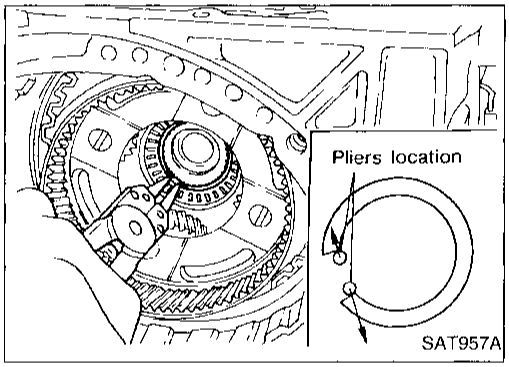

c. Slowly push output shaft all the way forward.
- **Do not use excessive force.**

d. Remove snap ring from output shaft.

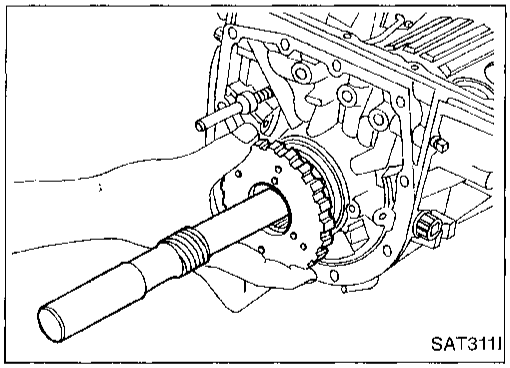

e. Remove output shaft and parking gear as a unit from transmission case.
f. Remove parking gear from output shaft.

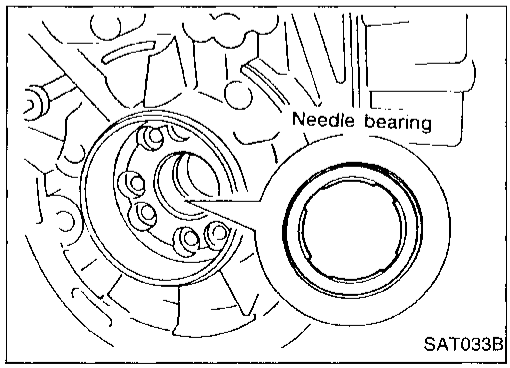

g. Remove needle bearing from transmission case.

Simpo PDF Merge and Split Unregistered Version - http://www.simpopdf.com

19. Remove rear side clutch and gear components.
a. Remove front internal gear.

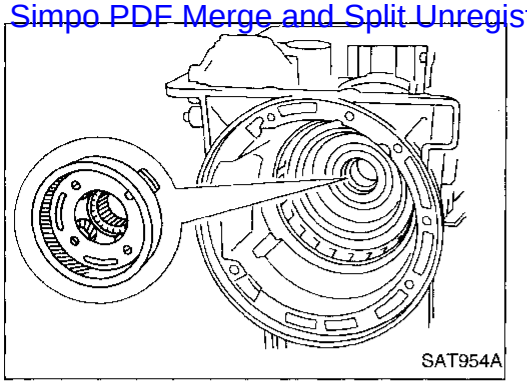
SAT954A

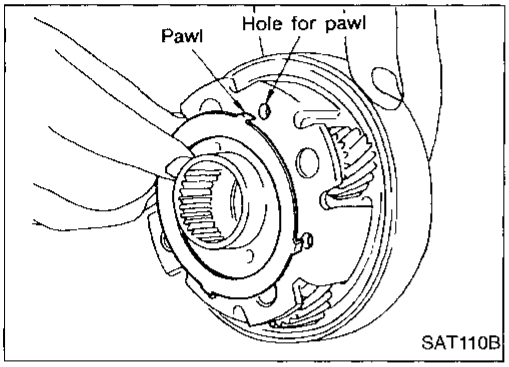

SAT110B

b. Remove bearing race from front internal gear.

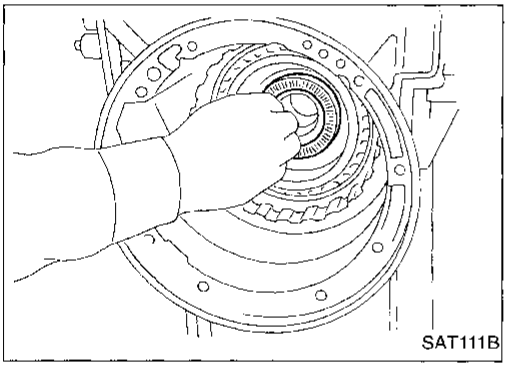
SAT111B

c. Remove needle bearing from rear internal gear.

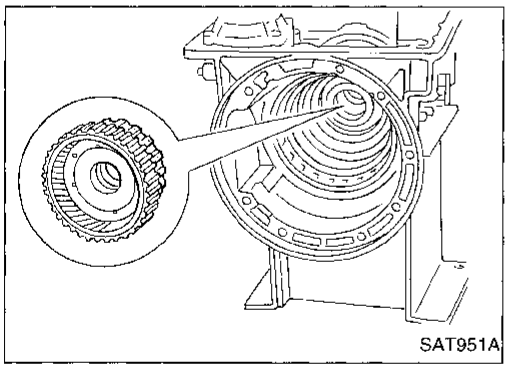
SAT951A

d. Remove rear internal gear, forward clutch hub and overrun clutch hub as a set from transmission case.

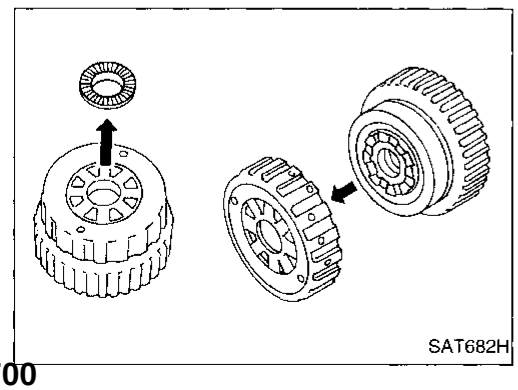
SAT682H

e. Remove needle bearing from overrun clutch hub.
f. Remove overrun clutch hub from rear internal gear and forward clutch hub.

Simpo PDF Merge and Split Unregistered Version - http://www.simpopdf.com

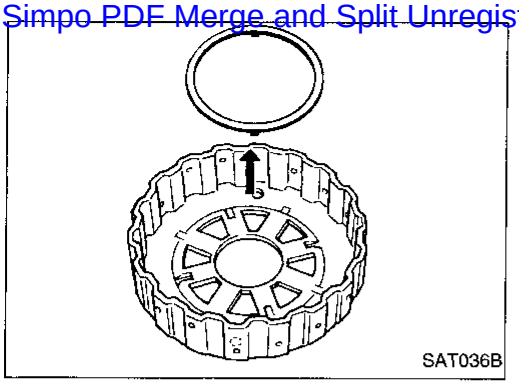
SAT036B

g. Remove thrust washer from overrun clutch hub.

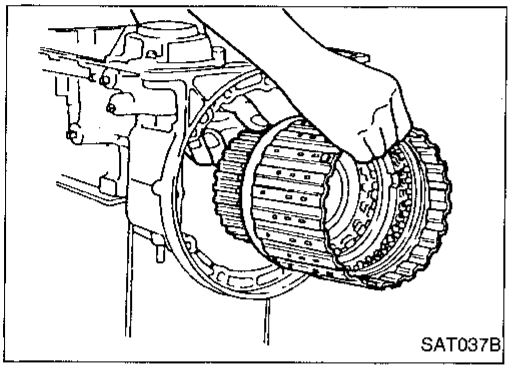
SAT037B

h. Remove forward clutch assembly from transmission case.

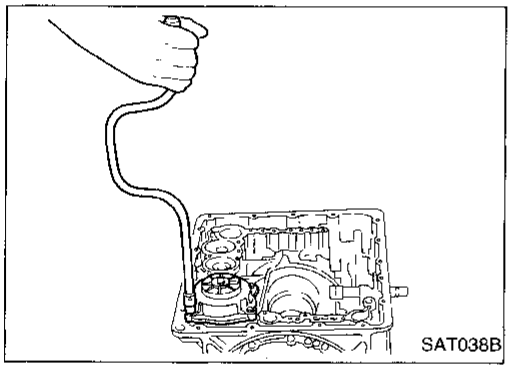
SAT038B

20. Remove band servo and accumulator components.
a. Remove band servo retainer from transmission case.

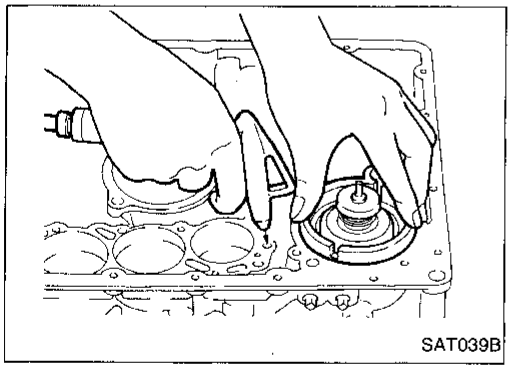
SAT039B

b. Apply compressed air to oil hole until band servo piston comes out of transmission case.

- **Hold piston with a rag and gradually direct air to oil hole.**

c. Remove return springs.

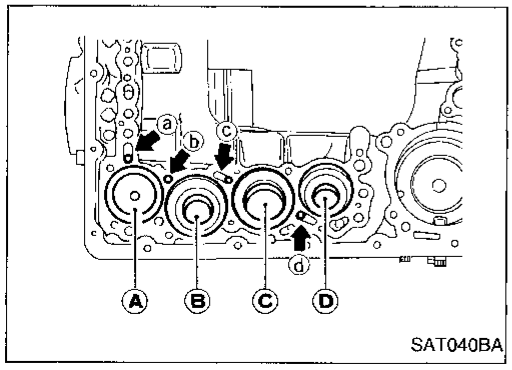

SAT040BA

d. Remove springs from accumulator pistons Ⓐ, Ⓑ, Ⓒ and Ⓓ.
e. Apply compressed air to each oil hole until piston comes out.

- **Hold piston with a rag and gradually direct air to oil hole.**

Identification of accumulator pistons	Ⓐ	Ⓑ	Ⓒ	Ⓓ
Identification of oil holes	ⓐ	ⓑ	ⓒ	ⓓ

Simpo PDF Merge and Split Unregistered Version - http://www.simpopdf.com

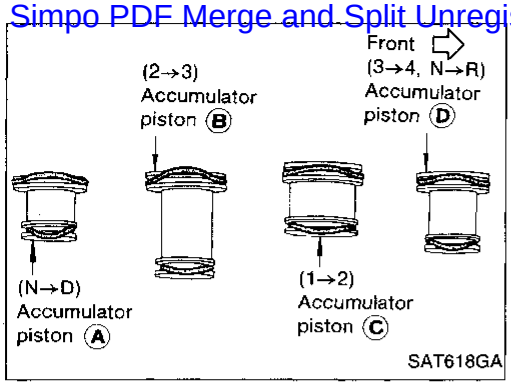

f. Remove O-ring from each piston.

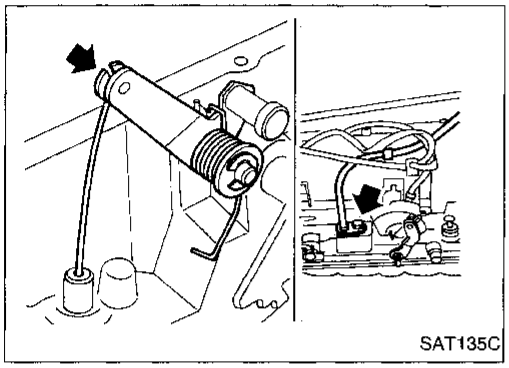

21. Remove throttle wire components if necessary.
a. Remove throttle wire from A/T assembly.

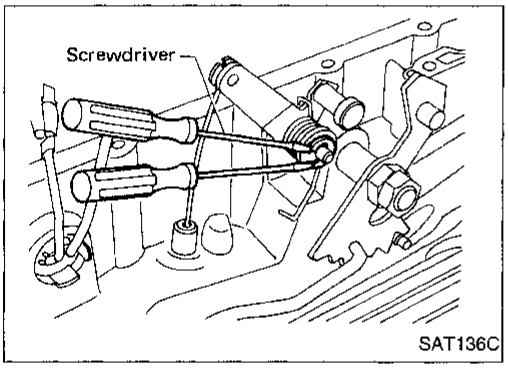

b. Remove throttle lever shaft E-ring.
c. Remove return spring.
d. Remove throttle lever.

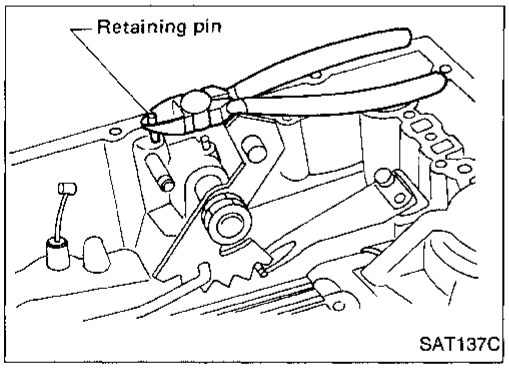

e. Remove throttle lever shaft retaining pin and throttle lever shaft.

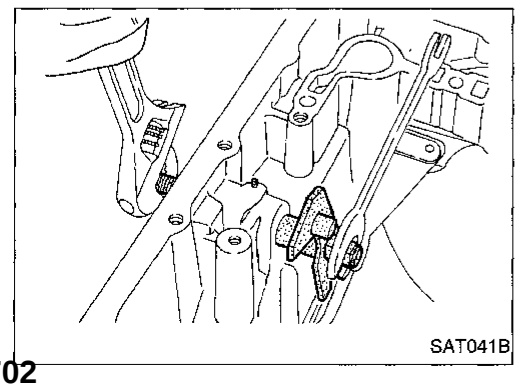

22. Remove manual shaft components, if necessary.
a. Hold width across flats of manual shaft (outside the transmission case) and remove lock nut from shaft.

Simpo PDF Merge and Split Unregistered Version - http://www.simpopdf.com

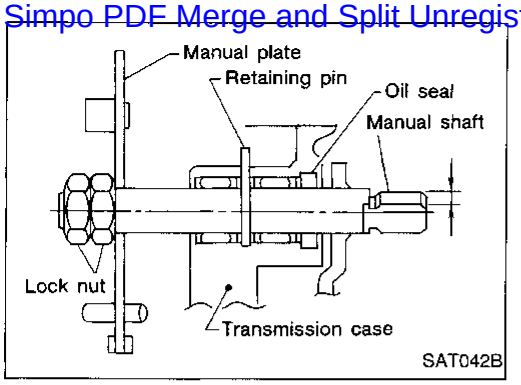

b. Remove retaining pin from transmission case.

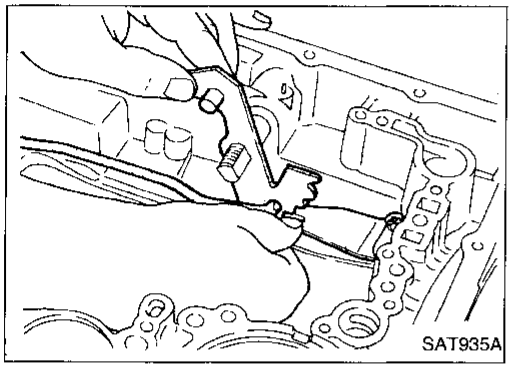

c. While pushing detent spring down, remove manual plate and parking rod from transmission case.

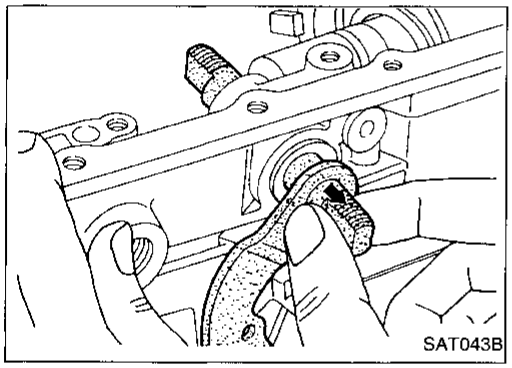

d. Remove manual shaft from transmission case.

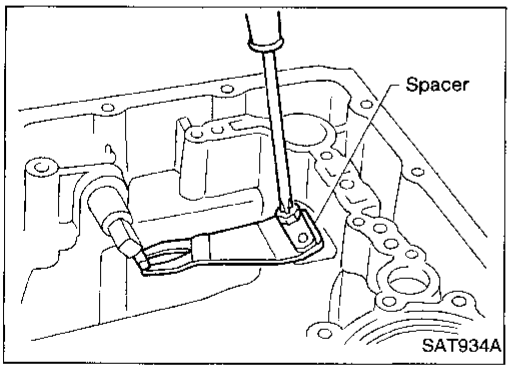

e. Remove spacer and detent spring from transmission case.

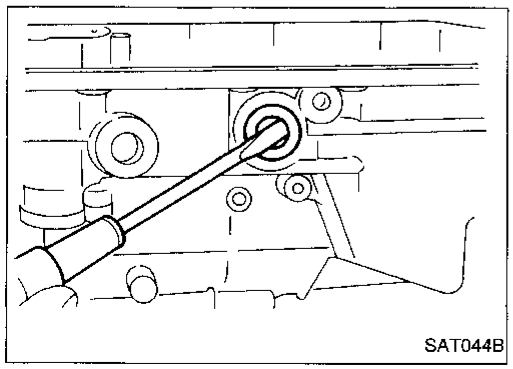

f. Remove oil seal from transmission case.

Simpo PDF Merge and Split Unregistered Version - http://www.simpopdf.com

Oil Pump

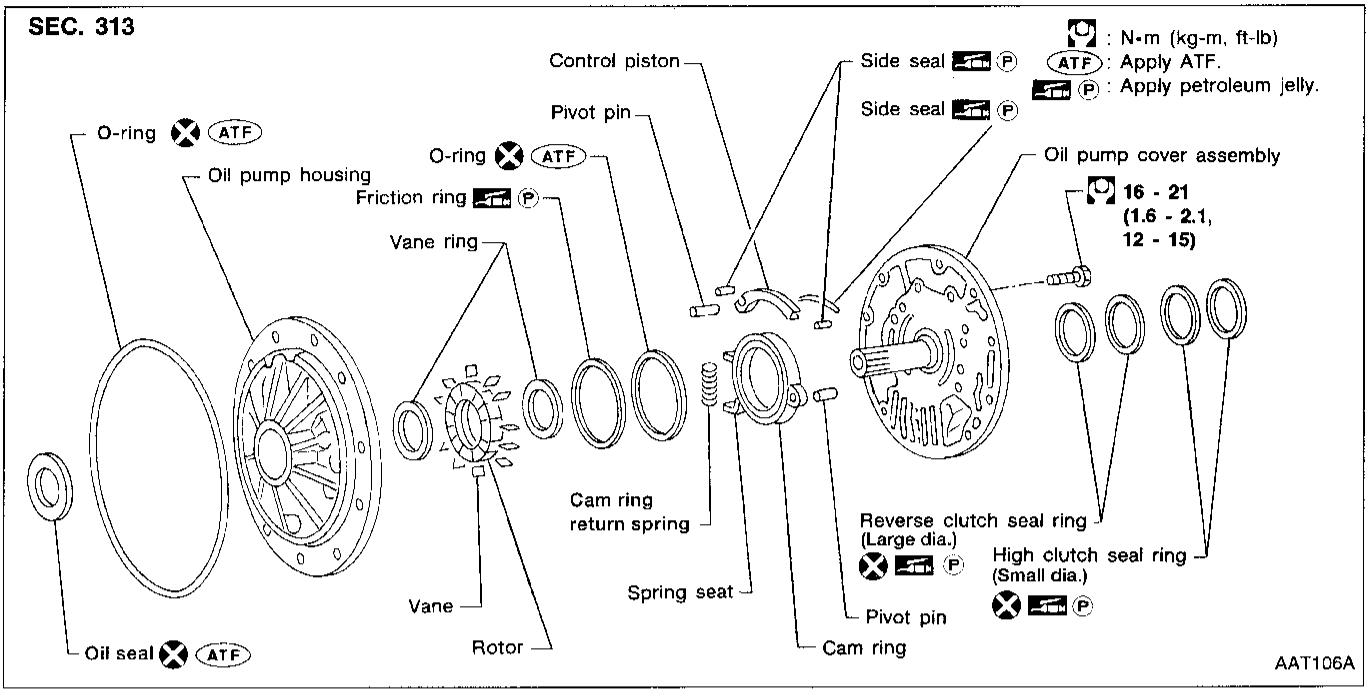

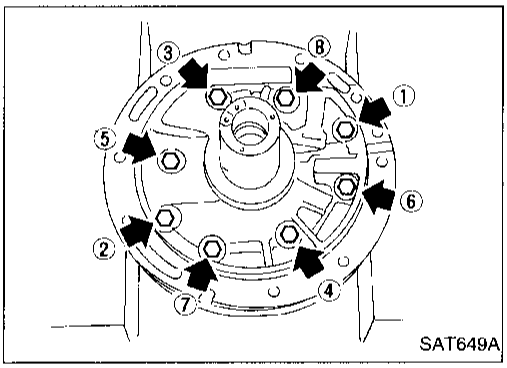

DISASSEMBLY

1. Loosen bolts in numerical order and remove oil pump cover.

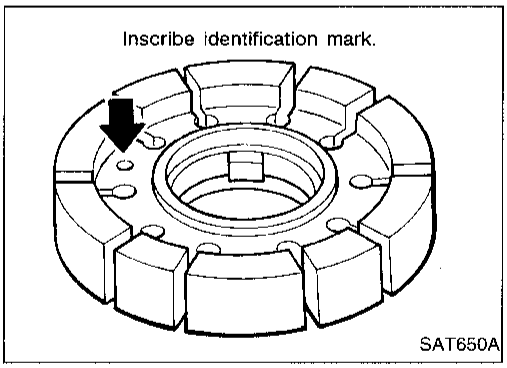

2. Remove rotor, vane rings and vanes.
- **Inscribe a mark on back of rotor for identification of fore-aft direction when reassembling rotor. Then remove rotor.**

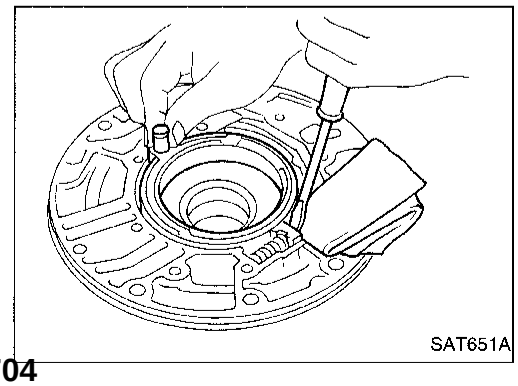

3. While pushing on cam ring, remove pivot pin.
- **Be careful not to scratch oil pump housing.**

Oil Pump (Cont'd)

Simpo PDF Merge and Split Unregistered Version - http://www.simpopdf.com

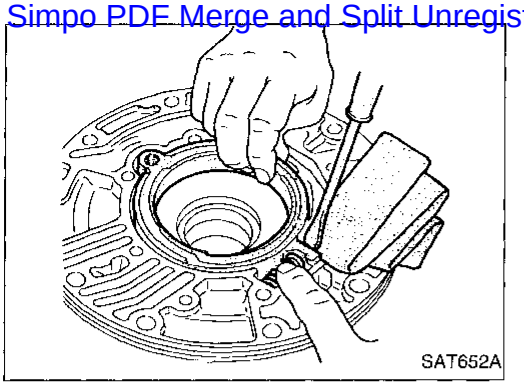
SAT652A

4. While holding cam ring and cam ring return spring, lift out cam ring return spring.
   - **Be careful not to damage oil pump housing.**
   - **Hold cam ring return spring to prevent it from jumping.**

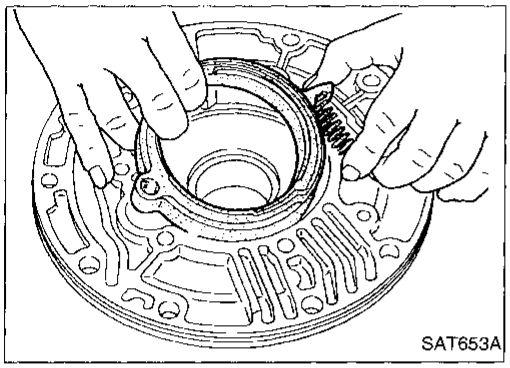
SAT653A

5. Remove cam ring and cam ring return spring from oil pump housing.

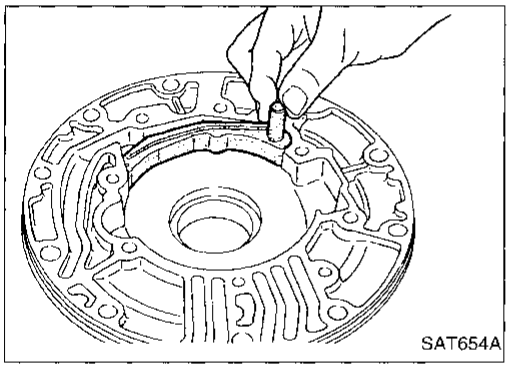
SAT654A

6. Remove pivot pin from control piston and remove control piston assembly.

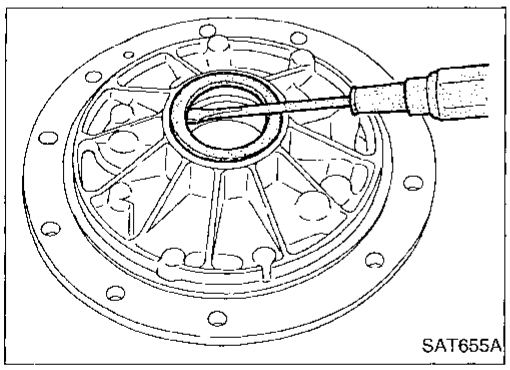
SAT655A

7. Remove oil seal from oil pump housing.
   - **Be careful not to scratch oil pump housing.**

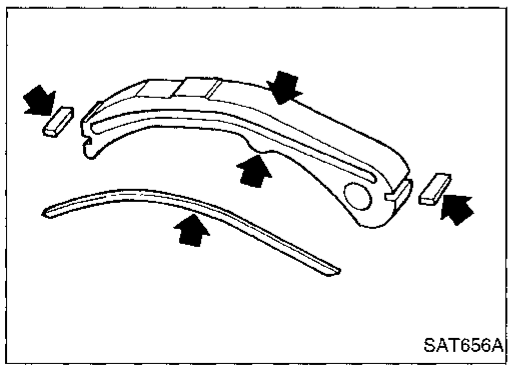
SAT656A

INSPECTION

Oil pump cover, rotor, vanes, control piston, side seals, cam ring and friction ring

- Check for wear and damage.

Oil Pump (Cont'd)

Simpo PDF Merge and Split Unregistered Version - http://www.simpopdf.com

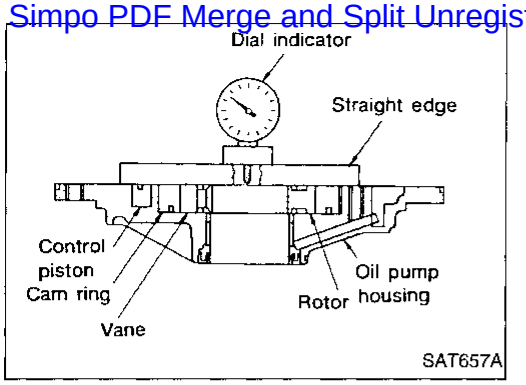

Side clearances

- Measure side clearances between end of oil pump housing and cam ring, rotor, vanes and control piston in at least four places along their circumferences. Maximum measured values should be within specified ranges.
- **Before measuring side clearance, check that friction rings, O-ring, control piston side seals and cam ring return spring are removed.**
  Standard clearance (Cam ring, rotor, vanes and control piston):
  Refer to SDS, AT-125.
- If not within standard clearance, replace oil pump assembly except oil pump cover assembly.

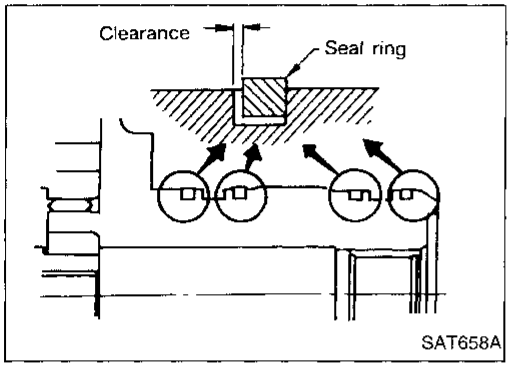

Seal ring clearance

- Measure clearance between seal ring and ring groove.
  Standard clearance:
  0.10 - 0.25 mm (0.0039 - 0.0098 in)
  Wear limit:
  0.25 mm (0.0098 in)
- If not within wear limit, replace oil pump cover assembly.

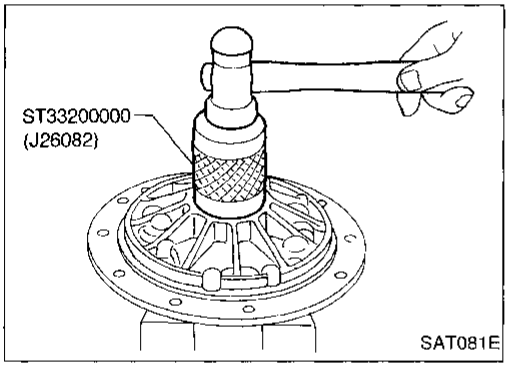

ASSEMBLY

1. Drive oil seal into oil pump housing.
- **Apply ATF to outer periphery and lip surface.**

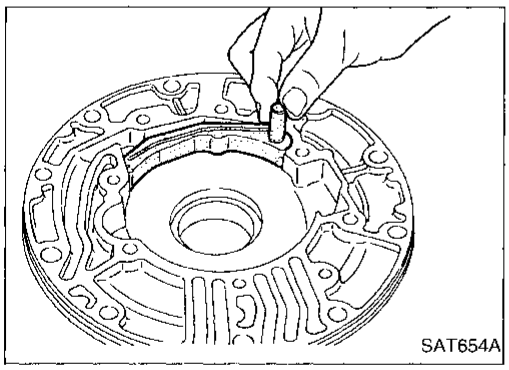

2. Install cam ring in oil pump housing as follows:
a. Install side seal on control piston.
- **Pay attention to its direction — black surface faces toward control piston.**
- **Apply petroleum jelly to side seal.**

b. Install control piston on oil pump.

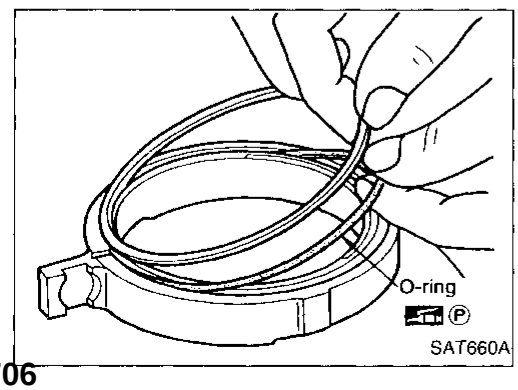

c. Install O-ring and friction ring on cam ring.
- **Apply petroleum jelly to O-ring.**

Oil Pump (Cont'd)

Simpo PDF Merge and Split Unregistered Version - http://www.simpopdf.com

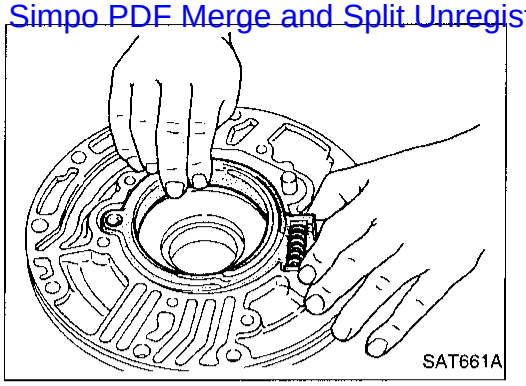
SAT661A

d. Assemble cam ring, cam ring return spring and spring seat. Install spring by pushing it against pump housing.

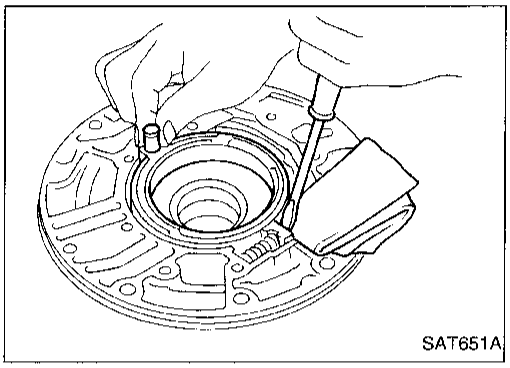
SAT651A

e. While pushing on cam ring install pivot pin.

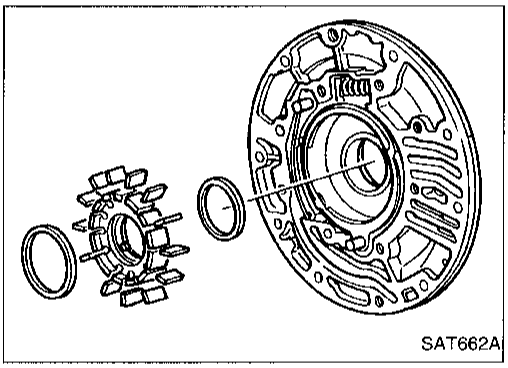
SAT662A

3. Install rotor, vanes and vane rings.

- **Pay attention to direction of rotor.**

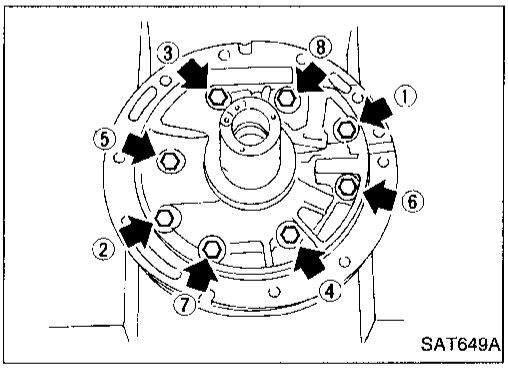

SAT649A

4. Install oil pump housing and oil pump cover.

a. Wrap masking tape around splines of oil pump cover assembly to protect seal. Position oil pump cover assembly in oil pump housing assembly, then remove masking tape.

b. Tighten bolts in numerical order as shown.

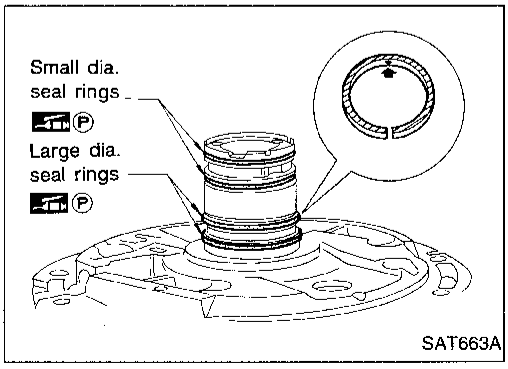

SAT663A

5. Install seal rings carefully after packing ring grooves with petroleum jelly. Press rings down into jelly for a close fit.

- **Seal rings come in two different diameters. Check fit carefully in each groove.**
  Small dia. seal ring:
  No mark
  Large dia. seal ring:
  Yellow mark in area shown by arrow
- **Do not spread gap of seal ring excessively while installing. It may deform ring.**

Simpo PDF Merge and Split Unregistered Version - http://www.simpopdf.com

Control Valve Assembly

SEC. 317

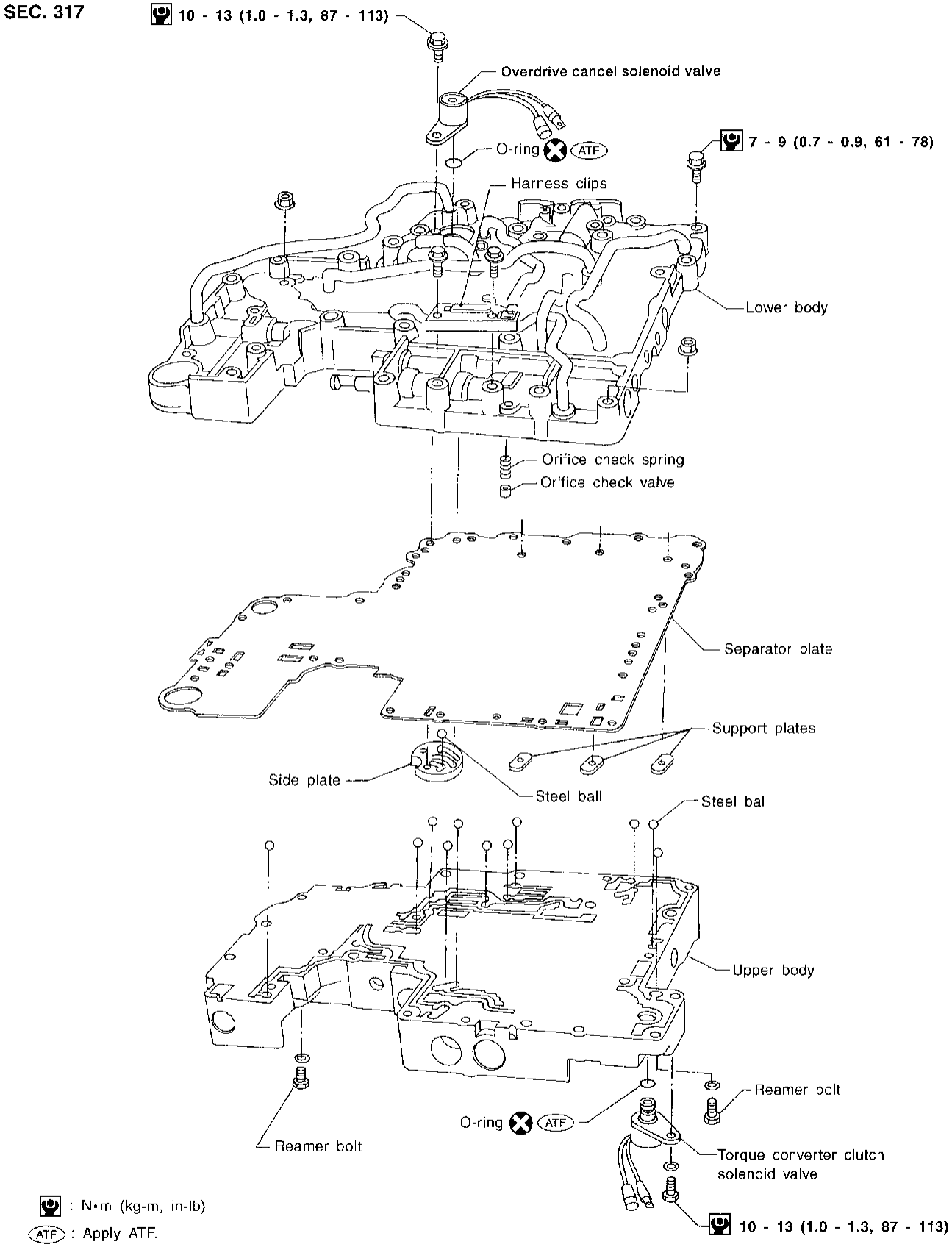

AAT107A

Control Valve Assembly (Cont'd)

Simpo PDF Merge and Split Unregistered Version - http://www.simpopdf.com

DISASSEMBLY

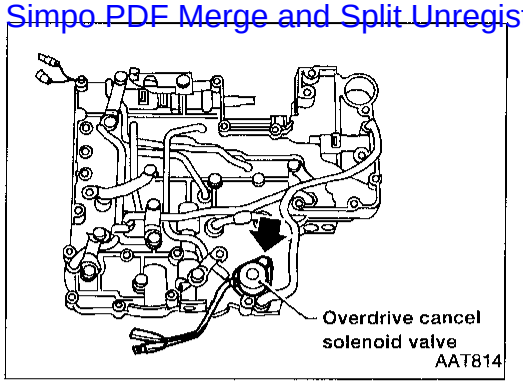

1. Remove solenoids.
a. Remove overdrive cancel solenoid valve and side plate from lower body.
b. Remove O-ring from solenoid.

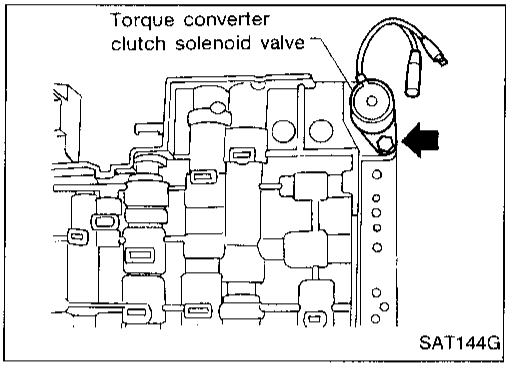

c. Remove torque converter clutch solenoid valve from upper body.
d. Remove O-ring from solenoid valve.

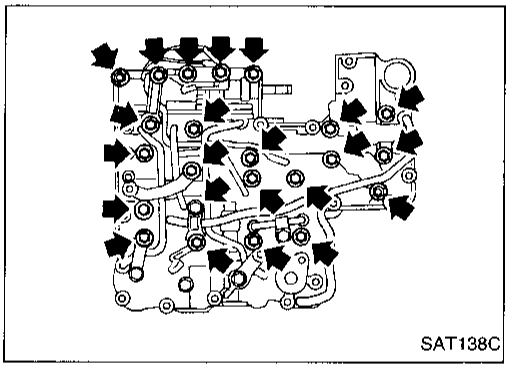

2. Disassemble upper and lower bodies.
a. Place upper body facedown, and remove bolts, reamer bolts, side plate and support plates.
b. Remove lower body and separator plate as a unit from upper body.

- **Be careful not to drop orifice check valve, spring and steel balls.**

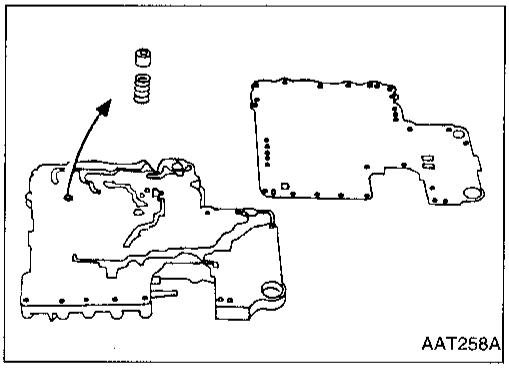

c. Place lower body facedown, and remove separator plate.
d. Remove orifice check valve and orifice check spring.

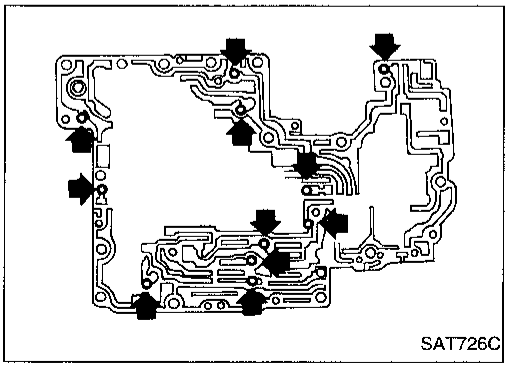

e. Check to see that steel balls are properly positioned in upper body and side plate, then remove them from upper body.

Control Valve Assembly (Cont'd)

Simpo PDF Merge and Split Unregistered Version - http://www.simpopdf.com

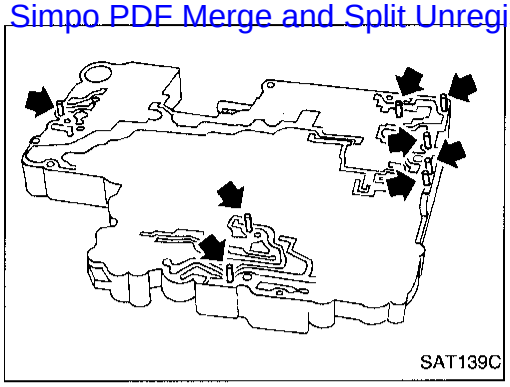
SAT139C

INSPECTION

Lower and upper bodies

- Check to see that there are pins and retainer plates in lower body.

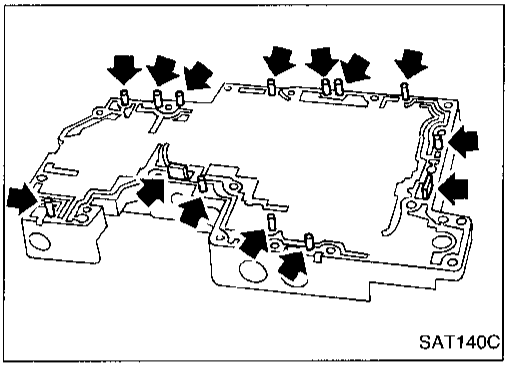
SAT140C

- Check to see that there are pins and retainer plates in upper body.
- **Be careful not to lose these parts.**

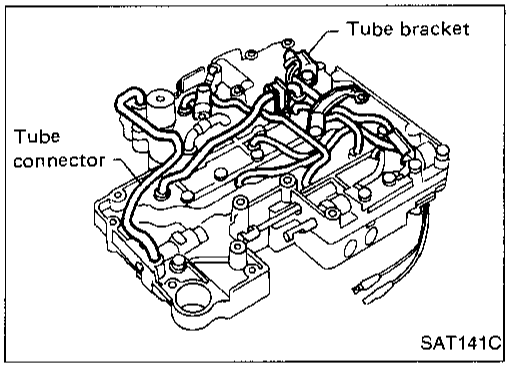

SAT141C

- Check to make sure that oil circuits are clean and free from damage.
- Check tube brackets and tube connectors for damage.

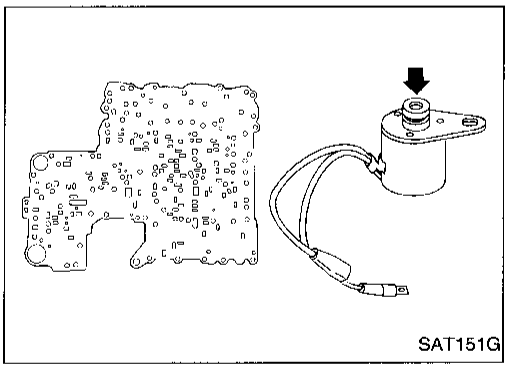
SAT151G

Separator plates

- Check to make sure that separator plate is free of damage and not deformed and oil holes are clean.

Overdrive cancel solenoid valve and torque converter clutch solenoid valve

- Check that filter is not clogged or damaged.
- Measure resistance. Refer to "Component Inspection", AT-36.

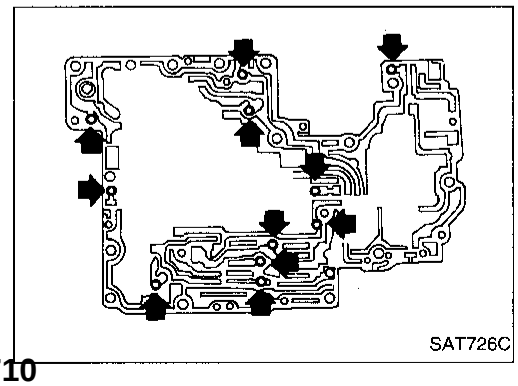
SAT726C

ASSEMBLY

1. Install upper and lower bodies.

a. Place oil circuit of upper body faceup. Install steel balls in their proper positions.

Control Valve Assembly (Cont'd)

Simpo PDF Merge and Split Unregistered Version - http://www.simpopdf.com

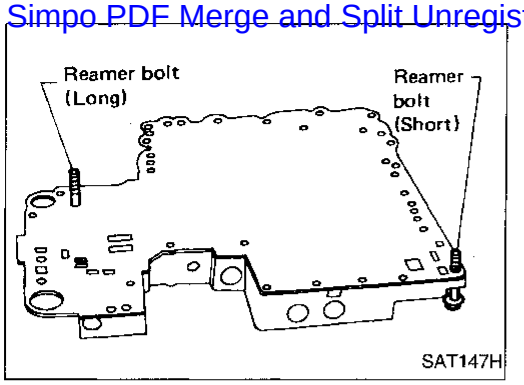

b. Install reamer bolts from bottom of upper body.

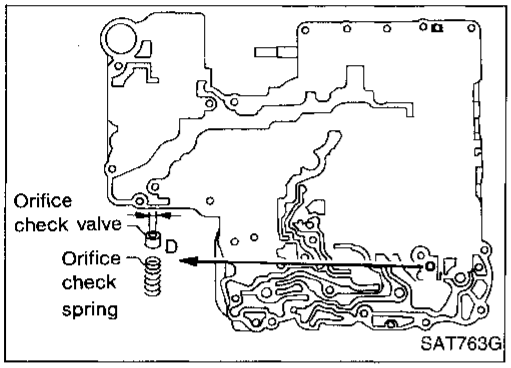

c. Place oil circuit of lower body faceup. Install orifice check spring, orifice check valve.

D: mm (in)
2.0 (0.079)

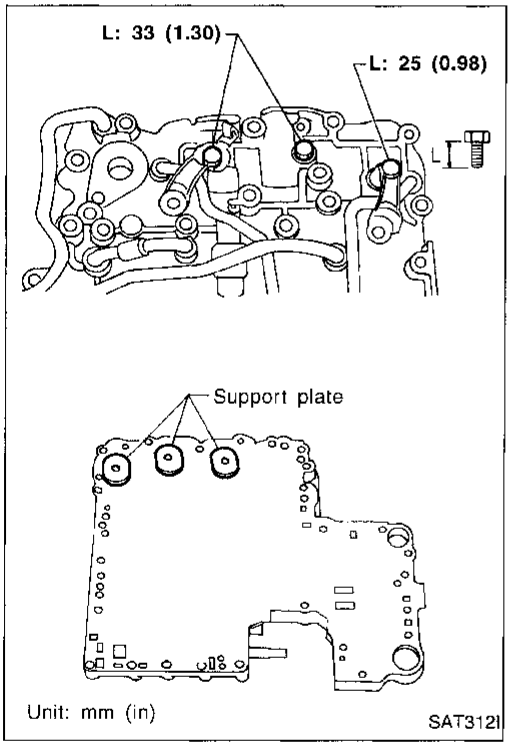

d. Install separator plate on lower body.
e. Temporarily install support plates, side plate (with steel ball) and tube brackets.

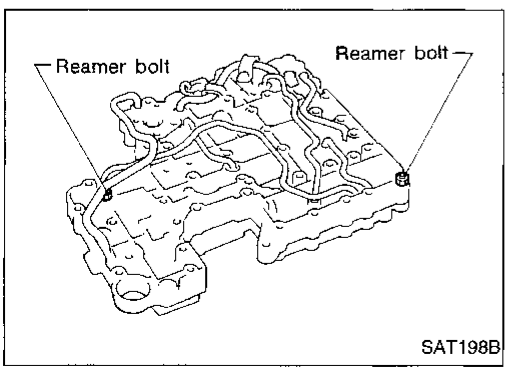

f. Temporarily assemble lower and upper bodies, using reamer bolt as a guide.

- **Be careful not to dislocate or drop steel balls, orifice check spring and orifice check valve.**

Control Valve Assembly (Cont'd)

Simpo PDF Merge and Split Unregistered Version - http://www.simpopdf.com

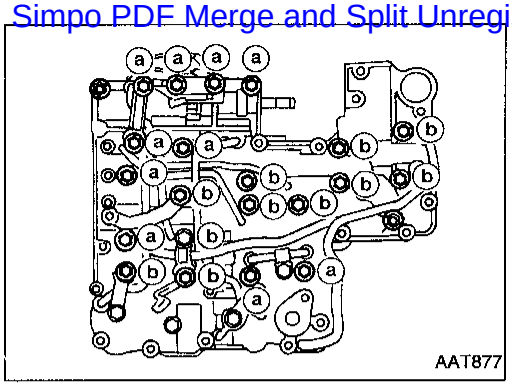

g. Install and temporarily tighten bolts and tube brackets in their proper locations.

Bolt length and location:

		Bolt symbol	
		ⓐ	ⓑ
Bolt length	mm (in)	45 (1.77)	33 (1.30)

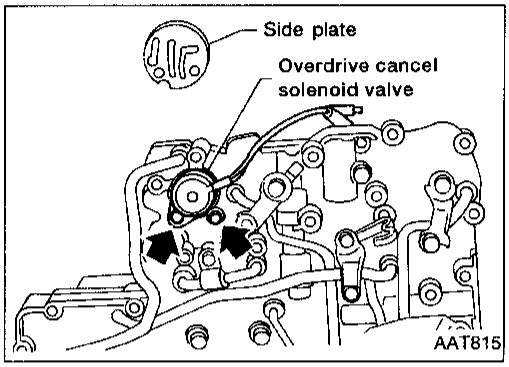

2. Install solenoids.
a. Attach O-ring and install overdrive cancel solenoid valve and side plate onto lower body.

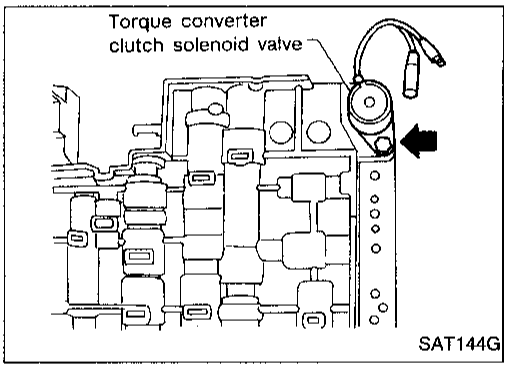

b. Attach O-ring and install torque converter clutch solenoid valve onto upper body.
3. Tighten bolt.

Simpo PDF Merge and Split Unregistered Version - http://www.simpopdf.com

Control Valve Upper Body

SEC. 317

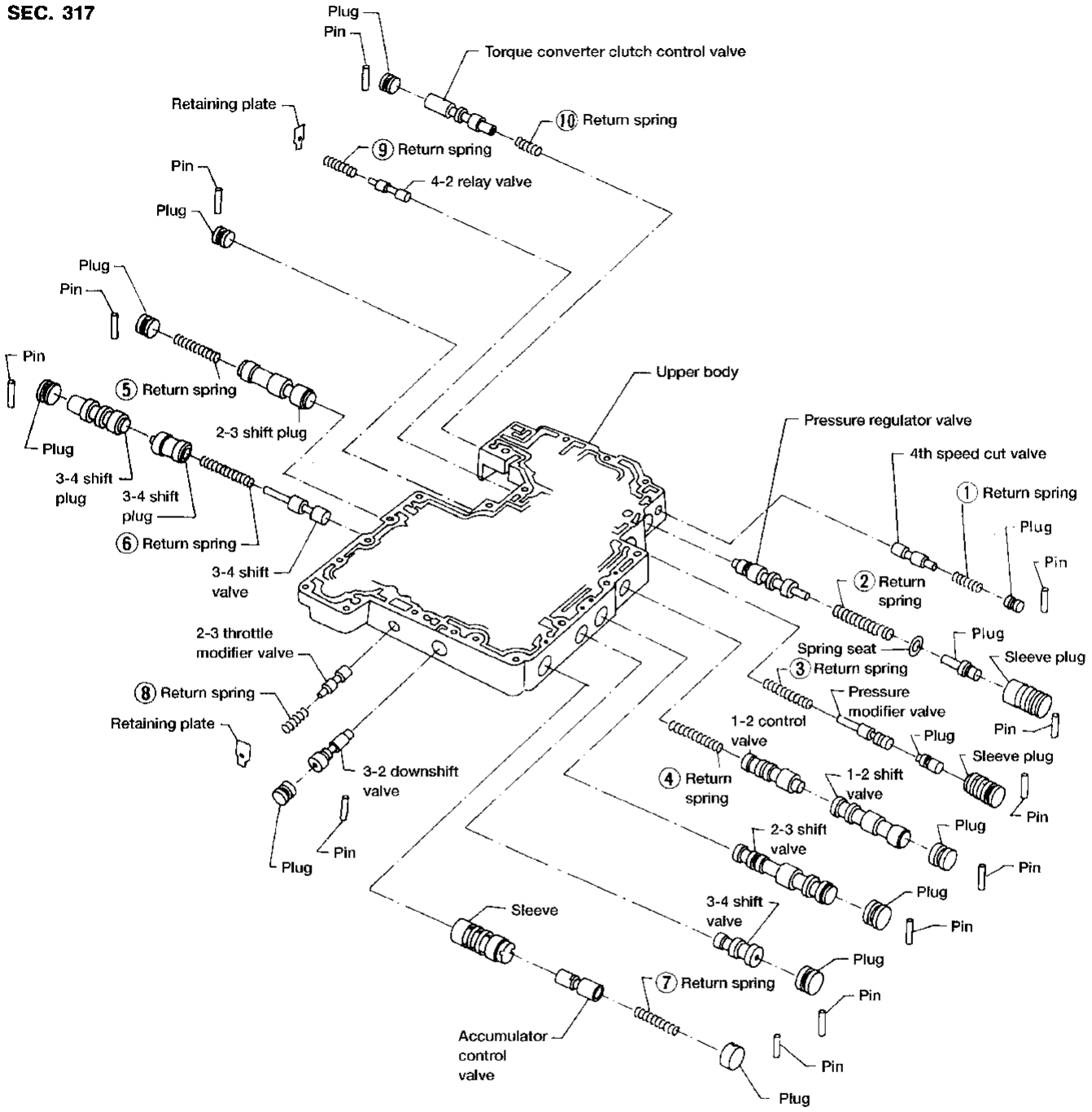

Apply ATF to all components before their installation.

AAT040A

Numbers preceding valve springs correspond with those shown in Return Springs Chart on SDS, AT-123.

Control Valve Upper Body (Cont'd)

Simpo PDF Merge and Split Unregistered Version - http://www.simpopdf.com

DISASSEMBLY

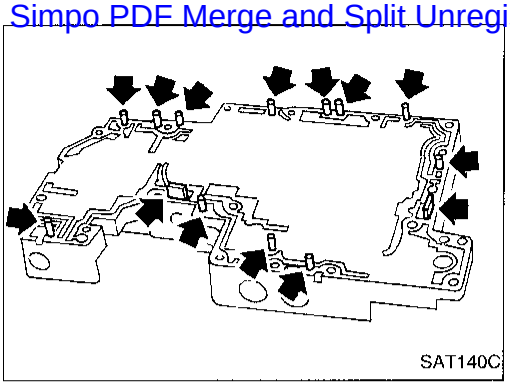

1. Remove valves at parallel pins.

- **Do not use a magnetic pick-up tool.**

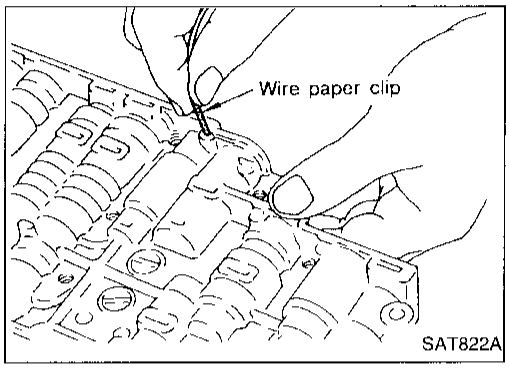

a. Use a wire paper clip to push out parallel pins.

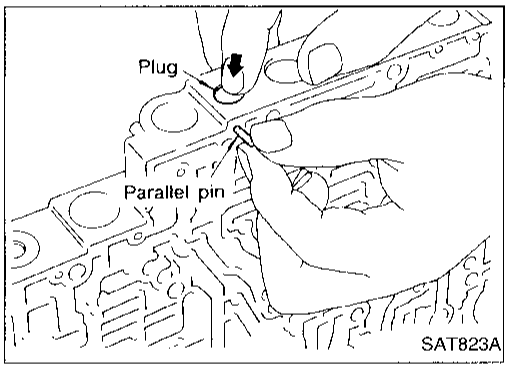

b. Remove parallel pins while pressing their corresponding plugs and sleeves.

- **Remove plug slowly to prevent internal parts from jumping out.**

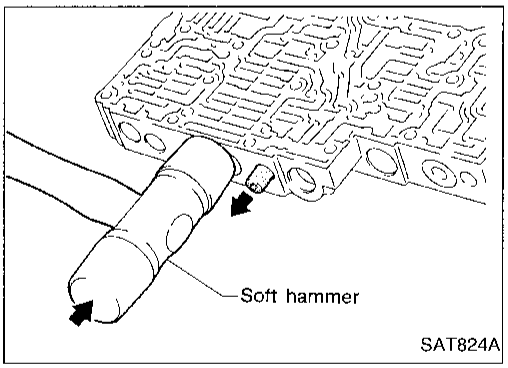

c. Place mating surface of valve facedown, and remove internal parts.

- **If a valve is hard to remove, place valve body facedown and lightly tap it with a soft hammer.**
- **Be careful not to drop or damage valves and sleeves.**

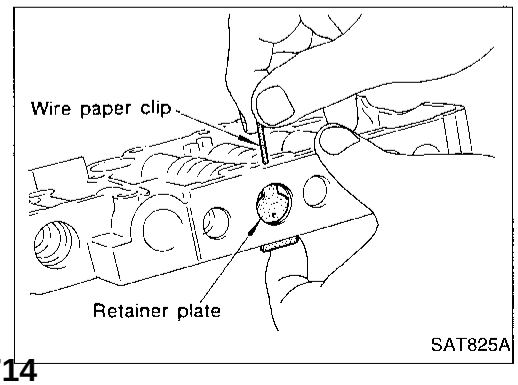

2. Remove valves at retainer plates.

a. Pry out retainer plate with wire paper clip.

Control Valve Upper Body (Cont'd)

Simpo PDF Merge and Split Unregistered Version - http://www.simpopdf.com

b. Remove retainer plates while holding spring.

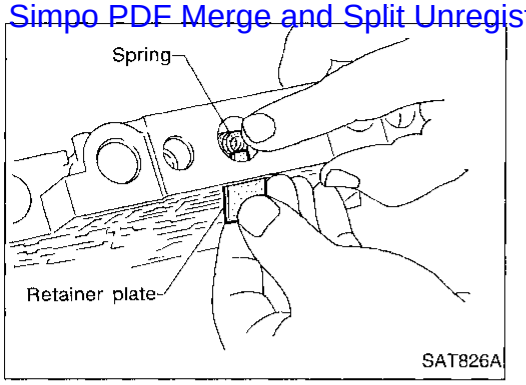

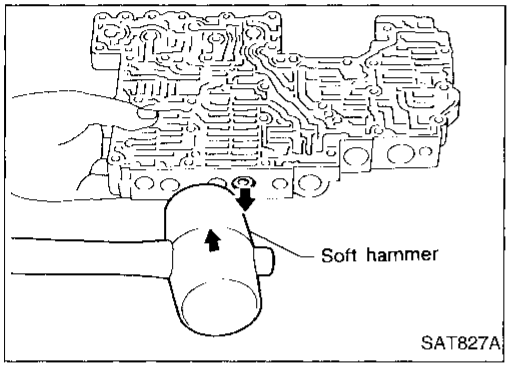

c. Place mating surface of valve facedown, and remove internal parts.

- **If a valve is hard to remove, lightly tap valve body with a soft hammer.**
- **Be careful not to drop or damage valves, sleeves, etc.**

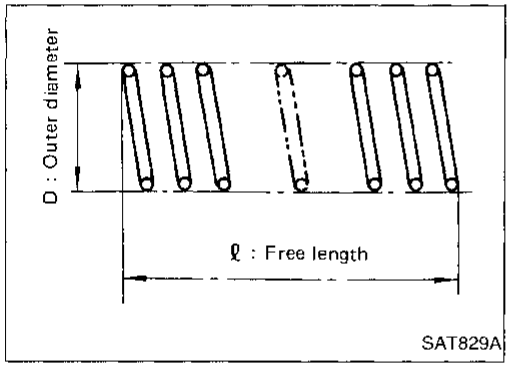

INSPECTION

Valve springs

- Measure free length and outer diameter of each valve spring. Also check for damage or deformation.
  Inspection standard:
  Refer to SDS, AT-123.
- Replace valve springs if deformed or fatigued.

Control valves

- Check sliding surfaces of valves, sleeves and plugs.

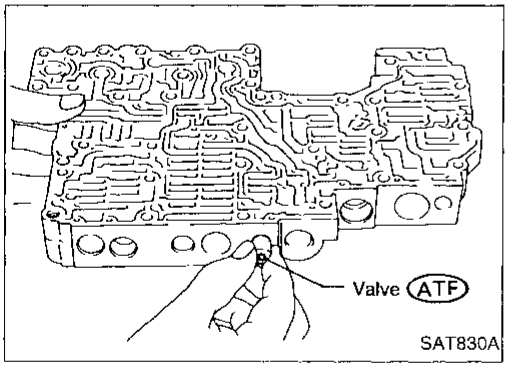

ASSEMBLY

1. Lubricate the control valve body and all valves with ATF. Install control valves by sliding them carefully into their bores.

- **Be careful not to scratch or damage valve body.**

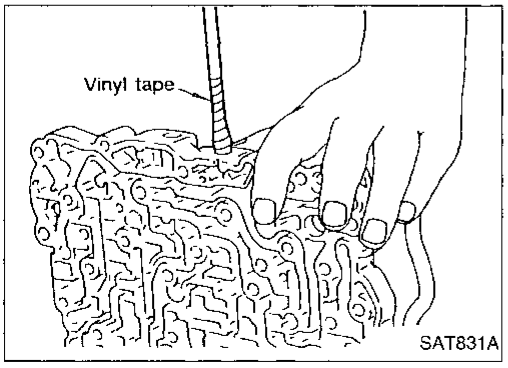

- Wrap a small screwdriver with vinyl tape and use it to insert the valves into proper position.

Control Valve Upper Body (Cont'd)

Simpo PDF Merge and Split Unregistered Version - http://www.simpopdf.com

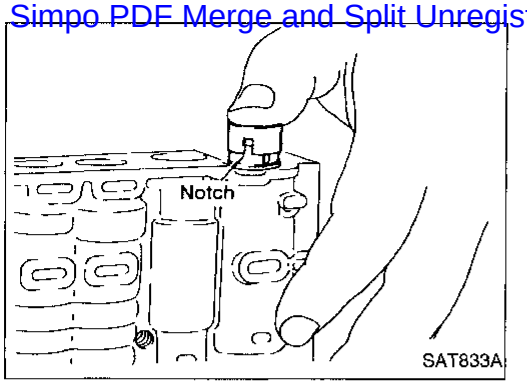

Accumulator control plug

- Align protrusion of accumulator control sleeve with notch in plug.
- Align parallel pin groove in plug with parallel pin, and install accumulator control valve.

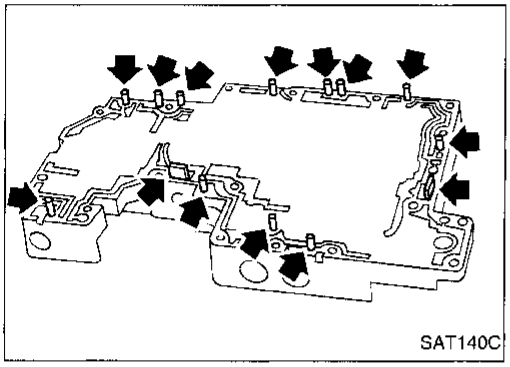

2. Install parallel pins and retainer plates.

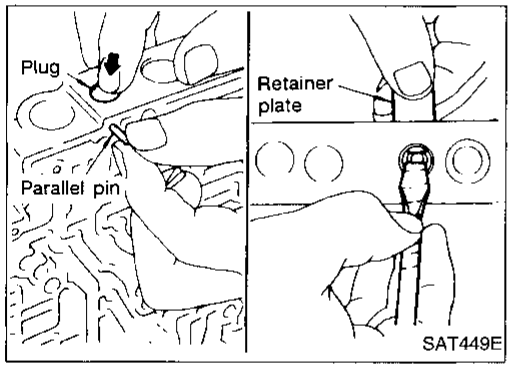

- While pushing plug, install parallel pin.
- Insert retainer plate while pushing spring.

Simpo PDF Merge and Split Unregistered Version - http://www.simpopdf.com

Control Valve Lower Body

SEC. 317

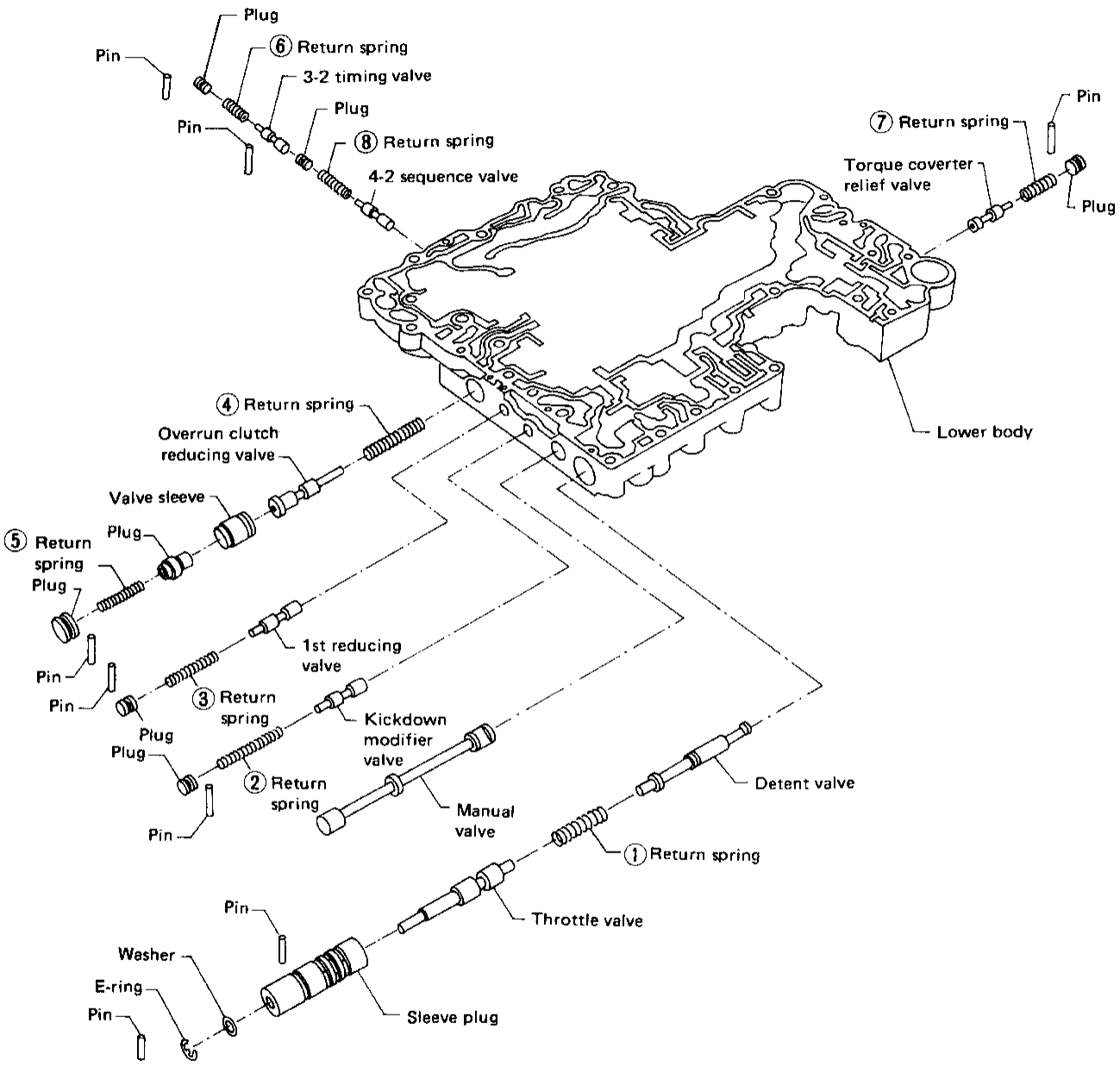

Apply ATF to all components before their installation.

SAT752GA

Numbers preceding valve springs correspond with those shown in Return Springs Chart on SDS, AT-123.

Control Valve Lower Body (Cont'd)

Simpo PDF Merge and Split Unregistered Version - http://www.simpopdf.com

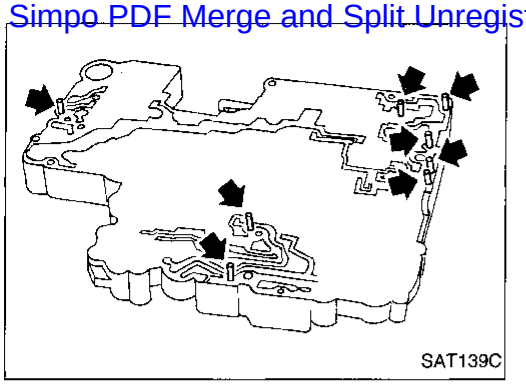
SAT139C

DISASSEMBLY

1. Remove valves at parallel pins.
2. Remove valves at retainer plates.
   For removal procedures, refer to "DISASSEMBLY", "Control Valve Upper Body," AT-76.

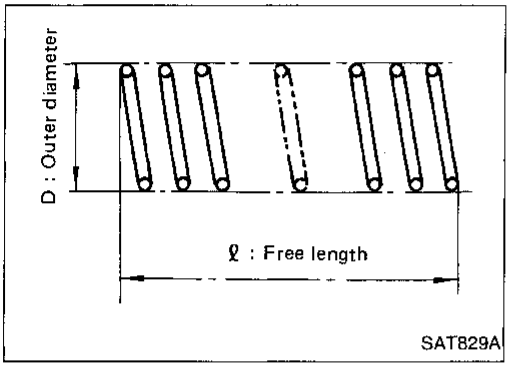

SAT829A

INSPECTION

Valve springs

- Check each valve spring for damage and deformation. Also measure free length and outer diameter.
  Inspection standard:
  Refer to SDS, AT-123.
- Replace valve springs if deformed or fatigued.

Control valves

- Check sliding surfaces of control valves, sleeves and plugs for damage.

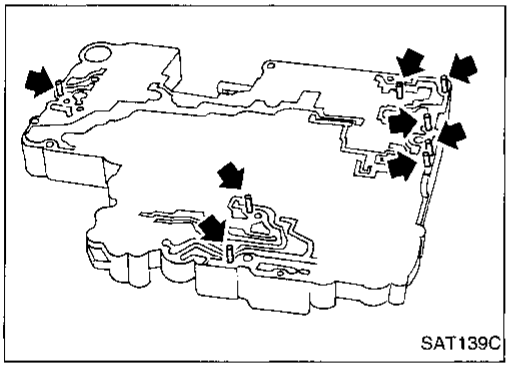
SAT139C

ASSEMBLY

- Install control valves.
  For installation procedures, refer to "ASSEMBLY", "Control Valve Upper Body," AT-77.

Simpo PDF Merge and Split Unregistered Version - http://www.simpopdf.com

Governor Valve Assembly

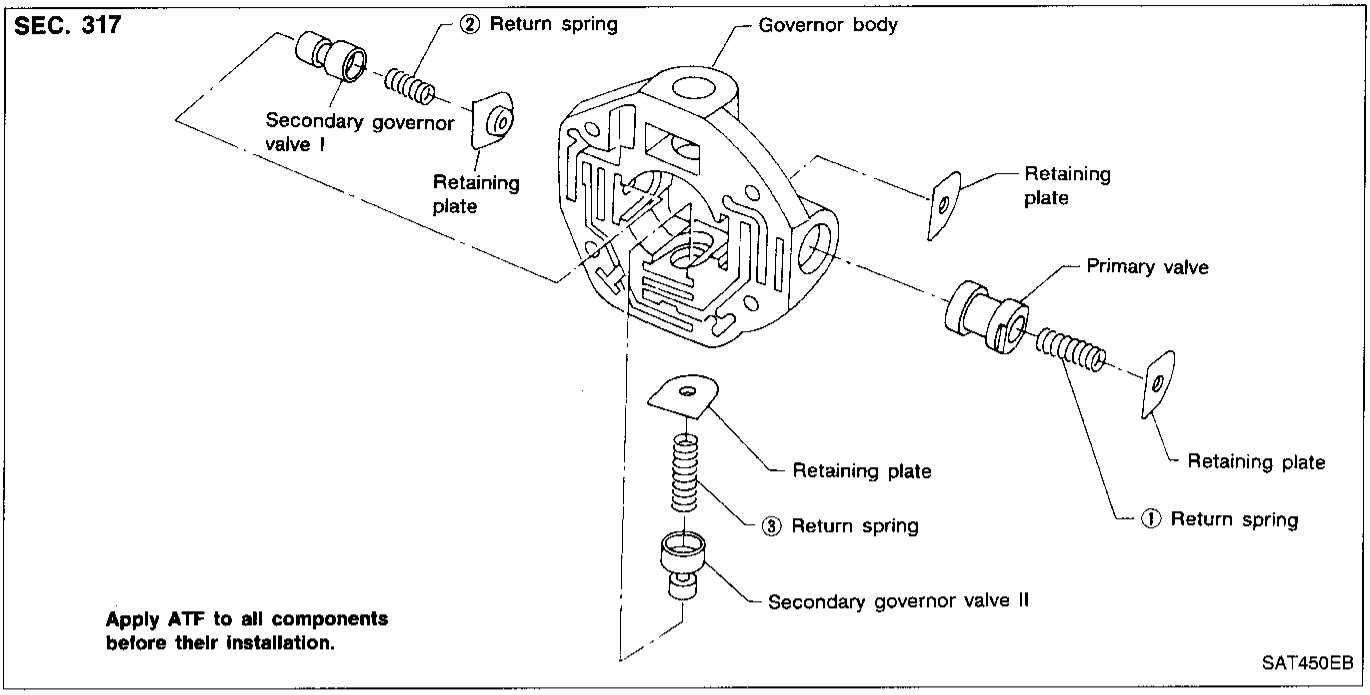

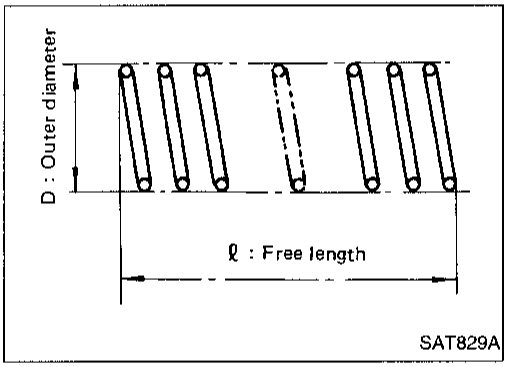

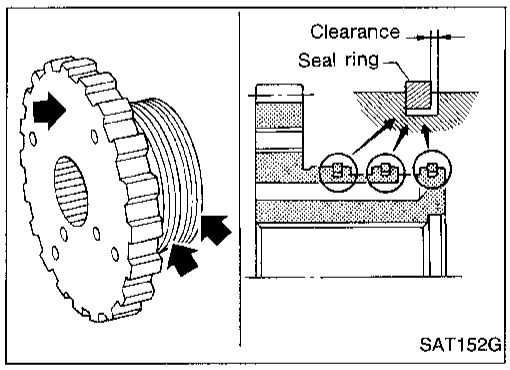

INSPECTION

Valve springs

- Measure free length and outer diameter of each valve spring. Also check for damage or deformation.

  Inspection standard:

  Refer to SDS, AT-123.

Governor valves and valve body

- Check governor valves and valve body for indication of burning or scratches.

Parking Gear

INSPECTION

- Check contacting surface of parking gear and ring groove areas for wear.
- Measure clearance between seal ring and ring groove.

  Standard clearance:

  0.15 - 0.40 mm (0.0059 - 0.0157 in)

  Wear limit:

  0.40 mm (0.0157 in)

Simpo PDF Merge and Split Unregistered Version - http://www.simpopdf.com

Reverse Clutch

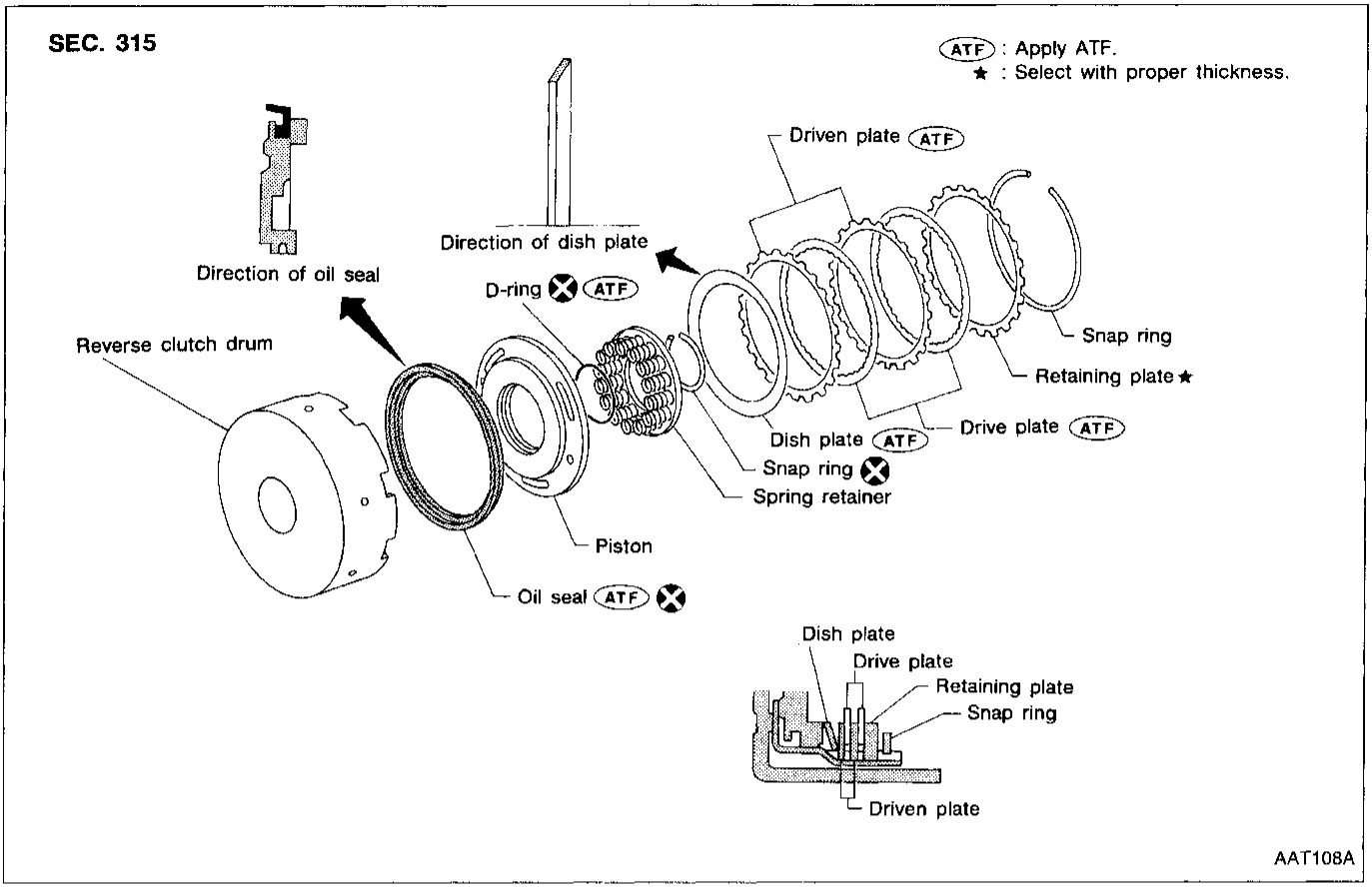

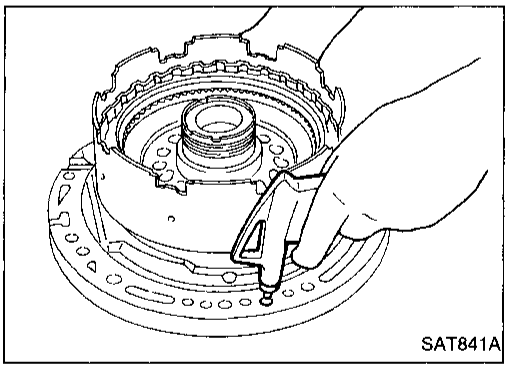

DISASSEMBLY

1. Check operation of reverse clutch.

a. Install seal ring onto oil pump cover and install reverse clutch. Apply compressed air to oil hole.

b. Check to see that retaining plate moves to snap ring.

c. If retaining plate does not contact snap ring,

- D-ring might be damaged.
- Oil seal might be damaged.
- Fluid might be leaking past piston check ball.

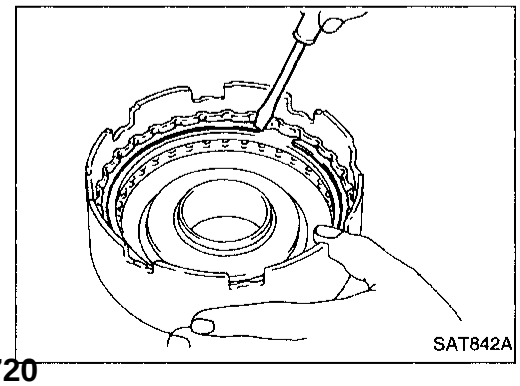

2. Remove snap ring, drive plates, driven plates, retaining plate and dish plate.

Reverse Clutch (Cont'd)

Simpo PDF Merge and Split Unregistered Version - http://www.simpopdf.com

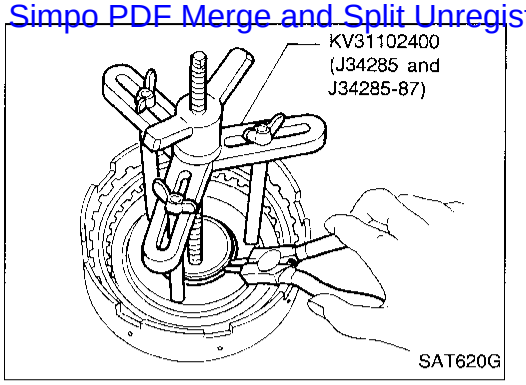

3. Remove snap ring from clutch drum while compressing clutch springs.
   - **Set Tool directly over springs.**
   - **Do not expand snap ring excessively.**
4. Remove spring retainer and return spring.

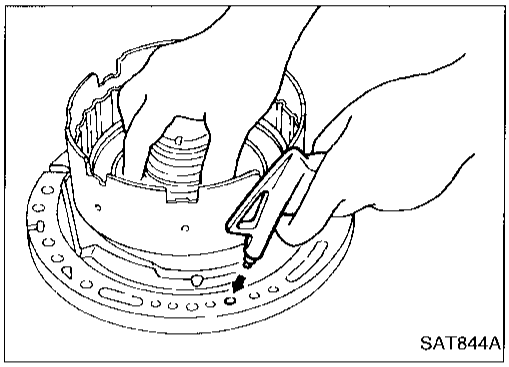

5. Install seal ring onto oil pump cover and install reverse clutch drum. While holding piston, gradually apply compressed air to oil hole until piston is removed.
   - **Do not apply compressed air abruptly.**
6. Remove D-ring and oil seal from piston.

INSPECTION

Reverse clutch snap ring and spring retainer

- Check for deformation, fatigue and damage.

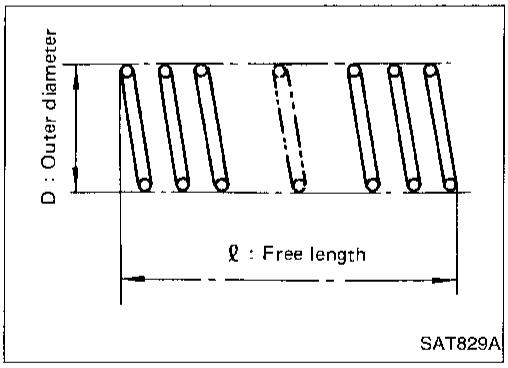

Reverse clutch return springs

- Check for deformation and damage. Also measure free length and outside diameter.
  Inspection standard:
  Refer to SDS, AT-123.

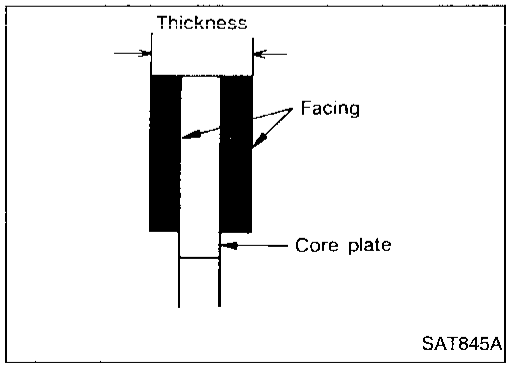

Reverse clutch drive plates

- Check facing for burns, cracks and damage.
- Measure thickness of facing.
  Thickness of drive plate:
  Standard value 1.90 - 2.05 mm (0.0748 - 0.0807 in)
  Wear limit 1.80 mm (0.0709 in)
- If not within wear limit, replace.

Reverse clutch dish plate

- Check for deformation and damage.

Reverse Clutch (Cont'd)

Simpo PDF Merge and Split Unregistered Version - http://www.simpopdf.com

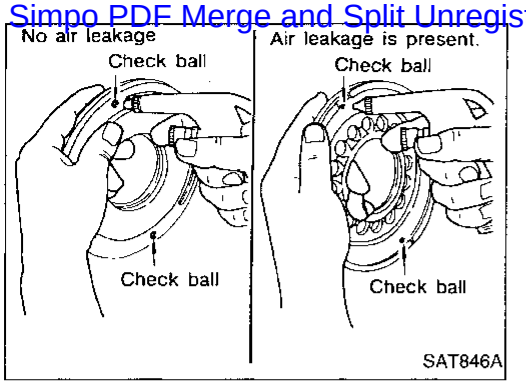

Reverse clutch piston

- Shake piston to assure that balls are not seized.
- Apply compressed air to check ball oil hole opposite the return spring to assure that there is no air leakage.
- Also apply compressed air to oil hole on return spring side to assure that air leaks past ball.

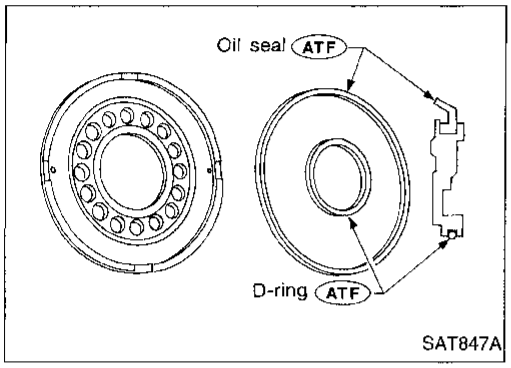

ASSEMBLY

1. Install D-ring and oil seal on piston.

- **Apply ATF to both parts.**
- **Take care with the direction of oil seal.**

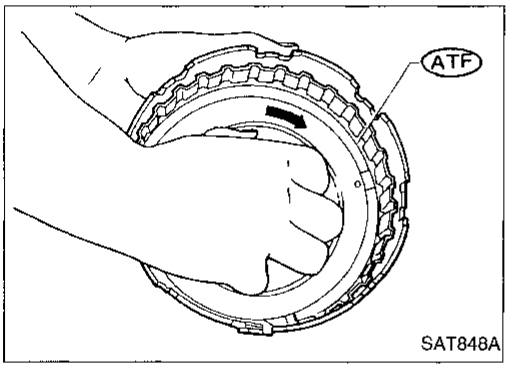

2. Install piston assembly by turning it slowly and evenly.

- **Apply ATF to inner surface of drum.**

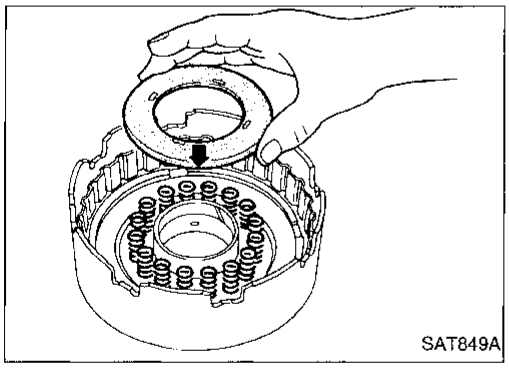

3. Install return springs and spring retainer.

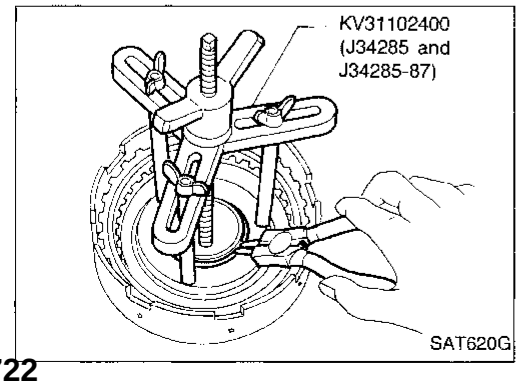

4. Set Tool on spring retainer and install snap ring while compressing clutch springs.

Simpo PDF Merge and Split Unregistered Version - http://www.simpopdf.com

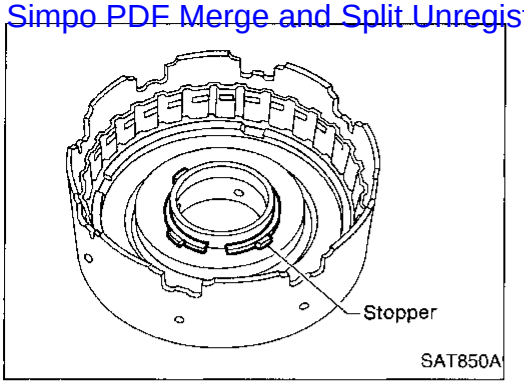

- **Do not align snap ring gap with spring retainer stopper.**

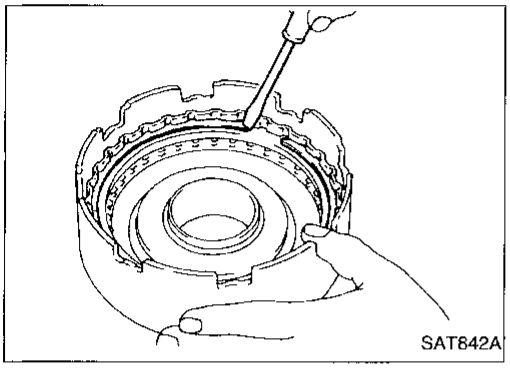

5. Install drive plates, driven plates, retaining plate and dish plate.
6. Install snap ring.

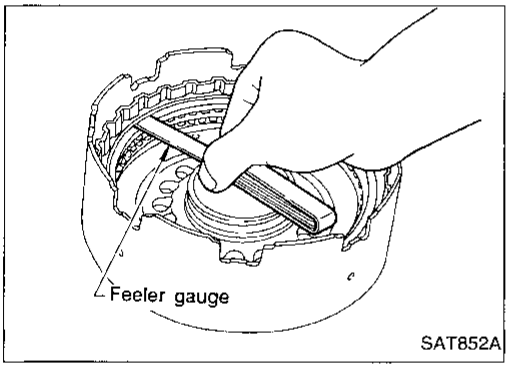

7. Measure clearance between retaining plate and snap ring. If not within allowable limit, select proper retaining plate.
   Specified clearance:
   Standard
   0.5 - 0.8 mm (0.020 - 0.031 in)
   Allowable limit
   1.2 mm (0.047 in)
   Retaining plate:
   Refer to SDS, AT-124.

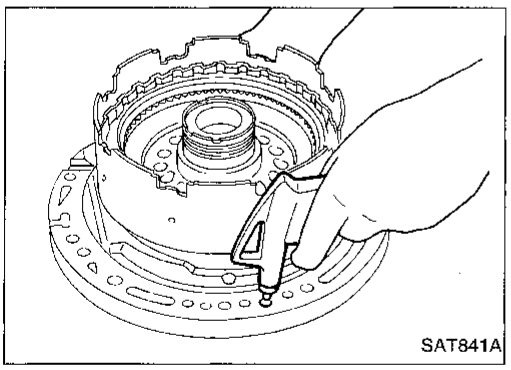

8. Check operation of reverse clutch.
   Refer to "DISASSEMBLY", "Reverse Clutch", AT-82.

Simpo PDF Merge and Split Unregistered Version - http://www.simpopdf.com

High Clutch

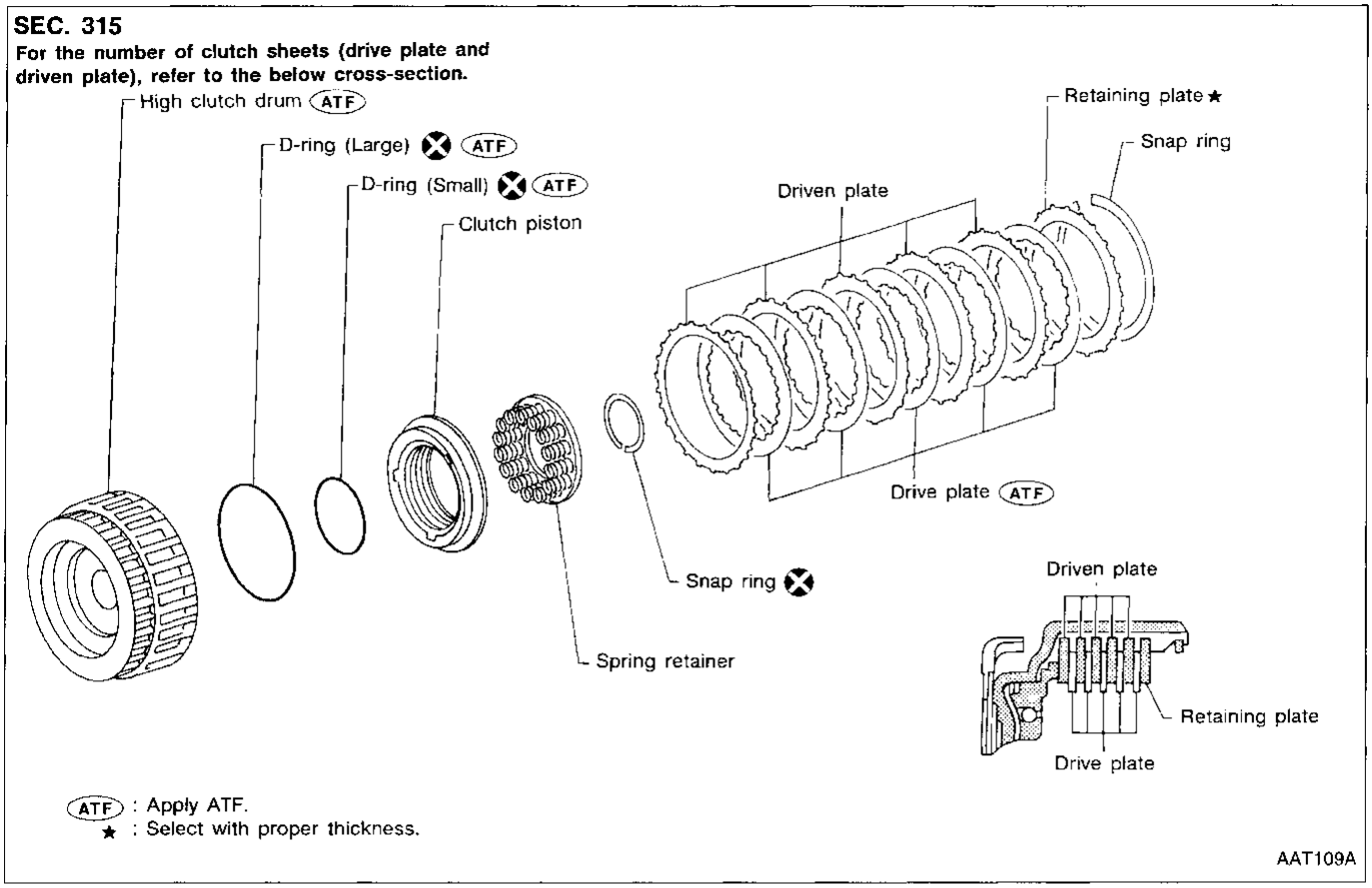

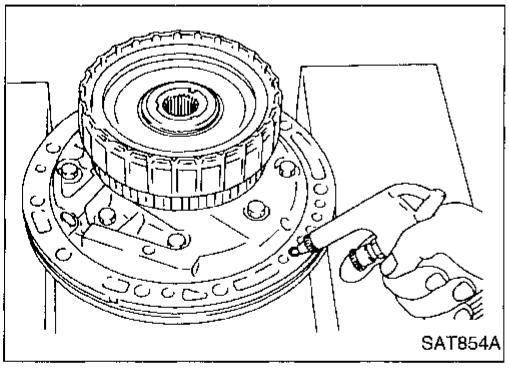

DISASSEMBLY AND ASSEMBLY

Service procedures for high clutch are essentially the same as those for reverse clutch, with the following exceptions:

- Check of high clutch operation

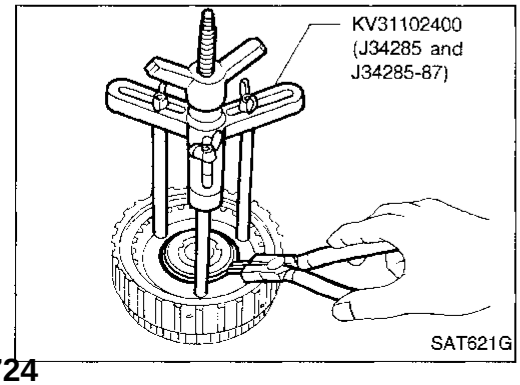

- Removal and installation of return spring

High Clutch (Cont'd)

Simpo PDF Merge and Split Unregistered Version - http://www.simpopdf.com

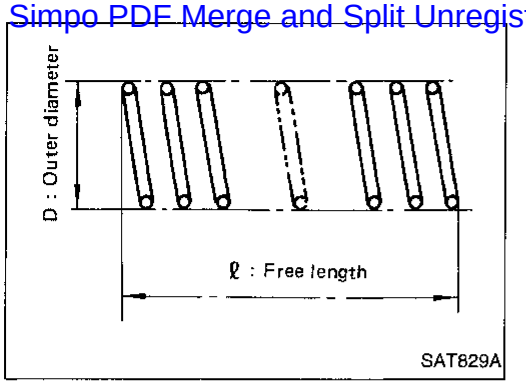

- Inspection of high clutch return springs
  Inspection standard:
  Refer to SDS, AT-123.

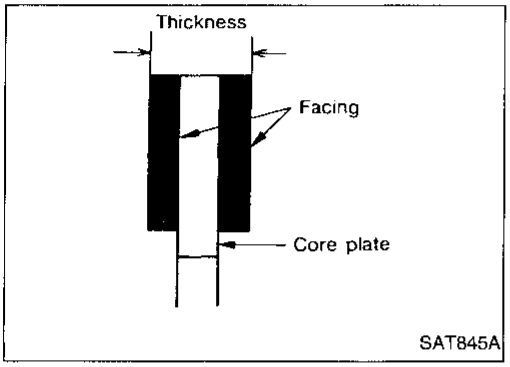

- Inspection of high clutch drive plate
  Thickness of drive plate:
  Standard
  1.52 - 1.67 mm (0.0598 - 0.0657 in)
  Wear limit
  1.40 mm (0.0551 in)

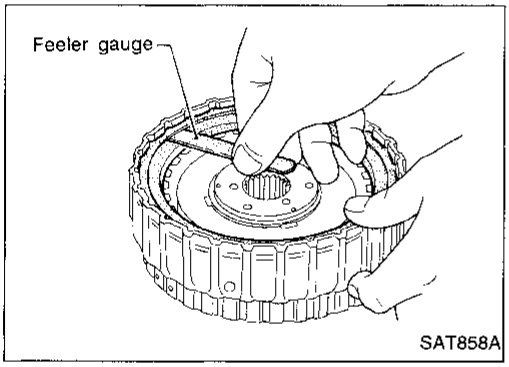

- Measurement of clearance between retaining plate and snap ring
  Specified clearance:
  Standard
  1.8 - 2.2 mm (0.071 - 0.087 in)
  Allowable limit
  2.8 mm (0.110 in)
  Retaining plate:
  Refer to SDS, AT-124.

Simpo PDF Merge and Split Unregistered Version - http://www.simpopdf.com

Forward and Overrun Clutches

SEC. 315

For the number of clutch sheets (drive plate and driven plate), refer to the below cross-section.

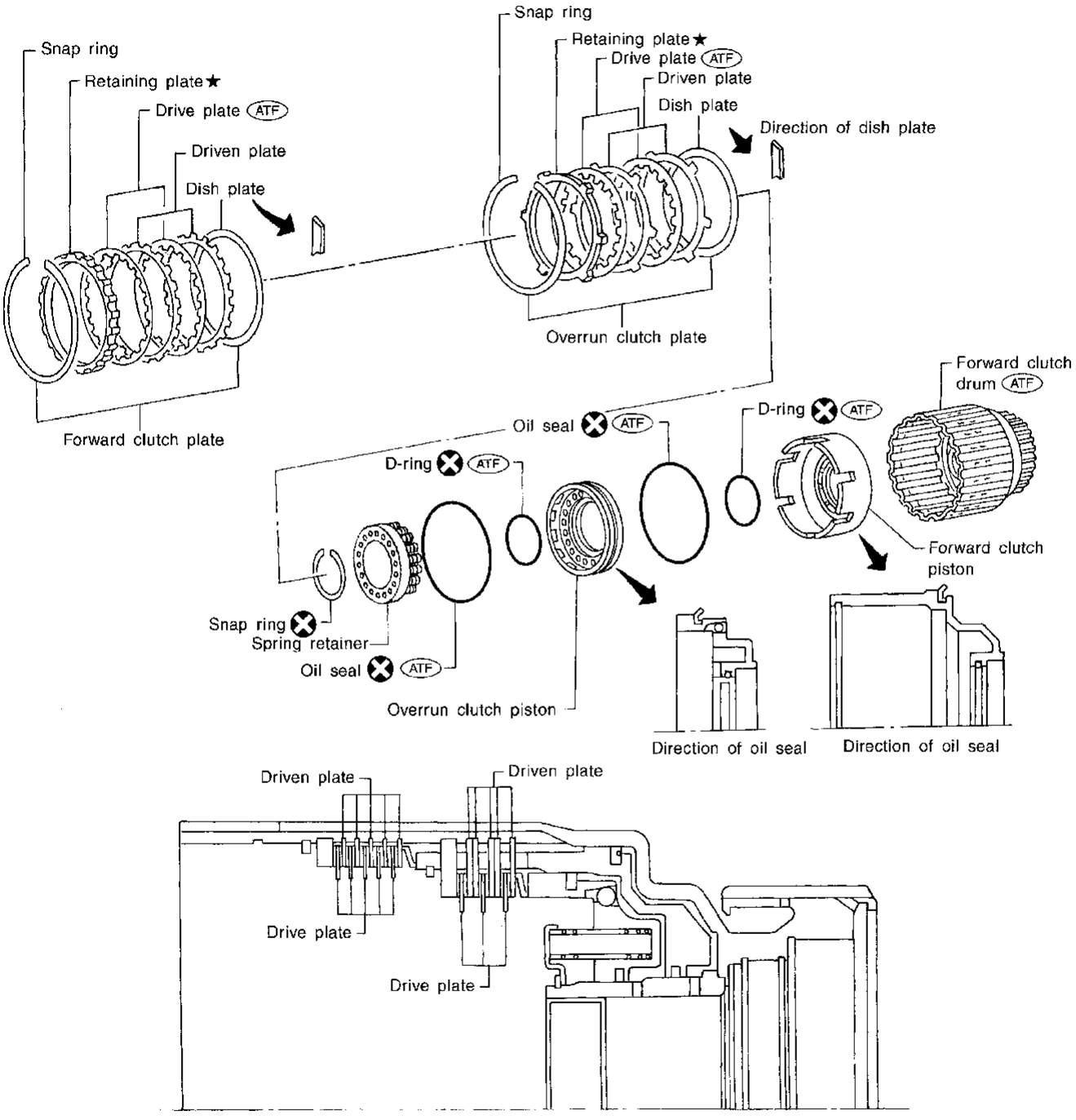

(ATF) : Apply ATF.
★ : Select with proper thickness.

AAT110A

Forward and Overrun Clutches (Cont'd)

Simpo PDF Merge and Split Unregistered Version - http://www.simpopdf.com

DISASSEMBLY AND ASSEMBLY

Service procedures for forward and overrun clutches are essentially the same as those for reverse clutch, with the following exceptions:

- Check of forward clutch operation.

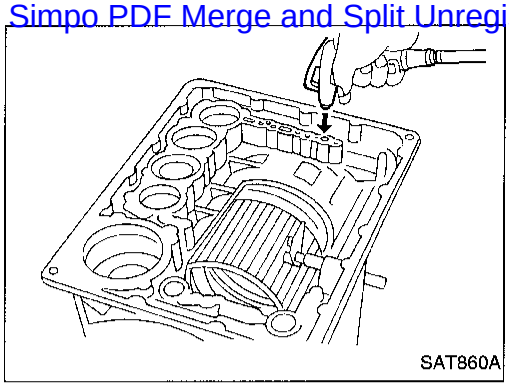
SAT860A

- Check of overrun clutch operation.

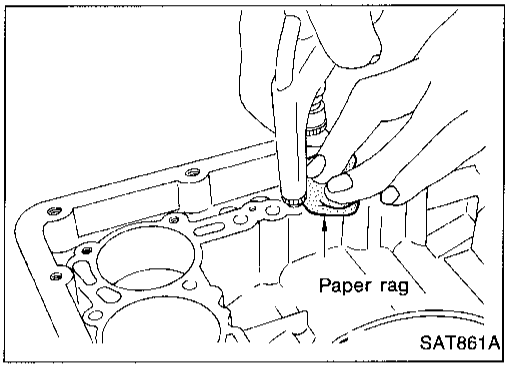

SAT861A

- Removal of forward clutch drum

Remove forward clutch drum from transmission case by holding snap ring.

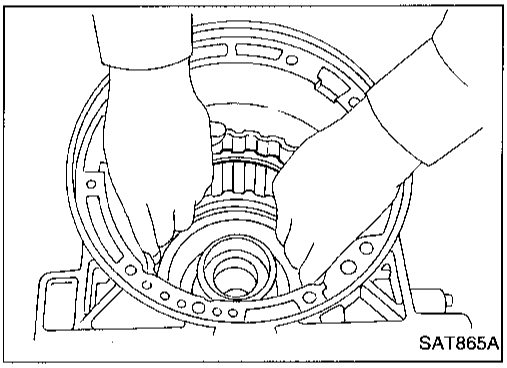
SAT865A

- Removal of forward clutch and overrun clutch pistons

1. While holding overrun clutch piston, gradually apply compressed air to oil hole.

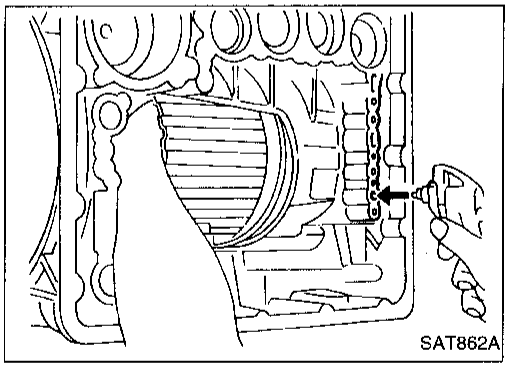
SAT862A

2. Remove overrun clutch from forward clutch.

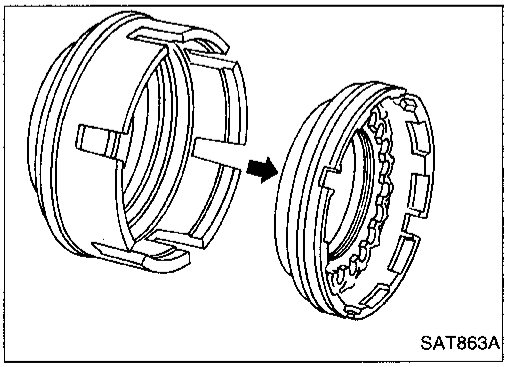
SAT863A

Forward and Overrun Clutches (Cont'd)

Simpo PDF Merge and Split Unregistered Version - http://www.simpopdf.com

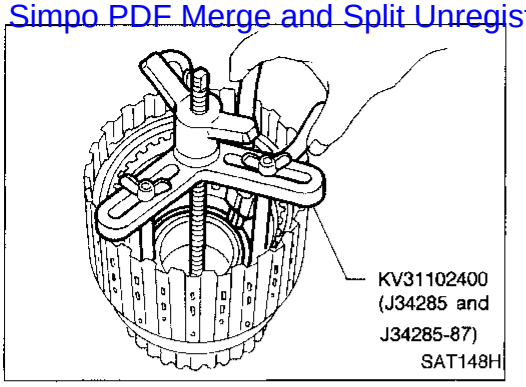

- Removal and installation of return springs

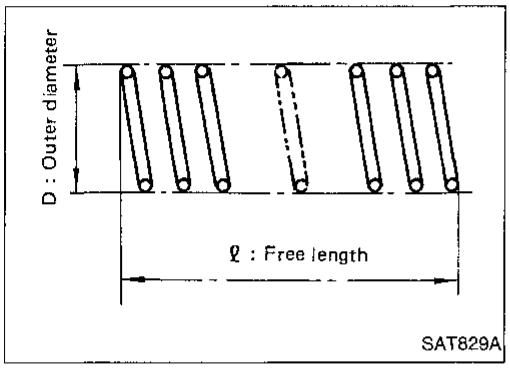

- Inspection of forward clutch and overrun clutch return springs
  Inspection standard:
  Refer to SDS, AT-123.

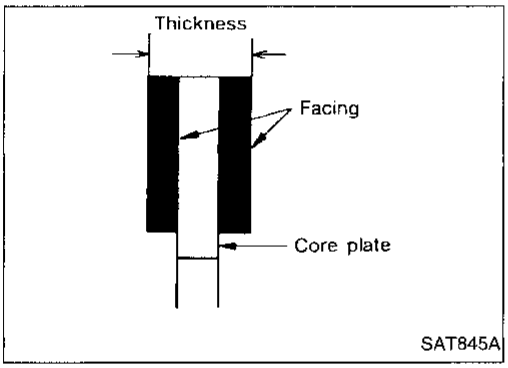

- Inspection of forward clutch drive plates
  Thickness of drive plate:
  Standard
  1.52 - 1.67 mm (0.0598 - 0.0657 in)
  Wear limit
  1.40 mm (0.0551 in)

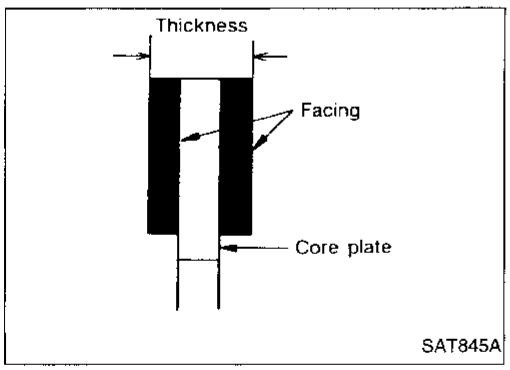

- Inspection of overrun clutch drive plates
  Thickness of drive plate:
  Standard
  1.90 - 2.05 mm (0.0748 - 0.0807 in)
  Wear limit
  1.80 mm (0.0709 in)

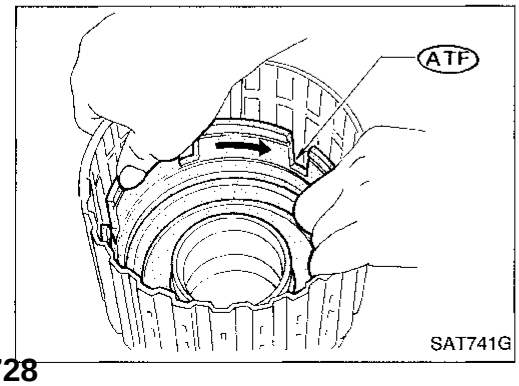

- Installation of forward clutch piston and overrun clutch piston

1. Install forward clutch piston by turning it slowly and evenly.

- **Apply ATF to inner surface of clutch drum.**

Forward and Overrun Clutches (Cont'd)

Simpo PDF Merge and Split Unregistered Version - http://www.simpopdf.com

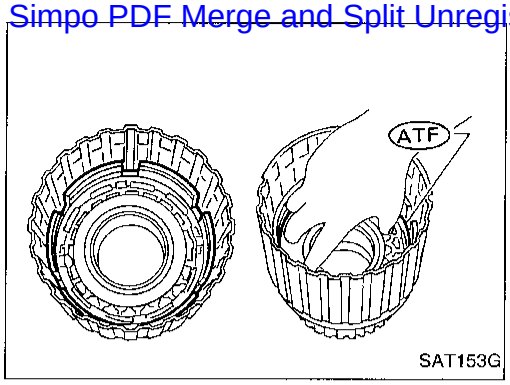

- **Align notch in forward clutch piston with groove in forward clutch drum.**

2. Install overrun clutch by turning it slowly and evenly.

- **Apply ATF to inner surface of forward clutch piston.**

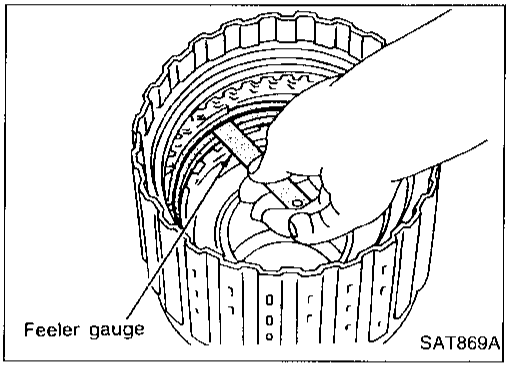

- Measurement of clearance between retaining plate and snap ring of overrun clutch
  - **Specified clearance:**
    - **Standard**
      - **1.0 - 1.4 mm (0.039 - 0.055 in)**
    - **Allowable limit**
      - **2.0 mm (0.079 in)**
  - **Retaining plate:**
    - **Refer to SDS, AT-124.**

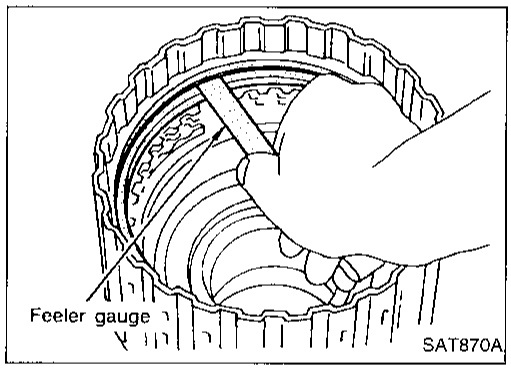

- Measurement of clearance between retaining plate and snap ring of forward clutch
  - **Specified clearance:**
    - **Standard**
      - **0.35 - 0.75 mm (0.0138 - 0.0295 in)**
    - **Allowable limit**
      - **1.85 mm (0.728 in)**
  - **Retaining plate:**
    - **Refer to SDS, AT-124.**

Simpo PDF Merge and Split Unregistered Version - http://www.simpopdf.com

Low & Reverse Brake

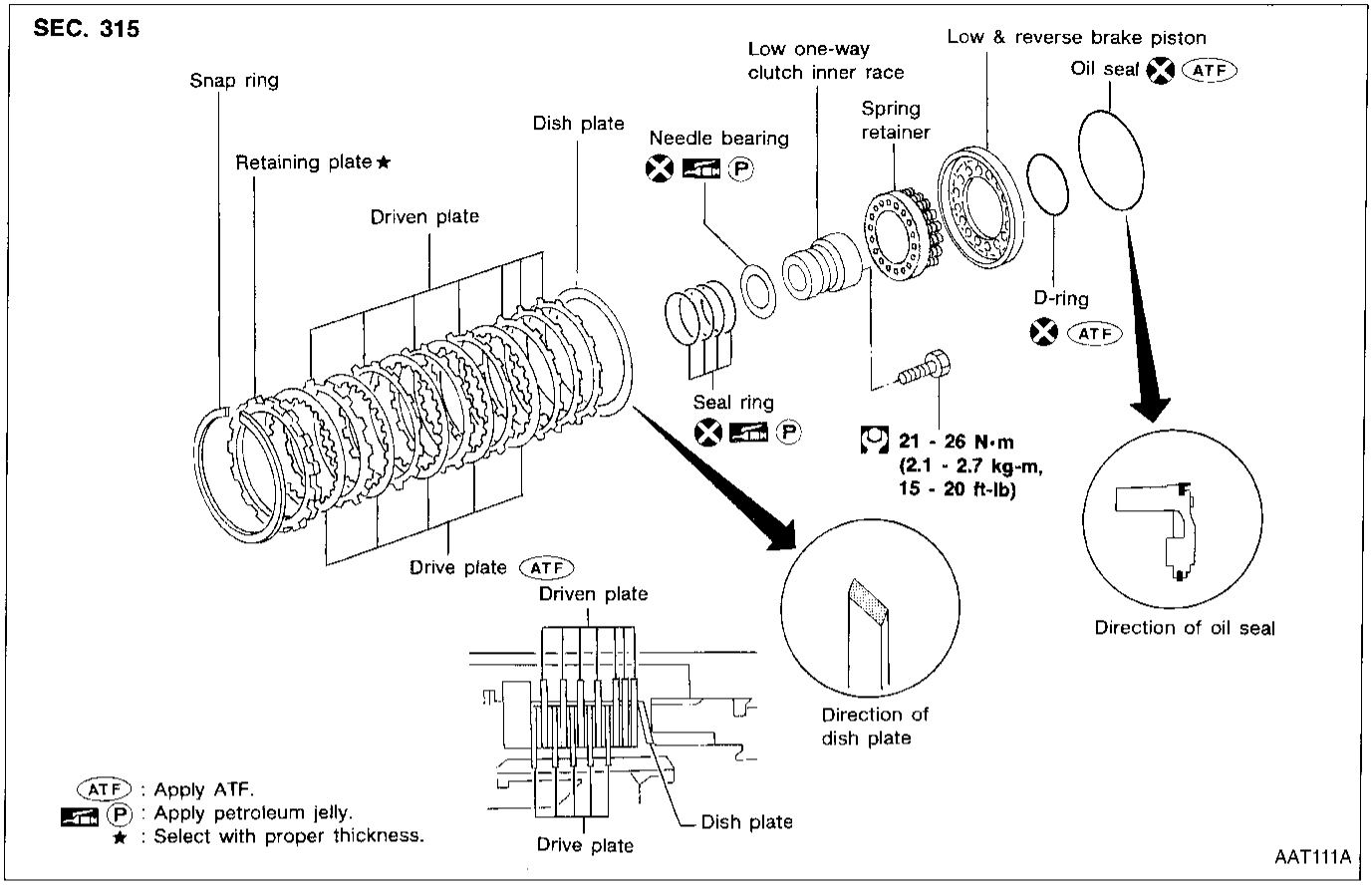

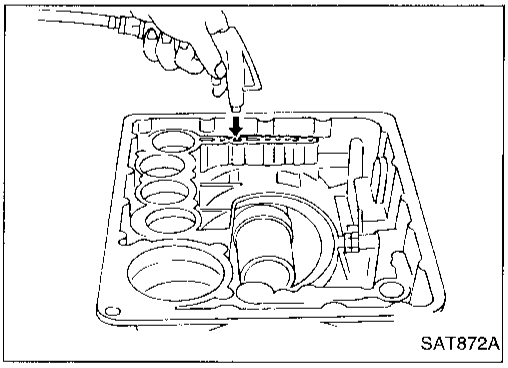

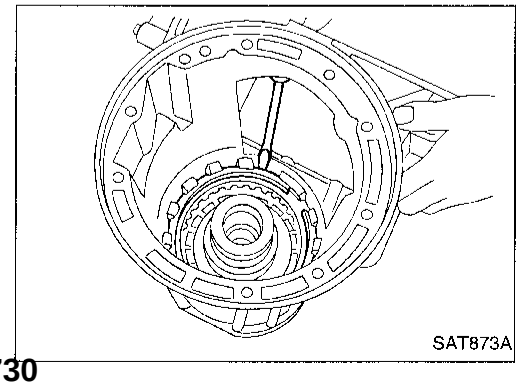

DISASSEMBLY

1. Check operation of low and reverse brake.

a. Install seal ring onto oil pump cover and install reverse clutch. Apply compressed air to oil hole.

b. Check to see that retaining plate moves to snap ring.

c. If retaining plate does not contact snap ring,

- D-ring might be damaged.
- Oil seal might be damaged.
- Fluid might be leaking past piston check ball.

2. Remove snap ring, low & reverse brake drive plates, driven plates and dish plate.

Low & Reverse Brake (Cont'd)

Simpo PDF Merge and Split Unregistered Version - http://www.simpopdf.com

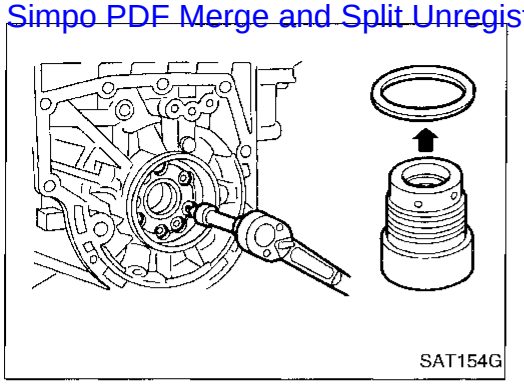
SAT154G

3. Remove low one-way clutch inner race, spring retainer and return spring from transmission case.
4. Remove seal rings from low one-way clutch inner race.
5. Remove needle bearing from low one-way clutch inner race.

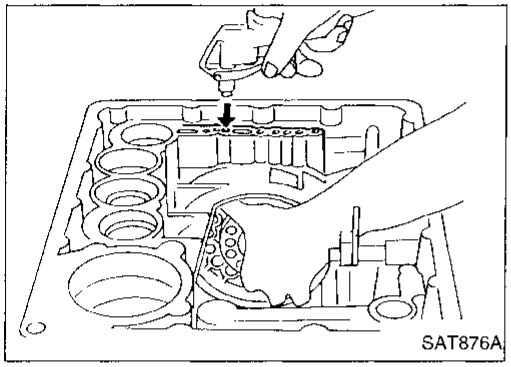
SAT876A

6. Remove low & reverse brake piston using compressed air.
7. Remove oil seal and D-ring from piston.

INSPECTION

Low & reverse brake snap ring and spring retainer

- Check for deformation, or damage.

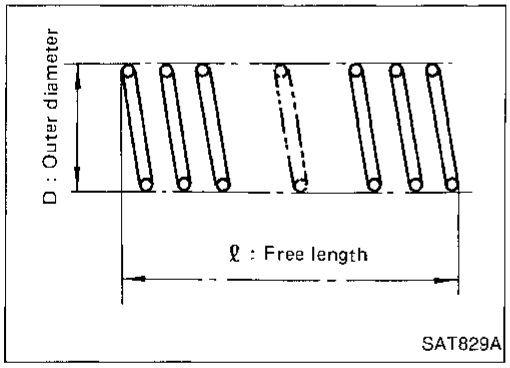

SAT829A

Low & reverse brake return springs

- Check for deformation or damage. Also measure free length and outside diameter.
  Inspection standard:
  Refer to SDS, AT-123.

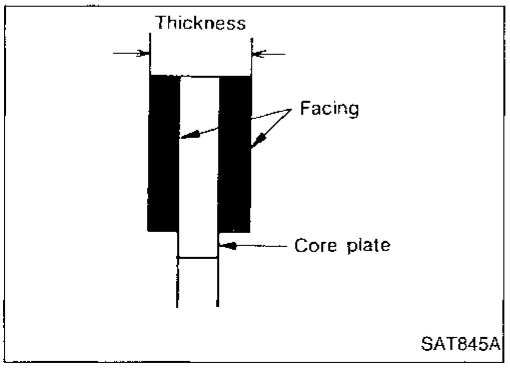

SAT845A

Low & reverse brake drive plates

- Check facing for burns, cracks or damage.
- Measure thickness of facing.
  Thickness of drive plate:
  Standard value
  1.52 - 1.67 mm (0.0598 - 0.0657 in)
  Wear limit
  1.4 mm (0.055 in)
- If not within wear limit, replace.

Low & Reverse Brake (Cont'd)

Simpo PDF Merge and Split Unregistered Version - http://www.simpopdf.com

Low one-way clutch inner race

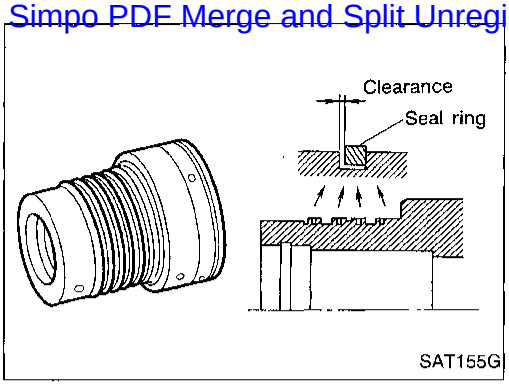

- Check frictional surface of inner race for wear or damage.
- Install new seal rings onto low one-way clutch inner race.
- **Be careful not to expand seal ring gap excessively.**
- Measure seal ring-to-groove clearance.

  Inspection standard:

  Standard value 0.10 - 0.25 mm (0.0039 - 0.0098 in)

  Allowable limit 0.25 mm (0.0098 in)
- If not within allowable limit, replace low one-way clutch inner race.

ASSEMBLY

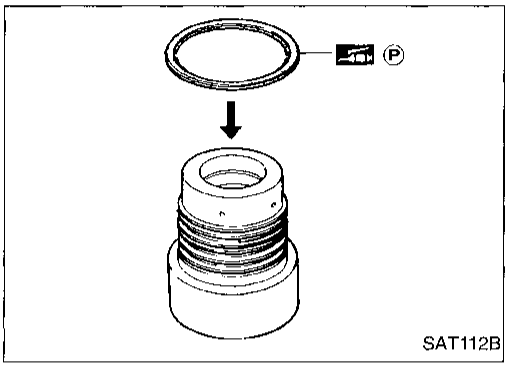

1. Install needle bearing onto one-way clutch inner race.
- **Pay attention to its direction — black surface faces to rear side.**
- **Apply petroleum jelly to thrust washers.**

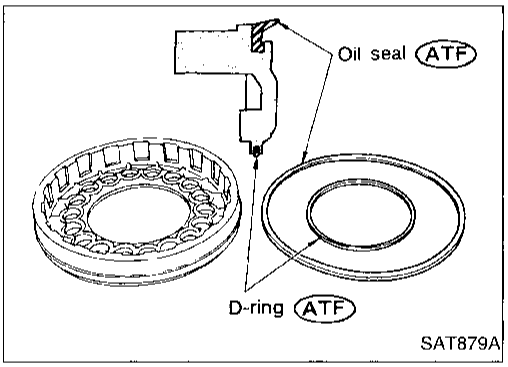

2. Install oil seal and D-ring onto piston.
- **Apply ATF to oil seal and D-ring.**

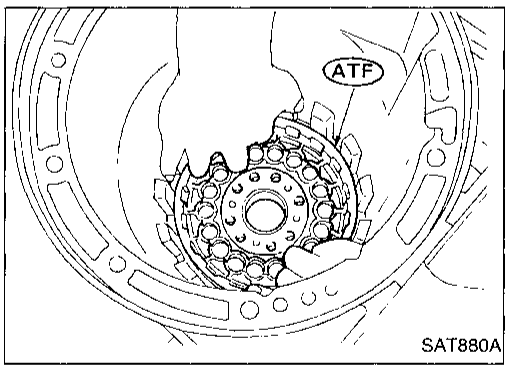

3. Install piston by rotating it slowly and evenly.
- **Apply ATF to inner surface of transmission case.**

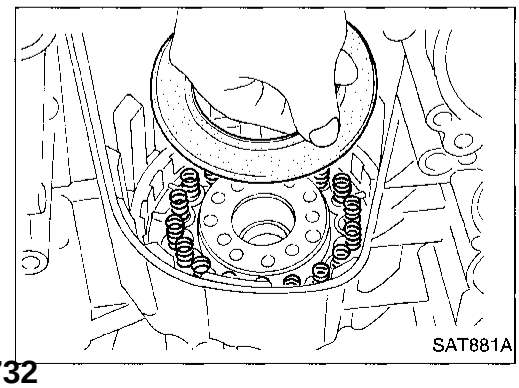

4. Install return springs, spring retainer and low one-way clutch inner race onto transmission case.
5. Install dish plate, low & reverse brake drive plates, driven plates and retaining plate.
6. Install snap ring on transmission case.

Low & Reverse Brake (Cont'd)

Simpo PDF Merge and Split Unregistered Version - http://www.simpopdf.com

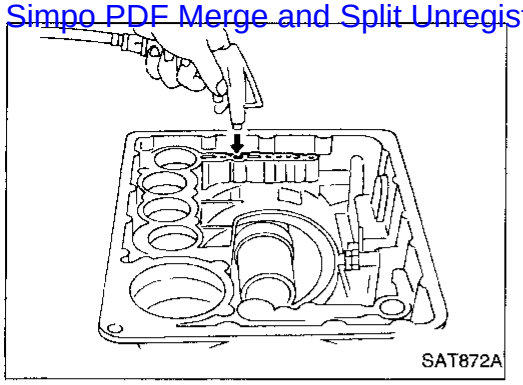
SAT872A

7. Check operation of low & reverse brake clutch piston. Refer to "DISASSEMBLY", AT-92.

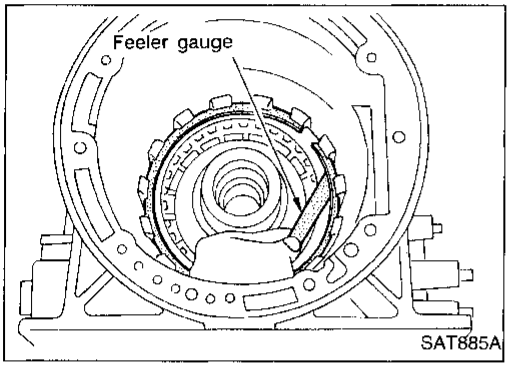

SAT885A

8. Measure clearance between retaining plate and snap ring. If not within allowable limit, select proper retaining plate.
   Specified clearance:
   Standard
   0.5 - 0.8 mm (0.020 - 0.031 in)
   Allowable limit
   2.3 mm (0.091 in)
   Retaining plate:
   Refer to SDS, AT-124.

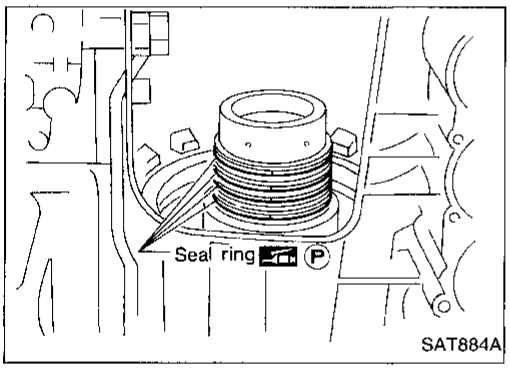

SAT884A

9. Install low one-way clutch inner race seal ring.
- **Apply petroleum jelly to seal ring.**
- **Make sure seal rings are pressed firmly into place and held by petroleum jelly.**

Forward Clutch Drum Assembly

SEC. 315

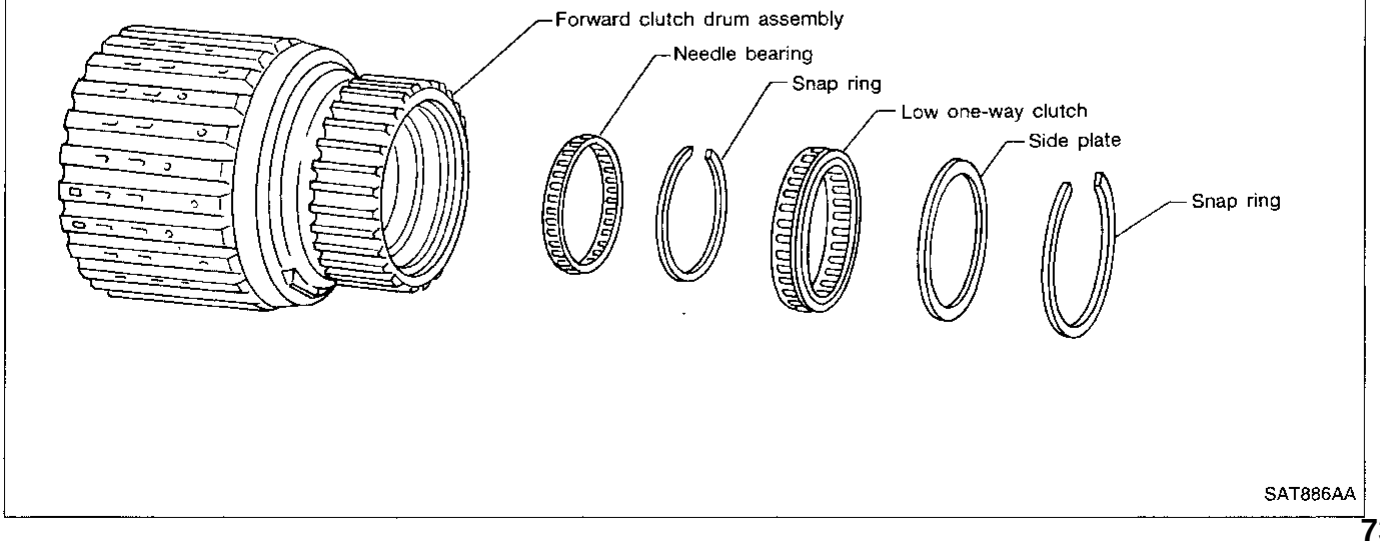

SAT886AA

Forward Clutch Drum Assembly (Cont'd)

Simpo PDF Merge and Split Unregistered Version - http://www.simpopdf.com

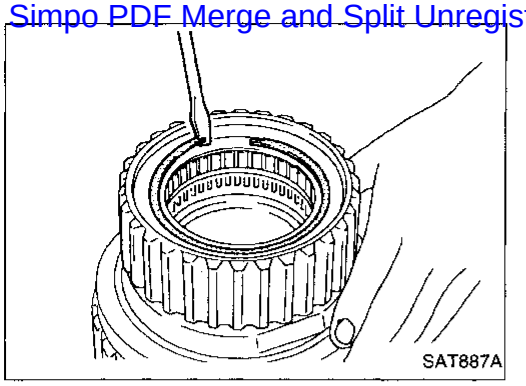
SAT887A

DISASSEMBLY

1. Remove snap ring from forward clutch drum.
2. Remove side plate from forward clutch drum.
3. Remove low one-way clutch from forward clutch drum.
4. Remove snap ring from forward clutch drum.
5. Remove needle bearing from forward clutch drum.

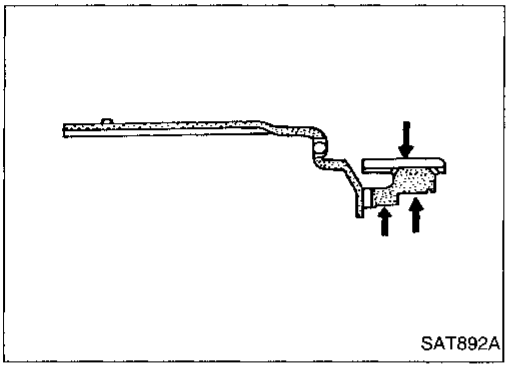
SAT892A

INSPECTION

Forward clutch drum

- Check spline portion for wear or damage.
- Check frictional surfaces of low one-way clutch and needle bearing for wear or damage.

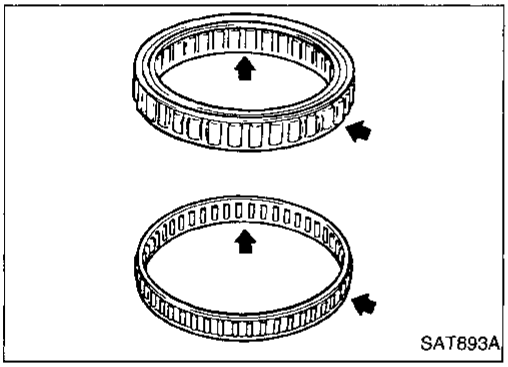
SAT893A

Needle bearing and low one-way clutch

- Check frictional surface for wear or damage.

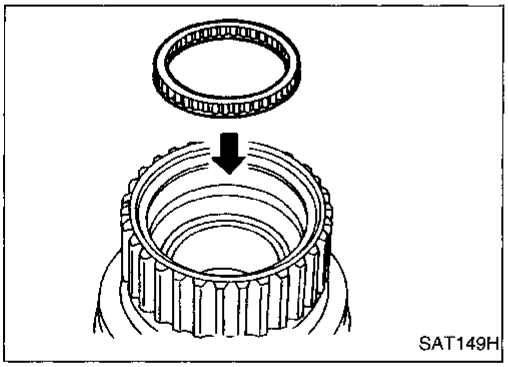
SAT149H

ASSEMBLY

1. Install needle bearing in forward clutch drum.
2. Install snap ring onto forward clutch drum.

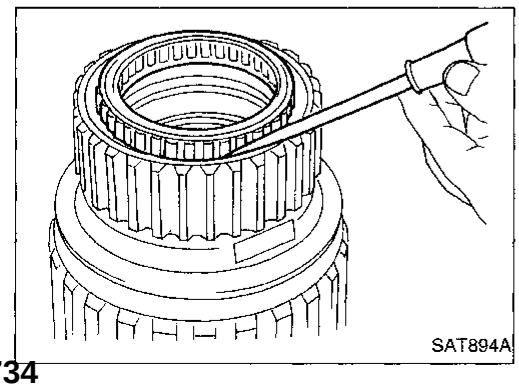
SAT894A

3. Install low one-way clutch onto forward clutch drum by pushing the roller in evenly.

Forward Clutch Drum Assembly (Cont'd)

Simpo PDF Merge and Split Unregistered Version - http://www.simpopdf.com

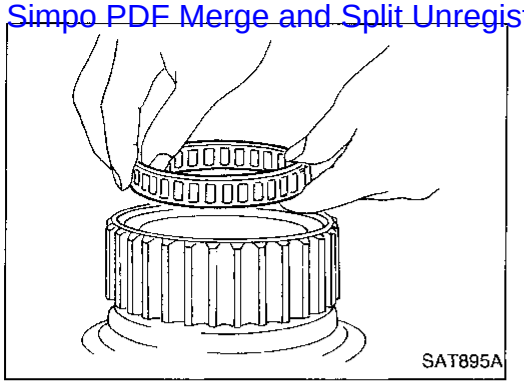
SAT895A

- **Install low one-way clutch with flange facing rearward.**

4. Install side plate onto forward clutch drum.
5. Install snap ring onto forward clutch drum.

Rear Internal Gear and Forward Clutch Hub

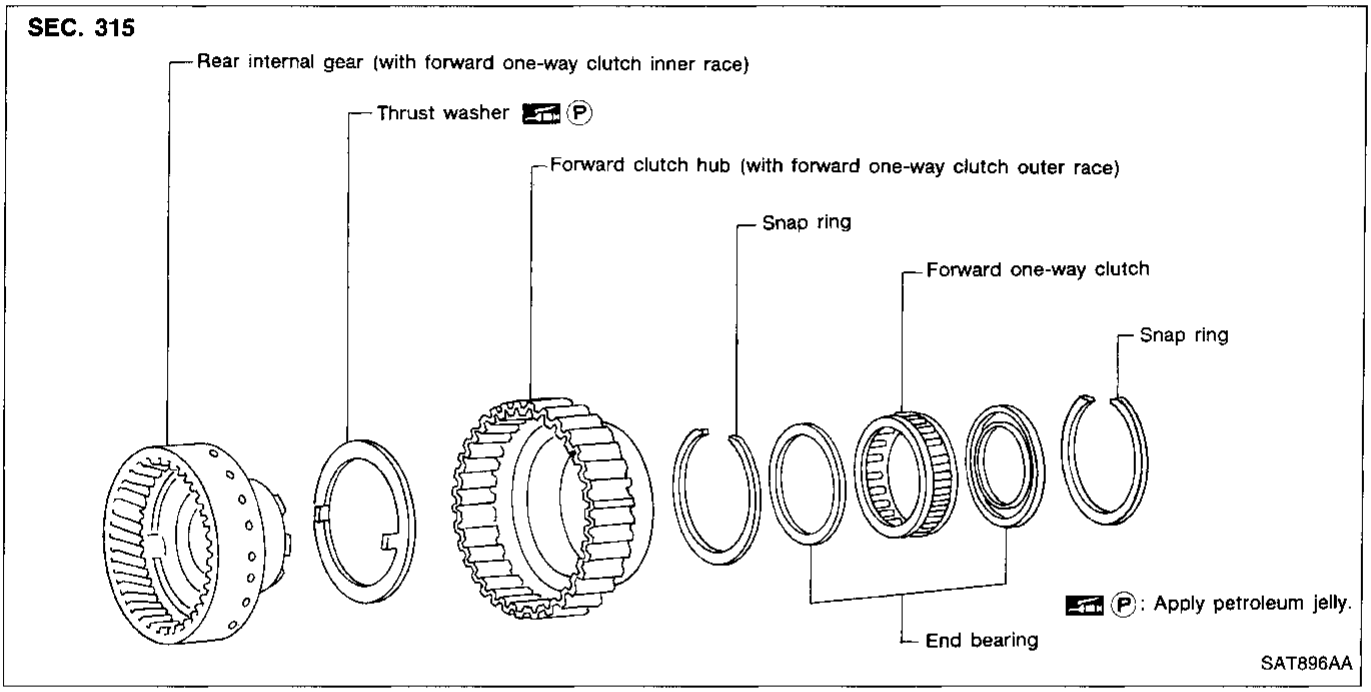

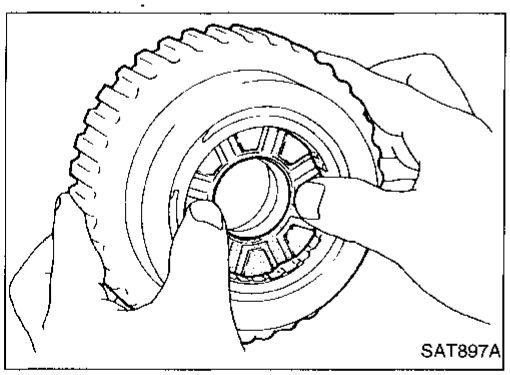
SAT897A

DISASSEMBLY

1. Remove rear internal gear by pushing forward clutch hub forward.
2. Remove thrust washer from rear internal gear.
3. Remove snap ring from forward clutch hub.
4. Remove end bearing.

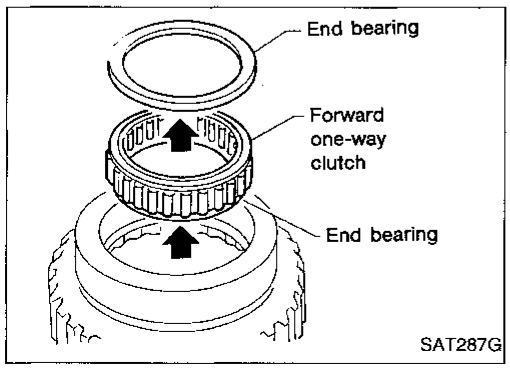

5. Remove forward one-way clutch and end bearing as a unit from forward clutch hub.
6. Remove snap ring from forward clutch hub.

Simpo PDF Merge and Split Unregistered Version - http://www.simpopdf.com

Rear Internal Gear and Forward Clutch Hub (Cont'd)

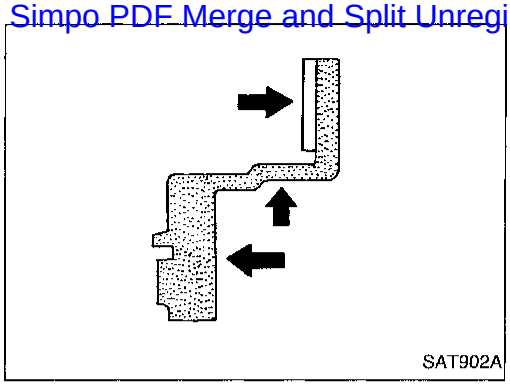
SAT902A

INSPECTION

Rear internal gear and forward clutch hub

- Check gear for excessive wear, chips or cracks.
- Check frictional surfaces of forward one-way clutch and thrust washer for wear or damage.
- Check spline for wear or damage.

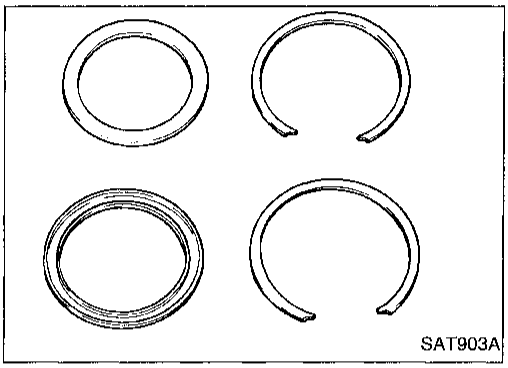
SAT903A

Snap ring and end bearing

- Check for deformation or damage.

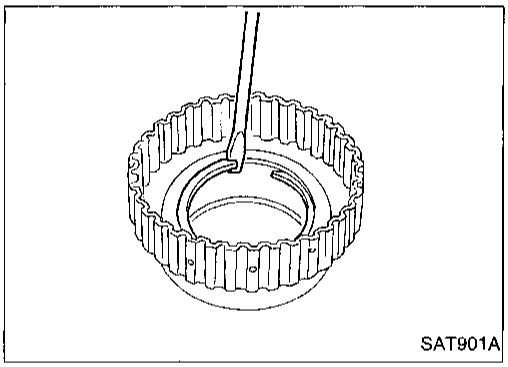
SAT901A

ASSEMBLY

1. Install snap ring onto forward clutch hub.
2. Install end bearing.

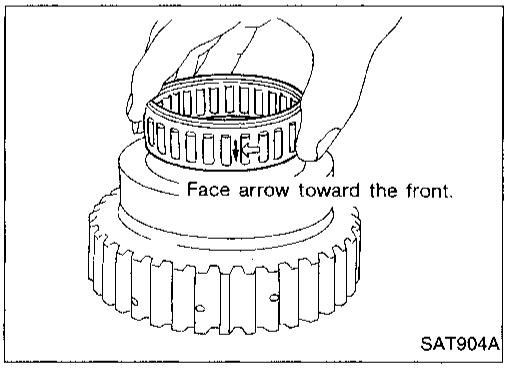

SAT904A

3. Install forward one-way clutch onto clutch hub.
- **Install forward one-way clutch with flange facing rearward.**
4. Install end bearing.
5. Install snap ring onto forward clutch hub.

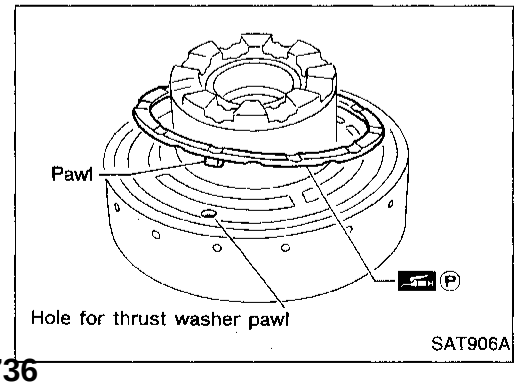

SAT906A

6. Install thrust washer onto rear internal gear.
- **Apply petroleum jelly to thrust washer.**
- **Securely insert pawls of thrust washer into holes in rear internal gear.**

Simpo PDF Merge and Split Unregistered Version - http://www.simpopdf.com

Rear Internal Gear and Forward Clutch Hub (Cont'd)

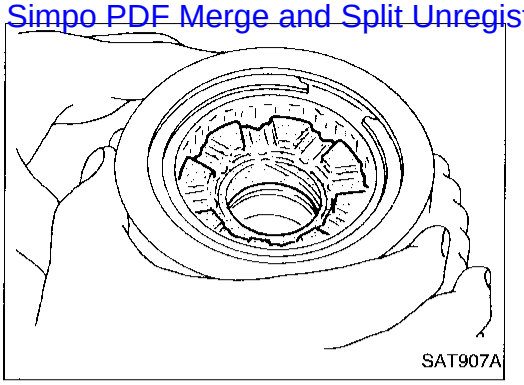
SAT907A

7. Position forward clutch hub in rear internal gear.

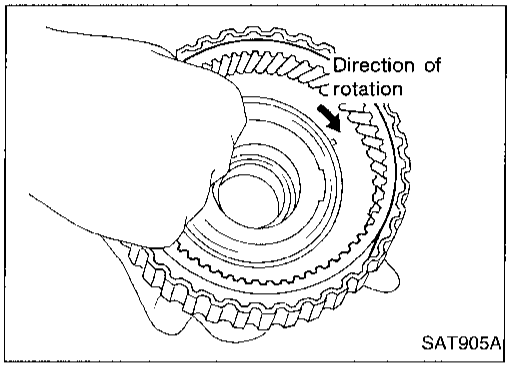

SAT905A

8. After installing, check to assure that forward clutch hub rotates clockwise.

Band Servo Piston Assembly

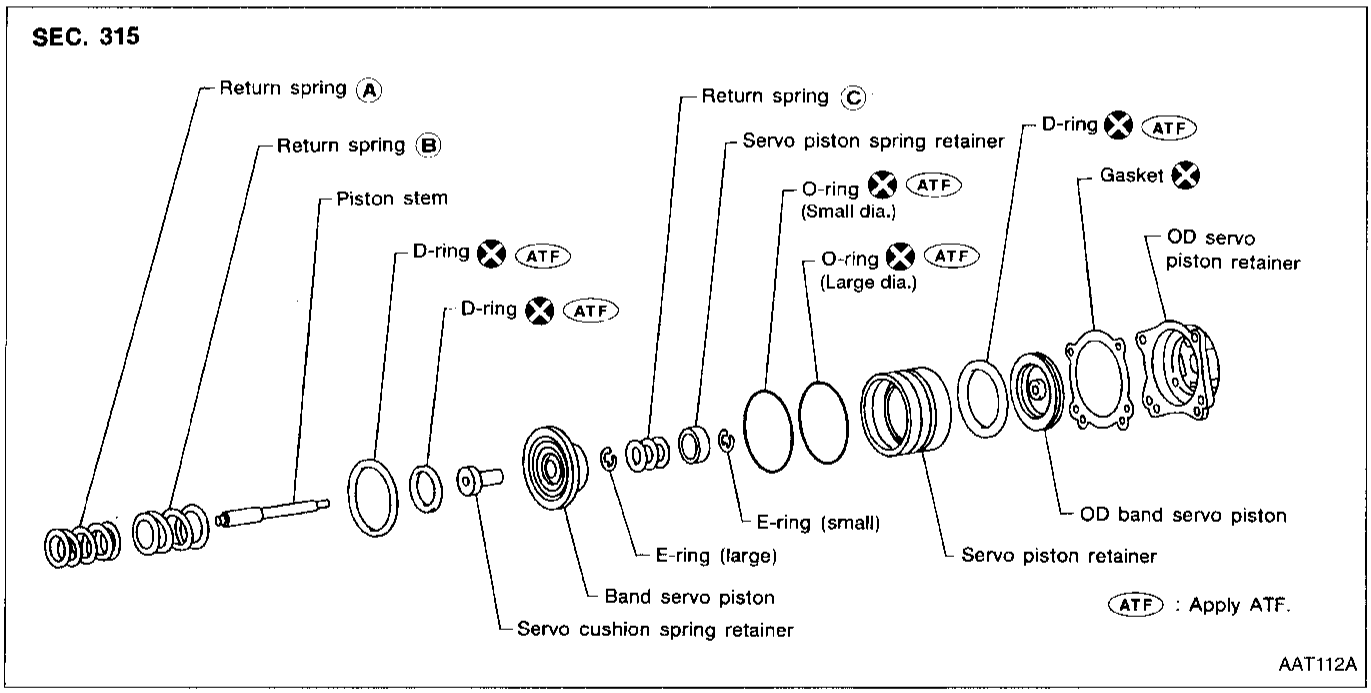

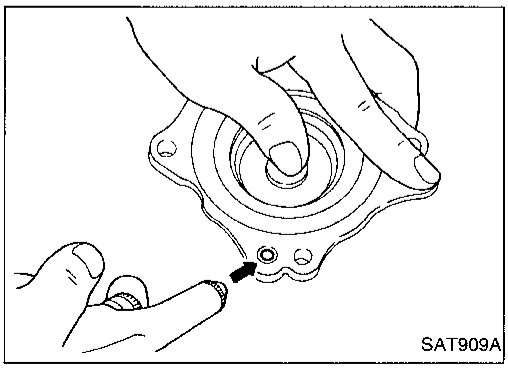
SAT909A

DISASSEMBLY

1. Block one oil hole in OD servo piston retainer and the center hole in OD band servo piston.
2. Apply compressed air to the other oil hole in piston retainer to remove OD band servo piston from retainer.
3. Remove D-ring from OD band servo piston.

Band Servo Piston Assembly (Cont'd)

Simpo PDF Merge and Split Unregistered Version - http://www.simpopdf.com

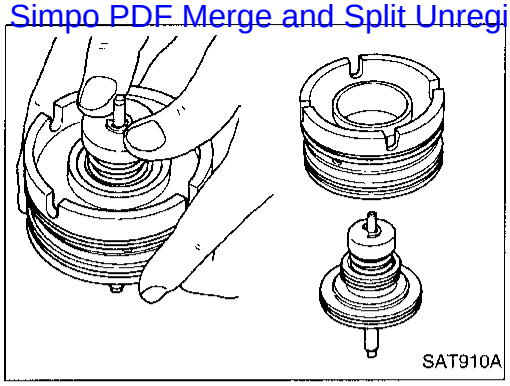
SAT910A

4. Remove band servo piston assembly from servo piston retainer by pushing it forward.

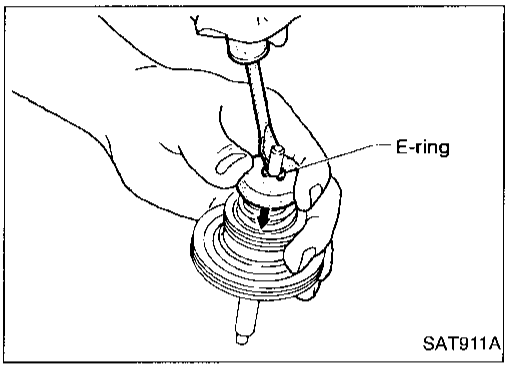

SAT911A

5. Place piston stem end on a wooden block. While pushing servo piston spring retainer down, remove E-ring.

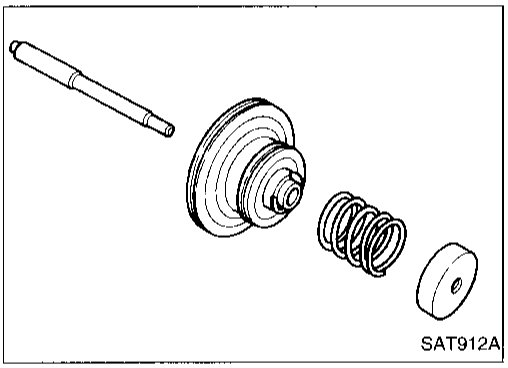
SAT912A

6. Remove servo piston spring retainer, return spring Ⓒ and piston stem from band servo piston.

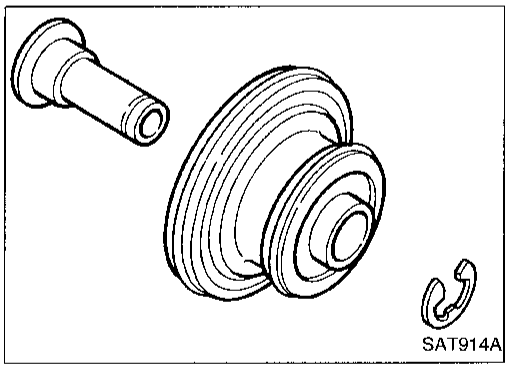
SAT914A

7. Remove E-ring from band servo piston.
8. Remove servo cushion spring retainer from band servo piston.
9. Remove D-rings from band servo piston.
10. Remove O-rings from servo piston retainer.

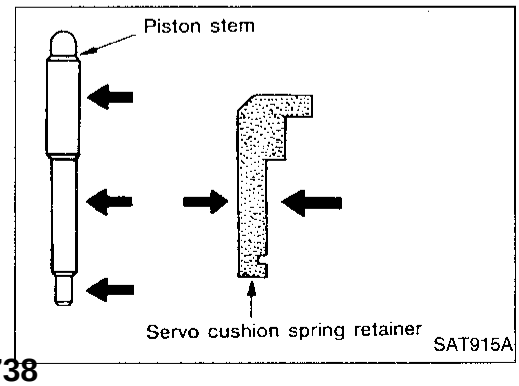

SAT915A

INSPECTION

Pistons, retainers and piston stem

- Check frictional surfaces for abnormal wear or damage.

Band Servo Piston Assembly (Cont'd)

Simpo PDF Merge and Split Unregistered Version - http://www.simpopdf.com

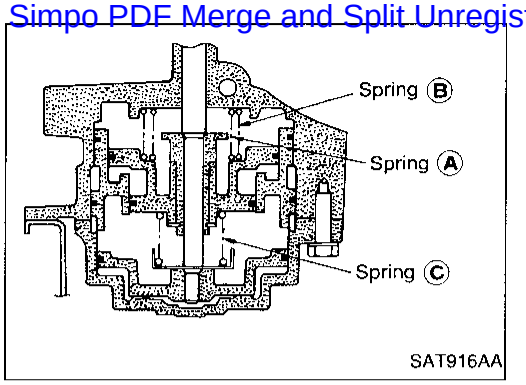

SAT916AA

Return springs

- Check for deformation or damage. Measure free length and outer diameter.

Inspection standard:
Refer to SDS, AT-123.

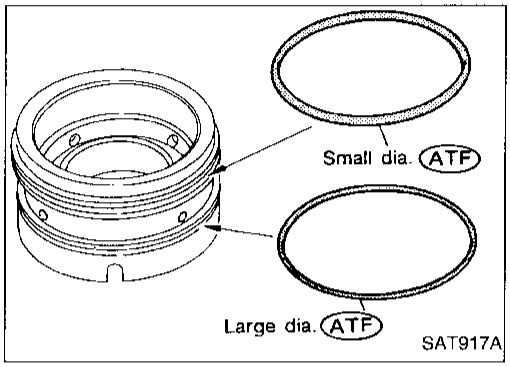

SAT917A

ASSEMBLY

1. Install O-rings onto servo piston retainer.
- **Apply ATF to O-rings.**
- **Pay attention to position of each O-ring.**

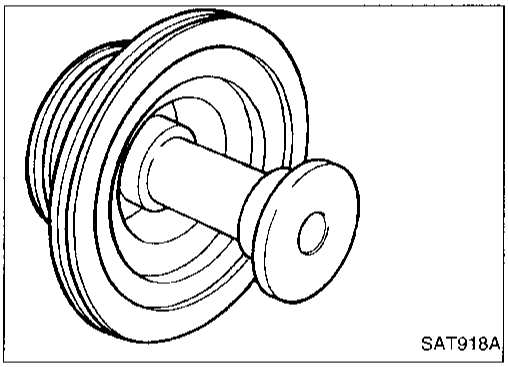
SAT918A

2. Install servo cushion spring retainer onto band servo piston.

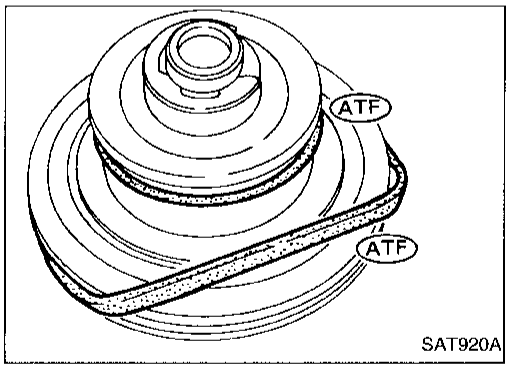

SAT920A

3. Install E-ring onto servo cushion spring retainer.
4. Install D-rings onto band servo piston.
- **Apply ATF to D-rings.**

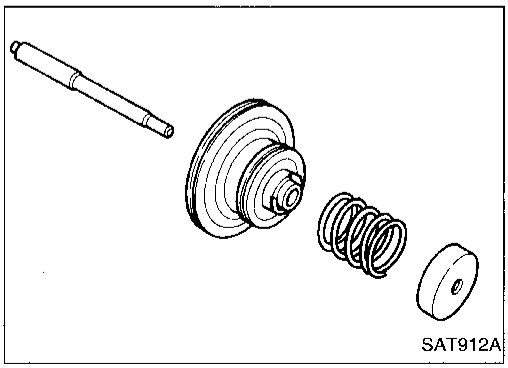
SAT912A

5. Install servo piston spring retainer, return spring Ⓒ and piston stem onto band servo piston.

Band Servo Piston Assembly (Cont'd)

Simpo PDF Merge and Split Unregistered Version - http://www.simpopdf.com

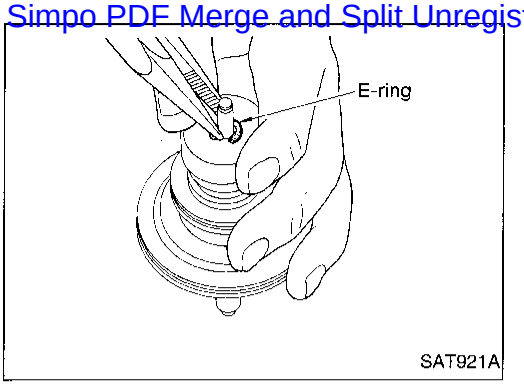

6. Place piston stem end on a wooden block. While pushing servo piston spring retainer down, install E-ring.

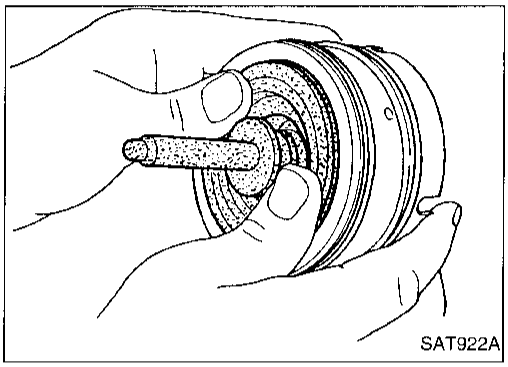

7. Install band servo piston assembly onto servo piston retainer by pushing it inward.

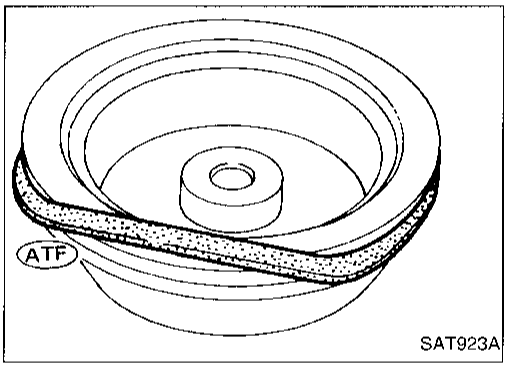

8. Install D-ring on OD band servo piston.
- **Apply ATF to D-ring.**

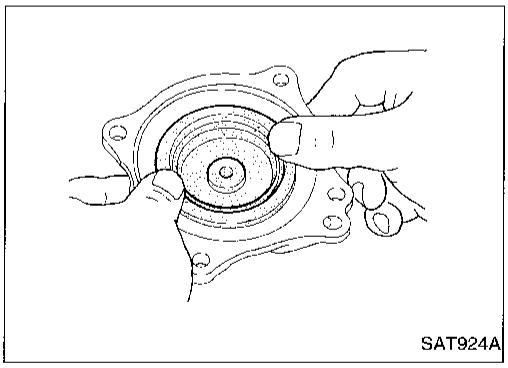

9. Install OD band servo piston onto OD servo piston retainer by pushing it inward.

Simpo PDF Merge and Split Unregistered Version - http://www.simpopdf.com

Parking Pawl Components

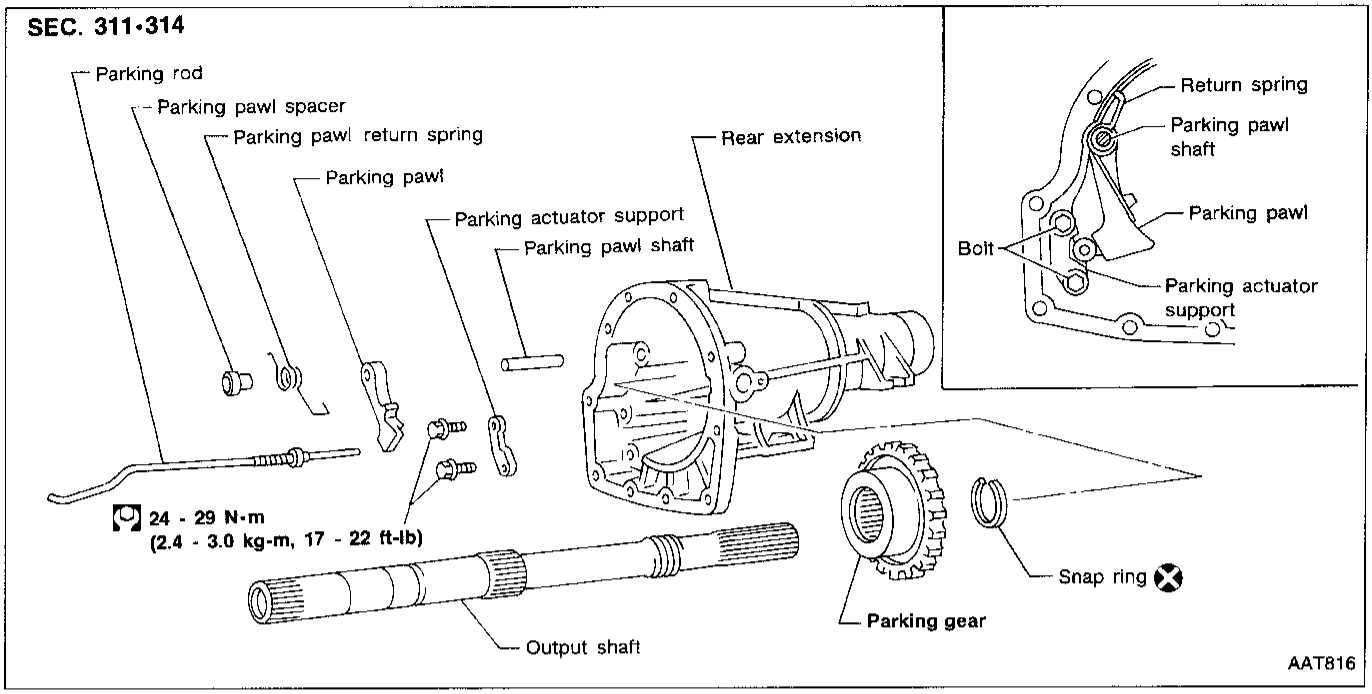

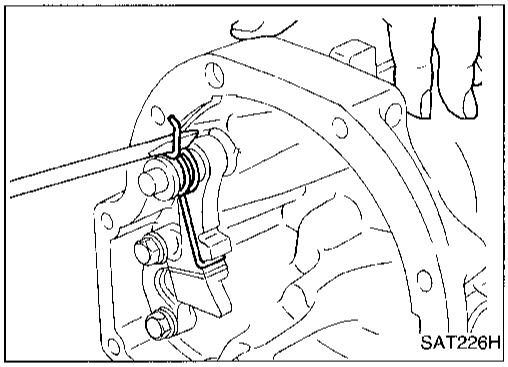

DISASSEMBLY

1. Slide return spring to the front of rear extension flange.

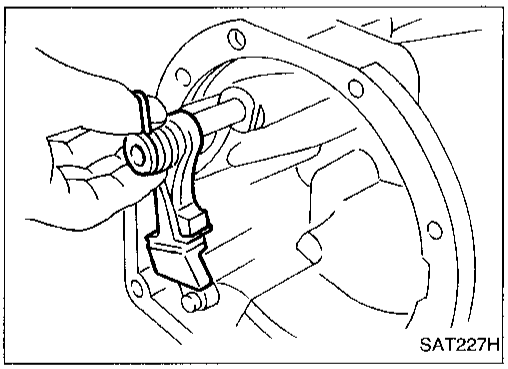

2. Remove return spring, pawl spacer and parking pawl from rear extension.
3. Remove parking pawl shaft from rear extension.

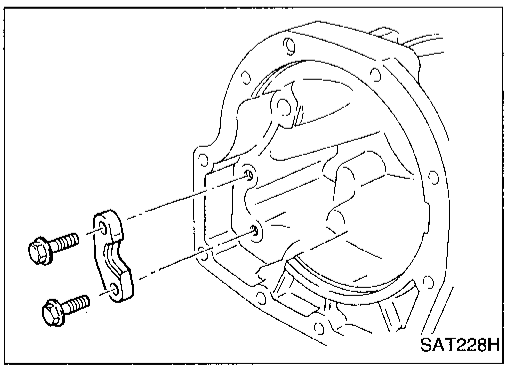

4. Remove parking actuator support from rear extension.

Parking Pawl Components (Cont'd)

Simpo PDF Merge and Split Unregistered Version - http://www.simpopdf.com

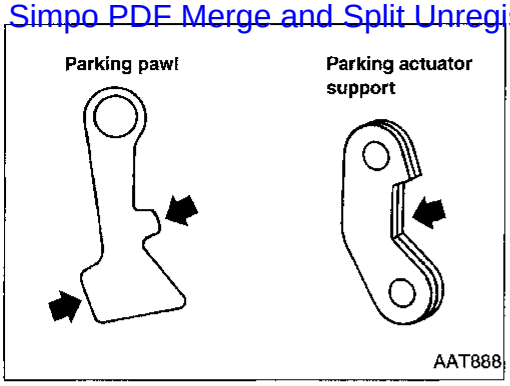

INSPECTION

Parking pawl and parking actuator support

- Check contact surface of parking rod and parking gear for wear.

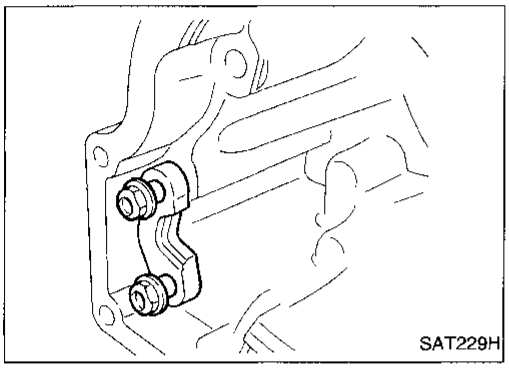

ASSEMBLY

1. Install parking actuator support onto rear extension.
2. Insert parking pawl shaft into rear extension.

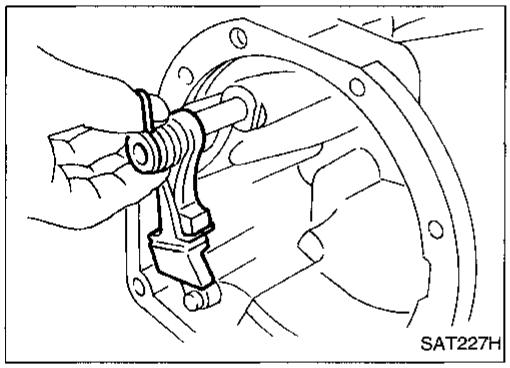

3. Install return spring, pawl spacer and parking pawl onto parking pawl shaft.

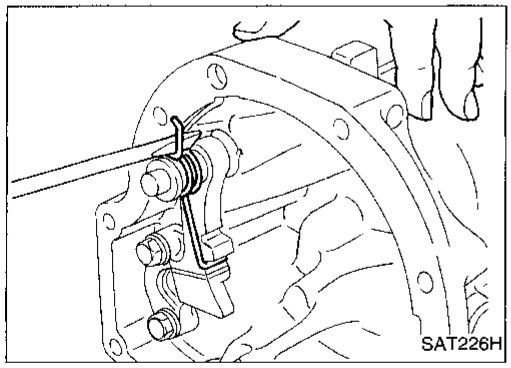

4. Bend return spring upward and install it onto rear extension.

Simpo PDF Merge and Split Unregistered Version - http://www.simpopdf.com

Assembly (1)

1. Install manual shaft components.

a. Install oil seal onto manual shaft.

- **Apply ATF to oil seal.**
- **Wrap threads of manual shaft with masking tape.**

b. Insert manual shaft and oil seal as a unit into transmission case.

c. Remove masking tape.

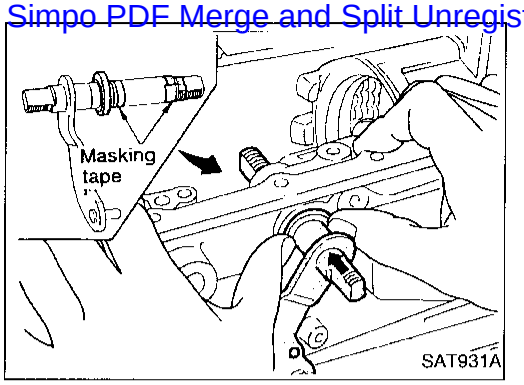

d. Push oil seal evenly and install it onto transmission case.

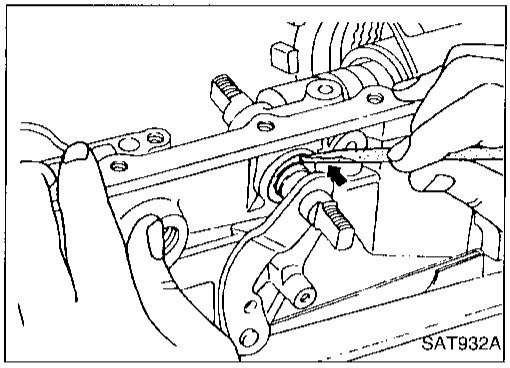

e. Align groove in shaft with drive pin hole; then drive pin into position as shown in figure at left.

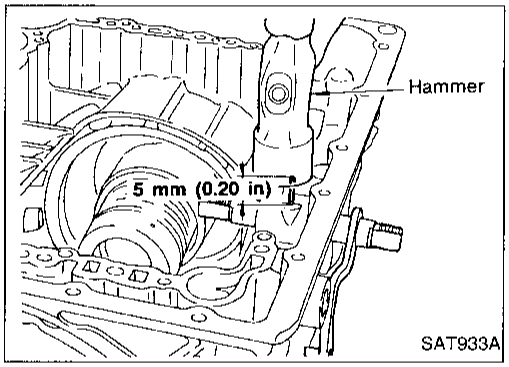

f. Install detent spring and spacer.

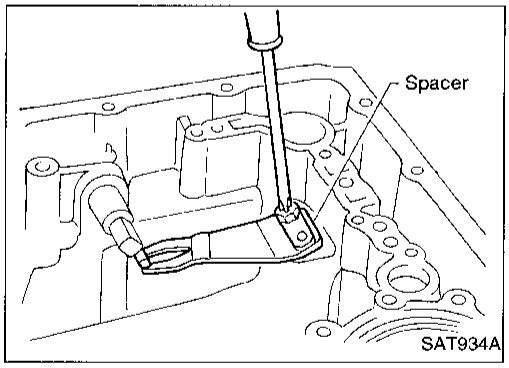

g. While pushing detent spring down, install manual plate onto manual shaft.

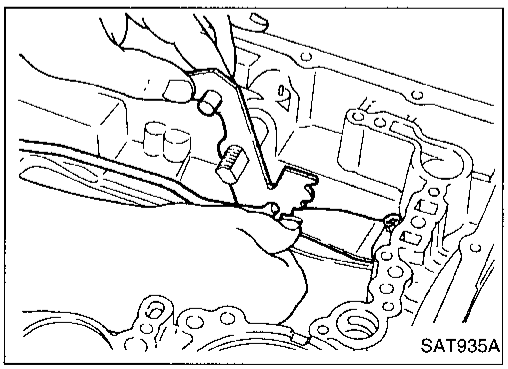

Assembly (1) (Cont'd)

Simpo PDF Merge and Split Unregistered Version - http://www.simpopdf.com

h. Install lock nuts onto manual shaft.

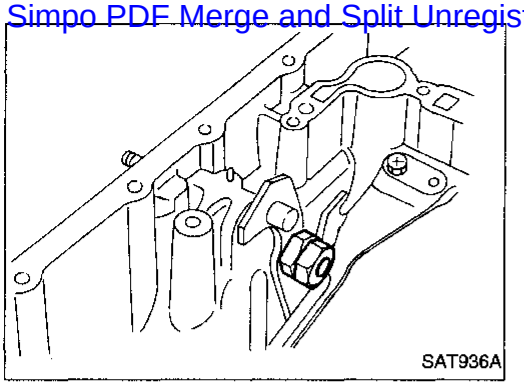
SAT936A

2. Install throttle lever components.
a. Install throttle lever shaft.
b. Align groove in shaft with drive pin hole, then drive pin into position as shown in figure at left.

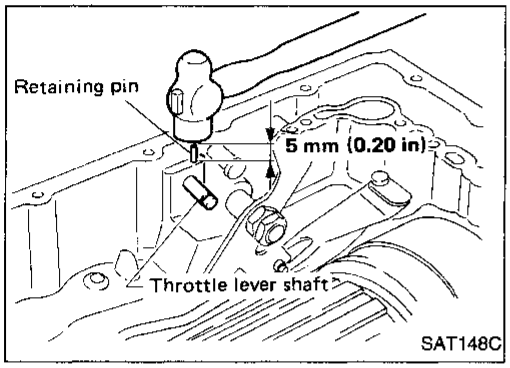

SAT148C

c. Install throttle lever, return spring, spring retainer and E-ring.

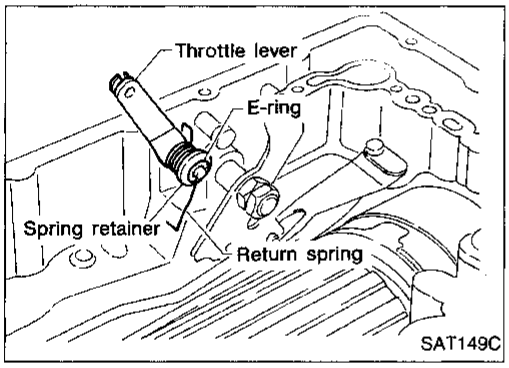

SAT149C

d. Install throttle wire.

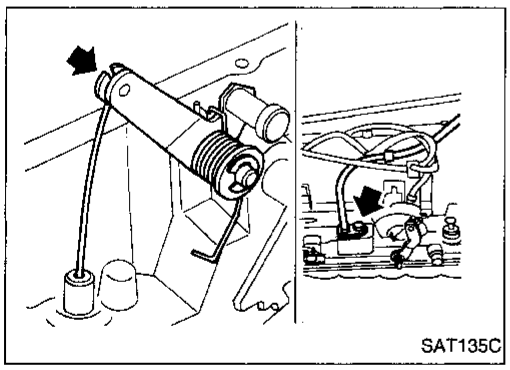
SAT135C

- **Apply ATF to O-ring.**

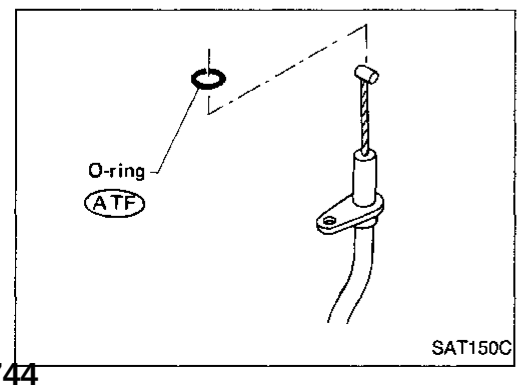

SAT150C

Assembly (1) (Cont'd)

Simpo PDF Merge and Split Unregistered Version - http://www.simpopdf.com

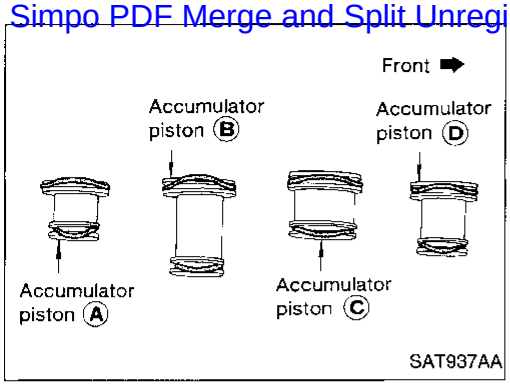

3. Install accumulator piston.

a. Install O-rings onto accumulator piston.

- **Apply ATF to O-rings.**

Accumulator piston O-rings:
Refer to SDS, AT-123.

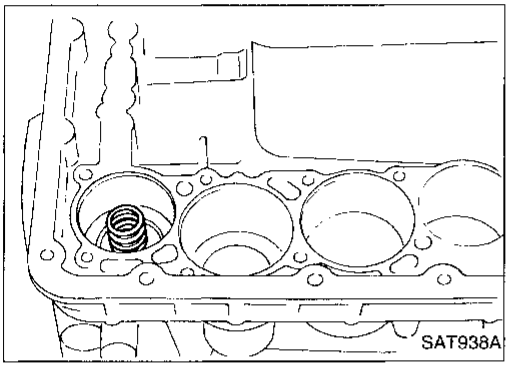

b. Install return spring for accumulator Ⓐ onto transmission case.

Free length of return spring:
Refer to SDS, AT-123.

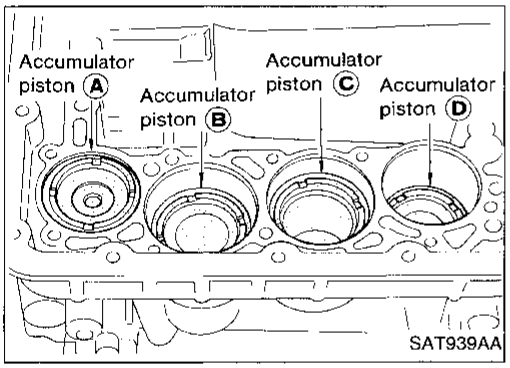

c. Install accumulator pistons Ⓐ, Ⓑ, Ⓒ and Ⓓ.

- **Apply ATF to transmission case.**

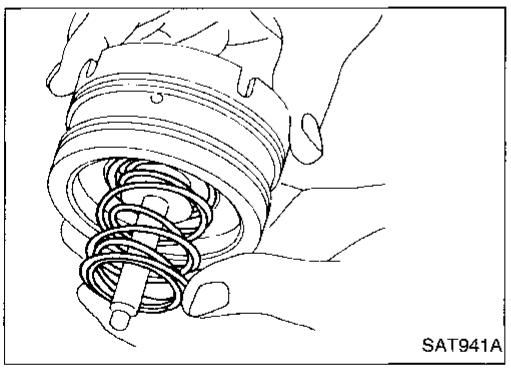

4. Install band servo piston.

a. Install return springs onto band servo piston.

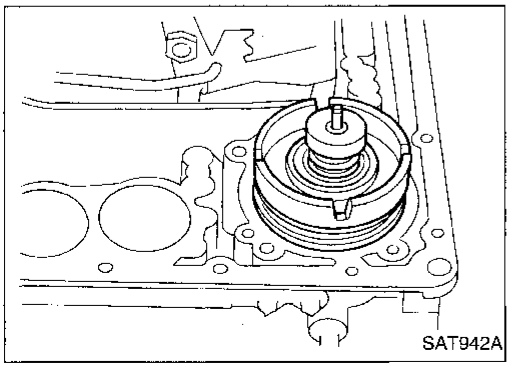

b. Install band servo piston onto transmission case.

- **Apply ATF to O-ring of band servo piston and transmission case.**

c. Install gasket for band servo onto transmission case.

Assembly (1) (Cont'd)

Simpo PDF Merge and Split Unregistered Version - http://www.simpopdf.com

d. Install OD servo piston retainer onto transmission case.

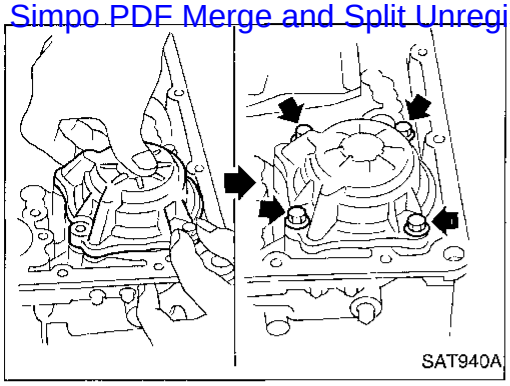

5. Install rear side clutch and gear components.

a. Place transmission case in vertical position.

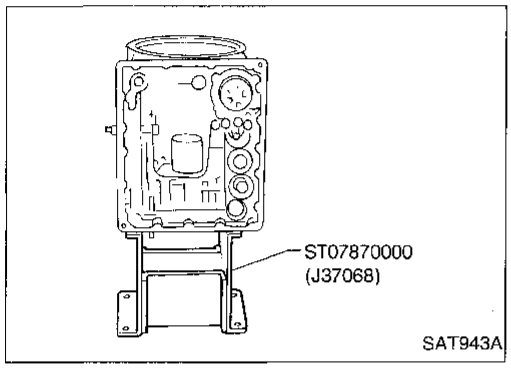

b. Slightly lift forward clutch drum assembly and slowly rotate it clockwise until its hub passes fully over the clutch inner race inside transmission case.

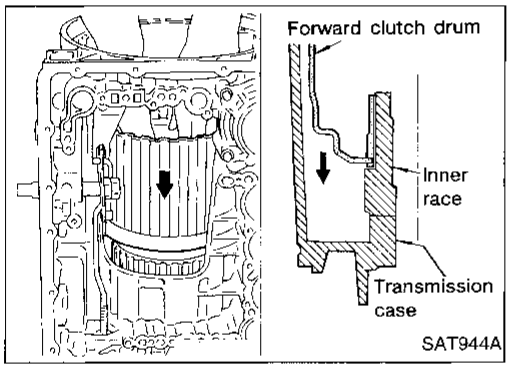

c. Check to be sure that rotation direction of forward clutch assembly is correct.

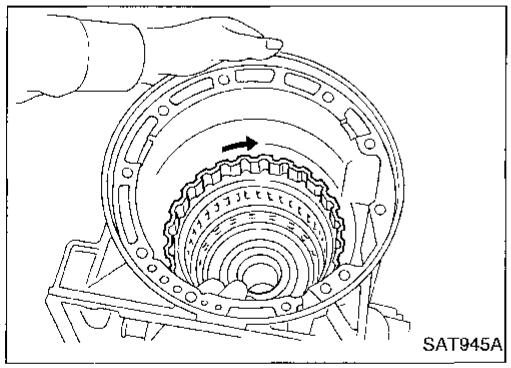

d. Install thrust washer onto front of overrun clutch hub.

- **Apply petroleum jelly to the thrust washer.**
- **Insert pawls of thrust washer securely into holes in overrun clutch hub.**

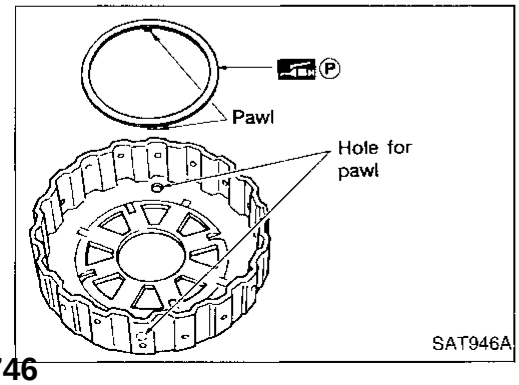

Assembly (1) (Cont'd)

Simpo PDF Merge and Split Unregistered Version - http://www.simpopdf.com

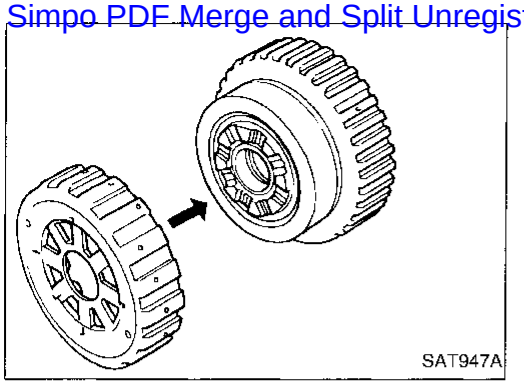
SAT947A

e. Install overrun clutch hub onto rear internal gear assembly.

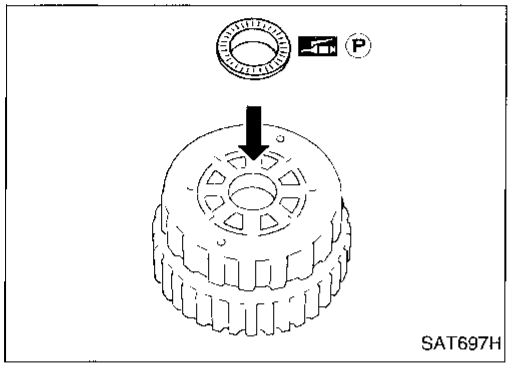
SAT697H

f. Install needle bearing onto rear of overrun clutch hub.
- **Apply petroleum jelly to needle bearing.**

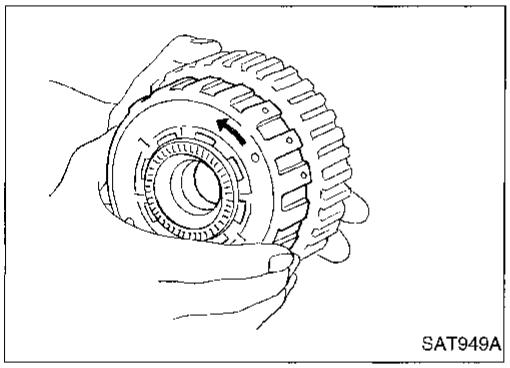
SAT949A

g. Check that overrun clutch hub rotates as shown while holding forward clutch hub.

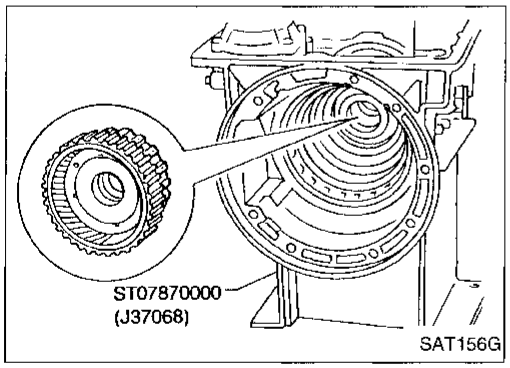

SAT156G

h. Place transmission case into horizontal position.
i. Install rear internal gear, forward clutch hub and overrun clutch hub as a unit onto transmission case.

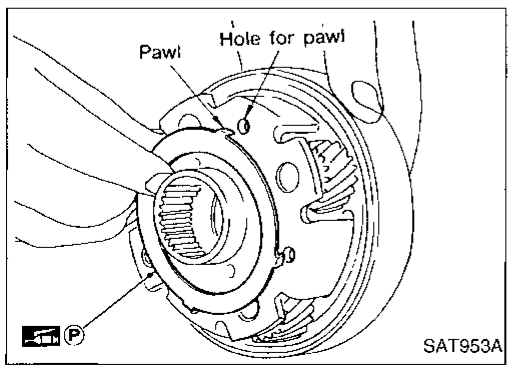

SAT953A

j. Install needle bearing onto rear internal gear.
- **Apply petroleum jelly to needle bearing.**

k. Install bearing race onto rear of front internal gear.
- **Apply petroleum jelly to bearing race.**
- **Securely engage pawls of bearing race with holes in front internal gear.**

Assembly (1) (Cont'd)

Simpo PDF Merge and Split Unregistered Version - http://www.simpopdf.com

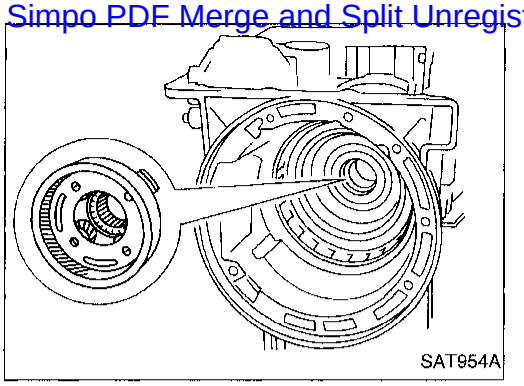
SAT954A

I. Install front internal gear on transmission case.

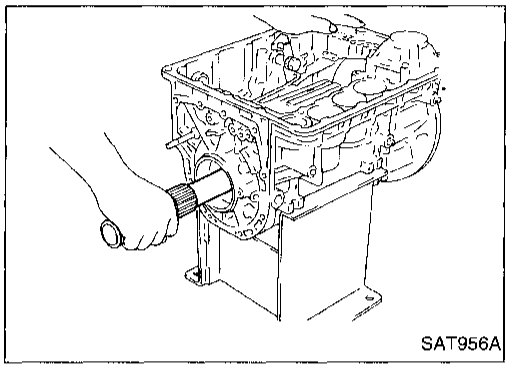
SAT956A

6. Install output shaft and parking gear.
a. Insert output shaft from rear of transmission case while slightly lifting front internal gear.

- **Do not force output shaft against front of transmission case.**

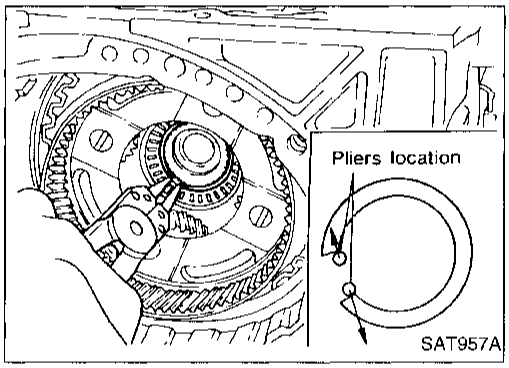

SAT957A

b. Carefully push output shaft against front of transmission case. Install snap ring on front of output shaft.

- **Check to be sure output shaft cannot be removed in rear direction.**

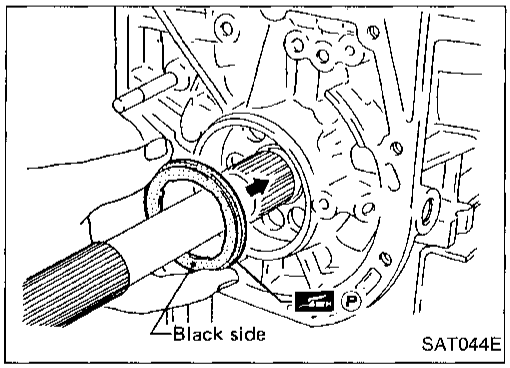

SAT044E

c. Install needle bearing on transmission case.

- **Pay attention to its direction — black side faces the rear.**
- **Apply petroleum jelly to needle bearing.**

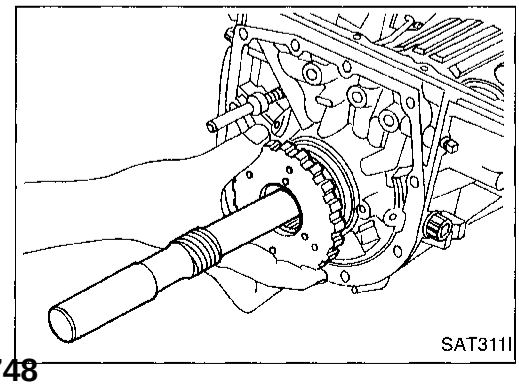
SAT311I

d. Install parking gear on transmission case.

Assembly (1) (Cont'd)

Simpo PDF Merge and Split Unregistered Version - http://www.simpopdf.com

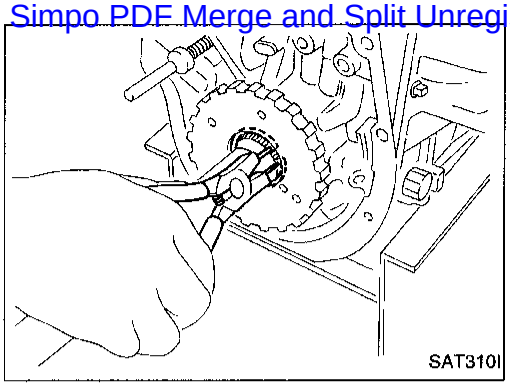
SAT310I

e. Install snap ring on rear of output shaft.
- **Check to be sure output shaft cannot be removed in forward direction.**

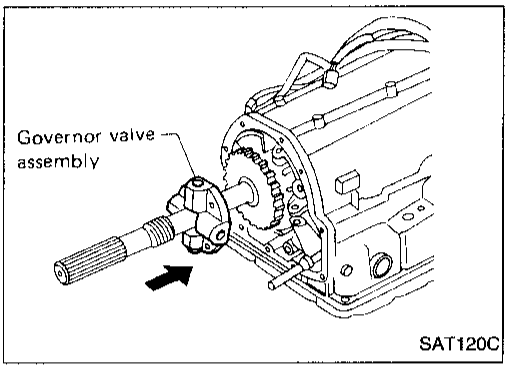

SAT120C

f. Install governor valve assembly on oil distributor.

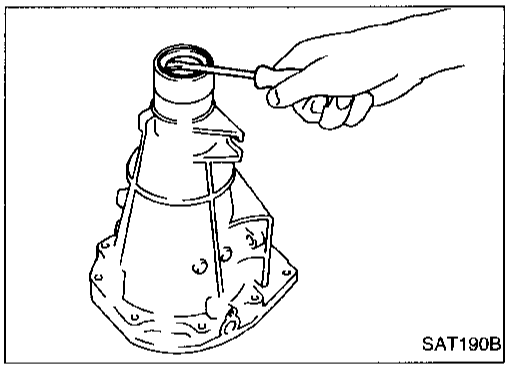
SAT190B

7. Install rear extension case.
a. Install oil seal on rear extension case.
- **Apply ATF to oil seal.**

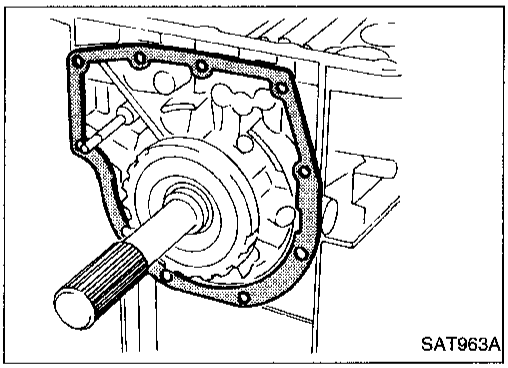
SAT963A

b. Install rear extension gasket on transmission case. Refer to AT-51.

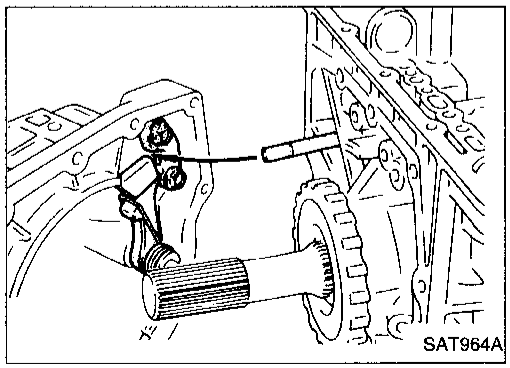
SAT964A

c. Install parking rod on transmission case.

Assembly (1) (Cont'd)

Simpo PDF Merge and Split Unregistered Version - http://www.simpopdf.com

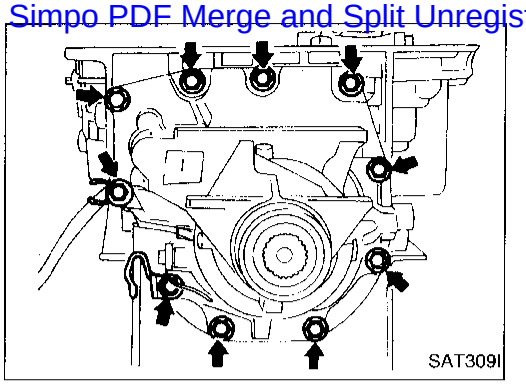

d. Install rear extension case on transmission case. Tighten bolts to specified torque.
: 20 - 25 N·m (2.0 - 2.5 kg-m, 14 - 18 ft-lb)

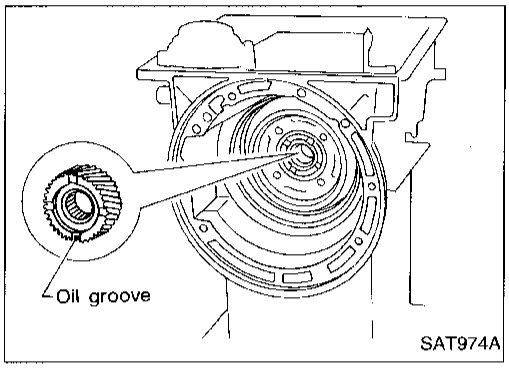

8. Install front side clutch and gear components.
a. Install rear sun gear on transmission case.
- **Pay attention to its direction.**

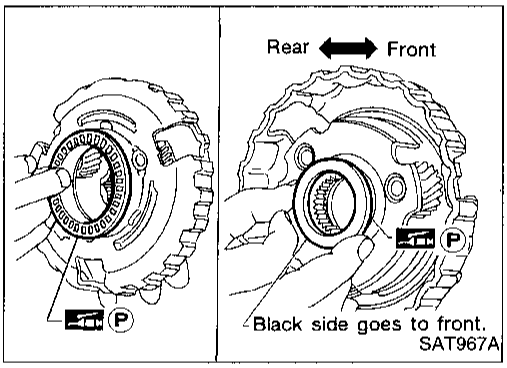

b. Install needle bearing on front of front planetary carrier.
- **Apply petroleum jelly to needle bearing.**

c. Install needle bearing on rear of front planetary carrier.
- **Apply petroleum jelly to needle bearing.**
- **Pay attention to its direction — black side faces the front.**

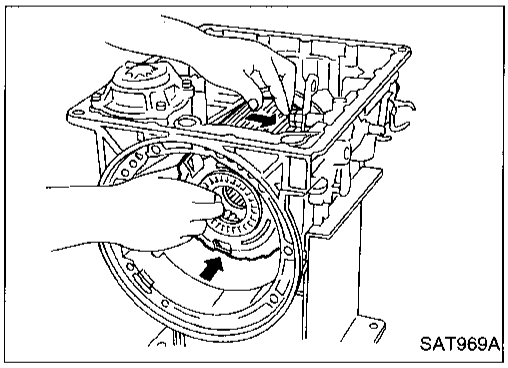

d. While rotating forward clutch drum clockwise, install front planetary carrier on forward clutch drum.

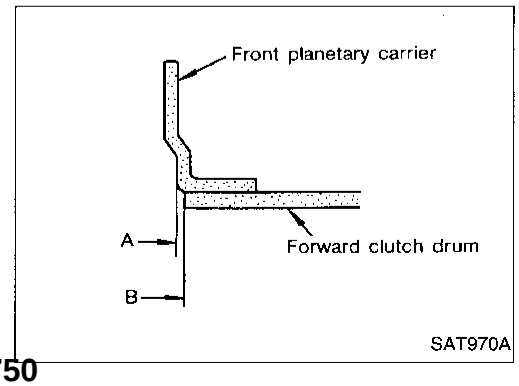

- **Check that portion A of front planetary carrier protrudes approximately 2 mm (0.08 in) beyond portion B of forward clutch assembly.**

Assembly (1) (Cont'd)

Simpo PDF Merge and Split Unregistered Version - http://www.simpopdf.com

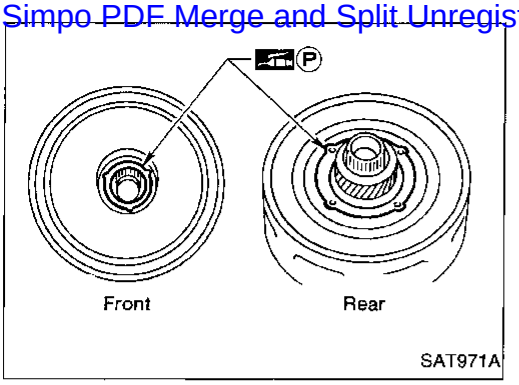

e. Install bearing races on front and rear of clutch pack.
- **Apply petroleum jelly to bearing races.**
- **Securely engage pawls of bearing races with holes in clutch pack.**

f. Place transmission case in vertical position.

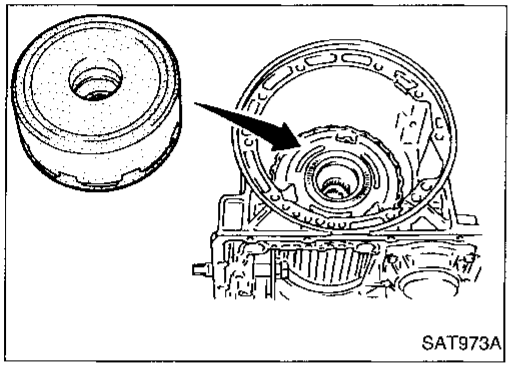

g. Install clutch pack into transmission case.

Adjustment

When any parts listed in the following table are replaced, total end play or reverse clutch end play must be adjusted.

Part name	Item	
	Total end play	Reverse clutch end play
Transmission case	●	●
Low one-way clutch inner race	●	●
Overrun clutch hub	●	●
Rear internal gear	●	●
Rear planetary carrier	●	●
Rear sun gear	●	●
Front planetary carrier	●	●
Front sun gear	●	●
High clutch hub	●	●
High clutch drum	●	●
Oil pump cover	●	●
Reverse clutch drum	—	●

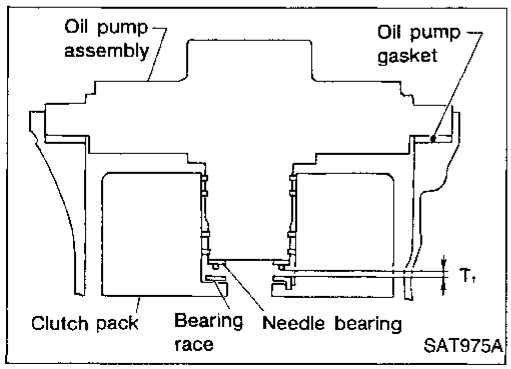

1. Adjust total end play.
   Total end play "T_1":
   0.25 - 0.55 mm (0.0098 - 0.0217 in)

Adjustment (Cont'd)

Simpo PDF Merge and Split Unregistered Version - http://www.simpopdf.com

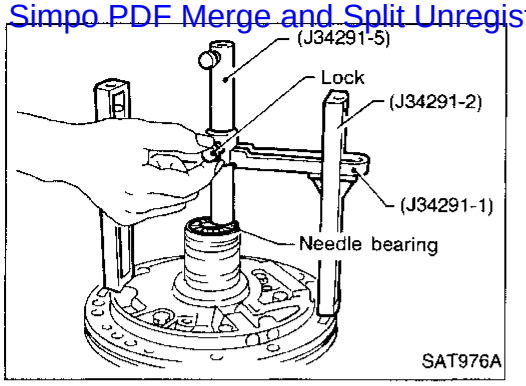

a. With original needle bearing installed, place J34291-1 (bridge), J34291-2 (legs) and the J34291-5 (gauging cylinder) onto oil pump. The long ends of legs should be placed firmly on machined surface of oil pump assembly and gauging cylinder should rest on top of the needle bearing. Lock gauging cylinder in place with set screw.

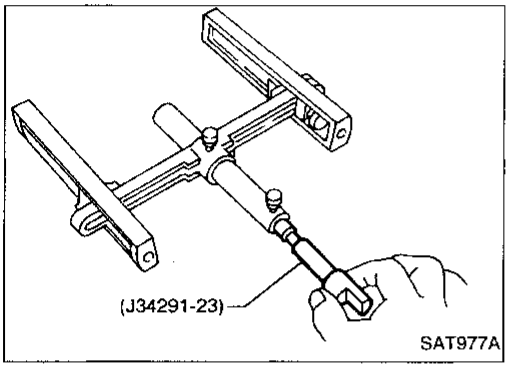

b. Install J34291-23 (gauging plunger) into gauging cylinder.

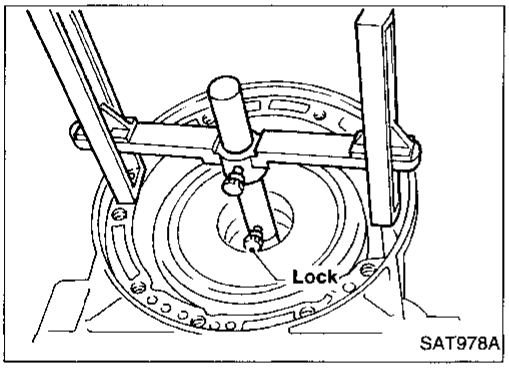

c. With original bearing race installed inside reverse clutch drum, place shim selecting gauge with its legs on machined surface of transmission case (no gasket) and allow gauging plunger to rest on bearing race. Lock gauging plunger in place with set screw.

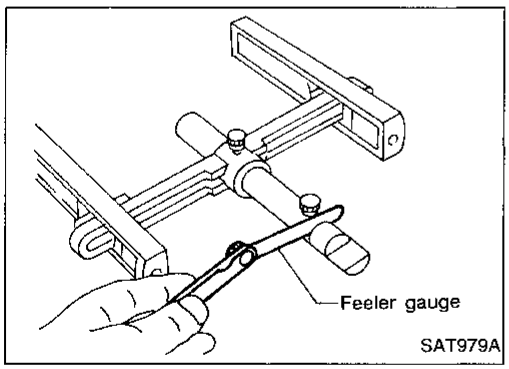

d. Remove Tool and use feeler gauge to measure gap between gauging cylinder and gauging plunger. This measurement should give exact total end play.

Total end play "T_1":
0.25 - 0.55 mm (0.0098 - 0.0217 in)

- If end play is out of specification, decrease or increase thickness of oil pump cover bearing race as necessary.

Available oil pump cover bearing race:
Refer to SDS, AT-125.

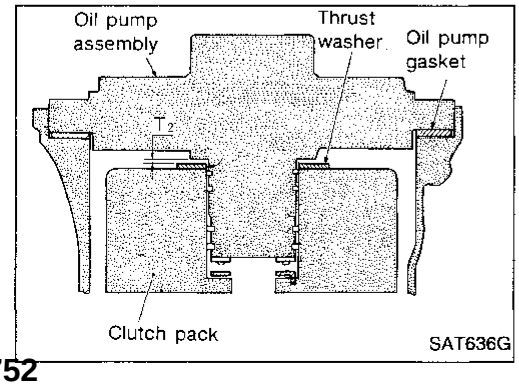

2. Adjust reverse clutch drum end play.

Reverse clutch drum end play "T_2":
0.55 - 0.90 mm (0.0217 - 0.0354 in)

Adjustment (Cont'd)

Simpo PDF Merge and Split Unregistered Version - http://www.simpopdf.com

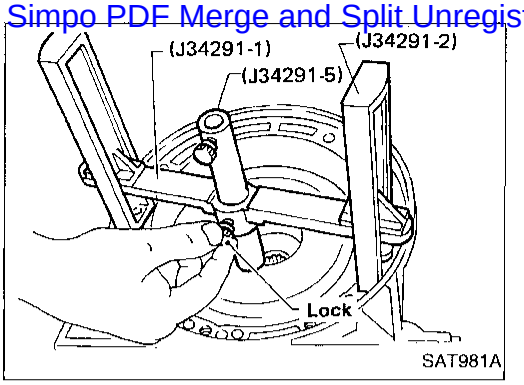

a. Place J34291-1 (bridge), J34291-2 (legs) and J34291-5 (gauging cylinder) on machined surface of transmission case (no gasket) and allow gauging cylinder to rest on front thrust surface of reverse clutch drum. Lock cylinder in place with set screw.

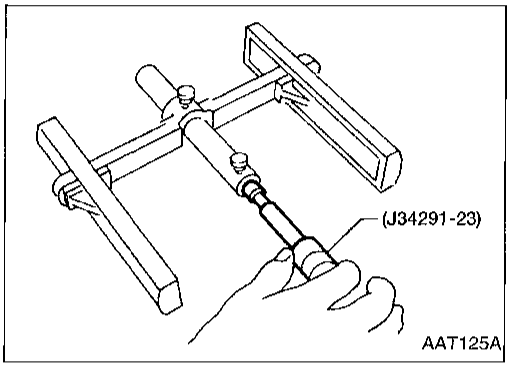

b. Install J34291-23 (gauging plunger) into gauging cylinder.

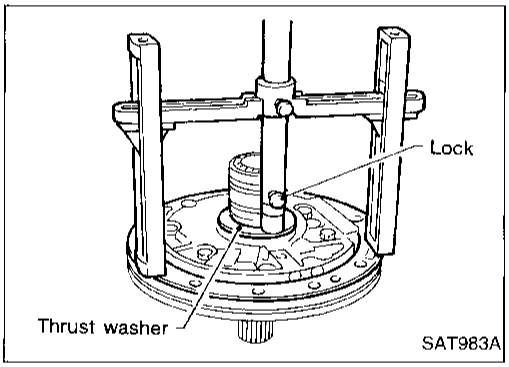

c. With original thrust washer installed on oil pump, place shim setting gauge legs onto machined surface of oil pump assembly and allow gauging plunger to rest on thrust washer. Lock plunger in place with set screw.

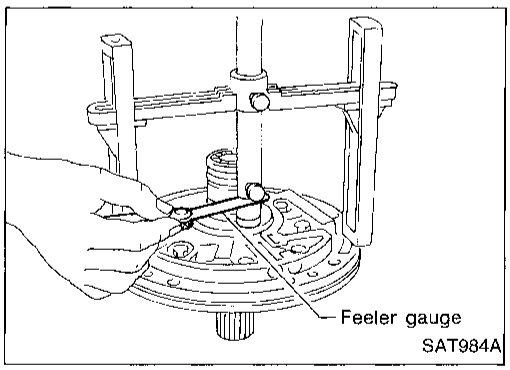

d. Use feeler gauge to measure gap between gauging plunger and gauging cylinder. This measurement should give you exact reverse clutch drum and play.

Reverse clutch drum end play "T_2":
0.55 - 0.90 mm (0.0217 - 0.0354 in)

- If end play is out of specification, decrease or increase thickness of oil pump thrust washer as necessary.

Available oil pump thrust washer:
Refer to SDS, AT-125.

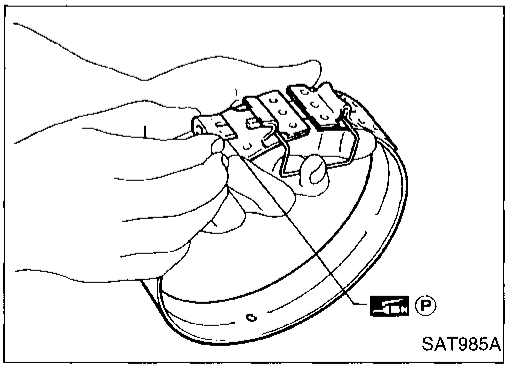

Assembly (2)

1. Place transmission case into horizontal position.
2. Install brake band and band strut.

a. Install band strut on brake band.

- **Apply petroleum jelly to band strut.**

Assembly (2) (Cont'd)

Simpo PDF Merge and Split Unregistered Version - http://www.simpopdf.com

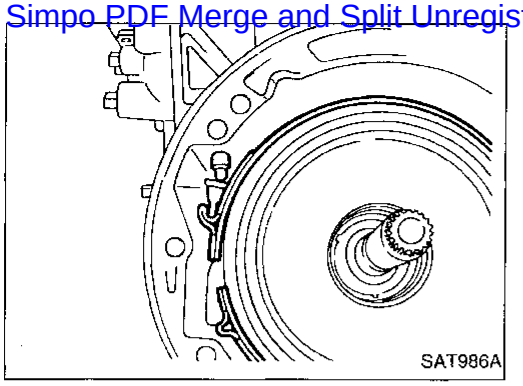

b. Place brake band around reverse clutch drum, and insert band strut into end of band servo piston stem.

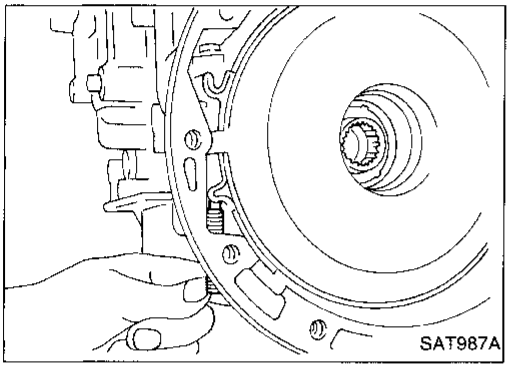

c. Install anchor end bolt on transmission case. Then, tighten anchor end bolt just enough so that reverse clutch drum (clutch pack) will not tilt forward.

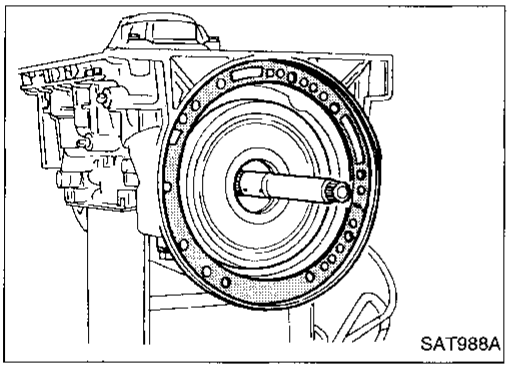

3. Install input shaft on transmission case.
- **Pay attention to its direction — O-ring groove side faces front.**

4. Install gasket on transmission case.

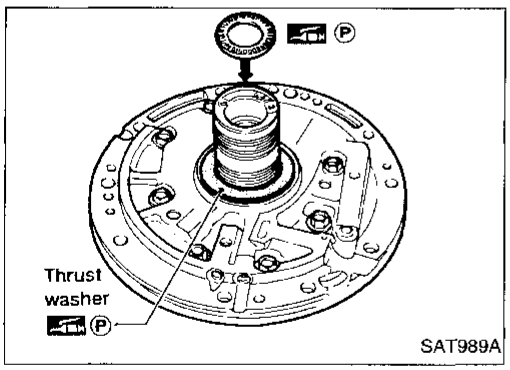

5. Install oil pump assembly.

a. Install needle bearing on oil pump assembly.
- **Apply petroleum jelly to the needle bearing.**

b. Install selected thrust washer on oil pump assembly.
- **Apply petroleum jelly to thrust washer.**

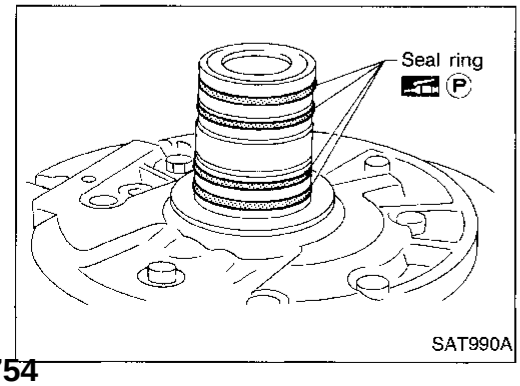

c. Carefully install seal rings into grooves and press them into the petroleum jelly so that they are a tight fit.

Assembly (2) (Cont'd)

Simpo PDF Merge and Split Unregistered Version - http://www.simpopdf.com

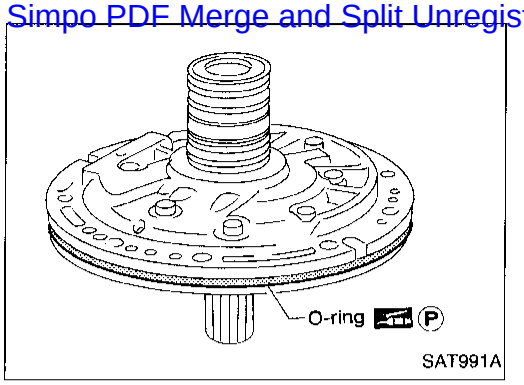

SAT991A

d. Install O-ring on oil pump assembly.
- **Apply petroleum jelly to O-ring.**

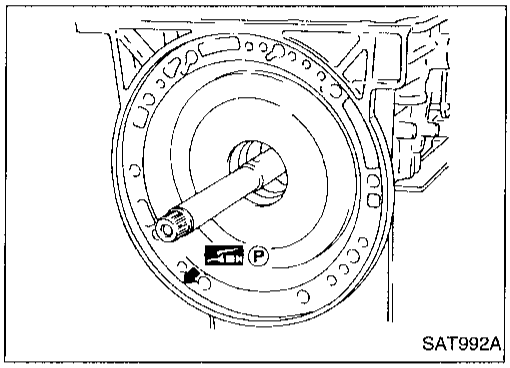

SAT992A

e. Apply petroleum jelly to mating surface of transmission case and oil pump assembly.

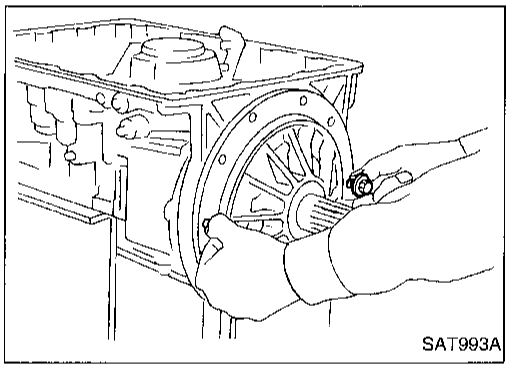
SAT993A

f. Install oil pump assembly.
- **Install two converter housing securing bolts in bolt holes in oil pump assembly as guides.**

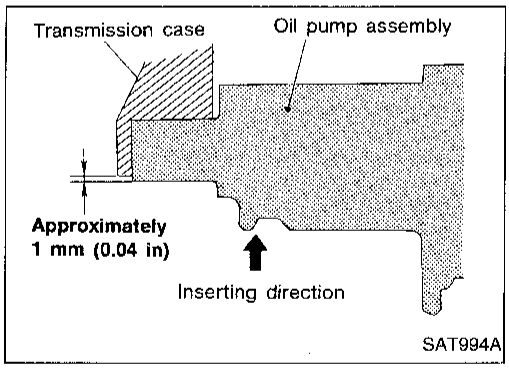

SAT994A

- **Insert oil pump assembly to the specified position in transmission, as shown at left.**

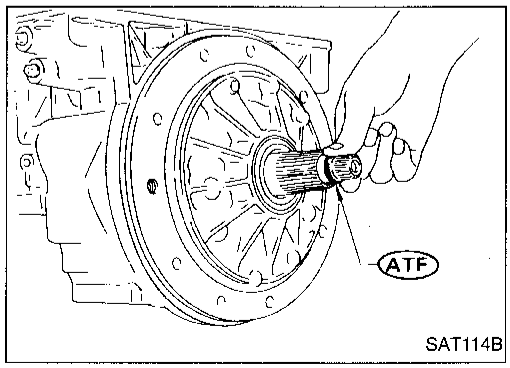

SAT114B

6. Install O-ring on input shaft.
- **Apply ATF to O-rings.**

Assembly (2) (Cont'd)

Simpo PDF Merge and Split Unregistered Version - http://www.simpopdf.com

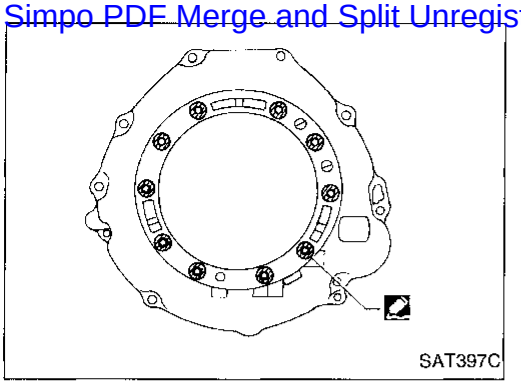

7. Install converter housing.
a. Apply genuine anaerobic liquid gasket Three Bond TB1215, Loctite Part No. 51813 or equivalent around bolt holes in converter housing.

- **Do not apply too much sealant.**

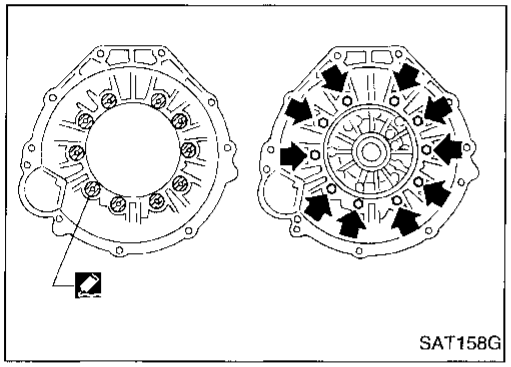

b. Apply genuine anaerobic liquid gasket Three Bond TB1215, Loctite Part No. 51813 or equivalent to seating surfaces of bolts that secure front of converter housing.
c. Install converter housing on transmission case.

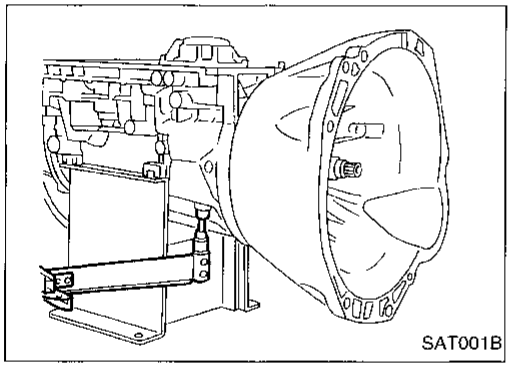

8. Adjust brake band.
a. Tighten anchor end bolt to specified torque.
Anchor end bolt:
: 4 - 6 N·m (0.4 - 0.6 kg-m, 35 - 52 in-lb)
b. Back off anchor end bolt two and a half turns.

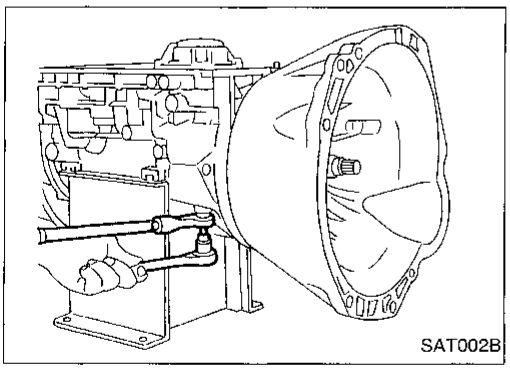

c. While holding anchor end pin, tighten lock nut.

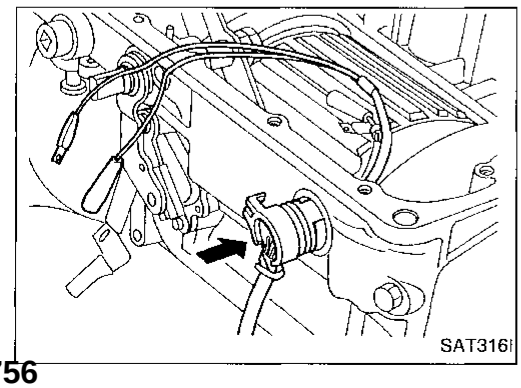

9. Install terminal cord assembly.
a. Install O-ring on terminal cord assembly.

- **Apply petroleum jelly to O-ring.**

b. Compress terminal cord assembly stopper and install terminal cord assembly on transmission case.

Assembly (2) (Cont'd)

Simpo PDF Merge and Split Unregistered Version - http://www.simpopdf.com

10. Install control valve assembly.

a. Install accumulator piston return springs Ⓑ, Ⓒ and Ⓓ.

Free length of return springs:
Refer to SDS, AT-123.

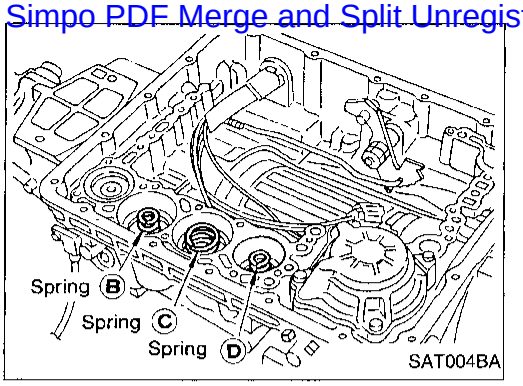

b. Install manual valve on control valve.

- **Apply ATF to manual valve.**

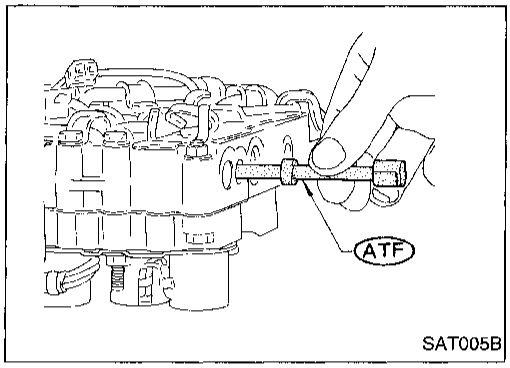

c. Install control valve assembly on transmission case.

d. Install connector tube brackets and tighten bolts Ⓐ and Ⓑ.

- **Check that terminal assembly harness does not catch.**

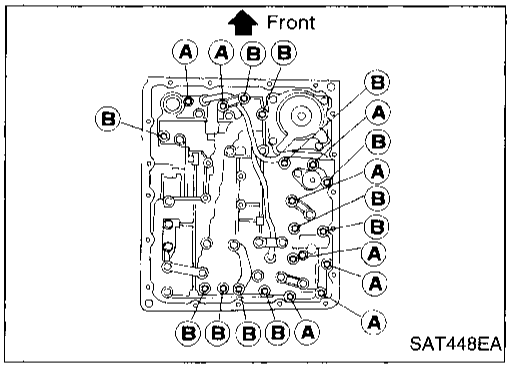

Bolt	ℓ mm (in)
Ⓐ	33 (1.30)
Ⓑ	45 (1.77)

e. Install O-ring on oil strainer.

- **Apply petroleum jelly to O-ring.**

f. Install oil strainer on control valve.

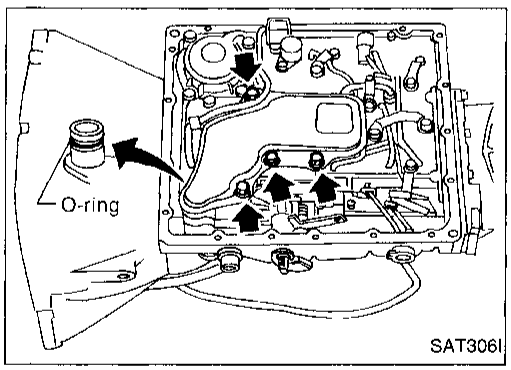

g. Securely fasten terminal harness with clips.

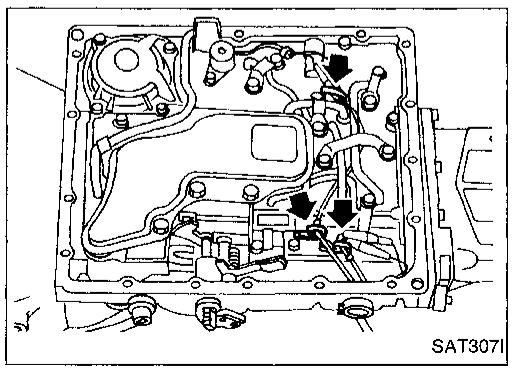

Assembly (2) (Cont'd)

Simpo PDF Merge and Split Unregistered Version - http://www.simpopdf.com

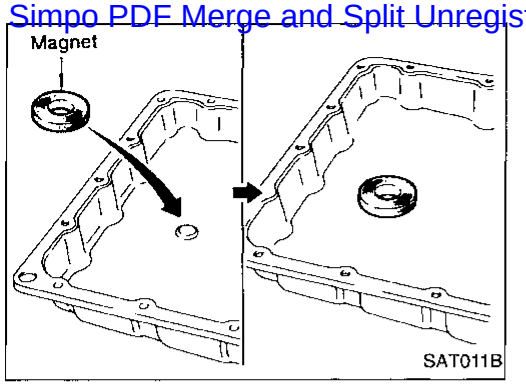

11. Install oil pan.
a. Attach a magnet to oil pan.

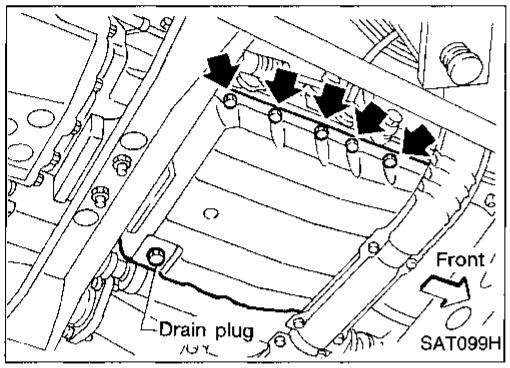

b. Install new oil pan gasket on transmission case.
c. Install oil pan and bracket on transmission case.

- **Always replace oil pan bolts; they are self-sealing bolts.**
- **Before installing bolts, remove traces of sealant and oil from mating surface and thread holes.**
- **Tighten four bolts in a criss-cross pattern to prevent dislocation of gasket.**

d. Tighten drain plug.

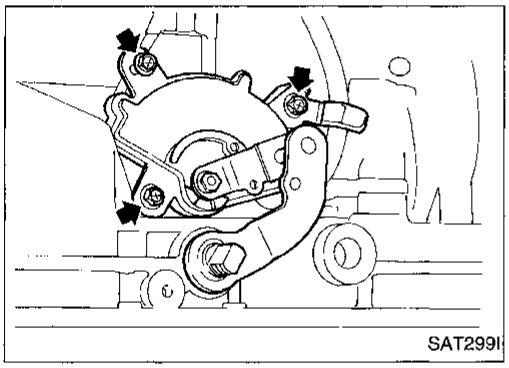

12. Install inhibitor switch.
a. Check that manual shaft is in "1" position.
b. Temporarily install inhibitor switch on manual shaft.
c. Move manual shaft to "N".

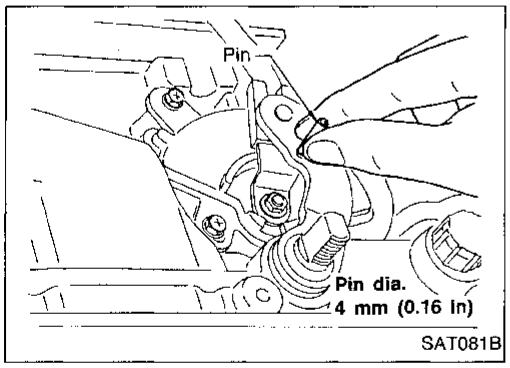

d. Use a 4 mm (0.16 in) pin for this adjustment.
1) Insert the pin straight into the manual shaft adjustment hole.
2) Rotate inhibitor switch until the pin can also be inserted straight into hole in inhibitor switch.
e. Tighten inhibitor switch fixing bolts.
f. Remove pin from adjustment hole after adjusting inhibitor switch.

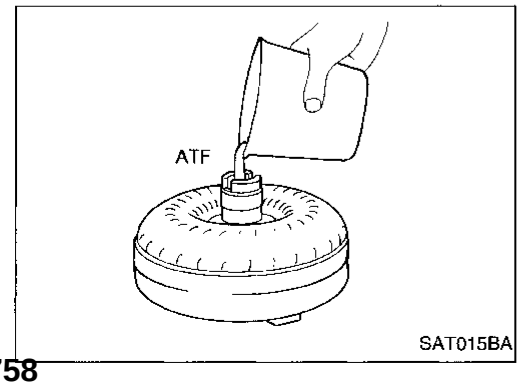

13. Install torque converter.
a. Pour ATF into torque converter.

- **Approximately 2 liters (2-1/8 US qt, 1-3/4 lmp qt) of fluid are required for a new torque converter.**
- **When reusing old torque converter, add the same amount of fluid as was drained.**

Assembly (2) (Cont'd)

Simpo PDF Merge and Split Unregistered Version - http://www.simpopdf.com

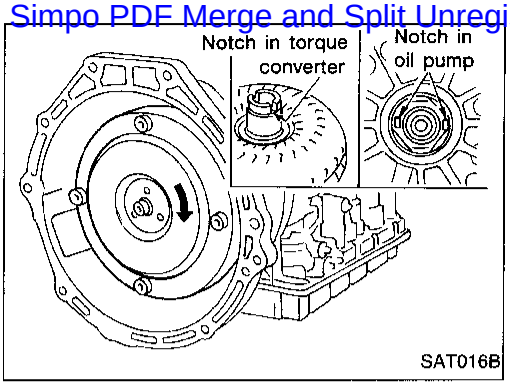

b. Install torque converter while aligning notches and oil pump.

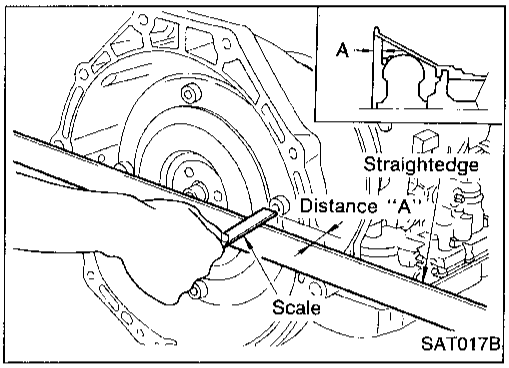

c. Measure distance A to check that torque converter is in proper position.

Distance "A":
26.0 mm (1.024 in) or more

Simpo PDF Merge and Split Unregistered Version - http://www.simpopdf.com

General Specifications

Automatic transmission model	RL4R01A
Transmission model code number	49X11
Stall torque ratio	2.0 : 1
Transmission gear ratio	
1st	2.785
2nd	1.545
Top	1.000
OD	0.694
Reverse	2.272
Recommended fluid	Nissan Matic "D" (Continental U.S. and Alaska) or Genuine Nissan Automatic Transmission Fluid (Canada)*1
Fluid capacity ℓ (US qt, Imp qt)	7.9 (8-3/8, 7)

*1: Refer to MA section ("Fluids and Lubricants", "RECOMMENDED FLUIDS AND LUBRICANTS").

Specifications and Adjustment

SHIFT SCHEDULE

Vehicle speed when shifting gears

Throttle position	Vehicle speed km/h (MPH)						
	$D_1 \rightarrow D_2$	$D_2 \rightarrow D_3$	$D_3 \rightarrow D_4$	$D_4 \rightarrow D_3$	$D_3 \rightarrow D_2$	$D_2 \rightarrow D_1$	$1_2 \rightarrow 1_1$
Full throttle	46 - 50 (29 - 31)	88 - 96 (55 - 60)	—	126 - 136 (78 - 85)	80 - 88 (50 - 55)	41 - 45 (25 - 28)	41 - 45 (25 - 28)
Half throttle	29 - 33 (18 - 21)	56 - 64 (35 - 40)	105 - 114 (65 - 71)	60 - 70 (37 - 43)	26 - 32 (16 - 20)	12 - 16 (7 - 10)	41 - 45 (25 - 28)

Vehicle speed when performing and releasing lock-up

Throttle position	D_4	
	Vehicle speed km/h (MPH)	
	Lock-up ON	Lock-up OFF
4/8	105 - 113 (65 - 70)	61 - 69 (38 - 43)
3/8	76 - 84 (47 - 52)	55 - 63 (34 - 39)
2/8	58 - 66 (36 - 41)	55 - 63 (34 - 39)
1/8	58 - 66 (36 - 41)	55 - 63 (34 - 39)

LINE PRESSURE

Engine speed rpm	Line pressure kPa (kg/cm², psi)		
	D position (Overdrive control switch ON and OFF)	2 and 1 positions	R position
Idle	471 - 510 (4.8 - 5.2, 68 - 74)	422 - 461 (4.3 - 4.7, 61 - 67)	736 - 775 (7.5 - 7.9, 107 - 112)
Stall	912 - 991 (9.3 - 10.1, 132 - 144)	883 - 961 (9.0 - 9.8, 128 - 139)	1,442 - 1,520 (14.7 - 15.5, 209 - 220)

STALL REVOLUTION

Stall revolution	rpm	2,100 - 2,300

Specifications and Adjustment (Cont'd)

Simpo PDF Merge and Split Unregistered Version - http://www.simpopdf.com

RETURN SPRINGS

Unit: mm (in)

Parts				Item		
				Part No.	Free length	Outer diameter
Control valve	Upper body	①	4th speed cut valve spring	31756-48X06	23.5 (0.925)	7.4 (0.2913)
		②	Pressure regulator valve spring	31742-48X23	51.2 (2.016)	12.1 (0.476)
		③	Pressure modifier valve spring	31742-48X13	40.83 (1.6075)	8.0 (0.315)
		④	1-2 shift valve spring	31762-48X00	43.4 (1.709)	6.0 (0.236)
		⑤	2-3 shift valve spring	31762-48X14	47.4 (1.866)	9.0 (0.354)
		⑥	3-4 shift valve spring	31762-48X06	44.03 (1.7335)	8.0 (0.315)
		⑦	Accumulator control valve spring	31742-48X24	30.3 (1.193)	8.0 (0.315)
		—	3-2 downshift valve spring	—	—	—
		⑧	2-3 throttle modifier valve spring	31742-41X21	33.0 (1.299)	6.5 (0.256)
		⑨	4-2 relay valve spring	31756-41X00	29.1 (1.146)	6.95 (0.2736)
		⑩	Torque converter clutch control valve spring	31742-48X07	20.0 (0.787)	5.45 (0.2146)
	Lower body	①	Throttle valve & detent valve spring	31802-48X02	34.23 (1.3476)	11.0 (0.433)
		②	Kickdown modifier valve spring	31756-48X12	42.8 (1.685)	7.0 (0.276)
		③	1st reducing valve spring	31756-48X04	34.1 (1.343)	7.0 (0.276)
		④	Overrun clutch reducing valve spring	31742-48X21	33.2 (1.307)	7.7 (0.303)
		⑤		31742-48X05	31.0 (1.220)	5.2 (0.205)
		⑥	3-2 timing valve spring	31742-48X15	23.0 (0.906)	7.0 (0.276)
		⑦	Torque converter relief valve spring	31742-41X23	38.0 (1.496)	9.0 (0.354)
		⑧	4-2 sequence valve spring	31756-41X00	29.1 (1.146)	6.95 (0.2736)
Governor valve		①	Primary valve spring	31742-48X11	19.1 (0.752)	9.05 (0.3563)
		②	Secondary governor valve I spring	31742-48X09	30.58 (1.2039)	9.2 (0.362)
		③	Secondary governor valve II spring	31742-48X10	16.79 (0.6610)	9.0 (0.354)
Reverse clutch			16 pcs	31521-41X02 (Assembly)	19.7 (0.7756)	11.6 (0.457)
High clutch			10 pcs	31521-41X03 (Assembly)	24.2 (0.9528)	11.6 (0.457)
Forward clutch (Overrun clutch)			20 pcs	31521-41X00 (Assembly)	35.77 (1.4083)	9.7 (0.382)
Low & reverse brake			18 pcs	31655-41X00 (Assembly)	22.3 (0.878)	11.2 (0.4409)
Band servo			Spring Ⓐ	31605-41X05	45.6 (1.795)	34.3 (1.350)
			Spring Ⓑ	31605-41X00	53.8 (2.118)	40.3 (1.587)
			Spring Ⓒ	31605-41X01	29.7 (1.1693)	27.6 (1.087)
Accumulator			Accumulator Ⓐ	31605-41X02	43.0 (1.693)	18.0 (0.709)
			Accumulator Ⓑ	31605-41X15	66.0 (2.598)	20.8 (0.819)
			Accumulator Ⓒ	31605-51X01	45.0 (1.772)	29.3 (1.154)
			Accumulator Ⓓ	31605-41X06	58.4 (2.299)	17.3 (0.681)

ACCUMULATOR O-RING

Accumulator	Diameter mm (in)			
	Ⓐ	Ⓑ	Ⓒ	Ⓓ
Small diameter end	28.6 (1.13)	31.5 (1.24)	44 (1.73)	28.6 (1.13)
Large diameter end	44 (1.73)	48.8 (1.92)	48.8 (1.92)	44 (1.73)

Simpo PDF Merge and Split Unregistered Version - http://www.simpopdf.com

CLUTCHES AND BRAKES

Code number		49X11
1. Reverse clutch		
Number of drive plates		2
Number of driven plates		2
Thickness of drive plate mm (in)	Standard	1.90 - 2.05 (0.0748 - 0.0807)
	Wear limit	1.80 (0.0709)
Clearance mm (in)	Standard	0.5 - 0.8 (0.020 - 0.031)
	Allowable limit	1.2 (0.047)

Thickness of retaining plate	Thickness mm (in)	Part number
	4.8 (0.189)	31537-42X02
	5.0 (0.197)	31537-42X03
	5.2 (0.205)	31537-42X04
	5.4 (0.213)	31537-42X05
	5.6 (0.220)	31537-42X06

2. High clutch		
Number of drive plates		5
Number of driven plates		5
Thickness of drive plate mm (in)	Standard	1.52 - 1.67 (0.0598 - 0.0657)
	Wear limit	1.40 (0.0551)
Clearance mm (in)	Standard	1.8 - 2.2 (0.071 - 0.087)
	Allowable limit	2.8 (0.110)

Thickness of retaining plate	Thickness mm (in)	Part number
	3.4 (0.134)	31537-41X71
	3.6 (0.142)	31537-41X61
	3.8 (0.150)	31537-41X62
	4.0 (0.157)	31537-41X63
	4.2 (0.165)	31537-41X64
	4.4 (0.173)	31537-41X65
	4.6 (0.181)	31537-41X66
	4.8 (0.189)	31537-41X67

3. Forward clutch		
Number of drive plates		5
Number of driven plates		5
Thickness of drive plate mm (in)	Standard	1.52 - 1.67 (0.0598 - 0.0657)
	Wear limit	1.40 (0.0551)
Clearance mm (in)	Standard	0.35 - 0.75 (0.0138 - 0.0295)
	Allowable limit	1.85 (0.0728)

Thickness of retaining plate	Thickness mm (in)	Part number
	8.0 (0.315)	31537-41X00
	8.1 (0.319)	31537-42X60
	8.2 (0.323)	31537-41X01
	8.3 (0.327)	31537-42X61
	8.4 (0.331)	31537-41X02
	8.5 (0.335)	31537-42X62
	8.6 (0.339)	31537-41X03
	8.7 (0.343)	31537-42X63
	8.8 (0.346)	31537-41X04
	8.9 (0.350)	31537-42X64
	9.0 (0.354)	31537-41X05
	9.1 (0.358)	31537-42X65
	9.2 (0.362)	31537-41X06

4. Overrun clutch		
Number of drive plates		3
Number of driven plates		5
Thickness of drive plate mm (in)	Standard	1.90 - 2.05 (0.0748 - 0.0807)
	Wear limit	1.80 (0.0709)
Clearance mm (in)	Standard	1.0 - 1.4 (0.039 - 0.055)
	Allowable limit	2.0 (0.079)

Thickness of retaining plate	Thickness mm (in)	Part number
	4.2 (0.165)	31537-41X80
	4.4 (0.173)	31537-41X81
	4.6 (0.181)	31537-41X82
	4.8 (0.189)	31537-41X83
	5.0 (0.197)	31537-41X84

5. Low & reverse brake		
Number of drive plates		5
Number of driven plates		7
Thickness of drive plate mm (in)	Standard	1.52 - 1.67 (0.0598 - 0.0657)
	Wear limit	1.40 (0.0551)
Clearance mm (in)	Standard	0.5 - 0.8 (0.020 - 0.031)
	Allowable limit	2.3 (0.091)

Thickness of retaining plate	Thickness mm (in)	Part number
	7.0 (0.276)	31667-41X12
	7.2 (0.283)	31667-41X13
	7.4 (0.291)	31667-41X14
	7.6 (0.299)	31667-41X07
	7.8 (0.307)	31667-41X08
	8.0 (0.315)	31667-41X00
	8.2 (0.323)	31667-41X01
	8.4 (0.331)	31667-41X02
	8.6 (0.339)	31667-41X03
	8.8 (0.346)	31667-41X04
	9.0 (0.354)	31667-41X05
	9.2 (0.362)	31667-41X06

6. Brake band	
Anchor end bolt tightening torque N·m (kg-m, in-lb)	4 - 6 (0.4 - 0.6, 35 - 52)
Number of returning revolutions for anchor end bolt	2.5

Simpo PDF Merge and Split Unregistered Version - http://www.simpopdf.com

OIL PUMP AND LOW ONE-WAY CLUTCH

Oil pump clearance mm (in)	
Cam ring — oil pump housing	
Standard	0.01 - 0.024 (0.0004 - 0.0009)
Rotor, vanes and control piston — oil pump housing	
Standard	0.03 - 0.044 (0.0012 - 0.0017)
Seal ring clearance mm (in)	
Standard	0.10 - 0.25 (0.0039 - 0.0098)
Allowable limit	0.25 (0.0098)

TOTAL END PLAY

Total end play "T_1"	0.25 - 0.55 mm (0.0098 - 0.0217 in)	
	Thickness mm (in)	Part number
Thickness of oil pump cover bearing race	0.8 (0.031)	31435-41X01
	1.0 (0.039)	31435-41X02
	1.2 (0.047)	31435-41X03
	1.4 (0.055)	31435-41X04
	1.6 (0.063)	31435-41X05
	1.8 (0.071)	31435-41X06
	2.0 (0.079)	31435-41X07

PARKING GEAR

Seal ring — ring groove clearance mm (in)	
Standard	0.15 - 0.40 (0.0059 - 0.0157)
Allowable limit	0.40 (0.0157)

REVERSE CLUTCH DRUM END PLAY

Reverse clutch drum end play "T_2"	0.55 - 0.90 mm (0.0217 - 0.0354 in)	
	Thickness mm (in)	Part number
Thickness of oil pump thrust washer	0.9 (0.035)	31528-21X01
	1.1 (0.043)	31528-21X02
	1.3 (0.051)	31528-21X03
	1.5 (0.059)	31528-21X04
	1.7 (0.067)	31528-21X05
	1.9 (0.075)	31528-21X06

REMOVAL AND INSTALLATION

Manual control linkage	
Number of returning revolutions for lock nut	2
Lock nut tightening torque N·m (kg-m, ft-lb)	11 - 15 (1.1 - 1.5, 8 - 11)
Distance between end of clutch housing and torque converter mm (in)	26.0 (1.024) or more

Simpo PDF Merge and Split Unregistered Version - http://www.simpopdf.com

SECTION BR

CONTENTS

PRECAUTIONS AND PREPARATION 2
Supplemental Restraint System (SRS) "AIR BAG" 2
Precautions for Brake System 3
Commercial Service Tools 3
NOISE, VIBRATION AND HARSHNESS (NVH) TROUBLESHOOTING 4
NVH Troubleshooting Chart 4
CHECK AND ADJUSTMENT 5
Checking Brake Fluid Level 5
Checking Brake Line 5
Changing Brake Fluid 5
Bleeding Brake System 6
BRAKE HYDRAULIC LINE 7
CONTROL VALVE 9
Load Sensing Valve (2WD) 9
BRAKE HYDRAULIC LINE/CONTROL VALVE 11
Proportioning Valve (4WD) 11
BRAKE PEDAL AND BRACKET 12
Removal and Installation 12
Inspection 13
Adjustment 13
MASTER CYLINDER 14
Removal 14
Disassembly 14
Inspection 15
Assembly 15
Installation 16
BRAKE BOOSTER 17
On-vehicle Service 17
Removal 17
Inspection 17
Installation 18
VACUUM HOSE 19
Removal and Installation 19
Inspection 19
FRONT DISC BRAKE 20
Pad Replacement 20
Removal 21
Disassembly 22
Inspection — Caliper 22
Inspection — Rotor 22
Assembly 23
Installation 23
Brake Burnishing Procedure 23
REAR DRUM BRAKE 25
Removal 26
Inspection — Wheel Cylinder 27
Wheel Cylinder Overhaul 27
Inspection — Drum 27
Inspection — Lining 27
Installation 27
PARKING BRAKE CONTROL 29
Removal and Installation 30
Inspection 30
Adjustment 30

2WD

REAR WHEEL ANTI-LOCK BRAKE SYSTEM 31
Purpose 31
Operation 31
ABS Hydraulic Circuit 31
System Components 32
System Description 32
Removal and Installation 33
TROUBLE DIAGNOSES 35
How to Perform Trouble Diagnoses for Quick and Accurate Repair 35
Preliminary Check 37
Component Parts and Harness Connector Location 38
Circuit Diagram for Quick Pinpoint Check 39
Wiring Diagram –ABS– 40
Self-diagnosis 42
Main Power Supply and Ground Circuit Check 45
TROUBLE DIAGNOSES FOR SELF-DIAGNOSTIC ITEMS 46
Diagnostic Procedure 1 46

CONTENTS (Cont'd.)

Simpo PDF Merge and Split Unregistered Version - http://www.simpopdf.com

Diagnostic Procedure 2 46
Diagnostic Procedure 3 47
Diagnostic Procedure 4 48
Diagnostic Procedure 5 48
Diagnostic Procedure 6 48
Diagnostic Procedure 7 (Warning lamp flashing 5) 49
TROUBLE DIAGNOSES FOR SYMPTOMS 50
Diagnostic Procedure 8 (ABS works frequently) 50
Diagnostic Procedure 9 (Brake pedal stroke is large) 51
Diagnostic Procedure 10 (Long stopping distance) 51
Diagnostic Procedure 11 (ABS does not work.) 52
Diagnostic Procedure 12 (Pedal vibration or noise) 52
Electrical Components Inspection 53

4WD

ANTI-LOCK BRAKE SYSTEM 54
Purpose 54
Operation 54
ABS Hydraulic Circuit 54
System Components 55
System Description 55
Removal and Installation 57
TROUBLE DIAGNOSES 60
How to Perform Trouble Diagnoses for Quick and Accurate Repair 60
Preliminary Check 62
Component Parts and Harness Connector Location 63
Circuit Diagram for Quick Pinpoint Check 64
Wiring Diagram — ABS — 65
Self-diagnosis 68
CONSULT 71
CONSULT Inspection Procedure 72
Ground Circuit Check 77
TROUBLE DIAGNOSES FOR SELF-DIAGNOSTIC ITEMS 78
Diagnostic Procedure 1 (Wheel sensor or rotor) 78
Diagnostic Procedure 2 (ABS actuator solenoid valve and solenoid valve relay) 80
Diagnostic Procedure 3 (Motor relay or motor) 82
Diagnostic Procedure 4 (Low voltage) 84
Diagnostic Procedure 5 (G sensor) 85
Diagnostic Procedure 6 (Control unit) 86
TROUBLE DIAGNOSES FOR SYMPTOMS 87
Diagnostic Procedure 7 (ABS works frequently.) 87
Diagnostic Procedure 8 (Unexpected pedal action) 88
Diagnostic Procedure 9 (Long stopping distance) 88
Diagnostic Procedure 10 (ABS does not work.) 89
Diagnostic Procedure 11 (Pedal vibration and noise) 89
Diagnostic Procedure 12 (Warning lamp does not come on when ignition switch is turned ON.) 90
Diagnostic Procedure 13 (Warning lamp stays on when ignition switch is turned ON.) 92
Electrical Components Inspection 93
SERVICE DATA AND SPECIFICATIONS (SDS) 94
General Specifications 94
Inspection and Adjustment 95

When you read wiring diagrams:
- **Read GI section, "HOW TO READ WIRING DIAGRAMS".**
- **See EL section, "POWER SUPPLY ROUTING" for power distribution circuit.**

When you perform trouble diagnoses, read GI section, "HOW TO FOLLOW FLOW CHART IN TROUBLE DIAGNOSES" and "HOW TO PERFORM EFFICIENT DIAGNOSIS FOR AN ELECTRICAL INCIDENT".

Simpo PDF Merge and Split Unregistered Version - http://www.simpopdf.com

Supplemental Restraint System (SRS) "AIR BAG"

The Supplemental Restraint System "AIR BAG", used along with a seat belt, helps to reduce the risk or severity of injury to the driver and front passenger in a frontal collision. The Supplemental Restraint System consists of air bag modules (located in the center of the steering wheel and in the instrument panel on the passenger side), a diagnosis sensor unit, a crash zone sensor (4WD models), warning lamp, wiring harness and spiral cable.

The vehicle is equipped with a passenger air bag deactivation switch. Because no rear seat exists where a rear-facing child restraint can be placed, the switch is designed to turn off the passenger air bag so that a rear-facing child restraint can be used in the front passenger seat. The switch is located in the center of the instrument panel, near the ashtray. When the switch is turned to the ON position, the passenger air bag is enabled and could inflate in a frontal collision. When the switch is turned to the OFF position, the passenger air bag is disabled and will not inflate in a frontal collision. A passenger air bag OFF indicator on the instrument panel lights up when the passenger air bag is switch OFF. The driver air bag always remains enabled and is not affected by the passenger air bag deactivation switch.

Information necessary to service the system safely is included in the **RS section** of this Service Manual.

WARNING:

- **To avoid rendering the SRS inoperative, which could increase the risk of personal injury or death in the event of a collision which would result in air bag inflation, all maintenance should be performed by an authorized NISSAN dealer.**
- **Improper maintenance, including incorrect removal and installation of the SRS, can lead to personal injury caused by unintentional activation of the system.**
- **Do not use electrical test equipment on any circuit related to the SRS unless instructed to in this Service Manual. SRS wiring harnesses are covered with yellow insulation either just before the harness connectors or on the complete harness, for easy identification.**
- **The vehicle is equipped with a passenger air bag deactivation switch which can be operated by the customer. When the passenger air bag is switched OFF, the passenger air bag is disabled and will not inflate in a frontal collision. When the passenger air bag is switched ON, the passenger air bag is enabled and could inflate in a frontal collision. After SRS maintenance or repair, make sure the passenger air bag deactivation switch is in the same position (ON or OFF) as when the vehicle arrived for service.**

Simpo PDF Merge and Split Unregistered Version - http://www.simpopdf.com

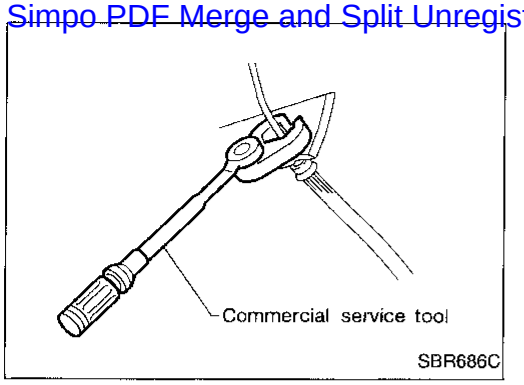

Precautions for Brake System

- **Use brake fluid DOT 3.**
- **Never reuse drained brake fluid.**
- **Be careful not to splash brake fluid on painted areas; it may cause paint damage. If brake fluid is splashed on painted areas, wash it away with water immediately.**
- **To clean master cylinder parts, disc brake caliper parts or wheel cylinder parts, use clean brake fluid.**
- **Never use mineral oils such as gasoline or kerosene. They will ruin rubber parts of the hydraulic system.**
- **Use flare nut wrench when removing and installing brake tubes.**
- **Always torque brake lines when installing.**

WARNING:

- **Clean brakes with a vacuum dust collector to minimize the hazard of airborne materials.**

Commercial Service Tools

Tool name	Description	
① Flare nut crowfoot ② Torque wrench	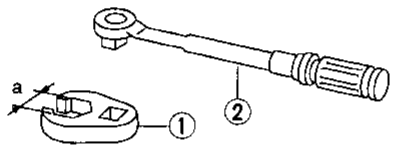 NT360	Removing and installing each brake piping **a: 10 mm (0.39 in)**
Brake fluid pressure gauge	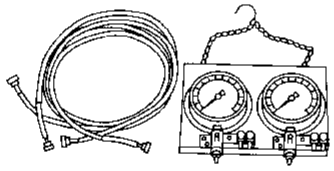 NT151	Measuring brake fluid pressure

Simpo PDF Merge and Split Unregistered Version - http://www.simpopdf.com

NVH Troubleshooting Chart

Use the chart below to help you find the cause of the symptom. If necessary, repair or replace these parts.

		Reference page	BR-20, 27	BR-20, 27	BR-25	BR-21	—	—	BR-22, 27	—	—	—	BR-23	BR-27	NVH in PD section	NVH in PD section	NVH in FA, RA section	NVH in FA section	NVH in FA section	NVH in RA section	NVH in ST section
		Possible cause and SUSPECTED PARTS	Linings or pads - damaged	Linings or pads - uneven wear	Return spring damaged	Shims damaged	Rotor or drum imbalance	Rotor or drum damage	Rotor or drum runout	Rotor or drum deformation	Rotor or drum deflection	Rotor or drum rust	Rotor thickness variation	Drum out of round	PROPELLER SHAFT	DIFFERENTIAL	AXLE AND SUSPENSION	TIRES	ROAD WHEEL	DRIVE SHAFT	STEERING
Symptom	BRAKE	Noise	X	X	X	X									X	X	X	X	X	X	X
		Shake					X								X		X	X	X	X	X
		Shimmy, Judder					X	X	X	X	X	X	X	X			X	X	X		X

X: Applicable

Simpo PDF Merge and Split Unregistered Version - http://www.simpopdf.com

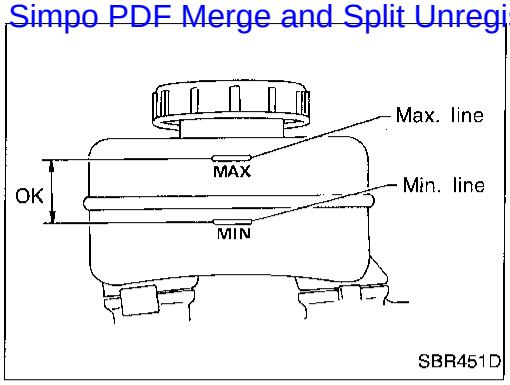

Checking Brake Fluid Level

- Check fluid level in reservoir tank. It should be between Max and Min lines on reservoir tank.
- If fluid level is extremely low, check brake system for leaks.
- If the brake warning lamp comes on, check brake fluid level switch and parking brake switch.

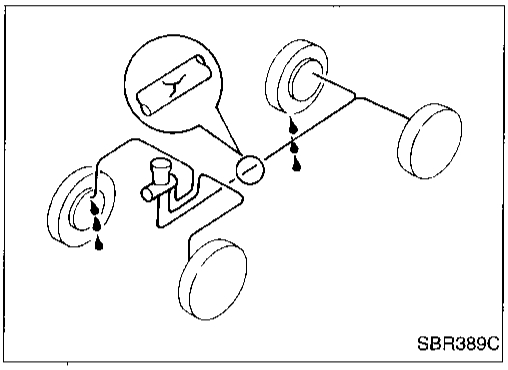

Checking Brake Line

CAUTION:
If leakage occurs around joints, retighten or, if necessary, replace damaged parts.

1. Check brake lines (tubes and hoses) for cracks, deterioration or other damage. Replace any damaged parts.
2. Check for oil leakage by fully depressing brake pedal while engine is running.

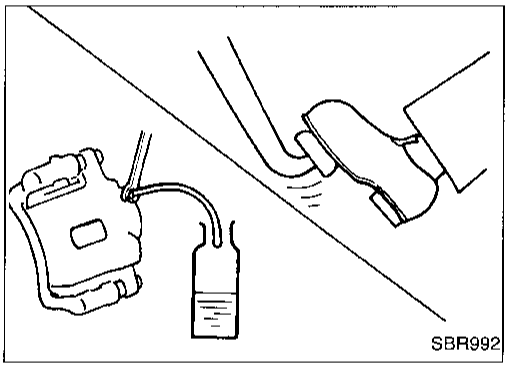

Changing Brake Fluid

CAUTION:

- **Refill with new brake fluid DOT 3.**
- **Always keep fluid level higher than minimum line on reservoir tank.**
- **Never reuse drained brake fluid.**
- **Be careful not to splash brake fluid on painted areas; it may cause paint damage. If brake fluid is splashed on painted areas, wash it away with water immediately.**

1. Clean inside of reservoir tank, and refill with new brake fluid.
2. Connect a vinyl tube to each air bleeder valve.
3. Drain brake fluid from each air bleeder valve by depressing brake pedal.
4. Refill until brake fluid comes out of each air bleeder valve. Use same procedure as in bleeding hydraulic system to refill brake fluid. Refer to "Bleeding Brake System", BR-6.

Simpo PDF Merge and Split Unregistered Version - http://www.simpopdf.com

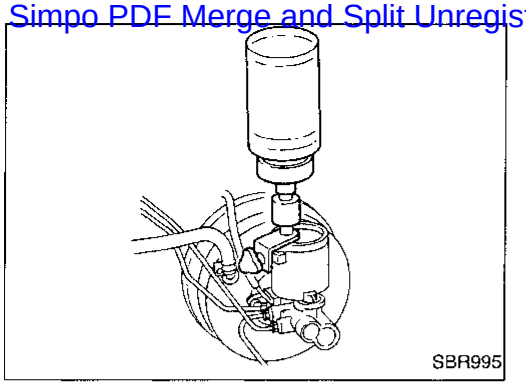
SBR995

Bleeding Brake System

CAUTION:

- **Carefully monitor brake fluid level at master cylinder during bleeding operation.**
- **If master cylinder is suspected to have air inside, bleed air from master cylinder first. Refer to "Installation", "MASTER CYLINDER", BR-16.**
- **Fill reservoir with new brake fluid DOT 3. Make sure it is full at all times while bleeding air out of system.**
- **Place a container under master cylinder to avoid spillage of brake fluid.**
- **Turn ignition switch OFF and disconnect ABS actuator (2WD)/ABS actuator and electric unit (4WD) connector or battery cable.**
- Bleed air in the following order.
  a. LSV air bleeder (Models equipped with LSV)
  b. Left rear brake
  c. Right rear brake
  d. Left front brake
  e. Right front brake
  f. ABS actuator (2WD) or ABS actuator and electric unit (4WD)

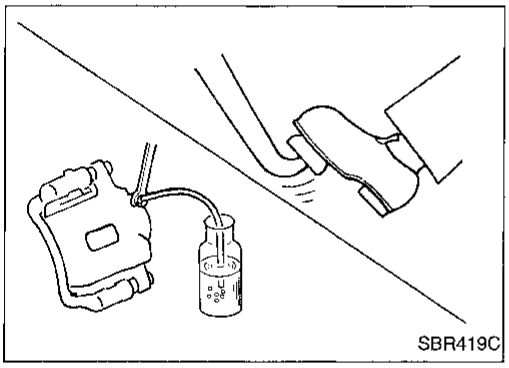
SBR419C

1. Connect a transparent vinyl tube to air bleeder valve.
2. Fully depress brake pedal several times.
3. With brake pedal depressed, open air bleeder valve to release air.
4. Close air bleeder valve.
5. Release brake pedal slowly.
6. Repeat steps 2 through 5 until clear brake fluid comes out of air bleeder valve.
7. Tighten air bleeder to the specified torque.
   : 7 - 9 N·m (0.7 - 0.9 kg-m, 61 - 78 in-lb)

Simpo PDF Merge and Split Unregistered Version - http://www.simpopdf.com

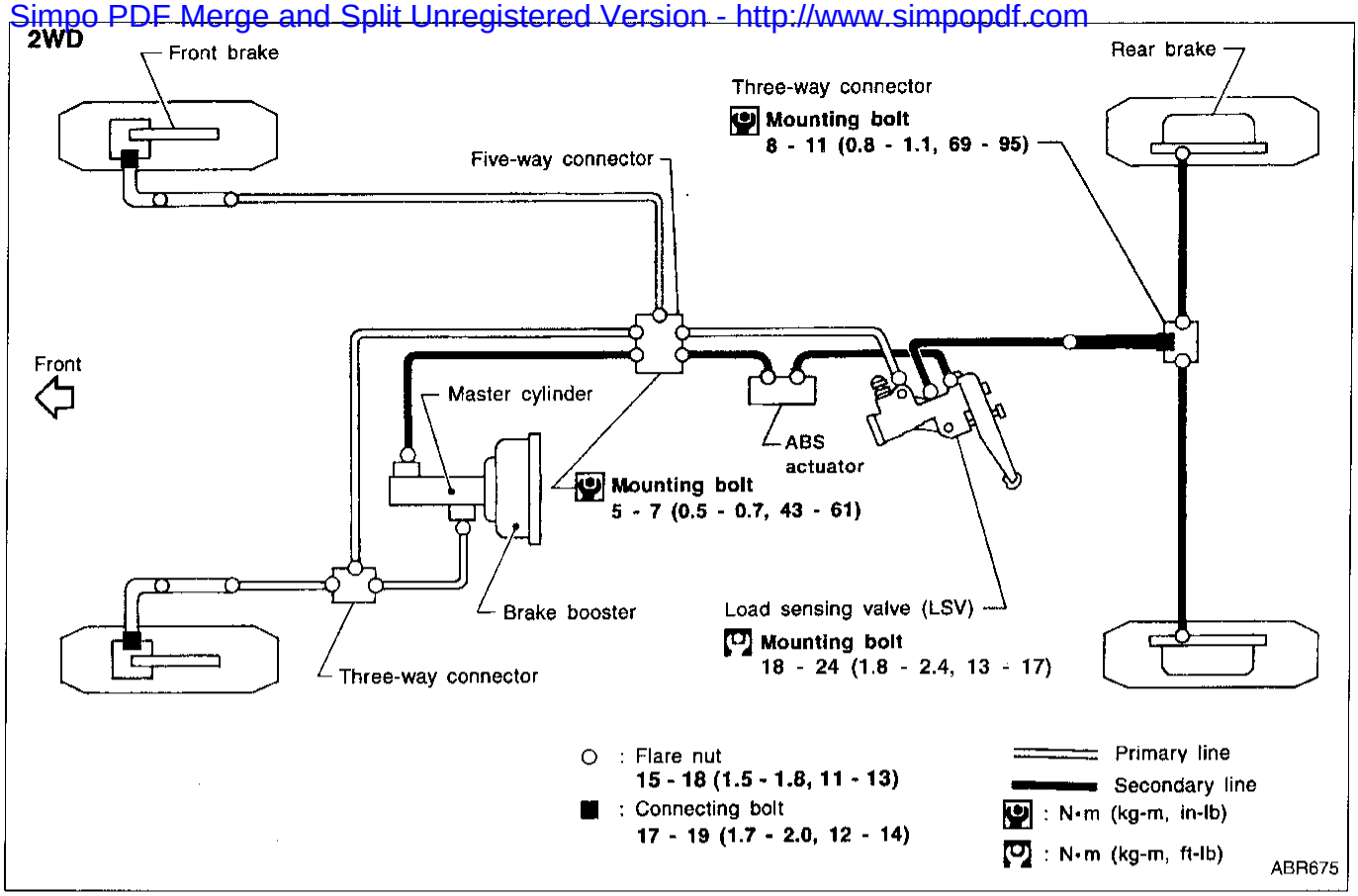

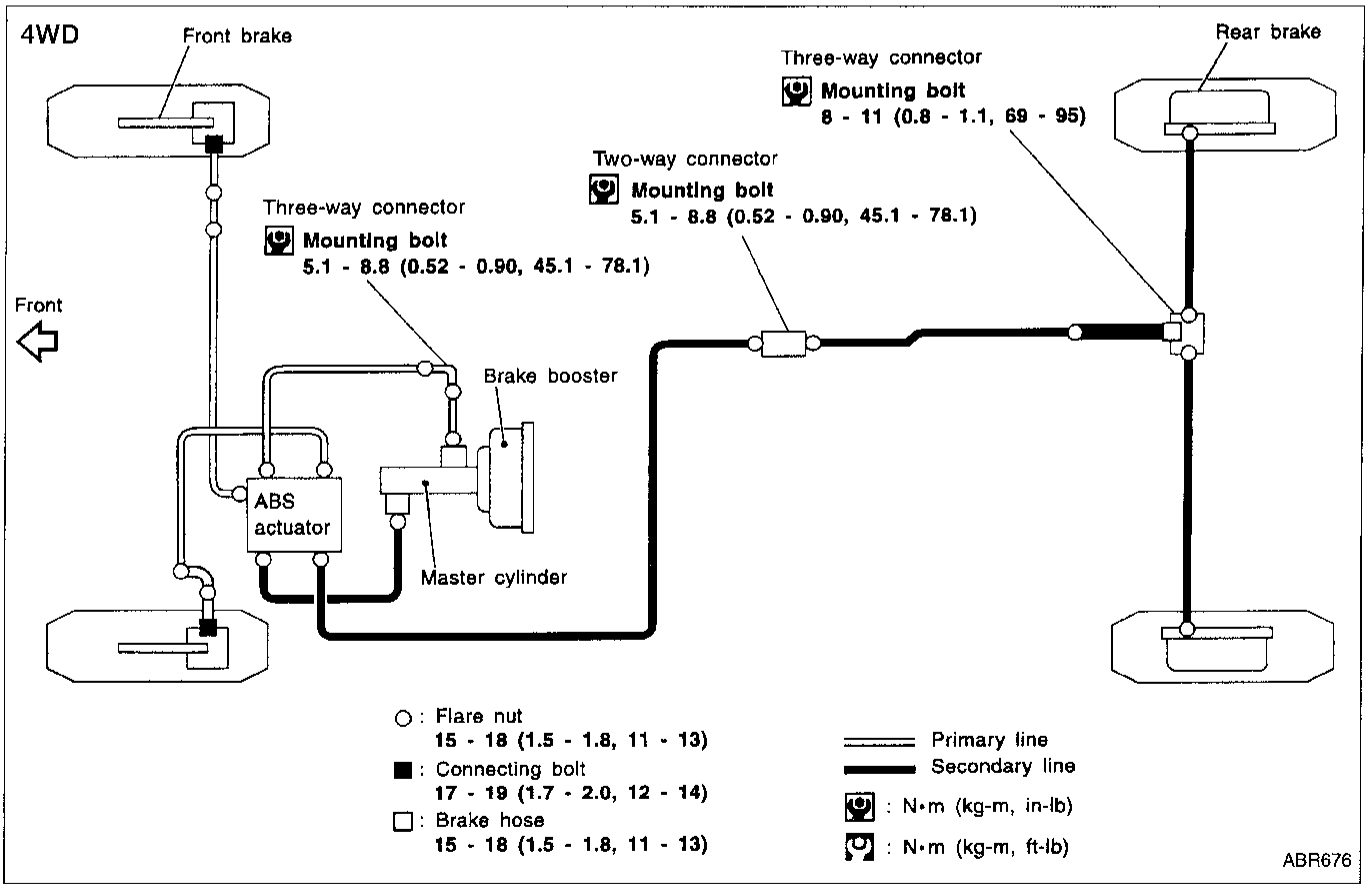

Simpo PDF Merge and Split Unregistered Version - http://www.simpopdf.com

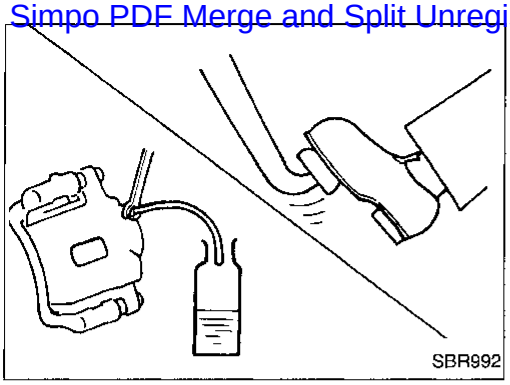
SBR992

REMOVAL

CAUTION:

- **Be careful not to splash brake fluid on painted areas; it may cause paint damage. If brake fluid is splashed on painted areas, wash it away with water immediately.**
- **All hoses must be free from excessive bending, twisting and pulling.**

1. Connect vinyl tube to air bleeder valve.
2. Drain brake fluid from each air bleeder valve by depressing brake pedal.
3. Remove flare nut connecting brake tube and hose, then withdraw lock spring.
4. Cover openings to prevent entrance of dirt whenever disconnecting brake line.

INSPECTION

Check brake lines (tubes and hoses) for cracks, deterioration or other damage. Replace any damaged parts.

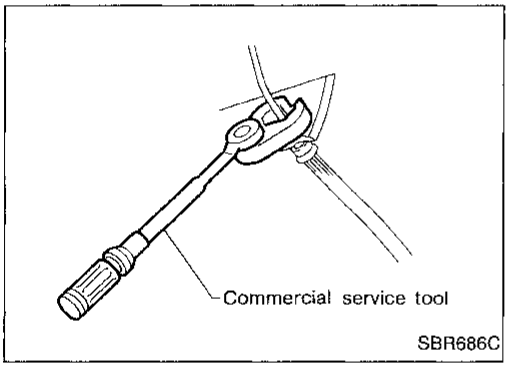

SBR686C

INSTALLATION

CAUTION:

- **Refill with new brake fluid DOT 3.**
- **Never reuse drained brake fluid.**

1. Tighten all flare nuts and connecting bolts.
   Flare nut:
   : 15 - 18 N·m (1.5 - 1.8 kg-m, 11 - 13 ft-lb)
   Connecting bolt:
   : 17 - 19 N·m (1.7 - 2.0 kg-m, 12 - 14 ft-lb)
2. Refill until new brake fluid comes out of each air bleeder valve.
3. Bleed air. Refer to "Bleeding Brake System", BR-6.

Simpo PDF Merge and Split Unregistered Version - http://www.simpopdf.com

Load Sensing Valve (2WD)

Load Sensing Valve
SEC. 462

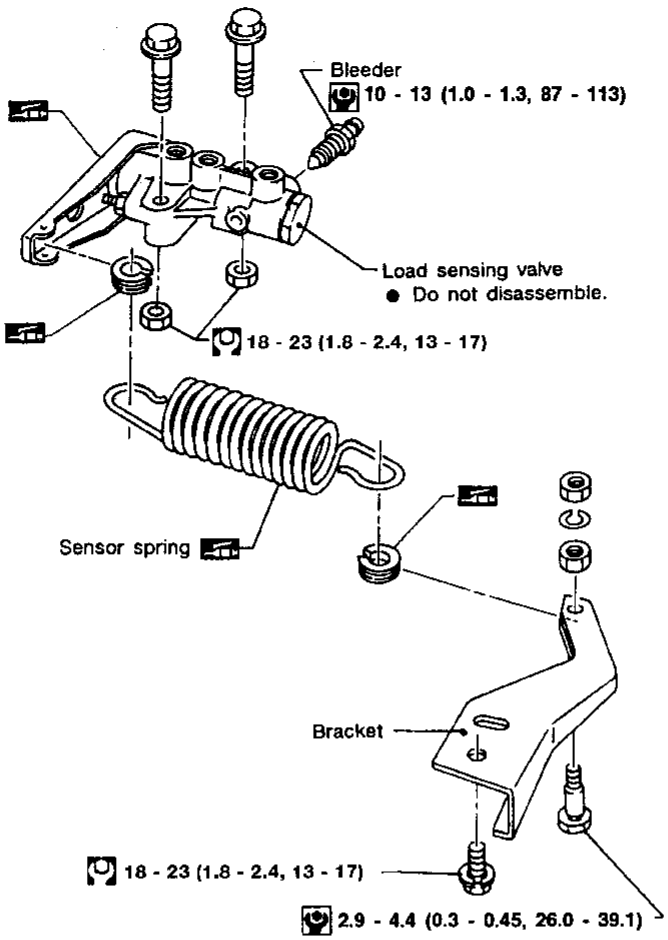

REMOVAL AND INSTALLATION

CAUTION:

- **Refill with new brake fluid DOT 3.**
- **Be careful not to splash brake fluid on painted areas; it may cause paint damage. If brake fluid is splashed on painted areas, wash it away with water immediately.**

1. Replace damaged load sensing valve linkage as an assembly.
2. When disassembling, apply multi-purpose grease to linkage.
3. Tighten all flare nuts and bolts.
   : 15 - 18 N·m (1.5 - 1.8 kg-m, 11 - 13 ft-lb)
4. Bleed air. Refer to "Bleeding Brake System", BR-6.

Load Sensing Valve (2WD) (Cont'd)

Simpo PDF Merge and Split Unregistered Version - http://www.simpopdf.com

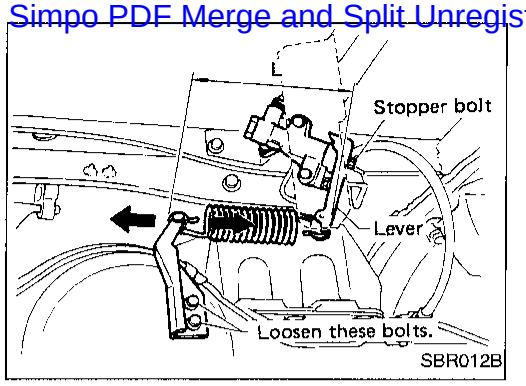

INSPECTION

1. Ensure vehicle is unladen condition*.
   * Fuel, radiator coolant and engine oil full. Spare tire, jack, hand tools and mats in designated positions.
2. Have a driver sit in the driver's seat and one person sit on the rear of the vehicle. Then have the person on the rear of the vehicle slowly get off. This is necessary to stabilize suspension deflection.
3. Adjust length "L" as follows:

a. Loosen stopper bolt locknut.
b. Pull lever against stopper bolt and adjust by turning stopper bolt.
c. Tighten stopper bolt locknut.

Length "L":
Approx. 203 mm (7.99 in)

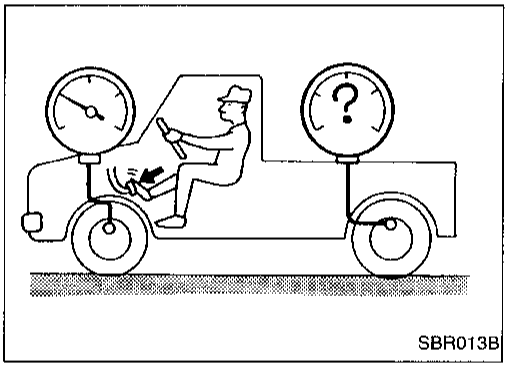

4. Install pressure gauge to front and rear brake air bleeder.
5. Bleed air from the Tool.
6. Raise front brake pressure to 4,904 kPa (49.0 bar, 50 kg/cm^2, 711 psi) and 9,807 kPa (98.1 bar, 100 kg/cm^2, 1,422 psi) and check rear brake pressure.

Rear brake pressure:
Refer to table below.

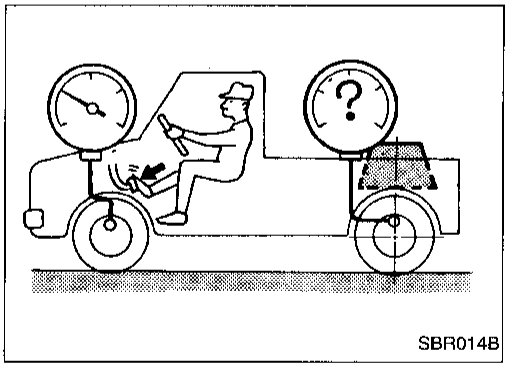

7. Set down weight slowly over axle center so that sensor spring length becomes the same as when in loaded condition (refer to table below). Check rear brake pressure in the same way described in step 6.

Unit: kPa (bar, kg/cm^2, psi)

Front brake pressure	Rear brake pressure	
	Unladen condition L = 203 mm (7.99 in)	Loaded condition L = 208.0 mm (8.19 in)
4,904 (49.0, 50, 711)	1,667 - 2,648 (16.7 - 26.5, 17 - 27, 242 - 384)	3,334 - 4,315 (33.3 - 43.2, 34 - 44, 483 - 626)
9,807 (98.1, 100, 1,422)	2,844 - 3,825 (28.4 - 38.2, 29 - 39, 412 - 555)	3,629 - 5,590 (36.3 - 55.9, 37 - 57, 526 - 811)

Simpo PDF Merge and Split Unregistered Version - http://www.simpopdf.com

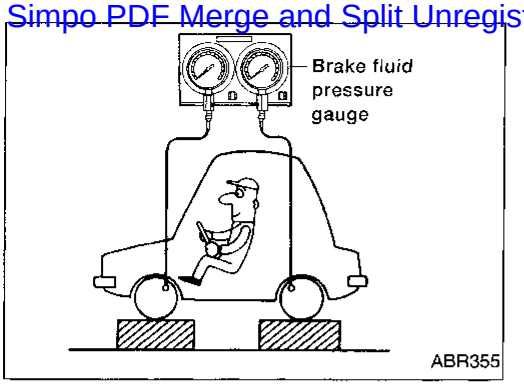

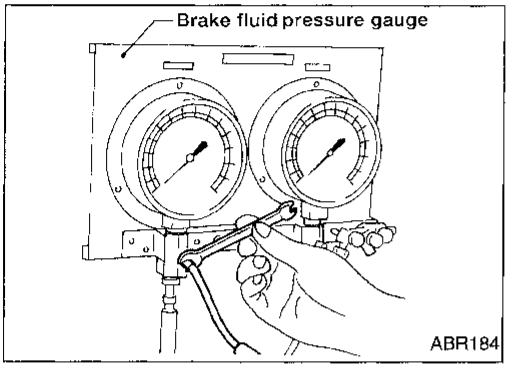

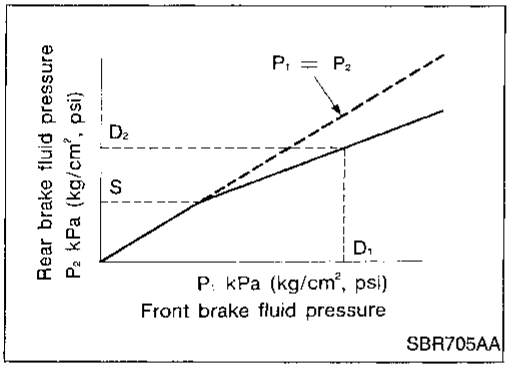

Proportioning Valve (4WD)

INSPECTION

CAUTION:

- **Carefully monitor brake fluid level at master cylinder.**
- **Use new brake fluid "DOT 3".**
- **Be careful not to splash brake fluid on painted areas; it may cause paint damage. If brake fluid is splashed on paint areas, wash it away with water immediately.**
- **Depress pedal slowly when raising front brake pressure.**
- **Check rear brake pressure 2 seconds after front brake pressure reaches specified value.**
- **Disconnect harness connector from ABS actuator and electric unit before checking.**

1. Remove front LH tire.
2. Connect tool to air bleeders on front LH brake caliper and rear LH or RH brake wheel cylinder.
3. Install front LH tire.

Before installing front LH tire, confirm the tool is not touching the front LH wheel.

4. Bleed air from the tool.
5. Check fluid pressure by depressing brake pedal.

Unit: kPa (kg/cm², psi)

Applied pressure (Front brake)	D_1	6,375 (65, 924)
Output pressure (Rear brake)	D_2	3,334 - 3,825 (34 - 39, 484 - 555)

If output pressure is out of specifications, replace master cylinder assembly.

6. Bleed air after disconnecting the tool. Refer to "Bleeding Brake System", BR-6.
7. Install front LH tire.

REMOVAL AND INSTALLATION

Always replace together with master cylinder as an assembly.

- Refer to "MASTER CYLINDER", BR-14.

Simpo PDF Merge and Split Unregistered Version - http://www.simpopdf.com

Removal and Installation

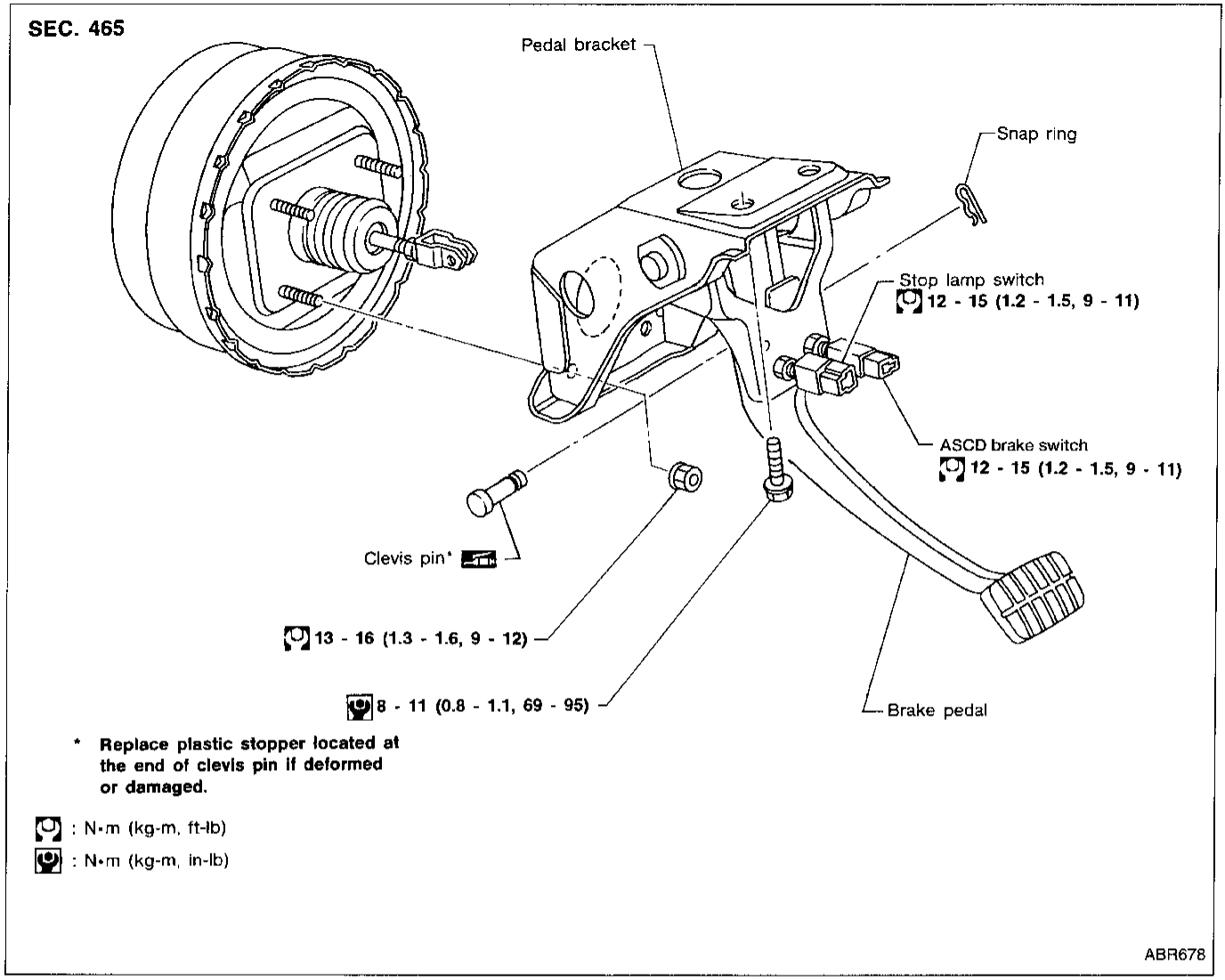

Simpo PDF Merge and Split Unregistered Version - http://www.simpopdf.com

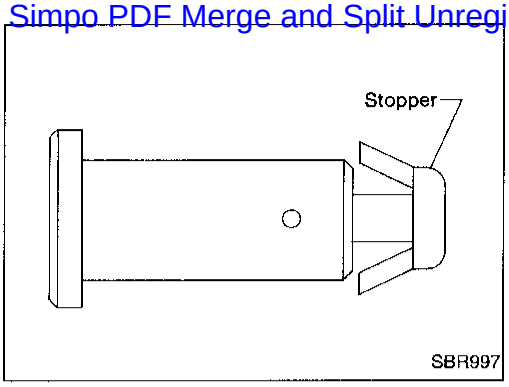

Inspection

Check brake pedal for following items:

- Brake pedal bend
- Clevis pin deformation
- Crack of any welded portion
- Crack or deformation of clevis pin stopper

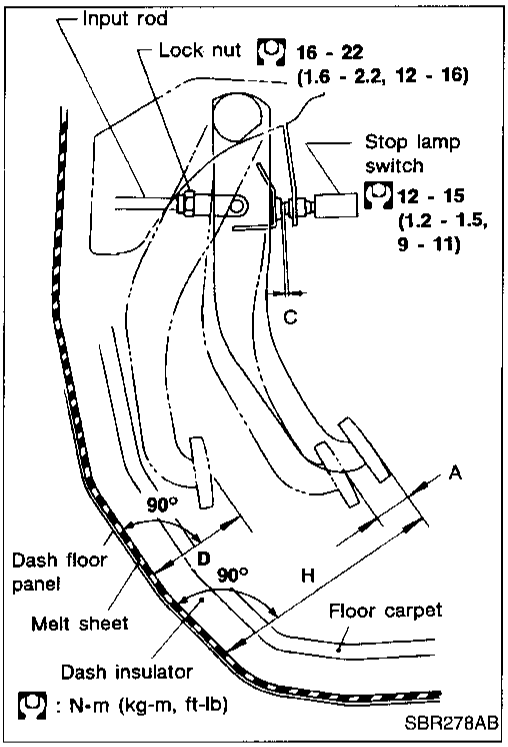

Adjustment

Check brake pedal free height from melt sheet.

H: Free height
Refer to SDS, BR-95.
D: Depressed height
Refer to SDS, BR-95.
Under force of 490 N (50 kg, 110 lb) with engine running
C: Clearance between pedal stopper and threaded end of stop lamp switch
0.3 - 1.0 mm (0.012 - 0.039 in)
A: Pedal free play at clevis
1 - 3 mm (0.04 - 0.12 in)

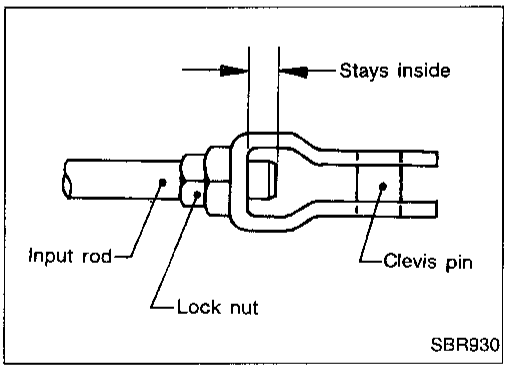

If necessary, adjust brake pedal free height.

1. Loosen lock nut and adjust pedal free height by turning brake booster input rod. Then tighten lock nut.

- **Make sure that the tip of input rod stays inside.**

2. Loosen lock nut and adjust clearance "C" with stop lamp switch respectively. Then tighten lock nut.
3. Check pedal free play.

- **Make sure that stop lamp is off when pedal is released.**

4. Check brake pedal's depressed height while engine is running. If lower than specification, check for leaks, air in system, or damage to components (master cylinder, wheel cylinder, etc.). Then make necessary repairs.

Simpo PDF Merge and Split Unregistered Version - http://www.simpopdf.com

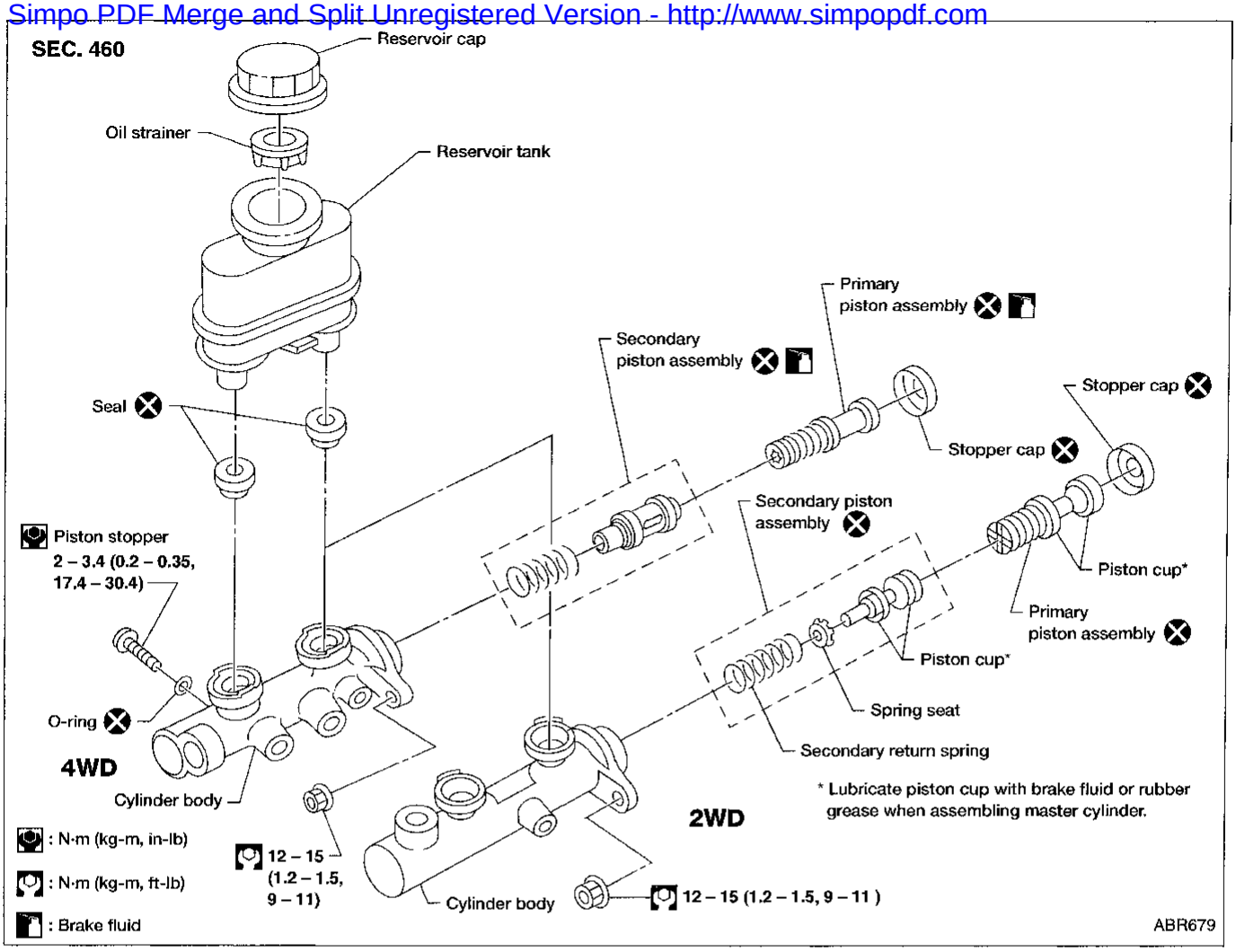

Removal

CAUTION:

- **Be careful not to splash brake fluid on painted areas; it may cause paint damage. If brake fluid is splashed on painted areas, wash it away with water immediately.**
- **In the case of brake fluid leakage from the master cylinder, disassemble the cylinder. Then check piston cups for deformation or scratches and replace necessary parts.**

1. Connect a vinyl tube to air bleeder valve.
2. Drain brake fluid from each air bleeder valve, depressing brake pedal to empty fluid from master cylinder.
3. Remove brake pipe flare nuts.
4. Remove master cylinder mounting nuts.

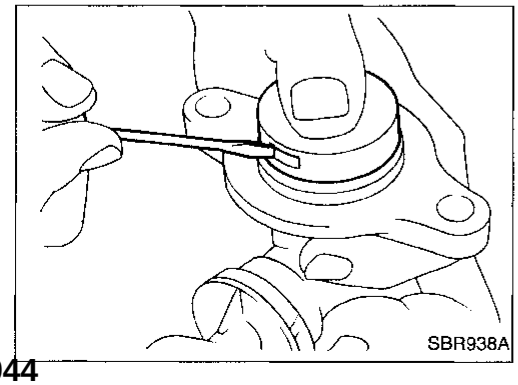

Disassembly

1. Bend claws of stopper cap outward.

Simpo PDF Merge and Split Unregistered Version - http://www.simpopdf.com

Disassembly (Cont'd)

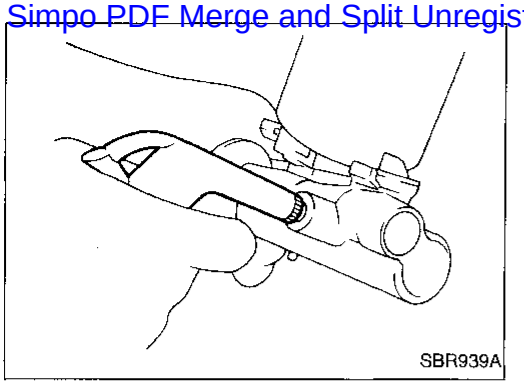

2. Remove piston assemblies.

- **If it is difficult to remove secondary piston assembly, gradually apply compressed air through fluid outlet.**

3. Draw out reservoir tank.

Inspection

Check master cylinder inner wall for pin holes or scratches. Replace if damaged.

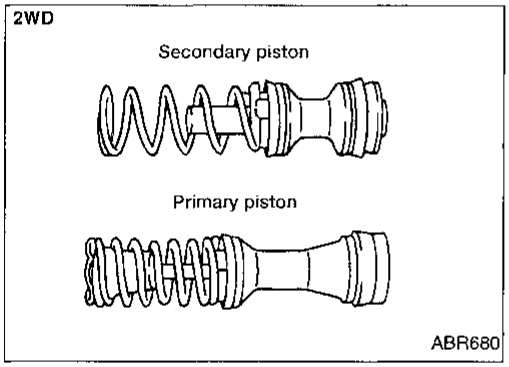

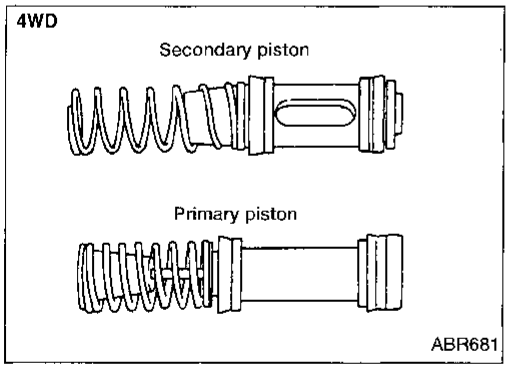

Assembly

1. Insert secondary piston assembly. Then insert primary piston assembly.

- **Pay attention to direction of piston cups in figure at left. Also, insert pistons squarely to avoid scratches on cylinder bore.**

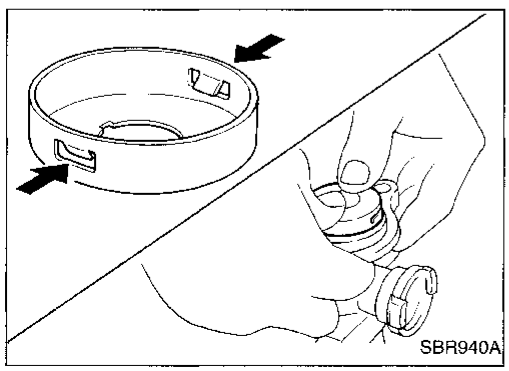

2. Install stopper cap.

- **Before installing stopper cap, ensure that claws are bent inward.**

3. Push reservoir tank seals into cylinder body.
4. Push reservoir tank into cylinder body.

Simpo PDF Merge and Split Unregistered Version - http://www.simpopdf.com

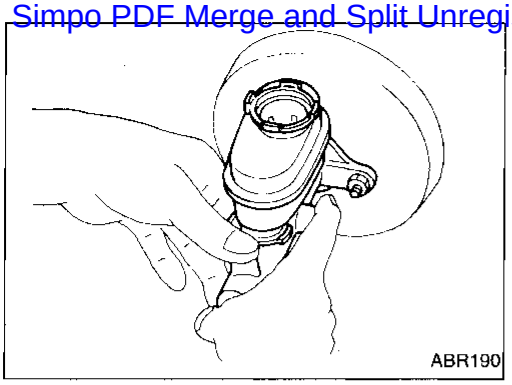

Installation

CAUTION:

- **Refill with new brake fluid DOT 3.**
- **Never reuse drained brake fluid.**

1. Place master cylinder onto brake booster and secure mounting nuts lightly.
2. Tighten mounting nuts.
   : 12 - 15 N·m (1.2 - 1.5 kg-m, 9 - 11 ft-lb)
3. Fill up reservoir tank with new brake fluid.
4. Plug all ports on master cylinder with fingers to prevent air suction while releasing brake pedal.
5. Have driver depress brake pedal slowly several times until no air comes out of master cylinder.
6. Fit brake lines to master cylinder.
7. Tighten flare nuts.
   : 15 - 18 N·m (1.5 - 1.8 kg-m, 11 - 13 ft-lb)
8. Bleed air from brake system. Refer to “Bleeding Brake System”, BR-6.

Simpo PDF Merge and Split Unregistered Version - http://www.simpopdf.com

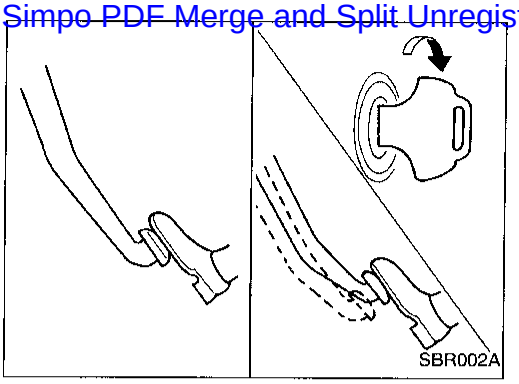

On-vehicle Service

OPERATING CHECK

- Depress brake pedal several times with engine off. After exhausting vacuum, make sure there is no change in pedal stroke.
- Depress brake pedal, then start engine. If pedal goes down slightly, operation is normal.

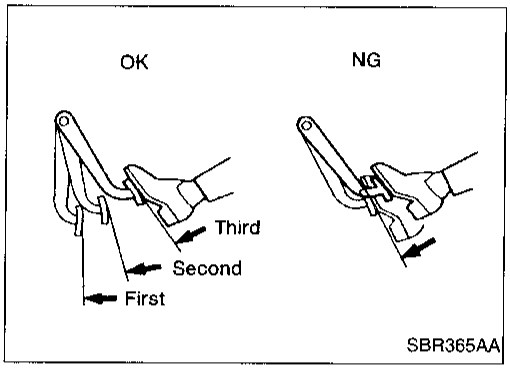

AIRTIGHT CHECK

- Start engine, and stop it after one or two minutes. Depress brake pedal several times slowly. Booster is airtight if pedal stroke is less each time.
- Depress brake pedal while engine is running, and stop engine with pedal depressed. The pedal stroke should not change after holding pedal down for **30 seconds**.

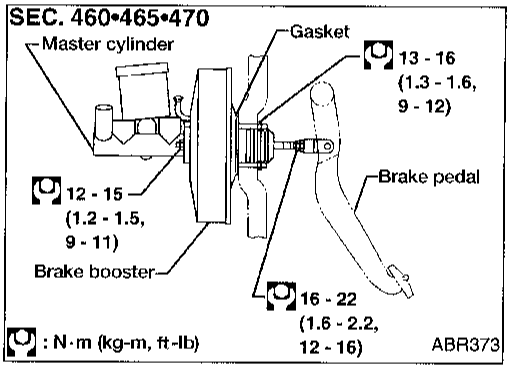

Removal

CAUTION:

- **Be careful not to splash brake fluid on painted areas; it may cause paint damage. If brake fluid is splashed on painted areas, wash it away with water immediately.**
- **Be careful not to deform or bend brake pipes during removal of booster.**

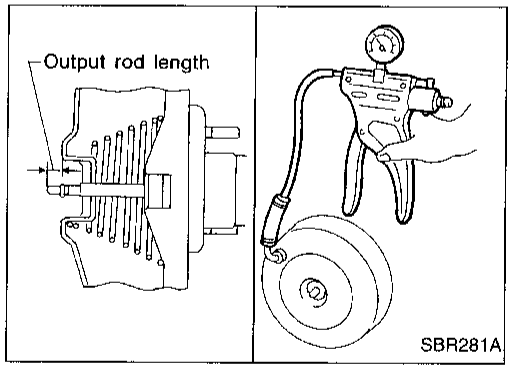

Inspection

OUTPUT ROD LENGTH CHECK

1. Apply vacuum of −66.7 kPa (−667 mbar, −500 mmHg, −19.69 inHg) to brake booster with a hand vacuum pump.
2. Check output rod length.
   Specified length:
   10.275 - 10.525 mm (0.4045 - 0.4144 in)

Simpo PDF Merge and Split Unregistered Version - http://www.simpopdf.com

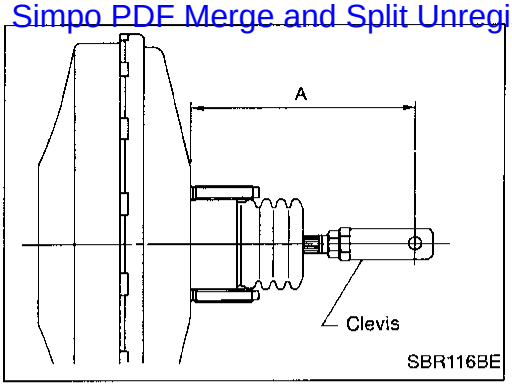

Installation

CAUTION:

- **Be careful not to deform or bend brake pipes during installation of booster.**
- **Replace clevis pin if damaged.**
- **Refill with new brake fluid DOT 3.**
- **Never reuse drained brake fluid.**
- **Take care not to damage brake booster mounting bolt thread when installing. Due to the narrow angle of installation, the threads can be damaged by the dash panel.**

A: 2WD
160 mm (6.30 in)
4WD
165 mm (6.50 in)

1. Before fitting booster, temporarily adjust clevis to dimension shown.
2. Fit booster, then secure mounting nuts (brake pedal bracket to brake booster) lightly.
3. Connect brake pedal and booster input rod with clevis pin.
4. Secure mounting nuts.
   : 13 - 16 N·m (1.3 - 1.6 kg-m, 9 - 12 ft-lb)
5. Install master cylinder. Refer to "Installation", "MASTER CYLINDER", BR-16.
6. Adjust brake pedal height and free play. Refer to BR-13.
7. Secure lock nut for clevis.
   : 16 - 22 N·m (1.6 - 2.2 kg-m, 12 - 16 ft-lb)
8. Bleed air. Refer to "Bleeding Brake System", BR-6.

Simpo PDF Merge and Split Unregistered Version - http://www.simpopdf.com

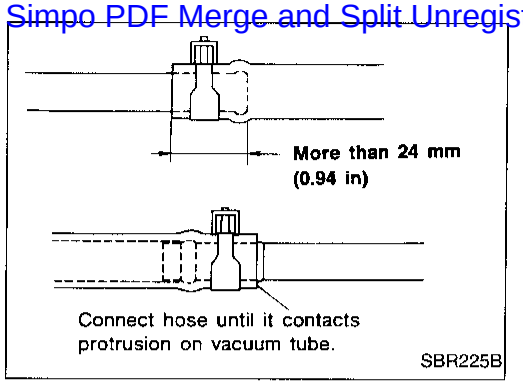

Removal and Installation

CAUTION:
When installing vacuum hoses, pay attention to the following points.

- **Do not apply any oil or lubricants to vacuum hose and check valve.**
- **Insert vacuum tube into vacuum hose as shown.**

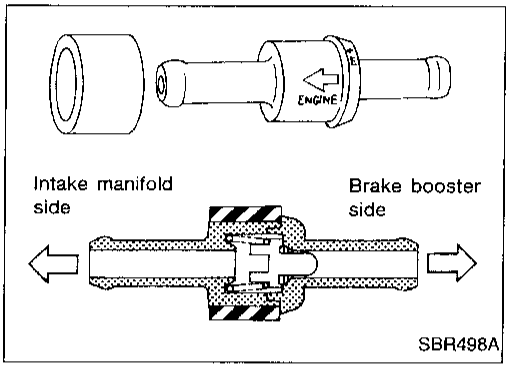

- **Install check valve, paying attention to its direction.**

Inspection

HOSES AND CONNECTORS

Check vacuum lines, connections and check valve for airtightness, improper attachment chafing and deterioration.

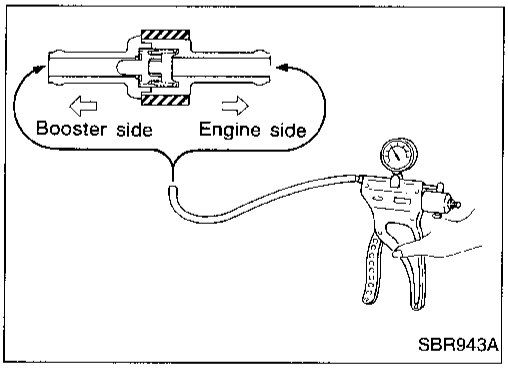

CHECK VALVE

Check vacuum with a vacuum pump.

Connect to booster side	Vacuum should exist.
Connect to engine side	Vacuum should not exist.

Simpo PDF Merge and Split Unregistered Version - http://www.simpopdf.com

Pad Replacement

WARNING:
Clean brake pads with a vacuum dust collector to minimize the hazard of airborne materials.

CAUTION:
- **When cylinder body is open, do not depress brake pedal or caliper piston will pop out.**
- **Be careful not to damage piston boot or get oil on rotor. Always replace shims when replacing pads.**
- **If shims are rusted or show peeling of the rubber coat, replace them with new shims.**
- **It is not necessary to remove connecting bolt except for disassembly or replacement of caliper assembly. In this case, suspend cylinder body with wire so as not to stretch brake hose.**

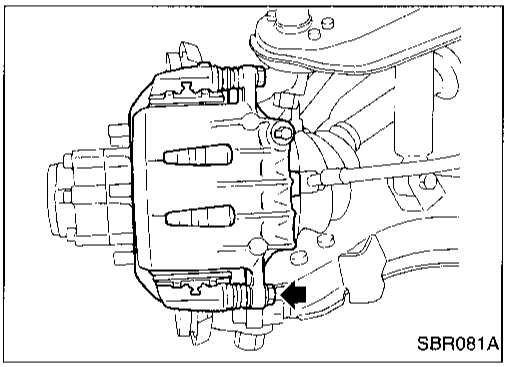
SBR081A

1. Remove master cylinder reservoir cap.
2. Remove lower pin bolt.

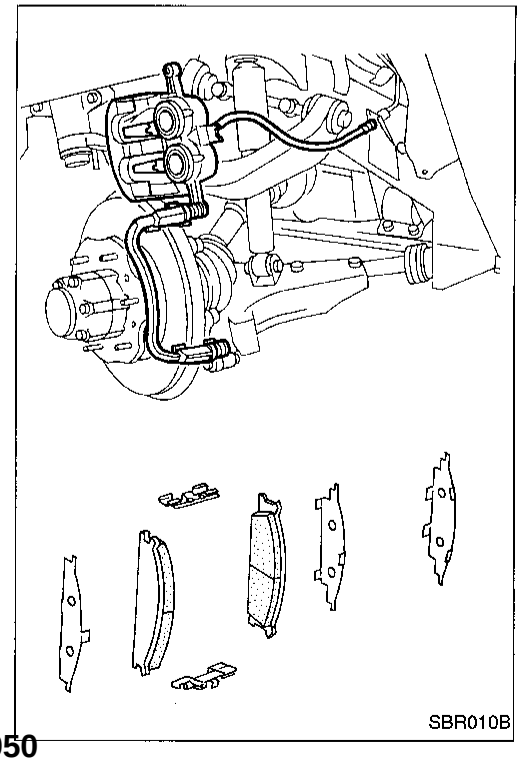
SBR010B

3. Open cylinder body upward. Then remove pad retainers, return spring and inner and outer shims.
   Standard pad thickness:
   10 mm (0.39 in)
   Pad wear limit:
   2.0 mm (0.079 in)

- **Carefully monitor brake fluid level because brake fluid will return to reservoir when pushing back piston.**

Simpo PDF Merge and Split Unregistered Version - http://www.simpopdf.com

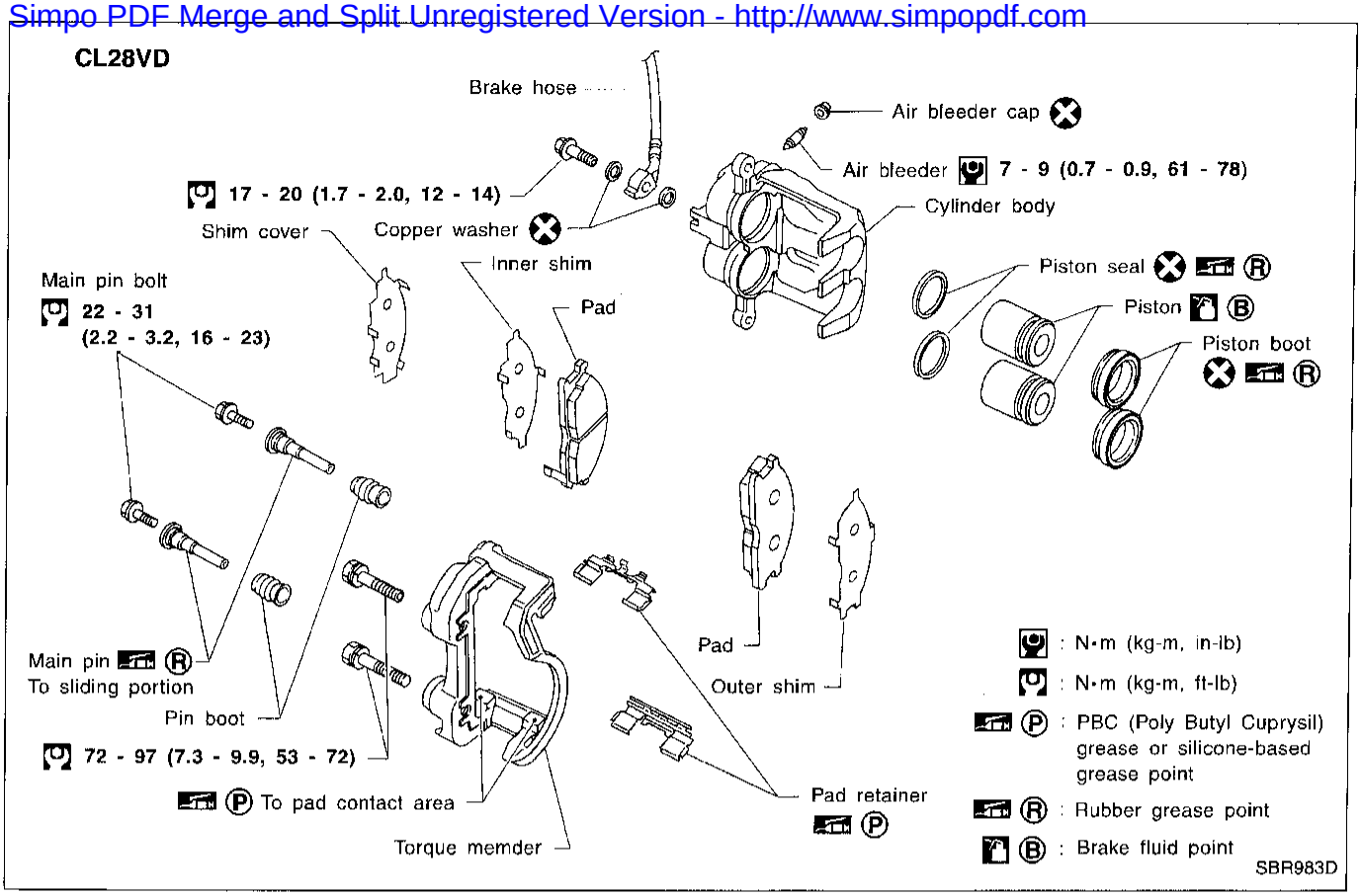

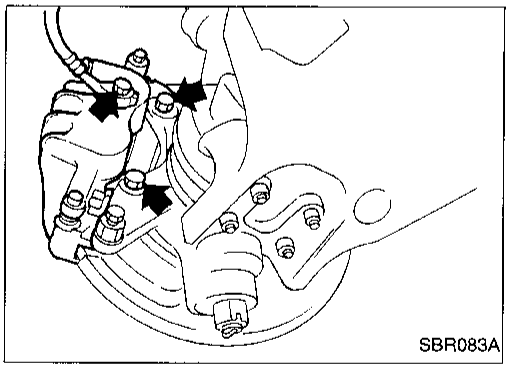

Removal

WARNING:
Clean brake pads with a vacuum dust collector to minimize the hazard of airborne materials.

CAUTION:
Suspend caliper assembly with wire so as not to stretch brake hose.

Remove torque member fixing bolts and connecting bolt.

- **It is not necessary to remove connecting bolt except for disassembly or replacement of caliper assembly. In this case, suspend caliper assembly with wire so as not to stretch brake hose.**

Simpo PDF Merge and Split Unregistered Version - http://www.simpopdf.com

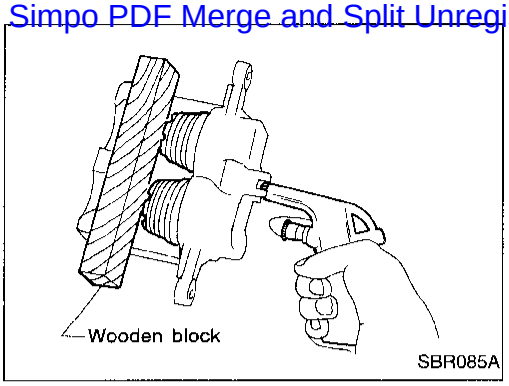

Disassembly

WARNING:
Do not place your fingers in front of piston.

CAUTION:
- **Do not scratch or score cylinder wall.**
- **CL28VD type front disc brake uses plastic pistons, handle them carefully.**

1. Push out pistons and dust covers with compressed air. Use a wooden block so that both pistons come out evenly.
2. Remove piston seals with a suitable tool.

Inspection — Caliper

CYLINDER BODY

- Check inside surface of cylinders for scores, rust, wear, damage or presence of foreign objects. If any of the above conditions are observed, replace cylinder body.
- Minor damage from rust or foreign objects may be eliminated by polishing the surface with a fine emery sandpaper. Replace cylinder body if necessary.

CAUTION:
Use brake fluid to clean. Never use mineral oil.

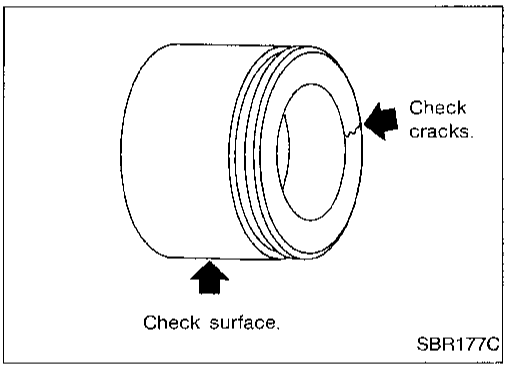

PISTON

CAUTION:
Piston sliding surface is plated. Do not polish with emery sandpaper even if rust or foreign objects are stuck to sliding surface.

Check pistons for uneven surface, chips or cracks. Replace if any of these conditions are observed.

SLIDE PIN, PIN BOLT AND PIN BOOT

Check for wear, cracks or other damage. Replace if any of these conditions are observed.

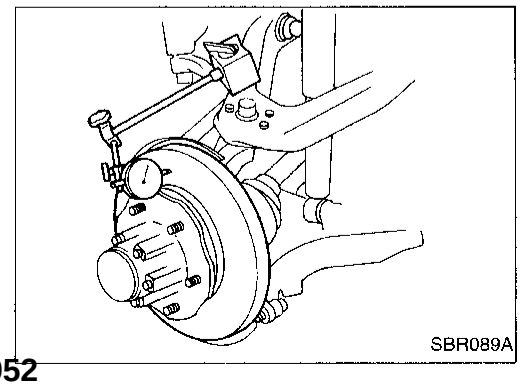

Inspection — Rotor

RUNOUT

1. Check runout using a dial indicator.
- **Make sure that wheel bearing axial end play is within the specifications before measuring. Refer to FA section ("Front Wheel Bearing", "ON-VEHICLE SERVICE").**
  Maximum runout:
  0.07 mm (0.0028 in)
2. If the runout is out of specification, machine rotor with on-car brake lathe ("MAD, DL-8700", "AMMCO 700 and 705" or equivalent).

Simpo PDF Merge and Split Unregistered Version - http://www.simpopdf.com

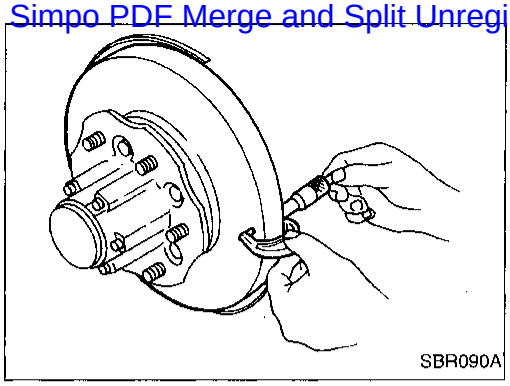
SBR090A

Inspection — Rotor (Cont'd)

THICKNESS

Thickness variation (At least 8 positions):
Maximum 0.02 mm (0.0008 in)

If thickness variation exceeds the specification, machine rotor with on-car brake lathe.

Rotor repair limit:
24.0 mm (0.945 in)

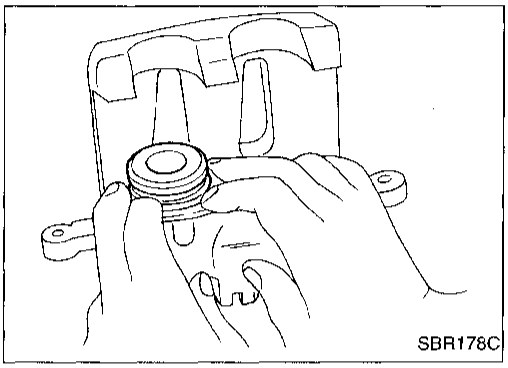
SBR178C

Assembly

1. Insert piston seal into groove on cylinder body.
2. With piston boot fitted to piston, insert piston boot into groove on cylinder body and install piston.
3. Properly secure piston boot.

CAUTION:

- **Secure dust seal properly.**
- **Lubricate with new brake fluid before installing plastic pistons into cylinder body.**

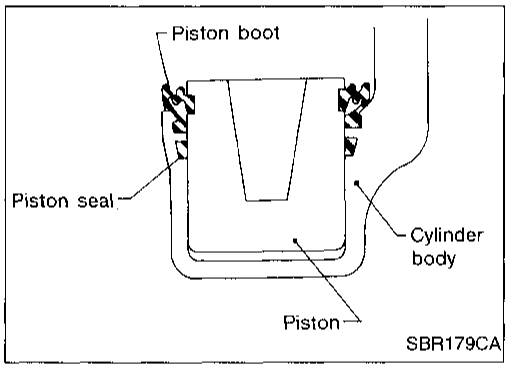

SBR179CA

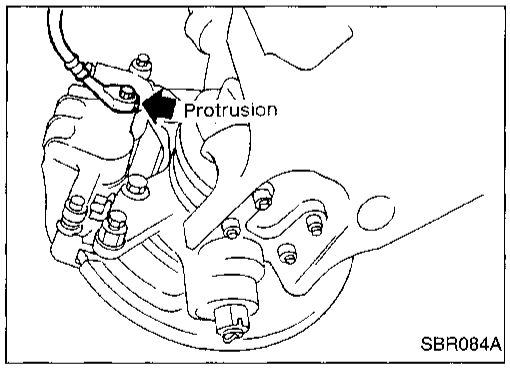

SBR084A

Installation

CAUTION:

- **Refill with new brake fluid DOT 3.**
- **Never reuse drained brake fluid.**

1. Install caliper assembly.
2. Install brake hose to caliper securely.
3. Install all parts and secure all bolts.
4. Bleed air. Refer to "Bleeding Brake System", BR-6.

Brake Burnishing Procedure

When experiencing soft brake pedal feel at very low mileage, or after replacing the rotor, burnish the brake pad contact surfaces according to the following procedure.

CAUTION:

Only perform this procedure under safe road and traffic conditions. Use extreme caution.

1. Drive the vehicle on a straight smooth road at 50 km/h (31 MPH).

Simpo PDF Merge and Split Unregistered Version - http://www.simpopdf.com

Brake Burnishing Procedure (Cont'd)

2. Use medium brake pedal/foot effort to bring the vehicle to a complete stop from 50 km/h (31 MPH). Adjust brake pedal/foot pressure such that vehicle stopping time equals 3 to 5 seconds.
3. To cool the brake system, drive the vehicle at 50 km/h (31 MPH) for 1 minute without stopping.
4. Repeat steps 1 to 3, 10 times or more to complete the burnishing procedure.

Simpo PDF Merge and Split Unregistered Version - http://www.simpopdf.com

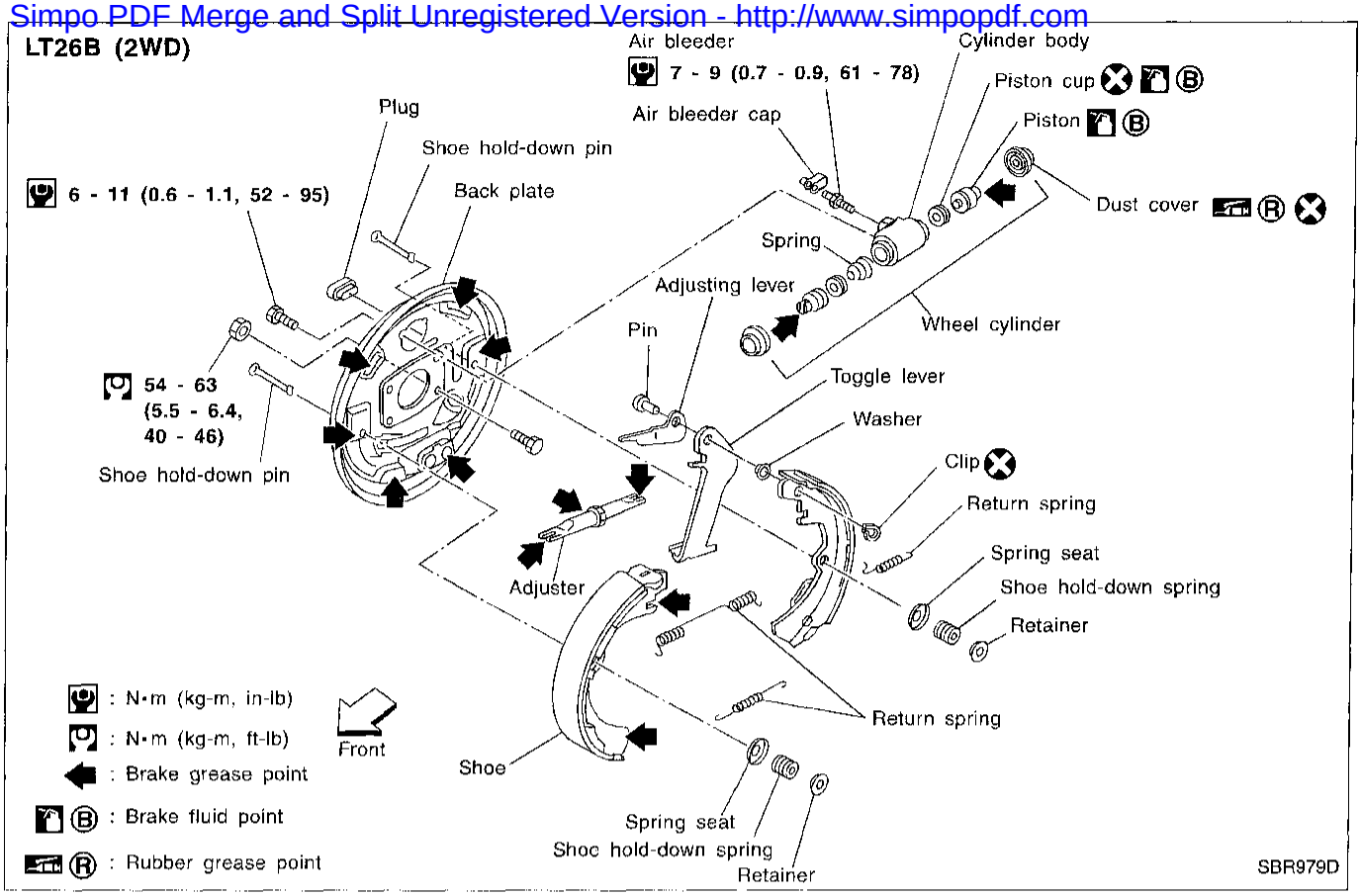

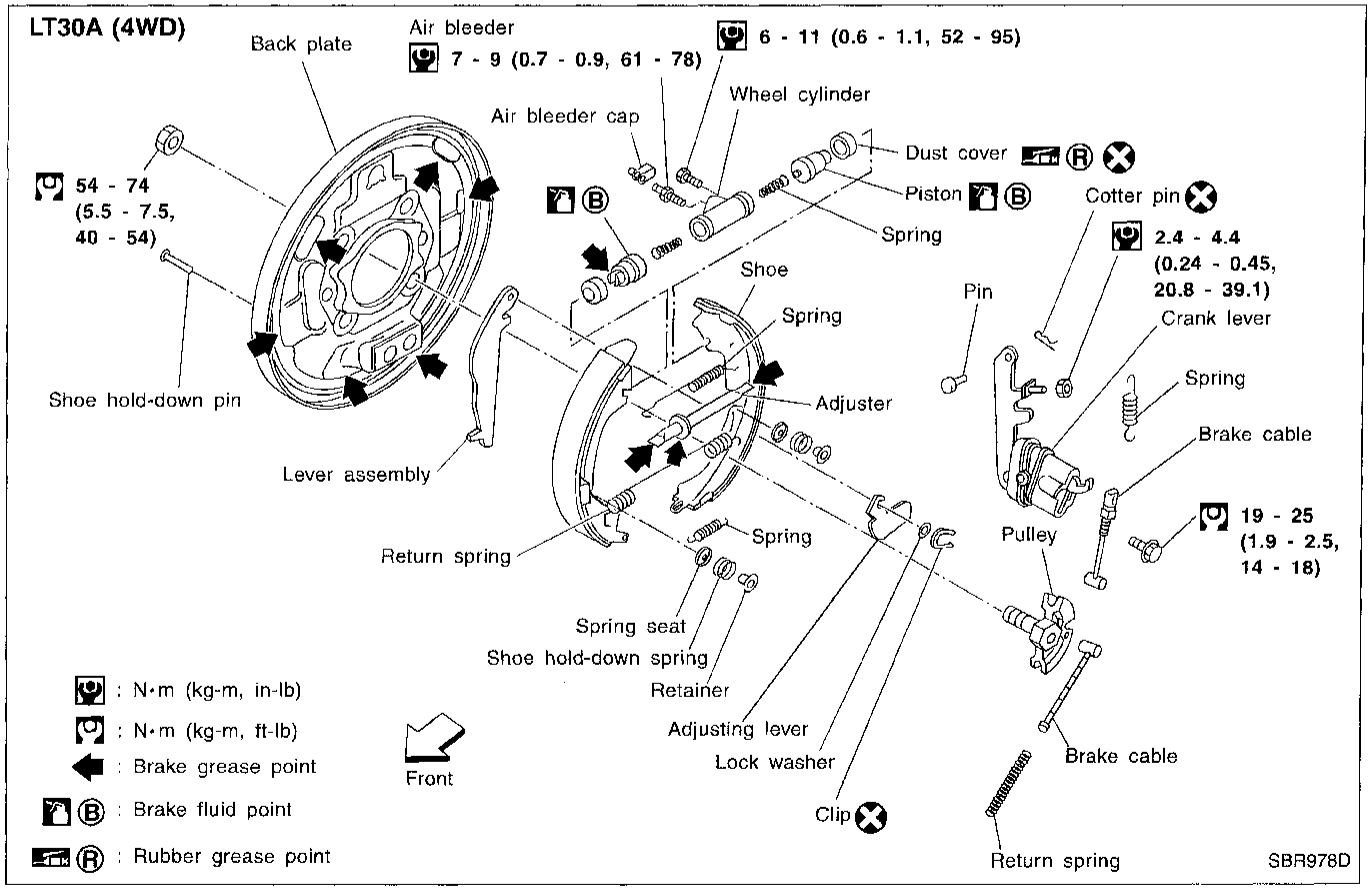

Simpo PDF Merge and Split Unregistered Version - http://www.simpopdf.com

Removal

WARNING:
Clean brake lining with a vacuum dust collector to minimize the hazard of airborne materials.

CAUTION:
Make sure parking brake lever is completely released.

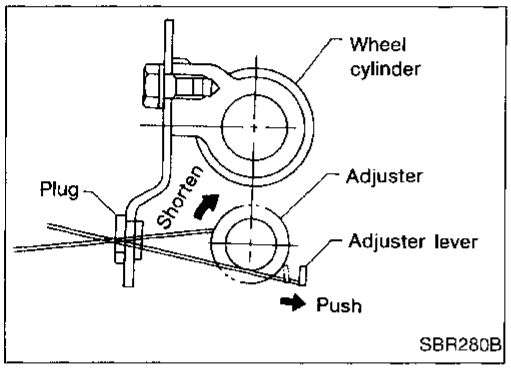

1. Release parking brake lever fully, then remove drum.

- **If drum is hard to remove, the following procedure should be carried out.**

a. **Remove plug. Then shorten adjuster to make clearance between brake shoe and drum.**

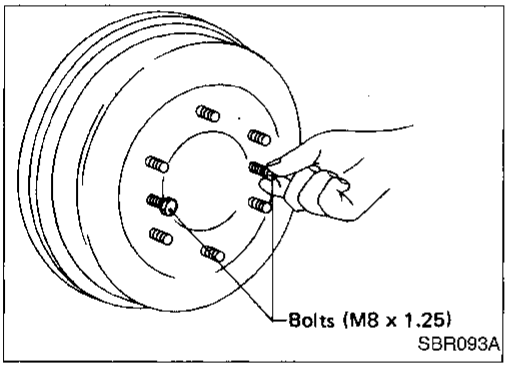

b. **Install two bolts as shown. Tighten the two bolts gradually.**

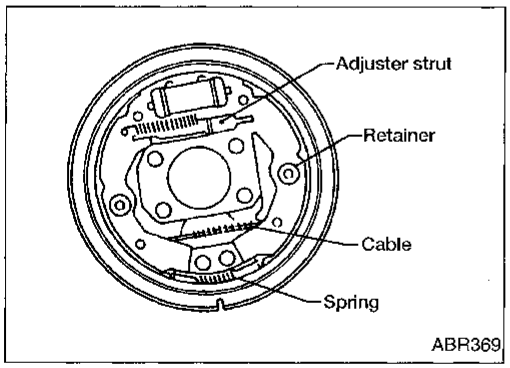

2. After removing retainer, remove spring by rotating shoes.

- **Be careful not to damage wheel cylinder piston boots.**
- **Be careful not to damage parking brake cable when separating it.**

3. Remove adjuster.
4. Disconnect parking brake cable from toggle lever.

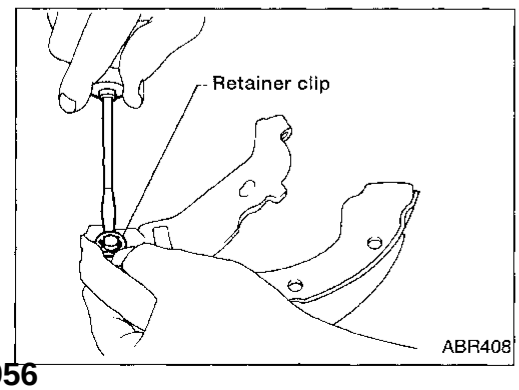

5. Remove retainer clip with a suitable tool. Then separate toggle lever and brake shoe.

Simpo PDF Merge and Split Unregistered Version - http://www.simpopdf.com

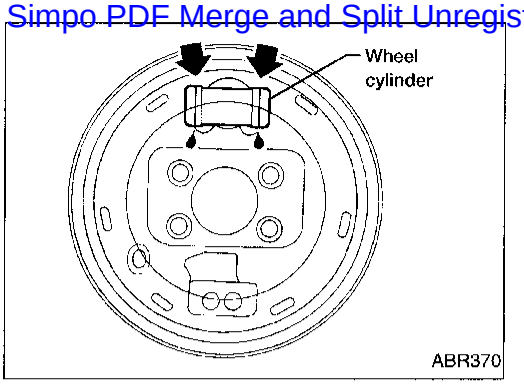

Inspection — Wheel Cylinder

- Check wheel cylinder for leakage.
- Check for wear, damage and loose conditions. Replace if any such conditions exists.

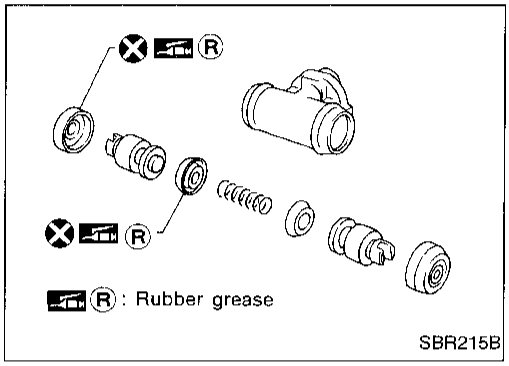

Wheel Cylinder Overhaul

- Check all internal parts for wear, rust and damage. Replace if necessary.
- Pay attention not to scratch cylinder when installing pistons.

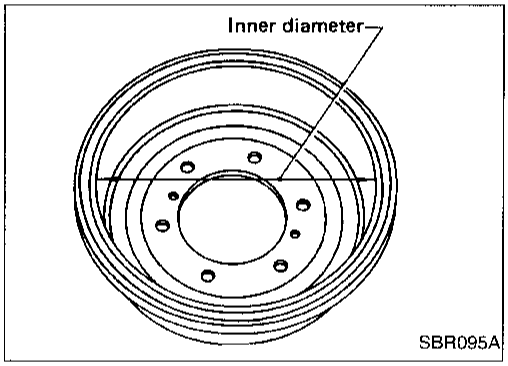

Inspection — Drum

Maximum inner diameter (Repair limit):
LT26B 261.5 mm (10.30 in)
LT30A 296.5 mm (11.67 in)

- Contact surface should be finished with No. 120 to 150 emery sandpaper.
- Using a brake lathe, machine brake drum if it shows score marks, partial wear or stepped wear.
- After brake drum has been completely reconditioned or replaced, check drum and shoes for proper contact pattern.

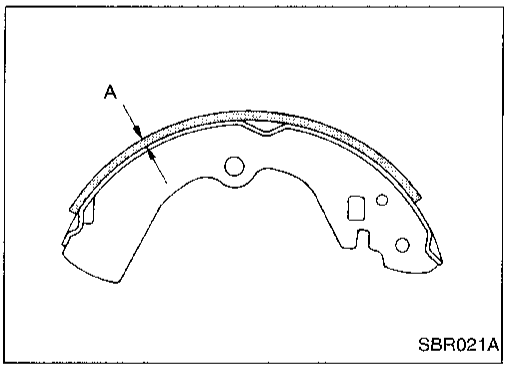

Inspection — Lining

Check lining thickness.

Standard lining thickness:
LT26B 5.5 mm (0.217 in)
LT30A 6.1 mm (0.240 in)
Lining wear limit (A):
LT26B 1.5 mm (0.059 in)
LT30A 1.5 mm (0.059 in)

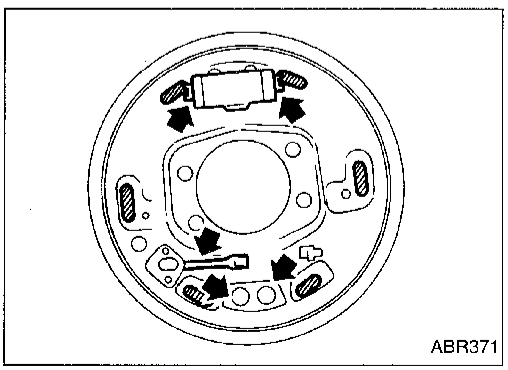

Installation

- **Always perform shoe clearance adjustment. Refer to BR-30.**

1. Fit toggle lever to brake shoe with retainer clip.
2. Apply brake grease to the contact areas shown at left.

Installation (Cont'd)

Simpo PDF Merge and Split Unregistered Version - http://www.simpopdf.com

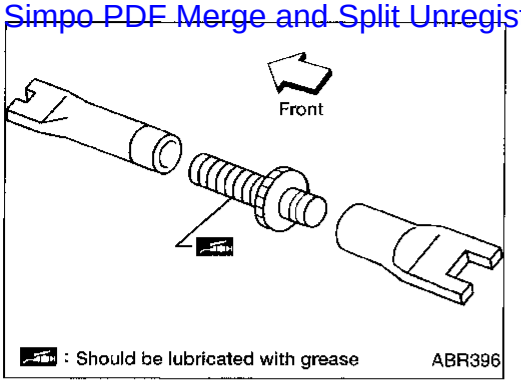

3. Shorten adjuster by rotating it.

- **Pay attention to direction of adjuster.**

Wheel	Screw
Left	Left-hand thread
Right	Right-hand thread

4. Connect parking brake cable to toggle lever.
5. Install all parts.

- **Be careful not to damage wheel cylinder piston boots.**

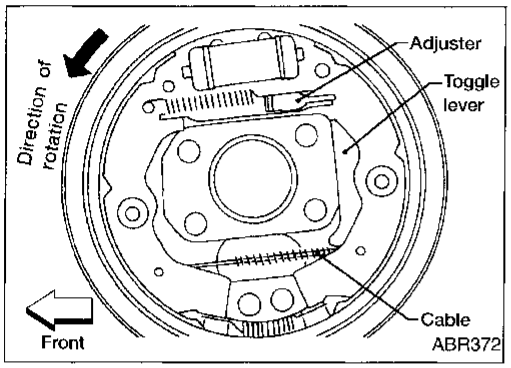

6. Check all parts are installed properly.

- **After installation is completed, adjust shoe-to-drum clearance.**

7. Install brake drum.
8. When installing new wheel cylinder or overhauling wheel cylinder, bleed air. Refer to "Bleeding Brake System", BR-6.
9. Adjust parking brake. Refer to BR-30.

- Install all the parts by referring to the figure below.

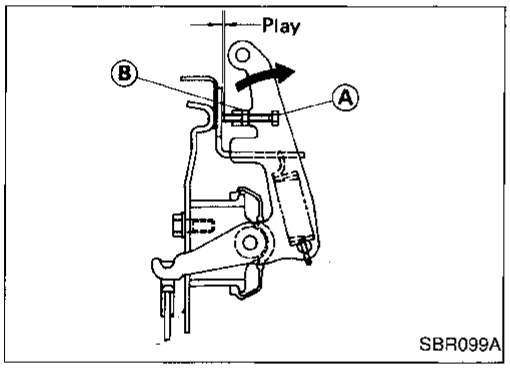

LT30A model

- After installing crank lever on back plate, make sure that there is no play between crank lever and back plate. If play exists, adjust bolt Ⓐ and lock nut Ⓑ.

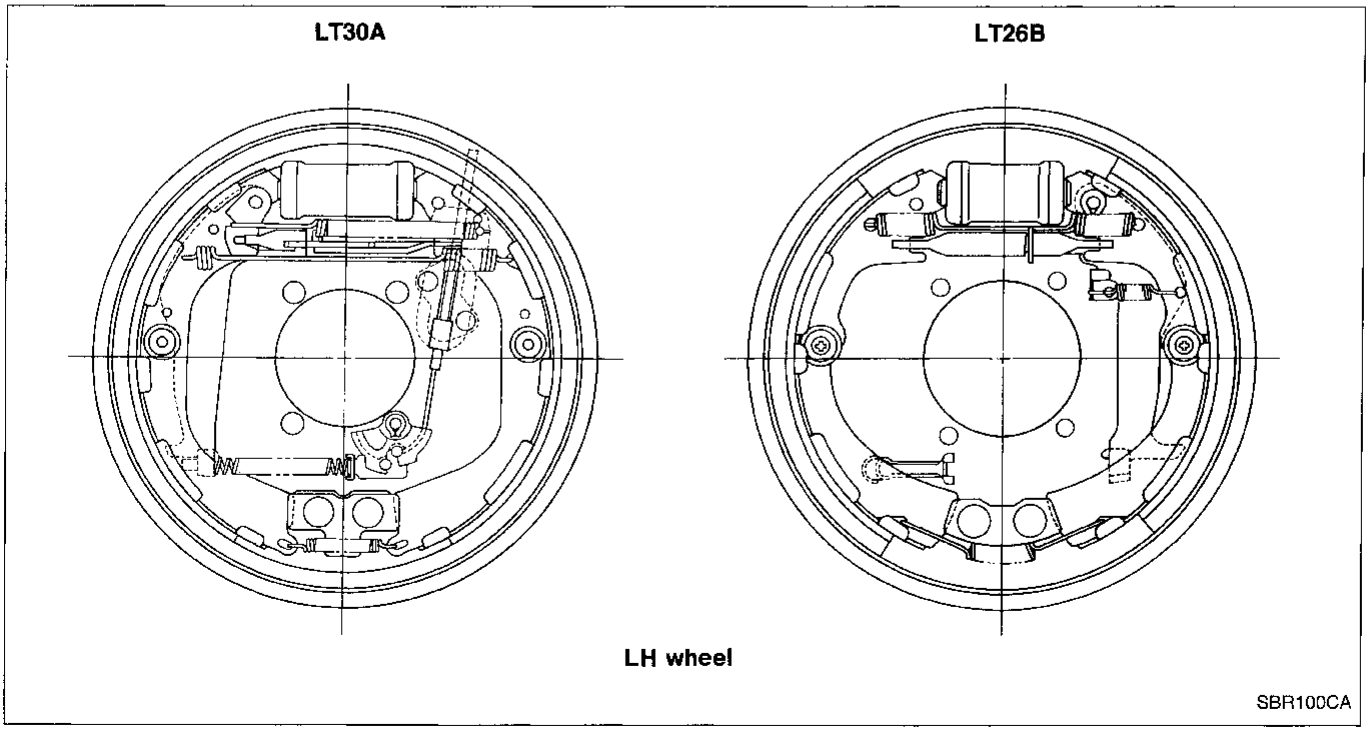

Simpo PDF Merge and Split Unregistered Version - http://www.simpopdf.com

2WD

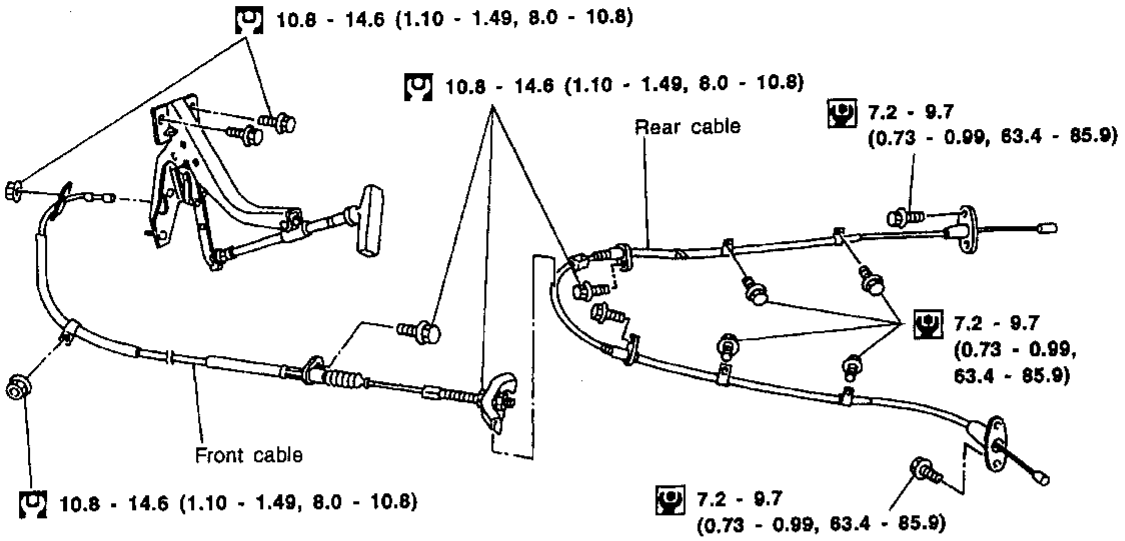

4WD Stick type

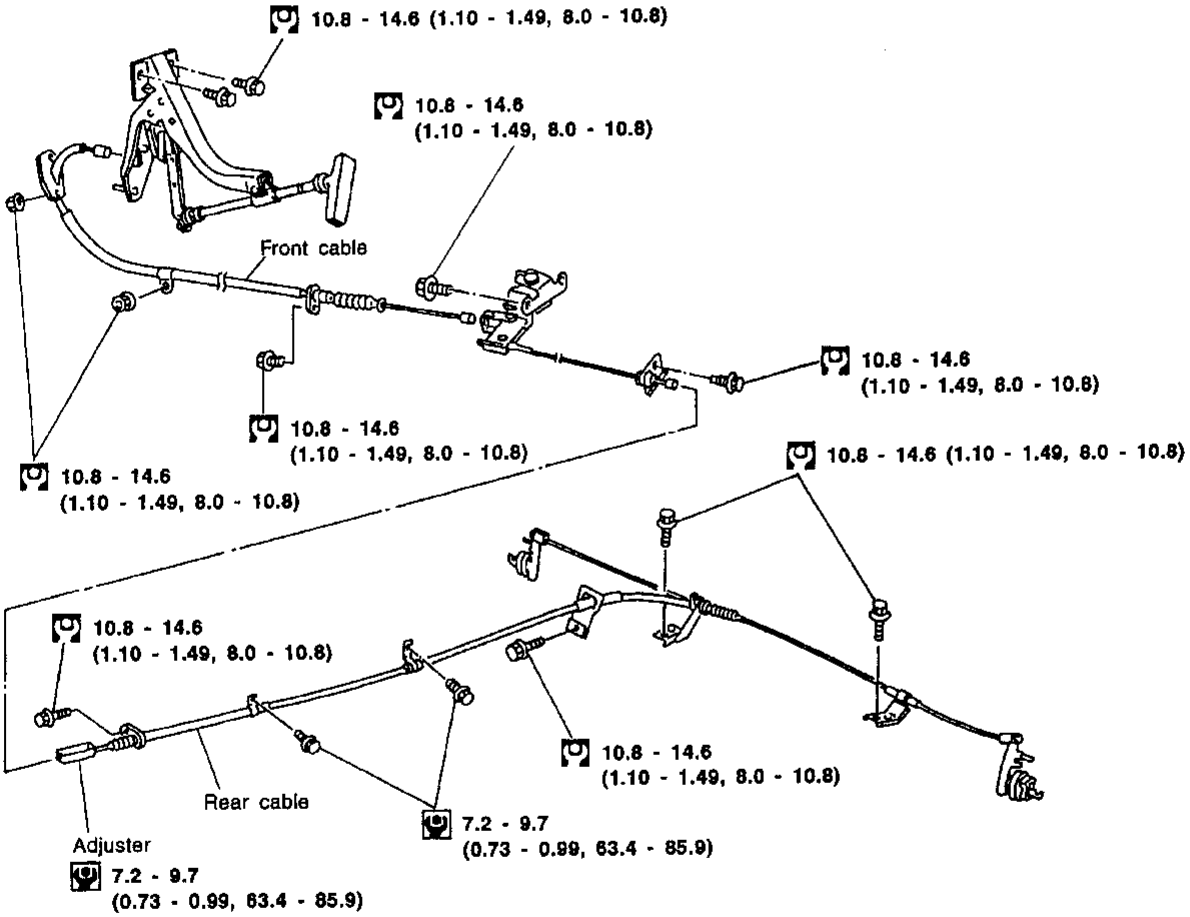

: N•m (kg-m, in-lb)
: N•m (kg-m, ft-lb)

ABR682

Simpo PDF Merge and Split Unregistered Version - http://www.simpopdf.com

Removal and Installation

- Be careful not to damage cable.
- Make sure there is no free play after installation.

Inspection

1. Check control lever for wear or other damage. Replace if necessary.
2. Check wires for discontinuity or deterioration. Replace if necessary.
3. Check warning lamp and switch. Correct if necessary.
4. Check part at each connecting portion and, if found deformed or damaged, replace.

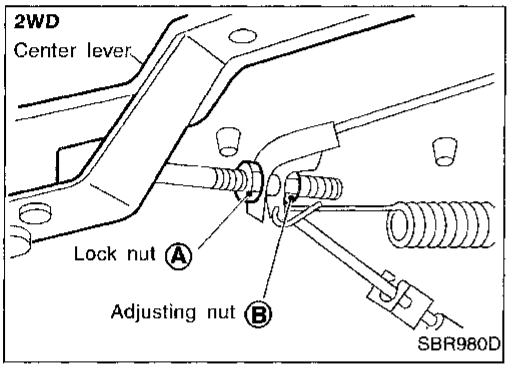

Adjustment

Adjust parking brake as follows:

1. Fully release parking brake lever.
2. Loosen Ⓐ and rotate Ⓑ until parking brake cable loosens.
3. Depress brake pedal several times until clicking sound does not occur from rear brakes.
4. Adjust clearance between rear brake shoe and drum.
5. Adjust parking brake lever stroke by rotating Ⓑ.
6. Pull parking brake lever with specified force. Check lever stroke and ensure smooth operation.
7. Readjust clearance between rear brake shoe and drum.

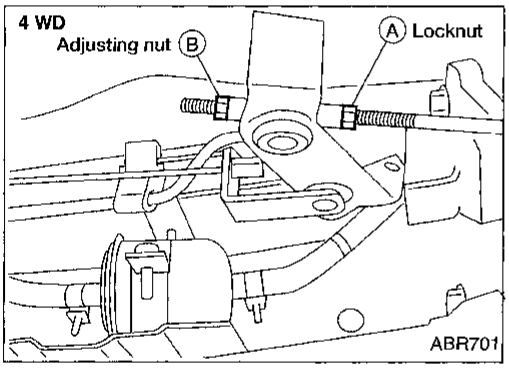

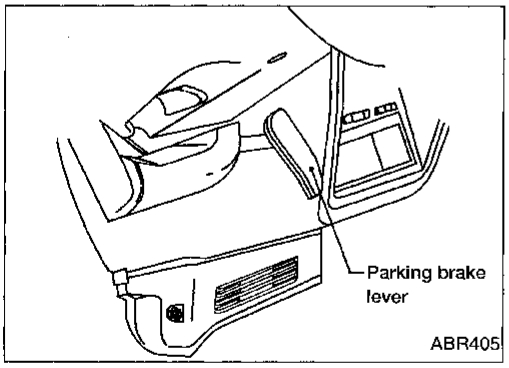

Simpo PDF Merge and Split Unregistered Version - http://www.simpopdf.com

Purpose

The Rear Wheel Anti-Lock Brake System (ABS) consists of electronic and hydraulic components. It controls rear braking force so locking of the rear wheels can be avoided.
The ABS:

1) Improves proper tracking performance during severe braking.
2) Eases obstacle avoidance during severe braking.
3) Improves vehicle stability.

Operation

- When the vehicle speed is less than 10 km/h (6 MPH) this system does not work.
- The Rear Wheel Anti-Lock Brake System (ABS) has self-test capabilities. The system turns on the ABS warning lamp for a few seconds each time the ignition switch is turned ON. After the engine is started, the ABS warning lamp turns off. The system performs a circuit check when the ignition switch is first turned ON. If a malfunction is found during this check, the ABS warning lamp will stay on.
- While driving, a mechanical noise may be heard and slight pedal pulsation may be felt during ABS operation. This is a normal condition.

ABS Hydraulic Circuit

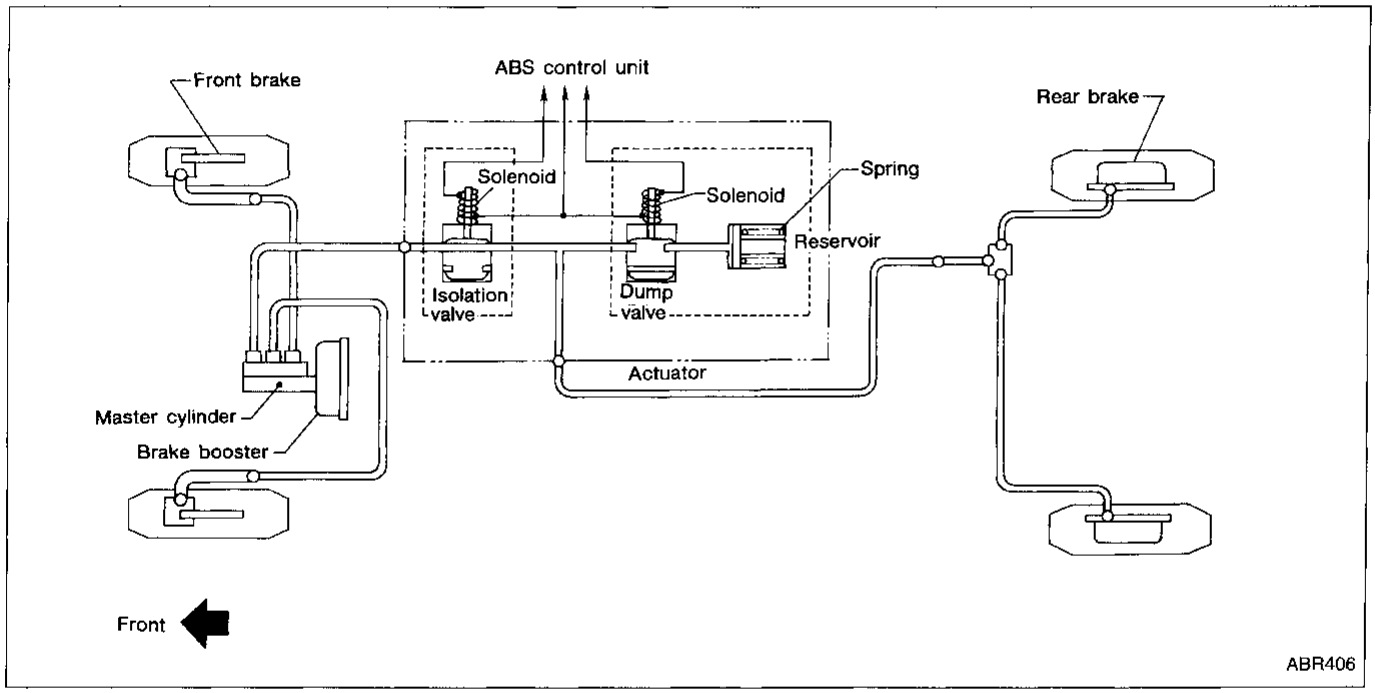

Simpo PDF Merge and Split Unregistered Version - http://www.simpopdf.com

System Components

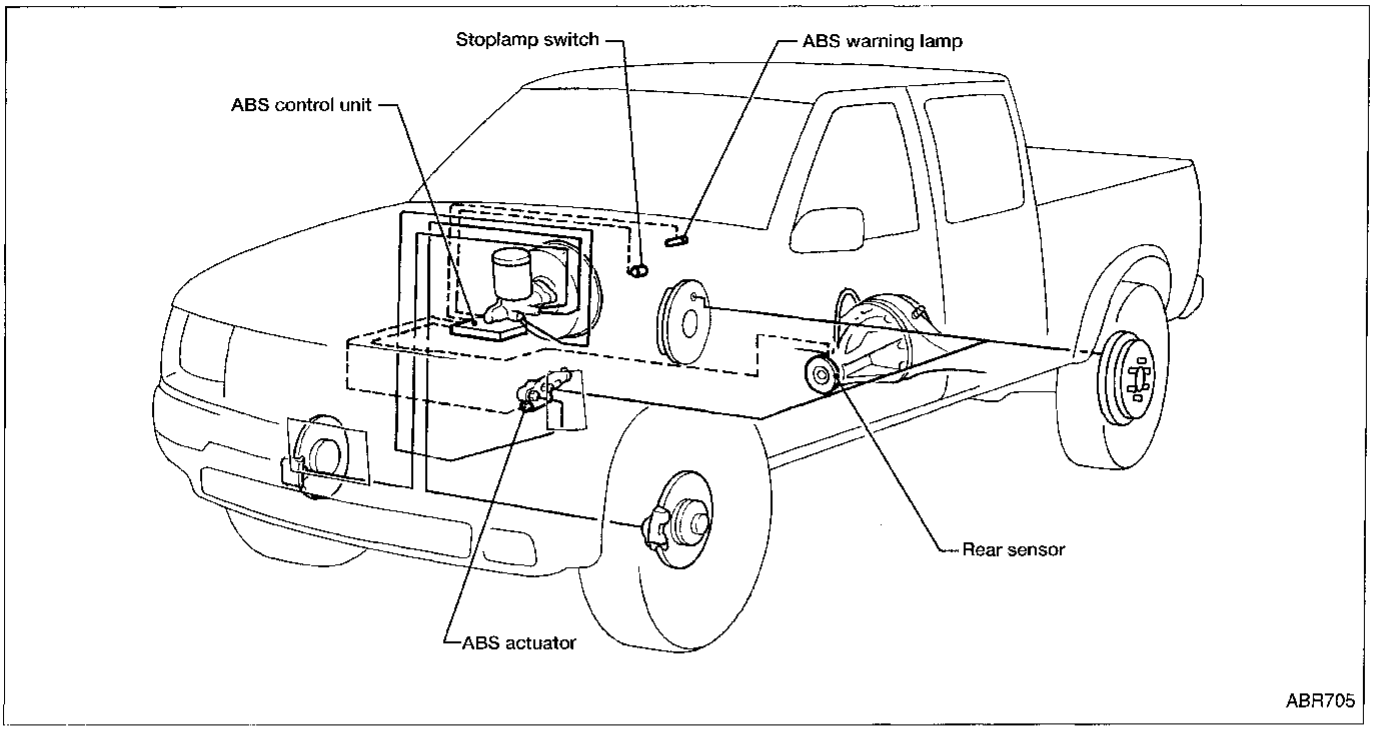

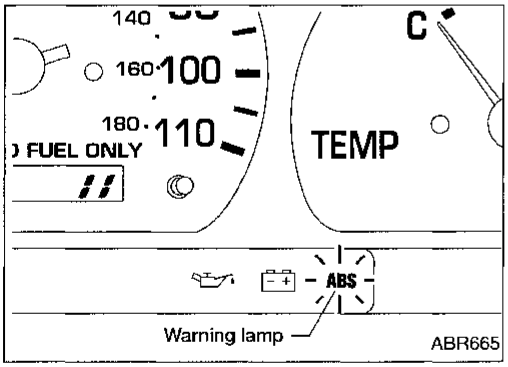

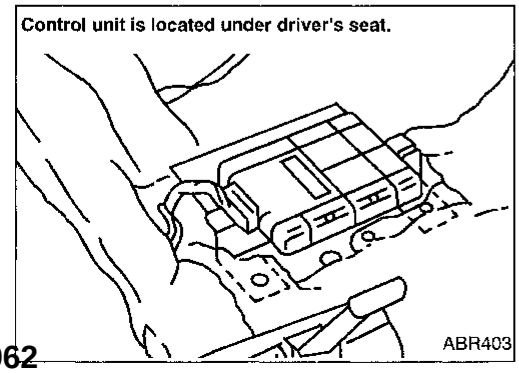

System Description

REAR SENSOR

The rear sensor unit consists of a gear-shaped sensor rotor and a sensor unit. The sensor unit consists of a bar magnet around which a coil is wound. The sensor rotor is installed on the companion flange and the sensor unit is installed on the rear axle housing. A sine-wave current is generated by the rear sensor unit as the rear axle pinion rotates. The frequency and voltage increase as the rotating speed increases.

ABS CONTROL UNIT

The ABS control unit computes the rear axle pinion rotating speed by reading the signal from the rear sensor unit. Then it supplies a DC current to the ABS actuator. If any electrical malfunction is detected in the system, the ABS control unit causes the ABS warning lamp to turn on. In this condition, the ABS system will be deactivated by the ABS control unit, and the vehicle's brake system reverts to normal operation.

Simpo PDF Merge and Split Unregistered Version - http://www.simpopdf.com

Removal and Installation

CAUTION:

Be careful not to damage sensor edge and sensor rotor teeth. In case the final drive assembly needs to be removed, disconnect the ABS sensor from the assembly and move it away. Failure to do so may result in damage to the sensor wires making the sensor inoperative.

For final drive models using collapsible spacer (H190A, C200), bearing preload must be adjusted whenever companion flange is removed. Therefore, final drive overhaul is required.

REAR SENSOR AND CONTROL UNIT

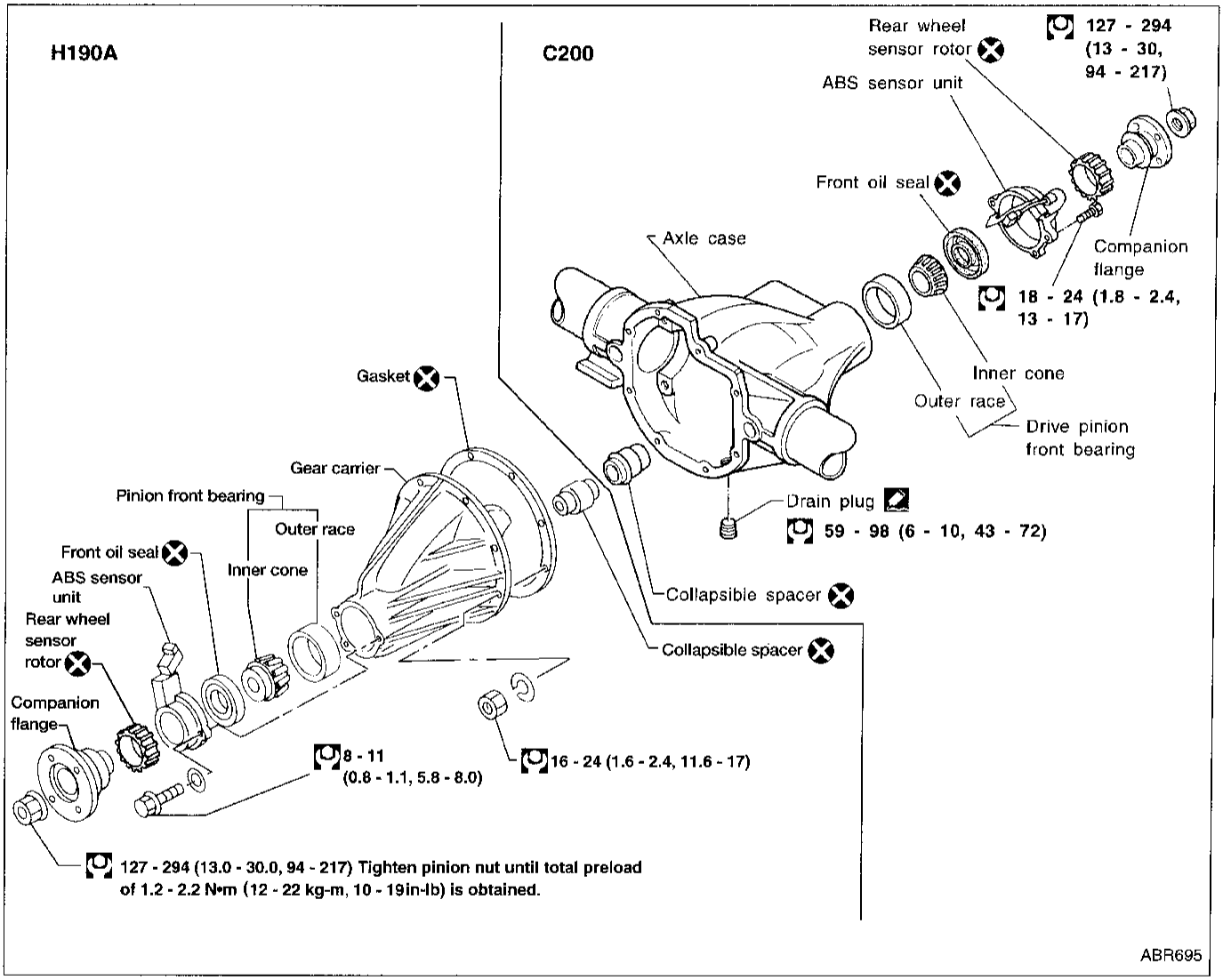

Simpo PDF Merge and Split Unregistered Version - http://www.simpopdf.com

Removal and Installation (Cont'd)

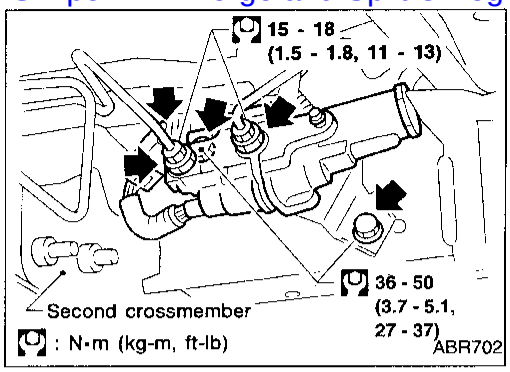

ACTUATOR

Removal

1. Disconnect battery cable.
2. Drain brake fluid.
   Refer to "Changing Brake Fluid", BR-5.
3. Disconnect connectors, brake pipes and remove fixing nuts.

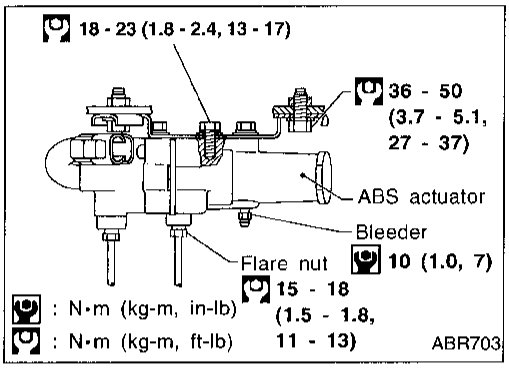

Installation

CAUTION:
After installation, refill brake fluid. Then bleed air. Refer to "Bleeding Procedure", BR-6.

1. Connect brake pipes temporarily.
2. Secure fixing bolts.
3. Torque brake pipe flare nuts.
4. Connect connectors and battery cable.

Simpo PDF Merge and Split Unregistered Version - http://www.simpopdf.com

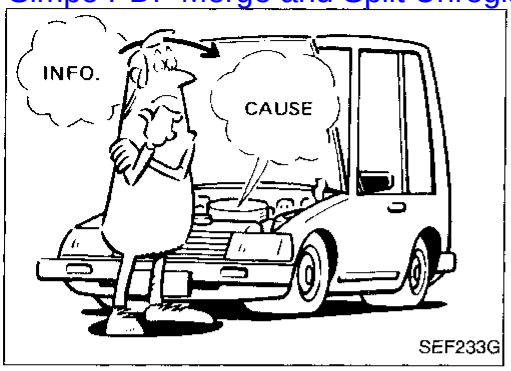

SEF233G

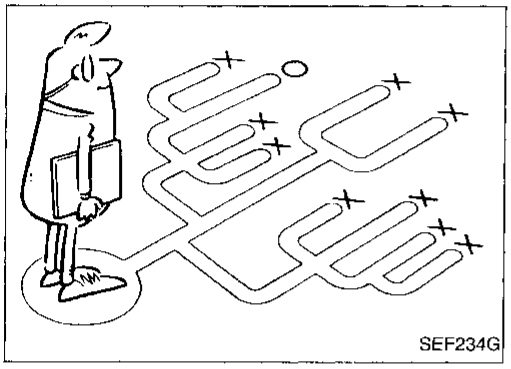
SEF234G

How to Perform Trouble Diagnoses for Quick and Accurate Repair

INTRODUCTION

The ABS system has an electronic control unit to control major functions. The control unit accepts input signals from sensors and instantly drives the actuators. It is essential that both kinds of signals are proper and stable. It is also important to check for conventional problems: such as air leaks in booster lines, lack of brake fluid, or other problems with the brake system.

It is much more difficult to diagnose a problem that occurs intermittently rather than continuously. Most intermittent problems are caused by poor electric connections or faulty wiring. In this case, careful checking of suspicious circuits may help prevent the replacement of good parts.

A visual check only, may not find the cause of the problems, so a road test should be performed.

Before undertaking actual checks, take a few minutes to talk with a customer who approaches with a ABS complaint. The customer is a very good source of information on such problems; especially intermittent ones. Through the talks with the customer, find out what symptoms are present and under what conditions they occur. Start your diagnosis by looking for "conventional" problems first. This is one of the best ways to troubleshoot brake problems on an ABS controlled vehicle.

Also check related service bulletins for information.

Simpo PDF Merge and Split Unregistered Version - http://www.simpopdf.com

How to Perform Trouble Diagnoses for Quick and Accurate Repair (Cont'd)

WORK FLOW

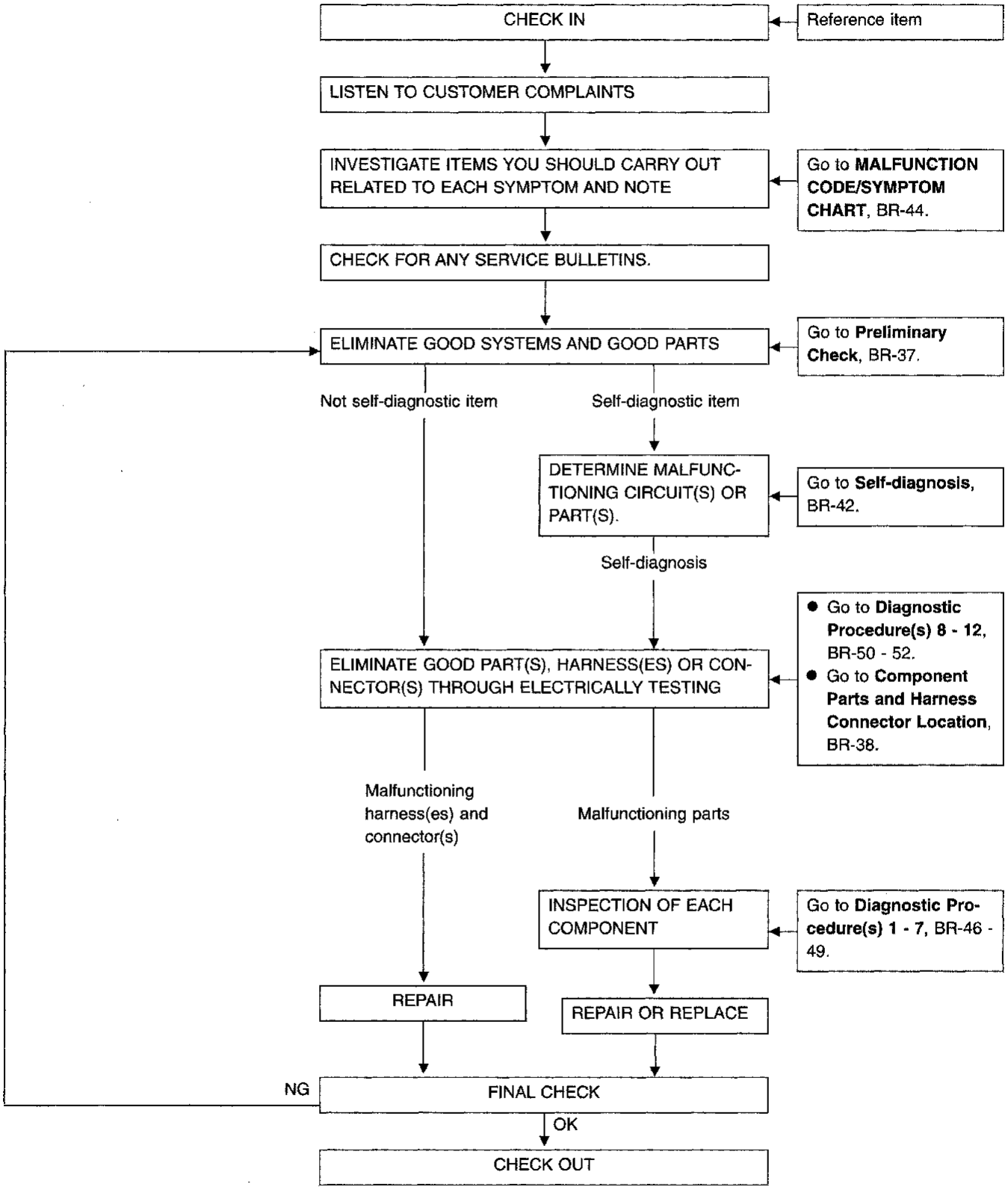

Simpo PDF Merge and Split Unregistered Version - http://www.simpopdf.com

Preliminary Check

A

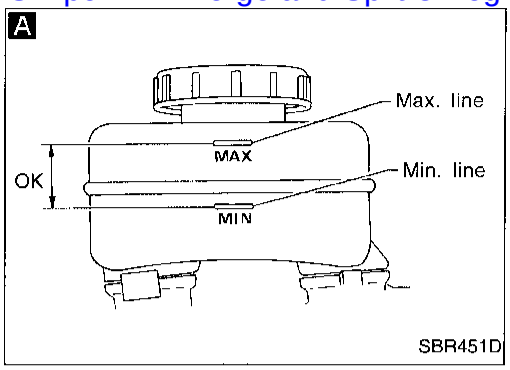

SBR451D

A

Check brake fluid level in reservoir tank.
Low fluid level may indicate brake pad wear or leakage from brake line.

B

Check brake line for leakage. — NG → Repair.
OK

B

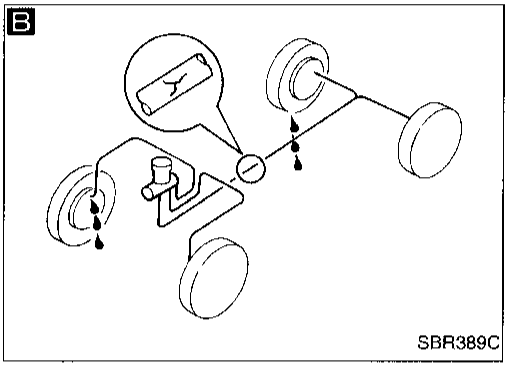
SBR389C

C

Check brake booster for operation and air tightness. Refer to BR-18. — NG → Replace.
OK

D

Check brake pads, rotors, linings and drums. Refer to BR-27. — NG → Replace.
OK

C

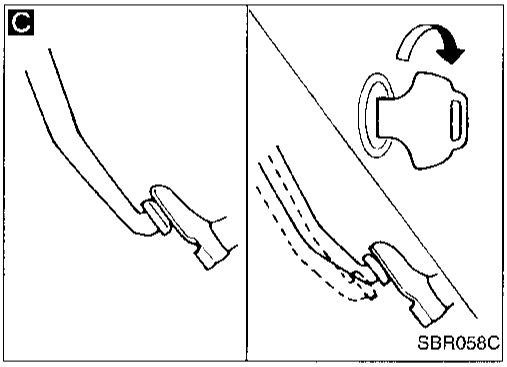
SBR058C

A

Check brake fluid level in reservoir tank again. — NG → Fill up brake fluid.
OK

E

Check warning lamp activation.
When ignition switch is turned ON, warning lamp turns on. — NG → Check fuse, warning lamp bulb and warning lamp circuit.
OK

D

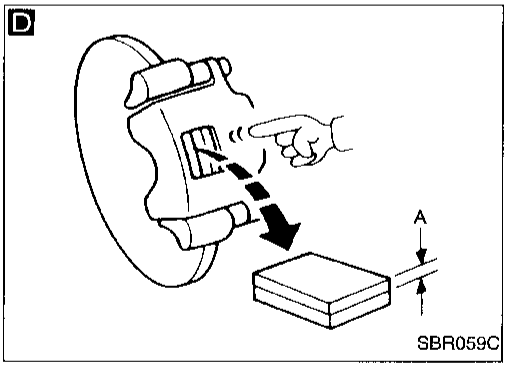

SBR059C

Check warning lamp for deactivation after engine is started. — NG → Go to Self-diagnosis, BR-42.
OK

Drive vehicle at speeds over 40 km/h (25 MPH) for at least one minute.

Ensure warning lamp remains off while driving. — NG → Go to Self-diagnosis, BR-42.
OK

END

E

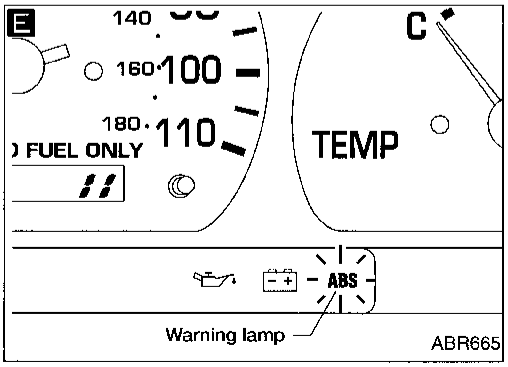

ABR665

Simpo PDF Merge and Split Unregistered Version - http://www.simpopdf.com

Component Parts and Harness Connector Location

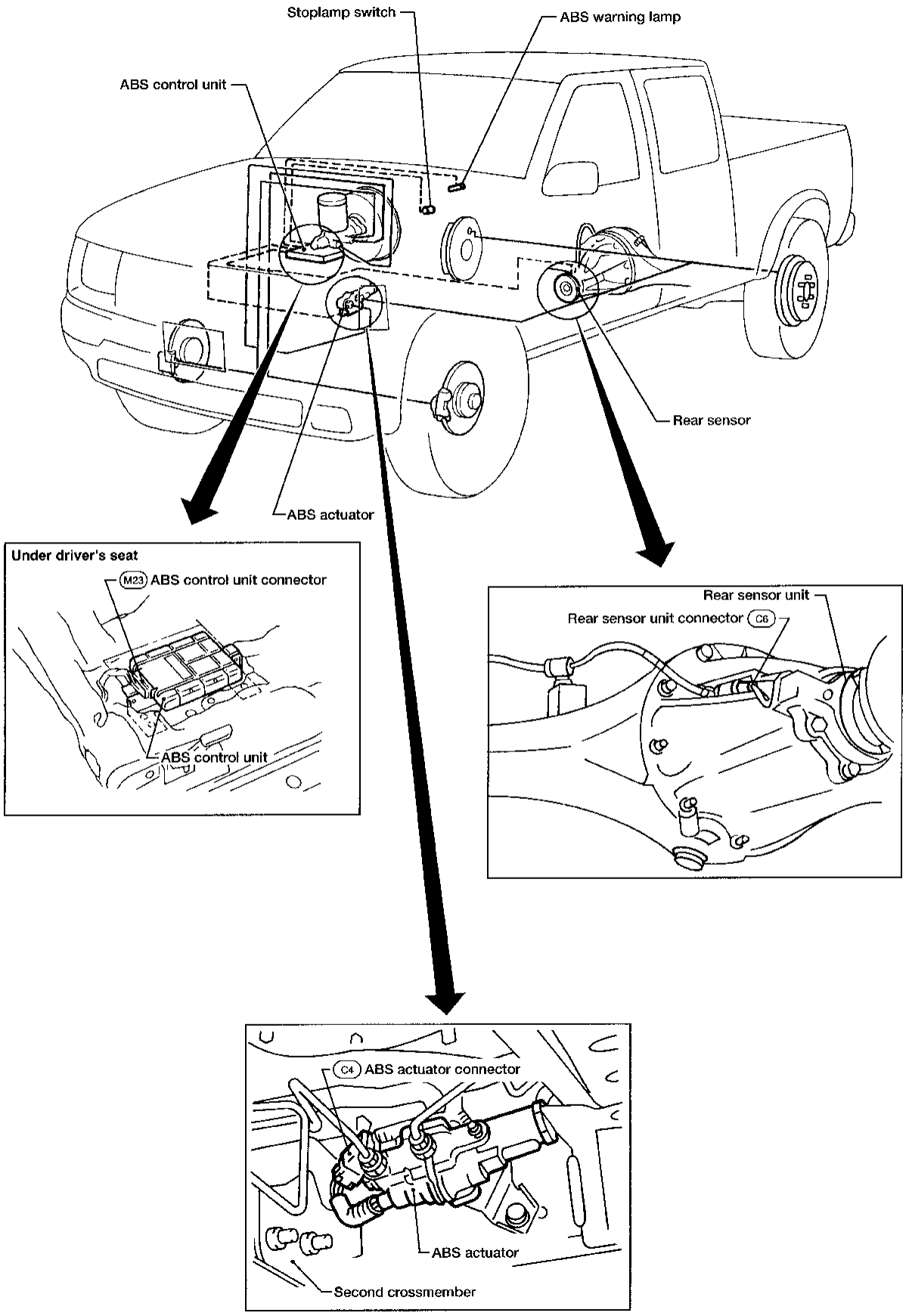

ABR683

Simpo PDF Merge and Split Unregistered Version - http://www.simpopdf.com

Circuit Diagram for Quick Pinpoint Check

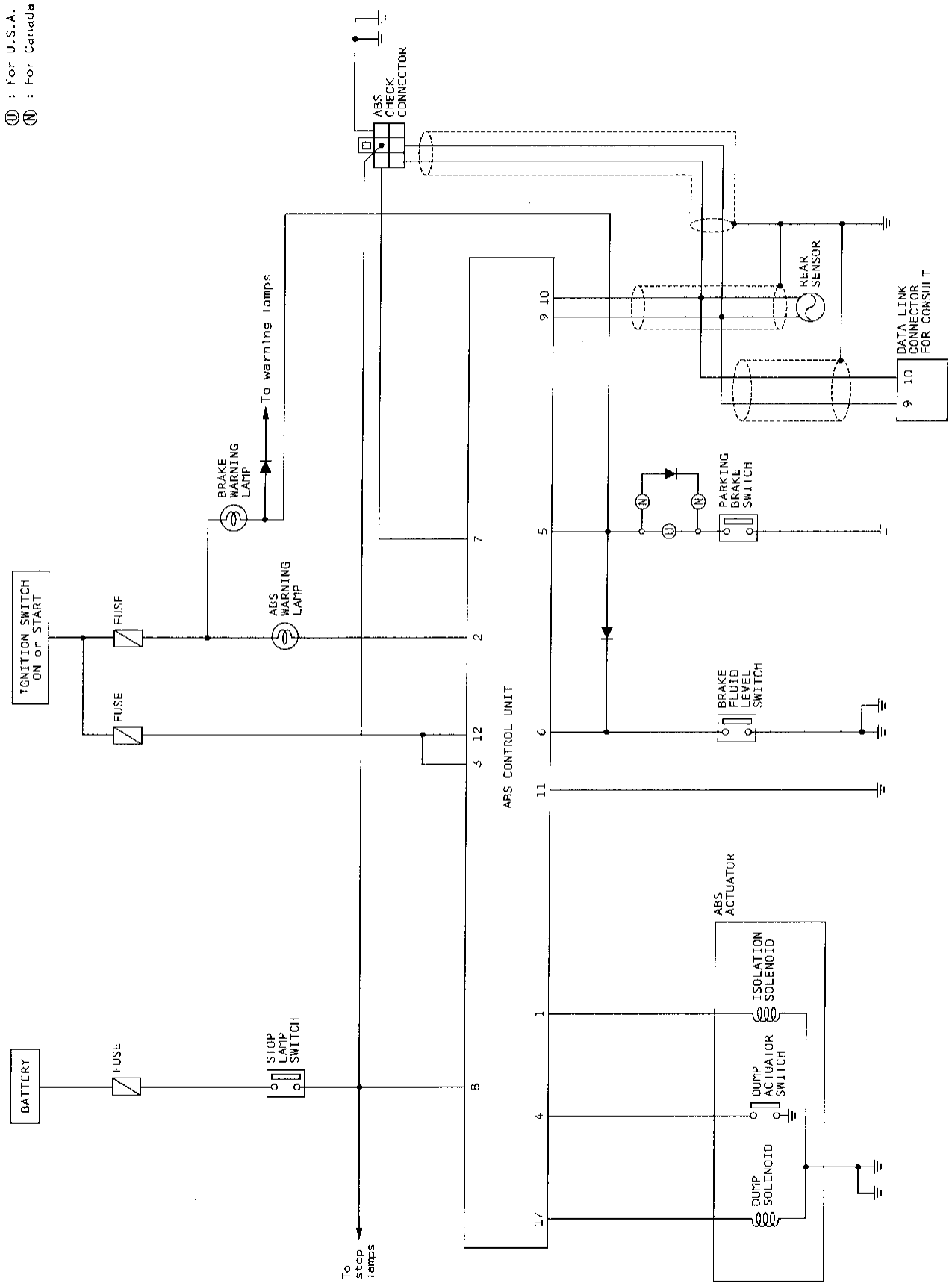

ABR567

Simpo PDF Merge and Split Unregistered Version - http://www.simpopdf.com

Wiring Diagram –ABS–

BR-ABS-01

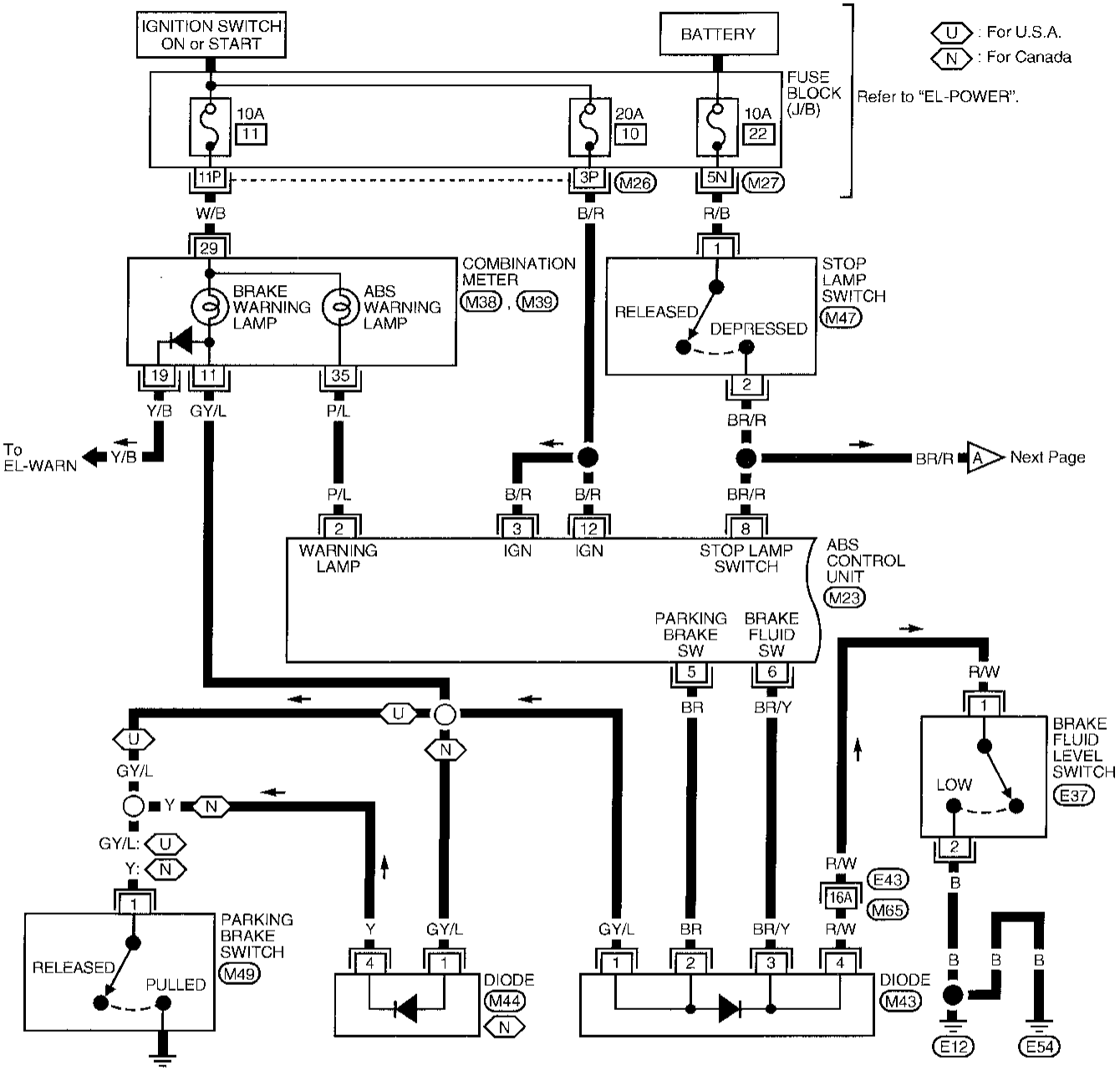

Refer to last page (Foldout page).
M65, E43

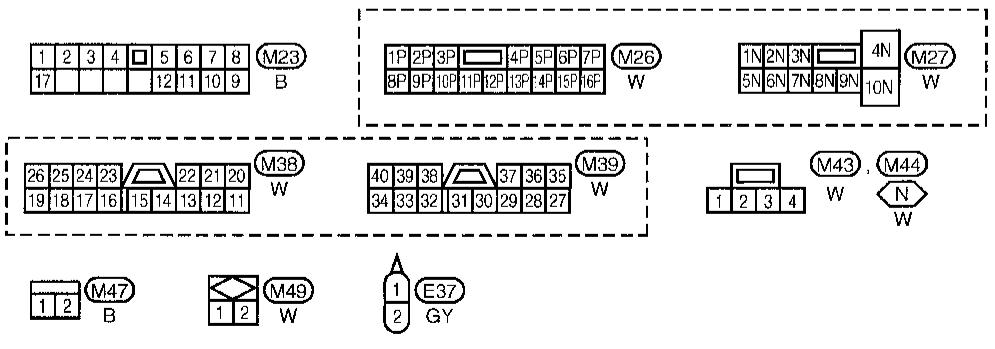

Simpo PDF Merge and Split Unregistered Version - http://www.simpopdf.com

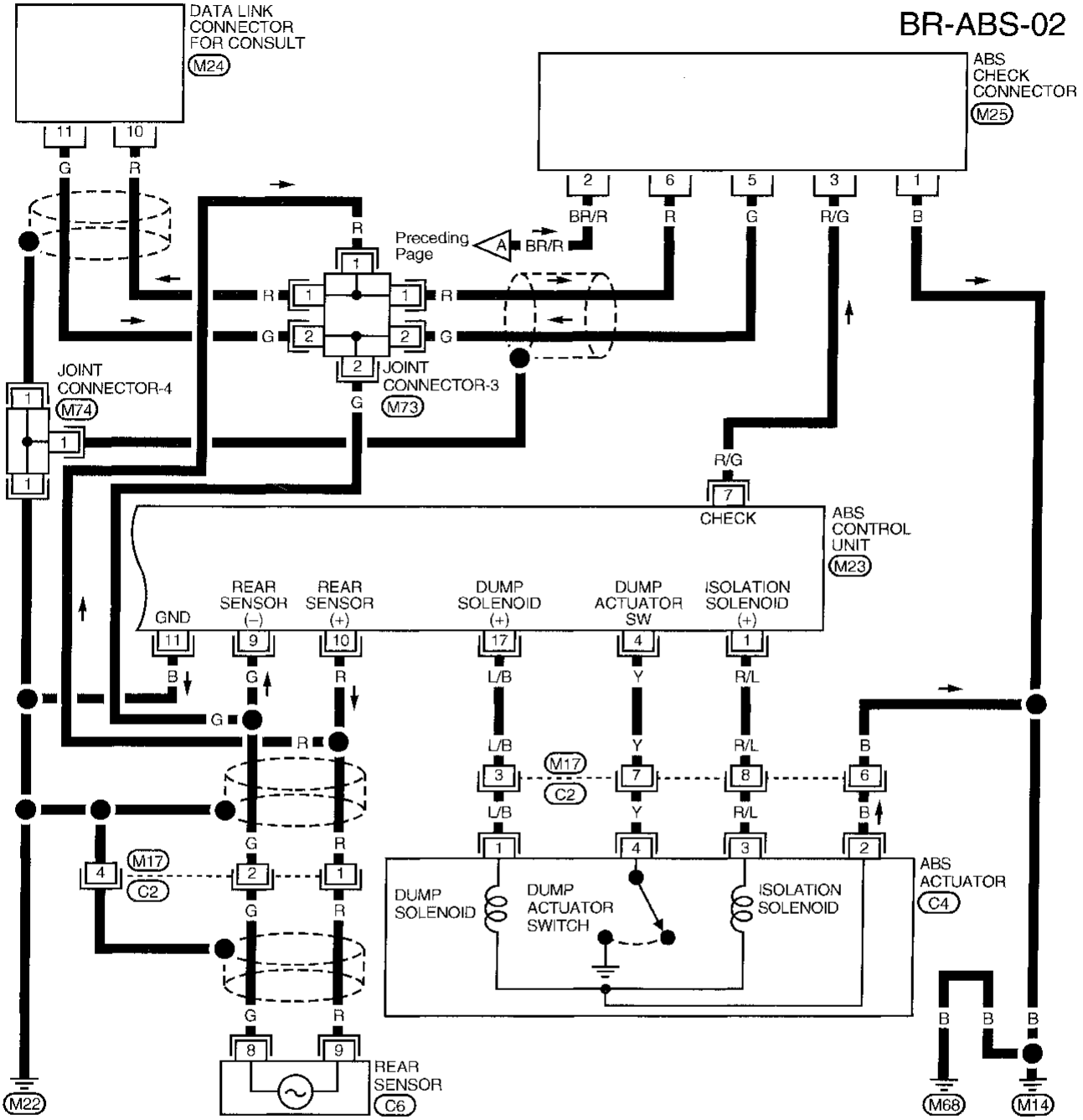

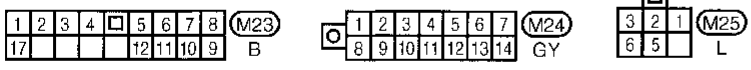

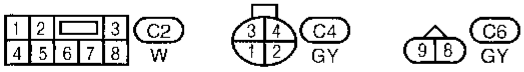

Refer to last page (Foldout page).
M73, M74

Simpo PDF Merge and Split Unregistered Version - http://www.simpopdf.com

Self-diagnosis

CHECKING THE NUMBER OF WARNING LAMP FLASHES

When a problem occurs in the ABS, the ABS warning lamp on the instrument panel turns on. As shown in the table, the control unit performs self-diagnosis.
To obtain satisfactory self-diagnosing results, the vehicle must be driven above 40 km/h (25 MPH) for at least one minute before the self-diagnosis is performed. After the vehicle has been stopped, the number of ABS warning lamp flashes is counted by grounding the check terminal, with the engine running, thereby identifying a malfunctioning part or unit by the number of flashes.
If more than two parts or units malfunction at the same time, the ABS warning lamp will flash to indicate one of the malfunctioning parts or units. After the part or unit has been repaired, the ABS warning lamp will then flash to indicate that the other part or unit is malfunctioning.

Self-diagnosis (Cont'd)

Simpo PDF Merge and Split Unregistered Version - http://www.simpopdf.com

SELF-DIAGNOSIS PROCEDURE 1

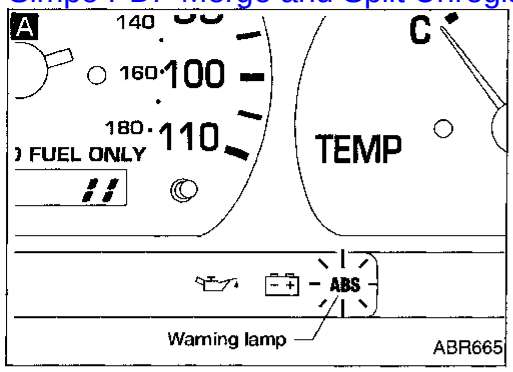

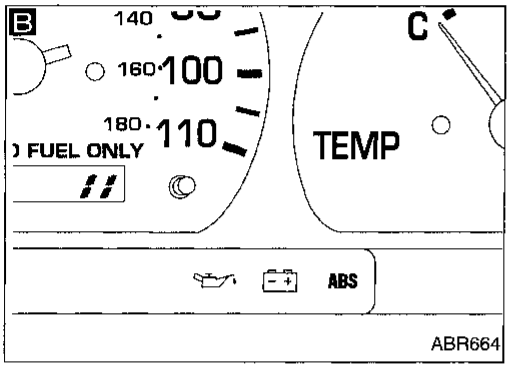

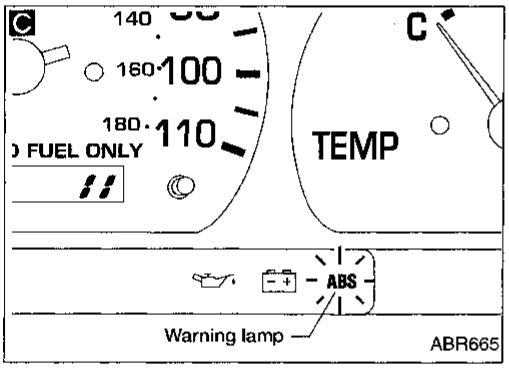

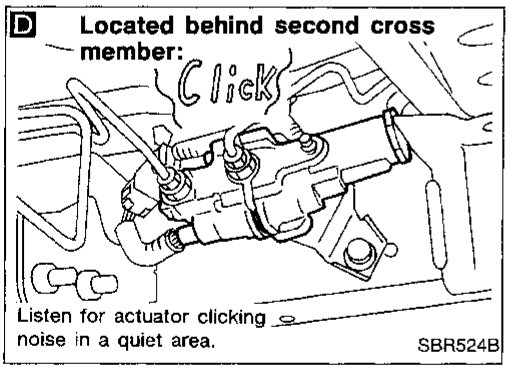

A

1. Turn ignition switch ON.
2. Check warning lamp activation.
   When ignition switch is turned on, warning lamp should turn on.

NG → Go to **Main Power Supply and Ground Circuit Check**, BR-45.
If OK, replace ABS control unit.

OK ↓

B

Check warning lamp deactivates within a few seconds.

NG → Go to **Self-Diagnosis Procedure 2**, BR-44.

OK ↓

C

Check warning lamp reactivation.

NG → Go to **Self-Diagnosis Procedure 2**, BR-44.

OK ↓

Drive vehicle for 1 minute or more at 40 km/h (25 MPH) or more.
Does warning lamp activate again?

Yes → Go to **Self-Diagnosis Procedure 2**, BR-44.

No ↓

D

1. Stop engine.
2. Turn ignition switch ON.
   Check actuator clicking noise, when warning lamp turns off.

OK → Self-operating function is OK.

NG ↓

Check actuator.
Go to Electrical Component Inspection, BR-53.

Self-diagnosis (Cont'd)

Simpo PDF Merge and Split Unregistered Version - http://www.simpopdf.com

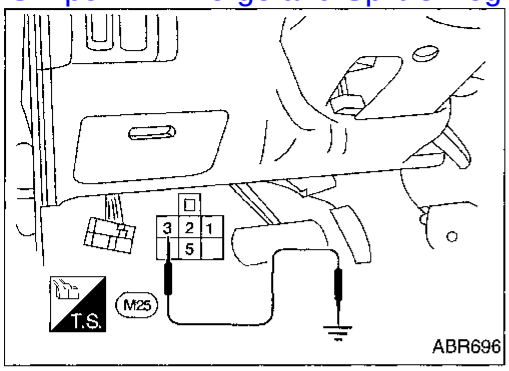

SELF-DIAGNOSIS PROCEDURE 2

1. Start engine.
2. Ground the check terminal of check connector.
3. Check the warning lamp flashing.

No → Check brake fluid level. Go to **Main Power Supply and Ground Circuit Check**, BR-45.

OK → Replace ABS control unit.

Yes → Count the number of flashes. Go to **MALFUNCTION CODE/SYMPTOM CHART** below.

MALFUNCTION CODE/SYMPTOM CHART

Code No./Symptom (No. of warning lamp flashes)	Malfunctioning part	Diagnostic Procedure
2	Actuator ISO solenoid (open-circuit)	1
7	Actuator ISO solenoid (short-circuit)	1
4	Actuator ISO solenoid (blocked)	2
3	Actuator DUMP solenoid (open-circuit)	3
8	Actuator DUMP solenoid (short-circuit)	3
9	Rear sensor (open-circuit)	4
10	Rear sensor (short-circuit)	4
6	Rear sensor (erratic)	5
13	Control unit	6
14		
15		
5	Other	7
Pedal vibration or noise	—	12
Long stopping distance	—	10
Brake pedal stroke is large	—	9
ABS does not work	—	11
ABS works frequently	—	8

Simpo PDF Merge and Split Unregistered Version - http://www.simpopdf.com

Main Power Supply and Ground Circuit Check

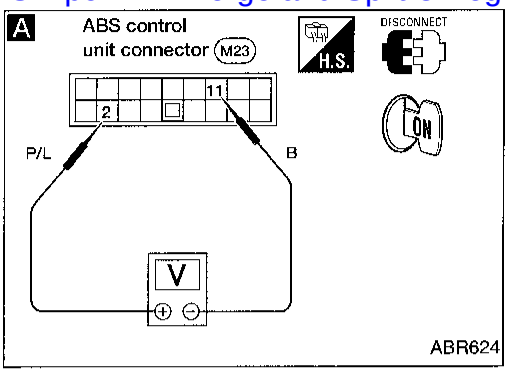

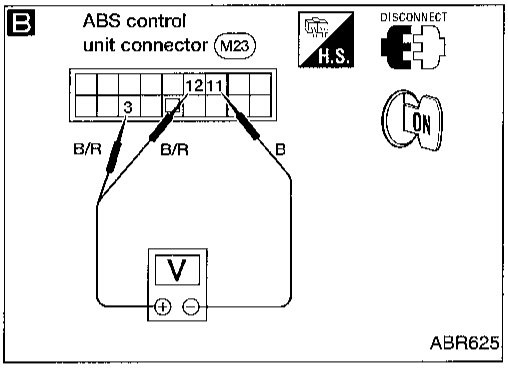

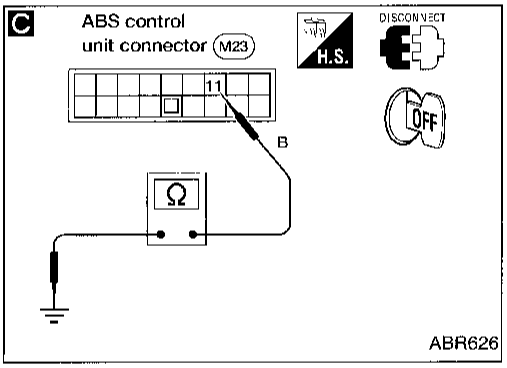

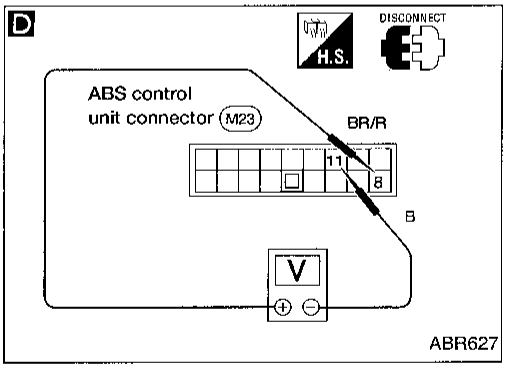

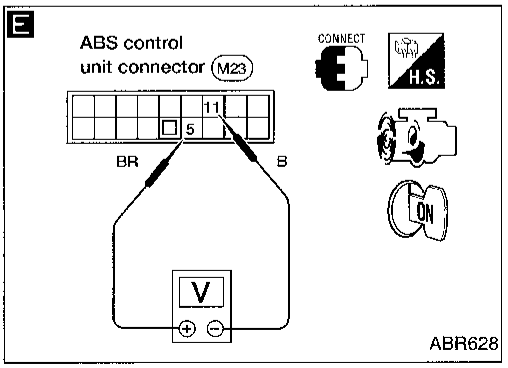

A

CHECK WARNING LAMP POWER SUPPLY.
1. Connect battery cable and confirm battery voltage is 12V.
2. Disconnect ABS control unit connector.
3. Turn ignition switch ON.
4. Do approx. 12 volts exist between ABS control unit connector terminals (2) and (11)?

No → **C**

C

CHECK GROUND CIRCUIT.
Check harness continuity between ABS control unit terminal (11) and suitable body ground.
Continuity should exist.

OK → Check and replace fuse or warning lamp if necessary. Repair ignition harness, relay and warning lamp connectors.

NG → Repair harness or connectors.

Yes → **B**

B

CHECK POWER SUPPLY.
1. Turn ignition switch ON.
2. Do approx. 12 volts exist between ABS control unit connector terminals (12), (3) and (11)?

No → Check and replace fuse or repair harness and connectors.

Yes → **D**

D

CHECK STOP LAMP SWITCH POWER SUPPLY.
1. Depress brake pedal.
2. Do approx. 12 volts exist between ABS control unit connector terminals (8) and (11)?

No → Adjust stop lamp switch if necessary. Replace stop lamp switch, if necessary, or repair harness or connectors.

Yes → **E**

E

CHECK PARKING BRAKE POWER SUPPLY.
1. Confirm that brake fluid level is adequate.
   If necessary, refill it.
2. Start engine.
3. Do approx. 12 volts exist between ABS control unit connector terminals (5) and (11) without parking brake applied?
   Do approx. 0 volts exist with parking brake applied?

No → Adjust parking brake switch, if necessary. Replace parking brake switch, if necessary, or repair harness or connectors.

Simpo PDF Merge and Split Unregistered Version - http://www.simpopdf.com

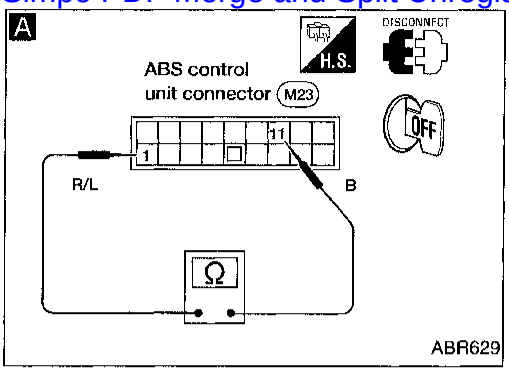

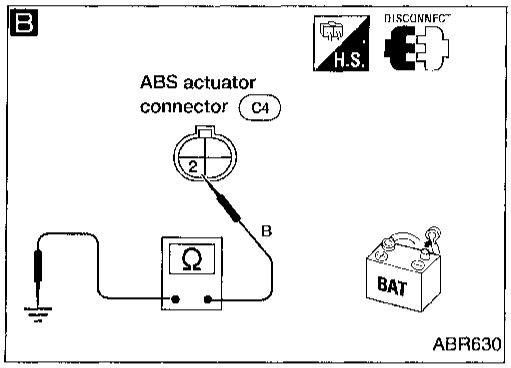

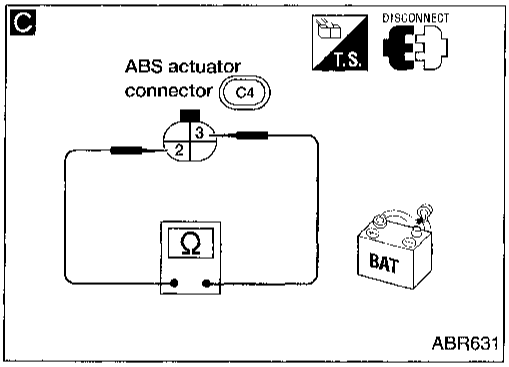

Diagnostic Procedure 1

ABS ACTUATOR ISO SOLENOID SHORT CIRCUIT OR OPEN (Warning lamp flashing number 2 or 7)

Remove battery negative terminal connector.

↓

A

CHECK ISO SOLENOID.
Check resistance between ABS control unit connector terminals (1) and (11).
Resistance: Approximately 4Ω

OK → Replace ABS control unit.

↓ NG

CHECK ABS CONTROL UNIT GROUND CIRCUIT.
Go to **Main Power Supply and Ground Circuit Check**, BR-45.

NG → Repair harness or connectors.

↓ OK

B

CHECK ABS ACTUATOR GROUND CIRCUIT.
Check harness continuity between ABS actuator terminal (2) and suitable body ground.

NG → Repair harness or connectors.

↓ OK

C

CHECK ISO SOLENOID.
Check resistance between ABS actuator connector terminals (2) and (3).
Resistance: Approximately 4Ω

OK → Repair harness and connectors between ISO solenoid and ABS control unit.

↓ NG

Replace ABS actuator.

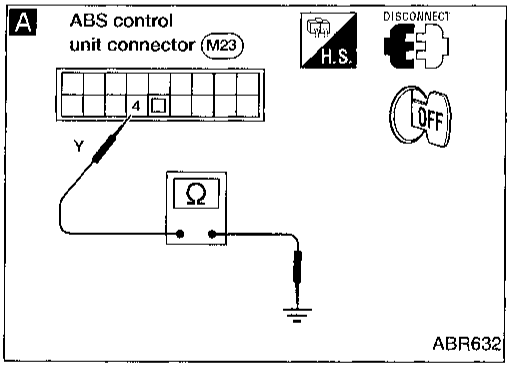

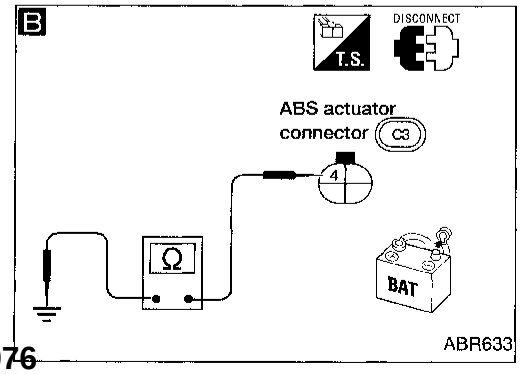

Diagnostic Procedure 2

ABS ACTUATOR ISO SOLENOID BLOCKED (Warning lamp flashing number 4)

Remove battery negative terminal connector.

↓

A

CHECK ABS ACTUATOR SWITCH.
Does continuity exist between ABS control unit terminal (4) and suitable body ground?
Continuity should not exist.

OK → Replace ABS control unit.

↓ NG

B

Does continuity exist between ABS actuator terminal (4) and suitable body ground?
Continuity should not exist.

NG → Replace ABS actuator.

↓ OK

Repair harness and connectors between ABS actuator and ABS control unit.

Simpo PDF Merge and Split Unregistered Version - http://www.simpopdf.com

Diagnostic Procedure 3

ABS ACTUATOR DUMP SOLENOID SHORT CIRCUIT OR OPEN (Warning lamp flashing number 3 or 8)

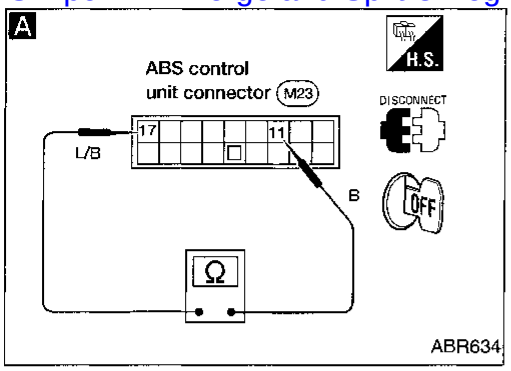

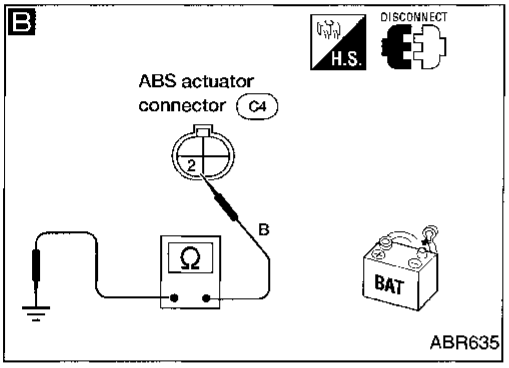

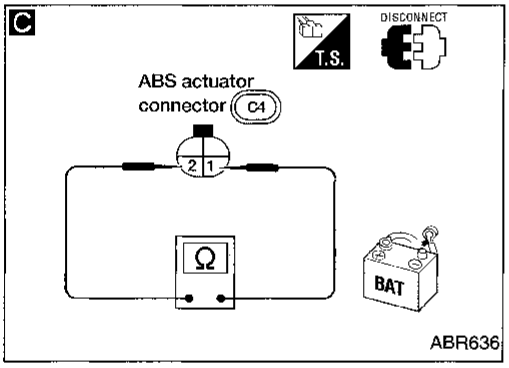

Remove battery negative terminal connector.

A

CHECK DUMP SOLENOID.
Check resistance between ABS control unit connector terminals ⑰ and ⑪.
Resistance:
Approximately 1.5Ω

OK → Replace ABS control unit.

NG

CHECK ABS CONTROL UNIT GROUND CIRCUIT.
Go to **Main Power Supply and Ground Check**, BR-45.

NG → Repair harness or connectors.

OK

B

CHECK ABS ACTUATOR GROUND CIRCUIT.
Check harness continuity between ABS actuator terminal ② and suitable body ground.

NG → Repair harness or connectors.

OK

C

CHECK DUMP SOLENOID.
Check resistance between ABS actuator connector terminals ① and ②.
Resistance:
Approximately 1.5Ω

OK → Repair harness or connectors between dump solenoid and ABS control unit.

NG

Replace ABS actuator.

Simpo PDF Merge and Split Unregistered Version - http://www.simpopdf.com

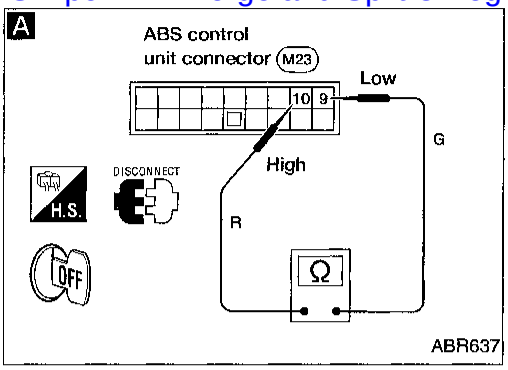

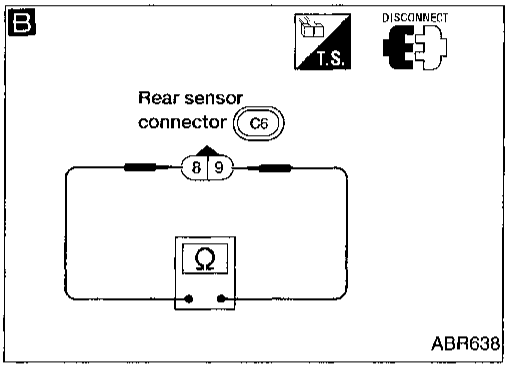

Diagnostic Procedure 4

REAR SENSOR OPEN OR SHORT CIRCUIT (Warning lamp flashing number 9 or 10)

Remove battery negative terminal connector.

A

CHECK REAR SENSOR.
Check resistance between ABS control unit connector terminals (10) and (9).
Resistance:
1.22 - 1.48 kΩ

OK → Replace ABS control unit.

NG

B

Check resistance between rear sensor unit connector terminals (8) and (9).
Resistance:
1.22 - 1.48 kΩ

OK → Repair harness or connectors between ABS control unit and rear sensor.

NG

Replace rear sensor unit.

Diagnostic Procedure 5

SENSOR SIGNAL ERRATIC (Warning lamp flashing number 6)

CHECK REAR SENSOR ROTOR TOOTH CONDITION.
1. Remove propeller shaft.
2. Remove companion flange, refer to "DISASSEMBLY" in PD section.
3. Check rotor on companion flange.

NG → Replace rear sensor rotor with companion flange.

OK

Replace ABS control unit.

Diagnostic Procedure 6

ABS CONTROL UNIT (Warning lamp flashing 13, 14 or 15)

ABS control unit malfunction.

Replace ABS control unit.

Simpo PDF Merge and Split Unregistered Version - http://www.simpopdf.com

Diagnostic Procedure 7 (Warning lamp flashing 5)

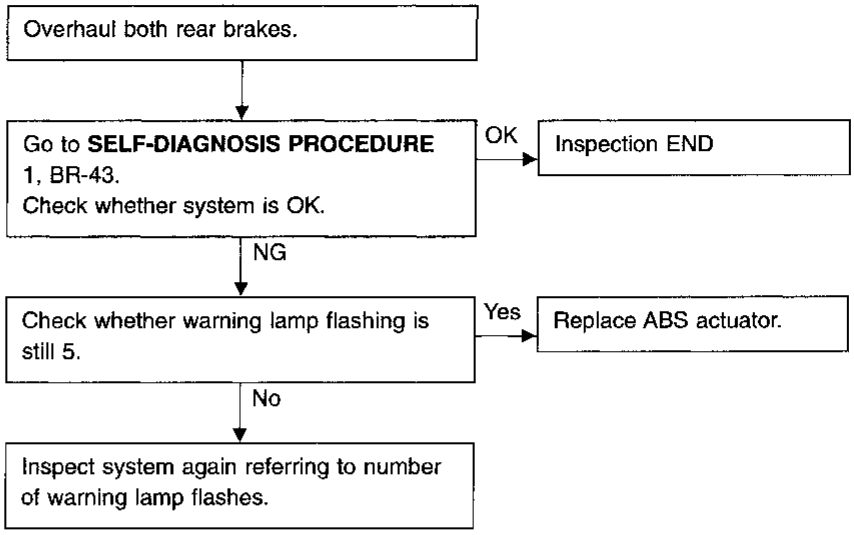

Simpo PDF Merge and Split Unregistered Version - http://www.simpopdf.com

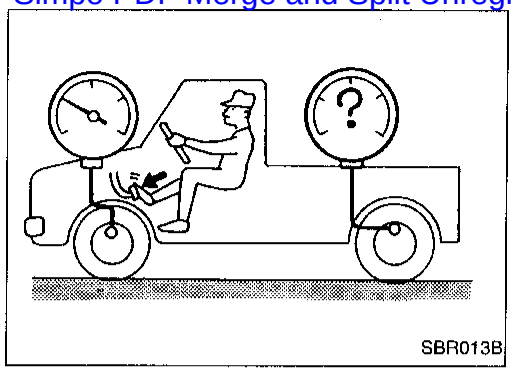

Diagnostic Procedure 8 (ABS works frequently)

CHECK BRAKE FLUID PRESSURE.
Check whether brake fluid pressure distribution is normal.
Refer to BR-11.

NG → Replace master cylinder.

OK ↓

Perform usual brake inspection.

NG → Repair.

OK ↓

When wheel lock occurs frequently due to hard braking operation, the ABS operates at each occurrence of wheel lock. Accordingly, frequent ABS operation is normal under severe braking conditions where wheel lock would occur frequently due to braking.

Simpo PDF Merge and Split Unregistered Version - http://www.simpopdf.com

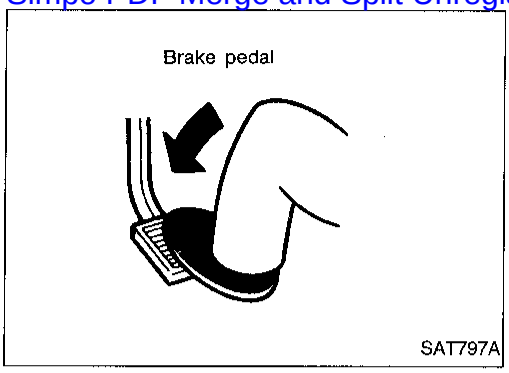

Diagnostic Procedure 9 (Brake pedal stroke is large)

Check whether the symptom usually appears.
- No → Vehicles equipped with ABS may have a tendency to increase pedal stroke during operation.
- Yes → Check for accumulation of air by trying to bleed air.
  - No → Perform brake inspection. Refer to BR-20.

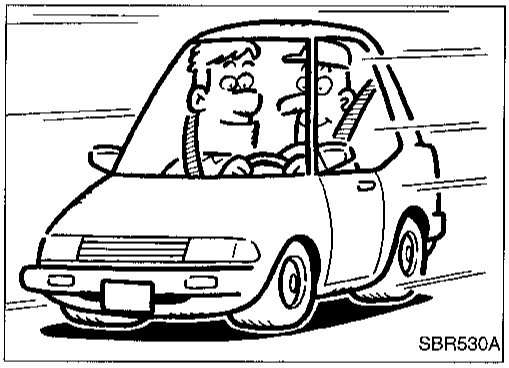

Diagnostic Procedure 10 (Long stopping distance)

Check if road condition is slippery with snow or gravel.
- Yes → Stopping distance may be longer than vehicles which are not equipped with ABS.
- No → Disconnect ABS actuator connector and check whether stopping distance is still long.
  - No → Connect ABS actuator connector. Go to **Self-Diagnosis Procedure 1**, BR-43.
  - Yes → Perform usual brake inspection and air bleeding.

Simpo PDF Merge and Split Unregistered Version - http://www.simpopdf.com

Diagnostic Procedure 11 (ABS does not work.)

Check whether warning lamp activates.
Go to **Self-Diagnosis Procedure 1**, BR-43.
→ Yes → Go to **Self-Diagnosis Procedure 2**, BR-44.
↓ No

Check whether vehicle speed is under 10 km/h (6 MPH).
→ Yes → ABS does not work in this condition.
↓ No

Check ABS actuator and rear sensor.
Go to **Electrical Component Inspection**, BR-53.
→ NG → Replace damaged parts.
↓ OK

Check main power supply and ground circuit.
Go to **Main Power Supply and Ground Circuit Check**, BR-45.
→ NG → Repair faulty part.
↓ OK

Check operation of ABS.
Refer to B in **Electrical Component Inspection**, BR-53.
→ NG → Replace ABS control unit.

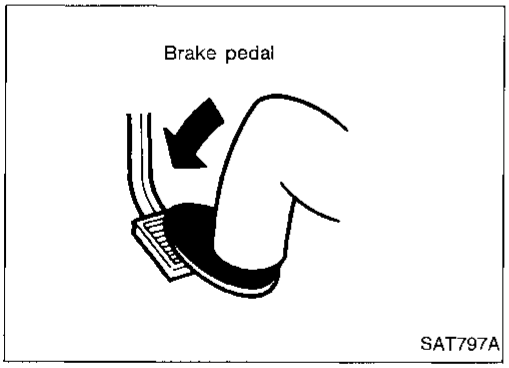

Diagnostic Procedure 12 (Pedal vibration or noise)

Check whether the symptom appears only when brake is applied suddenly.
→ Yes → When brake is suddenly applied, ABS works and produces pedal vibration or noise.
↓ No

Check whether the noise only appears and warning lamp only activates and deactivates when the ignition switch is turned on.
→ Yes → Self-operation of ABS functions properly.

Simpo PDF Merge and Split Unregistered Version - http://www.simpopdf.com

Electrical Components Inspection

REAR SENSOR UNIT AND ACTUATOR

A

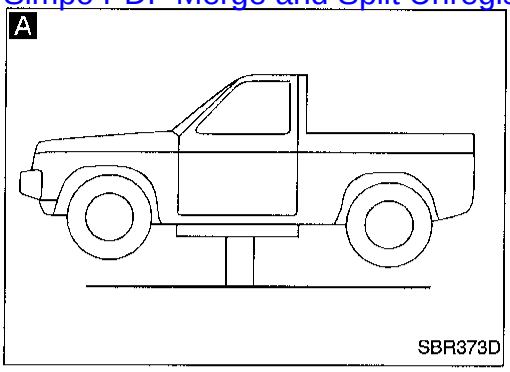

SBR373D

A

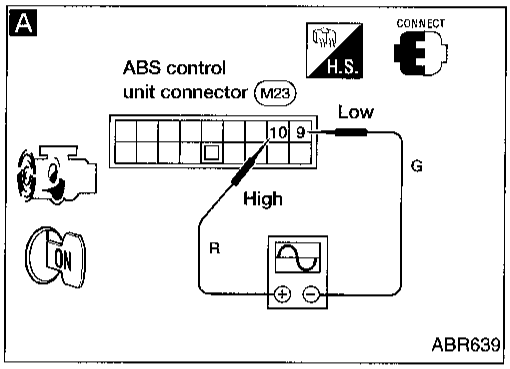

ABR639

B **Located behind second cross member:**

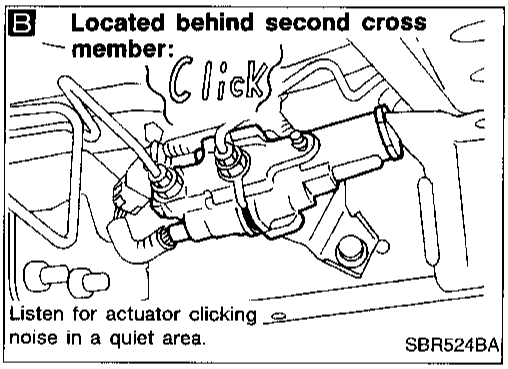

Listen for actuator clicking noise in a quiet area.

SBR524BA

C

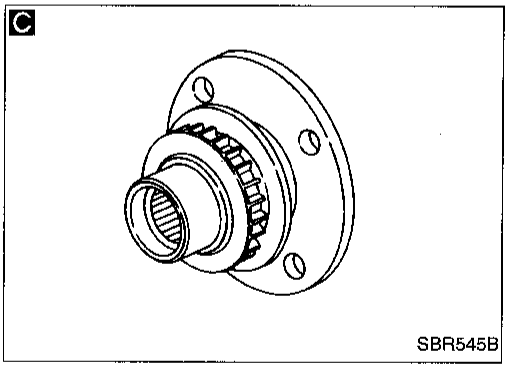

SBR545B

D

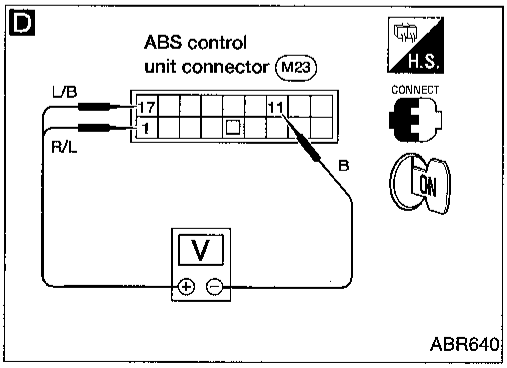

ABR640

A

CHECK REAR SENSOR SIGNAL.

1. Raise vehicle. Confirm it is safe to rotate rear wheels.
2. Start engine and rotate rear wheels with transmission in D position or first gear position.
3. Check rear sensor signal voltage between control unit terminals (10) and (9) with AC voltmeter.

Voltage: 0.4V or more
M/T at 700 rpm
A/T at 850 rpm

NG → C

OK → B

C

CHECK REAR SENSOR ROTOR for following points:

- Tooth condition
- Installation on companion flange
- Deformation
- Wear
- Looseness

NG → Replace rear sensor rotor with companion flange.

OK → Replace rear sensor unit.

B

CHECK ABS ACTUATOR OPERATION.

Go to **Self-diagnosis Procedure 2**, BR-44. Clicking noise sounds from actuator, when the ignition switch is turned on with battery cable connected.

NG → D

OK →

CHECK ABS OPERATION as follows:

1. Perform ABS check in a safe place without obstacles in the vicinity.
2. Drive the vehicle for more than one minute at speeds over 40 km/h (25 MPH), then check that the warning lamp does not light on the instrument panel. After this, check for operation.
3. Check if ordinary braking effect occurs, and also check that the rear wheels do not lock when abrupt braking causes the front wheels to lock.

OK → ABS is in good condition.

NG → Replace ABS actuator.

D

CHECK PULSING VOLTAGE FROM ABS CONTROL UNIT.

Check pulsing voltage for ISO and DUMP solenoid between ABS control unit terminals (17) and (11), and terminals (1) and (11).

Voltage: 0.3 - 3.5V for approx. 13 msec.

Use suitable digital voltmeter. Pulsing voltage appears when ABS warning lamp goes off after ignition is turned on.

NG → Replace ABS control unit.

OK → Replace ABS actuator.

Simpo PDF Merge and Split Unregistered Version - http://www.simpopdf.com

Purpose

The Anti-Lock Brake System (ABS) consists of electronic and hydraulic components. It allows for control of braking force so locking of the wheels can be avoided.
The ABS:
1) Improves proper tracking performance through steering wheel operation.
2) Eases obstacle avoidance through steering wheel operation.
3) Improves vehicle stability.

Operation

- When the vehicle speed is less than 10 km/h (6 MPH) this system does not work.
- The Anti-Lock Brake System (ABS) has a self-test function. The system turns on the ABS warning lamp for 1 second each time the ignition switch is turned "ON". After the engine is started, the ABS warning lamp turns off. The system performs a test the first time the vehicle reaches 6 km/h (4 MPH). A mechanical noise may be heard as the ABS performs this self-test. This is a normal part of the self-test feature. If a malfunction is found during this check, the ABS warning lamp will stay on.
- While driving, a mechanical noise may be heard during ABS operation. This is a normal condition.

ABS Hydraulic Circuit

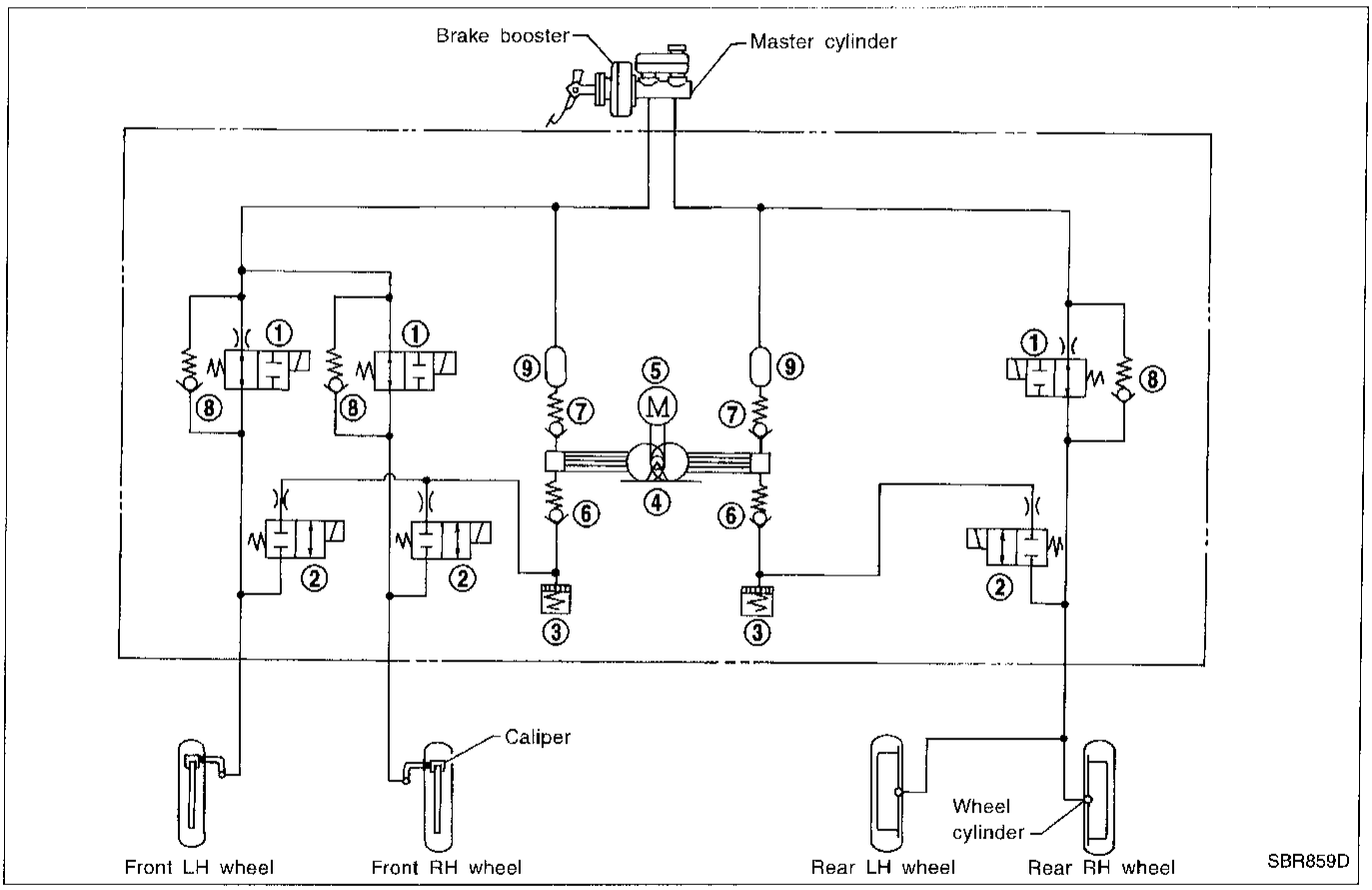

① Inlet solenoid valve
② Outlet solenoid valve
③ Reservoir
④ Pump
⑤ Motor
⑥ Inlet valve
⑦ Outlet valve
⑧ Bypass check valve
⑨ Damper

Simpo PDF Merge and Split Unregistered Version - http://www.simpopdf.com

System Components

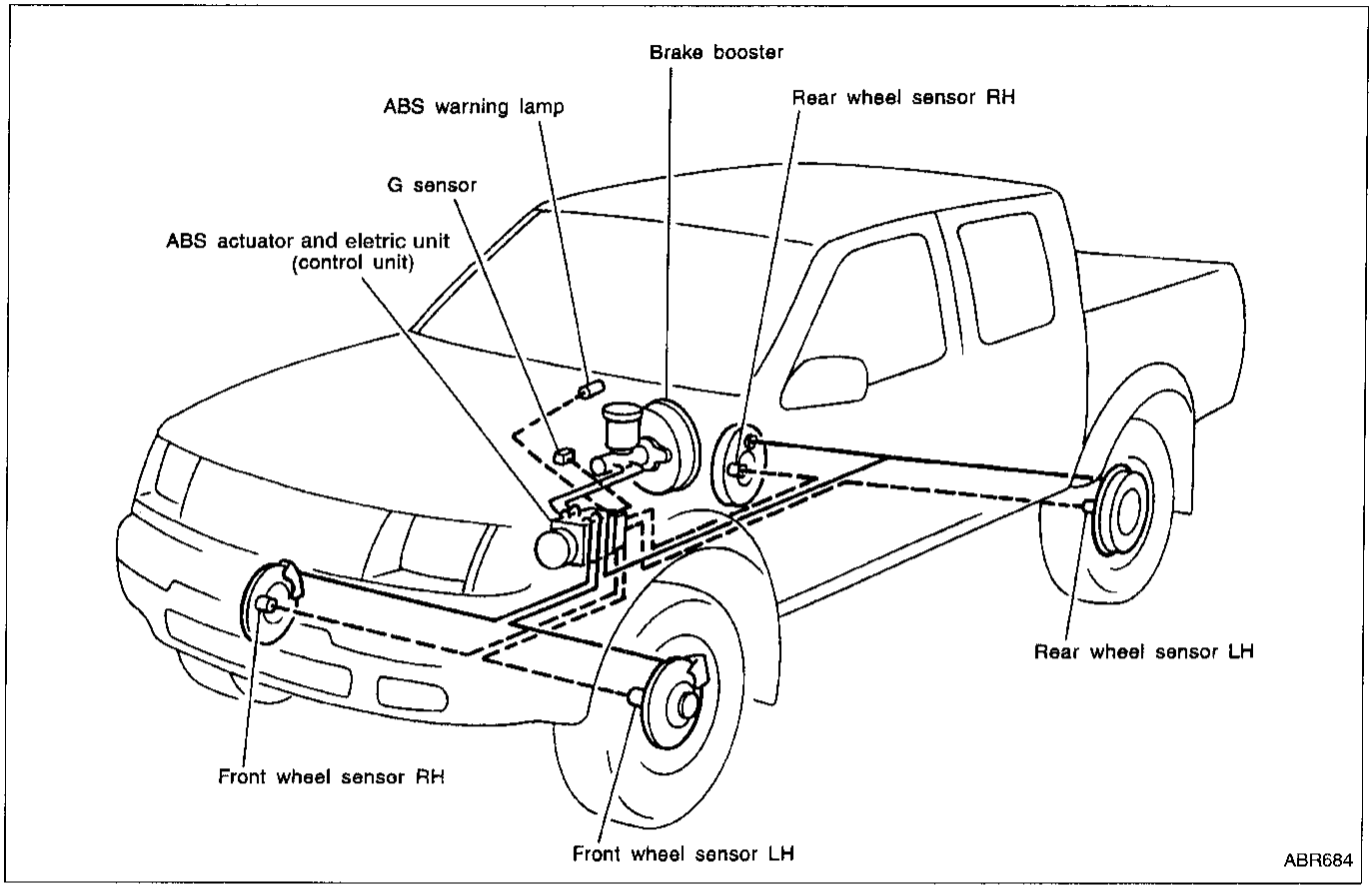

System Description

WHEEL SENSOR

The sensor unit consists of a gear-shaped sensor rotor and a sensor element. The element contains a bar magnet around which a coil is wound. The sensor is installed on the back of the brake rotor and the back of the rear brake drum. As the wheel rotates, the sensor generates a sine-wave pattern. The frequency and voltage increase(s) as the rotating speed increases.

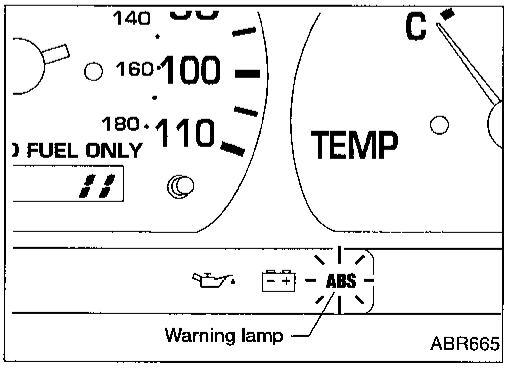

CONTROL UNIT (built-in ABS actuator and electric unit)

The control unit computes the wheel rotating speed by the signal current sent from the sensor. Then it supplies a DC current to the actuator solenoid valve. It also controls ON-OFF operation of the valve relay and motor relay. If any electrical malfunction should be detected in the system, the control unit causes the warning lamp to light up. In this condition, the ABS will be deactivated by the control unit, and the vehicle's brake system reverts to normal operation. (For control unit layout, refer to ABS ACTUATOR AND ELECTRIC UNIT, BR-56.)

Simpo PDF Merge and Split Unregistered Version - http://www.simpopdf.com

System Description (Cont'd)

G SENSOR

The G sensor senses deceleration during braking to determine whether the vehicle is being driven on a high μ road (asphalt road, etc.) or a low μ road (snow-covered road, etc.). It then sends a signal to the ABS control unit.

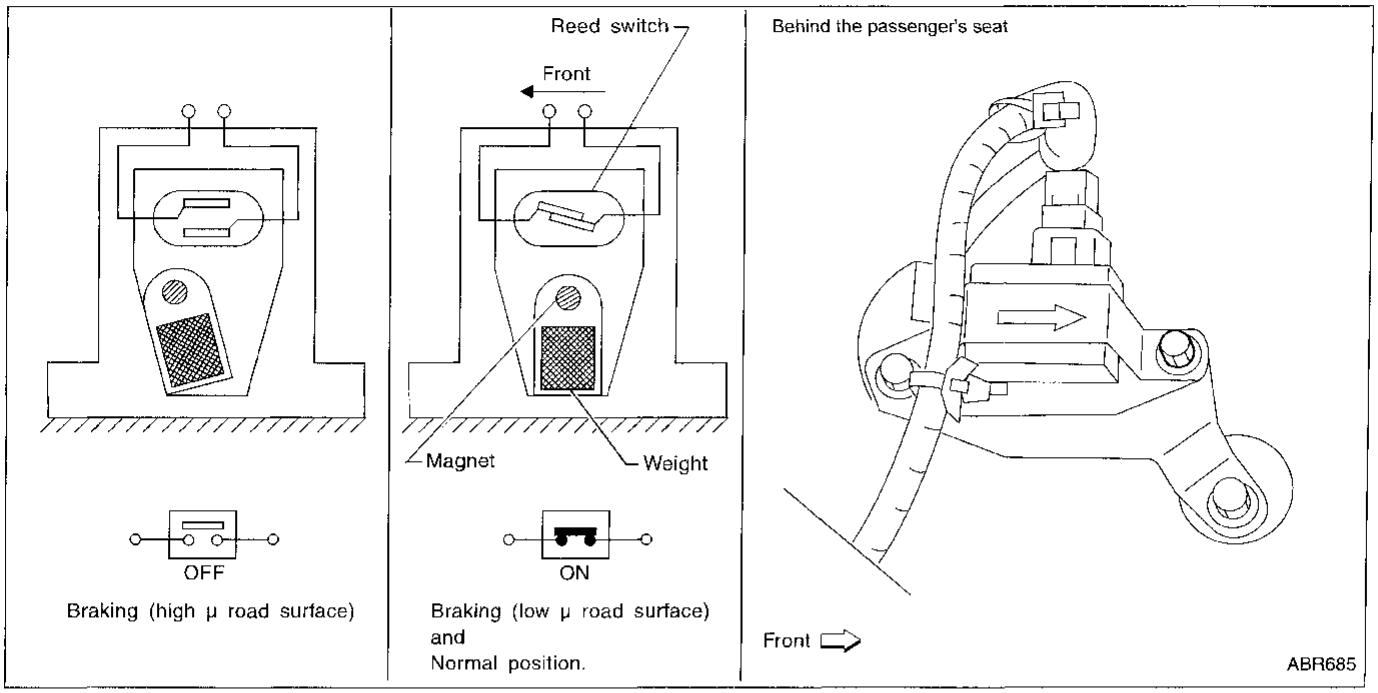

The reed switch turns on when it is affected by a magnetic field. During sudden deceleration (braking on a high μ road), the weight moves and the magnet in the weight moves away from the reed switch. The magnetic field then diminishes and the reed switch turns off.

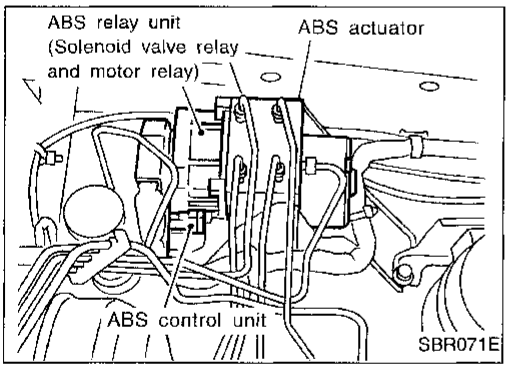

ABS ACTUATOR AND ELECTRIC UNIT

The ABS actuator and electric unit contains:

- An electric motor and pump
- Two relays
- Six solenoid valves, each inlet and outlet for
  - — LH front
  - — RH front
  - — Rear
- ABS control unit

This component controls the hydraulic circuit and increases, holds or decreases hydraulic pressure to all or individual wheels. The ABS actuator and electric unit is serviced as an assembly.

ABS actuator operation

		Inlet solenoid valve	Outlet solenoid valve	
Normal brake operation		OFF (Open)	OFF (Closed)	Master cylinder brake fluid pressure is directly transmitted to wheel cylinder via the inlet solenoid valve.
ABS operation	Pressure hold	ON (Closed)	OFF (Closed)	Hydraulic circuit is shut off to hold the wheel cylinder brake fluid pressure.
	Pressure decrease	ON (Closed)	ON (Open)	Wheel cylinder brake fluid is sent to reservoir via the outlet solenoid valve. Then it is pushed up to the master cylinder by pump.
	Pressure increase	OFF (Open)	OFF (Closed)	Master cylinder brake fluid pressure is transmitted to wheel cylinder.

Simpo PDF Merge and Split Unregistered Version - http://www.simpopdf.com

Removal and Installation

CAUTION:
Be careful not to damage sensor edge and sensor rotor teeth. When removing the front wheel hub or rear axle shaft assembly, disconnect the ABS wheel sensor from the assembly and move it away.

FRONT WHEEL SENSOR

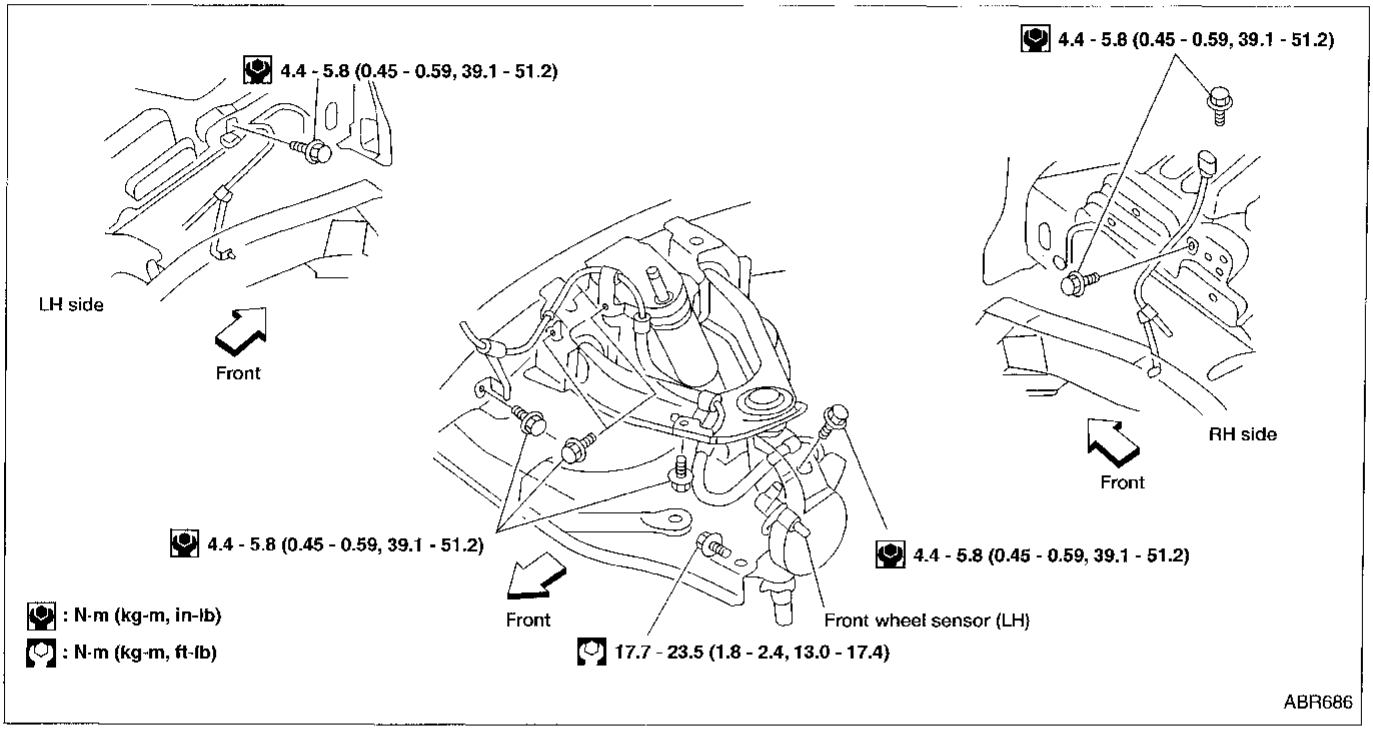

Simpo PDF Merge and Split Unregistered Version - http://www.simpopdf.com

Removal and Installation (Cont'd)

REAR WHEEL SENSOR

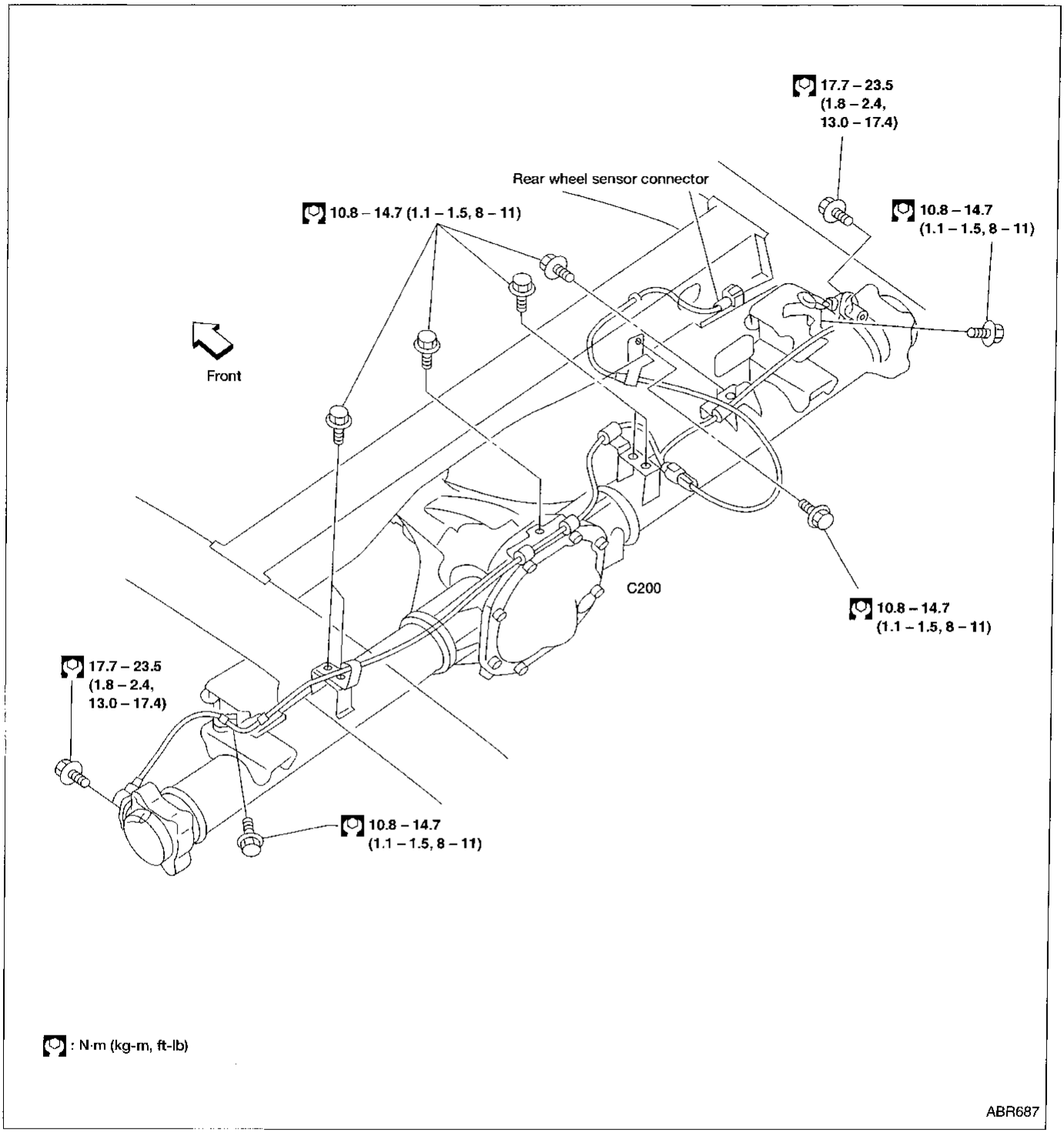

Simpo PDF Merge and Split Unregistered Version - http://www.simpopdf.com

Removal and Installation (Cont'd)

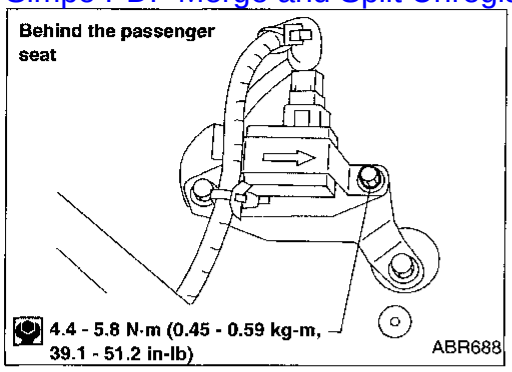

G SENSOR

Always replace G sensor if bumped or dropped. Otherwise, performance characteristics of G sensor will be changed, which in turn changes ABS control performance characteristics.

ABS ACTUATOR AND ELECTRIC UNIT

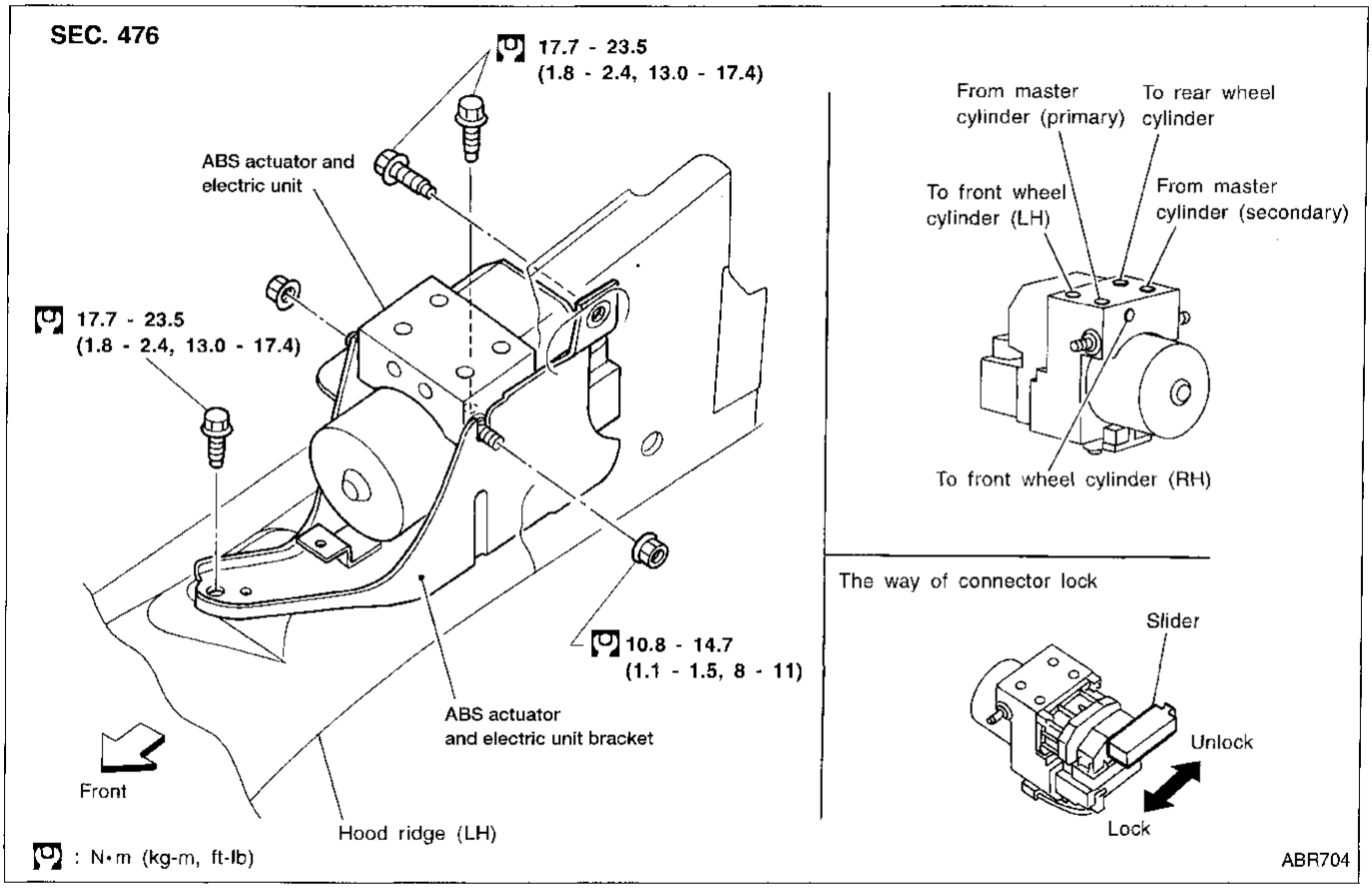

Removal

1. Disconnect battery cable.
2. Drain brake fluid. Refer to "Changing Brake Fluid", BR-5.
3. Remove mounting bracket fixing bolts and nuts.
4. Disconnect connector, brake pipes and remove fixing nuts.

Installation

CAUTION:
After installation, refill brake fluid. Then bleed air. Refer to "Bleeding Brake System", BR-6.

1. Connect brake pipes temporarily.
2. Tighten fixing bolts and nuts.
3. Tighten brake pipes.
4. Connect connector and battery cable.

Simpo PDF Merge and Split Unregistered Version - http://www.simpopdf.com

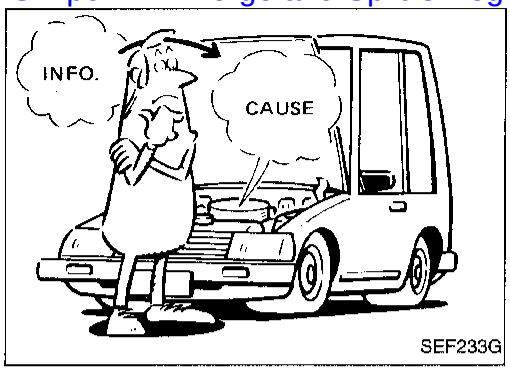

SEF233G

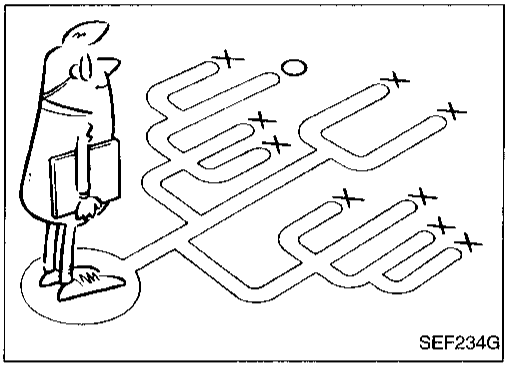
SEF234G

How to Perform Trouble Diagnoses for Quick and Accurate Repair

INTRODUCTION

The ABS system has an electronic control unit to control major functions. The control unit accepts input signals from sensors and instantly drives the actuators. It is essential that both kinds of signals are proper and stable. It is also important to check for conventional problems: such as air leaks in booster lines, lack of brake fluid, or other problems with the brake system.

It is much more difficult to diagnose a problem that occurs intermittently rather than continuously. Most intermittent problems are caused by poor electric connections or faulty wiring. In this case, careful checking of suspicious circuits may help prevent the replacement of good parts.

A visual check only, may not find the cause of the problems, so a road test should be performed.

Before undertaking actual checks, take a few minutes to talk with a customer who approaches with a ABS complaint. The customer is a very good source of information on such problems; especially intermittent ones. Through the talks with the customer, find out what symptoms are present and under what conditions they occur. Start your diagnosis by looking for "conventional" problems first. This is one of the best ways to troubleshoot brake problems on an ABS controlled vehicle.

Also check related service bulletins for information.

Simpo PDF Merge and Split Unregistered Version - http://www.simpopdf.com

How to Perform Trouble Diagnoses for Quick and Accurate Repair (Cont'd)

WORK FLOW

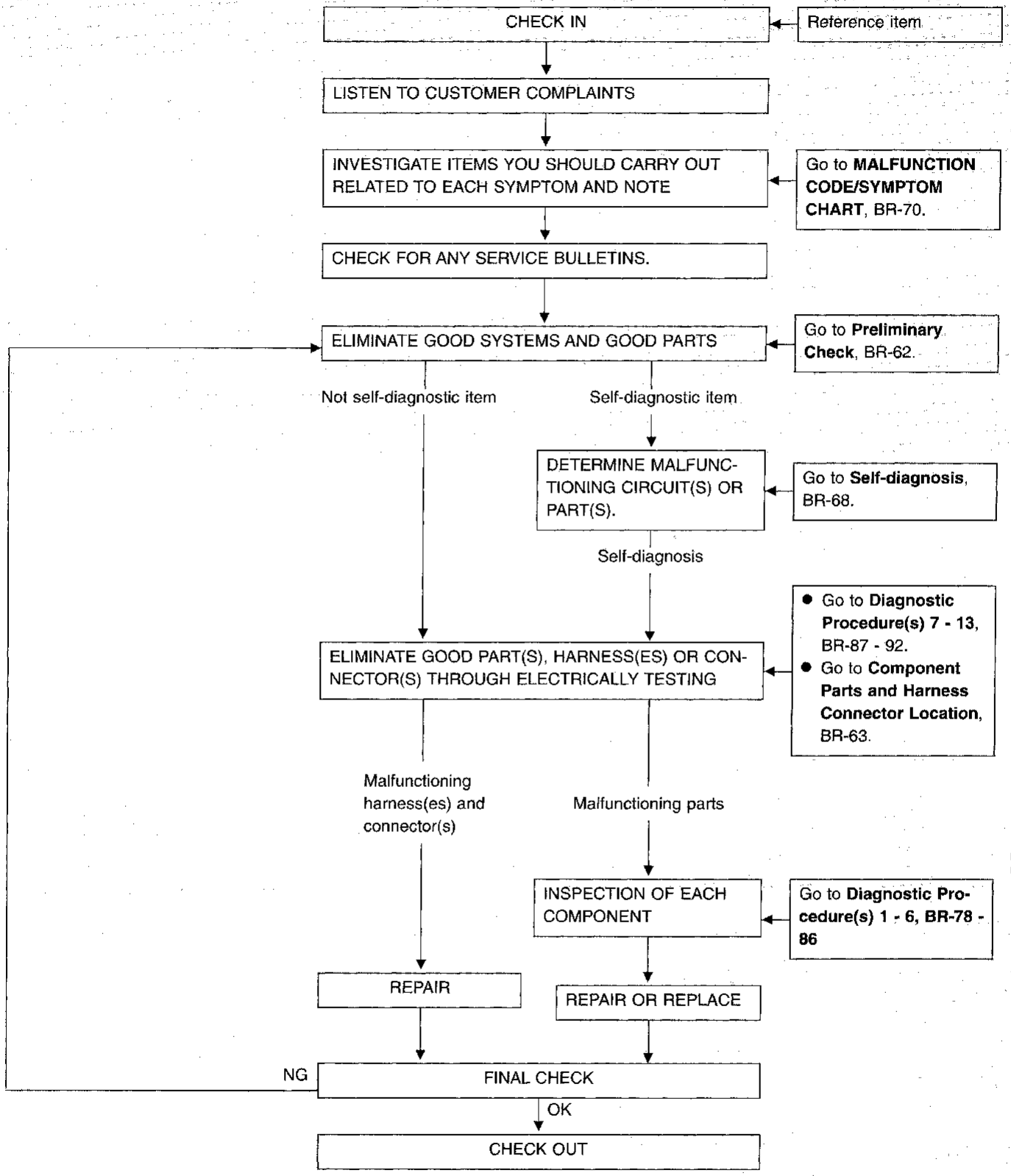

Simpo PDF Merge and Split Unregistered Version - http://www.simpopdf.com

Preliminary Check

A

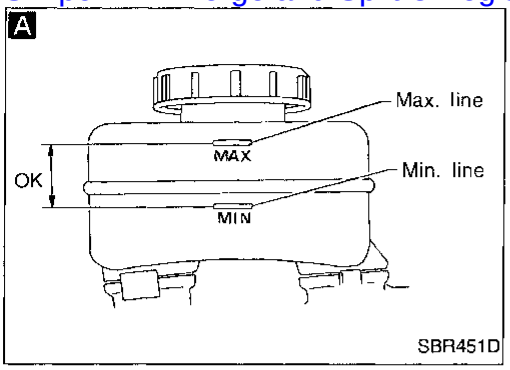

SBR451D

B

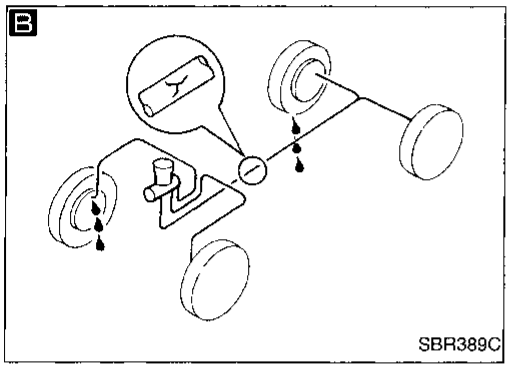
SBR389C

C

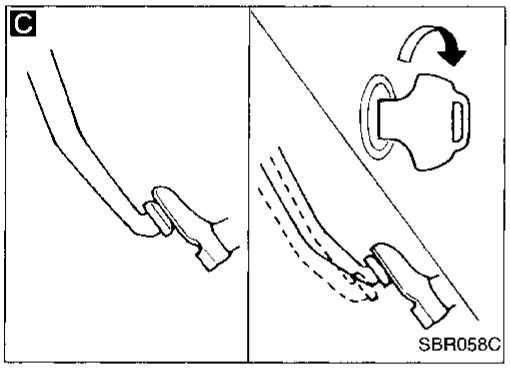
SBR058C

D

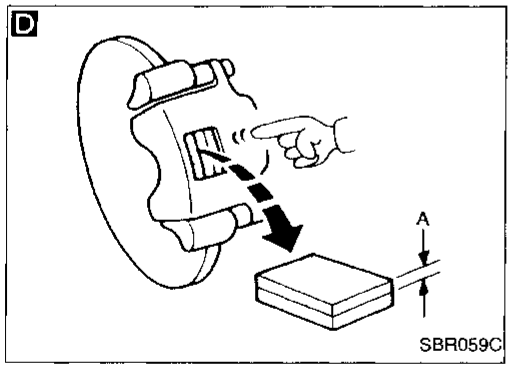

SBR059C

E

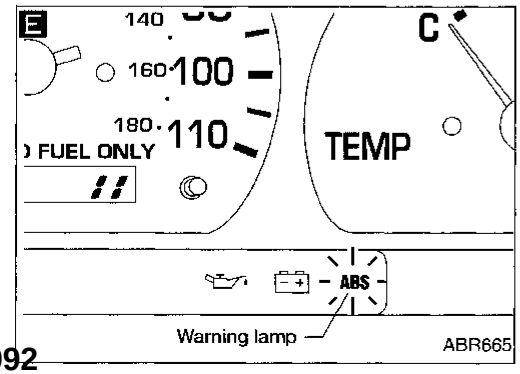

ABR665

A

Check brake fluid level in reservoir tank.
Low fluid level may indicate brake pad wear or leakage from brake line.

B

Check brake line for leakage. — NG → Repair.
OK

C

Check brake booster for operation and air tightness. Refer to BR-18. — NG → Replace.
OK

D

Check brake pads, rotors, linings and drums. Refer to BR-27. — NG → Replace.
OK

A

Check brake fluid level in reservoir tank again. — NG → Fill up brake fluid.
OK

E

Check warning lamp activation.
When ignition switch is turned ON, warning lamp turns on. — NG → Check fuse, warning lamp bulb and warning lamp circuit.
OK

Check warning lamp for deactivation after engine is started. — NG → Go to Self-diagnosis, BR-68, 72.
OK

Drive vehicle at speeds over 30 km/h (19 MPH) for at least one minute.

Ensure warning lamp remains off while driving. — NG → Go to Self-diagnosis, BR-68, 72.
OK

END

Simpo PDF Merge and Split Unregistered Version - http://www.simpopdf.com

Component Parts and Harness Connector Location

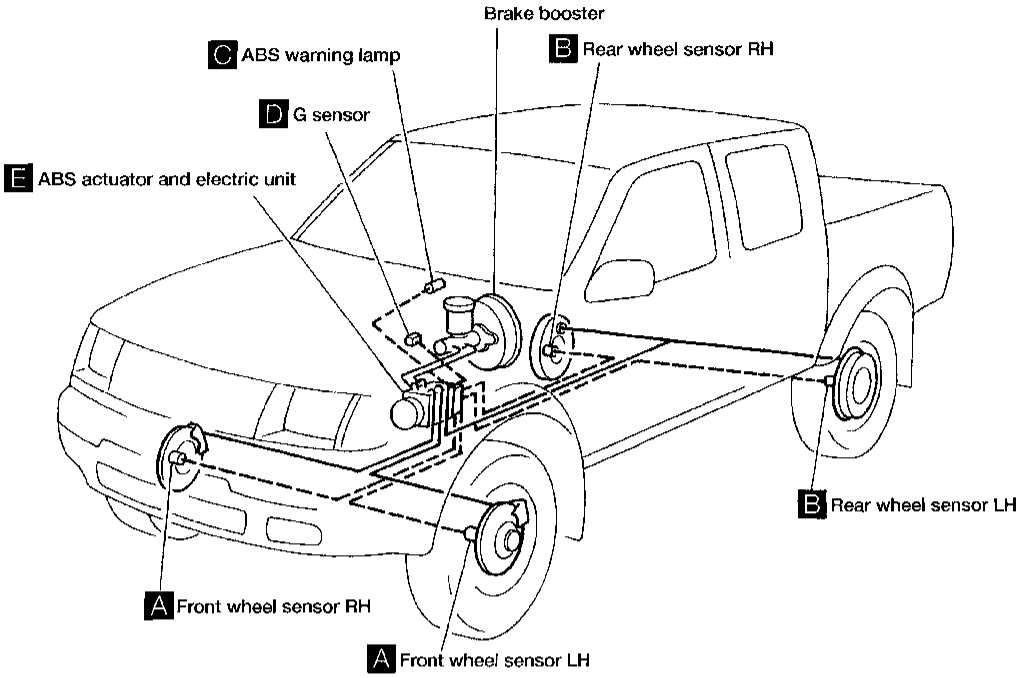

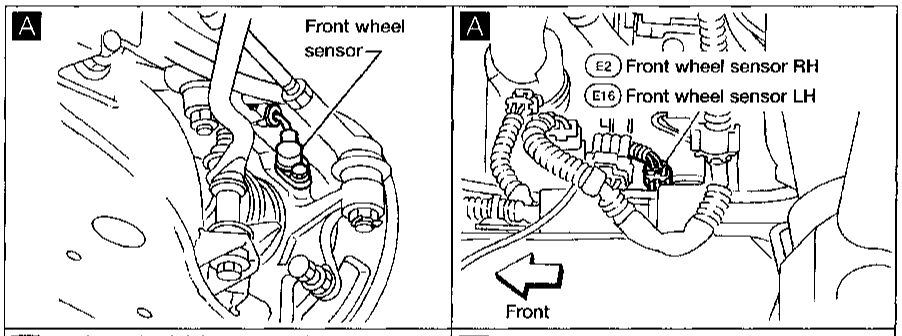

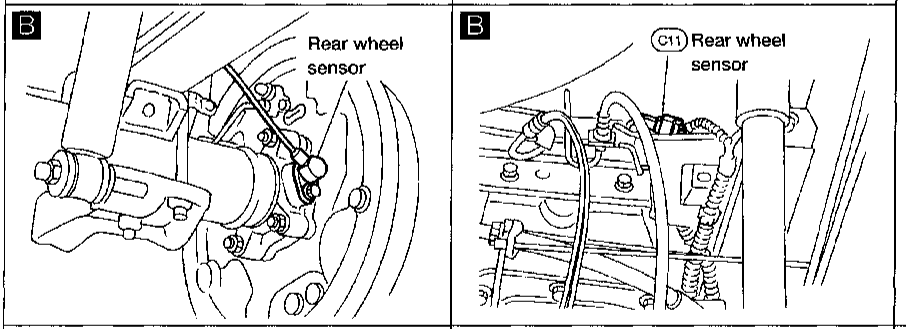

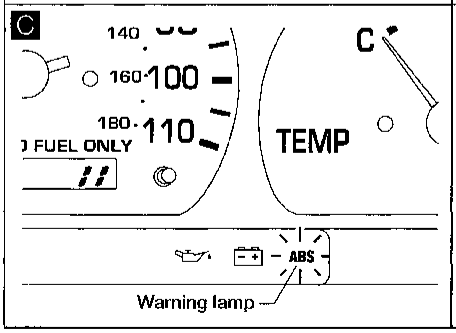

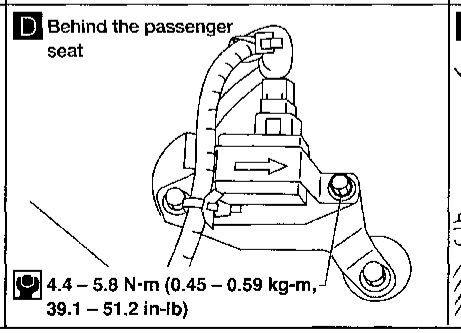

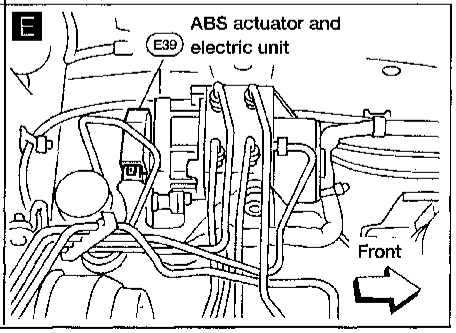

ABR689

Simpo PDF Merge and Split Unregistered Version - http://www.simpopdf.com

Circuit Diagram for Quick Pinpoint Check

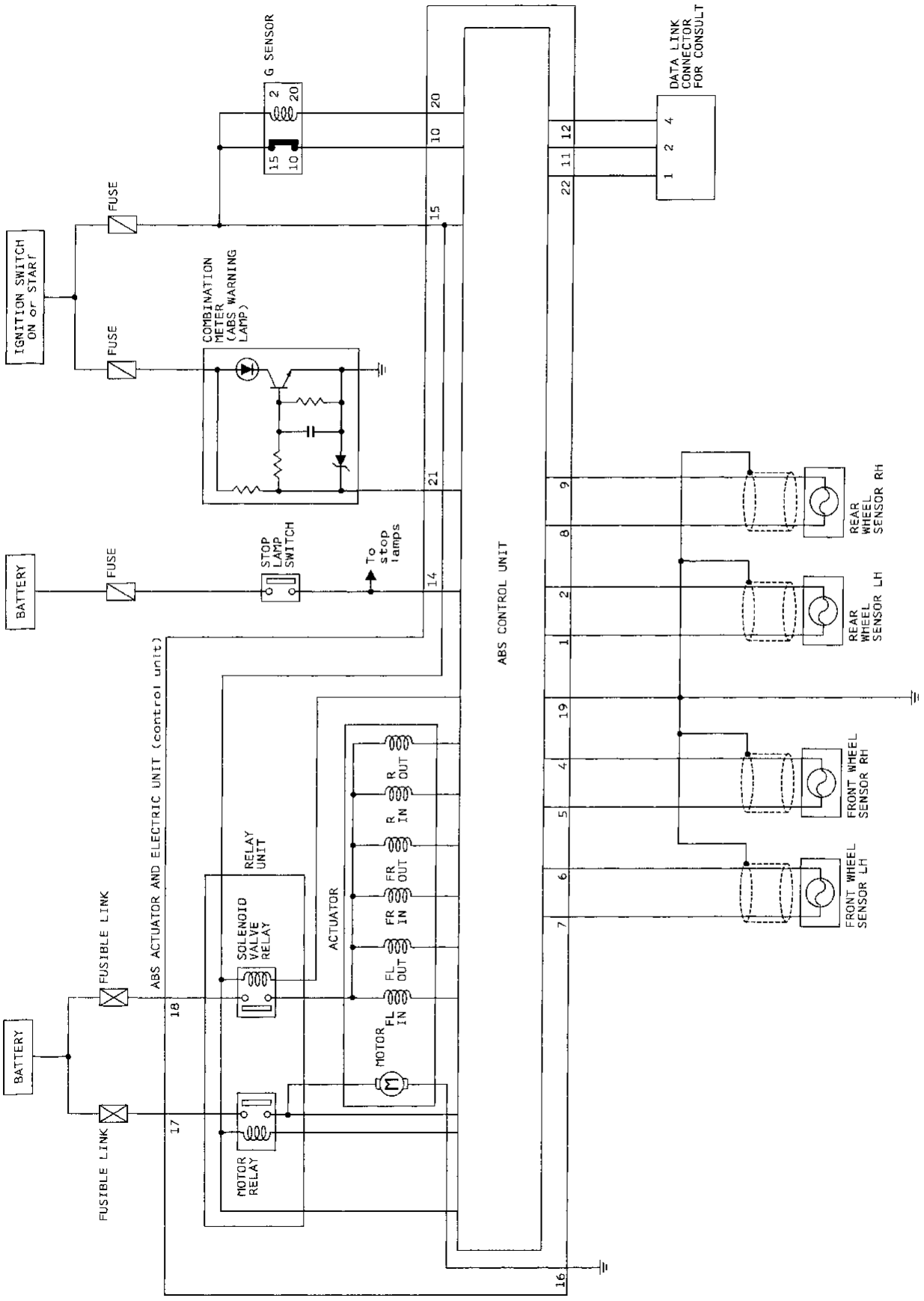

ABR566

Simpo PDF Merge and Split Unregistered Version - http://www.simpopdf.com

Wiring Diagram — ABS —

BR-ABS-03

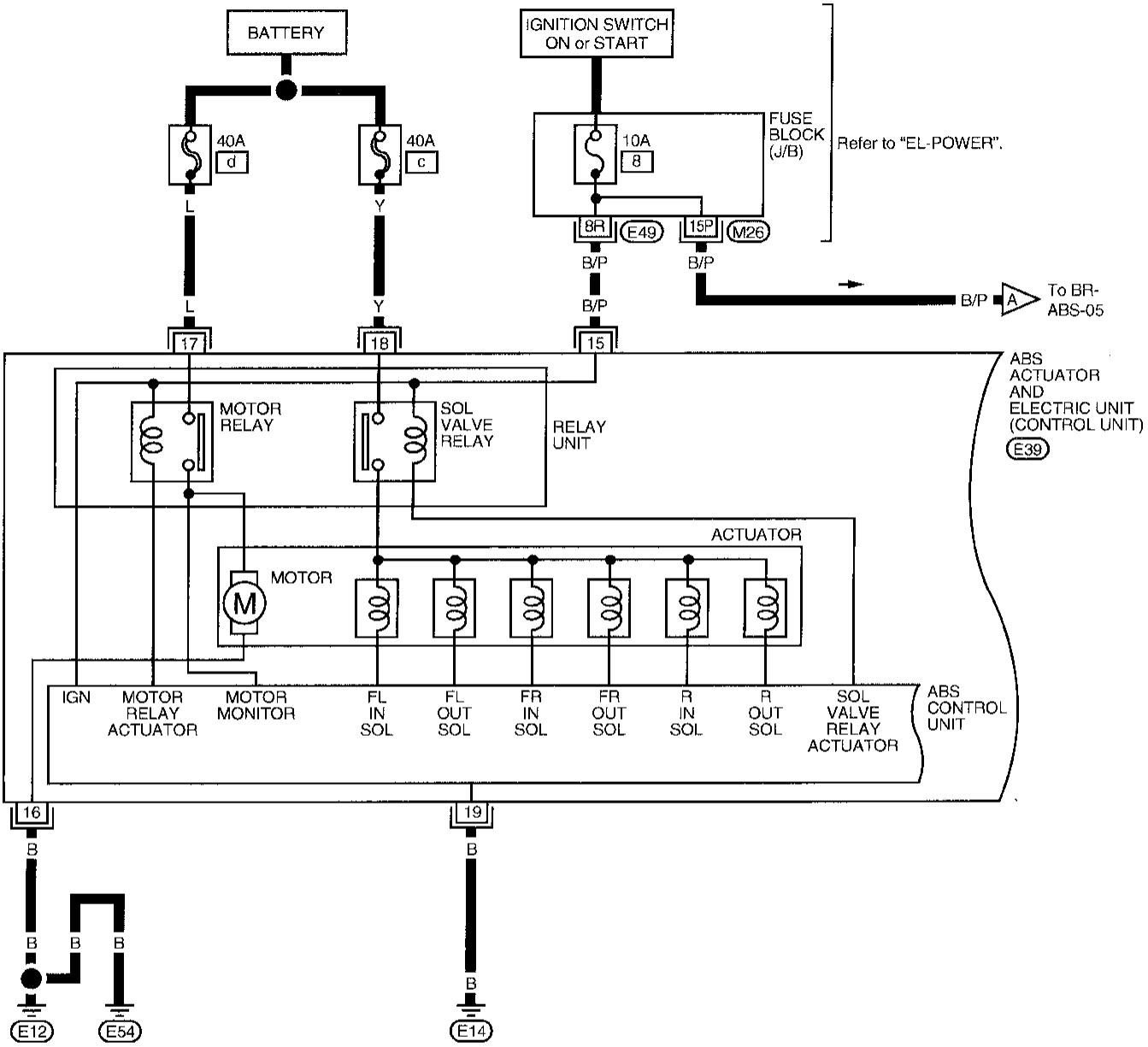

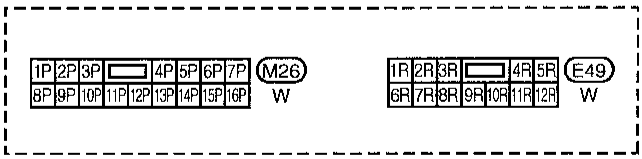

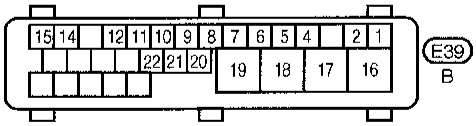

Simpo PDF Merge and Split Unregistered Version - http://www.simpopdf.com

BR-ABS-04

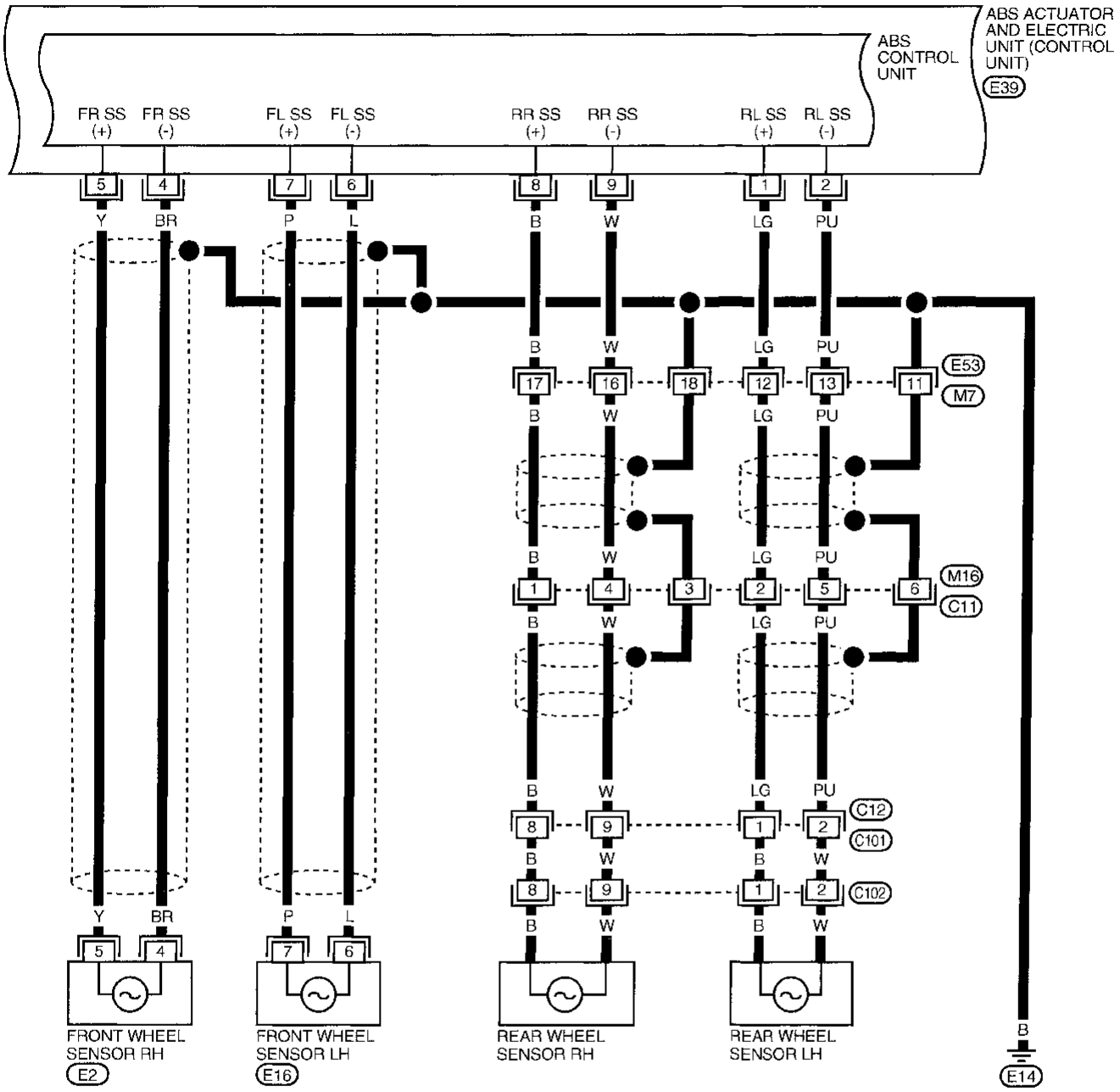

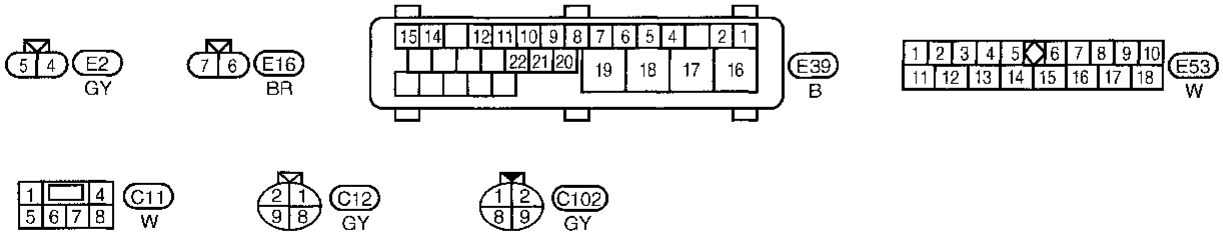

Wiring Diagram — ABS — (Cont'd)

Simpo PDF Merge and Split Unregistered Version - http://www.simpopdf.com

BR-ABS-05

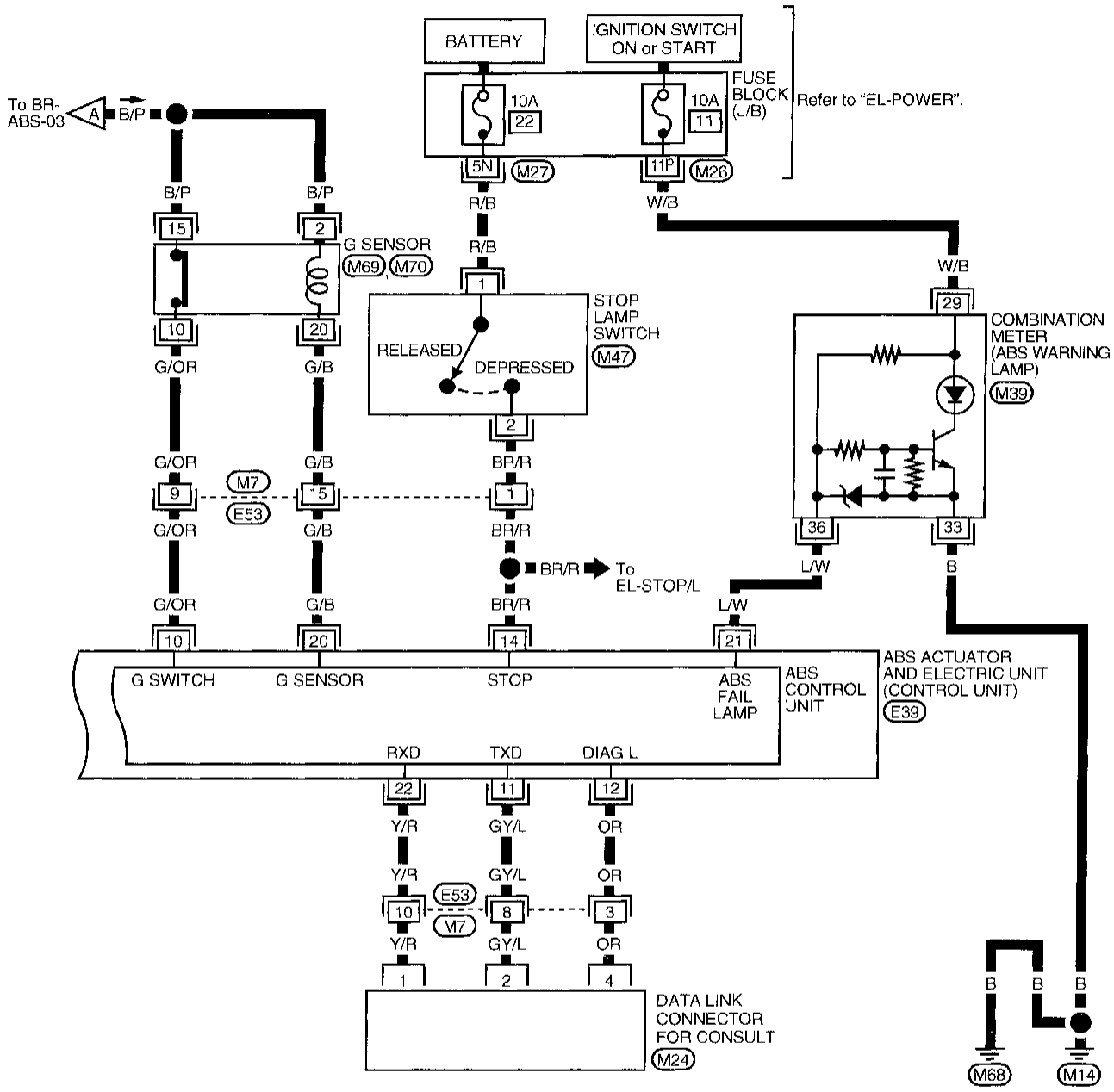

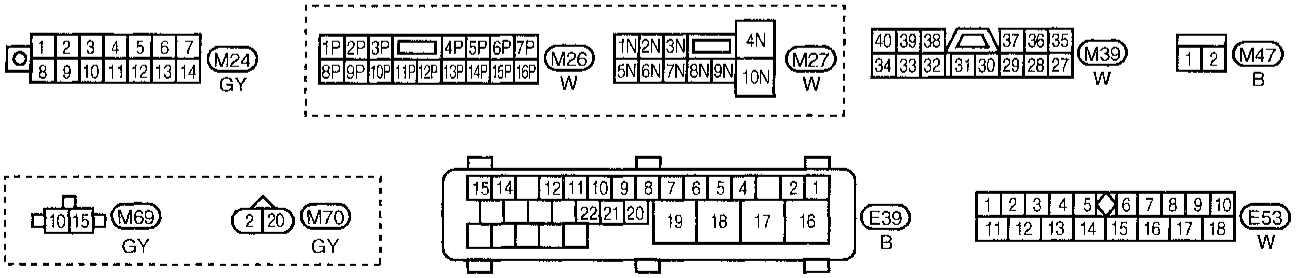

Simpo PDF Merge and Split Unregistered Version - http://www.simpopdf.com

Self-diagnosis

FUNCTION

- When a problem occurs in the ABS, the warning lamp on the instrument panel comes on. To start the self-diagnostic results mode, ground the self-diagnostic (check) terminal located on "Data Link Connector for CONSULT". The location of the malfunction is indicated by the warning lamp flashing.

SELF-DIAGNOSIS PROCEDURE

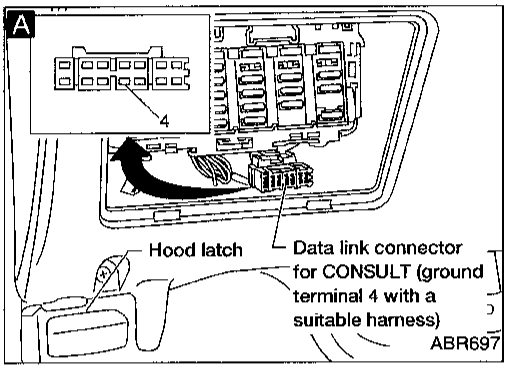

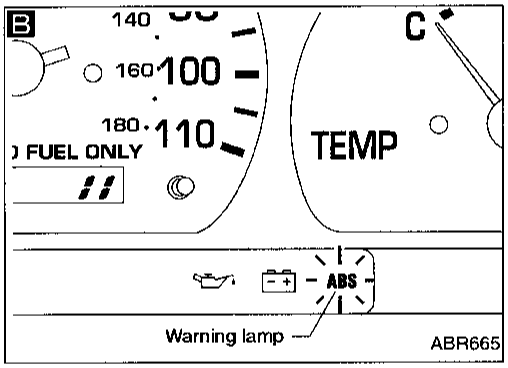

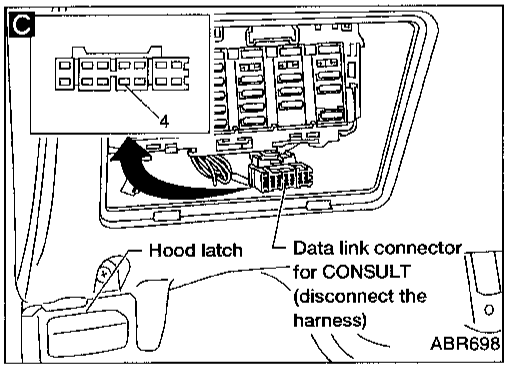

Drive vehicle over 30 km/h (19 MPH) for at least one minute.

↓

Turn ignition switch "OFF".

↓

A

Ground terminal "4" of "Data link connector for CONSULT" with a suitable harness.

↓

Turn ignition switch "ON" while grounding terminal "4".
Do not depress brake pedal.

↓

B

After 3.0 seconds, the warning lamp starts flashing to indicate the malfunction code No. (See NOTE.)

↓

Verify the location of the malfunction with the malfunction code chart. Refer to BR-70. Then make the necessary repairs following the diagnostic procedures.

↓

After the malfunctions are repaired, erase the malfunction codes stored in the control unit. Refer to BR-69.

↓

Rerun the self-diagnostic results mode to verify that the malfunction codes have been erased.

↓

C

Disconnect the check terminal from the ground. The self-diagnostic results mode is now complete.

↓

Ⓐ

(Go to next page.)

NOTE: The indication terminates after five minutes. However, when the ignition switch is turned from "OFF" to "ON", the indication starts flashing again.

Simpo PDF Merge and Split Unregistered Version - http://www.simpopdf.com

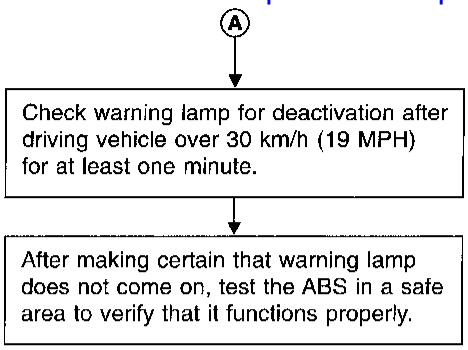

HOW TO READ SELF-DIAGNOSTIC RESULTS (Malfunction codes)

- Determine the code No. by counting the number of times the warning lamp flashes on and off.
- When several malfunctions occur at one time, up to three code numbers can be stored; the latest malfunction will be indicated first.
- The indication begins with the start code 12. After that a maximum of three code numbers appear in the order of the latest one first. The indication then returns to the start code 12 to repeat (the indication will stay on for five minutes at the most).
- The malfunction code chart is on the next page.

Example: Code No. 32 REAR SENSOR SHORT-CIRCUIT

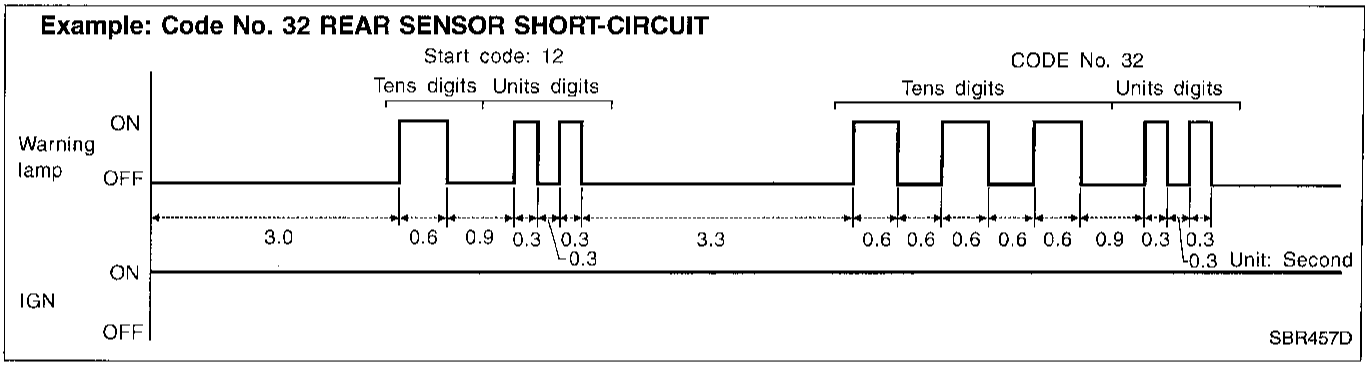

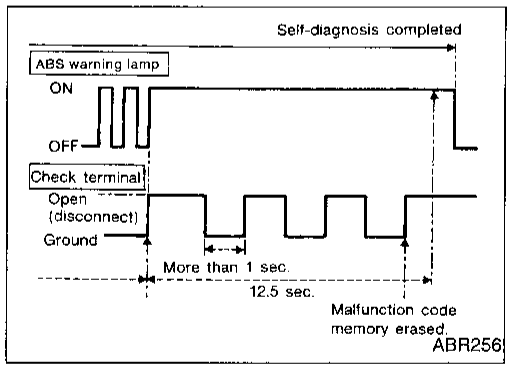

HOW TO ERASE SELF-DIAGNOSTIC RESULTS (Malfunction codes)

1. Disconnect the check terminal from ground (ABS warning lamp will stay lit).
2. Within 12.5 seconds, ground the check terminal 3 times. Each terminal ground must last more than 1 second. The ABS warning lamp goes out after the erase operation has been completed.
3. Perform self-diagnosis again. Refer to BR-68. Only the start-code should appear, no malfunction codes.

Simpo PDF Merge and Split Unregistered Version - http://www.simpopdf.com

Self-diagnosis (Cont'd)

MALFUNCTION CODE/SYMPTOM CHART

Code No./Symptom (No. of warning lamp flashes)	Malfunctioning part	Diagnostic procedure
45	Actuator front left outlet solenoid valve	2
46	Actuator front left inlet solenoid valve	2
41	Actuator front right outlet solenoid valve	2
42	Actuator front right inlet solenoid valve	2
55	Actuator rear outlet solenoid valve	2
56	Actuator rear inlet solenoid valve	2
25 ★1	Front left sensor (open-circuit)	1
26 ★1	Front left sensor (short-circuit)	1
21 ★1	Front right sensor (open-circuit)	1
22 ★1	Front right sensor (short-circuit)	1
31 ★1	Rear right sensor (open-circuit)	1
32 ★1	Rear right sensor (short-circuit)	1
35 ★1	Rear left sensor (open-circuit)	1
36 ★1	Rear left sensor (short-circuit)	1
18 ★1	Sensor rotor	1
17	G sensor and circuit	5
61 ★3	Actuator motor or motor relay	3
63	Solenoid valve relay	2
57 ★2	Power supply (Low voltage)	4
71	Control unit	6
Warning lamp stays on when ignition switch is turned ON	Control unit power supply circuit Warning lamp bulb circuit Control unit or control unit connector Solenoid valve relay stuck Power supply for solenoid valve relay coil	13
Warning lamp does not come on when ignition switch is turned ON	Fuse, warning lamp bulb or warning lamp circuit Control unit	12
Pedal vibration and noise	—	11
Long stopping distance	—	9
Unexpected pedal action	—	8
ABS does not work	—	10
ABS works frequently	—	7

★1: If one or more wheels spin on a rough or slippery road for 40 seconds or more, the ABS warning lamp will illuminate. This does not indicate a malfunction. Only in the case of the short-circuit (Code Nos. 26, 22, 32 and 36), after repair the ABS warning lamp also illuminates when the ignition switch is turned "ON". In this case, drive the vehicle at speeds greater than 30 km/h (19 MPH) for approximately 1 minute as specified in "SELF-DIAGNOSIS PROCEDURE", BR-68. Check to ensure that the ABS warning lamp goes out while the vehicle is being driven.

★2: The trouble code "57", which refers to a low power supply voltage, does not indicate that the ABS control unit is malfunctioning. Do not replace the ABS control unit with a new one.

★3: The trouble code "61" can sometimes appear when the ABS motor is not properly grounded. If it appears, be sure to check the condition of the ABS motor ground circuit connection.

Simpo PDF Merge and Split Unregistered Version - http://www.simpopdf.com

CONSULT

CONSULT APPLICATION TO ABS

ITEM	SELF-DIAGNOSTIC RESULTS	DATA MONITOR	ACTIVE TEST
Front right wheel sensor	X	X	—
Front left wheel sensor	X	X	—
Rear right wheel sensor	X	X	—
Rear left wheel sensor	X	X	—
G switch (G sensor)	X	X	X
Stop lamp switch	—	X	—
Front right inlet solenoid valve	X	X	X
Front right outlet solenoid valve	X	X	X
Front left inlet solenoid valve	X	X	X
Front left outlet solenoid valve	X	X	X
Rear inlet solenoid valve	X	X	X
Rear outlet solenoid valve	X	X	X
Actuator solenoid valve relay	X	X	—
Actuator motor relay (ABS MOTOR is shown on the Data Monitor screen.)	X	X	X
ABS warning lamp	—	X	—
Battery voltage	X	X	—

X: Applicable
—: Not applicable

ECU (ABS control unit) part number mode

Ignore the ECU part number displayed in the ECU PART NUMBER MODE. ECU (ABS control unit) is part of the ABS actuator and electric unit, serviced as an assembly.

Simpo PDF Merge and Split Unregistered Version - http://www.simpopdf.com

A Driver side

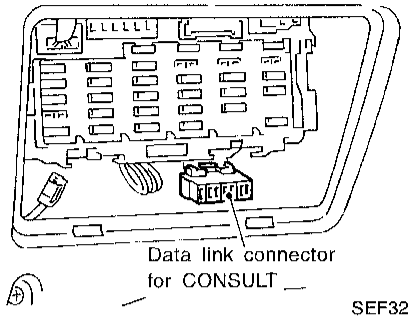

SEF321V

B

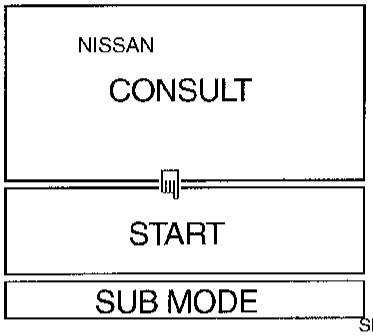

SBR455D

C

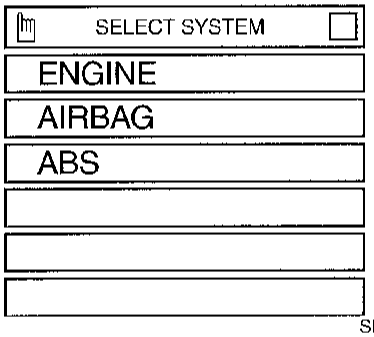

SBR080E

D

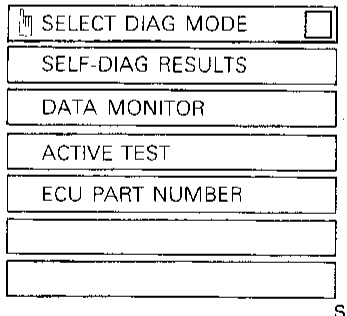

SST412B

E

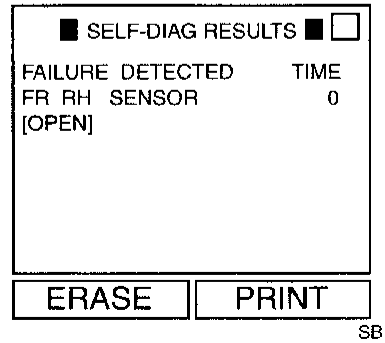

SBR950C

CONSULT Inspection Procedure

SELF-DIAGNOSIS PROCEDURE

A

1) Turn ignition switch OFF.
2) Connect CONSULT to Data Link Connector for CONSULT.

1) Start engine.
2) Drive vehicle over 30 km/h (19 MPH) for at least one minute.

B 1) Stop vehicle with engine running and touch "START" on CONSULT screen.
C 2) Touch "ABS".
D 3) Touch "SELF-DIAG RESULTS".
- The screen shows the detected malfunction and how many times the ignition switch has been turned since the malfunction.

Make the necessary repairs following the diagnostic procedures.

E

After the malfunctions are repaired, erase the self-diagnostic results stored in the control unit by touching "ERASE".

Check warning lamp for deactivation after driving vehicle over 30 km/h (19 MPH) for at least one minute.

Test the ABS in a safe area to verify that it functions properly.

Note: "SELF-DIAG RESULTS" screen shows the detected malfunction and how many times the ignition switch has been turned since the malfunction.

CONSULT Inspection Procedure (Cont'd)

Simpo PDF Merge and Split Unregistered Version - http://www.simpopdf.com

SELF-DIAGNOSTIC RESULTS MODE

Diagnostic item	Diagnostic item is detected when ...	Diagnostic procedure
FR RH SENSOR★ [OPEN]	● Circuit for front right wheel sensor is open. (An abnormally high input voltage is entered.)	1
FR LH SENSOR★ [OPEN]	● Circuit for front left wheel sensor is open. (An abnormally high input voltage is entered.)	1
RR RH SENSOR★ [OPEN]	● Circuit for rear right sensor is open. (An abnormally high input voltage is entered.)	1
RR LH SENSOR★ [OPEN]	● Circuit for rear left sensor is open. (An abnormally high input voltage is entered.)	1
FR RH SENSOR★ [SHORT]	● Circuit for front right wheel sensor is shorted. (An abnormally low input voltage is entered.)	1
FR LH SENSOR★ [SHORT]	● Circuit for front left wheel sensor is shorted. (An abnormally low input voltage is entered.)	1
RR RH SENSOR★ [SHORT]	● Circuit for rear right sensor is shorted. (An abnormally low input voltage is entered.)	1
RR LH SENSOR★ [SHORT]	● Circuit for rear left sensor is shorted. (An abnormally low input voltage is entered.)	1
ABS SENSOR★ [ABNORMAL SIGNAL]	● Teeth damage on sensor rotor or improper installation of wheel sensor. (Abnormal wheel sensor signal is entered.)	1
FR RH IN ABS SOL [OPEN]	● Circuit for front right inlet solenoid valve is open. (An abnormally low output voltage is entered.)	2
FR LH IN ABS SOL [OPEN]	● Circuit for front left inlet solenoid valve is open. (An abnormally low output voltage is entered.)	2
RR IN ABS SOL [OPEN]	● Circuit for rear inlet solenoid valve is open. (An abnormally low output voltage is entered.)	2
FR RH IN ABS SOL [SHORT]	● Circuit for front right inlet solenoid valve is shorted. (An abnormally high output voltage is entered.)	2
FR LH IN ABS SOL [SHORT]	● Circuit for front left inlet solenoid valve is shorted. (An abnormally high output voltage is entered.)	2
RR IN ABS SOL [SHORT]	● Circuit for rear inlet solenoid valve is shorted. (An abnormally high output voltage is entered.)	2
FR RH OUT ABS SOL [OPEN]	● Circuit for front right outlet solenoid valve is open. (An abnormally low output voltage is entered.)	2
FR LH OUT ABS SOL [OPEN]	● Circuit for front left outlet solenoid valve is open. (An abnormally low output voltage is entered.)	2
RR OUT ABS SOL [OPEN]	● Circuit for rear outlet solenoid valve is open. (An abnormally low output voltage is entered.)	2
FR RH OUT ABS SOL [SHORT]	● Circuit for front right outlet solenoid valve is shorted. (An abnormally high output voltage is entered.)	2
FR LH OUT ABS SOL [SHORT]	● Circuit for front left outlet solenoid valve is shorted. (An abnormally high output voltage is entered.)	2
RR OUT ABS SOL [SHORT]	● Circuit for rear outlet solenoid valve is shorted. (An abnormally high output voltage is entered.)	2
ABS ACTUATOR RELAY [ABNORMAL]	● Actuator solenoid valve relay is ON, even if control unit sends off signal. ● Actuator solenoid valve relay is OFF, even if control unit sends on signal.	2
ABS MOTOR RELAY [ABNORMAL]	● Circuit for ABS motor relay is open or shorted. ● Circuit for actuator motor is open or shorted. ● Actuator motor relay is stuck.	3
BATTERY VOLT [VB-LOW]	● Power source voltage supplied to ABS control unit is abnormally low.	4
CONTROL UNIT	● Function of calculation in ABS control unit has failed.	6
G-SENSOR★ [ABNORMAL]	● G sensor circuit is open or shorted.	5

★: If one or more wheels spin on a rough or slippery road for 40 seconds or more, the ABS warning lamp will illuminate. This does not indicate a malfunction. Only in the case of the short-circuit, after repair the ABS warning lamp also illuminates when the ignition switch is turned "ON". In this case, drive the vehicle at speeds greater than 30 km/h (19 MPH) for approximately 1 minute as specified in "SELF-DIAGNOSIS PROCEDURE", BR-68. Check to ensure that the ABS warning lamp goes out while the vehicle is being driven.

Simpo PDF Merge and Split Unregistered Version - http://www.simpopdf.com

CONSULT Inspection Procedure (Cont'd)

DATA MONITOR PROCEDURE

A

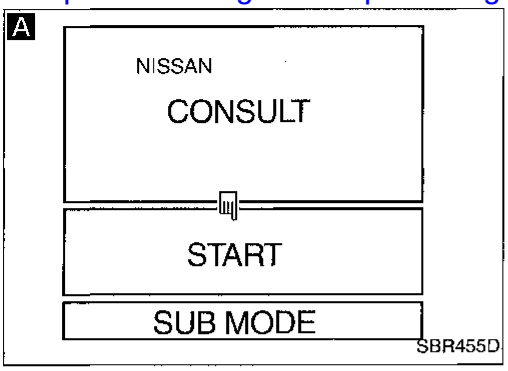

SBR455D

1) Turn ignition switch OFF.
2) Connect CONSULT to Data Link Connector for CONSULT.
3) Turn ignition switch ON.

A 1) Touch "START" on CONSULT screen.
B 2) Touch "ABS".
C 3) Touch "DATA MONITOR".

B

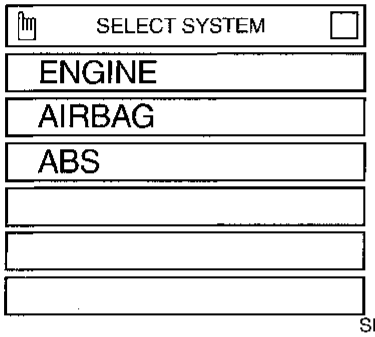

SBR080E

D 1) Touch "SETTING" on "SELECT MONITOR ITEM" screen.
E 2) Touch "LONG TIME" on "SET RECORDING COND" screen.
D 3) Touch "START" on "SELECT MONITOR ITEM".

C

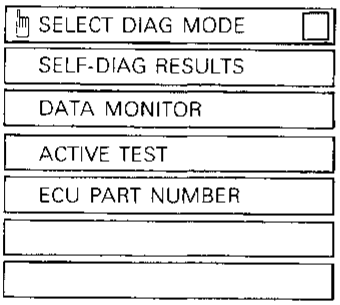

SST412B

D

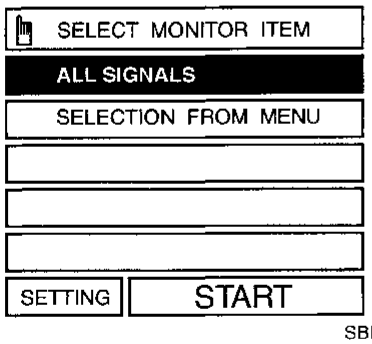

SBR936C

E

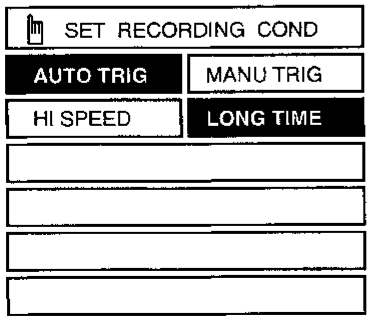

SBR937C

Simpo PDF Merge and Split Unregistered Version - http://www.simpopdf.com

CONSULT Inspection Procedure (Cont'd)

ACTIVE TEST PROCEDURE

- When conducting Active test, vehicle must be stationary.
- When ABS warning lamp stays on, never conduct Active test.

1) Turn ignition switch OFF.
2) Connect CONSULT to Data Link Connector for CONSULT.
3) Start engine.

↓

A 1) Touch "START" on CONSULT screen.
B 2) Touch "ABS".
C 3) Touch "ACTIVE TEST".

↓

D 1) Select active test item by touching screen.
E 2) Touch "START".

↓

Carry out the active test by touching screen key.

A

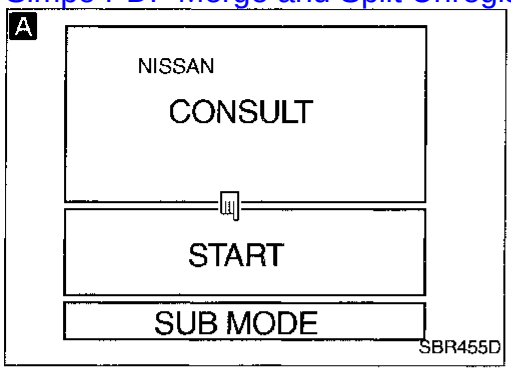

SBR455D

B

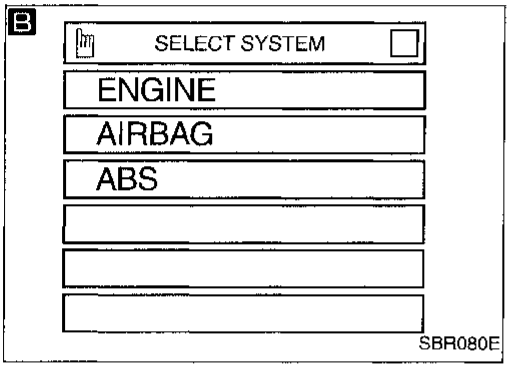

SBR080E

C

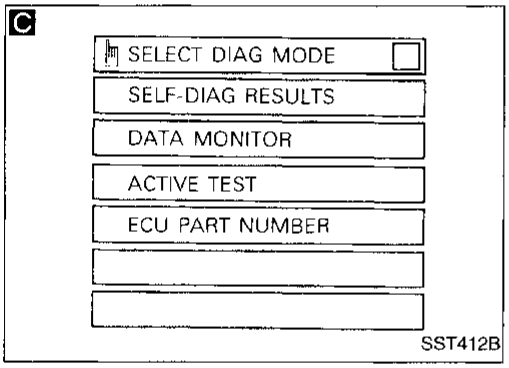

SST412B

D

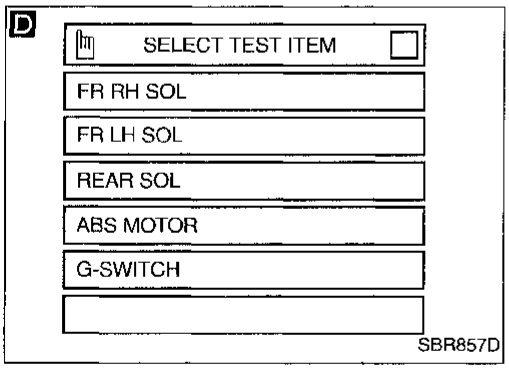

SBR857D

E

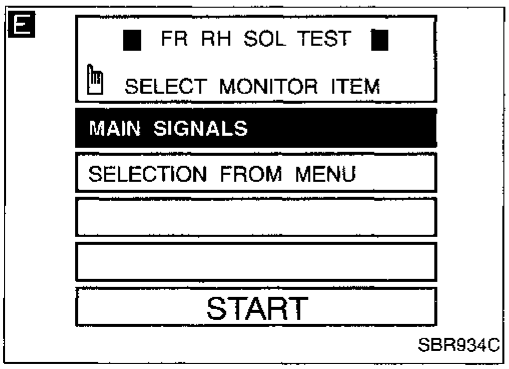

SBR934C

Simpo PDF Merge and Split Unregistered Version - http://www.simpopdf.com

DATA MONITOR MODE

MONITOR ITEM	CONDITION	SPECIFICATION
FR RH SENSOR FR LH SENSOR RR RH SENSOR RR LH SENSOR	Drive vehicle. (Each wheel is rotating.)	Wheel speed signal (Almost the same speed as speedometer.)
STOP LAMP SW	Brake is depressed.	Depress the pedal: ON Release the pedal: OFF
G-SWITCH	Vehicle is driven. Vehicle is stopped. Brake is applied.	During sudden braking while driving on high μ roads (asphalt roads, etc.): ON While vehicle is stopped or during constant-speed driving: OFF
FR RH IN SOL FR RH OUT SOL FR LH IN SOL FR LH OUT SOL RR IN SOL RR OUT SOL	1. Drive vehicle at speeds over 30 km/h (19 MPH) for at least one minute. 2. Engine is running.	Operating conditions for each solenoid valve are indicated. ABS is not operating: OFF
MOTOR RELAY		ABS is not operating: OFF ABS is operating: ON
ACTUATOR RELAY	Ignition switch is ON or engine is running.	Ignition switch ON (Engine stops): OFF Engine running: ON
WARNING LAMP		ABS warning lamp is turned on: ON ABS warning lamp is turned off: OFF
BATTERY VOLT		Power supply voltage for control unit

ACTIVE TEST MODE

TEST ITEM	CONDITION	JUDGEMENT
FR RH SOLENOID FR LH SOLENOID REAR SOLENOID	Engine is running.	Brake fluid pressure control operation IN SOL / OUT SOL UP (Increase): OFF / OFF KEEP (Hold): ON / OFF DOWN (Decrease): ON / ON
ABS MOTOR		ABS actuator motor ON: Motor runs (ABS motor relay ON) OFF: Motor stops (ABS motor relay OFF)
G SWITCH	Ignition switch is ON.	G SWITCH (G SENSOR), ON : Set G SWITCH MONITOR "ON" (G switch circuit is closed.) OFF: Set G SWITCH MONITOR "OFF" (G switch circuit is open.)

Note: Active test will automatically stop ten seconds after the test starts. (LIMIT SIGNAL monitor shows ON.)

Simpo PDF Merge and Split Unregistered Version - http://www.simpopdf.com

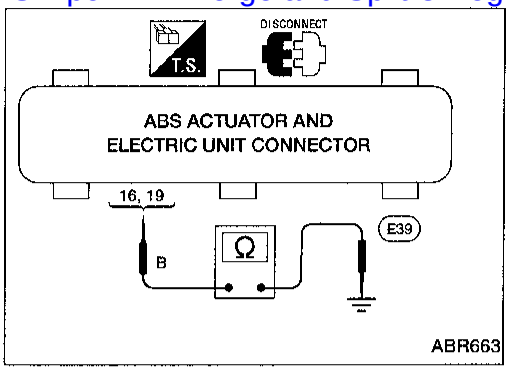

Ground Circuit Check

ABS ACTUATOR AND ELECTRIC UNIT GROUND

- Check resistance between ABS actuator and electric unit connector terminals and ground.
  Resistance: approximately 0Ω

Simpo PDF Merge and Split Unregistered Version - http://www.simpopdf.com

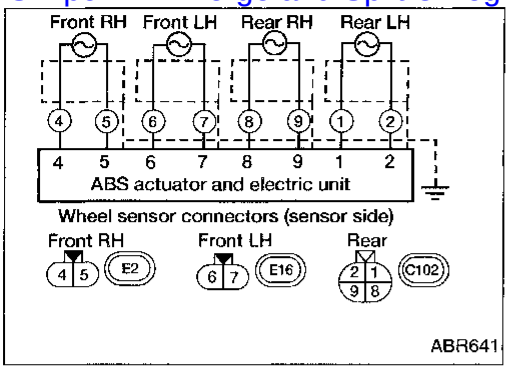

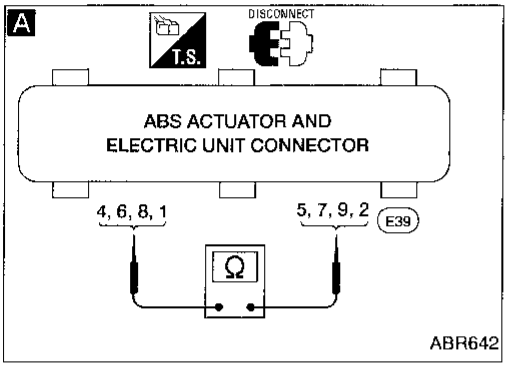

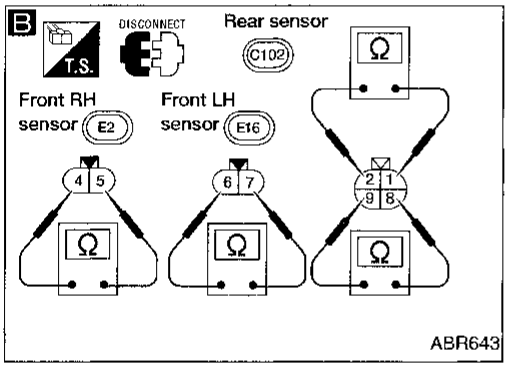

Diagnostic Procedure 1 (Wheel sensor or rotor)

Malfunction code No. 21, 22, 25, 26, 31, 32, 35, 36 or 18

INSPECTION START
1. Disconnect connectors from ABS actuator and electric unit and wheel sensor of malfunction code No. Check terminals for damage or loose connections. Then reconnect connectors.
2. Carry out self-diagnosis again.
Does warning lamp activate again?

No → Inspection end

Yes

A

CHECK WHEEL SENSOR ELECTRICAL.
1. Disconnect ABS actuator and electric unit connector.
2. Check resistance between ABS actuator and electric unit connector (E39) (body side) terminals.
Code No. 21 or 22 (Front RH wheel)
Terminals (4) and (5)
Code No. 25 or 26 (Front LH wheel)
Terminals (6) and (7)
Code No. 31 or 32 (Rear RH wheel)
Terminals (8) and (9)
Code No. 35 or 36 (Rear LH wheel)
Terminals (1) and (2)
Resistance: Front 1.44 - 1.76 kΩ
Rear 1.44 - 1.76 kΩ

OK → (A) (Go to next page.)

NG

B

CHECK WHEEL SENSOR.
Check each sensor for resistance.
Resistance: Front 1.44 - 1.76 kΩ
Rear 1.44 - 1.76 kΩ

OK → Check the following.
- Harness connectors (E39), (E53), (C11), (C12), (C102)
- Harness for open or short between wheel sensor connectors and ABS actuator and electric unit

If NG, repair harness or connectors.

NG

REPLACE.
Replace wheel sensor.

Simpo PDF Merge and Split Unregistered Version - http://www.simpopdf.com

Diagnostic Procedure 1 (Wheel sensor or rotor) (Cont'd)

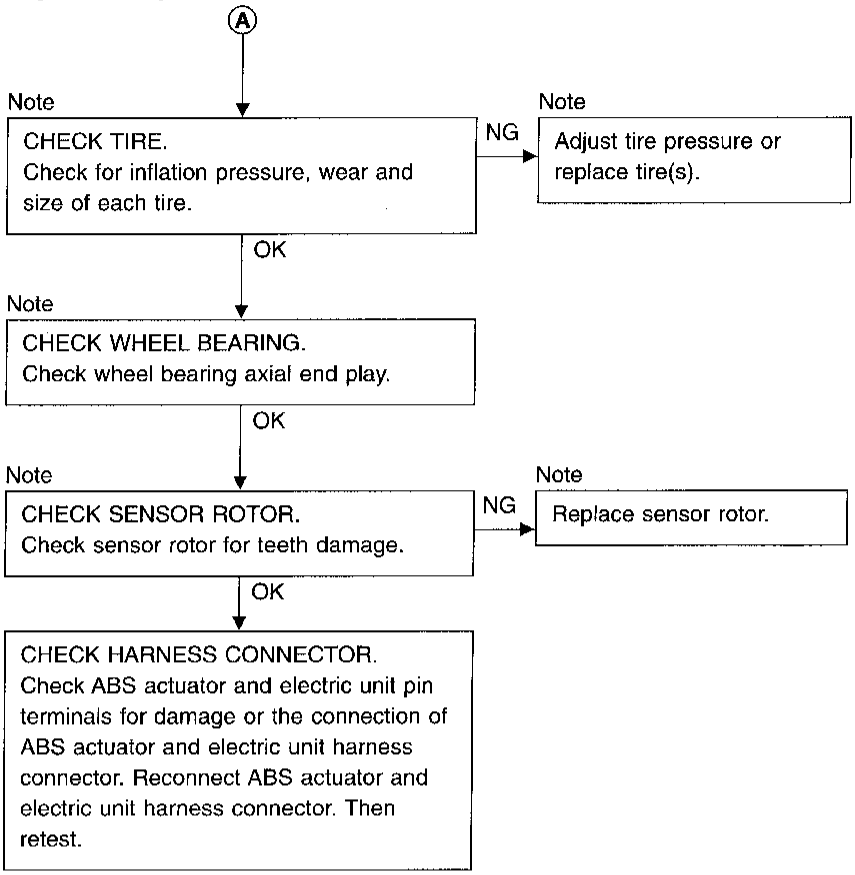

Note: Wheel position should be distinguished by code numbers except code No. 18 (sensor rotor).

Simpo PDF Merge and Split Unregistered Version - http://www.simpopdf.com

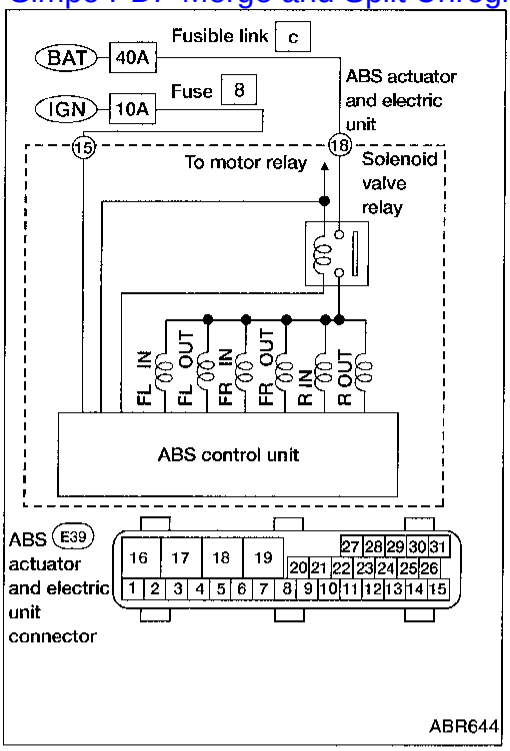

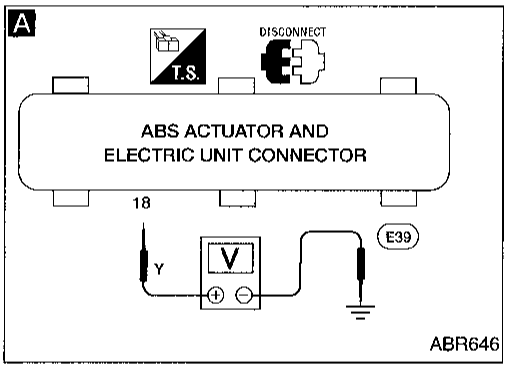

Diagnostic Procedure 2 (ABS actuator solenoid valve and solenoid valve relay)

Malfunction code Nos. 41, 42, 45, 46, 55, 56, 63

CHECK FUSIBLE LINK.
Check 40A fusible link C. For fusible link layout, refer to POWER SUPPLY ROUTING in EL section.
NG → (A) (Go to next page.)
OK ↓

CHECK FUSE.
Check 10A fuse 8. For fuse layout, refer to POWER SUPPLY ROUTING in EL section.
NG → (B) (Go to next page.)
OK ↓

CHECK CONNECTOR.
1. Disconnect ABS actuator and electric unit connector. Check terminals for damage or loose connection. Then reconnect connector.
2. Carry out self-diagnosis again.
Does warning lamp activate again?

No → Inspection end
Yes ↓

CHECK ABS ACTUATOR AND ELECTRIC UNIT GROUND CIRCUIT.
Refer to ABS ACTUATOR AND ELECTRIC UNIT GROUND in Ground Circuit Check, BR-77.
NG → Repair harness and connector.
OK ↓

A

CHECK SOLENOID VALVE RELAY POWER SUPPLY CIRCUIT.
1. Disconnect ABS actuator and electric unit connector.
2. Check voltage between ABS actuator and electric unit connector E39 (body side) terminal 18 and ground.
Battery voltage should exist.

NG → Check the following.
- Harness connector E39
- Harness for open or short between ABS actuator and electric unit and fusible link

If NG, repair harness or connector.

OK ↓

REPLACE.
Replace ABS actuator and electric unit.

Simpo PDF Merge and Split Unregistered Version - http://www.simpopdf.com

Diagnostic Procedure 2 (ABS actuator solenoid valve and solenoid valve relay) (Cont'd)

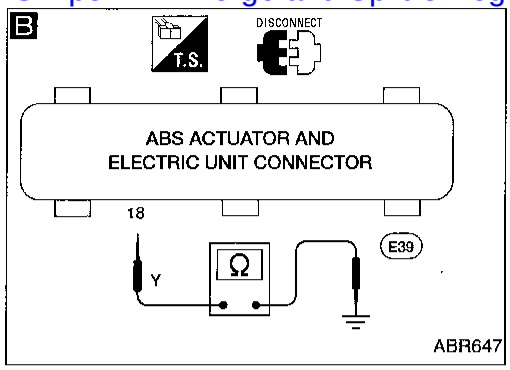

(A)

REPLACE.
Replace fusible link.
Does the fusible link blow out when ignition switch is turned ON?

No → Inspection end

Yes

B

CHECK SOLENOID VALVE RELAY POWER SUPPLY CIRCUIT.
1. Disconnect battery cable and ABS actuator and electric unit connector.
2. Check continuity between ABS actuator and electric unit connector (E39) (body side) terminal (18) and ground.
Continuity should not exit.

NG → Check the following.
- Harness connector (E39)
- Harness for open or short between ABS actuator and electric unit and fusible link

If NG, repair harness or connector.

OK

REPLACE.
Replace ABS actuator and electric unit.

(B)

REPLACE.
Replace fuse.
Does the fuse blow out when ignition switch is turned ON?

Yes → Check the following.
- Harness connector (E39)
- Harness for open or short between ABS actuator and electric unit and fuse

If NG, repair harness or connector.

No

END
Inspection end

Simpo PDF Merge and Split Unregistered Version - http://www.simpopdf.com

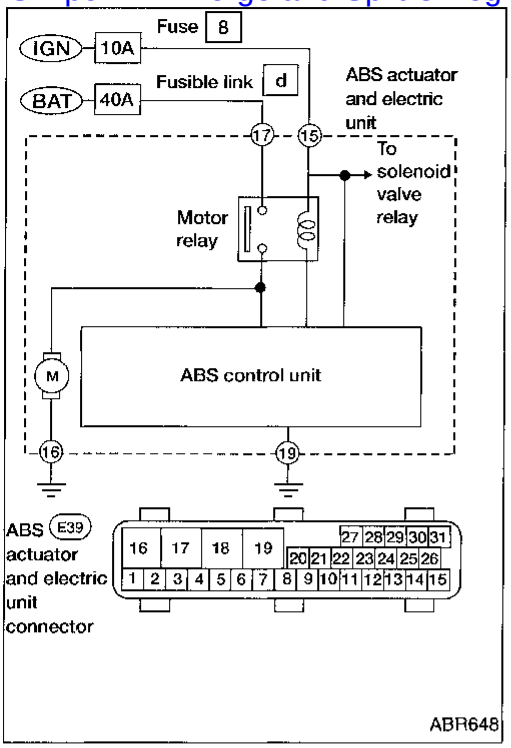

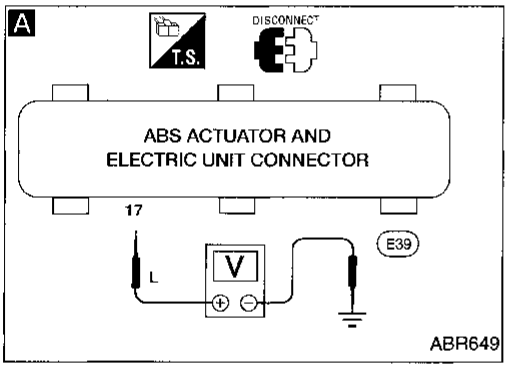

Diagnostic Procedure 3 (Motor relay or motor)

Malfunction code No. 61

CHECK FUSIBLE LINK.
Check 40A fusible link d. For fusible link layout, refer to POWER SUPPLY ROUTING in EL section.

NG → A (Go to next page.)

OK ↓

CHECK CONNECTOR.
1. Disconnect ABS actuator and electric unit connector. Check terminals for damage or loose connection. Then reconnect connector.
2. Carry out self-diagnosis again.
Does warning lamp activate again?

No → Inspection end

Yes ↓

A

CHECK MOTOR RELAY POWER SUPPLY CIRCUIT.
1. Disconnect ABS actuator and electric unit connector.
2. Check voltage between ABS actuator and electric unit connector E39 (body side) terminal 17 and ground.
Battery voltage should exist.

NG → Check the following.
- Harness connector E39
- Harness for open or short between ABS actuator and electric unit and fusible link

If NG, repair harness or connector.

OK ↓

CHECK ABS ACTUATOR AND ELECTRIC UNIT GROUND.
Refer to ABS ACTUATOR AND ELECTRIC UNIT GROUND in Ground Circuit Check, BR-77.

NG → Repair harness and terminals.

OK ↓

REPLACE.
Replace ABS actuator and electric unit.

Simpo PDF Merge and Split Unregistered Version - http://www.simpopdf.com

Diagnostic Procedure 3 (Motor relay or motor) (Cont'd)

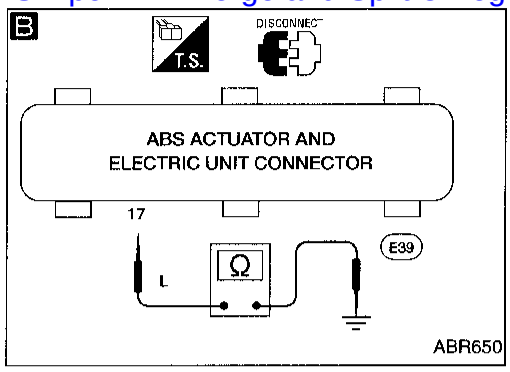

(A)

REPLACE.
Replace fusible link.
Does the fusible link blow out when ignition switch is turned ON?

No → Inspection end

Yes

B

CHECK ABS ACTUATOR MOTOR POWER SUPPLY CIRCUIT.
1. Disconnect battery cable and ABS actuator and electric unit connector (E39).
2. Check continuity between ABS actuator and electric unit connector (E39) (body side) terminal (17) and ground.
Continuity should not exist.

NG → Check the following
- Harness connector (E39)
- Harness for open or short between ABS actuator and electric unit and fusible link

If NG, repair harness or connector.

OK

CHECK HARNESS CONNECTOR.
Check ABS actuator and electric unit pin terminals for damage or the connection of ABS actuator and electric unit harness connector.
Reconnect ABS actuator and electric unit harness connector. Then retest.

Simpo PDF Merge and Split Unregistered Version - http://www.simpopdf.com

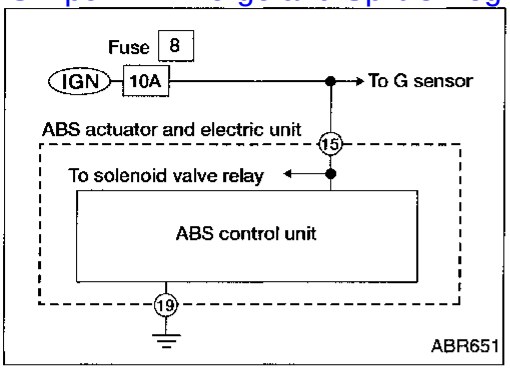

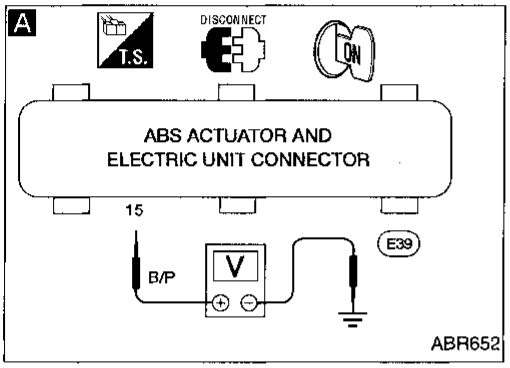

Diagnostic Procedure 4 (Low voltage)

Malfunction code No. 57

CHECK CONNECTOR.
1. Disconnect ABS actuator and electric unit connector. Check terminals for damage or loose connection. Then reconnect connector.
2. Carry out self-diagnosis again.
Does warning lamp activate again?

No → Inspection end

Yes ↓

A

CHECK ABS CONTROL UNIT POWER SUPPLY CIRCUIT.
1. Disconnect ABS actuator and electric unit connector.
2. Check voltage between ABS actuator and electric unit connector (E39) (body side) terminal (15) and ground.
Battery voltage should exist when ignition switch is turned ON.

NG → (A) (See below.)

OK ↓

CHECK ABS CONTROL UNIT GROUND.
Refer to ABS ACTUATOR AND ELECTRIC UNIT GROUND in Ground Circuit Check, BR-77.

NG → Repair harness and connector.

OK ↓

CHECK HARNESS CONNECTOR.
Check ABS actuator and electric unit pin terminals for damage or the connection of ABS actuator and electric unit harness connector. Reconnect ABS actuator and electric unit harness connector. Then retest.

(A) ↓

CHECK FUSE.
Check 10A fuse [8]. For fuse layout, refer to POWER SUPPLY ROUTING in EL section.

NG → Replace fuse.

OK ↓

CHECK ABS CONTROL UNIT POWER SUPPLY CIRCUIT.
Check continuity between fuse and ABS actuator and electric unit connector (E39) (body side) terminal (15).

NG → Check the following.
- Harness connector (E39)
- Harness for open or short between ABS actuator and electric unit and fuse

If NG, repair harness or connector.

OK ↓

CHECK BATTERY.
Check battery. Refer to BATTERY in EL section.

Simpo PDF Merge and Split Unregistered Version - http://www.simpopdf.com

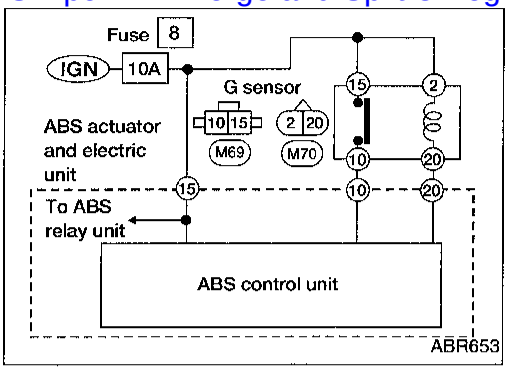

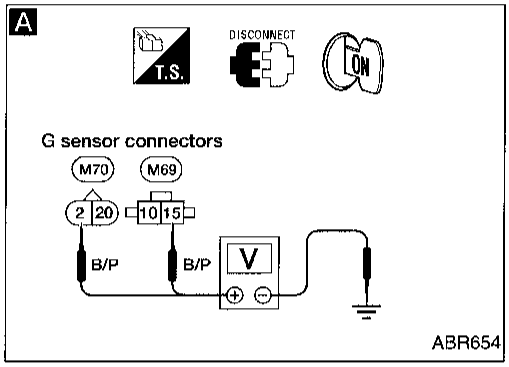

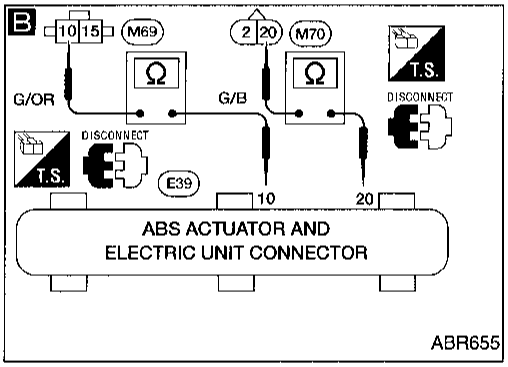

Diagnostic Procedure 5 (G sensor)

Malfunction code No. 17

CHECK G SENSOR POWER SUPPLY CIRCUIT.
Check 10A fuse 8. For fuse layout, refer to POWER SUPPLY ROUTING in EL section.

NG → Replace fuse.

OK ↓

CHECK CONNECTOR.
1. Disconnect ABS actuator and electric unit connector. Check terminals for damage or loose connection. Then reconnect connector.
2. Carry out self-diagnosis again.
Does warning lamp activate again?

No → Inspection end

Yes ↓

CHECK G SENSOR.
Refer to G SENSOR in Electrical Components Inspection, BR-93.

NG → Replace G sensor.

OK ↓

A

CHECK G SENSOR POWER SUPPLY CIRCUIT.
1. Disconnect G sensor connectors.
2. Check voltage between G sensor connector M69, M70 (body side) terminal 2, 15 and ground.
Battery voltage should exist.

NG → Check the following.
- Harness connectors M69, M70, E39
- Harness for open or short between G sensor and ABS actuator and electric unit

If NG, repair harness or connectors.

OK ↓

B

CHECK G SENSOR GROUND.
1. Disconnect ABS actuator and electric unit connector and G sensor connectors.
2. Check continuity between ABS actuator and electric unit connector E39 (body side) terminals 10, 20 and G sensor connectors M69, M70 (body side) terminals 10, 20.
Continuity should exist.

NG → Check the following.
- Harness connectors M69, M70, E39, E53
- Harness for open or short between G sensor and ABS actuator and electric unit

If NG, repair harness or connectors.

OK ↓

CHECK HARNESS CONNECTOR.
Check ABS actuator and electric unit pin terminals for damage or the connection of ABS actuator and electric unit harness connector. Reconnect ABS actuator and electric unit harness connector. Then retest.

Simpo PDF Merge and Split Unregistered Version - http://www.simpopdf.com

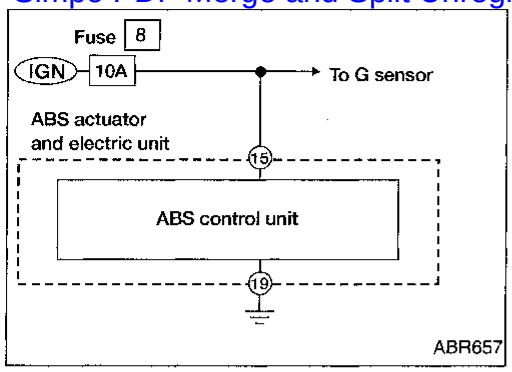

Diagnostic Procedure 6 (Control unit)

Malfunction code No. 71

CHECK CONNECTOR.
1. Disconnect ABS actuator and electric unit connector.
   Check terminals for damage or loose connections. Then reconnect connector.
2. Carry out self-diagnosis again.
   Does warning lamp activate again?

No → Inspection end

Yes ↓

ABS CONTROL UNIT POWER SUPPLY CHECK
Check voltage. Refer to A in Diagnostic Procedure 4, BR-84.

↓

CHECK SELF-DIAGNOSTIC RESULTS
Does warning lamp indicate code No. 71 again?

Yes → Replace ABS actuator and electric unit.

No ↓

INSPECTION
Inspect the system according to the code No.

Simpo PDF Merge and Split Unregistered Version - http://www.simpopdf.com

Diagnostic Procedure 7 (ABS works frequently.)

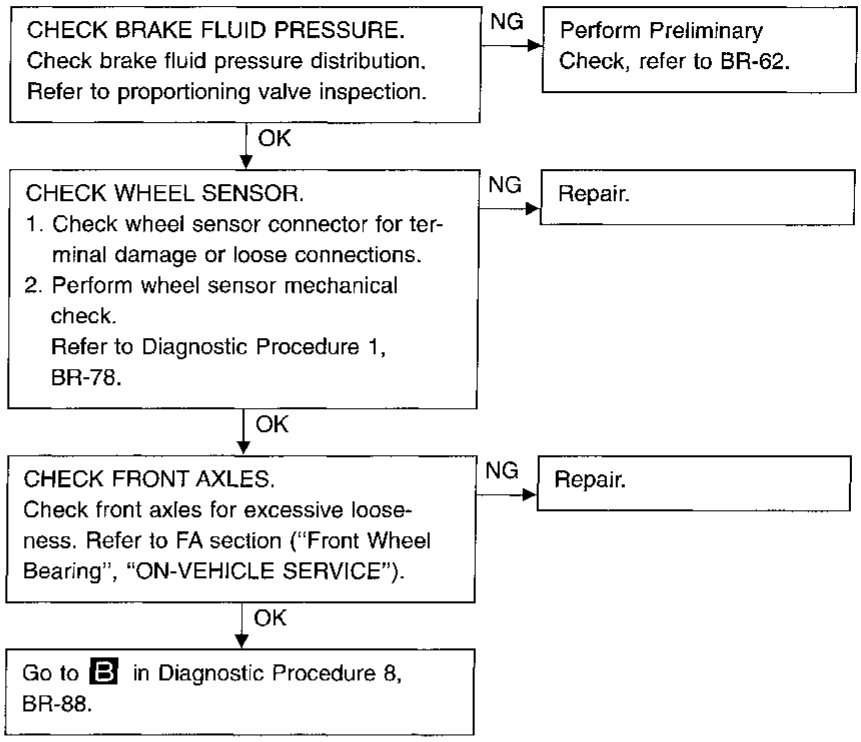

Simpo PDF Merge and Split Unregistered Version - http://www.simpopdf.com

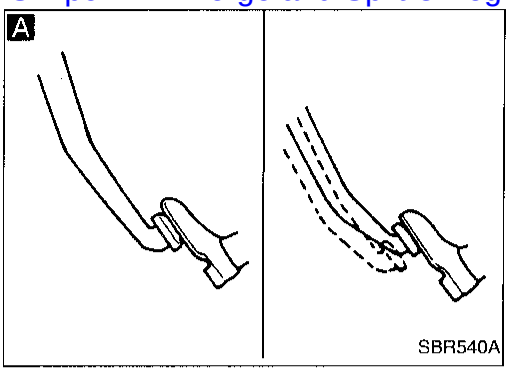

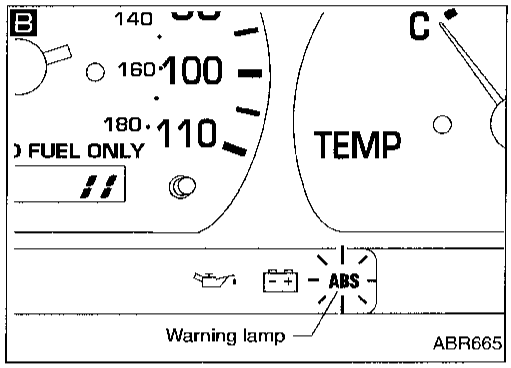

Diagnostic Procedure 8 (Unexpected pedal action)

A

CHECK BRAKE PEDAL STROKE.
Check brake pedal stroke. Is stroke excessively large?
- Yes → Perform Preliminary Check, refer to BR-62.
- No ↓

CHECK BRAKE PERFORMANCE.
Disconnect ABS actuator and electric unit connector and check whether brake is effective.
- No → Perform Preliminary Check, refer to BR-62.
- Yes ↓

B

CHECK WARNING LAMP ACTIVATE.
Ensure warning lamp remains off while driving.
- NG → Carry out self-diagnosis. Refer to BR-68, 72.
- OK ↓

CHECK WHEEL SENSOR.
1. Check wheel sensor connector for terminal damage or loose connection.
2. Perform wheel sensor mechanical check.
   Refer to Diagnostic Procedure 1, BR-78.

- NG → Repair.
- OK ↓

CHECK HARNESS CONNECTOR.
Check ABS actuator and electric unit pin terminals for damage or the connection of ABS actuator and electric unit harness connector.
Reconnect ABS actuator and electric unit harness connector. Then retest.

Diagnostic Procedure 9 (Long stopping distance)

CHECK ABS PERFORMANCE.
Disconnect ABS actuator and electric unit connector and check whether stopping distance is still long.
- No → Go to B in Diagnostic Procedure 8, BR-88.
- Yes ↓

Perform Preliminary Check and air bleeding.

Note: Stopping distance may be larger than vehicles without ABS when road condition is slippery.

Simpo PDF Merge and Split Unregistered Version - http://www.simpopdf.com

Diagnostic Procedure 10 (ABS does not work.)

CHECK WARNING LAMP ACTIVATE.
Does the ABS warning lamp activate?

Yes → Carry out self-diagnosis. Refer to BR-68, 72.

No → Go to B in Diagnostic Procedure 8, BR-88.

Note: ABS does not work when vehicle speed is under 10 km/h (6 MPH).

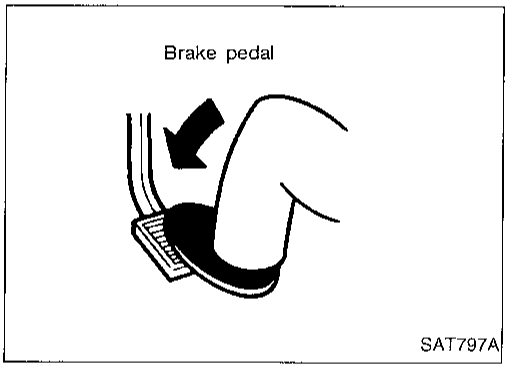

Diagnostic Procedure 11 (Pedal vibration and noise)

INSPECTION START
1. Apply brake.
2. Start engine.
3. Does the symptom appear only when engine is started?

Yes → Carry out self-diagnosis. Refer to BR-68, 72.

No → CHECK IF SYMPTOM APPEARS.
Does the symptom appear when electrical equipment switches (such as headlamp) are operated?

No → Go to B in Diagnostic Procedure 8, BR-88.

Yes → CHECK WHEEL SENSOR.
Check wheel sensor shield ground. For location of shield ground, refer to wiring diagram and "HARNESS LAYOUT" in EL section.

NG → Repair wheel sensor.

OK → CHECK HARNESS CONNECTOR.
Check ABS actuator and electric unit pin terminals for damage or the connection of ABS actuator and electric unit harness connector.
Reconnect ABS actuator and electric unit harness connector. Then retest.

Simpo PDF Merge and Split Unregistered Version - http://www.simpopdf.com

Diagnostic Procedure 11 (Pedal vibration and noise) (Cont'd)

Note: ABS may operate and cause vibration under any of the following conditions.

- **Applying brake gradually when shifting or operating clutch.**
- **Low friction (slippery) road.**
- **High speed cornering.**
- **Driving over bumps and pot holes.**
- **Engine speed is over 5,000 rpm with vehicle stopped.**

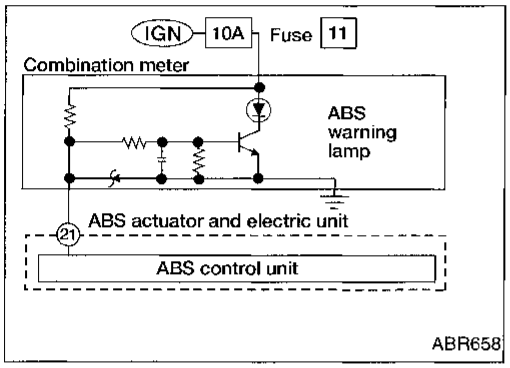

Diagnostic Procedure 12 (Warning lamp does not come on when ignition switch is turned ON.)

CHECK FUSE.
Check 10A fuse [11]. For fuse layout, refer to POWER SUPPLY ROUTING in EL section.

NG → Replace fuse.

OK ↓

A

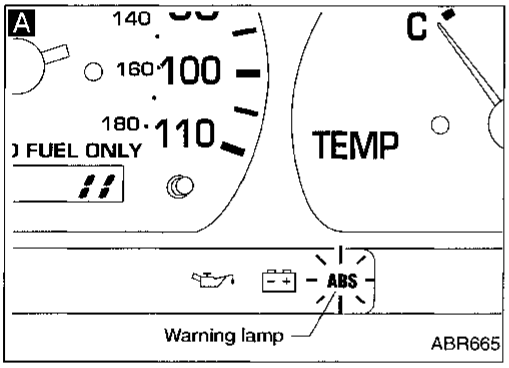

CHECK WARNING LAMP ACTIVATE.
Disconnect ABS actuator and electric unit connector.
Does the warning lamp activate?

Yes → (A) (Go to next page.)

No ↓

B

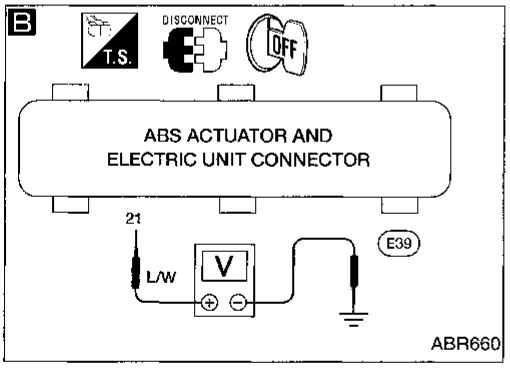

CHECK HARNESS FOR SHORT.
1. Disconnect ABS actuator and electric unit connector.
2. Check voltage between ABS actuator and electric unit connector (E39) (body side) terminal (21) and ground.

Battery voltage should not exist.

NG → Repair harness or connector.

OK ↓

CHECK COMBINATION METER.
Check combination meter. Refer to WARNING LAMPS in EL section.

Simpo PDF Merge and Split Unregistered Version - http://www.simpopdf.com

Diagnostic Procedure 12 (Warning lamp does not come on when ignition switch is turned ON.) (Cont'd)

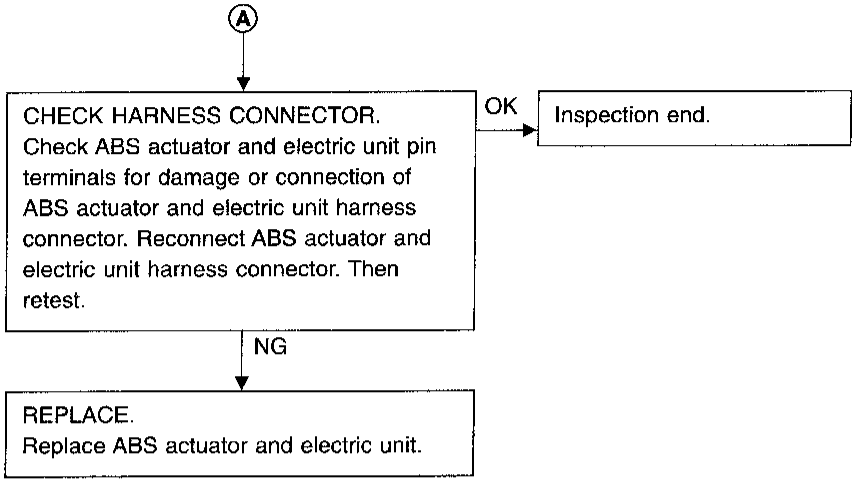

Simpo PDF Merge and Split Unregistered Version - http://www.simpopdf.com

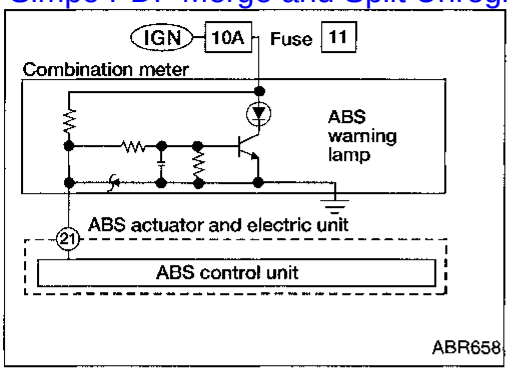

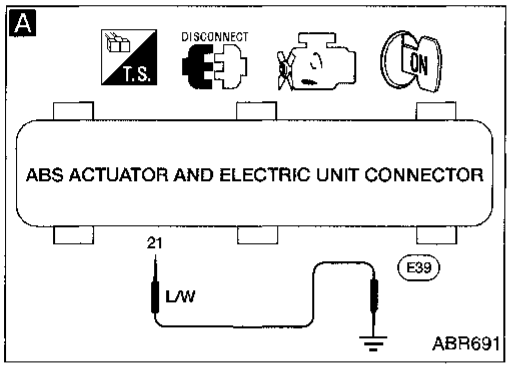

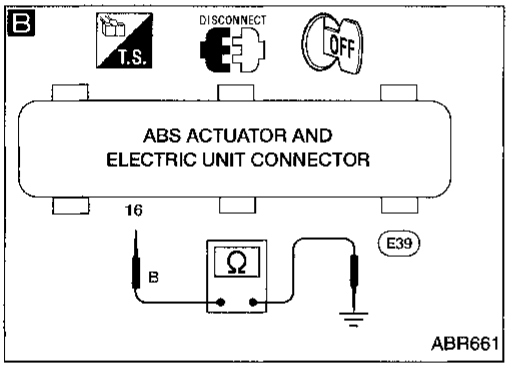

Diagnostic Procedure 13 (Warning lamp stays on when ignition switch is turned ON.)

A

CHECK WARNING LAMP.
1. Disconnect ABS actuator and electric unit connector.
2. Connect suitable wire between ABS actuator and electric unit connector E39 (body side) terminal 21 and ground.

Warning lamp should not activate.

NG → Repair combination meter. Check the following.
- Harness connector E39
- Harness for open or short between ABS actuator and electric unit and fuse

If NG, repair harness or connector.

OK ↓

CHECK HARNESS CONNECTOR.
Check ABS actuator and electric unit pin terminals for damage or the connection of ABS actuator and electric unit harness connector. Reconnect ABS actuator and electric unit harness connector. Then retest.

OK → Inspection end.

NG ↓

B

CHECK ABS MOTOR GROUND.
1. Turn ignition switch OFF.
2. Disconnect ABS actuator and electric unit connector.
3. Check continuity between ABS actuator and electric unit connector E39 (body side) terminal 16 and ground.

Continuity should exist.

NG → Check the following.
- Harness connector E39
- Harness for open or short between ABS actuator and electric unit and ground

If NG, repair harness or connector.

OK ↓

REPLACE.
Replace ABS actuator and electric unit.

Simpo PDF Merge and Split Unregistered Version - http://www.simpopdf.com

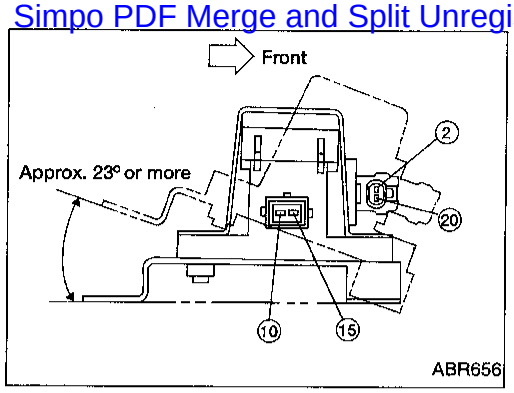

Electrical Components Inspection

G sensor

CAUTION:
The G sensor is easily damaged if it sustains an impact. Be careful not to drop or bump it.

1. Measure resistance between terminals ⑩ and ⑮ of G sensor unit connector.

G sensor condition	Resistance between terminals ⑩ and ⑮	G sensor switch condition
Installed in vehicle	1.4 - 1.6 kΩ	"ON"
Tilted as shown in figure	4.7 - 5.5 kΩ	"OFF"

2. Measure resistance between terminals ② and ⑳ of the G sensor unit connector.

Resistance:	70 - 124 Ω

Simpo PDF Merge and Split Unregistered Version - http://www.simpopdf.com

General Specifications

Applied model		2WD	4WD	
			Standard wheelbase	Long wheelbase
Front brake				
Brake model		CL28VD		
Cylinder bore diameter x number of pistons	mm (in)	42.8 (1.685) x 2		
Pad length x width x thickness	mm (in)	146.6 x 48.5 x 10 (5.77 x 1.909 x 0.39)		
Rotor outer diameter x thickness	mm (in)	250 x 22 (9.84 x 0.87)	277 x 26 (10.9 x 1.02)	
Rear brake				
Brake model		LT26B	LT30A	
Cylinder bore diameter	mm (in)	22.22 (7/8)	20.64 (13/16)	
Lining length x width x thickness	mm (in)	249.6 x 50 x 5.5 (9.83 x 1.97 x 0.217)	296 x 50 x 6.1 (11.65 x 1.97 x 0.240)	
Drum inner diameter	mm (in)	260.0 (10.24)	295.0 (11.61)	
Master cylinder				
Bore diameter	mm (in)	25.40 (1)		
Control valve				
Valve model		Linkage type load sensing valve	Proportioning valve within master cylinder	
Split point [kPa (kg/cm^2, psi)] x reducing ratio		(Variable) x 0.23	2,942 (30, 427) x 0.2	3,432 (35, 498) x 0.2
Brake booster				
Booster model		M195T	M215T	
Diaphragm diameter	mm (in)	Pri.: 205 (8.07) Sec.: 180 (7.09)	Pri.: 230 (9.06) Sec.: 205 (8.07)	
Recommended brake fluid		DOT 3		

Simpo PDF Merge and Split Unregistered Version - http://www.simpopdf.com

Inspection and Adjustment

DISC BRAKE

Unit: mm (in)

Brake model	CL28VD
Pad wear limit	
Minimum thickness	2.0 (0.079)
Rotor repair limit	
Minimum thickness	24.0 (0.945)

DRUM BRAKE

Unit: mm (in)

Brake model	LT26B	LT30A
Lining wear limit		
Minimum thickness	1.5 (0.059)	
Drum repair limit		
Maximum inner diameter	261.5 (10.30)	296.5 (11.67)
Out-of-round limit	0.03 (0.0012)	

BRAKE PEDAL

Unit: mm (in)

Free height "H"*	
M/T	209 - 219 (8.23 - 8.62)
A/T	212 - 222 (8.35 - 8.74)
Depressed height "D" [under force of 490 N (50 kg, 110 lb) with engine running]	120.0 (4.72)
Clearance "C" between pedal stopper and threaded end of stop lamp switch or ASCD switch	0.3 - 1.0 (0.012 - 0.039)
Pedal free play	
At clevis	1.0 - 3.0 (0.039 - 0.118)
At pedal pad	4 - 12 (0.16 - 0.47)

*: Measured from surface of melt sheet to pedal pad.

PARKING BRAKE CONTROL

Control type	Stick lever
Lever stroke [under force of 196 N (20 kg, 44 lb)]	10 - 12
Lever stroke when warning switch comes on	1

Simpo PDF Merge and Split Unregistered Version - http://www.simpopdf.com

SECTION BT

CONTENTS

PRECAUTIONS AND PREPARATION 2
Service Notice 2
Supplemental Restraint System (SRS) "AIR BAG" 2
GENERAL SERVICING 3
Clip and Fastener 3
BODY END 5
Body Front End 5
Removal — Front bumper assembly 5
Body Rear End 8
Removal — Rear bumper assembly 8
DOOR 10
Front Door 10
INSTRUMENT PANEL 11
Removal — Instrument panel assembly 11
INTERIOR TRIM 14
Side and Floor Trim 14
Removal — Body side trim 14
King cab model 14
Standard cab model 14
Door Trim 17
Removal 17
Door trim (Formed type) 17
Door trim (Flat type) 17
Roof Trim 20
Removal — Headlining 20
EXTERIOR 22
① 111 Hood front sealing rubber 23
② 222 Cowl top seal and cowl top grille 23
③ Windshield side molding 23
④ Windshield upper molding 23
⑤ Sunroof weatherstrip and lid protector 23
⑥ Drip weatherstrip 24
⑦ Body side welt 24
⑧ Door weatherstrip 24
⑨ Door outside molding 24
⑩ Drafter duct 25
⑪ Over fender 25
⑫ Rear combination lamp 25
SEAT 26
Front Seat 26
Jump Seat — King Cab Model 29
SUNROOF 30
WINDSHIELD AND WINDOWS 31
Windshield 32
Side Window 32
Back Window 33
Rearview Mirror 34
MIRROR 35
Door Mirror 35
Removal — Door mirror 35
CAB AND REAR BODY 36
Body Mounting 36
BODY ALIGNMENT 37
Engine Compartment 38
Measurement 38
Measurement Points 39
Underbody 40
Measurement 40
2WD·4WD (Short wheelbase) models 40
Measurement Points 41
2WD·4WD (Short wheelbase) models 41
Measurement 42
2WD·4WD (Long wheelbase) models 42
Measurement Points 43
2WD·4WD (Long wheelbase) models 43

★ **For seat belt, refer to MA and RS section.**
★ **For wiring diagrams of body electrical systems, refer to EL section.**

Simpo PDF Merge and Split Unregistered Version - http://www.simpopdf.com

Service Notice

- When removing or installing various parts, place a cloth or padding onto the vehicle body to prevent scratches.
- Handle trim, molding, instruments, grille, etc. carefully during removing or installing. Be careful not to soil or damage them.
- Apply sealing compound where necessary when installing parts.
- When applying sealing compound, be careful that the sealing compound does not protrude from parts.
- When replacing any metal parts (for example body outer panel, members, etc.), be sure to take rust prevention measures.

Supplemental Restraint System (SRS) "AIR BAG"

The Supplemental Restraint System "AIR BAG", used along with a seat belt, helps to reduce the risk or severity of injury to the driver and front passenger in a frontal collision. The Supplemental Restraint System consists of air bag modules (located in the center of the steering wheel and in the instrument panel on the passenger side), a diagnosis sensor unit, a crash zone sensor (4WD models), warning lamp, wiring harness and spiral cable.

The vehicle is equipped with a passenger air bag deactivation switch. Because no rear seat exists where a rear-facing child restraint can be placed, the switch is designed to turn off the passenger air bag so that a rear-facing child restraint can be used in the front passenger seat. The switch is located in the center of the instrument panel, near the ashtray. When the switch is turned to the ON position, the passenger air bag is enabled and could inflate in a frontal collision. When the switch is turned to the OFF position, the passenger air bag is disabled and will not inflate in a frontal collision. A passenger air bag OFF indicator on the instrument panel lights up when the passenger air bag is switched OFF. The driver air bag always remains enabled and is not affected by the passenger air bag deactivation switch.

Information necessary to service the system safely is included in the **RS section** of this Service Manual.

WARNING:

- **To avoid rendering the SRS inoperative, which could increase the risk of personal injury or death in the event of a collision which would result in air bag inflation, all maintenance should be performed by an authorized NISSAN dealer.**
- **Improper maintenance, including incorrect removal and installation of the SRS, can lead to personal injury caused by unintentional activation of the system.**
- **Do not use electrical test equipment on any circuit related to the SRS unless instructed to in this Service Manual. SRS wiring harnesses are covered with yellow insulation either just before the harness connectors or on the complete harness, for easy identification.**
- **The vehicle is equipped with a passenger air bag deactivation switch which can be operated by the customer. When the passenger air bag is switched OFF, the passenger air bag is disabled and will not inflate in a frontal collision. When the passenger air bag is switched ON, the passenger air bag is enabled and could inflate in a frontal collision. After SRS maintenance or repair, make sure the passenger air bag deactivation switch is in the same position (ON or OFF) as when the vehicle arrived for service.**

Simpo PDF Merge and Split Unregistered Version - http://www.simpopdf.com

Clip and Fastener

- Clips and fasteners in BT section correspond to the following numbers and symbols.
- Replace any clips and/or fasteners which are damaged during removal or installation.

Symbol No.	Shapes	Removal & Installation
C101	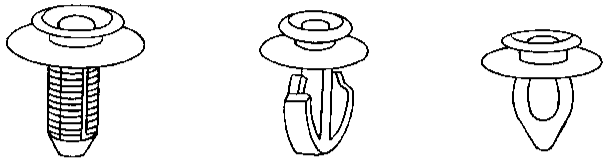 SBF302H	**Removal:** Remove by bending up with flat-bladed screwdrivers or clip remover. 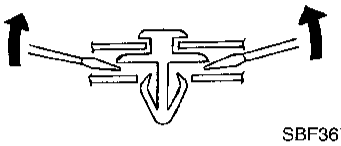 SBF367BA
C103	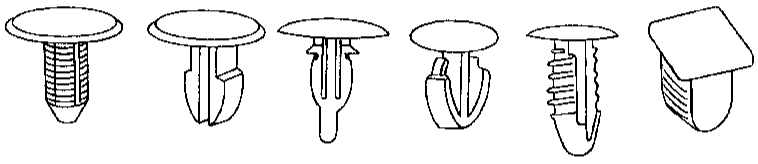 SBT095	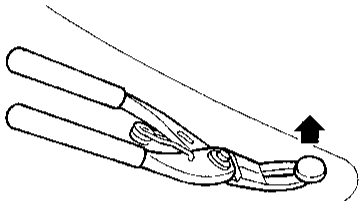 **Removal:** Remove with a clip remover. SBF423H
C203	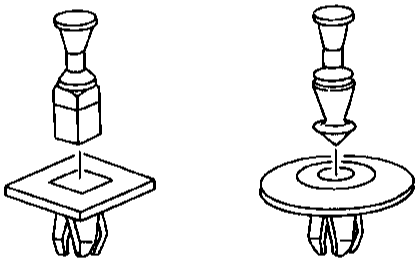 SBF258G	Push center pin to catching position. (Do not remove center pin by hitting it.) Push Push 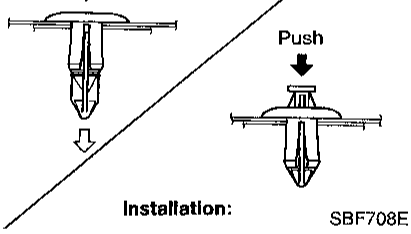 **Installation:** SBF708E
CE103	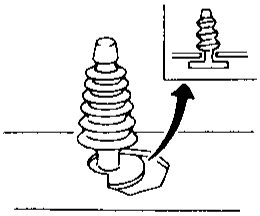 SBF104B	**Removal:** 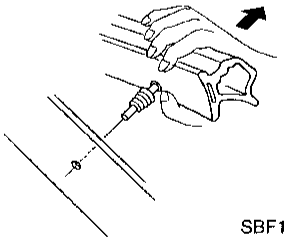 SBF147B

Clip and Fastener (Cont'd)

Simpo PDF Merge and Split Unregistered Version - http://www.simpopdf.com

Symbol No.	Shapes	Removal & Installation
CG104	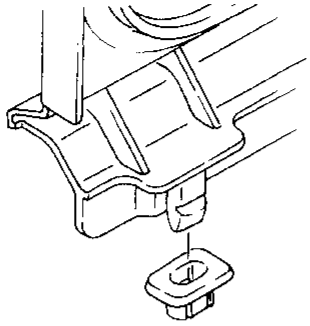 SBF351C	**Removal:** **Remove by bending up with flat-bladed screwdrivers.** 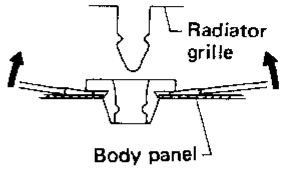 SBF352C
CE114	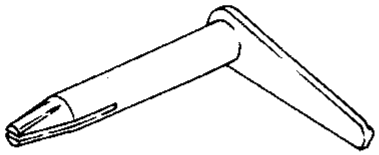 SBF353C	—
CG101 	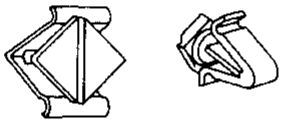 SBF145B	**Removal:**  Rotate 45° to remove.  **Removal:** **Installation:** 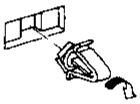 SBF085B
CR103	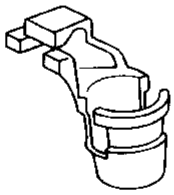 SBF768B	**Removal:** Holder portion of clip must be spread out to remove rod. 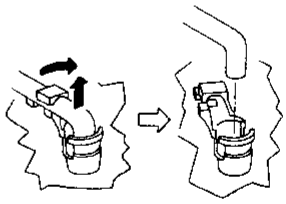 SBF770B
CS101 	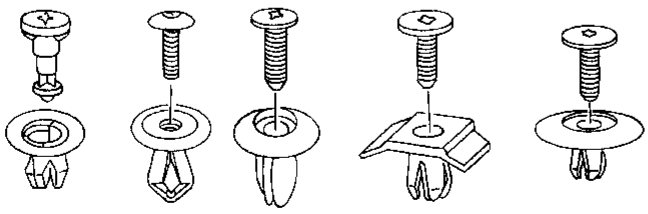 SBF078B	**Removal:** 1. Screw out with a Phillips screwdriver. 2. Remove female portion with flat-bladed screwdriver. 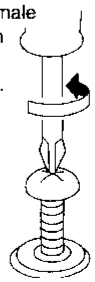 SBF992G

Simpo PDF Merge and Split Unregistered Version - http://www.simpopdf.com

Body Front End

- When removing or installing hood, place a cloth or other padding on hood. This prevents vehicle body from being scratched.
- Bumper fascia is made of plastic. Do not use excessive force and be sure to keep oil away from it.
- Hood adjustment: Adjust at hinge portion.
- Hood lock adjustment: After adjusting, check hood lock control operation. Apply a coat of grease to hood locks engaging mechanism.
- Hood opener: Do not attempt to bend cable forcibly. Doing so increases effort required to unlock hood.

REMOVAL — Front bumper assembly

① Remove screws securing left and right combination lamps and remove the lamps. A
② Remove clips securing front grille and remove the front grille. B
③ Remove bolts securing left and right bumper stays. C
④ Remove bolts securing left and right bumper side brackets. D
⑤ Remove bolts securing left and right bumper side stays. E
⑥ Remove bumper assembly.
Separate bumper assembly.

Body Front End (Cont'd)

Simpo PDF Merge and Split Unregistered Version - http://www.simpopdf.com

SEC. 261 • 620 • 650

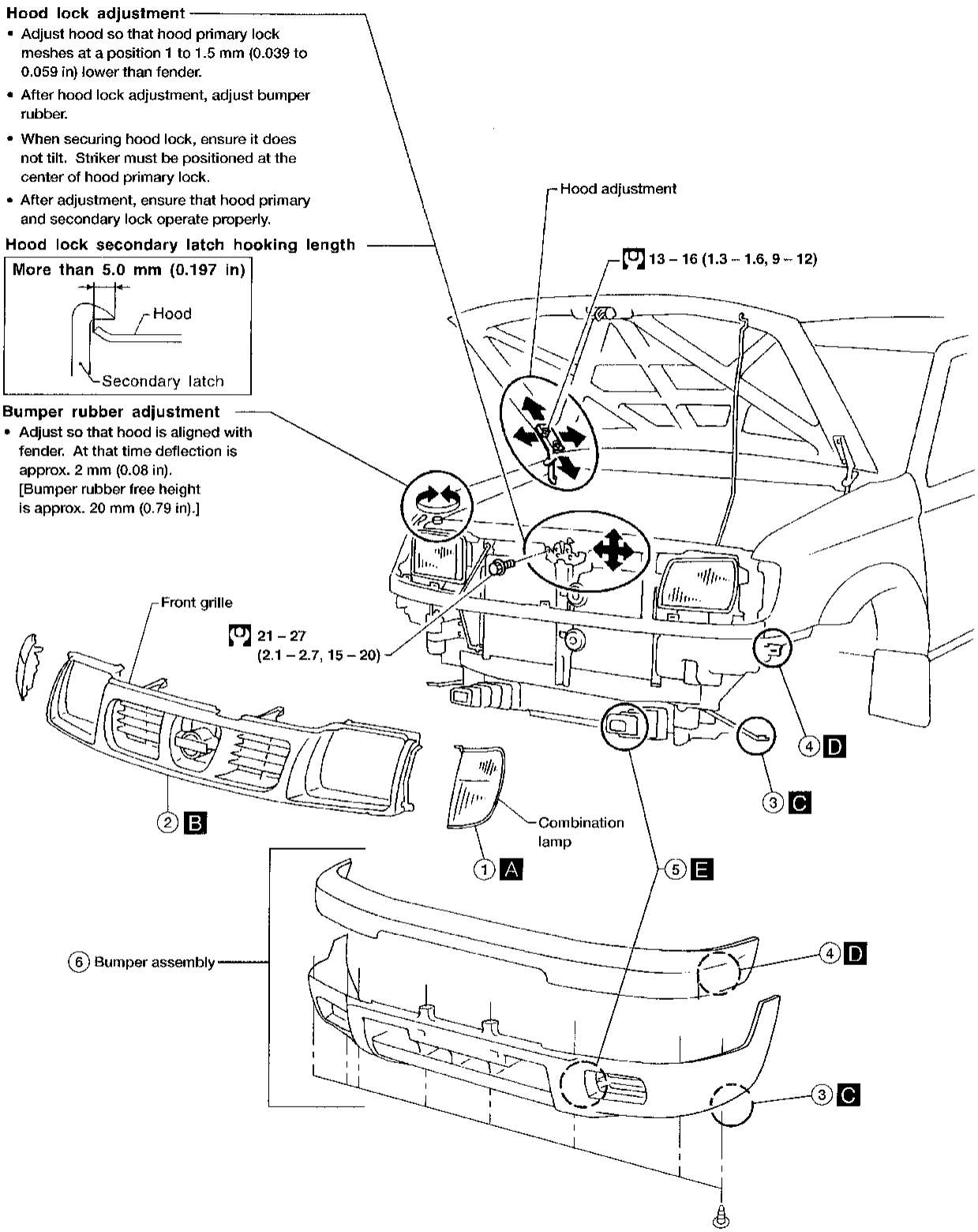

ABT302

Body Front End (Cont'd)

Simpo PDF Merge and Split Unregistered Version - http://www.simpopdf.com

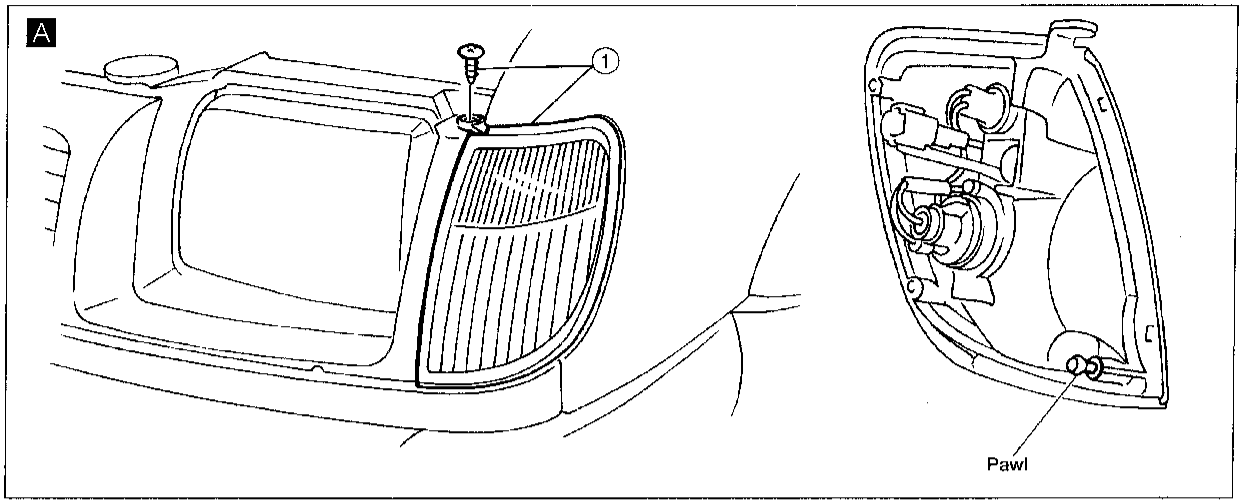

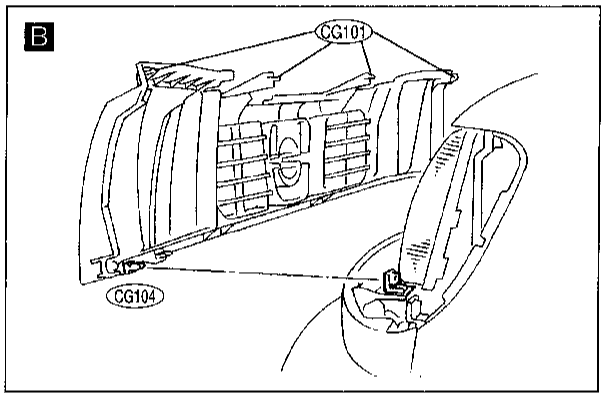

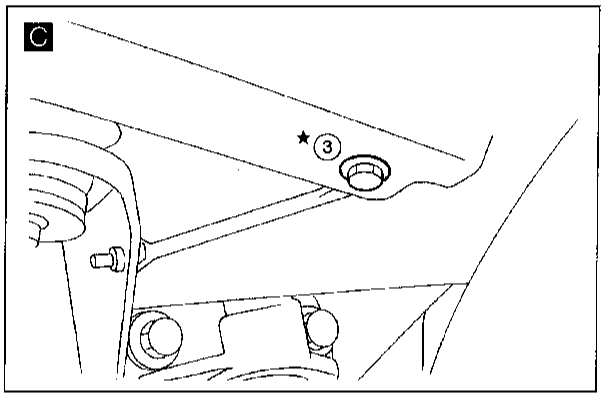

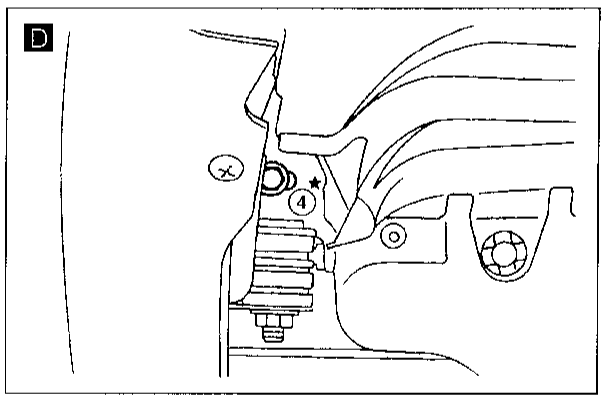

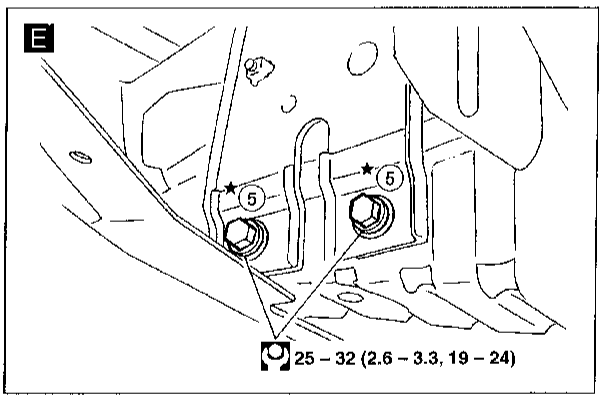

: N·m (kg-m, ft-lb)

★ : Bumper assembly mounting bolts

ABT330

Simpo PDF Merge and Split Unregistered Version - http://www.simpopdf.com

Body Rear End

- Adjustment: Adjust at hinge portion for proper fit.
- Lock system adjustment: Adjust striker so that it is in the center of the lock. After adjustment, check trunk lid lock operation.
- After installation, make sure that rear gate opens smoothly.

REMOVAL — Rear bumper assembly

① Remove nuts securing bumper side stay. A or G
② Remove bumper assembly.

SEC. 930A • 940A

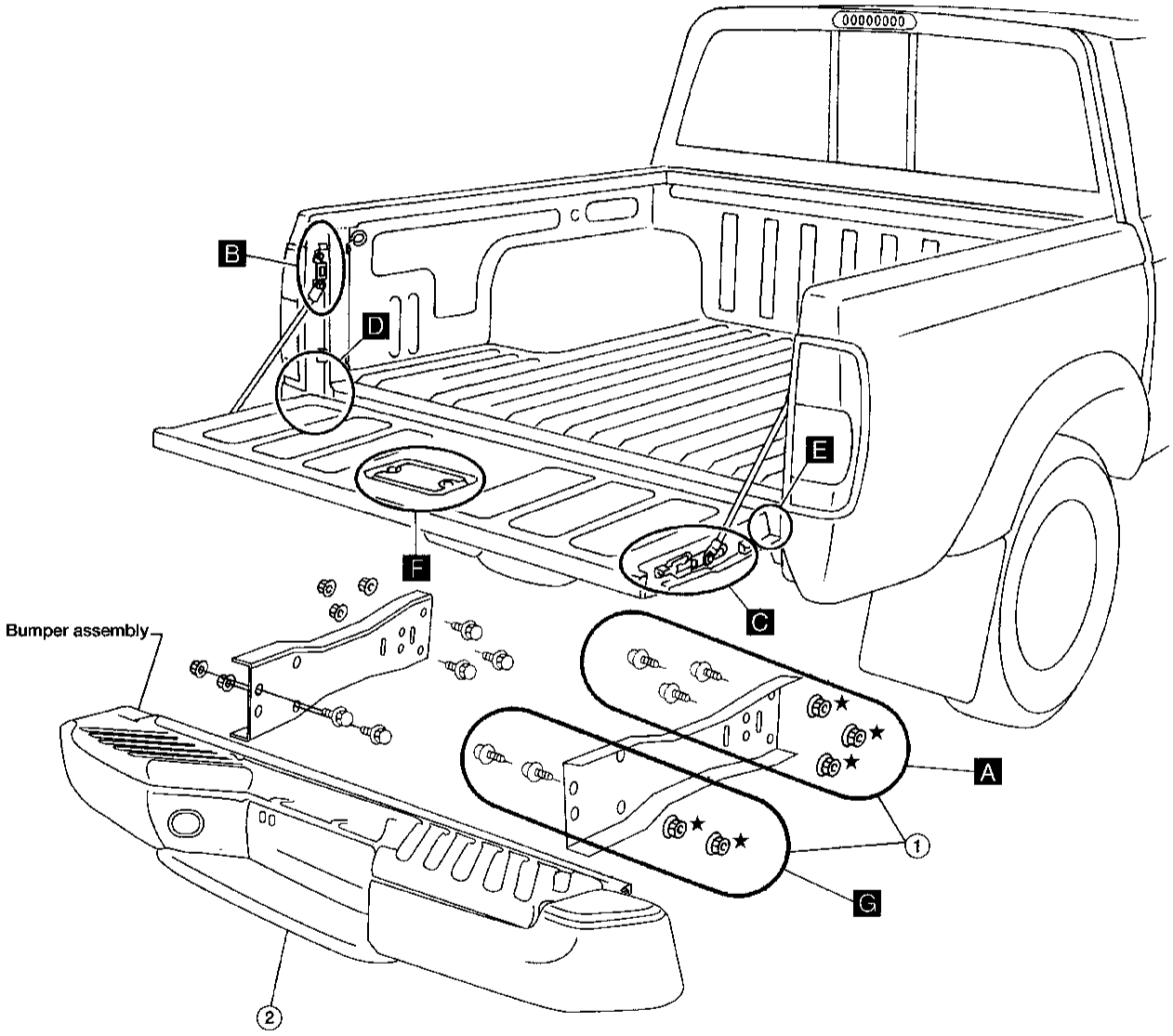

★ : Bumper assembly mounting nuts

ABT303

Body Rear End (Cont'd)

Simpo PDF Merge and Split Unregistered Version - http://www.simpopdf.com

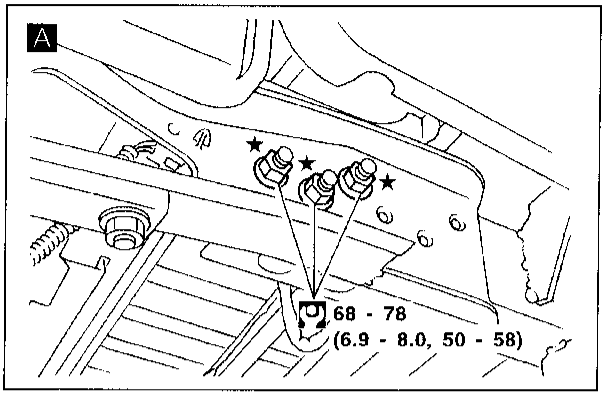

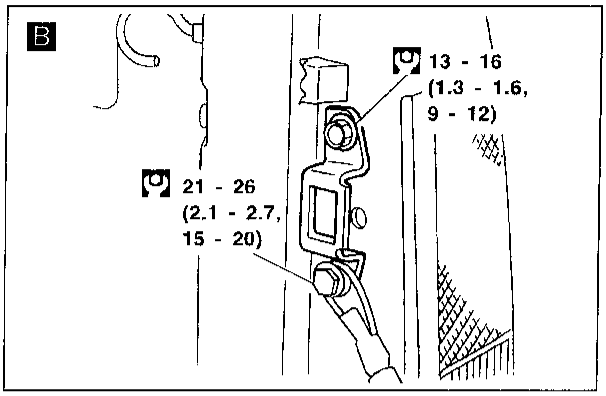

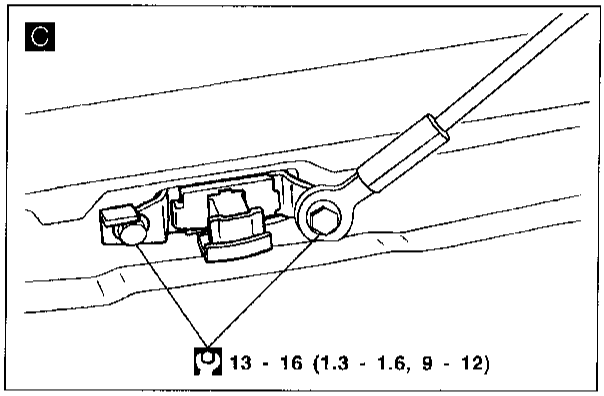

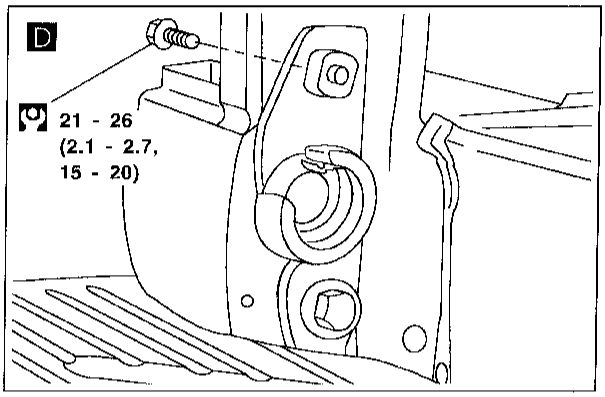

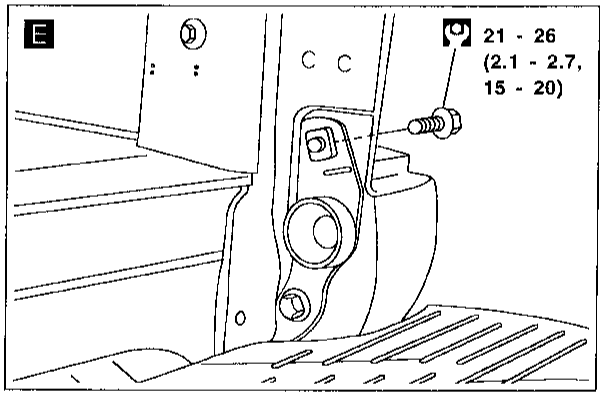

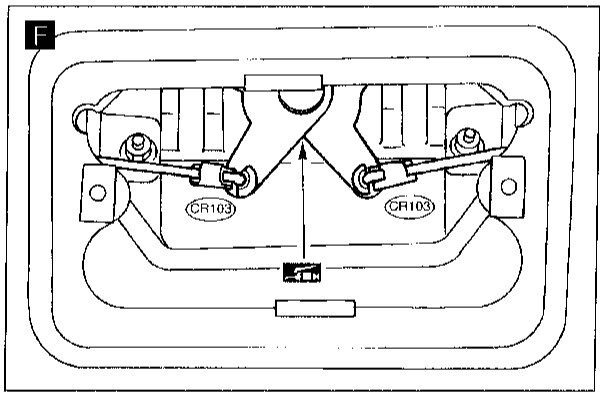

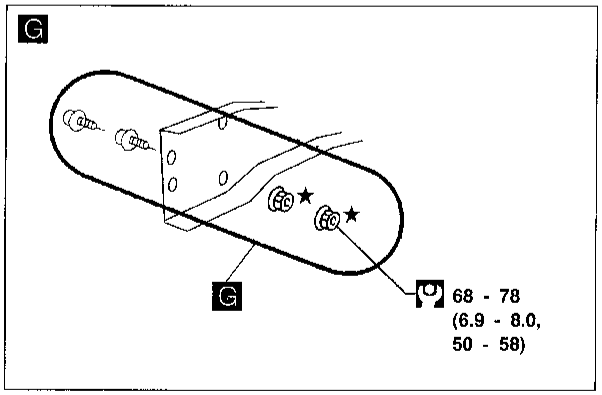

: N•m (kg-m, ft-lb)
★ : Bumper assembly mounting bolts and nuts

ABT304

Simpo PDF Merge and Split Unregistered Version - http://www.simpopdf.com

Front Door

- For removal of door trim, refer to "Door Trim" in "INTERIOR TRIM" for details, BT-17.
- After adjusting door or door lock, check door lock operation.

SEC. 800•803•805

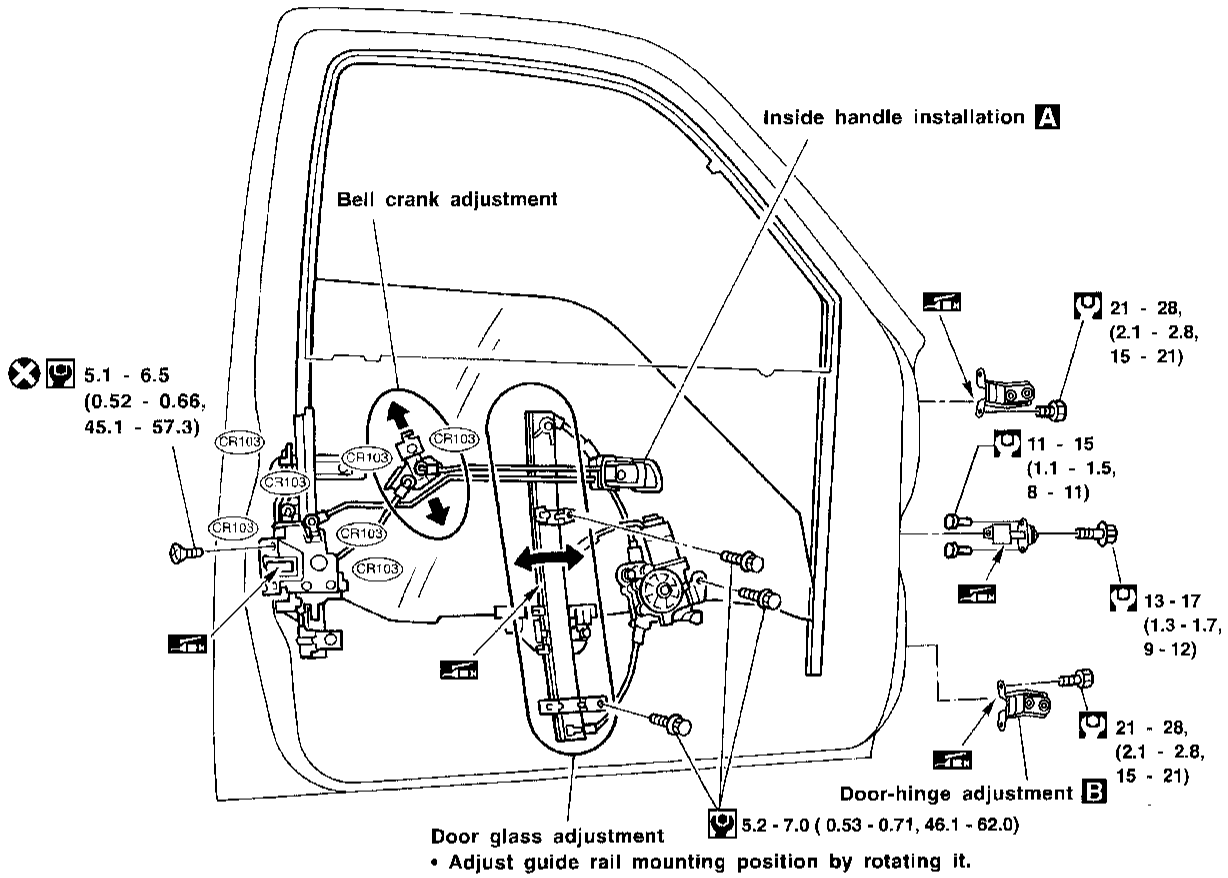

A Bell crank adjustment

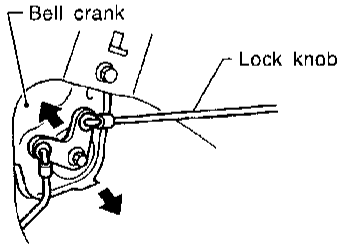

Lock door after setting door lock assembly and inside handle in position.
Move bell crank in direction of arrow (shown in figure at left) to take up knob free play, and secure with bolts.

B Door-hinge adjustment

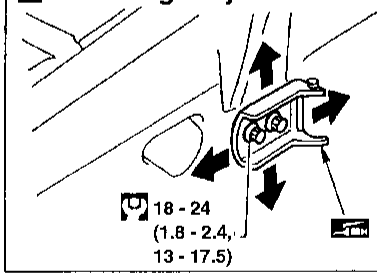

Striker adjustment

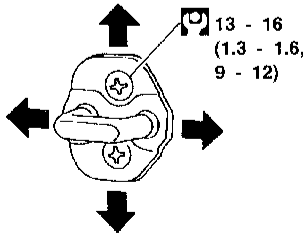

: N•m (kg-m, in-lb)
: N•m (kg-m, ft-lb)

ABT305

Simpo PDF Merge and Split Unregistered Version - http://www.simpopdf.com

CAUTION:

- **Disconnect both terminals from battery in advance.**
- **Disconnect air bag module connectors in advance.**
- **Be careful not to scratch finishers and other parts.**
- **Never tamper with or force air bag lid open, as this may adversely affect air bag performance.**

REMOVAL — Instrument panel assembly

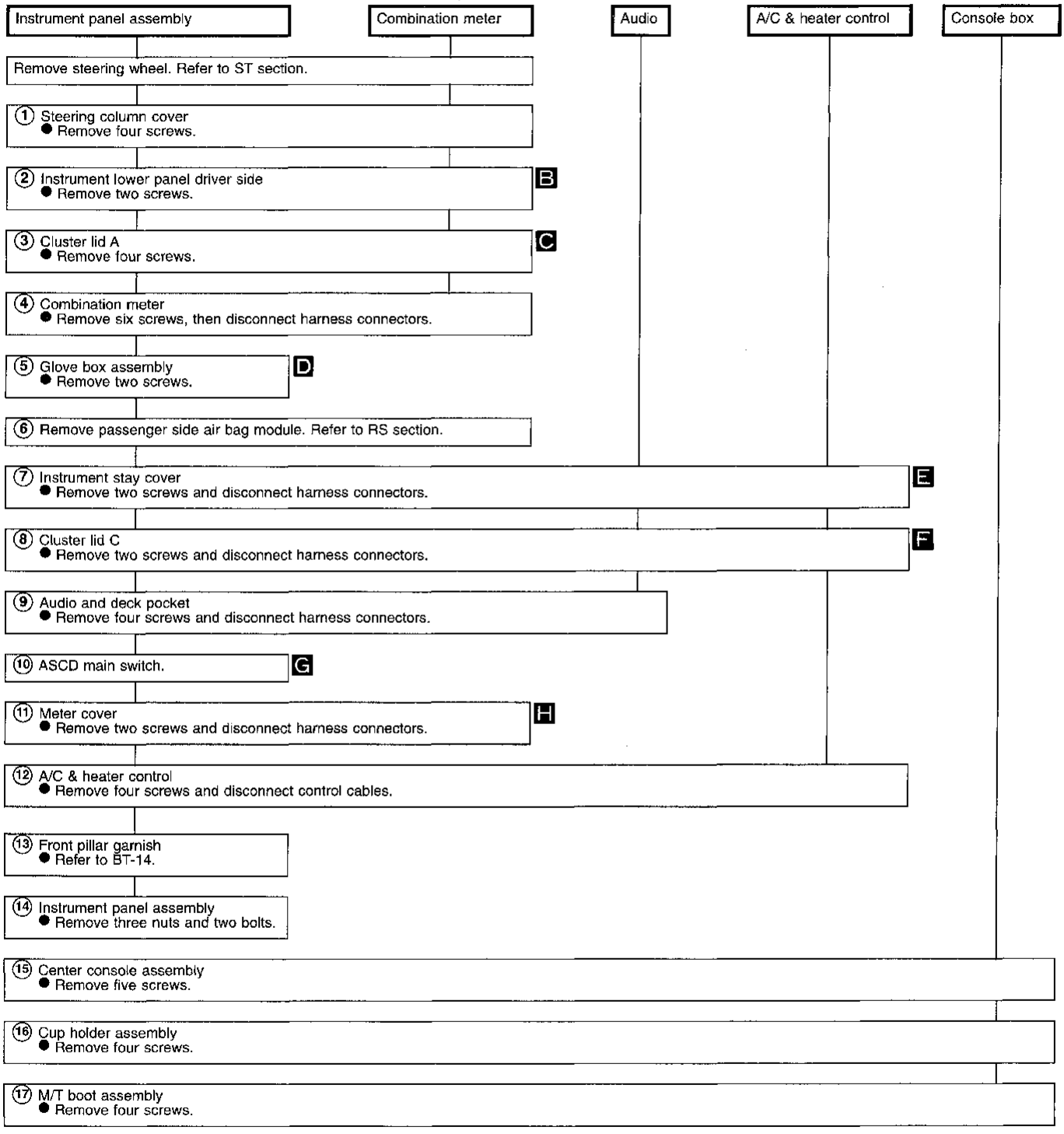

Simpo PDF Merge and Split Unregistered Version - http://www.simpopdf.com

SEC. 272 • 280 • 680 • 685 • 969

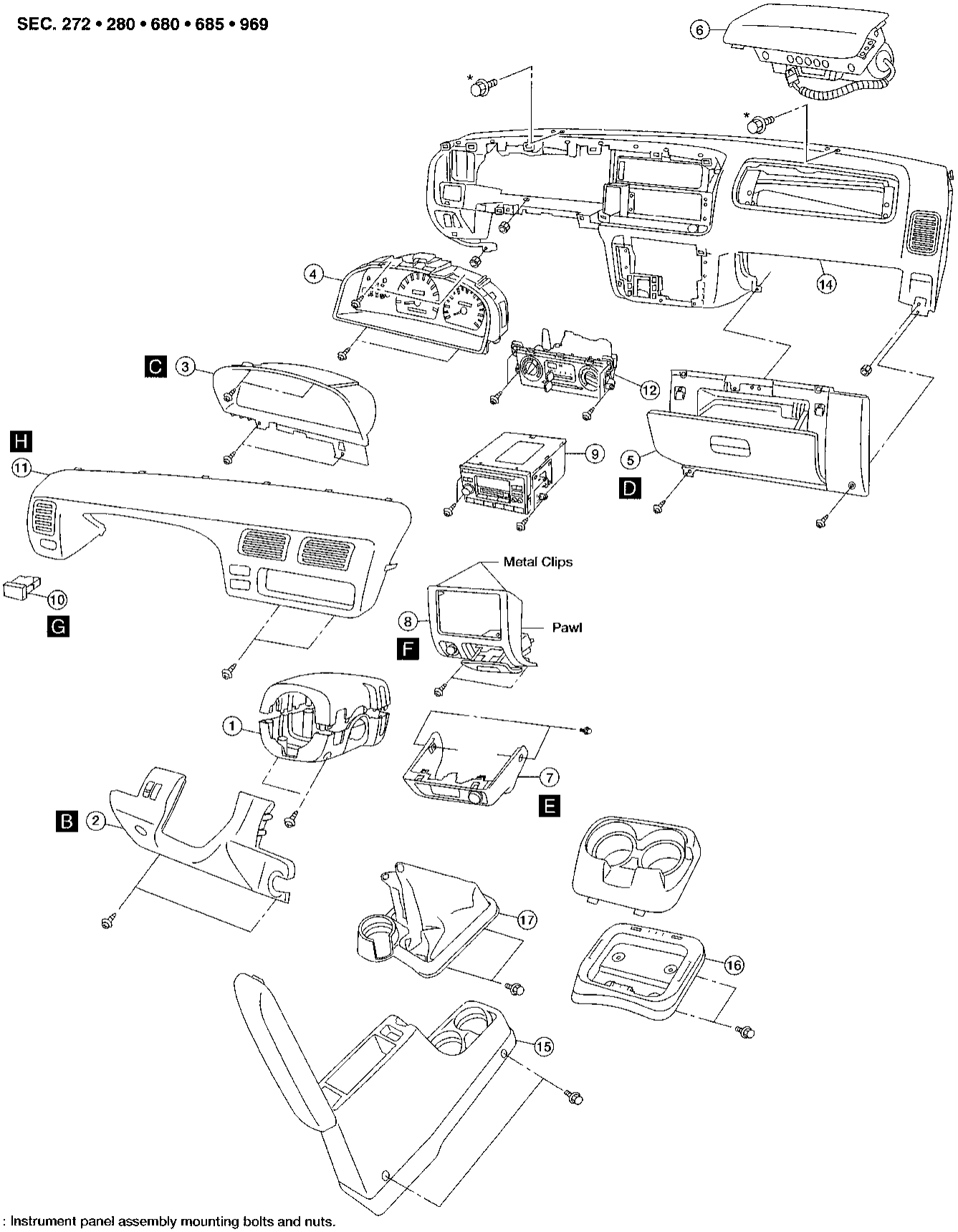

*: Instrument panel assembly mounting bolts and nuts.

ABT319

Simpo PDF Merge and Split Unregistered Version - http://www.simpopdf.com

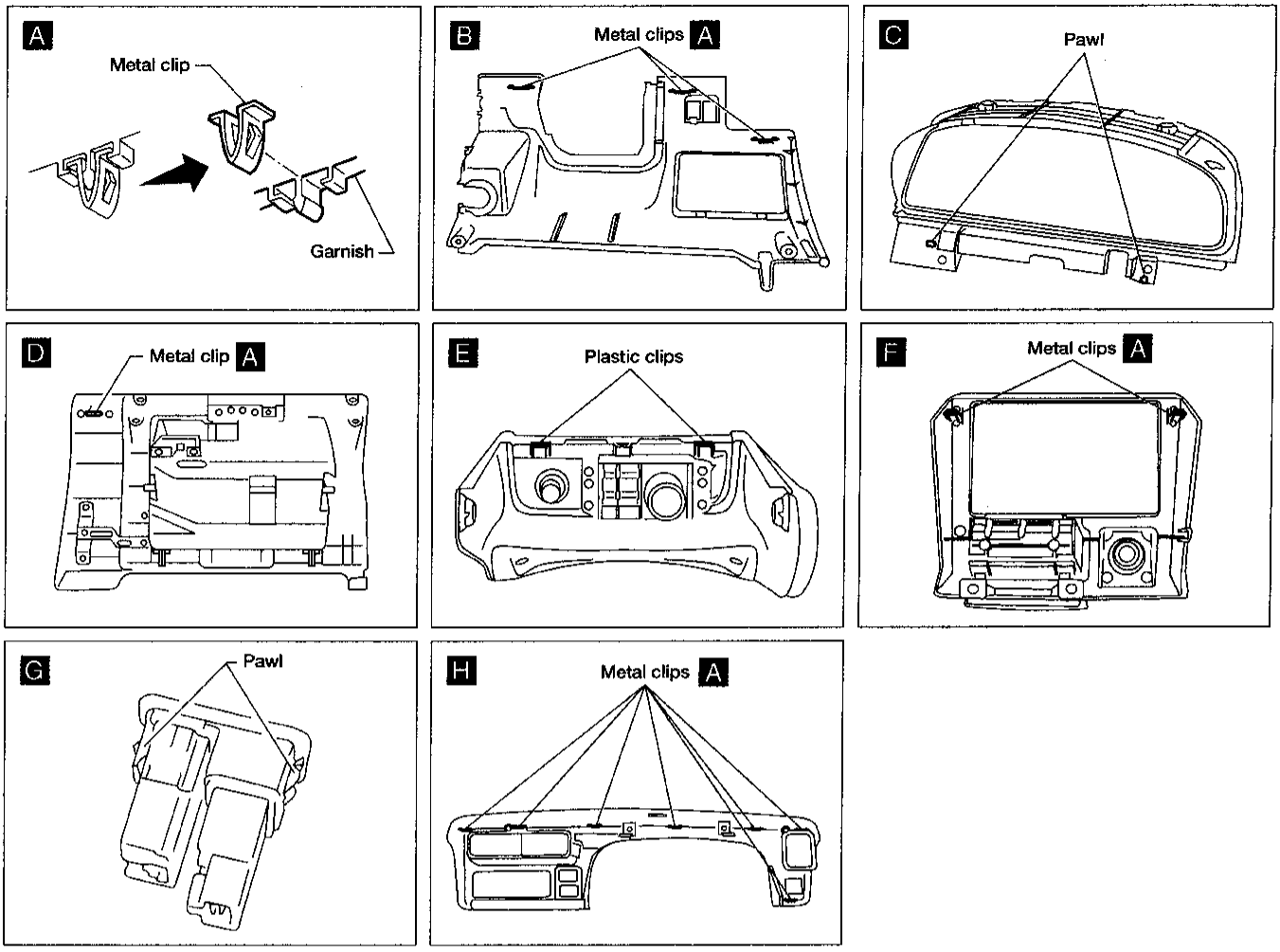

ABT341

Simpo PDF Merge and Split Unregistered Version - http://www.simpopdf.com

Side and Floor Trim

CAUTION:
Wrap the tip of flat-bladed screwdriver with a cloth when removing metal clips from garnishes.

REMOVAL — Body side trim

King cab model

① Remove front and jump seats. Refer to "SEAT" for details, BT-26, 29.
② Remove kicking plates.
③ Remove dash side lower finishers.
④ Remove body side welts.
⑤ Remove front pillar garnishes.
⑥ Remove jack cover.
⑦ Remove lower rear pillar garnishes.
⑧ Remove seat belt upper guide loop. Refer to "SEAT BELTS" in RS section.
⑨ Remove upper rear pillar garnishes.

Standard cab model

① Remove front seats. Refer to "SEAT" for details, BT-26.
② Remove kicking plates.
③ Remove dash side lower finishers.
④ Remove body side welts.
⑤ Remove front pillar garnishes.
⑥ Remove seat belt upper guide loop. Refer to "SEAT BELT" in RS section.
⑦ Remove upper rear garnishes.

Simpo PDF Merge and Split Unregistered Version - http://www.simpopdf.com

SEC. 745 • 769 • 799
King Cab shown Standard Cab similar

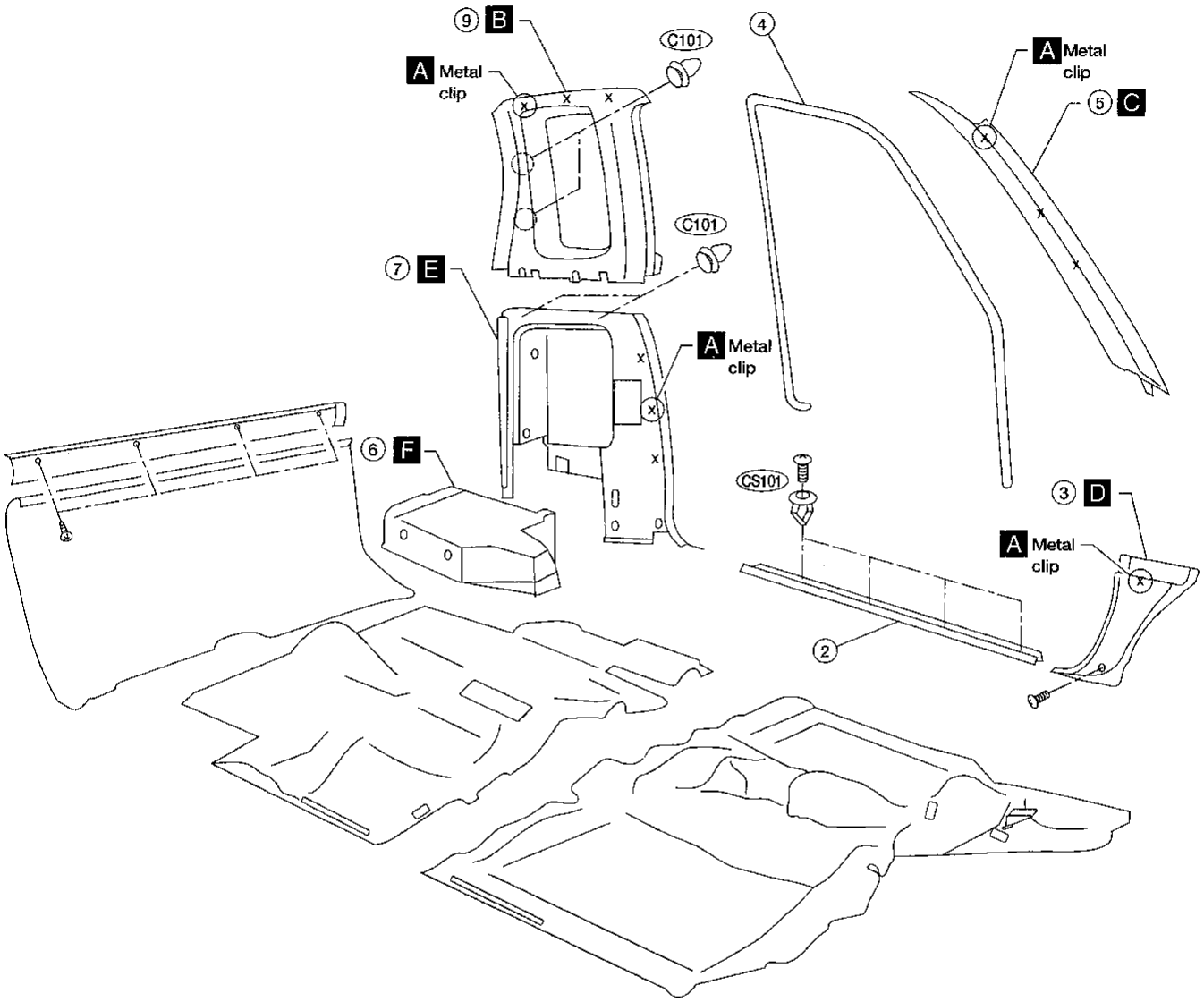

ABT339

Simpo PDF Merge and Split Unregistered Version - http://www.simpopdf.com

King Cab shown Standard Cab similar

A

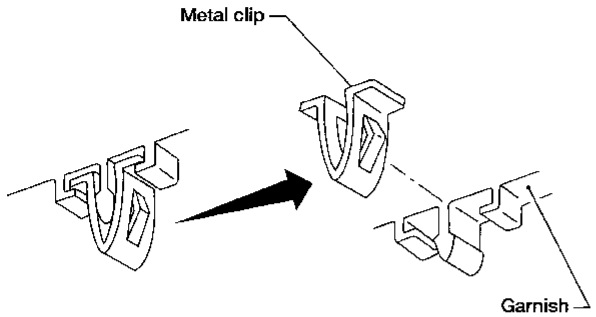

D

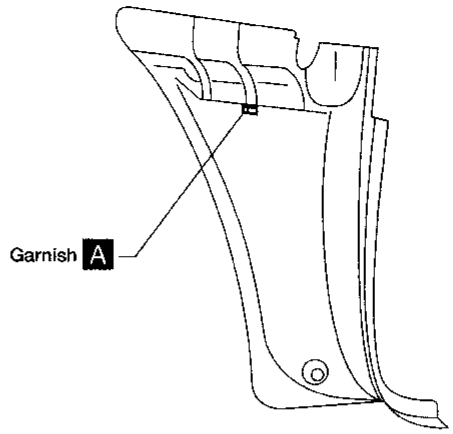

B

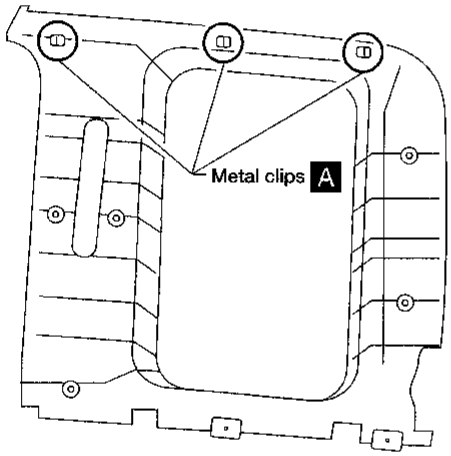

E

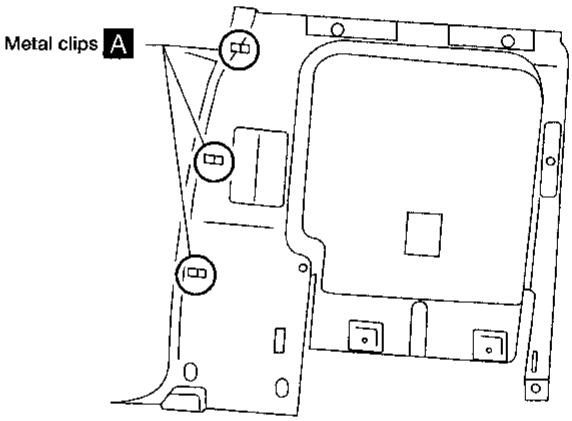

C

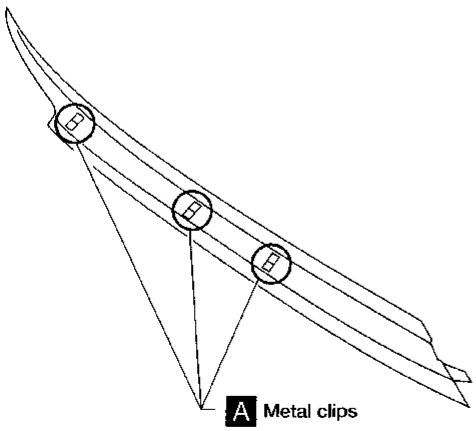

F

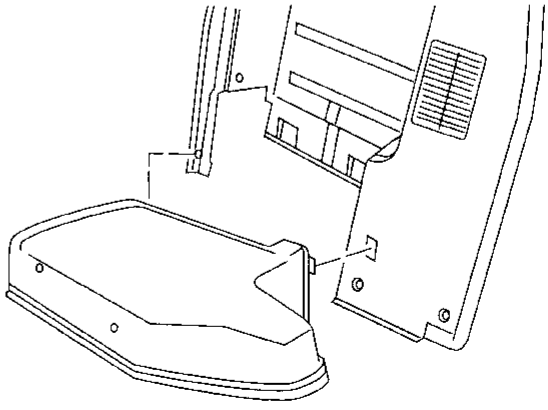

ABT340

Simpo PDF Merge and Split Unregistered Version - http://www.simpopdf.com

Door Trim

REMOVAL

Door trim (Formed type)

Remove manual window regulator handle, if equipped.

① Remove inside handle escutcheon. A
② Remove door armrest. B
③ Remove screw securing door pull handle.
④ Remove power window switch, then disconnect the connector. C D
⑤ Remove two screws.
⑥ Remove clips securing door finisher.
⑦ Lift out door finisher.

Door trim (Flat type)

① Remove inside handle escutcheon. A
② Remove window regulator handle.
③ Remove screws securing door armrest and remove armrest.
④ Lift out door finisher.

Formed type (without power windows)

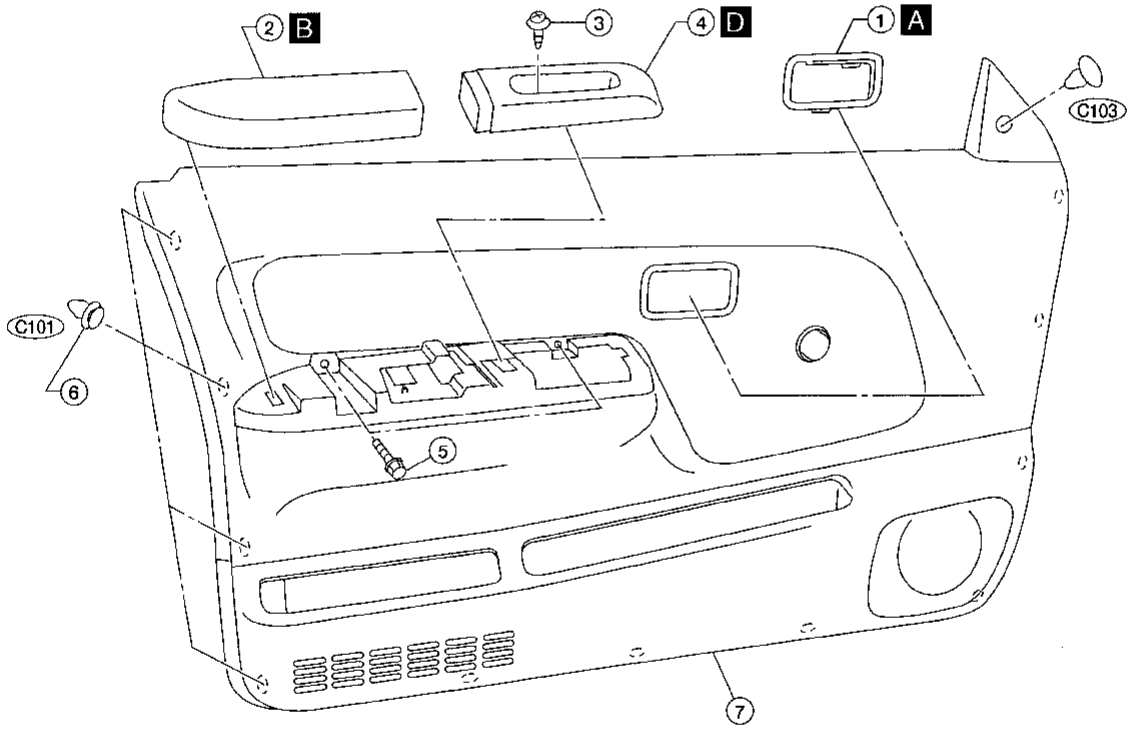

ABT297

Simpo PDF Merge and Split Unregistered Version - http://www.simpopdf.com

Formed type (with power windows)

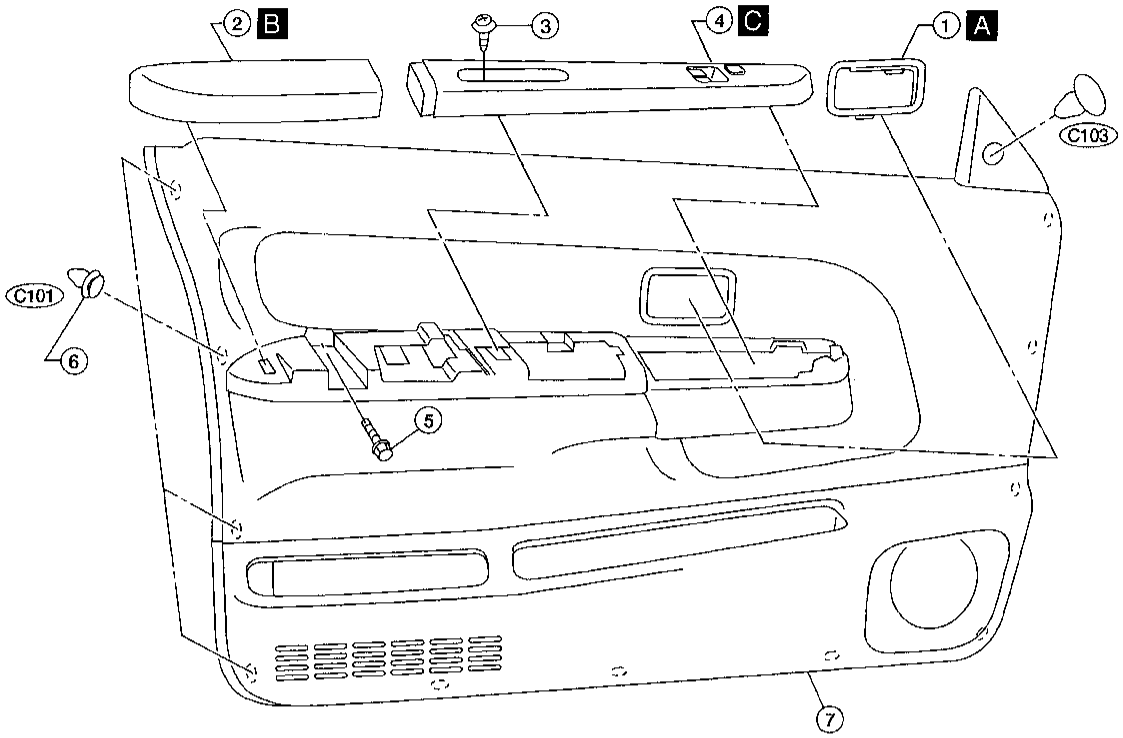

ABT298

Flat type

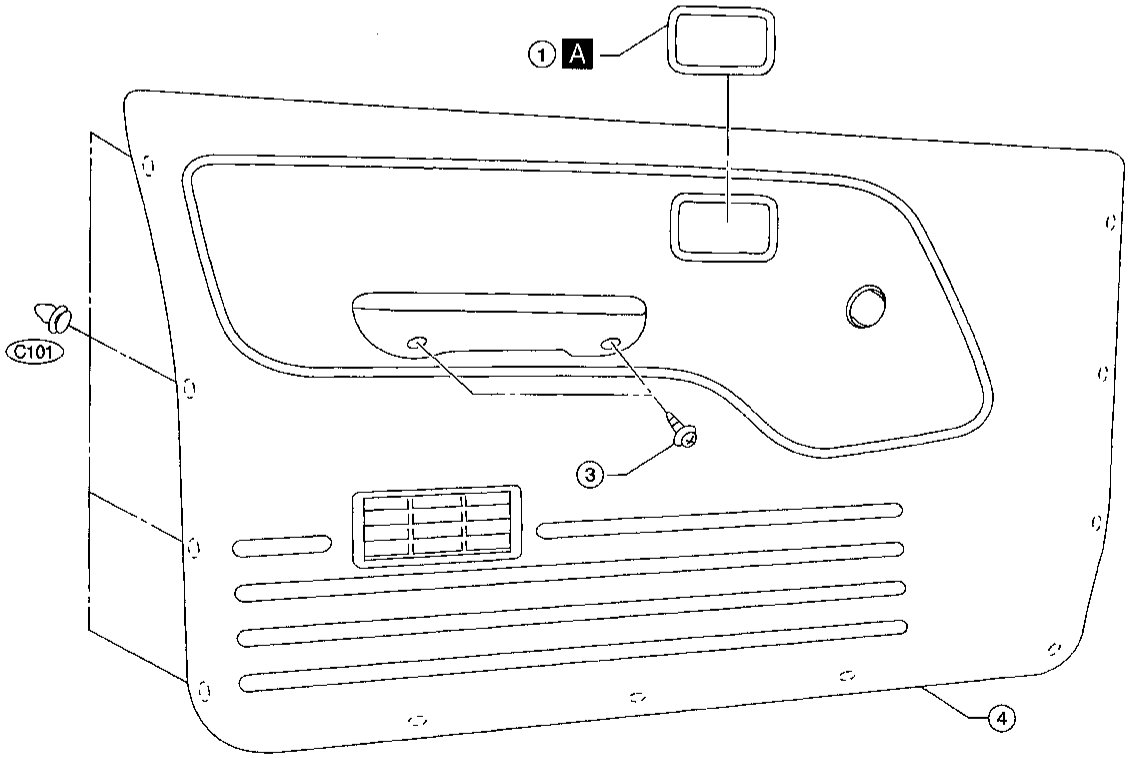

ABT296

Simpo PDF Merge and Split Unregistered Version - http://www.simpopdf.com

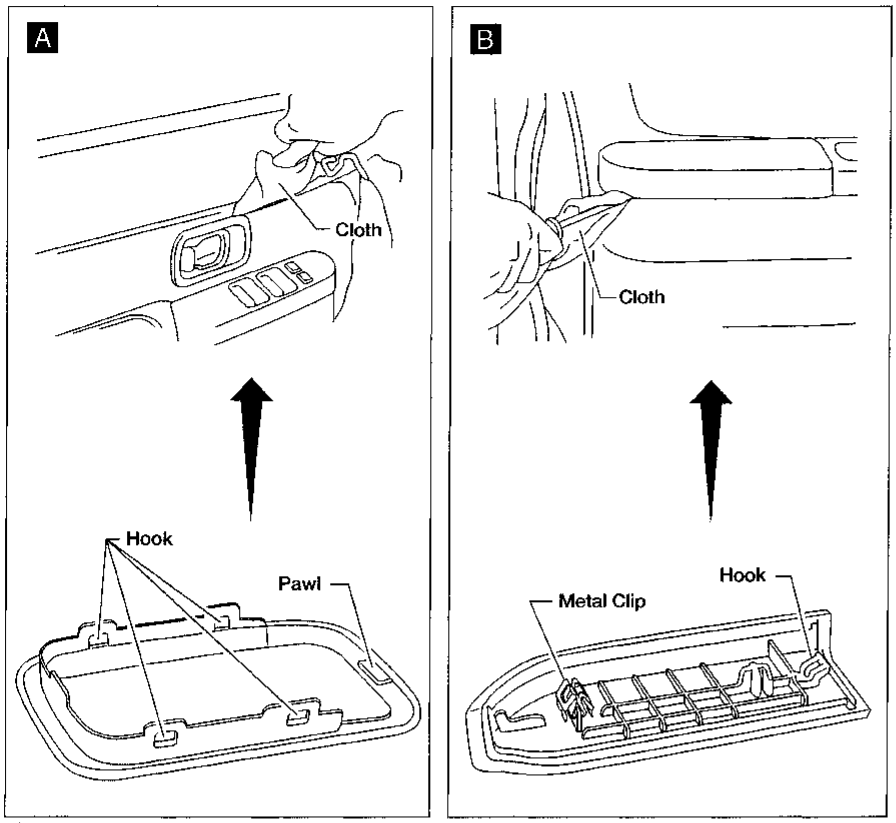

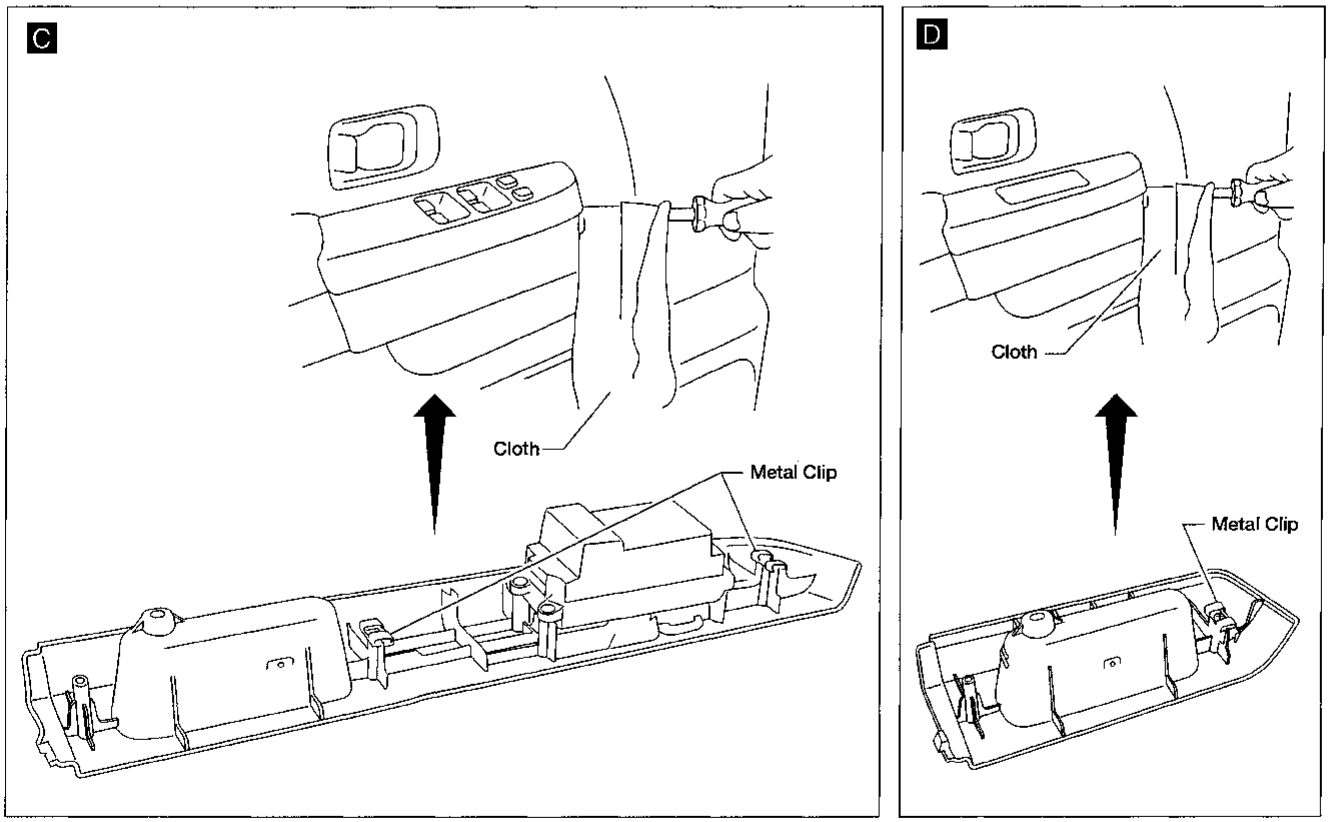

ABT299

Simpo PDF Merge and Split Unregistered Version - http://www.simpopdf.com

Roof Trim

REMOVAL — Headlining

① Remove front and jump seats if equipped. Refer to “SEAT” for details, BT-26, 29.
② Remove front seat belt. Refer to “SEAT BELTS” in RS section for details.
③ Remove body side trim. Refer to “Side and Floor Trim” for details, BT-14.
④ Remove sun visors.
⑤ Remove interior lamp assembly. A
⑥ Remove assist grip if equipped. B
⑦ Remove sunroof if equipped, refer to “SUNROOF” for details, BT-30.
⑧ Remove clips securing headlining.
⑨ Remove headlining.

SEC. 264 • 738 • 964

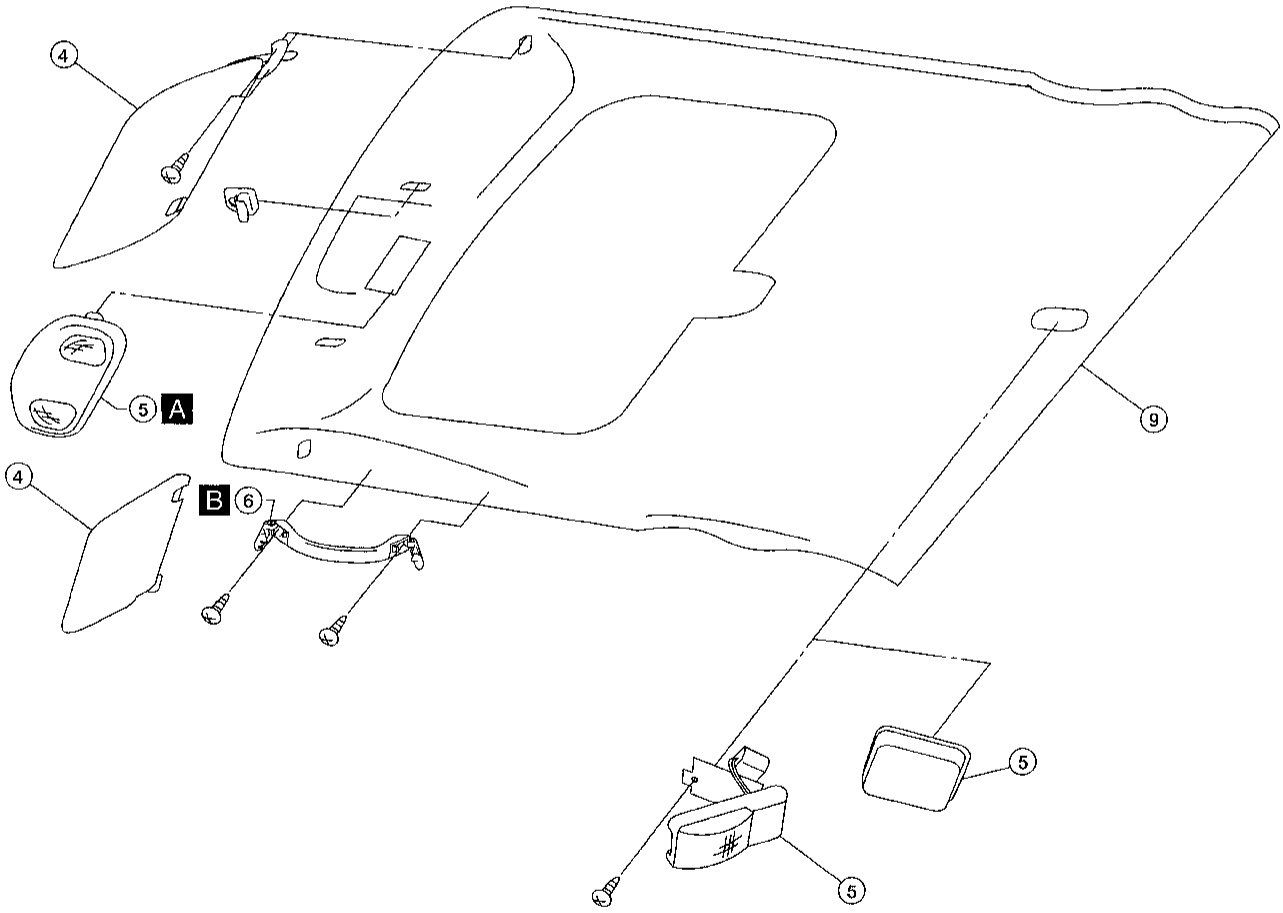

ABT342

Simpo PDF Merge and Split Unregistered Version - http://www.simpopdf.com

A

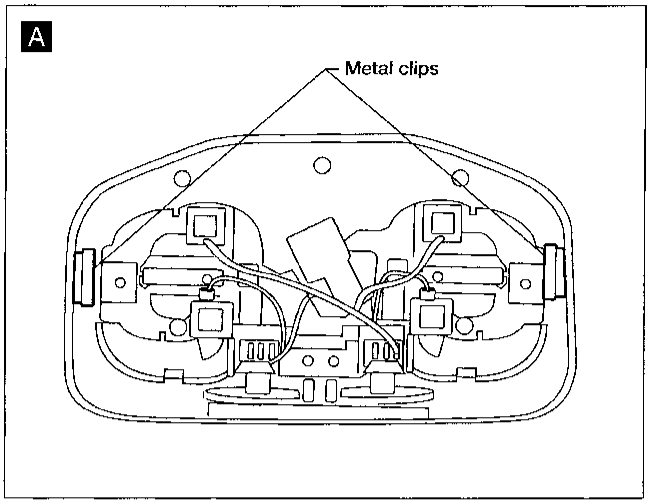

B

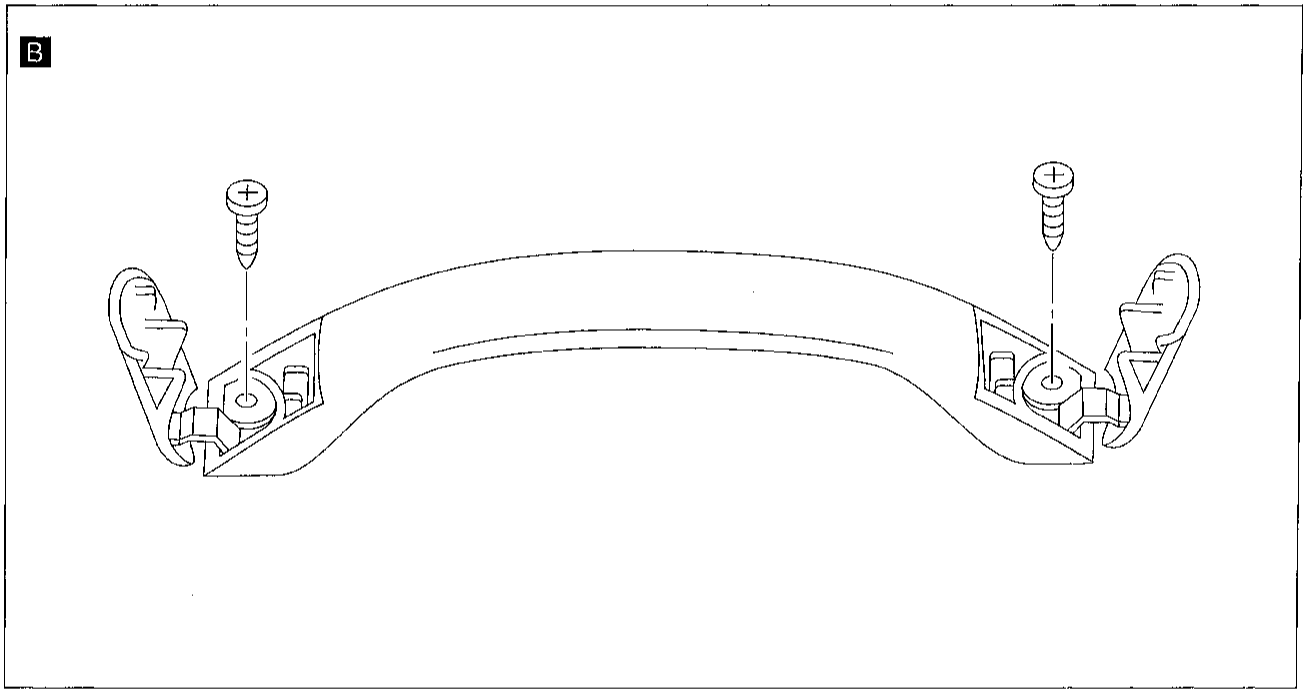

ABT343

Simpo PDF Merge and Split Unregistered Version - http://www.simpopdf.com

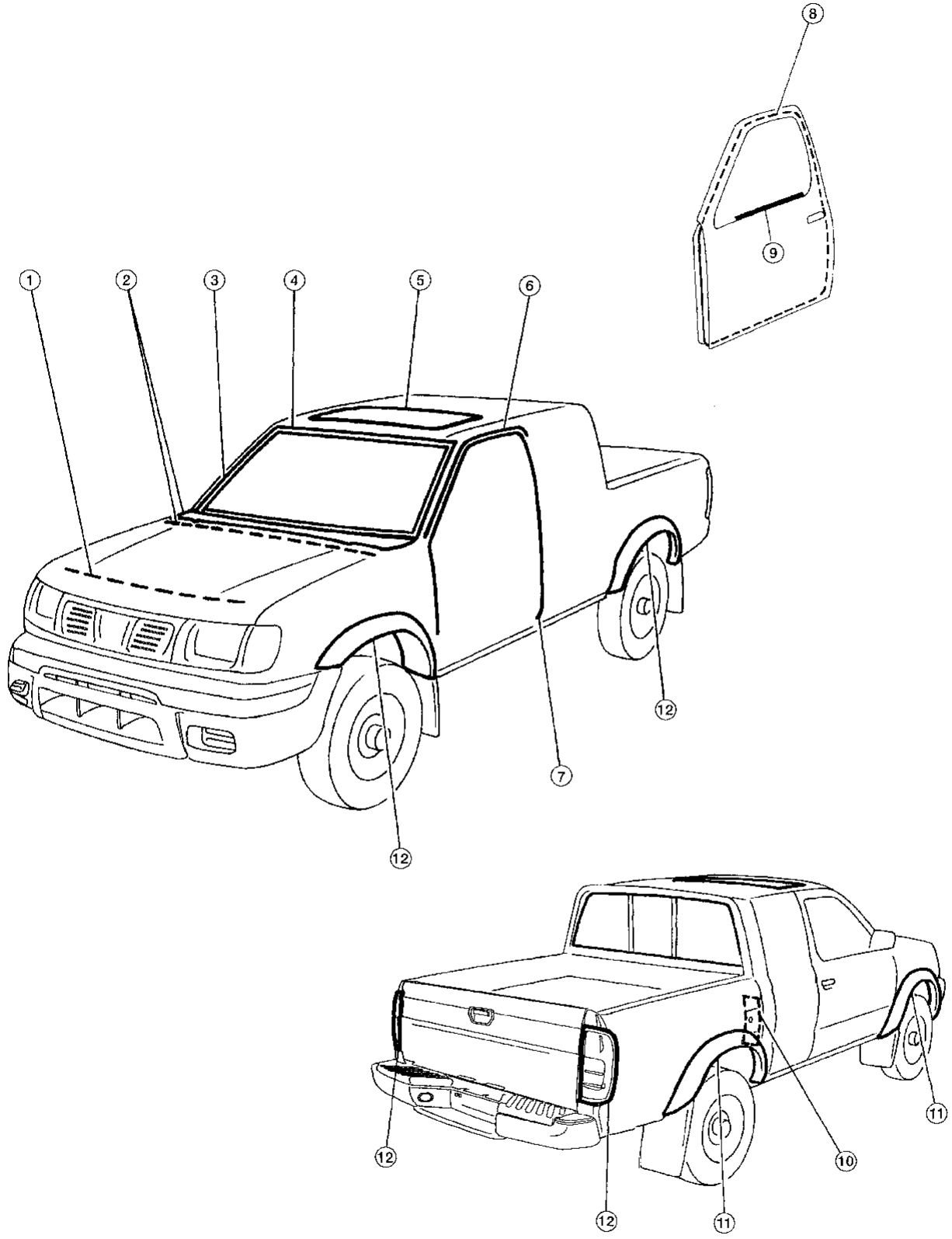

ABT306

Simpo PDF Merge and Split Unregistered Version - http://www.simpopdf.com

① Hood front sealing rubber

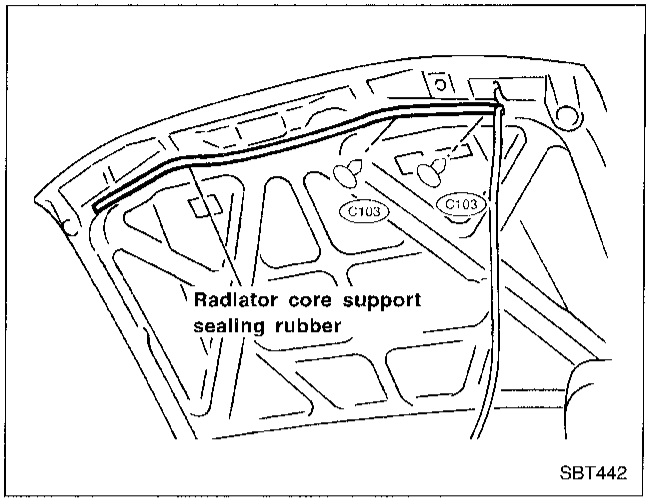

② Cowl top seal and cowl top grille

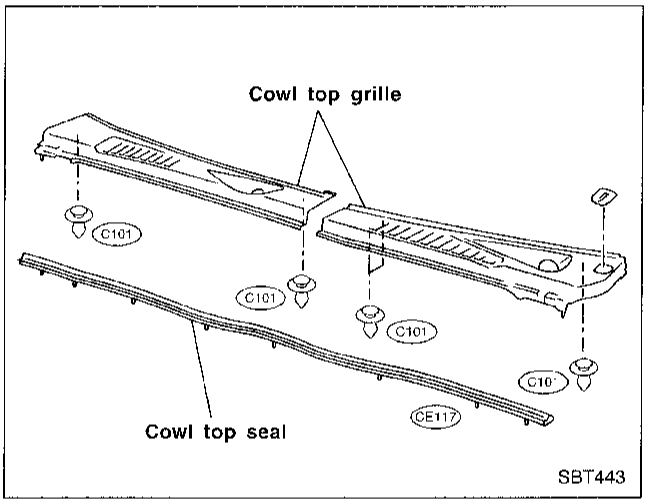

③ Windshield side molding

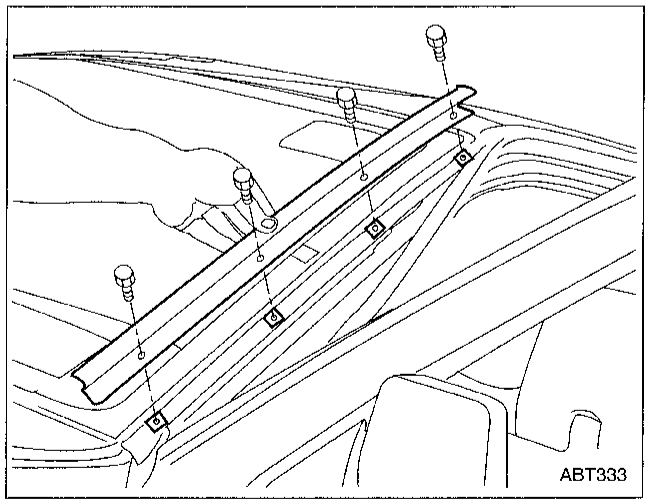

④ Windshield upper molding

SEC. 720

1. Cut off urethane adhesive at glass end.
2. Remove old urethane adhesive from panel surface.
3. Set molding fastener and apply primer to body panel, and apply urethane adhesive to body.

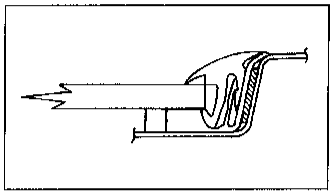

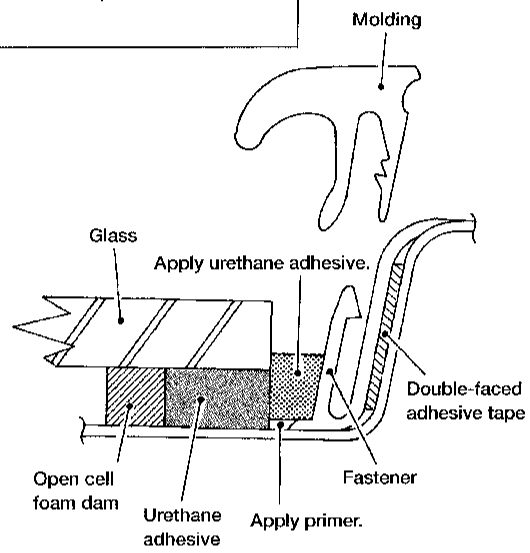

4. Install molding by aligning the molding mark located on center with vehicle center. Be sure to install tightly so that there is no gap around the corner.

ABT332

⑤ Sunroof weatherstrip and lid protector

SEC. 736

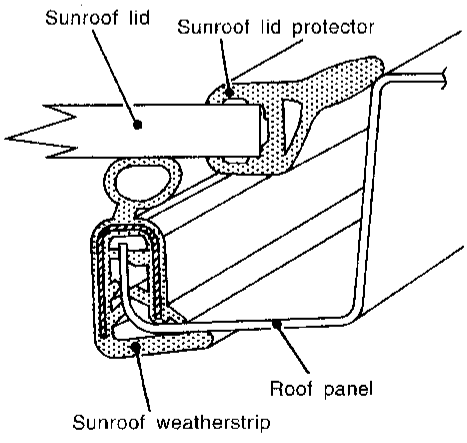

Simpo PDF Merge and Split Unregistered Version - http://www.simpopdf.com

⑥ Drip weatherstrip

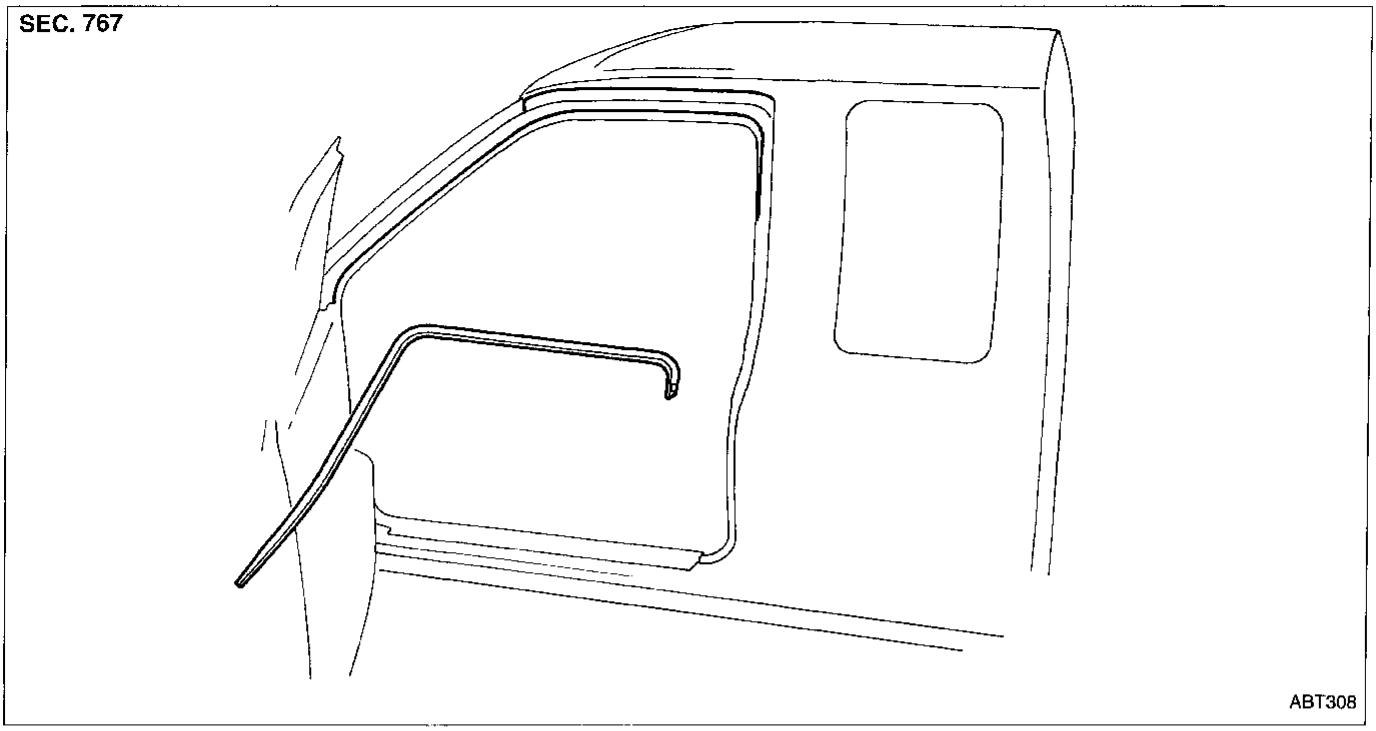

⑦ Body side welt

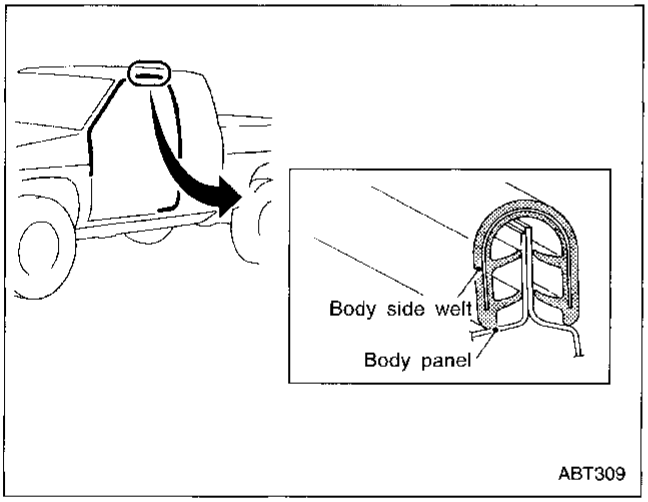

⑨ Door outside molding

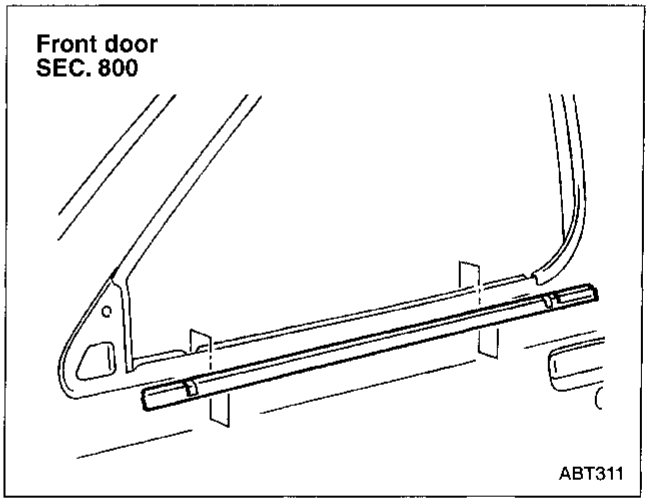

⑧ Door weatherstrip

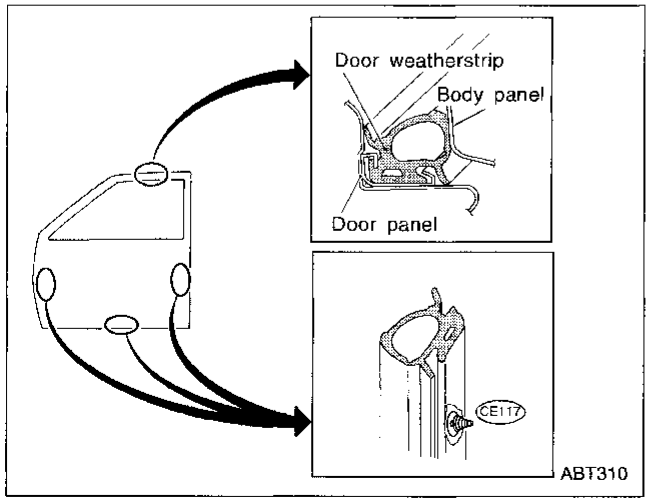

Simpo PDF Merge and Split Unregistered Version - http://www.simpopdf.com

⑩ Drafter duct

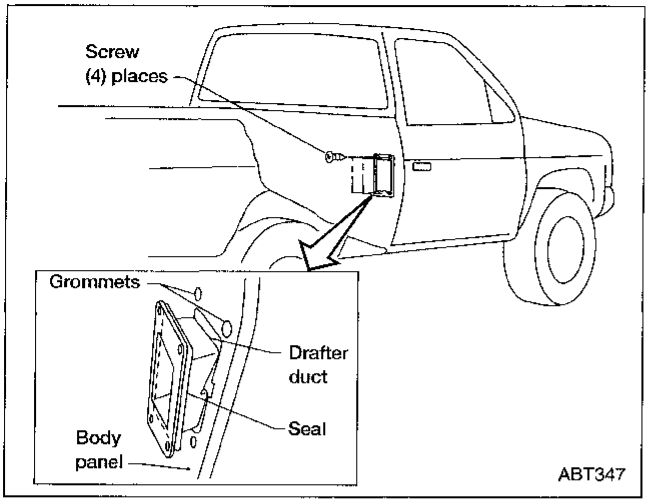

⑪ Over fender

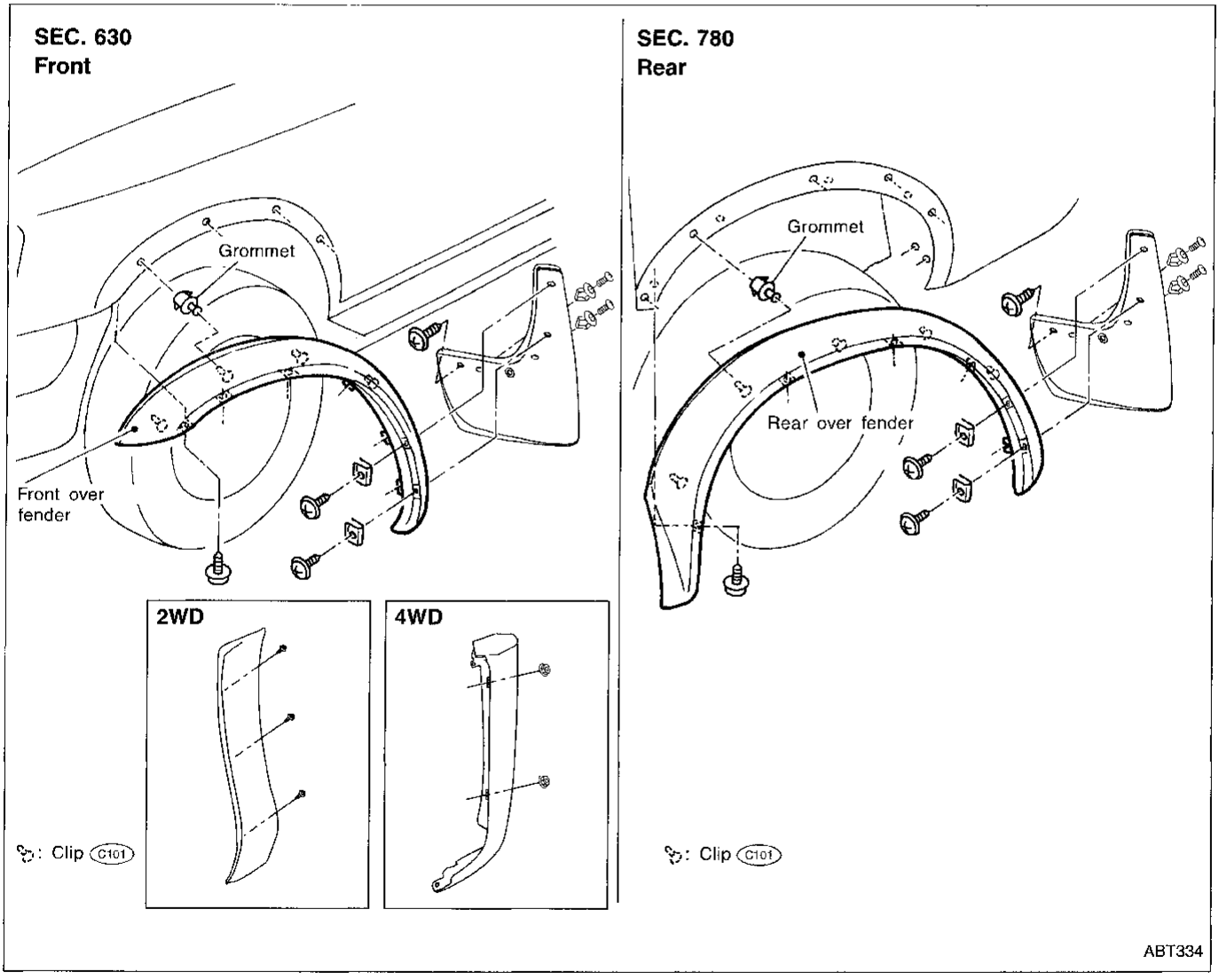

⑫ Rear combination lamp

Mounted with bolts.

Simpo PDF Merge and Split Unregistered Version - http://www.simpopdf.com

- When removing and installing the seat trim, carefully handle it to keep dirt out and avoid damage.

Front Seat

SEC. 868•870

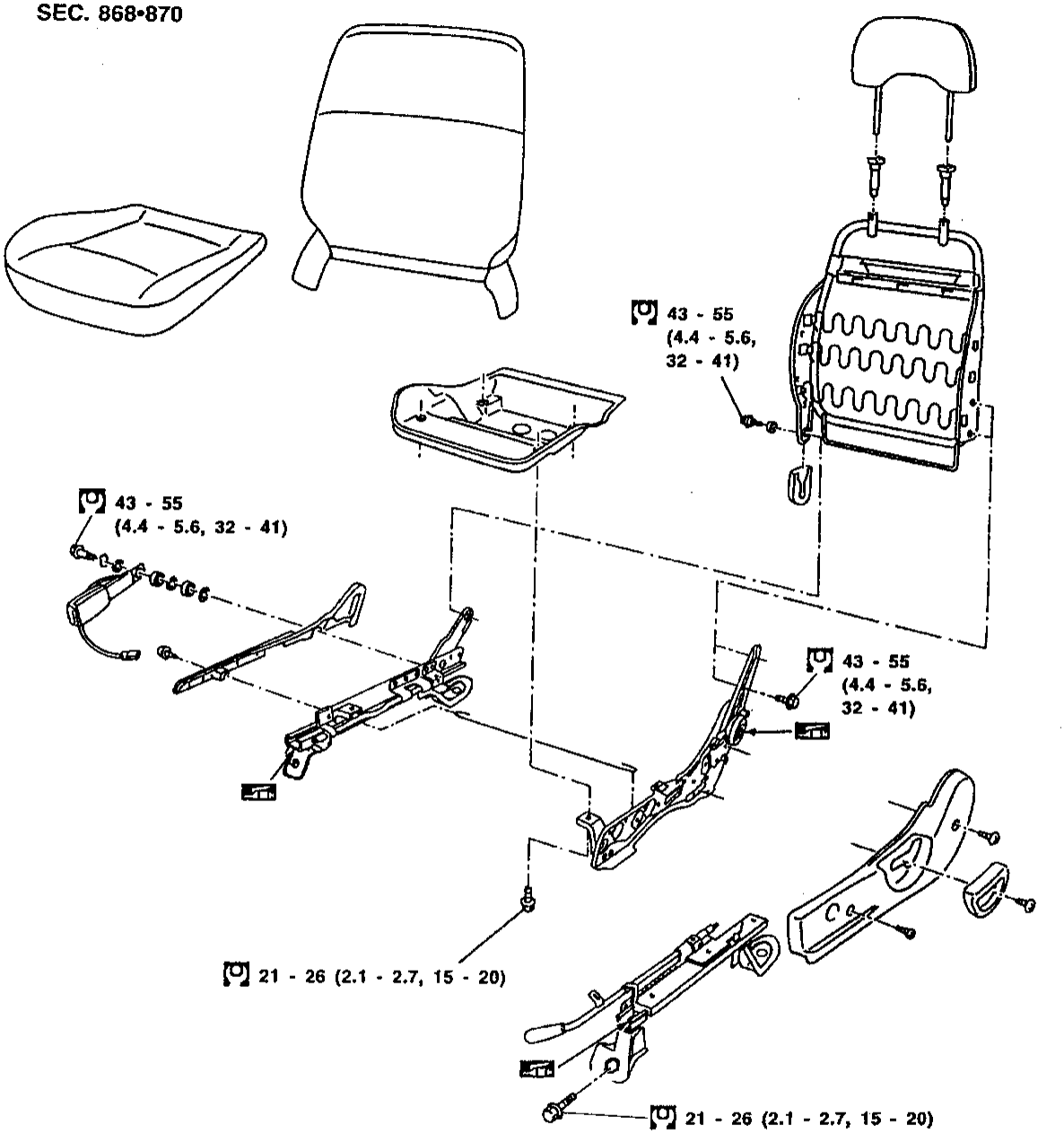

Walk-in mechanism

- The walk-in system is non-adjustable.

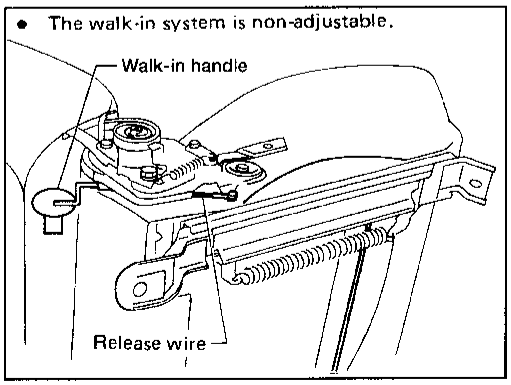

ABT324

: N·m (kg-m, ft-lb)
: Grease-up point
(Do not apply too much grease as it will drip.)

Front Seat (Cont'd)

Simpo PDF Merge and Split Unregistered Version - http://www.simpopdf.com

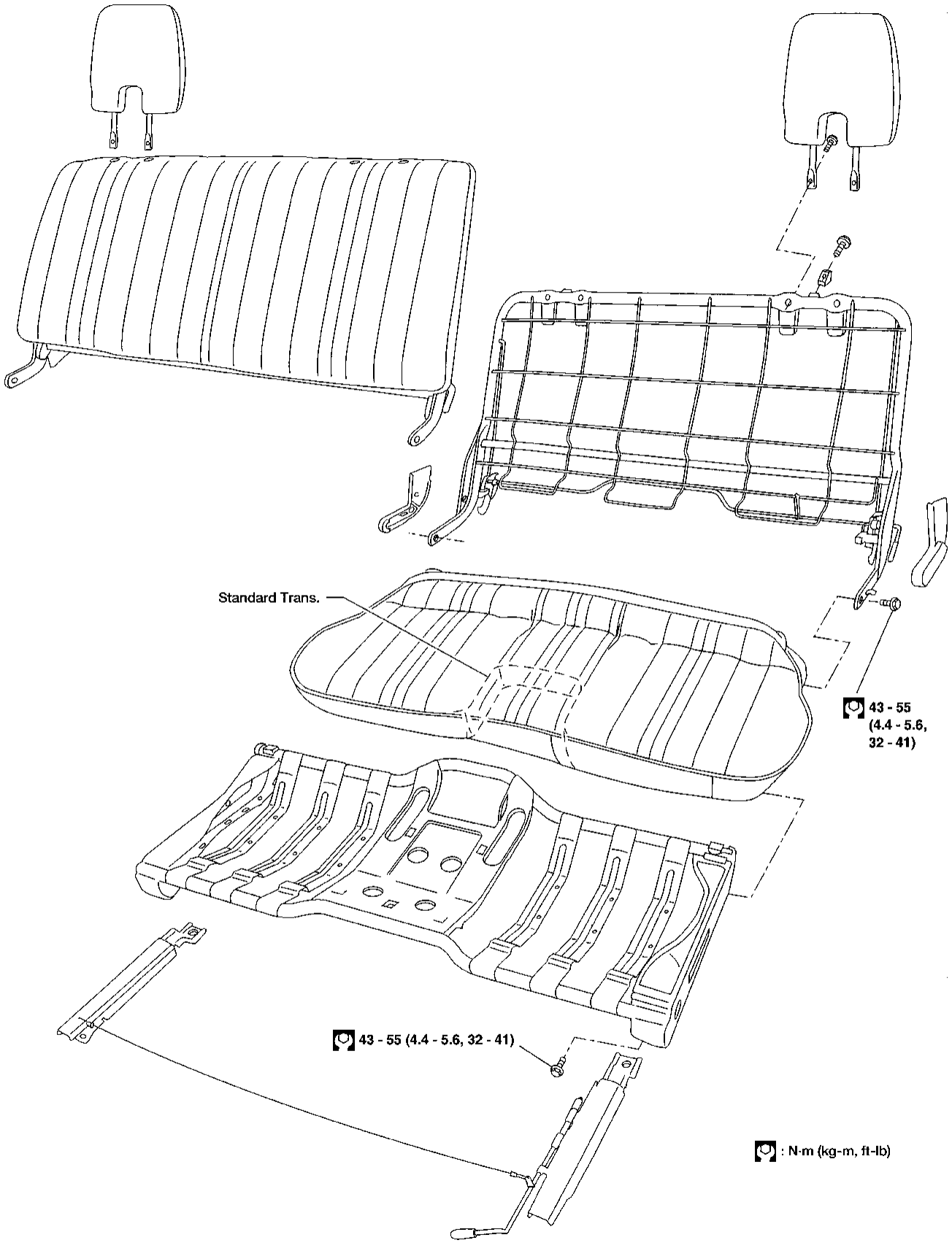

ABT301

Simpo PDF Merge and Split Unregistered Version - http://www.simpopdf.com

NOTES

Simpo PDF Merge and Split Unregistered Version - http://www.simpopdf.com

Jump Seat — King Cab Model

SEC. 880

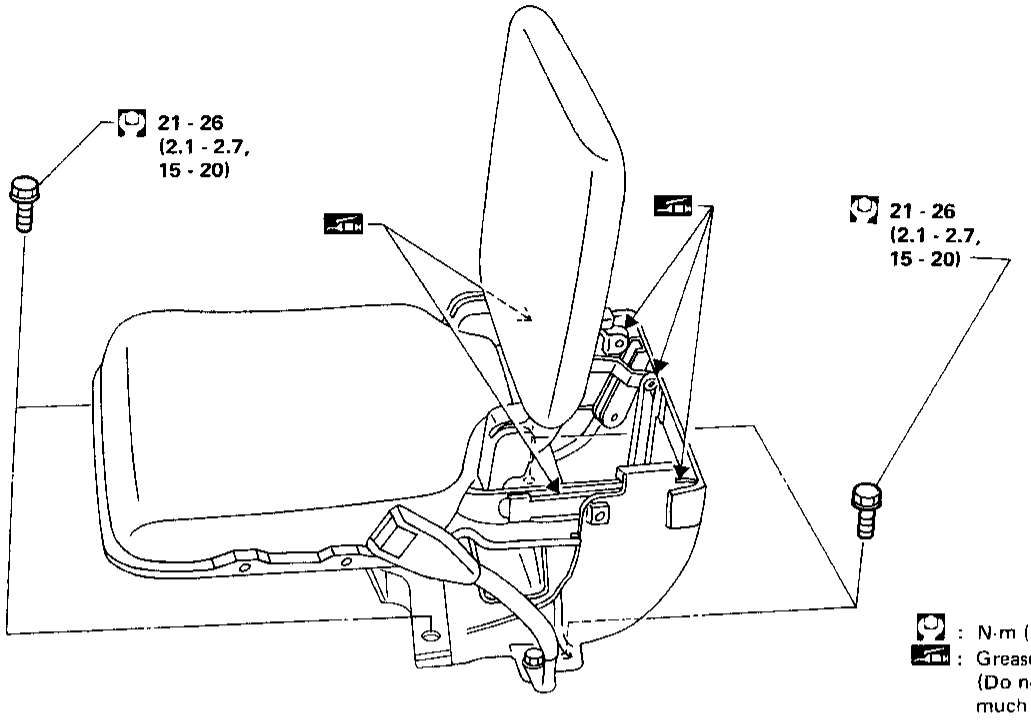

ABT322

Simpo PDF Merge and Split Unregistered Version - http://www.simpopdf.com

SEC. 736

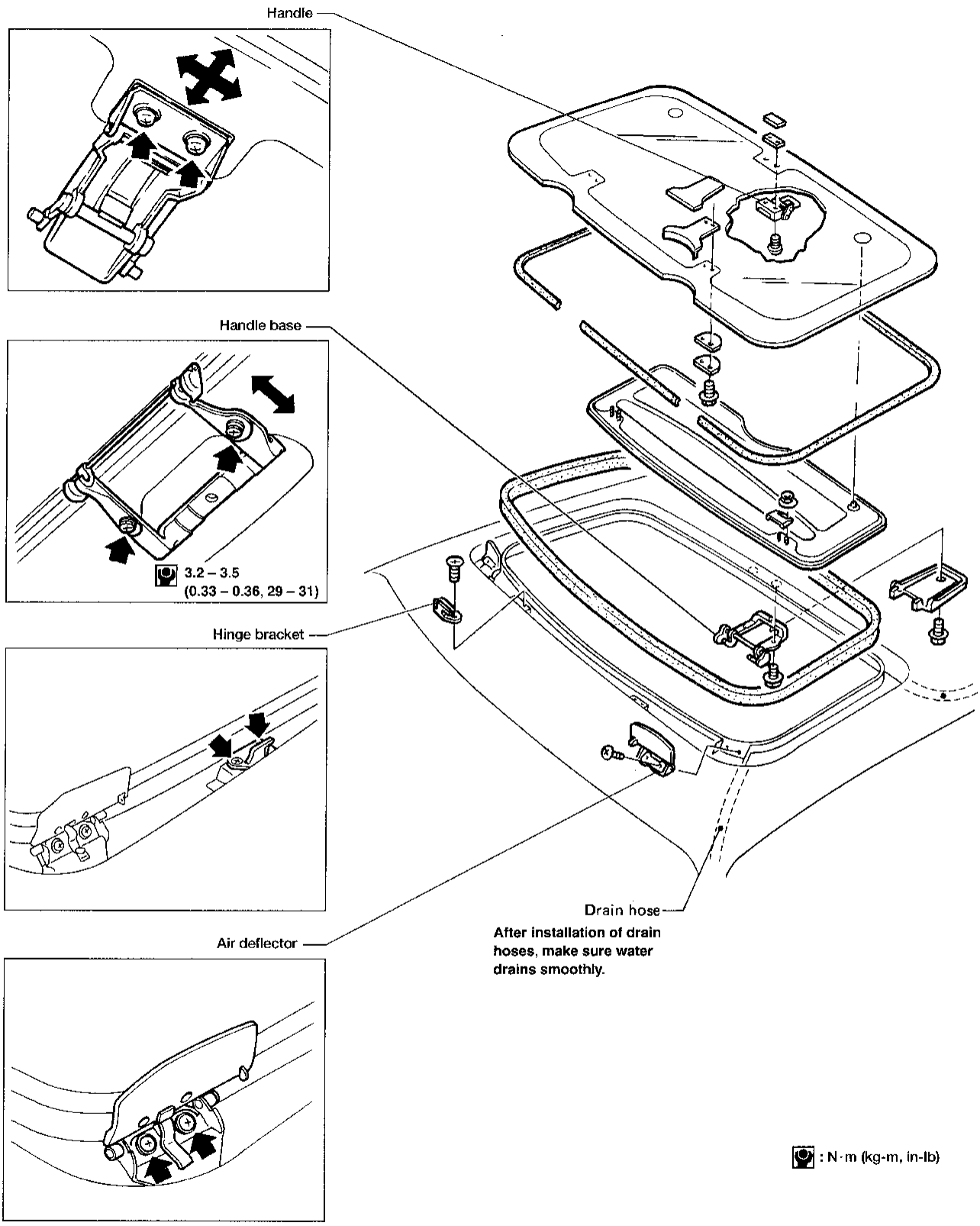

ABT326

Simpo PDF Merge and Split Unregistered Version - http://www.simpopdf.com

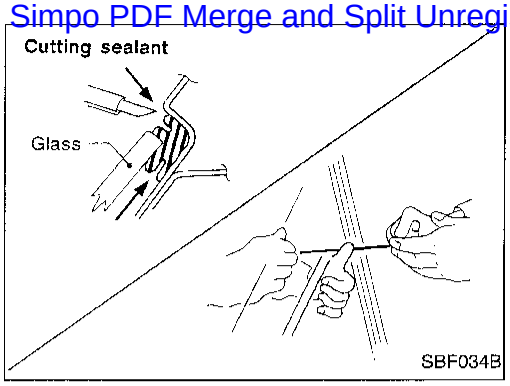

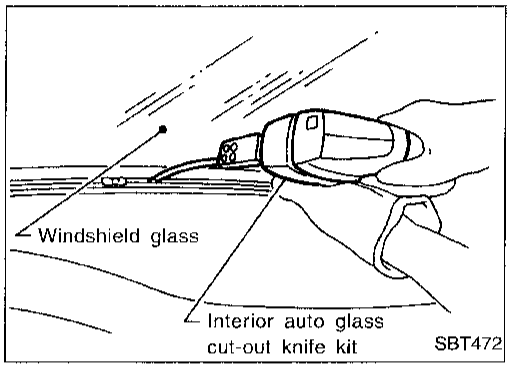

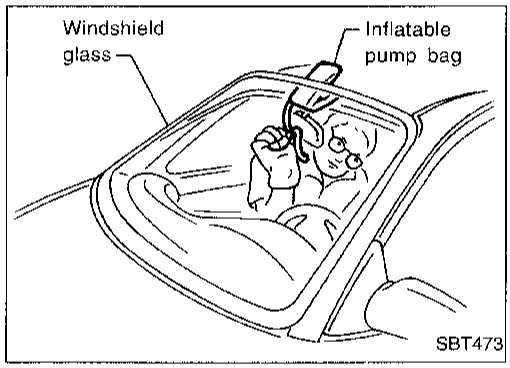

REMOVAL

After removing moldings, remove glass using piano wire or power cutting tool and an inflatable pump bag.

WARNING:

When cutting the glass from the vehicle, always wear safety glasses and heavy gloves to help prevent glass splinters from entering your eyes or cutting your hands.

CAUTION:

- **Be careful not to scratch the glass when removing.**
- **Do not set or stand the glass on its edge. Small chips may develop into cracks.**

INSTALLATION

- **Use genuine Nissan Urethane Adhesive Kit or equivalent and follow the instructions furnished with it.**
- **While the urethane adhesive is curing, open a door window. This will prevent the glass from being forced out by passenger compartment air pressure when a door is closed.**
- **The molding must be installed securely so that it is in position and leaves no gap.**
- **Inform the customer that the vehicle should remain stationary until the urethane adhesive has completely cured (preferably 24 hours). Curing time varies with temperature and humidity.**

WARNING:

- **Keep heat and open flames away as primers and adhesive are flammable.**
- **The materials contained in the kit are harmful if swallowed, and may irritate skin and eyes. Avoid contact with the skin and eyes.**
- **Use in an open, well ventilated location. Avoid breathing the vapors. They can be harmful if inhaled. If affected by vapor inhalation, immediately move to an area with fresh air.**
- **Driving the vehicle before the urethane adhesive has completely cured may affect the performance of the windshield in case of an accident.**

CAUTION:

- **Do not use an adhesive which is past its usable term. Shelf life of this product is limited to six months after the date of manufacture. Carefully adhere to the expiration or manufacture date printed on the box.**
- **Keep primers and adhesive in a cool, dry place. Ideally, they should be stored in a refrigerator.**
- **Do not leave primers or adhesive cartridge unattended with their caps open or off.**
- **The vehicle should not be driven for at least 24 hours or until the urethane adhesive has completely cured. Curing time varies depending on temperature and humidities. The curing time will increase under higher temperatures and lower humidities.**

Simpo PDF Merge and Split Unregistered Version - http://www.simpopdf.com

Windshield

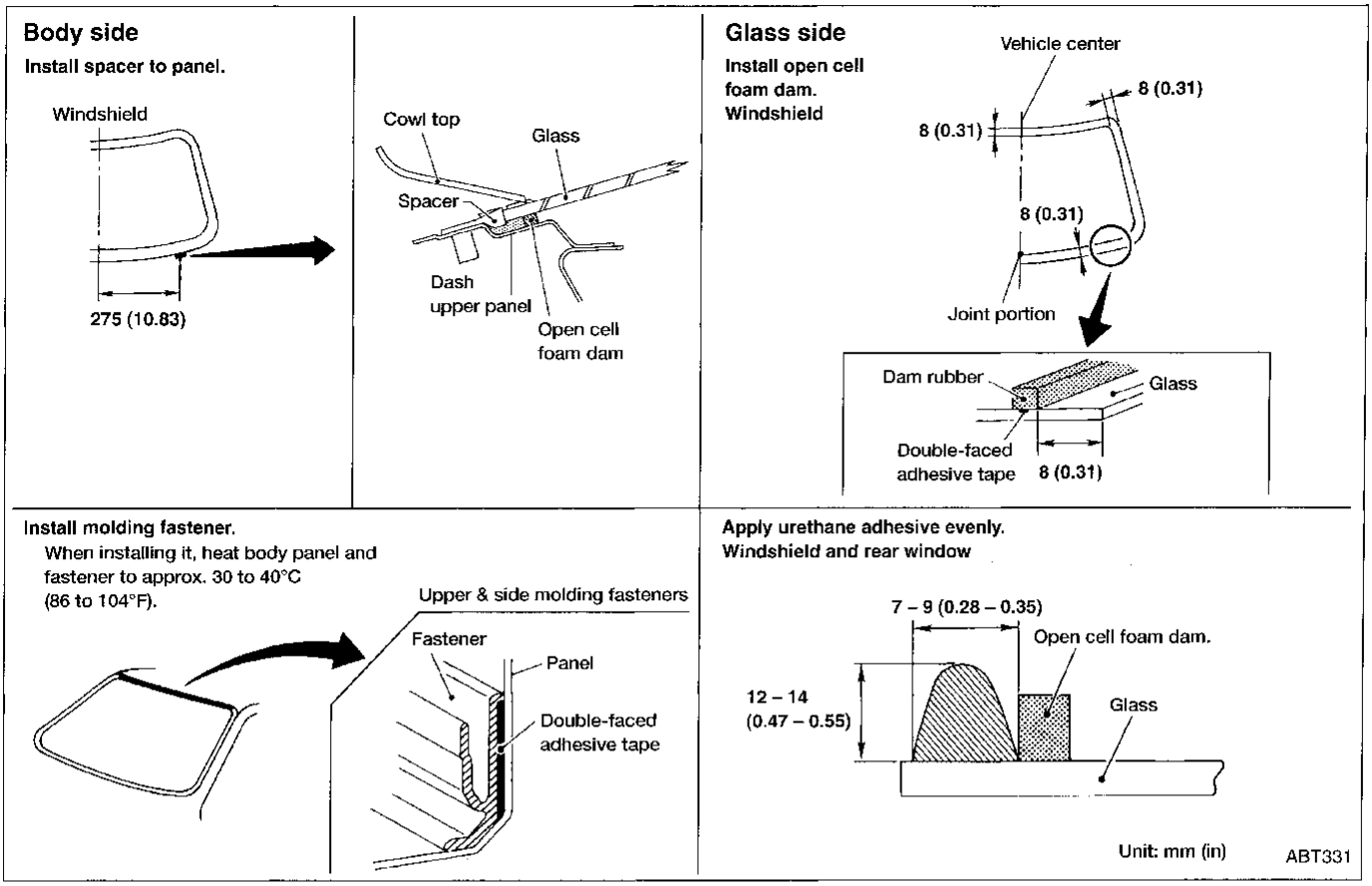

Side Window

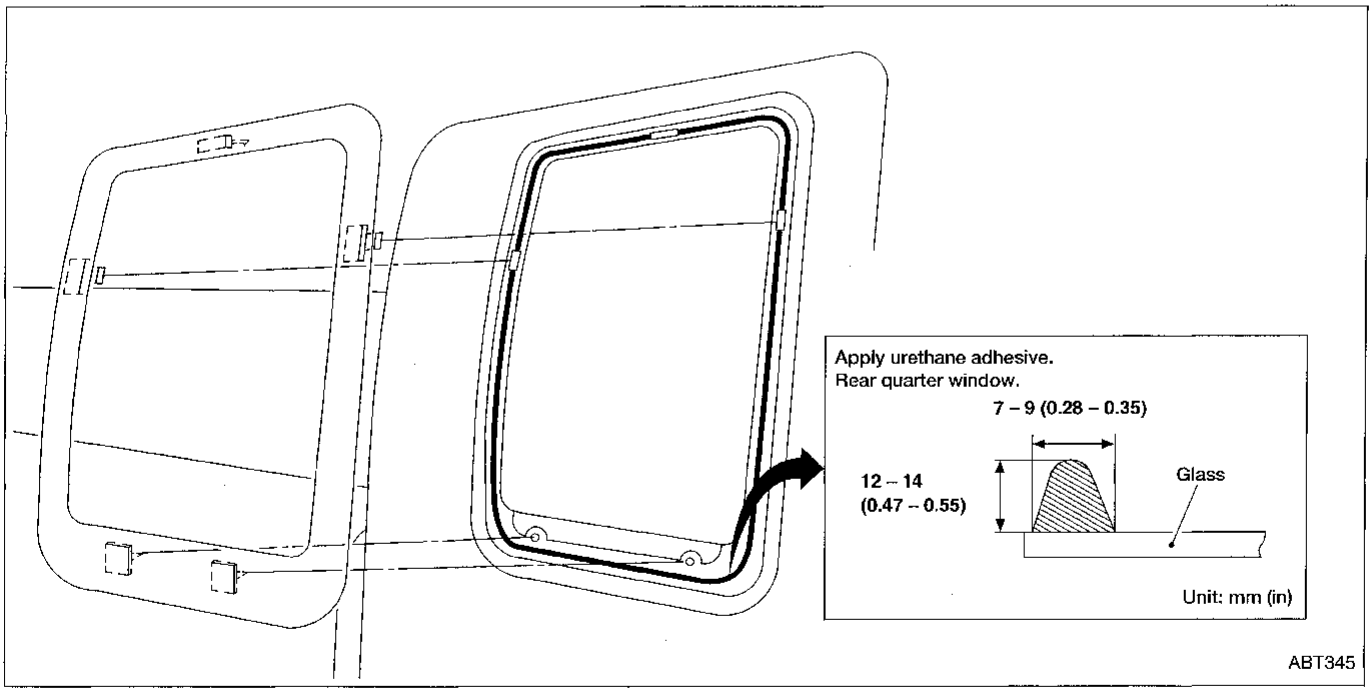

Simpo PDF Merge and Split Unregistered Version - http://www.simpopdf.com

Back Window

- Window glass is held in place by urethane adhesive.

SEC. 797

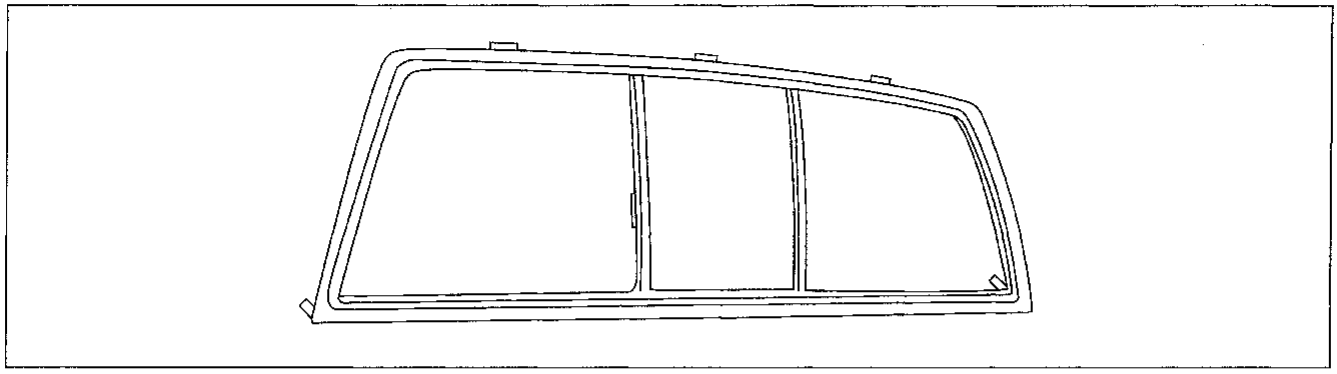

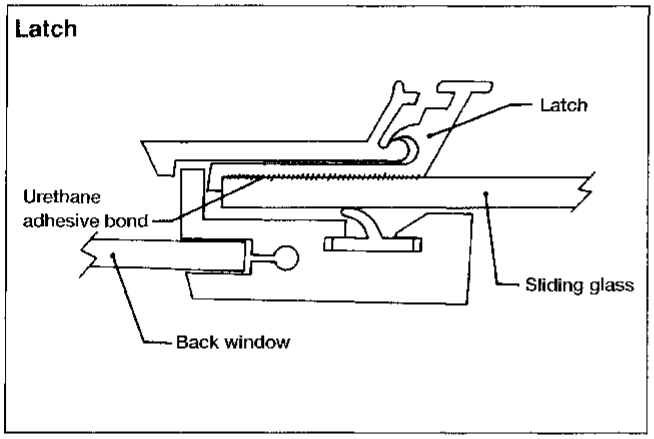

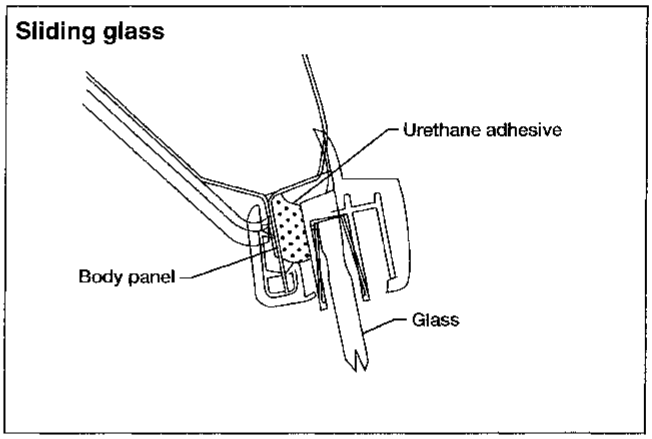

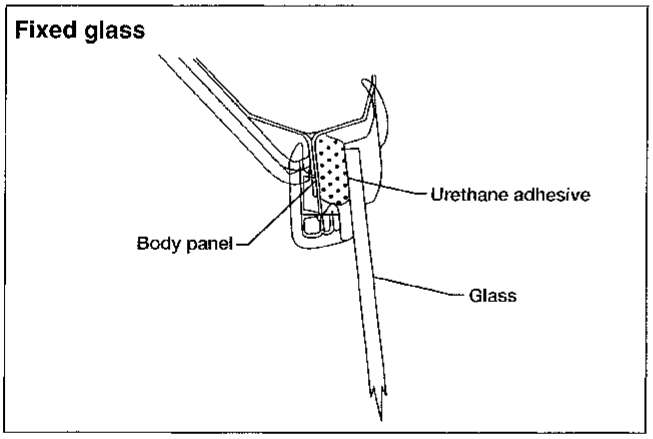

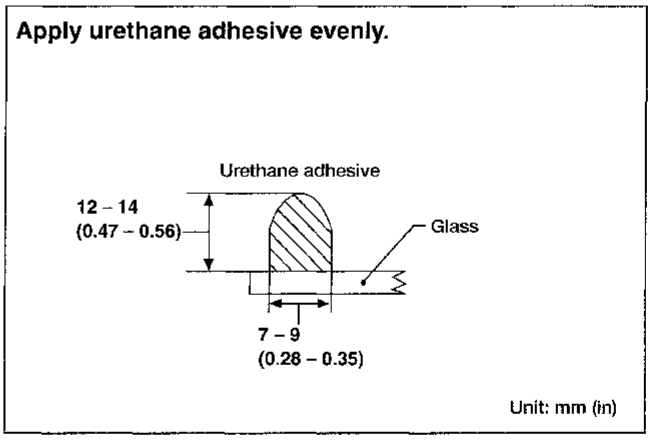

ABT335

REPAIRING WATER LEAKS FOR WINDSHIELD, SIDE WINDOW AND BACK WINDOW

Leaks can be repaired without removing and reinstalling glass.

If water is leaking between urethane adhesive material and body or glass, determine the extent of leakage. This can be done by applying water to the windshield or side window area while pushing glass outward.

To stop the leak, apply primer (if necessary) and then urethane adhesive to the leak point.

Simpo PDF Merge and Split Unregistered Version - http://www.simpopdf.com

Rearview Mirror

REMOVAL

Remove rearview mirror by deflecting spring with screwdriver as shown in the figure.

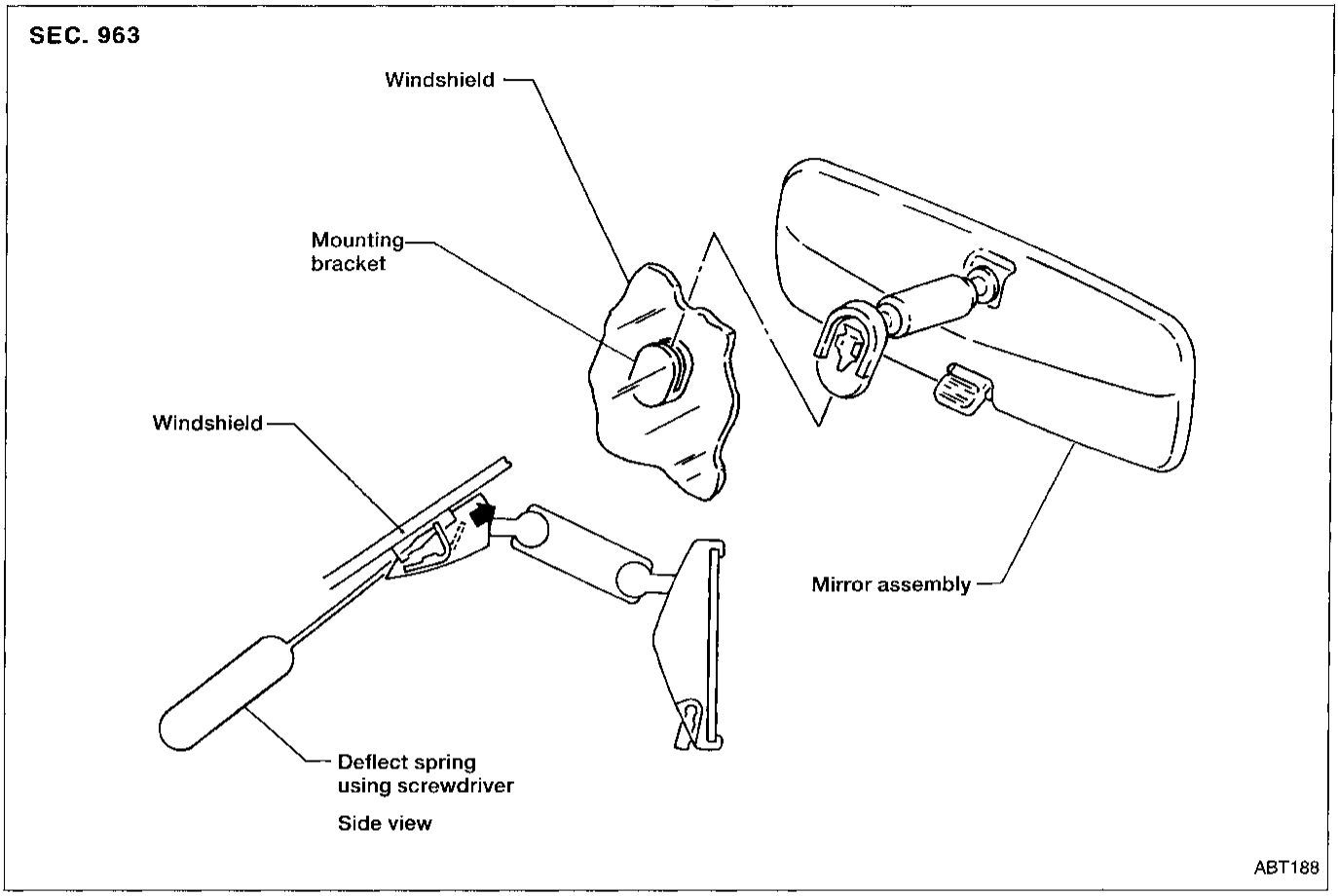

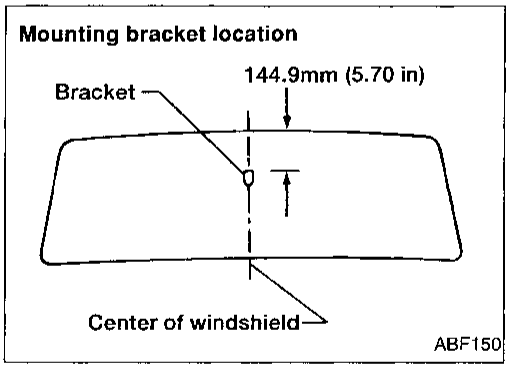

INSTALLATION

1. Install mounting bracket as follows:
   a. Determine mounting bracket position on windshield by measuring from top of windshield to top of mounting bracket as shown in the figure.
   b. Mark location on outside of windshield with wax pencil or equivalent.
   c. Clean attaching point on inside of windshield with an alcohol-saturated paper towel.
   d. Sand bonding surface of mounting bracket with sandpaper (No. 320 or No. 360).
   e. Clean bonding surface of mounting bracket with an alcohol-saturated paper towel.
   f. Apply Loctite Adhesive 11067-2 or equivalent to bonding surface of mounting bracket.
   g. Install mounting bracket at premarked position and press mounting bracket against glass for 30 to 60 seconds.
   h. After five minutes, wipe off excess adhesive with an alcohol-moistened paper towel.
2. Install rearview mirror.

Simpo PDF Merge and Split Unregistered Version - http://www.simpopdf.com

Door Mirror

CAUTION:
Be careful not to scratch door rearview mirror body.

★ **For Wiring Diagram, refer to "POWER DOOR MIRROR" in EL section.**

REMOVAL — Door mirror

① Remove door trim or inner cover from front corner of door. Refer to "Door Trim" for details, BT-17.
② Disconnect door mirror harness connector.
③ Remove bolts securing door mirror, then remove door mirror assembly.

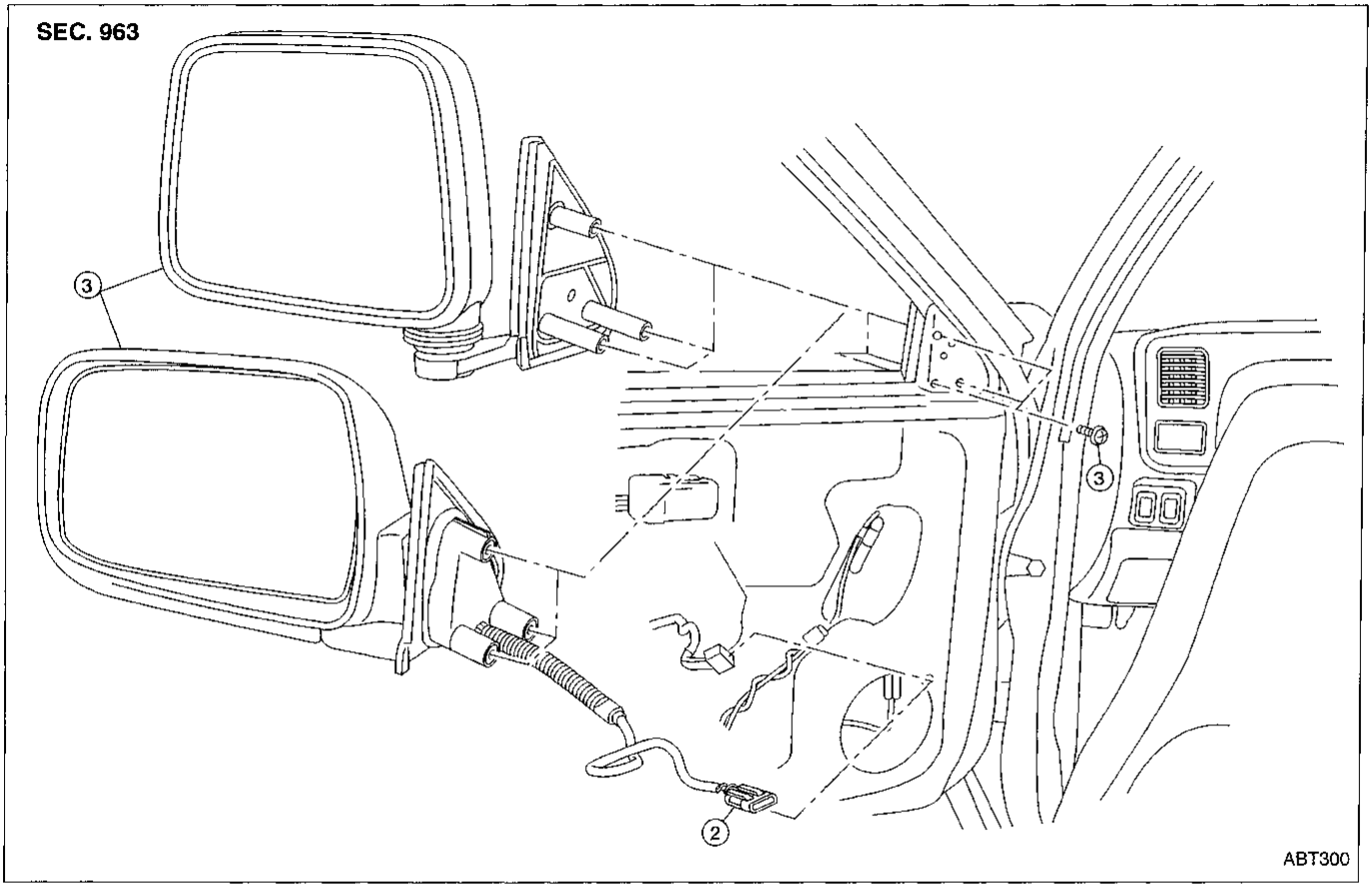

Simpo PDF Merge and Split Unregistered Version - http://www.simpopdf.com

Body Mounting

When removing, be sure to replace bolts and nuts (sealant applied bolts or self-lock nuts are used for all mounting).

SEC. 930

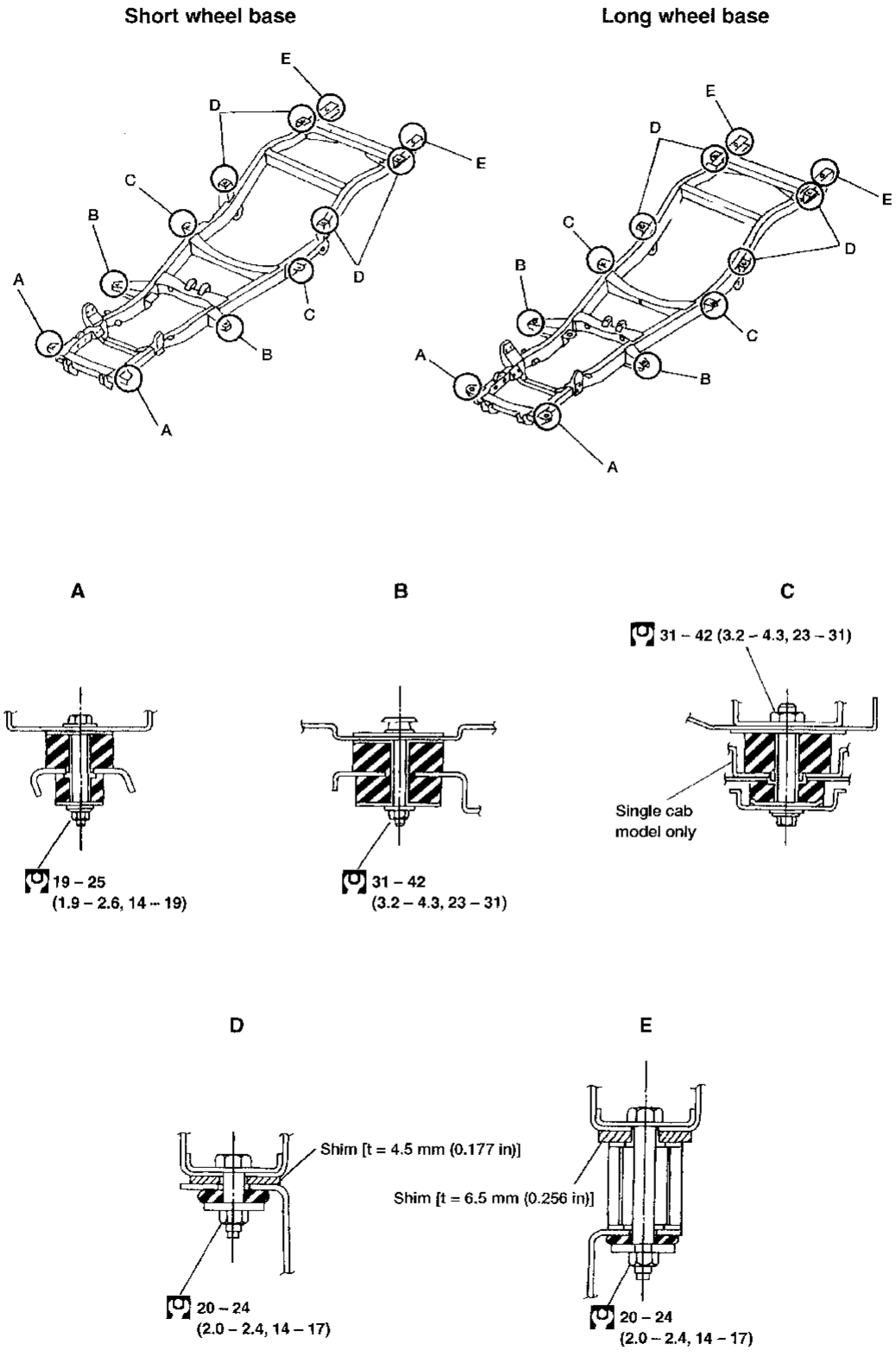

: N·m (kg-m, ft-lb)

ABT312

Simpo PDF Merge and Split Unregistered Version - http://www.simpopdf.com

- All dimensions indicated in the figures are actual.
- When using a tracking gauge, adjust both pointers to equal length, then check pointers and the gauge to make sure there is no free play.
- When a measuring tape is used, check to be sure there is no elongation, twisting or bending.
- Measurements should be taken at the center of the mounting holes.
- An asterisk (*) following the value at the measuring point indicates that the measuring point on the other side is symmetrically the same value.
- The coordinates of the measurement points are the distances measured from the standard line of "X", "Y" and "Z".

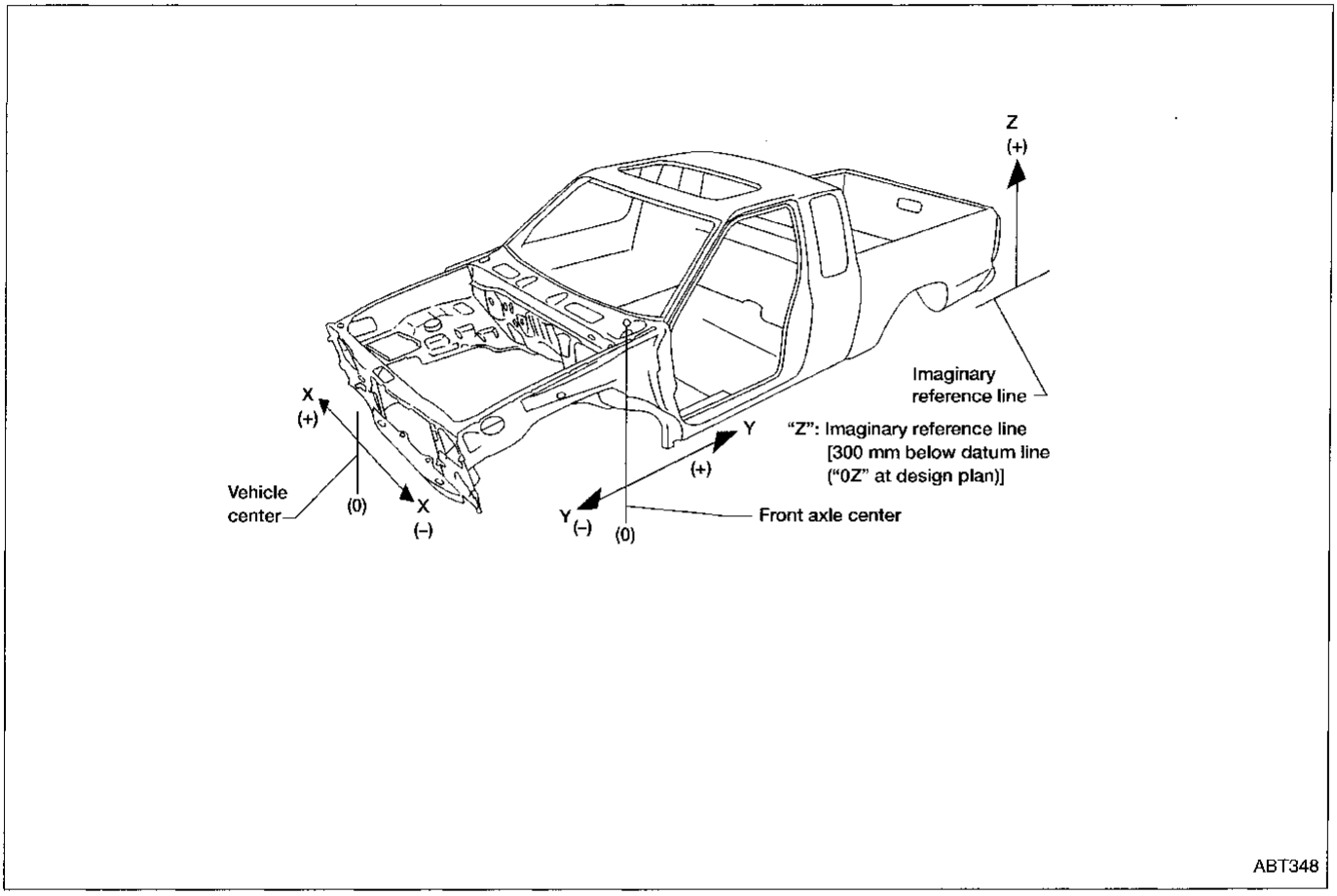

Simpo PDF Merge and Split Unregistered Version - http://www.simpopdf.com

Engine Compartment

MEASUREMENT

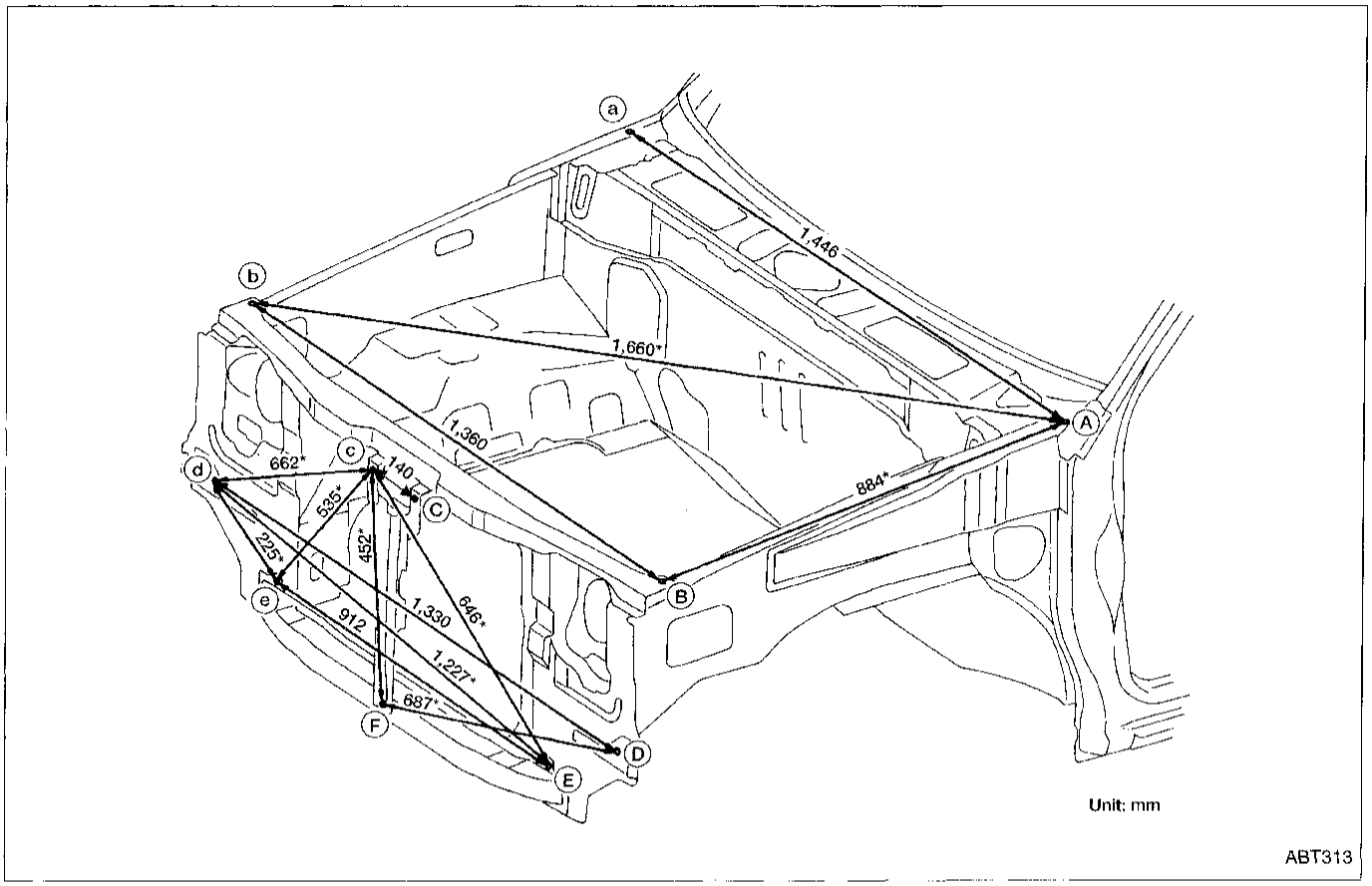

Simpo PDF Merge and Split Unregistered Version - http://www.simpopdf.com

MEASUREMENT POINTS

Front fender : (A)

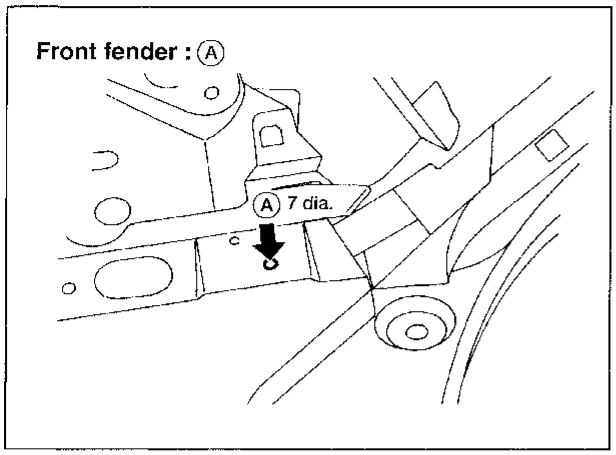

Front fender : (B)

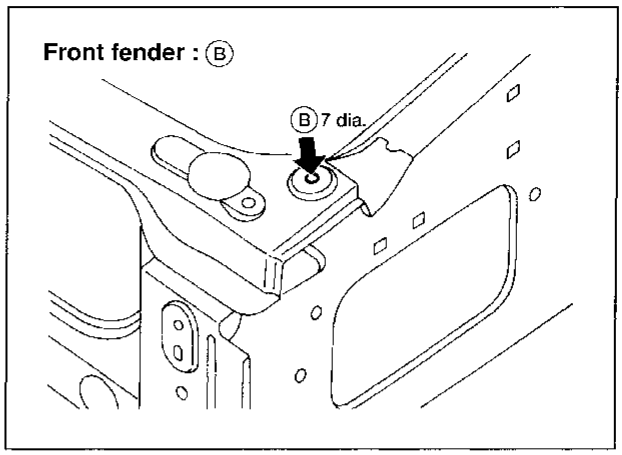

Hood lock : (C) (C)

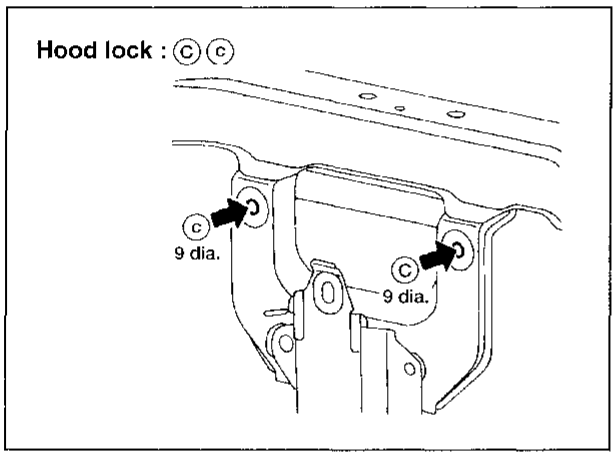

Radiator core support side : (D)

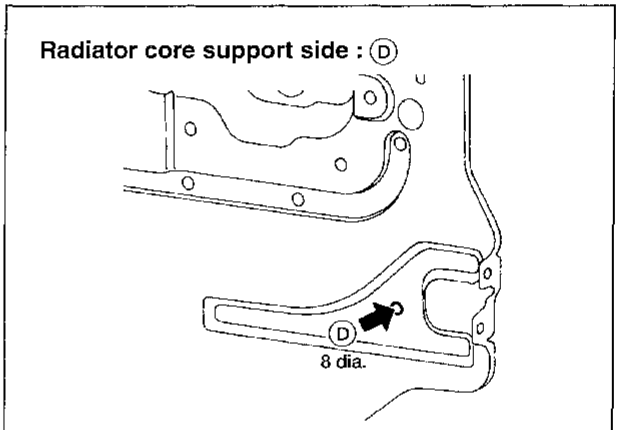

Radiator core support lower : (E)

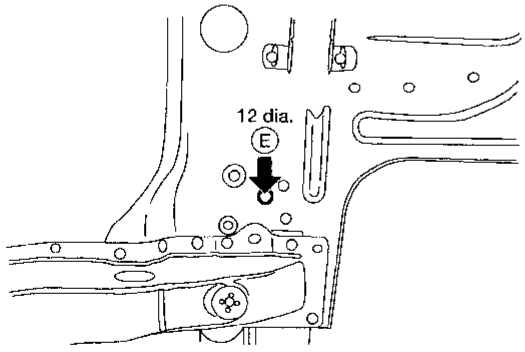

Hood lock stay : (F)

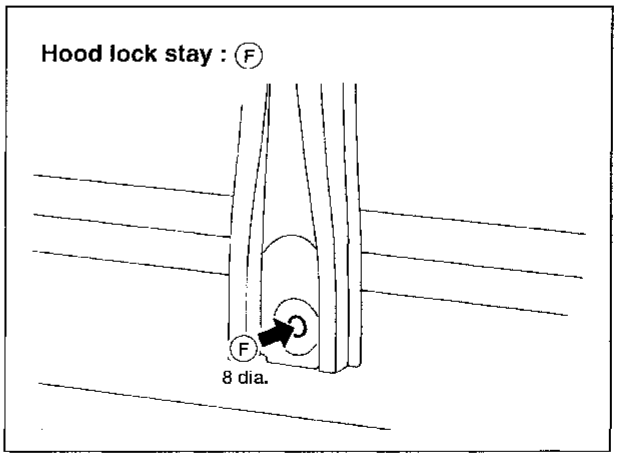

Unit: mm

ABT314

Simpo PDF Merge and Split Unregistered Version - http://www.simpopdf.com

Underbody

MEASUREMENT

2WD·4WD (Short wheelbase) models

2WD model shown

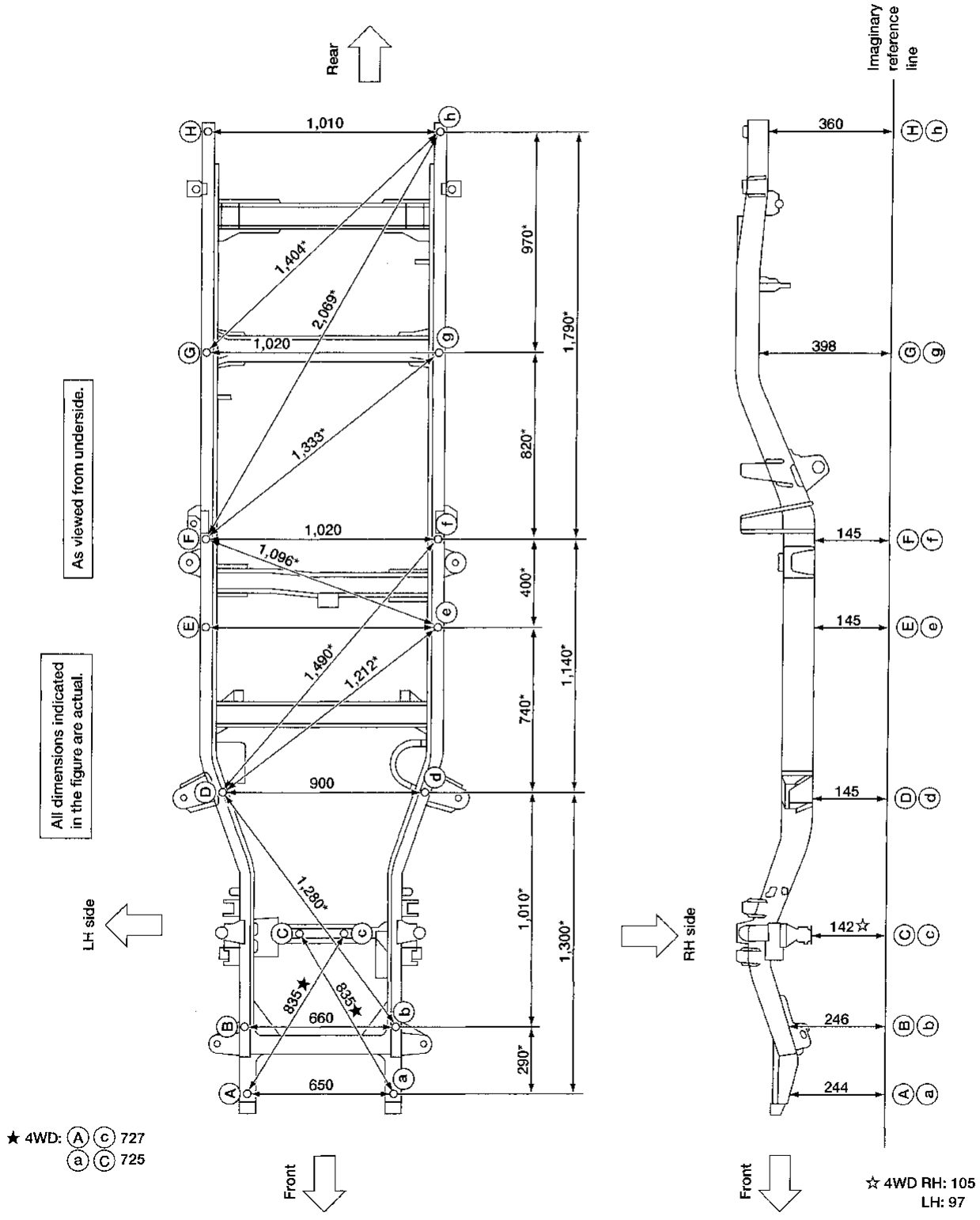

ABT315

Simpo PDF Merge and Split Unregistered Version - http://www.simpopdf.com

MEASUREMENT POINTS

2WD·4WD (Short wheelbase) models

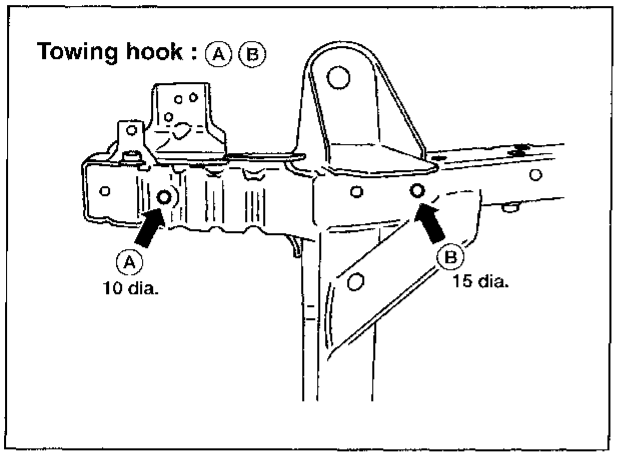

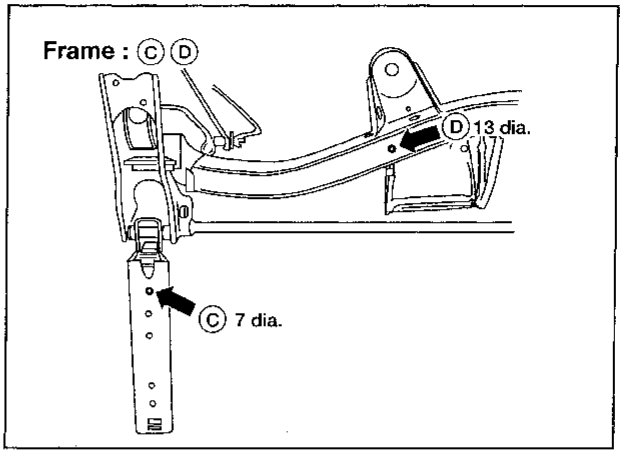

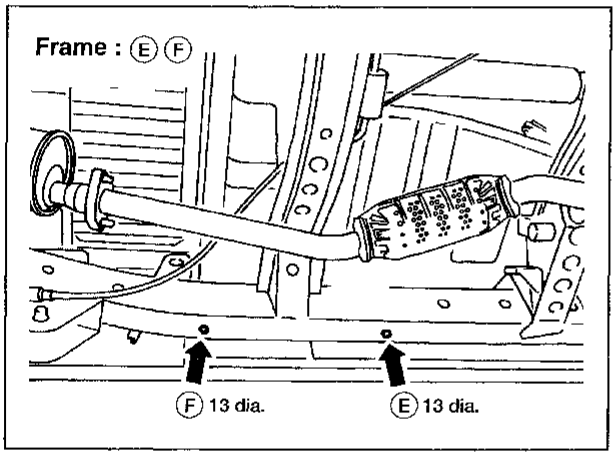

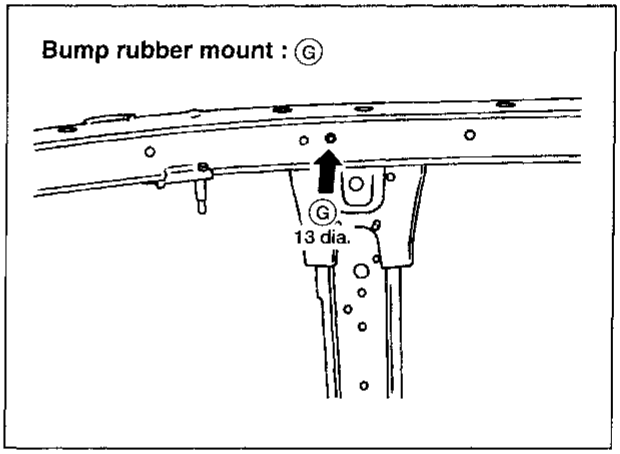

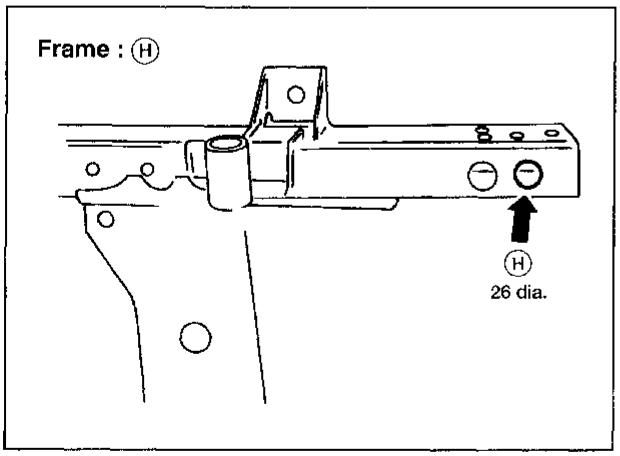

Coordinates:

A, a		E, e	
X	325	X	510
Y	-700	Y	1,340
Z	244	Z	145
B, b		F, f	
X	330	X	510
Y	-409	Y	1,740
Z	246	Z	145
C, c		G, g	
X	123	X	510
Y	-3	Y	2,560
Z	4WD RH 105 4WD LH 97 2WD 142	Z	398
D, d		H, h	
X	450	X	505
Y	600	Y	3,530
Z	145	Z	360

Unit: mm

ABT316

Simpo PDF Merge and Split Unregistered Version - http://www.simpopdf.com

MEASUREMENT

2WD·4WD (Long wheelbase) models

4WD model shown

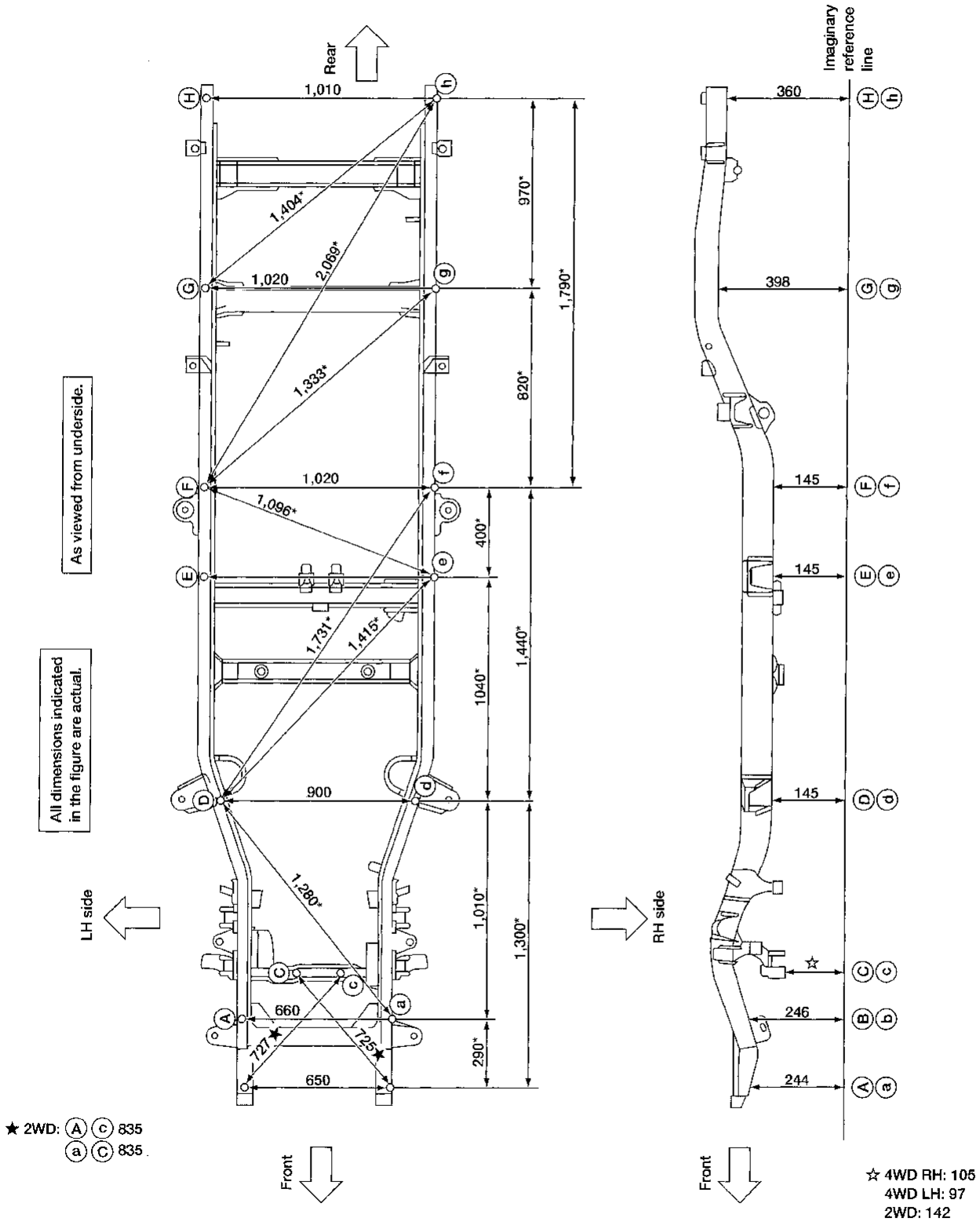

ABT317

Simpo PDF Merge and Split Unregistered Version - http://www.simpopdf.com

MEASUREMENT POINTS

2WD·4WD (Long wheelbase) models

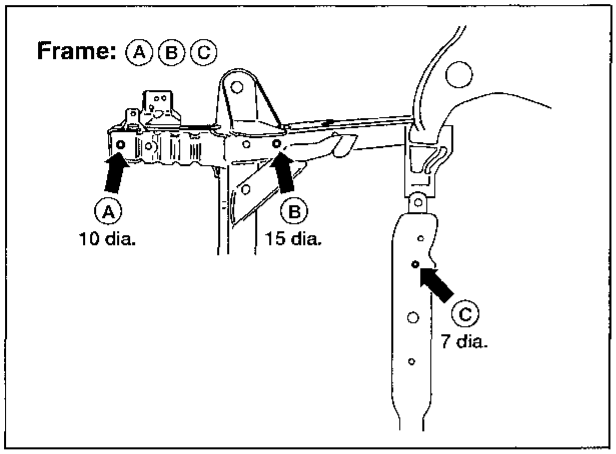

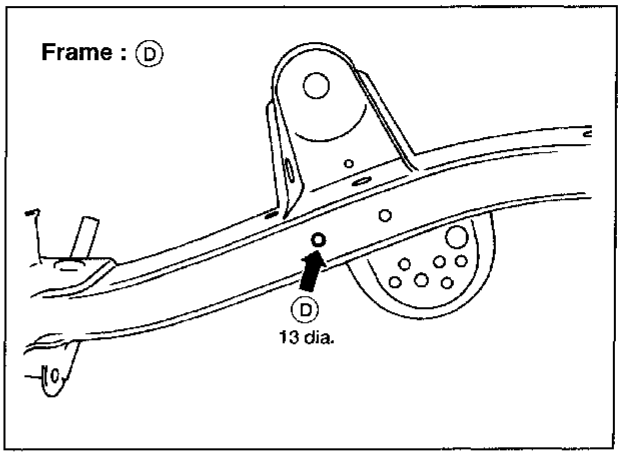

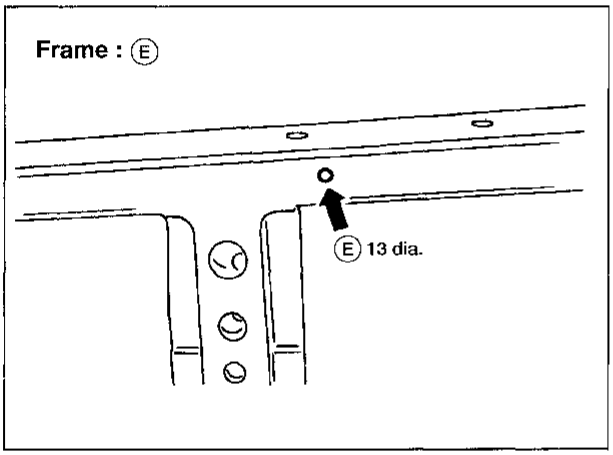

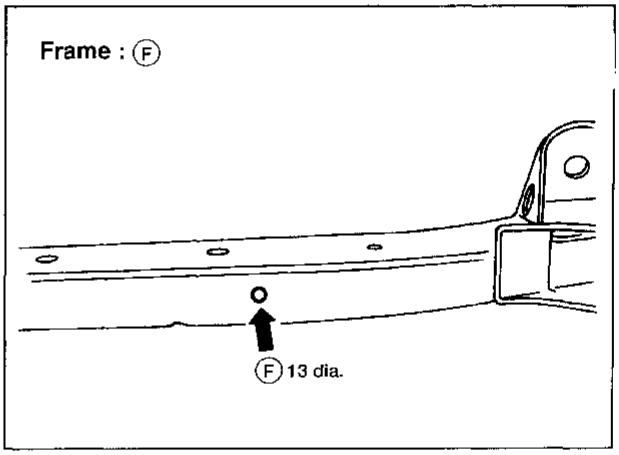

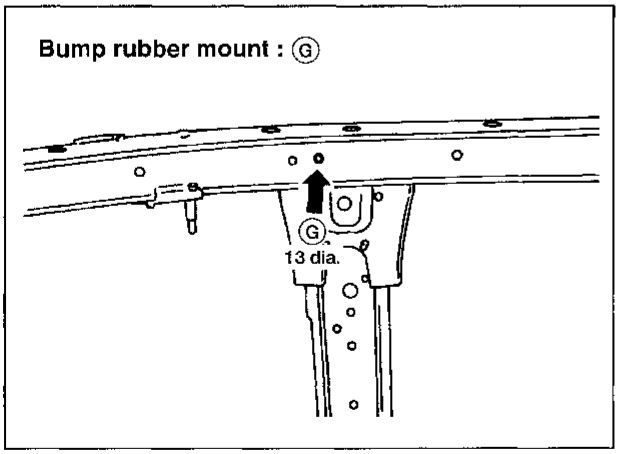

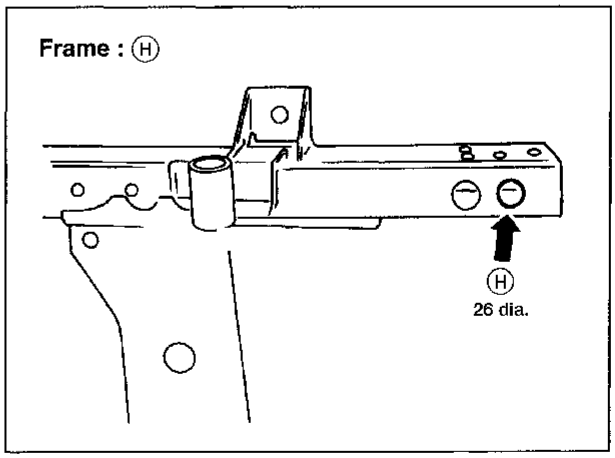

Unit: mm

Coordinates:	A, a	B, b	C, c	D, d	E, e	F, f	G, g	H, h
	X : 325 Y : -700 Z : 244	X : 330 Y : -400 Z : 246	X : 100 Y : -129 Z : 4WD: RH 105 4WD: LH 97 2WD: 142	X : 450 Y : 600 Z : 145	X : 510 Y : 1,040 Z : 145	X : 510 Y : 1,640 Z : 145	X : 510 Y : 2,860 Z : 398	X : 505 Y : 3,830 Z : 360

ABT318

Simpo PDF Merge and Split Unregistered Version - http://www.simpopdf.com

SECTION CL

CONTENTS

PRECAUTIONS AND PREPARATION 2
- Precautions 2
- Special Service Tools 2
- Commercial Service Tools 2

NOISE, VIBRATION AND HARSHNESS (NVH) TROUBLESHOOTING 3
- NVH Troubleshooting Chart 3

CLUTCH SYSTEM 4
- Clutch Pedal 5

INSPECTION AND ADJUSTMENT 6
- Adjusting Clutch Pedal 6
- Air Bleeding Procedure 7

HYDRAULIC CLUTCH CONTROL 8
- Clutch Master Cylinder (With clutch damper) 8
- Operating Cylinder 9

CLUTCH RELEASE MECHANISM 10

CLUTCH DISC AND CLUTCH COVER 12
- Clutch Disc 12
- Clutch Cover and Flywheel 13

SERVICE DATA AND SPECIFICATIONS (SDS) 14
- General Specifications 14
  - Clutch Control System 14
- Inspection and Adjustment 14

Simpo PDF Merge and Split Unregistered Version - http://www.simpopdf.com

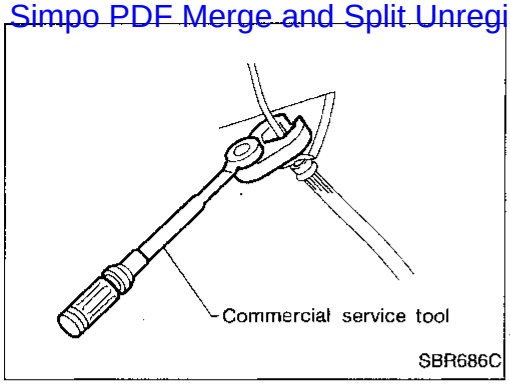

Precautions

- **Recommended fluid is brake fluid DOT 3.**
- **Never reuse drained brake fluid.**
- **Be careful not to splash brake fluid on painted areas.**
- **When removing and installing clutch piping, use a suitable tool.**
- **Use new brake fluid to clean or wash all parts of master cylinder, operating cylinder and clutch damper.**
- **Never use mineral oils such as gasoline or kerosene. They will ruin the rubber parts of the hydraulic system.**

WARNING:
After cleaning the clutch disc, wipe it with a dust collector. Do not use compressed air.

Special Service Tools

The actual shapes of Kent-Moore tools may differ from those of special service tools illustrated here.

Tool number (Kent-Moore No.) Tool name	Description	
ST20630000 (J26366) Clutch aligning bar	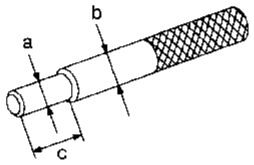 NT405	Installing clutch cover and clutch disc **a: 15.9 mm (0.626 in) dia.** **b: 22.8 mm (0.898 in) dia.** **c: 55 mm (2.17 in)**
ST20050240 (—) Diaphragm spring adjusting wrench	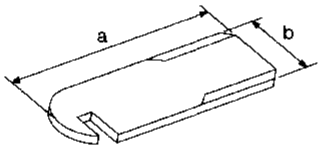 NT404	Adjusting unevenness of clutch cover diaphragm spring **a: 150 mm (5.91 in)** **b: 25 mm (0.98 in)**

Commercial Service Tools

Tool name	Description	
① Flare nut crowfoot ② Torque wrench	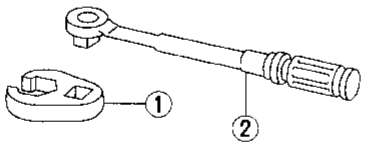 NT223	Removing and installing clutch piping **a: 10 mm (0.39 in)**
Bearing puller	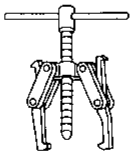 NT077	Removing release bearing
Bearing drift	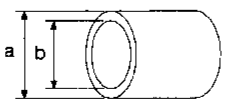 NT474	Installing release bearing **a: 52 mm (2.05 in) dia.** **b: 45 mm (1.77 in) dia.**

Simpo PDF Merge and Split Unregistered Version - http://www.simpopdf.com

NVH Troubleshooting Chart

Use the chart below to help you find the cause of the problem. The numbers indicate the priority of the likely cause of the problem. Check each part in order. If necessary, repair or replace these parts.

	Reference page	CL-6	CL-7	CL-8	CL-9	Refer to EM section	CL-10	CL-12	CL-12	CL-12	CL-12	CL-12	CL-12	CL-12	CL-12	CL-13	CL-13	CL-13	CL-13
	Possible cause and SUSPECTED PARTS	CLUTCH PEDAL (Free play out of adjustment)	CLUTCH LINE (Air in line)	MASTER CYLINDER PISTON CUP (Damaged)	OPERATING CYLINDER PISTON CUP (Damaged)	ENGINE MOUNTING (Loose)	RELEASE BEARING (Worn, dirty or damaged)	CLUTCH DISC (Out of true)	CLUTCH DISC (Runout is excessive)	CLUTCH DISC (Lining broken)	CLUTCH DISC (Dirty or burned)	CLUTCH DISC (Oily)	CLUTCH DISC (Worn out)	CLUTCH DISC (Hardened)	CLUTCH DISC (Lack of spline grease)	DIAPHRAGM SPRING (Damaged)	DIAPHRAGM SPRING (Out of tip alignment)	CLUTCH COVER (Distortion)	FLYWHEEL (Distortion)
Symptom	Clutch grabs/chatters					1			2			2	2	2			2		
	Clutch pedal spongy		1	2	2														
	Clutch noisy						1												
	Clutch slips	1										2	2			3		4	5
	Clutch does not disengage	1	2	3	4			5	5	5	5	5			5	6	6	7	

Simpo PDF Merge and Split Unregistered Version - http://www.simpopdf.com

SEC. 300 • 305 • 306 • 465

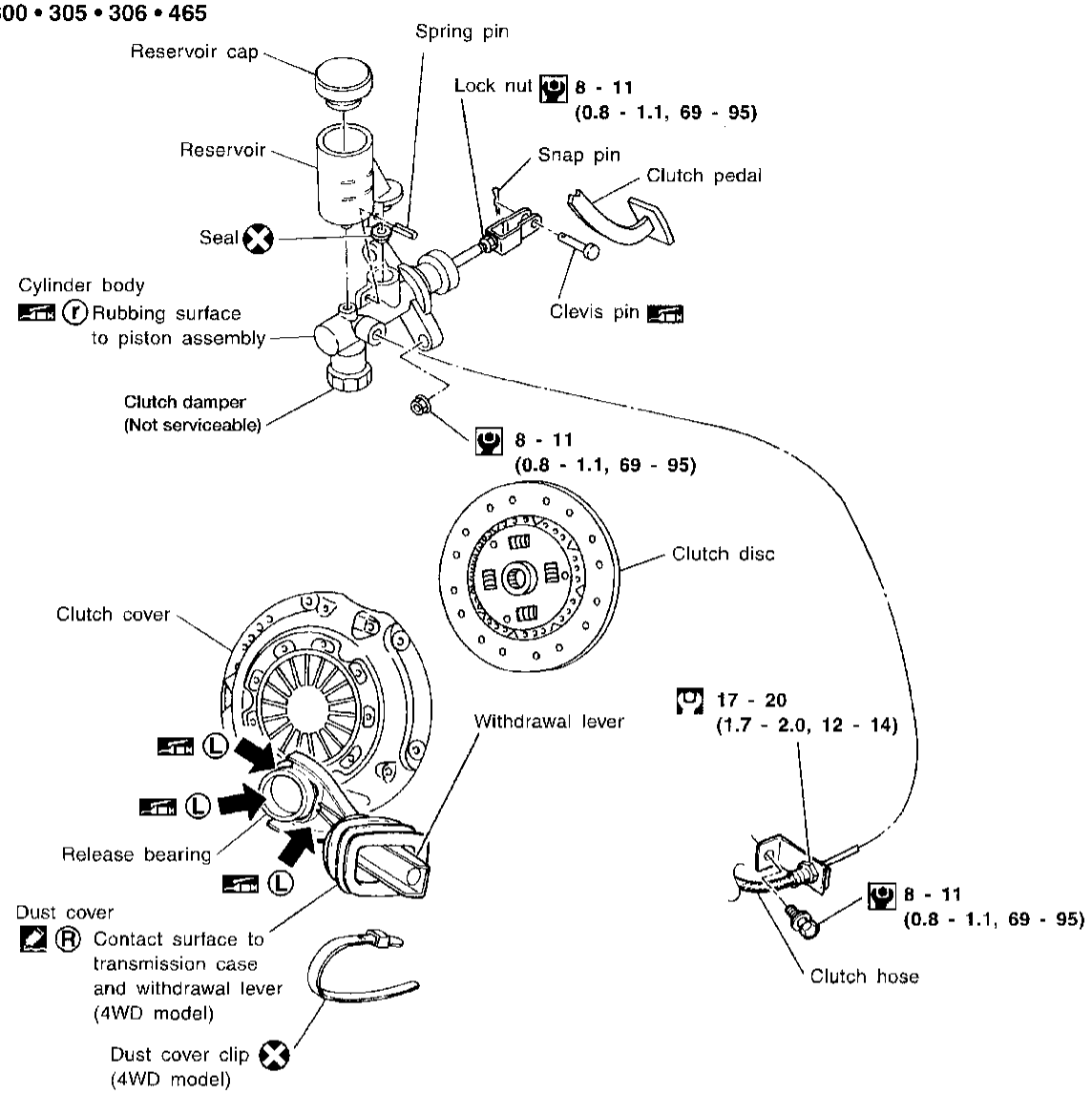

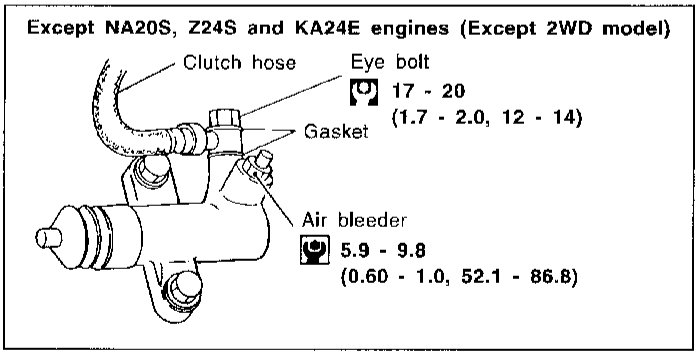

: N•m (kg-m, ft-lb)
: N•m (kg-m, in-lb)
: Apply genuine anaerobic liquid gasket, Three Bond TB 1212, Loctite Part No. 51813 or equivalent.
: Apply lithium-based grease including molybdenum disulphide.
: Apply rubber lubricant.

ACL073

Simpo PDF Merge and Split Unregistered Version - http://www.simpopdf.com

Clutch Pedal

SEC. 465

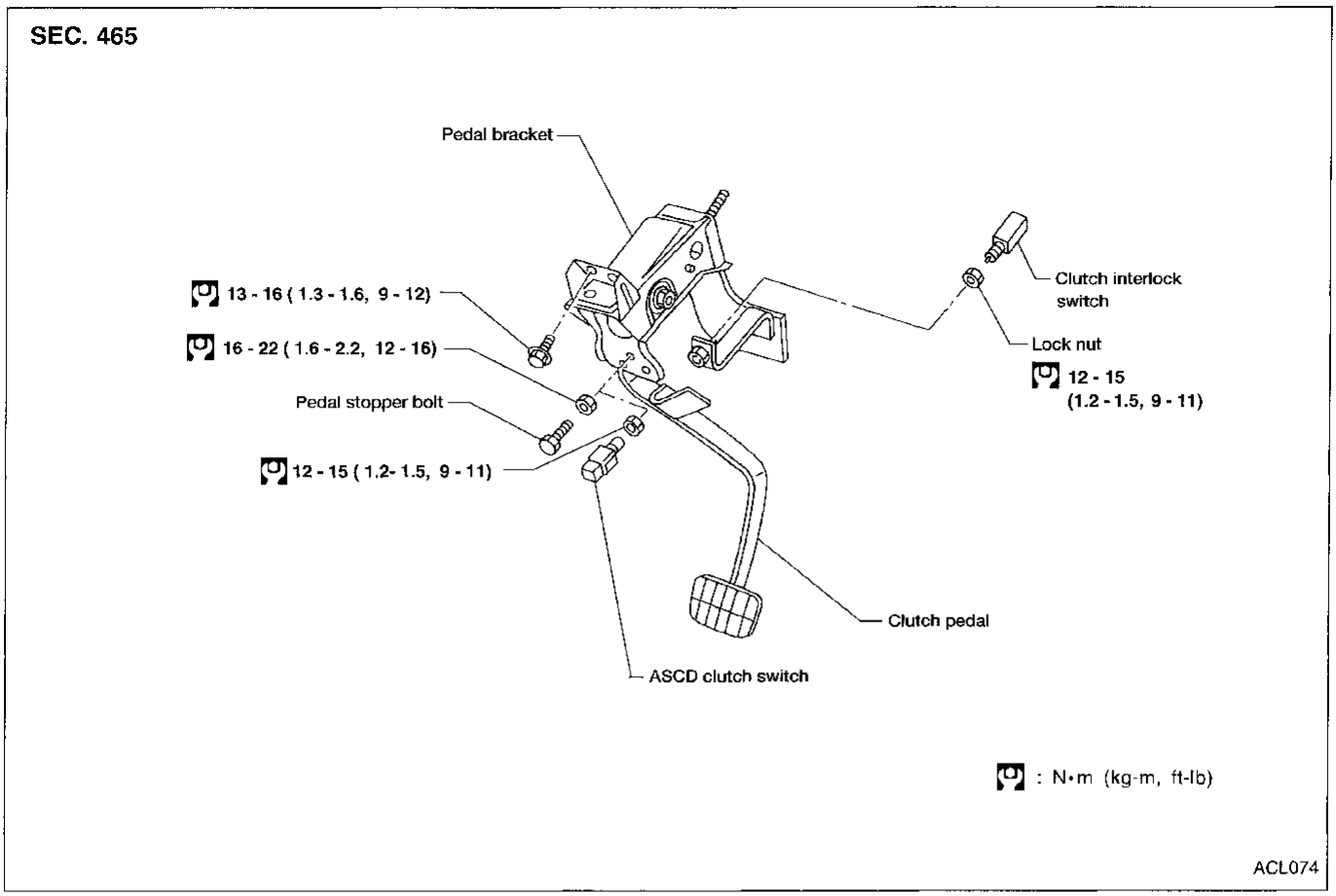

Simpo PDF Merge and Split Unregistered Version - http://www.simpopdf.com

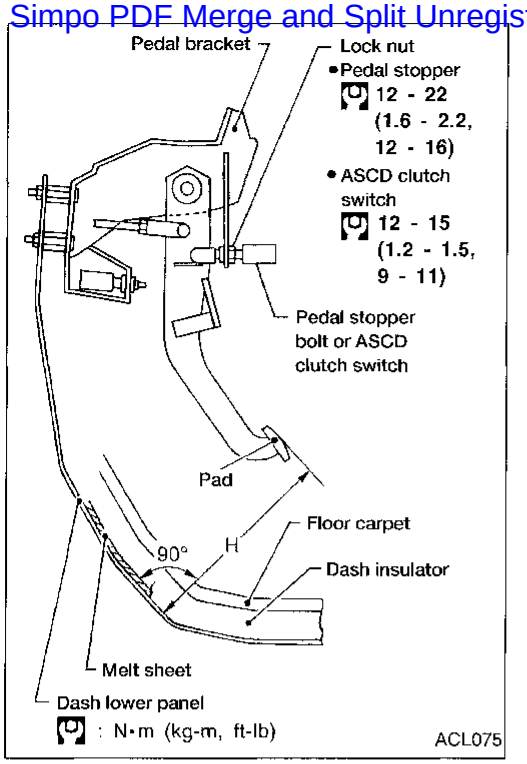

Adjusting Clutch Pedal

1. Adjust pedal height with pedal stopper bolt or ASCD clutch switch.
   Pedal height "H":
   221 - 231 mm (8.70 - 9.09 in)

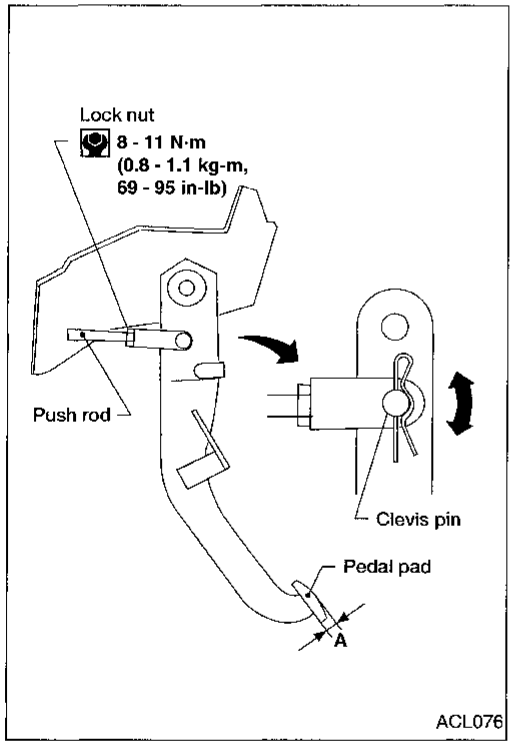

2. Adjust pedal free play by turning master cylinder push rod. Then tighten lock nut.
   Pedal free play "A":
   9 - 16 mm (0.35 - 0.63 in)
   Pedal free play, measured at pedal pad includes the following:
   - Free play due to clevis pin and clevis pin hole, push rod and master cylinder.
3. Make sure that clevis pin can rotate smoothly.
   If not, readjust pedal free play with master cylinder push rod.

Adjusting Clutch Pedal (Cont'd)

Simpo PDF Merge and Split Unregistered Version - http://www.simpopdf.com

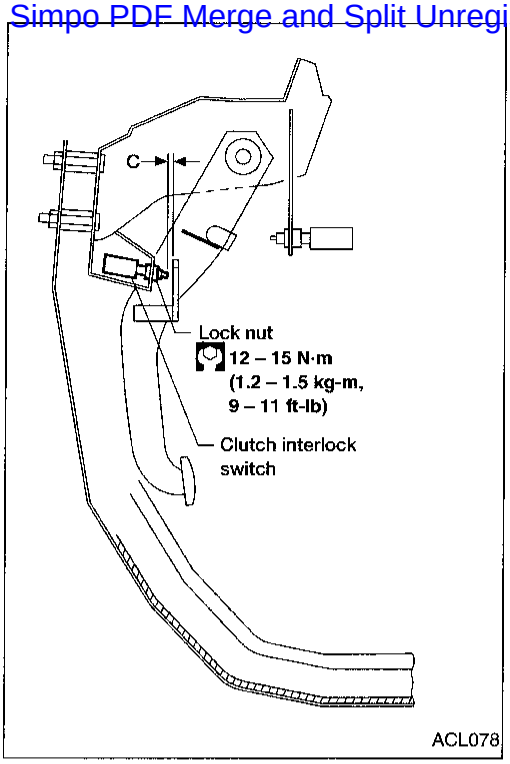

4. Adjust clearance "C" shown in the figure while fully depressing clutch pedal.
   Clearance "C":
   0.1 - 1.0 mm (0.004 - 0.039 in)

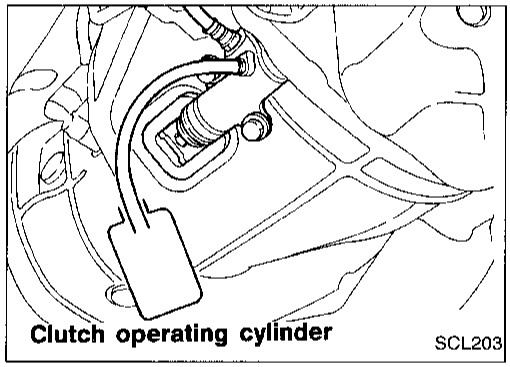

Air Bleeding Procedure

Bleed air according to the following procedure.

1. Fill the master cylinder reservoir tank with new brake fluid.
2. Connect a transparent vinyl hose to the air bleeder.
3. Slowly depress the clutch pedal to its full stroke length and release it completely. Repeat this operation several times at 2 to 3 second intervals.
4. Open the air bleeder with the clutch pedal fully depressed.
5. Close the air bleeder.
6. Release the clutch pedal and wait at least 5 seconds.
7. Repeat steps 3 through 6 above until air bubbles no longer appear in the brake fluid.

Simpo PDF Merge and Split Unregistered Version - http://www.simpopdf.com

Clutch Master Cylinder (With clutch damper)

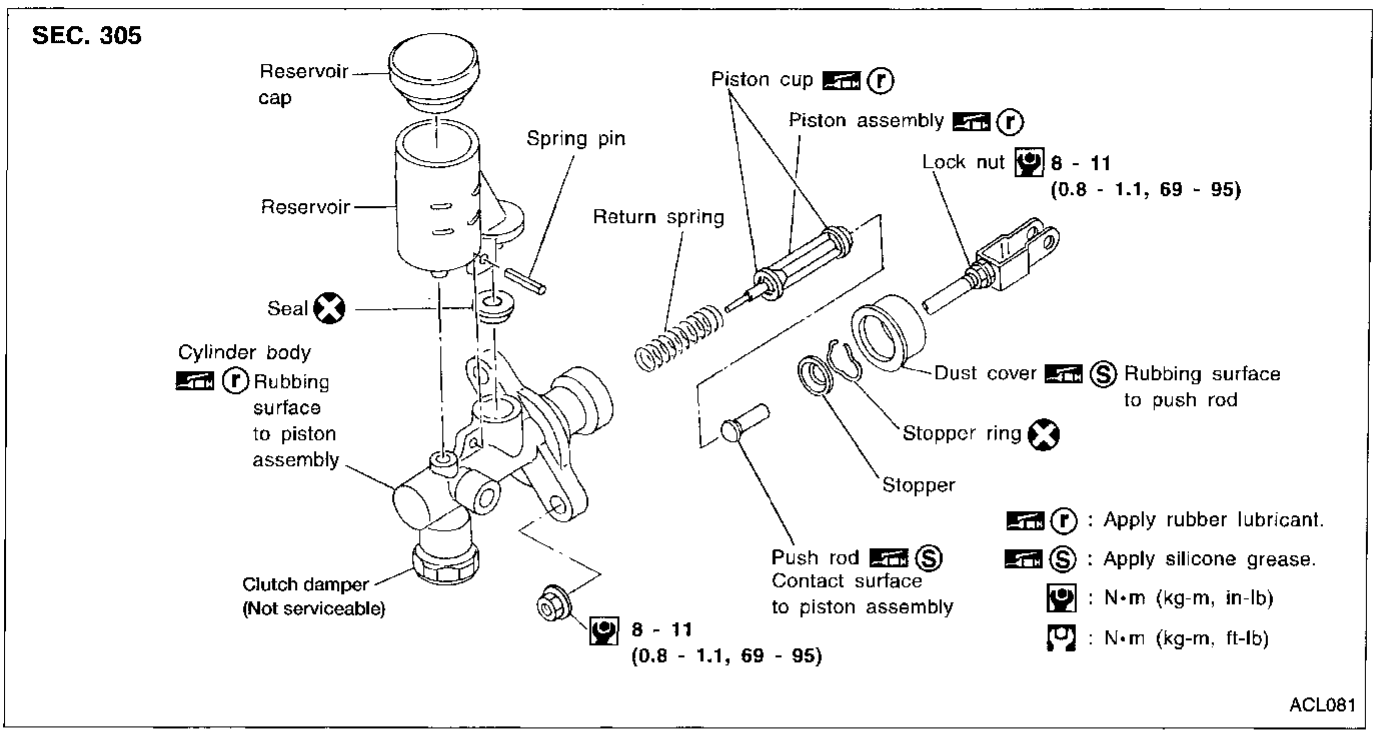

DISASSEMBLY AND ASSEMBLY

- Use a screwdriver to remove stopper ring while pushing push rod into cylinder.
- When installing stopper ring, tap in lightly while pushing push rod into cylinder.

INSPECTION

Check the following items, and replace as necessary.

- Rubbing surface of cylinder and piston, for uneven wear, rust and damage
- Piston with piston cup, for wear and damage
- Return spring, for wear and damage
- Dust cover, for cracks, deformation and damage
- Reservoir, for deformation and damage

Simpo PDF Merge and Split Unregistered Version - http://www.simpopdf.com

Operating Cylinder

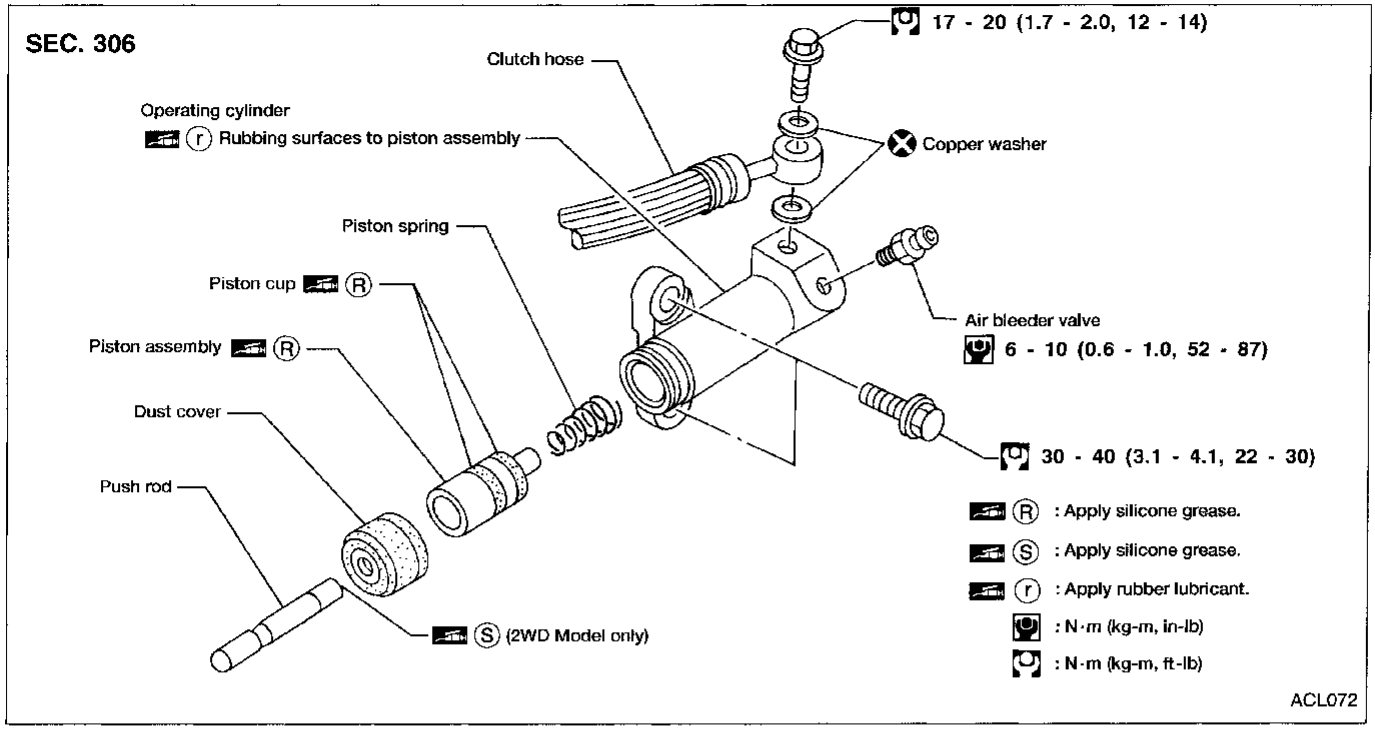

INSPECTION

Check the following items, and replace as necessary.

- Rubbing surface of cylinder and piston, for uneven wear, rust and damage
- Piston with piston cup, for wear and damage
- Piston spring, for wear and damage
- Dust cover, for cracks, deformation and damage

Simpo PDF Merge and Split Unregistered Version - http://www.simpopdf.com

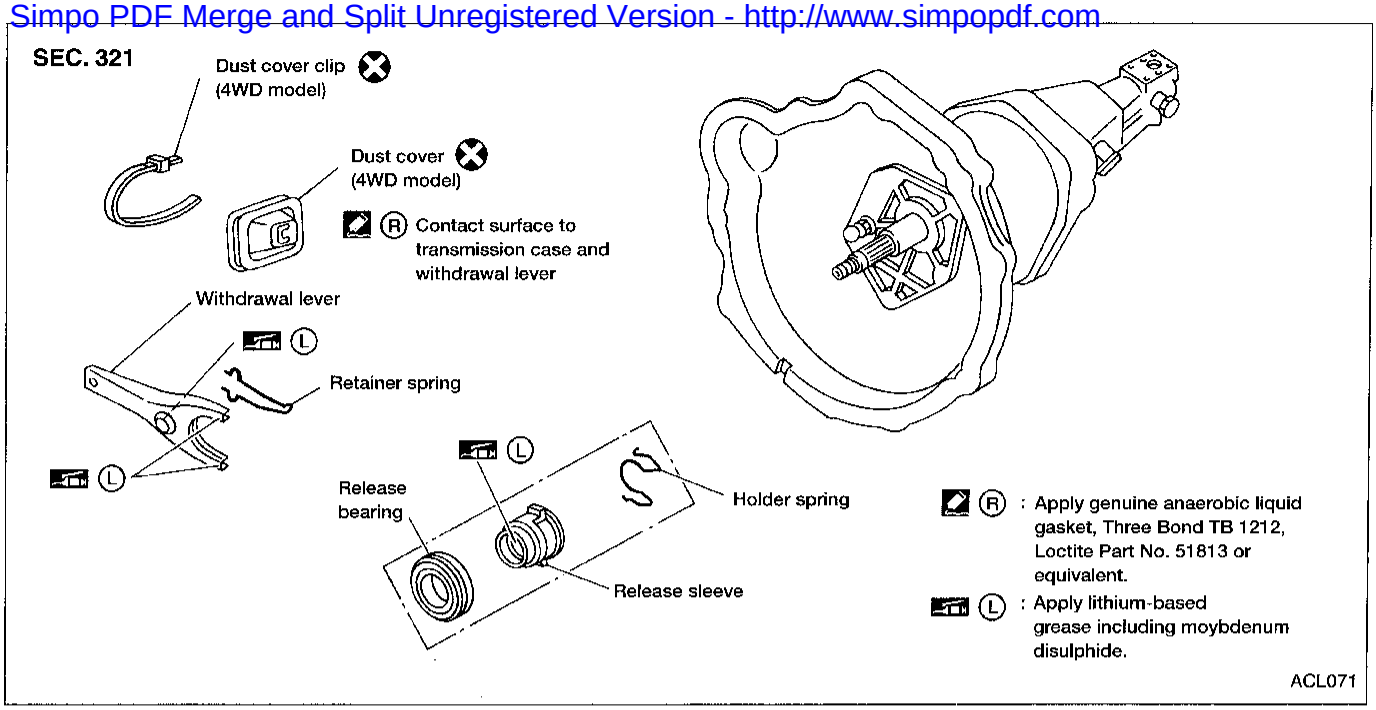

REMOVAL AND INSTALLATION

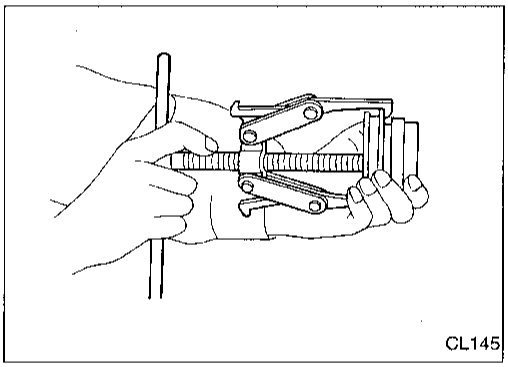

- Remove release bearing.

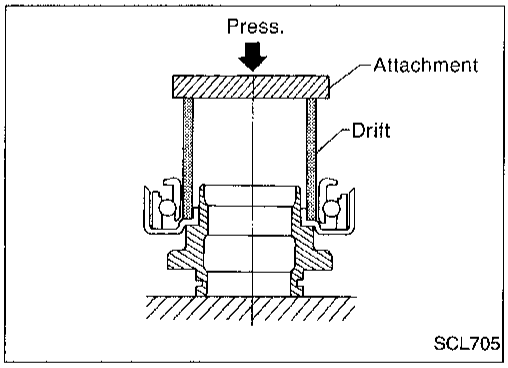

- Install release bearing with suitable drift.

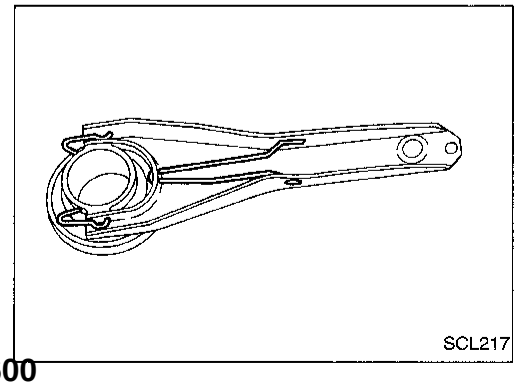

- Install retainer spring and holder spring.

Simpo PDF Merge and Split Unregistered Version - http://www.simpopdf.com

INSPECTION

Check the following items, and replace as necessary.

- Release bearing, to see that it rolls freely and is free from noise, cracks, pitting and wear
- Release sleeve and withdrawal lever rubbing surface, for wear, rust and damage

LUBRICATION

- Apply recommended grease to contact surface and rubbing surface.
- **Too much lubricant might damage clutch disc facing.**

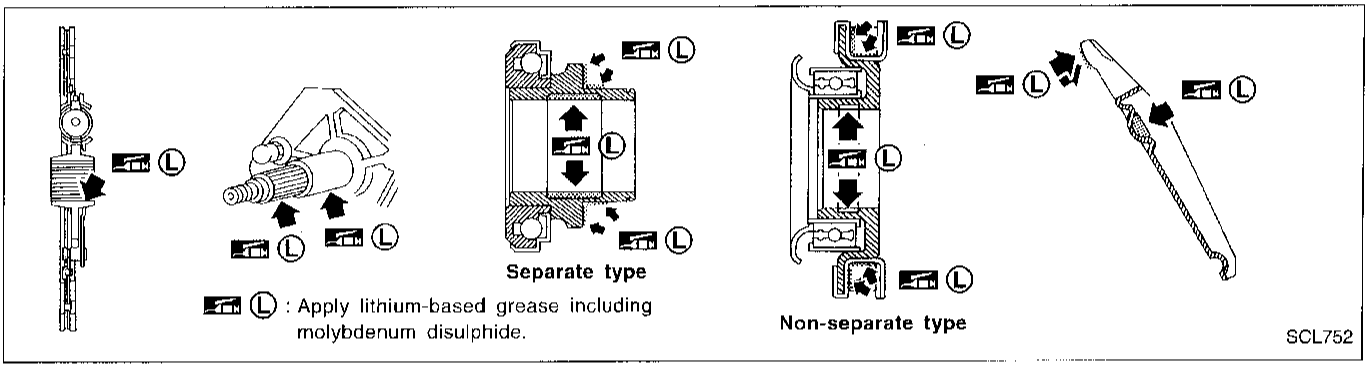

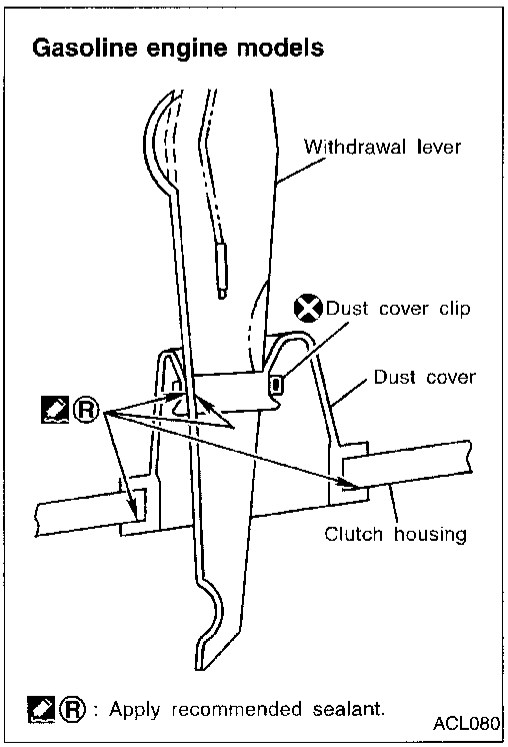

WATERPROOF — for 4WD model

- Apply recommended sealant to contact surface of transmission case dust cover and withdrawal lever, then install dust cover clip.

Recommended sealant: Nissan genuine part (KP115-00100) or equivalent.

Simpo PDF Merge and Split Unregistered Version - http://www.simpopdf.com

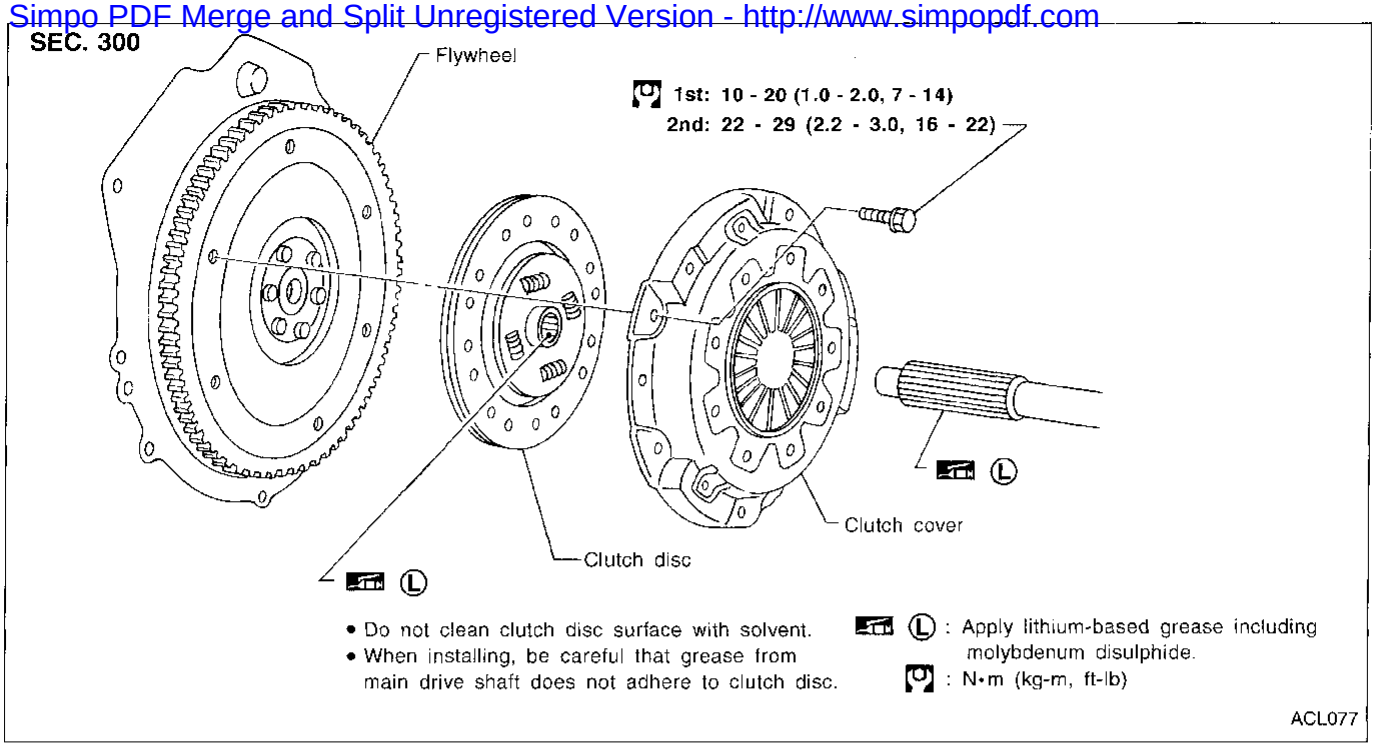

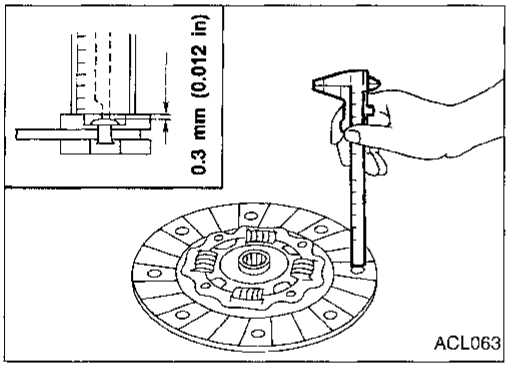

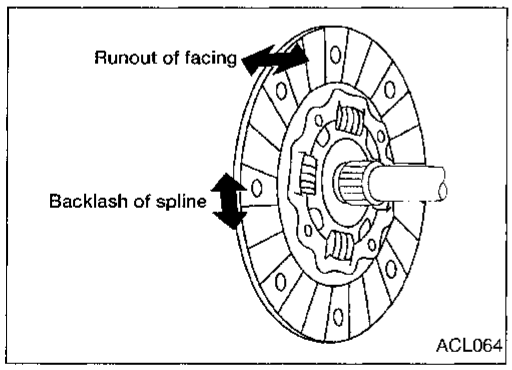

Clutch Disc

INSPECTION

Check the following items, and replace as necessary.

- Clutch disc, for burns, discoloration and oil or grease leakage
- Clutch disc, for wear of facing
  Wear limit of facing surface to rivet head:
  0.3 mm (0.012 in)

- Clutch disc, for backlash of spline and runout of facing
  Maximum backlash of spline (at outer edge of disc):
  1.0 mm (0.039 in)
  Runout limit:
  1.0 mm (0.039 in)
  Distance of runout check point (from hub center):
  115 mm (4.53 in)

INSTALLATION

- Apply recommended grease to contact surface of splines.
- **Too much lubricant may damage clutch disc facing.**

Simpo PDF Merge and Split Unregistered Version - http://www.simpopdf.com

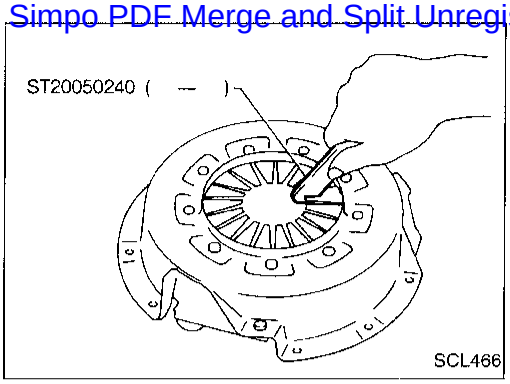

Clutch Cover and Flywheel

INSPECTION AND ADJUSTMENT

- Check clutch cover, installed on vehicle, for uneven diaphragm spring toe height.
  Uneven limit:
  0.7 mm (0.028 in)
- If out of limit, adjust the height using Tool.

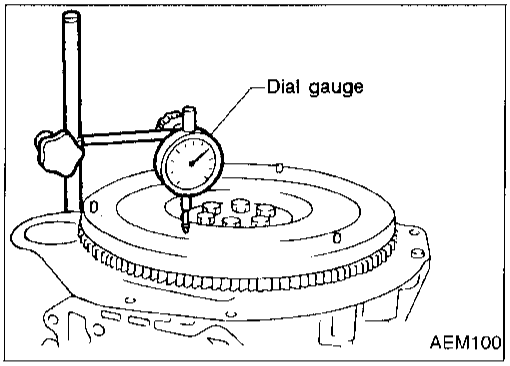

FLYWHEEL INSPECTION

CAUTION:
Do not allow any magnetic materials to contact the ring gear teeth.

- Inspect contact surface of flywheel for slight burns or discoloration. Clean flywheel using emery paper.
- Check flywheel runout.
  Maximum allowable runout:
  Refer to EM section ("Inspection", "CYLINDER BLOCK").

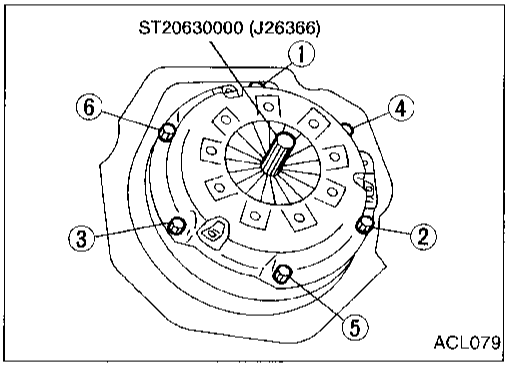

INSTALLATION

- Insert Tool into clutch disc hub while installing clutch cover and disc.
- Be careful not to allow grease to contaminate clutch facing.
- Tighten bolts in numerical order, in two steps.
  First step:
  : 10 - 20 N·m (1.0 - 2.0 kg-m, 7 - 14 ft-lb)
  Final step:
  : 22 - 29 N·m (2.2 - 3.0 kg-m, 16 - 22 ft-lb)

Simpo PDF Merge and Split Unregistered Version - http://www.simpopdf.com

General Specifications

CLUTCH CONTROL SYSTEM

Type of clutch control	Hydraulic

CLUTCH MASTER CYLINDER

Unit: mm (in)

Inner diameter	15.87 (5/8)

CLUTCH OPERATING CYLINDER (with clutch damper)

Unit: mm (in)

Inner diameter	17.46 (11/16)

CLUTCH DISC

Unit: mm (in)

Model	240
Engine	KA24DE
Facing size (Outer dia. x inner dia. x thickness)	240 x 150 x 3.5 (9.45 x 5.91 x 0.138)
Thickness of disc assembly With load	7.75 - 8.25 (0.3051 - 0.3248) with 4904 N (500 kg, 1103 lb)

CLUTCH COVER

Model		240	
Engine		KA24DE	
Set-load	N (kg, lb)	2WD	4904 (500, 1103)
		4WD	4658 (475, 1047)

Inspection and Adjustment

CLUTCH PEDAL

Unit: mm (in)

Pedal height "H"*	221 - 231 (8.70 - 9.09)
Pedal free play "A" (at pedal pad)	9 - 16 (0.35 - 0.63)
Clearance "C" between pedal stopper bracket and clutch pedal position switch (with clutch pedal fully depressed)	0.1 - 1.0 (0.004 - 0.039)

*: Measured from surface of dash lower panel to pedal pad.

CLUTCH DISC

Unit: mm (in)

Model	240
Wear limit of facing surface to rivet head	0.3 (0.012)
Runout limit of facing	1.0 (0.039)
Distance of runout check point (from hub center)	115 (4.53)
Maximum backlash of spline (at outer edge of disc)	1.0 (0.039)

CLUTCH COVER

Unit: mm (in)

Model	240
Diaphragm spring height	37.5 - 39.5 (1.476 - 1.555)
Uneven limit of diaphragm spring toe height	0.7 (0.028)

Simpo PDF Merge and Split Unregistered Version - http://www.simpopdf.com

SECTION EC

CONTENTS

DIAGNOSTIC TROUBLE CODE INDEX 2
Alphabetical & P No. Index for DTC 2
PRECAUTIONS AND PREPARATION 4
Special Service Tools 4
Commercial Service Tools 4
Supplemental Restraint System (SRS) "AIR BAG" 5
Precautions for On Board Diagnostic (OBD) System of Engine 5
Engine Fuel & Emission Control System 6
Precautions 7
ENGINE AND EMISSION CONTROL OVERALL SYSTEM 9
Circuit Diagram 9
ECCS Component Parts Location 10
System Diagram 12
Vacuum Hose Drawing 13
System Chart 14
ENGINE AND EMISSION BASIC CONTROL SYSTEM DESCRIPTION 15
Multiport Fuel Injection (MFI) System 15
Distributor Ignition (DI) System 17
Air Conditioning Cut Control 18
Fuel Cut Control 19
EVAPORATIVE EMISSION SYSTEM 20
Description 20
Inspection 20
Evaporative Emission Line Drawing 23
POSITIVE CRANKCASE VENTILATION 25
Description 25
Inspection 25
BASIC SERVICE PROCEDURE 26
Fuel Pressure Release 26
Fuel Pressure Check 26
Fuel Pressure Regulator Check 26
Injector Removal and Installation 27
Fast Idle Cam (FIC) 28
Idle Speed/Ignition Timing/Idle Mixture Ratio Adjustment 29
ON BOARD DIAGNOSTIC SYSTEM DESCRIPTION 35
Introduction 35
Two Trip Detection Logic 35
Emission-related Diagnostic Information 36
Malfunction Indicator Lamp (MIL) 46
OBD System Operation Chart 49
CONSULT 54
Generic Scan Tool (GST) 65
TROUBLE DIAGNOSIS — Introduction 67
Introduction 67
Diagnostic Worksheet 67
TROUBLE DIAGNOSIS — Work Flow 69
Work Flow 69
Description for Work Flow 70
TROUBLE DIAGNOSIS — Basic Inspection 71
Basic Inspection 71
TROUBLE DIAGNOSIS — General Description 75
Diagnostic Trouble Code (DTC) Inspection Priority Chart 75
Fail-Safe Chart 76
Symptom Matrix Chart 77
CONSULT Reference Value in Data Monitor Mode 80
Major Sensor Reference Graph in Data Monitor Mode 82
ECM Terminals and Reference Value 84
TROUBLE DIAGNOSIS FOR INTERMITTENT INCIDENT 93
Description 93
Common I/I Report Situations 93
Diagnostic Procedure 93
TROUBLE DIAGNOSIS FOR POWER SUPPLY 94
Main Power Supply and Ground Circuit 94
TROUBLE DIAGNOSIS FOR DTC P0100 99
Mass Air Flow Sensor (MAFS) 99
TROUBLE DIAGNOSIS FOR DTC P0105 108
Absolute Pressure Sensor 108
TROUBLE DIAGNOSIS FOR DTC P0110 115
Intake Air Temperature Sensor 115

CONTENTS (Cont'd.)

Simpo PDF Merge and Split Unregistered Version - http://www.simpopdf.com

TROUBLE DIAGNOSIS FOR DTC P0115.....121
Engine Coolant Temperature Sensor (ECTS) (Circuit).....121
TROUBLE DIAGNOSIS FOR DTC P0120.....126
Throttle Position Sensor.....126
TROUBLE DIAGNOSIS FOR DTC P0125.....139
Engine Coolant Temperature (ECT) Sensor.....139
TROUBLE DIAGNOSIS FOR DTC P0130.....144
Front Heated Oxygen Sensor (Circuit) (Front HO2S).....144
TROUBLE DIAGNOSIS FOR DTC P0131.....150
Front Heated Oxygen Sensor (Lean Shift Monitoring) (Front HO2S).....150
TROUBLE DIAGNOSIS FOR DTC P0132.....156
Front Heated Oxygen Sensor (Rich Shift Monitoring) (Front HO2S).....156
TROUBLE DIAGNOSIS FOR DTC P0133.....162
Front Heated Oxygen Sensor (Response Monitoring) (Front HO2S).....162
TROUBLE DIAGNOSIS FOR DTC P0134.....170
Front Heated Oxygen Sensor (High Voltage) (Front HO2S).....170
TROUBLE DIAGNOSIS FOR DTC P0135.....175
Front Heated Oxygen Sensor Heater.....175
TROUBLE DIAGNOSIS FOR DTC P0137.....179
Rear Heated Oxygen Sensor (Min. Voltage Monitoring) (Rear HO2S).....179
TROUBLE DIAGNOSIS FOR DTC P0138.....186
Rear Heated Oxygen Sensor (Max. Voltage Monitoring) (Rear HO2S).....186
TROUBLE DIAGNOSIS FOR DTC P0139.....193
Rear Heated Oxygen Sensor (Response Monitoring) (Rear HO2S).....193
TROUBLE DIAGNOSIS FOR DTC P0140.....199
Rear Heated Oxygen Sensor (High Voltage) (Rear HO2S).....199
TROUBLE DIAGNOSIS FOR DTC P0141.....204
Rear Heated Oxygen Sensor Heater.....204
TROUBLE DIAGNOSIS FOR DTC P0171.....208
Fuel Injection System Function (Lean side).....208
TROUBLE DIAGNOSIS FOR DTC P0172.....213
Fuel Injection System Function (Rich side).....213
TROUBLE DIAGNOSIS FOR DTC P0180.....218
Tank Fuel Temperature Sensor.....218
TROUBLE DIAGNOSIS FOR DTC P0300 - P0304.....222
No. 4 - 1 Cylinder Misfire, Multiple Cylinder Misfire.....222
TROUBLE DIAGNOSIS FOR DTC P0325.....227
Knock Sensor (KS).....227
TROUBLE DIAGNOSIS FOR DTC P0335.....231
Crankshaft Position Sensor (CKPS) (OBD).....231
TROUBLE DIAGNOSIS FOR DTC P0340.....236
Camshaft Position Sensor (CMPS).....236
TROUBLE DIAGNOSIS FOR DTC P0400.....242
EGR Function (Close).....242
TROUBLE DIAGNOSIS FOR DTC P0402.....250
EGRC-BPT Valve Function.....250
TROUBLE DIAGNOSIS FOR DTC P0420.....255
Three-Way Catalyst Function.....255
TROUBLE DIAGNOSIS FOR DTC P0440.....260
Evaporative Emission (EVAP) Control System (Small Leak) (Negative Pressure).....260
TROUBLE DIAGNOSIS FOR DTC P0443.....270
Evaporative Emission (EVAP) Canister Purge Volume Control Solenoid Valve (Circuit).....270
TROUBLE DIAGNOSIS FOR DTC P0446.....276
Evaporative Emission (EVAP) Canister Vent Control Valve (Circuit).....276
TROUBLE DIAGNOSIS FOR DTC P0450.....281
Evaporative Emission (EVAP) Control System Pressure Sensor.....281
TROUBLE DIAGNOSIS FOR DTC P0500.....287
Vehicle Speed Sensor (VSS).....287
TROUBLE DIAGNOSIS FOR DTC P0505.....291
Idle Air Control Valve (IACV) — Auxiliary Air Control (AAC) Valve.....291
TROUBLE DIAGNOSIS FOR DTC P0510.....297
Closed Throttle Position Switch.....297
TROUBLE DIAGNOSIS FOR DTC P0605.....302
Engine Control Module (ECM).....302
TROUBLE DIAGNOSIS FOR DTC P1105.....304
Manifold Absolute Pressure (MAP)/ Barometric Pressure (BARO) Switch Solenoid Valve.....304
TROUBLE DIAGNOSIS FOR DTC P1148.....313
Closed Loop Control.....313
TROUBLE DIAGNOSIS FOR DTC P1320.....315
Ignition Signal.....315
TROUBLE DIAGNOSIS FOR DTC P1336.....322
Crankshaft Position Sensor (CKPS) (OBD) (COG).....322
TROUBLE DIAGNOSIS FOR DTC P1400.....327
EGRC-Solenoid Valve.....327
TROUBLE DIAGNOSIS FOR DTC P1401.....332
EGR Temperature Sensor.....332
TROUBLE DIAGNOSIS FOR DTC P1402.....338
EGR Function (Open).....338
TROUBLE DIAGNOSIS FOR DTC P1440.....345
Evaporative Emission (EVAP) Control System (Small Leak) (Positive Pressure).....345
TROUBLE DIAGNOSIS FOR DTC P1444.....355
Evaporative Emission (EVAP) Canister Purge Volume Control Solenoid Valve.....355

CONTENTS (Cont'd.)

Simpo PDF Merge and Split Unregistered Version - http://www.simpopdf.com

TROUBLE DIAGNOSIS FOR DTC P1446.....362
Evaporative Emission (EVAP) Canister Vent Control Valve (Close).....362
TROUBLE DIAGNOSIS FOR DTC P1447.....367
Evaporative Emission (EVAP) Control System Purge Flow Monitoring.....367
TROUBLE DIAGNOSIS FOR DTC P1448.....373
Evaporative Emission (EVAP) Canister Vent Control Valve (Open).....373
TROUBLE DIAGNOSIS FOR DTC P1490.....378
Vacuum Cut Valve Bypass Valve (Circuit).....378
TROUBLE DIAGNOSIS FOR DTC P1491.....383
Vacuum Cut Valve Bypass Valve.....383
TROUBLE DIAGNOSIS FOR DTC P1706.....388
Park/Neutral Position Switch.....388
TROUBLE DIAGNOSIS FOR DTC P1775.....393
Torque Converter Clutch Solenoid Valve.....393
TROUBLE DIAGNOSIS FOR DTC P1776.....397
Torque Converter Clutch Solenoid Valve.....397
TROUBLE DIAGNOSIS FOR OVERHEAT.....401
Overheat.....401
TROUBLE DIAGNOSIS FOR NON-DETECTABLE ITEMS.....404
Injector.....404
Start Signal.....407
Fuel Pump.....410
Power Steering Oil Pressure Switch.....415
IACV-FICD Solenoid Valve.....418
MIL & Data Link Connectors.....422
SERVICE DATA AND SPECIFICATIONS (SDS).....423
General Specifications.....423
Inspection and Adjustment.....423

When you read wiring diagrams:
- **Read GI section, "HOW TO READ WIRING DIAGRAMS".**
- **Read EL section, "POWER SUPPLY ROUTING" for power distribution circuit.**

When you perform trouble diagnoses, read GI section, "HOW TO FOLLOW FLOW CHART IN TROUBLE DIAGNOSES" and "HOW TO PERFORM EFFICIENT DIAGNOSIS FOR AN ELECTRICAL INCIDENT".

Simpo PDF Merge and Split Unregistered Version - http://www.simpopdf.com

Alphabetical & P No. Index for DTC

ALPHABETICAL INDEX FOR DTC

Items (CONSULT screen terms)	DTC*5		Reference page
	CONSULT GST*2	ECM*1	
Unable to access ECCS	—	—	EC-76
*COOLAN T SEN/CIRC	P0125	0908	EC-139
ABSL PRES SEN/CIRC	P0105	0803	EC-108
AIR TEMP SEN/CIRC	P0110	0401	EC-115
CAM POS SEN/CIR	P0340	0101	EC-236
CLOSED LOOP	P1148	0307	EC-313
CLOSED TP SW/CIRC	P0510	0203	EC-297
COOLANT T SEN/CIRC	P0115	0103	EC-121
CPS/CIRC (OBD) COG	P1336	0905	EC-322
CPS/CIRCUIT (OBD)	P0335	0802	EC-231
CYL 1 MISFIRE	P0301	0608	EC-222
CYL 2 MISFIRE	P0302	0607	EC-222
CYL 3 MISFIRE	P0303	0606	EC-222
CYL 4 MISFIRE	P0304	0605	EC-222
ECM	P0605	0301	EC-302
EGR SYSTEM	P0400	0302	EC-242
EGR SYSTEM	P1402	0514	EC-338
EGR TEMP SEN/CIRC	P1401	0305	EC-332
EGRC SOLENOID/V	P1400	1005	EC-327
EGRC-BPT VALVE	P0402	0306	EC-250
EVAP PURG FLOW/MON	P1447	0111	EC-367
EVAP SMALL LEAK	P1440	0213	EC-345
EVAP SMALL LEAK	P0440	0705	EC-260
EVAPO SYS PRES SEN	P0450	0704	EC-281
FRONT O2 SENSOR	P0130	0303	EC-144
FR O2 SEN HEATER	P0135	0901	EC-175
FRONT O2 SENSOR	P0133	0409	EC-162
FRONT O2 SENSOR	P0132	0410	EC-156
FRONT O2 SENSOR	P0131	0411	EC-150
FRONT O2 SENSOR	P0134	0412	EC-170
FUEL SYS DIAG-LEAN	P0171	0115	EC-208
FUEL SYS DIAG-RICH	P0172	0114	EC-213
FUEL TEMP SEN/CIRC	P0180	0402	EC-218
IACV/AAC VLV/CIRC	P0505	0205	EC-291
IGN SIGNAL-PRIMARY	P1320	0201	EC-315
KNOCK SEN/CIRCUIT	P0325	0304	EC-227
MAF SEN/CIRCUIT*3	P0100	0102	EC-99
MAP/BAR SW SOL/CIR	P1105	1302	EC-304
MULTI CYL MISFIRE	P0300	0701	EC-222
NO SELF DIAGNOSTIC FAILURE INDICATED	P0000	0505	—
NO SELF DIAGNOSTIC FAILURE INDICATED	No DTC	Flash-ing*4	EC-46
OVERHEAT	—	0208	EC-401
P-N POS SW/CIRCUIT	P1706	1003	EC-388
PURG VOLUME CONT/V	P1444	0214	EC-355
PURG VOLUME CONT/V	P0443	1008	EC-270
REAR O2 SENSOR	P0138	0510	EC-186
REAR O2 SENSOR	P0137	0511	EC-179
REAR O2 SENSOR	P0140	0512	EC-199
REAR O2 SENSOR	P0139	0707	EC-193
RR O2 SEN HEATER	P0141	0902	EC-204
THRTL POS SEN/CIRC*3	P0120	0403	EC-126
TOR CONV CLTCH S/V	P1775	0904	EC-393
TOR CONV CLTCH S/V	P1776	0513	EC-397
TW CATALYST SYSTEM	P0420	0702	EC-255
VC CUT/V BYPASS/V	P1491	0311	EC-383
VC/V BYPASS/V	P1490	0801	EC-378
VEH SPEED SEN/CIRC	P0500	0104	EC-287
VENT CONTROL VALVE	P1446	0215	EC-362
VENT CONTROL VALVE	P1448	0309	EC-373
VENT CONTROL VALVE	P0446	0903	EC-276

*1: In Diagnostic Test Mode II (Self-diagnostic results). These numbers are controlled by NISSAN.
*2: These numbers are prescribed by SAE J2012.
*3: When the fail-safe operation occurs, the MIL illuminates.
*4: While engine is running.
*5: 1st trip DTC No. is the same as DTC No.

Simpo PDF Merge and Split Unregistered Version - http://www.simpopdf.com

P NO. INDEX FOR DTC

DTC*5		Items (CONSULT screen terms)	Reference page
CONSULT GST*2	ECM*1		
—	—	Unable to access ECCS	EC-76
No DTC	Flash-ing*4	NO SELF DIAGNOSTIC FAILURE INDICATED	EC-46
P0000	0505	NO SELF DIAGNOSTIC FAILURE INDICATED	—
P0100	0102	MAF SEN/CIRCUIT*3	EC-99
P0105	0803	ABSL PRES SEN/CIRC	EC-108
P0110	0401	AIR TEMP SEN/CIRC	EC-115
P0115	0103	COOLANT T SEN/CIRC	EC-121
P0120	0403	THRTL POS SEN/CIRC*3	EC-126
P0125	0908	*COOLAN T SEN/CIRC	EC-139
P0130	0303	FRONT O2 SENSOR	EC-144
P0131	0411	FRONT O2 SENSOR	EC-150
P0132	0410	FRONT O2 SENSOR	EC-156
P0133	0409	FRONT O2 SENSOR	EC-162
P0134	0412	FRONT O2 SENSOR	EC-170
P0135	0901	FR O2 SEN HEATER	EC-175
P0137	0511	REAR O2 SENSOR	EC-179
P0138	0510	REAR O2 SENSOR	EC-186
P0139	0707	REAR O2 SENSOR	EC-193
P0140	0512	REAR O2 SENSOR	EC-199
P0141	0902	RR O2 SEN HEATER	EC-204
P0171	0115	FUEL SYS DIAG-LEAN	EC-208
P0172	0114	FUEL SYS DIAG-RICH	EC-213
P0180	0402	FUEL TEMP SEN/CIRC	EC-218
P0300	0701	MULTI CYL MISFIRE	EC-222
P0301	0608	CYL 1 MISFIRE	EC-222
P0302	0607	CYL 2 MISFIRE	EC-222
P0303	0606	CYL 3 MISFIRE	EC-222
P0304	0605	CYL 4 MISFIRE	EC-222
P0325	0304	KNOCK SEN/CIRCUIT	EC-227
P0335	0802	CPS/CIRCUIT (OBD)	EC-231
P0340	0101	CAM POS SEN/CIR	EC-236
P0400	0302	EGR SYSTEM	EC-242
P0402	0306	EGRC-BPT VALVE	EC-250
P0420	0702	TW CATALYST SYSTEM	EC-255
P0440	0705	EVAP SMALL LEAK	EC-260
P0443	1008	PURG VOLUME CONT/V	EC-270
P0446	0903	VENT CONTROL VALVE	EC-276
P0450	0704	EVAPO SYS PRES SEN	EC-281
P0500	0104	VEH SPEED SEN/CIRC	EC-287
P0505	0205	IACV/AAC VLV/CIRC	EC-291
P0510	0203	CLOSED TP SW/CIRC	EC-297
P0605	0301	ECM	EC-302
P1105	1302	MAP/BAR SW SOL/CIR	EC-304
P1148	0307	CLOSED LOOP	EC-313
P1320	0201	IGN SIGNAL-PRIMARY	EC-315
P1336	0905	CPS/CIRC (OBD) COG	EC-322
P1400	1005	EGRC SOLENOID/V	EC-327
P1401	0305	EGR TEMP SEN/CIRC	EC-332
P1402	0514	EGR SYSTEM	EC-338
P1440	0213	EVAP SMALL LEAK	EC-345
P1444	0214	PURG VOLUME CONT/V	EC-355
P1446	0215	VENT CONTROL VALVE	EC-362
P1447	0111	EVAP PURG FLOW/MON	EC-367
P1448	0309	VENT CONTROL VALVE	EC-373
P1490	0801	VC/V BYPASS/V	EC-378
P1491	0311	VC CUT/V BYPASS/V	EC-383
P1706	1003	P-N POS SW/CIRCUIT	EC-388
P1775	0904	TOR CONV CLTCH S/V	EC-393
P1776	0513	TOR CONV CLTCH S/V	EC-397
—	0208	OVERHEAT	EC-401

*1: In Diagnostic Test Mode II (Self-diagnostic results). These numbers are controlled by NISSAN.
*2: These numbers are prescribed by SAE J2012.
*3: When the fail-safe operation occurs, the MIL illuminates.
*4: While engine is running.
*5: 1st trip DTC No. is the same as DTC No.

Simpo PDF Merge and Split Unregistered Version - http://www.simpopdf.com

Special Service Tools

The actual shapes of Kent-Moore tools may differ from those of special service tools illustrated here.

Tool number (Kent-Moore No.) Tool name	Description	
KV10117100 (J36471-A) Heated oxygen sensor wrench	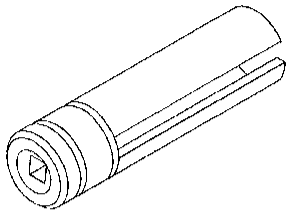 NT379	Loosening or tightening front heated oxygen sensor with 22 mm (0.87 in) hexagon nut
KV10114400 (J-38365) Heated oxygen sensor wrench	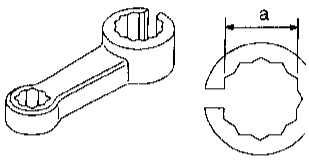 NT636	Loosening or tightening rear heated oxygen sensor **a: 22 mm (0.87 in)**

Commercial Service Tools

Tool name	Description	
Fuel filler cap adapter	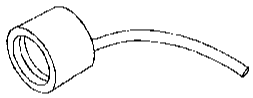 NT653	Checking fuel tank vacuum relief valve opening pressure
Leak detector (J41416)	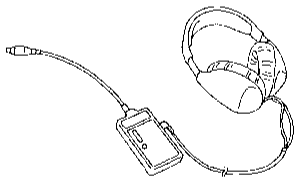 NT703	Locating the EVAP leak
EVAP service port adapter (J41413-OBD)	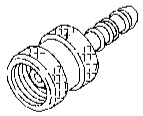 NT704	Applying positive pressure through EVAP service port
Hose clipper (—)	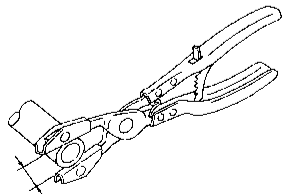 Approx. 20 mm (0.79 in) NT720	Clamping the EVAP purge hose between the fuel tank and EVAP canister applied to DTC P1440 [EVAP control system (Small leak — Positive pressure)]

Simpo PDF Merge and Split Unregistered Version - http://www.simpopdf.com

Supplemental Restraint System (SRS) "AIR BAG"

The Supplemental Restraint System "AIR BAG", used along with a seat belt, helps to reduce the risk or severity of injury to the driver and front passenger in a frontal collision. The Supplemental Restraint System consists of air bag modules (located in the center of the steering wheel and in the instrument panel on the passenger side), a diagnosis sensor unit, a crash zone sensor (4WD models), warning lamp, wiring harness and spiral cable.

The vehicle is equipped with a passenger air bag deactivation switch. Because no rear seat exists where a rear-facing child restraint can be placed, the switch is designed to turn off the passenger air bag so that a rear-facing child restraint can be used in the front passenger seat. The switch is located in the center of the instrument panel, near the ashtray. When the switch is turned to the ON position, the passenger air bag is enabled and could inflate in a frontal collision. When the switch is turned to the OFF position, the passenger air bag is disabled and will not inflate in a frontal collision. A passenger air bag OFF indicator on the instrument panel lights up when the passenger air bag is switched OFF. The driver air bag always remains enabled and is not affected by the passenger air bag deactivation switch.

Information necessary to service the system safely is included in the **RS section** of this Service Manual.

WARNING:

- **To avoid rendering the SRS inoperative, which could increase the risk of personal injury or death in the event of a collision which would result in air bag inflation, all maintenance should be performed by an authorized NISSAN dealer.**
- **Improper maintenance, including incorrect removal and installation of the SRS, can lead to personal injury caused by unintentional activation of the system.**
- **Do not use electrical test equipment on any circuit related to the SRS unless instructed to in this Service Manual. SRS wiring harnesses are covered with yellow insulation either just before the harness connectors or on the complete harness, for easy identification.**
- **The vehicle is equipped with a passenger air bag deactivation switch which can be operated by the customer. When the passenger air bag is switched OFF, the passenger air bag is disabled and will not inflate in a frontal collision. When the passenger air bag is switched ON, the passenger air bag is enabled and could inflate in a frontal collision. After SRS maintenance or repair, make sure the passenger air bag deactivation switch is in the same position (ON or OFF) as when the vehicle arrived for service.**

Precautions for On Board Diagnostic (OBD) System of Engine

The ECM has an on board diagnostic system. It will light up the malfunction indicator lamp (MIL) to warn the driver of a malfunction causing emission deterioration.

CAUTION:

- **Be sure to turn the ignition switch "OFF" and disconnect the negative battery terminal before any repair or inspection work. The open/short circuit of related switches, sensors, solenoid valves, etc. will cause the MIL to light up.**
- **Be sure to connect and lock the connectors securely after work. A loose (unlocked) connector will cause the MIL to light up due to the open circuit. (Be sure the connector is free from water, grease, dirt, bent terminals, etc.)**
- **Be sure to route and secure the harnesses properly after work. The interference of the harness with a bracket, etc. may cause the MIL to light up due to the short circuit.**
- **Be sure to connect rubber tubes properly after work. A misconnected or disconnected rubber tube may cause the MIL to light up due to the malfunction of the EGR system or fuel injection system, etc.**
- **Be sure to erase the unnecessary malfunction information (repairs completed) from the ECM before returning the vehicle to the customer.**

Simpo PDF Merge and Split Unregistered Version - http://www.simpopdf.com

Engine Fuel & Emission Control System

ECM

- Do not disassemble ECM.
- Do not turn on board diagnostic test mode selector forcibly.
- If a battery terminal is disconnected, the memory will return to the ECM value.
  The ECM will now start to self-control at its initial value. Engine operation can vary slightly when the terminal is disconnected. However, this is not an indication of a problem. Do not replace parts because of a slight variation.

WIRELESS EQUIPMENT

- When installing CB ham radio or a mobile phone, be sure to observe the following as it may adversely affect electronic control systems depending on its installation location.

1) Keep the antenna as far away as possible from the electronic control units.
2) Keep the antenna feeder line more than 20 cm (7.9 in) away from the harness of electronic controls.
   Do not let them run parallel for a long distance.
3) Adjust the antenna and feeder line so that the standing-wave ratio can be kept smaller.
4) Be sure to ground the radio to vehicle body.

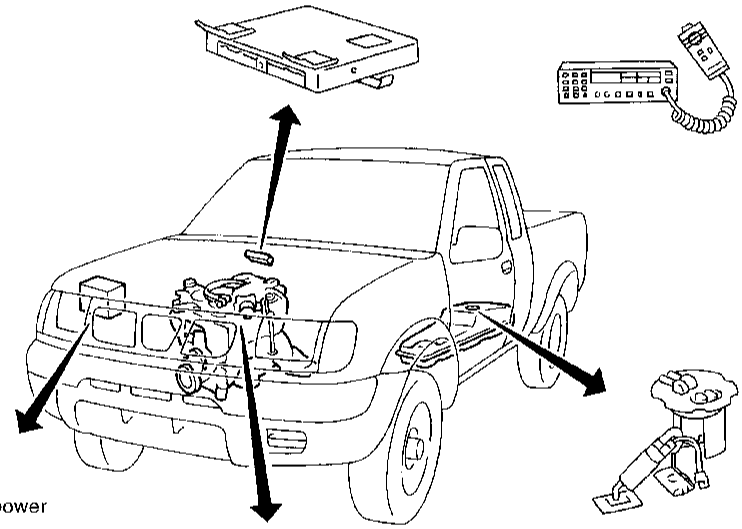

BATTERY

- Always use a 12 volt battery as power source.
- Do not attempt to disconnect battery cables while engine is running.

WHEN STARTING

- Do not depress accelerator pedal when starting.
- Immediately after starting, do not rev up engine unnecessarily.
- Do not rev up engine just prior to shutdown.

ECM PARTS HANDLING

- Handle mass air flow sensor carefully to avoid damage.
- Do not disassemble mass air flow sensor.
- Do not clean mass air flow sensor with any type of detergent.
- Do not disassemble IACV-AAC valve.
- Even a slight leak in the air intake system can cause serious problems.
- Do not shock or jar the camshaft position sensor or crankshaft position sensor (OBD).

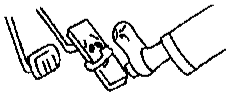

FUEL PUMP

- Do not operate fuel pump when there is no fuel in lines.
- Tighten fuel hose clamps to the specified torque. (Refer to MA section.)

ECM HARNESS HANDLING

- Securely connect ECM harness connectors.
  A poor connection can cause an extremely high (surge) voltage to develop in coil and condenser, thus resulting in damage to ICs.
- Keep ECM harness at least 10 cm (3.9 in.) away from adjacent harnesses to prevent an ECM system malfunction due to receiving external noise, degraded operation of ICs, etc.
- Keep ECM parts and harnesses dry.
- Before removing parts, turn off ignition switch and then disconnect battery ground cable.

SEF236V

Simpo PDF Merge and Split Unregistered Version - http://www.simpopdf.com

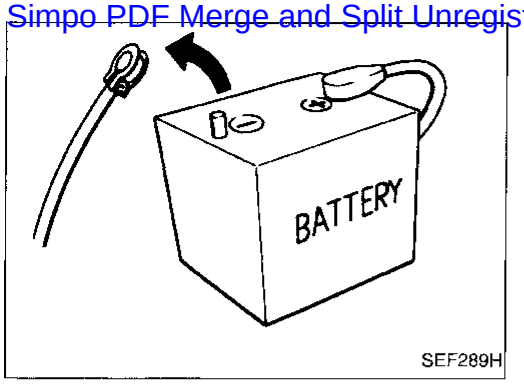

SEF289H

Precautions

- Before connecting or disconnecting the ECM harness connector, turn ignition switch OFF and disconnect negative battery terminal. Failure to do so may damage the ECM because battery voltage is applied to ECM even if ignition switch is turned off.

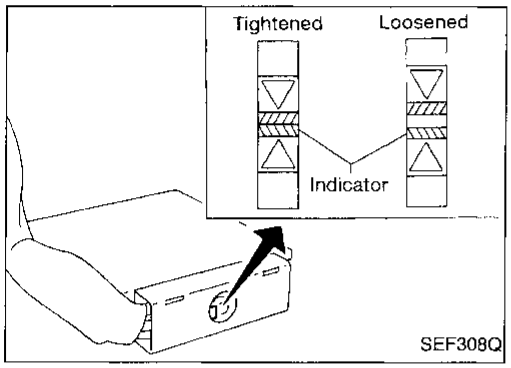

SEF308Q

- When connecting ECM harness connector, tighten securing bolt until the gap between orange indicators disappears.
  : 3.0 - 5.0 N·m (0.3 - 0.5 kg-m, 26 - 43 in-lb)

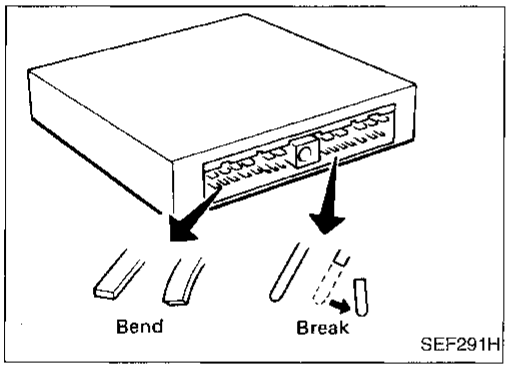

SEF291H

- When connecting or disconnecting pin connectors into or from ECM, take care not to damage pin terminals (bend or break).
  Make sure that there are not any bends or breaks on ECM pin terminal, when connecting pin connectors.

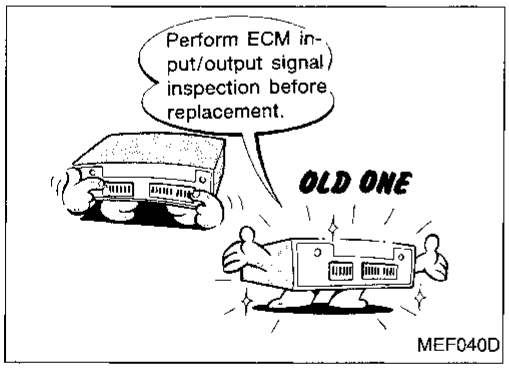

MEF040D

- Before replacing ECM, perform Terminals and Reference Value inspection and make sure ECM functions properly. Refer to EC-84.

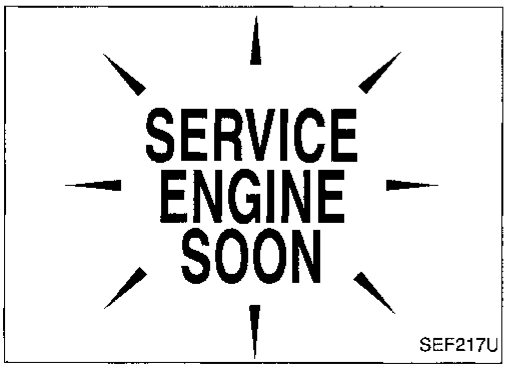

SEF217U

- After performing each TROUBLE DIAGNOSIS, perform "OVERALL FUNCTION CHECK" or "DTC (Diagnostic Trouble Code) CONFIRMATION PROCEDURE".
  The DTC should not be displayed in the "DIAGNOSTIC TROUBLE CODE CONFIRMATION PROCEDURE" if the repair is completed. The "OVERALL FUNCTION CHECK" should be a good result if the repair is completed.

Precautions (Cont'd)

Simpo PDF Merge and Split Unregistered Version - http://www.simpopdf.com

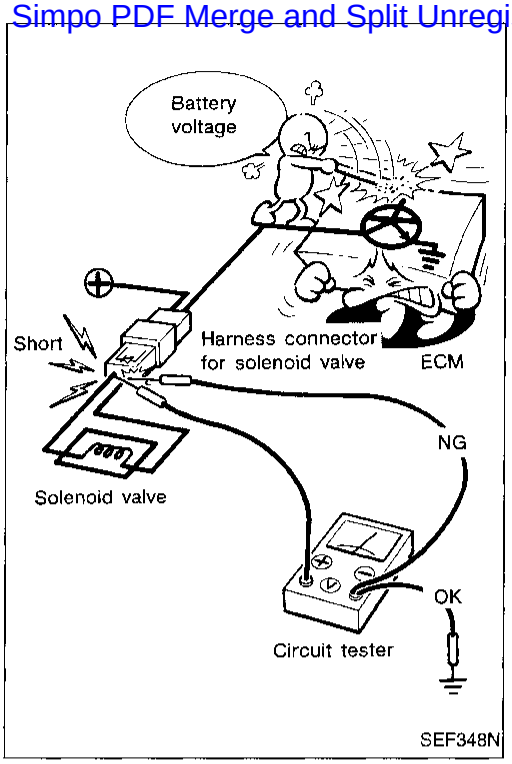

- **When measuring ECM signals with a circuit tester, never allow the two tester probes to contact.**
  Accidental contact of probes will cause a short circuit and damage the ECM power transistor.

Simpo PDF Merge and Split Unregistered Version - http://www.simpopdf.com

Circuit Diagram

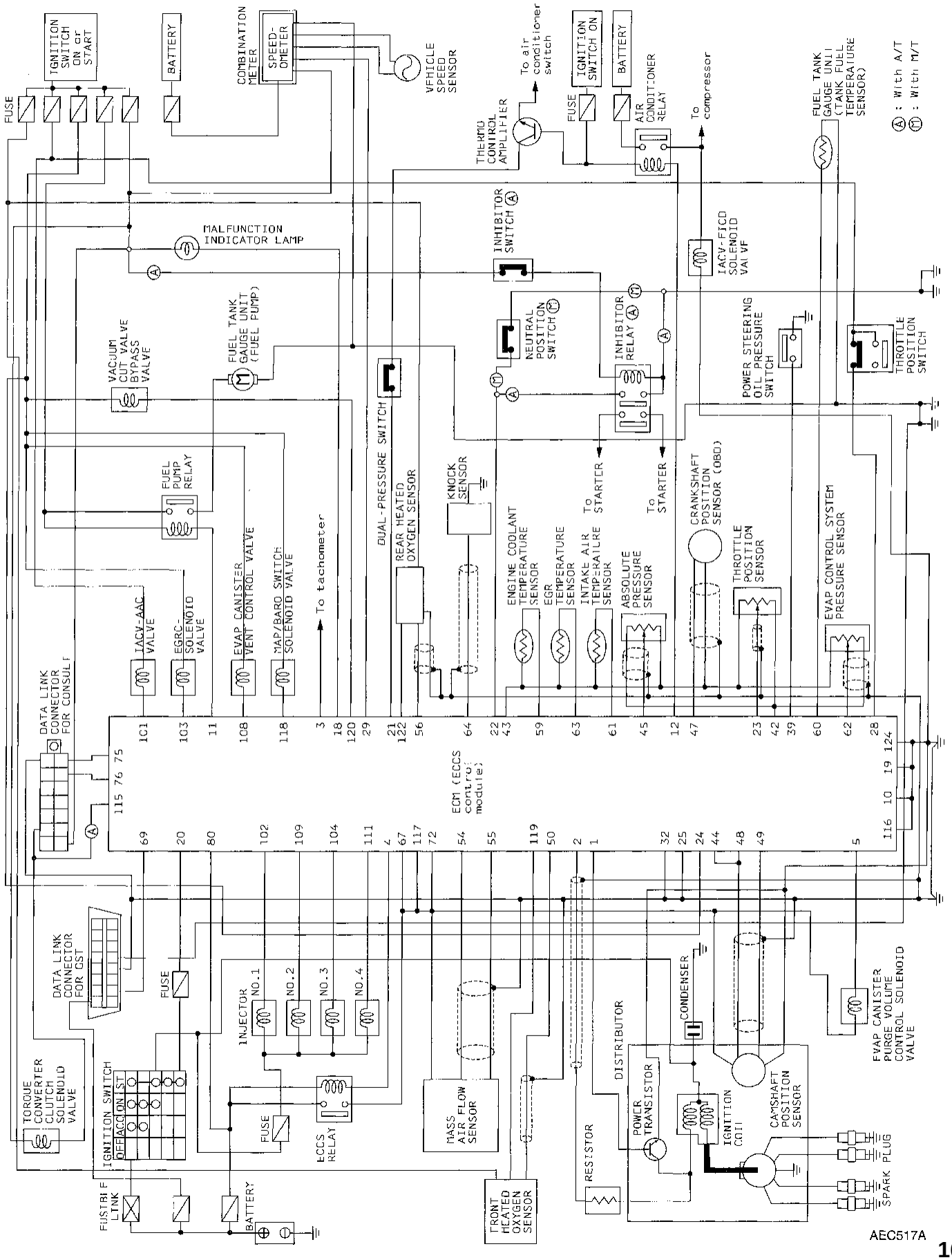

Simpo PDF Merge and Split Unregistered Version - http://www.simpopdf.com

ECCS Component Parts Location

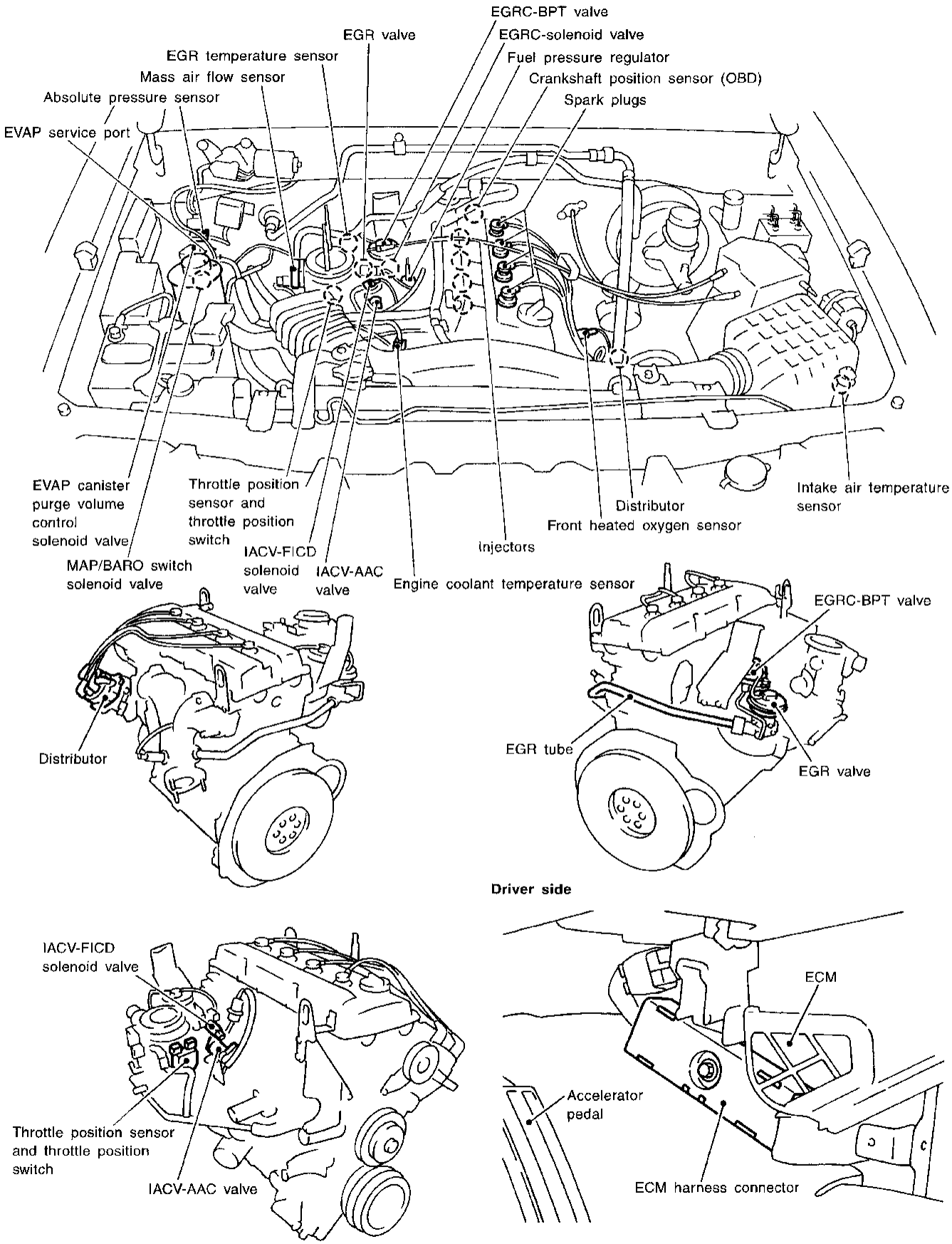

SEF312V

ECCS Component Parts Location (Cont'd)

Simpo PDF Merge and Split Unregistered Version - http://www.simpopdf.com

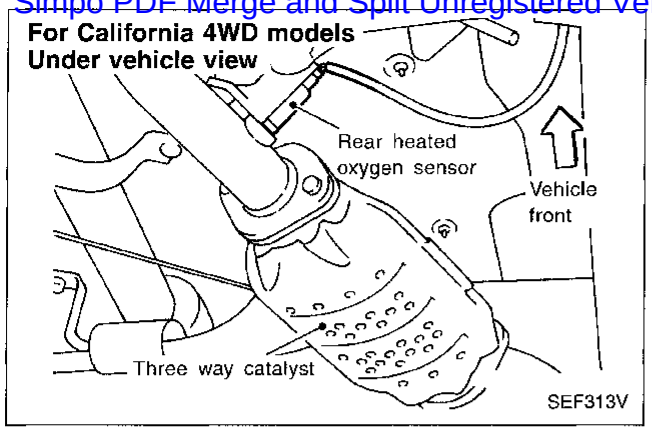

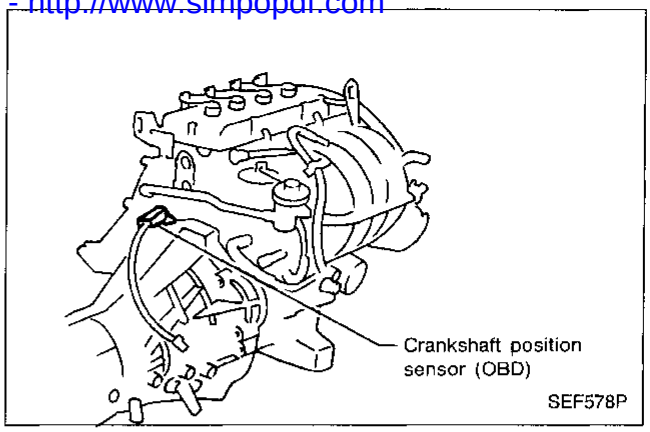

Simpo PDF Merge and Split Unregistered Version - http://www.simpopdf.com

System Diagram

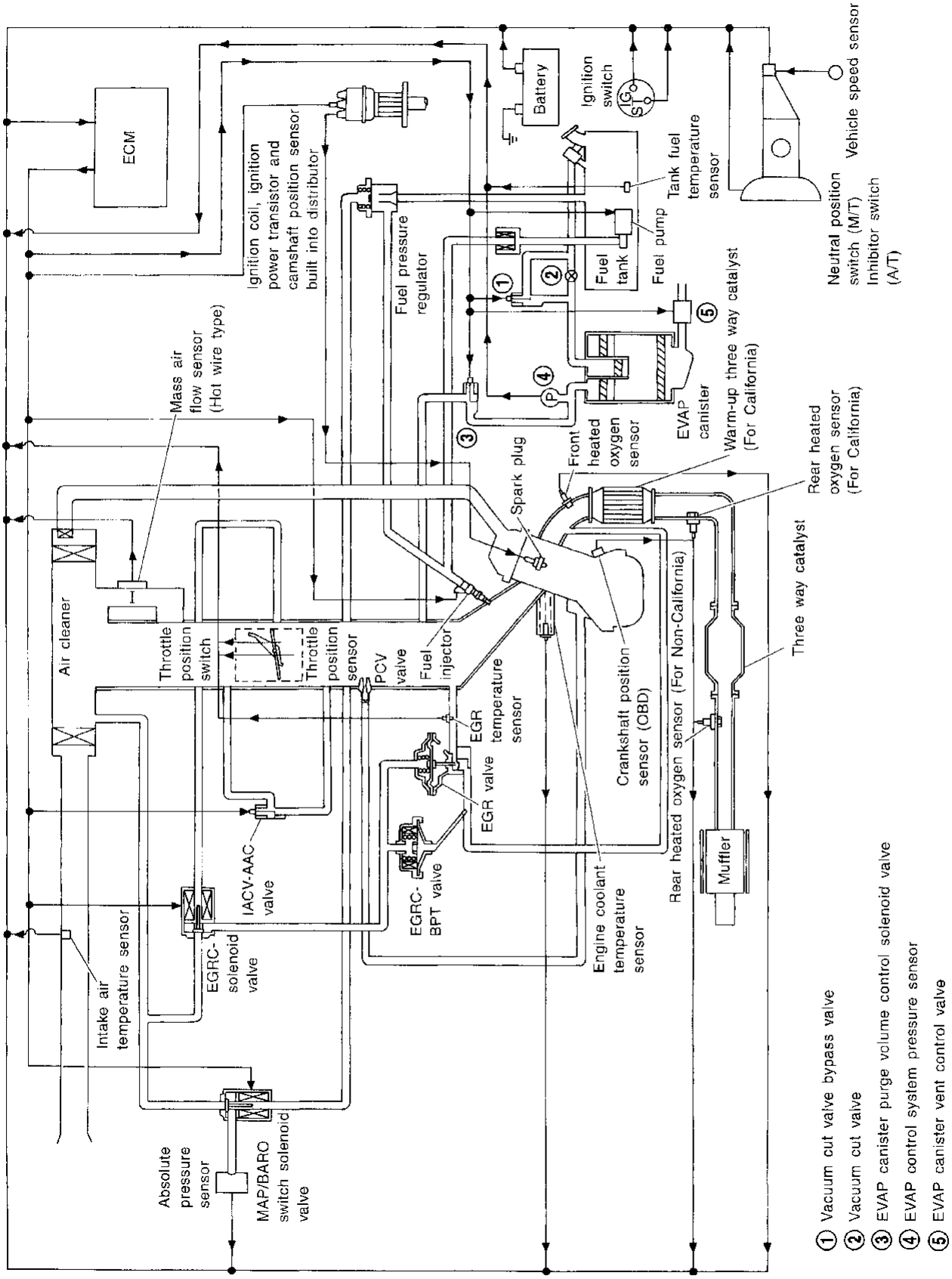

SEF106V

Simpo PDF Merge and Split Unregistered Version - http://www.simpopdf.com

Vacuum Hose Drawing

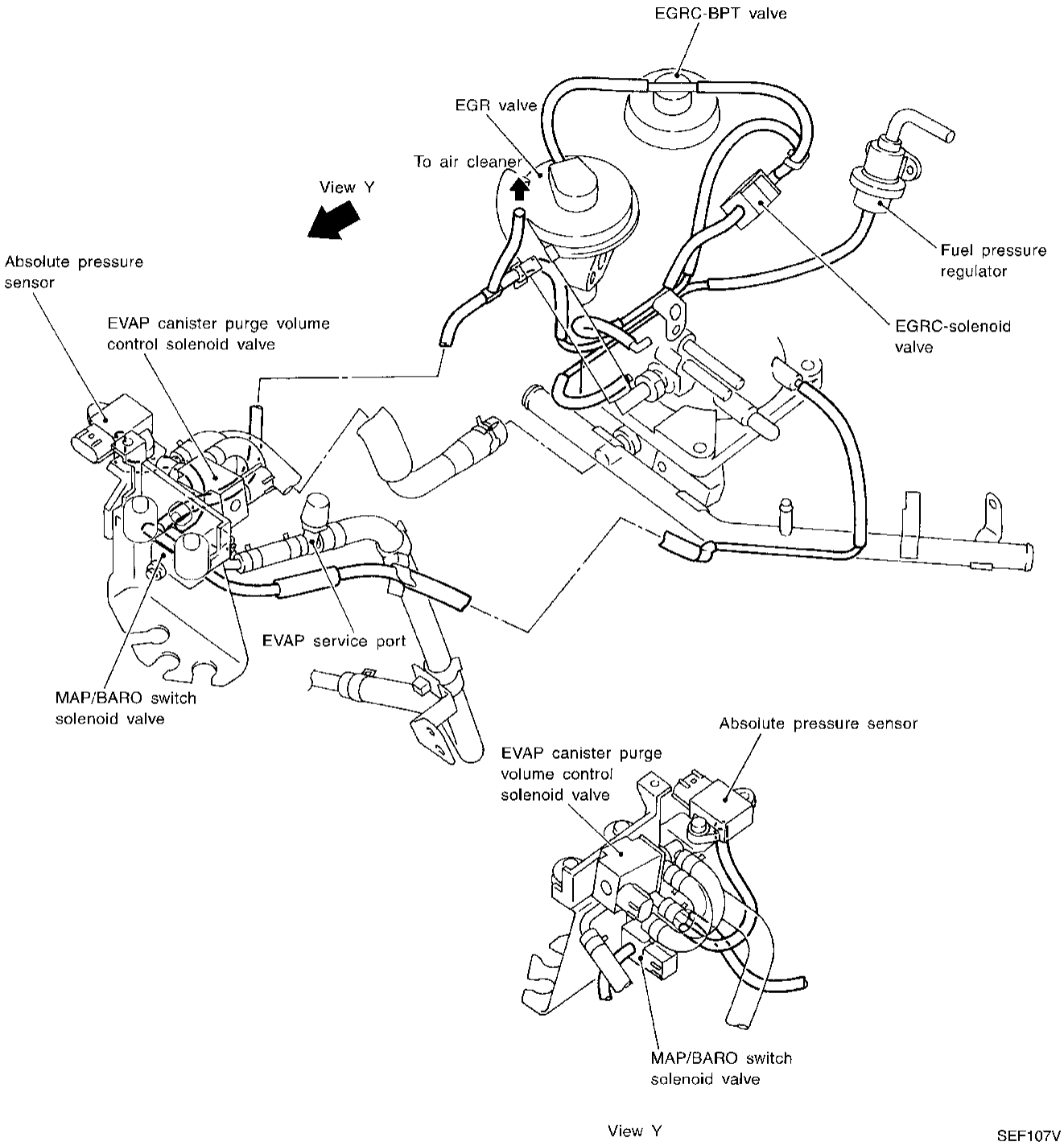

Note: Do not use soapy water or any type of solvent while installing vacuum hoses or purge hoses.

Simpo PDF Merge and Split Unregistered Version - http://www.simpopdf.com

System Chart

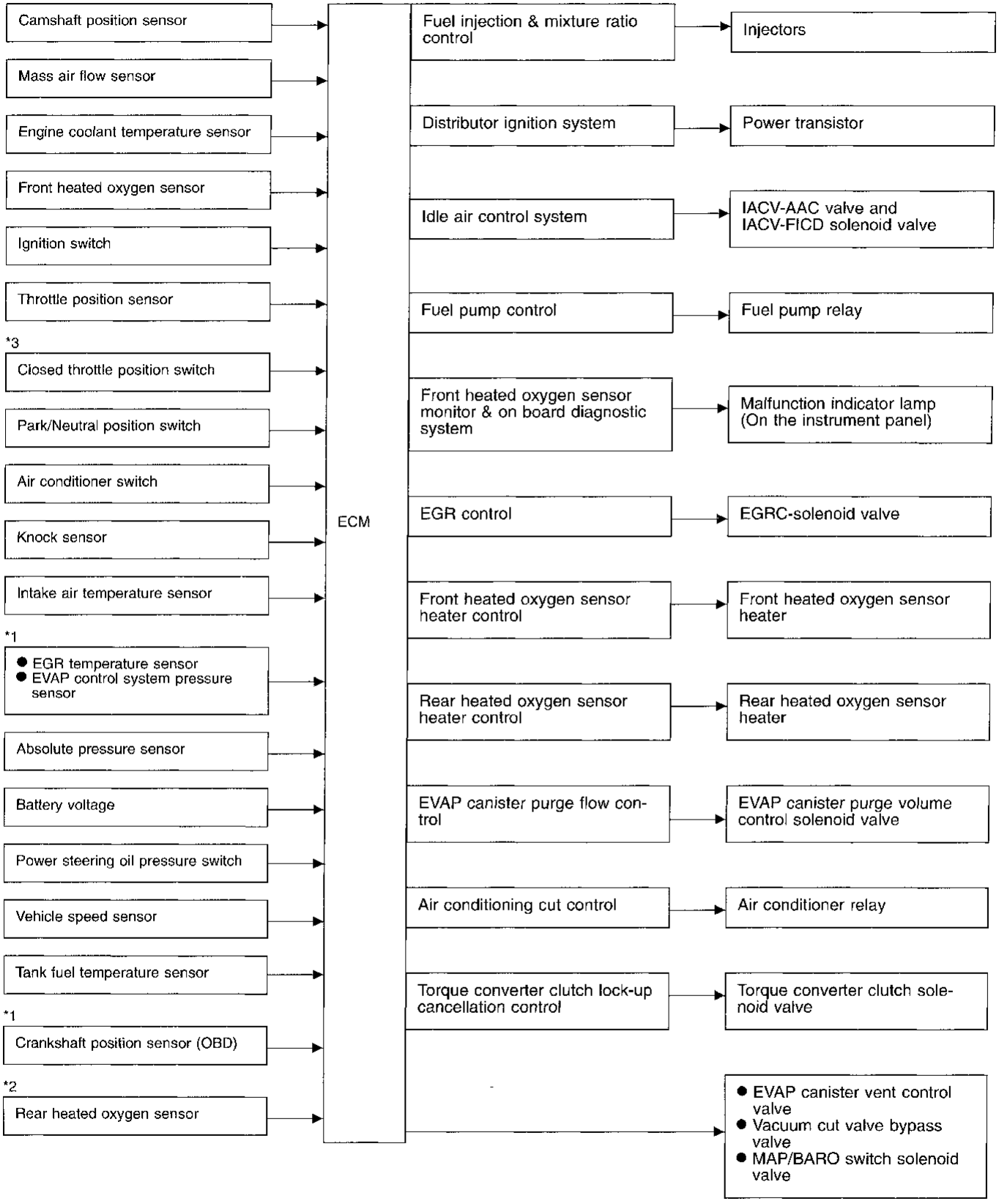

*1: These sensors are not used to control the engine system. They are used only for the on board diagnosis.
*2: This sensor is not used to control the engine system under normal conditions.
*3: This switch will operate in place of the throttle position sensor to control EVAP parts if the sensor malfunctions.

Simpo PDF Merge and Split Unregistered Version - http://www.simpopdf.com

Multiport Fuel Injection (MFI) System

INPUT/OUTPUT SIGNAL LINE

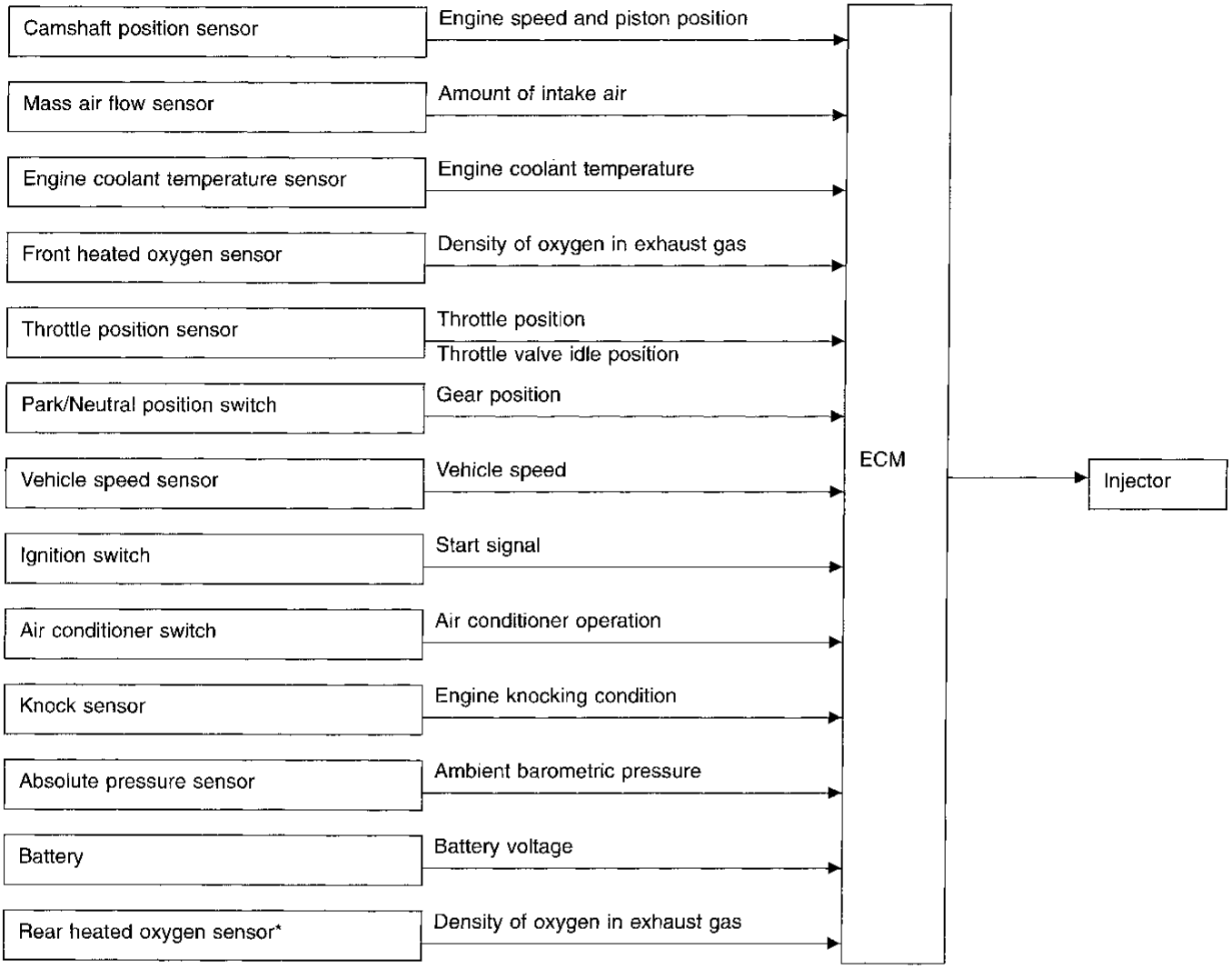

* Under normal conditions, this sensor is not for engine control operation.

BASIC MULTIPORT FUEL INJECTION SYSTEM

The amount of fuel injected from the fuel injector is determined by the ECM. The ECM controls the length of time the valve remains open (injection pulse duration). The amount of fuel injected is a program value in the ECM memory. The program value is preset by engine operating conditions. These conditions are determined by input signals (for engine speed and intake air) from both the camshaft position sensor and the mass air flow sensor.

VARIOUS FUEL INJECTION INCREASE/DECREASE COMPENSATION

In addition, the amount of fuel injected is compensated to improve engine performance under various operating conditions as listed below.

<Fuel increase>
- During warm-up
- When starting the engine
- During acceleration
- Hot-engine operation
- High-load, high-speed operation

<Fuel decrease>
- During deceleration
- During high engine speed operation

Simpo PDF Merge and Split Unregistered Version - http://www.simpopdf.com

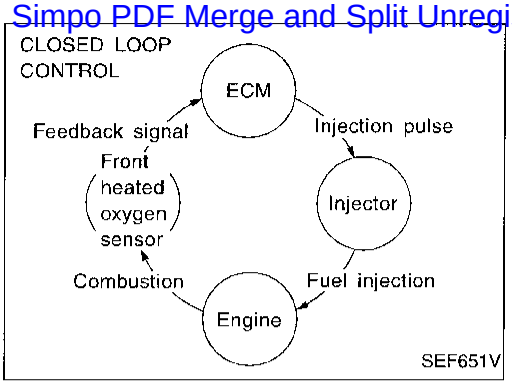

Multiport Fuel Injection (MFI) System (Cont'd)

MIXTURE RATIO FEEDBACK CONTROL (CLOSED LOOP CONTROL)

The mixture ratio feedback system provides the best air-fuel mixture ratio for driveability and emission control. The three way catalyst can then better reduce CO, HC and NOx emissions. This system uses a front heated oxygen sensor in the exhaust manifold to monitor if the engine operation is rich or lean. The ECM adjusts the injection pulse width according to the sensor voltage signal. For more information about the front heated oxygen sensor, refer to EC-144. This maintains the mixture ratio within the range of stoichiometric (ideal air-fuel mixture).

This stage is referred to as the closed loop control condition.

Rear heated oxygen sensor is located downstream of the three way catalyst. Even if the switching characteristics of the front heated oxygen sensor shift, the air-fuel ratio is controlled to stoichiometric by the signal from the rear heated oxygen sensor.

OPEN LOOP CONTROL

The open loop system condition refers to when the ECM detects any of the following conditions. Feedback control stops in order to maintain stabilized fuel combustion.

- Deceleration and acceleration
- High-load, high-speed operation
- Malfunction of front heated oxygen sensor or its circuit
- Insufficient activation of front heated oxygen sensor at low engine coolant temperature
- High engine coolant temperature
- During warm-up
- When starting the engine

MIXTURE RATIO SELF-LEARNING CONTROL

The mixture ratio feedback control system monitors the mixture ratio signal transmitted from the front heated oxygen sensor. This feedback signal is then sent to the ECM. The ECM controls the basic mixture ratio as close to the theoretical mixture ratio as possible. However, the basic mixture ratio is not necessarily controlled as originally designed. Both manufacturing differences (i.e., mass air flow sensor hot wire) and characteristic changes during operation (i.e., injector clogging) directly affect mixture ratio. Accordingly, the difference between the basic and theoretical mixture ratios is monitored in this system. This is then computed in terms of "injection pulse duration" to automatically compensate for the difference between the two ratios.

"Fuel trim" refers to the feedback compensation value compared against the basic injection duration. Fuel trim includes short term fuel trim and long term fuel trim.

"Short term fuel trim" is the short-term fuel compensation used to maintain the mixture ratio at its theoretical value. The signal from the front heated oxygen sensor indicates whether the mixture ratio is RICH or LEAN compared to the theoretical value. The signal then triggers a reduction in fuel volume if the mixture ratio is rich, and an increase in fuel volume if it is lean.

"Long term fuel trim" is overall fuel compensation carried out long-term to compensate for continual deviation of the short term fuel trim from the central value. Such deviation will occur due to individual engine differences, wear over time and changes in the usage environment.

Simpo PDF Merge and Split Unregistered Version - http://www.simpopdf.com

Multiport Fuel Injection (MFI) System (Cont'd)

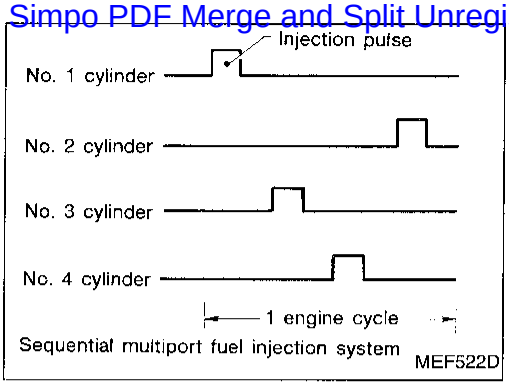

Sequential multiport fuel injection system

MEF522D

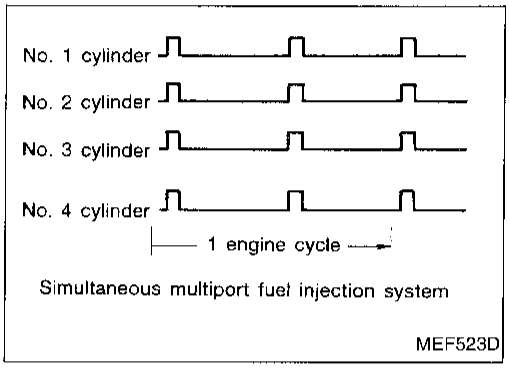

Simultaneous multiport fuel injection system

MEF523D

FUEL INJECTION TIMING

Two types of systems are used.

Sequential multiport fuel injection system

Fuel is injected into each cylinder during each engine cycle according to the firing order. This system is used when the engine is running.

Simultaneous multiport fuel injection system

Fuel is injected simultaneously into all six cylinders twice each engine cycle. In other words, pulse signals of the same width are simultaneously transmitted from the ECM.
The six injectors will then receive the signals two times for each engine cycle.
This system is used when the engine is being started and/or if the fail-safe system (CPU) is operating.

FUEL SHUT-OFF

Fuel to each cylinder is cut off during deceleration or operation of the engine at excessively high speeds.

Distributor Ignition (DI) System

INPUT/OUTPUT SIGNAL LINE

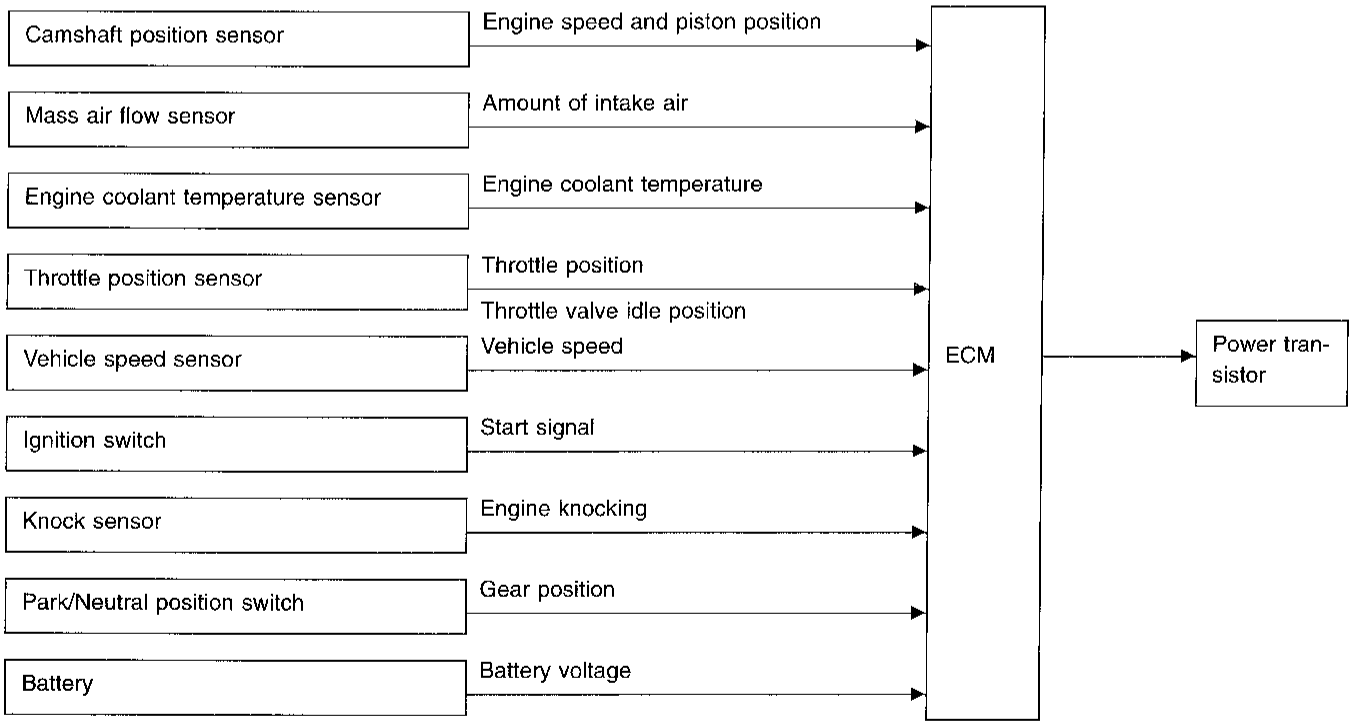

Simpo PDF Merge and Split Unregistered Version - http://www.simpopdf.com

Distributor Ignition (DI) System (Cont'd)

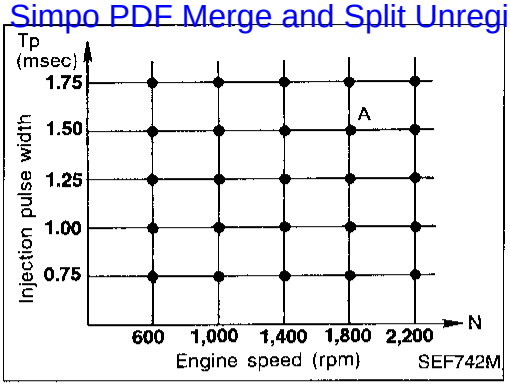

SYSTEM DESCRIPTION

The ignition timing is controlled by the ECM to maintain the best air-fuel ratio for every running condition of the engine.
The ignition timing data is stored in the ECM. This data forms the map shown.
The ECM receives information such as the injection pulse width and camshaft position sensor signal. Computing this information, ignition signals are transmitted to the power transistor.

e.g., N: 1,800 rpm, Tp: 1.50 msec
A°BTDC

During the following conditions, the ignition timing is revised by the ECM according to the other data stored in the ECM.

- At starting
- During warm-up
- At idle
- Hot engine operation
- During acceleration

The knock sensor retard system is designed only for emergencies. The basic ignition timing is programmed within the anti-knocking zone, if recommended fuel is used under dry conditions. The retard system does not operate under normal driving conditions.
If engine knocking occurs, the knock sensor monitors the condition. The signal is transmitted to the ECM. The ECM retards the ignition timing to eliminate the knocking condition.

Air Conditioning Cut Control

INPUT/OUTPUT SIGNAL LINE

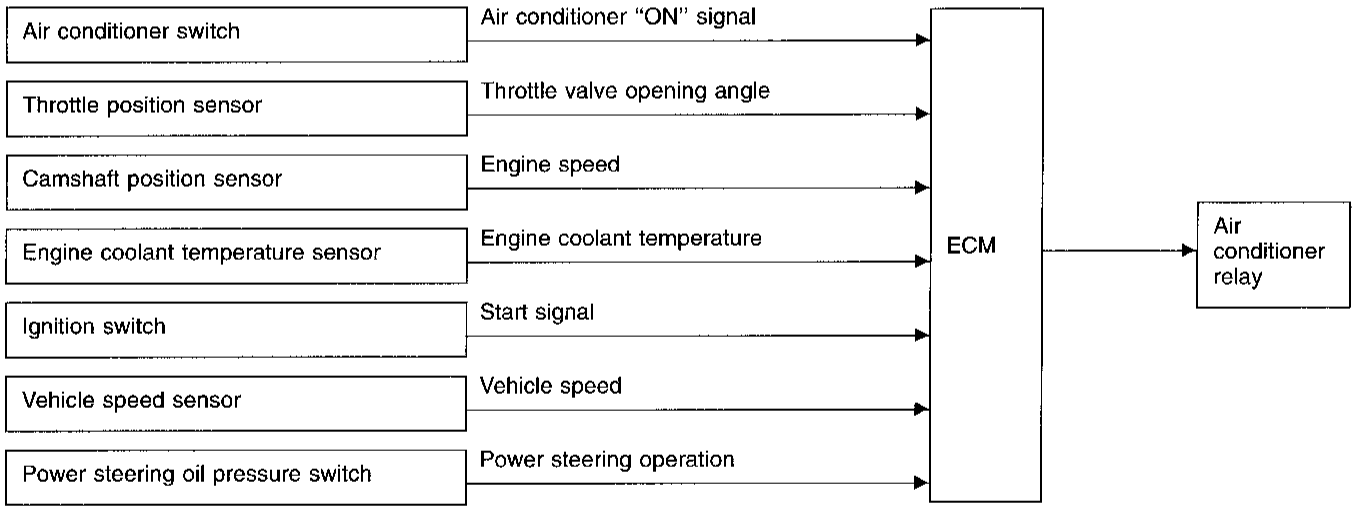

SYSTEM DESCRIPTION

This system improves engine operation when the air conditioner is used.
Under the following conditions, the air conditioner is turned off.

- When the accelerator pedal is fully depressed.
- When cranking the engine.
- When the engine coolant temperature becomes excessively high.
- When operating power steering and air conditioner during low engine speed or when fully releasing accelerator pedal.
- When engine speed is excessively low.

Simpo PDF Merge and Split Unregistered Version - http://www.simpopdf.com

Fuel Cut Control (at no load & high engine speed)

INPUT/OUTPUT SIGNAL LINE

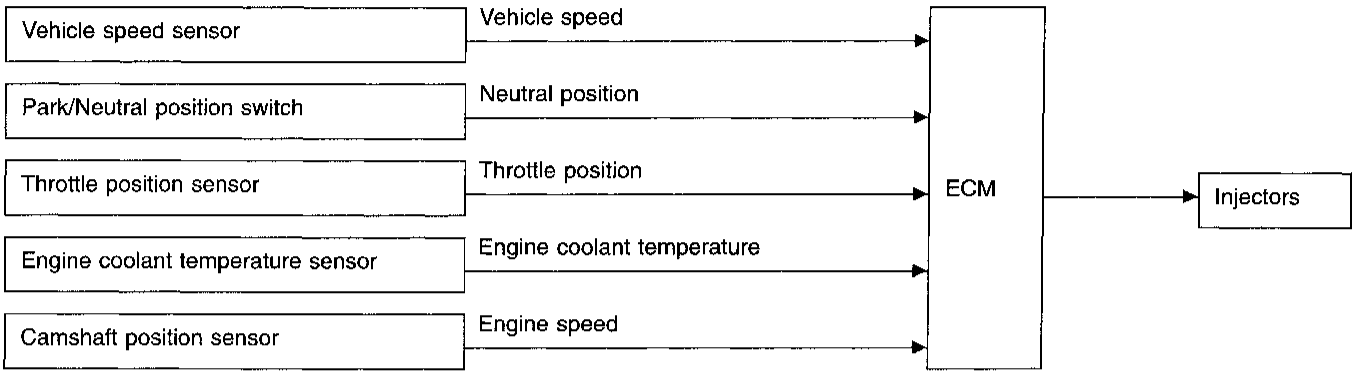

If the engine speed is above 3,000 rpm with no load, (for example, in neutral and engine speed over 3,000 rpm) fuel will be cut off after some time. The exact time when the fuel is cut off varies based on engine speed.
Fuel cut will operate until the engine speed reaches 1,500 rpm, then fuel cut is cancelled.

NOTE:
This function is different from deceleration control listed under "Multiport Fuel Injection (MFI) System", EC-15.

Simpo PDF Merge and Split Unregistered Version - http://www.simpopdf.com

Description

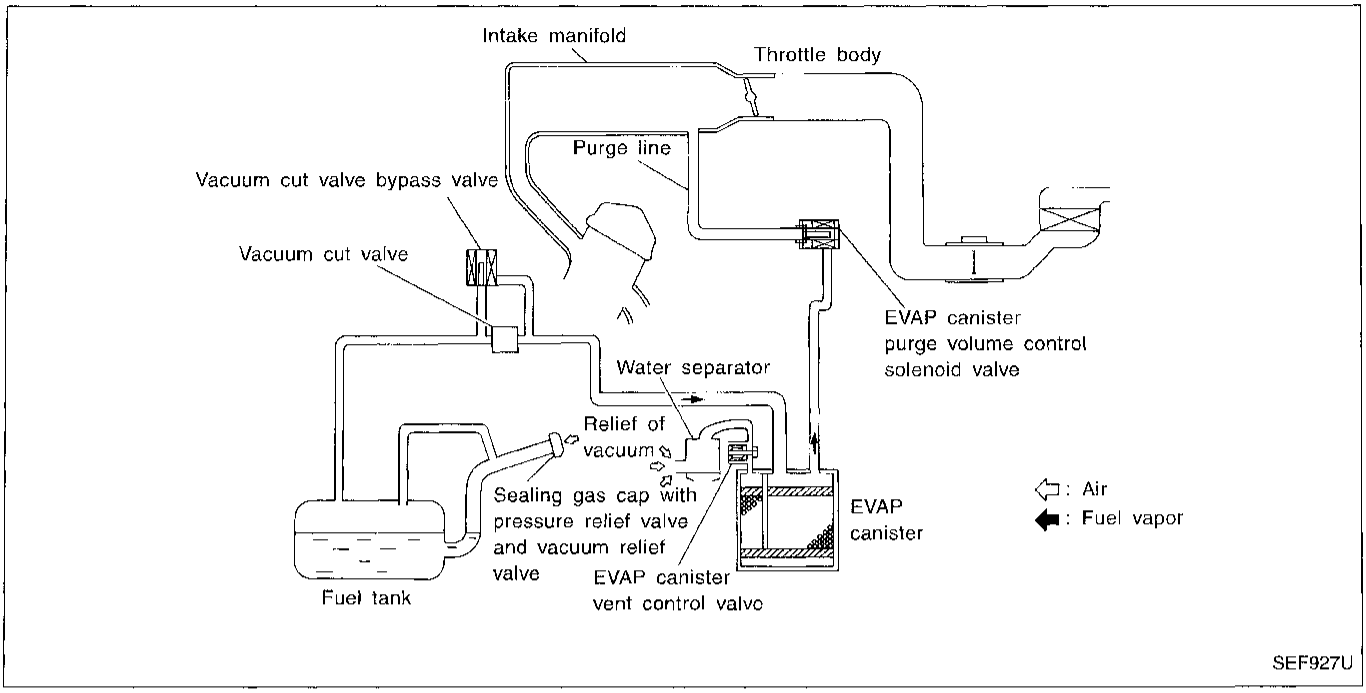

The evaporative emission system is used to reduce hydrocarbons emitted into the atmosphere from the fuel system. This reduction of hydrocarbons is accomplished by activated charcoals in the EVAP canister.

The fuel vapor in the sealed fuel tank is led into the EVAP canister which contains activated carbon and the vapor is stored there when the engine is not operating.

The vapor in the EVAP canister is purged by the air through the purge line to the intake manifold when the engine is operating.

EVAP canister purge volume control solenoid valve is controlled by ECM. When the engine operates, the flow rate of vapor controlled by EVAP canister purge volume control solenoid valve is proportionally regulated as the air flow increases.

EVAP canister purge volume control solenoid valve also shuts off the vapor purge line during decelerating and idling.

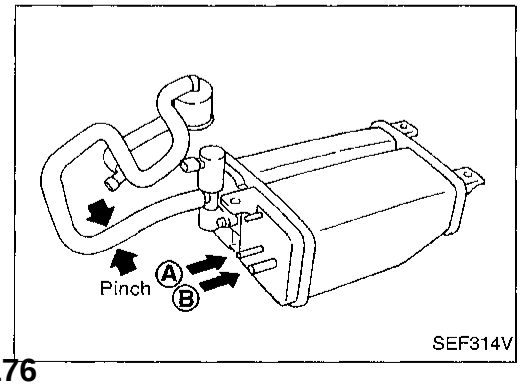

Inspection

EVAP CANISTER

Check EVAP canister as follows:

1. Pinch the fresh air hose.
2. Blow air into port Ⓐ and check that air flows freely through port Ⓑ.

Inspection (Cont'd)

Simpo PDF Merge and Split Unregistered Version - http://www.simpopdf.com

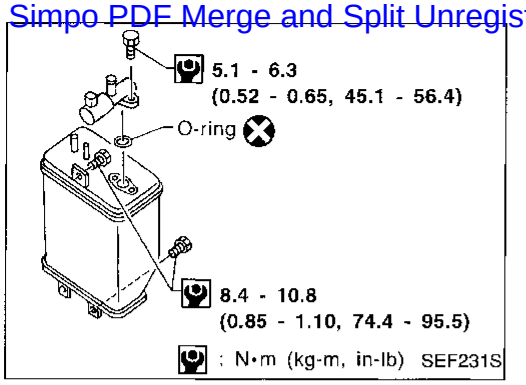

TIGHTENING TORQUE

Tighten EVAP canister as shown in the figure.

Make sure new O-ring is installed properly between EVAP canister and EVAP vent control valve.

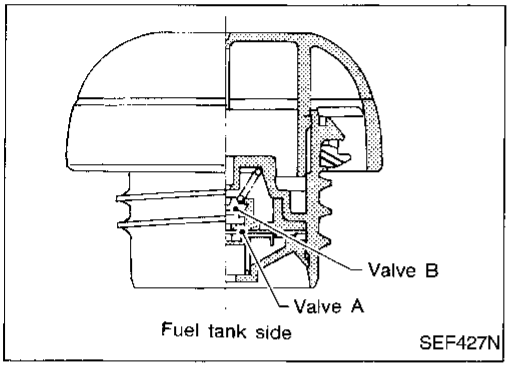

FUEL TANK VACUUM RELIEF VALVE (Built into fuel filler cap)

1. Wipe clean valve housing.
2. Check valve opening pressure and vacuum.
   Pressure:
   16.0 - 20.0 kPa (0.163 - 0.204 kg/cm^2, 2.32 - 2.90 psi)
   Vacuum:
   −6.0 to −3.5 kPa (−0.061 to −0.036 kg/cm^2, −0.87 to −0.51 psi)
3. If out of specification, replace fuel filler cap as an assembly.

CAUTION:
Use only a genuine NISSAN fuel filler cap as a replacement. If an incorrect fuel filler cap is used, the MIL may come on.

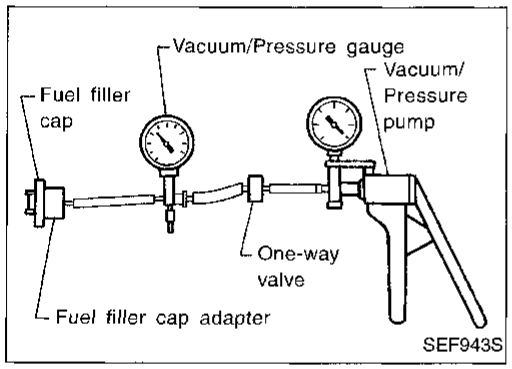

VACUUM CUT VALVE AND VACUUM CUT VALVE BYPASS VALVE

Refer to EC-383.

EVAPORATIVE EMISSION (EVAP) CANISTER PURGE VOLUME CONTROL SOLENOID VALVE

Refer to EC-355.

TANK FUEL TEMPERATURE SENSOR

Refer to EC-218.

Simpo PDF Merge and Split Unregistered Version - http://www.simpopdf.com

Inspection (Cont'd)

EVAP SERVICE PORT

Positive pressure is delivered to the EVAP system through the EVAP service port. If fuel vapor leakage in the EVAP system occurs, use a leak detector to locate the leak.

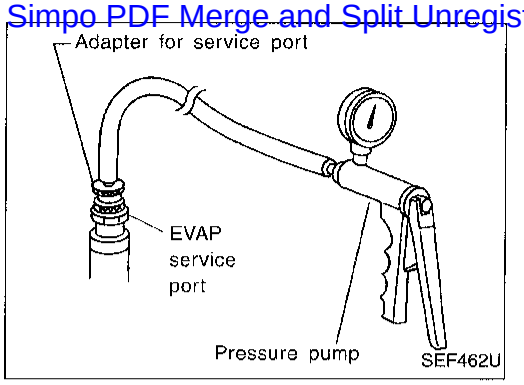

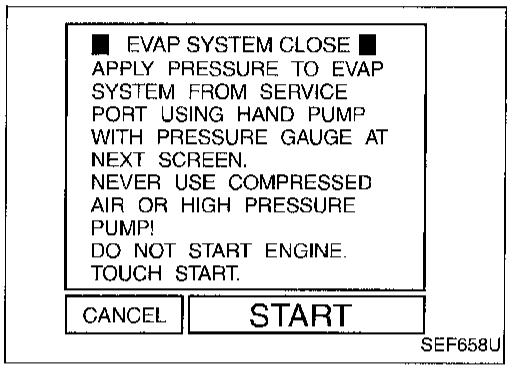

How to detect fuel vapor leakage

CAUTION:
Never use compressed air or a high pressure pump.

NOTE:
Improper installation of adapter to the service port may cause a leak.

1. Attach the adapter securely to the EVAP SERVICE port.
2. Also attach the pressure pump and hose.
3. Turn ignition switch "ON".
4. Select the "EVAP SYSTEM CLOSE" of "WORK SUPPORT MODE" with CONSULT.
5. Touch "START". A bar graph (Pressure indicating display) will appear on the screen.
6. Apply positive pressure to the EVAP system until the pressure indicator reaches the middle of the bar graph.
7. Remove adapter and hose with pressure pump.
8. Locate the leak using a leak detector. Refer to "Evaporative Emission Line Drawing" on next page.

OR

CAUTION:
Never use compressed air or a high pressure pump.

NOTE:
Improper installation of adapter to service port may cause a leak.

1. Attach the adapter securely to the EVAP service port and pressure pump with pressure gauge to the EVAP service port.
2. Apply battery voltage to between the terminals of both EVAP canister vent control valve and vacuum cut valve bypass valve to make a closed EVAP system.
3. To locate the leak, deliver positive pressure to the EVAP system until pressure gauge points reach 1.38 to 2.76 kPa (0.014 to 0.028 kg/cm^2, 0.2 to 0.4 psi).
4. Remove adapter and hose with pressure pump.
5. Locate the leak using a leak detector. Refer to "Evaporative Emission Line Drawing" on next page.

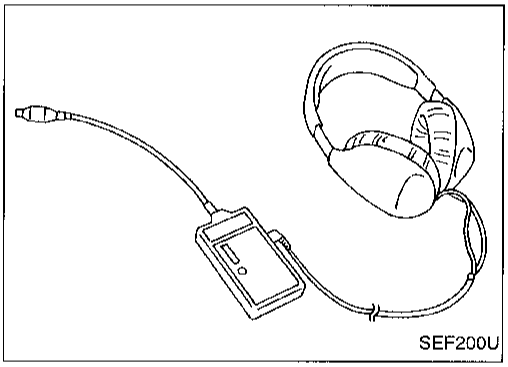

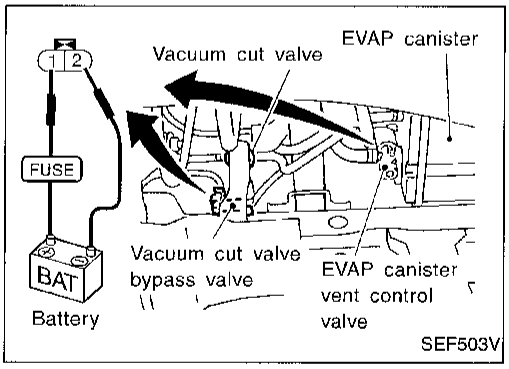

Simpo PDF Merge and Split Unregistered Version - http://www.simpopdf.com

Evaporative Emission Line Drawing

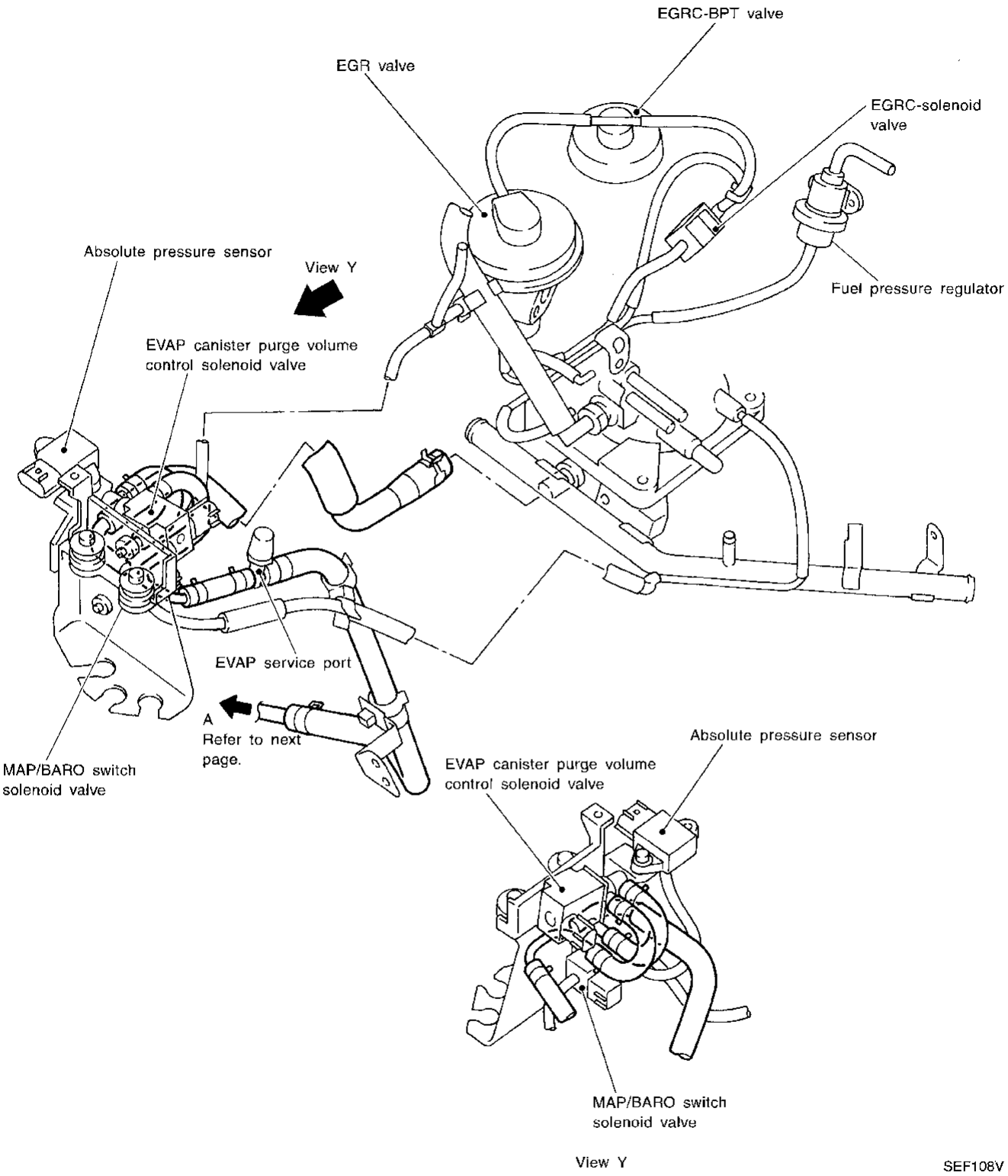

Note: Do not use soapy water or any type of solvent while installing vacuum hoses or purge hoses.

Evaporative Emission Line Drawing (Cont'd)

Simpo PDF Merge and Split Unregistered Version - http://www.simpopdf.com

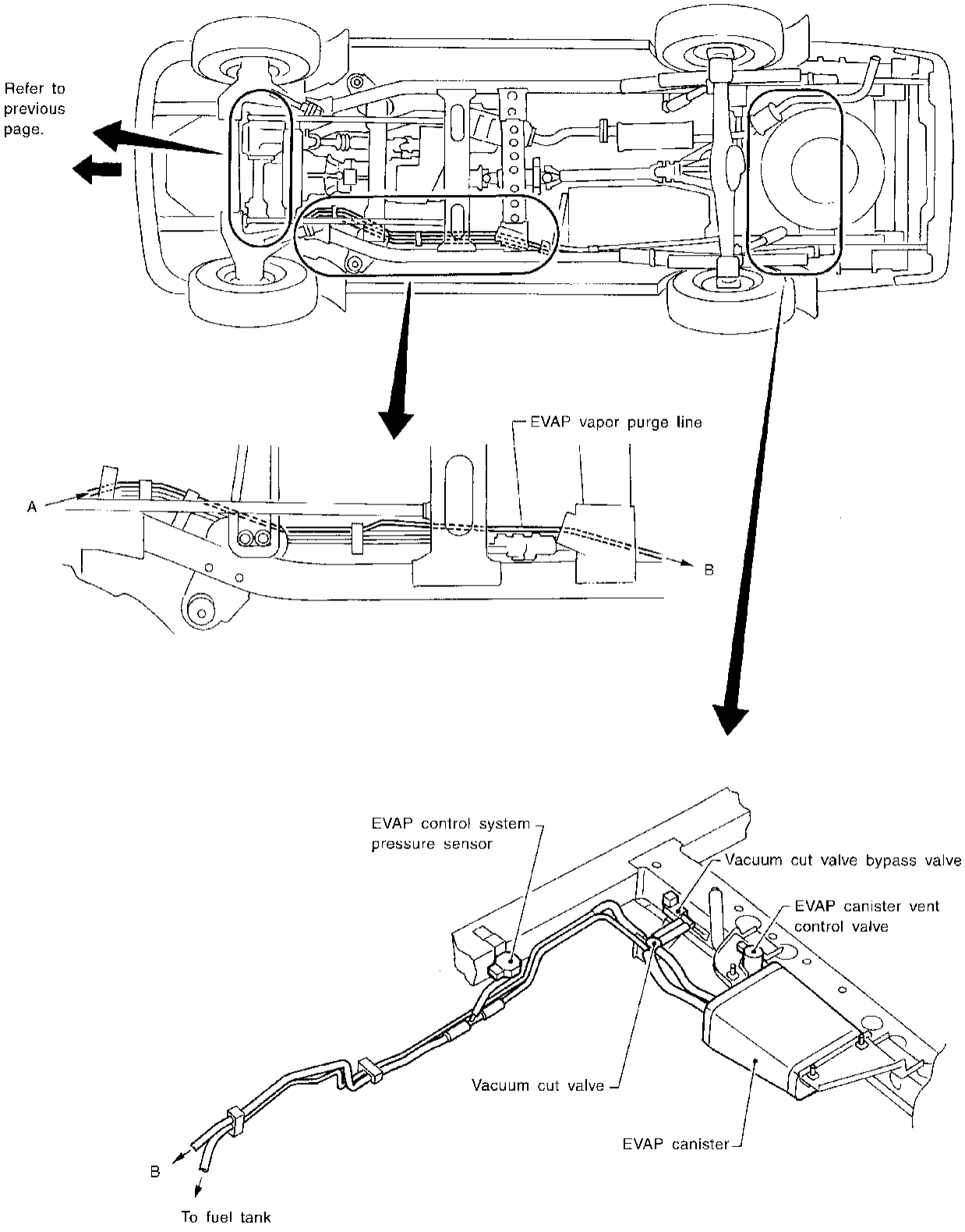

SEF315V

Simpo PDF Merge and Split Unregistered Version - http://www.simpopdf.com

Description

This system returns blow-by gas to the intake collector.
The positive crankcase ventilation (PCV) valve is provided to conduct crankcase blow-by gas to the intake manifold.
During partial throttle operation of the engine, the intake manifold sucks the blow-by gas through the PCV valve.
Normally, the capacity of the valve is sufficient to handle any blow-by and a small amount of ventilating air.
The ventilating air is then drawn from the air duct into the crankcase. In this process the air passes through the hose connecting air inlet tubes to rocker cover.
Under full-throttle condition, the manifold vacuum is insufficient to draw the blow-by flow through the valve. The flow goes through the hose connection in the reverse direction.
On vehicles with an excessively high blow-by, the valve does not meet the requirement. This is because some of the flow will go through the hose connection to the intake collector under all conditions.

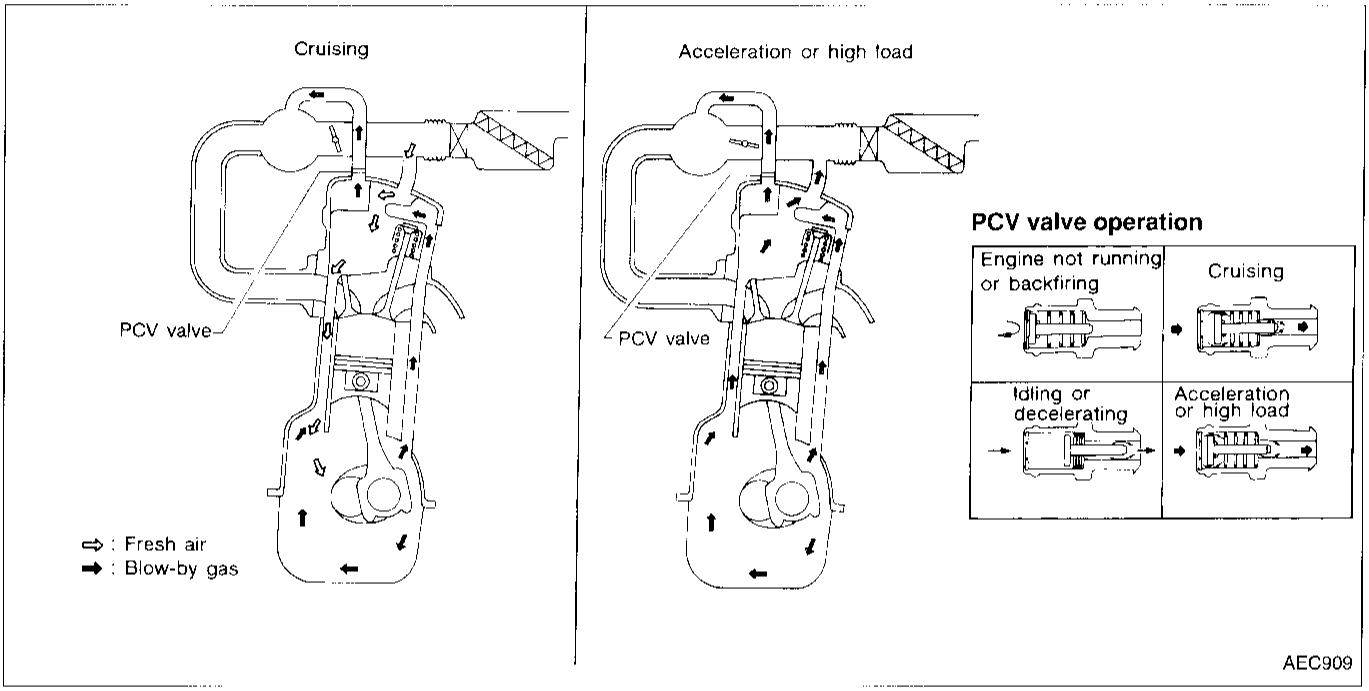

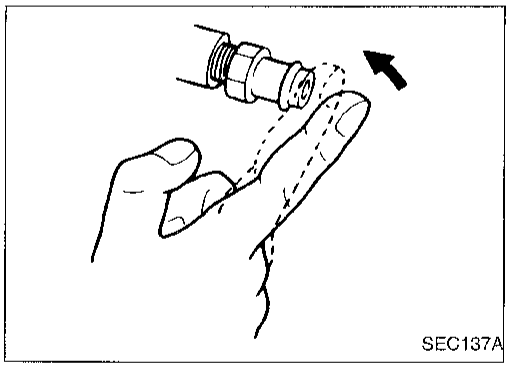

Inspection

PCV (Positive Crankcase Ventilation) VALVE

With engine running at idle, remove PCV valve from breather separator. A properly working valve makes a hissing noise as air passes through it. A strong vacuum should be felt immediately when a finger is placed over the valve inlet.

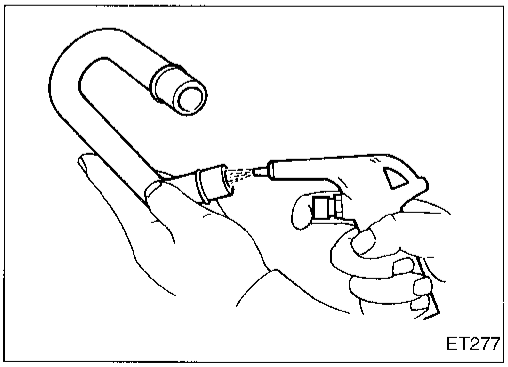

VENTILATION HOSE

1. Check hoses and hose connections for leaks.
2. Disconnect all hoses and clean with compressed air. If any hose cannot be freed of obstructions, replace.

Simpo PDF Merge and Split Unregistered Version - http://www.simpopdf.com

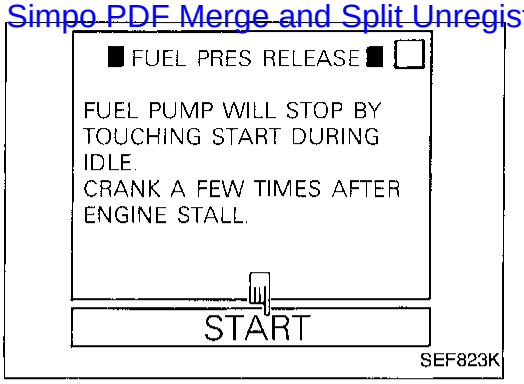

Fuel Pressure Release

Before disconnecting fuel line, release fuel pressure from fuel line to eliminate danger.

1. Start engine.
2. Perform "FUEL PRESSURE RELEASE" in "WORK SUPPORT" mode with CONSULT.
3. After engine stalls, crank it two or three times to make sure that fuel pressure is released.
4. Turn ignition switch "OFF".

OR

1. Remove fuse for fuel pump.
2. Start engine.
3. After engine stalls, crank it two or three times to release all fuel pressure.
4. Turn ignition switch "OFF" and reconnect fuel pump fuse.

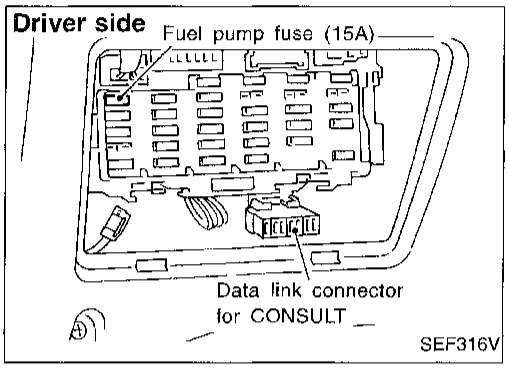

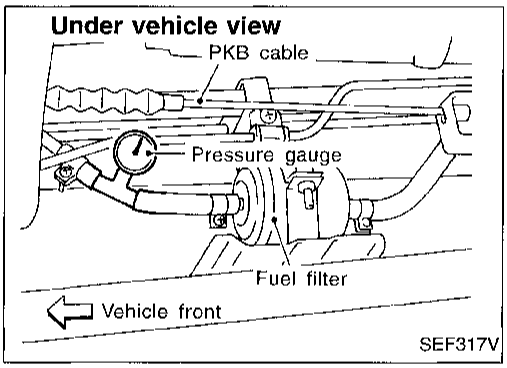

Fuel Pressure Check

- **When reconnecting fuel line, always use new clamps.**
- **Make sure that clamp screw does not contact adjacent parts.**
- **Use a torque driver to tighten clamps.**
- **Use Pressure Gauge to check fuel pressure.**
- **Do not perform fuel pressure check with system operating. Fuel pressure gauge may indicate false readings.**

1. Release fuel pressure to zero.
2. Disconnect fuel hose between fuel filter and fuel tube (engine side).
3. Install pressure gauge between fuel filter and fuel tube.
4. Start engine and check for fuel leakage.
5. Read the indication of fuel pressure gauge.

   At idling:

   With vacuum hose connected

   Approximately 235 kPa (2.4 kg/cm^2, 34 psi)

   With vacuum hose disconnected

   Approximately 294 kPa (3.0 kg/cm^2, 43 psi)

   If results are unsatisfactory, perform "Fuel Pressure Regulator Check".

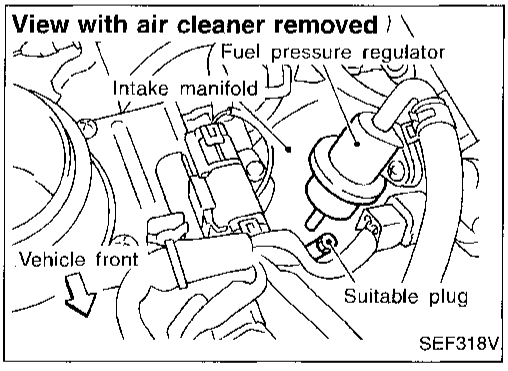

Fuel Pressure Regulator Check

1. Stop engine and disconnect fuel pressure regulator vacuum hose from intake manifold.
2. Plug intake manifold with a rubber cap.
3. Connect variable vacuum source to fuel pressure regulator.
4. Start engine and read indication of fuel pressure gauge as vacuum is changed.

Fuel pressure should decrease as vacuum increases. If results are unsatisfactory, replace fuel pressure regulator.

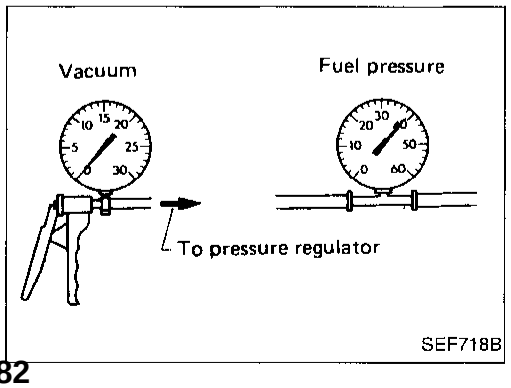

Simpo PDF Merge and Split Unregistered Version - http://www.simpopdf.com

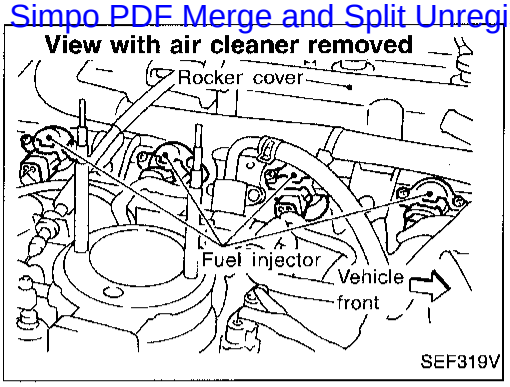

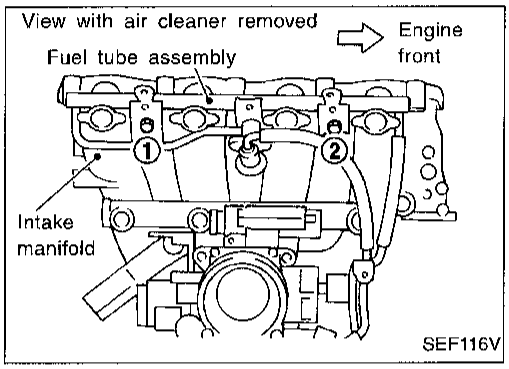

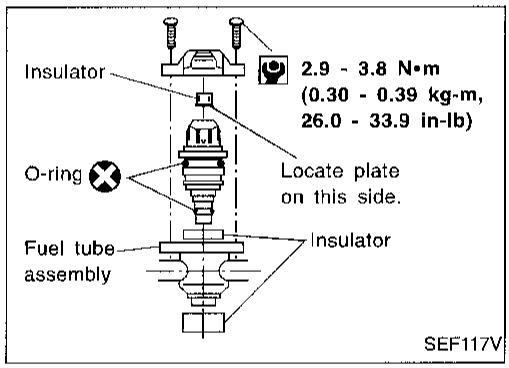

Injector Removal and Installation

1. Release fuel pressure to zero.
2. Remove injector tube assembly with injectors from intake manifold.
3. Remove injectors from injector tube assembly.
- Push injector tail piece.
- Do not pull on the connector.
4. Install injector to fuel tube assembly.

a. Clean exterior of injector tail piece.
b. Use new O-rings.

Always replace O-rings with new ones.
Lubricate O-rings with a smear of engine oil.

5. Install injectors with fuel tube assembly to intake manifold.

Tighten in numerical order shown in the figure.

a. First, tighten all bolts to 9.3 to 10.8 N·m (0.95 to 1.1 kg-m, 6.9 to 8.0 ft-lb).
b. Then, tighten all bolts to 21 to 26 N·m (2.1 to 2.7 kg-m, 15 to 20 ft-lb).

6. Install fuel hoses to fuel tube assembly.
7. Reinstall any parts removed in reverse order of removal.

CAUTION:
After properly connecting injectors to fuel tube assembly, check connections for fuel leakage.

Simpo PDF Merge and Split Unregistered Version - http://www.simpopdf.com

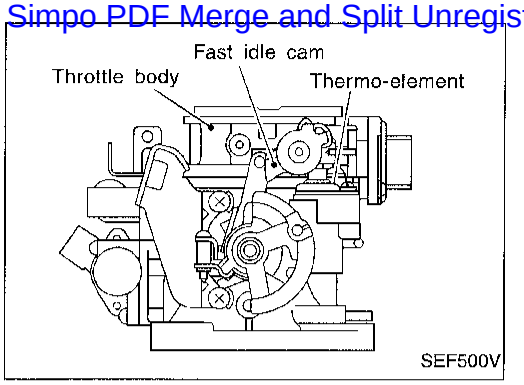

Fast Idle Cam (FIC)

COMPONENT DESCRIPTION

The FIC is installed on the throttle body to maintain adequate engine speed while the engine is cold. It is operated by a volumetric change in wax located inside the thermo-element. The thermo-element is operated by engine coolant temperature.

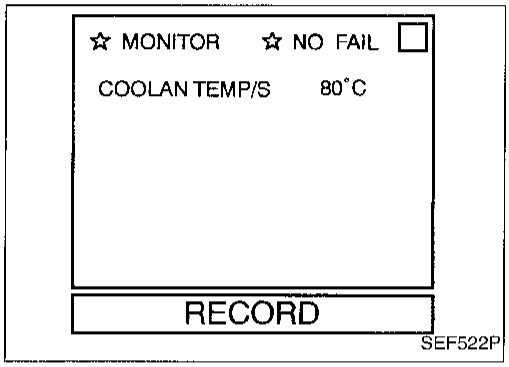

COMPONENT INSPECTION AND ADJUSTMENT

1. Turn ignition switch "ON".
2. See "COOLAN TEMP/S" in "DATA MONITOR" mode with CONSULT.
3. Start engine and warm it up.
   When engine temperature is 80±5°C (176±9°F), make sure that the center of mark Ⓐ is aligned with mark Ⓑ as shown in the figure.

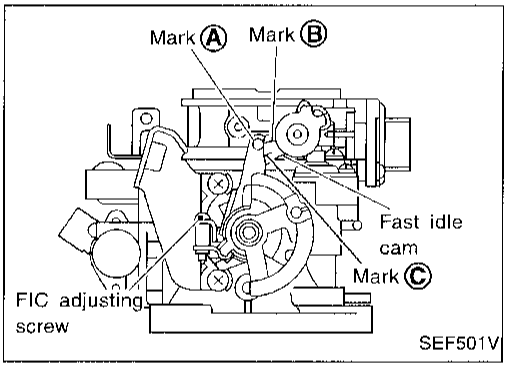

OR

1. Turn ignition switch "OFF".
2. Disconnect engine coolant temperature sensor harness connector and check resistance as shown in the figure.
3. Start engine and warm it up.
   When the resistance of engine coolant temperature sensor is 0.26 to 0.39 kΩ, make sure that the center of mark Ⓐ is aligned with mark Ⓑ as shown in the figure.

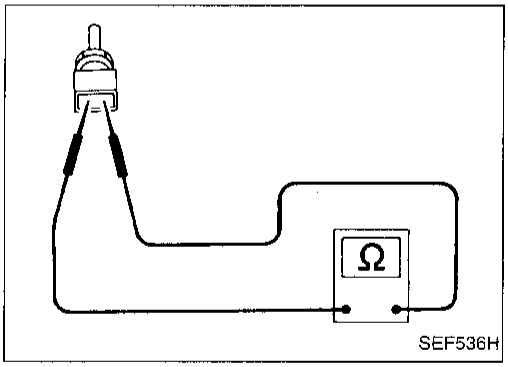

- If NG, adjust by turning adjusting screw.
  Adjusting screw tightening torque:
  0.98 - 1.96 N·m (10 - 20 kg-cm, 8.7 - 17.4 in-lb)

4. Stop engine.
5. Turn ignition switch "ON" and see "COOLAN TEMP/S" in "DATA MONITOR" mode with CONSULT.
6. When engine coolant temperature is 25±5°C (77±9°F), make sure that the center of mark Ⓐ is aligned with mark Ⓒ as shown in the figure.

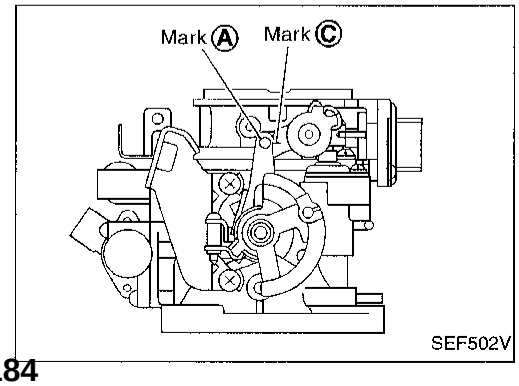

OR

5. When the resistance of engine coolant temperature sensor is 1.65 to 2.40 kΩ, make sure that the center of mark Ⓐ is aligned with mark Ⓒ as shown in the figure.

- If NG, replace thermo-element and perform the above inspection and adjustment again.

Simpo PDF Merge and Split Unregistered Version - http://www.simpopdf.com

Idle Speed/Ignition Timing/Idle Mixture Ratio Adjustment

PREPARATION

- Make sure that the following parts are in good order.

(1) Battery
(2) Ignition system
(3) Engine oil and coolant levels
(4) Fuses
(5) ECM harness connector
(6) Vacuum hoses
(7) Air intake system
(Oil filler cap, oil level gauge, etc.)
(8) Fuel pressure
(9) Engine compression
(10) EGR valve operation
(11) Throttle valve
(12) EVAP system

- On models equipped with air conditioner, checks should be carried out while the air conditioner is "OFF".
- On models equipped with automatic transaxle, when checking idle speed, ignition timing and mixture ratio, checks should be carried out while shift lever is in "N" position.
- When measuring "CO" percentage, insert probe more than 40 cm (15.7 in) into tail pipe.
- Turn off headlamps, heater blower.
- Keep front wheels pointed straight ahead.

Overall inspection sequence

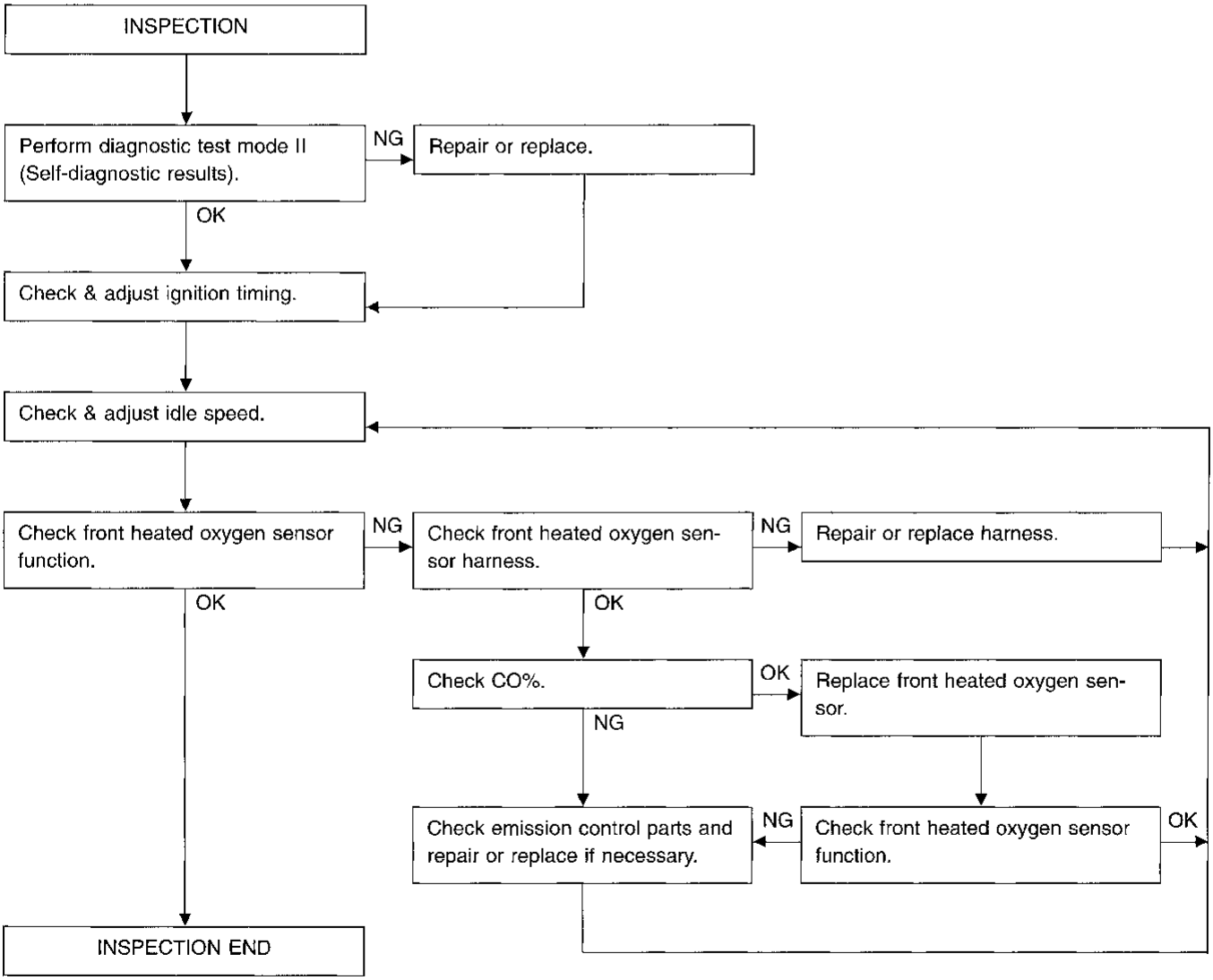

Idle Speed/Ignition Timing/Idle Mixture Ratio Adjustment (Cont'd)

Simpo PDF Merge and Split Unregistered Version - http://www.simpopdf.com

A

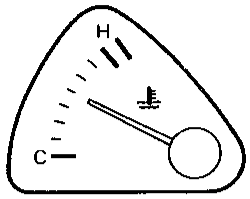

SEF810K

B

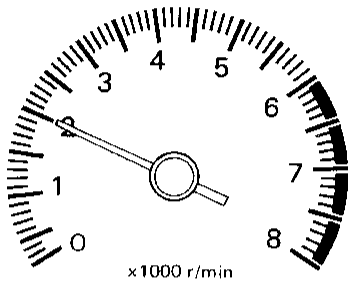

SEF247F

C

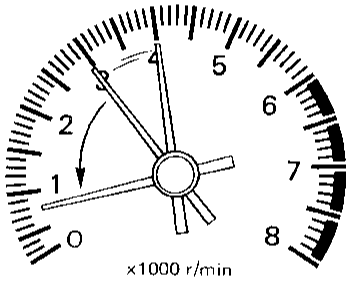

SEF248F

D

■ IGN TIMING ADJ ■

IGNITION TIMING FEEDBACK CONTROL WILL BE HELD BY TOUCHING START.
AFTER DOING SO, ADJUST IGNITION TIMING WITH A TIMING LIGHT BY TURNING THE CAMSHAFT POSITION SENSOR.

START

SEF546N

E

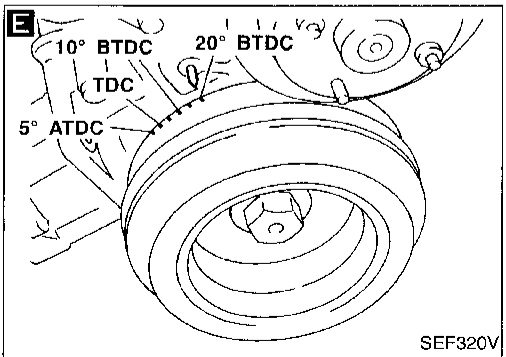

SEF320V

START

Visually check the following:
- Air cleaner clogging
- Hoses and ducts for leaks
- EGR valve operation
- Electrical connectors
- Gasket
- Throttle valve and throttle position sensor operations

A

Start engine and warm it up until engine coolant temperature indicator points to the middle of gauge and ensure that engine speed is below 1,000 rpm.

B

Open engine hood and run engine at about 2,000 rpm for about 2 minutes under no-load.

Perform ECM Self-diagnosis.

OK / NG

Repair or replace components as necessary.

C

Run engine at about 2,000 rpm for about 2 minutes under no-load.
Rev engine two or three times under no-load, then run engine for about 1 minute at idle speed.

D

1. Select "IGNITION TIMING ADJ" in WORK SUPPORT mode.
2. Touch "START".

OR

1. Stop engine and disconnect throttle position sensor harness connector.
2. Start engine.

Rev engine (2,000 - 3,000 rpm) 2 or 3 times under no-load and run engine at idle speed.

E

Check ignition timing with a timing light.

20°±2° BTDC (A/T in "N" position)

OK / NG

Ⓐ (Go to next page.)

Ⓑ (Go to next page.)

Idle Speed/Ignition Timing/Idle Mixture Ratio Adjustment (Cont'd)

Simpo PDF Merge and Split Unregistered Version - http://www.simpopdf.com

F

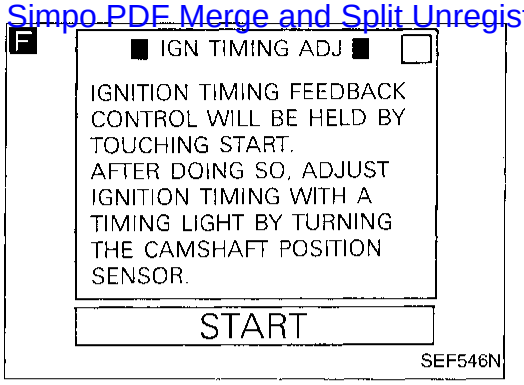

G

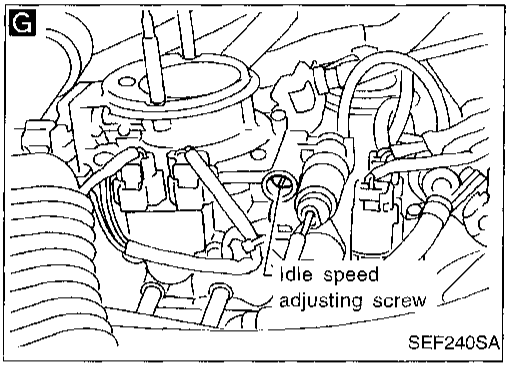

H

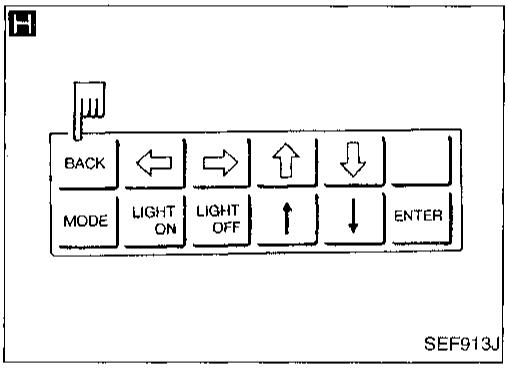

I

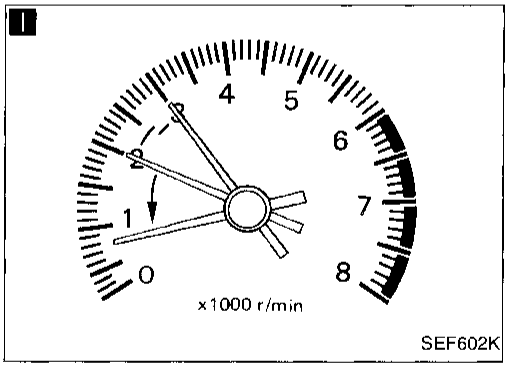

Ⓐ

Ⓑ

Adjust ignition timing to the specified value by turning distributor after loosening bolts which secure distributor.

20°±2° BTDC (in "N" position)

Ⓕ

1. Select "IGNITION TIMING ADJ" in WORK SUPPORT mode.
2. Touch "START".

OR

1. Stop engine and disconnect throttle position sensor harness connector.
2. Start engine.

F

Check base idle speed.

Read idle speed in "IGN TIMING ADJ" mode with CONSULT.

OR

Check idle speed.

750±50 rpm (in "N" position)

OK

NG

Rev engine (2,000 - 3,000 rpm) 2 or 3 times under no-load and run engine at idle speed.

G

Adjust idle speed by turning idle speed adjusting screw.

750±50 rpm (in "N" position)

H

Touch "Back".

OR

1. Stop engine and connect throttle position sensor harness connector.
2. Start engine.

I

Rev engine (2,000 - 3,000 rpm) 2 or 3 times under no-load and run engine at idle speed.

Ⓒ

(Go to next page.)

Idle Speed/Ignition Timing/Idle Mixture Ratio Adjustment (Cont'd)

Simpo PDF Merge and Split Unregistered Version - http://www.simpopdf.com

J

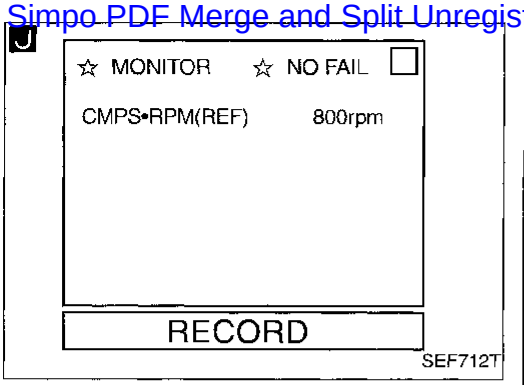

SEF712T

K

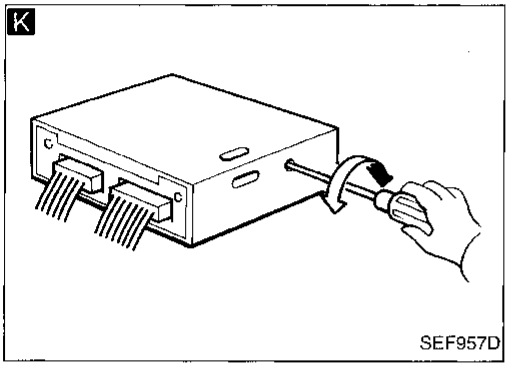

SEF957D

K

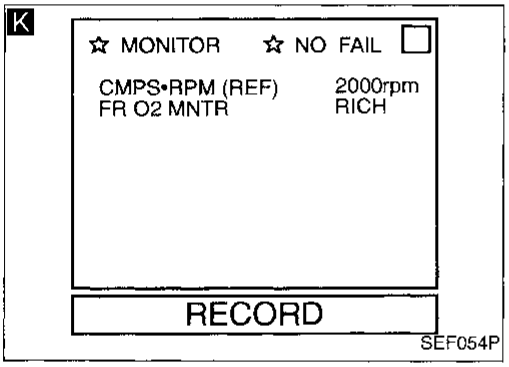

SEF054P

K

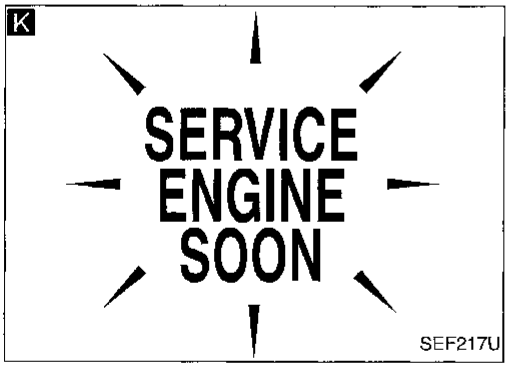

SEF217U

Ⓒ

J

Check target idle speed.

Read idle speed in "DATA MONITOR" mode with CONSULT.

OR

Check idle speed.

800±50 rpm (in "N" position)

OK

NG

Check IACV-AAC valve and replace if necessary.

Check IACV-AAC valve harness and repair if necessary.

Check ECM function* by substituting another known good ECM.

*: ECM may be the cause of a problem, but this is rarely the case.

Run engine at about 2,000 rpm for about 2 minutes under no-load.

K

Check front heated oxygen sensor signal.

1. See "FR O2 MNTR" in "DATA MONITOR" mode.
2. Maintaining engine at 2,000 rpm under no-load (engine is warmed up to normal operating temperature.), check that the monitor fluctuates between "LEAN" and "RICH" more than 5 times during 10 seconds.
   1 cycle: RICH → LEAN → RICH
   2 cycles: RICH → LEAN → RICH → LEAN → RICH

NG → Ⓓ (Go to next page.)

OR

1. Set the diagnostic test mode II (front heated oxygen sensor monitor).
2. Make sure that malfunction indicator lamp goes on more than 5 times during 10 seconds at 2,000 rpm.

OK

INSPECTION END

Idle Speed/Ignition Timing/Idle Mixture Ratio Adjustment (Cont'd)

Simpo PDF Merge and Split Unregistered Version - http://www.simpopdf.com

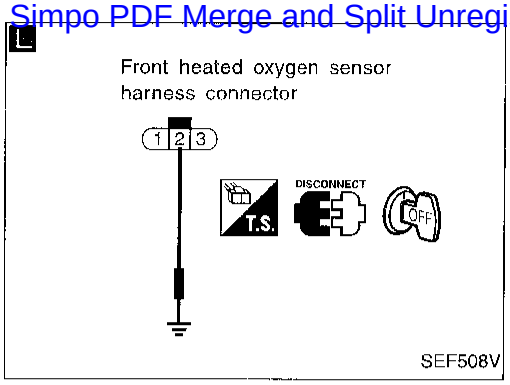

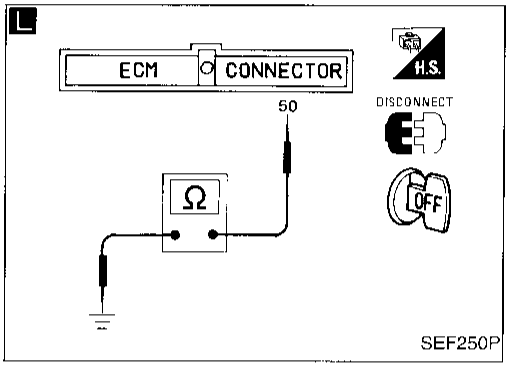

Ⓓ

Check front heated oxygen sensor harness:
1. Turn off engine and disconnect battery ground cable.
2. Disconnect ECM harness connector from ECM.
3. Disconnect front heated oxygen sensor harness connector and connect terminal for front heated oxygen sensor to ground with a jumper wire.
4. Check for continuity between terminal No. 50 of ECM harness connector and ground metal on vehicle body.

Continuity exists ... OK
Continuity does not exist ... NG

OK

NG

Repair harness.

Ⓕ (Go to EC-31.)

Connect ECM harness connector to ECM.

1. Select "ENG COOLANT TEMP" in "ACTIVE TEST" mode.
2. Set "COOLANT TEMP" at 5°C (41°F).

OR

1. Disconnect engine coolant temperature sensor harness connector.
2. Connect a resistor (4.4 kΩ) between terminals of engine coolant temperature sensor harness connector.

Start engine and warm it up until engine coolant temperature indicator points to the middle of gauge.
(Be careful to start engine after setting "COOLANT TEMP" or installing a 4.4 kΩ resistor.)

Rev engine two or three times under no-load then run engine at idle speed.

Ⓔ (Go to next page.)

Simpo PDF Merge and Split Unregistered Version - http://www.simpopdf.com

Idle Speed/Ignition Timing/Idle Mixture Ratio Adjustment (Cont'd)

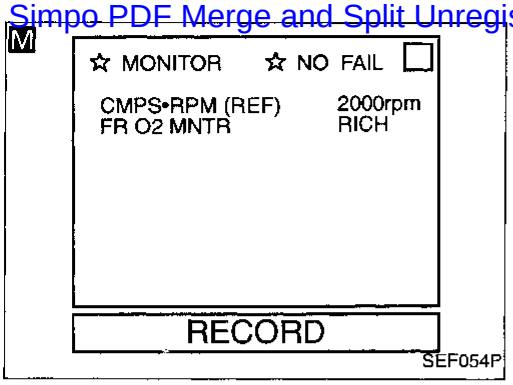

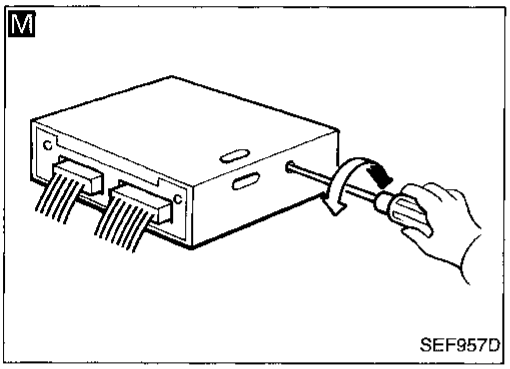

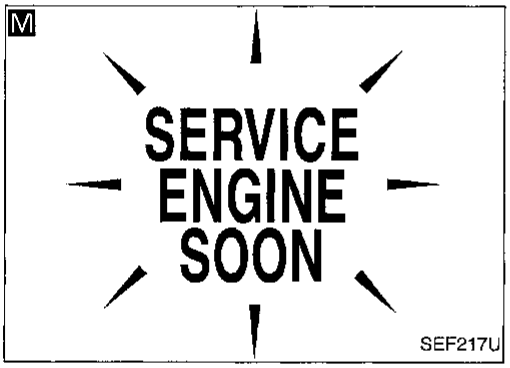

Ⓔ

Check "CO"%.

Idle CO: 2.9 - 10.8 % and engine runs smoothly.

After checking "CO"%
Touch "BACK".

OR

1. Disconnect the resistor from terminals of engine coolant temperature sensor.
2. Connect engine coolant temperature sensor harness connector to engine coolant temperature sensor.

NG / OK

M

Replace front heated oxygen sensor.

1. See "FR O2 MNTR" in "DATA MONITOR" mode.
2. Maintaining engine at 2,000 rpm under no-load (engine is warmed up to normal operating temperature.), check that the monitor fluctuates between "LEAN" and "RICH" more than 5 times during 10 seconds.
   1 cycle: RICH → LEAN → RICH
   2 cycles: RICH → LEAN → RICH → LEAN → RICH

OR

1. Set the diagnostic test mode II (front heated oxygen sensor monitor).
2. Make sure that malfunction indicator lamp goes on more than 5 times during 10 seconds at 2,000 rpm.

NG / OK

OK → Ⓕ (Go to EC-31.)

NG →

Connect front heated oxygen sensor harness connector to front oxygen sensor.

↓

Check fuel pressure regulator.

↓

Check mass air flow sensor.

↓

Check injector and clean or replace if necessary.

↓

Check engine coolant temperature sensor.

↓

Check ECM function* by substituting another known good ECM.

↓

Ⓕ (Go to EC-31.)

*: ECM may be the cause of a problem, but this is rarely the case.

- **If a vehicle contains a part which is operating outside of design specifications with no MIL illumination, the part shall not be replaced prior to emission testing unless it is determined that the part has been tampered with or abused in such a way that the diagnostic system cannot reasonably be expected to detect the resulting malfunction.**

Simpo PDF Merge and Split Unregistered Version - http://www.simpopdf.com

Introduction

The ECM has an on board diagnostic system, which detects malfunctions related to engine sensors or actuators. The ECM also records various emission-related diagnostic information including:

- Diagnostic Trouble Code (DTC) .....Mode 3 of SAE J1979
- Freeze Frame data .....Mode 2 of SAE J1979
- System Readiness Test (SRT) code .....Mode 1 of SAE J1979
- 1st Trip Diagnostic Trouble Code (1st Trip DTC) .....Mode 7 of SAE J1979
- 1st Trip Freeze Frame data
- Test values and Test limits .....Mode 6 of SAE J1979

The above information can be checked using procedures listed in the table below.

	DTC	1st trip DTC	Freeze Frame data	1st trip Freeze Frame data	SRT code	Test value
Diagnostic test mode II (Self-diagnostic results)	○	○*1				
CONSULT	○	○	○	○	○	
GST	○	○*2	○		○	○

*1: When DTC and 1st trip DTC simultaneously appear on the display, they cannot be clearly distinguished from each other.
*2: 1st trip DTCs for self-diagnoses concerning SRT items cannot be shown on the GST display.

The malfunction indicator lamp (MIL) on the instrument panel lights up when the same malfunction is detected in two consecutive trips (Two trip detection logic), or when the ECM enters fail-safe mode (Refer to EC-76.).

Two Trip Detection Logic

When a malfunction is detected for the first time, 1st trip DTC and 1st trip Freeze Frame data are stored in the ECM memory. The MIL will not light up at this stage. <1st trip>
If the same malfunction is detected again during the next drive, the DTC and Freeze Frame data are stored in the ECM memory, and the MIL lights up. The MIL lights up at the same time when the DTC is stored. <2nd trip> The "trip" in the "Two Trip Detection Logic" means a driving mode in which self-diagnosis is performed during vehicle operation. Specific on board diagnostic items will cause the ECM to light up or blink the MIL, and store DTC and Freeze Frame data, even in the 1st trip, as shown below.

Items	MIL			DTC		1st trip DTC	
	1st trip		2nd trip lighting up	1st trip displaying	2nd trip displaying	1st trip displaying	2nd trip displaying
	Blinking	Lighting up					
Misfire (Possible three way catalyst damage) — DTC: P0300 - P0304 (0701, 0605 - 0608) is being detected	X			X		X	
Misfire (Possible three way catalyst damage) — DTC: P0300 - P0304 (0701, 0605 - 0608) has been detected		X		X		X	
Closed loop control — DTC: P1148 (0307)		X		X		X	
Fail-safe items (Refer to EC-76.)		X		X*1		X*1	
Except above			X		X	X	X

*1: Except "ECM".

Simpo PDF Merge and Split Unregistered Version - http://www.simpopdf.com

Emission-related Diagnostic Information

DTC AND 1ST TRIP DTC

The 1st trip DTC (whose number is the same as the DTC number) is displayed for the latest self-diagnostic result obtained. If the ECM memory was cleared previously, and the 1st trip DTC did not reoccur, the 1st trip DTC will not be displayed. If a malfunction is detected during the 1st trip, the 1st trip DTC is stored in the ECM memory. The MIL will not light up (two trip detection logic). If the same malfunction is not detected in the 2nd trip (meeting the required driving pattern), the 1st trip DTC is cleared from the ECM memory. If the same malfunction is detected in the 2nd trip, both the 1st trip DTC and DTC are stored in the ECM memory and the MIL lights up. In other words, the DTC is stored in the ECM memory and the MIL lights up when the same malfunction occurs in two consecutive trips. If a 1st trip DTC is stored and a non-diagnostic operation is performed between the 1st and 2nd trips, only the 1st trip DTC will continue to be stored. For malfunctions that blink or light up the MIL during the 1st trip, the DTC and 1st trip DTC are stored in the ECM memory.
Procedures for clearing the DTC and the 1st trip DTC from the ECM memory are described in "HOW TO ERASE EMISSION-RELATED DIAGNOSTIC INFORMATION". Refer to EC-45.
For malfunctions in which 1st trip DTCs are displayed, refer to EC-43. These items are required by legal regulations to continuously monitor the system/component. In addition, the items monitored non-continuously are also displayed on CONSULT.
1st trip DTC is specified in Mode 7 of SAE J1979. 1st trip DTC detection occurs without lighting up the MIL and therefore does not warn the driver of a problem. However, 1st trip DTC detection will not prevent the vehicle from being tested, for example during Inspection/Maintenance (I/M) tests.
When a 1st trip DTC is detected, check, print out or write down and erase (1st trip) DTC and Freeze Frame data as specified in "Work Flow" procedure Step II, refer to page EC-69. Then perform "Diagnostic trouble code confirmation procedure" or "Overall function check" to try to duplicate the problem. If the malfunction is duplicated, the item requires repair.

How to read DTC and 1st trip DTC

DTC and 1st trip DTC can be read by the following methods.

1. The number of blinks of the malfunction indicator lamp in the Diagnostic Test Mode II (Self-Diagnostic Results) Examples: 0101, 0201, 1003, 1104, etc.
   These DTCs are controlled by NISSAN.

2. CONSULT or GST (Generic Scan Tool) Examples: P0340, P1320, P0705, P0750, etc.
   These DTCs are prescribed by SAE J2012.
   (CONSULT also displays the malfunctioning component or system.)

- **1st trip DTC No. is the same as DTC No.**
- **Output of a DTC indicates a malfunction. However, Mode II and GST do not indicate whether the malfunction is still occurring or has occurred in the past and has returned to normal. CONSULT can identify malfunction status as shown below. Therefore, using CONSULT (if available) is recommended.**

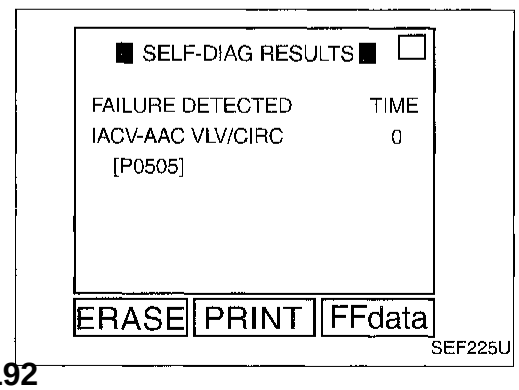

A sample of CONSULT display for DTC is shown at left. DTC or 1st trip DTC of a malfunction is displayed in SELF-DIAGNOSTIC RESULTS mode of CONSULT. Time data indicates how many times the vehicle was driven after the last detection of a DTC.
If the DTC is being detected currently, the time data will be "0".

Simpo PDF Merge and Split Unregistered Version - http://www.simpopdf.com

Emission-related Diagnostic Information (Cont'd)

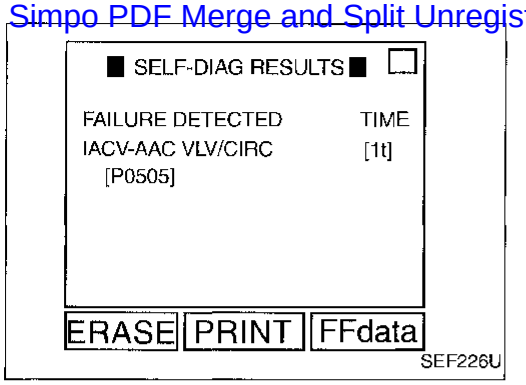

If a 1st trip DTC is stored in the ECM, the time data will be "[1t]".

FREEZE FRAME DATA AND 1ST TRIP FREEZE FRAME DATA

The ECM records the driving conditions such as fuel system status, calculated load value, engine coolant temperature, short term fuel trim, long term fuel trim, engine speed, vehicle speed and absolute pressure sensor at the moment a malfunction is detected.

Data which are stored in the ECM memory, along with the 1st trip DTC, are called 1st trip freeze frame data. The data, stored together with the DTC data, are called freeze frame data and displayed on CONSULT or GST. The 1st trip freeze frame data can only be displayed on the CONSULT screen, not on the GST. For details, see EC-57.

Only one set of freeze frame data (either 1st trip freeze frame data or freeze frame data) can be stored in the ECM. 1st trip freeze frame data is stored in the ECM memory along with the 1st trip DTC. There is no priority for 1st trip freeze frame data and it is updated each time a different 1st trip DTC is detected. However, once freeze frame data (2nd trip detection/MIL on) is stored in the ECM memory, 1st trip freeze frame data is no longer stored. Remember, only one set of freeze frame data can be stored in the ECM. The ECM has the following priorities to update the data.

Priority	Items	
1	Freeze frame data	Misfire — DTC: P0300 - P0304 (0701, 0605 - 0608) Fuel Injection System Function — DTC: P0171 (0115), P0172 (0114)
2		Except the above items
3	1st trip freeze frame data	

For example, the EGR malfunction (Priority: 2) was detected and the freeze frame data was stored in the 2nd trip. After that when the misfire (Priority: 1) is detected in another trip, the freeze frame data will be updated from the EGR malfunction to the misfire. The 1st trip freeze frame data is updated each time a different malfunction is detected. There is no priority for 1st trip freeze frame data. However, once freeze frame data is stored in the ECM memory, first trip freeze data is no longer stored (because only one freeze frame data or first trip freeze frame data can be stored in the ECM). If freeze frame data is stored in the ECM memory and freeze frame data with the same priority occurs later, the first (original) freeze frame data remains unchanged in the ECM memory.

Both 1st trip freeze frame data and freeze frame data (along with the DTCs) are cleared when the ECM memory is erased. Procedures for clearing the ECM memory are described in "HOW TO ERASE EMISSION-RELATED DIAGNOSTIC INFORMATION". Refer to EC-45.

SYSTEM READINESS TEST (SRT) CODE

System Readiness Test (SRT) code is specified in Mode 1 of SAE J1979. It indicates whether the self-diagnostic tests for non-continuously monitored items have been completed or not.

Inspection/Maintenance (I/M) tests of the on board diagnostic (OBD) II system may become the legal requirements in some states/areas. All SRT codes must be set in this case. Unless all SRT codes are set, conducting the I/M test may not be allowed.

SRT codes are set after self-diagnosis has been performed one or more times. This occurs regardless of whether the diagnosis is in "OK" or "NG", and whether or not the diagnosis is performed in consecutive trips. The following table lists the five SRT items (18 test items) for the ECCS used in D22 models.

Emission-related Diagnostic Information (Cont'd)

Simpo PDF Merge and Split Unregistered Version - http://www.simpopdf.com

SRT items	Self-diagnostic test items
Catalyst monitoring	● Three way catalyst function P0420 (0702)
EVAP system monitoring	● EVAP control system (Small leak — Negative pressure) P0440 (0705) ● EVAP control system (Small leak — Positive pressure) P1440 (0213) ● EVAP control system purge flow monitoring P1447 (0111)
Oxygen sensor monitoring	● Front heated oxygen sensor (Response monitoring) P0133 (0409) ● Front heated oxygen sensor (Rich shift monitoring) P0132 (0410) ● Front heated oxygen sensor (Lean shift monitoring) P0131 (0411) ● Front heated oxygen sensor (Circuit) P0130 (0303) ● Front heated oxygen sensor (High voltage) P0134 (0412) ● Rear heated oxygen sensor (Response monitoring) P0139 (0707) ● Rear heated oxygen sensor (Max. voltage monitoring) P0138 (0510) ● Rear heated oxygen sensor (Min. voltage monitoring) P0137 (0511) ● Rear heated oxygen sensor (High voltage) P0140 (0512)
Oxygen sensor heater monitoring	● Front heated oxygen sensor heater P0135 (0901) ● Rear heated oxygen sensor heater P0141 (0902)
EGR system monitoring	● EGR function (Close) P0400 (0302) ● EGR function (Open) P1402 (0514) ● EGRC-BPT valve function P0402 (0306)

Together with the DTC, the SRT code is cleared from the ECM memory using the method described later (Refer to EC-45). In addition, after ECCS components/system are repaired or if the battery terminals remain disconnected for more than 24 hours, all SRT codes may be cleared from the ECM memory.

How to display SRT code

1. Selecting "SRT STATUS" in "DTC CONFIRMATION" mode with CONSULT.
   For items whose SRT codes are set, a "CMPLT" is displayed on the CONSULT screen; for items whose SRT codes are not set, "INCMP" is displayed.

2. Selecting Mode 1 with GST (Generic Scan Tool)

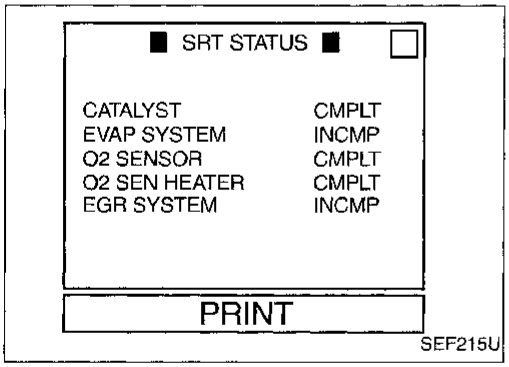

A sample of CONSULT display for SRT code is shown at left. "INCMP" means the self-diagnosis is incomplete and SRT is not set. "CMPLT" means the self-diagnosis is complete and SRT is set.

How to set SRT code

To set all SRT codes, self-diagnosis for the items indicated above must be performed one or more times. Each diagnosis may require a long period of actual driving under various conditions. The most efficient driving pattern in which SRT codes can be properly set is explained on the next page. The driving pattern should be performed one or more times to set all SRT codes.

Emission-related Diagnostic Information (Cont'd)

Simpo PDF Merge and Split Unregistered Version - http://www.simpopdf.com

Driving pattern

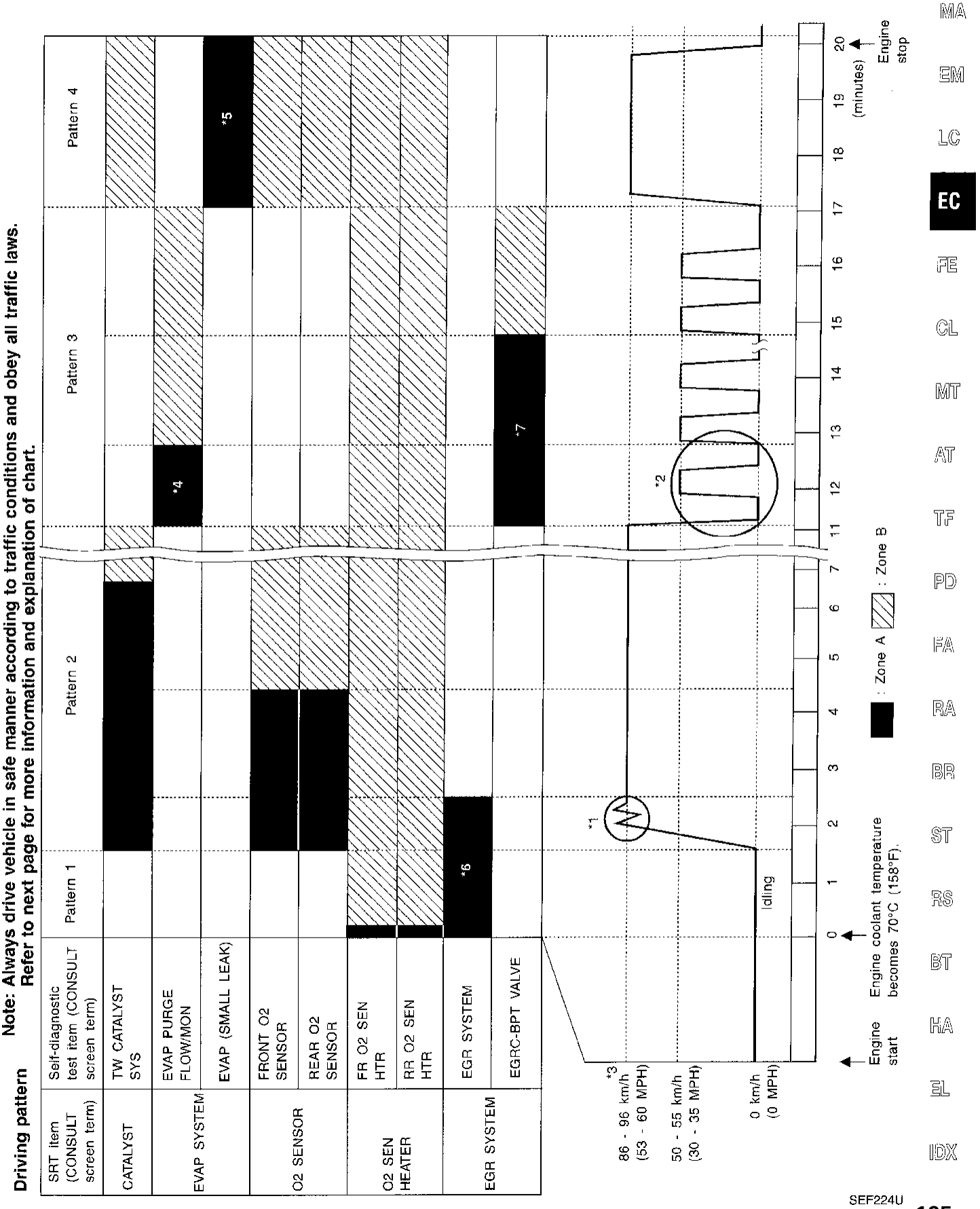

Simpo PDF Merge and Split Unregistered Version - http://www.simpopdf.com

- The time required for each diagnosis varies with road surface conditions, weather, altitude, individual driving habits, etc.
  Zone A refers to the range where the time required, for the diagnosis under normal conditions*, is the shortest. Zone B refers to the range where the diagnosis can still be performed if the diagnosis is not completed within zone A.

*: Normal conditions refer to the following:
— Sea level
— Flat road
— Ambient air temperature: 20 - 30°C (68 - 86°F)
— Diagnosis is performed as quickly as possible under normal conditions.
  Under different conditions [For example: ambient air temperature other than 20 - 30°C (68 - 86°F)], diagnosis may also be performed.

Pattern 1:
- **The engine is started at the engine coolant temperature of –10 to 35°C (14 to 95°F) (where the voltage between the ECM terminals ⑤⑨ and ④③ is 3.0 - 4.3V).**
- **The engine must be operated at idle speed until the engine coolant temperature is greater than 70°C (158°F) (where the voltage between the ECM terminals ⑤⑨ and ④③ is lower than 1.4V).**
- **The engine is started at the tank fuel temperature of warmer than 0°C (32°F) (where the voltage between the ECM terminals ⑥⓪ and ground is less than 4.1V).**

Pattern 2:
- When steady-state driving is performed again even after it is interrupted, each diagnosis can be conducted. In this case, the time required for diagnosis may be extended.

Pattern 3:
- The driving pattern outlined in *2 must be repeated at least 3 times.
  On M/T models, shift gears following "suggested upshift speeds" schedule on next page.

Pattern 4:
- Tests are performed after the engine has been operated for at least 17 minutes.
- The accelerator pedal must be held very steady during steady-state driving.
- If the accelerator pedal is moved, the test must be conducted all over again.

*1: Depress the accelerator pedal until vehicle speed is 90 km/h (56 MPH), then release the accelerator pedal and keep it released for more than 10 seconds. Depress the accelerator pedal until vehicle speed is 90 km/h (56 MPH) again.

*2: Operate the vehicle in the following driving pattern.
1) Decelerate vehicle to 0 km/h and let engine idle.
2) Repeat driving pattern shown below at least 10 times.
   - **During acceleration, hold the accelerator pedal as steady as possible. (The THROTL POS SEN value of CONSULT should be between 0.8 to 1.2V.)**
3) Repeat steps 1 and 2 until the EGR system SRT is set.

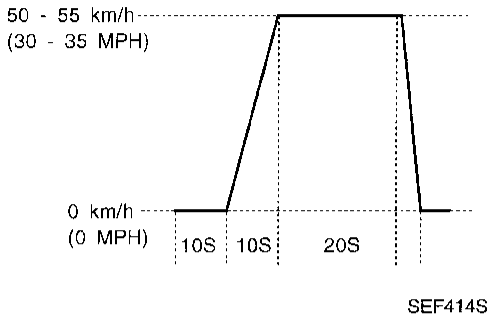

SEF414S

*3: Checking the vehicle speed with CONSULT or GST is advised.

*4: The driving pattern may be omitted when "PURG FLOW P1447" is performed using the "DTC WORK SUPPORT" mode with CONSULT.

*5: The driving pattern may be omitted when "EVAP SML LEAK P0440" is performed using the "DTC WORK SUPPORT" mode with CONSULT.

*6: The driving pattern may be omitted when all the followings are performed using the "DTC WORK SUPPORT" mode with CONSULT.
- "EGR SYSTEM P0400"
- "EGR SYSTEM P1402"

*7: The driving pattern may be omitted when all the followings are performed using the "DTC WORK SUPPORT" mode with CONSULT.
- "PURGE FLOW P1447"
- "EGRC-BPT/VLV P0402"

Emission-related Diagnostic Information (Cont'd)

Simpo PDF Merge and Split Unregistered Version - http://www.simpopdf.com

Suggested transmission gear position for A/T models

Set the selector lever in the "D" position with "OD" ON.

Suggested upshift speeds for M/T models

Shown below are suggested vehicle speeds for shifting into a higher gear. These suggestions relate to fuel economy and vehicle performance. Actual upshift speeds will vary according to road conditions, the weather and individual driving habits.

Gear change (2H and 4H position)	ACCEL shift point km/h (MPH)
1st to 2nd	24 (15)
2nd to 3rd	40 (25)
3rd to 4th	64 (40)
4th to 5th	72 (45)

Suggested maximum speed in each gear

Downshift to a lower gear if the engine is not running smoothly, or if you need to accelerate.
Do not exceed the maximum suggested speed (shown below) in any gear. For level road driving, use the highest gear suggested for that speed. Always observe posted speed limits and drive according to the road conditions to ensure safe operation. Do not over-rev the engine when shifting to a lower gear as it may cause engine damage or loss of vehicle control.

2-wheel drive models

Gear	km/h (MPH)
1st	48 (30)
2nd	88 (55)
3rd	129 (80)
4th & 5th	— (—)

4-wheel drive models
2H/4H position

Gear	km/h (MPH)
1st	40 (25)
2nd	69 (43)
3rd	109 (68)
4th & 5th	— (—)

Emission-related Diagnostic Information (Cont'd)

Simpo PDF Merge and Split Unregistered Version - http://www.simpopdf.com

TEST VALUE AND TEST LIMIT (GST only — not applicable to CONSULT)

The following is the information specified in Mode 6 of SAE J1979.
The test value is a parameter used to determine whether a system/circuit diagnostic test is "OK" or "NG" while being monitored by the ECM during self-diagnosis. The test limit is a reference value which is specified as the maximum or minimum value and is compared with the test value being monitored.
Items for which these data (test value and test limit) are displayed are the same as SRT code items (9 test items).
These data (test value and test limit) are specified by Test ID (TID) and Component ID (CID) and can be displayed on the GST screen.

X: Applicable
—: Not applicable

SRT item (CONSULT display)	Self-diagnostic test item	Test value		Test limit	Application
		TID	CID		
CATALYST	Three way catalyst function	01H	01H	Max.	X
EVAP SYSTEM	EVAP control system (Small leak)	05H	03H	Max.	X
	EVAP control system purge flow monitoring	06H	83H	Min.	X
O2 SENSOR	Front heated oxygen sensor	09H	04H	Max.	X
		0AH	84H	Min.	X
		0BH	04H	Max.	X
		0CH	04H	Max.	X
		0DH	04H	Max.	X
	Rear heated oxygen sensor	19H	86H	Min.	X
		1AH	86H	Min.	X
		1BH	06H	Max.	X
		1CH	06H	Max.	X
O2 SENSOR HEATER	Front heated oxygen sensor heater	29H	08H	Max.	X
		2AH	88H	Min.	X
	Rear heated oxygen sensor heater	2DH	0AH	Max.	X
		2EH	8AH	Min.	X
EGR SYSTEM	EGR function	31H	8CH	Min.	X
		32H	8CH	Min.	X
		33H	8CH	Min.	X
		34H	8CH	Min.	X
		35H	0CH	Max.	X
	EGRC-BPT valve function	36H	0CH	Max.	X
		37H	8CH	Min.	X

Emission-related Diagnostic Information (Cont'd)

Simpo PDF Merge and Split Unregistered Version - http://www.simpopdf.com

EMISSION-RELATED DIAGNOSTIC INFORMATION ITEMS

X: Applicable
—: Not applicable

Items (CONSULT screen terms)	DTC*4		SRT code	Test value/ Test limit (GST only)	1st trip DTC	Reference page
	CONSULT GST*2	ECM*1				
NO SELF DIAGNOSTIC FAILURE INDICATED	**P0000**	**0505**	—	—	—	—
MAF SEN/CIRCUIT	P0100	0102	—	—	X	EC-99
ABSL PRES SEN/CIRC	P0105	0803	—	—	X	EC-108
AIR TEMP SEN/CIRC	P0110	0401	—	—	X	EC-115
COOLANT T SEN/CIRC	P0115	0103	—	—	X	EC-121
THRTL POS SEN/CIRC	P0120	0403	—	—	X	EC-126
*COOLAN T SEN/CIRC	P0125	0908	—	—	X	EC-139
FRONT O2 SENSOR	P0130	0303	X	X	X*3	EC-144
FRONT O2 SENSOR	P0131	0411	X	X	X*3	EC-150
FRONT O2 SENSOR	P0132	0410	X	X	X*3	EC-156
FRONT O2 SENSOR	P0133	0409	X	X	X*3	EC-162
FRONT O2 SENSOR	P0134	0412	X	X	X*3	EC-170
FR O2 SEN HEATER	P0135	0901	X	X	X*3	EC-175
REAR O2 SENSOR	P0137	0511	X	X	X*3	EC-179
REAR O2 SENSOR	P0138	0510	X	X	X*3	EC-186
REAR O2 SENSOR	P0139	0707	X	X	X*3	EC-193
REAR O2 SENSOR	P0140	0512	X	X	X*3	EC-199
RR O2 SEN HEATER	P0141	0902	X	X	X*3	EC-204
FUEL SYS DIAG-LEAN	P0171	0115	—	—	X	EC-208
FUEL SYS DIAG-RICH	P0172	0114	—	—	X	EC-213
FUEL TEMP SEN/CIRC	P0180	0402	—	—	X	EC-218
MULTI CYL MISFIRE	P0300	0701	—	—	X	EC-222
CYL 1 MISFIRE	P0301	0608	—	—	X	EC-222
CYL 2 MISFIRE	P0302	0607	—	—	X	EC-222
CYL 3 MISFIRE	P0303	0606	—	—	X	EC-222
CYL 4 MISFIRE	P0304	0605	—	—	X	EC-222
KNOCK SEN/CIRCUIT	P0325	0304	—	—	X	EC-227
CPS/CIRCUIT (OBD)	P0335	0802	—	—	X	EC-231
CAM POS SEN/CIR	P0340	0101	—	—	X	EC-236
EGR SYSTEM	P0400	0302	X	X	X*3	EC-242
EGRC-BPT VALVE	P0402	0306	X	X	X*3	EC-250
TW CATALYST SYSTEM	P0420	0702	X	X	X*3	EC-255
EVAP SMALL LEAK	P0440	0705	X	X	X*3	EC-260
PURG VOLUME CONT/V	P0443	1008	—	—	X	EC-270
VENT CONTROL VALVE	P0446	0903	—	—	X	EC-276
EVAPO SYS PRES SEN	P0450	0704	—	—	X	EC-281

*1: In Diagnostic Test Mode II (Self-diagnostic results). These numbers are controlled by NISSAN.
*2: These numbers are prescribed by SAE J2012.
*3: These are not displayed with GST.
*4: 1st trip DTC No. is the same as DTC No.

Emission-related Diagnostic Information (Cont'd)

Simpo PDF Merge and Split Unregistered Version - http://www.simpopdf.com

X: Applicable
—: Not applicable

Items (CONSULT screen terms)	DTC*4		SRT code	Test value/ Test limit (GST only)	1st trip DTC	Reference page
	CONSULT GST*2	ECM*1				
VEH SPEED SEN/CIRC	P0500	0104	—	—	X	EC-287
IACV/AAC VLV/CIRC	P0505	0205	—	—	X	EC-291
CLOSED TP SW/CIRC	P0510	0203	—	—	X	EC-297
ECM	P0605	0301	—	—	X	EC-302
MAP/BAR SW SOL/CIR	P1105	1302	—	—	X	EC-304
CLOSED LOOP	P1148	0307	—	—	X	EC-313
IGN SIGNAL-PRIMARY	P1320	0201	—	—	X	EC-315
CPS/CIRC (OBD) COG	P1336	0905	—	—	X	EC-322
EGRC SOLENOID/V	P1400	1005	—	—	X	EC-327
EGR TEMP SEN/CIRC	P1401	0305	—	—	X	EC-332
EGR SYSTEM	P1402	0514	X	X	X*3	EC-338
EVAP SMALL LEAK	P1440	0213	X	X	X*3	EC-345
PURG VOLUME CONT/V	P1444	0214	—	—	X	EC-355
VENT CONTROL VALVE	P1446	0215	—	—	X	EC-362
EVAP PURG FLOW/MON	P1447	0111	X	X	X*3	EC-367
VENT CONTROL VALVE	P1448	0309	—	—	X	EC-373
VC/V BYPASS/V	P1490	0801	—	—	X	EC-378
VC CUT/V BYPASS/V	P1491	0311	—	—	X	EC-383
P-N POS SW/CIRCUIT	P1706	1003	—	—	X	EC-388
TOR CONV CLTCH S/V	P1775	0904	—	—	X	EC-393
TOR CONV CLTCH S/V	P1776	0513	—	—	X	EC-397

*1: In Diagnostic Test Mode II (Self-diagnostic results). These numbers are controlled by NISSAN.
*2: These numbers are prescribed by SAE J2012.
*3: These are not displayed with GST.
*4: 1st trip DTC No. is the same as DTC No.

Emission-related Diagnostic Information (Cont'd)

Simpo PDF Merge and Split Unregistered Version - http://www.simpopdf.com

HOW TO ERASE EMISSION-RELATED DIAGNOSTIC INFORMATION

How to erase DTC (With CONSULT)

1. If the ignition switch stays "ON" after repair work, be sure to turn ignition switch "OFF" once. Wait at least 5 seconds and then turn it "ON" (engine stopped) again.
2. Turn CONSULT "ON" and touch "ENGINE".
3. Touch "SELF-DIAG RESULTS".
4. Touch "ERASE". (The DTC in the ECM will be erased.)

How to erase DTC (With CONSULT)

1. If the ignition switch stays "ON" after repair work, be sure to turn ignition switch "OFF" once. Wait at least 5 seconds and then turn it "ON" again.

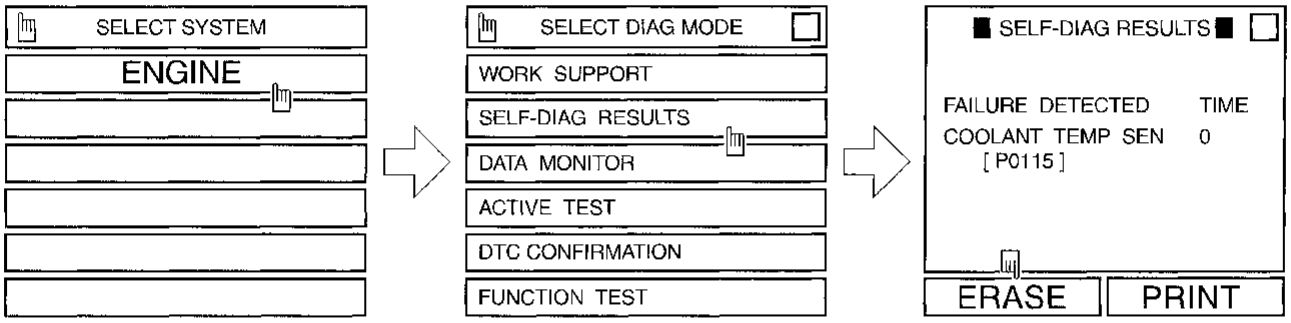

2. Turn CONSULT "ON" and touch "ENGINE".
3. Touch "SELF-DIAG RESULTS".
4. Touch "ERASE". (The DTC in the ECM will be erased.)

SEF847U

The emission-related diagnostic information in the ECM can be erased by selecting "ERASE" in the "SELF-DIAG RESULTS" mode with CONSULT.

How to erase DTC (With GST)

1. If the ignition switch stays "ON" after repair work, be sure to turn ignition switch "OFF" once. Wait at least 5 seconds and then turn it "ON" (engine stopped) again.
2. Select Mode 4 with GST (Generic Scan Tool).

The emission-related diagnostic information in the ECM can be erased by selecting Mode 4 with GST (Generic Scan Tool).

How to erase DTC (No Tools)

1. If the ignition switch stays "ON" after repair work, be sure to turn ignition switch "OFF" once. Wait at least 5 seconds and then turn it "ON" again.
2. Change the diagnostic test mode from Mode II to Mode I by turning the mode selector on the ECM. (See EC-47.)

The emission-related diagnostic information in the ECM can be erased by changing the diagnostic test mode from Diagnostic Test Mode II to Mode I by turning the mode selector on the ECM. (Refer to EC-47.)

Note:

- **If the battery is disconnected, the emission-related diagnostic information will be lost after approx. 24 hours.**
- **Erasing the emission-related diagnostic information using CONSULT or GST is easier and quicker than switching the mode selector on the ECM.**
- **The following data are cleared when the ECM memory is erased.**

1. Diagnostic trouble codes
2. 1st trip diagnostic trouble codes
3. Freeze frame data
4. 1st trip freeze frame data
5. System readiness test (SRT) codes
6. Test values
7. Others

Actual work procedures are explained using a DTC as an example. Be careful so that not only the DTC, but all of the data listed above, are cleared from the ECM memory during work procedures.

Simpo PDF Merge and Split Unregistered Version - http://www.simpopdf.com

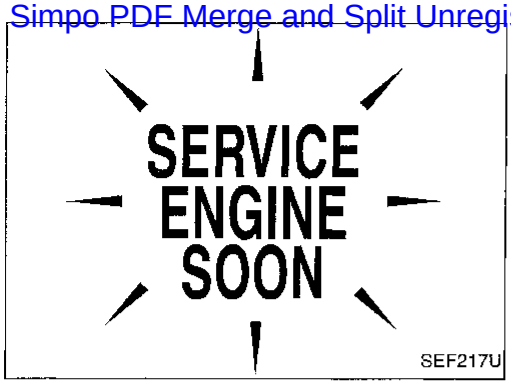

Malfunction Indicator Lamp (MIL)

1. The malfunction indicator lamp will light up when the ignition switch is turned ON without the engine running. This is a bulb check.
   - If the malfunction indicator lamp does not light up, refer to EL section ("WARNING LAMPS AND CHIME") or see EC-422.
2. When the engine is started, the malfunction indicator lamp should go off.
   If the lamp remains on, the on board diagnostic system has detected an engine system malfunction.

ON BOARD DIAGNOSTIC SYSTEM FUNCTION

The on board diagnostic system has the following four functions.

Diagnostic Test Mode I

1. BULB CHECK : This function checks the MIL bulb for damage (blown, open circuit, etc.).
   If the MIL does not come on, check MIL circuit and ECM test mode selector. (See next page.)
2. MALFUNCTION WARNING : This is a usual driving condition. When a malfunction is detected twice in two consecutive driving cycles (two trip detection logic), the MIL will light up to inform the driver that a malfunction has been detected.
   The following malfunctions will light up or blink the MIL in the 1st trip.
   - "Misfire (Possible three way catalyst damage)"
   - "Closed loop control"
   - Fail-safe mode

Diagnostic Test Mode II

3. SELF-DIAGNOSTIC RESULTS : This function allows DTCs and 1st trip DTCs to be read.
4. FRONT HEATED OXYGEN SENSOR MONITOR : This function allows the fuel mixture condition (lean or rich), monitored by front heated oxygen sensor, to be read.

MIL flashing without DTC

If the ECM is in Diagnostic Test Mode II, MIL may flash when engine is running. In this case, check ECM test mode selector following "HOW TO SWITCH DIAGNOSTIC TEST MODES" on next page.
How to switch the diagnostic test (function) modes, and details of the above functions are described later. (Refer to EC-47.)

Condition		Diagnostic Test Mode I	Diagnostic Test Mode II
Ignition switch in "ON" position	Engine stopped	BULB CHECK	SELF-DIAGNOSTIC RESULTS
	Engine running	MALFUNCTION WARNING	FRONT HEATED OXYGEN SENSOR MONITOR

Malfunction Indicator Lamp (MIL) (Cont'd)

Simpo PDF Merge and Split Unregistered Version - http://www.simpopdf.com

HOW TO SWITCH DIAGNOSTIC TEST MODES

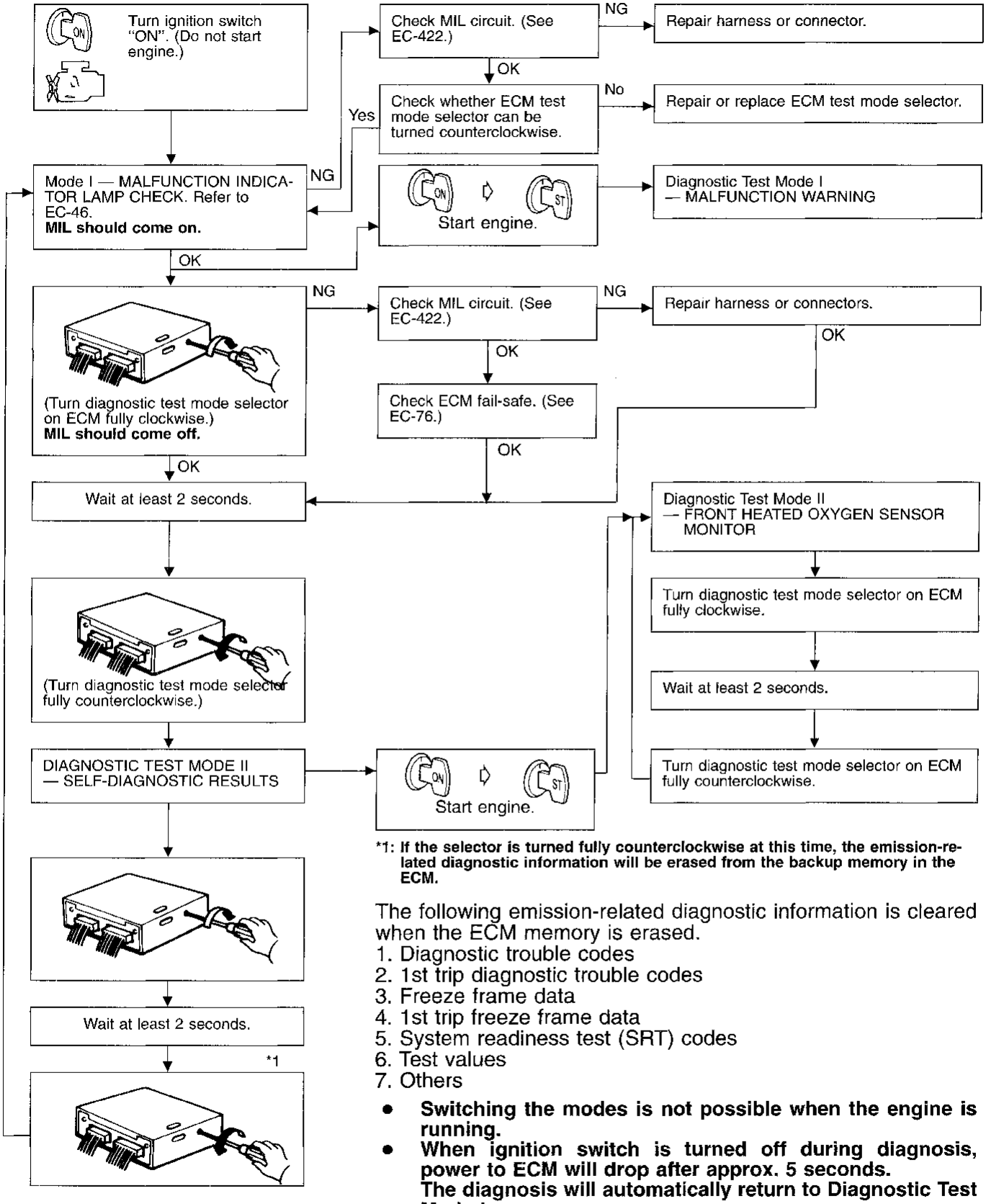

***1: If the selector is turned fully counterclockwise at this time, the emission-related diagnostic information will be erased from the backup memory in the ECM.**

The following emission-related diagnostic information is cleared when the ECM memory is erased.

1. Diagnostic trouble codes
2. 1st trip diagnostic trouble codes
3. Freeze frame data
4. 1st trip freeze frame data
5. System readiness test (SRT) codes
6. Test values
7. Others

- **Switching the modes is not possible when the engine is running.**
- **When ignition switch is turned off during diagnosis, power to ECM will drop after approx. 5 seconds. The diagnosis will automatically return to Diagnostic Test Mode I.**
- **Turn back diagnostic test mode selector to the fully counterclockwise position whenever vehicle is in use.**

Malfunction Indicator Lamp (MIL) (Cont'd)

Simpo PDF Merge and Split Unregistered Version - http://www.simpopdf.com

DIAGNOSTIC TEST MODE I — BULB CHECK

In this mode, the MALFUNCTION INDICATOR LAMP on the instrument panel should stay ON. If it remains OFF, check the bulb. Refer to EL section ("WARNING LAMPS AND CHIME") or see EC-422.

DIAGNOSTIC TEST MODE I — MALFUNCTION WARNING

MALFUNCTION INDICATOR LAMP	Condition
ON	When the malfunction is detected or the ECM's CPU is malfunctioning.
OFF	No malfunction.

- These Diagnostic Trouble Code Numbers are clarified in Diagnostic Test Mode II (SELF-DIAGNOSTIC RESULTS).

DIAGNOSTIC TEST MODE II — SELF-DIAGNOSTIC RESULTS

In this mode, the DTC and 1st trip DTC are indicated by the number of blinks of the MALFUNCTION INDICATOR LAMP.
The DTC and 1st trip DTC are displayed at the same time. If the MIL does not illuminate in diagnostic test mode 1 (Malfunction warning), all displayed items are 1st trip DTC's. If only one code is displayed when the MIL illuminates in diagnostic test mode II (SELF-DIAGNOSTIC RESULTS), it is a DTC; if two or more codes are displayed, they may be either DTC's or 1st trip DTC's. DTC No. is same as that of 1st trip DTC. These unidentified codes can be identified by using the consult or GST. A DTC will be used as an example for how to read a code.

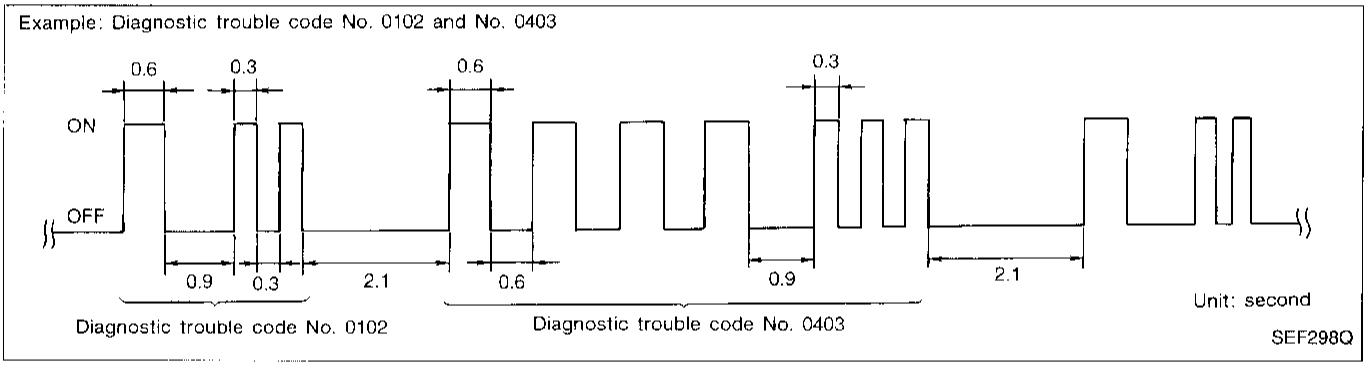

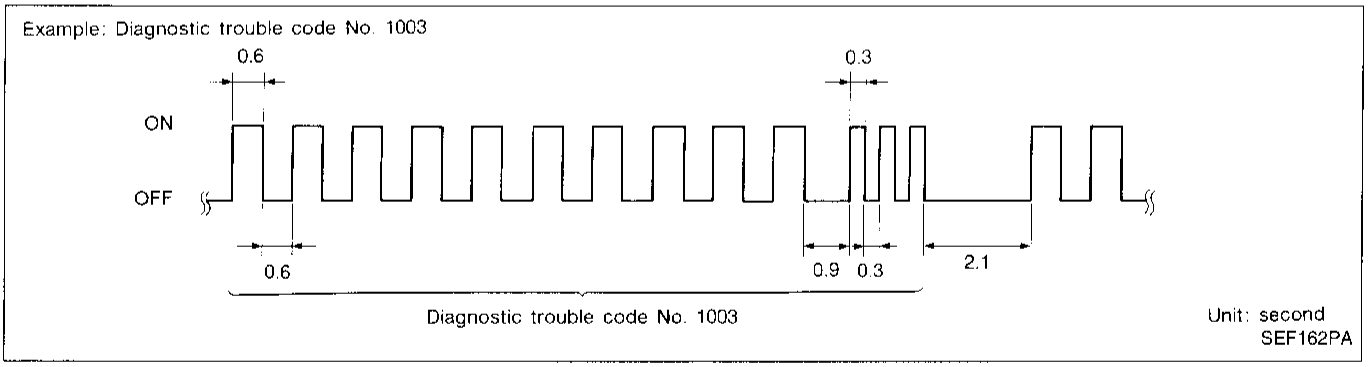

Long (0.6 second) blinking indicates the two LH digits of number and short (0.3 second) blinking indicates the two RH digits of number. For example, the malfunction indicator lamp blinks 10 times for 6 seconds (0.6 sec x 10 times) and then it blinks three times for about 1 second (0.3 sec x 3 times). This indicates the DTC "1003" and refers to the malfunction of the neutral position switch.
In this way, all the detected malfunctions are classified by their diagnostic trouble code numbers. The DTC "0505" refers to no malfunction. (See DIAGNOSTIC TROUBLE CODE (DTC) INDEX, EC-2.)

Malfunction Indicator Lamp (MIL) (Cont'd)

Simpo PDF Merge and Split Unregistered Version - http://www.simpopdf.com

How to erase diagnostic test mode II (Self-diagnostic results)

The diagnostic trouble code can be erased from the backup memory in the ECM when the diagnostic test mode is changed from Diagnostic Test Mode II to Diagnostic Test Mode I. (Refer to "HOW TO SWITCH DIAGNOSTIC TEST MODES".)

- **If the battery is disconnected, the diagnostic trouble code will be lost from the backup memory after approx. 24 hours.**
- **Be careful not to erase the stored memory before starting trouble diagnoses.**

DIAGNOSTIC TEST MODE II — FRONT HEATED OXYGEN SENSOR MONITOR

In this mode, the MALFUNCTION INDICATOR LAMP displays the condition of the fuel mixture (lean or rich) which is monitored by the front heated oxygen sensor.

MALFUNCTION INDICATOR LAMP	Fuel mixture condition in the exhaust gas	Air fuel ratio feedback control condition
ON	Lean	Closed loop system
OFF	Rich	
*Remains ON or OFF	Any condition	Open loop system

*: Maintains conditions just before switching to open loop.

To check the front heated oxygen sensor function, start engine in the Diagnostic Test Mode II and warm it up until engine coolant temperature indicator points to the middle of the gauge.
Next run engine at about 2,000 rpm for about 2 minutes under no-load conditions. Then make sure that the MALFUNCTION INDICATOR LAMP comes ON more than 5 times within 10 seconds with engine running at 2,000 rpm under no-load.

OBD System Operation Chart

RELATIONSHIP BETWEEN MIL, 1ST TRIP DTC, DTC, AND DETECTABLE ITEMS

- When a malfunction is detected for the first time, the 1st trip DTC and the 1st trip freeze frame data are stored in the ECM memory.
- When the same malfunction is detected in two consecutive trips, the DTC and the freeze frame data are stored in the ECM memory, and the MIL will come on. For details, refer to "Two Trip Detection Logic" on EC-35.
- The MIL will go off after the vehicle is driven 3 times with no malfunction. The drive is counted only when the recorded driving pattern is met (as stored in the ECM). If another malfunction occurs while counting, the counter will reset.
- The DTC and the freeze frame data will be stored until the vehicle is driven 40 times (driving pattern A) without the same malfunction recurring (except for Misfire and Fuel Injection System). For Misfire and Fuel Injection System, the DTC and freeze frame data will be stored until the vehicle is driven 80 times (driving pattern C) without the same malfunction recurring. The "TIME" in "SELF-DIAGNOSTIC RESULTS" mode of CONSULT will count the number of times the vehicle is driven.
- The 1st trip DTC is not displayed when the self-diagnosis results in "OK" for the 2nd trip.

SUMMARY CHART

Items	Fuel Injection System	Misfire	Other
MIL (goes off)	3 (pattern B)	3 (pattern B)	3 (pattern B)
DTC, Freeze Frame Data (no display)	80 (pattern C)	80 (pattern C)	40 (pattern A)
1st Trip DTC (clear)	1 (pattern C), *1	1 (pattern C), *1	1 (pattern B)
1st Trip Freeze Frame Data (clear)	*1, *2	*1, *2	1 (pattern B)

For details about patterns "B" and "C" under "Fuel Injection System" and "Misfire", see EC-51.
For details about patterns "A" and "B" under "Other", see EC-53.
*1: Clear timing is at the moment OK is detected.
*2: Clear timing is when the same malfunction is detected in the 2nd trip.

OBD System Operation Chart (Cont'd)

Simpo PDF Merge and Split Unregistered Version - http://www.simpopdf.com

RELATIONSHIP BETWEEN MIL, DTC, 1ST TRIP DTC AND DRIVING PATTERNS FOR "MISFIRE" <EXHAUST QUALITY DETERIORATION>, "FUEL INJECTION SYSTEM"

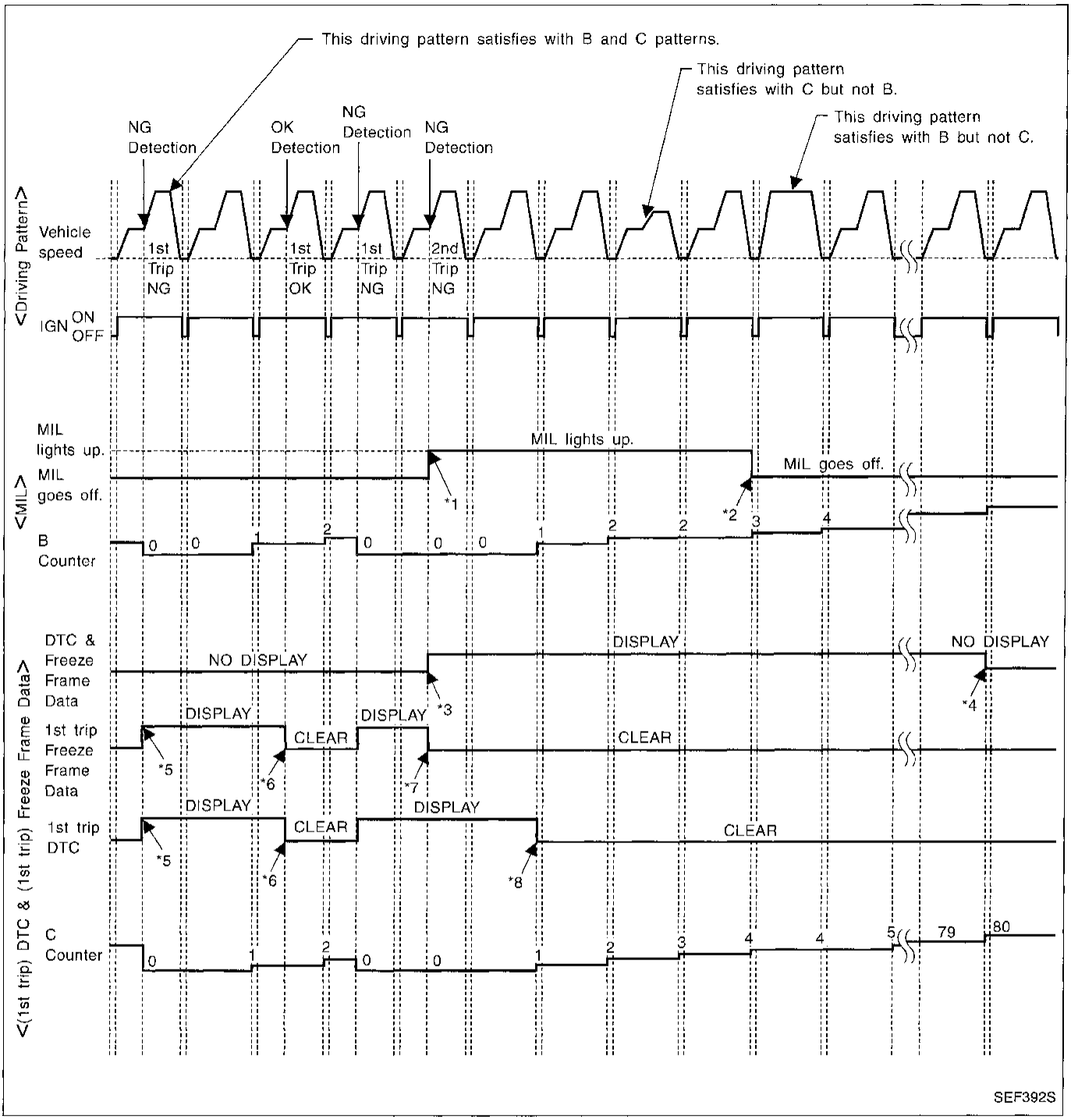

*1: When the same malfunction is detected in two consecutive trips, MIL will light up.

*2: MIL will go off after vehicle is driven 3 times (pattern B) without any malfunctions.

*3: When the same malfunction is detected in two consecutive trips, the DTC and the freeze frame data will be stored in ECM.

*4: The DTC and the freeze frame data will not be displayed any longer after vehicle is driven 80 times (pattern C) without the same malfunction.
(The DTC and the freeze frame data still remain in ECM.)

*5: When a malfunction is detected for the first time, the 1st trip DTC and the 1st trip freeze frame data will be stored in ECM.

*6: The 1st trip DTC and the 1st trip freeze frame data will be cleared at the moment OK is detected.

*7: When the same malfunction is detected in the 2nd trip, the 1st trip freeze frame data will be cleared.

*8: 1st trip DTC will be cleared when vehicle is driven once (pattern C) without the same malfunction after DTC is stored in ECM.

OBD System Operation Chart (Cont'd)

Simpo PDF Merge and Split Unregistered Version - http://www.simpopdf.com

EXPLANATION FOR DRIVING PATTERNS FOR "MISFIRE <EXHAUST QUALITY DETERIORATION>", "FUEL INJECTION SYSTEM"

<Driving pattern B>

Driving pattern B means the vehicle operation as follows:

All components and systems should be monitored at least once by the OBD system.

- The B counter will be cleared when the malfunction is detected once regardless of the driving pattern.
- The B counter will be counted up when driving pattern B is satisfied without any malfunction.
- The MIL will go off when the B counter reaches 3. (*2 in "OBD SYSTEM OPERATION CHART")

<Driving pattern C>

Driving pattern C means the vehicle operation as follows:

(1) The following conditions should be satisfied at the same time:
Engine speed: (Engine speed in the freeze frame data) ±375 rpm
Calculated load value: (Calculated load value in the freeze frame data) x (1±0.1) [%]
Engine coolant temperature (T) condition:

- When the freeze frame data shows lower than 70°C (158°F), "T" should be lower than 70°C (158°F).
- When the freeze frame data shows higher than or equal to 70°C (158°F), "T" should be higher than or equal to 70°C (158°F).

Example:

If the stored freeze frame data is as follows:

Engine speed: 850 rpm, Calculated load value: 30%, Engine coolant temperature: 80°C (176°F)

To be satisfied with driving pattern C, the vehicle should run under the following conditions:

Engine speed: 475 - 1,225 rpm, Calculated load value: 27 - 33%, Engine coolant temperature: more than 70°C (158°F)

- The C counter will be cleared when the malfunction is detected regardless of (1).
- The C counter will be counted up when (1) is satisfied without the same malfunction.
- The DTC will not be displayed after C counter reaches 80.
- The 1st trip DTC will be cleared when C counter is counted once without the same malfunction after DTC is stored in ECM.

OBD System Operation Chart (Cont'd)

Simpo PDF Merge and Split Unregistered Version - http://www.simpopdf.com

RELATIONSHIP BETWEEN MIL, DTC, 1ST TRIP DTC AND DRIVING PATTERNS EXCEPT FOR "MISFIRE <EXHAUST QUALITY DETERIORATION>", "FUEL INJECTION SYSTEM"

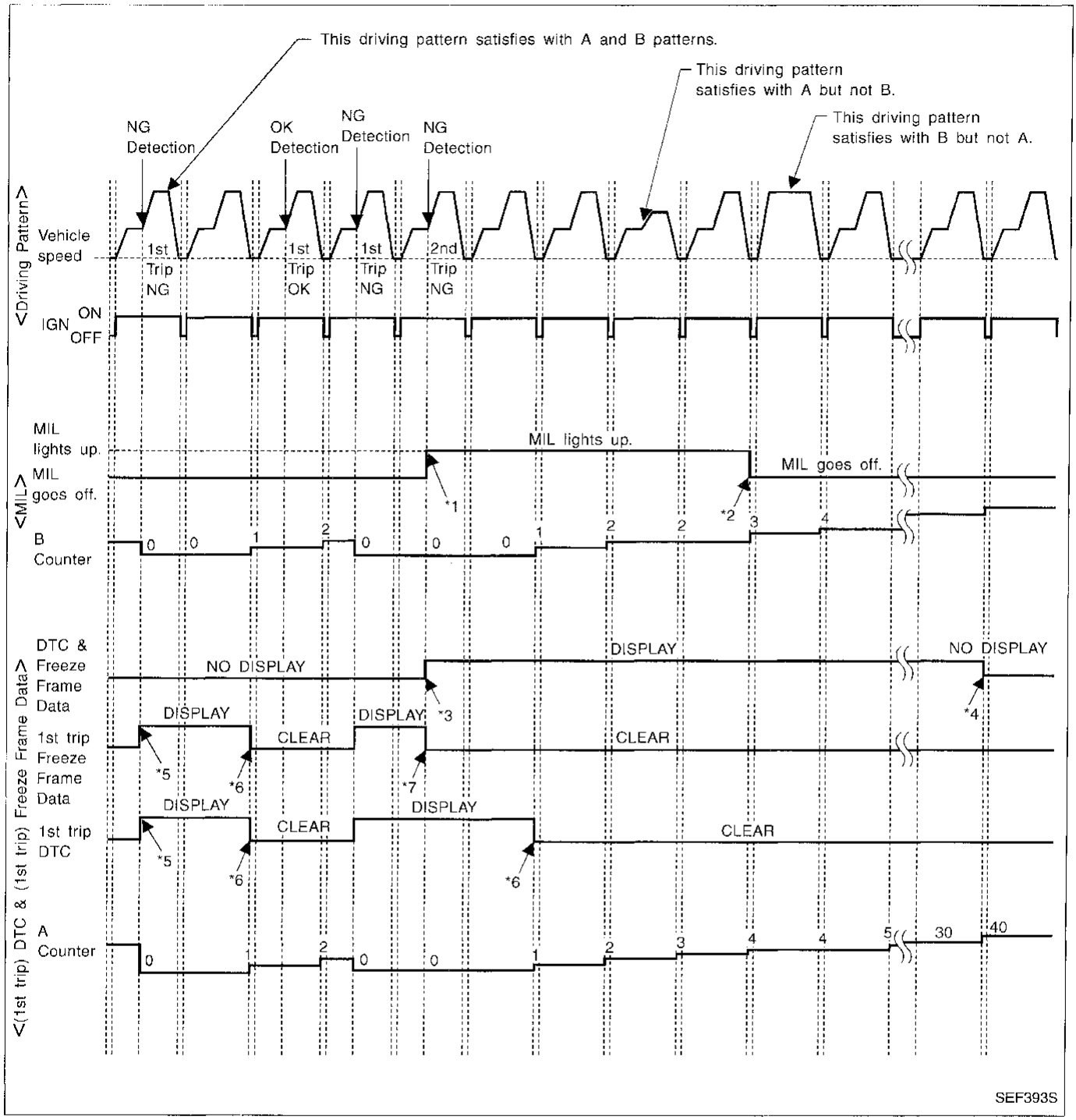

*1: When the same malfunction is detected in two consecutive trips, MIL will light up.

*2: MIL will go off after vehicle is driven 3 times (pattern B) without any malfunctions.

*3: When the same malfunction is detected in two consecutive trips, the DTC and the freeze frame data will be stored in ECM.

*4: The DTC and the freeze frame data will not be displayed any longer after vehicle is driven 40 times (pattern A) without the same malfunction.
(The DTC and the freeze frame data still remain in ECM.)

*5: When a malfunction is detected for the first time, the 1st trip DTC and the 1st trip freeze frame data will be stored in ECM.

*6: 1st trip DTC will be cleared after vehicle is driven once (pattern B) without the same malfunction.

*7: When the same malfunction is detected in the 2nd trip, the 1st trip freeze frame data will be cleared.

OBD System Operation Chart (Cont'd)

Simpo PDF Merge and Split Unregistered Version - http://www.simpopdf.com

EXPLANATION FOR DRIVING PATTERNS EXCEPT FOR "MISFIRE <EXHAUST QUALITY DETERIORATION>", "FUEL INJECTION SYSTEM"

<Driving pattern A>

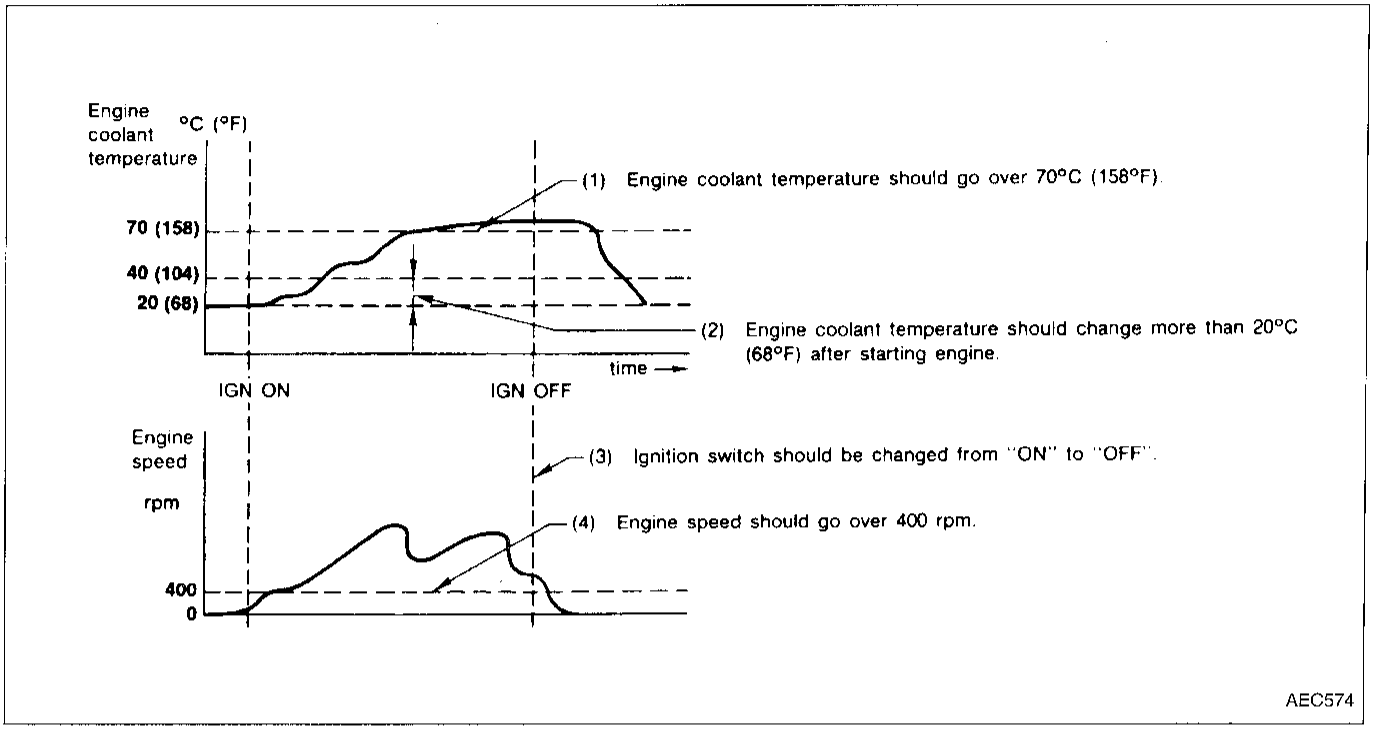

- The A counter will be cleared when the malfunction is detected regardless of (1) - (4).
- The A counter will be counted up when (1) - (4) are satisfied without the same malfunction.
- The DTC will not be displayed after the A counter reaches 40.

<Driving pattern B>

Driving pattern B means the vehicle operation as follows:
All components and systems should be monitored at least once by the OBD system.

- The B counter will be cleared when the malfunction is detected once regardless of the driving pattern.
- The B counter will be counted up when driving pattern B is satisfied without any malfunctions.
- The MIL will go off when the B counter reaches 3 (*2 in "OBD SYSTEM OPERATION CHART").

Simpo PDF Merge and Split Unregistered Version - http://www.simpopdf.com

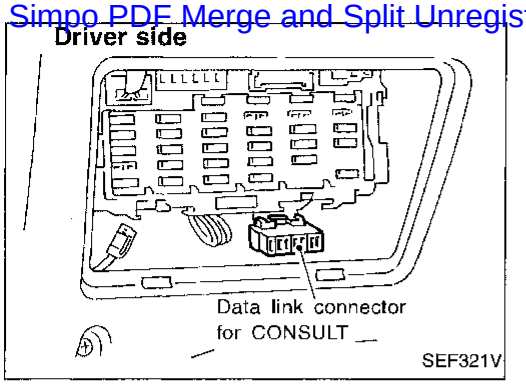

CONSULT

CONSULT INSPECTION PROCEDURE

1. Turn ignition switch "OFF".
2. Connect "CONSULT" to data link connector for CONSULT. (Data link connector for CONSULT is located behind the fuse box cover.)

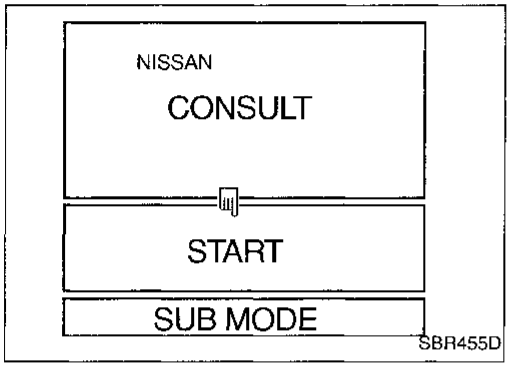

3. Turn ignition switch "ON".
4. Touch "START".

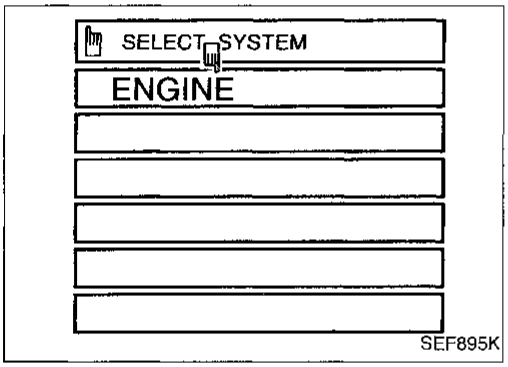

5. Touch "ENGINE".

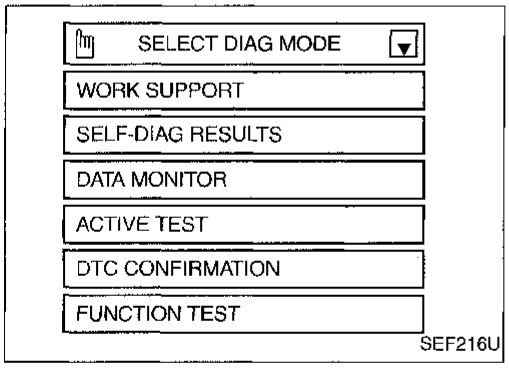

6. Perform each diagnostic test mode according to each service procedure.

For further information, see the CONSULT Operation Manual. This sample shows the display when using the UEOBD98 program card. Screen differs in accordance with the program card used.

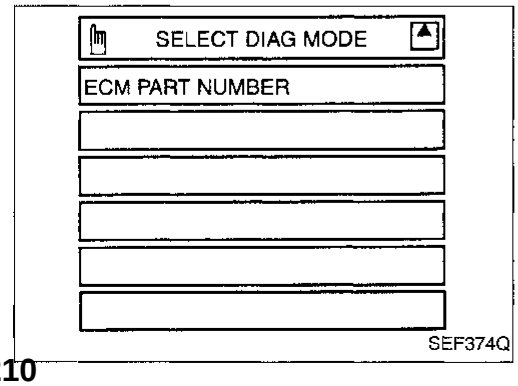

CONSULT (Cont'd)

Simpo PDF Merge and Split Unregistered Version - http://www.simpopdf.com

ECCS COMPONENT PARTS/CONTROL SYSTEMS APPLICATION

Item			DIAGNOSTIC TEST MODE							
			WORK SUP-PORT	SELF-DIAGNOSTIC RESULTS*1	FREEZE FRAME DATA*2	DATA MONITOR	ACTIVE TEST	FUNC-TION TEST	DTC CONFIRMATION SRT STATUS	DTC CONFIRMATION DTC WORK SUP-PORT
ECCS COMPONENT PARTS	INPUT	Camshaft position sensor		X	X	X				
		Mass air flow sensor		X		X				
		Engine coolant temperature sensor		X	X	X	X			
		Front heated oxygen sensor		X		X		X	X	X
		Rear heated oxygen sensor		X		X			X	X
		Vehicle speed sensor		X	X	X		X		
		Throttle position sensor	X	X		X		X		
		Tank fuel temperature sensor		X		X	X			
		EVAP control system pressure sensor		X		X				
		Absolute pressure sensor		X	X	X				
		EGR temperature sensor		X		X				
		Intake air temperature sensor		X		X				
		Crankshaft position sensor (OBD)		X						
		Knock sensor		X						
		Ignition switch (start signal)				X		X		
		Closed throttle position switch		X						
		Closed throttle position switch (throttle position sensor signal)				X		X		
		Air conditioner switch				X				
		Park/Neutral position switch		X		X		X		
		Power steering oil pressure switch				X		X		
		Air conditioner pressure switch				X				
		Battery voltage				X				
	OUTPUT	Injectors				X	X	X		
		Power transistor (Ignition timing)		X (Ignition signal)		X	X	X		
		IACV-AAC valve	X	X		X	X	X		
		EVAP canister purge volume control solenoid valve		X		X	X			X
		Air conditioner relay				X				
		Fuel pump relay	X			X	X	X		
		EGRC-solenoid valve		X		X	X	X		
		Front heated oxygen sensor heater		X		X			X	
		Rear heated oxygen sensor heater		X		X			X	
		Torque converter clutch solenoid valve		X		X				X
		EVAP canister vent control valve		X		X	X			
		Vacuum cut valve bypass valve		X		X	X			X
		MAP/BARO switch solenoid valve		X		X	X			
		Calculated load value			X	X				

X: Applicable
*1: This item includes 1st trip DTCs.
*2: This mode includes 1st trip freeze frame data or freeze frame data. The items appear on CONSULT screen in freeze frame data mode only if a 1st trip DTC or DTC is detected. For details, refer to EC-37.

CONSULT (Cont'd)

Simpo PDF Merge and Split Unregistered Version - http://www.simpopdf.com

FUNCTION

Diagnostic test mode	Function
Work support	This mode enables a technician to adjust some devices faster and more accurately by following the indications on the CONSULT unit.
Self-diagnostic results	Self-diagnostic results such as 1st trip DTC, DTCs and 1st trip freeze frame data or freeze frame data can be read and erased quickly.*1
Data monitor	Input/Output data in the ECM can be read.
Active test	Diagnostic Test Mode in which CONSULT drives some actuators apart from the ECMs and also shifts some parameters in a specified range.
DTC confirmation	The status of system monitoring tests and the self-diagnosis status/result can be confirmed.
Function test	Conducted by CONSULT instead of a technician to determine whether each system is "OK" or "NG".
ECM part numbers	ECM part numbers can be read.

*1 The following emission-related diagnostic information is cleared when the ECM memory is erased.
1. Diagnostic trouble codes
2. 1st trip diagnostic trouble codes
3. Freeze frame data
4. 1st trip freeze frame data
5. System readiness test (SRT) codes
6. Test values
7. Others

WORK SUPPORT MODE

WORK ITEM	CONDITION	USAGE
THRTL POS SEN ADJ	CHECK THE THROTTLE POSITION SENSOR SIGNAL. ADJUST IT TO THE SPECIFIED VALUE BY ROTATING THE SENSOR BODY UNDER THE FOLLOWING CONDITIONS. ● IGN SW "ON" ● ENG NOT RUNNING ● ACC PEDAL NOT PRESSED	When adjusting throttle position sensor initial position
IGNITION TIMING ADJ	● IGNITION TIMING FEEDBACK CONTROL WILL BE HELD BY TOUCHING "START". AFTER DOING SO, ADJUST IGNITION TIMING WITH A TIMING LIGHT BY TURNING THE CRANKSHAFT POSITION SENSOR.	When adjusting initial ignition timing
IACV-AAC/V ADJ	SET ENGINE SPEED AT THE SPECIFIED VALUE UNDER THE FOLLOWING CONDITIONS. ● ENGINE WARMED UP ● NO-LOAD	When adjusting idle speed
FUEL PRESSURE RELEASE	● FUEL PUMP WILL STOP BY TOUCHING "START" DURING IDLING. CRANK A FEW TIMES AFTER ENGINE STALLS.	When releasing fuel pressure from fuel line
EVAP SYSTEM CLOSE	OPEN THE VACUUM CUT VALVE BYPASS VALVE AND CLOSE THE EVAP CANISTER VENT CONTROL VALVE IN ORDER TO MAKE EVAP SYSTEM CLOSE UNDER THE FOLLOWING CONDITIONS. ● BATTERY VOLTAGE IS SUFFICIENT. ● IGN SW "ON" ● ENGINE NOT RUNNING ● AMBIENT TEMPERATURE IS ABOVE 0°C (32°F). ● NO VACUUM AND NO HIGH PRESSURE IN EVAP SYSTEM ● TANK FUEL TEMP. IS MORE THAN 0°C (32°F). ● WITHIN 10 MINUTES AFTER STARTING "EVAP SYSTEM CLOSE" WHEN TRYING TO EXECUTE "EVAP SYSTEM CLOSE" UNDER THE CONDITION EXCEPT ABOVE, CONSULT WILL DISCONTINUE IT AND DISPLAY APPROPRIATE INSTRUCTION. **NOTE: WHEN STARTING ENGINE, CONSULT MAY DISPLAY "BATTERY VOLTAGE IS LOW. CHARGE BATTERY", EVEN IN USING CHARGED BATTERY.**	When detecting EVAP vapor leak point of EVAP system

CONSULT (Cont'd)

Simpo PDF Merge and Split Unregistered Version - http://www.simpopdf.com

SELF-DIAGNOSTIC MODE

DTC and 1st trip DTC

Regarding items of "DTC and 1st trip DTC", refer to "DIAGNOSTIC TROUBLE CODE INDEX" (See EC-2.).

Freeze frame data and 1st trip freeze frame data

Freeze frame data item*	Description
DIAG TROUBLE CODE [PXXXX]	● ECCS component part/control system has a trouble code, it is displayed as "PXXXX". [Refer to "Alphabetical & P No. Index for DTC" (EC-2).]
FUEL SYS	● "Fuel injection system status" at the moment a malfunction is detected is displayed. ● One mode in the following is displayed. "MODE 2": Open loop due to detected system malfunction "MODE 3": Open loop due to driving conditions (power enrichment, deceleration enrichment) "MODE 4": Closed loop - using oxygen sensor(s) as feedback for fuel control "MODE 5": Open loop - has not yet satisfied condition to go to closed loop
CAL/LD VALUE [%]	● The calculated load value at the moment a malfunction is detected is displayed.
COOLANT TEMP [°C] or [°F]	● The engine coolant temperature at the moment a malfunction is detected is displayed.
S-FUEL TRIM [%]	● "Short-term fuel trim" at the moment a malfunction is detected is displayed. ● The short-term fuel trim indicates dynamic or instantaneous feedback compensation to the base fuel schedule.
L-FUEL TRIM [%]	● "Long-term fuel trim" at the moment a malfunction is detected is displayed. ● The long-term fuel trim indicates much more gradual feedback compensation to the base fuel schedule than short-term fuel trim.
ENGINE SPEED [rpm]	● The engine speed at the moment a malfunction is detected is displayed.
VHCL SPEED [km/h] or [mph]	● The vehicle speed at the moment a malfunction is detected is displayed.
ABSOL PRESS [kPa] or [kg/cm^2] or [psi]	● The absolute pressure at the moment a malfunction is detected is displayed.

*: The items are the same as those of 1st trip freeze frame data.

CONSULT (Cont'd)

Simpo PDF Merge and Split Unregistered Version - http://www.simpopdf.com

DATA MONITOR MODE

Monitored item [Unit]	ECM input signals	Main signals	Description	Remarks
CMPS·RPM (REF) [rpm]	○	○	● Indicates the engine speed computed from the REF signal (180° signal) of the camshaft position sensor.	
MAS AIR/FL SE [V]	○	○	● The signal voltage of the mass air flow sensor is displayed.	● When the engine is stopped, a certain value is indicated.
COOLAN TEMP/S [°C] or [°F]	○	○	● The engine coolant temperature (determined by the signal voltage of the engine coolant temperature sensor) is displayed.	● When the engine coolant temperature sensor is open or short-circuited, ECM enters fail-safe mode. The engine coolant temperature determined by the ECM is displayed.
FR O2 SENSOR [V]	○	○	● The signal voltage of the front heated oxygen sensor is displayed.	
RR O2 SENSOR [V]	○	○	● The signal voltage of the rear heated oxygen sensor is displayed.	
FR O2 MNTR [RICH/LEAN]	○	○	● Display of front heated oxygen sensor signal during air-fuel ratio feedback control: RICH ... means the mixture became "rich", and control is being affected toward a leaner mixture. LEAN ... means the mixture became "lean", and control is being affected toward a rich mixture.	● After turning ON the ignition switch, "RICH" is displayed until air-fuel mixture ratio feedback control begins. ● When the air-fuel ratio feedback is clamped, the value just before the clamping is displayed continuously.
RR O2 MNTR [RICH/LEAN]	○		● Display of rear heated oxygen sensor signal: RICH ... means the amount of oxygen after three way catalyst is relatively small. LEAN ... means the amount of oxygen after three way catalyst is relatively large.	● When the engine is stopped, a certain value is indicated.
VHCL SPEED SE [km/h] or [mph]	○	○	● The vehicle speed computed from the vehicle speed sensor signal is displayed.	
BATTERY VOLT [V]	○	○	● The power supply voltage of ECM is displayed.	
THRTL POS SEN [V]	○	○	● The throttle position sensor signal voltage is displayed.	
TANK F/TMP SE [°C] or [°F]	○		● The fuel temperature judged from the tank fuel temperature sensor signal voltage is displayed.	
EGR TEMP SEN [V]	○		● The signal voltage of the EGR temperature sensor is displayed.	
INT/A TEMP SE [°C] or [°F]	○		● The intake air temperature determined by the signal voltage of the intake air temperature sensor is indicated.	
START SIGNAL [ON/OFF]	○	○	● Indicates [ON/OFF] condition from the starter signal.	● After starting the engine, [OFF] is displayed regardless of the starter signal.
CLSD THL/P SW [ON/OFF]	○	○	● Indicates [ON/OFF] condition from the throttle position sensor signal.	
AIR COND SIG [ON/OFF]	○	○	● Indicates [ON/OFF] condition of the air conditioner switch as determined by the air conditioner signal.	
P/N POSI SW [ON/OFF]	○	○	● Indicates [ON/OFF] condition from the park/neutral position switch signal.	

NOTE:
Any monitored item that does not match the vehicle being diagnosed is deleted from the display automatically.

CONSULT (Cont'd)

Simpo PDF Merge and Split Unregistered Version - http://www.simpopdf.com

Monitored item [Unit]	ECM input signals	Main signals	Description	Remarks
PW/ST SIGNAL [ON/OFF]	○	○	• [ON/OFF] condition of the power steering oil pressure switch determined by the power steering oil pressure signal is indicated.	
IGNITION SW [ON/OFF]	○		• Indicates [ON/OFF] condition from ignition switch.	
INJ PULSE [msec]		○	• Indicates the actual fuel injection pulse width compensated by ECM according to the input signals.	• When the engine is stopped, a certain computed value is indicated.
B/FUEL SCHDL [msec]		○	• "Base fuel schedule" indicates the fuel injection pulse width programmed into ECM, prior to any learned on board correction.	
IGN TIMING [BTDC]		○	• Indicates the ignition timing computed by ECM according to the input signals.	• When the engine is stopped, a certain value is indicated.
IACV-AAC/V [%]		○	• Indicates the IACV-AAC valve control value computed by ECM according to the input signals.	
PURG VOL C/V [%]		○	• Indicates the EVAP canister purge volume control solenoid valve computed by the ECM according to the input signals. • The opening becomes larger as the value increases.	
A/F ALPHA [%]			• The mean value of the air-fuel ratio feedback correction factor per cycle is indicated.	• When the engine is stopped, a certain value is indicated. • This data also includes the data for the air-fuel ratio learning control.
EVAP SYS PRES [V]		○	• The signal voltage of EVAP control system pressure sensor is displayed.	
AIR COND RLY [ON/OFF]			• The air conditioner relay control condition (determined by ECM according to the input signal) is indicated.	
FUEL PUMP RLY [ON/OFF]			• Indicates the fuel pump relay control condition determined by ECM according to the input signals.	
EGRC SOL/V [ON/OFF]			• The control condition of the EGRC-solenoid valve (determined by ECM according to the input signal) is indicated. • ON ... EGR operation is cut-off OFF ... EGR is operational	
TCC SOL/V			• The control condition of the torque converter clutch solenoid valve (determined by ECM according to the input signal) is indicated. ON ... Lock-up is cancelled OFF ... Lock-up is operational	
VENT CONT/V [ON/OFF]			• The control condition of the EVAP canister vent control valve (determined by ECM according to the input signal) is indicated. • ON ... Closed OFF ... Open	
FR O2 HEATER [ON/OFF]			• Indicates [ON/OFF] condition of front heated oxygen sensor heater determined by ECM according to the input signals.	
RR O2 HEATER [ON/OFF]			• Indicates [ON/OFF] condition of rear heated oxygen sensor heater determined by ECM according to the input signals.	
VC/V BYPASS/V [ON/OFF]			• The control condition of the vacuum cut valve bypass valve (determined by ECM according to the input signal) is indicated. • ON ... Open OFF ... Closed	

CONSULT (Cont'd)

Simpo PDF Merge and Split Unregistered Version - http://www.simpopdf.com

Monitored item [Unit]	ECM input signals	Main signals	Description	Remarks
CAL/LD VALUE [%]			● "Calculated load value" indicates the value of the current airflow divided by peak airflow.	
ABSOL TH·P/S [%]			● "Absolute throttle position sensor" indicates the throttle opening computed by ECM according to the signal voltage of the throttle position sensor.	
MASS AIRFLOW [g·m/s]			● Indicates the mass airflow computed by ECM according to the signal voltage of the mass airflow sensor.	
MAP/BARO SW/V [MAP/BARO]			● The control condition of the MAP/BARO switch solenoid valve (determined by ECM according to the input signal) is indicated. MAP ... Intake manifold absolute pressure BARO ... Barometric pressure	
ABSOL PRES/SE [V]			● The signal voltage of the absolute pressure sensor is displayed.	
VOLTAGE [V]			● Voltage measured by the voltage probe.	
PULSE [msec] or [Hz] or [%]			● Pulse width, frequency or duty cycle measured by the pulse probe.	● Only "#" is displayed if item is unable to be measured. ● Figures with "#"s are temporary ones. They are the same figures as an actual piece of data which was just previously measured.

CONSULT (Cont'd)

Simpo PDF Merge and Split Unregistered Version - http://www.simpopdf.com

ACTIVE TEST MODE

TEST ITEM	CONDITION	JUDGEMENT	CHECK ITEM (REMEDY)
FUEL INJECTION	● Engine: Return to the original trouble condition ● Change the amount of fuel injection using CONSULT.	If trouble symptom disappears, see CHECK ITEM.	● Harness and connector ● Fuel injectors ● Front heated oxygen sensor
IACV-AAC/V OPENING	● Engine: After warming up, idle the engine. ● Change the IACV-AAC valve opening percent using CONSULT.	Engine speed changes according to the opening percent.	● Harness and connector ● IACV-AAC valve
ENG COOLANT TEMP	● Engine: Return to the original trouble condition ● Change the engine coolant temperature using CONSULT.	If trouble symptom disappears, see CHECK ITEM.	● Harness and connector ● Engine coolant temperature sensor ● Fuel injectors
IGNITION TIMING	● Engine: Return to the original trouble condition ● Timing light: Set ● Retard the ignition timing using CONSULT.	If trouble symptom disappears, see CHECK ITEM.	● Adjust initial ignition timing
POWER BALANCE	● Engine: After warming up, idle the engine. ● A/C switch "OFF" ● Shift lever "N" ● Cut off each injector signal one at a time using CONSULT.	Engine runs rough or dies.	● Harness and connector ● Compression ● Injectors ● Power transistor ● Spark plugs ● Ignition coils
FUEL PUMP RELAY	● Ignition switch: ON (Engine stopped) ● Turn the fuel pump relay "ON" and "OFF" using CONSULT and listen to operating sound.	Fuel pump relay makes the operating sound.	● Harness and connector ● Fuel pump relay
EGRC SOLENOID VALVE	● Ignition switch: ON ● Turn solenoid valve "ON" and "OFF" with the CONSULT and listen to operating sound.	Solenoid valve makes an operating sound.	● Harness and connector ● Solenoid valve
SELF-LEARNING CONT	● In this test, the coefficient of self-learning control mixture ratio returns to the original coefficient by touching "CLEAR" on the screen.		
PURG VOL CONT/V	● Engine: After warming up, idle the engine. ● Change the EVAP canister purge volume control solenoid valve opening percent using CONSULT.	Engine speed changes according to the opening percent.	● Harness and connector ● EVAP canister purge volume control solenoid valve
TANK F/TEMP SEN	● Change the tank fuel temperature using CONSULT.		
VENT CONTROL/V	● Ignition switch: ON (Engine stopped) ● Turn solenoid valve "ON" and "OFF" with the CONSULT and listen to operating sound.	Solenoid valve makes an operating sound.	● Harness and connector ● Solenoid valve
VC/V BYPASS/V	● Ignition switch: ON (Engine stopped) ● Turn solenoid valve "ON" and "OFF" with the CONSULT and listen to operating sound.	Solenoid valve makes an operating sound.	● Harness and connector ● Solenoid valve
MAP/BARO SW/V	● Ignition switch: ON (Engine stopped) ● Turn the MAP/BARO switch solenoid valve between "MAP" and "BARO" using CONSULT and listen for operating sound.	MAP/BARO switch solenoid valve makes an operating sound.	● Harness and connector ● MAP/BARO switch solenoid valve

CONSULT (Cont'd)

Simpo PDF Merge and Split Unregistered Version - http://www.simpopdf.com

DTC CONFIRMATION MODE

SRT STATUS mode

For details, refer to "SYSTEM READINESS TEST (SRT) CODE", EC-37.

DTC WORK SUPPORT mode

TEST MODE	TEST ITEM	CONDITION	REFERENCE PAGE
EVAPORATIVE SYSTEM	PURGE FLOW P1447	Refer to corresponding trouble diagnosis for DTC.	EC-367
	VC CUT/V BP/V P1491		EC-383
	PURG VOL CN/V P1444		EC-355
	EVAP SML LEAK P0440		EC-260
	EVAP SML LEAK P1440		EC-345
FR O2 SENSOR	FR O2 SENSOR P0130		EC-144
	FR O2 SENSOR P0131		EC-150
	FR O2 SENSOR P0132		EC-156
	FR O2 SENSOR P0133		EC-162
RR O2 SENSOR	RR O2 SENSOR P0137		EC-179
	RR O2 SENSOR P0138		EC-186
	RR O2 SENSOR P0139		EC-193
EGR SYSTEM	EGR SYSTEM P0400		EC-242
	EGRC-BPT/VLV P0402		EC-250
	EGR SYSTEM P1402		EC-338
A/T (TCC S/V)	TCC S/V FNCTN P1776		EC-397

FUNCTION TEST MODE

FUNCTION TEST ITEM	CONDITION	JUDGEMENT		CHECK ITEM (REMEDY)
SELF-DIAG RESULTS	● Ignition switch: ON (Engine stopped) ● Displays the results of on board diagnostic system.	—		Objective system
CLOSED THROTTLE POSI	● Ignition switch: ON (Engine stopped) ● Throttle position sensor circuit is tested when throttle is opened and closed fully. ("IDLE POSITION" is the test item name for the vehicles in which idle is selected by throttle position sensor.)	Throttle valve: opened	OFF	● Harness and connector ● Throttle position sensor (Closed throttle position) ● Throttle position sensor (Closed throttle position) adjustment ● Throttle linkage ● Verify operation in DATA MONITOR mode.
		Throttle valve: closed	ON	
THROTTLE POSI SEN CKT	● Ignition switch: ON (Engine stopped) ● Throttle position sensor circuit is tested when throttle is opened and closed fully.	Range (Throttle valve fully opened — Throttle valve fully closed)	More than 3.0V	● Harness and connector ● Throttle position sensor ● Throttle position sensor adjustment ● Throttle linkage ● Verify operation in DATA MONITOR mode.
PARK/NEUT POSI SW CKT	● Ignition switch: ON (Engine stopped) ● Inhibitor position switch circuit is tested when shift lever is manipulated.	Out of N/P positions	OFF	● Harness and connector ● Inhibitor switch ● Linkage or Inhibitor switch adjustment
		In N/P positions	ON	
FUEL PUMP CIRCUIT	● Ignition switch: ON (Engine stopped) ● Fuel pump circuit is tested by checking the pulsation in fuel pressure when fuel tube is pinched.	There is pressure pulsation on the fuel feed hose.		● Harness and connector ● Fuel pump ● Fuel pump relay ● Fuel filter clogging ● Fuel level
EGRC SOL/V CIRCUIT	● Ignition switch: ON (Engine stopped) ● EGRC-solenoid valve circuit is tested by checking solenoid valve operating noise.	The solenoid valve makes an operating sound every 3 seconds.		● Harness and connector ● EGRC-solenoid valve

CONSULT (Cont'd)

Simpo PDF Merge and Split Unregistered Version - http://www.simpopdf.com

FUNCTION TEST ITEM	CONDITION	JUDGEMENT		CHECK ITEM (REMEDY)
START SIGNAL CIRCUIT	● Ignition switch: ON → START ● Start signal circuit is tested when engine is started by operating the starter. Battery voltage and engine coolant temperature before cranking, and average battery voltage, mass air flow sensor output voltage and cranking speed during cranking are displayed.	Start signal: OFF → ON		● Harness and connector ● Ignition switch
PW/ST SIGNAL CIRCUIT	● Ignition switch: ON (Engine running) ● Power steering circuit is tested when steering wheel is rotated fully and then set to a straight line running position.	Locked position	ON	● Harness and connector ● Power steering oil pressure switch ● Power steering oil pump
		Neutral position	OFF	
VEHICLE SPEED SEN CKT	● Vehicle speed sensor circuit is tested when vehicle is running at a speed of 10 km/h (6 MPH) or higher.	Vehicle speed sensor input signal is greater than 4 km/h (2 MPH).		● Harness and connector ● Vehicle speed sensor ● Speedometer
IGN TIMING ADJ	● After warming up, idle the engine. ● Ignition timing is checked by reading ignition timing with a timing light and checking whether it agrees with specifications.	The timing light indicates the same value on the screen.		● Adjust ignition timing (by moving camshaft position sensor or distributor) ● Camshaft position sensor drive mechanism
MIXTURE RATIO TEST	● Air-fuel ratio feedback circuit (injection system, ignition system, vacuum system, etc.) is tested by examining the front heated oxygen sensor output at 2,000 rpm under non-loaded state.	Front heated oxygen sensor COUNT: More than 5 times during 10 seconds		● INJECTION SYS (Injector, fuel pressure regulator, harness or connector) ● IGNITION SYS (Spark plug, power transistor, ignition coil, harness or connector) ● VACUUM SYS (Intake air leaks) ● Front heated oxygen sensor circuit ● Front heated oxygen sensor operation ● Fuel pressure high or low ● Mass air flow sensor
POWER BALANCE	● After warming up, idle the engine. ● Injector operation of each cylinder is stopped one after another, and resultant change in engine rotation is examined to evaluate combustion of each cylinder. (This is only displayed for models where a sequential multiport fuel injection system is used.)	Difference in engine speed is greater than 25 rpm before and after cutting off the injector of each cylinder.		● Injector circuit (Injector, harness or connector) ● Ignition circuit (Spark plug, ignition coil with power transistor harness or connector) ● Compression ● Valve timing
IACV-AAC/V SYSTEM	● After warming up, idle the engine. ● IACV-AAC valve system is tested by detecting change in engine speed when IACV-AAC valve opening is changed to 0%, 20% and 80%.	Difference in engine speed is greater than 150 rpm between when valve opening is at 80% and 20%.		● Harness and connector ● IACV-AAC valve ● Air passage restriction between air inlet and IACV-AAC valve ● IAS (Idle adjusting screw) adjustment

CONSULT (Cont'd)

Simpo PDF Merge and Split Unregistered Version - http://www.simpopdf.com

REAL TIME DIAGNOSIS IN DATA MONITOR MODE (Recording vehicle data)

CONSULT has two kinds of triggers and they can be selected by touching "SETTING" in "DATA MONITOR" mode.

1. "AUTO TRIG" (Automatic trigger):
   - The malfunction will be identified on the CONSULT screen in real time.
     In other words, DTC/1st trip DTC and malfunction item will be displayed at the moment the malfunction is detected by ECM.
     DATA MONITOR can be performed continuously until a malfunction is detected. However, DATA MONITOR cannot continue any longer after the malfunction detection.
2. "MANU TRIG" (Manual trigger):
   - DTC/1st trip DTC and malfunction item will not be displayed automatically on CONSULT screen even though a malfunction is detected by ECM.
     DATA MONITOR can be performed continuously even though a malfunction is detected.

Use these triggers as follows:

1. "AUTO TRIG"
   - While trying to detect the DTC/1st trip DTC by performing the "DIAGNOSTIC TROUBLE CODE CONFIRMATION PROCEDURE", be sure to select to "DATA MONITOR (AUTO TRIG)" mode. You can confirm the malfunction at the moment it is detected.
   - While narrowing down the possible causes, CONSULT should be set in "DATA MONITOR (AUTO TRIG)" mode, especially in case the incident is intermittent.
     When you are inspecting the circuit by gently shaking (or twisting) the suspicious connectors, components and harness in the "DIAGNOSTIC TROUBLE CODE CONFIRMATION PROCEDURE", the moment a malfunction is found the DTC/1st trip DTC will be displayed. (Refer to GI section, "Incident Simulation Tests" in "HOW TO PERFORM EFFICIENT DIAGNOSIS FOR AN ELECTRICAL INCIDENT".)
2. "MANU TRIG"
   - If the malfunction is displayed as soon as "DATA MONITOR" is selected, reset CONSULT to "MANU TRIG". By selecting "MANU TRIG" you can monitor and store the data. The data can be utilized for further diagnosis, such as a comparison with the value for the normal operating condition.

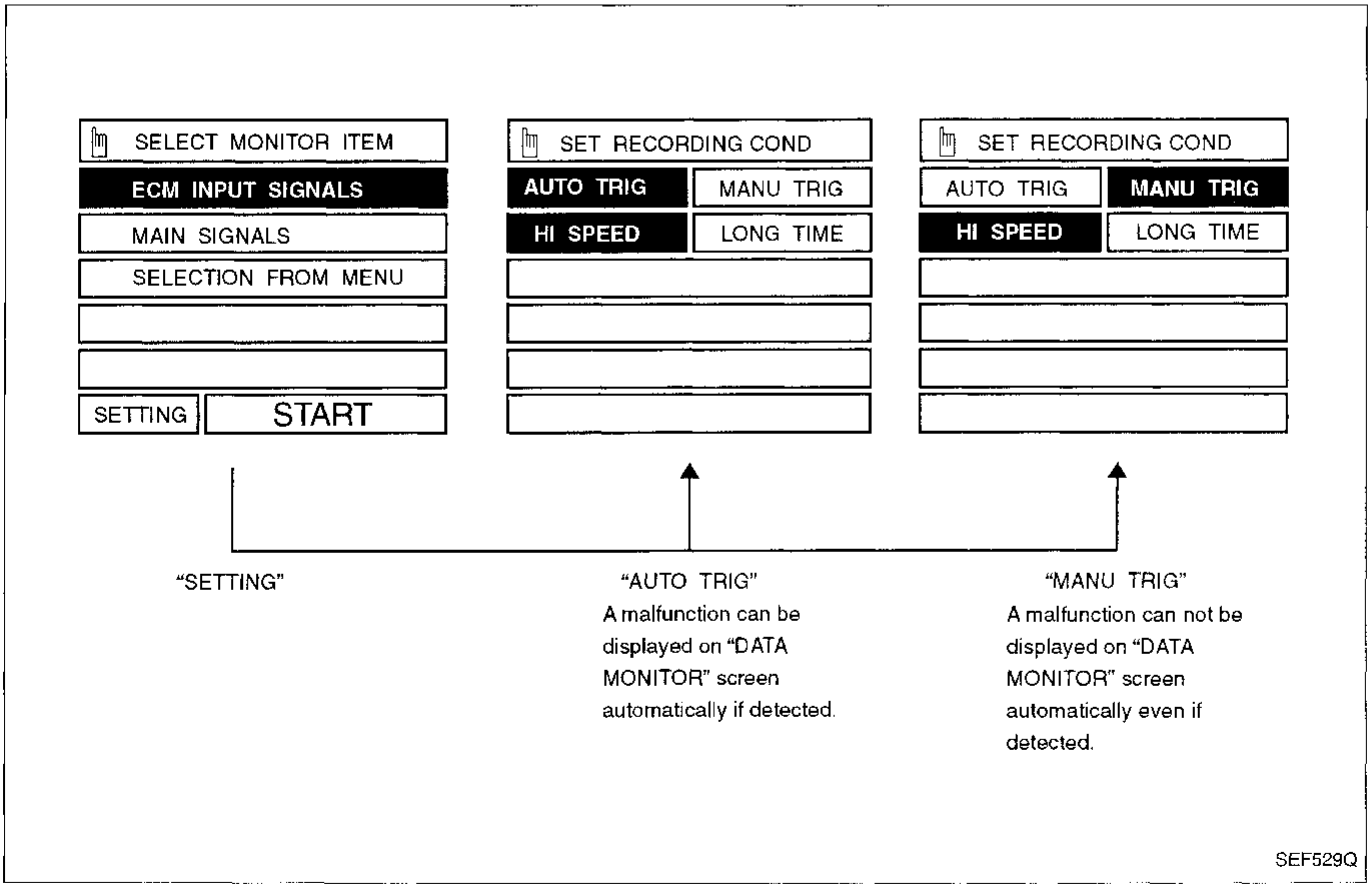

Simpo PDF Merge and Split Unregistered Version - http://www.simpopdf.com

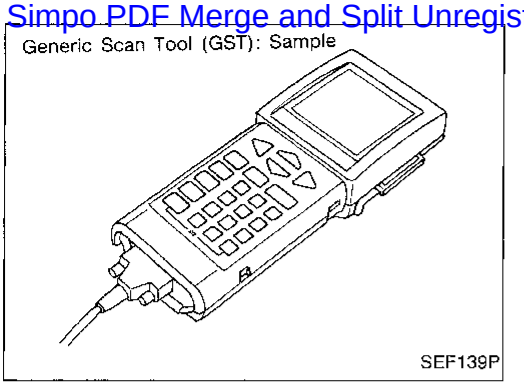

Generic Scan Tool (GST)

DESCRIPTION

Generic Scan Tool (OBDII scan tool) complying with SAE J1978 has 7 different functions explained on the next page.
ISO9141 is used as the protocol.
The name "GST" or "Generic Scan Tool" is used in this service manual.

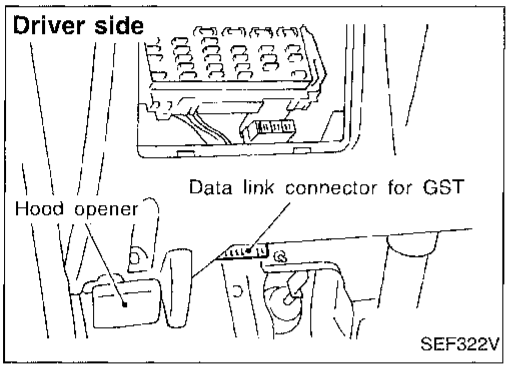

GST INSPECTION PROCEDURE

1. Turn ignition switch "OFF".
2. Connect "GST" to data link connector for GST. (Data link connector for GST is located under LH dash panel near the fuse box cover.)

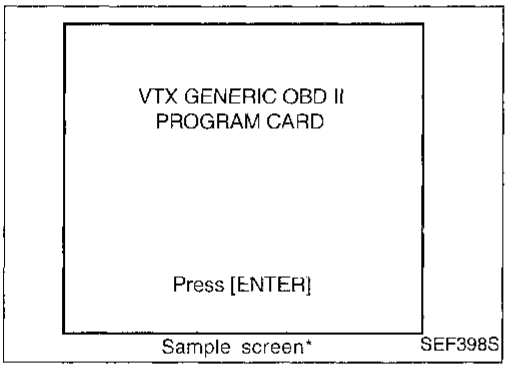

3. Turn ignition switch "ON".
4. Enter the program according to instruction on the screen or in the operation manual.

(*: Regarding GST screens in this section, sample screens are shown.)

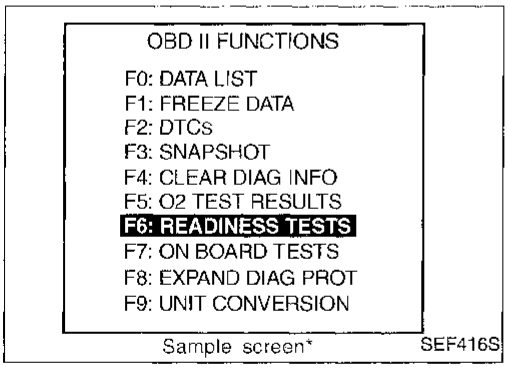

5. Perform each diagnostic mode according to each service procedure.

For further information, see the GST Operation Manual of the tool maker.

Generic Scan Tool (GST) (Cont'd)

Simpo PDF Merge and Split Unregistered Version - http://www.simpopdf.com

FUNCTION

Diagnostic test mode		Function
MODE 1	READINESS TESTS	This mode gains access to current emission-related data values, including analog inputs and outputs, digital inputs and outputs, and system status information.
MODE 2	(FREEZE DATA)	This mode gains access to emission-related data value which were stored by ECM during the freeze frame. [For details, refer to "Freeze Frame Data" (EC-57).]
MODE 3	DTCs	This mode gains access to emission-related power train trouble codes which were stored by ECM.
MODE 4	CLEAR DIAG INFO	This mode can clear all emission-related diagnostic information. This includes: ● Clear number of diagnostic trouble codes (MODE 1) ● Clear diagnostic trouble codes (MODE 3) ● Clear trouble code for freeze frame data (MODE 1) ● Clear freeze frame data (MODE 2) ● Reset status of system monitoring test (MODE 1) ● Clear on board monitoring test results (MODE 6 and 7)
MODE 6	(ON BOARD TESTS)	This mode accesses the results of on board diagnostic monitoring tests of specific components/systems that are not continuously monitored.
MODE 7	(ON BOARD TESTS)	This mode enables the off board test drive to obtain test results for emission-related powertrain components/systems that are continuously monitored during normal driving conditions.
MODE 8	—	This mode can close EVAP system in ignition switch "ON" position (Engine stopped). When this mode is performed, following parts can be opened or closed. ● EVAP canister vent control valve open ● Vacuum cut valve bypass valve closed In the following conditions, this mode cannot function. ● Low ambient temperature ● Low battery voltage ● Engine running ● Ignition switch "OFF" ● Low fuel temperature ● Too much pressure is applied to EVAP system

Simpo PDF Merge and Split Unregistered Version - http://www.simpopdf.com

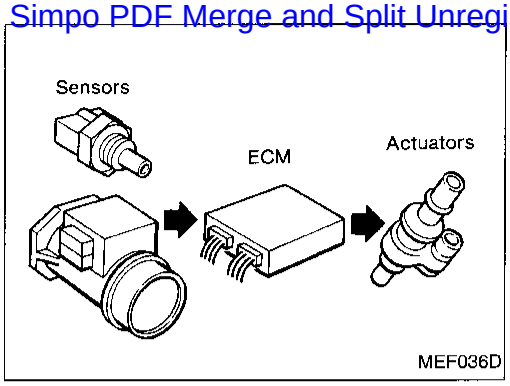

MEF036D

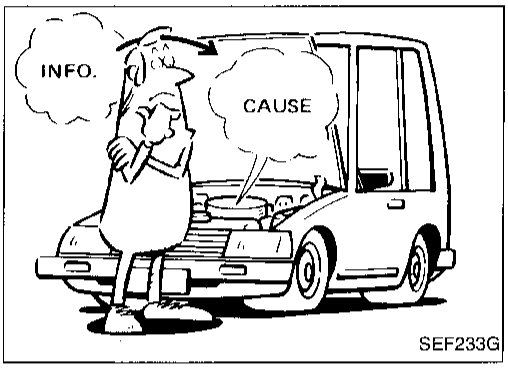

SEF233G

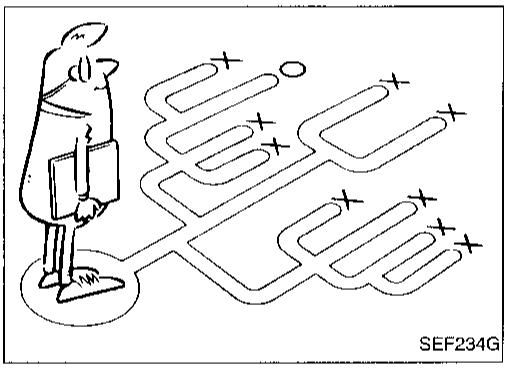
SEF234G

KEY POINTS

WHAT ..... Vehicle & engine model
WHEN ..... Date, Frequencies
WHERE..... Road conditions
HOW ..... Operating conditions, Weather conditions, Symptoms

SEF907L

Introduction

The engine has an ECM to control major systems such as fuel control, ignition control, idle air control system, etc. The ECM accepts input signals from sensors and instantly drives actuators. It is essential that both input and output signals are proper and stable. At the same time, it is important that there are no problems such as vacuum leaks, fouled spark plugs, or other problems with the engine.

It is much more difficult to diagnose a problem that occurs intermittently rather than continuously. Most intermittent problems are caused by poor electric connections or improper wiring. In this case, careful checking of suspected circuits may help prevent the replacement of good parts.

A visual check only may not find the cause of the problems. A road test with CONSULT (or GST) or a circuit tester connected should be performed. Follow the "Work Flow" on EC-69.

Before undertaking actual checks, take a few minutes to talk with a customer who approaches with a driveability complaint. The customer can supply good information about such problems, especially intermittent ones. Find out what symptoms are present and under what conditions they occur. A "Diagnostic Worksheet" like the example on next page should be used.

Start your diagnosis by looking for "conventional" problems first. This will help troubleshoot driveability problems on an electronically controlled engine vehicle.

Diagnostic Worksheet

There are many operating conditions that lead to the malfunction of engine components. A good grasp of such conditions can make trouble-shooting faster and more accurate.

In general, each customer feels differently about a problem. It is important to fully understand the symptoms or conditions for a customer complaint.

Utilize a diagnostic worksheet like the one on the next page in order to organize all the information for troubleshooting.

Some conditions may cause the malfunction indicator lamp to come on steady or blink and DTC to be detected. Examples:

- Vehicle ran out of fuel, which caused the engine to misfire.
- Fuel filler cap was left off or incorrectly screwed on, allowing fuel to evaporate into the atmosphere [for the models with EVAP (SMALL LEAK) diagnosis].

Diagnostic Worksheet (Cont'd)

Simpo PDF Merge and Split Unregistered Version - http://www.simpopdf.com

WORKSHEET SAMPLE

Customer name MR/MS		Model & Year	VIN
Engine #		Trans.	Mileage
Incident Date		Manuf. Date	In Service Date
Fuel and fuel filler cap		☐ Vehicle ran out of fuel causing misfire ☐ Fuel filler cap was left off or incorrectly screwed on.	
Symptoms	☐ Startability	☐ Impossible to start ☐ No combustion ☐ Partial combustion ☐ Partial combustion affected by throttle position ☐ Partial combustion NOT affected by throttle position ☐ Possible but hard to start ☐ Others [ ]	
	☐ Idling	☐ No fast idle ☐ Unstable ☐ High idle ☐ Low idle ☐ Others [ ]	
	☐ Driveability	☐ Stumble ☐ Surge ☐ Knock ☐ Lack of power ☐ Intake backfire ☐ Exhaust backfire ☐ Others [ ]	
	☐ Engine stall	☐ At the time of start ☐ While idling ☐ While accelerating ☐ While decelerating ☐ Just after stopping ☐ While loading	
Incident occurrence		☐ Just after delivery ☐ Recently ☐ In the morning ☐ At night ☐ In the daytime	
Frequency		☐ All the time ☐ Under certain conditions ☐ Sometimes	
Weather conditions		☐ Not affected	
	Weather	☐ Fine ☐ Raining ☐ Snowing ☐ Others [ ]	
	Temperature	☐ Hot ☐ Warm ☐ Cool ☐ Cold ☐ Humid °F	
Engine conditions		☐ Cold ☐ During warm-up ☐ After warm-up Engine speed 0 2,000 4,000 6,000 8,000 rpm	
Road conditions		☐ In town ☐ In suburbs ☐ Highway ☐ Off road (up/down)	
Driving conditions		☐ Not affected ☐ At starting ☐ While idling ☐ At racing ☐ While accelerating ☐ While cruising ☐ While decelerating ☐ While turning (RH/LH) Vehicle speed 0 10 20 30 40 50 60 MPH	
Malfunction indicator lamp		☐ Turned on ☐ Not turned on	

Simpo PDF Merge and Split Unregistered Version - http://www.simpopdf.com

Work Flow

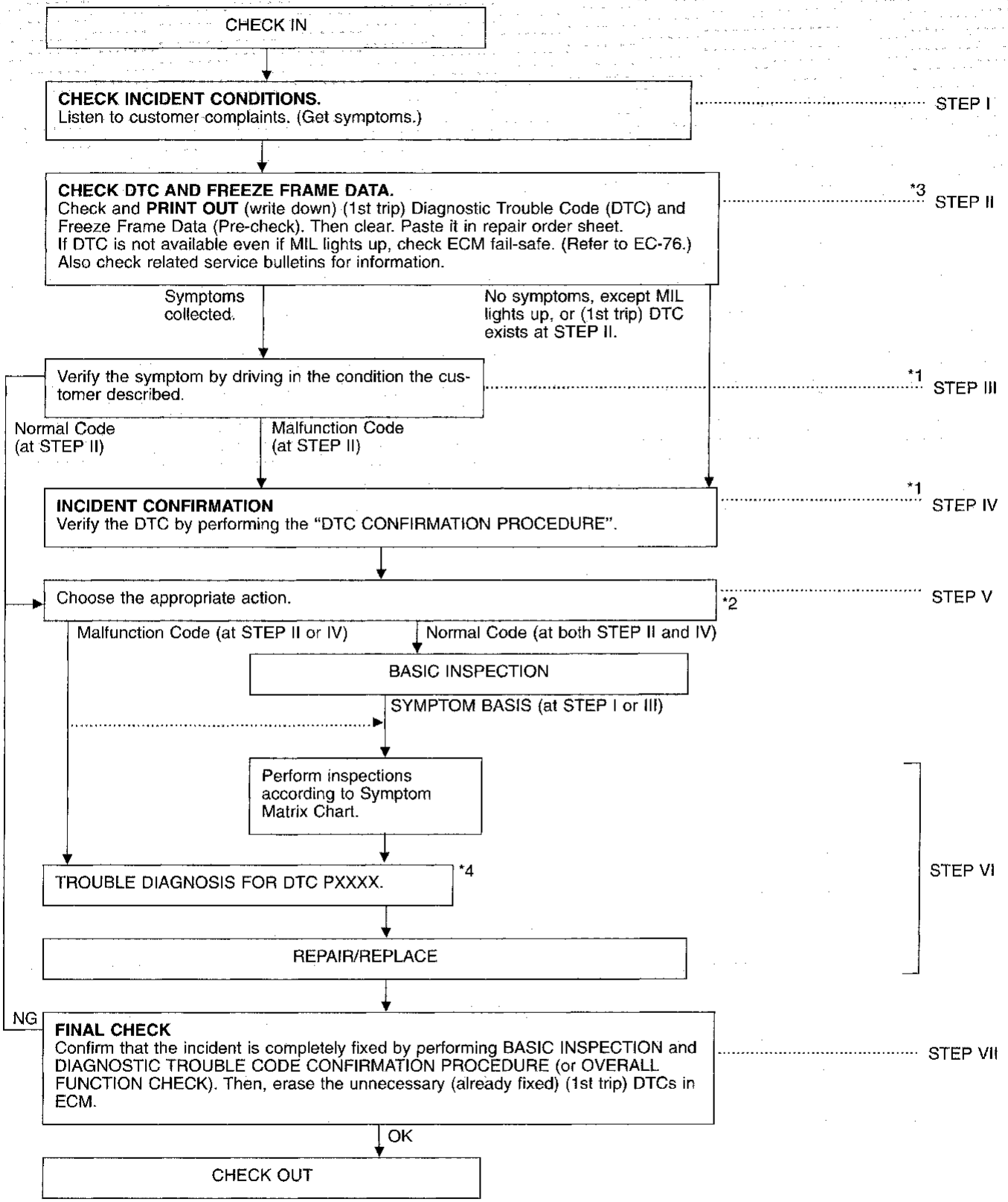

***1: If the incident cannot be duplicated, refer to "TROUBLE DIAGNOSIS FOR INTERMITTENT INCIDENT", EC-93.**

***2: If the on board diagnostic system cannot be performed, check main power supply and ground circuit. Refer to "TROUBLE DIAGNOSIS FOR POWER SUPPLY", EC-94.**

***3: If time data of "SELF-DIAG RESULTS" is other than "0" or "1t" refer to "TROUBLE DIAGNOSIS FOR INTERMITTENT INCIDENT", EC-93.**

***4: If the malfunctioning part cannot be found, refer to "TROUBLE DIAGNOSIS FOR INTERMITTENT INCIDENT", EC-93.**

Simpo PDF Merge and Split Unregistered Version - http://www.simpopdf.com

Description for Work Flow

STEP	DESCRIPTION
STEP I	Get detailed information about the conditions and the environment when the incident/symptom occurred using the "DIAGNOSTIC WORK SHEET", EC-68.
STEP II	Before confirming the concern, check and write down (print out using CONSULT or Generic Scan Tool) the (1st trip) Diagnostic Trouble Code (DTC) and the (1st trip) freeze frame data, then erase the code and the data. (Refer to EC-45.) The (1st trip) DTC and the (1st trip) freeze frame data can be used when duplicating the incident at STEP III & IV. Study the relationship between the cause, specified by (1st trip) DTC, and the symptom described by the customer. (The "Symptom Matrix Chart" will be useful. See EC-77.) Also check related service bulletins for information.
STEP III	Try to confirm the symptom and under what conditions the incident occurs. The "DIAGNOSTIC WORK SHEET" and the freeze frame data are useful to verify the incident. Connect CONSULT to the vehicle in DATA MONITOR (AUTO TRIG) mode and check real time diagnosis results. If the incident cannot be verified, perform INCIDENT SIMULATION TESTS. (Refer to GI section.) If the malfunction code is detected, skip STEP IV and perform STEP V.
STEP IV	Try to detect the (1st trip) Diagnostic Trouble Code by driving in (or performing) the "DIAGNOSTIC TROUBLE CODE CONFIRMATION PROCEDURE". Check and read the (1st trip) DTC and (1st trip) freeze frame data by using CONSULT or Generic Scan Tool. During the (1st trip) DTC verification, be sure to connect CONSULT to the vehicle in DATA MONITOR (AUTO TRIG) mode and check real time diagnosis results. If the incident cannot be verified, perform INCIDENT SIMULATION TESTS. (Refer to GI section.) In case the "DIAGNOSTIC TROUBLE CODE CONFIRMATION PROCEDURE" is not available, perform the "OVERALL FUNCTION CHECK" instead. The (1st trip) DTC cannot be displayed by this check, however, this simplified "check" is an effective alternative. The "NG" result of the "OVERALL FUNCTION CHECK" is the same as the (1st trip) DTC detection.
STEP V	Take the appropriate action based on the results of STEP I through IV. If the malfunction code is indicated, proceed to TROUBLE DIAGNOSIS FOR DTC PXXXX. If the normal code is indicated, proceed to the BASIC INSPECTION. (Refer to EC-71.) Then perform inspections according to the Symptom Matrix Chart. (Refer to EC-77.)
STEP VI	Identify where to begin diagnosis based on the relationship study between symptom and possible causes. Inspect the system for mechanical binding, loose connectors or wiring damage using (tracing) "Harness Layouts". Gently shake the related connectors, components or wiring harness with CONSULT set in "DATA MONITOR (AUTO TRIG)" mode. Check the voltage of the related ECM terminals or monitor the output data from the related sensors with CONSULT. Refer to EC-80. The "DIAGNOSTIC PROCEDURE" in EC section contains a description based on open circuit inspection. A short circuit inspection is also required for the circuit check in the DIAGNOSTIC PROCEDURE. For details, refer to GI section ("HOW TO PERFORM EFFICIENT DIAGNOSIS FOR AN ELECTRICAL INCIDENT", "Circuit Inspection"). Repair or replace the malfunction parts.
STEP VII	Once you have repaired the circuit or replaced a component, you need to run the engine in the same conditions and circumstances which resulted in the customer's initial complaint. Perform the "DIAGNOSTIC TROUBLE CODE CONFIRMATION PROCEDURE" and confirm the normal code [Diagnostic trouble code No. P0000 or 0505] is detected. If the incident is still detected in the final check, perform STEP VI by using a different method from the previous one. Before returning the vehicle to the customer, be sure to erase the unnecessary (already fixed) (1st trip) DTC in ECM. (Refer to EC-43.)

Simpo PDF Merge and Split Unregistered Version - http://www.simpopdf.com

A

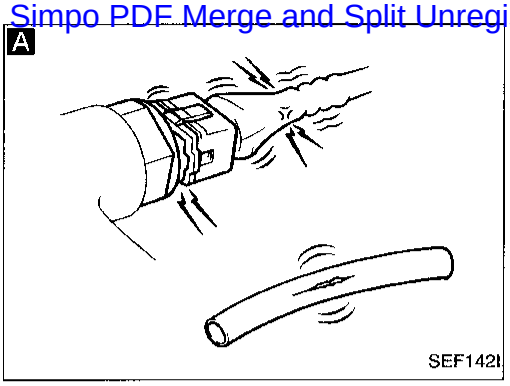

SEF142I

B Driver side

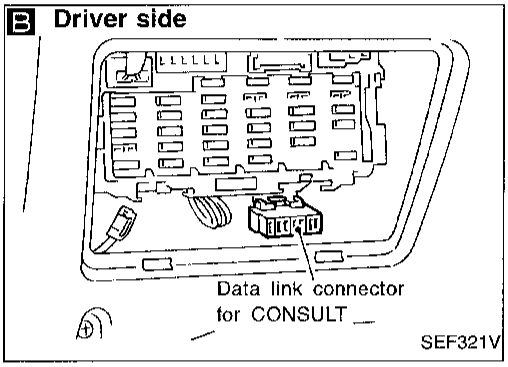

SEF321V

C

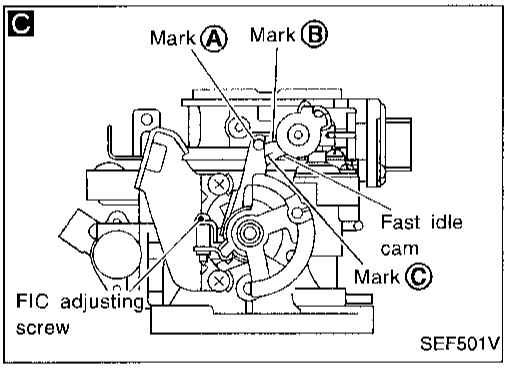

SEF501V

D

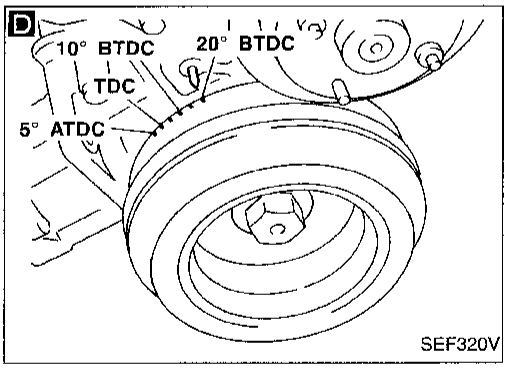

SEF320V

D

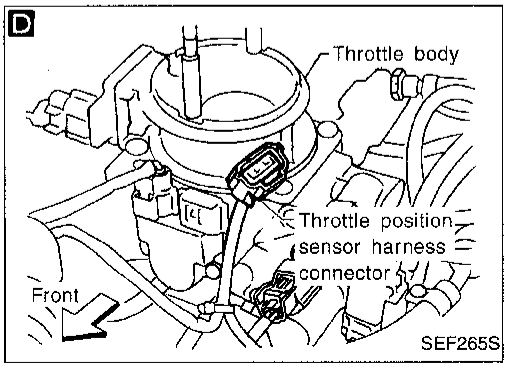

SEF265S

Basic Inspection

Precaution:

Perform Basic Inspection without electrical or mechanical loads applied;

- **Headlamp switch is OFF,**
- **Air conditioner switch is OFF,**
- **Steering wheel is in the straight-ahead position, etc.**

A

BEFORE STARTING

1. Check service records for repairs of related problems, or the current need for scheduled maintenance.
2. Open engine hood and check the following:
- Harness connectors for proper connections
- Vacuum hoses for splits, kinks, and proper connections
- Wiring for proper connections, pinches, or cuts

B

CONNECT CONSULT TO THE VEHICLE.

Connect "CONSULT" to the data link connector for CONSULT and select "ENGINE" from the menu. (Refer to page EC-54.)

C

Warm engine up to normal operating temperature and make sure that the center of mark Ⓐ is aligned with mark Ⓑ as shown in the figure.

NG → Check FI cam. Refer to EC-28.

OK

D

CHECK IGNITION TIMING.

NG → Adjust ignition timing by turning distributor.

1. Warm engine up to normal operating temperature.
2. Select "IGN TIMING ADJ" in "WORK SUPPORT" mode.
3. Touch "START".
4. Check ignition timing at idle using timing light.
   Ignition timing:
   20°±2° BTDC

OR

1. Warm engine up to normal operating temperature.
2. Stop engine and disconnect throttle position sensor harness connector.
3. Start engine.
4. Rev engine (2,000 to 3,000 rpm) 2 or 3 times under no-load and then run engine at idle speed.
5. Check ignition timing at idle using timing light.
   Ignition timing:
   20°±2° BTDC

OK

Ⓐ
(Go to next page.)

Basic Inspection (Cont'd)

Simpo PDF Merge and Split Unregistered Version - http://www.simpopdf.com

Ⓐ

E

CHECK BASE IDLE SPEED.
Warm engine up to normal operating temperature.

1. Select "IGN TIMING ADJ" in "WORK SUPPORT" mode.
2. When touching "START", does engine speed fall to **750±50 rpm (in "P" or "N" position)?**

OR

Does engine run at **750±50 rpm (in "P" or "N" position)?**

NG → Adjust base idle speed by turning idle speed adjusting screw.
Refer to "Idle Speed/ Ignition Timing/Idle Mixture Ratio Adjustment", EC-29.

OK ↓

E

IGN TIMING ADJ

IGNITION TIMING FEEDBACK CONTROL WILL BE HELD BY TOUCHING START.
AFTER DOING SO, ADJUST IGNITION TIMING WITH A TIMING LIGHT BY TURNING THE CAMSHAFT POSITION SENSOR.

START

SEF555N

F

CHECK CLOSED THROTTLE POSITION SWITCH IDLE POSITION.

- **Warm engine up to normal operating temperature.**
- **Check FI cam. Refer to procedure C .**
- **Always check ignition timing and base idle speed before performing followings.**

1. Disconnect throttle position sensor harness connector and closed throttle position switch harness connector.
2. Rev engine (2,000 to 3,000 rpm) 2 or 3 times under no-load and then run engine at idle speed.
3. Check harness continuity between closed throttle position switch terminals ⑤ and ⑥ under the following condition.

- Raise engine speed to 2,000 rpm.
- Lower engine speed as gradually as possible.
  Engine speed at the point closed throttle position switch switches from OFF → ON (No continuity to continuity exists): 950±150 rpm

NG → **G**

ADJUSTMENT
Adjust closed throttle position switch idle position by rotating throttle position sensor body as follows.

1. Start engine and warm it up to normal operating temperature.
2. Stop engine and disconnect throttle position sensor harness connector and closed throttle position switch harness connector.
3. Set the circuit tester leads to the closed throttle position switch terminals ⑤ and ⑥.
4. Loosen throttle position sensor body fixing bolts and move the sensor.
5. Start engine and adjust the sensor body while engine speed at the point closed throttle position switch switches **from OFF → ON (No continuity to continuity exists): 950±150 rpm.**
6. Temporarily tighten the sensor body fixing bolts.
7. Raise engine speed to 2,000 rpm and lower the engine speed as gradually as possible, confirm that above adjustment is performed correctly.
8. Tighten throttle position sensor body.
9. Reconfirm that the closed throttle position idle position is switched from "OFF" to "ON" at 950±50 rpm while reducing engine speed from 2,000 rpm.

If NG, repeat from the step 4.

Ⓒ
(Go to next page.)

F

T.S. DISCONNECT Closed throttle position switch connector

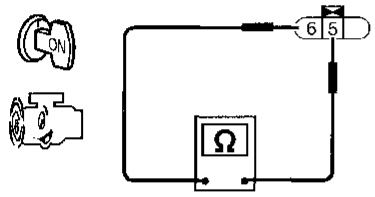

SEF403T

G

Closed throttle position switch idle position switching engine rpm

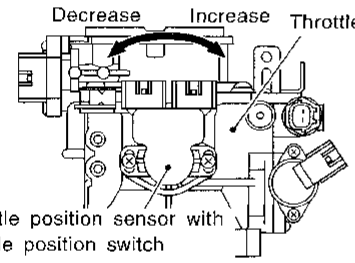

SEF548V

OK ↓

Ⓑ
(Go to next page.)

Basic Inspection (Cont'd)

Simpo PDF Merge and Split Unregistered Version - http://www.simpopdf.com

H

■ THRTL POS SEN ADJ ■ □

CHECK THE THROTTLE POSITION SENSOR SIGNAL. ADJUST IT TO THE SPECIFIED VALUE BY ROTATING THE SENSOR BODY UNDER THE FOLLOWING CONDITION

- IGN SW "ON"
- ENG NOT RUNNING
- ACC PEDAL KEPT OFF

START

SEF549V

H

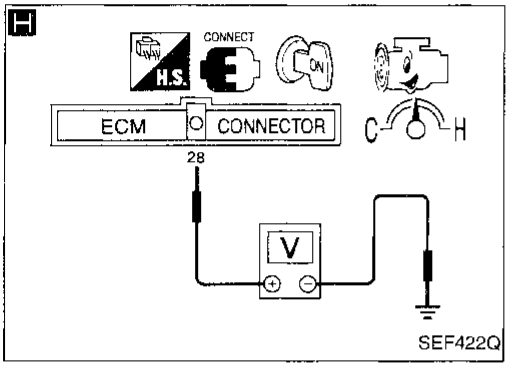

SEF422Q

H

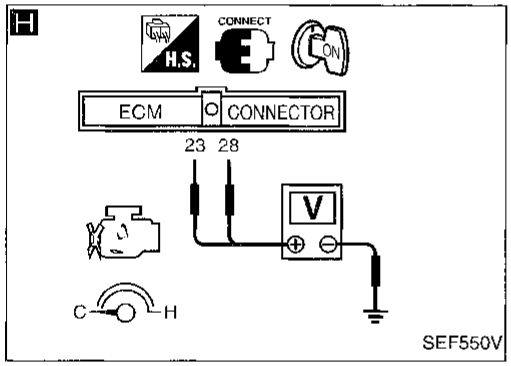

SEF550V

Ⓑ

- Reconnect throttle position sensor harness connector and throttle position switch harness connector.
- Rev engine (2,000 to 3,000 rpm) 2 or 3 times under no-load and then run engine at idle speed.

OK

Ⓒ

RESET THROTTLE POSITION SENSOR IDLE POSITION MEMORY.

1. Warm engine up to normal operating temperature and stop engine.
2. Select "CLSD THL/P SW" in "DATA MONITOR" mode (Manual trigger) with CONSULT before stopping engine.
3. Reconnect throttle position sensor harness connector and closed throttle position switch harness connector.
4. Turn ignition switch "ON".
5. Turn ignition switch "OFF" and wait at least 5 seconds.
6. Repeat steps 3 and 4 until "CLSD THL/P SW" in "DATA MONITOR" mode with CONSULT changes to "ON".
7. Repeat steps 3 and 4 20 times.

OK

H

CHECK THROTTLE POSITION SENSOR IDLE POSITION.

1. Stop engine.
2. Perform "THRTL POS SEN ADJ" in "WORK SUPPORT" mode.
3. Check that output voltage of throttle position sensor is approx. 0.3 to 0.7V. At the same time, measure voltage between ECM terminal 28 (Closed throttle position switch) and ground with CONSULT on tester.

The voltage is between 11 to 14V (Battery voltage).

OR

1. Stop engine.
2. Measure voltage between ECM terminal 23 (Throttle position sensor) and ground. The voltage is approx. 0.3 to 0.7V. At the same time, measure voltage between ECM terminal 28 (Closed throttle position switch) and ground with CONSULT on tester.

The voltage is between 11 to 14V (Battery voltage).

NG → Readjust the closed throttle position switch idle position. Go to G .

OK

Ⓓ

(Go to next page.)

Basic Inspection (Cont'd)

Simpo PDF Merge and Split Unregistered Version - http://www.simpopdf.com

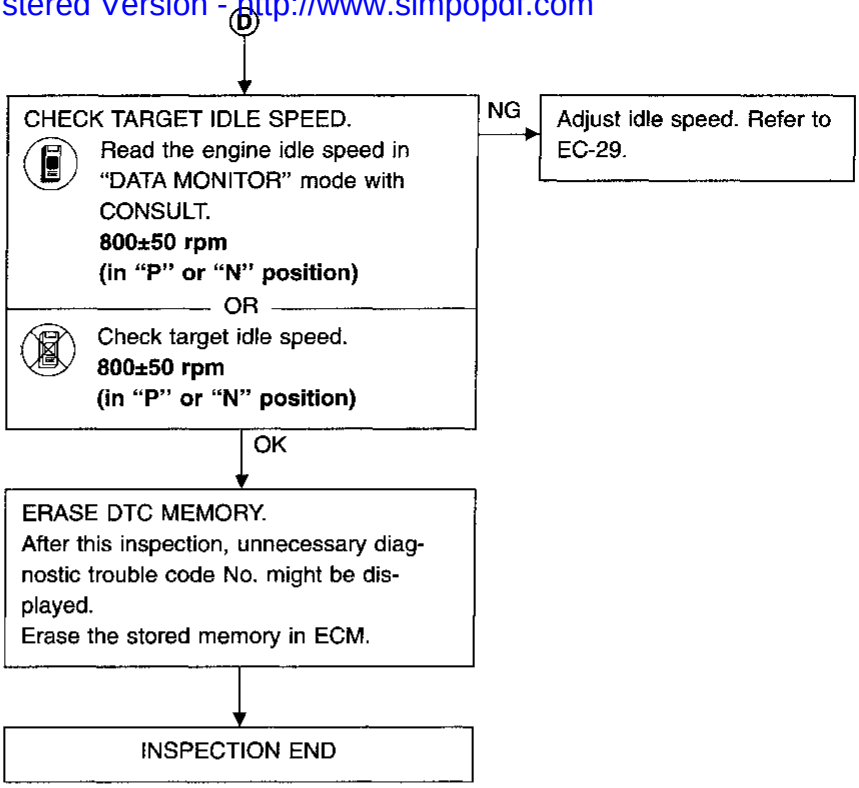

Simpo PDF Merge and Split Unregistered Version - http://www.simpopdf.com

Diagnostic Trouble Code (DTC) Inspection Priority Chart

If some DTCs are displayed at the same time, perform inspections one by one based on the following priority chart.

Priority	Detected items (DTC)		
1	● ECM (P0605, 0301)	● Camshaft position sensor (P0340, 0101)	● Engine coolant temperature sensor (P0115, 0103) (P0125, 0908)
	● Mass air flow sensor (P0100, 0102)	● Vehicle speed sensor (P0500, 0104)	● Ignition signal (P1320, 0201)
	● Throttle position sensor (P0120, 0403)	● Intake air temperature sensor (P0110, 0401)	● Park/Neutral position switch (P1706, 1003)
	● EGRC-solenoid valve (P1400, 1005)	● Knock sensor (P0325, 0304)	
		● Tank fuel temperature sensor (P0180, 0402)	
2	● EGR temperature sensor (P1401, 0305)	● Front heated oxygen sensor heater (P0135, 0901)	● Front heated oxygen sensor (P0130 - P0134, 0303 - 0412)
		● Crankshaft position sensor (OBD) (P0335, 0802) (P1336, 0905)	● Rear heated oxygen sensor (P0137 - P0140, 0510 - 0707)
		● Torque converter clutch solenoid valve (P1775, 0904) (P1776, 0513)	
	● Absolute pressure sensor (P0105, 0803)		● Rear heated oxygen sensor heater (P0141, 0902)
	● MAP/BARO switch solenoid valve (P1105, 1302)	● Vacuum cut valve bypass valve (P1491, 0311) (P1490, 0801)	● EVAP control system pressure sensor (P0450, 0704)
	● Closed throttle position switch (P0510, 0203)		● EVAP canister vent control valve (P1448, 0309) (P0446, 0903) (P1446, 0215)
			● EVAP canister purge volume control solenoid valve (P1444, 0214) (P0443, 1008)
			● EVAP control system purge flow monitoring (P1447, 0111)
3	● EGR function (P0400, 0302) (P1402, 0514)	● Misfire (P0304 - P0300, 0605 - 0701)	● Fuel injection system function (P0172, 0114), (P0171, 0115)
	● EVAP control system (SMALL LEAK) (P0440, 0705) (P1440, 0213)	● Closed loop control (P1148, 0307)	● Three way catalyst function (P0420, 0702)
	● EGRC-BPT valve function (P0402, 0306)		
	● IACV-AAC valve (P0505, 0205)		

Simpo PDF Merge and Split Unregistered Version - http://www.simpopdf.com

Fail-Safe Chart

The ECM enters fail-safe mode, if any of the following malfunctions is detected due to the open or short circuit. When the ECM enters the fail-safe mode, the MIL illuminates.

<table>
<tr><th colspan="2">DTC No.</th><th rowspan="2">Detected items</th><th rowspan="2">Engine operating condition in fail-safe mode</th></tr>
<tr><th>CONSULT GST</th><th>ECM*1</th></tr>
<tr><td>P0100</td><td>0102</td><td>Mass air flow sensor circuit</td><td>Engine speed will not rise more than 2,400 rpm due to the fuel cut.</td></tr>
<tr><td>P0115</td><td>0103</td><td>Engine coolant temperature sensor circuit</td><td>Engine coolant temperature will be determined by ECM based on the time after turning ignition switch “ON” or “START”.
CONSULT displays the engine coolant temperature decided by ECM.
<table>
<tr><th>Condition</th><th>Engine coolant temperature decided (CONSULT display)</th></tr>
<tr><td>Just as ignition switch is turned ON or Start</td><td>40°C (104°F)</td></tr>
<tr><td>More than approx. 4 minutes after ignition ON or Start</td><td>80°C (176°F)</td></tr>
<tr><td>Except as shown above</td><td>40 - 80°C (104 - 176°F)
(Depends on the time)</td></tr>
</table></td></tr>
<tr><td>P0120</td><td>0403</td><td>Throttle position sensor circuit</td><td>Throttle position will be determined based on the injected fuel amount and the engine speed.
Therefore, acceleration will be poor.
<table>
<tr><th>Condition</th><th>Driving condition</th></tr>
<tr><td>When engine is idling</td><td>Normal</td></tr>
<tr><td>When accelerating</td><td>Poor acceleration</td></tr>
</table></td></tr>
<tr><td>Unable to access ECM</td><td>Unable to access Diagnostic Test Mode II</td><td>ECM</td><td>ECM fail-safe activating condition
The computing function of the ECM was judged to be malfunctioning.
When the fail-safe system activates (i.e., if the ECM detects a malfunction condition in the CPU of ECM), the MALFUNCTION INDICATOR LAMP on the instrument panel lights to warn the driver.
However it is not possible to access ECM and DTC cannot be confirmed.
Engine control with fail-safe
When ECM fail-safe is operating, fuel injection, ignition timing, fuel pump operation, and IACV-AAC valve operation are controlled under certain limitations.
<table>
<tr><th></th><th>ECM fail-safe operation</th></tr>
<tr><td>Engine speed</td><td>Engine speed will not rise more than 3,000 rpm.</td></tr>
<tr><td>Fuel injection</td><td>Simultaneous multiport fuel injection system</td></tr>
<tr><td>Ignition timing</td><td>Ignition timing is fixed at the preset valve.</td></tr>
<tr><td>Fuel pump</td><td>Fuel pump relay is “ON” when engine is running and “OFF” when engine stalls.</td></tr>
<tr><td>IACV-AAC valve</td><td>Full open</td></tr>
</table>
Replace ECM, if ECM fail-safe condition is confirmed.</td></tr>
</table>

*1: In Diagnostic Test Mode II (Self-diagnostic results)

Simpo PDF Merge and Split Unregistered Version - http://www.simpopdf.com

Symptom Matrix Chart

SYSTEM — Basic engine control system		SYMPTOM													Reference page
		HARD/NO START/RESTART (EXCP. HA)	ENGINE STALL	HESITATION/SURGING/FLAT SPOT	SPARK KNOCK/DETONATION	LACK OF POWER/POOR ACCELERATION	HIGH IDLE/LOW IDLE	ROUGH IDLE/HUNTING	IDLING VIBRATION	SLOW/NO RETURN TO IDLE	OVERHEATS/WATER TEMPERATURE HIGH	EXCESSIVE FUEL CONSUMPTION	EXCESSIVE OIL CONSUMPTION	BATTERY DEAD (UNDER CHARGE)	
Warranty symptom code		AA	AB	AC	AD	AE	AF	AG	AH	AJ	AK	AL	AM	HA	
Fuel	Fuel pump circuit	1	1	2	3	2		2	2			3		2	EC-410
	Fuel pressure regulator system	3	3	4	4	4	4	4	4	4		4			EC-26
	Injector circuit	1	1	2	3	2		2	2			2			EC-404
	Evaporative emission system	3	3	4	4	4	4	4	4	4		4			EC-20
Air	Positive crankcase ventilation system	3	3	4	4	4	4	4	4	4		4	1		EC-25
	Incorrect idle speed adjustment	3	3				1	1	1	1		1			EC-71
	IACV-AAC valve circuit	1	1	2	3	3	2	2	2	2		2		2	EC-291
	IACV-FICD solenoid valve circuit	2	2	3	3	3	3	3	3	3		3			EC-418
Ignition	Incorrect ignition timing adjustment	3	3	1	1	1		1	1			1			EC-71
	Ignition circuit	1	1	2	2	2		2	2			2			EC-315
EGR	EGRC-solenoid valve circuit		2	2	3	3						3			EC-327
	EGR system	2	1	2	3	3	3	2	2	3		3			EC-242, 250, 338
Main power supply and ground circuit		2	2	3	3	3		3	3		2	3		2	EC-94
Air conditioner circuit		2	2	3	3	3	3	3	3	3		3		2	HA section

1 - 6: The numbers refer to the order of inspection.

(continued on next page)

Symptom Matrix Chart (Cont'd)

Simpo PDF Merge and Split Unregistered Version - http://www.simpopdf.com

SYSTEM — ECCS system		SYMPTOM													Reference page
		HARD/NO START/RESTART (EXCP. HA)	ENGINE STALL	HESITATION/SURGING/FLAT SPOT	SPARK KNOCK/DETONATION	LACK OF POWER/POOR ACCELERATION	HIGH IDLE/LOW IDLE	ROUGH IDLE/HUNTING	IDLING VIBRATION	SLOW/NO RETURN TO IDLE	OVERHEATS/WATER TEMPERATURE HIGH	EXCESSIVE FUEL CONSUMPTION	EXCESSIVE OIL CONSUMPTION	BATTERY DEAD (UNDER CHARGE)	
Warranty symptom code		AA	AB	AC	AD	AE	AF	AG	AH	AJ	AK	AL	AM	HA	
ECCS	Camshaft position sensor circuit	2	2	3	3	3		3	3			3			EC-236
	Mass air flow sensor circuit	1	1	2	2	2		2	2			2			EC-99
	Front heated oxygen sensor circuit		1	2	3	2		2	2			2			EC-144, 150
	Engine coolant temperature sensor circuit	1	1	2	3	2	3	2	2	3		2			EC-121, 139
	Throttle position sensor circuit		1	2		2	2	2	2	2		2			EC-126
	Incorrect throttle position sensor adjustment		3	1		1	1	1	1	1		1			EC-71
	Vehicle speed sensor circuit		2	3		3						3			EC-287
	Knock sensor circuit			2								3			EC-227
	ECM	2	2	3	3	3	3	3	3	3	3	3			EC-302, 76
	Start signal circuit	2													EC-407
	Park/Neutral position switch circuit			3		3		3	3			3			EC-388
	Power steering oil pressure switch circuit		2					3	3						EC-415

1 - 6: The numbers refer to the order of inspection.

(continued on next page)

Symptom Matrix Chart (Cont'd)

Simpo PDF Merge and Split Unregistered Version - http://www.simpopdf.com

SYSTEM — Engine mechanical & other		SYMPTOM													Reference page
		HARD/NO START/RESTART (EXCP. HA)	ENGINE STALL	HESITATION/SURGING/FLAT SPOT	SPARK KNOCK/DETONATION	LACK OF POWER/POOR ACCELERATION	HIGH IDLE/LOW IDLE	ROUGH IDLE/HUNTING	IDLING VIBRATION	SLOW/NO RETURN TO IDLE	OVERHEATS/WATER TEMPERATURE HIGH	EXCESSIVE FUEL CONSUMPTION	EXCESSIVE OIL CONSUMPTION	BATTERY DEAD (UNDER CHARGE)	
Warranty symptom code		AA	AB	AC	AD	AE	AF	AG	AH	AJ	AK	AL	AM	HA	
Fuel	Fuel tank	5	5												FE section
	Fuel piping			5	5	5		5	5			5			
	Vapor lock														—
	Valve deposit	5		5	5	5		5	5			5			
	Poor fuel (Heavy weight gasoline, Low octane)														
Air	Air duct	5	5	5	5	5	5	5	5	5		5			
	Air cleaner														
	Air leakage from air duct (Mass air flow sensor — throttle body)														
	Throttle body, Throttle wire														FE section
	Air leakage from intake manifold/ Collector/Gasket														—
Cranking	Battery	1	1	1		1		1	1			1		1	EL section
	Alternator circuit														
	Starter circuit	3													
	Flywheel/Drive plate	6													EM section
	Inhibitor switch	4													AT section
Engine	Cylinder head	5	5	5	5	5		5	5			5			EM section
	Cylinder head gasket										4		3		
	Cylinder block	6	6	6	6	6		6	6			6	4		
	Piston														
	Piston ring														
	Connecting rod														
	Bearing														
	Crankshaft														
Valve mechanism	Timing chain	5	5	5	5	5		5	5			5			
	Camshaft														
	Intake valve												3		
	Exhaust valve														
Exhaust	Exhaust manifold/Tube/Muffler/Gasket	5	5	5	5	5	5	5	5			5			FE section
	Three way catalyst														
Lubrication	Oil pan/Oil strainer/Oil pump/Oil filter/Oil gallery	5	5	5	5	5		5	5			5			MA, EM, LC section
	Oil level (Low)/Filthy oil														
Cooling	Radiator/Hose/Radiator filler cap	5	5	5	5	5		5	5	5	4	5			LC section
	Thermostat														
	Water pump														
	Water gallery														
	Cooling fan									5					
	Coolant level (low)/Contaminated coolant														MA section

1 - 6: The numbers refer to the order of inspection.

Simpo PDF Merge and Split Unregistered Version - http://www.simpopdf.com

CONSULT Reference Value in Data Monitor Mode

Remarks:

- Specification data are reference values.
- Specification data are output/input values which are detected or supplied by the ECM at the connector.
  * Specification data may not be directly related to their components signals/values/operations.
  i.e. Adjust ignition timing with a timing light before monitoring IGN TIMING, because the monitor may show the specification data in spite of the ignition timing not being adjusted to the specification data. This IGN TIMING monitors the data calculated by the ECM according to the signals input from the camshaft position sensor and other ignition timing related sensors.
- If the real-time diagnosis results are NG and the on board diagnostic system results are OK when diagnosing the mass air flow sensor, first check to see if the fuel pump control circuit is normal.

MONITOR ITEM	CONDITION		SPECIFICATION
CMPS·RPM (REF)	● Tachometer: Connect ● Run engine and compare tachometer indication with the CONSULT value.		Almost the same speed as the CONSULT value.
MAS AIR/FL SE	● Engine: After warming up ● Air conditioner switch: "OFF" ● Shift lever: "N" ● No-load	Idle	0.9 - 1.8V
		2,500 rpm	1.9 - 2.3V
COOLAN TEMP/S	● Engine: After warming up		More than 70°C (158°F)
FR O2 SENSOR	● Engine: After warming up	Maintaining engine speed at 2,000 rpm	0 - 0.3V ↔ Approx. 0.6 - 1.0V
FR O2 MNTR			LEAN ↔ RICH Changes more than 5 times during 10 seconds.
RR O2 SENSOR	● Engine: After warming up	Revving engine from idle to 3,000 rpm quickly	0 - 0.3V ↔ Approx. 0.6 - 1.0V
RR O2 MNTR			LEAN ↔ RICH
VHCL SPEED SE	● Turn drive wheels and compare speedometer indication with the CONSULT value		Almost the same speed as the CONSULT value
BATTERY VOLT	● Ignition switch: ON (Engine stopped)		11 - 14V
THRTL POS SEN	● Ignition switch: ON (Engine stopped) ● Engine: After warming up	Throttle valve: fully closed	0.3 - 0.7V
		Throttle valve: fully opened	Approx. 4.0V
EGR TEMP SEN	● Engine: After warming up		Less than 4.5V
START SIGNAL	● Ignition switch: ON → START → ON		OFF → ON → OFF
CLSD THL/P SW	● Engine: After warming up ● Ignition switch: ON (Engine stopped)	Throttle valve: Idle position	ON
		Throttle valve: Slightly open	OFF
AIR COND SIG	● Engine: After warming up, idle the engine	Air conditioner switch: "OFF"	OFF
		Air conditioner switch: "ON" (Compressor operates.)	ON
P/N POSI SW	● Ignition switch: ON	Shift lever: "P" or "N"	ON
		Except above	OFF
PW/ST SIGNAL	● Engine: After warming up, idle the engine	Steering wheel in neutral position (forward direction)	OFF
		The steering wheel is fully turned	ON

CONSULT Reference Value in Data Monitor Mode (Cont'd)

Simpo PDF Merge and Split Unregistered Version - http://www.simpopdf.com

MONITOR ITEM	CONDITION		SPECIFICATION
IGNITION SW	● Ignition switch: ON → OFF → ON		ON → OFF → ON
INJ PULSE	● Engine: After warming up ● Air conditioner switch: "OFF" ● Shift lever: "N" ● No-load	Idle	2.5 - 3.3 msec
		2,000 rpm	2.4 - 3.2 msec
B/FUEL SCHDL	● Engine: After warming up ● Air conditioner switch: "OFF" ● Shift lever: "N" ● No-load	Idle	0.8 - 1.2 msec
		2,000 rpm	0.8 - 1.2 msec
IGN TIMING	● Engine: After warming up ● Air conditioner switch: "OFF" ● Shift lever: "N" ● No-load	Idle	Approx. 20° BTDC
		2,000 rpm	More than 25° BTDC
IACV-AAC/V	● Engine: After warming up ● Air conditioner switch: "OFF" ● Shift lever: "N" ● No-load	Idle	Approx. 30%
		2,000 rpm	—
PURG VOL C/V	● Engine: After warming up ● Air conditioner switch "OFF" ● No-load	Idle	0%
		2,000 rpm (More than 200 seconds after starting engine)	—
A/F ALPHA	● Engine: After warming up	Maintaining engine speed at 2,000 rpm	50 - 159%
EVAP SYS PRES	● Ignition switch: ON		Approx. 3.4V
AIR COND RLY	● Air conditioner switch: OFF → ON		OFF → ON
FUEL PUMP RLY	● Ignition switch is turned to ON (Operates for 5 seconds) ● Engine running and cranking		ON
	Except as shown above		OFF
EGRC SOL/V	● Engine: After warming up ● Air conditioner switch: "OFF" ● Shift lever: "N" ● No-load	Idle	ON
		Engine speed: Revving engine from idle to 3,000 rpm quickly	OFF
TCC SOL/V	● Engine: After warming up	Idle	ON
		2,000 rpm	OFF
VENT CONT/V	● Ignition switch: ON		OFF
FR O2 HEATER	● Engine speed: Below 3,000 rpm (All models) For 6 seconds after engine speed exceeds 3,000 rpm (4WD models only)		ON
	● Engine speed: Above 3,000 rpm (2WD models) More than 6 seconds after engine speed exceeds 3,000 rpm (4WD models)		OFF
RR O2 HEATER	● Engine running		ON
	● Ignition switch: ON		OFF
VC/V BYPASS/V	● Ignition switch: ON		OFF
CAL/LD VALUE	● Engine: After warming up ● Air conditioner switch: "OFF" ● Shift lever: "N" ● No-load	Idle	9.5 - 34.0%
		2,500 rpm	13.9 - 24.9%
ABSOL TH·P/S	● Engine: After warming up, engine stopped ● Ignition switch: ON	Throttle valve: fully closed	0.0%
		Throttle valve: fully opened	Approx. 80%
MASS AIRFLOW	● Engine: After warming up ● Air conditioner switch: "OFF" ● Shift lever: "N" ● No-load	Idle	0.9 - 5.8 g·m/s
		2,500 rpm	7.5 - 13.2 g·m/s
MAP/BARO SW/V	● Engine: For 5 seconds after starting engine		BARO
	● Ignition switch: More than 5 seconds after turning ignition switch "ON" ● Engine: More than 5 seconds after starting engine		MAP
ABSOL PRES/SE	● Ignition switch: ON ● Engine: For 5 seconds after starting engine		Approx. 4.4V
	● Engine: More than 5 seconds after starting engine (After warming up)		Approx. 1.2V

Simpo PDF Merge and Split Unregistered Version - http://www.simpopdf.com

Major Sensor Reference Graph in Data Monitor Mode

The following are the major sensor reference graphs in "DATA MONITOR" mode.
(Select "HI SPEED" in "DATA MONITOR" with CONSULT.)

THRTL POS SEN, ABSOL TH·P/S, CLSD THL/P SW

Below is the data for "THRTL POS SEN", "ABSOL TH·P/S" and "CLSD THL/P SW" when depressing the accelerator pedal with the ignition switch "ON".
The signal of "THRTL POS SEN" and "ABSOL TH·P/S" should rise gradually without any intermittent drop or rise after "CLSD THL/P SW" is changed from "ON" to "OFF".

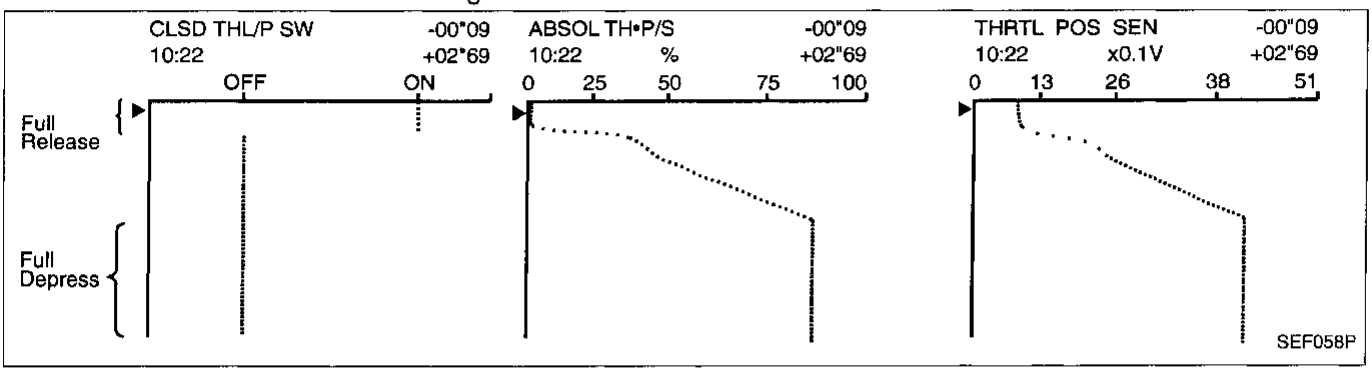

CMPS·RPM (REF), MAS AIR/FL SE, THRTL POS SEN, RR O2 SEN, FR O2 SEN, INJ PULSE

Below is the data for "CMPS·RPM (REF)", "MAS AIR/FL SE", "THRTL POS SEN", "RR O2 SEN", "FR O2 SEN" and "INJ PULSE" when revving engine quickly up to 4,800 rpm under no load after warming up engine to normal operating temperature.
Each value is for reference, the exact value may vary.

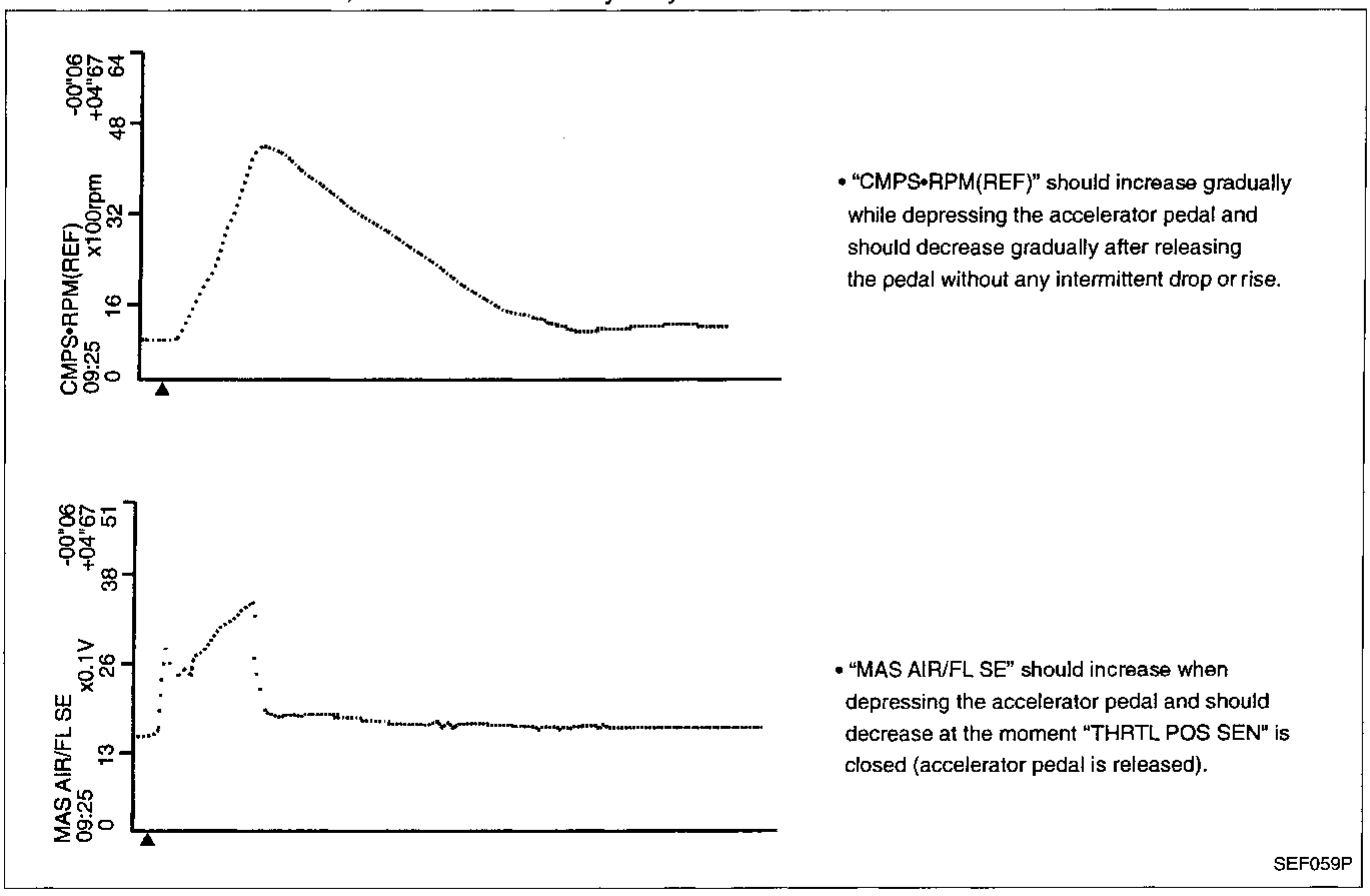

Simpo PDF Merge and Split Unregistered Version - http://www.simpopdf.com

Major Sensor Reference Graph in Data Monitor Mode (Cont'd)

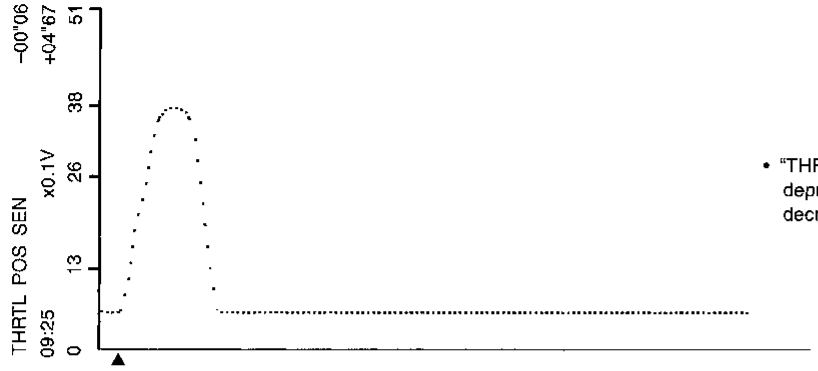

- "THRTL POS SEN" should increase while depressing the accelerator pedal and should decrease while releasing it.

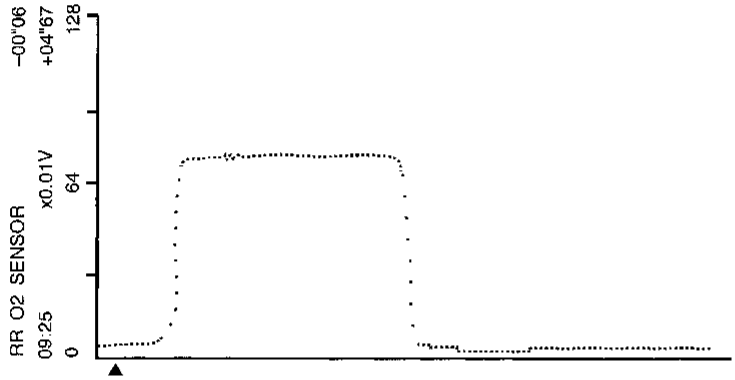

- "RR O2 SENSOR" may increase immediately after depressing the accelerator pedal and may decrease after releasing the pedal.

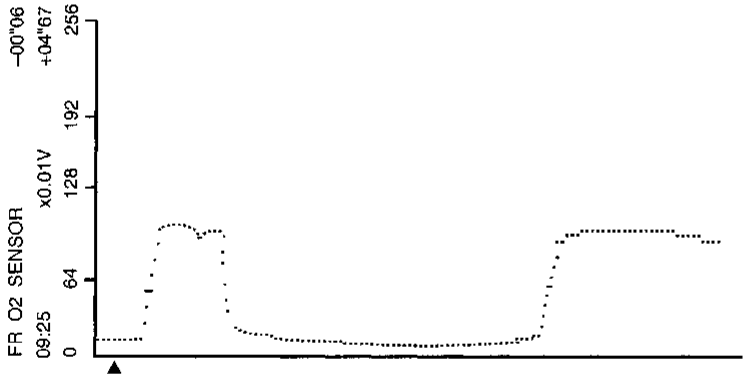

- "FR O2 SENSOR" may increase immediately after depressing the accelerator pedal and may decrease after releasing the pedal.

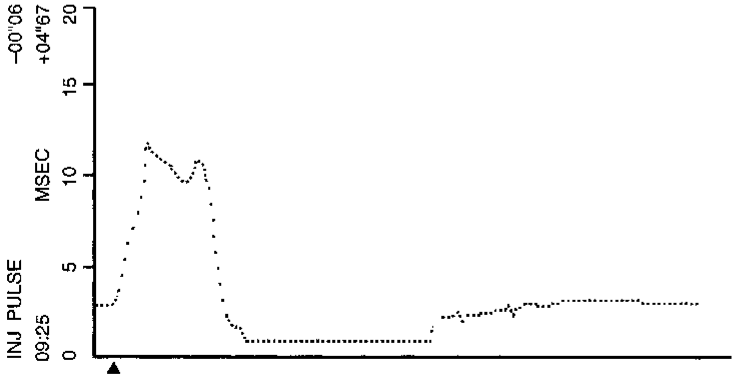

- "INJ PULSE" should increase when depressing the accelerator pedal and should decrease when the pedal is released.

SEF417R

Simpo PDF Merge and Split Unregistered Version - http://www.simpopdf.com

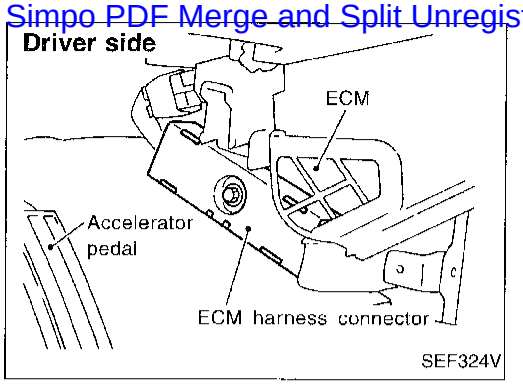

ECM Terminals and Reference Value

PREPARATION

1. ECM is located behind the instrument lower cover. For this inspection:
   - Remove instrument lower cover.

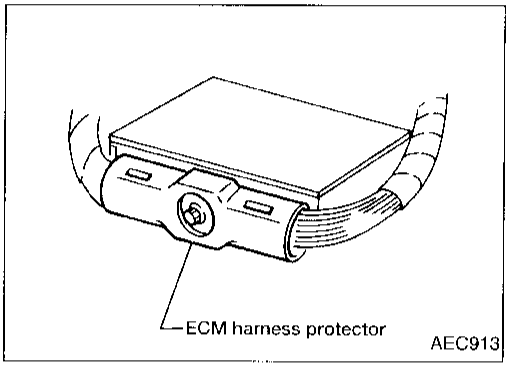

2. Remove ECM harness protector.

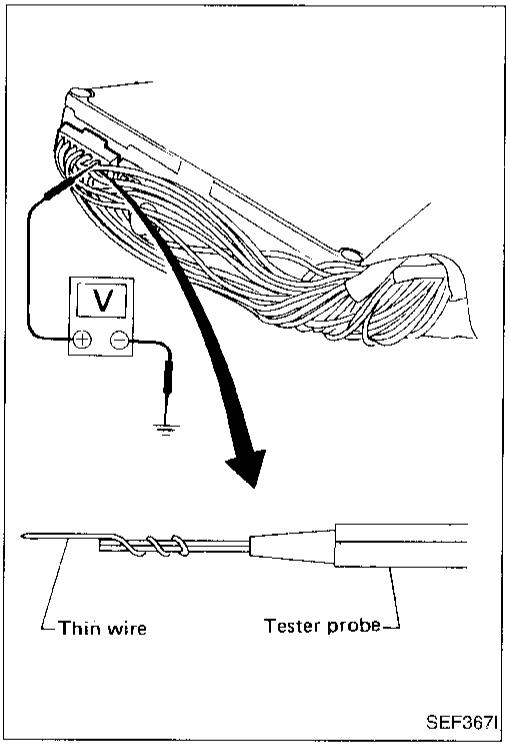

3. Perform all voltage measurements with the connector connected. Extend tester probe as shown to perform tests easily.
   - Open harness securing clip to make testing easier.
   - Use extreme care not to touch 2 pins at one time.
   - Data is for comparison and may not be exact.

ECM HARNESS CONNECTOR TERMINAL LAYOUT

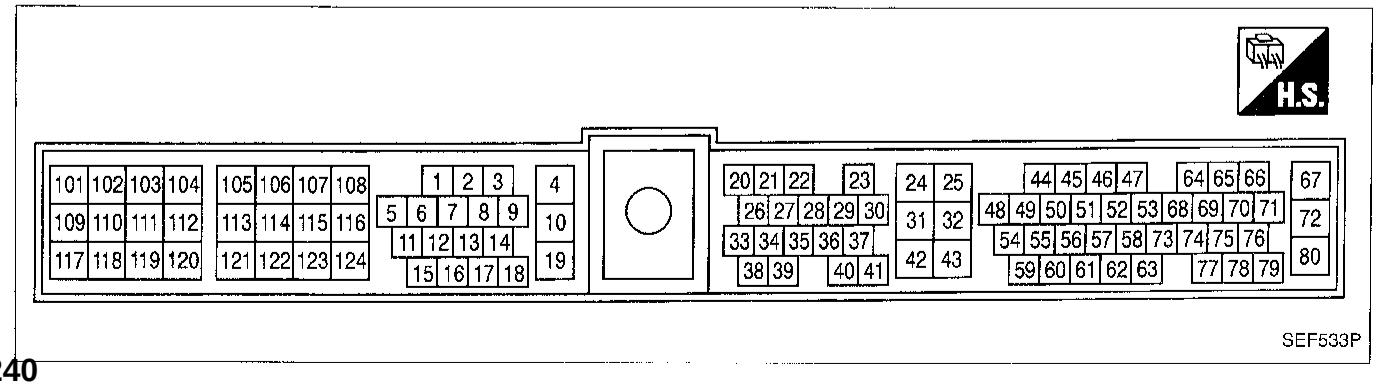

ECM Terminals and Reference Value (Cont'd)

Simpo PDF Merge and Split Unregistered Version - http://www.simpopdf.com

ECM INSPECTION TABLE

Specification data are reference values and are measured between each terminal and ㉜ (ECM ground).

TERMINAL NO.	WIRE COLOR	ITEM	CONDITION	DATA (DC Voltage)
1	PU/W	Ignition signal	Engine is running. (Warm-up condition) └ Idle speed	0 - 0.5V 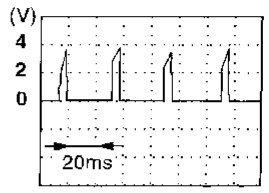 SEF186T
			Engine is running. └ Engine speed is 2,000 rpm.	0.2 - 1.0V 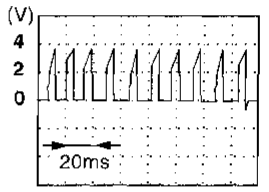 SEF187T
2	B	Ignition check	Engine is running. (Warm-up condition) └ Idle speed	12 - 14V 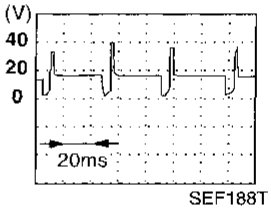 SEF188T
			Engine is running. └ Engine speed is 2,000 rpm.	12 - 13V 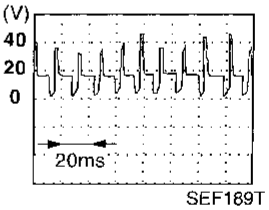 SEF189T
3	P/L	Tachometer	Engine is running. (Warm-up condition) └ Idle speed	0 - 1V 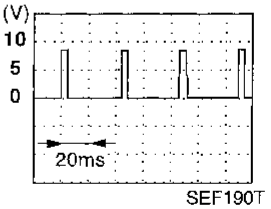 SEF190T
			Engine is running. └ Engine speed is 2,000 rpm.	0.5 - 2V 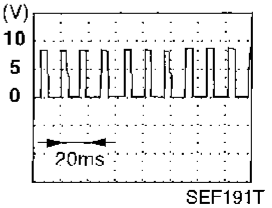 SEF191T

ECM Terminals and Reference Value (Cont'd)

Simpo PDF Merge and Split Unregistered Version - http://www.simpopdf.com

TERMINAL NO.	WIRE COLOR	ITEM	CONDITION	DATA (DC Voltage)
4	LG/R	ECCS relay (Self-shutoff)	Engine is running. Ignition switch "OFF" For a few seconds after turning ignition switch "OFF"	0 - 1V
			Ignition switch "OFF" A few seconds passed after turning ignition switch "OFF"	BATTERY VOLTAGE (11 - 14V)
5	R/Y	EVAP canister purge volume control solenoid valve	Engine is running. Idle speed	BATTERY VOLTAGE (11 - 14V) 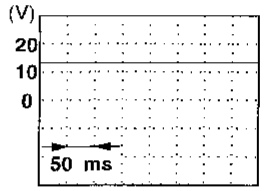 SEF109V
			Engine is running. Engine speed is 2,000 rpm. (More than 200 seconds after starting engine)	12 - 13V 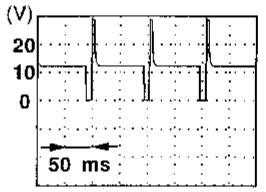 SEF110V
10	B/R	ECM ground	Engine is running. Idle speed	Engine ground
11	W/R	Fuel pump relay	Ignition switch "ON" For 5 seconds after turning ignition switch "ON" Engine is running.	0 - 1V
			Ignition switch "ON" More than 5 seconds after turning ignition switch "ON"	BATTERY VOLTAGE (11 - 14V)
12	P	Air conditioner relay	Engine is running. Both A/C switch and blower switch are "ON"*	Approximately 0V
			Engine is running. A/C switch is "OFF".	BATTERY VOLTAGE (11 - 14V)
18	R/W	Malfunction indicator lamp	Ignition switch "ON"	0 - 1V
			Engine is running. Idle speed	BATTERY VOLTAGE (11 - 14V)
19	B/R	ECM ground	Engine is running. Idle speed	Engine ground

*: Any mode except "OFF", ambient air temperature above 10°C (50°F).

ECM Terminals and Reference Value (Cont'd)

Simpo PDF Merge and Split Unregistered Version - http://www.simpopdf.com

TERMINAL NO.	WIRE COLOR	ITEM	CONDITION	DATA (DC Voltage)
20	L/OR	Start signal	Ignition switch "ON"	Approximately 0V
			Ignition switch "START"	BATTERY VOLTAGE (11 - 14V)
21	G/R	Air conditioner dual-pressure switch	Engine is running. └ Both air conditioner switch and blower switch are "ON" (Compressor operates)	Approximately 0V
			Engine is running. └ Air conditioner switch is "OFF".	BATTERY VOLTAGE (11 - 14V)
22	L/B	Neutral position switch (M/T models) Inhibitor switch (A/T models)	Ignition switch "ON" └ Gear position is "N" or "P".	Approximately 0V
			Ignition switch "ON" └ Except the above gear position	Approximately 5V
23	L	Throttle position sensor	Ignition switch "ON" (Warm-up condition) └ Accelerator pedal fully released	0.3 - 0.7V
			Ignition switch "ON" └ Accelerator pedal fully depressed	Approximately 4V
24	W/G	Ignition switch	Ignition switch "OFF"	0V
			Ignition switch "ON"	BATTERY VOLTAGE (11 - 14V)
25	B/Y	ECM ground	Engine is running. └ Idle speed	Engine ground
28	BR/W	Throttle position switch (Closed position)	Ignition switch "ON" (Warm-up condition) └ Accelerator pedal fully released	BATTERY VOLTAGE (11 - 14V)
			Ignition switch "ON" └ Accelerator pedal depressed	Approximately 0V
29	G/B	Vehicle speed sensor	Engine is running. ├ Lift up the vehicle. ├ In 2nd gear position └ 40 km/h (25 MPH)	1 - 4V 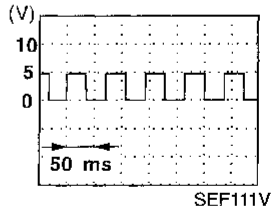 SEF111V
32	B/Y	ECM ground	Engine is running. └ Idle speed	Engine ground (Probe this terminal with ⊖ tester probe when measuring.)
39	GY/R	Power steering oil pressure switch	Engine is running. └ Steering wheel is fully turned.	Approximately 0V
			Engine is running. └ Steering wheel is not turned.	Approximately 5V

ECM Terminals and Reference Value (Cont'd)

Simpo PDF Merge and Split Unregistered Version - http://www.simpopdf.com

TER-MINAL NO.	WIRE COLOR	ITEM	CONDITION	DATA (DC Voltage)
42	BR	Sensors' power supply	Ignition switch "ON"	Approximately 5V
43	B/W	Sensors' ground	Engine is running. └ Idle speed	Approximately 0V
44	PU	Camshaft position sensor (Reference signal)	Engine is running. (Warm-up condition) └ Idle speed	0.2 - 0.5V 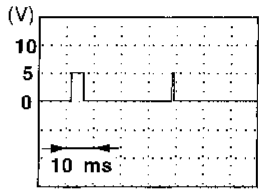 SEF114V
48	PU		Engine is running. └ Engine speed is 2,000 rpm.	0 - 0.5V 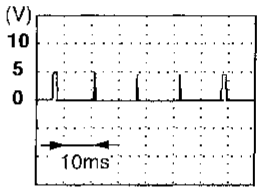 SEF200T
45	B/R	Absolute pressure sensor	Ignition switch "ON" └ Engine is not running. Engine is running. └ For 5 seconds after starting engine	Approximately 4.4V
			Engine is running. (Warm-up condition) └ More than 5 seconds after starting engine	Approximately 1.2V

ECM Terminals and Reference Value (Cont'd)

Simpo PDF Merge and Split Unregistered Version - http://www.simpopdf.com

TERMINAL NO.	WIRE COLOR	ITEM	CONDITION	DATA (DC Voltage)
47	L	Crankshaft position sensor (OBD)	Engine is running. (Warm-up condition) └ Idle speed	Approximately 0V 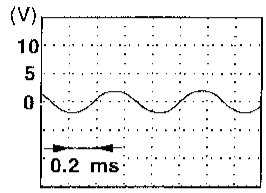 SEF112V
			Engine is running. └ Engine speed is 2,000 rpm.	Approximately 0V 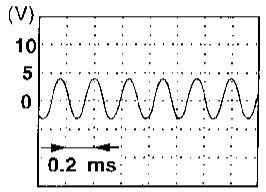 SEF113V
49	LG	Camshaft position sensor (Position signal)	Engine is running. (Warm-up condition) └ Idle speed	Approximately 2.6V 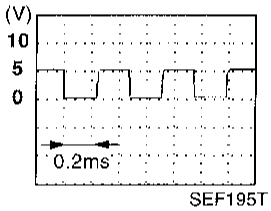 SEF195T
			Engine is running. └ Engine speed is 2,000 rpm.	Approximately 2.5 - 2.6V 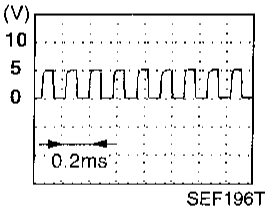 SEF196T
50	B	Front heated oxygen sensor	Engine is running. └ After warming up to normal operating temperature and engine speed is 2,000 rpm.	0 - Approximately 1.0V 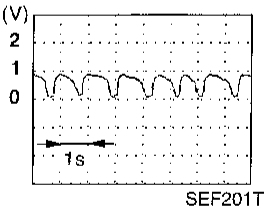 SEF201T
54	R	Mass air flow sensor	Engine is running. (Warm-up condition) └ Idle speed	1.0 - 1.7V
			Engine is running. (Warm-up condition) └ Engine speed is 2,500 rpm.	1.8 - 2.4V
55	G	Mass air flow sensor ground	Engine is running. (Warm-up condition) └ Idle speed	Approximately 0V

ECM Terminals and Reference Value (Cont'd)

Simpo PDF Merge and Split Unregistered Version - http://www.simpopdf.com

TERMINAL NO.	WIRE COLOR	ITEM	CONDITION	DATA (DC Voltage)
56	OR	Rear heated oxygen sensor	Engine is running. └ After warming up to normal operating temperature and revving engine from idle to 3,000 rpm quickly	0 - Approximately 1.0V
59	LG/R	Engine coolant temperature sensor	Engine is running.	Approximately 0 - 4.8V Output voltage varies with engine coolant temperature.
60	Y/B	Tank fuel temperature sensor	Engine is running.	Approximately 0 - 4.8V Output voltage varies with fuel temperature.
61	PU/R	Intake air temperature sensor	Engine is running.	Approximately 0 - 4.8V Output voltage varies with intake air temperature.
62	Y	EVAP control system pressure sensor	Ignition switch "ON"	Approximately 3.4V
63	G/OR	EGR temperature sensor	Engine is running. (Warm-up condition) └ Idle speed	Less than 4.5V
			Engine is running. (Warm-up condition) └ EGR system is operating.	0 - 1.5V
64	W	Knock sensor	Engine is running. └ Idle speed	Approximately 2.4V
67	B/P	Power supply for ECM	Ignition switch "ON"	BATTERY VOLTAGE (11 - 14V)
72	B/P			
69	LG/R	Data link connector for GST	Engine is running. └ Idle speed (GST is disconnected.)	0.2 - 14V
75	Y/R	Data link connector for CONSULT	Engine is running. └ Idle speed (CONSULT is connected and turned on.)	0 - 4V
76	GY/L			3 - 10V
80	SB	Power supply (Back-up)	Ignition switch "OFF"	BATTERY VOLTAGE (11 - 14V)

ECM Terminals and Reference Value (Cont'd)

Simpo PDF Merge and Split Unregistered Version - http://www.simpopdf.com

TERMINAL NO.	WIRE COLOR	ITEM	CONDITION	DATA (DC Voltage)
101	OR/L	IACV-AAC valve	Engine is running. (Warm-up condition) └ Idle speed	10.5 - 11.5V 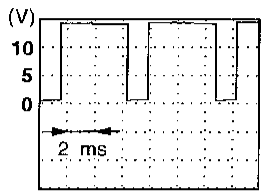 SEF645U
			Engine is running. (Warm-up condition) └ Engine speed is 2,000 rpm.	1 - 13V 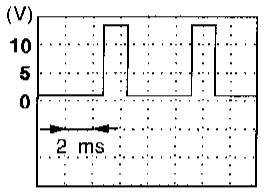 SEF646U
102	W/B	Injector No. 1	Engine is running. (Warm-up condition) └ Idle speed	BATTERY VOLTAGE (11 - 14V) 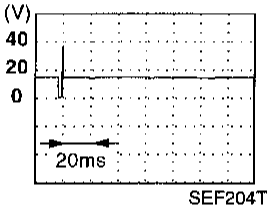 SEF204T
104	W/R	Injector No. 3		
109	W/L	Injector No. 2	Engine is running. (Warm-up condition) └ Engine speed is 2,000 rpm.	BATTERY VOLTAGE (11 - 14V) 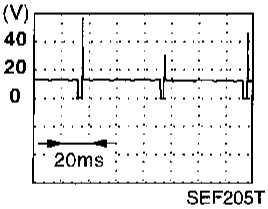 SEF205T
111	W/PU	Injector No. 4		
103	G/W	EGRC-solenoid valve	Engine is running. (Warm-up condition) └ Idle speed	0 - 1V
			Engine is running. (Warm-up condition) └ Revving engine from idle to 3,000 rpm quickly	BATTERY VOLTAGE (11 - 14V)
108	R/G	EVAP canister vent control valve	Ignition switch "ON"	BATTERY VOLTAGE (11 - 14V)
115	L/Y	Torque converter clutch solenoid valve (A/T models only)	Engine is running. └ Idle speed	Approximately 1V
			Engine is running. (Warm-up condition) └ Engine speed is 2,000 rpm.	BATTERY VOLTAGE (11 - 14V)

ECM Terminals and Reference Value (Cont'd)

Simpo PDF Merge and Split Unregistered Version - http://www.simpopdf.com

TERMINAL NO.	WIRE COLOR	ITEM	CONDITION	DATA (DC Voltage)
116	B/R	ECM ground	Engine is running. — Idle speed	Engine ground
117	B/P	Current return	Engine is running. — Idle speed	BATTERY VOLTAGE (11 - 14V)
118	LG/B	MAP/BARO switch solenoid valve	Ignition switch "ON" — For 5 seconds after turning ignition switch "ON" Engine is running. — For 5 seconds after starting engine	0 - 1V
			Ignition switch "ON" — More than 5 seconds after turning ignition switch "ON" Engine is running. — More than 5 seconds after starting engine	BATTERY VOLTAGE (11 - 14V)
119	BR/Y	Front heated oxygen sensor heater	Engine is running. — Engine speed is below 3,000 rpm. (All models) — For 6 seconds after engine speed exceeds 3,000 rpm (4WD models only)	Approximately 0.4V
			Engine is running. — Engine speed is above 3,000 rpm. (2WD models) — More than 6 seconds after engine speed exceeds 3,000 rpm (4WD models)	BATTERY VOLTAGE (11 - 14V)
120	P/B	Vacuum cut valve bypass valve	Ignition switch "ON"	BATTERY VOLTAGE (11 - 14V)
122	R/B	Rear heated oxygen sensor heater	Engine is running.	Approximately 0.4V
			Ignition switch "ON" — Engine is not running.	BATTERY VOLTAGE (11 - 14V)
124	B/R	ECM ground	Engine is running. — Idle speed	Engine ground

Simpo PDF Merge and Split Unregistered Version - http://www.simpopdf.com

Description

Intermittent incidents (I/I) may occur. In many cases, the problem resolves itself (the part or circuit function returns to normal without intervention). It is important to realize that the symptoms described in the customer's complaint often do not recur on DTC (1st trip) visits. Realize also that the most frequent cause of I/I occurrences is poor electrical connections. Because of this, the conditions under which the incident occurred may not be clear. Therefore, circuit checks made as part of the standard diagnostic procedure may not indicate the specific problem area.

Common I/I Report Situations

STEP in Work Flow	Situation
II	The CONSULT is used. The SELF-DIAG RESULTS screen shows time data other than "0" or "1t".
III	The symptom described by the customer does not recur.
IV	(1st trip) DTC data does not appear during the DTC CONFIRMATION PROCEDURE.
VI	The TROUBLE DIAGNOSIS for PXXXX does not indicate the problem area.

Diagnostic Procedure

Erase (1st trip) DTCs. Refer to "HOW TO ERASE EMISSION-RELATED INFORMATION" (EC-45).

↓

Check ground terminals. Refer to "Circuit Inspection", "GROUND INSPECTION" (GI section).

↓

Perform "Incident Simulation Tests" (GI section).

↓

Check connector terminals. Refer to "How to Check Enlarged Contact Spring of Terminal" (GI section).

Simpo PDF Merge and Split Unregistered Version - http://www.simpopdf.com

Main Power Supply and Ground Circuit

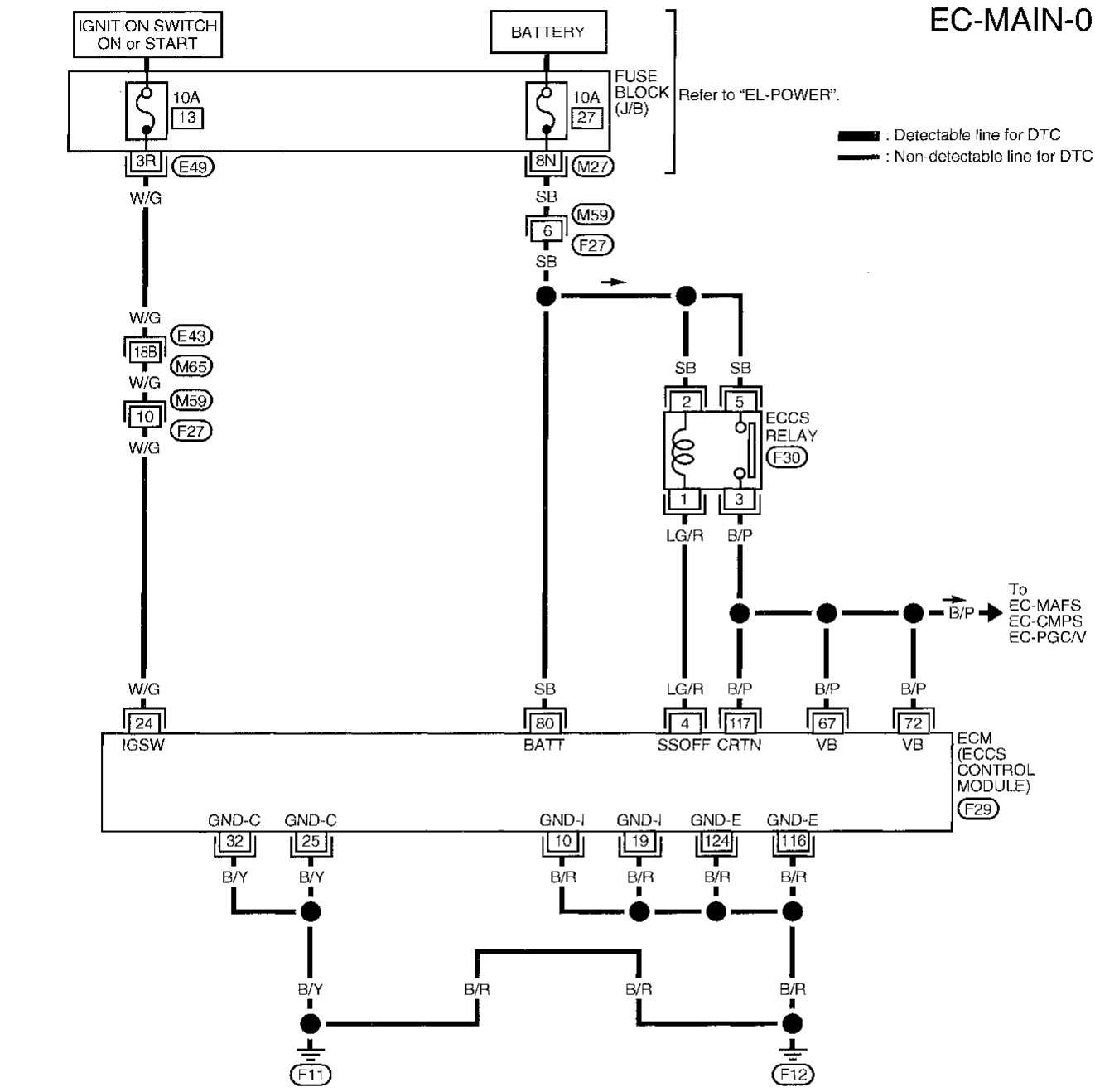

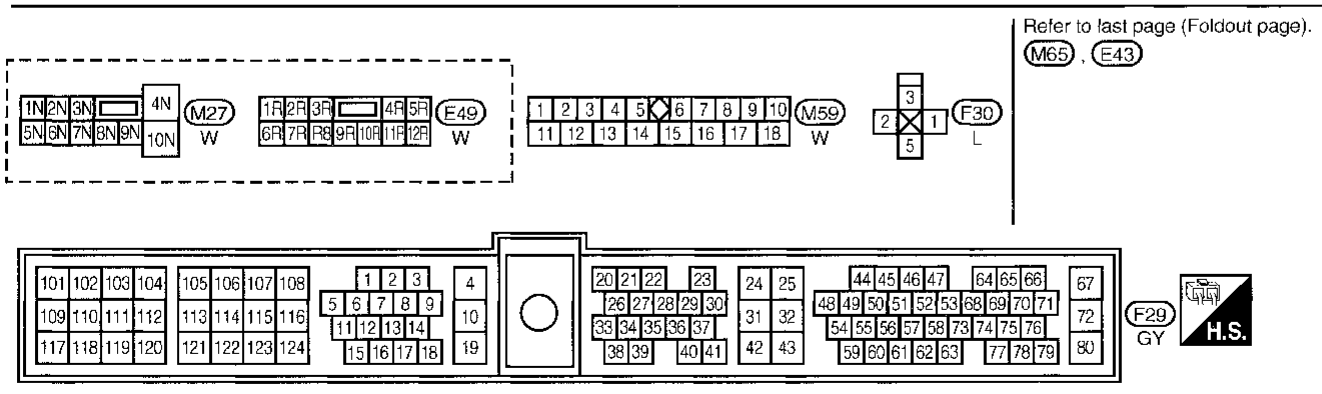

AEC518A

Main Power Supply and Ground Circuit (Cont'd)

Simpo PDF Merge and Split Unregistered Version - http://www.simpopdf.com

ECM TERMINALS AND REFERENCE VALUE

Specification data are reference values and are measured between each terminal and ㉜ (ECM ground).

TER-MINAL NO.	WIRE COLOR	ITEM	CONDITION	DATA (DC Voltage)
4	LG/R	ECCS relay (Self-shutoff)	Engine is running. Ignition switch "OFF" └ For a few seconds after turning ignition switch "OFF"	0 - 1V
			Ignition switch "OFF" └ A few seconds passed after turning ignition switch "OFF"	BATTERY VOLTAGE (11 - 14V)
10	B/R	ECM ground	Engine is running. └ Idle speed	Engine ground
19	B/R	ECM ground	Engine is running. └ Idle speed	Engine ground
24	W/G	Ignition switch	Ignition switch "OFF"	0V
			Ignition switch "ON"	BATTERY VOLTAGE (11 - 14V)
25	B/Y	ECM ground	Engine is running. └ Idle speed	Engine ground
32	B/Y	ECM ground	Engine is running. └ Idle speed	Engine ground (Probe this terminal with ⊖ tester probe when measuring.)
67	B/P	Power supply for ECM	Ignition switch "ON"	BATTERY VOLTAGE (11 - 14V)
72	B/P			
80	SB	Power supply (Back-up)	Ignition switch "OFF"	BATTERY VOLTAGE (11 - 14V)
116	B/R	ECM ground	Engine is running. └ Idle speed	Engine ground
117	B/P	Current return	Engine is running. └ Idle speed	BATTERY VOLTAGE (11 - 14V)
124	B/R	ECM ground	Engine is running. └ Idle speed	Engine ground

Simpo PDF Merge and Split Unregistered Version - http://www.simpopdf.com

Main Power Supply and Ground Circuit (Cont'd)

DIAGNOSTIC PROCEDURE

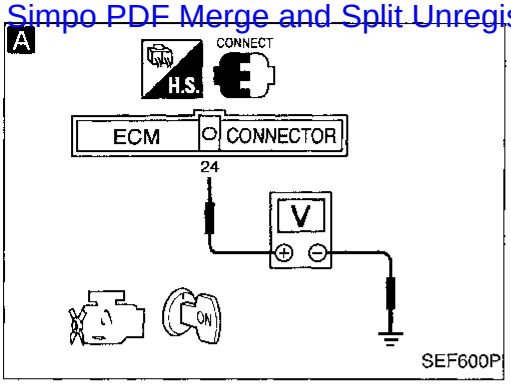

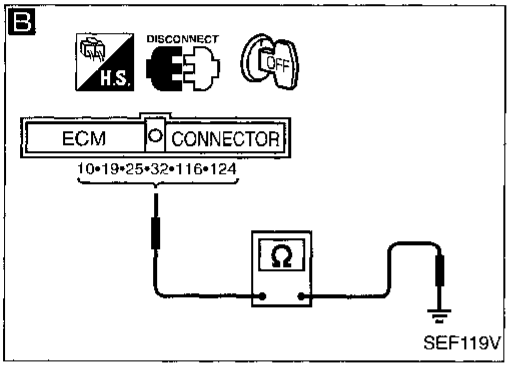

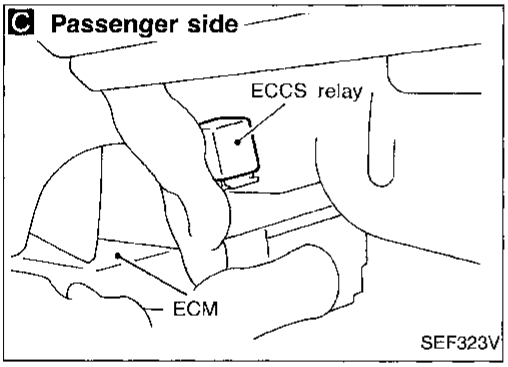

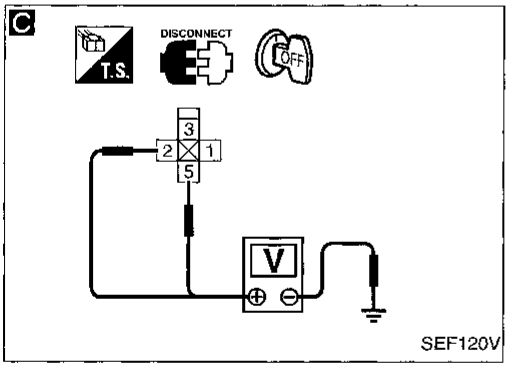

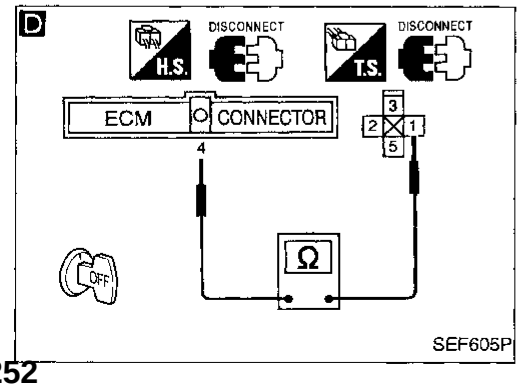

INSPECTION START

Start engine.
Is engine running?

Yes → Go to E "**CHECK POWER SUPPLY-III**" on next page.

No

A

CHECK POWER SUPPLY-I.
1. Turn ignition switch "ON".
2. Check voltage between ECM terminal (24) and ground with CONSULT or tester.
   Voltage: Battery voltage

NG → Check the following.
- Harness connectors (M65), (E43)
- Harness connectors (M59), (F27)
- 10A fuse
- Harness for open or short between ECM and ignition switch

If NG, repair harness or connectors.

OK

B

CHECK GROUND CIRCUIT-I.
1. Turn ignition switch "OFF".
2. Disconnect ECM harness connector.
3. Check harness continuity between ECM terminals (10), (19), (25), (32), (116), (124) and engine ground.
   Continuity should exist.
   If OK, check harness for short to ground and short to power.

NG → Repair open circuit, short to ground or short to power in harness or connectors.

OK

C

CHECK POWER SUPPLY-II.
1. Disconnect ECCS relay.
2. Turn ignition switch "OFF".
3. Check voltage between terminals (2), (5) and ground with CONSULT or tester.
   Voltage: Battery voltage

NG → Check the following.
- 10A fuse
- Harness connectors (M59), (F27)
- Harness for open or short between ECCS relay and battery

If NG, repair harness or connectors.

OK

D

CHECK OUTPUT SIGNAL CIRCUIT.
1. Turn ignition switch "OFF".
2. Check harness continuity between ECM terminal (4) and terminal (1).
   Continuity should exist.
   If OK, check harness for short to ground and short to power.

NG → Repair open circuit, short to ground or short to power in harness or connectors.

OK

Perform "TROUBLE DIAGNOSIS FOR INTERMITTENT INCIDENT", EC-93.

INSPECTION END

Main Power Supply and Ground Circuit (Cont'd)

Simpo PDF Merge and Split Unregistered Version - http://www.simpopdf.com

E

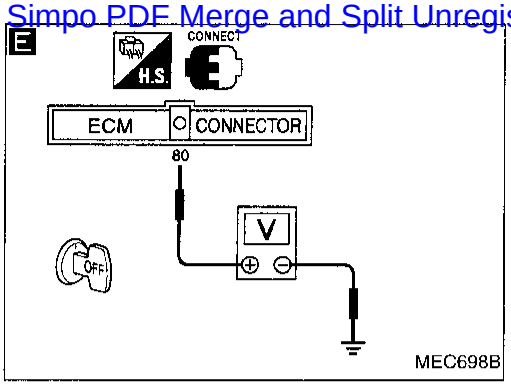

MEC698B

E

CHECK POWER SUPPLY-III.
Check voltage between ECM terminals (80) and ground with CONSULT or tester.
Voltage: Battery voltage

NG → Check the following.
- Harness connectors (F27), (M59)
- 10A fuse
- Harness for open or short between ECM and battery

If NG, repair harness or connectors.

OK ↓

F

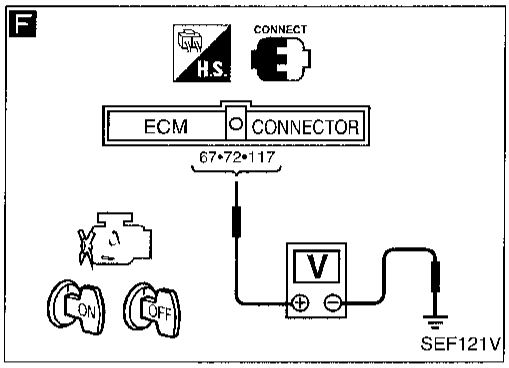

SEF121V

F

CHECK POWER SUPPLY-IV.
1. Turn ignition switch "ON" and then "OFF".
2. Check voltage between ECM terminals (67), (72), (117) and ground with CONSULT or tester.
   Voltage:
   After turning ignition switch "OFF", battery voltage will exist for a few seconds, then drop to approximately 0V.

OK → Go to K "CHECK GROUND CIRCUIT-II" on next page.

Case-1: Battery voltage does not exist.
Case-2: Battery voltage exists for more than a few seconds.

NG ↓

Case-1 ↓

Case-2 → Go to J "CHECK ECCS RELAY" on next page.

G

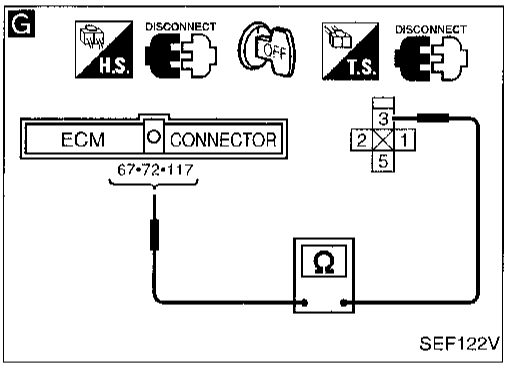

SEF122V

G

CHECK HARNESS CONTINUITY BETWEEN ECCS RELAY AND ECM.
1. Disconnect ECM harness connector.
2. Disconnect ECCS relay.
3. Check harness continuity between ECM terminals (67), (72), (117) and relay terminal (3).
   Continuity should exist.
   If OK, check harness for short to ground and short to power.

NG → If NG, repair open circuit or short to ground or short to power in harness or connectors.

OK ↓

H **Passenger side**

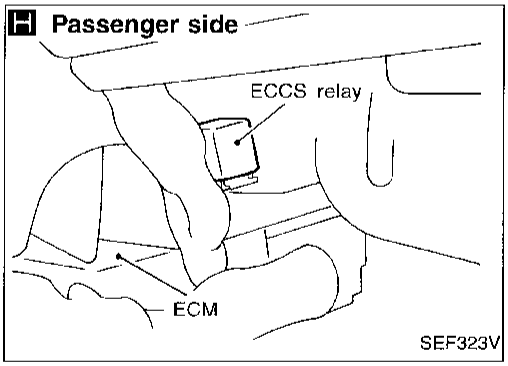

SEF323V

H

CHECK VOLTAGE BETWEEN ECCS RELAY AND GROUND.
Check voltage between relay terminals (2), (5) and ground with CONSULT or tester.
Voltage: Battery voltage

NG → Check the following.
- Harness connectors (F27), (M59)
- 10A fuse
- Harness for open or short between ECCS relay and battery

If NG, repair harness or connectors.

OK ↓

H

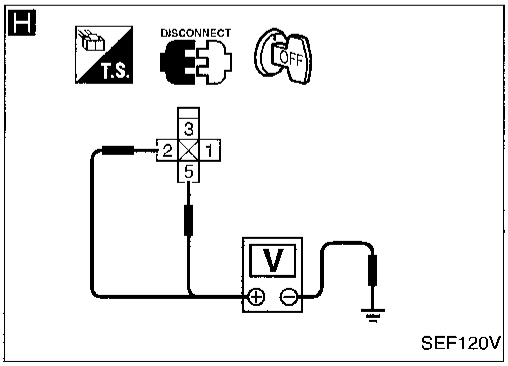

SEF120V

(B)
(Go to next page.)

Main Power Supply and Ground Circuit (Cont'd)

Simpo PDF Merge and Split Unregistered Version - http://www.simpopdf.com

I

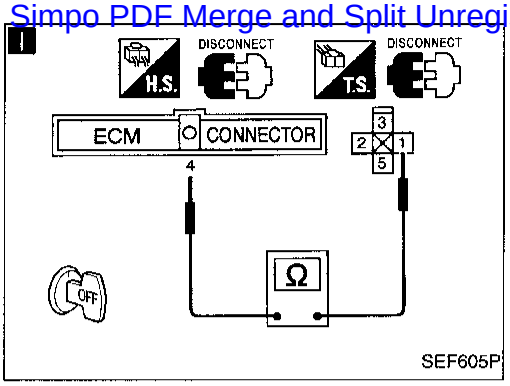

SEF605P

J

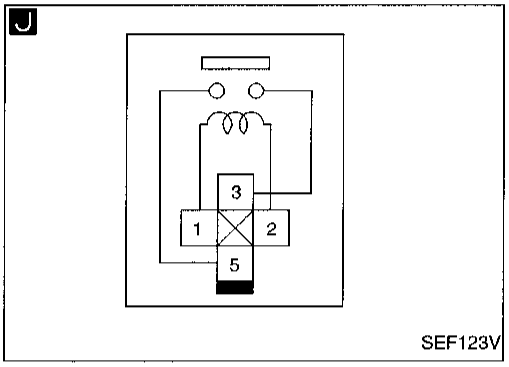

SEF123V

K

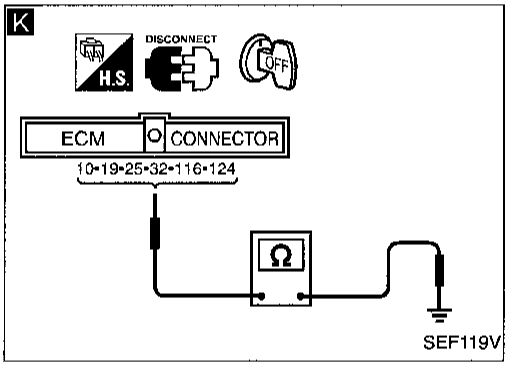

SEF119V

Ⓑ

I

CHECK OUTPUT SIGNAL CIRCUIT.
Check harness continuity between ECM terminal ④ and relay terminal ①.
Continuity should exist.
If OK, check harness for short to ground and short to power.

NG → Repair open circuit, short to ground or short to power in harness or connectors.

OK ↓

J

CHECK ECCS RELAY.
1. Apply 12V direct current between relay terminals ① and ②.
2. Check continuity between relay terminals ③ and ⑤.
   12V (① - ②) applied:
   Continuity exists.
   No voltage applied:
   No continuity

NG → Replace ECCS relay.

OK ↓

K

CHECK GROUND CIRCUIT-II.
Check harness continuity between ECM terminals ⑩, ⑲, ㉕, ㉜, ⑯, ㉔ and engine ground.
Continuity should exist.
If OK, check harness for short to power.

NG → Repair open circuit, short to ground or short to power in harness or connectors.

OK ↓

Perform "TROUBLE DIAGNOSIS FOR INTERMITTENT INCIDENT", EC-93.

↓

INSPECTION END

Simpo PDF Merge and Split Unregistered Version - http://www.simpopdf.com

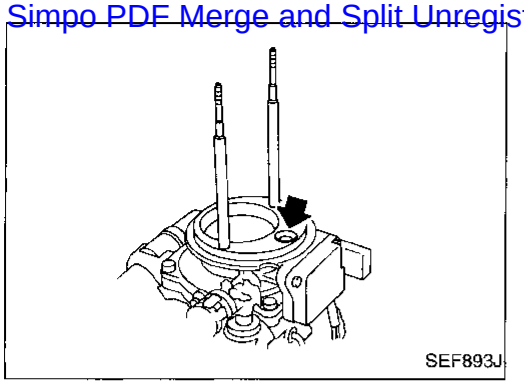
SEF893J

Mass Air Flow Sensor (MAFS)

COMPONENT DESCRIPTION

The mass air flow sensor is placed in the stream of intake air. It measures the intake flow rate by measuring a part of the entire intake flow. It consists of a hot wire that is supplied with electric current from the ECM. The temperature of the hot wire is controlled by the ECM a certain amount. The heat generated by the hot wire is reduced as the intake air flows around it. The more air, the greater the heat loss.
Therefore, the ECM must supply more electric current to maintain the temperature of the hot wire as air flow increases. The ECM detects the air flow by means of this current change.

CONSULT REFERENCE VALUE IN DATA MONITOR MODE

Specification data are reference values.

MONITOR ITEM	CONDITION		SPECIFICATION
MAS AIR/FL SE	● Engine: After warming up ● Air conditioner switch: "OFF" ● Shift lever: "N" ● No-load	Idle	0.9 - 1.8V
		2,500 rpm	1.9 - 2.3V
CAL/LD VALUE	● Engine: After warming up ● Air conditioner switch: "OFF" ● Shift lever: "N" ● No-load	Idle	9.5 - 34.0%
		2,500 rpm	13.9 - 24.9%
MASS AIRFLOW	● Engine: After warming up ● Air conditioner switch: "OFF" ● Shift lever: "N" ● No-load	Idle	0.9 - 5.8 g·m/s
		2,500 rpm	7.5 - 13.2 g·m/s

ECM TERMINALS AND REFERENCE VALUE

Specification data are reference values and are measured between each terminal and ㉜ (ECM ground).

TER-MINAL NO.	WIRE COLOR	ITEM	CONDITION	DATA (DC Voltage)
54	R	Mass air flow sensor	Engine is running. (Warm-up condition) └ Idle speed	0.9 - 1.8V
			Engine is running. (Warm-up condition) └ Engine speed is 2,500 rpm.	1.9 - 2.3V
55	G	Mass air flow sensor ground	Engine is running. (Warm-up condition) └ Idle speed	Approximately 0V

Mass Air Flow Sensor (MAFS) (Cont'd)

Simpo PDF Merge and Split Unregistered Version - http://www.simpopdf.com

ON BOARD DIAGNOSIS LOGIC

Diagnostic Trouble Code No.	Malfunction is detected when ...	Check Items (Possible Cause)
P0100 0102	A) An excessively high voltage from the sensor is sent to ECM when engine is not running. C) A high voltage from the sensor is sent to ECM under light load driving condition.	● Harness or connectors (The sensor circuit is open or shorted.) ● Mass air flow sensor
	B) An excessively low voltage from the sensor is sent to ECM* when engine is running. D) A low voltage from the sensor is sent to ECM under heavy load driving condition.	● Harness or connectors (The sensor circuit is open or shorted.) ● Intake air leaks ● Mass air flow sensor

*: When this malfunction is detected, the ECM enters fail-safe mode and the MIL lights up.

Detected items	Engine operating condition in fail-safe mode
Mass air flow sensor circuit	Engine speed will not rise more than 2,400 rpm due to the fuel cut.

DIAGNOSTIC TROUBLE CODE CONFIRMATION PROCEDURE

Perform "Procedure for malfunction A" first. If the 1st trip DTC cannot be confirmed, perform "Procedure for malfunction B". If there is no problem on "Procedure for malfunction B", perform "Procedure for malfunction C". If there is no problem on "Procedure for malfunction C", perform "Procedure for malfunction D".

CAUTION:
Always drive vehicle at a safe speed.

NOTE:
If "DIAGNOSTIC TROUBLE CODE CONFIRMATION PROCEDURE" has been previously conducted, always turn ignition switch "OFF" and wait at least 5 seconds before conducting the next test.

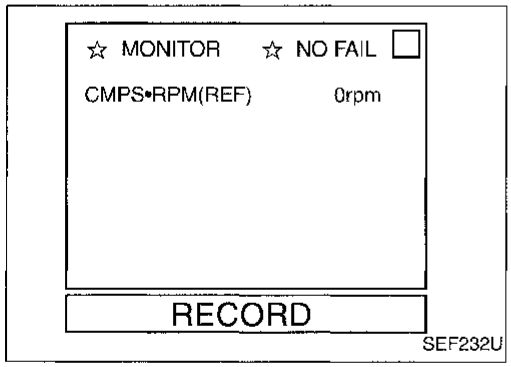

Procedure for malfunction A

1) Turn ignition switch "ON".
2) Select "DATA MONITOR" mode with CONSULT.
3) Wait at least 6 seconds.

OR

1) Turn ignition switch "ON", and wait at least 6 seconds.
2) Select "MODE 7" with GST.

OR

1) Turn ignition switch "ON", and wait at least 6 seconds.
2) Turn ignition switch "OFF", wait at least 5 seconds and then turn "ON".
3) Perform "Diagnostic Test Mode II (Self-diagnostic results)" with ECM.

Mass Air Flow Sensor (MAFS) (Cont'd)

Simpo PDF Merge and Split Unregistered Version - http://www.simpopdf.com

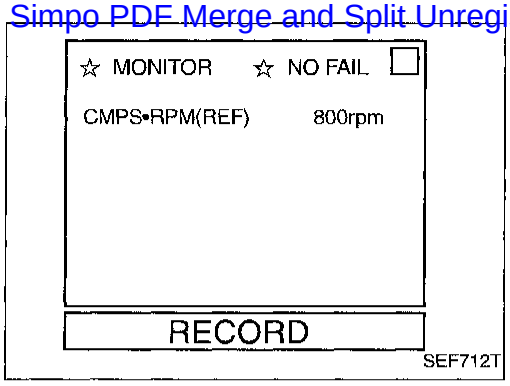

Procedure for malfunction B

1) Turn ignition switch "ON".
2) Select "DATA MONITOR" mode with CONSULT.
3) Start engine and wait 5 seconds at most.

OR

1) Turn ignition switch "ON".
2) Start engine and wait 5 seconds at most.
3) Select "MODE 7" with GST.

OR

1) Turn ignition switch "ON".
2) Start engine and wait 5 seconds at most.
3) Turn ignition switch "OFF", wait at least 5 seconds and then turn "ON".
4) Perform "Diagnostic Test Mode II (Self-diagnostic results)" with ECM.

NOTE:
If 1st trip DTC is confirmed after more than 5 seconds, there may be malfunction C.

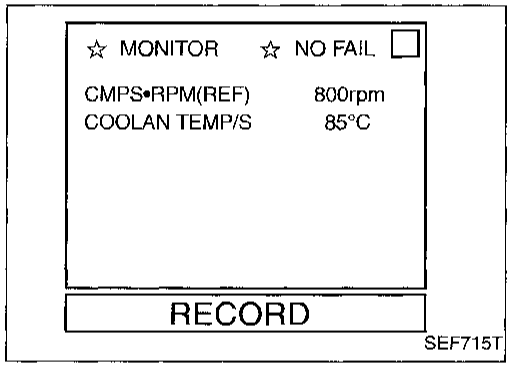

Procedure for malfunction C

1) Turn ignition switch "ON".
2) Select "DATA MONITOR" mode with CONSULT.

NOTE:
If engine will not start or stops soon after starting at next step, wait at least 10 seconds with engine stopped. (Ignition switch "ON")

3) Start engine and warm it up to normal operating temperature.
4) Run engine for at least 10 seconds at idle speed.

OR

NOTE:
If engine will not start or stops soon after starting at next step, wait at least 10 seconds with engine stopped. (Ignition switch "ON")

1) Start engine and warm it up to normal operating temperature.
2) Run engine for at least 10 seconds at idle speed.
3) Select "MODE 7" with GST.

OR

NOTE:
If engine will not start or stops soon after starting at next step, wait at least 10 seconds with engine stopped. (Ignition switch "ON")

1) Start engine and warm it up to normal operating temperature.
2) Run engine for at least 10 seconds at idle speed.
3) Turn ignition switch "OFF", wait at least 5 seconds and then turn "ON".
4) Perform "Diagnostic Test Mode II (Self-diagnostic results)" with ECM.

Mass Air Flow Sensor (MAFS) (Cont'd)

Simpo PDF Merge and Split Unregistered Version - http://www.simpopdf.com

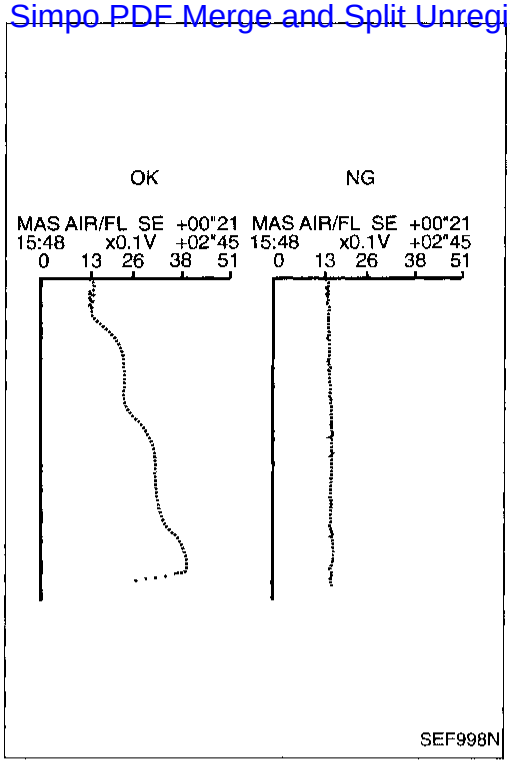

SEF998N

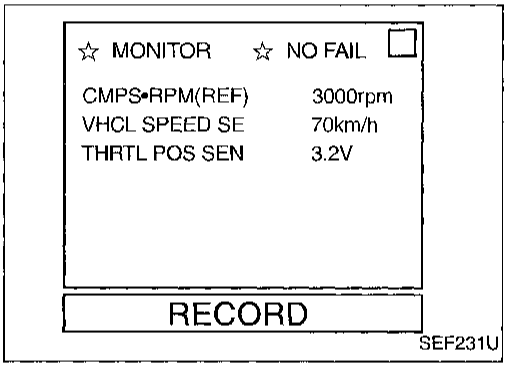

SEF231U

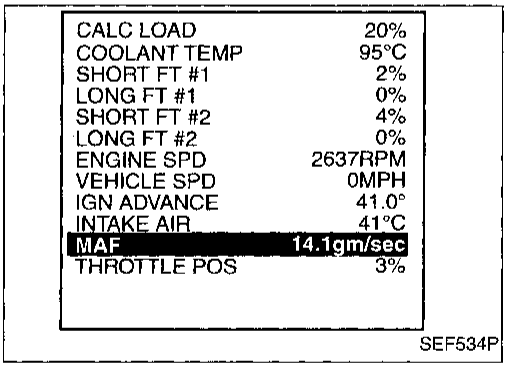

SEF534P

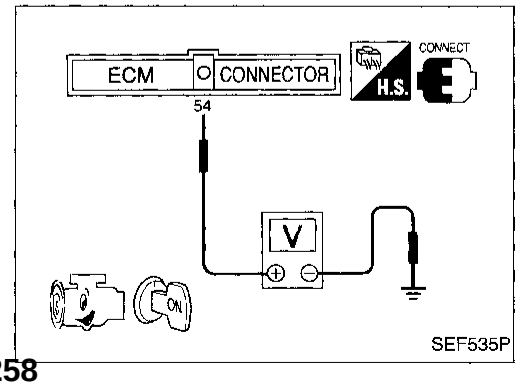

SEF535P

Procedure for malfunction D

1) Turn ignition switch "ON".
2) Start engine and warm it up to normal operating temperature.
   If engine cannot be started, go to "DIAGNOSTIC PROCEDURE", EC-104.
3) Select "DATA MONITOR" mode with CONSULT.
4) Start engine.
5) Check the voltage of MAS AIR/FL SE with "DATA MONITOR".
6) Increases engine speed to about 4,000 rpm.
7) Monitor the linear voltage rise in response to engine speed increases.
   If NG, go to "DIAGNOSTIC PROCEDURE", EC-104.
   If OK, go to following step.
8) Maintain the following conditions for at least 10 consecutive seconds.
   CMPS·RPM (REF): More than 2,000 rpm
   THRTL POS SEN: More than 3V
   Selector lever: Suitable position
   Driving location: Driving vehicle uphill (Increased engine load) will help maintain the driving conditions required for this test.

OR

OVERALL FUNCTION CHECK

Use this procedure to check the overall function of the mass air flow sensor circuit. During this check, a 1st trip DTC might not be confirmed.

Procedure for malfunction D

1) Turn ignition switch "ON".
2) Start engine and warm it up to normal operating temperature.
3) Select "MODE 1" with GST.
4) Check the mass air flow with "MODE 1".
5) Check for linear mass air flow rise in response to increases to about 4,000 rpm in engine speed.

OR

1) Turn ignition switch "ON".
2) Start engine and warm it up to normal operating temperature.
3) Check the voltage between ECM terminal ⑤④ and ground.
4) Check for linear voltage rise in response to increases to about 4,000 rpm in engine speed.

Simpo PDF Merge and Split Unregistered Version - http://www.simpopdf.com

EC-MAFS-01

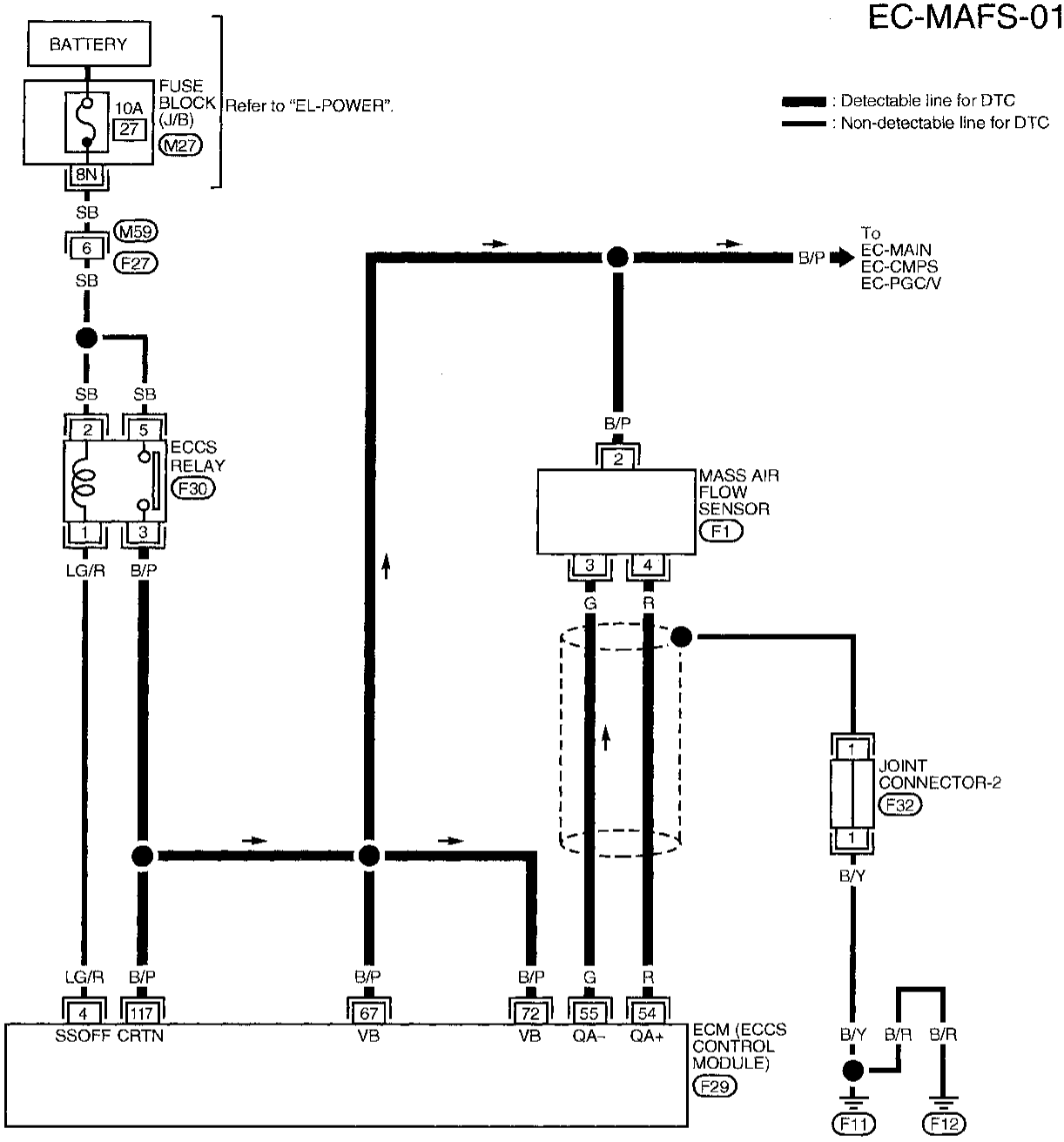

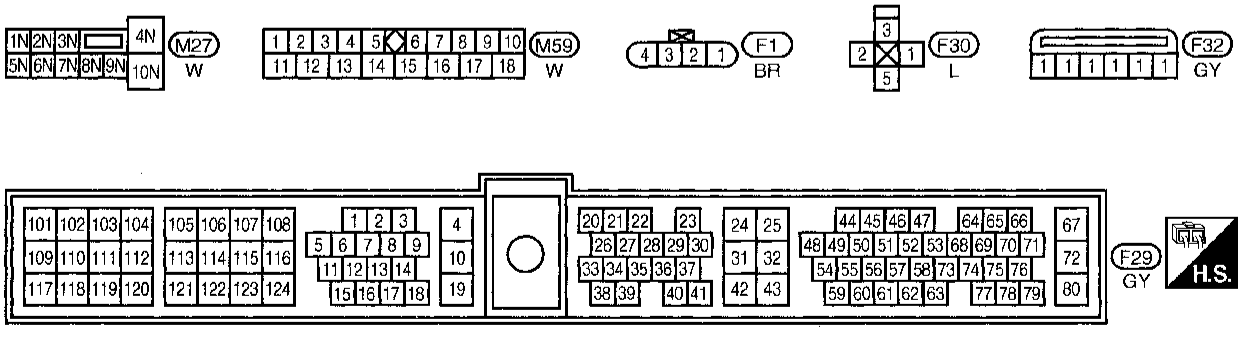

AEC519A

Simpo PDF Merge and Split Unregistered Version - http://www.simpopdf.com

Mass Air Flow Sensor (MAFS) (Cont'd)

DIAGNOSTIC PROCEDURE

If the trouble is duplicated after "Procedure for malfunction A or C", perform "Procedure A" below. If the trouble is duplicated after "Procedure for malfunction B or D", perform "Procedure B" on next page.

Procedure A

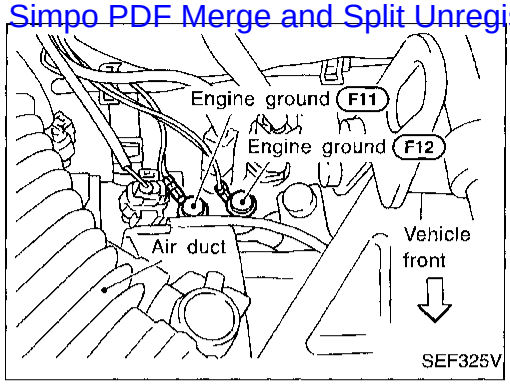

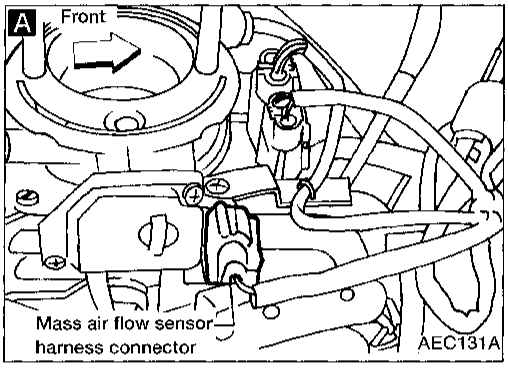

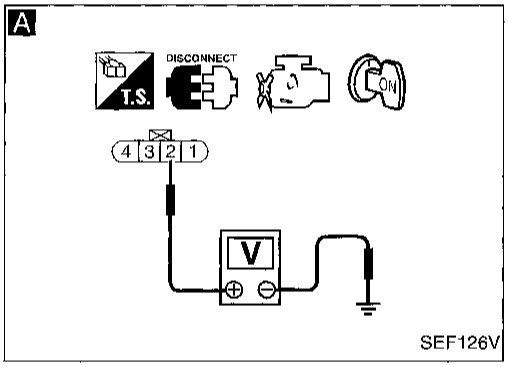

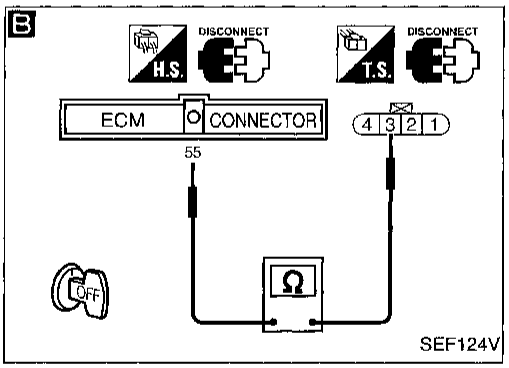

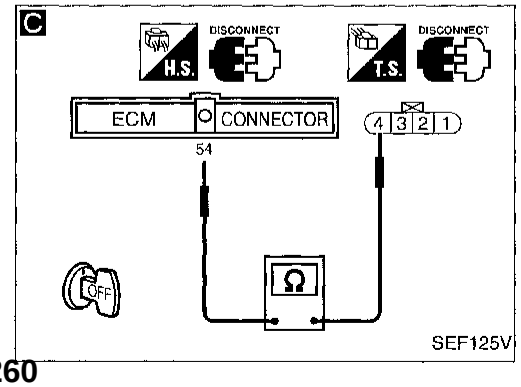

INSPECTION START

1. Turn ignition switch "OFF".
2. Loosen and retighten engine ground screws.

A

CHECK POWER SUPPLY.
1. Disconnect mass air flow sensor harness connector.
2. Turn ignition switch "ON".
3. Check voltage between terminal ② and ground with CONSULT or tester.
Voltage: Battery voltage

NG → Check the following.
- Harness for open or short between ECCS relay and mass air flow sensor
- Harness for open or short between mass air flow sensor and ECM

If NG, repair harness or connectors.

OK ↓

B

CHECK GROUND CIRCUIT.
1. Turn ignition switch "OFF".
2. Disconnect ECM harness connector.
3. Check harness continuity between terminal ③ and ECM terminal ⑤⑤.
Continuity should exist.
If OK, check harness for short to ground and short to power.

NG → Repair open circuit, short to ground or short to power in harness or connectors.

OK ↓

C

CHECK INPUT SIGNAL CIRCUIT.
Check harness continuity between terminal ④ and ECM terminal ⑤④.
Continuity should exist.
If OK, check harness for short.

NG → Repair open circuit, short to ground or short to power in harness or connectors.

OK ↓

CHECK COMPONENT
(Mass air flow sensor).
Refer to "COMPONENT INSPECTION", EC-107.

NG → Replace mass air flow sensor.

OK ↓

Ⓐ

(Go to next page.)

Simpo PDF Merge and Split Unregistered Version - http://www.simpopdf.com

Ⓐ

CHECK SHIELD CIRCUIT.
1. Turn ignition switch "OFF".
2. Remove joint connector-2.
3. Check the following.
   - Continuity between joint connector-2 terminal ① and ground
   - Joint connector-2
     (Refer to "HARNESS LAYOUT" in EL section.)

Continuity should exist.
If OK, check harness for short to power.

NG → Repair open circuit, short to ground or short to power in harness or connectors.

OK ↓

Perform "TROUBLE DIAGNOSIS FOR INTERMITTENT INCIDENT", EC-93. ↓

INSPECTION END

Procedure B

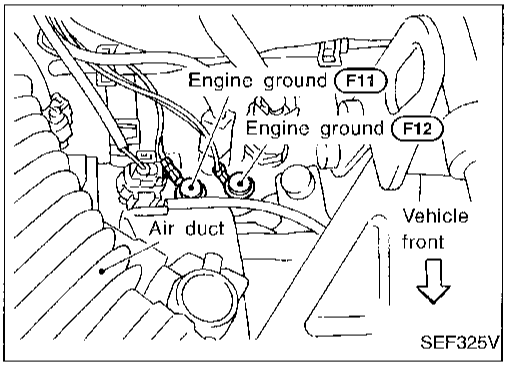

INSPECTION START ↓

CHECK INTAKE SYSTEM.
Check the followings for connection.
- Air duct
- Air cleaner
- Vacuum hoses
- Intake air passage between air duct to collector

If disconnected, reconnect the parts.

NG → Reconnect the parts.

OK ↓

1. Turn ignition switch "OFF".
2. Loosen and retighten engine ground screws. ↓

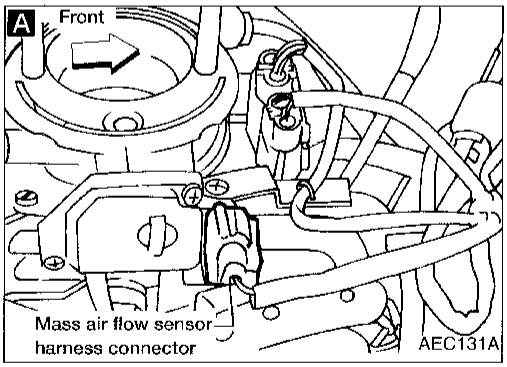

A

CHECK POWER SUPPLY.
1. Disconnect mass air flow sensor harness connector.
2. Turn ignition switch "ON".
3. Check voltage between terminal ② and ground with CONSULT or tester.

Voltage: Battery voltage

NG → Check the following.
- Harness for open or short between ECCS relay and mass air flow sensor
- Harness for open or short between mass air flow sensor and ECM

If NG, repair harness or connectors.

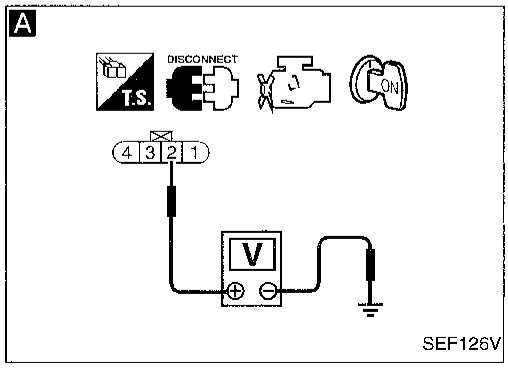

OK ↓

Ⓐ

(Go to next page.)

Simpo PDF Merge and Split Unregistered Version - http://www.simpopdf.com

B

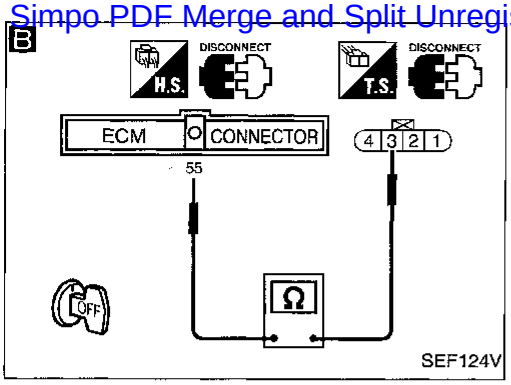

SEF124V

C

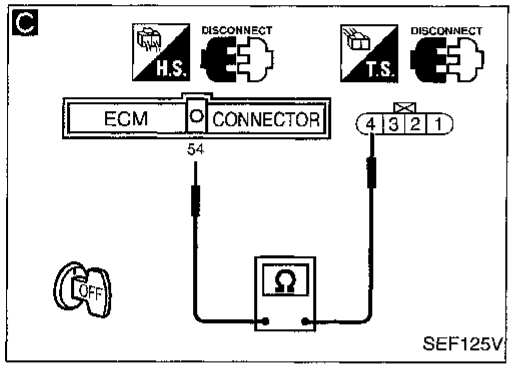

SEF125V

Ⓐ

B

CHECK GROUND CIRCUIT.
1. Turn ignition switch "OFF".
2. Disconnect ECM harness connector.
3. Check harness continuity between terminal ③ and ECM terminal ⑤⑤.
   Continuity should exist.
   If OK, check harness for short to ground and short to power.

NG → Repair open circuit, short to ground or short to power in harness or connectors.

OK ↓

C

CHECK INPUT SIGNAL CIRCUIT.
Check harness continuity between terminal ④ and ECM terminal ⑤④.
Continuity should exist.
If OK, check harness for short to ground and short to power.

NG → Repair open circuit, short to ground or short to power in harness or connectors.

OK ↓

CHECK COMPONENT
(Mass air flow sensor).
Refer to "COMPONENT INSPECTION", EC-107.

NG → Replace mass air flow sensor.

OK ↓

CHECK SHIELD CIRCUIT.
1. Turn ignition switch "OFF".
2. Remove joint connector-2.
3. Check the following.
   - Continuity between joint connector-2 terminal ① and ground
   - Joint connector-2
     (Refer to "HARNESS LAYOUT" in EL section.)

   Continuity should exist.
   If OK, check harness for short to power.

NG → Repair open circuit, short to ground or short to power in harness or connectors.

OK ↓

Perform "TROUBLE DIAGNOSIS FOR INTERMITTENT INCIDENT", EC-93.

↓

INSPECTION END

Simpo PDF Merge and Split Unregistered Version - http://www.simpopdf.com

Mass Air Flow Sensor (MAFS) (Cont'd)

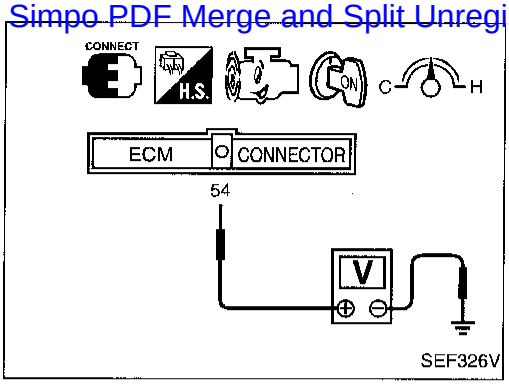

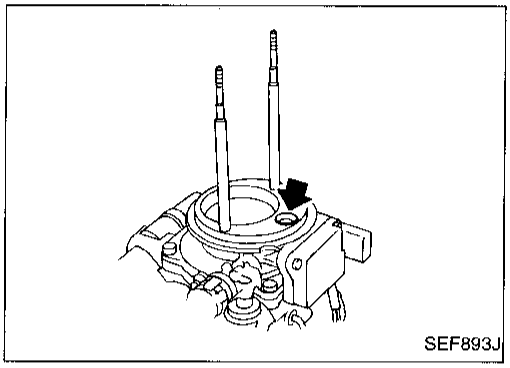

COMPONENT INSPECTION

Mass air flow sensor

1. Turn ignition switch "ON".
2. Start engine and warm it up to normal operating temperature.
3. Check voltage between terminal ⑤④ and ground.

Conditions	Voltage V
Ignition switch "ON" (Engine stopped.)	Less than 1.0
Idle (Engine is warmed-up to normal operating temperature.)	1.3 - 1.7
2,500 rpm (Engine is warmed-up to normal operating temperature.)	1.9 - 2.3
Idle to about 4,000 rpm*	1.3 - 1.7 to Approx. 3

*: Check for linear voltage rise in response to increases to about 4,000 rpm in engine speed.

4. If the voltage is out of specification, disconnect mass air flow sensor harness connector and connect it again. Repeat above check.
5. If NG, remove mass air flow sensor from air duct. Check hot wire for damage or dust.

Simpo PDF Merge and Split Unregistered Version - http://www.simpopdf.com

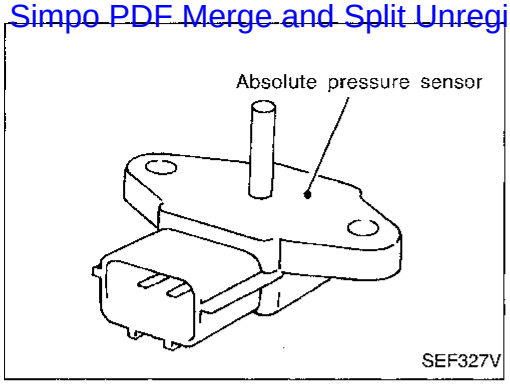

Absolute Pressure Sensor

COMPONENT DESCRIPTION

The absolute pressure sensor is connected to the MAP/BARO switch solenoid valve by a hose. The sensor detects ambient barometric pressure and intake manifold pressure and sends the voltage signal to the ECM. As the pressure increases, the voltage rises.

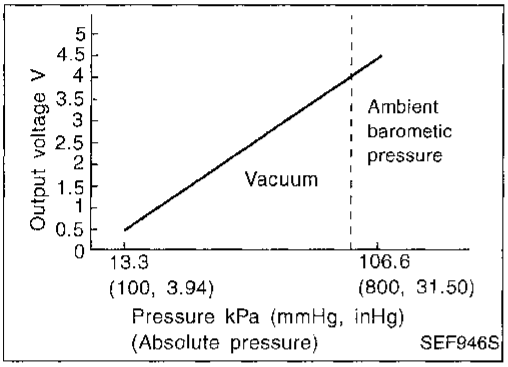

ON BOARD DIAGNOSIS LOGIC

Diagnostic Trouble Code No.	Malfunction is detected when	Check Items (Possible Cause)
P0105 0803	A) An excessively low or high voltage from the sensor is sent to ECM.	● Harness or connectors (Absolute pressure sensor circuit is open or shorted.) ● Absolute pressure sensor
	B) A high voltage from the sensor is sent to ECM under light load driving conditions.	● Hoses (Hoses between the intake manifold and absolute pressure sensor are disconnected or clogged.) ● Intake air leaks ● MAP/BARO switch solenoid valve ● Absolute pressure sensor
	C) A low voltage from the sensor is sent to ECM under heavy load driving conditions.	● Absolute pressure sensor

DIAGNOSTIC TROUBLE CODE CONFIRMATION PROCEDURE

Perform "Procedure for malfunction A" first. If the 1st trip DTC cannot be confirmed, perform "Procedure for malfunction B". If the 1st trip DTC is not confirmed on "Procedure for malfunction B", perform "Procedure for malfunction C".

Absolute Pressure Sensor (Cont'd)

Simpo PDF Merge and Split Unregistered Version - http://www.simpopdf.com

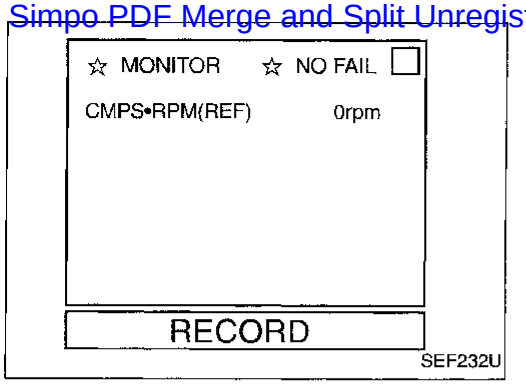

Procedure for malfunction A

NOTE:
If "DIAGNOSTIC TROUBLE CODE CONFIRMATION PROCEDURE" has been previously conducted, always turn ignition switch "OFF" and wait at least 5 seconds before conducting the next test.

1) Turn ignition switch "ON".
2) Select "DATA MONITOR" mode with CONSULT.
3) Wait at least 6 seconds.

OR

1) Turn ignition switch "ON" and wait at least 6 seconds.
2) Select "MODE 7" with GST.

OR

1) Turn ignition switch "ON" and wait at least 6 seconds.
2) Turn ignition switch "OFF", wait at least 5 seconds and then turn "ON".
3) Perform "Diagnostic Test Mode II (Self-diagnostic results)" with ECM.

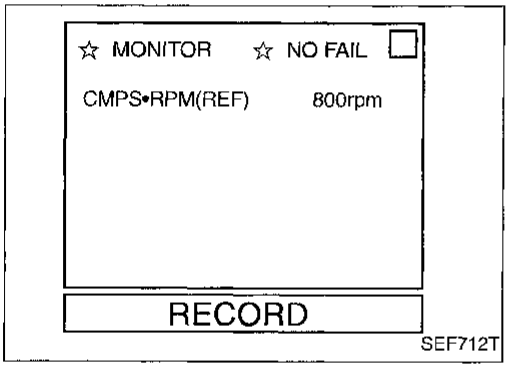

Procedure for malfunction B

NOTE:
If "DIAGNOSTIC TROUBLE CODE CONFIRMATION PROCEDURE" has been previously conducted, always turn ignition switch "OFF" and wait at least 5 seconds before conducting the next test.

1) Start engine and warm it up to normal operating temperature.
2) Turn ignition switch "OFF" and wait at least 5 seconds.
3) Turn ignition switch "ON" and select "DATA MONITOR" mode with CONSULT.
4) Start engine and let it idle.
5) Wait at least 10 seconds.

OR

1) Start engine and warm it up to normal operating temperature.
2) Turn ignition switch "OFF" and wait at least 5 seconds.
3) Start engine.
4) Let engine idle and wait at least 10 seconds.
5) Select "MODE 7" with GST.

OR

1) Start engine and warm it up to normal operating temperature.
2) Turn ignition switch "OFF" and wait at least 5 seconds.
3) Start engine.
4) Let engine idle and wait at least 10 seconds.
5) Turn ignition switch "OFF", wait at least 5 seconds and then turn "ON".
6) Perform "Diagnostic Test Mode II (Self-diagnostic results)" with ECM.

Simpo PDF Merge and Split Unregistered Version - http://www.simpopdf.com

Absolute Pressure Sensor (Cont'd)

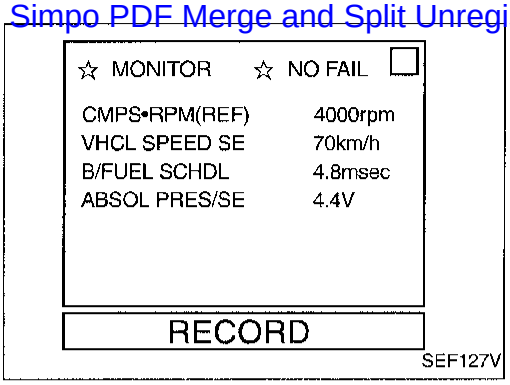

Procedure for malfunction C

CAUTION:
Always drive vehicle at a safe speed.

NOTE:
If "DIAGNOSTIC TROUBLE CODE CONFIRMATION PROCEDURE" has been previously conducted, always turn ignition switch "OFF" and wait at least 5 seconds before conducting the next test.

1) Turn ignition switch "ON".
2) Select "DATA MONITOR" mode with CONSULT.

The voltage of "ABSOL PRES/SE" should be more than 1.74 [V].
If the check result is NG, go to "DIAGNOSTIC PROCEDURE", EC-112.
If the check result is OK, go to following step.

3) Start engine and warm it up to normal operating temperature.
4) Turn ignition switch "OFF" and wait at least 5 seconds.
5) Start engine and let it idle for at least 10 seconds.
6) Select "DATA MONITOR" mode with CONSULT.
7) Drive the vehicle at least 3 consecutive seconds under the following conditions,
   B/FUEL SCHDL: More than 4 ms
   CMPS·RPM (REF): 3,000 - 4,800 rpm
   Selector lever: Suitable position
   Driving pattern: Driving vehicle uphill (Increased engine load) will help maintain the driving conditions required for this test.

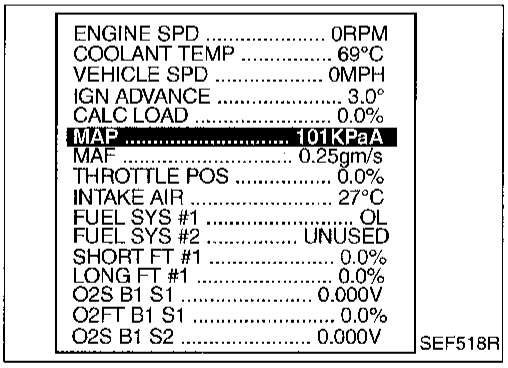

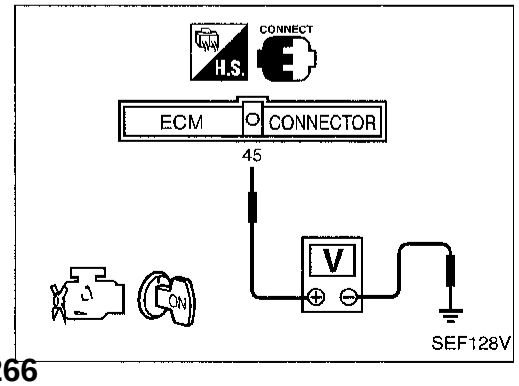

OR

OVERALL FUNCTION CHECK

Use this procedure to check the overall function of the front heated oxygen sensor circuit. During this check, a 1st trip DTC might not be confirmed.

Procedure for malfunction C

1) Turn ignition switch "ON".
2) Select "MAP" in "MODE 1" with GST.
3) Make sure that the pressure of "MAP" is more than 46 kPa (0.47 kg/cm^2, 6.7 psi).

OR

1) Turn ignition switch "ON".
2) Make sure that the voltage between ECM terminal ㊺ and ground is more than 1.74 [V].

Simpo PDF Merge and Split Unregistered Version - http://www.simpopdf.com

EC-AP/SEN-01

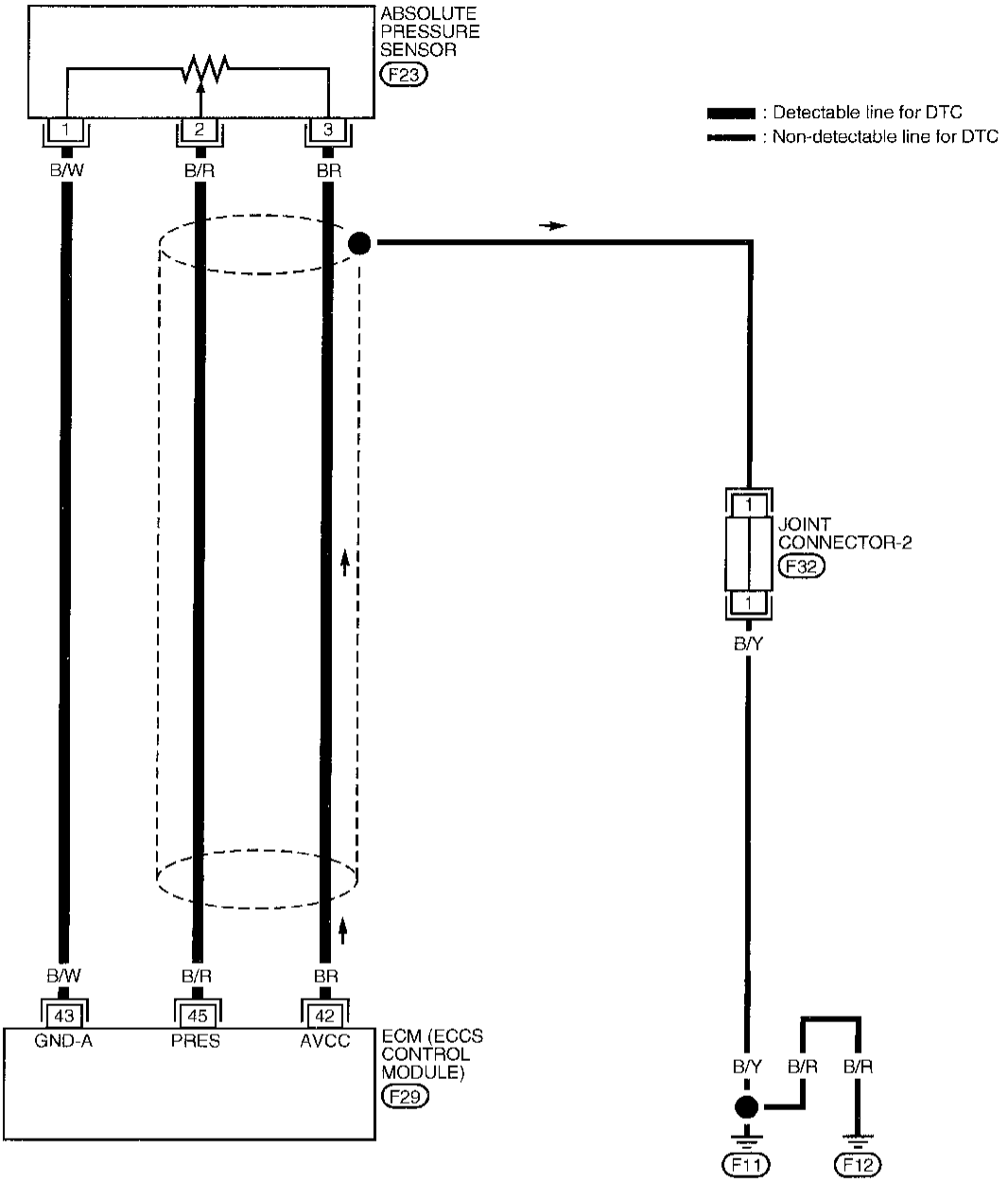

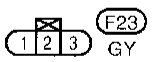



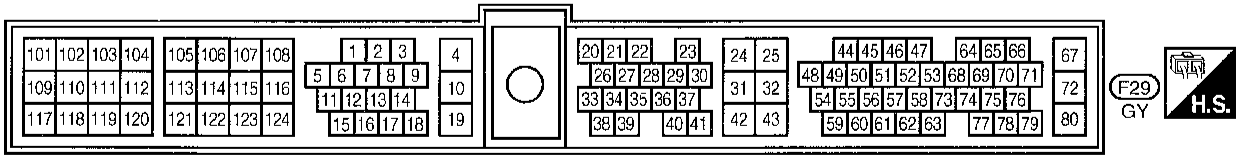

AEC520A

Absolute Pressure Sensor (Cont'd)

Simpo PDF Merge and Split Unregistered Version - http://www.simpopdf.com

DIAGNOSTIC PROCEDURE

If the trouble is duplicated after "Procedure for malfunction A or C", perform "Procedure A" below. If the trouble is duplicated after "Procedure for malfunction B", perform "Procedure B" on next page.

Procedure A

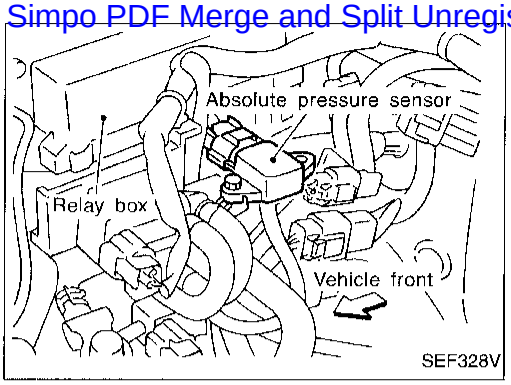

SEF328V

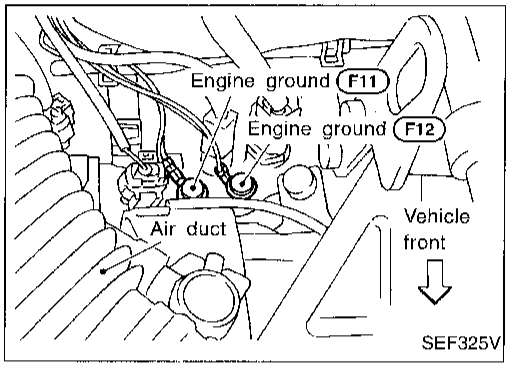

SEF325V

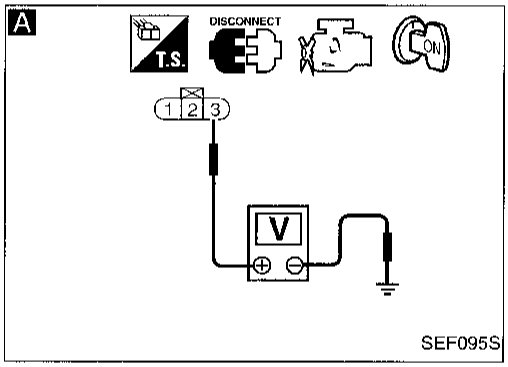

SEF095S

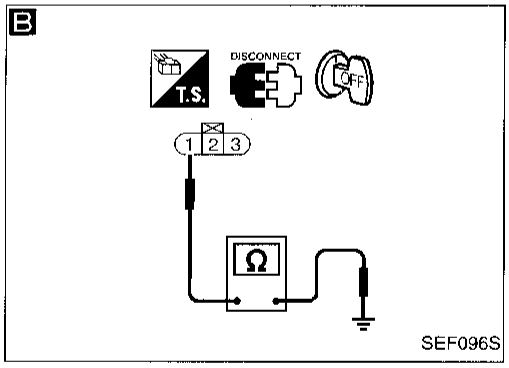

SEF096S

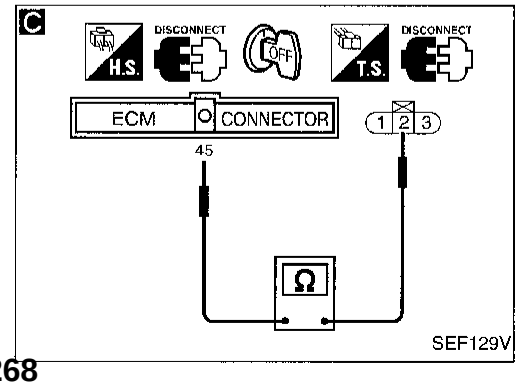

SEF129V

INSPECTION START

1. Turn ignition switch "OFF".
2. Loosen and retighten engine ground screws.

OK

A

CHECK POWER SUPPLY.
1. Turn ignition switch "OFF".
2. Disconnect absolute pressure sensor harness connector.
3. Check sensor connector for water.
   Water should not exist.
   If OK, go to step 4. If NG, repair or replace harness connector.
4. Turn ignition switch "ON".
5. Check voltage between terminal ③ and engine ground with CONSULT or tester.
   Voltage: Approximately 5V

NG → Repair harness or connectors.

OK

B

CHECK GROUND CIRCUIT.
1. Turn ignition switch "OFF".
2. Check harness continuity between terminal ① and engine ground.
   Continuity should exist.
   If OK, check harness for short to ground and short to power.

NG → Repair open circuit, short to ground or short to power in harness or connectors.

OK

C

CHECK INPUT SIGNAL CIRCUIT.
1. Disconnect ECM harness connector.
2. Check harness continuity between ECM terminal ㊺ and terminal ②.
   Continuity should exist.
   If OK, check harness for short to ground and short to power.

NG → Repair open circuit, short to ground or short to power in harness or connectors.

OK

CHECK COMPONENT (Absolute pressure sensor).
Refer to "COMPONENT INSPECTION", EC-114.

NG → Replace absolute pressure sensor.

OK

Perform "TROUBLE DIAGNOSIS FOR INTERMITTENT INCIDENT", EC-93.

INSPECTION END

Absolute Pressure Sensor (Cont'd)

Simpo PDF Merge and Split Unregistered Version - http://www.simpopdf.com

Procedure B

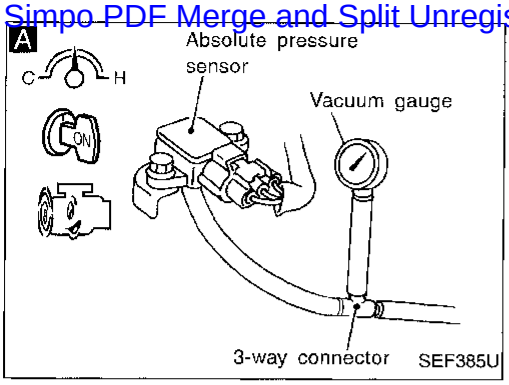

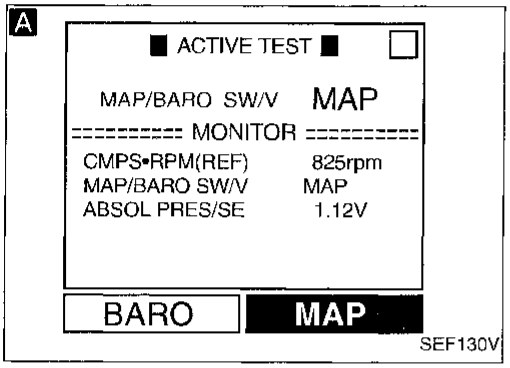

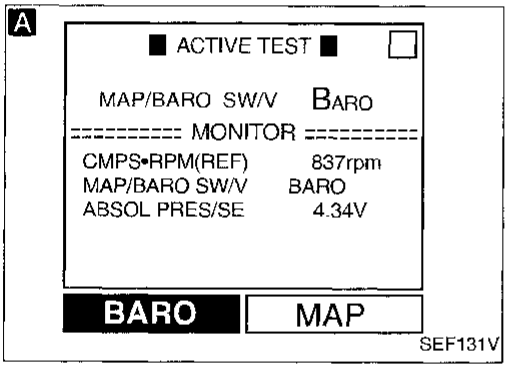

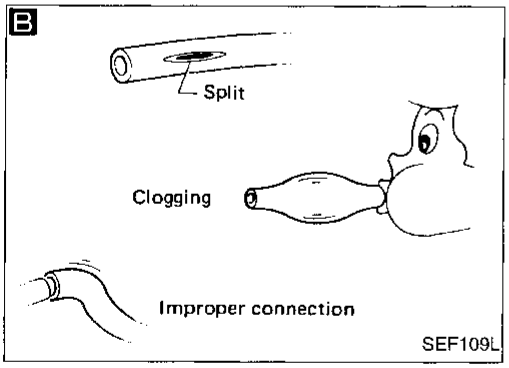

INSPECTION START

A

CHECK VACUUM SOURCE TO ABSOLUTE PRESSURE SENSOR.

1. Start engine and warm it up to normal operating temperature.
2. Turn ignition switch "OFF".
3. Connect MAP/BARO switch solenoid valve and absolute pressure sensor with a rubber tube that has vacuum gauge.
4. Turn ignition switch "ON".
5. Select "MAP/BARO SW/V" in "ACTIVE TEST" mode with CONSULT.
6. Start engine and let it idle.
7. Touch "MAP" and "BARO" alternately and check for vacuum.

MAP/BARO SW/V	Vacuum
BARO	Should not exist
MAP	Should exist

OR

4. Turn ignition switch "ON".
5. Start engine and check for vacuum.
   For 5 seconds after starting engine:
   Vacuum should not exist.
6. More than 5 seconds after starting engine.
   Vacuum should exist.

NG → CHECK VACUUM HOSE.
Check vacuum hose for clogging, cracks, disconnection or improper connection.
If NG, repair or replace the hose.

OK → Check vacuum port for clogging.
If NG, clean it.

OK → CHECK COMPONENT (MAP/BARO switch solenoid valve).
Refer to "COMPONENT INSPECTION" of "TROUBLE DIAGNOSIS FOR DTC P1105", EC-312.

OK → CHECK INTAKE SYSTEM.
Check intake system for air leaks.

NG → Replace MAP/BARO switch solenoid valve.

OK

B

CHECK HOSE BETWEEN ABSOLUTE PRESSURE SENSOR AND MAP/BARO SWITCH SOLENOID VALVE.

1. Turn ignition switch "OFF".
2. Check hose for clogging, cracks, disconnection or improper connection.

NG → Repair or reconnect hose.

OK

CHECK COMPONENT (Absolute pressure sensor).
Refer to "COMPONENT INSPECTION" on next page.

NG → Replace absolute pressure sensor.

OK

Perform "TROUBLE DIAGNOSIS FOR INTERMITTENT INCIDENT", EC-93.

INSPECTION END

Simpo PDF Merge and Split Unregistered Version - http://www.simpopdf.com

Absolute Pressure Sensor (Cont'd)

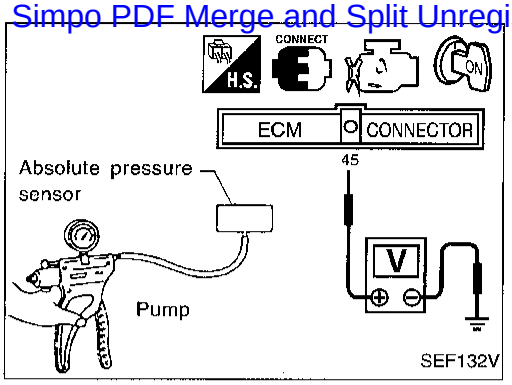

COMPONENT INSPECTION

Absolute pressure sensor

1. Remove absolute pressure sensor with its harness connector connected.
2. Remove hose from absolute pressure sensor.
3. Turn ignition switch "ON" and check output voltage between ECM terminal ㊺ and engine ground.
   The voltage should be 3.2 to 4.8 V.
4. Use pump to apply vacuum of −26.7 kPa (−200 mmHg, −7.87 inHg) to absolute pressure sensor as shown in figure and check the output voltage.
   The voltage should be 1.0 to 1.4 V lower than the value measured in step 3.

CAUTION:

- **Always calibrate the vacuum pump gauge when using it.**
- **Do not apply vacuum below −93.3 kPa (−700 mmHg, −27.56 inHg) or pressure over 101.3 kPa (760 mmHg, 29.92 inHg).**

5. If NG, replace absolute pressure sensor.

Simpo PDF Merge and Split Unregistered Version - http://www.simpopdf.com

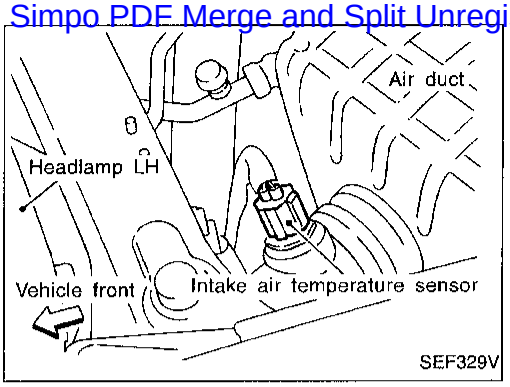

Intake Air Temperature Sensor

COMPONENT DESCRIPTION

The intake air temperature sensor is mounted to the air duct housing. The sensor detects intake air temperature and transmits a signal to the ECM.

The temperature sensing unit uses a thermistor which is sensitive to the change in temperature. Electrical resistance of the thermistor decreases in response to the temperature rise.

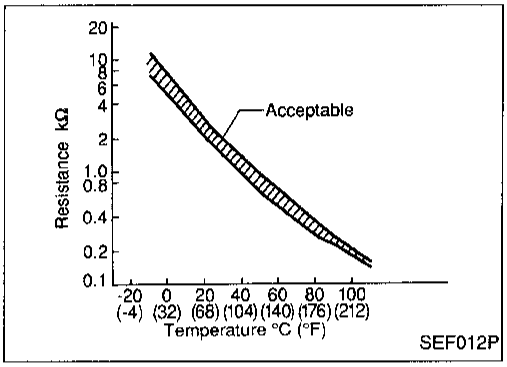

<Reference data>

Intake air temperature °C (°F)	Voltage* V	Resistance kΩ
20 (68)	3.5	2.1 - 2.9
80 (176)	1.23	0.27 - 0.38

*: These data are reference values and are measured between ECM terminal (61) (Intake air temperature sensor) and ECM terminal (32) (ECM ground).

ON BOARD DIAGNOSIS LOGIC

Diagnostic Trouble Code No.	Malfunction is detected when ...	Check Items (Possible Cause)
P0110 0401	A) An excessively low or high voltage from the sensor is sent to ECM. ..... B) Rationally incorrect voltage from the sensor is sent to ECM, compared with the voltage signal from engine coolant temperature sensor.	● Harness or connectors (The sensor circuit is open or shorted.) ● Intake air temperature sensor

DIAGNOSTIC TROUBLE CODE CONFIRMATION PROCEDURE

Perform "Procedure for malfunction A" first. If DTC cannot be confirmed, perform "Procedure for malfunction B".

NOTE:
If "DIAGNOSTIC TROUBLE CODE CONFIRMATION PROCEDURE" has been previously conducted, always turn ignition switch "OFF" and wait at least 5 seconds before conducting the next test.

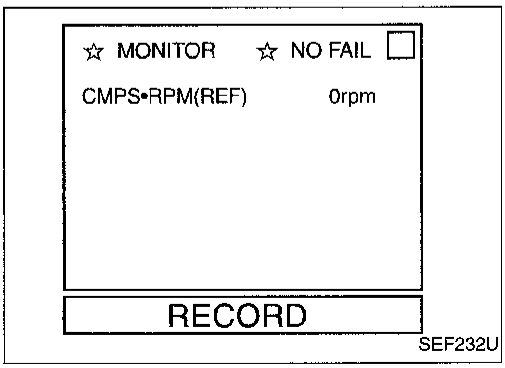

Procedure for malfunction A

1) Turn ignition switch "ON".
2) Select "DATA MONITOR" mode with CONSULT.
3) Wait at least 5 seconds.

OR

1) Turn ignition switch "ON" and wait at least 5 seconds.
2) Select MODE 7 with GST.

Simpo PDF Merge and Split Unregistered Version - http://www.simpopdf.com

OR

1) Turn ignition switch "ON" and wait at least 5 seconds.
2) Turn ignition switch "OFF", wait at least 5 seconds and then turn "ON".
3) Perform "Diagnostic Test Mode II (Self-diagnostic results)" with ECM.

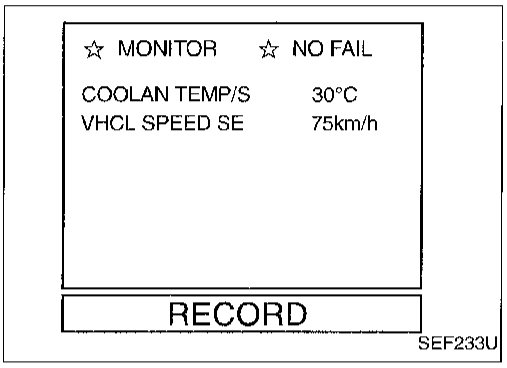

Procedure for malfunction B

CAUTION:
Always drive vehicle at a safe speed.

TESTING CONDITION:
This test may be conducted with the drive wheels lifted in the shop or by driving the vehicle. If a road test is expected to be easier, it is unnecessary to lift the vehicle.

1) Wait until engine coolant temperature is less than 90°C (194°F).
   (a) Turn ignition switch "ON".
   (b) Select "DATA MONITOR" mode with CONSULT.
   (c) Check the engine coolant temperature.
   (d) If the engine coolant temperature is above 90°C (194°F), turn ignition switch "OFF" and cool down engine.

- Perform the following steps before engine coolant temperature is above 90°C (194°F).

2) Turn ignition switch "ON".
3) Select "DATA MONITOR" mode with CONSULT.
4) Start engine.
5) Hold vehicle speed more than 70 km/h (43 MPH) for 100 consecutive seconds.

OR

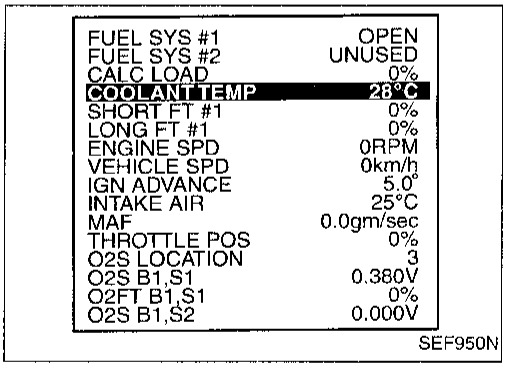

1) Wait until engine coolant temperature is less than 90°C (194°F).
   (a) Turn ignition switch "ON".
   (b) Select MODE 1 with GST.
   (c) Check the engine coolant temperature.
   (d) If the engine coolant temperature is above 90°C (194°F), turn ignition switch "OFF" and cool down engine.

- Perform the following steps before engine coolant temperature is above 90°C (194°F).

2) Start engine.
3) Hold vehicle speed more than 70 km/h (43 MPH) for 100 consecutive seconds.
4) Select MODE 7 with GST.

Intake Air Temperature Sensor (Cont'd)

Simpo PDF Merge and Split Unregistered Version - http://www.simpopdf.com

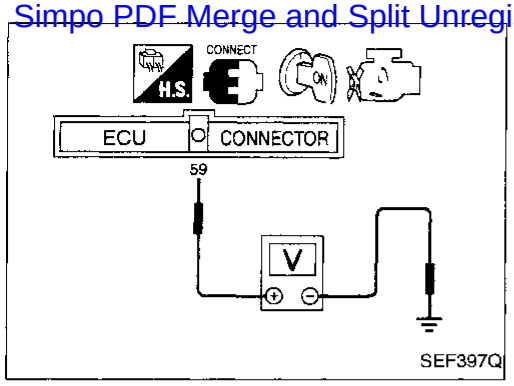

OR

NO TOOLS

1) Wait until engine coolant temperature is less than 90°C (194°F).
   (a) Turn ignition switch "ON".
   (b) Check voltage between ECM terminal (59) and ground.
   Voltage: More than 1.0 (V)
   (c) If the voltage is below 1.0 (V), turn ignition switch "OFF" and cool down engine.

- Perform the following steps before the voltage is below 1.0V.

2) Start engine.
3) Hold vehicle speed more than 70 km/h (43 MPH) for 100 consecutive seconds.
4) Turn ignition switch "OFF", wait at least 5 seconds and then turn "ON".
5) Perform "Diagnostic Test Mode II (Self-diagnostic results)" with ECM.

Simpo PDF Merge and Split Unregistered Version - http://www.simpopdf.com

EC-IATS-01

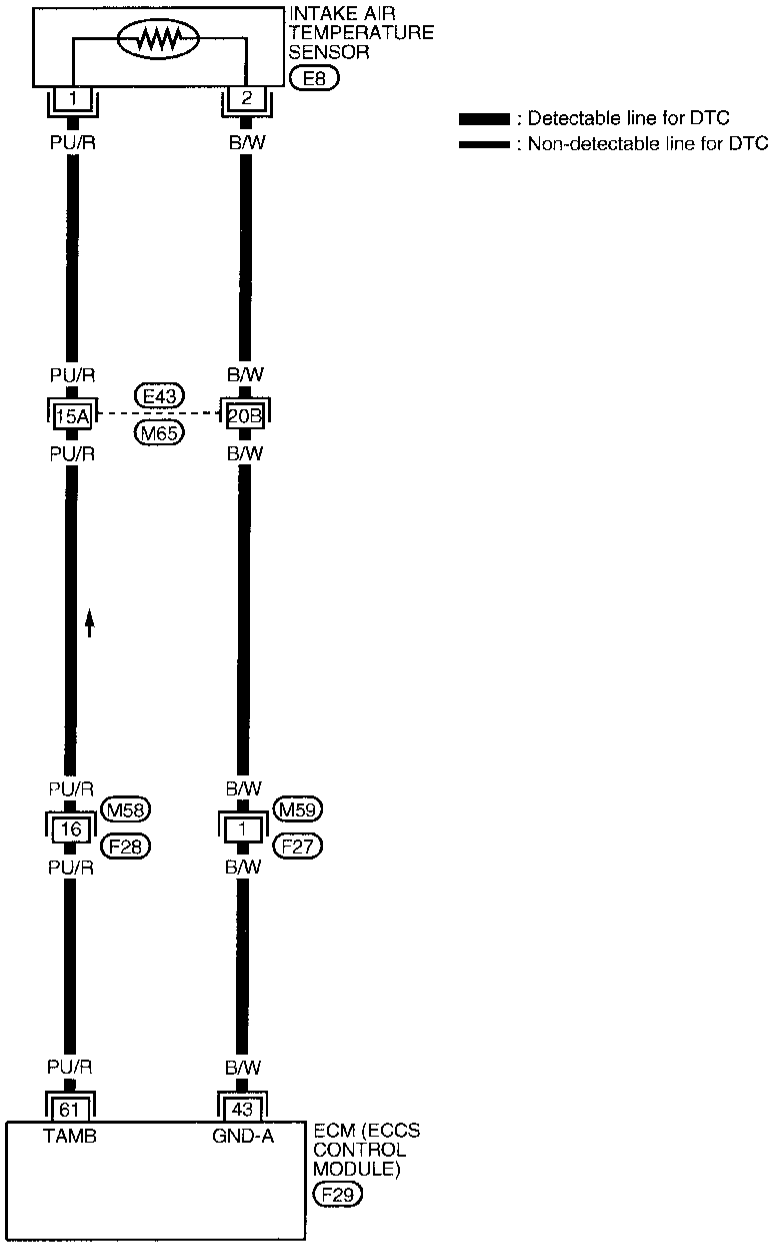

Refer to last page (Foldout page).
M65 , E43

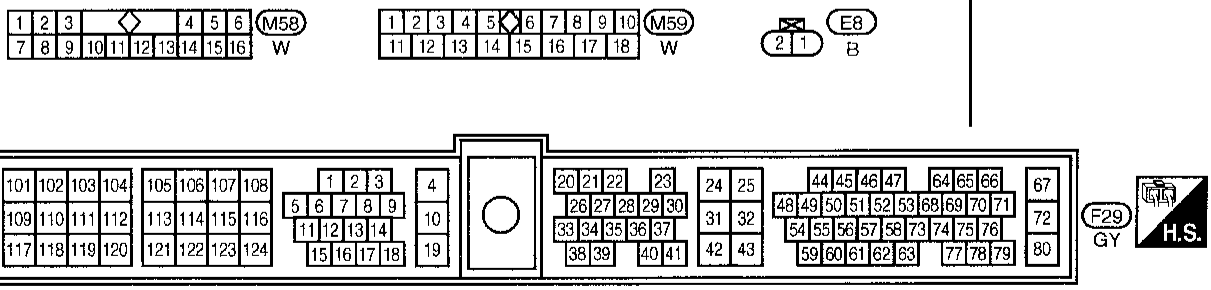

AEC521A

Intake Air Temperature Sensor (Cont'd)

Simpo PDF Merge and Split Unregistered Version - http://www.simpopdf.com

DIAGNOSTIC PROCEDURE

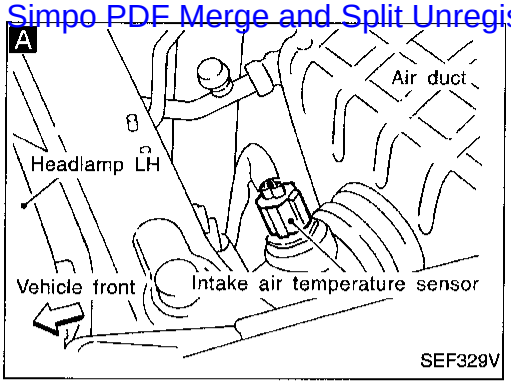

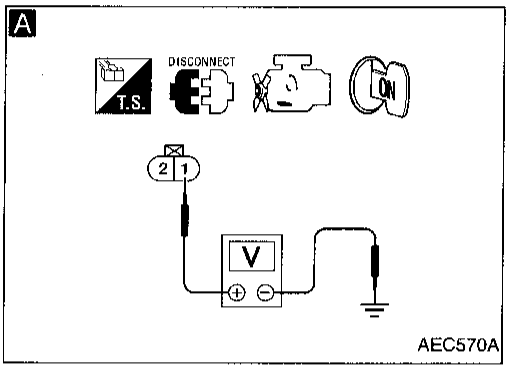

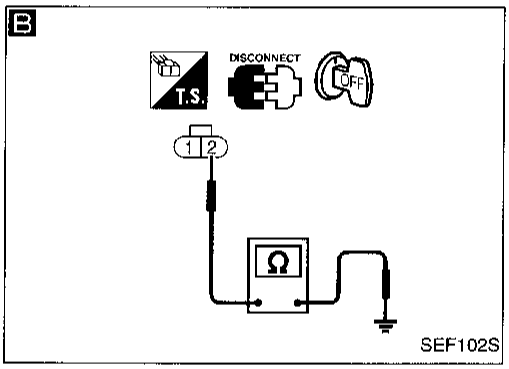

INSPECTION START

A

CHECK POWER SUPPLY.
1. Turn ignition switch "OFF".
2. Disconnect intake air temperature sensor harness connector.
3. Turn ignition switch "ON".
4. Check voltage between terminal ① and ground.

Voltage:
Approximately 5V

NG → Repair harness or connectors.

OK

B

CHECK GROUND CIRCUIT.
1. Turn ignition switch "OFF".
2. Check harness continuity between terminal ② and engine ground.

Continuity should exist.
If OK, check harness for short to ground and short to power.

NG → Repair open circuit, short to ground or short to power in harness or connectors.

OK

CHECK COMPONENT
(Intake air temperature sensor).
Refer to "COMPONENT INSPECTION" on next page.

NG → Replace intake air temperature sensor.

OK

Perform "TROUBLE DIAGNOSIS FOR INTERMITTENT INCIDENT", EC-93.

INSPECTION END

Intake Air Temperature Sensor (Cont'd)

Simpo PDF Merge and Split Unregistered Version - http://www.simpopdf.com

COMPONENT INSPECTION

Intake air temperature sensor

Check resistance as shown in the figure.

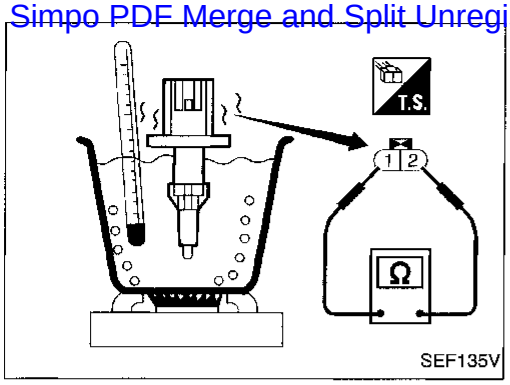

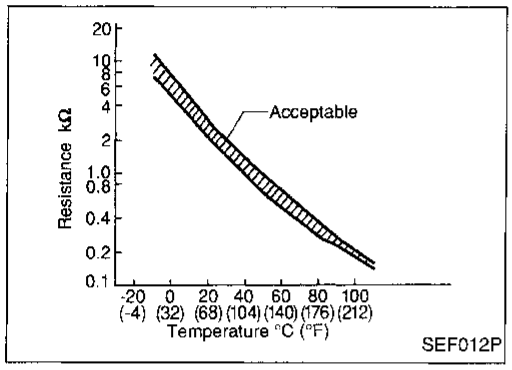

<Reference data>

Intake air temperature °C (°F)	Resistance kΩ
20 (68)	2.1 - 2.9
80 (176)	0.27 - 0.38

If NG, replace intake air temperature sensor.

Simpo PDF Merge and Split Unregistered Version - http://www.simpopdf.com

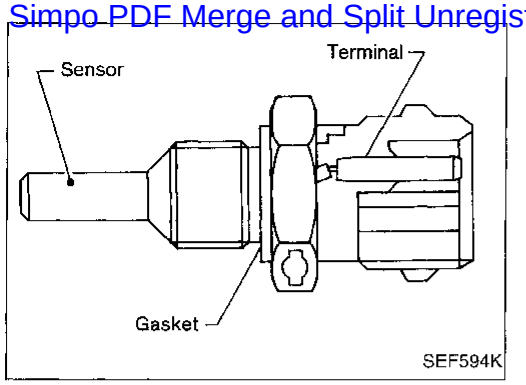

Engine Coolant Temperature Sensor (ECTS) (Circuit)

COMPONENT DESCRIPTION

The engine coolant temperature sensor is used to detect the engine coolant temperature. The sensor modifies a voltage signal from the ECM. The modified signal returns to the ECM as the engine coolant temperature input. The sensor uses a thermistor which is sensitive to the change in temperature. The electrical resistance of the thermistor decreases as temperature increases.

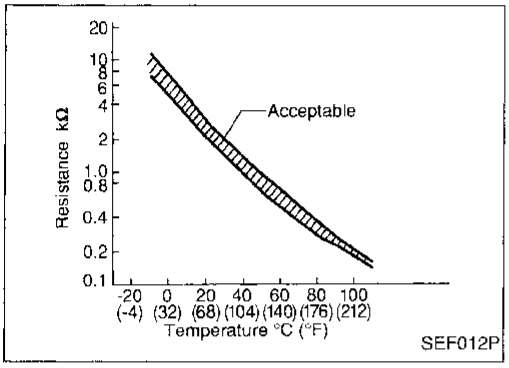

<Reference data>

Engine coolant temperature °C (°F)	Voltage* V	Resistance kΩ
−10 (14)	4.4	7.0 - 11.4
20 (68)	3.5	2.1 - 2.9
50 (122)	2.2	0.68 - 1.00
90 (194)	0.9	0.236 - 0.260

*: These data are reference values and are measured between ECM terminal (59) (Engine coolant temperature sensor) and ECM terminal (32) (ECM ground).

ON BOARD DIAGNOSIS LOGIC

Diagnostic Trouble Code No.	Malfunction is detected when ...	Check Items (Possible Cause)
P0115 0103	● An excessively high or low voltage from the sensor is sent to ECM.*	● Harness or connectors (The sensor circuit is open or shorted.) ● Engine coolant temperature sensor

*: When this malfunction is detected, the ECM enters fail-safe mode and the MIL lights up.

Detected items	Engine operating condition in fail-safe mode
Engine coolant temperature sensor circuit	Engine coolant temperature will be determined by ECM based on the time after turning ignition switch "ON" or "START". CONSULT displays the engine coolant temperature decided by ECM.

Condition	Engine coolant temperature decided (CONSULT display)
Just as ignition switch is turned ON or Start	40°C (104°F)
More than approx. 4 minutes after ignition ON or Start	80°C (176°F)
Except as shown above	40 - 80°C (104 - 176°F) (Depends on the time)

Simpo PDF Merge and Split Unregistered Version - http://www.simpopdf.com

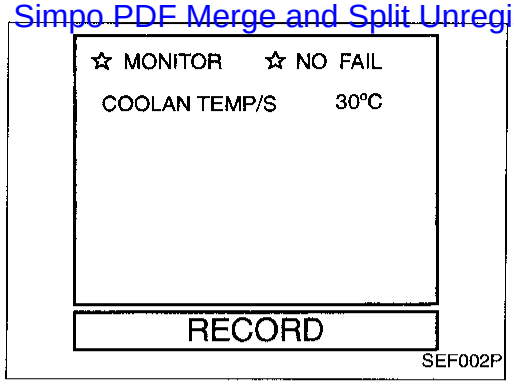

Engine Coolant Temperature Sensor (ECTS) (Circuit) (Cont'd)

DIAGNOSTIC TROUBLE CODE CONFIRMATION PROCEDURE

NOTE:
If "DIAGNOSTIC TROUBLE CODE CONFIRMATION PROCEDURE" has been previously conducted, always turn ignition switch "OFF" and wait at least 5 seconds before conducting the next test.

1) Turn ignition switch "ON".
2) Select "DATA MONITOR" mode with CONSULT.
3) Wait at least 5 seconds.

OR

1) Turn ignition switch "ON" and wait at least 5 seconds.
2) Select "MODE 7" with GST.

OR

1) Turn ignition switch "ON" and wait at least 5 seconds.
2) Turn ignition switch "OFF", wait at least 5 seconds and then turn "ON".
3) Perform "Diagnostic Test Mode II (Self-diagnostic results)" with ECM.

Engine Coolant Temperature Sensor (ECTS) (Circuit) (Cont'd)

Simpo PDF Merge and Split Unregistered Version - http://www.simpopdf.com

EC-ECTS-01

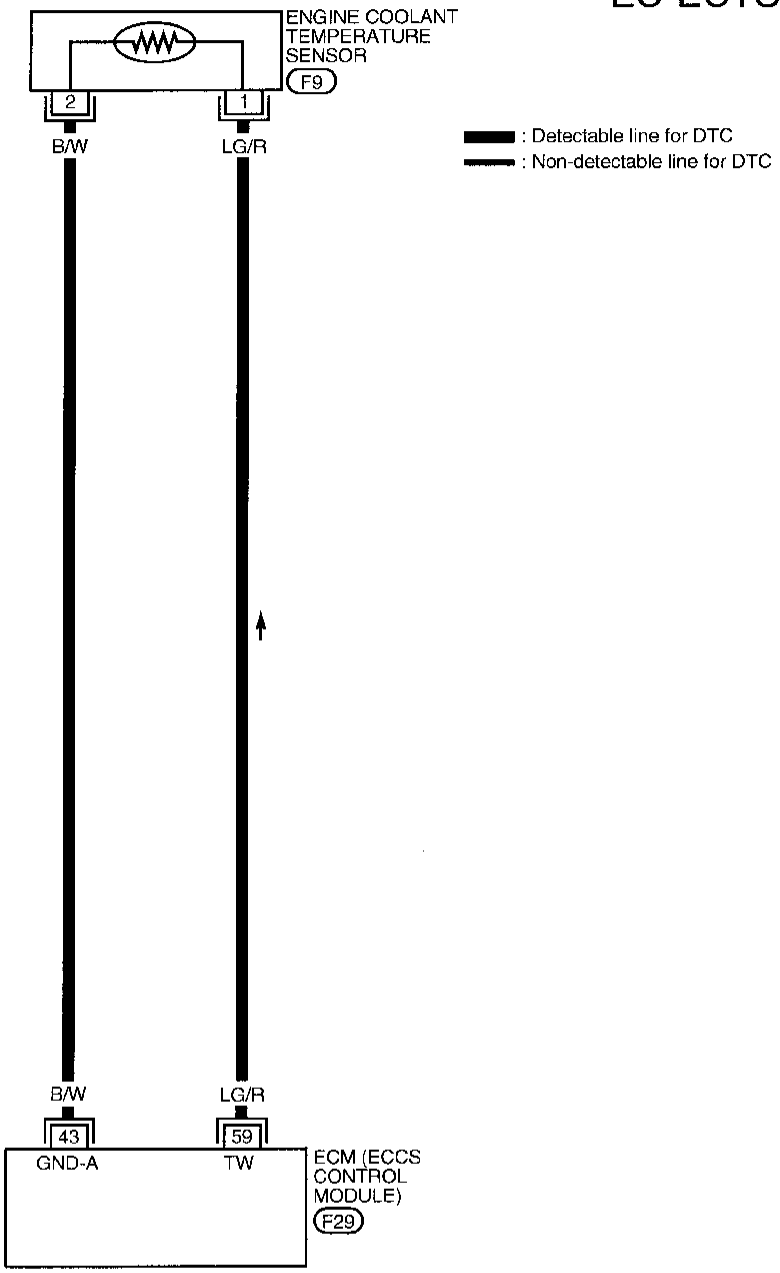

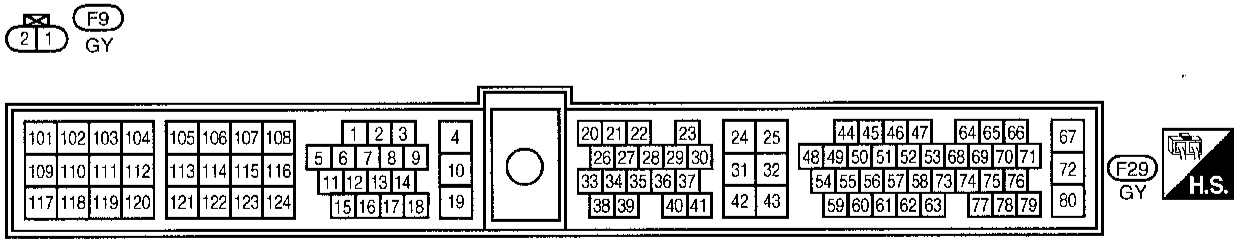

AEC522A

Engine Coolant Temperature Sensor (ECTS) (Circuit) (Cont'd)

Simpo PDF Merge and Split Unregistered Version - http://www.simpopdf.com

DIAGNOSTIC PROCEDURE

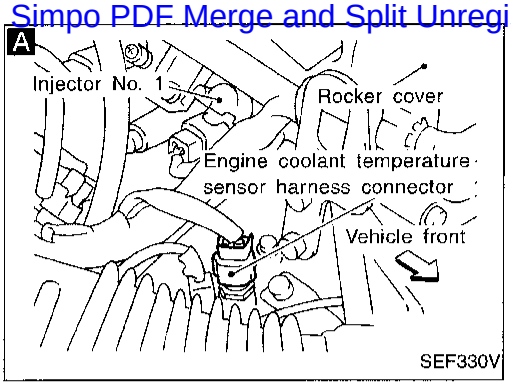

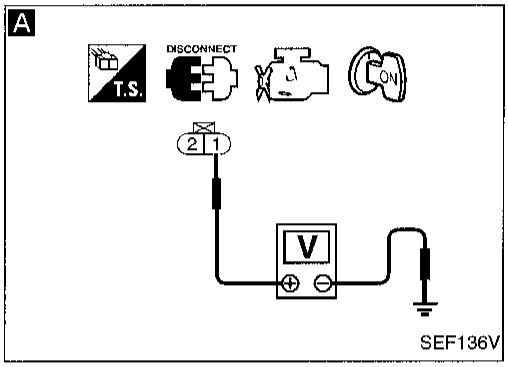

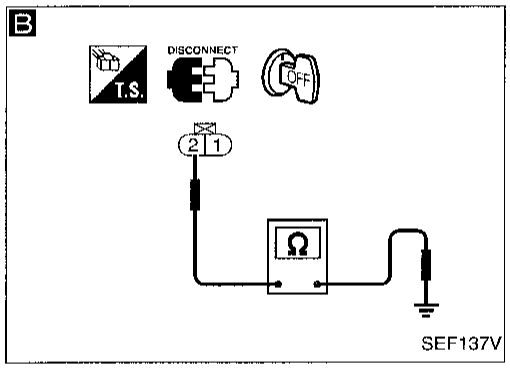

INSPECTION START

A

CHECK POWER SUPPLY.
1. Turn ignition switch "OFF".
2. Disconnect engine coolant temperature sensor harness connector.
3. Turn ignition switch "ON".
4. Check voltage between terminal ① and ground with CONSULT or tester.

Voltage:
Approximately 5V

NG → Repair harness or connectors.

OK

B

CHECK GROUND CIRCUIT.
1. Turn ignition switch "OFF".
2. Check harness continuity between terminal ② and engine ground.

Continuity should exist.
If OK, check harness for short to ground and short to power.

NG → Repair open circuit, short to ground or short to power in harness or connectors.

OK

CHECK COMPONENT
(Engine coolant temperature sensor).
Refer to "COMPONENT INSPECTION" on next page.

NG → Replace engine coolant temperature sensor.

OK

Perform "TROUBLE DIAGNOSIS FOR INTERMITTENT INCIDENT", EC-93.

INSPECTION END

Simpo PDF Merge and Split Unregistered Version - http://www.simpopdf.com

Engine Coolant Temperature Sensor (ECTS) (Circuit) (Cont'd)

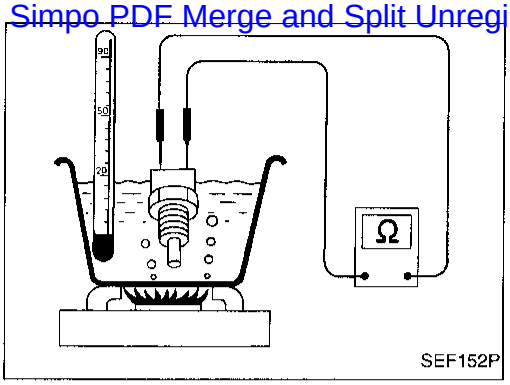

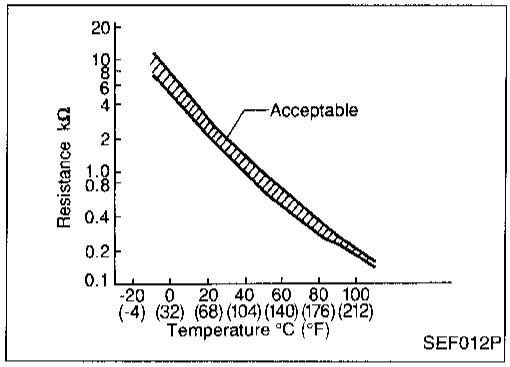

COMPONENT INSPECTION

Engine coolant temperature sensor

Check resistance as shown in the figure.

<Reference data>

Temperature °C (°F)	Resistance kΩ
20 (68)	2.1 - 2.9
50 (122)	0.68 - 1.00
90 (194)	0.236 - 0.260

If NG, replace engine coolant temperature sensor.

Simpo PDF Merge and Split Unregistered Version - http://www.simpopdf.com

Throttle Position Sensor

Note: If both DTC P0120 (0403) and DTC P0510 (0203) are displayed, perform TROUBLE DIAGNOSIS FOR DTC P0510 first. (See EC-297.)

COMPONENT DESCRIPTION

The throttle position sensor responds to the accelerator pedal movement. This sensor is a kind of potentiometer which transforms the throttle position into output voltage, and emits the voltage signal to the ECM. In addition, the sensor detects the opening and closing speed of the throttle valve and feeds the voltage signal to the ECM.

Idle position of the throttle valve is determined by the ECM receiving the signal from the throttle position sensor. This sensor controls engine operation such as fuel cut. On the other hand, the "Wide open and closed throttle position switch", which is built into the throttle position sensor unit, is not used for engine control.

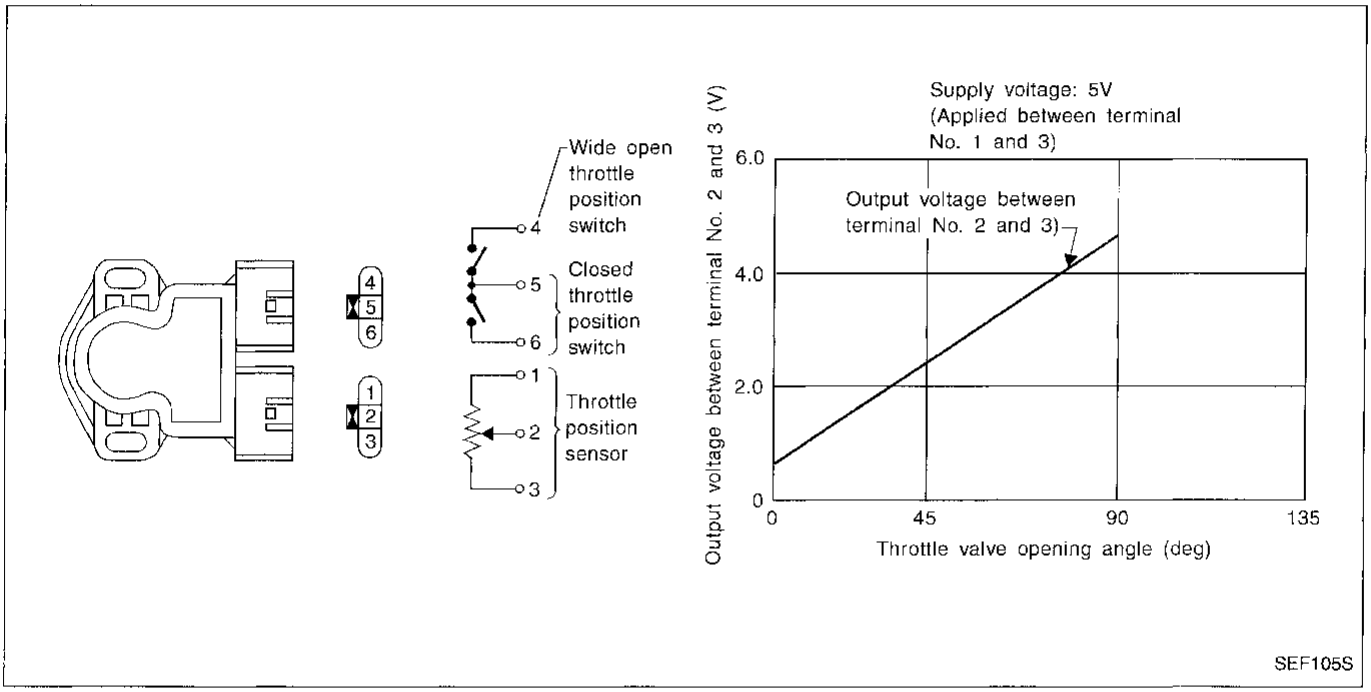

CONSULT REFERENCE VALUE IN DATA MONITOR MODE

Specification data are reference values.

MONITOR ITEM	CONDITION		SPECIFICATION
THRTL POS SEN	● Ignition switch: ON (Engine stopped) ● Engine: After warming up	Throttle valve: fully closed	0.3 - 0.7V
		Throttle valve: fully opened	Approx. 4.0V
ABSOL TH·P/S	● Ignition switch: ON (Engine stopped) ● Engine: After warming up	Throttle valve: fully closed	0.0%
		Throttle valve: fully opened	Approx. 80%

Simpo PDF Merge and Split Unregistered Version - http://www.simpopdf.com

ECM TERMINALS AND REFERENCE VALUE

Specification data are reference values and are measured between each terminal and ㉜ (ECM ground).

TERMINAL NO.	WIRE COLOR	ITEM	CONDITION	DATA (DC Voltage)
23	L	Throttle position sensor	Ignition switch "ON" (Warm-up condition) └ Accelerator pedal fully released	0.3 - 0.7V
			Ignition switch "ON" └ Accelerator pedal fully depressed	Approximately 4V
42	BR	Sensors' power supply	Ignition switch "ON"	Approximately 5V
43	B/W	Sensors' ground	Engine is running. └ Idle speed	Approximately 0V

ON BOARD DIAGNOSIS LOGIC

Diagnostic Trouble Code No.	Malfunction is detected when ...	Check Items (Possible Cause)
P0120 0403	A) An excessively low or high voltage from the sensor is sent to ECM.*	● Harness or connectors (The throttle position sensor circuit is open or shorted.) ● Throttle position sensor
	B) A high voltage from the sensor is sent to ECM under light load driving condition.	● Harness or connectors (The throttle position sensor circuit is open or shorted.) ● Throttle position sensor ● Fuel injector ● Camshaft position sensor ● Mass air flow sensor
	C) A low voltage from the sensor is sent to ECM under heavy load driving condition.	● Harness or connectors (The throttle position sensor circuit is open or shorted.) ● Intake air leaks ● Throttle position sensor

*: When this malfunction is detected, the ECM enters fail-safe mode and the MIL lights up.

Detected items	Engine operating condition in fail-safe mode
Throttle position sensor circuit	Throttle position will be determined based on the injected fuel amount and the engine speed. Therefore, acceleration will be poor.

Condition	Driving condition
When engine is idling	Normal
When accelerating	Poor acceleration

Simpo PDF Merge and Split Unregistered Version - http://www.simpopdf.com

Throttle Position Sensor (Cont'd)

DIAGNOSTIC TROUBLE CODE CONFIRMATION PROCEDURE

Perform "Procedure for malfunction A" first. If the DTC cannot be confirmed, perform "Procedure for malfunction B". If there is no problem on "Procedure for malfunction B", perform "Procedure for malfunction C".

Procedure for malfunction A

NOTE:
If "DIAGNOSTIC TROUBLE CODE CONFIRMATION PROCEDURE" has been previously conducted, always turn ignition switch "OFF" and wait at least 5 seconds before conducting the next test.

CAUTION:
Always drive vehicle at a safe speed.

TESTING CONDITION:

- **Before performing the following procedure, confirm that battery voltage is more than 10V at idle.**
- **This test may be conducted with the drive wheels lifted in the shop or by driving the vehicle. If a road test is expected to be easier, it is unnecessary to lift the vehicle.**

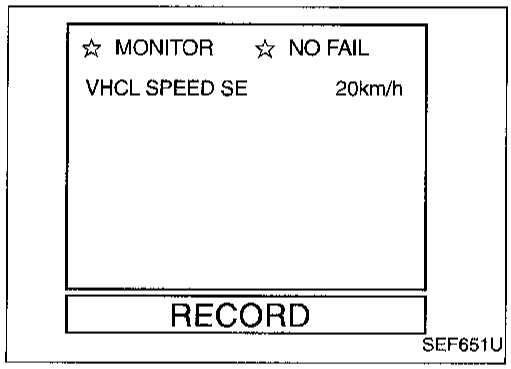

1) Turn ignition switch "ON" and select "DATA MONITOR" mode with CONSULT.
2) Start engine and maintain the following conditions for at least 5 consecutive seconds.
   VHCL SPEED SE: More than 4 km/h (2 MPH)
   Selector lever: Suitable position except "P" or "N" position

OR

1) Start engine and maintain the following conditions for at least 5 consecutive seconds.
   Vehicle speed: More than 4 km/h (2 MPH)
   Selector lever: Suitable position except "P" or "N" position
2) Select "MODE 7" with GST.

OR

1) Start engine and maintain the following conditions for at least 5 consecutive seconds.
   Vehicle speed: More than 4 km/h (2 MPH)
   Selector lever: Suitable position except "P" or "N" position
2) Turn ignition switch "OFF" and wait at least 5 seconds.
3) Turn ignition switch "ON" and perform "Diagnostic Test Mode II (Self-diagnostic results)" with ECM.

Throttle Position Sensor (Cont'd)

Simpo PDF Merge and Split Unregistered Version - http://www.simpopdf.com

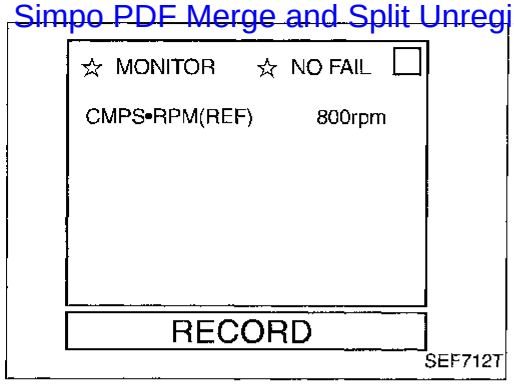

Procedure for malfunction B

NOTE:
If "DIAGNOSTIC TROUBLE CODE CONFIRMATION PROCEDURE" has been previously conducted, always turn ignition switch "OFF" and wait at least 5 seconds before conducting the next test.

1) Turn ignition switch "ON".
2) Select "DATA MONITOR" mode with CONSULT.
3) Start engine and let it idle for at least 10 seconds.
   If idle speed is over 1,100 rpm, maintain the following conditions for at least 10 seconds to keep engine speed below 1,100 rpm.
   A/T model
   Selector lever: Suitable position except "P" or "N"
   Brake pedal: Depressed
   Vehicle speed: 0 km/h (0 MPH)
   M/T model
   Selector lever: Suitable position except "N" (Higher gear position such as 3rd or 4th position is better to keep engine rpm low.)
   Accelerator pedal: Released
   Vehicle speed: As slow as possible

OR

1) Start engine and let it idle for at least 10 seconds.
   If idle speed is over 1,100 rpm, maintain the following conditions for at least 10 seconds to keep engine speed below 1,100 rpm.
   A/T model
   Selector lever: Suitable position except "P" or "N"
   Brake pedal: Depressed
   Vehicle speed: 0 km/h (0 MPH)
   M/T model
   Selector lever: Suitable position except "N" (Higher gear position such as 3rd or 4th position is better to keep engine rpm low.)
   Accelerator pedal: Released
   Vehicle speed: As slow as possible
2) Select "MODE 7" with GST.

OR

1) Start engine and let it idle for at least 10 seconds.
   If idle speed is over 1,100 rpm, maintain the following conditions for at least 10 seconds to keep engine speed below 1,100 rpm.
   A/T model
   Selector lever: Suitable position except "P" or "N"
   Brake pedal: Depressed
   Vehicle speed: 0 km/h (0 MPH)
   M/T model
   Selector lever: Suitable position except "N" (Higher gear position such as 3rd or 4th position is better to keep engine rpm low.)
   Accelerator pedal: Released
   Vehicle speed: As slow as possible
2) Turn ignition switch "OFF" and wait at least 5 seconds.
3) Turn ignition switch "ON" and perform "Diagnostic Test Mode II (Self-diagnostic results)" with ECM.

Simpo PDF Merge and Split Unregistered Version - http://www.simpopdf.com

Throttle Position Sensor (Cont'd)

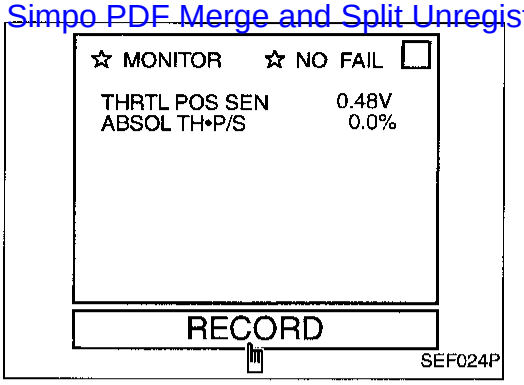

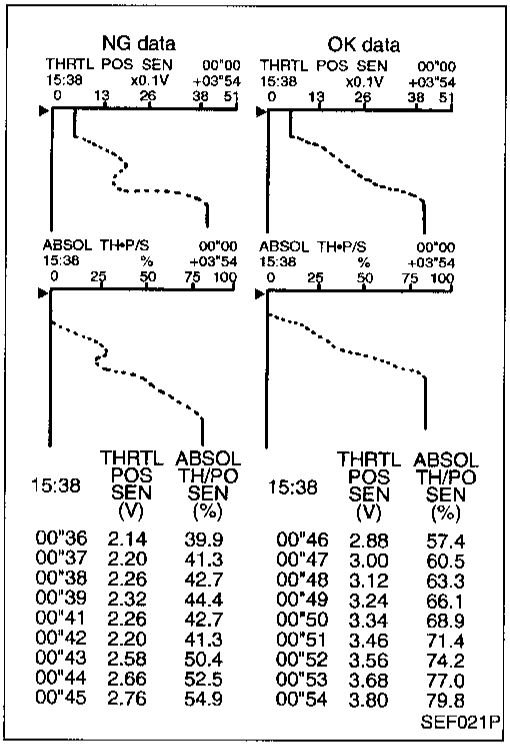

15:38	THRTL POS SEN (V)	ABSOL TH/PO SEN (%)	15:38	THRTL POS SEN (V)	ABSOL TH/PO SEN (%)
00"36	2.14	39.9	00"46	2.88	57.4
00"37	2.20	41.3	00"47	3.00	60.5
00"38	2.26	42.7	00"48	3.12	63.3
00"39	2.32	44.4	00"49	3.24	66.1
00"41	2.26	42.7	00"50	3.34	68.9
00"42	2.20	41.3	00"51	3.46	71.4
00"43	2.58	50.4	00"52	3.56	74.2
00"44	2.66	52.5	00"53	3.68	77.0
00"45	2.76	54.9	00"54	3.80	79.8

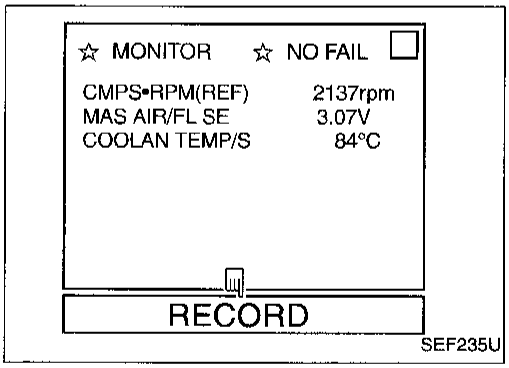

Procedure for malfunction C

CAUTION:

Always drive vehicle at a safe speed.

NOTE:

If "DIAGNOSTIC TROUBLE CODE CONFIRMATION PROCEDURE" has been previously conducted, always turn ignition switch "OFF" and wait at least 5 seconds before conducting the next test.

1) Start engine and warm it up to normal operating temperature.
2) Turn ignition switch "OFF" and wait at least 5 seconds.
3) Turn ignition switch "ON".
4) Select "MANU TRIG" and "HI SPEED" in "DATA MONITOR" mode with CONSULT.
5) Select "THRTL POS SEN" and "ABSOL TH•P/S" in "DATA MONITOR" mode with CONSULT.
6) Press RECORD on CONSULT SCREEN at the same time accelerator pedal is depressed.
7) Print out the recorded graph and check the following:
   - The voltage rise is linear in response to accelerator pedal depression.
   - The voltage when accelerator pedal is fully depressed is approximately 4V.

   If NG, go to "DIAGNOSTIC PROCEDURE", EC-133.
   If OK, go to following step.
8) Select "AUTO TRIG" in "DATA MONITOR" mode with CONSULT.
9) Maintain the following conditions for at least 10 consecutive seconds.

   CMPS•RPM (REF): More than 2,000 rpm
   MAS AIR/FL SE: More than 3V
   COOLAN TEMP/S: More than 70°C (158°F)
   Selector lever: Suitable position
   Driving location: Driving vehicle uphill (Increased engine load) will help maintain the driving conditions required for this test.

Throttle Position Sensor (Cont'd)

Simpo PDF Merge and Split Unregistered Version - http://www.simpopdf.com

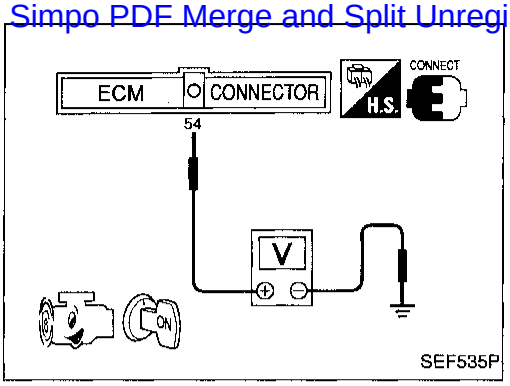

SEF535P

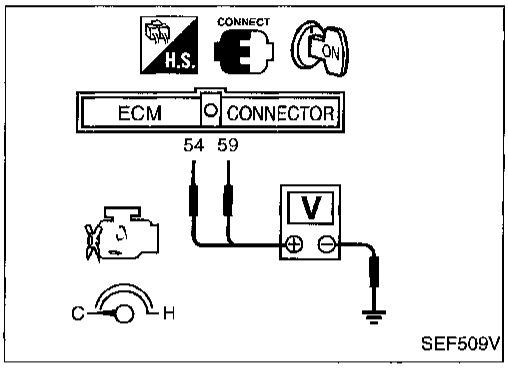

SEF509V

OR

1) Maintain the following conditions for at least 10 consecutive seconds.
Gear position: Suitable position
Engine speed: More than 2,000 rpm
Engine coolant temperature: More than 70°C (158°F)
Voltage between ECM terminal ⑭ and ground: More than 3V

OR

1) Maintain the following conditions for at least 10 consecutive seconds.
Gear position: Suitable position
Engine speed: More than 2,000 rpm
Voltage between ECM terminal ⑭ and ground: More than 3V
Voltage between ECM terminal ⑲ and ground: Less than 4V
2) Stop the vehicle, turn ignition switch "OFF", wait at least 5 seconds and then turn "ON".
3) Perform "Diagnostic Test Mode II (Self-diagnostic results)" with ECM.

Simpo PDF Merge and Split Unregistered Version - http://www.simpopdf.com

EC-TPS-01

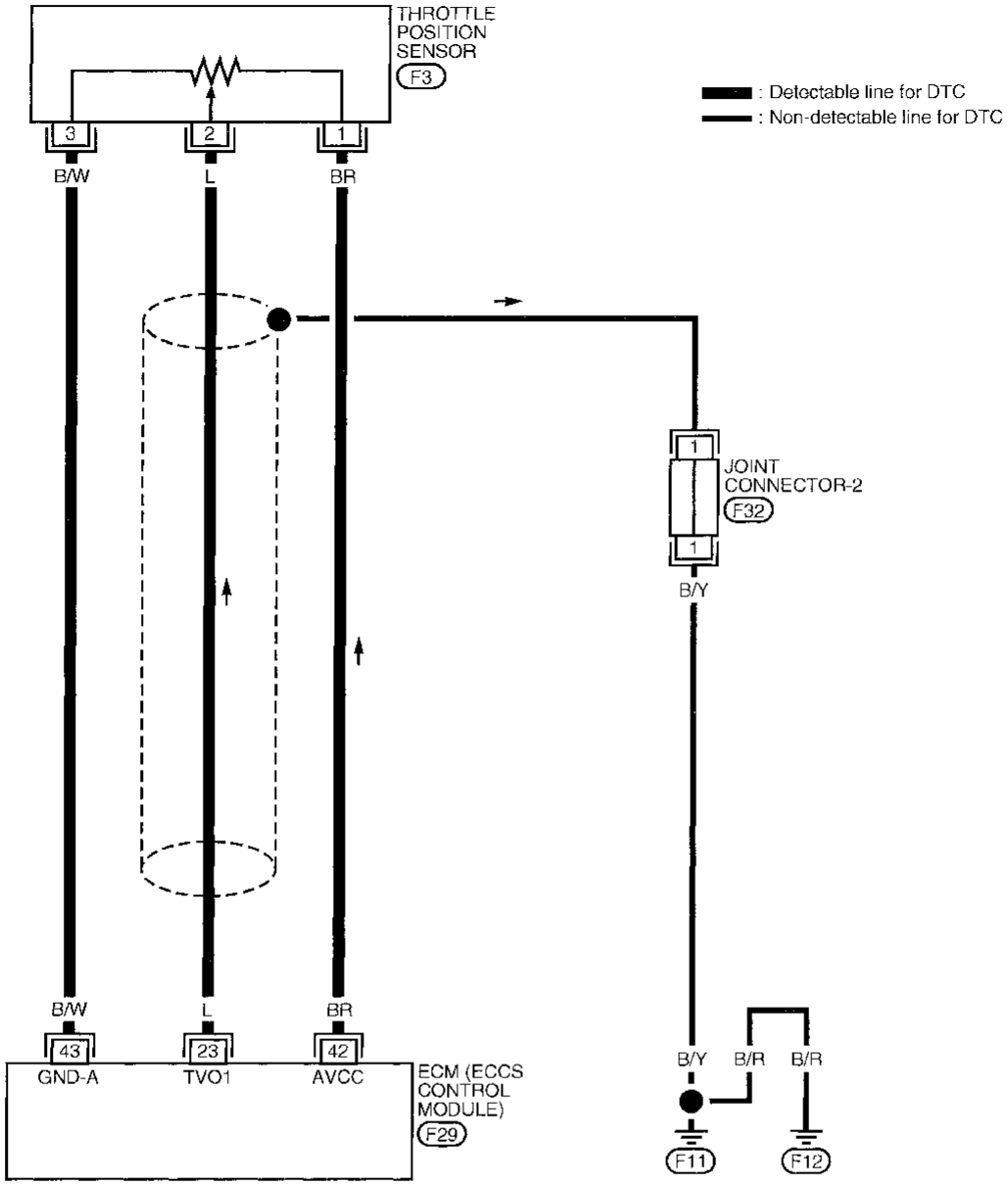

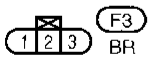



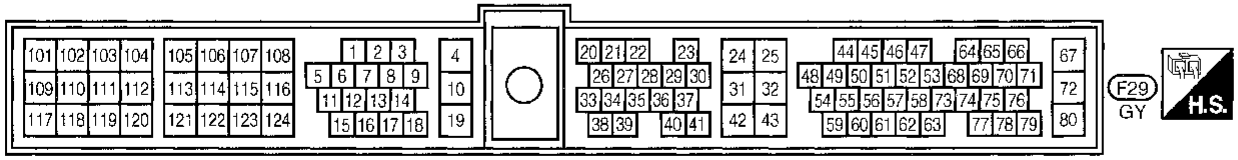

AEC523A

Throttle Position Sensor (Cont'd)

Simpo PDF Merge and Split Unregistered Version - http://www.simpopdf.com

DIAGNOSTIC PROCEDURE

If the trouble is duplicated after "Procedure for malfunction A", perform "Procedure A" below. If the trouble is duplicated after "Procedure for malfunction B", perform "Procedure B" on EC-135. If the trouble is duplicated after "Procedure for malfunction C", perform "Procedure C" on EC-137.

Procedure A

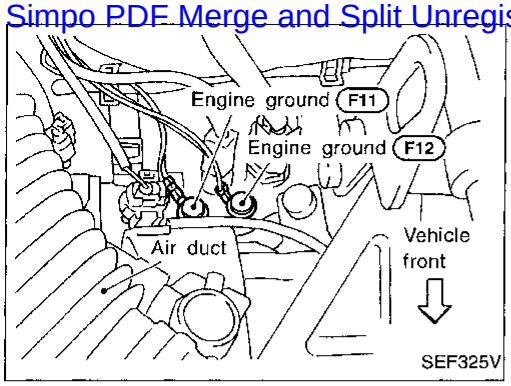

INSPECTION START

1. Turn ignition switch "OFF".
2. Loosen and retighten engine ground screws.

A

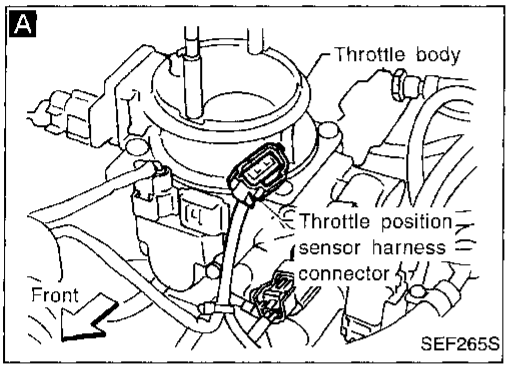

CHECK POWER SUPPLY.
1. Disconnect throttle position sensor harness connector.
2. Turn ignition switch "ON".
3. Check voltage between terminal ① and ground with CONSULT or tester.
Voltage: Approximately 5V

NG → Repair harness or connectors.

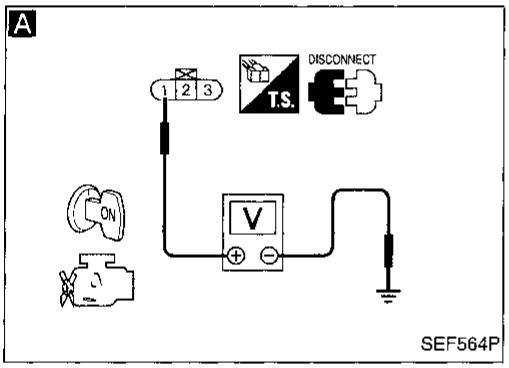

OK

B

CHECK GROUND CIRCUIT.
1. Turn ignition switch "OFF".
2. Check harness continuity between terminal ③ and engine ground.
Continuity should exist.
If OK, check harness for short to ground and short to power.

NG → Repair open circuit, short to ground or short to power in harness or connectors.

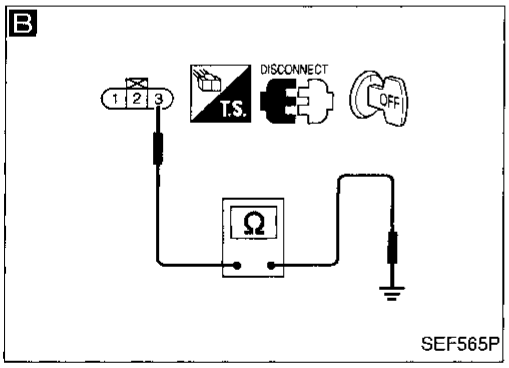

OK

C

CHECK INPUT SIGNAL CIRCUIT.
1. Disconnect ECM harness connector.
2. Check harness continuity between ECM terminal ㉓ and terminal ②.
Continuity should exist.
If OK, check harness for short to ground and short to power.

NG → Repair open circuit, short to ground or short to power in harness or connectors.

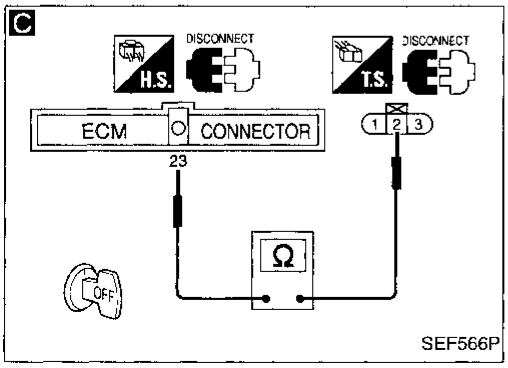

OK

Ⓐ

(Go to next page.)

Simpo PDF Merge and Split Unregistered Version - http://www.simpopdf.com

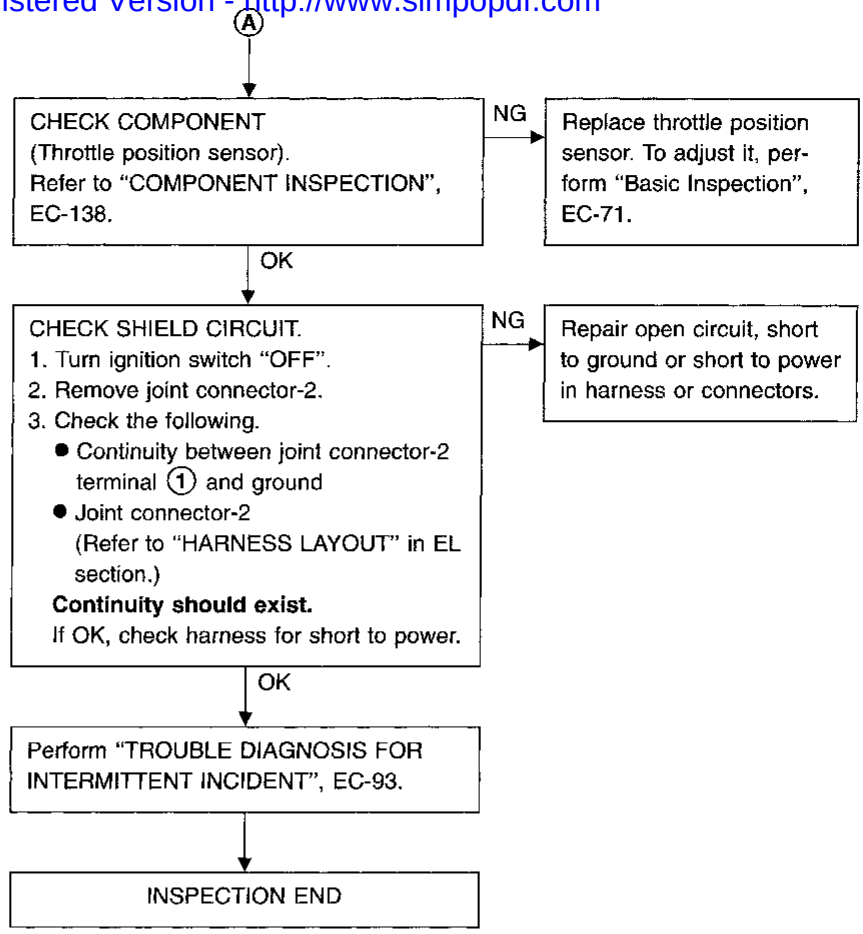

Throttle Position Sensor (Cont'd)

Simpo PDF Merge and Split Unregistered Version - http://www.simpopdf.com

Procedure B

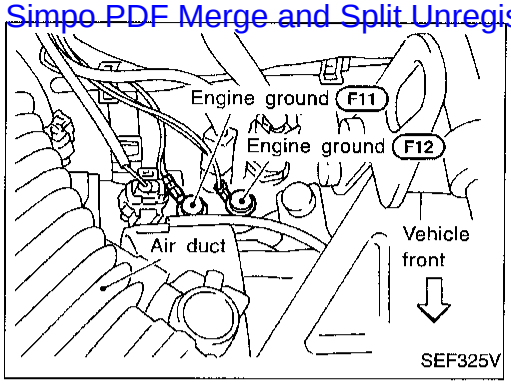

INSPECTION START

1. Turn ignition switch "OFF".
2. Loosen and retighten engine ground screws.

A

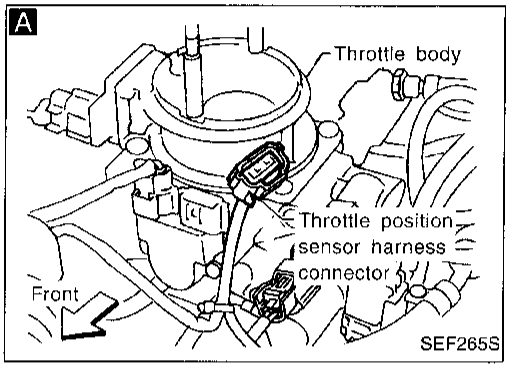

CHECK POWER SUPPLY.
1. Disconnect throttle position sensor harness connector.
2. Turn ignition switch "ON".
3. Check voltage between terminal ① and ground with CONSULT or tester.
Voltage: Approximately 5V

NG → Repair harness or connectors.

OK

B

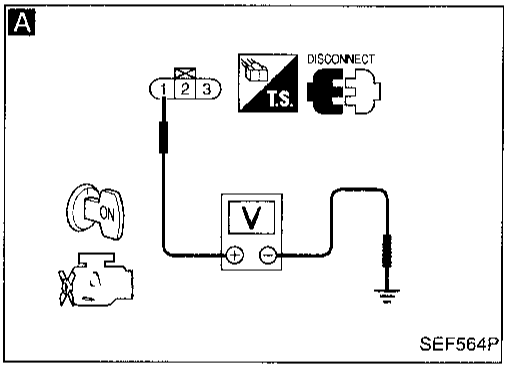

CHECK GROUND CIRCUIT.
1. Turn ignition switch "OFF".
2. Check harness continuity between terminal ③ and engine ground.
Continuity should exist.
If OK, check harness for short to ground and short to power.

NG → Repair open circuit, short to ground or short to power in harness or connectors.

OK

C

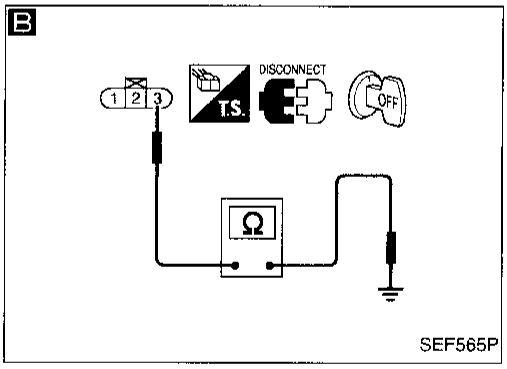

CHECK INPUT SIGNAL CIRCUIT.
1. Disconnect ECM harness connector.
2. Check harness continuity between ECM terminal ㉓ and terminal ②.
Continuity should exist.
If OK, check harness for short to ground and short to power.

NG → Repair open circuit, short to ground or short to power in harness or connectors.

OK

CHECK COMPONENT
(Throttle position sensor).
Refer to "COMPONENT INSPECTION", EC-138.

NG → Replace throttle position sensor. To adjust it, perform "Basic Inspection", EC-71.

OK

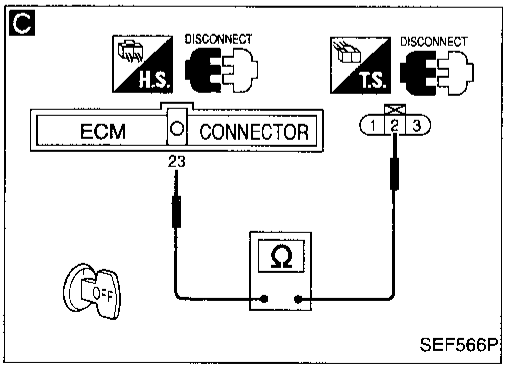

CHECK COMPONENT
(Mass air flow sensor).
Refer to "COMPONENT INSPECTION", EC-107.

NG → Replace mass air flow sensor.

OK

Ⓐ

(Go to next page.)

Simpo PDF Merge and Split Unregistered Version - http://www.simpopdf.com

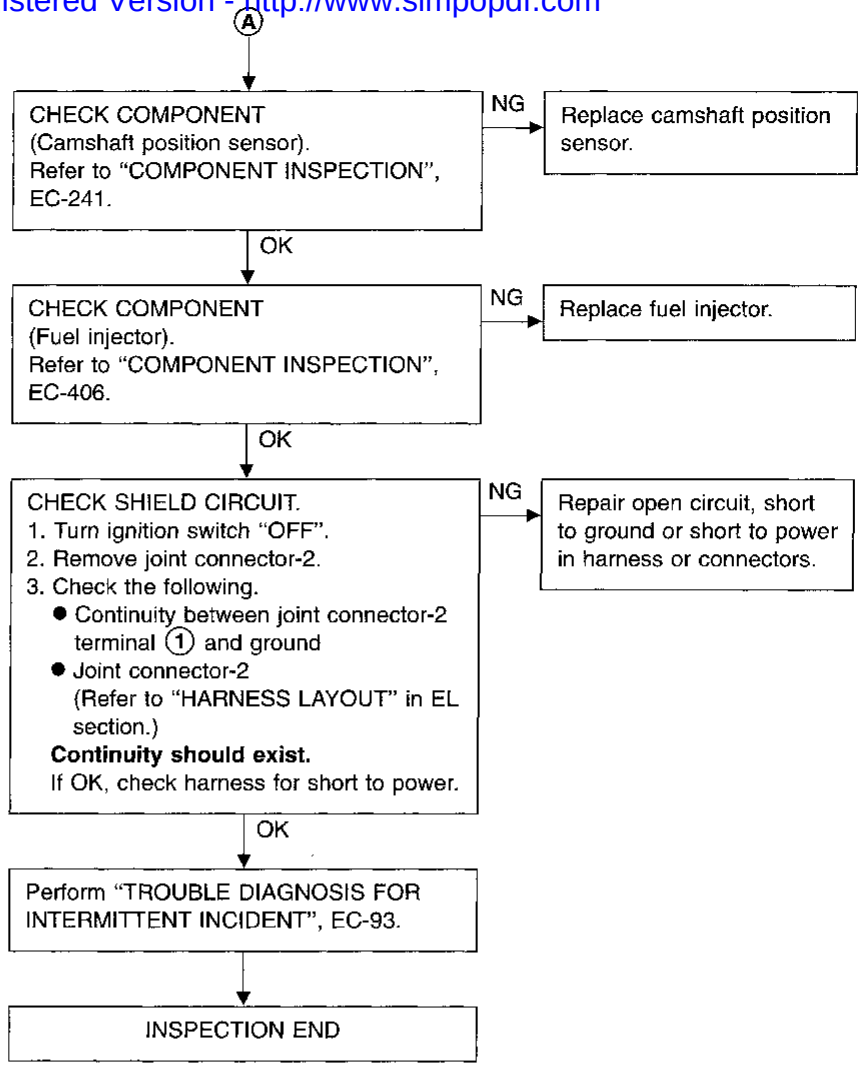

Throttle Position Sensor (Cont'd)

Simpo PDF Merge and Split Unregistered Version - http://www.simpopdf.com

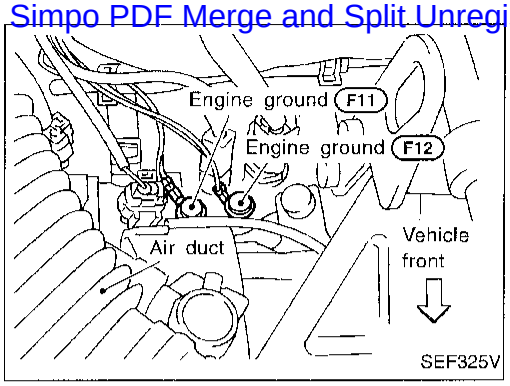

Procedure C

INSPECTION START

↓

ADJUST THROTTLE POSITION SENSOR.
Perform "Basic Inspection", EC-71.

↓ OK

CHECK INTAKE SYSTEM.
Check the followings for connection.
- Air duct
- Air cleaner
- Vacuum hoses
- Intake air passage between air duct to collector

If disconnected, reconnect the parts.

NG → Reconnect the parts.

↓ OK

1. Turn ignition switch "OFF".
2. Loosen and retighten engine ground screws.

↓

A

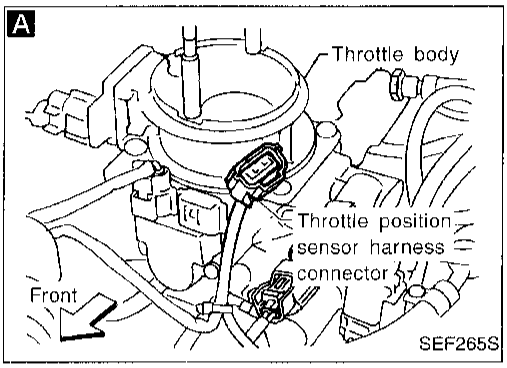

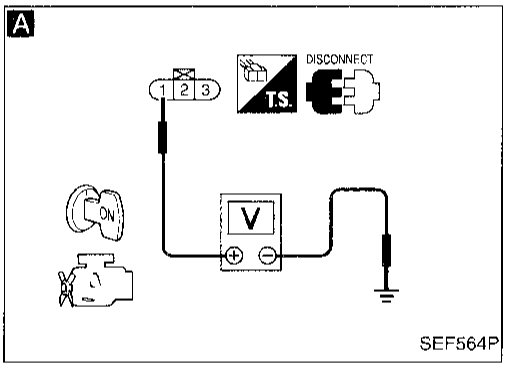

CHECK POWER SUPPLY.
1. Disconnect throttle position sensor harness connector.
2. Turn ignition switch "ON".
3. Check voltage between terminal ① and ground with CONSULT or tester.
Voltage: Approximately 5V

NG → Repair harness or connectors.

↓ OK

B

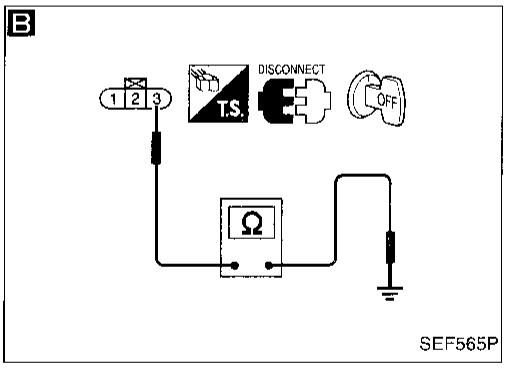

CHECK GROUND CIRCUIT.
1. Turn ignition switch "OFF".
2. Check harness continuity between terminal ③ and engine ground.
Continuity should exist.
If OK, check harness for short to ground and short to power.

NG → Repair open circuit, short to ground or short to power in harness or connectors.

↓ OK

Ⓐ

(Go to next page.)

Simpo PDF Merge and Split Unregistered Version - http://www.simpopdf.com

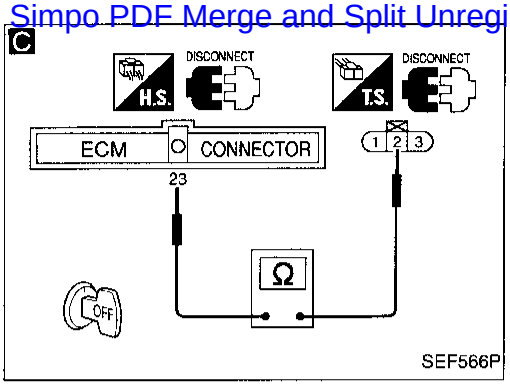

C

CHECK INPUT SIGNAL CIRCUIT.
1. Disconnect ECM harness connector.
2. Check harness continuity between ECM terminal (23) and terminal (2).
   Continuity should exist.
   If OK, check harness for short to ground and short to power.

NG → Repair open circuit, short to ground or short to power in harness or connectors.

OK ↓

CHECK COMPONENT
(Throttle position sensor).
Refer to "COMPONENT INSPECTION" below.

NG → Replace throttle position sensor. To adjust it, perform "Basic Inspection", EC-71.

OK ↓

CHECK SHIELD CIRCUIT.
1. Turn ignition switch "OFF".
2. Remove joint connector-2.
3. Check the following.
   - Continuity between joint connector-2 terminal (1) and ground
   - Joint connector-2
     (Refer to "HARNESS LAYOUT" in EL section.)

   Continuity should exist.
   If OK, check harness for short to power.

NG → Repair open circuit, short to ground or short to power in harness or connectors.

OK ↓

Perform "TROUBLE DIAGNOSIS FOR INTERMITTENT INCIDENT", EC-93.

↓

INSPECTION END

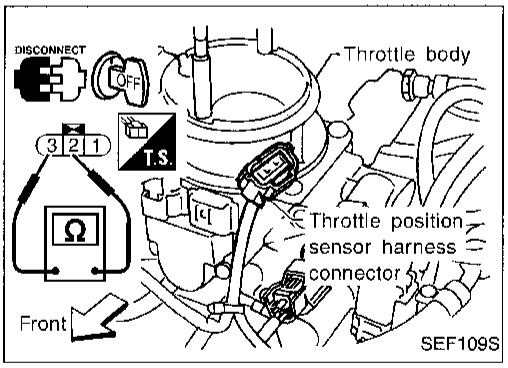

COMPONENT INSPECTION

Throttle position sensor

1. Disconnect throttle position sensor harness connector.
2. Make sure that resistance between terminals (2) and (3) changes when opening throttle valve manually.

Throttle valve conditions	Resistance [at 25°C (77°F)]
Completely closed	Approximately 0.5 kΩ
Partially open	0.5 - 4 kΩ
Completely open	Approximately 4 kΩ

If NG, replace throttle position sensor.
To adjust it, perform "Basic Inspection", EC-71.

Simpo PDF Merge and Split Unregistered Version - http://www.simpopdf.com

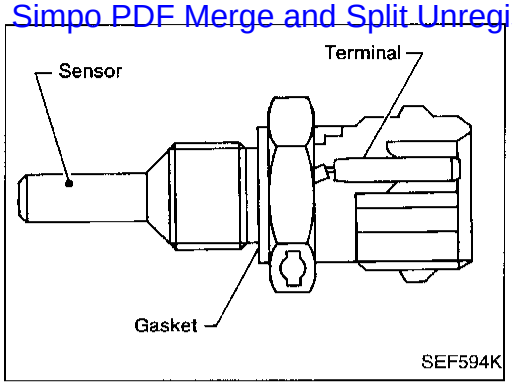

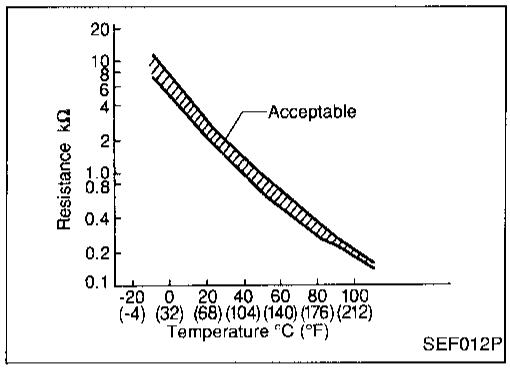

Engine Coolant Temperature (ECT) Sensor

COMPONENT DESCRIPTION

The engine coolant temperature sensor is used to detect the engine coolant temperature. The sensor modifies a voltage signal from the ECM. The modified signal returns to the ECM as the engine coolant temperature input. The sensor uses a thermistor which is sensitive to the change in temperature. The electrical resistance of the thermistor decreases as temperature increases.

<Reference data>

Engine coolant temperature °C (°F)	Voltage* V	Resistance kΩ
−10 (14)	4.4	7.0 - 11.4
20 (68)	3.5	2.1 - 2.9
50 (122)	2.2	0.68 - 1.00
90 (194)	0.9	0.236 - 0.260

*: These data are reference values and are measured between ECM terminal (59) (Engine coolant temperature sensor) and ECM terminal (32) (ECM ground).

ON BOARD DIAGNOSIS LOGIC

Diagnostic Trouble Code No.	Malfunction is detected when ...	Check Items (Possible Cause)
P0125 0908	● Voltage sent to ECM from the sensor is not practical, even when some time has passed after starting the engine. ● Engine coolant temperature is insufficient for closed loop fuel control.	● Harness or connectors (High resistance in the circuit) ● Engine coolant temperature sensor ● Thermostat

Simpo PDF Merge and Split Unregistered Version - http://www.simpopdf.com

Engine Coolant Temperature (ECT) Sensor (Cont'd)

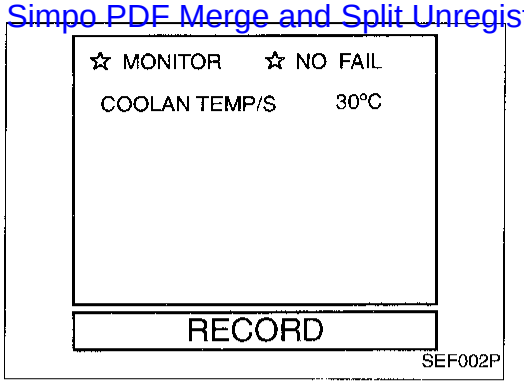

DIAGNOSTIC TROUBLE CODE CONFIRMATION PROCEDURE

CAUTION:
Be careful not to overheat engine.

NOTE:

- **If both DTC P0115 (0103) and P0125 (0908) are displayed, first perform "TROUBLE DIAGNOSIS FOR DTC P0115". Refer to EC-121.**
- **If "DIAGNOSTIC TROUBLE CODE CONFIRMATION PROCEDURE" has been previously conducted, always turn ignition switch "OFF" and wait at least 5 seconds before conducting the next test.**

1) Turn ignition switch "ON".
2) Select "DATA MONITOR" mode with CONSULT.
3) Start engine and run it for 65 minutes at idle speed.

If "COOLAN TEMP/S" increases to more than 10°C (50°F) within 65 minutes, stop engine because the test result will be OK.

OR

1) Start engine and run it for 65 minutes at idle speed.
2) Select "MODE 7" with GST.

If engine coolant temperature increases to more than 10°C (50°F) within 65 minutes, stop engine because the test result will be OK.

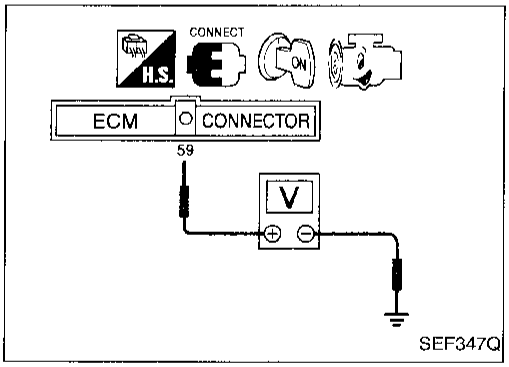

OR

1) Start engine and run it for 65 minutes at idle speed.
2) Turn ignition switch "OFF", wait at least 5 seconds and then turn "ON".
3) Perform "Diagnostic Test Mode II (Self-diagnostic results)" with ECM.

If voltage between ECM terminals (59) and ground decreases to less than 3.8V within 65 minutes, stop engine because the test result will be OK.

Simpo PDF Merge and Split Unregistered Version - http://www.simpopdf.com

EC-ECTS-01

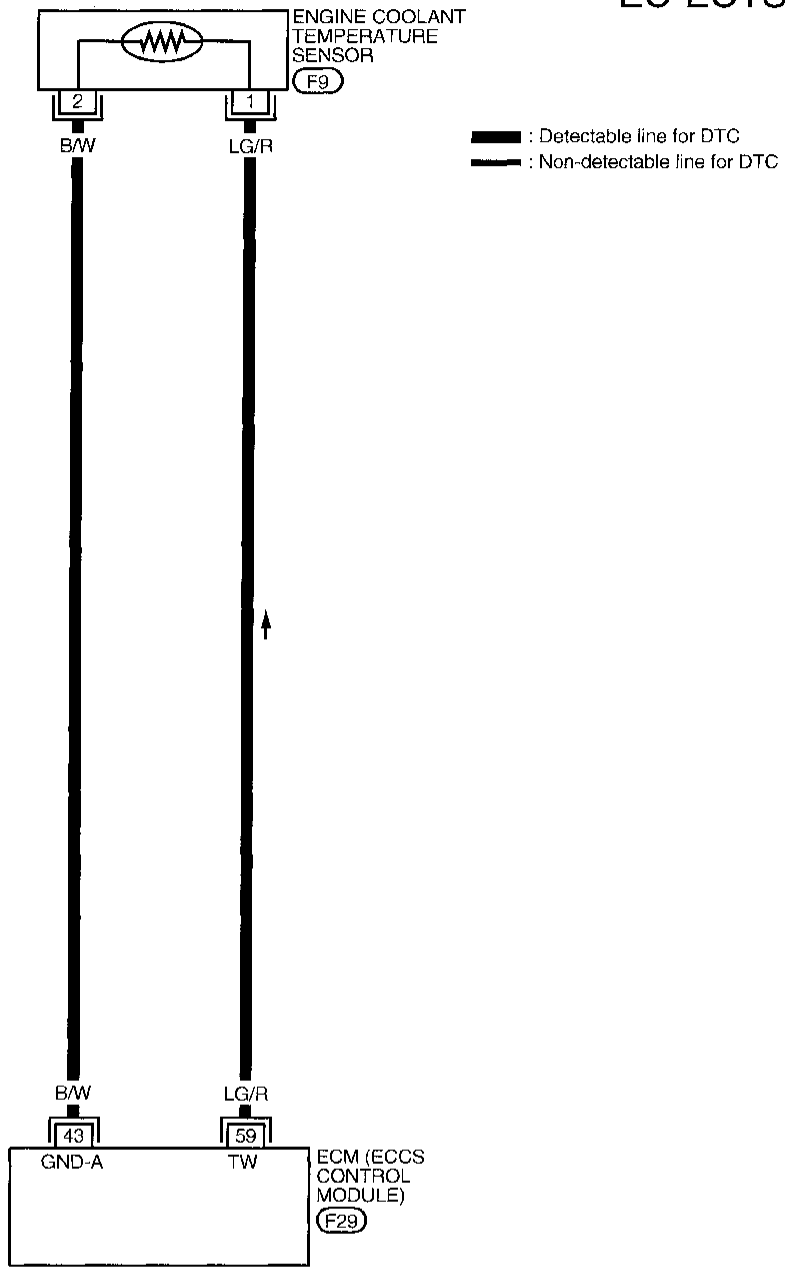

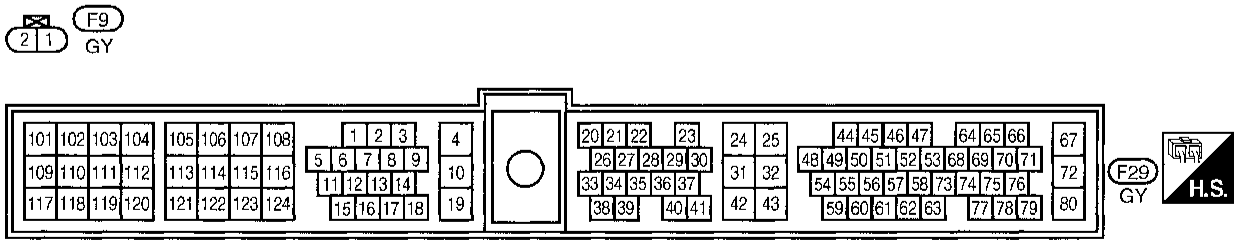

AEC522A

Simpo PDF Merge and Split Unregistered Version - http://www.simpopdf.com

Engine Coolant Temperature (ECT) Sensor (Cont'd)

DIAGNOSTIC PROCEDURE

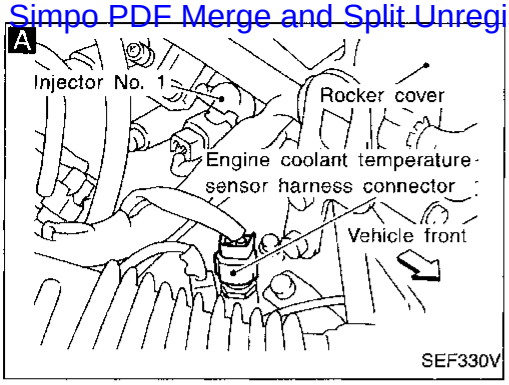

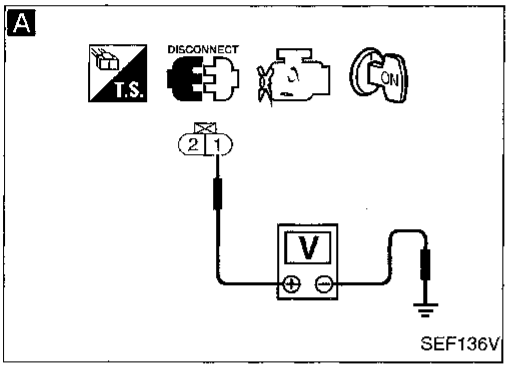

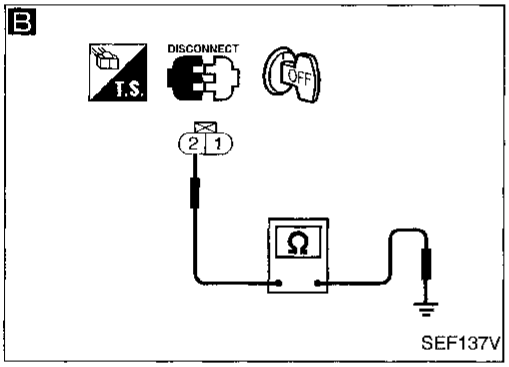

INSPECTION START

A

CHECK POWER SUPPLY.
1. Turn ignition switch "OFF".
2. Disconnect engine coolant temperature sensor harness connector.
3. Turn ignition switch "ON".
4. Check voltage between terminal ① and ground with CONSULT or tester.

Voltage:
Approximately 5V

NG → Repair harness or connectors.

OK

B

CHECK GROUND CIRCUIT.
1. Turn ignition switch "OFF".
2. Check harness continuity between terminal ② and engine ground.

Continuity should exist.
If OK, check harness for short to ground and short to power.

NG → Repair open circuit, short to ground or short to power in harness or connectors.

OK

CHECK COMPONENT
(Engine coolant temperature sensor).
Refer to "COMPONENT INSPECTION" on next page.

NG → Replace engine coolant temperature sensor.

OK

CHECK THERMOSTAT OPERATION.
When the engine is cooled [lower than 76.5°C (170°F)], hold lower radiator hose and confirm the engine coolant does not flow.

NG → CHECK COMPONENT (Thermostat).
Refer to LC section ("Thermostat").
If NG, replace it.

OK

Perform "TROUBLE DIAGNOSIS FOR INTERMITTENT INCIDENT", EC-93.

INSPECTION END

Simpo PDF Merge and Split Unregistered Version - http://www.simpopdf.com

Engine Coolant Temperature (ECT) Sensor (Cont'd)

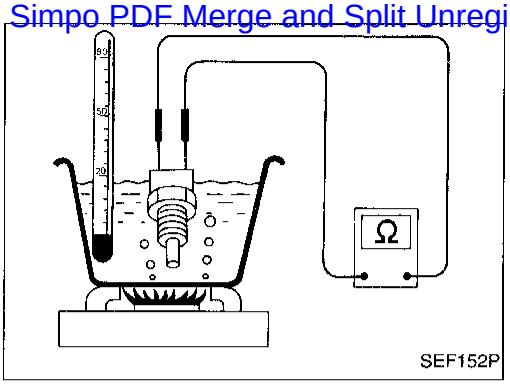

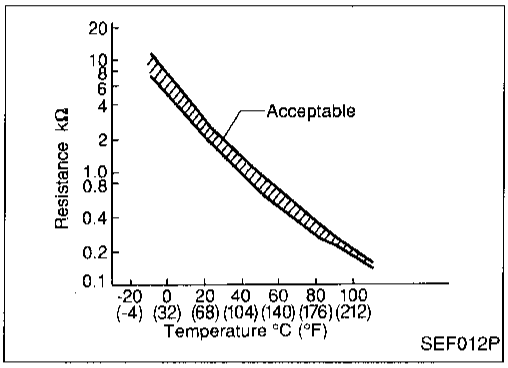

COMPONENT INSPECTION

Engine coolant temperature sensor

Check resistance as shown in the figure.

<Reference data>

Temperature °C (°F)	Resistance kΩ
20 (68)	2.1 - 2.9
50 (122)	0.68 - 1.0
90 (194)	0.236 - 0.260

If NG, replace engine coolant temperature sensor.

Simpo PDF Merge and Split Unregistered Version - http://www.simpopdf.com

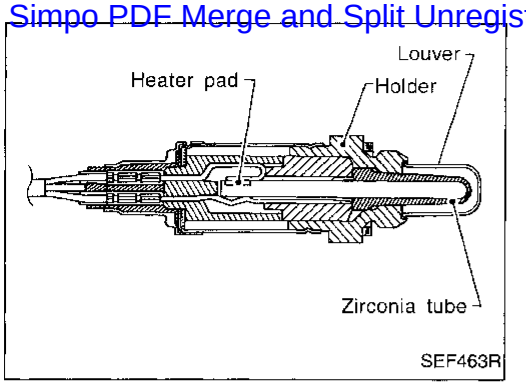

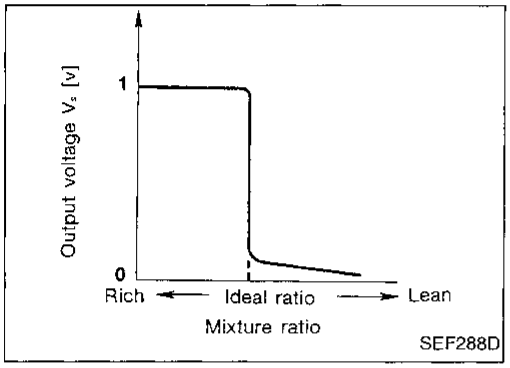

Front Heated Oxygen Sensor (Circuit) (Front HO2S)

COMPONENT DESCRIPTION

The front heated oxygen sensor is placed into the exhaust manifold. It detects the amount of oxygen in the exhaust gas compared to the outside air. The front heated oxygen sensor has a closed-end tube made of ceramic zirconia. The zirconia generates voltage from approximately 1V in richer conditions to 0V in leaner conditions. The front heated oxygen sensor signal is sent to the ECM. The ECM adjusts the injection pulse duration to achieve the ideal air-fuel ratio. The ideal air-fuel ratio occurs near the radical change from 1V to 0V.

CONSULT REFERENCE VALUE IN DATA MONITOR MODE

Specification data are reference values.

MONITOR ITEM	CONDITION		SPECIFICATION
FR O2 SENSOR	● Engine: After warming up	Maintaining engine speed at 2,000 rpm	0 - 0.3V ↔ Approx. 0.6 - 1.0V
FR O2 MNTR			LEAN ↔ RICH Changes more than 5 times during 10 seconds.

ECM TERMINALS AND REFERENCE VALUE

Specification data are reference values and are measured between each terminal and ㉜ (ECM ground).

TERMINAL NO.	WIRE COLOR	ITEM	CONDITION	DATA (DC Voltage)
50	B	Front heated oxygen sensor	Engine is running. └ After warming up to normal operating temperature and engine speed is 2,000 rpm.	0 - Approximately 1.0V 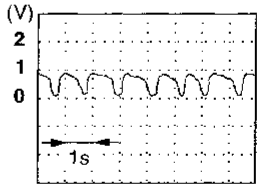 SEF201T

Simpo PDF Merge and Split Unregistered Version - http://www.simpopdf.com

Front Heated Oxygen Sensor (Circuit) (Front HO2S) (Cont'd)

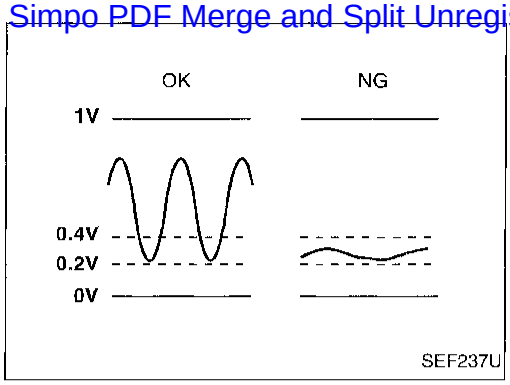

ON BOARD DIAGNOSIS LOGIC

Under the condition in which the front heated oxygen sensor signal is not input, the ECM circuits will read a continuous approximately 0.3V. Therefore, for this diagnosis, the time that output voltage is within 200 to 400 mV range is monitored, and the diagnosis checks that this time is not inordinately long.

Diagnostic Trouble Code No.	Malfunction is detected when ...	Check Items (Possible Cause)
P0130 0303	● The voltage from the sensor is constantly approx. 0.3V.	● Harness or connectors (The sensor circuit is open or shorted.) ● Front heated oxygen sensor

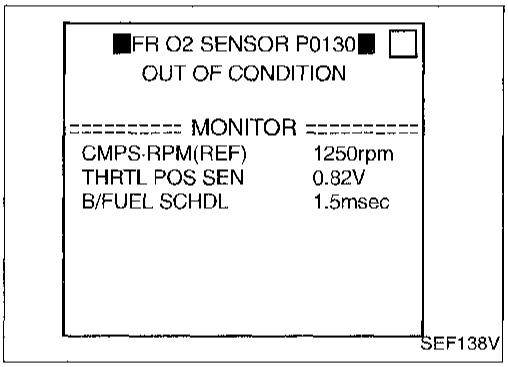

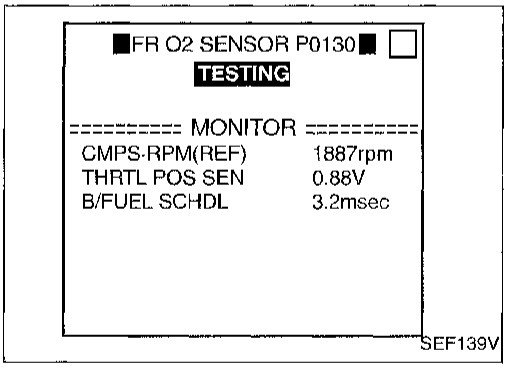

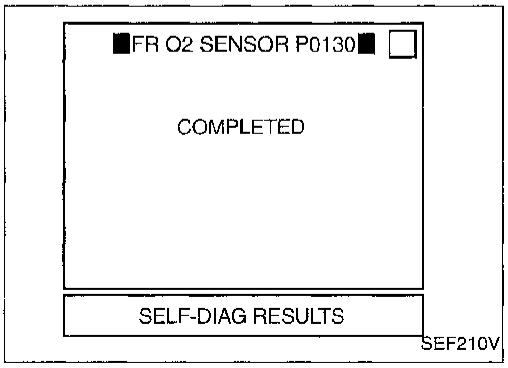

DIAGNOSTIC TROUBLE CODE CONFIRMATION PROCEDURE

CAUTION:
Always drive vehicle at a safe speed.

NOTE:
If "DIAGNOSTIC TROUBLE CODE CONFIRMATION PROCEDURE" has been previously conducted, always turn ignition switch "OFF" and wait at least 5 seconds before conducting the next test.

TESTING CONDITION:

- **Before performing the following procedure, confirm that battery voltage is in between 11V and 16V at idle.**
- **Never raise engine speed above 3,000 rpm during the "DIAGNOSTIC TROUBLE CODE CONFIRMATION PROCEDURE". If the engine speed limit is exceeded, retry the procedure from step 4).**

1) Start engine and warm it up to normal operating temperature.
2) Select "FR O2 SENSOR P0130" of "FRONT O2 SENSOR" in "DTC WORK SUPPORT" mode with CONSULT.
3) Touch "START".
4) Let it idle for at least 3 minutes.
5) When the following conditions are met, "TESTING" will be displayed on the CONSULT screen. Maintain the conditions continuously until "TESTING" changes to "COMPLETED". (It will take approximately 10 to 50 seconds.)
   CMPS-RPM (REF): 1,700 - 2,700 rpm (A/T)
   1,700 - 3,000 rpm (M/T)
   Vehicle speed: 80 - 100 km/h (50 - 62 MPH)
   B/FUEL SCHDL: 1.1 - 4.8 ms (A/T)
   1.1 - 5.2 ms (M/T)
   Selector lever: Suitable position

Simpo PDF Merge and Split Unregistered Version - http://www.simpopdf.com

Front Heated Oxygen Sensor (Circuit) (Front HO2S) (Cont'd)

If "TESTING" is not displayed after 5 minutes, retry from step 2).

6) Make sure that "OK" is displayed after touching "SELF-DIAG RESULTS". If "NG" is displayed, refer to "DIAGNOSTIC PROCEDURE", EC-148.

During this test, P1148 may be displayed on CONSULT screen.

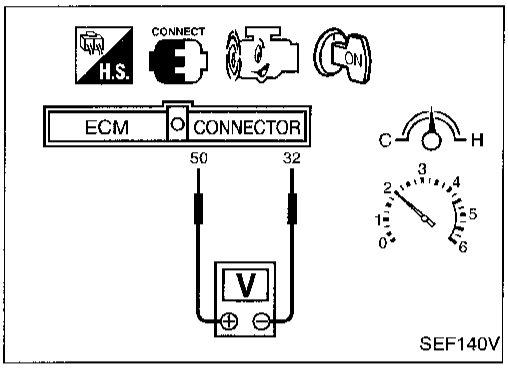

OR

OVERALL FUNCTION CHECK

Use this procedure to check the overall function of the front heated oxygen sensor circuit. During this check, a 1st trip DTC might not be confirmed.

1) Start engine and warm it up to normal operating temperature.
2) Set voltmeter probes between ECM terminals ⑤⓪ (sensor signal) and ③② (ECM ground).
3) Check the following with engine speed held at 2,000 rpm constant under no load.

- The voltage does not remain in the range of 0.2 - 0.4V.

Front Heated Oxygen Sensor (Circuit) (Front HO2S) (Cont'd)

Simpo PDF Merge and Split Unregistered Version - http://www.simpopdf.com

EC-FRO2-01

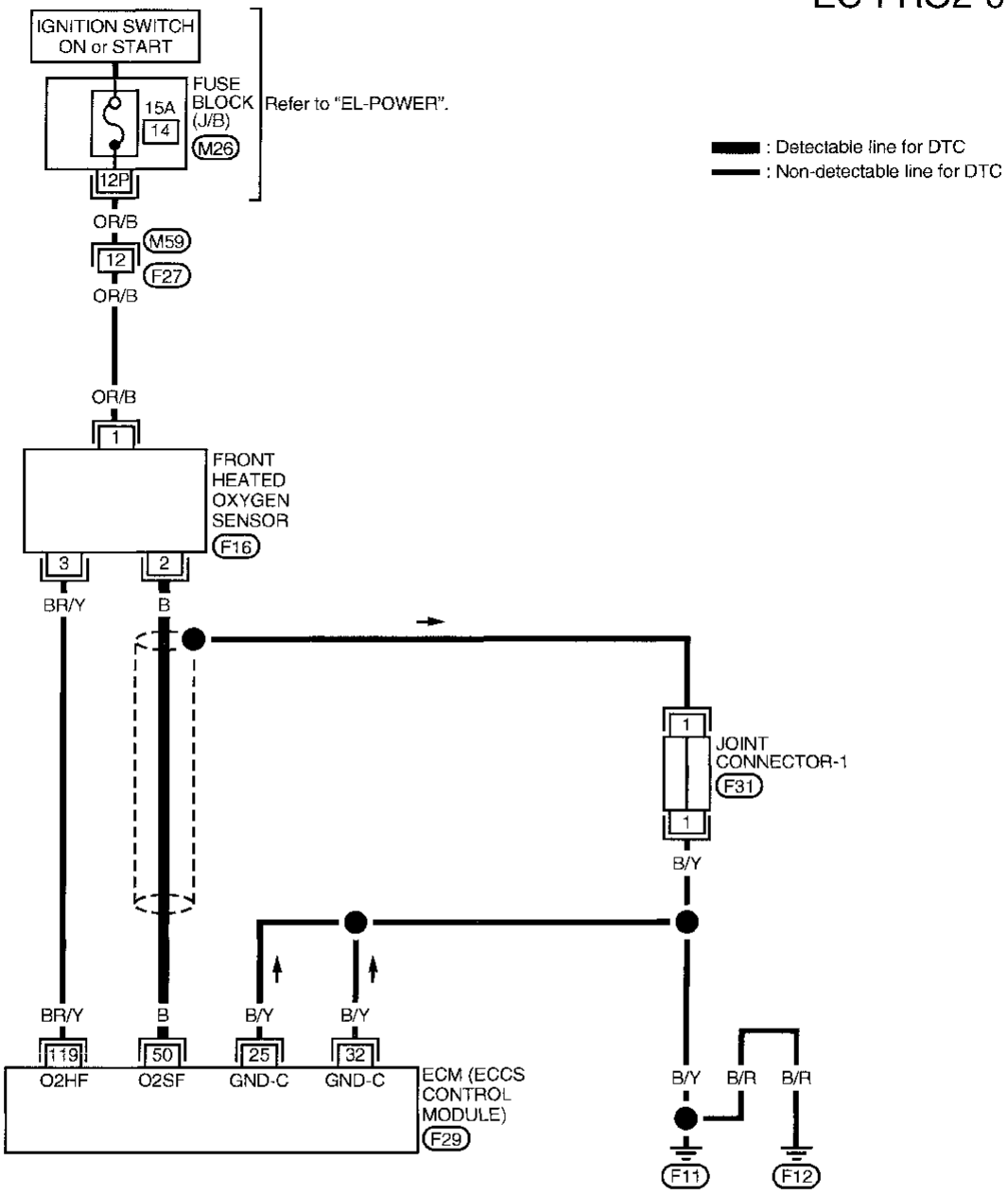

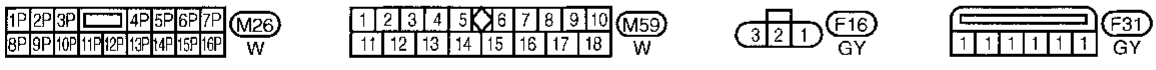

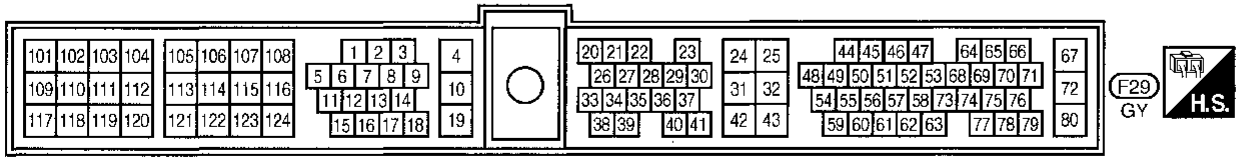

AEC524A

Simpo PDF Merge and Split Unregistered Version - http://www.simpopdf.com

Front Heated Oxygen Sensor (Circuit) (Front HO2S) (Cont'd)

DIAGNOSTIC PROCEDURE

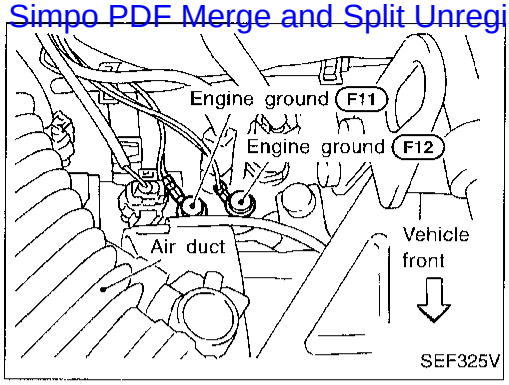

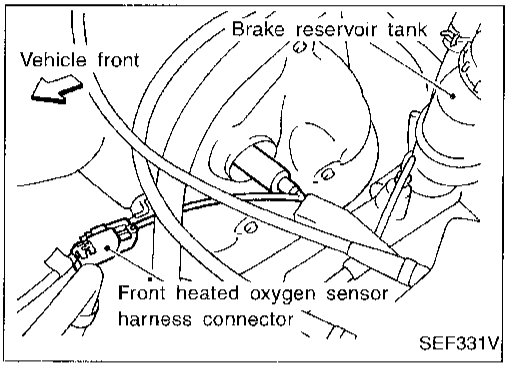

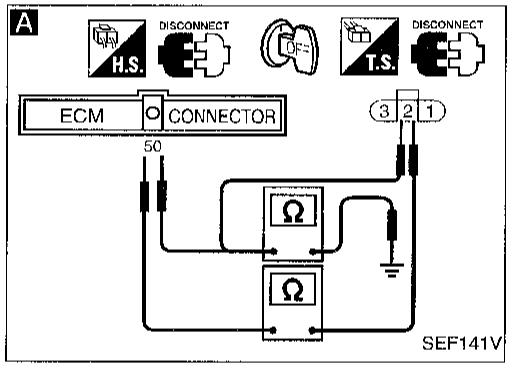

INSPECTION START

1. Turn ignition switch "OFF".
2. Loosen and retighten engine ground screws.

A

CHECK INPUT SIGNAL CIRCUIT.
1. Disconnect front heated oxygen sensor harness connector and ECM harness connector.
2. Check harness continuity between ECM terminal (50) and terminal (2).
   Continuity should exist.
3. Check harness continuity between ECM terminal (50) (or terminal (2)) and ground.
   Continuity should not exist.

If OK, check harness for short to ground and short to power.

NG → Repair open circuit, short to ground or short to power in harness or connectors.

OK ↓

CHECK COMPONENT
(Front heated oxygen sensor).
Refer to "COMPONENT INSPECTION" on next page.

NG → Replace front heated oxygen sensor.

OK ↓

CHECK SHIELD CIRCUIT.
1. Turn ignition switch "OFF".
2. Remove joint connector-1.
3. Check the following.
   - Continuity between joint connector-1 terminal (1) and ground
   - Joint connector-1
     (Refer to "HARNESS LAYOUT" in EL section.)

   Continuity should exist.

If OK, check harness for short to power.

NG → Repair open circuit, short to ground or short to power in harness or connectors.

OK ↓

Perform "TROUBLE DIAGNOSIS FOR INTERMITTENT INCIDENT", EC-93.

INSPECTION END

Simpo PDF Merge and Split Unregistered Version - http://www.simpopdf.com

Front Heated Oxygen Sensor (Circuit) (Front HO2S) (Cont'd)

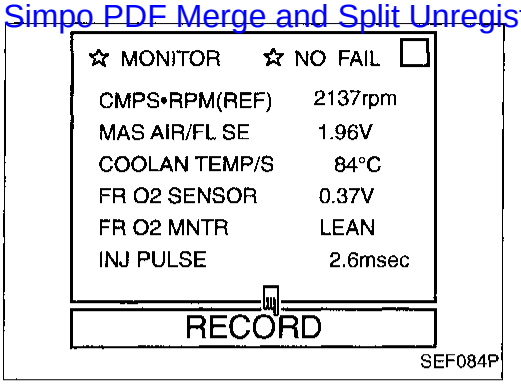

COMPONENT INSPECTION

Front heated oxygen sensor

1) Start engine and warm it up to normal operating temperature.
2) Select "MANU TRIG" and "HI SPEED" in "DATA MONITOR" mode with CONSULT, and select "FR O2 SENSOR" and "FR O2 MNTR".
3) Hold engine speed at 2,000 rpm under no load during the following steps.
4) Touch "RECORD" on CONSULT screen.
5) Check the following.

- "FR O2 MNTR" in "DATA MONITOR" mode changes from "RICH" to "LEAN" to "RICH" 5 times in 10 seconds.
  5 times (cycles) are counted as shown below:

cycle	1	2	3	4	5
FR O2 MNTR	R-L-R-L-R-L-R-L-R-L				

  R = "FR O2 MNTR", "RICH"
  L = "FR O2 MNTR", "LEAN"
- "FR O2 SENSOR" voltage goes above 0.6V at least once.
- "FR O2 SENSOR" voltage goes below 0.35V at least once.
- "FR O2 SENSOR" voltage never exceeds 1.0V.

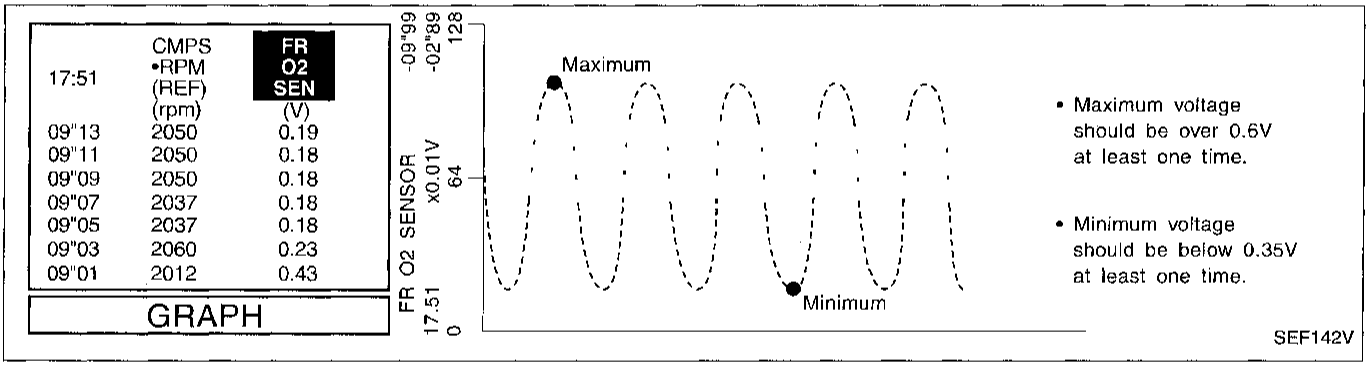

OR

1) Start engine and warm it up to normal operating temperature.
2) Set voltmeter probes between ECM terminals ⑤⓪ (sensor signal) and ③② (ECM ground).
3) Check the following with engine speed held at 2,000 rpm constant under no load.

- Malfunction indicator lamp goes on more than 5 times within 10 seconds in Diagnostic Test Mode II (FRONT HEATED OXYGEN SENSOR MONITOR).
- The maximum voltage is over 0.6V at least one time.
- The minimum voltage is below 0.35V at least one time.
- The voltage never exceeds 1.0V.

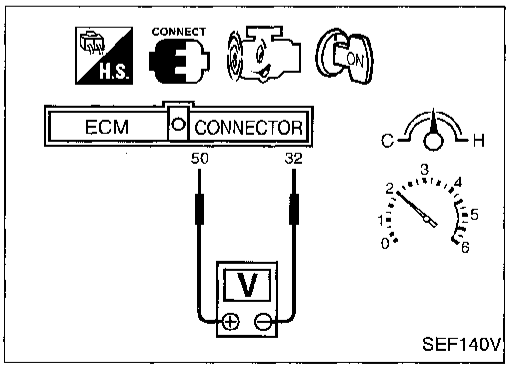

Simpo PDF Merge and Split Unregistered Version - http://www.simpopdf.com

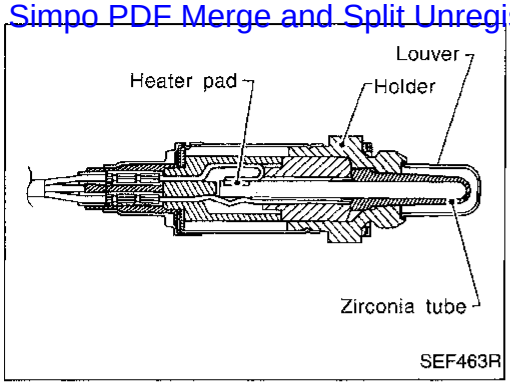

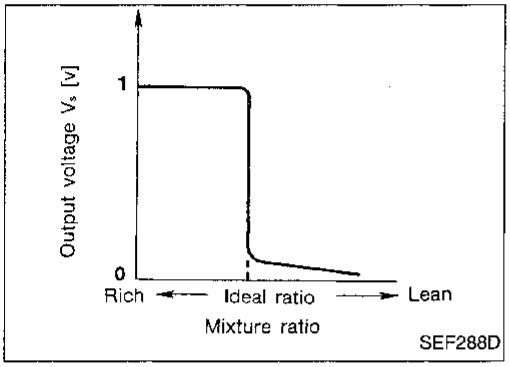

Front Heated Oxygen Sensor (Lean Shift Monitoring) (Front HO2S)

COMPONENT DESCRIPTION

The front heated oxygen sensor is placed into the exhaust manifold. It detects the amount of oxygen in the exhaust gas compared to the outside air. The front heated oxygen sensor has a closed-end tube made of ceramic zirconia. The zirconia generates voltage from approximately 1V in richer conditions to 0V in leaner conditions. The front heated oxygen sensor signal is sent to the ECM. The ECM adjusts the injection pulse duration to achieve the ideal air-fuel ratio. The ideal air-fuel ratio occurs near the radical change from 1V to 0V.

CONSULT REFERENCE VALUE IN DATA MONITOR MODE

Specification data are reference values.

MONITOR ITEM	CONDITION		SPECIFICATION
FR O2 SENSOR ..... FR O2 MNTR	● Engine: After warming up	Maintaining engine speed at 2,000 rpm	0 - 0.3V ↔ Approx. 0.6 - 1.0V LEAN ↔ RICH Changes more than 5 times during 10 seconds.

ECM TERMINALS AND REFERENCE VALUE

Specification data are reference values and are measured between each terminal and ㉜ (ECM ground).

TERMINAL NO.	WIRE COLOR	ITEM	CONDITION	DATA (DC Voltage)
50	B	Front heated oxygen sensor	Engine is running. └ After warming up to normal operating temperature and engine speed is 2,000 rpm.	0 - Approximately 1.0V 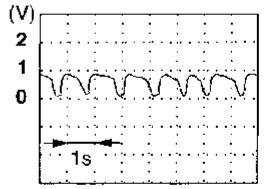 SEF201T

Simpo PDF Merge and Split Unregistered Version - http://www.simpopdf.com

Front Heated Oxygen Sensor (Lean Shift Monitoring) (Front HO2S) (Cont'd)

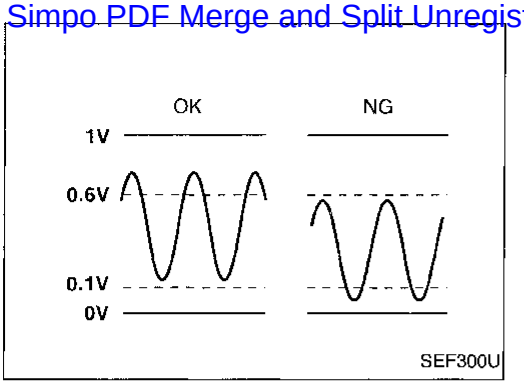

ON BOARD DIAGNOSIS LOGIC

To judge the malfunction, the output from the front heated oxygen sensor is monitored to determine whether the "rich" output is sufficiently high and whether the "lean" output is sufficiently low. When both the outputs are shifting to the lean side, the malfunction will be detected.

Diagnostic Trouble Code No.	Malfunction is detected when ...	Check Items (Possible Cause)
P0131 0411	● The maximum and minimum voltages from the sensor are not reached to the specified voltages.	● Front heated oxygen sensor ● Front heated oxygen sensor heater ● Fuel pressure ● Injectors ● Intake air leaks

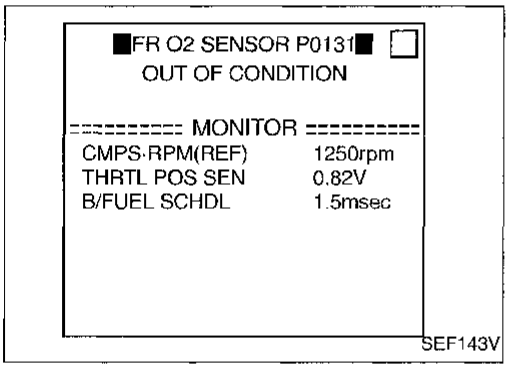

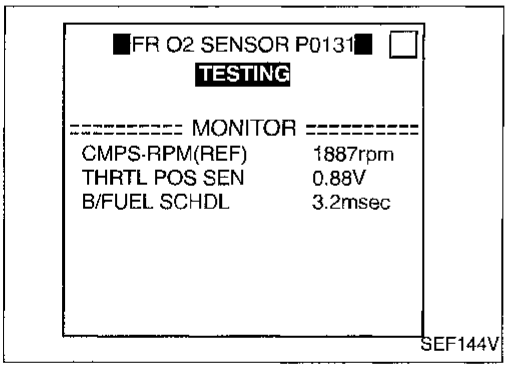

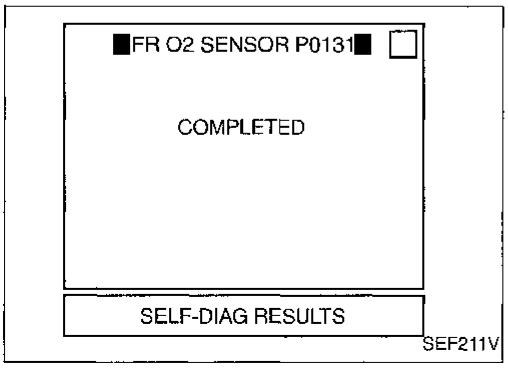

DIAGNOSTIC TROUBLE CODE CONFIRMATION PROCEDURE

CAUTION:
Always drive vehicle at a safe speed.

NOTE:
If "DIAGNOSTIC TROUBLE CODE CONFIRMATION PROCEDURE" has been previously conducted, always turn ignition switch "OFF" and wait at least 5 seconds before conducting the next test.

TESTING CONDITION:

- **Always perform at a temperature above −10°C (14°F).**
- **Before performing the following procedure, confirm that battery voltage is in between 11V and 16V at idle.**
- **Never raise engine speed above 3,000 rpm during the "DIAGNOSTIC TROUBLE CODE CONFIRMATION PROCEDURE". If the engine speed limit is exceeded, retry the procedure from step 5).**

1) Start engine and warm it up to normal operating temperature.
2) Stop engine and wait at least 5 seconds.
3) Turn ignition switch "ON" and select "FR O2 SENSOR P0131" of "FRONT O2 SENSOR" in "DTC WORK SUPPORT" mode with CONSULT.
4) Touch "START".
5) Start engine and let it idle for at least 3 minutes.
6) When the following conditions are met, "TESTING" will be displayed on the CONSULT screen. Maintain the conditions continuously until "TESTING" changes to "COMPLETED". (It will take approximately 50 seconds or more.)
   CMPS·RPM (REF): 1,700 - 3,000 rpm
   Vehicle speed: 80 - 120 km/h (50 - 75 MPH)
   B/FUEL SCHDL: 1.1 - 4.8 ms
   Selector lever: Suitable position

Simpo PDF Merge and Split Unregistered Version - http://www.simpopdf.com

Front Heated Oxygen Sensor (Lean Shift Monitoring) (Front HO2S) (Cont'd)

If "TESTING" is not displayed after 5 minutes, retry from step 2).

7) Make sure that "OK" is displayed after touching "SELF-DIAG RESULTS". If "NG" is displayed, refer to "DIAGNOSTIC PROCEDURE", EC-153.

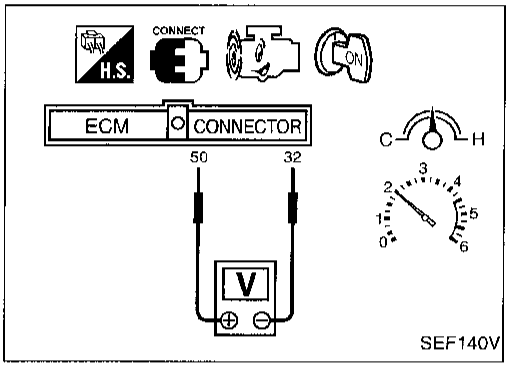

OR

OVERALL FUNCTION CHECK

Use this procedure to check the overall function of the front heated oxygen sensor circuit. During this check, a 1st trip DTC might not be confirmed.

1) Start engine and warm it up to normal operating temperature.
2) Set voltmeter probes between ECM terminals ⑤⓪ (sensor signal) and ③② (ECM ground).
3) Check the following with engine speed held at 2,000 rpm constant under no load.

- The maximum voltage is over 0.6V at least one time.

OR

- The minimum voltage is over 0.1V at least one time.

Simpo PDF Merge and Split Unregistered Version - http://www.simpopdf.com

Front Heated Oxygen Sensor (Lean Shift Monitoring) (Front HO2S) (Cont'd)

DIAGNOSTIC PROCEDURE

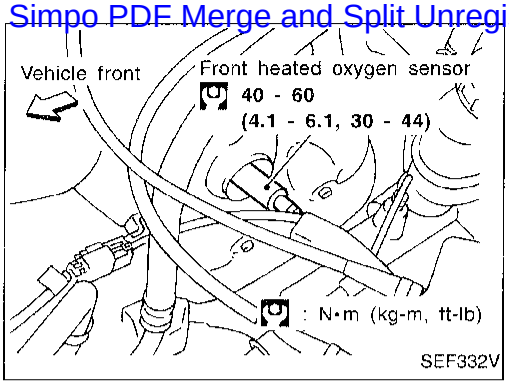

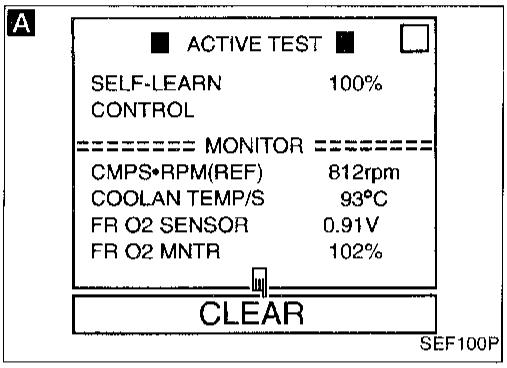

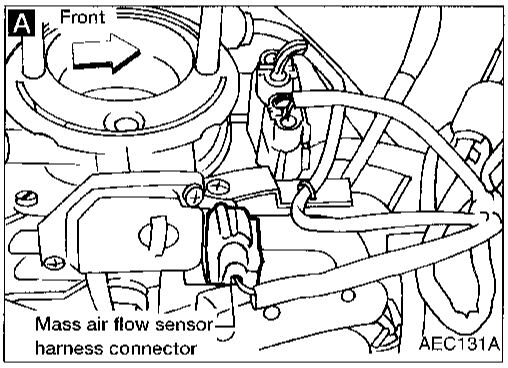

INSPECTION START

1. Turn ignition switch "OFF".
2. Loosen and retighten front heated oxygen sensor.
   Tightening torque:
   40 - 60 N·m
   (4.1 - 6.1 kg-m, 30 - 44 ft-lb)

A

CLEAR THE SELF-LEARNING DATA.

1. Start engine and warm it up to normal operating temperature.
2. Select "SELF-LEARNING CONT" in "ACTIVE TEST" mode with CONSULT.
3. Clear the self-learning control coefficient by touching "CLEAR".
4. Run engine for at least 10 minutes at idle speed.
   Is the 1st trip DTC P0171 detected? Is it difficult to start engine?

Yes → Go to "TROUBLE DIAGNOSIS FOR DTC P0171", EC-208.

OR

2. Turn ignition switch "OFF".
3. Disconnect mass air flow sensor harness connector, and restart and run engine for at least 3 seconds at idle speed.
4. Stop engine and reconnect mass air flow sensor harness connector.
5. Make sure diagnostic trouble code No. 0102 is displayed in Diagnostic Test Mode II.
6. Erase the diagnostic test mode II (Self-diagnostic results) memory. Make sure diagnostic trouble code No. 0505 is displayed in Diagnostic Test Mode II.
7. Run engine for at least 10 minutes at idle speed.
   Is the 1st trip DTC 0115 detected? Is it difficult to start engine?

No

CHECK COMPONENT
(Front heated oxygen sensor heater).
Refer to "COMPONENT INSPECTION" on next page.

NG → Replace front heated oxygen sensor.

OK

Ⓐ
(Go to next page.)

Simpo PDF Merge and Split Unregistered Version - http://www.simpopdf.com

Front Heated Oxygen Sensor (Lean Shift Monitoring) (Front HO2S) (Cont'd)

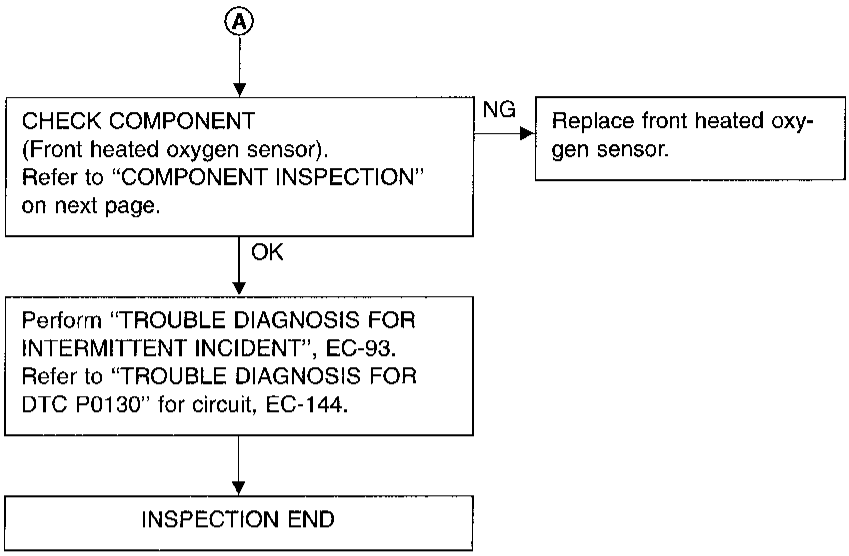

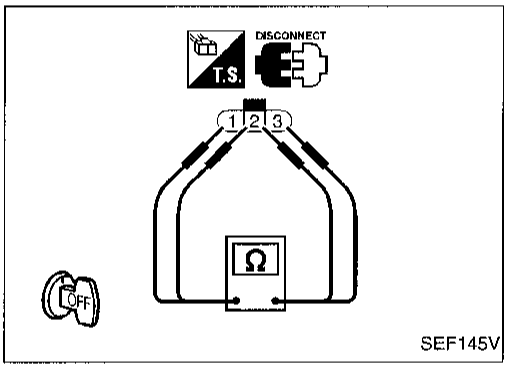

COMPONENT INSPECTION

Front heated oxygen sensor heater

Check resistance between terminals ③ and ①.

Resistance: 2.3 - 4.3Ω at 25°C (77°F)

Check continuity between terminals ② and ①, ③ and ②.

Continuity should not exist.

If NG, replace the front heated oxygen sensor.

CAUTION:

Discard any heated oxygen sensor which has been dropped from a height of more than 0.5 m (19.7 in) onto a hard surface such as a concrete floor; use a new one.

Simpo PDF Merge and Split Unregistered Version - http://www.simpopdf.com

Front Heated Oxygen Sensor (Lean Shift Monitoring) (Front HO2S) (Cont'd)

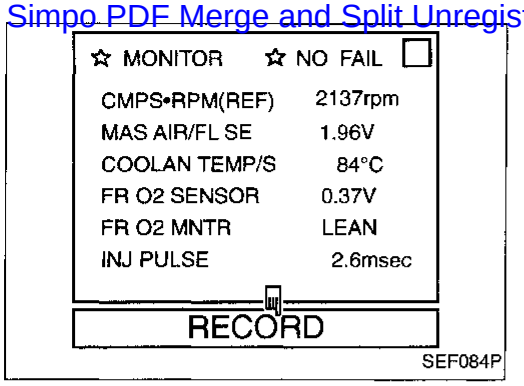

Front heated oxygen sensor

1) Start engine and warm it up to normal operating temperature.
2) Select "MANU TRIG" and "HI SPEED" in "DATA MONITOR" mode with CONSULT, and select "FR O2 SENSOR" and "FR O2 MNTR".
3) Hold engine speed at 2,000 rpm under no load during the following steps.
4) Touch "RECORD" on CONSULT screen.
5) Check the following.

- "FR O2 MNTR" in "DATA MONITOR" mode changes from "RICH" to "LEAN" to "RICH" 5 times in 10 seconds.
  5 times (cycles) are counted as shown below:

cycle	I	1	I	2	I	3	I	4	I	5	I
FR O2 MNTR	R-L-R-L-R-L-R-L-R-L-R									

  R = "FR O2 MNTR", "RICH"
  L = "FR O2 MNTR", "LEAN"
- "FR O2 SENSOR" voltage goes above 0.6V at least once.
- "FR O2 SENSOR" voltage goes below 0.35V at least once.
- "FR O2 SENSOR" voltage never exceeds 1.0V.

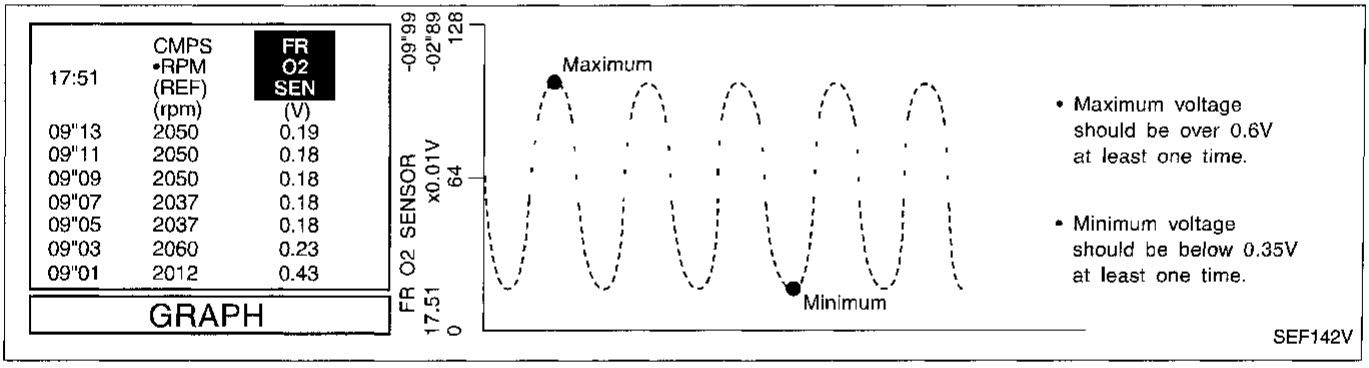

OR

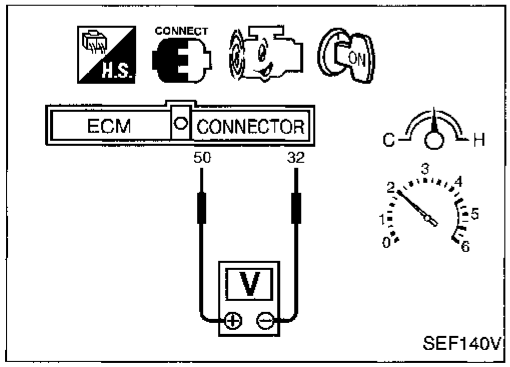

1) Start engine and warm it up to normal operating temperature.
2) Set voltmeter probes between ECM terminals ⑤⓪ (sensor signal) and ③② (ECM ground).
3) Check the following with engine speed held at 2,000 rpm constant under no load.

- Malfunction indicator lamp goes on more than 5 times within 10 seconds in Diagnostic Test Mode II (FRONT HEATED OXYGEN SENSOR MONITOR).
- The maximum voltage is over 0.6V at least one time.
- The minimum voltage is below 0.35V at least one time.
- The voltage never exceeds 1.0V.

Simpo PDF Merge and Split Unregistered Version - http://www.simpopdf.com

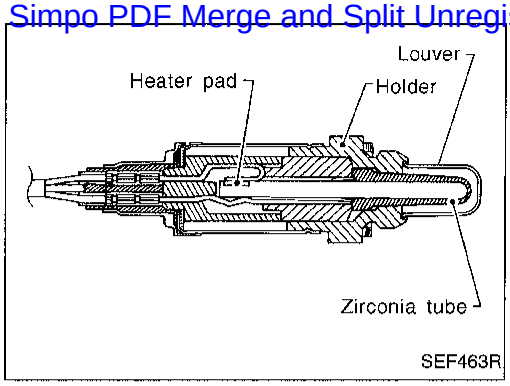

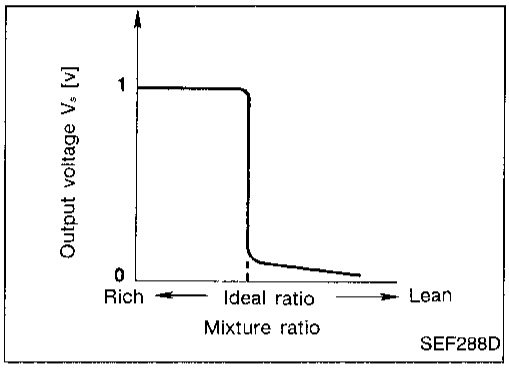

Front Heated Oxygen Sensor (Rich Shift Monitoring) (Front HO2S)

COMPONENT DESCRIPTION

The front heated oxygen sensor is placed into the exhaust manifold. It detects the amount of oxygen in the exhaust gas compared to the outside air. The front heated oxygen sensor has a closed-end tube made of ceramic zirconia. The zirconia generates voltage from approximately 1V in richer conditions to 0V in leaner conditions. The front heated oxygen sensor signal is sent to the ECM. The ECM adjusts the injection pulse duration to achieve the ideal air-fuel ratio. The ideal air-fuel ratio occurs near the radical change from 1V to 0V.

CONSULT REFERENCE VALUE IN DATA MONITOR MODE

Specification data are reference values.

MONITOR ITEM	CONDITION		SPECIFICATION
FR O2 SENSOR ..... FR O2 MNTR	● Engine: After warming up	Maintaining engine speed at 2,000 rpm	0 - 0.3V ↔ Approx. 0.6 - 1.0V LEAN ↔ RICH Changes more than 5 times during 10 seconds.

ECM TERMINALS AND REFERENCE VALUE

Specification data are reference values and are measured between each terminal and ㉜ (ECM ground).

TER-MINAL NO.	WIRE COLOR	ITEM	CONDITION	DATA (DC Voltage)
50	B	Front heated oxygen sensor	Engine is running. └ After warming up to normal operating temperature and engine speed is 2,000 rpm.	0 - Approximately 1.0V 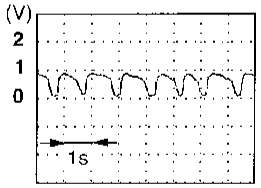 SEF201T

Simpo PDF Merge and Split Unregistered Version - http://www.simpopdf.com

Front Heated Oxygen Sensor (Rich Shift Monitoring) (Front HO2S) (Cont'd)

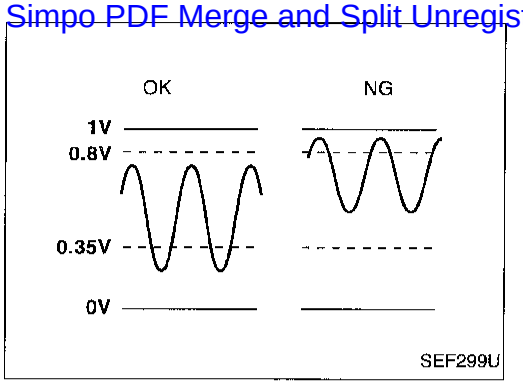

ON BOARD DIAGNOSIS LOGIC

To judge the malfunction, the output from the front heated oxygen sensor is monitored to determine whether the "rich" output is sufficiently high. The "lean" output is sufficiently low. When both the outputs are shifting to the rich side, the malfunction will be detected.

Diagnostic Trouble Code No.	Malfunction is detected when ...	Check Items (Possible Cause)
P0132 0410	● The maximum and minimum voltages from the sensor are beyond the specified voltages.	● Front heated oxygen sensor ● Front heated oxygen sensor heater ● Fuel pressure ● Injectors

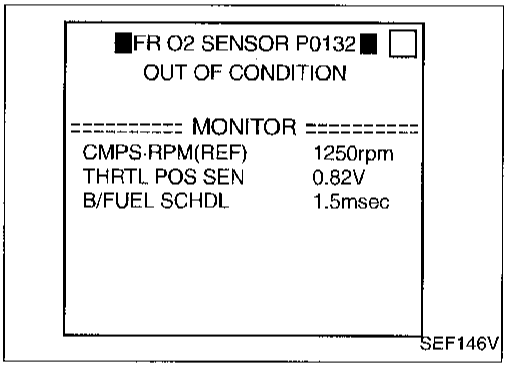

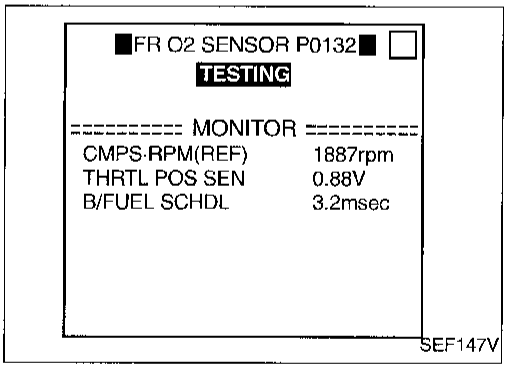

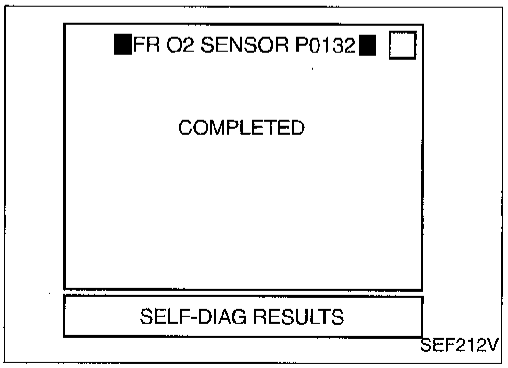

DIAGNOSTIC TROUBLE CODE CONFIRMATION PROCEDURE

CAUTION:
Always drive vehicle at a safe speed.

NOTE:
If "DIAGNOSTIC TROUBLE CODE CONFIRMATION PROCEDURE" has been previously conducted, always turn ignition switch "OFF" and wait at least 5 seconds before conducting the next test.

TESTING CONDITION:

- **Always perform at a temperature above −10°C (14°F).**
- **Before performing the following procedure, confirm that battery voltage is in between 11V and 16V at idle.**
- **Never raise engine speed above 3,000 rpm during the "DIAGNOSTIC TROUBLE CODE CONFIRMATION PROCEDURE". If the engine speed limit is exceeded, retry the procedure from step 5).**

1) Start engine and warm it up to normal operating temperature.
2) Stop engine and wait at least 5 seconds.
3) Turn ignition switch "ON" and select "FR O2 SENSOR P0132" of "FRONT O2 SENSOR" in "DTC WORK SUPPORT" mode with CONSULT.
4) Touch "START".
5) Start engine and let it idle for at least 3 minutes.
6) When the following conditions are met, "TESTING" will be displayed on the CONSULT screen. Maintain the conditions continuously until "TESTING" changes to "COMPLETED". (It will take approximately 50 seconds or more.)
   CMPS·RPM (REF): 1,700 - 3,000 rpm
   Vehicle speed: 80 - 120 km/h (50 - 75 MPH)
   B/FUEL SCHDL: 1.1 - 4.8 ms
   Selector lever: Suitable position

Simpo PDF Merge and Split Unregistered Version - http://www.simpopdf.com

Front Heated Oxygen Sensor (Rich Shift Monitoring) (Front HO2S) (Cont'd)

If "TESTING" is not displayed after 5 minutes, retry from step 2).

7) Make sure that "OK" is displayed after touching "SELF-DIAG RESULTS". If "NG" is displayed, refer to "DIAGNOSTIC PROCEDURE", EC-159.

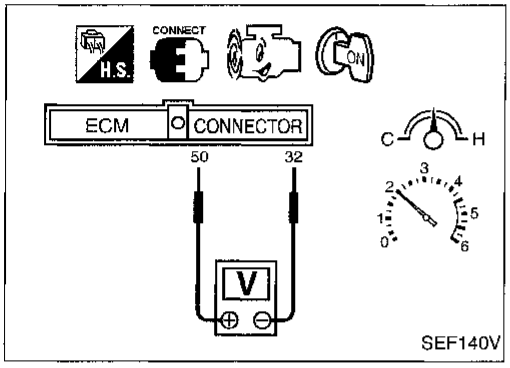

OR

OVERALL FUNCTION CHECK

Use this procedure to check the overall function of the front heated oxygen sensor circuit. During this check, a 1st trip DTC might not be confirmed.

1) Start engine and warm it up to normal operating temperature.
2) Set voltmeter probes between ECM terminals ⑤⓪ (sensor signal) and ③② (ECM ground).
3) Check the following with engine speed held at 2,000 rpm constant under no load.

- The maximum voltage is below 0.8V at least one time.

OR

- The minimum voltage is below 0.35V at least one time.

Simpo PDF Merge and Split Unregistered Version - http://www.simpopdf.com

Front Heated Oxygen Sensor (Rich Shift Monitoring) (Front HO2S) (Cont'd)

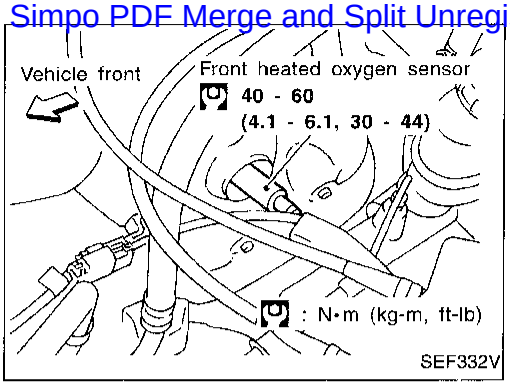

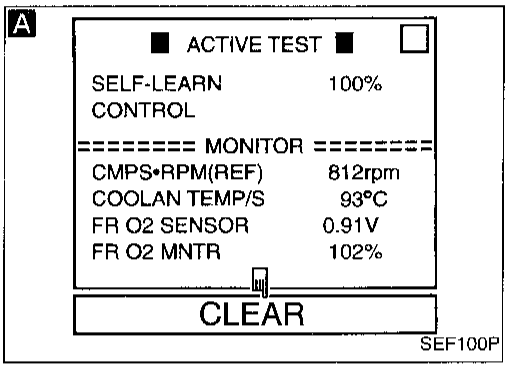

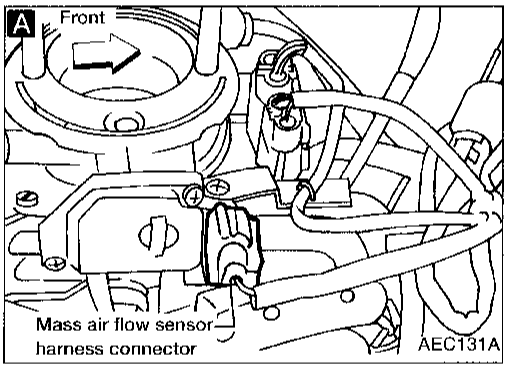

DIAGNOSTIC PROCEDURE

INSPECTION START

1. Turn ignition switch "OFF".
2. Loosen and retighten front heated oxygen sensor.
   Tightening torque:
   40 - 60 N·m
   (4.1 - 6.1 kg-m, 30 - 44 ft-lb)

A

CLEAR THE SELF-LEARNING DATA

1. Start engine and warm it up to normal operating temperature.
2. Select "SELF-LEARNING CONT" in "ACTIVE TEST" mode with CONSULT.
3. Clear the self-learning control coefficient by touching "CLEAR".
4. Run engine for at least 10 minutes at idle speed.
   Is the 1st trip DTC P0172 detected? Is it difficult to start engine?

Yes → Go to "TROUBLE DIAGNOSIS FOR DTC P0172", EC-213.

OR

2. Turn ignition switch "OFF".
3. Disconnect mass air flow sensor harness connector, and restart and run engine for at least 3 seconds at idle speed.
4. Stop engine and reconnect mass air flow sensor harness connector.
5. Make sure diagnostic trouble code No. 0102 is displayed in Diagnostic Test Mode II.
6. Erase the diagnostic test mode II (Self-diagnostic results) memory. Make sure diagnostic trouble code No. 0505 is displayed in Diagnostic Test Mode II.
7. Run engine for at least 10 minutes at idle speed.
   Is the 1st trip DTC 0114 detected? Is it difficult to start engine?

No → Ⓐ

(Go to next page.)

Simpo PDF Merge and Split Unregistered Version - http://www.simpopdf.com

Front Heated Oxygen Sensor (Rich Shift Monitoring) (Front HO2S) (Cont'd)

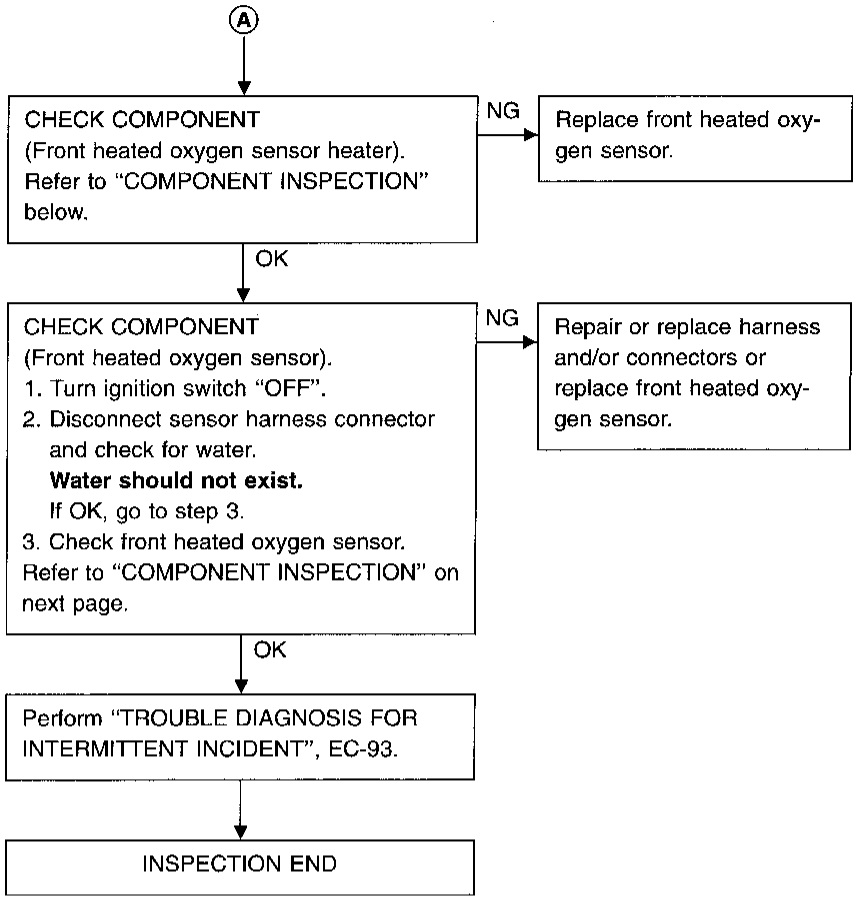

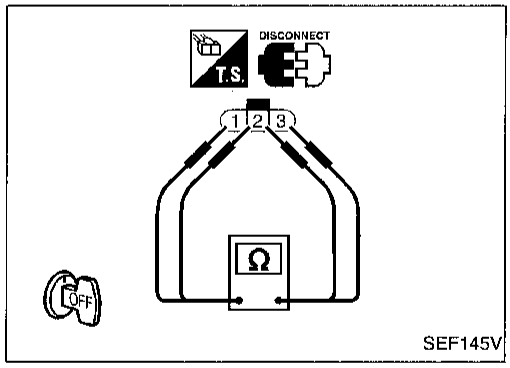

COMPONENT INSPECTION

Front heated oxygen sensor heater

Check resistance between terminals ③ and ①.

Resistance: 2.3 - 4.3Ω at 25°C (77°F)

Check continuity between terminals ② and ①, ③ and ②.

Continuity should not exist.

If NG, replace the front heated oxygen sensor.

CAUTION:

Discard any heated oxygen sensor which has been dropped from a height of more than 0.5 m (19.7 in) onto a hard surface such as a concrete floor; use a new one.

Simpo PDF Merge and Split Unregistered Version - http://www.simpopdf.com

Front Heated Oxygen Sensor (Rich Shift Monitoring) (Front HO2S) (Cont'd)

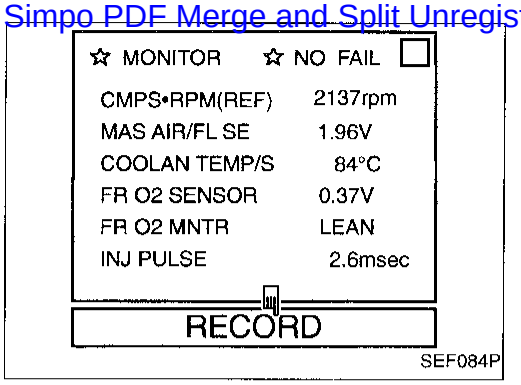

Front heated oxygen sensor

1) Start engine and warm it up to normal operating temperature.
2) Select "MANU TRIG" and "HI SPEED" in "DATA MONITOR" mode with CONSULT, and select "FR O2 SENSOR" and "FR O2 MNTR".
3) Hold engine speed at 2,000 rpm under no load during the following steps.
4) Touch "RECORD" on CONSULT screen.
5) Check the following.

- "FR O2 MNTR" in "DATA MONITOR" mode changes from "RICH" to "LEAN" to "RICH" 5 times in 10 seconds.
  5 times (cycles) are counted as shown below:

cycle	1	2	3	4	5
FR O2 MNTR	R-L	R-L	R-L	R-L	R-L-R

  R = "FR O2 MNTR", "RICH"
  L = "FR O2 MNTR", "LEAN"
- "FR O2 SENSOR" voltage goes above 0.6V at least once.
- "FR O2 SENSOR" voltage goes below 0.35V at least once.
- "FR O2 SENSOR" voltage never exceeds 1.0V.

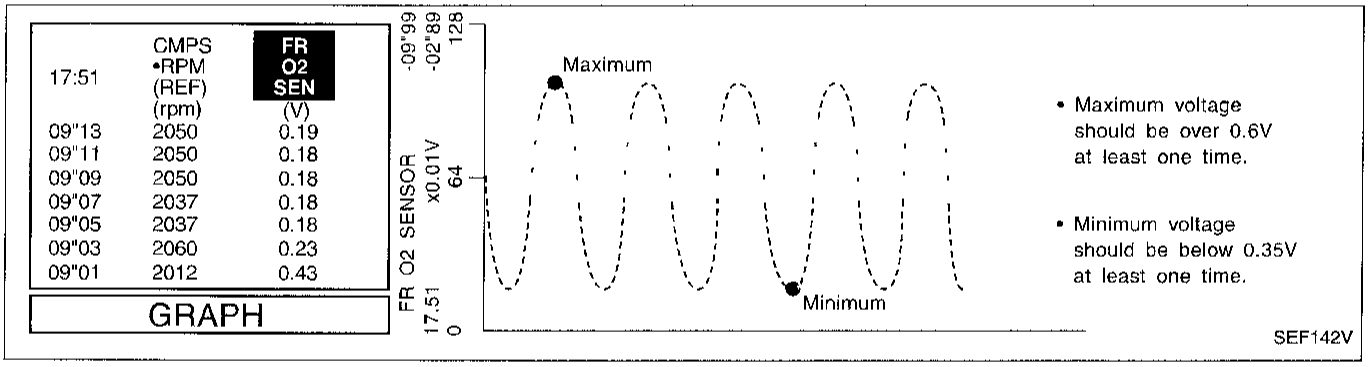

OR

1) Start engine and warm it up to normal operating temperature.
2) Set voltmeter probes between ECM terminals ⑤⓪ (sensor signal) and ③② (ECM ground).
3) Check the following with engine speed held at 2,000 rpm constant under no load.

- Malfunction indicator lamp goes on more than 5 times within 10 seconds in Diagnostic Test Mode II (FRONT HEATED OXYGEN SENSOR MONITOR).
- The maximum voltage is over 0.6V at least one time.
- The minimum voltage is below 0.35V at least one time.
- The voltage never exceeds 1.0V.

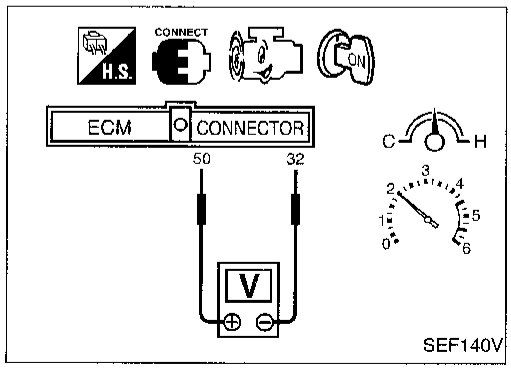

Simpo PDF Merge and Split Unregistered Version - http://www.simpopdf.com

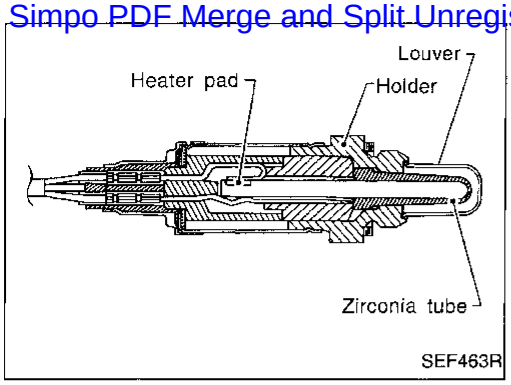

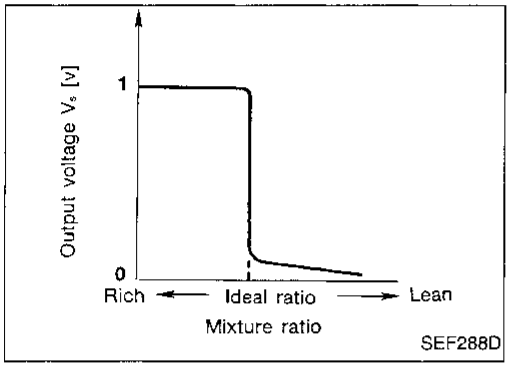

Front Heated Oxygen Sensor (Response Monitoring) (Front HO2S)

COMPONENT DESCRIPTION

The front heated oxygen sensor is placed into the exhaust manifold. It detects the amount of oxygen in the exhaust gas compared to the outside air. The front heated oxygen sensor has a closed-end tube made of ceramic zirconia. The zirconia generates voltage from approximately 1V in richer conditions to 0V in leaner conditions. The front heated oxygen sensor signal is sent to the ECM. The ECM adjusts the injection pulse duration to achieve the ideal air-fuel ratio. The ideal air-fuel ratio occurs near the radical change from 1V to 0V.

CONSULT REFERENCE VALUE IN DATA MONITOR MODE

Specification data are reference values.

MONITOR ITEM	CONDITION		SPECIFICATION
FR O2 SENSOR	● Engine: After warming up	Maintaining engine speed at 2,000 rpm	0 - 0.3V ↔ Approx. 0.6 - 1.0V
..... FR O2 MNTR			LEAN ↔ RICH Changes more than 5 times during 10 seconds.

ECM TERMINALS AND REFERENCE VALUE

Specification data are reference values and are measured between each terminal and ㉜ (ECM ground).

TERMINAL NO.	WIRE COLOR	ITEM	CONDITION	DATA (DC Voltage)
50	B	Front heated oxygen sensor	Engine is running. └ After warming up to normal operating temperature and engine speed is 2,000 rpm.	0 - Approximately 1.0V 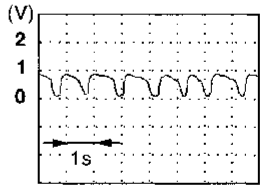 SEF201T

Simpo PDF Merge and Split Unregistered Version - http://www.simpopdf.com

Front Heated Oxygen Sensor (Response Monitoring) (Front HO2S) (Cont'd)

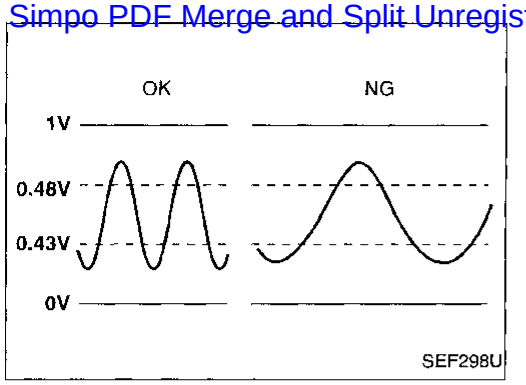

ON BOARD DIAGNOSIS LOGIC

To judge the malfunction of front heated oxygen sensor, this diagnosis measures front heated oxygen sensor cycling time. The time is compensated by engine operating (speed and load), fuel feedback control constant, and front heated oxygen sensor temperature index. Judgment is based on whether the compensated time (front heated oxygen sensor cycling time index) is inordinately long or not.

Diagnostic Trouble Code No.	Malfunction is detected when ...	Check Items (Possible Cause)
P0133 0409	● The cycle of the voltage signal from the sensor is more than the specified time.	● Harness or connectors (The sensor circuit is open or shorted.) ● Front heated oxygen sensor ● Front heated oxygen sensor heater ● Fuel pressure ● Injectors ● Intake air leaks ● Exhaust gas leaks ● PCV ● Mass air flow sensor

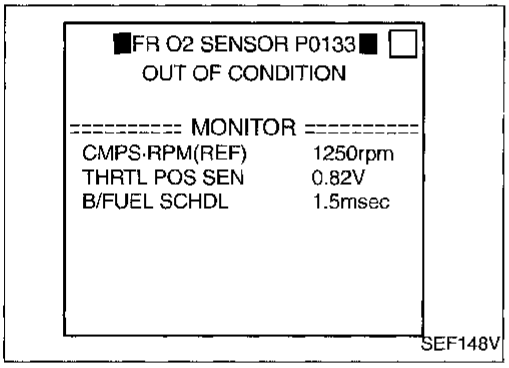

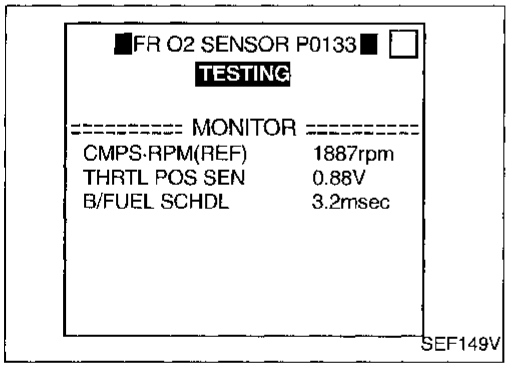

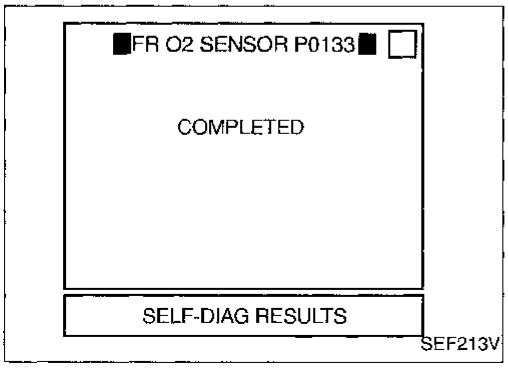

DIAGNOSTIC TROUBLE CODE CONFIRMATION PROCEDURE

CAUTION:
Always drive vehicle at a safe speed.

NOTE:
If "DIAGNOSTIC TROUBLE CODE CONFIRMATION PROCEDURE" has been previously conducted, always turn ignition switch "OFF" and wait at least 5 seconds before conducting the next test.

TESTING CONDITION:

- **Always perform at a temperature above −10°C (14°F).**
- **Before performing the following procedure, confirm that battery voltage is between 11V and 16V at idle.**
- **Never raise engine speed above 3,000 rpm during the "DIAGNOSTIC TROUBLE CODE CONFIRMATION PROCEDURE". If the engine speed limit is exceeded, retry the procedure from step 5).**

1) Start engine and warm it up to normal operating temperature.
2) Stop engine and wait at least 5 seconds.
3) Turn ignition switch "ON" and select "FR O2 SENSOR P0133" of "FRONT O2 SENSOR" in "DTC WORK SUPPORT" mode with CONSULT.
4) Touch "START".
5) Start engine and let it idle for at least 3 minutes.
6) When the following conditions are met, "TESTING" will be displayed on the CONSULT screen. Maintain the conditions continuously until "TESTING" changes to "COMPLETED". (It will take approximately 20 seconds or more.)
   CMPS·RPM (REF): 1,700 - 3,000 rpm
   Vehicle speed: 80 - 120 km/h (50 - 75 MPH)
   B/FUEL SCHDL: 1.1 - 4.8 ms
   Selector lever: Suitable position

Simpo PDF Merge and Split Unregistered Version - http://www.simpopdf.com

Front Heated Oxygen Sensor (Response Monitoring) (Front HO2S) (Cont'd)

If "TESTING" is not displayed after 5 minutes, retry from step 2).

7) Make sure that "OK" is displayed after touching "SELF-DIAG RESULTS". If "NG" is displayed, refer to "DIAGNOSTIC PROCEDURE", EC-166.

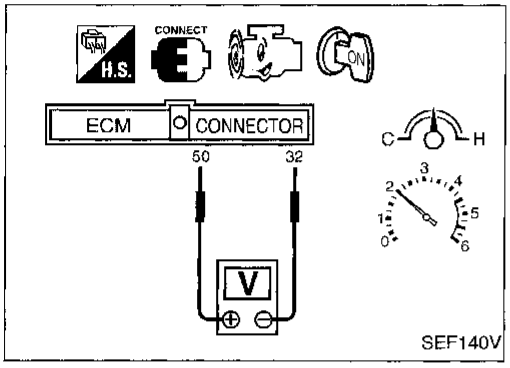

OR

OVERALL FUNCTION CHECK

Use this procedure to check the overall function of the front heated oxygen sensor circuit. During this check, a 1st trip DTC might not be confirmed.

1) Start engine and warm it up to normal operating temperature.
2) Set voltmeter probes between ECM terminals ⑤⓪ (sensor signal) and ③② (ECM ground).
3) Check the following with engine speed held at 2,000 rpm constant under no load.

- Malfunction indicator lamp goes on more than 5 times within 10 seconds in Diagnostic Test Mode II (FRONT HEATED OXYGEN SENSOR MONITOR).

Front Heated Oxygen Sensor (Response Monitoring) (Front HO2S) (Cont'd)

Simpo PDF Merge and Split Unregistered Version - http://www.simpopdf.com

EC-FRO2-01

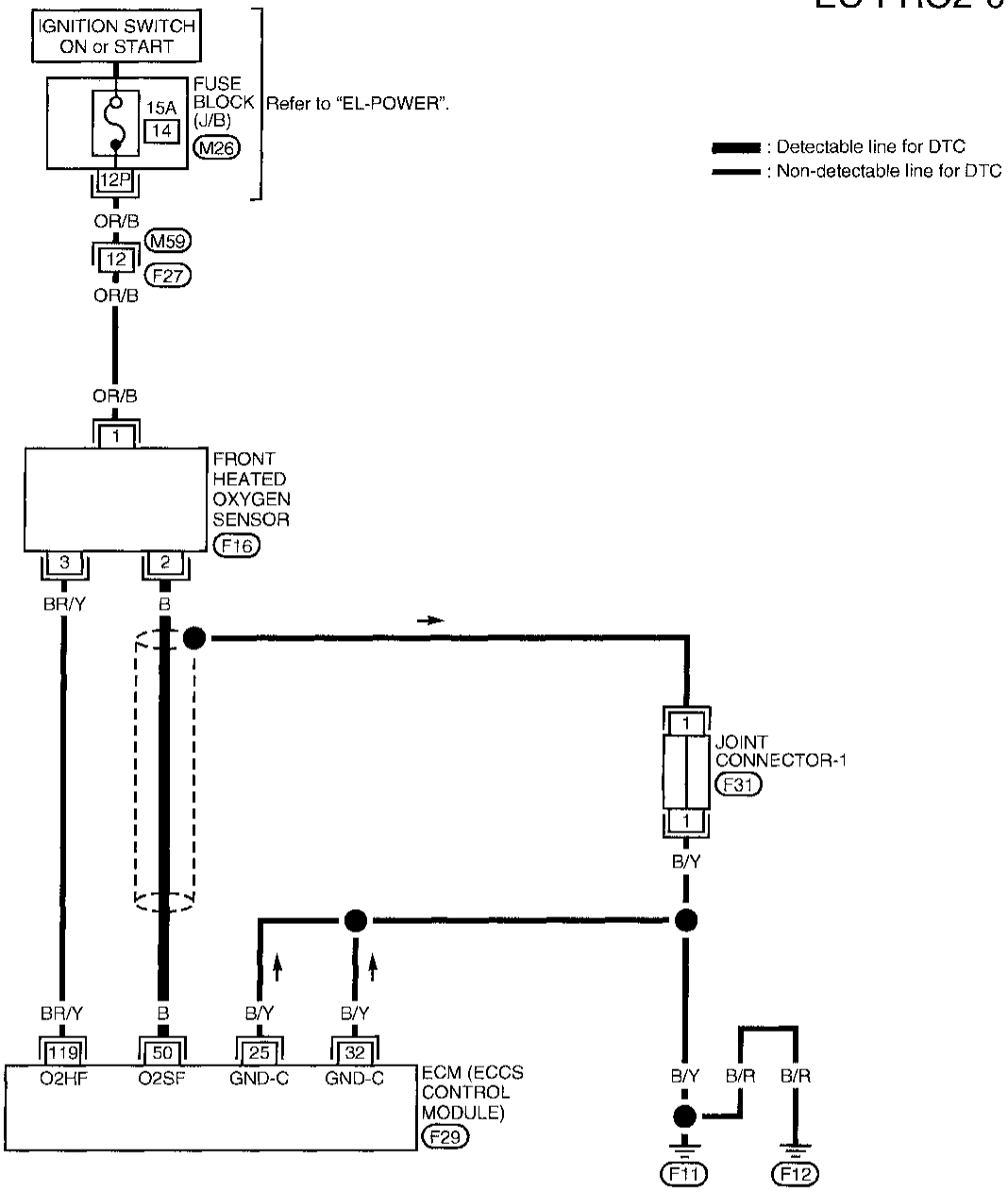



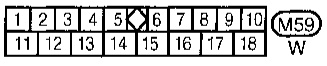

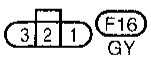

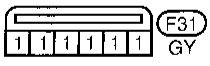

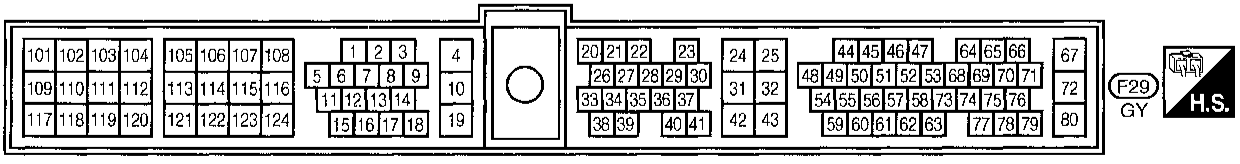

AEC524A

Simpo PDF Merge and Split Unregistered Version - http://www.simpopdf.com

Front Heated Oxygen Sensor (Response Monitoring) (Front HO2S) (Cont'd)

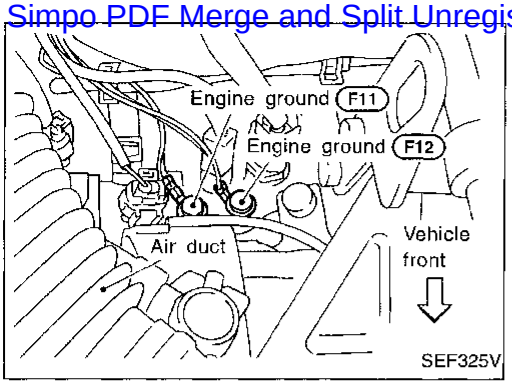

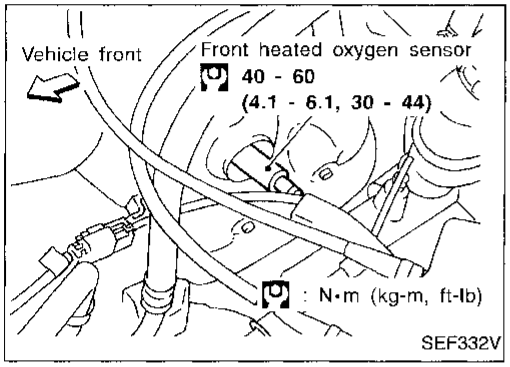

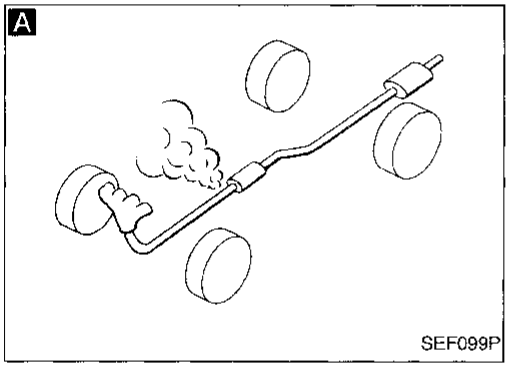

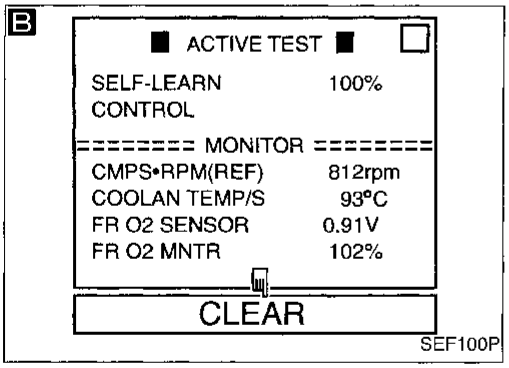

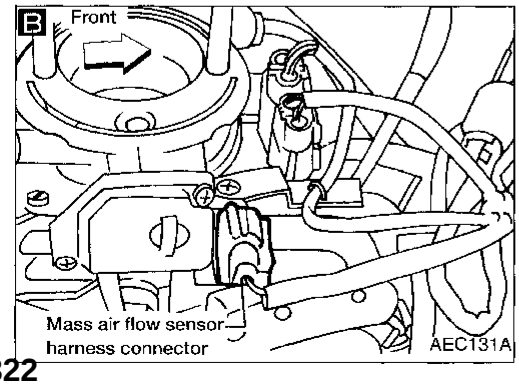

DIAGNOSTIC PROCEDURE

INSPECTION START

1. Turn ignition switch "OFF".
2. Loosen and retighten engine ground screws.

Loosen and retighten front heated oxygen sensor.
Tightening torque:
40 - 60 N·m
(4.1 - 6.1 kg-m, 30 - 44 ft-lb)

A

CHECK EXHAUST AIR LEAK.
Start engine and run it at idle. Listen for an exhaust air leak before three way catalyst.

NG → Repair or replace.

OK

CHECK FOR INTAKE AIR LEAK.
Start engine and run it at idle. Listen for an intake air leak between the mass air flow sensor and the intake manifold.

NG → Repair or replace.

OK

B

CLEAR THE SELF-LEARNING DATA.
1. Start engine and warm it up to normal operating temperature.
2. Select "SELF-LEARNING CONT" in "ACTIVE TEST" mode with CONSULT.
3. Clear the self-learning control coefficient by touching "CLEAR".
4. Run engine for at least 10 minutes at idle speed.
Is the 1st trip DTC P0171 or P0172 detected? Is it difficult to start engine?

Yes → Go to "TROUBLE DIAGNOSIS FOR DTC P0171", EC-208 or "TROUBLE DIAGNOSIS FOR DTC P0172", EC-213.

OR

2. Turn ignition switch "OFF".
3. Disconnect mass air flow sensor harness connector, and restart and run engine for at least 3 seconds at idle speed.
4. Stop engine and reconnect mass air flow sensor harness connector.
5. Make sure diagnostic trouble code No. 0102 is displayed in Diagnostic Test Mode II.
6. Erase the diagnostic test mode II (Self-diagnostic results) memory. Make sure diagnostic trouble code No. 0505 is displayed in Diagnostic Test Mode II.
7. Run engine for at least 10 minutes at idle speed.
Is the 1st trip DTC 0115 or 0114 detected? Is it difficult to start engine?

No

Ⓐ
(Go to next page.)

Front Heated Oxygen Sensor (Response Monitoring) (Front HO2S) (Cont'd)

Simpo PDF Merge and Split Unregistered Version - http://www.simpopdf.com

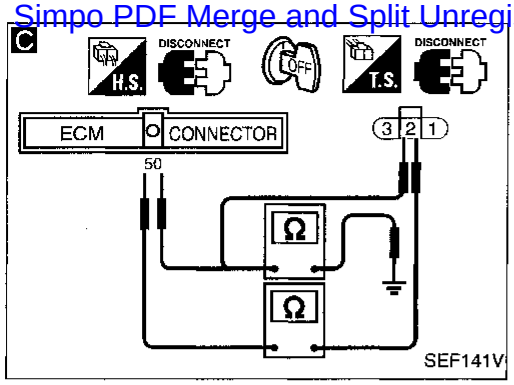

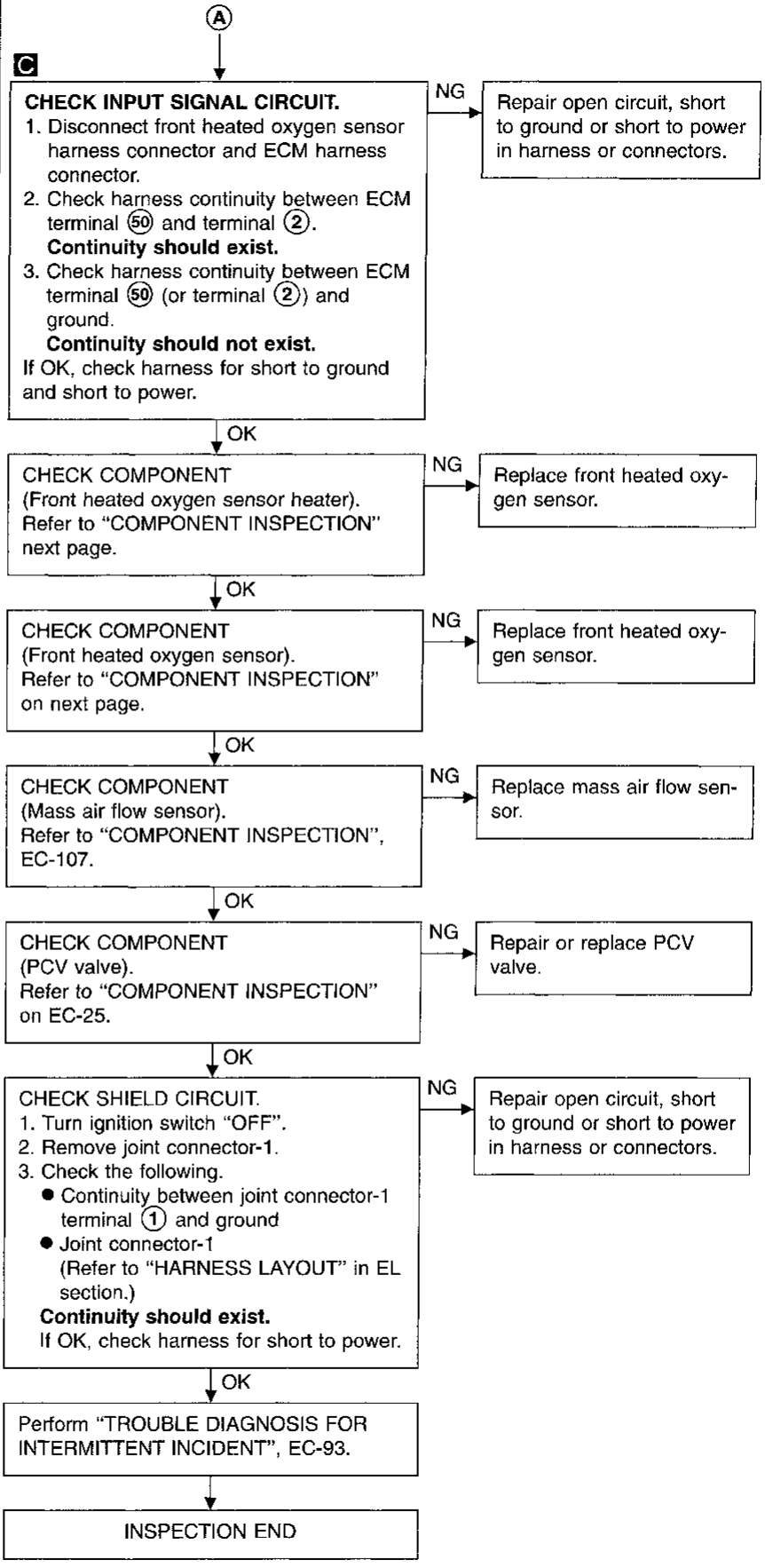

Simpo PDF Merge and Split Unregistered Version - http://www.simpopdf.com

Front Heated Oxygen Sensor (Response Monitoring) (Front HO2S) (Cont'd)

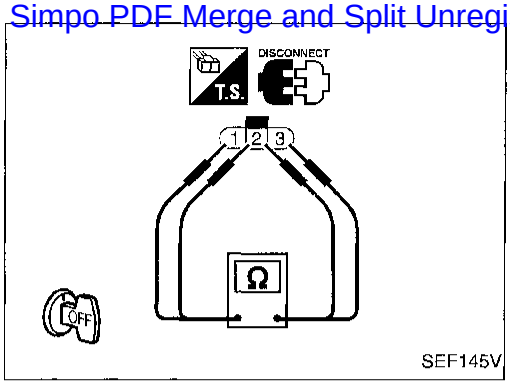

COMPONENT INSPECTION

Front heated oxygen sensor heater

Check resistance between terminals ③ and ①.

Resistance: 2.3 - 4.3Ω at 25°C (77°F)

Check continuity between terminals ② and ①, ③ and ②.

Continuity should not exist.

If NG, replace the front heated oxygen sensor.

CAUTION:

Discard any heated oxygen sensor which has been dropped from a height of more than 0.5 m (19.7 in) onto a hard surface such as a concrete floor; use a new one.

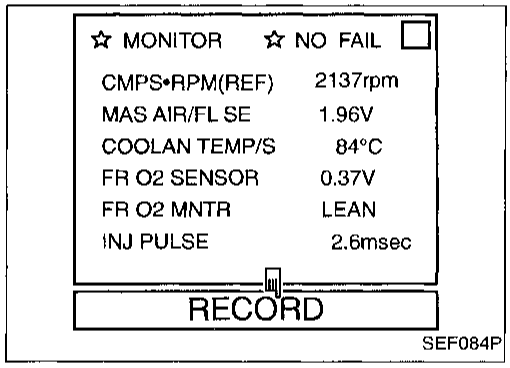

Front heated oxygen sensor

1) Start engine and warm it up to normal operating temperature.
2) Select "MANU TRIG" and "HI SPEED" in "DATA MONITOR" mode with CONSULT, and select "FR O2 SENSOR" and "FR O2 MNTR".
3) Hold engine speed at 2,000 rpm under no load during the following steps.
4) Touch "RECORD" on CONSULT screen.
5) Check the following.

- "FR O2 MNTR" in "DATA MONITOR" mode changes from "RICH" to "LEAN" to "RICH" 5 times in 10 seconds.
  5 times (cycles) are counted as shown below:

cycle	1	2	3	4	5
FR O2 MNTR	R-L-R-L-R-L-R-L-R-L-R				

  R = "FR O2 MNTR", "RICH"
  L = "FR O2 MNTR", "LEAN"
- "FR O2 SENSOR" voltage goes above 0.6V at least once.
- "FR O2 SENSOR" voltage goes below 0.35V at least once.
- "FR O2 SENSOR" voltage never exceeds 1.0V.

Front Heated Oxygen Sensor (Response Monitoring) (Front HO2S) (Cont'd)

Simpo PDF Merge and Split Unregistered Version - http://www.simpopdf.com

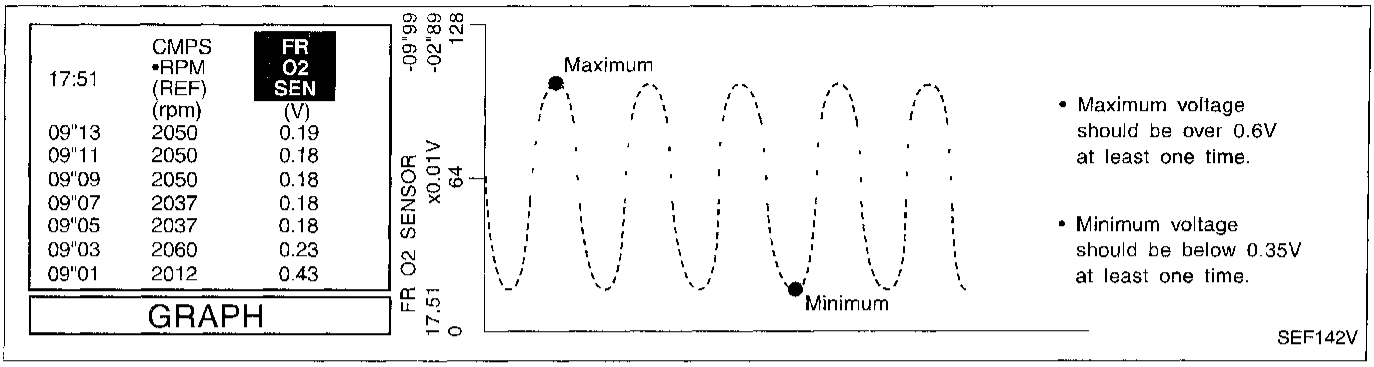

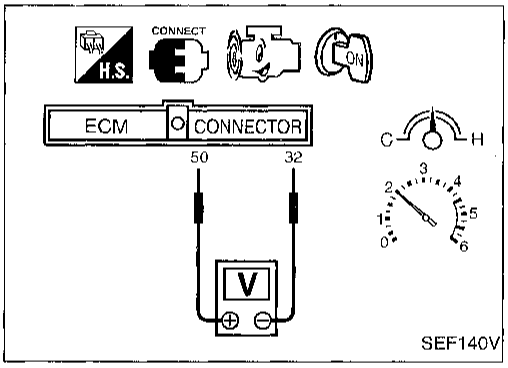

OR

1) Start engine and warm it up to normal operating temperature.
2) Set voltmeter probes between ECM terminals ⑤⓪ (sensor signal) and ③② (ECM ground).
3) Check the following with engine speed held at 2,000 rpm constant under no load.

- Malfunction indicator lamp goes on more than 5 times within 10 seconds in Diagnostic Test Mode II (FRONT HEATED OXYGEN SENSOR MONITOR).
- The maximum voltage is over 0.6V at least one time.
- The minimum voltage is below 0.35V at least one time.
- The voltage never exceeds 1.0V.

Simpo PDF Merge and Split Unregistered Version - http://www.simpopdf.com

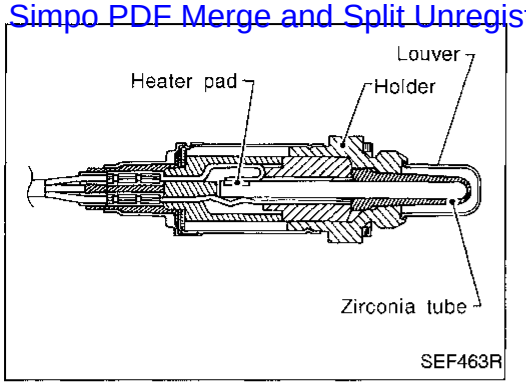

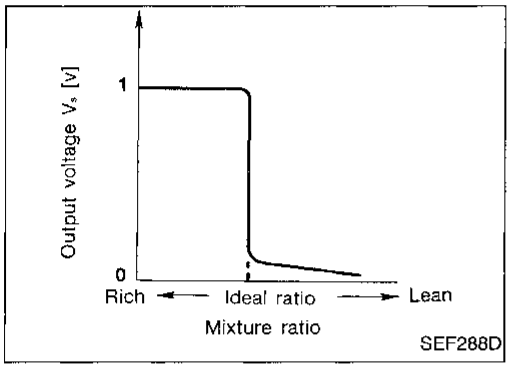

Front Heated Oxygen Sensor (High Voltage) (Front HO2S)

COMPONENT DESCRIPTION

The front heated oxygen sensor is placed into the exhaust manifold. It detects the amount of oxygen in the exhaust gas compared to the outside air. The front heated oxygen sensor has a closed-end tube made of ceramic zirconia. The zirconia generates voltage from approximately 1V in richer conditions to 0V in leaner conditions. The front heated oxygen sensor signal is sent to the ECM. The ECM adjusts the injection pulse duration to achieve the ideal air-fuel ratio. The ideal air-fuel ratio occurs near the radical change from 1V to 0V.

CONSULT REFERENCE VALUE IN DATA MONITOR MODE

Specification data are reference values.

MONITOR ITEM	CONDITION		SPECIFICATION
FR O2 SENSOR ..... FR O2 MNTR	● Engine: After warming up	Maintaining engine speed at 2,000 rpm	0 - 0.3V ↔ Approx. 0.6 - 1.0V LEAN ↔ RICH Changes more than 5 times during 10 seconds.

ECM TERMINALS AND REFERENCE VALUE

Specification data are reference values and are measured between each terminal and ㉜ (ECM ground).

TERMINAL NO.	WIRE COLOR	ITEM	CONDITION	DATA (DC Voltage)
50	B	Front heated oxygen sensor	Engine is running. └ After warming up to normal operating temperature and engine speed is 2,000 rpm.	0 - Approximately 1.0V 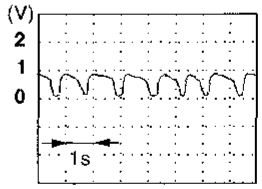 SEF201T

Simpo PDF Merge and Split Unregistered Version - http://www.simpopdf.com

Front Heated Oxygen Sensor (High Voltage) (Front HO2S) (Cont'd)

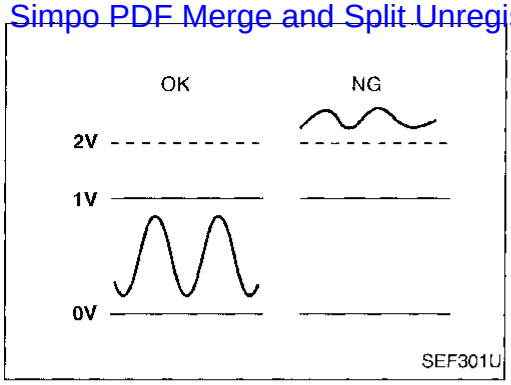

ON BOARD DIAGNOSIS LOGIC

To judge the malfunction, the diagnosis checks that the front heated oxygen sensor output is not inordinately high.

Diagnostic Trouble Code No.	Malfunction is detected when ...	Check Items (Possible Cause)
P0134 0412	● An excessively high voltage from the sensor is sent to ECM.	● Harness or connectors (The sensor circuit is open or shorted.) ● Front heated oxygen sensor

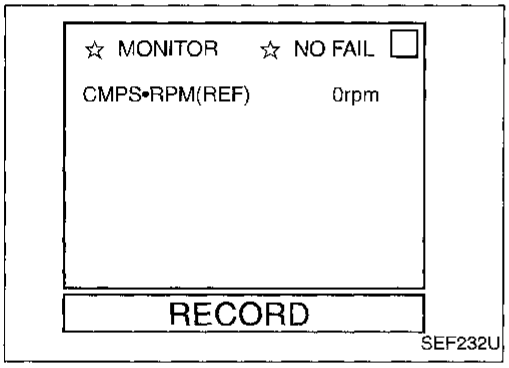

DIAGNOSTIC TROUBLE CODE CONFIRMATION PROCEDURE

NOTE:
If "DIAGNOSTIC TROUBLE CODE CONFIRMATION PROCEDURE" has been previously conducted, always turn ignition switch "OFF" and wait at least 5 seconds before conducting the next test.

1) Turn ignition switch "ON".
2) Select "DATA MONITOR" mode with CONSULT and wait at least 5 seconds.

OR

1) Turn ignition switch "ON" and wait at least 5 seconds.
2) Select "MODE 3" with GST.

OR

1) Turn ignition switch "ON" and wait at least 5 seconds.
2) Turn ignition switch "OFF", wait at least 5 seconds and then turn "ON".
3) Perform "Diagnostic Test Mode II (Self-diagnostic results)" with ECM.

Front Heated Oxygen Sensor (High Voltage) (Front HO2S) (Cont'd)

Simpo PDF Merge and Split Unregistered Version - http://www.simpopdf.com

EC-FRO2-01

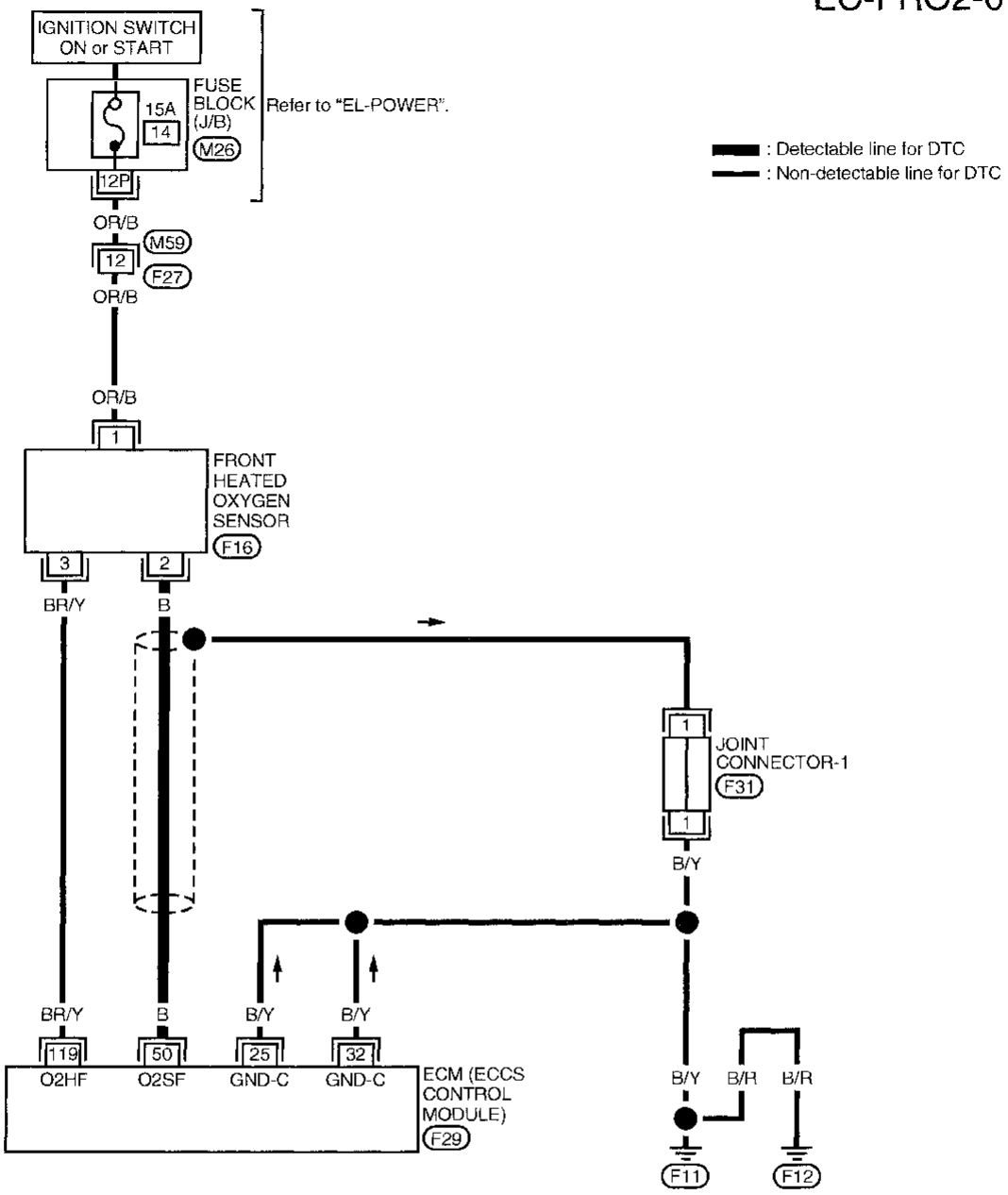

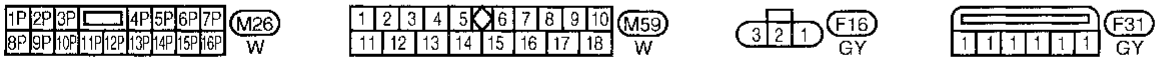

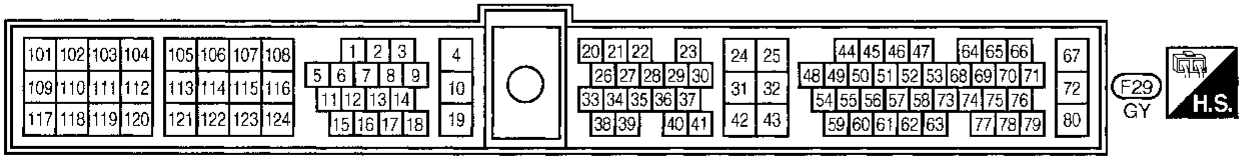

AEC524A

Simpo PDF Merge and Split Unregistered Version - http://www.simpopdf.com

Front Heated Oxygen Sensor (High Voltage) (Front HO2S) (Cont'd)

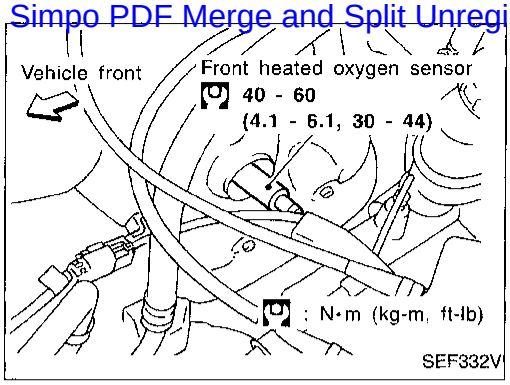

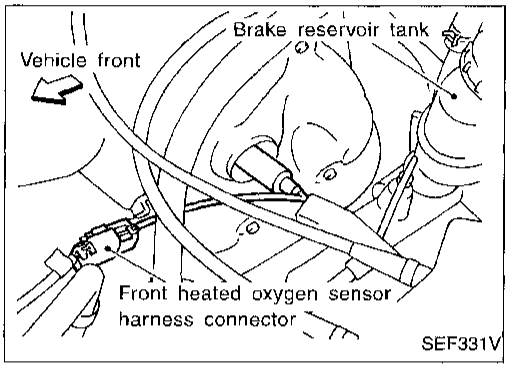

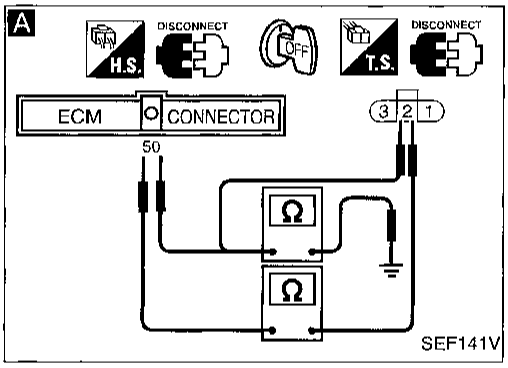

DIAGNOSTIC PROCEDURE

INSPECTION START

1. Turn ignition switch "OFF".
2. Loosen and retighten front heated oxygen sensor.
   Tightening torque:
   40 - 60 N·m
   (4.1 - 6.1 kg-m, 30 - 44 ft-lb)

A

CHECK INPUT SIGNAL CIRCUIT.
1. Disconnect front heated oxygen sensor harness connector and ECM harness connector.
2. Check harness continuity between ECM terminal (50) and terminal (2).
   Continuity should exist.
3. Check harness continuity between ECM terminal (50) (or terminal (2)) and ground.
   Continuity should not exist.

If OK, check harness for short to ground and short to power.

NG → Repair open circuit, short to ground or short to power in harness or connectors.

OK

CHECK COMPONENT
(Front heated oxygen sensor).
1. Turn ignition switch "OFF".
2. Disconnect sensor harness connector and check for water.
   Water should not exist.
   If OK, go to step 3.
3. Check front heated oxygen sensor.

Refer to "COMPONENT INSPECTION" on next page.

NG → Repair or replace harness and/or connectors or replace front heated oxygen sensor.

OK

CHECK SHIELD CIRCUIT.
1. Turn ignition switch "OFF".
2. Remove joint connector-1.
3. Check the following.
   - Continuity between joint connector-1 terminal (1) and ground
   - Joint connector-1
     (Refer to "HARNESS LAYOUT" in EL section.)

   Continuity should exist.

If OK, check harness for short to power.

NG → Repair open circuit, short to ground or short to power in harness or connectors.

OK

Perform "TROUBLE DIAGNOSIS FOR INTERMITTENT INCIDENT", EC-93.

INSPECTION END

Simpo PDF Merge and Split Unregistered Version - http://www.simpopdf.com

Front Heated Oxygen Sensor (High Voltage) (Front HO2S) (Cont'd)

COMPONENT INSPECTION

Front heated oxygen sensor

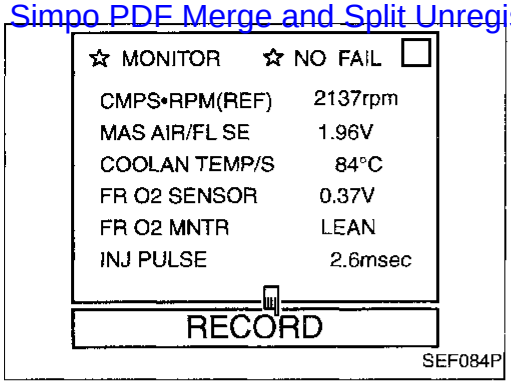

1) Start engine and warm it up to normal operating temperature.
2) Select "MANU TRIG" and "HI SPEED" in "DATA MONITOR" mode with CONSULT, and select "FR O2 SENSOR" and "FR O2 MNTR".
3) Hold engine speed at 2,000 rpm under no load during the following steps.
4) Touch "RECORD" on CONSULT screen.
5) Check the following.

- "FR O2 MNTR" in "DATA MONITOR" mode changes from "RICH" to "LEAN" to "RICH" 5 times in 10 seconds.
  5 times (cycles) are counted as shown below:

cycle	1	2	3	4	5
FR O2 MNTR	R-L-R-L-R-L-R-L-R-L				

  R = "FR O2 MNTR", "RICH"
  L = "FR O2 MNTR", "LEAN"
- "FR O2 SENSOR" voltage goes above 0.6V at least once.
- "FR O2 SENSOR" voltage goes below 0.35V at least once.
- "FR O2 SENSOR" voltage never exceeds 1.0V.

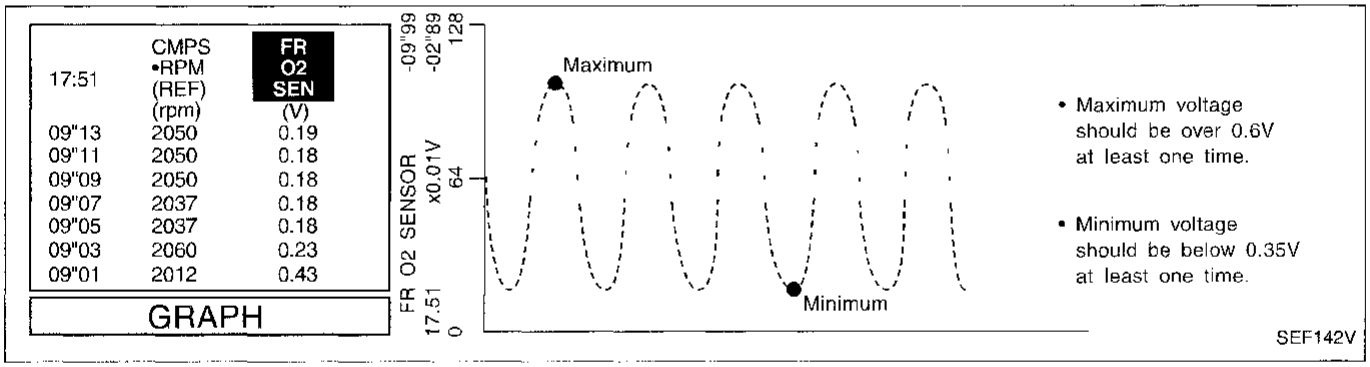

OR

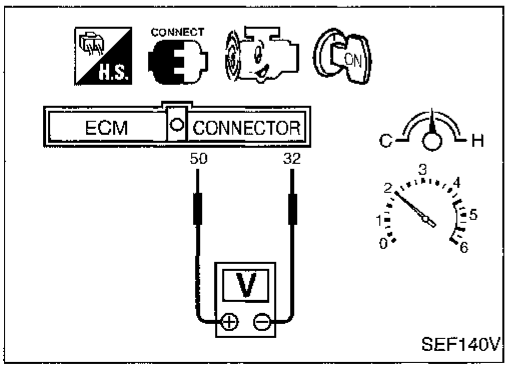

1) Start engine and warm it up to normal operating temperature.
2) Set voltmeter probes between ECM terminals ⑤⓪ (sensor signal) and ③② (ECM ground).
3) Check the following with engine speed held at 2,000 rpm constant under no load.

- Malfunction indicator lamp goes on more than 5 times within 10 seconds in Diagnostic Test Mode II (FRONT HEATED OXYGEN SENSOR MONITOR).
- The maximum voltage is over 0.6V at least one time.
- The minimum voltage is below 0.35V at least one time.
- The voltage never exceeds 1.0V.

Simpo PDF Merge and Split Unregistered Version - http://www.simpopdf.com

Front Heated Oxygen Sensor Heater

SYSTEM DESCRIPTION

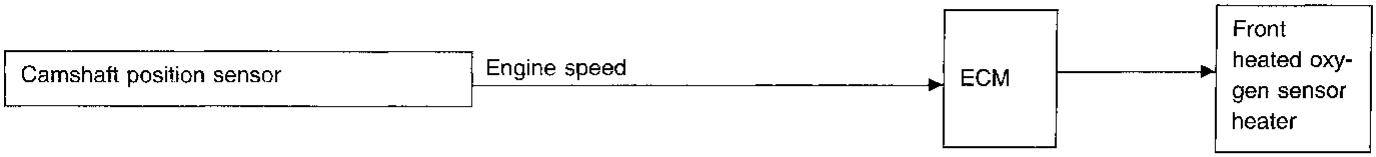

The ECM performs ON/OFF control of the front heated oxygen sensor heater corresponding to the engine speed.

OPERATION

Engine speed rpm	Front heated oxygen sensor heater
Above 3,000 rpm (2WD models) More than 6 seconds after engine speed exceeds 3,000 rpm (4WD models)	OFF
Below 3,000 rpm (All models) For 6 seconds after engine speed exceeds 3,000 rpm (4WD models only)	ON

CONSULT REFERENCE VALUE IN DATA MONITOR MODE

Specification data are reference values.

MONITOR ITEM	CONDITION	SPECIFICATION
FR O2 HEATER	● Engine speed: Below 3,000 rpm (All models) For 6 seconds after engine speed exceeds 3,000 rpm (4WD models only)	ON
	● Engine speed: Above 3,000 rpm (2WD models) More than 6 seconds after engine speed exceeds 3,000 rpm (4WD models)	OFF

ECM TERMINALS AND REFERENCE VALUE

Specification data are reference values and are measured between each terminal and ㉜ (ECM ground).

TERMINAL NO.	WIRE COLOR	ITEM	CONDITION	DATA (DC Voltage)
119	BR/Y	Front heated oxygen sensor heater	Engine is running. — Engine speed is below 3,000 rpm. (All models) └ For 6 seconds after engine speed exceeds 3,000 rpm (4WD models only)	Approximately 0.4V
			Engine is running. — Engine speed is above 3,000 rpm. (2WD models) └ More than 6 seconds after engine speed exceeds 3,000 rpm (4WD models)	BATTERY VOLTAGE (11 - 14V)

ON BOARD DIAGNOSIS LOGIC

Diagnostic Trouble Code No.	Malfunction is detected when	Check Items (Possible Cause)
P0135 0901	● The current amperage in the front heated oxygen sensor heater circuit is out of the normal range. (An improper voltage drop signal is sent to ECM through the front heated oxygen sensor heater.)	● Harness or connectors (The front heated oxygen sensor heater circuit is open or shorted.) ● Front heated oxygen sensor heater

Simpo PDF Merge and Split Unregistered Version - http://www.simpopdf.com

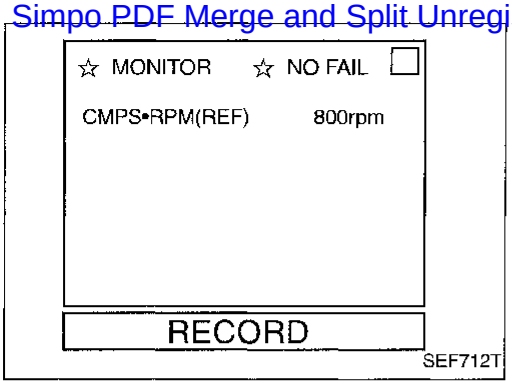

Front Heated Oxygen Sensor Heater (Cont'd)

DIAGNOSTIC TROUBLE CODE CONFIRMATION PROCEDURE

NOTE:
If "DIAGNOSTIC TROUBLE CODE CONFIRMATION PROCEDURE" has been previously conducted, always turn ignition switch "OFF" and wait at least 5 seconds before conducting the next test.

TESTING CONDITION:
Before performing the following procedure, confirm that battery voltage is in between 10.5V and 16V at idle.

1) Turn ignition switch "ON" and select "DATA MONITOR" mode with CONSULT.
2) Start engine and run it for at least 6 seconds at idle speed.

OR

1) Start engine and run it for at least 6 seconds at idle speed.
2) Turn ignition switch "OFF" and wait at least 5 seconds.
3) Start engine and run it for at least 5 seconds at idle speed.
4) Select "MODE 3" with GST.

OR

1) Start engine and run it for at least 5 seconds at idle speed.
2) Turn ignition switch "OFF", wait at least 5 seconds and then turn "ON".
3) Perform "Diagnostic Test Mode II (Self-diagnostic results)" with ECM.

- **When using GST, "DIAGNOSTIC TROUBLE CODE CONFIRMATION PROCEDURE" should be performed twice as much as when using CONSULT or ECM (Diagnostic Test Mode II) because GST cannot display MODE 7 (1st trip DTC) concerning this diagnosis. Therefore, using CONSULT or ECM (Diagnostic Test Mode II) is recommended.**

Simpo PDF Merge and Split Unregistered Version - http://www.simpopdf.com

EC-FRO2/H-01

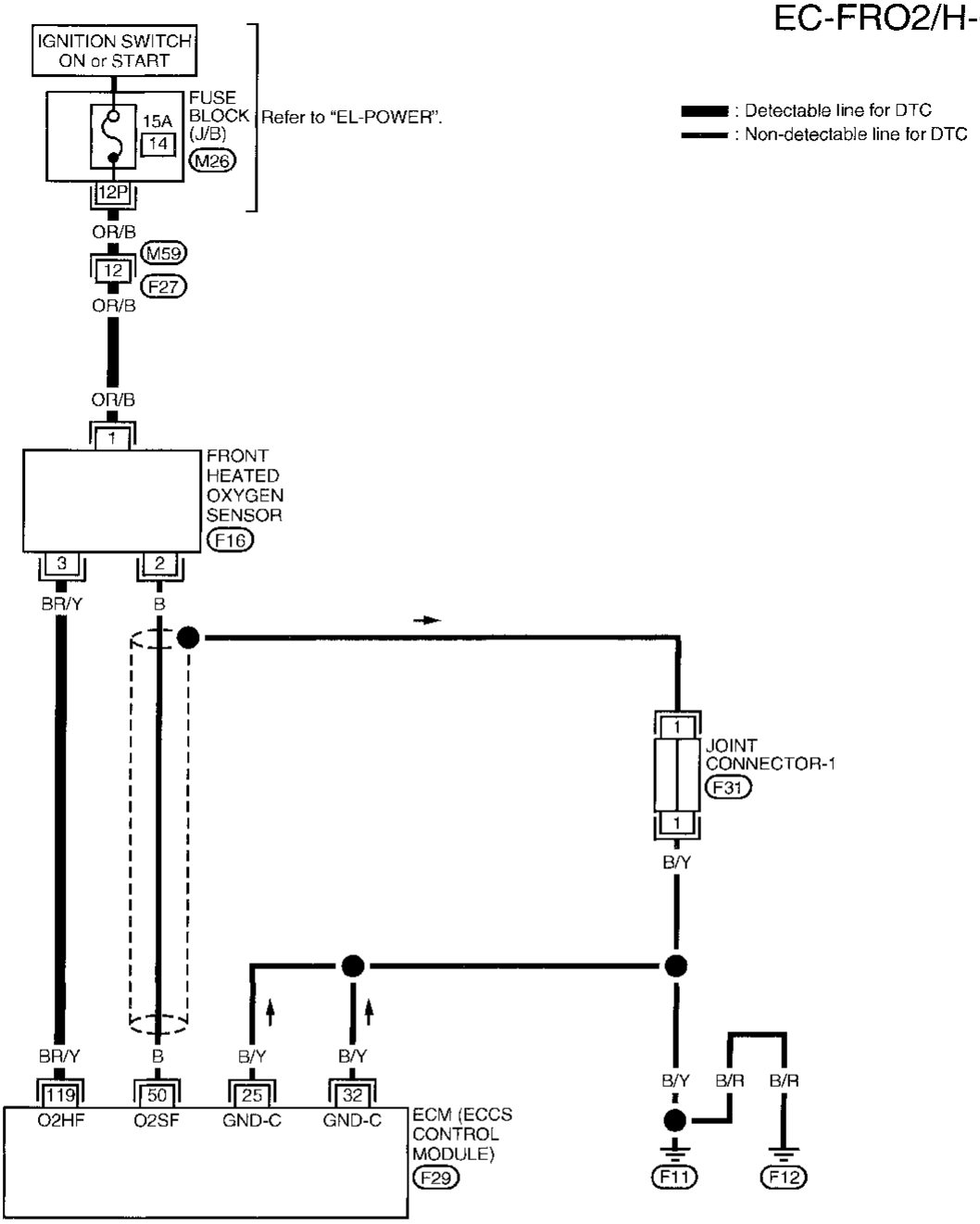



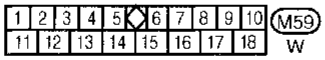

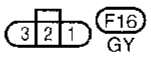

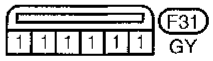

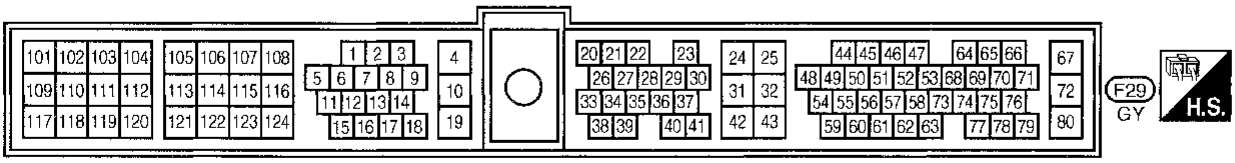

AEC525A

Front Heated Oxygen Sensor Heater (Cont'd)

Simpo PDF Merge and Split Unregistered Version - http://www.simpopdf.com

DIAGNOSTIC PROCEDURE

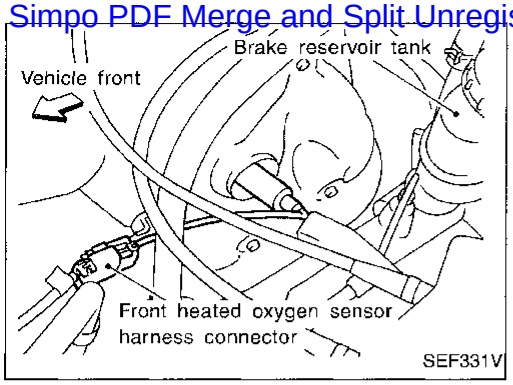

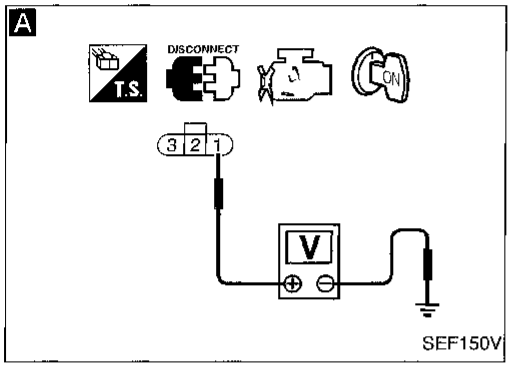

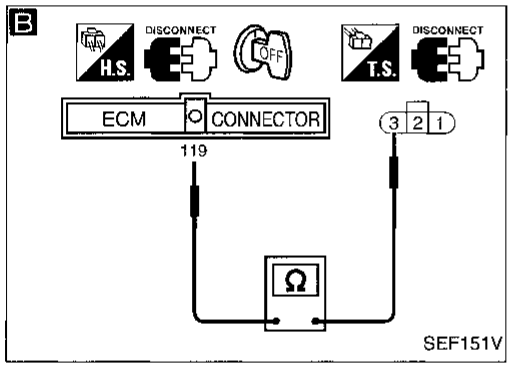

INSPECTION START

A

CHECK POWER SUPPLY.
1. Turn ignition switch "OFF".
2. Disconnect front heated oxygen sensor harness connector.
3. Turn ignition switch "ON".
4. Check voltage between terminal ① and ground with CONSULT or tester.
   Voltage: Battery voltage

NG → Check the following.
- 15A fuse
- Harness connectors (M59), (F27)
- Harness for open or short between front heated oxygen sensor and 15A fuse

If NG, repair harness or connectors.

OK

B

CHECK GROUND CIRCUIT.
1. Turn ignition switch "OFF".
2. Disconnect ECM harness connector.
3. Check harness continuity between terminal ③ and ECM terminal (119).
   Continuity should exist.
   If OK, check harness for short to ground and short to power.

NG → Repair open circuit, short to ground or short to power in harness or connectors.

OK

CHECK COMPONENT
(Front heated oxygen sensor heater).
Refer to "COMPONENT INSPECTION" below.

NG → Replace front heated oxygen sensor.

OK

Perform "TROUBLE DIAGNOSIS FOR INTERMITTENT INCIDENT", EC-93.

INSPECTION END

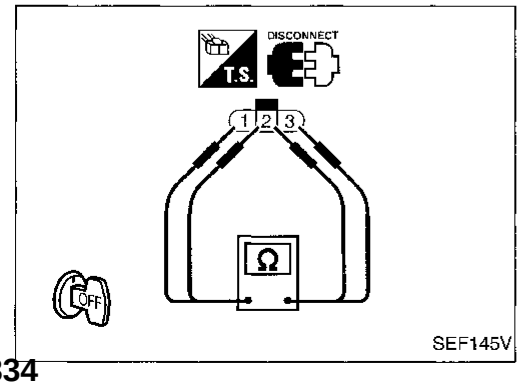

COMPONENT INSPECTION

Front heated oxygen sensor heater

Check resistance between terminals ③ and ①.
Resistance: 2.3 - 4.3Ω at 25°C (77°F)

Check continuity between terminals ② and ①, ③ and ②.
Continuity should not exist.

If NG, replace the front heated oxygen sensor.

CAUTION:
Discard any heated oxygen sensor which has been dropped from a height of more than 0.5 m (19.7 in) onto a hard surface such as a concrete floor; use a new one.

Simpo PDF Merge and Split Unregistered Version - http://www.simpopdf.com

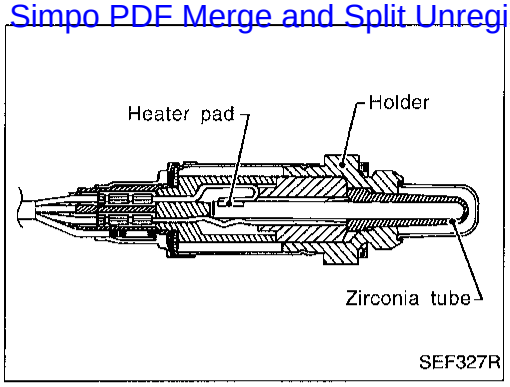

Rear Heated Oxygen Sensor (Min. Voltage Monitoring) (Rear HO2S)

COMPONENT DESCRIPTION

The rear heated oxygen sensor (Rear HO2S), after three way catalyst, monitors the oxygen level in the exhaust gas.
Even if switching characteristics of the front heated oxygen sensor are shifted, the air fuel ratio is controlled to stoichiometric, by the signal from the rear heated oxygen sensor.
This sensor is made of ceramic zirconia. The zirconia generates voltage from approximately 1V in richer conditions to 0V in leaner conditions.
Under normal conditions the rear heated oxygen sensor is not used for engine control operation.

CONSULT REFERENCE VALUE IN DATA MONITOR MODE

Specification data are reference values.

MONITOR ITEM	CONDITION		SPECIFICATION
RR O2 SENSOR ..... RR O2 MNTR	● Engine: After warming up	Revving engine from idle to 3,000 rpm quickly	0 - 0.3V ↔ Approx. 0.6 - 1.0V LEAN ↔ RICH

ECM TERMINALS AND REFERENCE VALUE

Specification data are reference values and are measured between each terminal and ㉜ (ECM ground).

TER-MINAL NO.	WIRE COLOR	ITEM	CONDITION	DATA (DC Voltage)
56	OR	Rear heated oxygen sensor	Engine is running. └ After warming up to normal operating temperature and revving engine from idle to 3,000 rpm quickly	0 - Approximately 1.0V

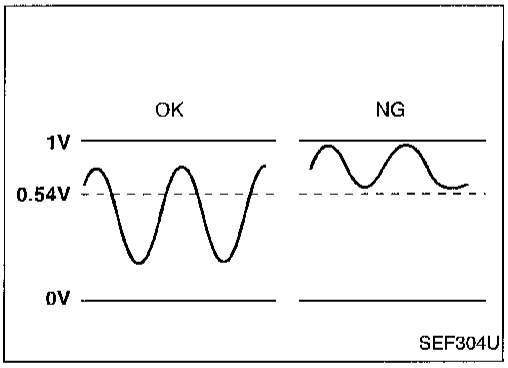

ON BOARD DIAGNOSIS LOGIC

The rear heated oxygen sensor has a much longer switching time between rich and lean than the front heated oxygen sensor. The oxygen storage capacity before the three way catalyst causes the longer switching time. To judge malfunctions of the rear heated oxygen sensor, ECM monitors whether the minimum voltage of the sensor is sufficiently low during various driving conditions such as fuel-cut.

Diagnostic Trouble Code No.	Malfunction is detected when ...	Check Items (Possible Cause)
P0137 0511	● The minimum voltage from the sensor has not reached the specified voltage.	● Harness or connectors (The sensor circuit is open or shorted.) ● Rear heated oxygen sensor ● Fuel pressure ● Injectors

Simpo PDF Merge and Split Unregistered Version - http://www.simpopdf.com

Rear Heated Oxygen Sensor (Min. Voltage Monitoring) (Rear HO2S) (Cont'd)

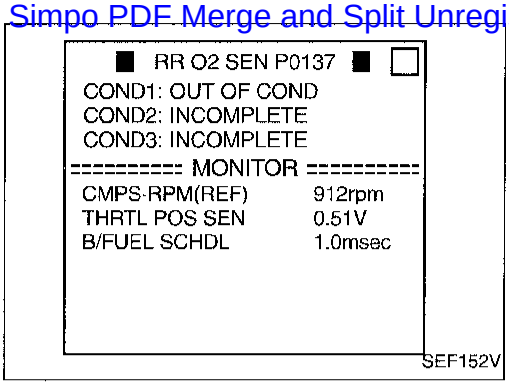

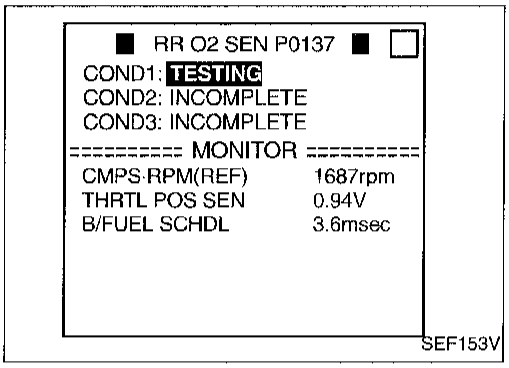

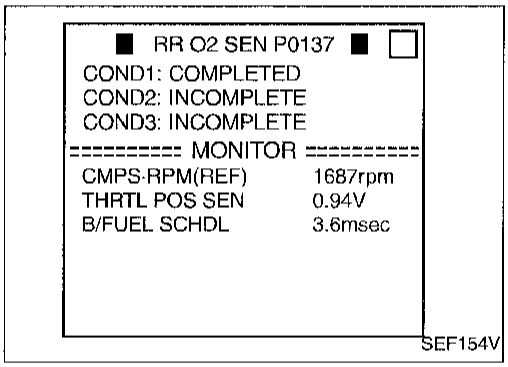

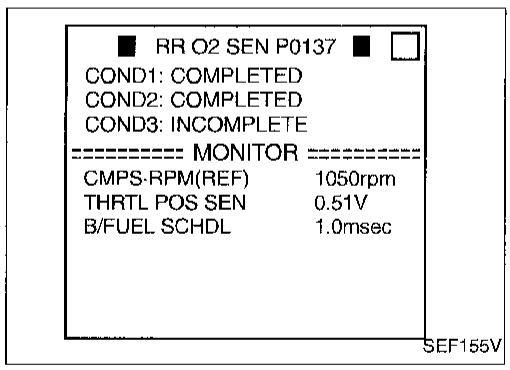

DIAGNOSTIC TROUBLE CODE CONFIRMATION PROCEDURE

CAUTION:
Always drive vehicle at a safe speed.

NOTE:
- **"COMPLETED" will appear on CONSULT screen when all tests "COND1", "COND2" and "COND3" are completed.**
- **If "DIAGNOSTIC TROUBLE CODE CONFIRMATION PROCEDURE" has been previously conducted, always turn ignition switch "OFF" and wait at least 5 seconds before conducting the next test.**

TESTING CONDITION:
- **Never stop engine during this test. If the engine is stopped, reperform this test from step 2).**
- **Always perform at a temperature above −10°C (14°F).**

Procedure for COND1

1) Start engine and warm it up to normal operating temperature.
2) Turn ignition switch "OFF" and wait at least 5 seconds.
3) Turn ignition switch "ON" and select "RR O2 SENSOR P0137" of "REAR O2 SENSOR" in "DTC WORK SUPPORT" mode with CONSULT.
4) Touch "START".
5) Start engine and let it idle for at least 10 seconds.
6) Rev engine up to 2,000 rpm 2 or 3 times quickly under no load.
   If "COMPLETED" appears on CONSULT screen, go to step 10).
   If "COMPLETED" does not appear on CONSULT screen, go to the following step.
7) When the following conditions are met, "TESTING" will be displayed at "COND1" on the CONSULT screen. Maintain the conditions continuously until "TESTING" changes to "COMPLETED". (It will take approximately 50 seconds.)
   CMPS-RPM (REF): 1,400 - 3,000 rpm
   Vehicle speed: 64 - 120 km/h (40 - 75 MPH)
   B/FUEL SCHDL: 1 - 4.8 ms
   Selector lever: Suitable position

NOTE:
- **If "TESTING" is not displayed after 5 minutes, retry from step 2).**
- **If "COMPLETED" already appears at "COND2" on CONSULT screen before "Procedure for COND2" is conducted, it is unnecessary to conduct step 8).**

Procedure for COND2

8) While driving, release accelerator pedal completely [with "OD" OFF (A/T models only)] from the above condition [step 7] until "INCOMPLETE" at "COND2" on CONSULT screen has turned to "COMPLETED". [It will take approximately 1 second (A/T), 4 seconds (M/T).]

Simpo PDF Merge and Split Unregistered Version - http://www.simpopdf.com

Rear Heated Oxygen Sensor (Min. Voltage Monitoring) (Rear HO2S) (Cont'd)

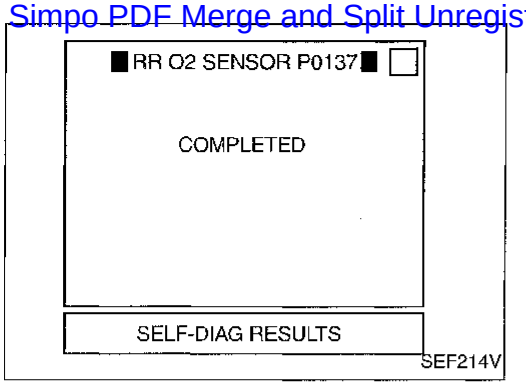

NOTE:

- **If "TESTING" is not displayed after 5 minutes, retry from step 2).**
- **If "COMPLETED" already appears at "COND3" on CONSULT screen before "Procedure for COND3" is conducted, it is unnecessary to conduct step 9).**

Procedure for COND3

9) Stop vehicle and let it idle until "INCOMPLETE" of "COND3" on CONSULT screen has turned to "COMPLETED". (It will take a maximum of approximately 6 minutes.)

NOTE:

If "TESTING" is not displayed after 5 minutes, retry from step 2).

10) Make sure that "OK" is displayed after touching "SELF-DIAG RESULTS". If "NG" is displayed, refer to "DIAGNOSTIC PROCEDURE", EC-183.

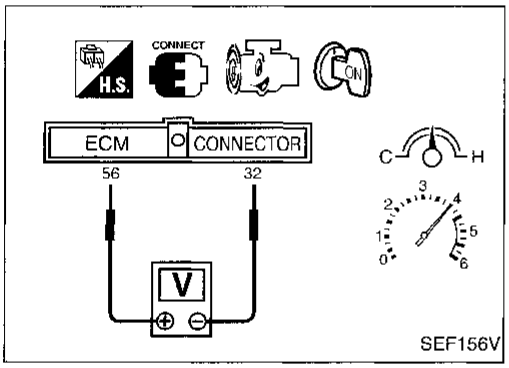

OR

OVERALL FUNCTION CHECK

Use this procedure to check the overall function of the rear heated oxygen sensor circuit. During this check, a 1st trip DTC might not be confirmed.

1) Start engine and warm it up to normal operating temperature.
2) Set voltmeter probes between ECM terminals ⑤⑥ (sensor signal) and ③② (ECM ground).
3) Check the voltage when revving engine up to 4,000 rpm under no load at least 10 times.
   (Depress and release accelerator pedal as soon as possible.)
   The voltage should be below 0.54V at least once during this procedure.
   If the voltage can be confirmed in step 3, step 4 is not necessary.
4) Keep vehicle at idling for 10 minutes, then check the voltage. Or check the voltage when coasting from 80 km/h (50 MPH) in 3rd gear position (M/T), D position with "OD" OFF (A/T).
   The voltage should be below 0.54V at least once during this procedure.

Rear Heated Oxygen Sensor (Min. Voltage Monitoring) (Rear HO2S) (Cont'd)

Simpo PDF Merge and Split Unregistered Version - http://www.simpopdf.com

EC-RRO2-01

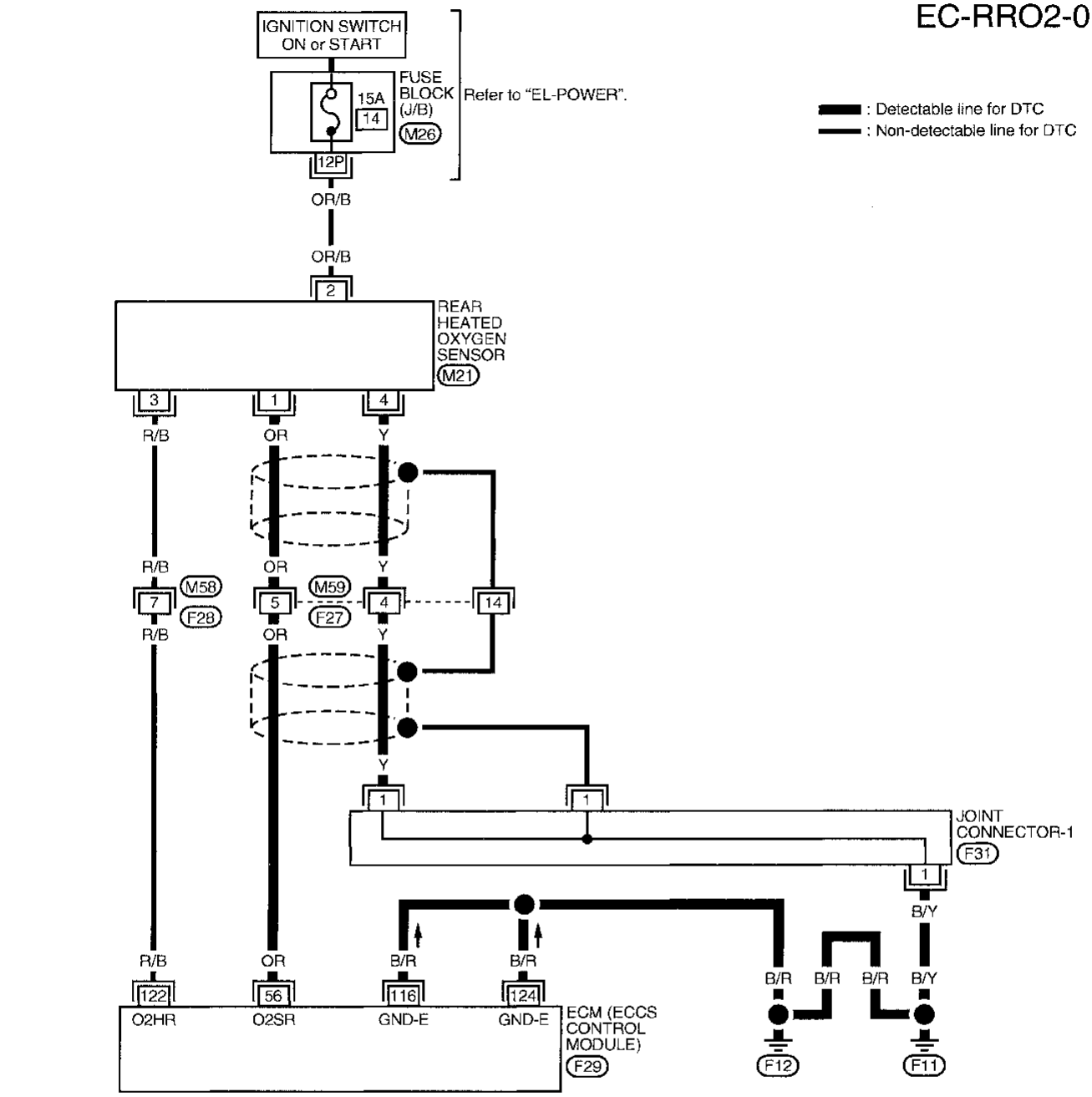

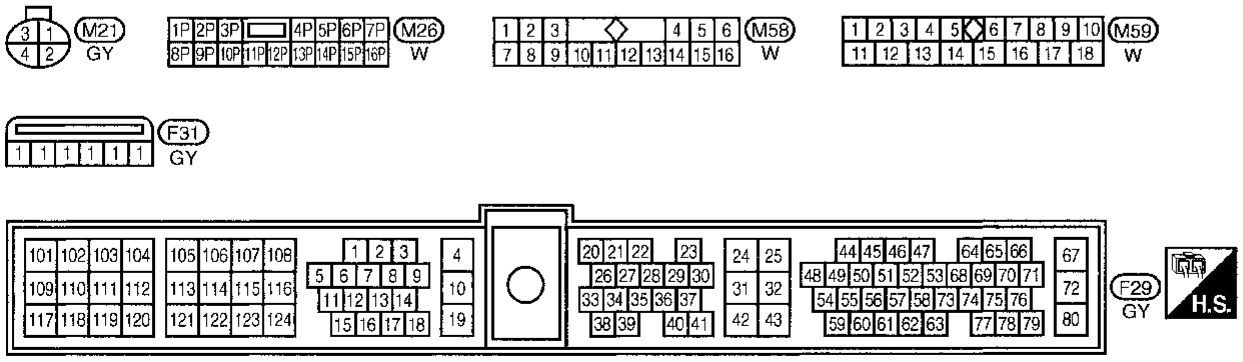

AEC526A

Simpo PDF Merge and Split Unregistered Version - http://www.simpopdf.com

Rear Heated Oxygen Sensor (Min. Voltage Monitoring) (Rear HO2S) (Cont'd)

DIAGNOSTIC PROCEDURE

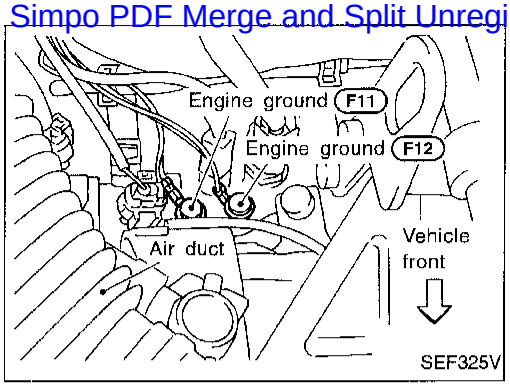

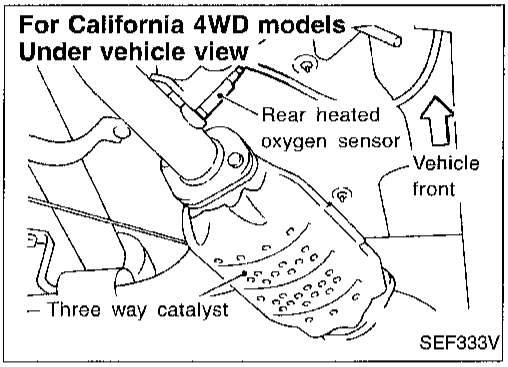

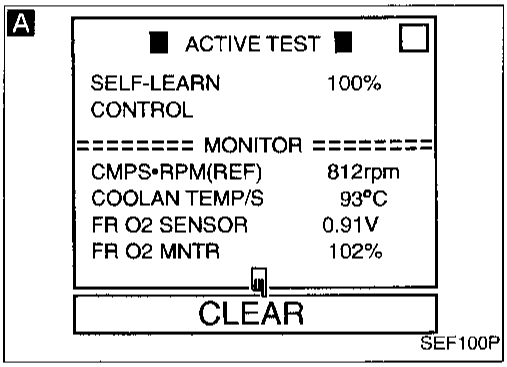

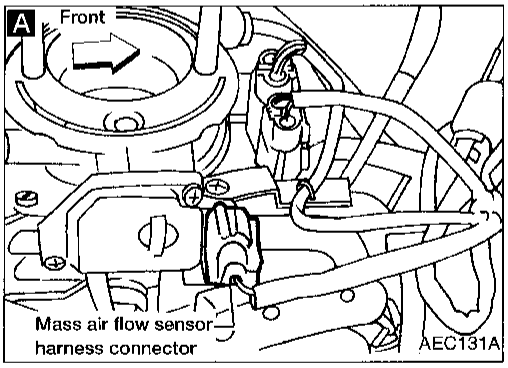

INSPECTION START

1. Turn ignition switch "OFF".
2. Loosen and retighten engine ground screws.

A

CLEAR THE SELF-LEARNING DATA.

1. Start engine and warm it up to normal operating temperature.
2. Select "SELF-LEARNING CONT" in "ACTIVE TEST" mode with CONSULT.
3. Clear the self-learning control coefficient by touching "CLEAR".
4. Run engine for at least 10 minutes at idle speed.

Is the 1st trip DTC P0172 detected? Is it difficult to start engine?

Yes → Go to "TROUBLE DIAGNOSIS FOR DTC P0172", EC-213.

OR

2. Turn ignition switch "OFF".
3. Disconnect mass air flow sensor harness connector, and restart and run engine for at least 3 seconds at idle speed.
4. Stop engine and reconnect mass air flow sensor harness connector.
5. Make sure diagnostic trouble code No. 0102 is displayed in Diagnostic Test Mode II.
6. Erase the diagnostic test mode II (Self-diagnostic results) memory. Make sure diagnostic trouble code No. 0505 is displayed in Diagnostic Test Mode II.
7. Run engine for at least 10 minutes at idle speed.

Is the 1st trip DTC 0114 detected? Is it difficult to start engine?

No → (A) (Go to next page.)

Rear Heated Oxygen Sensor (Min. Voltage Monitoring) (Rear HO2S) (Cont'd)

Simpo PDF Merge and Split Unregistered Version - http://www.simpopdf.com

B

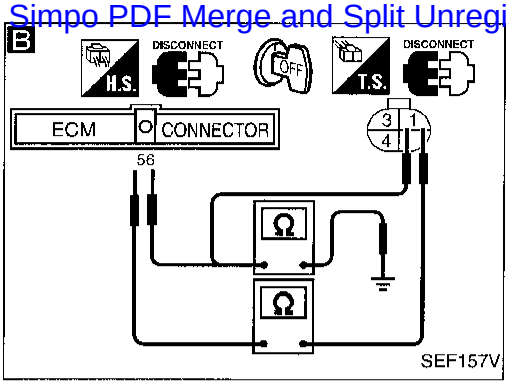

SEF157V

C

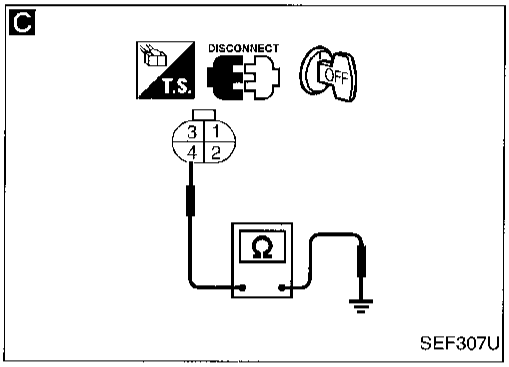

SEF307U

D

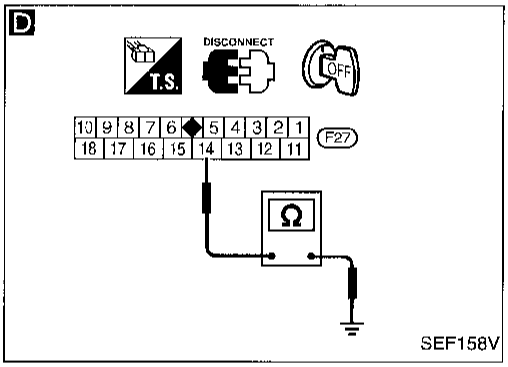

SEF158V

Ⓐ

B

CHECK INPUT SIGNAL CIRCUIT.
1. Disconnect rear heated oxygen sensor harness connector and ECM harness connector.
2. Check harness continuity between ECM terminal (56) and terminal (1).
   Continuity should exist.
3. Check harness continuity between ECM terminal (56) (or terminal (1)) and ground.
   Continuity should not exist.
   If OK, check harness for short to ground and short to power.

NG → Check the following.
- Harness connectors (M59), (F27)
- Harness for open or short between rear heated oxygen sensor and ECM

If NG, repair open circuit, short to ground or short to power in harness or connectors.

OK ↓

C

CHECK GROUND CIRCUIT.
Check harness continuity between terminal (4) and engine ground.
Continuity should exist.
If OK, check harness for short to ground and short to power.

NG → Check the following.
- Harness connectors (M59), (F27)
- Joint connector-1
- Harness for open or short between rear heated oxygen sensor and ground

If NG, repair open circuit, short to ground or short to power in harness or connectors.

OK ↓

CHECK COMPONENT
(Rear heated oxygen sensor).
Refer to "COMPONENT INSPECTION" on next page.

NG → Replace rear heated oxygen sensor.

OK ↓

D

CHECK SHIELD CIRCUIT.
1. Turn ignition switch "OFF".
2. Disconnect harness connector (F27).
3. Check harness continuity between harness connector (F27) terminal (14) and ground.
   Continuity should exist.
   If OK, check harness for short to power.

NG → Check the following.
- Joint connector-1
- Harness for open or short between harness connector (F27) and ground

If NG, repair open circuit or short to power in harness or connectors.

OK ↓

Perform "TROUBLE DIAGNOSIS FOR INTERMITTENT INCIDENT", EC-93.

↓

INSPECTION END

Simpo PDF Merge and Split Unregistered Version - http://www.simpopdf.com

Rear Heated Oxygen Sensor (Min. Voltage Monitoring) (Rear HO2S) (Cont'd)

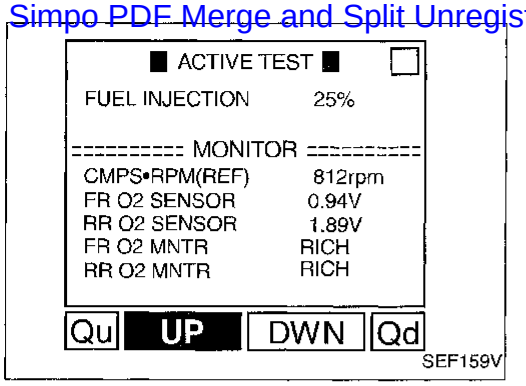

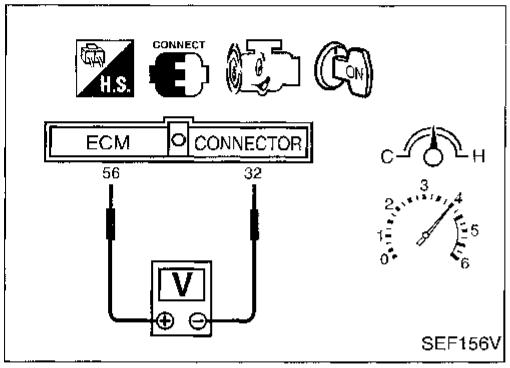

COMPONENT INSPECTION

Rear heated oxygen sensor

1) Start engine and warm it up to normal operating temperature.
2) Select "FUEL INJECTION" in "ACTIVE TEST" mode, and select "RR O2 SENSOR" as the monitor item with CONSULT.
3) Check "RR O2 SENSOR" at idle speed when adjusting "FUEL INJECTION" to ±25%.
   "RR O2 SENSOR" should be above 0.56V at least once when the "FUEL INJECTION" is +25%.
   "RR O2 SENSOR" should be below 0.54V at least once when the "FUEL INJECTION" is −25%.

OR

1) Start engine and warm it up to normal operating temperature.
2) Set voltmeter probes between ECM terminals (56) (sensor signal) and (32) (ECM ground).
3) Check the voltage when racing up to 4,000 rpm under no load at least 10 times.
   (Depress and release accelerator pedal as soon as possible.)
   The voltage should be above 0.56V at least once.
   If the voltage is above 0.56V at step 3, step 4 is not necessary.
4) Check the voltage when racing up to 5,000 rpm under no load. Or keep vehicle at idling for 10 minutes, then check the voltage. Or check the voltage when coasting from 80 km/h (50 MPH) in 3rd gear position (M/T), D position with "OD" OFF (A/T).
   The voltage should be below 0.54V at least once.

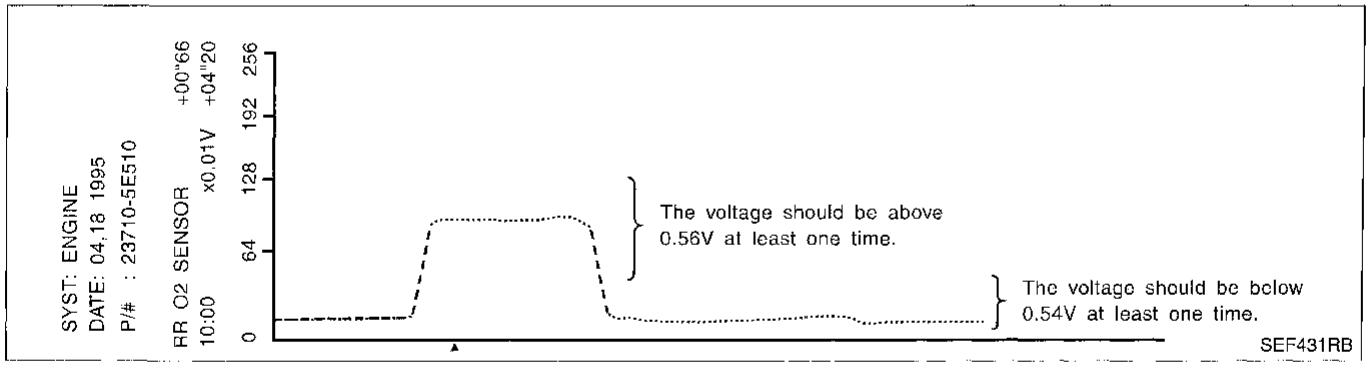

Simpo PDF Merge and Split Unregistered Version - http://www.simpopdf.com

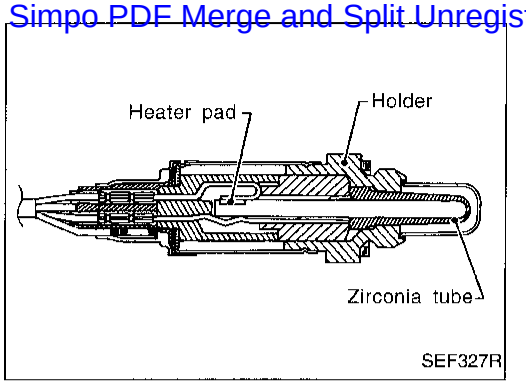

Rear Heated Oxygen Sensor (Max. Voltage Monitoring) (Rear HO2S)

COMPONENT DESCRIPTION

The rear heated oxygen sensor (rear HO2S), after three way catalyst, monitors the oxygen level in the exhaust gas.
Even if switching characteristics of the front heated oxygen sensor are shifted, the air fuel ratio is controlled to stoichiometric by the signal from the rear heated oxygen sensor.
This sensor is made of ceramic zirconia. The zirconia generates voltage from approximately 1V in richer conditions to 0V in leaner conditions.
Under normal conditions the rear heated oxygen sensor is not used for engine control operation.

CONSULT REFERENCE VALUE IN DATA MONITOR MODE

Specification data are reference values.

MONITOR ITEM	CONDITION		SPECIFICATION
RR O2 SENSOR ..... RR O2 MNTR	● Engine: After warming up	Revving engine from idle to 3,000 rpm quickly	0 - 0.3V ↔ Approx. 0.6 - 1.0V LEAN ↔ RICH

ECM TERMINALS AND REFERENCE VALUE

Specification data are reference values and are measured between each terminal and ㉜ (ECM ground).

TER-MINAL NO.	WIRE COLOR	ITEM	CONDITION	DATA (DC Voltage)
56	OR	Rear heated oxygen sensor	Engine is running. └ After warming up to normal operating temperature and revving engine from idle to 3,000 rpm quickly	0 - Approximately 1.0V

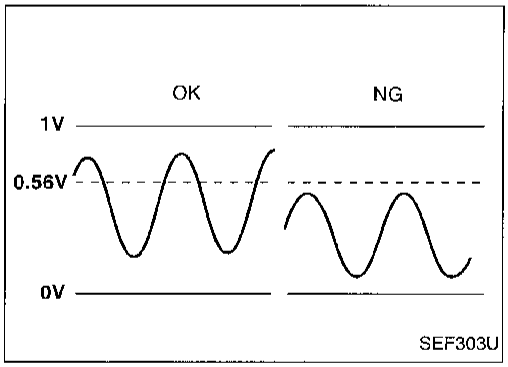

ON BOARD DIAGNOSIS LOGIC

The rear heated oxygen sensor has a much longer switching time between rich and lean than the front heated oxygen sensor. The oxygen storage capacity before the three way catalyst causes the longer switching time. To judge malfunctions of the rear heated oxygen sensor, ECM monitors whether the maximum voltage of the sensor is sufficiently high during various driving conditions such as fuel-cut.

Diagnostic Trouble Code No.	Malfunction is detected when ...	Check Items (Possible Cause)
P0138 0510	● The maximum voltage from the sensor has not reached the specified voltage.	● Harness or connectors (The sensor circuit is open or shorted.) ● Rear heated oxygen sensor ● Fuel pressure ● Injectors ● Intake air leaks

Simpo PDF Merge and Split Unregistered Version - http://www.simpopdf.com

Rear Heated Oxygen Sensor (Max. Voltage Monitoring) (Rear HO2S) (Cont'd)

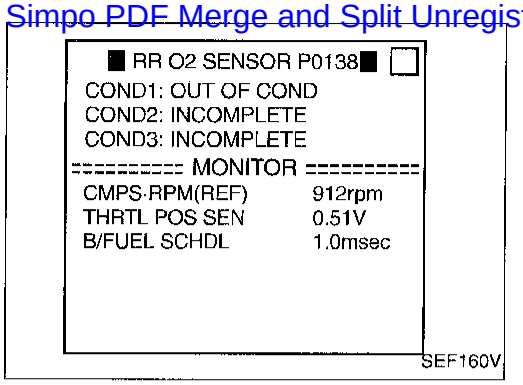

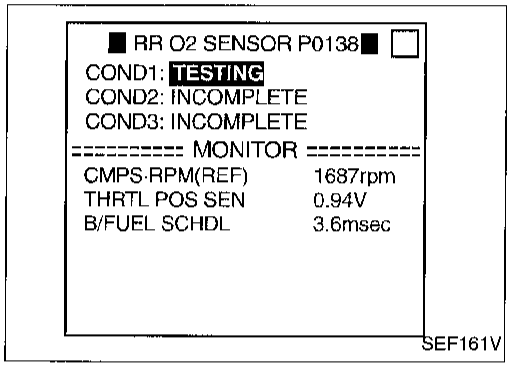

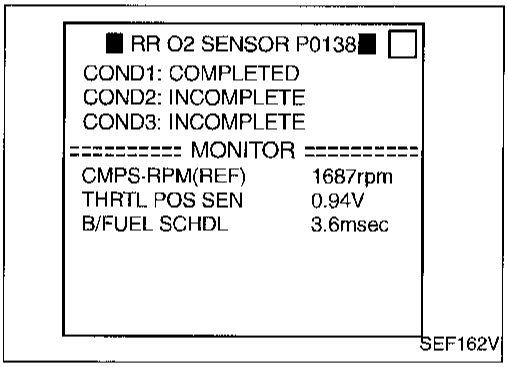

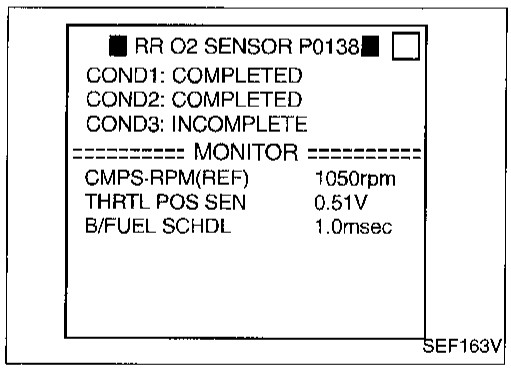

DIAGNOSTIC TROUBLE CODE CONFIRMATION PROCEDURE

CAUTION:
Always drive vehicle at a safe speed.

NOTE:
- **"COMPLETED" will appear on CONSULT screen when all tests "COND1", "COND2" and "COND3" are completed.**
- **If "DIAGNOSTIC TROUBLE CODE CONFIRMATION PROCEDURE" has been previously conducted, always turn ignition switch "OFF" and wait at least 5 seconds before conducting the next test.**

TESTING CONDITION:
- **Never stop engine during this test. If the engine is stopped, reperform this test from step 2).**
- **Always perform at a temperature above −10°C (14°F).**

Procedure for COND1

1) Start engine and warm it up to normal operating temperature.
2) Turn ignition switch "OFF" and wait at least 5 seconds.
3) Turn ignition switch "ON" and select "RR O2 SENSOR P0138" of "REAR O2 SENSOR" in "DTC WORK SUPPORT" mode with CONSULT.
4) Touch "START".
5) Start engine and let it idle for at least 10 seconds.
6) Rev engine up to 2,000 rpm 2 or 3 times quickly under no load.
   If "COMPLETED" appears on CONSULT screen, go to step 10).
   If "COMPLETED" does not appear on CONSULT screen, go to the following step.
7) When the following conditions are met, "TESTING" will be displayed at "COND1" on the CONSULT screen. Maintain the conditions continuously until "TESTING" changes to "COMPLETED". (It will take approximately 50 seconds.)
   CMPS·RPM (REF): 1,400 - 3,000 rpm
   Vehicle speed: 64 - 120 km/h (40 - 75 MPH)
   B/FUEL SCHDL: 1 - 4.8 ms
   Selector lever: Suitable position

NOTE:
- **If "TESTING" is not displayed after 5 minutes, retry from step 2).**
- **If "COMPLETED" already appears at "COND2" on CONSULT screen before "Procedure for COND2" is conducted, it is unnecessary to conduct step 8).**

Procedure for COND2

8) While driving, release accelerator pedal completely [with "OD" OFF (A/T models only)] from the above condition [step 7] until "INCOMPLETE" at "COND2" on CONSULT screen is turned to "COMPLETED". [It will take approximately 1 second (A/T), 4 seconds (M/T).]

Simpo PDF Merge and Split Unregistered Version - http://www.simpopdf.com

Rear Heated Oxygen Sensor (Max. Voltage Monitoring) (Rear HO2S) (Cont'd)

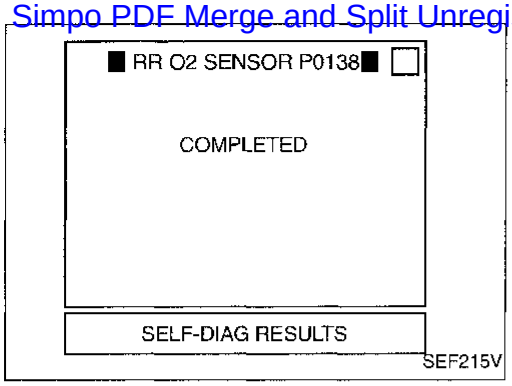

NOTE:

- **If "TESTING" is not displayed after 5 minutes, retry from step 2).**
- **If "COMPLETED" already appears at "COND3" on CONSULT screen before "Procedure for COND3" is conducted, it is unnecessary to conduct step 9).**

Procedure for COND3

9) Stop vehicle and let it idle until "INCOMPLETE" of "COND3" on CONSULT screen has turned to "COMPLETED". (It will take a maximum of approximately 6 minutes.)

NOTE:
If "TESTING" is not displayed after 5 minutes, retry from step 2).

10) Make sure that "OK" is displayed after touching "SELF-DIAG RESULTS".
If "NG" is displayed, refer to "DIAGNOSTIC PROCEDURE", EC-190.

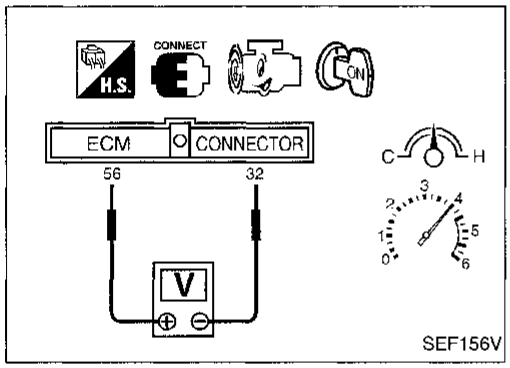

OR

OVERALL FUNCTION CHECK

Use this procedure to check the overall function of the rear heated oxygen sensor circuit. During this check, a 1st trip DTC might not be confirmed.

1) Start engine and warm it up to normal operating temperature.
2) Set voltmeter probes between ECM terminals ⑤⑥ (sensor signal) and ③② (ECM ground).
3) Check the voltage when revving engine up to 4,000 rpm under no load at least 10 times.
(Depress and release accelerator pedal as soon as possible.)
The voltage should be above 0.56V at least once during this procedure.
If the voltage can be confirmed in step 3, step 4 is not necessary.
4) Keep vehicle at idling for 10 minutes, then check the voltage. Or check the voltage when coasting from 80 km/h (50 MPH) in 3rd gear position (M/T), D position with "OD" OFF (A/T).
The voltage should be above 0.56V at least once during this procedure.

Rear Heated Oxygen Sensor (Max. Voltage Monitoring) (Rear HO2S) (Cont'd)

Simpo PDF Merge and Split Unregistered Version - http://www.simpopdf.com

EC-RRO2-01

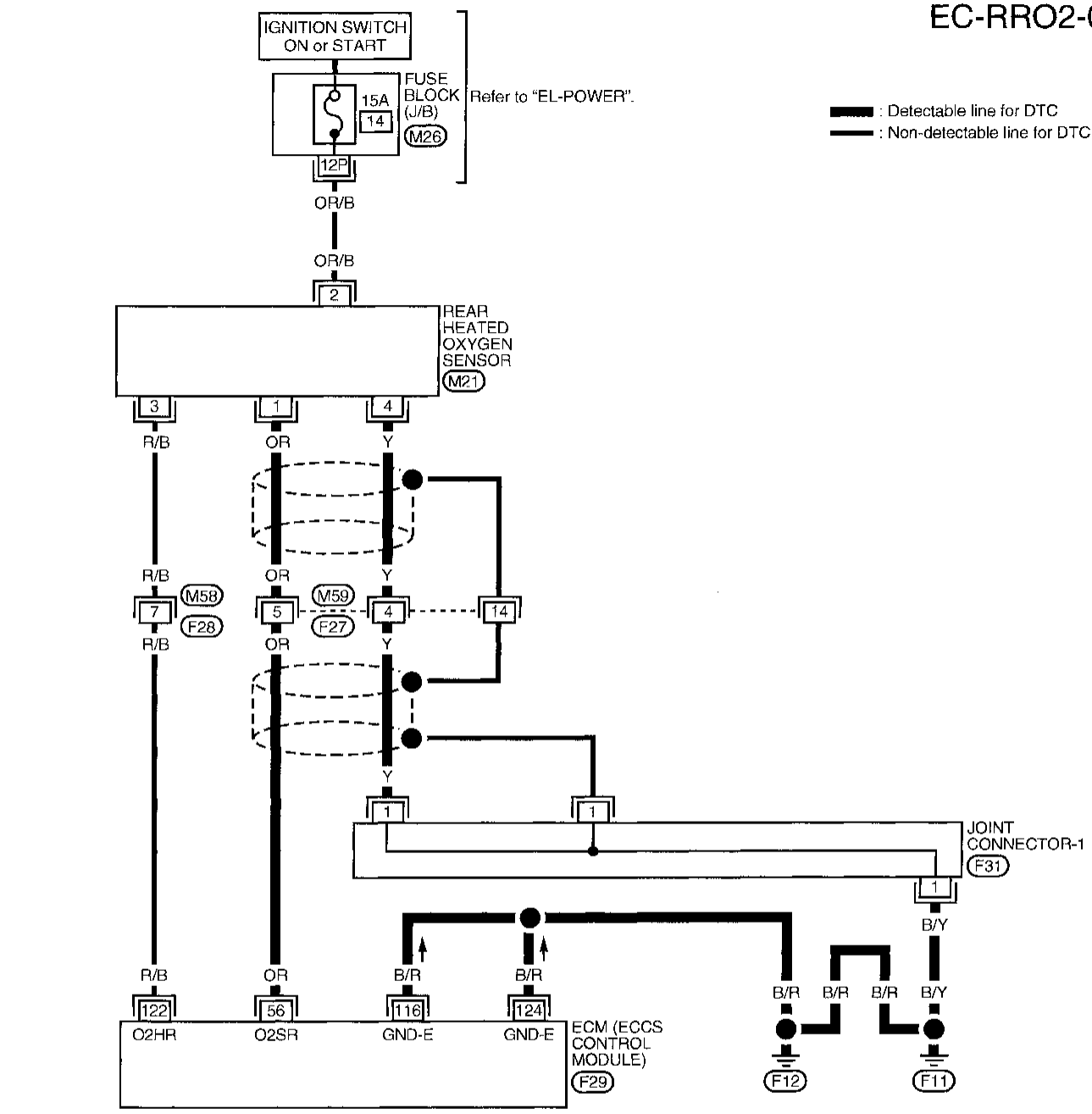

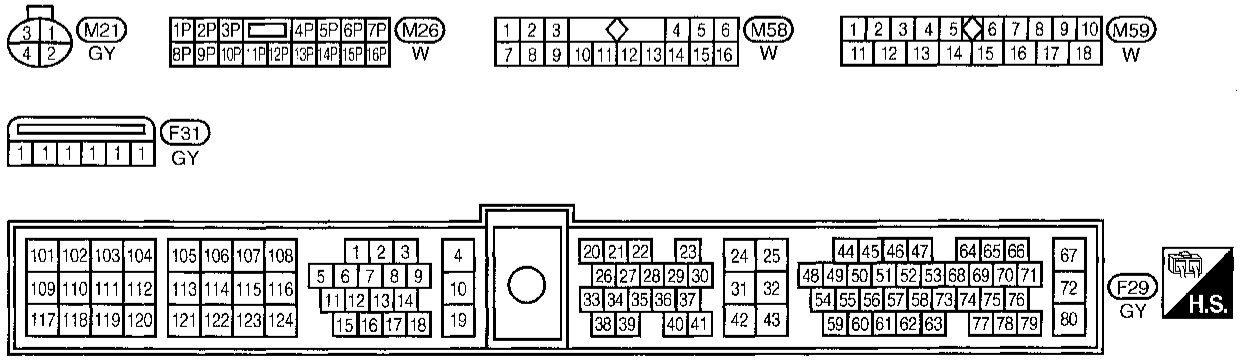

AEC526A

Simpo PDF Merge and Split Unregistered Version - http://www.simpopdf.com

Rear Heated Oxygen Sensor (Max. Voltage Monitoring) (Rear HO2S) (Cont'd)

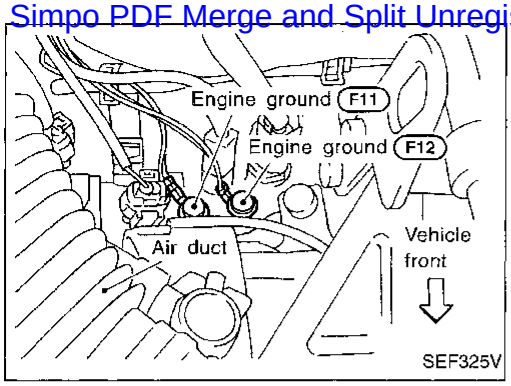

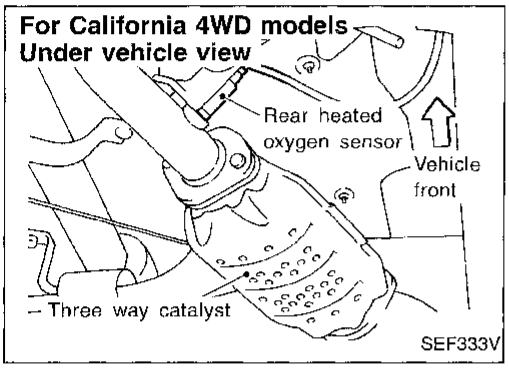

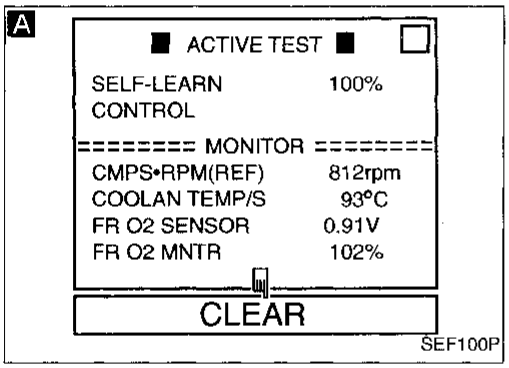

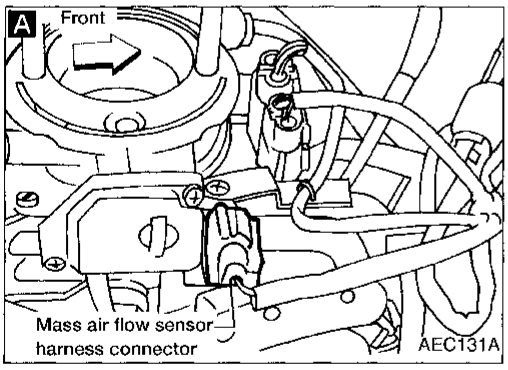

DIAGNOSTIC PROCEDURE

INSPECTION START

1. Turn ignition switch "OFF".
2. Loosen and retighten engine ground screws.

A

CLEAR THE SELF-LEARNING DATA

1. Start engine and warm it up to normal operating temperature.
2. Select "SELF-LEARNING CONT" in "ACTIVE TEST" mode with CONSULT.
3. Clear the self-learning control coefficient by touching "CLEAR".
4. Run engine for at least 10 minutes at idle speed.

Is the 1st trip DTC P0171 detected? Is it difficult to start engine?

Yes → Go to "TROUBLE DIAGNOSIS FOR DTC P0171", EC-208.

OR

2. Turn ignition switch "OFF".
3. Disconnect mass air flow sensor harness connector, and restart and run engine for at least 3 seconds at idle speed.
4. Stop engine and reconnect mass air flow sensor harness connector.
5. Make sure diagnostic trouble code No. 0102 is displayed in Diagnostic Test Mode II.
6. Erase the diagnostic test mode II (Self-diagnostic results) memory. Make sure diagnostic trouble code No. 0505 is displayed in Diagnostic Test Mode II.
7. Run engine for at least 10 minutes at idle speed.

Is the 1st trip DTC 0115 detected? Is it difficult to start engine?

No → Ⓐ

(Go to next page.)

Rear Heated Oxygen Sensor (Max. Voltage Monitoring) (Rear HO2S) (Cont'd)

Simpo PDF Merge and Split Unregistered Version - http://www.simpopdf.com

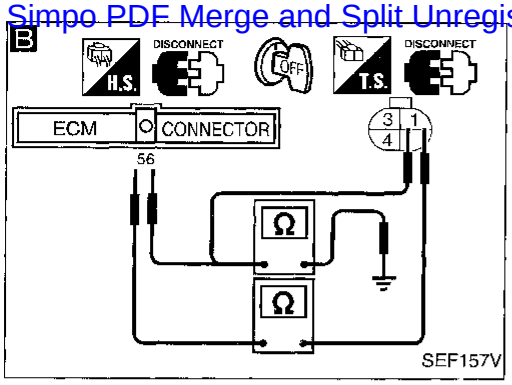

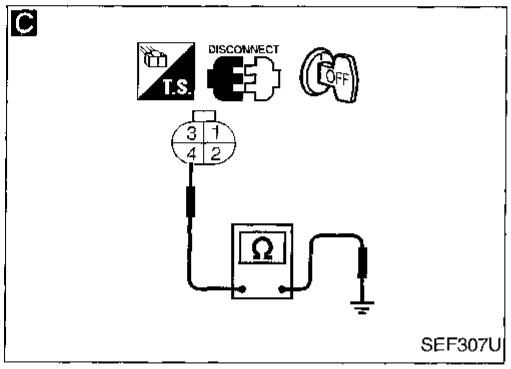

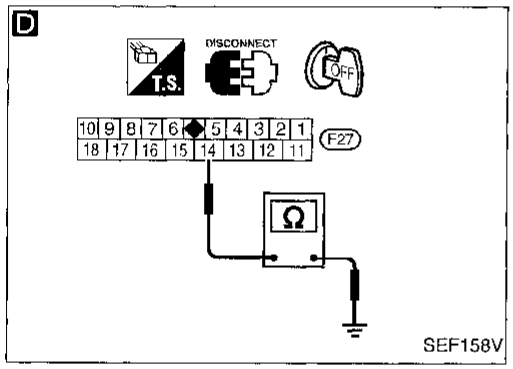

Ⓐ

B

CHECK INPUT SIGNAL CIRCUIT.
1. Disconnect rear heated oxygen sensor harness connector and ECM harness connector.
2. Check harness continuity between ECM terminal (56) and terminal (1).
   Continuity should exist.
3. Check harness continuity between ECM terminal (56) (or terminal (1)) and ground.
   Continuity should not exist.
   If OK, check harness for short to ground and short to power.

NG → Check the following.
- Harness connectors (M59), (F27)
- Harness for open or short between rear heated oxygen sensor and ECM

If NG, repair open circuit, short to ground or short to power in harness or connectors.

OK ↓

C

CHECK GROUND CIRCUIT.
Check harness continuity between terminal (4) and engine ground.
Continuity should exist.
If OK, check harness for short to ground and short to power.

NG → Check the following.
- Harness connectors (M59), (F27)
- Joint connector-1
- Harness for open or short between rear heated oxygen sensor and ground

If NG, repair open circuit, short to ground or short to power in harness or connectors.

OK ↓

CHECK COMPONENT
(Rear heated oxygen sensor).
Refer to "COMPONENT INSPECTION" on next page.

NG → Replace rear heated oxygen sensor.

OK ↓

D

CHECK SHIELD CIRCUIT.
1. Turn ignition switch "OFF".
2. Disconnect harness connector (F27).
3. Check harness continuity between harness connector (F27) terminal (14) and ground.
   Continuity should exist.
   If OK, check harness for short to power.

NG → Check the following.
- Joint connector-1
- Harness for open or short between harness connector (F27) and ground

If NG, repair open circuit or short to power in harness or connectors.

OK ↓

Perform "TROUBLE DIAGNOSIS FOR INTERMITTENT INCIDENT", EC-93.

INSPECTION END

Simpo PDF Merge and Split Unregistered Version - http://www.simpopdf.com

Rear Heated Oxygen Sensor (Max. Voltage Monitoring) (Rear HO2S) (Cont'd)

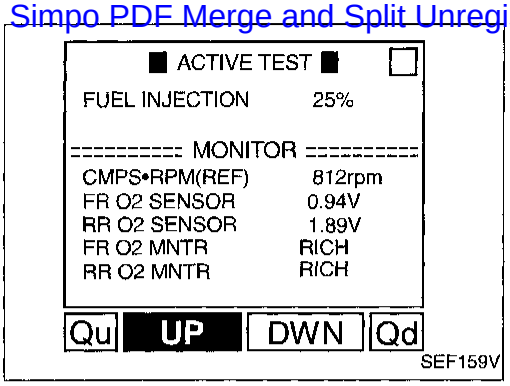

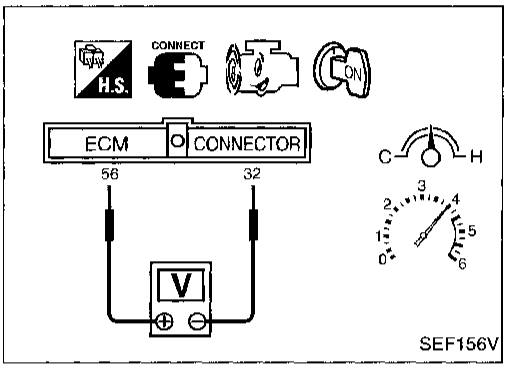

COMPONENT INSPECTION

Rear heated oxygen sensor

1) Start engine and warm it up to normal operating temperature.
2) Select "FUEL INJECTION" in "ACTIVE TEST" mode, and select "RR O2 SENSOR" as the monitor item with CONSULT.
3) Check "RR O2 SENSOR" at idle speed when adjusting "FUEL INJECTION" to ±25%.
   "RR O2 SENSOR" should be above 0.56V at least once when the "FUEL INJECTION" is +25%.
   "RR O2 SENSOR" should be below 0.54V at least once when the "FUEL INJECTION" is –25%.

OR

1) Start engine and warm it up to normal operating temperature.
2) Set voltmeter probes between ECM terminals ⑯ (sensor signal) and ㉜ (ECM ground).
3) Check the voltage when racing up to 4,000 rpm under no load at least 10 times.
   (Depress and release accelerator pedal as soon as possible.)
   The voltage should be above 0.56V at least once.
   If the voltage is above 0.56V at step 3, step 4 is not necessary.
4) Check the voltage when racing up to 5,000 rpm under no load. Or keep vehicle at idling for 10 minutes, then check the voltage. Or check the voltage when coasting from 80 km/h (50 MPH) in 3rd gear position (M/T), D position with "OD" OFF (A/T).
   The voltage should be below 0.54V at least once.

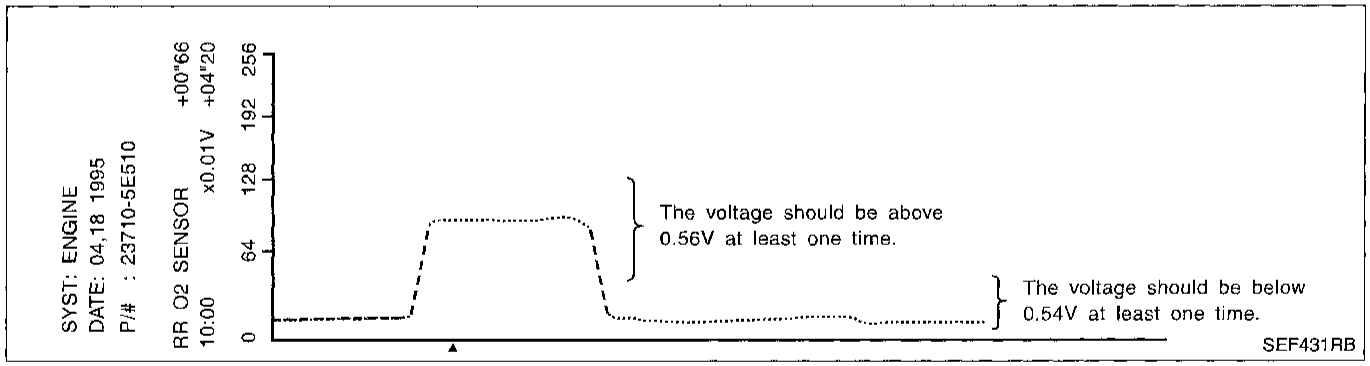

Simpo PDF Merge and Split Unregistered Version - http://www.simpopdf.com

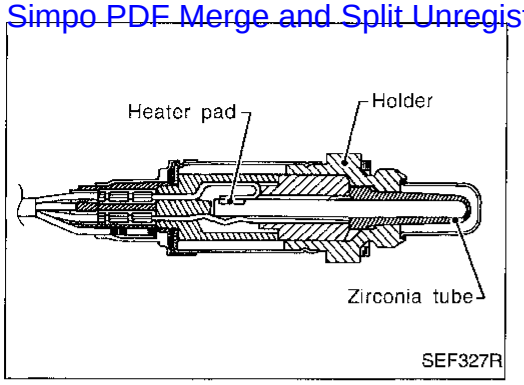

Rear Heated Oxygen Sensor (Response Monitoring) (Rear HO2S)

COMPONENT DESCRIPTION

The rear heated oxygen sensor (rear HO2S), after three way catalyst, monitors the oxygen level in the exhaust gas.
Even if switching characteristics of the front heated oxygen sensor are shifted, the air fuel ratio is controlled to stoichiometric by the signal from the rear heated oxygen sensor.
This sensor is made of ceramic zirconia. The zirconia generates voltage from approximately 1V in richer conditions to 0V in leaner conditions.
Under normal conditions the rear heated oxygen sensor is not used for engine control operation.

CONSULT REFERENCE VALUE IN DATA MONITOR MODE

Specification data are reference values.

MONITOR ITEM	CONDITION		SPECIFICATION
RR O2 SENSOR ..... RR O2 MNTR	● Engine: After warming up	Revving engine from idle to 3,000 rpm quickly	0 - 0.3V ↔ Approx. 0.6 - 1.0V LEAN ↔ RICH

ECM TERMINALS AND REFERENCE VALUE

Specification data are reference values and are measured between each terminal and ㉜ (ECM ground).

TER-MINAL NO.	WIRE COLOR	ITEM	CONDITION	DATA (DC Voltage)
56	OR	Rear heated oxygen sensor	Engine is running. └ After warming up to normal operating temperature and revving engine from idle to 3,000 rpm quickly	0 - Approximately 1.0V

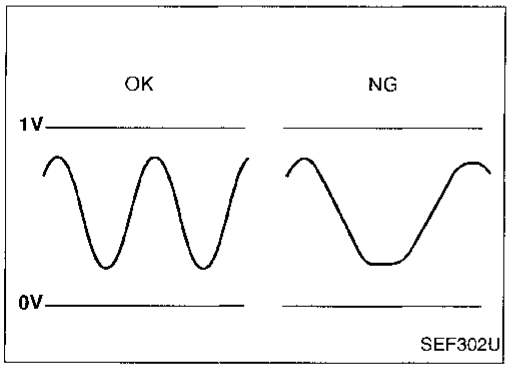

ON BOARD DIAGNOSIS LOGIC

The rear heated oxygen sensor has a much longer switching time between rich and lean than the front heated oxygen sensor. The oxygen storage capacity before the three way catalyst causes the longer switching time. To judge malfunctions of the rear heated oxygen sensor, ECM monitors whether the switching response of the sensor's voltage is faster than specified during various driving conditions such as fuel-cut.

Diagnostic Trouble Code No.	Malfunction is detected when ...	Check Items (Possible Cause)
P0139 0707	● It takes more time for the sensor to respond between rich and lean than the specified time.	● Harness or connectors (The sensor circuit is open or shorted.) ● Rear heated oxygen sensor ● Fuel pressure ● Injectors ● Intake air leaks

Simpo PDF Merge and Split Unregistered Version - http://www.simpopdf.com

Rear Heated Oxygen Sensor (Response Monitoring) (Rear HO2S) (Cont'd)

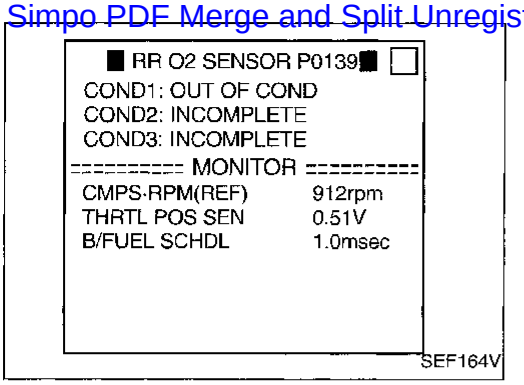

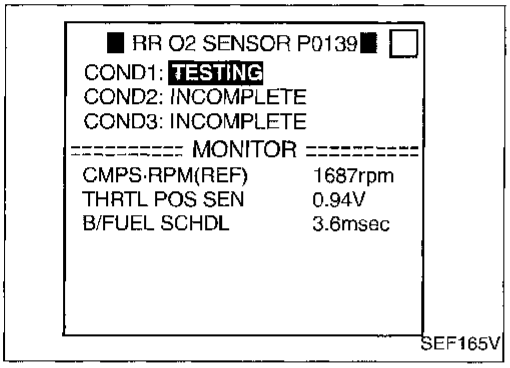

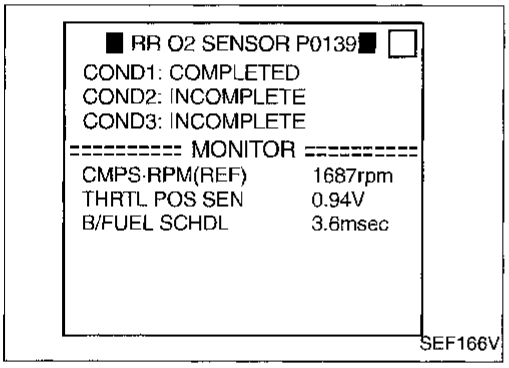

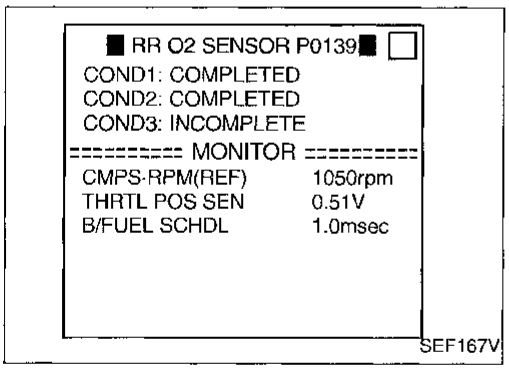

DIAGNOSTIC TROUBLE CODE CONFIRMATION PROCEDURE

CAUTION:
Always drive vehicle at a safe speed.

NOTE:
- **"COMPLETED" will appear on CONSULT screen when all tests "COND1", "COND2" and "COND3" are completed.**
- **If "DIAGNOSTIC TROUBLE CODE CONFIRMATION PROCEDURE" has been previously conducted, always turn ignition switch "OFF" and wait at least 5 seconds before conducting the next test.**

TESTING CONDITION:
- **Never stop engine during this test. If the engine is stopped, reperform this test from step 2).**
- **Always perform at a temperature above −10°C (14°F).**

Procedure for COND1

1) Start engine and warm it up to normal operating temperature.
2) Turn ignition switch "OFF" and wait at least 5 seconds.
3) Turn ignition switch "ON" and select "RR O2 SENSOR P0139" of "REAR O2 SENSOR" in "DTC WORK SUPPORT" mode with CONSULT.
4) Touch "START".
5) Start engine and let it idle for at least 10 seconds.
6) Rev engine up to 2,000 rpm 2 or 3 times quickly under no load.
   If "COMPLETED" appears on CONSULT screen, go to step 10).
   If "COMPLETED" does not appear on CONSULT screen, go to the following step.
7) When the following conditions are met, "TESTING" will be displayed at "COND1" on the CONSULT screen. Maintain the conditions continuously until "TESTING" changes to "COMPLETED". (It will take approximately 50 seconds.)
   CMPS·RPM (REF): 1,400 - 3,000 rpm
   Vehicle speed: 64 - 120 km/h (40 - 75 MPH)
   B/FUEL SCHDL: 1 - 4.8 ms
   Selector lever: Suitable position

NOTE:
- **If "TESTING" is not displayed after 5 minutes, retry from step 2).**
- **If "COMPLETED" already appears at "COND2" on CONSULT screen before "Procedure for COND2" is conducted, it is unnecessary to conduct step 8).**

Procedure for COND2

8) While driving, release accelerator pedal completely [with "OD" OFF (A/T models only)] from the above condition [step 7] until "INCOMPLETE" at "COND2" on CONSULT screen has turned to "COMPLETED". [It will take approximately 1 second (A/T), 4 seconds (M/T).]

Simpo PDF Merge and Split Unregistered Version - http://www.simpopdf.com

Rear Heated Oxygen Sensor (Response Monitoring) (Rear HO2S) (Cont'd)

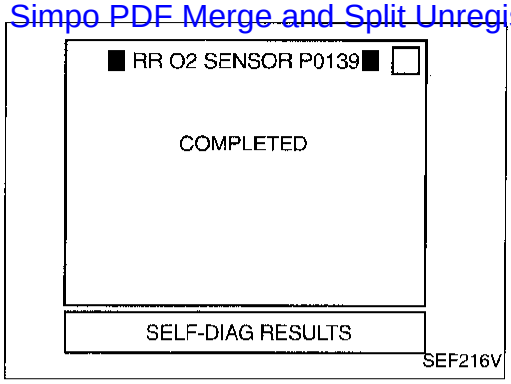

NOTE:

- **If "TESTING" is not displayed after 5 minutes, retry from step 2).**
- **If "COMPLETED" already appears at "COND3" on CONSULT screen before "Procedure for COND3" is conducted, it is unnecessary to conduct step 9).**

Procedure for COND3

9) Stop vehicle and let it idle until "INCOMPLETE" of "COND3" on CONSULT screen has turned to "COMPLETED". (It will take a maximum of approximately 6 minutes.)

NOTE:
If "TESTING" is not displayed after 5 minutes, retry from step 2).

10) Make sure that "OK" is displayed after touching "SELF-DIAG RESULTS".
If "NG" is displayed, refer to "DIAGNOSTIC PROCEDURE", EC-197.

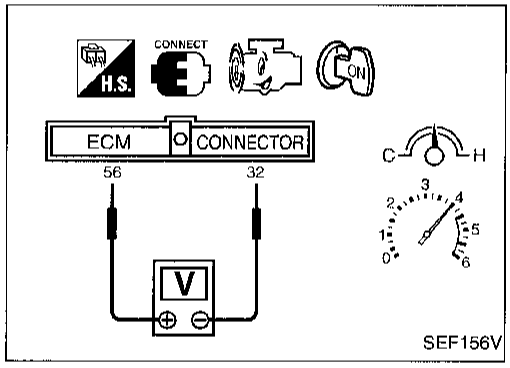

OR

OVERALL FUNCTION CHECK

Use this procedure to check the overall function of the rear heated oxygen sensor circuit. During this check, a 1st trip DTC might not be confirmed.

1) Start engine and warm it up to normal operating temperature.
2) Set voltmeter probes between ECM terminals ⑤⑥(sensor signal) and ③②(ECM ground).
3) Check the voltage when racing up to 4,000 rpm under no load at least 10 times.
(Depress and release accelerator pedal as soon as possible.)
The voltage should change at more than 0.06V for 1 second during this procedure.
If the voltage can be confirmed in step 3, step 4 is not necessary.
4) Keep vehicle at idling for 10 minutes, then check the voltage. Or check the voltage when coasting from 80 km/h (50 MPH) in 3rd gear position (M/T), D position with "OD" OFF (A/T).
The voltage should change at more than 0.06V for 1 second during this procedure.

Rear Heated Oxygen Sensor (Response Monitoring) (Rear HO2S) (Cont'd)

Simpo PDF Merge and Split Unregistered Version - http://www.simpopdf.com

EC-RRO2-01

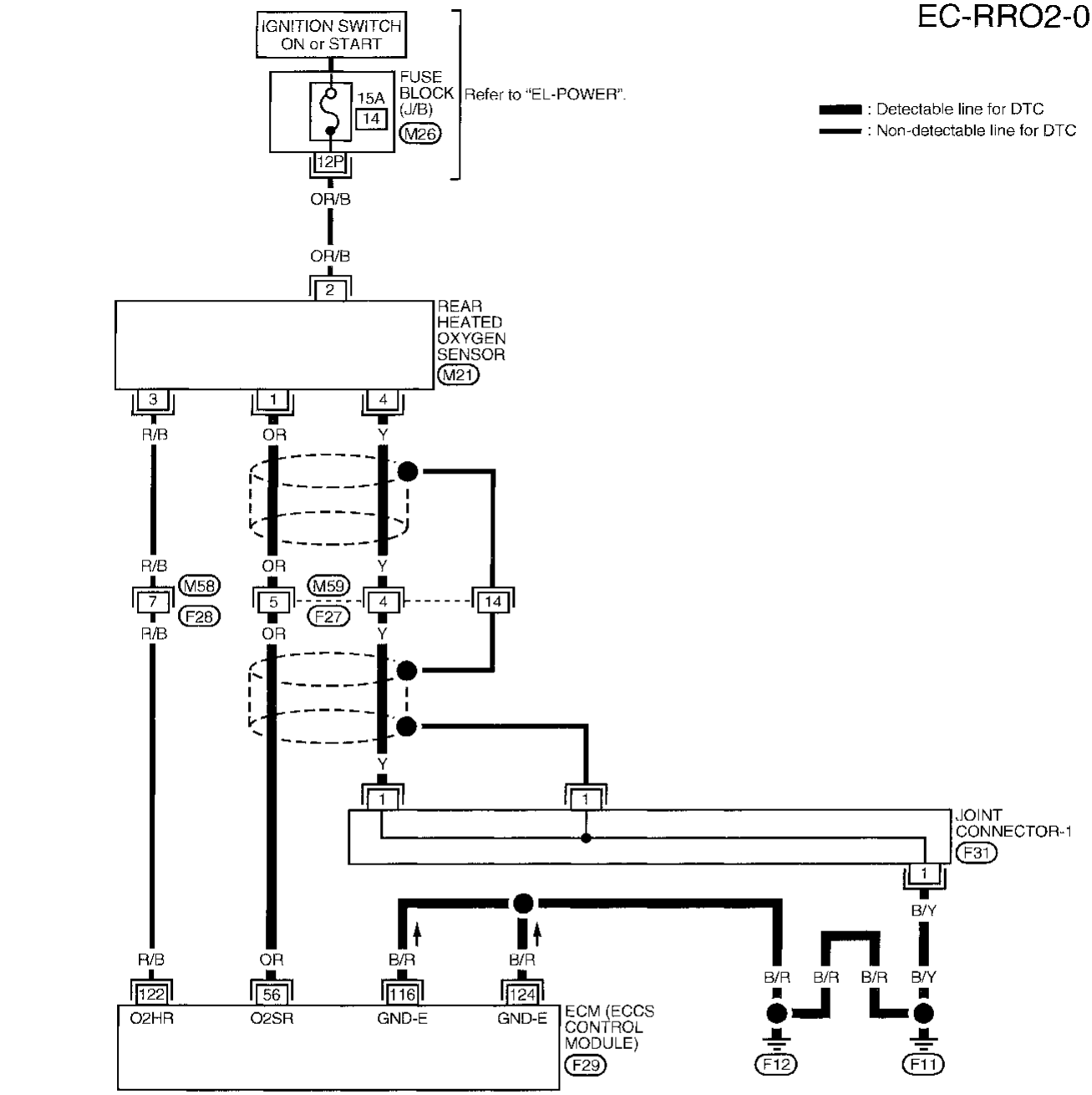

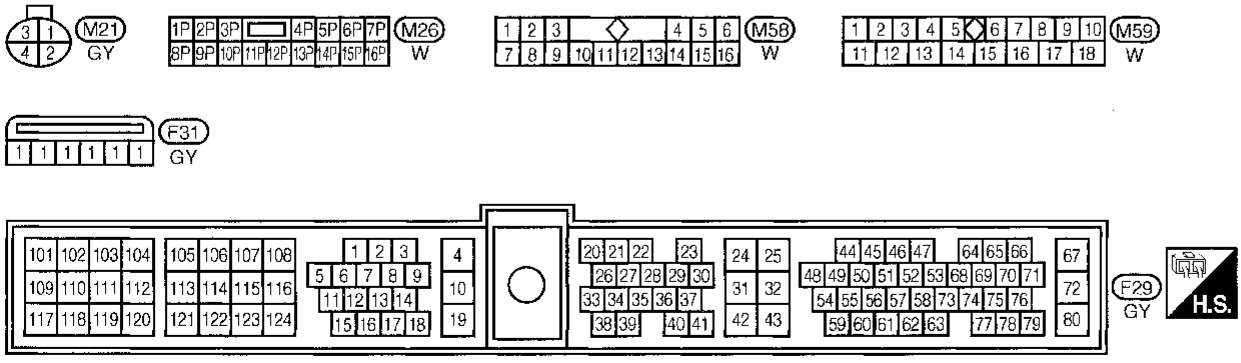

AEC526A

Simpo PDF Merge and Split Unregistered Version - http://www.simpopdf.com

Rear Heated Oxygen Sensor (Response Monitoring) (Rear HO2S) (Cont'd)

DIAGNOSTIC PROCEDURE

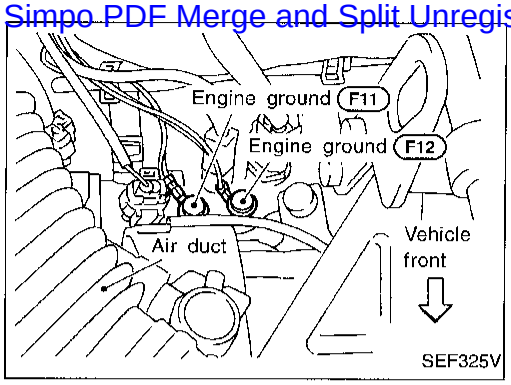

INSPECTION START

1. Turn ignition switch "OFF".
2. Loosen and retighten engine ground screws.

A

CHECK INPUT SIGNAL CIRCUIT.
1. Disconnect rear heated oxygen sensor harness connector and ECM harness connector.
2. Check harness continuity between ECM terminal 56 and terminal 1.
   Continuity should exist.
3. Check harness continuity between ECM terminal 56 (or terminal 1) and ground.
   Continuity should not exist.
   If OK, check harness for short to ground and short to power.

NG → Check the following.
- Harness connectors M59, F27
- Harness for open or short between rear heated oxygen sensor and ECM

If NG, repair open circuit, short to ground or short to power in harness or connectors.

OK ↓

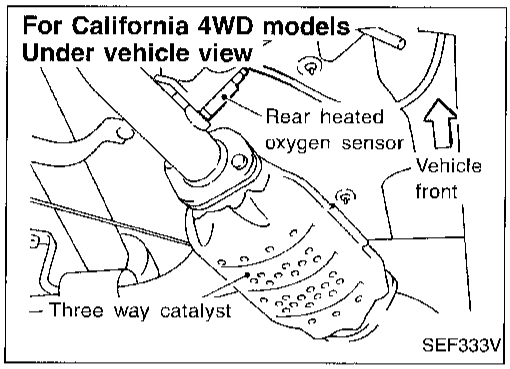

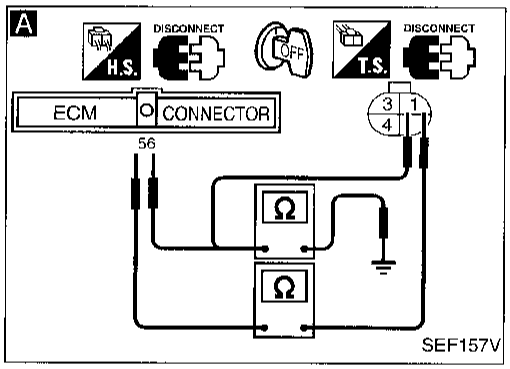

B

CHECK GROUND CIRCUIT.
Check harness continuity between terminal 4 and engine ground.
Continuity should exist.
If OK, check harness for short to ground and short to power.

NG → Check the following.
- Harness connectors M59, F27
- Joint connector-1
- Harness for open or short between rear heated oxygen sensor and ground

If NG, repair open circuit, short to ground or short to power in harness or connectors.

OK ↓

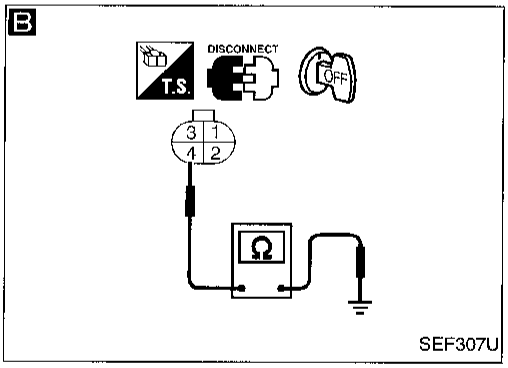

CHECK COMPONENT
(Rear heated oxygen sensor).
Refer to "COMPONENT INSPECTION" on next page.

NG → Replace rear heated oxygen sensor.

OK ↓

C

CHECK SHIELD CIRCUIT.
1. Turn ignition switch "OFF".
2. Disconnect harness connector F27.
3. Check harness continuity between harness connector F27 terminal 14 and ground.
   Continuity should exist.
   If OK, check harness for short to power.

NG → Check the following.
- Joint connector-1
- Harness for open or short between harness connector F27 and ground

If NG, repair open circuit or short to power in harness or connectors.

OK ↓

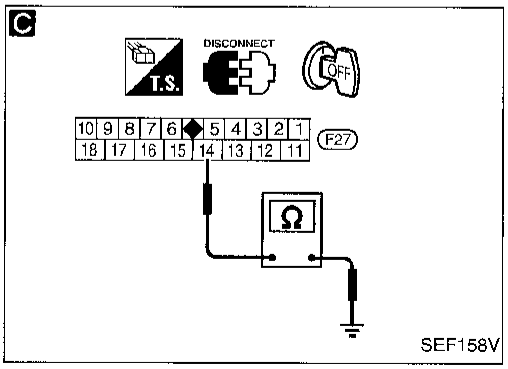

Perform "TROUBLE DIAGNOSIS FOR INTERMITTENT INCIDENT", EC-93.

INSPECTION END

Simpo PDF Merge and Split Unregistered Version - http://www.simpopdf.com

Rear Heated Oxygen Sensor (Response Monitoring) (Rear HO2S) (Cont'd)

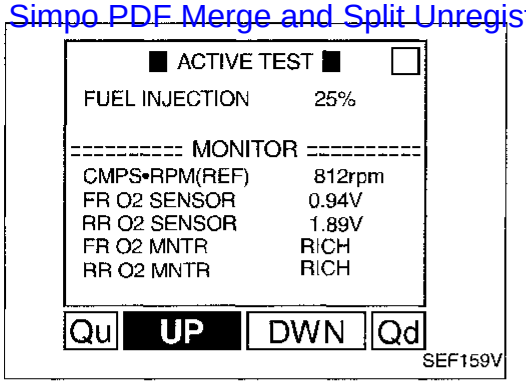

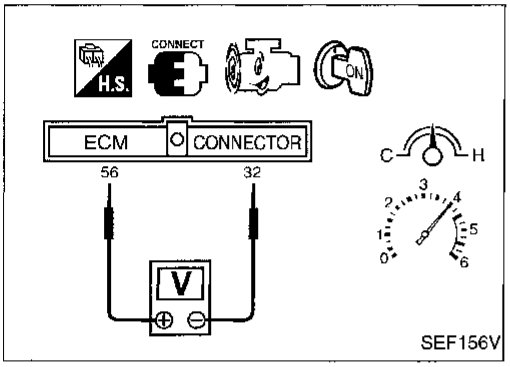

COMPONENT INSPECTION

Rear heated oxygen sensor

1) Start engine and warm it up to normal operating temperature.
2) Select "FUEL INJECTION" in "ACTIVE TEST" mode, and select "RR O2 SENSOR" as the monitor item with CONSULT.
3) Check "RR O2 SENSOR" at idle speed when adjusting "FUEL INJECTION" to ±25%.
   "RR O2 SENSOR" should be above 0.56V at least once when the "FUEL INJECTION" is +25%.
   "RR O2 SENSOR" should be below 0.54V at least once when the "FUEL INJECTION" is –25%.

OR

1) Start engine and warm it up to normal operating temperature.
2) Set voltmeter probes between ECM terminals ⑯ (sensor signal) and ㉜ (ECM ground).
3) Check the voltage when racing up to 4,000 rpm under no load at least 10 times.
   (Depress and release accelerator pedal as soon as possible.)
   The voltage should be above 0.56V at least once.
   If the voltage is above 0.56V at step 3, step 4 is not necessary.
4) Check the voltage when racing up to 5,000 rpm under no load. Or keep vehicle at idling for 10 minutes, then check the voltage. Or check the voltage when coasting from 80 km/h (50 MPH) in 3rd gear position (M/T), D position with "OD" OFF (A/T).
   The voltage should be below 0.54V at least once.

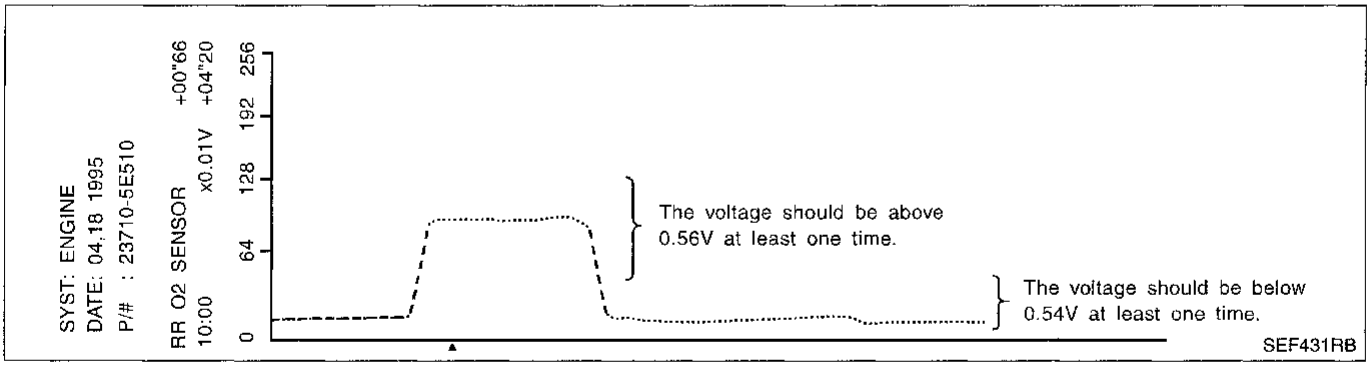

Simpo PDF Merge and Split Unregistered Version - http://www.simpopdf.com

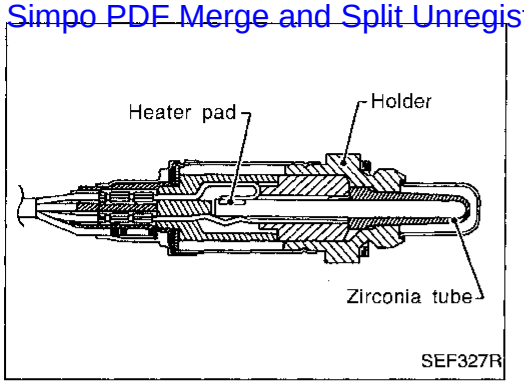

Rear Heated Oxygen Sensor (High Voltage) (Rear HO2S)

COMPONENT DESCRIPTION

The rear heated oxygen sensor (rear HO2S), after three way catalyst, monitors the oxygen level in the exhaust gas.
Even if switching characteristics of the front heated oxygen sensor are shifted, the air fuel ratio is controlled to stoichiometric by the signal from the rear heated oxygen sensor.
This sensor is made of ceramic zirconia. The zirconia generates voltage from approximately 1V in richer conditions to 0V in leaner conditions.
Under normal conditions the rear heated oxygen sensor is not used for engine control operation.

CONSULT REFERENCE VALUE IN DATA MONITOR MODE

Specification data are reference values.

MONITOR ITEM	CONDITION		SPECIFICATION
RR O2 SENSOR ..... RR O2 MNTR	● Engine: After warming up	Revving engine from idle to 3,000 rpm quickly	0 - 0.3V ↔ Approx. 0.6 - 1.0V
			LEAN ↔ RICH

ECM TERMINALS AND REFERENCE VALUE

Specification data are reference values and are measured between each terminal and ㉜ (ECM ground).

TERMINAL NO.	WIRE COLOR	ITEM	CONDITION	DATA (DC Voltage)
56	OR	Rear heated oxygen sensor	Engine is running. └ After warming up to normal operating temperature and revving engine from idle to 3,000 rpm quickly	0 - Approximately 1.0V

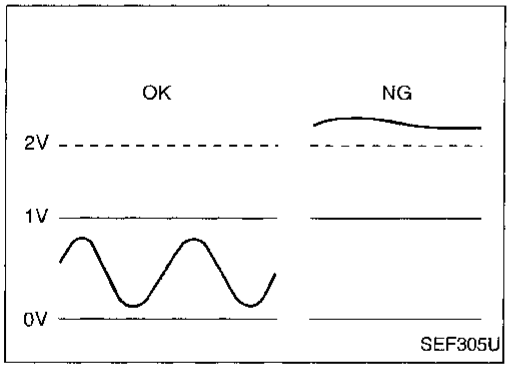

ON BOARD DIAGNOSIS LOGIC

The rear heated oxygen sensor has a much longer switching time between rich and lean than the front heated oxygen sensor. The oxygen storage capacity before the three way catalyst causes the longer switching time. To judge malfunctions of the rear heated oxygen sensor, ECM monitors whether or not the voltage is too high during various driving conditions such as fuel-cut.

Diagnostic Trouble Code No.	Malfunction is detected when ...	Check Items (Possible Cause)
P0140 0512	● An excessively high voltage from the sensor is sent to ECM.	● Harness or connectors (The sensor circuit is open or shorted.) ● Rear heated oxygen sensor

Simpo PDF Merge and Split Unregistered Version - http://www.simpopdf.com

Rear Heated Oxygen Sensor (High Voltage) (Rear HO2S) (Cont'd)

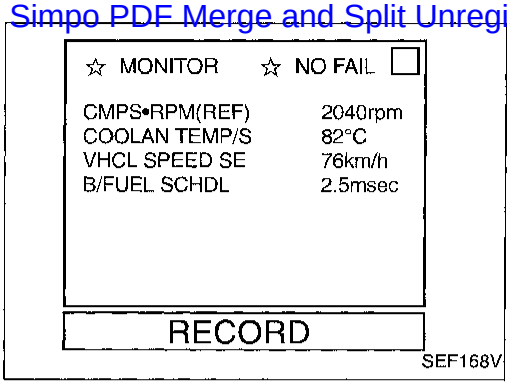

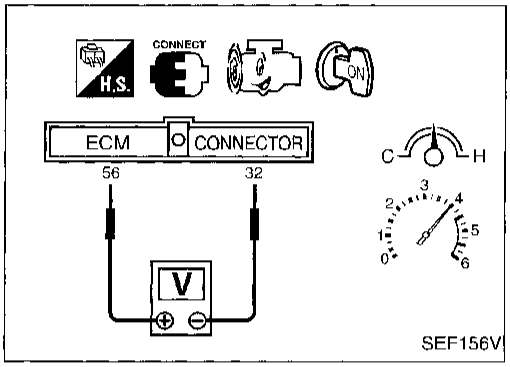

DIAGNOSTIC TROUBLE CODE CONFIRMATION PROCEDURE

CAUTION:
Always drive vehicle at a safe speed.

NOTE:
If "DIAGNOSTIC TROUBLE CODE CONFIRMATION PROCEDURE" has been previously conducted, always turn ignition switch "OFF" and wait at least 5 seconds before conducting the next test.

1) Turn ignition switch "ON" and select "DATA MONITOR" mode with CONSULT.
2) Meet the following conditions once.
   CMPS·RPM (REF): 1,400 - 3,000 rpm
   VHCL SPEED SE: 64 - 120 km/h (40 - 75 MPH)
   B/FUEL SCHDL: 1 - 4.8 ms
   COOLAN TEMP/S: 70 - 100°C (158 - 212°F)
   Selector lever: Suitable position
3) Stop vehicle with engine running.

OR

OVERALL FUNCTION CHECK

Use this procedure to check the overall function of the rear heated oxygen sensor circuit. During this check, a 1st trip DTC might not be confirmed.

1) Start engine and warm it up to normal operating temperature.
2) Set voltmeter probes between ECM terminals ⑤⑥ (sensor signal) and ③② (ECM ground).
3) Check the voltage after racing up to 4,000 rpm under no load at least 10 times.
   (Depress and release accelerator pedal as soon as possible.)
   The voltage should be below 2V during this procedure.

Simpo PDF Merge and Split Unregistered Version - http://www.simpopdf.com

EC-RRO2-01

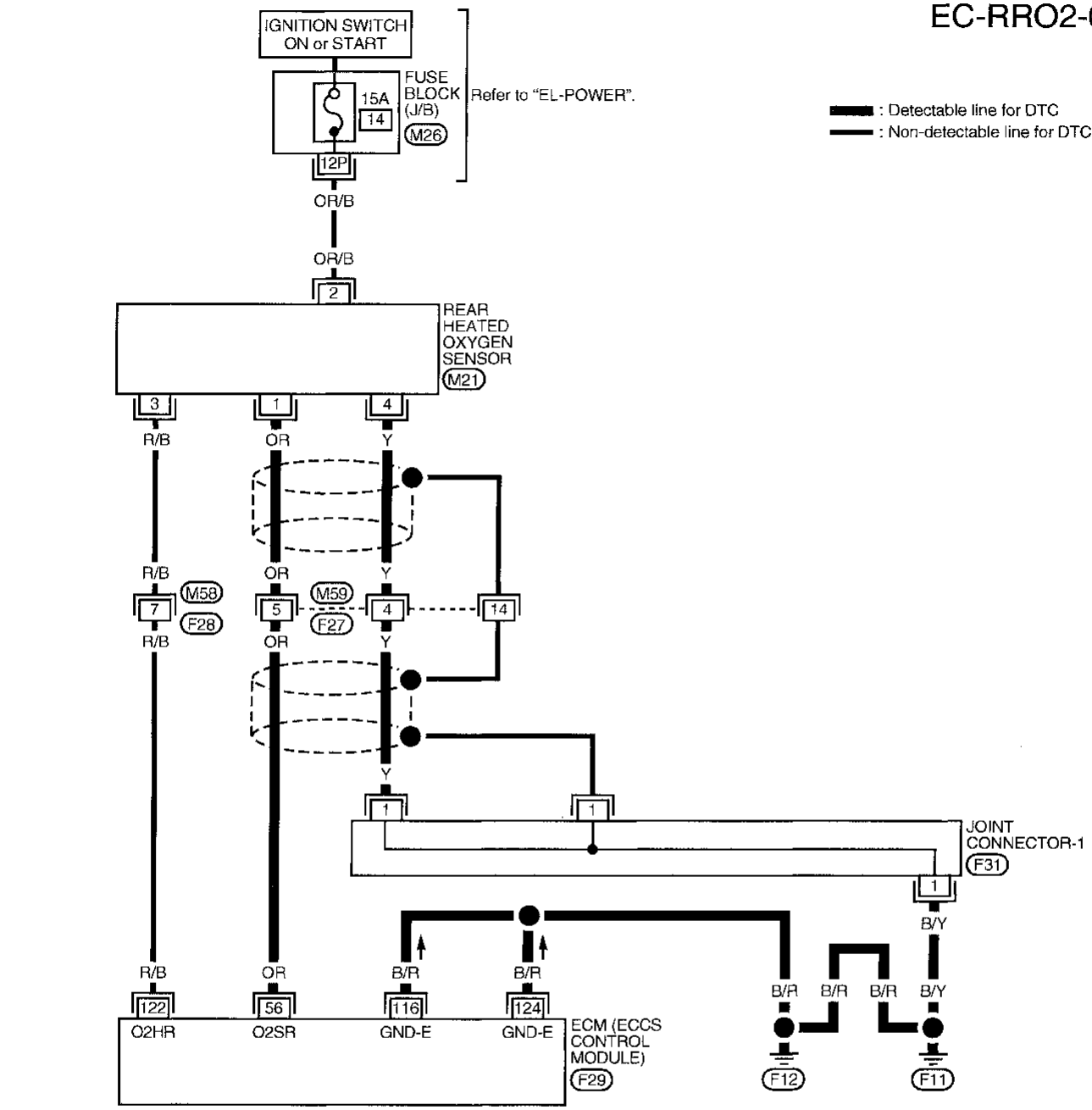

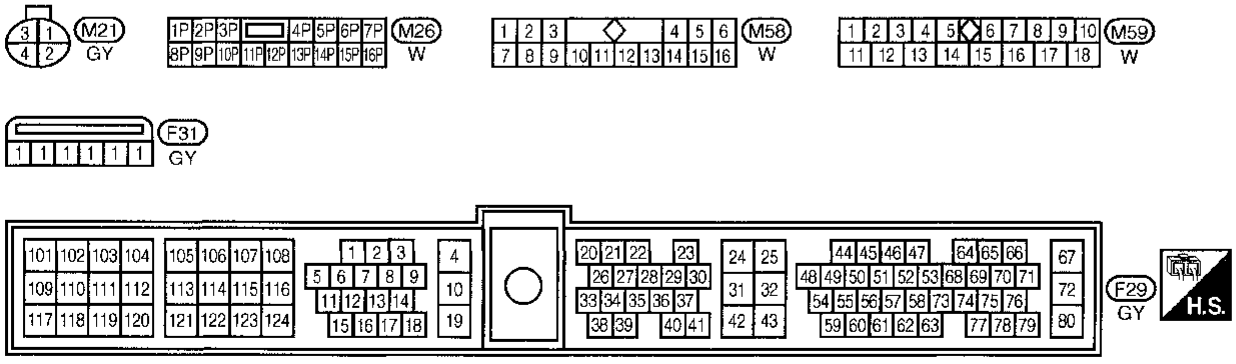

AEC526A

Simpo PDF Merge and Split Unregistered Version - http://www.simpopdf.com

Rear Heated Oxygen Sensor (High Voltage) (Rear HO2S) (Cont'd)

DIAGNOSTIC PROCEDURE

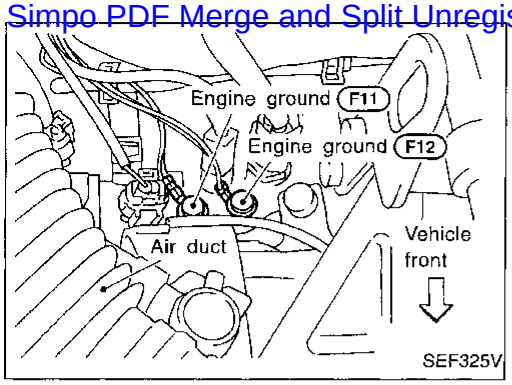

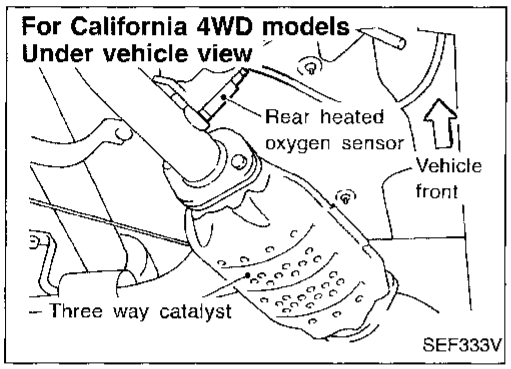

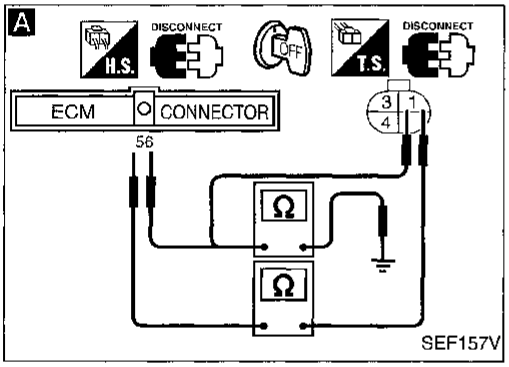

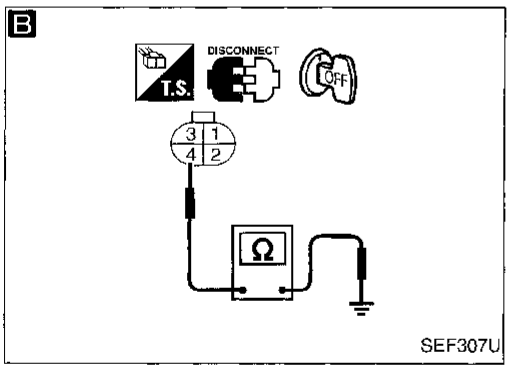

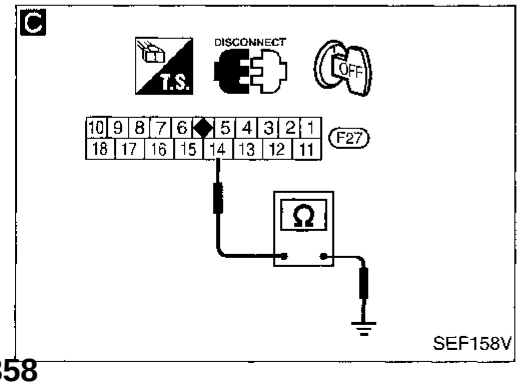

INSPECTION START

1. Turn ignition switch "OFF".
2. Loosen and retighten engine ground screws.

A

CHECK INPUT SIGNAL CIRCUIT.
1. Disconnect rear heated oxygen sensor harness connector and ECM harness connector.
2. Check harness continuity between ECM terminal (56) and terminal (1).
   Continuity should exist.
3. Check harness continuity between ECM terminal (56) (or terminal (1)) and ground.
   Continuity should not exist.
   If OK, check harness for short to ground and short to power.

NG → Check the following.
- Harness connectors (M59), (F27)
- Harness for open or short between rear heated oxygen sensor and ECM

If NG, repair open circuit, short to ground or short to power in harness or connectors.

OK ↓

B

CHECK GROUND CIRCUIT.
Check harness continuity between terminal (4) and engine ground.
Continuity should exist.
If OK, check harness for short to ground and short to power.

NG → Check the following.
- Harness connectors (M59), (F27)
- Joint connector-1
- Harness for open or short between rear heated oxygen sensor and ground

If NG, repair open circuit, short to ground or short to power in harness or connectors.

OK ↓

CHECK COMPONENT
(Rear heated oxygen sensor).
1. Turn ignition switch "OFF".
2. Disconnect sensor harness connector and check for water.
   Water should not exist.
   If OK, go to step 3.
3. Check rear heated oxygen sensor.

Refer to "COMPONENT INSPECTION" on next page.

NG → Replace rear heated oxygen sensor.

OK ↓

C

CHECK SHIELD CIRCUIT.
1. Turn ignition switch "OFF".
2. Disconnect harness connector (F27).
3. Check harness continuity between harness connector (F27) terminal (14) and ground.
   Continuity should exist.
   If OK, check harness for short to power.

NG → Check the following.
- Joint connector-1
- Harness for open or short between harness connector (F27) and ground

If NG, repair open circuit or short to power in harness or connectors.

OK ↓

Perform "TROUBLE DIAGNOSIS FOR INTERMITTENT INCIDENT", EC-93.

INSPECTION END

Simpo PDF Merge and Split Unregistered Version - http://www.simpopdf.com

Rear Heated Oxygen Sensor (High Voltage) (Rear HO2S) (Cont'd)

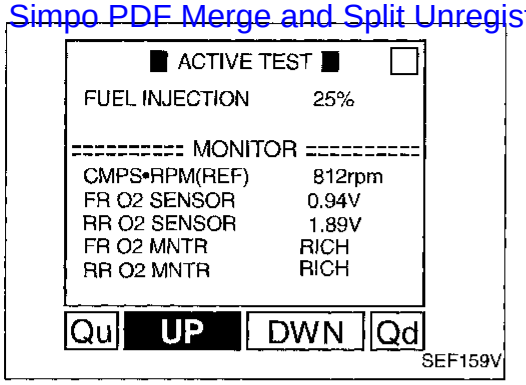

SEF159V

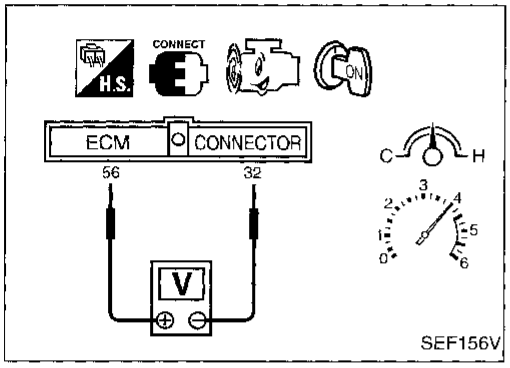

SEF156V

COMPONENT INSPECTION

Rear heated oxygen sensor

1) Start engine and warm it up to normal operating temperature.
2) Select "FUEL INJECTION" in "ACTIVE TEST" mode, and select "RR O2 SENSOR" as the monitor item with CONSULT.
3) Check "RR O2 SENSOR" at idle speed when adjusting "FUEL INJECTION" to ±25%.
   "RR O2 SENSOR" should be above 0.56V at least once when the "FUEL INJECTION" is +25%.
   "RR O2 SENSOR" should be below 0.54V at least once when the "FUEL INJECTION" is –25%.

OR

1) Start engine and warm it up to normal operating temperature.
2) Set voltmeter probes between ECM terminals ⑯ (sensor signal) and ㉜ (ECM ground).
3) Check the voltage when racing up to 4,000 rpm under no load at least 10 times.
   (Depress and release accelerator pedal as soon as possible.)
   The voltage should be above 0.56V at least once.
   If the voltage is above 0.56V at step 3, step 4 is not necessary.
4) Check the voltage when racing up to 5,000 rpm under no load. Or keep vehicle at idling for 10 minutes, then check the voltage. Or check the voltage when coasting from 80 km/h (50 MPH) in 3rd gear position (M/T), D position with "OD" OFF (A/T).
   The voltage should be below 0.54V at least once.

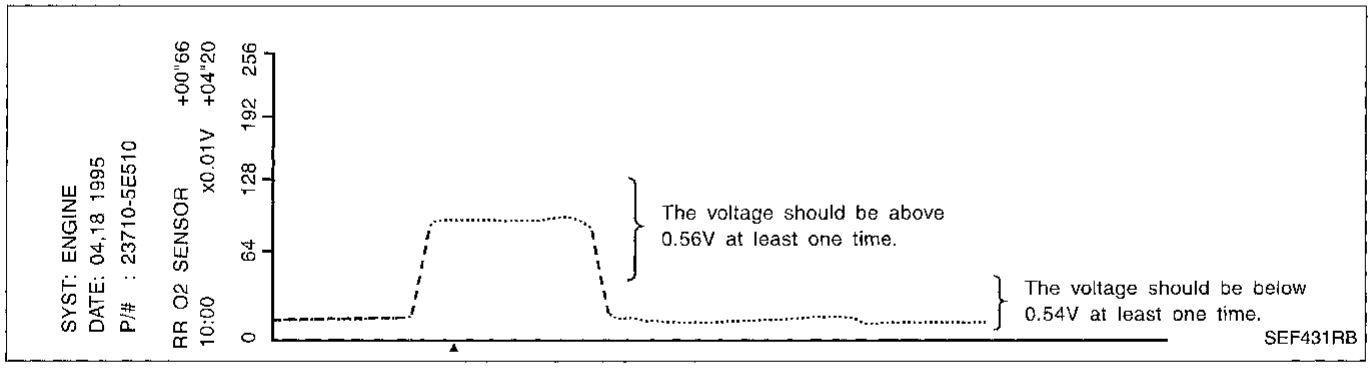

SEF431RB

Simpo PDF Merge and Split Unregistered Version - http://www.simpopdf.com

Rear Heated Oxygen Sensor Heater

SYSTEM DESCRIPTION

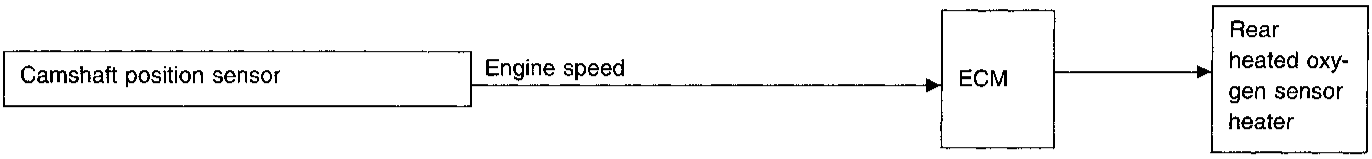

The ECM performs ON/OFF control of the rear heated oxygen sensor heater corresponding to the engine speed.

OPERATION

Engine speed rpm	Rear heated oxygen sensor heater
Ignition switch "ON" (Engine is stopped.)	OFF
Engine is running.	ON

CONSULT REFERENCE VALUE IN DATA MONITOR MODE

Specification data are reference values.

MONITOR ITEM	CONDITION	SPECIFICATION
RR O2 HEATER	● Ignition switch: ON	ON
	● Engine running	OFF

ECM TERMINALS AND REFERENCE VALUE

Specification data are reference values and are measured between each terminal and ㉜ (ECM ground).

TERMINAL NO.	WIRE COLOR	ITEM	CONDITION	DATA (DC Voltage)
122	R/B	Rear heated oxygen sensor heater	Engine is running.	Approximately 0.4V
			Ignition switch "ON" └ Engine is not running.	BATTERY VOLTAGE (11 - 14V)

ON BOARD DIAGNOSIS LOGIC

Diagnostic Trouble Code No.	Malfunction is detected when	Check Items (Possible Cause)
P0141 0902	● The current amperage in the rear heated oxygen sensor heater circuit is out of the normal range. (An improper voltage drop signal is sent to ECM through the rear heated oxygen sensor heater.)	● Harness or connectors (The rear heated oxygen sensor heater circuit is open or shorted.) ● Rear heated oxygen sensor heater

Simpo PDF Merge and Split Unregistered Version - http://www.simpopdf.com

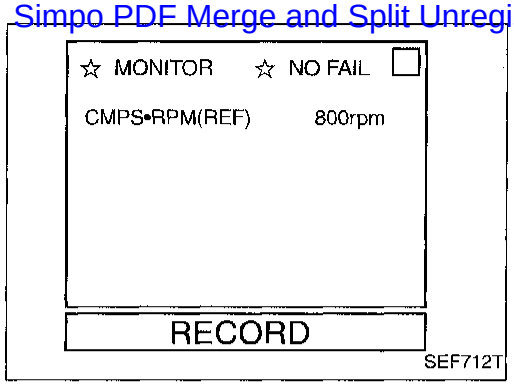

Rear Heated Oxygen Sensor Heater (Cont'd)

DIAGNOSTIC TROUBLE CODE CONFIRMATION PROCEDURE

NOTE:
If "DIAGNOSTIC TROUBLE CODE CONFIRMATION PROCEDURE" has been previously conducted, always turn ignition switch "OFF" and wait at least 5 seconds before conducting the next test.

TESTING CONDITION:
Before performing the following procedure, confirm that battery voltage is between 10.5V and 16V at idle.

1) Turn ignition switch "ON" and select "DATA MONITOR" mode with CONSULT.
2) Start engine and run it for at least 6 seconds at idle speed.

OR

1) Start engine and run it for at least 6 seconds at idle speed.
2) Turn ignition switch "OFF" and wait at least 5 seconds.
3) Start engine and run it for at least 5 seconds at idle speed.
4) Select "MODE 3" with GST.

OR

1) Start engine and run it for at least 5 seconds at idle speed.
2) Turn ignition switch "OFF", wait at least 5 seconds and then turn "ON".
3) Perform "Diagnostic Test Mode II (Self-diagnostic results)" with ECM.

- **When using GST, "DIAGNOSTIC TROUBLE CODE CONFIRMATION PROCEDURE" should be performed twice as much as when using CONSULT or ECM (Diagnostic Test Mode II) because GST cannot display MODE 7 (1st trip DTC) concerning this diagnosis. Therefore, using CONSULT or ECM (Diagnostic Test Mode II) is recommended.**

Rear Heated Oxygen Sensor Heater (Cont'd)

Simpo PDF Merge and Split Unregistered Version - http://www.simpopdf.com

EC-RR02/H-01

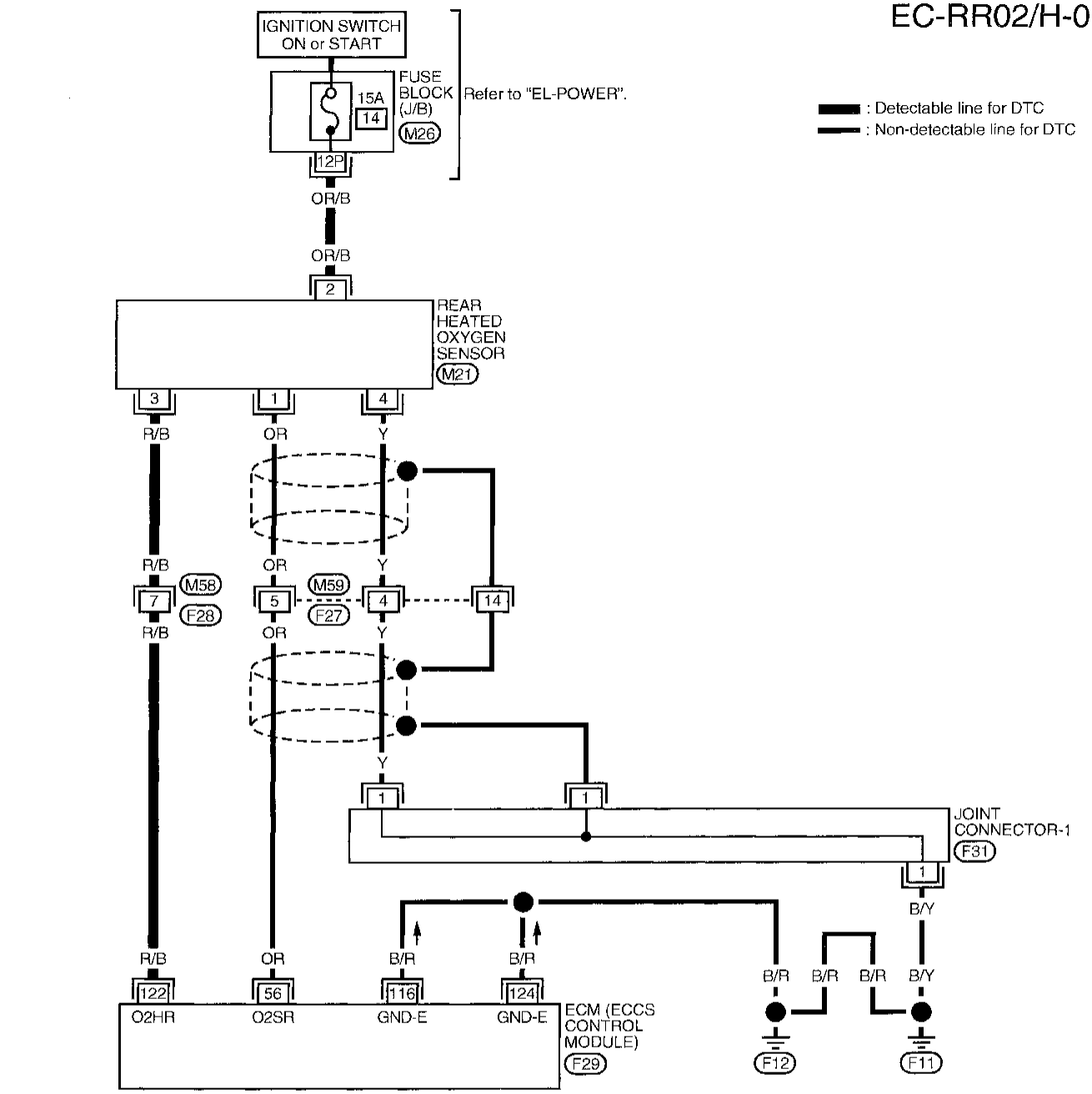

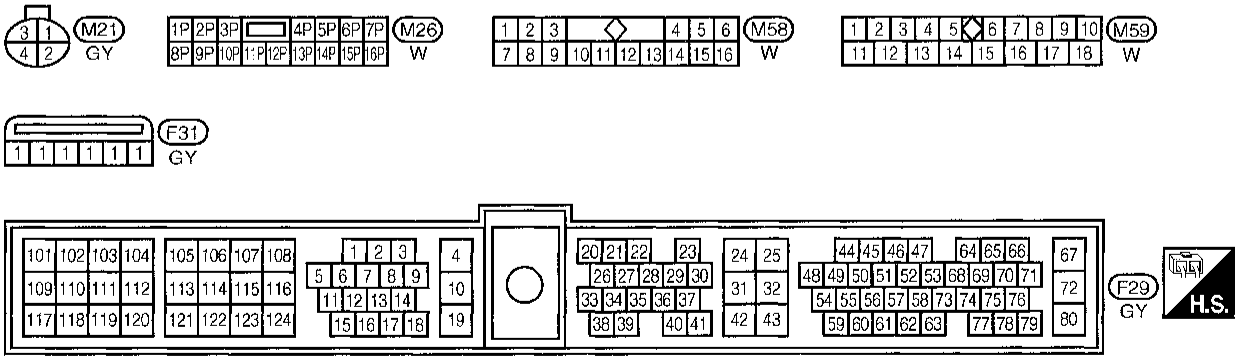

AEC527A

Rear Heated Oxygen Sensor Heater (Cont'd)

Simpo PDF Merge and Split Unregistered Version - http://www.simpopdf.com

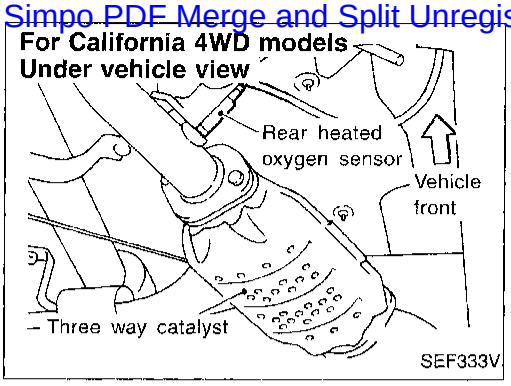

DIAGNOSTIC PROCEDURE

INSPECTION START

A

CHECK POWER SUPPLY.
1. Turn ignition switch "OFF".
2. Disconnect rear heated oxygen sensor harness connector.
3. Turn ignition switch "ON".
4. Check voltage between terminal ② and ground.
Voltage: Battery voltage

NG → Check the following.
- 15A fuse
- Harness for open or short between rear heated oxygen sensor and 15A fuse

If NG, repair harness or connectors.

OK ↓

B

CHECK GROUND CIRCUIT.
1. Turn ignition switch "OFF".
2. Disconnect ECM harness connector.
3. Check harness continuity between terminal ③ and ECM terminal (122).
Continuity should exist.
If OK, check harness for short to ground and short to power.

NG → Check the following.
- Harness connectors (M58), (F28)
- Harness for open or short between rear heated oxygen sensor and ECM

If NG, repair open circuit, short to ground or short to power in harness or connectors.

OK ↓

CHECK COMPONENT
(Rear heated oxygen sensor heater).
Refer to "COMPONENT INSPECTION" below.

NG → Replace rear heated oxygen sensor.

OK ↓

Perform "TROUBLE DIAGNOSIS FOR INTERMITTENT INCIDENT", EC-93.

INSPECTION END

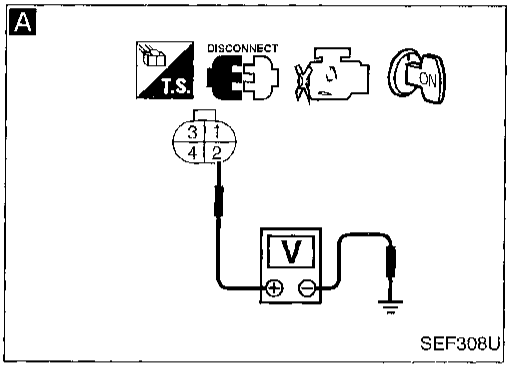

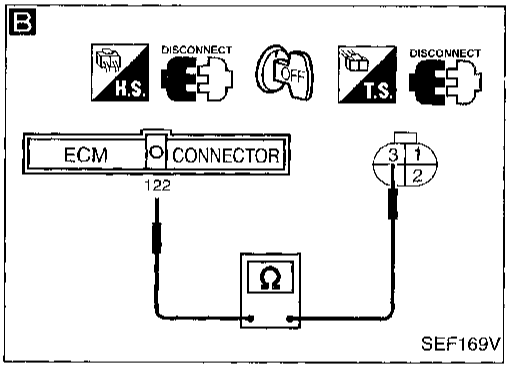

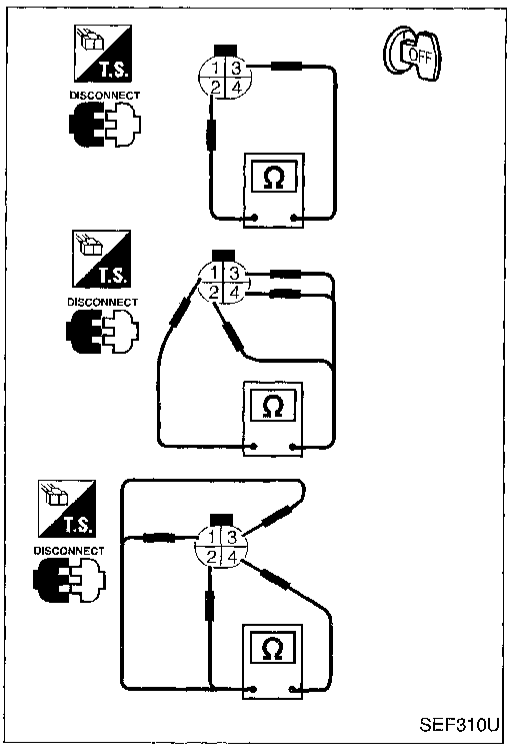

COMPONENT INSPECTION

Rear heated oxygen sensor heater

Check the following.

1. Check resistance between terminals ② and ③.
Resistance: 2.3 - 4.3Ω at 25°C (77°F)
2. Check continuity.

Terminal No.	Continuity
① and ②, ③, ④	No
④ and ①, ②, ③	

If NG, replace the rear heated oxygen sensor.

CAUTION:
Discard any heated oxygen sensor which has been dropped from a height of more than 0.5 m (19.7 in) onto a hard surface such as a concrete floor; use a new one.

Simpo PDF Merge and Split Unregistered Version - http://www.simpopdf.com

Fuel Injection System Function (Lean side)

ON BOARD DIAGNOSIS LOGIC

With the Air/Fuel Mixture Ratio Self-Learning Control, the actual mixture ratio can be brought closely to the theoretical mixture ratio based on the mixture ratio feedback signal from the front heated oxygen sensor. The ECM calculates the necessary compensation to correct the offset between the actual and the theoretical ratios. In case the amount of the compensation value is extremely large (The actual mixture ratio is too lean.), the ECM judges the condition as the fuel injection system malfunction and light up the MIL (2 trip detection logic).

Front heated oxygen sensor → Density of oxygen in exhaust gas (Mixture ratio feedback signal) → ECM → Injectors

Diagnostic Trouble Code No.	Malfunction is detected when ...	Check Items (Possible Cause)
P0171 0115	● Fuel injection system does not operate properly. ● The amount of mixture ratio compensation is too large. (The mixture ratio is too lean.)	● Intake air leaks ● Front heated oxygen sensor ● Injectors ● Exhaust gas leaks ● Incorrect fuel pressure ● Lack of fuel ● Mass air flow sensor

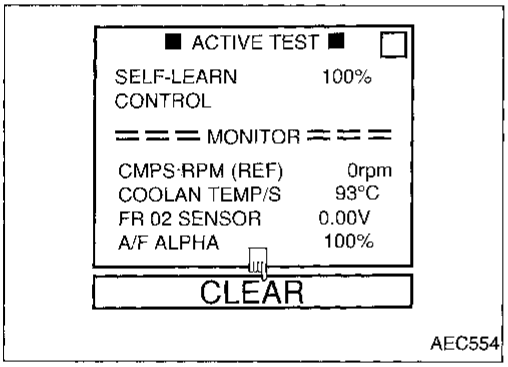

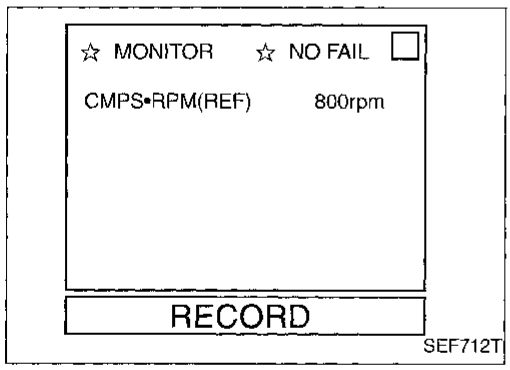

DIAGNOSTIC TROUBLE CODE CONFIRMATION PROCEDURE

NOTE:
If "DIAGNOSTIC TROUBLE CODE CONFIRMATION PROCEDURE" has been previously conducted, always turn ignition switch "OFF" and wait at least 5 seconds before conducting the next test.

1) Start engine and warm it up to normal operating temperature.
2) Turn ignition switch "OFF" and wait at least 5 seconds.
3) Turn ignition switch "ON" and select "SELF-LEARN CONTROL" in "ACTIVE TEST" mode with CONSULT.
4) Clear the self-learning control coefficient by touching "CLEAR".
5) Select "DATA MONITOR" mode with CONSULT.
6) Start engine again and let it idle for at least 10 minutes. The 1st trip DTC P0171 should be detected at this stage, if a malfunction exists.
7) If it is difficult to start engine at step 6, the fuel injection system has a malfunction.
8) Crank engine while depressing accelerator pedal. If engine starts, go to "DIAGNOSTIC PROCEDURE", EC-211. If engine does not start, visually check for exhaust and intake air leak.

OR

Fuel Injection System Function (Lean side) (Cont'd)

Simpo PDF Merge and Split Unregistered Version - http://www.simpopdf.com

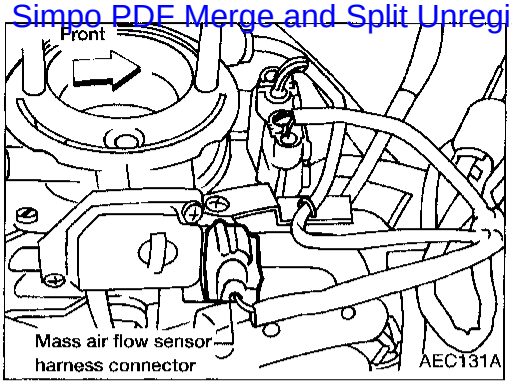

1) Start engine and warm it up to normal operating temperature.
2) Turn ignition switch "OFF" and wait at least 5 seconds.
3) Disconnect mass air flow sensor harness connector. Then restart and run engine for at least 3 seconds at idle speed.
4) Stop engine and reconnect mass air flow sensor harness connector.
5) Select "MODE 7" with GST. Make sure 1st trip DTC P0100 is detected.
6) Select "MODE 4" with GST and erase the 1st trip DTC P0100.
7) Start engine again and run it for at least 10 minutes at idle speed.
8) Select "MODE 7" with GST. The 1st trip DTC P0171 should be detected at this stage, if a malfunction exists.
9) If it is difficult to start engine at step 8, the fuel injection system has a malfunction.
10) Crank engine while depressing accelerator pedal. If engine starts, go to "DIAGNOSTIC PROCEDURE", EC-211. If engine does not start, visually check for exhaust and intake air leak.

OR

1) Start engine and warm it up to normal operating temperature.
2) Turn ignition switch "OFF" and wait at least 5 seconds.
3) Disconnect mass air flow sensor harness connector. Then restart and run engine for at least 3 seconds at idle speed.
4) Stop engine and reconnect mass air flow sensor harness connector.
5) Turn ignition switch "ON".
6) Perform Diagnostic Test Mode II (Self-diagnostic results) with ECM. Make sure 1st trip DTC 0102 is detected.
7) Erase the 1st trip DTC 0102 by changing from Diagnostic Test Mode II to Diagnostic Test Mode I.
8) Perform Diagnostic Test Mode II (Self-diagnostic results) with ECM. Make sure DTC 0505 is detected.
9) Start engine again and run it for at least 10 minutes at idle speed.
   The 1st trip DTC 0115 should be detected at this stage, if a malfunction exists.
10) If it is difficult to start engine at step 9, the fuel injection system also has a malfunction.
11) Crank engine while depressing accelerator pedal. If engine starts, go to "DIAGNOSTIC PROCEDURE", EC-211. If engine does not start, visually check for exhaust and intake air leak.

Fuel Injection System Function (Lean side) (Cont'd)

Simpo PDF Merge and Split Unregistered Version - http://www.simpopdf.com

EC-FUEL-01

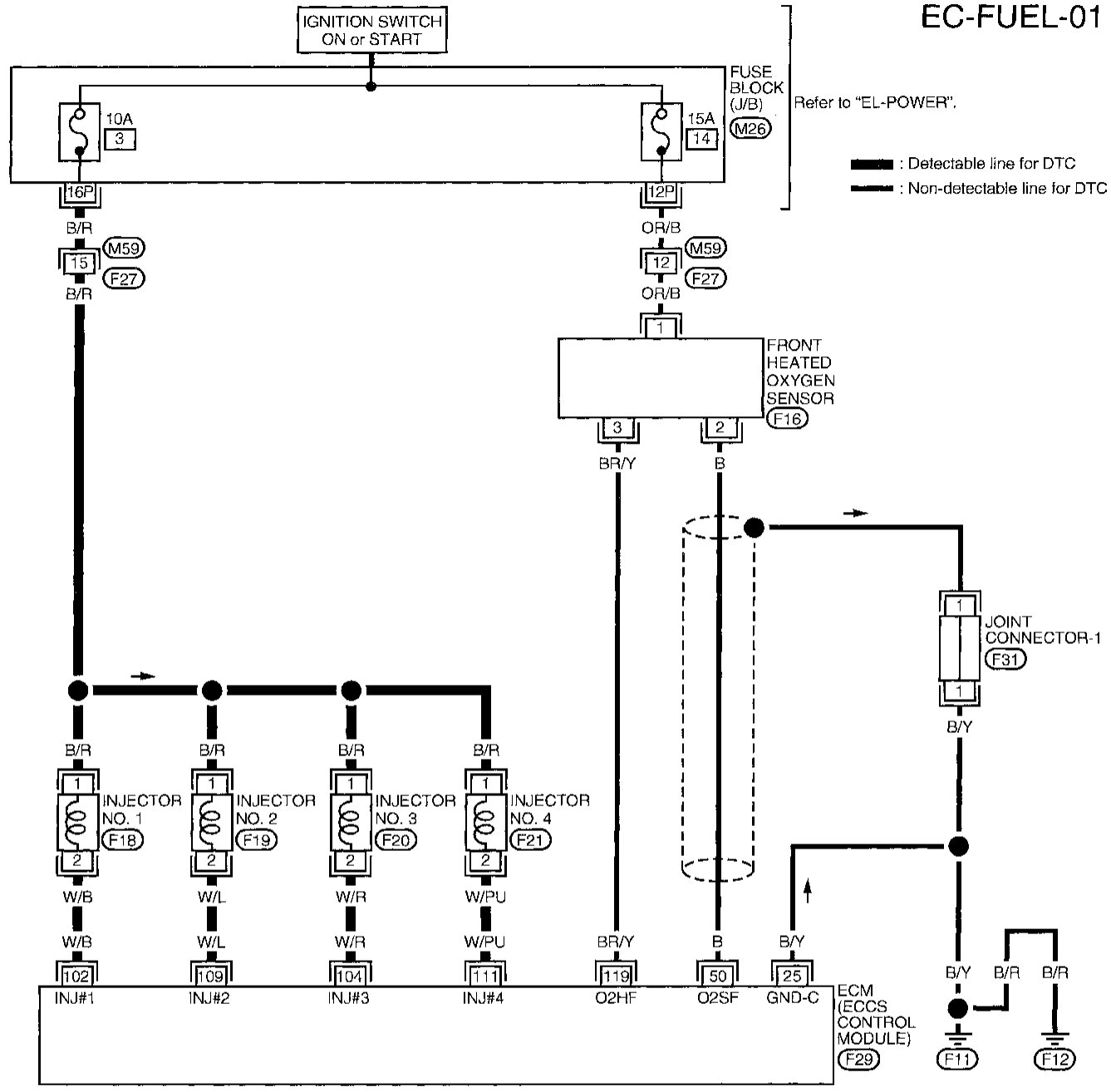

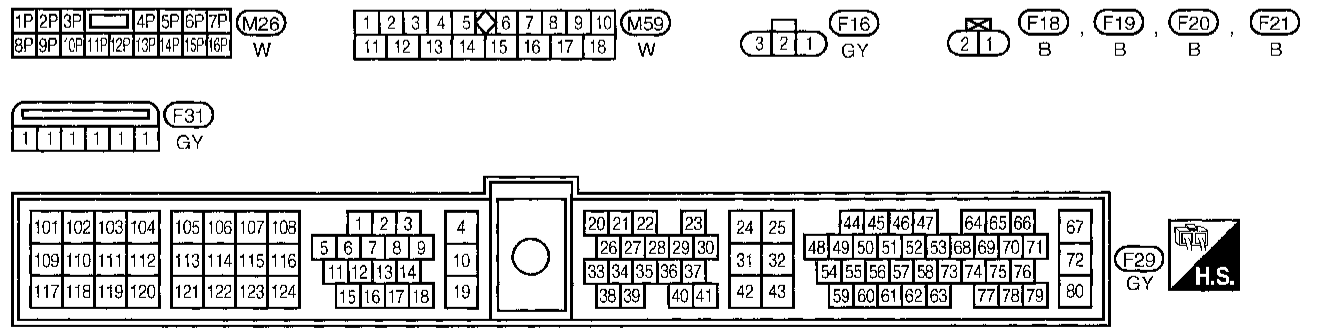

AEC528A

Fuel Injection System Function (Lean side) (Cont'd)

Simpo PDF Merge and Split Unregistered Version - http://www.simpopdf.com

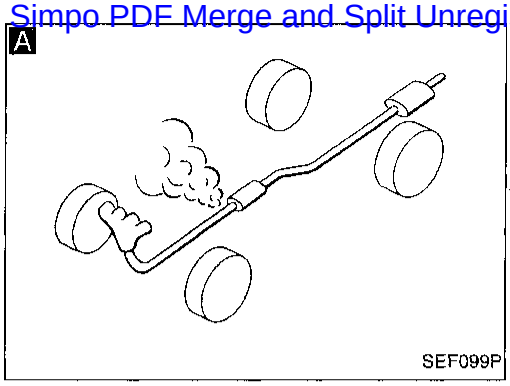

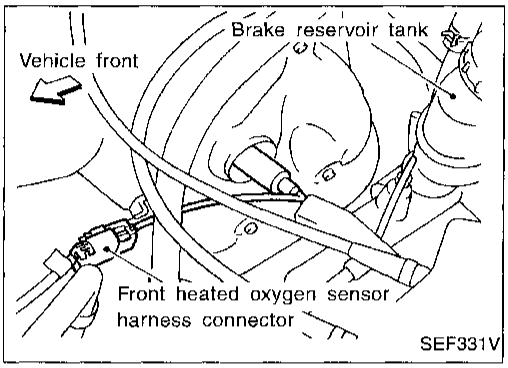

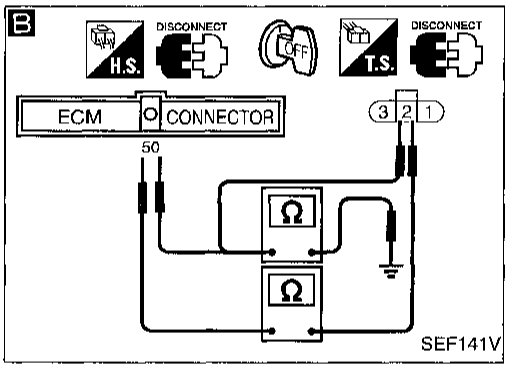

DIAGNOSTIC PROCEDURE

INSPECTION START

A

CHECK EXHAUST AIR LEAK.
Start engine and run it at idle. Listen for an exhaust air leak before three way catalyst.
- NG → Repair or replace.
- OK ↓

CHECK FOR INTAKE AIR LEAK.
Start engine and run it at idle. Listen for an intake air leak between the mass air flow sensor and the intake manifold.
- NG → Repair or replace.
- OK ↓

B

CHECK FRONT HEATED OXYGEN SENSOR.
1. Turn ignition switch "OFF".
2. Disconnect front heated oxygen sensor harness connector and ECM harness connector.
3. Check harness continuity between ECM terminal (50) and terminal (2).
   Continuity should exist.
4. Check harness continuity between ECM terminal (50) (or terminal (2)) and ground.
   Continuity should not exist.
   If OK, check harness for short to ground and short to power.

- NG → Repair open circuit, short to ground or short to power in harness or connectors.
- OK ↓

CHECK FUEL PRESSURE.
1. Release fuel pressure to zero.
   Refer to EC-26.
2. Install fuel pressure gauge and check fuel pressure.
   At idling:
   When fuel pressure regulator valve vacuum hose is connected.
   235 kPa
   (2.4 kg/cm², 34 psi)
   When fuel pressure regulator valve vacuum hose is disconnected.
   294 kPa
   (3.0 kg/cm², 43 psi)

- NG → Check the following.
  - Fuel pump and circuit Refer to EC-410.
  - Fuel pressure regulator Refer to EC-26.
  - Fuel lines Refer to "ENGINE MAINTENANCE" in MA section.
  - Fuel filter for clogging

  If NG, repair or replace.
- OK ↓

CHECK MASS AIR FLOW SENSOR.
1. Start engine and warm it up to normal operating temperature.
2. Check "MASS AIR FLOW" in "DATA MONITOR" mode with CONSULT.
   0.9 - 5.8 g·m/sec: at idling
   7.5 - 13.2 g·m/sec: at 2,500 rpm

OR

2. Check "MASS AIR FLOW" in MODE 1 with GST.
   0.9 - 5.8 g·m/sec: at idling
   7.5 - 13.2 g·m/sec: at 2,500 rpm

OR

2. Check voltage between ECM terminal (47) and ground.
   0.9 - 1.8V: at idling
   1.9 - 2.3V: at 2,500 rpm

- NG → Check connectors for rusted terminals or loose connections in the mass air flow sensor circuit or engine grounds. Refer to EC-99.
- OK ↓

(A)
(Go to next page.)

Fuel Injection System Function (Lean side) (Cont'd)

Simpo PDF Merge and Split Unregistered Version - http://www.simpopdf.com

C

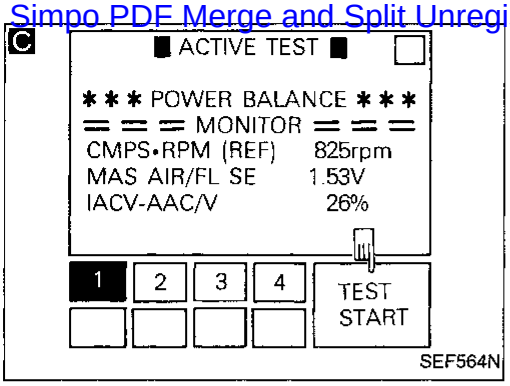

SEF564N

C

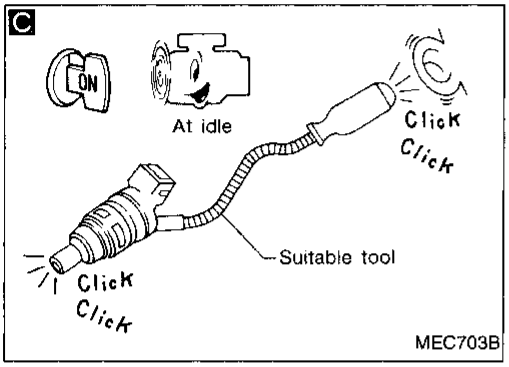

MEC703B

D

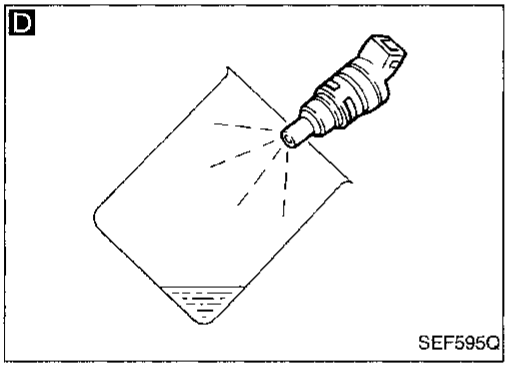

SEF595Q

Ⓐ

C

CHECK FUNCTION OF INJECTORS.
1. Install all parts removed.
2. Start engine.
3. Perform "POWER BALANCE" in "ACTIVE TEST" mode with CONSULT.
4. Make sure that each circuit produces a momentary engine speed drop.

OR

3. Listen to each injector operating sound.
Clicking noise should be heard.

NG → Perform TROUBLE DIAGNOSIS FOR NON-DETECTABLE ITEMS, "Injectors", EC-404. Repair harness or connectors.

OK ↓

Confirm that the engine is cooled down and there are no fire hazards near the vehicle.

1. Turn ignition switch "OFF".
2. Remove injector with fuel tube assembly.
Refer to EC-27.
Keep fuel hose and all injectors connected to injector gallery.
The injector harness connectors should remain connected.

D

1. Disconnect all ignition coil harness connectors.
2. Place pans or saucers under each cylinder.
3. Crank engine for about 3 seconds.
Make sure that fuel sprays out from injectors.
Fuel should be sprayed evenly for each cylinder.

NG → Replace injectors from which fuel does not spray out. Refer to EC-27. Always replace O-ring with new one.

OK ↓

Perform "TROUBLE DIAGNOSIS FOR INTERMITTENT INCIDENT", EC-93.

INSPECTION END

Simpo PDF Merge and Split Unregistered Version - http://www.simpopdf.com

Fuel Injection System Function (Rich side)

ON BOARD DIAGNOSIS LOGIC

With the Air/Fuel Mixture Ratio Self-Learning Control, the actual mixture ratio can be brought closely to the theoretical mixture ratio based on the mixture ratio feedback signal from the front heated oxygen sensor. The ECM calculates the necessary compensation to correct the offset between the actual and the theoretical ratios. In case the amount of the compensation value is extremely large (the actual mixture ratio is too rich.), the ECM judges the condition as the fuel injection system malfunction and lights up the MIL (2 trip detection logic).

Front heated oxygen sensor → Density of oxygen in exhaust gas (Mixture ratio feedback signal) → ECM → Injectors

Diagnostic Trouble Code No.	Malfunction is detected when ...	Check Items (Possible Cause)
P0172 0114	● Fuel injection system does not operate properly. ● The amount of mixture ratio compensation is too large. (The mixture ratio is too rich.)	● Front heated oxygen sensor ● Injectors ● Exhaust gas leaks ● Incorrect fuel pressure ● Mass air flow sensor

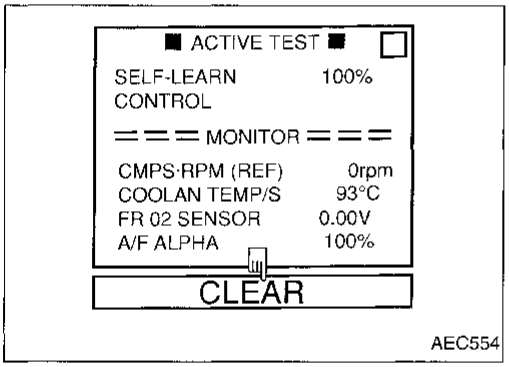

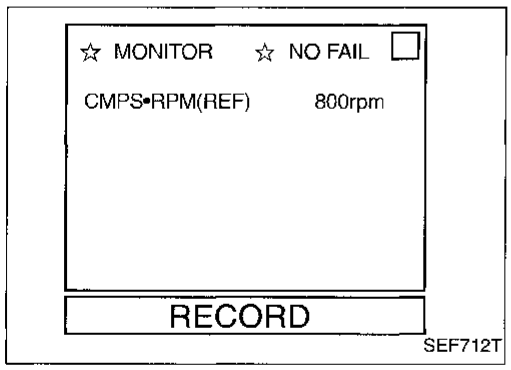

DIAGNOSTIC TROUBLE CODE CONFIRMATION PROCEDURE

NOTE:
If "DIAGNOSTIC TROUBLE CODE CONFIRMATION PROCEDURE" has been previously conducted, always turn ignition switch "OFF" and wait at least 5 seconds before conducting the next test.

1) Start engine and warm it up to normal operating temperature.
2) Turn ignition switch "OFF" and wait at least 5 seconds.
3) Turn ignition switch "ON" and select "SELF-LEARN CONTROL" in "ACTIVE TEST" mode with CONSULT.
4) Clear the self-learning control coefficient by touching "CLEAR".
5) Select "DATA MONITOR" mode with CONSULT.
6) Start engine again and let it idle for at least 10 minutes. The 1st trip DTC P0172 should be detected at this stage, if a malfunction exists.
7) If it is difficult to start engine at step 6, the fuel injection system has a malfunction.
8) Crank engine while depressing accelerator pedal. If engine starts, go to "DIAGNOSTIC PROCEDURE", EC-216. If engine does not start, remove ignition plugs and check for fouling, etc.

OR

Fuel Injection System Function (Rich side) (Cont'd)

Simpo PDF Merge and Split Unregistered Version - http://www.simpopdf.com

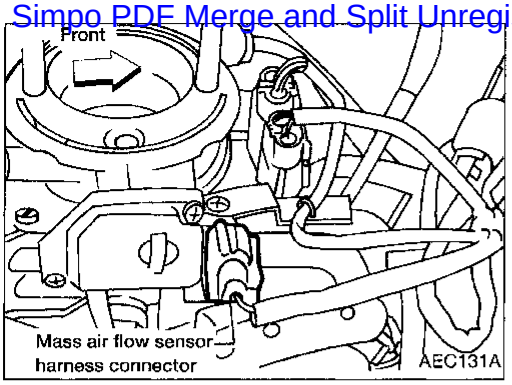

1) Start engine and warm it up to normal operating temperature.
2) Turn ignition switch "OFF" and wait at least 5 seconds.
3) Disconnect mass air flow sensor harness connector. Then restart and run engine for at least 3 seconds at idle speed.
4) Stop engine and reconnect mass air flow sensor harness connector.
5) Select "MODE 7" with GST. Make sure 1st trip DTC P0100 is detected.
6) Select "MODE 4" with GST and erase the 1st trip DTC P0100.
7) Start engine again and run it for at least 10 minutes at idle speed.
8) Select "MODE 7" with GST. The 1st trip DTC P0171 should be detected at this stage, if a malfunction exists.
9) If it is difficult to start engine at step 8, the fuel injection system has a malfunction.
10) Crank engine while depressing accelerator pedal.
If engine starts, go to "DIAGNOSTIC PROCEDURE", EC-211. If engine does not start, remove ignition plugs and check for fouling, etc.

OR

1) Start engine and warm it up to normal operating temperature.
2) Turn ignition switch "OFF" and wait at least 5 seconds.
3) Disconnect mass air flow sensor harness connector. Then restart engine and run it for at least 3 seconds at idle speed.
4) Stop engine and reconnect mass air flow sensor harness connector.
5) Turn ignition switch "ON".
6) Perform Diagnostic Test Mode II (Self-diagnostic results) with ECM. Make sure 1st trip DTC 0102 is detected.
7) Erase the 1st trip DTC 0102 by changing from Diagnostic Test Mode II to Diagnostic Test Mode I.
8) Perform Diagnostic Test Mode II (Self-diagnostic results) with ECM. Make sure DTC 0505 is detected.
9) Start engine again and run it for at least 10 minutes at idle speed.
The 1st trip DTC 0114 should be detected at this stage, if a malfunction exists.
10) If it is difficult to start engine at step 9, the fuel injection system also has a malfunction.
11) Crank engine while depressing accelerator pedal.
If engine starts, go to "DIAGNOSTIC PROCEDURE", EC-211. If engine does not start, remove ignition plugs and check for fouling, etc.

Fuel Injection System Function (Rich side) (Cont'd)

Simpo PDF Merge and Split Unregistered Version - http://www.simpopdf.com

EC-FUEL-01

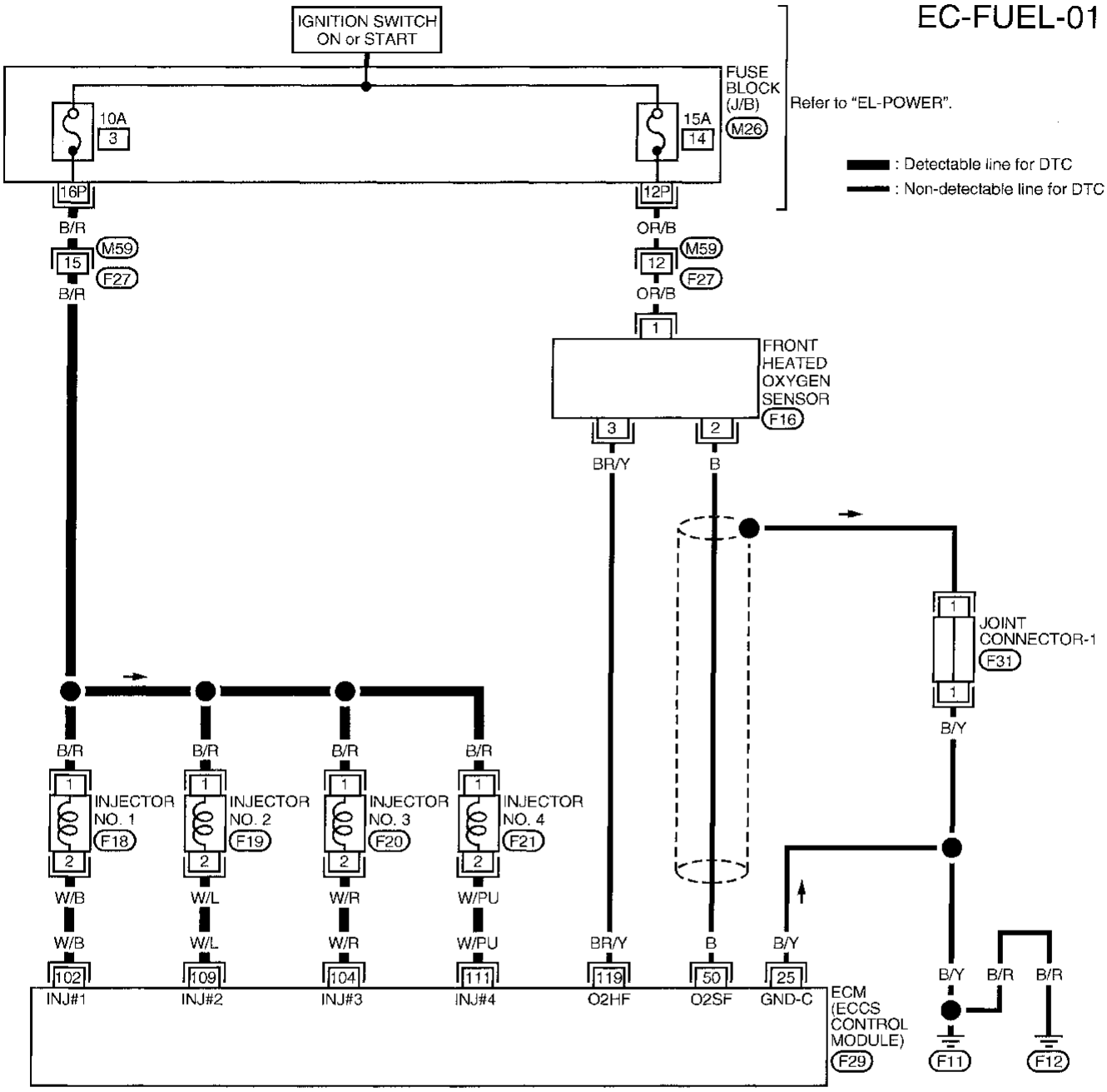

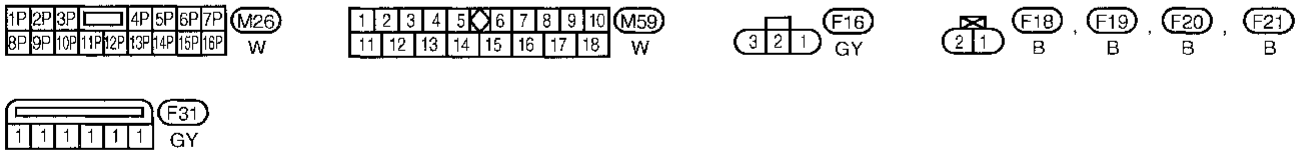

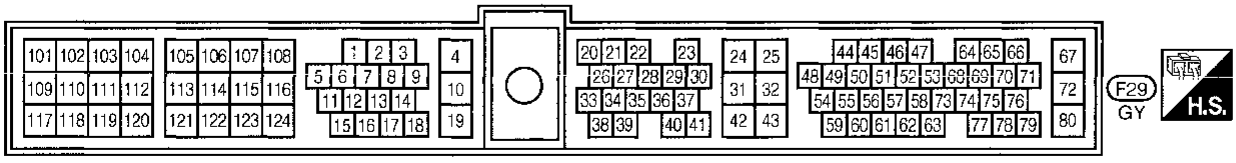

AEC528A

Fuel Injection System Function (Rich side) (Cont'd)

Simpo PDF Merge and Split Unregistered Version - http://www.simpopdf.com

A

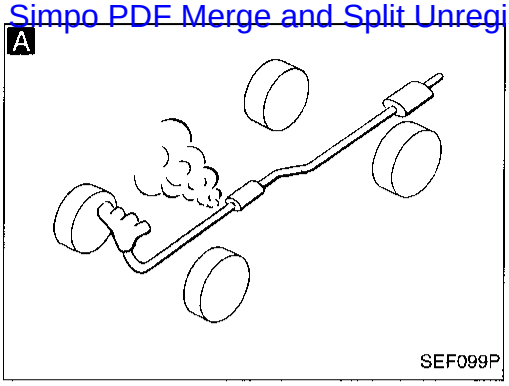

SEF099P

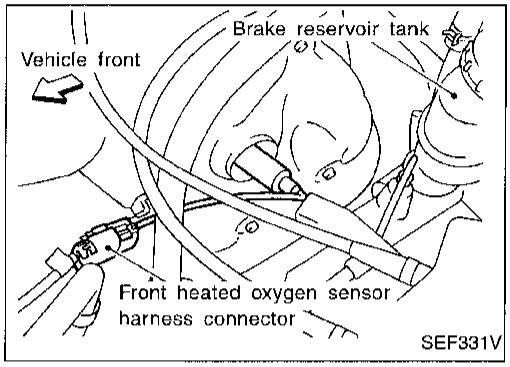

SEF331V

B

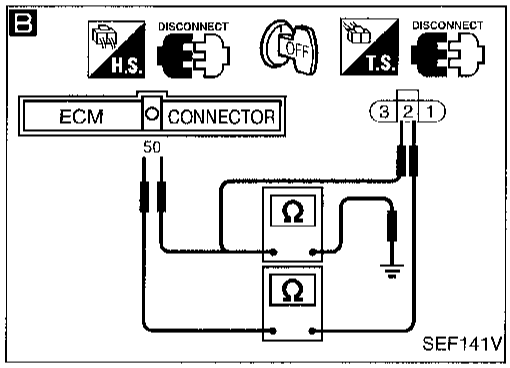

SEF141V

DIAGNOSTIC PROCEDURE

INSPECTION START

A

CHECK FOR EXHAUST AIR LEAK.
Start engine and run it at idle. Listen for an exhaust air leak before the warm-up three way catalyst (California model), the three way catalyst (Non-California model).

NG → Repair or replace.

OK ↓

B

CHECK FRONT HEATED OXYGEN SENSOR.
1. Turn ignition switch "OFF".
2. Disconnect front heated oxygen sensor RH harness connector and ECM harness connector.
3. Check harness continuity between ECM terminal (50) and terminal (2).
   Continuity should exist.
4. Check harness continuity between ECM terminal (50) (or terminal (2)) and ground.
   Continuity should not exist.
   If OK, check harness for short to ground and short to power.

NG → Repair harness or connectors.

OK ↓

CHECK FUEL PRESSURE.
1. Release fuel pressure to zero.
   Refer to EC-26.
2. Install fuel pressure gauge and check fuel pressure.
   At idling:
   When fuel pressure regulator valve vacuum hose is connected.
   Approximately 235 kPa (2.4 kg/cm², 34 psi)
   When fuel pressure regulator valve vacuum hose is disconnected.
   Approximately 294 kPa (3.0 kg/cm², 43 psi)

NG → Check the following.
- Fuel pump and circuit
  Refer to EC-410.
- Fuel pressure regulator
  Refer to EC-26.

If NG, repair or replace.

OK ↓

CHECK MASS AIR FLOW SENSOR.
1. Start engine and warm it up to normal operating temperature.

2. Check "MASS AIR FLOW" in "DATA MONITOR" mode with CONSULT.
   0.9 - 5.8 g·m/sec: at idling
   7.5 - 13.2 g·m/sec: at 2,500 rpm

OR

2. Check "MASS AIR FLOW" in MODE 1 with GST.
   0.9 - 5.8 g·m/sec: at idling
   7.5 - 13.2 g·m/sec: at 2,500 rpm

OR

2. Check voltage between ECM terminal (47) and ground.
   0.9 - 1.8V: at idling
   1.9 - 2.3V: at 2,500 rpm

NG → Check connectors for rusted terminals or loose connections in the mass air flow sensor circuit or engine grounds.
Refer to EC-99.

OK ↓

(A)

(Go to next page.)

Fuel Injection System Function (Rich side) (Cont'd)

Simpo PDF Merge and Split Unregistered Version - http://www.simpopdf.com

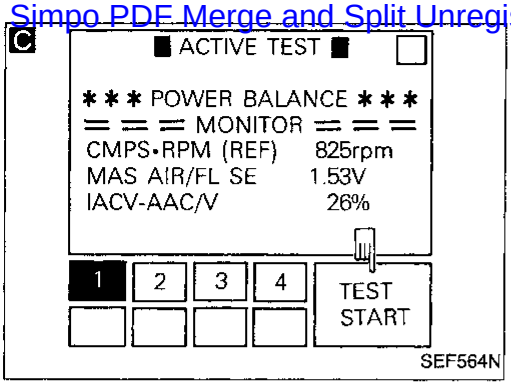

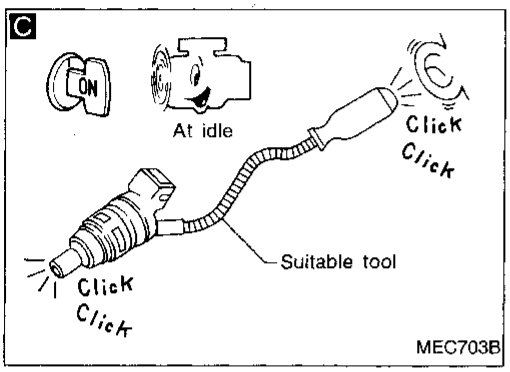

Ⓐ

C

CHECK FUNCTION OF INJECTORS.
1. Install all parts removed.
2. Start engine.
3. Perform "POWER BALANCE" in "ACTIVE TEST" mode with CONSULT.
4. Make sure that each circuit produces a momentary engine speed drop.

OR

3. Listen to each injector operating sound.
Clicking noise should be heard.

NG → Perform TROUBLE DIAGNOSIS FOR NON-DETECTABLE ITEMS, "Injectors", EC-404. Repair harness or connectors.

OK ↓

Remove injector assembly.
Refer to EC-27.
Keep fuel hose and all injectors connected to injector gallery.

↓

Confirm that the engine is cooled down and there are no fire hazards near the vehicle.

↓

1. Disconnect all injector harness connectors.
2. Disconnect all ignition coil harness connectors.
3. Crank engine for about 3 seconds. Make sure fuel does not drip from injector.

Drips → Replace any injectors from which fuel is dripping.

Does not drip. ↓

Perform "TROUBLE DIAGNOSIS FOR INTERMITTENT INCIDENT", EC-93.

↓

INSPECTION END

Simpo PDF Merge and Split Unregistered Version - http://www.simpopdf.com

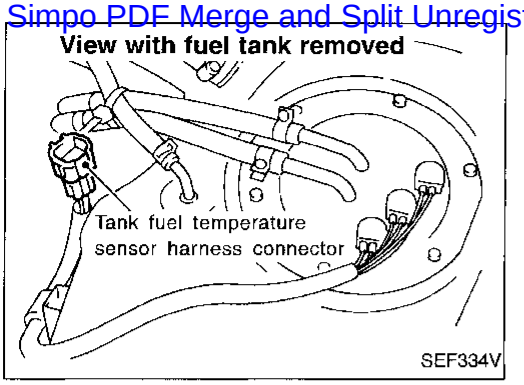

Tank Fuel Temperature Sensor

COMPONENT DESCRIPTION

The tank fuel temperature sensor is used to detect the fuel temperature inside the fuel tank. The sensor modifies a voltage signal from the ECM. The modified signal returns to the ECM as the fuel temperature input. The sensor uses a thermistor which is sensitive to the change in temperature. The electrical resistance of the thermistor decreases as temperature increases.

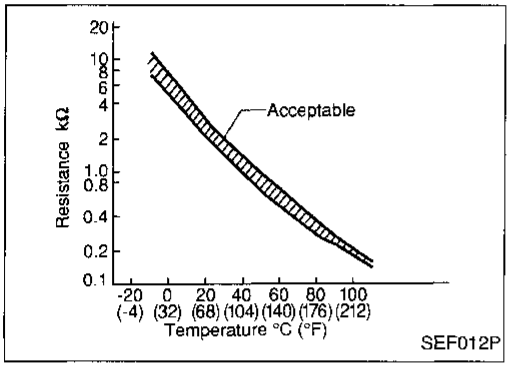

<Reference data>

Fluid temperature °C (°F)	Voltage* V	Resistance kΩ
20 (68)	3.5	2.3 - 2.7
50 (122)	2.2	0.79 - 0.90

*: These data are reference values and are measured between ECM terminal (60) (Tank fuel temperature sensor) and ECM terminal (32) (ECM ground).

ON BOARD DIAGNOSIS LOGIC

Diagnostic Trouble Code No.	Malfunction is detected when ...	Check Items (Possible Causes)
P0180 0402	● An excessively high or low voltage is sent to ECM. ● Rationally incorrect voltage is sent to ECM, compared with the voltage signals from engine coolant temperature sensor and intake air temperature sensor.	● Harness or connectors (The sensor circuit is open or shorted.) ● Tank fuel temperature sensor

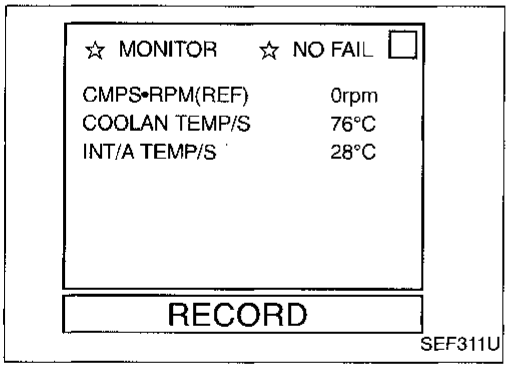

DIAGNOSTIC TROUBLE CODE CONFIRMATION PROCEDURE

NOTE:
If "DIAGNOSTIC TROUBLE CODE CONFIRMATION PROCEDURE" has been previously conducted, always turn ignition switch "OFF" and wait at least 5 seconds before conducting the next test.

1) Turn ignition switch "ON".
2) Select "DATA MONITOR" mode with CONSULT.
3) Wait at least 10 seconds.
   If the result is NG, go to "DIAGNOSTIC PROCEDURE", EC-221.
   If the result is OK, go to following step.

NOTE: If "COOLAN TEMP/S" is already less than 90°C (194°F) before step 4), the result will be OK. If "COOLAN TEMP/S" is above 90°C (194°F), go to the following step.

4) Cool engine down until "COOLAN TEMP/S" is less than 90°C (194°F).
5) Wait at least 10 seconds.

Simpo PDF Merge and Split Unregistered Version - http://www.simpopdf.com

OR

1) Turn ignition switch "ON" and wait at least 10 seconds.
2) Select "MODE 7" with GST.
   If the result is NG, go to "DIAGNOSTIC PROCEDURE", EC-221.
   If the result is OK, go to following step.
3) Select "MODE 1" with GST and check for the engine coolant temperature.
4) Cool engine down until the engine coolant temperature is less than 90°C (194°F). If the temperature is already less than 90°C (194°F) before step 4), the result will be OK.
5) Wait at least 10 seconds.
6) Select "MODE 7" with GST.

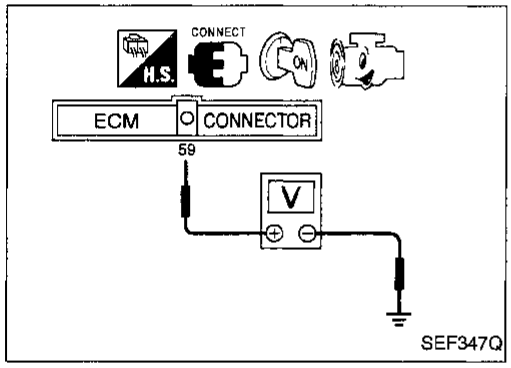

OR

1) Turn ignition switch "ON" and wait at least 10 seconds.
2) Turn ignition switch "OFF", wait at least 5 seconds and then turn "ON".
3) Perform "Diagnostic Test Mode II (Self-diagnostic results)" with ECM.
   If the result is NG, go to "DIAGNOSTIC PROCEDURE", EC-221.
   If the result is OK, go to following step.
4) Cool engine down until the voltage between ECM terminal ⑤⑨ (Engine coolant temperature sensor) and ground becomes more than 1.0V.
   If the voltage is already more than 1.0V before step 4), the result will be OK.
5) Wait at least 10 seconds.
6) Turn ignition switch "OFF", wait at least 5 seconds and then turn "ON".
7) Perform "Diagnostic Test Mode II (Self-diagnostic results)" with ECM.

Simpo PDF Merge and Split Unregistered Version - http://www.simpopdf.com

EC-TFTS-01

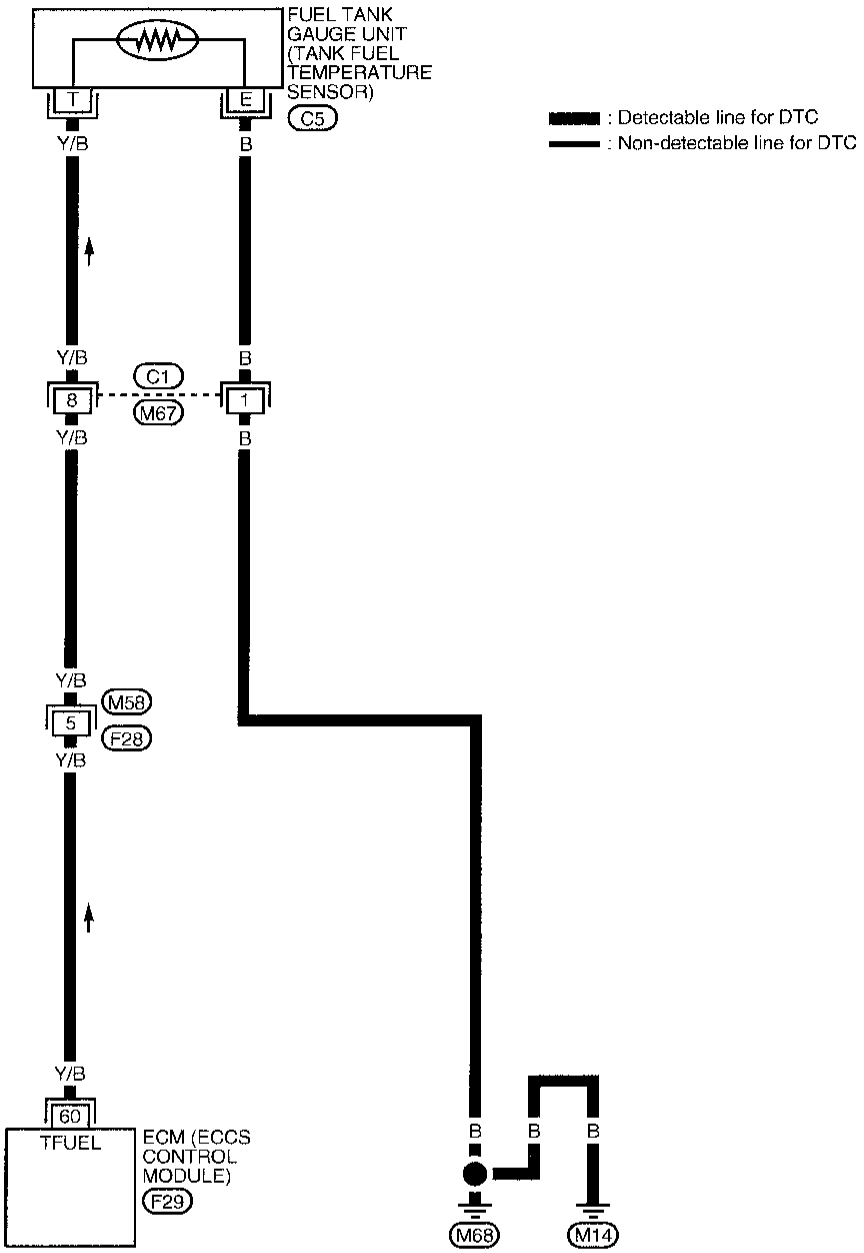

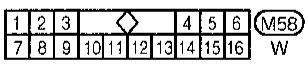

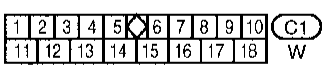



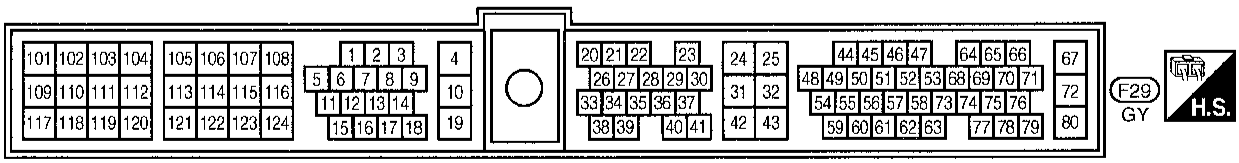

AEC530A

Tank Fuel Temperature Sensor (Cont'd)

Simpo PDF Merge and Split Unregistered Version - http://www.simpopdf.com

DIAGNOSTIC PROCEDURE

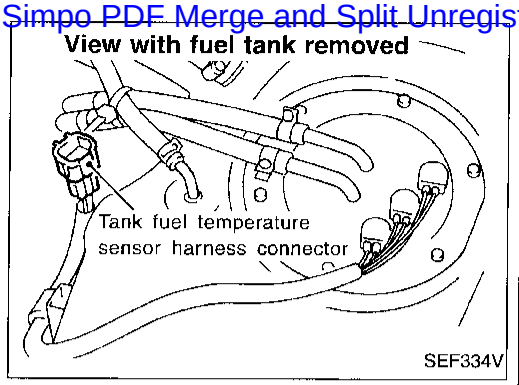

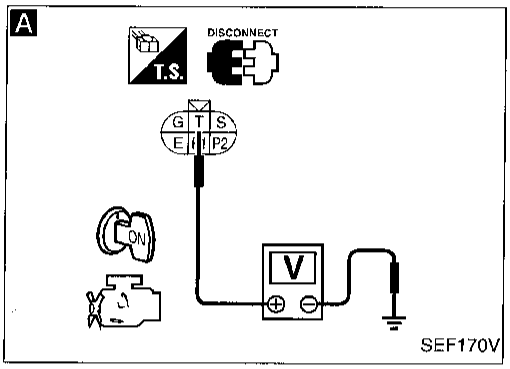

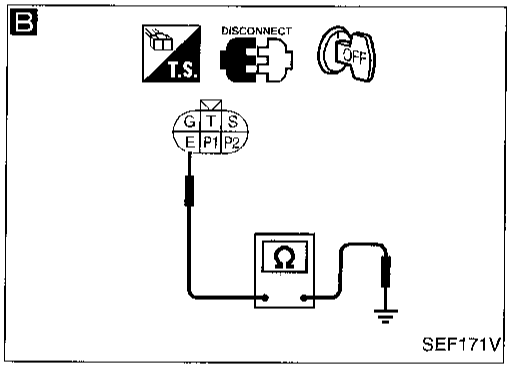

INSPECTION START

A

CHECK POWER SUPPLY.
1. Turn ignition switch "OFF".
2. Disconnect tank fuel temperature sensor harness connector.
3. Turn ignition switch "ON".
4. Check voltage between terminal (T) and ground with CONSULT or tester.
Voltage: Approximately 5V

NG → Check the following.
- Harness connectors (C1), (M67)
- Harness connectors (M58), (F28)
- Harness for open or short between ECM and tank fuel temperature sensor

If NG, repair harness or connector.

OK ↓

B

CHECK GROUND CIRCUIT.
1. Turn ignition switch "OFF".
2. Check harness continuity between terminal (E) and body ground.
Continuity should exist.
If OK, check harness for short to ground and short to power.

NG → Check the following.
- Harness connectors (C1), (M67)
- Harness for open or short between ECM and body ground

If NG, repair open circuit or short to ground or short to power in harness or connectors.

OK ↓

CHECK COMPONENT
(Tank fuel temperature sensor).
Refer to "COMPONENT INSPECTION" below.

NG → Replace tank fuel temperature sensor.

OK ↓

Perform "TROUBLE DIAGNOSIS FOR INTERMITTENT INCIDENT", EC-93.

INSPECTION END

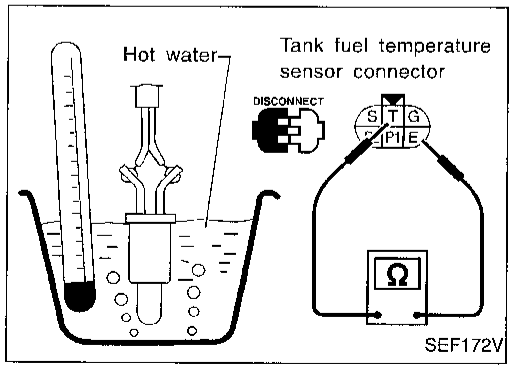

COMPONENT INSPECTION

Tank fuel temperature sensor

Check resistance by heating with hot water as shown in the figure or a heat gun.

Temperature °C (°F)	Resistance kΩ
20 (68)	2.3 - 2.7
50 (122)	0.79 - 0.90

If NG, replace tank fuel temperature sensor.

Simpo PDF Merge and Split Unregistered Version - http://www.simpopdf.com

No. 4 - 1 Cylinder Misfire, Multiple Cylinder Misfire

ON BOARD DIAGNOSIS LOGIC

If a misfire occurs, the engine speed will fluctuate. If the fluctuation is detected by the crankshaft position sensor (OBD), the misfire is diagnosed.
The misfire detection logic consists of the following two conditions.

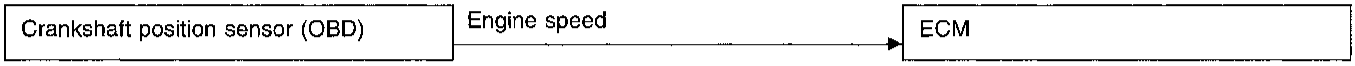

1. One Trip Detection Logic (Three Way Catalyst Damage)
   When a misfire is detected which will overheat and damage the three way catalyst, the malfunction indicator lamp (MIL) will start blinking; even during the first trip. In this condition, ECM monitors the misfire every 200 revolutions.
   If the misfire frequency decreases to a level that will not damage the three way catalyst, the MIL will change from blinking to lighting up.
   (After the first trip detection, the MIL will light up from engine starting. If a misfire is detected that will cause three way catalyst damage, the MIL will start blinking.)
2. Two Trip Detection Logic (Exhaust quality deterioration)
   When a misfire that will not damage the three way catalyst (but will affect exhaust emission) occurs, the malfunction indicator lamp will light up based on two trip detection logic. In this condition, ECM monitors the misfire for every 1,000 revolutions of the engine.

Diagnostic Trouble Code No.	Malfunction is detected when ...	Check Items (Possible Cause)
P0300 (0701)	● Multiple cylinders misfire.	● Improper spark plug ● Insufficient compression ● Incorrect fuel pressure ● EGR valve ● The injector circuit is open or shorted ● Injectors ● Intake air leak ● The ignition secondary circuit is open or shorted ● Lack of fuel ● Drive plate/Flywheel ● Front heated oxygen sensor
P0301 (0608)	● No. 1 cylinder misfires.	
P0302 (0607)	● No. 2 cylinder misfires.	
P0303 (0606)	● No. 3 cylinder misfires.	
P0304 (0605)	● No. 4 cylinder misfires.	

Simpo PDF Merge and Split Unregistered Version - http://www.simpopdf.com

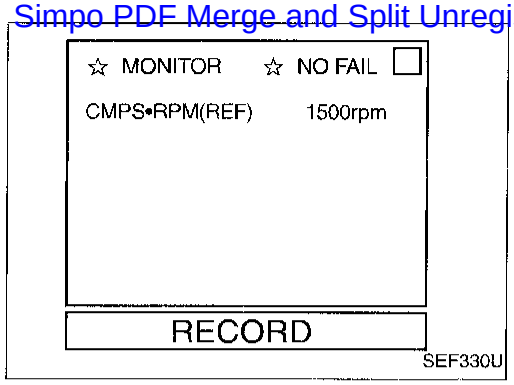

No. 4 - 1 Cylinder Misfire, Multiple Cylinder Misfire (Cont'd)

DIAGNOSTIC TROUBLE CODE CONFIRMATION PROCEDURE (Overall)

CAUTION:
Always drive vehicle at a safe speed.

NOTE:
If "DIAGNOSTIC TROUBLE CODE CONFIRMATION PROCEDURE" has been previously conducted, always turn ignition switch "OFF" and wait at least 5 seconds before conducting the next test.

1) Turn ignition switch "ON", and select "DATA MONITOR" mode with CONSULT.
2) Start engine and warm it up to normal operating temperature.
3) Turn ignition switch "OFF" and wait at least 5 seconds.
4) Start engine again and drive at 1,500 - 3,000 rpm for at least 3 minutes.
   Hold the accelerator pedal as steady as possible.
   Note: Refer to the freeze frame data for the test driving conditions.

OR

1) Start engine and warm it up to normal operating temperature.
2) Turn ignition switch "OFF" and wait at least 5 seconds.
3) Start engine again and drive at 1,500 - 3,000 rpm for at least 3 minutes.
   Hold the accelerator pedal as steady as possible.
   Note: Refer to the freeze frame data for the test driving conditions.
4) Select "MODE 7" with GST.

OR

1) Start engine and warm it up to normal operating temperature.
2) Turn ignition switch "OFF" and wait at least 5 seconds.
3) Start engine again and drive at 1,500 - 3,000 rpm for at least 3 minutes.
   Hold the accelerator pedal as steady as possible.
4) Turn ignition switch "OFF", wait at least 5 seconds, and then turn "ON".
5) Perform "Diagnostic Test Mode II (Self-diagnostic results)" with ECM.

Simpo PDF Merge and Split Unregistered Version - http://www.simpopdf.com

No. 4 - 1 Cylinder Misfire, Multiple Cylinder Misfire (Cont'd)

DIAGNOSTIC PROCEDURE

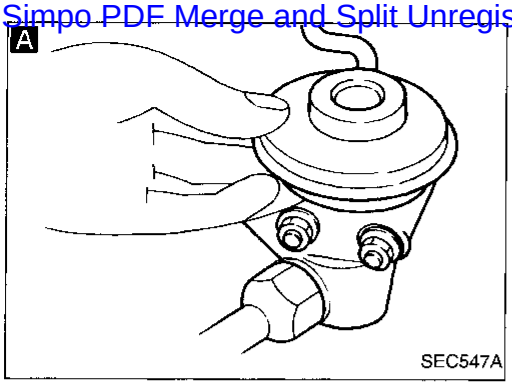

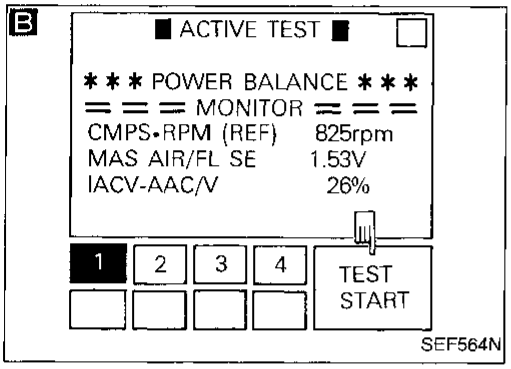

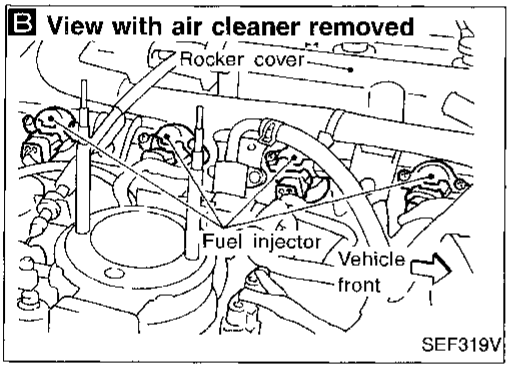

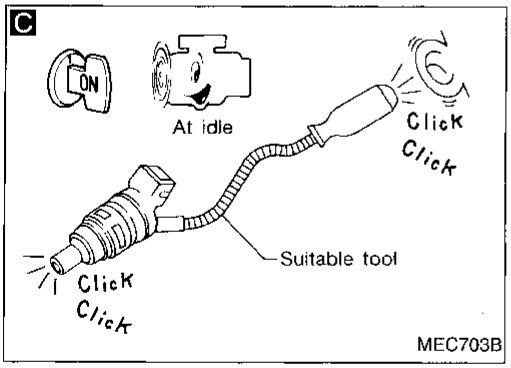

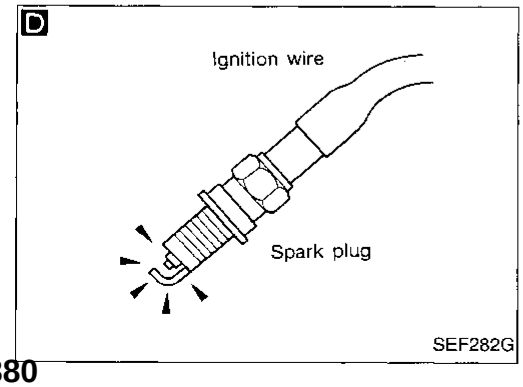

INSPECTION START

CHECK FOR INTAKE AIR LEAK.
Start engine and run it at idle speed. Listen for the sound of the intake air leak.
NG → Discover air leak location and repair.
OK

CHECK FOR EXHAUST SYSTEM CLOGGING.
Stop engine and visually check exhaust tube, three way catalyst and muffler for dents.
NG → Repair or replace it.
OK

A

CHECK EGR FUNCTION.
Perform DIAGNOSTIC TROUBLE CODE CONFIRMATION PROCEDURE for EGR Function.
Refer to EC-338.
NG → Repair EGR system.
OK

B

PERFORM POWER BALANCE TEST.
1. Perform "POWER BALANCE" in "ACTIVE TEST" mode.
2. Is there any cylinder which does not produce a momentary engine speed drop?

OR

When disconnecting each injector harness connector one at a time, is there any cylinder which does not produce a momentary engine speed drop?

No → Go to E on next page.
Yes

C

CHECK INJECTOR.
Does each injector make an operating sound at idle?
No → Check injector(s) and circuit(s). Refer to EC-404.
Yes

D

CHECK IGNITION SPARK.
1. Disconnect ignition wire from spark plug.
2. Connect a known good spark plug to the ignition wire.
3. Place end of spark plug against a suitable ground and crank engine.
4. Check for spark.

NG → CHECK COMPONENT (Ignition wires).
Refer to "COMPONENT INSPECTION", EC-226.
OK → Check ignition coil, power transistor and their circuits. Refer to EC-315.
NG → Replace.
OK

Ⓐ
(Go to next page.)

No. 4 - 1 Cylinder Misfire, Multiple Cylinder Misfire (Cont'd)

Simpo PDF Merge and Split Unregistered Version - http://www.simpopdf.com

E

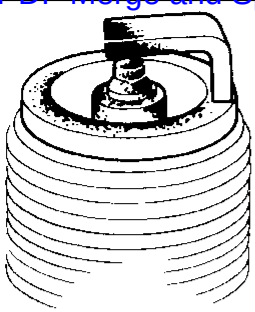

SEF156I

F **Under vehicle view**

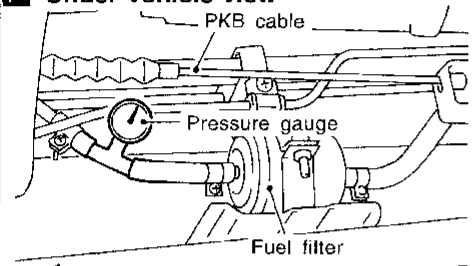

SEF317V

Ⓐ

E

CHECK SPARK PLUGS.
Remove the spark plugs and check for fouling, etc.

NG → Repair or replace spark plug(s) with standard type one(s).
For spark plug type, refer to "ENGINE MAINTENANCE" in MA section.

OK ↓

CHECK COMPRESSION PRESSURE.
Refer to EM section.
- Check compression pressure.
  Standard:
  kPa (kg/cm², psi)/300 rpm
  1,226 (12.5, 178)
  Minimum:
  kPa (kg/cm², psi)/300 rpm
  1,030 (10.5, 149)
  Difference between each cylinder:
  kPa (kg/cm², psi)/300 rpm
  98 (1.0, 14)

NG → Check pistons, piston rings, valves, valve seats and cylinder head gaskets.

OK ↓

F

CHECK FUEL PRESSURE.
1. Release fuel pressure to zero. Refer to EC-26.
2. Install fuel pressure gauge and check fuel pressure.
   At idle:
   Approx. 235 kPa
   (2.4 kg/cm², 34 psi)

NG → Check the following.
- Fuel pump and circuit
  Refer to EC-410.
- Fuel pressure regulator
  Refer to EC-26.
- Fuel lines
  Refer to "ENGINE MAINTENANCE" in MA section.
- Fuel filter for clogging

If NG, repair or replace.

OK ↓

CHECK IGNITION TIMING.
Perform "Basic Inspection", EC-71.

NG → Adjust ignition timing.

OK ↓

CHECK COMPONENT
(Front heated oxygen sensor).
Refer to "COMPONENT INSPECTION", EC-155.

NG → Replace front heated oxygen sensor.

OK ↓

CHECK MASS AIR FLOW SENSOR.

Check "MASS AIR FLOW" in "DATA MONITOR" mode with CONSULT.
0.9 - 5.8 g·m/sec: at idling
7.5 - 13.2 g·m/sec: at 2,500 rpm

OR

Check "MASS AIR FLOW" in MODE 1 with GST.
0.9 - 5.8 g·m/sec: at idling
7.5 - 13.2 g·m/sec: at 2,500 rpm

OR

Check voltage between ECM terminal (47) and ground.
0.9 - 1.8V: at idling
1.9 - 2.3V: at 2,500 rpm

NG → Check connectors for rusted terminals or loose connections in the mass air flow sensor circuit or engine grounds.
Refer to EC-99.
If NG, repair or replace it.

OK ↓

Ⓑ

(Go to next page.)

Simpo PDF Merge and Split Unregistered Version - http://www.simpopdf.com

No. 4 - 1 Cylinder Misfire, Multiple Cylinder Misfire (Cont'd)

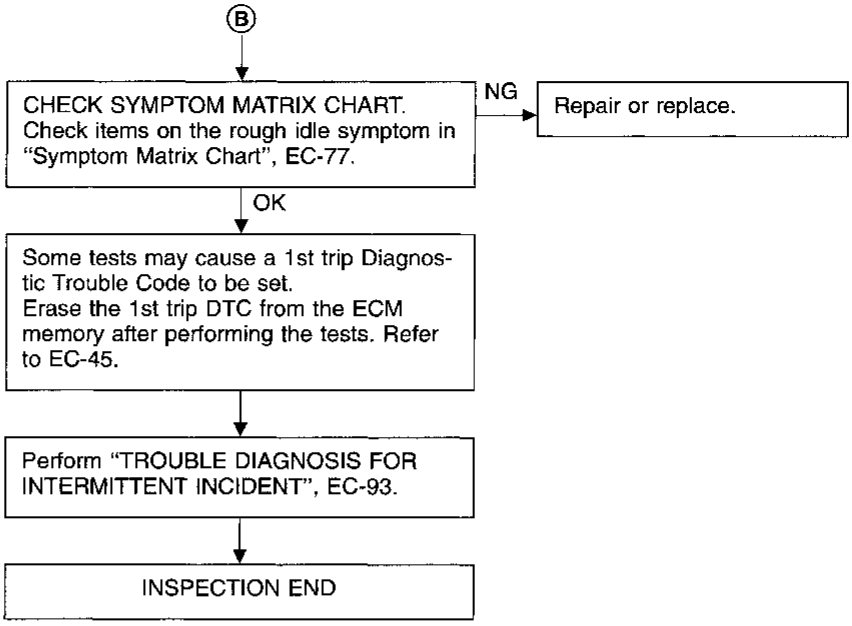

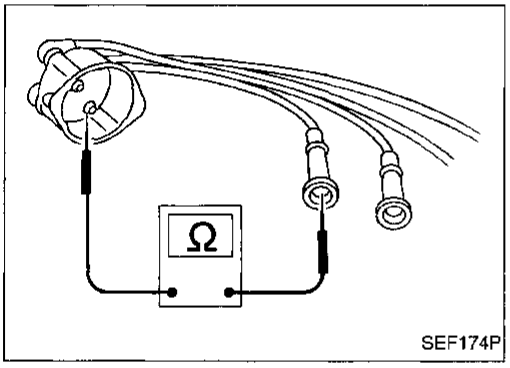

COMPONENT INSPECTION

Ignition wires

1. Inspect wires for cracks, damage, burned terminals and for improper fit.
2. Measure the resistance of wires to their distributor cap terminal. Move each wire while testing to check for intermittent breaks.

   Resistance:

   13.6 - 18.4 kΩ/m (4.15 - 5.61 kΩ/ft) at 25°C (77°F)

   If the resistance exceeds the above specification, inspect ignition wire to distributor cap connection. Clean connection or replace the ignition wire with a new one.

Simpo PDF Merge and Split Unregistered Version - http://www.simpopdf.com

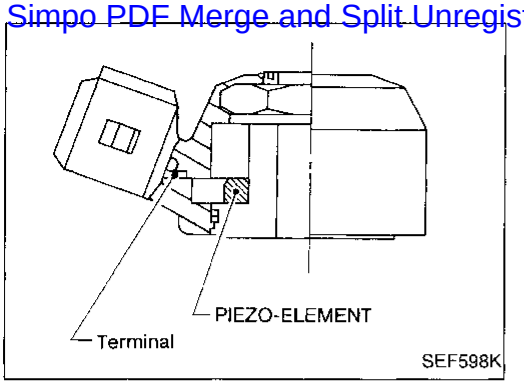

Knock Sensor (KS)

COMPONENT DESCRIPTION

The knock sensor is attached to the cylinder block. It senses engine knocking using a piezoelectric element. A knocking vibration from the cylinder block is sensed as vibrational pressure. This pressure is converted into a voltage signal and sent to the ECM.

*** Freeze frame data will not be stored in the ECM for the knock sensor. The MIL will not light for knock sensor malfunction. The knock sensor has one trip detection logic.**

ECM TERMINALS AND REFERENCE VALUE

Specification data are reference values and are measured between each terminal and ㉜ (ECM ground).

TER-MINAL NO.	WIRE COLOR	ITEM	CONDITION	DATA (DC Voltage)
64	W	Knock sensor	Engine is running. └ Idle speed	Approximately 2.4V

ON BOARD DIAGNOSIS LOGIC

Diagnostic Trouble Code No.	Malfunction is detected when	Check Items (Possible Cause)
P0325 0304	● An excessively low or high voltage from the knock sensor is sent to ECM.	● Harness or connectors (The knock sensor circuit is open or shorted.) ● Knock sensor

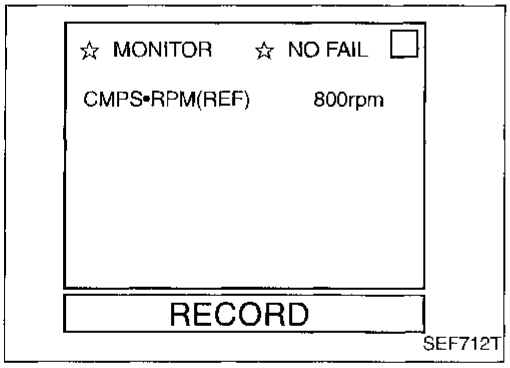

DIAGNOSTIC TROUBLE CODE CONFIRMATION PROCEDURE

CAUTION:
Always drive vehicle at a safe speed.

NOTE:
If "DIAGNOSTIC TROUBLE CODE CONFIRMATION PROCEDURE" has been previously conducted, always turn ignition switch "OFF" and wait at least 5 seconds before conducting the next test.

TESTING CONDITION:
Before performing the following procedure, confirm that battery voltage is more than 10V at idle.

1) Turn ignition switch "ON" and select "DATA MONITOR" mode with CONSULT.
2) Start engine and run it for at least 5 seconds at idle speed.

OR

1) Start engine and run it for at least 5 seconds at idle speed.
2) Select "MODE 3" with GST.

Simpo PDF Merge and Split Unregistered Version - http://www.simpopdf.com

OR

NO TOOLS

1) Start engine and run it for at least 5 seconds at idle speed.
2) Turn ignition switch "OFF", wait at least 5 seconds and then turn "ON".
3) Perform "Diagnostic Test Mode II" (Self-diagnostic results) with ECM.

Simpo PDF Merge and Split Unregistered Version - http://www.simpopdf.com

EC-KS-01

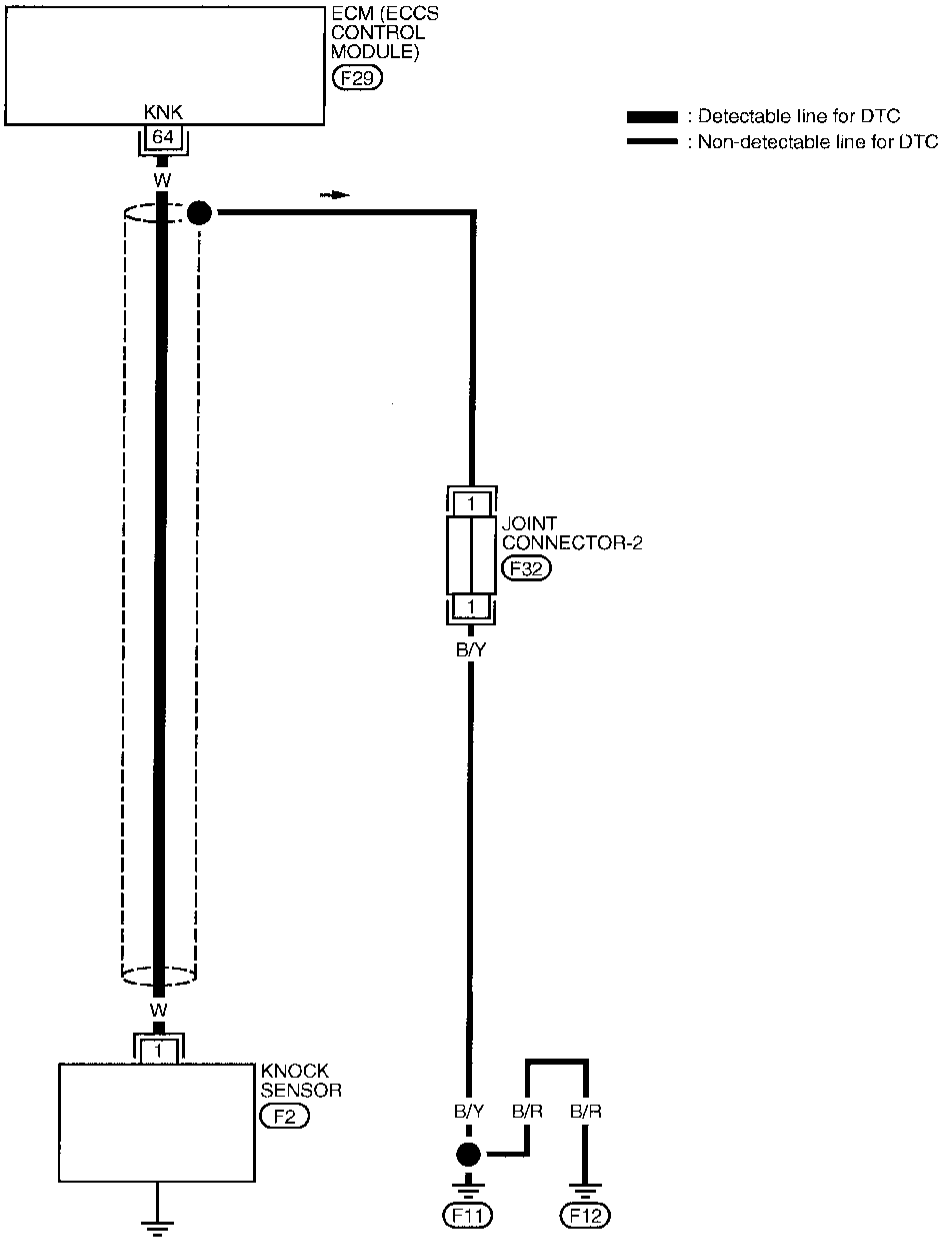





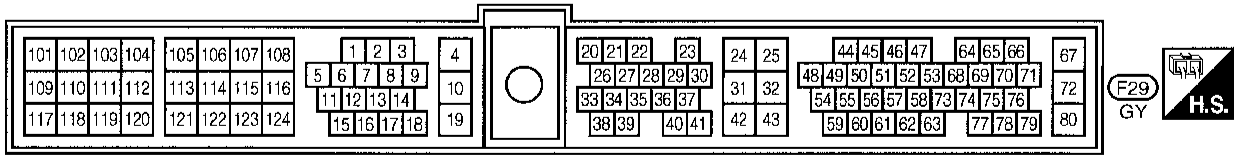

AEC529A

Knock Sensor (KS) (Cont'd)

Simpo PDF Merge and Split Unregistered Version - http://www.simpopdf.com

DIAGNOSTIC PROCEDURE

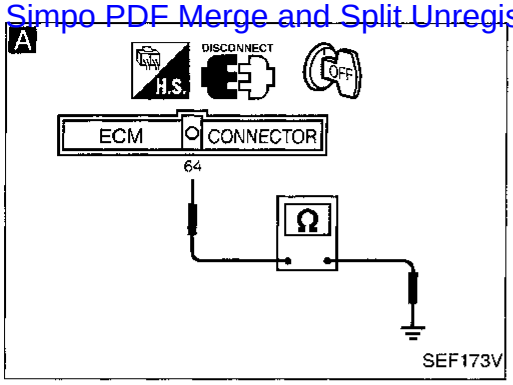

INSPECTION START

A

CHECK INPUT SIGNAL CIRCUIT.
1. Turn ignition switch "OFF".
2. Disconnect ECM harness connector.
3. Check harness continuity between ECM terminal (64) and ground.
   Resistance:
   Approximately 500 - 620 kΩ [at 25°C (77°F)]

If OK, check harness for short to ground and short to power.
It is necessary to use an ohmmeter which can measure more than 10 MΩ.

NG → Check the following.
- Harness for open or short between knock sensor and ECM

If NG, repair open circuit or short to ground or short to power in harness or connectors.
- Knock sensor (Refer to "COMPONENT INSPECTION" below.)

If NG, replace knock sensor.

OK ↓

CHECK SHIELD CIRCUIT.
1. Turn ignition switch "OFF".
2. Remove joint connector-2.
3. Check the following.
   - Continuity between joint connector-2 terminal (1) and ground
   - Joint connector-2
     (Refer to "HARNESS LAYOUT" in EL section.)

Continuity should exist.
If OK, check harness for short to power.

NG → Repair open circuit, short to ground or short to power in harness or connectors.

OK ↓

Perform "TROUBLE DIAGNOSIS FOR INTERMITTENT INCIDENT", EC-93.

INSPECTION END

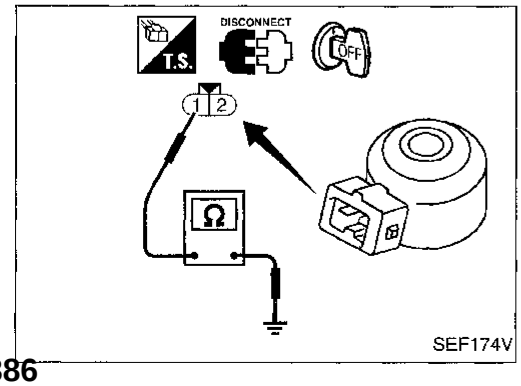

COMPONENT INSPECTION

Knock sensor

- Use an ohmmeter which can measure more than 10 MΩ.

1. Disconnect knock sensor harness connector.
2. Check resistance between terminal (1) and ground.
   Resistance: 500 - 620 kΩ [at 25°C (77°F)]

CAUTION:
Do not use any knock sensors that have been dropped or physically damaged. Use only new ones.

Simpo PDF Merge and Split Unregistered Version - http://www.simpopdf.com

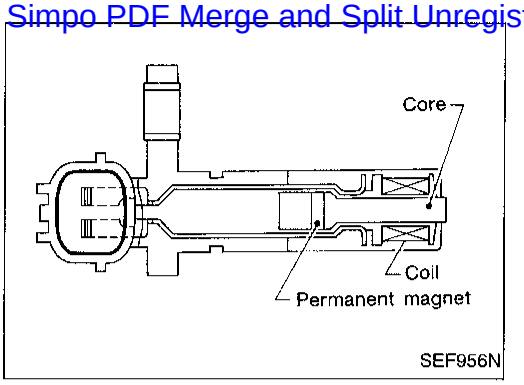

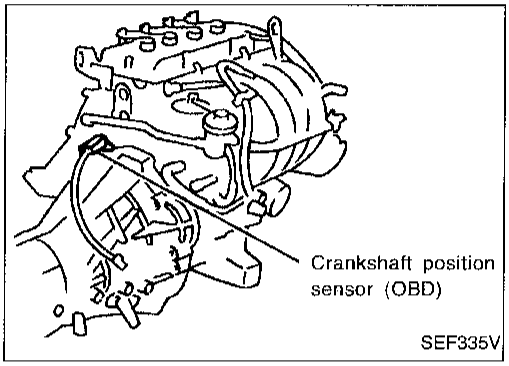

Crankshaft Position Sensor (CKPS) (OBD)

COMPONENT DESCRIPTION

The crankshaft position sensor (OBD) is located on the transaxle housing facing the gear teeth (cogs) of the flywheel or drive plate. It detects the fluctuation of the engine revolution.
The sensor consists of a permanent magnet, core and coil.
When the engine is running, the high and low parts of the teeth cause the gap with the sensor to change.
The changing gap causes the magnetic field near the sensor to change.
Due to the changing magnetic field, the voltage from the sensor changes.
The ECM receives the voltage signal and detects the fluctuation of the engine revolution.
This sensor is not directly used to control the engine system. It is used only for the on board diagnosis of misfire.

ECM TERMINALS AND REFERENCE VALUE

Specification data are reference values and are measured between each terminal and ㉜ (ECM ground).

TER-MINAL NO.	WIRE COLOR	ITEM	CONDITION	DATA (AC Voltage)
47	L	Crankshaft position sensor (OBD)	Engine is running. (Warm-up condition) Idle speed	Approximately 0V 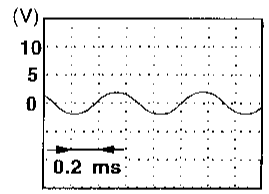 SEF112V
			Engine is running. Engine speed is 2,000 rpm.	Approximately 0V 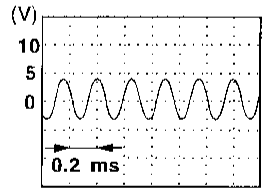 SEF113V

ON BOARD DIAGNOSIS LOGIC

Diagnostic Trouble Code No.	Malfunction is detected when	Check Items (Possible Cause)
P0335 0802	● The proper pulse signal from the crankshaft position sensor (OBD) is not sent to ECM while the engine is running at the specified engine speed.	● Harness or connectors (The crankshaft position sensor (OBD) circuit is open.) ● Crankshaft position sensor (OBD)

Simpo PDF Merge and Split Unregistered Version - http://www.simpopdf.com

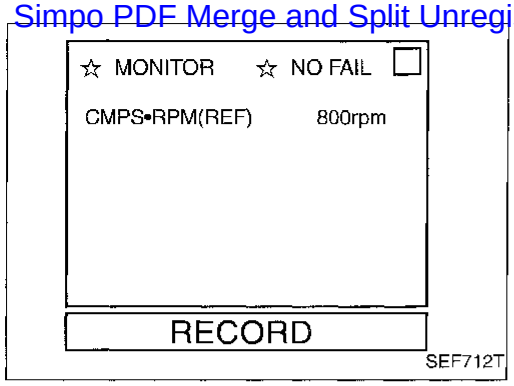

Crankshaft Position Sensor (CKPS) (OBD) (Cont'd)

DIAGNOSTIC TROUBLE CODE CONFIRMATION PROCEDURE

NOTE:
If "DIAGNOSTIC TROUBLE CODE CONFIRMATION PROCEDURE" has been previously conducted, always turn ignition switch "OFF" and wait at least 5 seconds before conducting the next test.

1) Turn ignition switch "ON" and select "DATA MONITOR" mode with CONSULT.
2) Start engine and run it for at least 15 seconds at idle speed.

OR

1) Start engine and run it for at least 15 seconds at idle speed.
2) Select "MODE 7" with GST.

OR

1) Start engine and run it for at least 15 seconds at idle speed.
2) Turn ignition switch "OFF", wait at least 5 seconds and then turn "ON".
3) Perform "Diagnostic Test Mode II" (Self-diagnostic results) with ECM.

Simpo PDF Merge and Split Unregistered Version - http://www.simpopdf.com

EC-CKPS-01

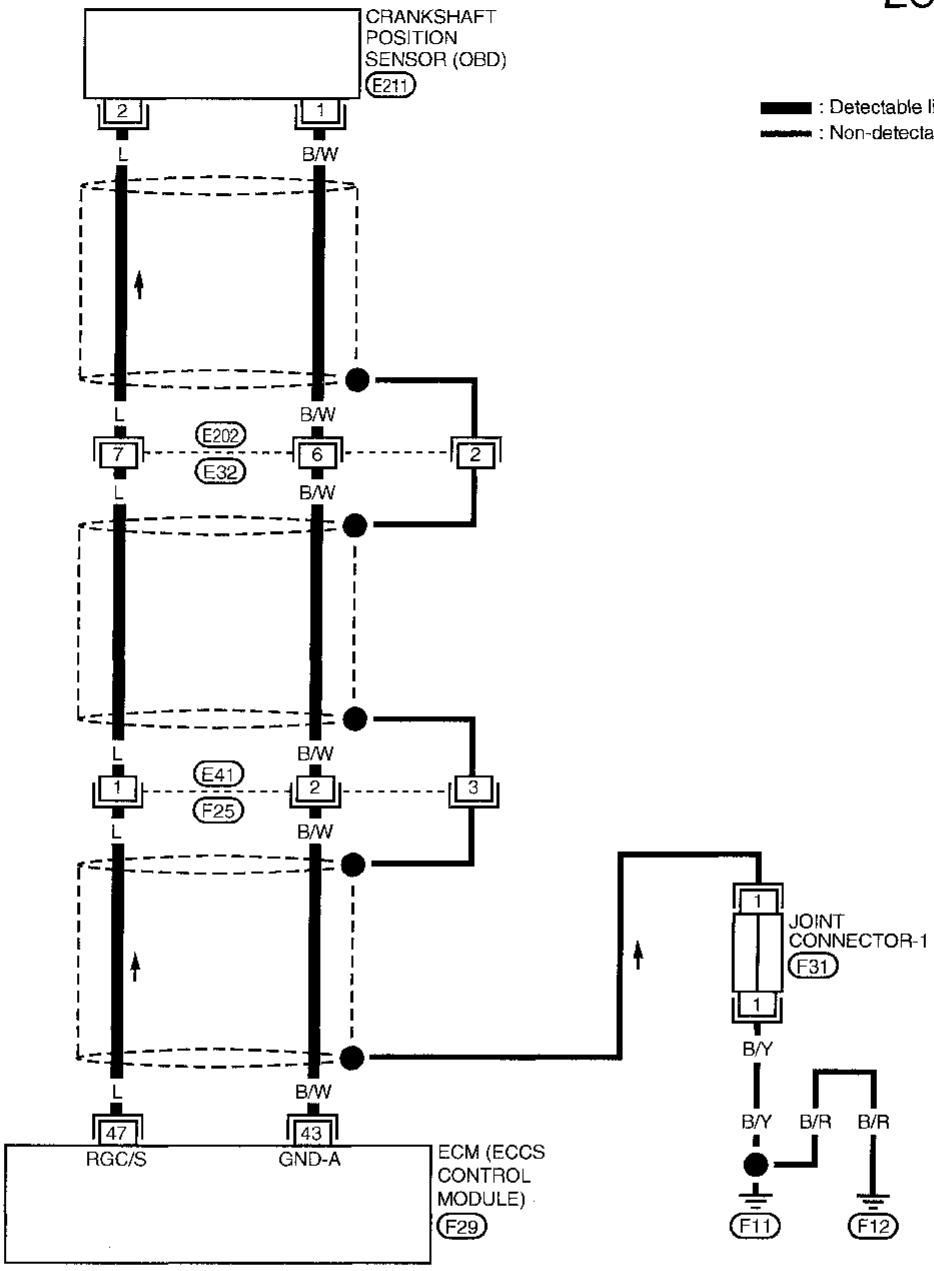

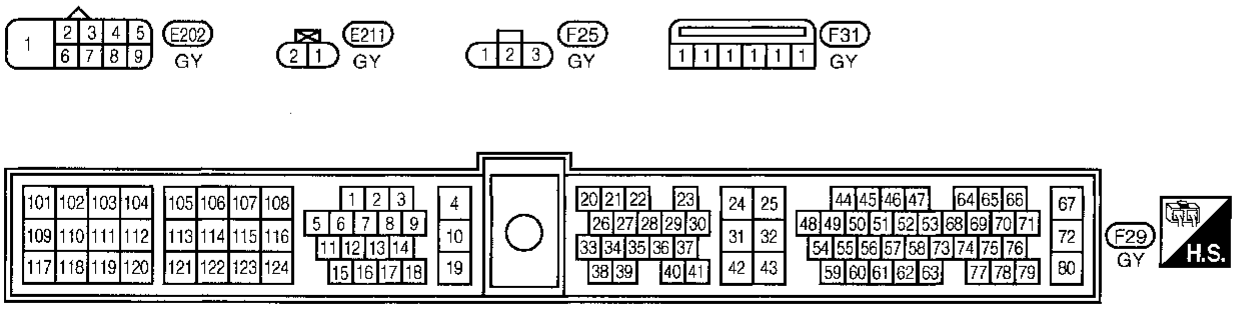

AEC531A

Crankshaft Position Sensor (CKPS) (OBD) (Cont'd)

Simpo PDF Merge and Split Unregistered Version - http://www.simpopdf.com

DIAGNOSTIC PROCEDURE

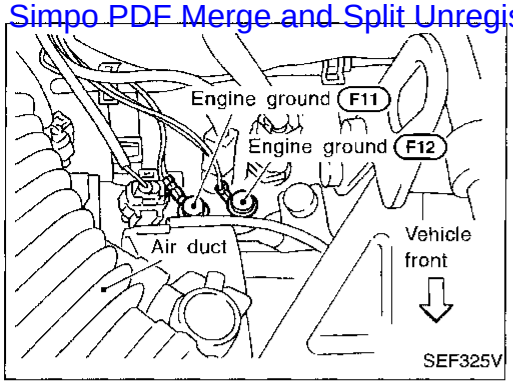

SEF325V

INSPECTION START

1. Turn ignition switch "OFF".
2. Loosen and retighten engine ground screws.

A

CHECK INPUT SIGNAL CIRCUIT.
1. Disconnect crankshaft position sensor (OBD) and ECM harness connectors.
2. Check continuity between ECM terminal (47) and terminal (2).
   Continuity should exist.
   If OK, check harness for short to ground and short to power.

NG → Check the following.
- Harness connectors (E202), (E32)
- Harness connectors (E41), (F25)
- Harness for open or short between ECM and crankshaft position sensor (OBD)

If NG, repair open circuit or short to ground or short to power in harness or connectors.

OK

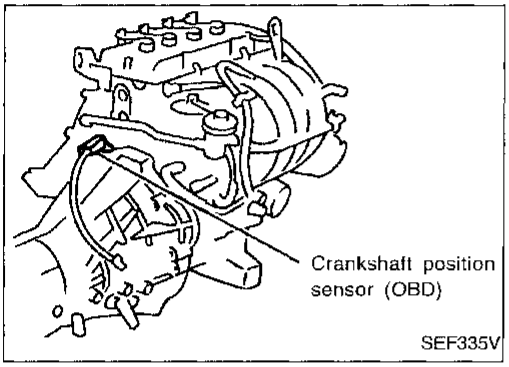

SEF335V

B

CHECK GROUND CIRCUIT.
1. Reconnect ECM harness connector.
2. Check harness continuity between terminal (1) and engine ground.
   Continuity should exist.
   If OK, check harness for short to ground and short to power.

NG → Check the following.
- Harness connectors (E202), (E32)
- Harness connectors (E41), (F25)
- Harness for open or short between crankshaft position sensor (OBD) and ECM

If NG, repair open circuit or short to ground or short to power in harness or connectors.

OK

A

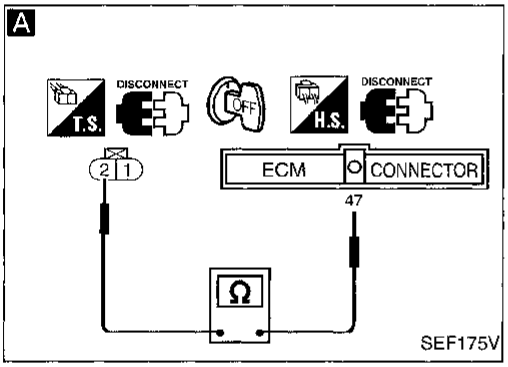

SEF175V

CHECK COMPONENT
[Crankshaft position sensor (OBD)].
Refer to "COMPONENT INSPECTION" on next page.

NG → Replace crankshaft position sensor (OBD).

OK

B

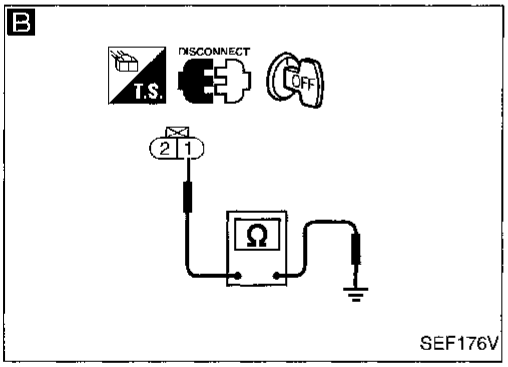

SEF176V

C

CHECK SHIELD CIRCUIT.
1. Turn ignition switch "OFF".
2. Disconnect harness connector (E32).
3. Check harness continuity between harness connector (E32) terminal (2) and ground.
   Continuity should exist.
   If OK, check harness for short to power.

NG → Check the following.
- Harness connectors (E41), (F25)
- Joint connector-1
- Harness for open or short between harness connector (E32) and ground

If NG, repair open circuit or short to power in harness or connectors.

OK

C

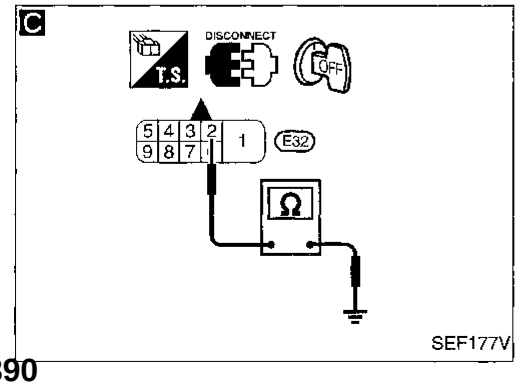

SEF177V

Perform "TROUBLE DIAGNOSIS FOR INTERMITTENT INCIDENT", EC-93.

INSPECTION END

Simpo PDF Merge and Split Unregistered Version - http://www.simpopdf.com

Crankshaft Position Sensor (CKPS) (OBD) (Cont d)

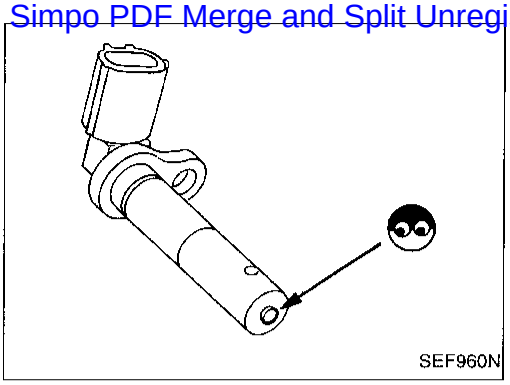
SEF960N

COMPONENT INSPECTION

Crankshaft position sensor (OBD)

1. Disconnect crankshaft position sensor (OBD) harness connector.
2. Loosen the fixing bolt of the sensor.
3. Remove the sensor.
4. Visually check the sensor for chipping.

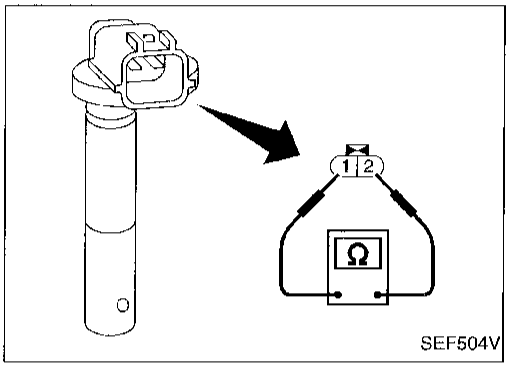

SEF504V

5. Check resistance as shown in the figure.
   Resistance: Approximately 166.5 - 203.5Ω [at 20°C (68°F)]
   If NG, replace crankshaft position sensor (OBD).

Simpo PDF Merge and Split Unregistered Version - http://www.simpopdf.com

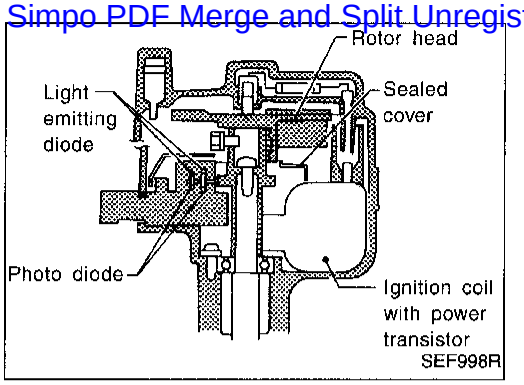

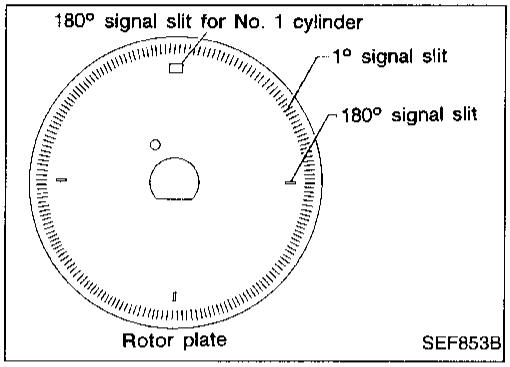

Camshaft Position Sensor (CMPS)

COMPONENT DESCRIPTION

The camshaft position sensor is a basic component of the ECCS. It monitors engine speed and piston position. These input signals to the ECM are used to control fuel injection, ignition timing and other functions.

The camshaft position sensor has a rotor plate and a wave-forming circuit. The rotor plate has 360 slits for a 1° (POS) signal and 4 slits for a 180° (REF) signal. The wave-forming circuit consists of Light Emitting Diodes (LED) and photo diodes.

The rotor plate is positioned between the LED and the photo diode. The LED transmits light to the photo diode. As the rotor plate turns, the slits cut the light to generate rough-shaped pulses. These pulses are converted into on-off signals by the wave-forming circuit and sent to the ECM.

The distributor is not repairable and must be replaced as an assembly except distributor cap.

ECM TERMINALS AND REFERENCE VALUE

Specification data are reference values and are measured between each terminal and ㉜ (ECM ground).

TERMINAL NO.	WIRE COLOR	ITEM	CONDITION	DATA (DC Voltage)
4	LG/R	ECCS relay (Self-shutoff)	Engine is running. Ignition switch "OFF" └ For a few seconds after turning ignition switch "OFF"	0 - 1V
			Ignition switch "OFF" └ A few seconds passed after turning ignition switch "OFF"	BATTERY VOLTAGE (11 - 14V)
44	PU	Camshaft position sensor (Reference signal)	Engine is running. (Warm-up condition) └ Idle speed	0.2 - 0.5V 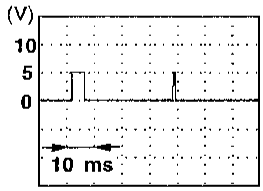 SEF114V
48	PU		Engine is running. └ Engine speed is 2,000 rpm.	0 - 0.5V 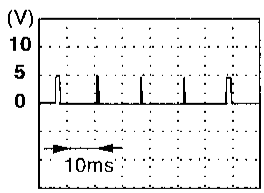 SEF200T

Simpo PDF Merge and Split Unregistered Version - http://www.simpopdf.com

TER-MINAL NO.	WIRE COLOR	ITEM	CONDITION	DATA (DC Voltage)
49	LG	Camshaft position sensor (Position signal)	Engine is running. (Warm-up condition) └ Idle speed	Approximately 2.6V 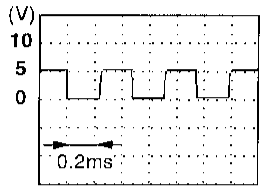 SEF195T
			Engine is running. └ Engine speed is 2,000 rpm.	Approximately 2.5 - 2.6V 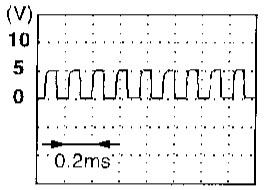 SEF196T
67	B/P	Power supply for ECM	Ignition switch "ON"	BATTERY VOLTAGE (11 - 14V)
72	B/P			
117	B/P	Current return	Engine is running. └ Idle speed	BATTERY VOLTAGE (11 - 14V)

ON BOARD DIAGNOSIS LOGIC

Diagnostic Trouble Code No.	Malfunction is detected when	Check Items (Possible Cause)
P0340 0101	A) Either 1° or 180° signal is not sent to ECM for the first few seconds during engine cranking. B) Either 1° or 180° signal is not sent to ECM often enough while the engine speed is higher than the specified engine speed. C) The relation between 1° and 180° signal is not in the normal range during the specified engine speed.	● Harness or connectors (The camshaft position sensor circuit is open or shorted.) ● Camshaft position sensor ● Starter motor (Refer to EL section.) ● Starting system circuit (Refer to EL section.) ● Dead (Weak) battery

DIAGNOSTIC TROUBLE CODE CONFIRMATION PROCEDURE

Perform "Procedure for malfunction A" first. If DTC cannot be confirmed, perform "Procedure for malfunction B and C".

Camshaft Position Sensor (CMPS) (Cont'd)

Simpo PDF Merge and Split Unregistered Version - http://www.simpopdf.com

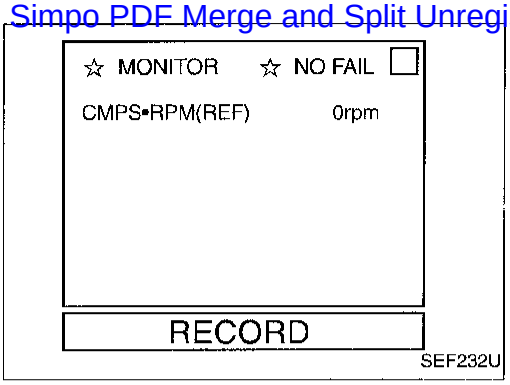

Procedure for malfunction A

NOTE:
If "DIAGNOSTIC TROUBLE CODE CONFIRMATION PROCEDURE" has been previously conducted, always turn ignition switch "OFF" and wait at least 5 seconds before conducting the next test.

TESTING CONDITION:
Before performing the following procedure, confirm that battery voltage is more than 10.5V at idle.

1) Turn ignition switch "ON".
2) Select "DATA MONITOR" mode with CONSULT.
3) Crank engine for at least 2 seconds.

OR

1) Crank engine for at least 2 seconds.
2) Select "MODE 7" with GST.

OR

1) Crank engine for at least 2 seconds.
2) Turn ignition switch "OFF", wait at least 5 seconds and then turn "ON".
3) Perform "Diagnostic Test Mode II" (Self-diagnostic results) with ECM.

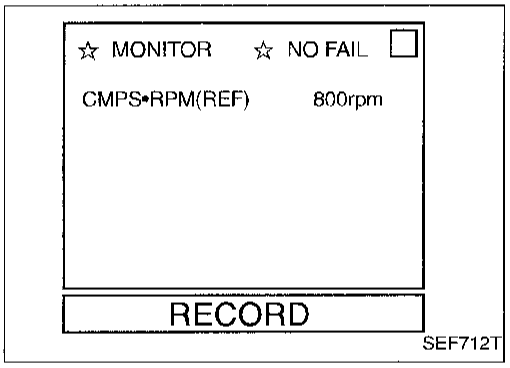

Procedure for malfunction B and C

NOTE:
If "DIAGNOSTIC TROUBLE CODE CONFIRMATION PROCEDURE" has been previously conducted, always turn ignition switch "OFF" and wait at least 5 seconds before conducting the next test.

TESTING CONDITION:
Before performing the following procedure, confirm that battery voltage is more than 10.5V at idle.

1) Turn ignition switch "ON".
2) Select "DATA MONITOR" mode with CONSULT.
3) Start engine and run it for at least 2 seconds at idle speed.

OR

1) Start engine and run it for at least 2 seconds at idle speed.
2) Select "MODE 7" with GST.

OR

1) Start engine and run it for at least 2 seconds at idle speed.
2) Turn ignition switch "OFF", wait at least 5 seconds and then turn "ON".
3) Perform "Diagnostic Test Mode II" (Self-diagnostic results) with ECM.

Simpo PDF Merge and Split Unregistered Version - http://www.simpopdf.com

EC-CMPS-01

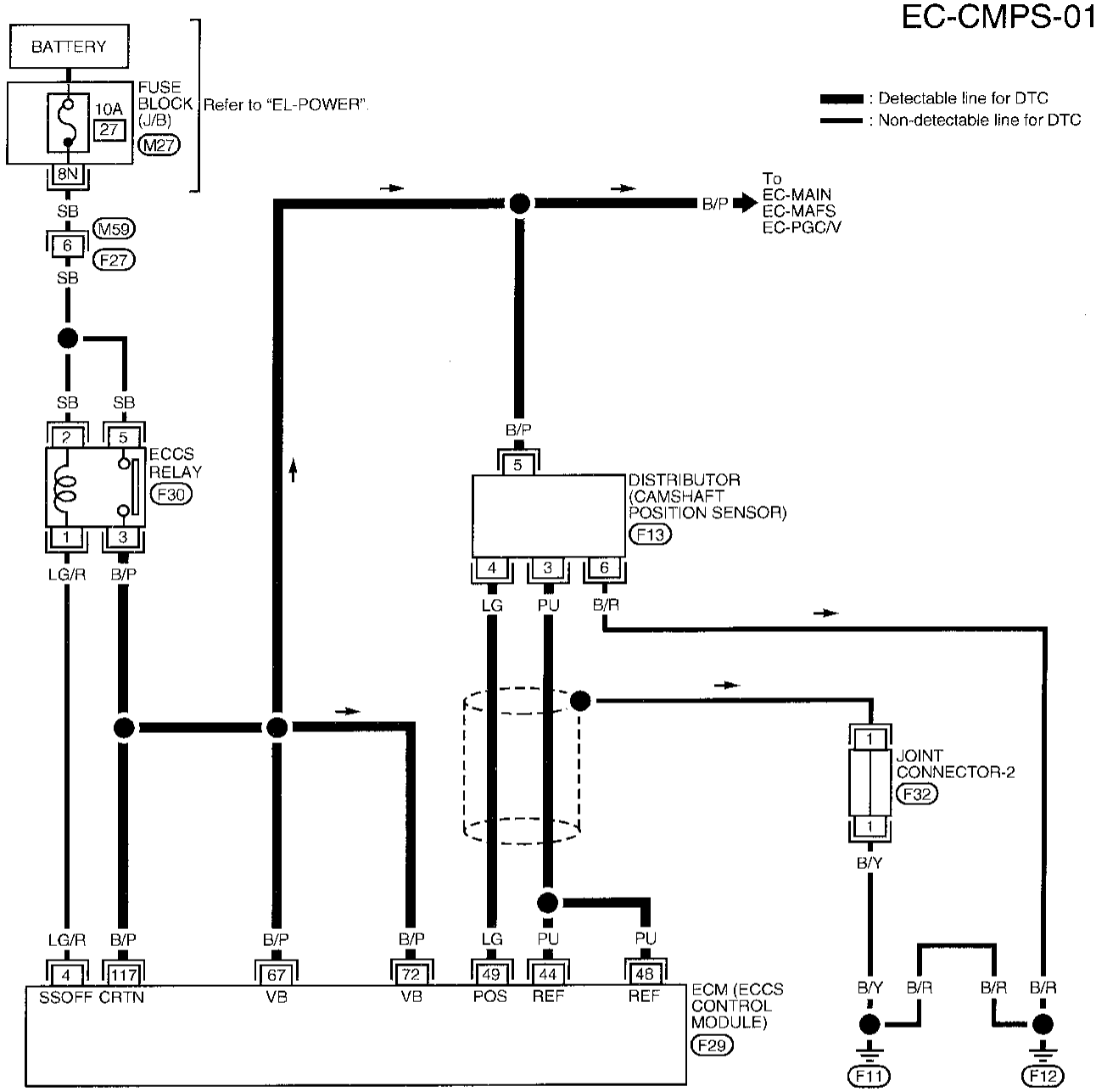



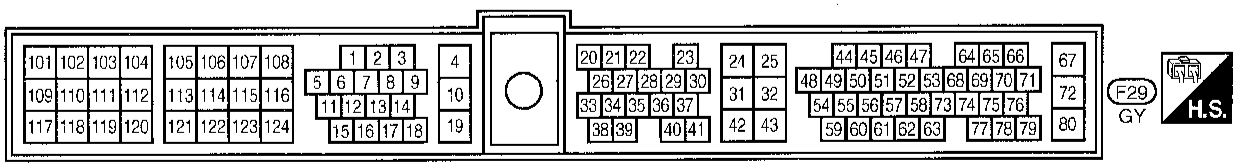

AEC532A

Camshaft Position Sensor (CMPS) (Cont'd)

Simpo PDF Merge and Split Unregistered Version - http://www.simpopdf.com

DIAGNOSTIC PROCEDURE (DETECTABLE CIRCUIT)

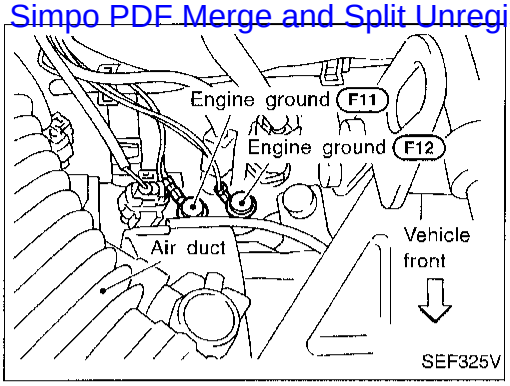

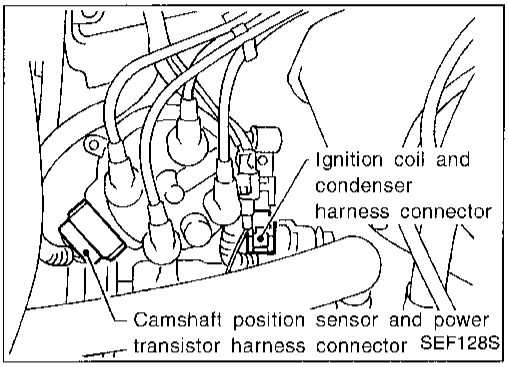

A

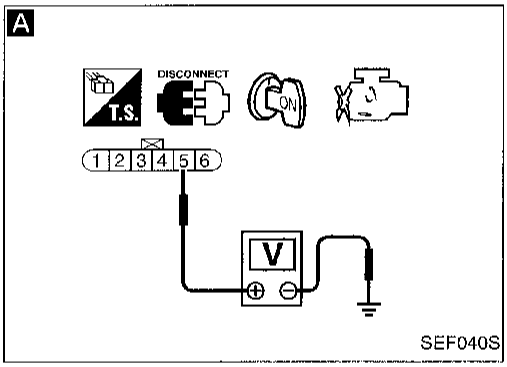

B

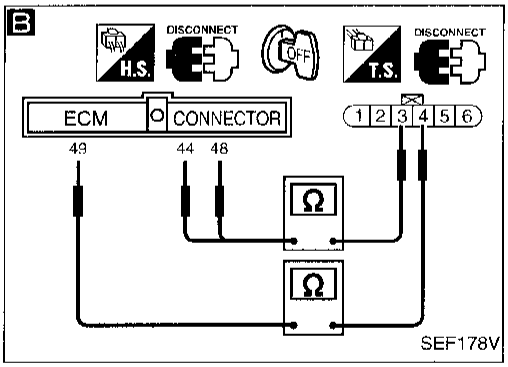

C

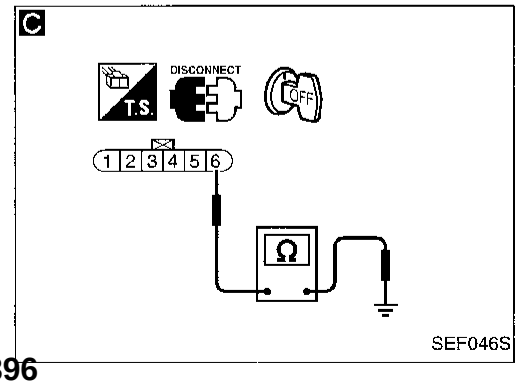

INSPECTION START

1. Turn ignition switch "OFF".
2. Loosen and retighten engine ground screws.

A

CHECK POWER SUPPLY.
1. Disconnect camshaft position sensor harness connector.
2. Turn ignition switch "ON".
3. Check voltage between terminal (5) and ground with CONSULT or tester.
Voltage: Battery voltage

NG → Check the following.
- Harness for open or short between camshaft position sensor and ECM
- Harness for open or short between camshaft position sensor and ECCS relay

If NG, repair harness or connectors.

OK ↓

B

CHECK INPUT SIGNAL CIRCUIT.
1. Turn ignition switch "OFF".
2. Disconnect ECM harness connector.
3. Check harness continuity between sensor terminal (4) and ECM terminals (49), sensor terminal (3) and ECM terminals (44), (48).
Continuity should exist.
If OK, check harness for short to ground and short to power.

NG → Repair open circuit, short to ground or short to power in harness or connectors.

OK ↓

C

CHECK GROUND CIRCUIT.
1. Turn ignition switch "OFF".
2. Disconnect camshaft position sensor harness connector.
3. Check harness continuity between sensor terminal (6) and engine ground.
Continuity should exist.
If OK, check harness for short to ground and short to power.

NG → Repair open circuit, short to ground or short to power in harness or connectors.

OK ↓

CHECK COMPONENT
(Camshaft position sensor).
Refer to "COMPONENT INSPECTION" on next page.

NG → Replace camshaft position sensor.

OK ↓

CHECK SHIELD CIRCUIT.
1. Turn ignition switch "OFF".
2. Remove joint connector-2.
3. Check the following.
- Continuity between joint connector-2 terminal (1) and ground
- Joint connector-2
(Refer to "HARNESS LAYOUT" in EL section.)

Continuity should exist.
If OK, check harness for short to power.

NG → Repair open circuit, short to ground or short to power in harness or connectors.

OK ↓

Perform "TROUBLE DIAGNOSIS FOR INTERMITTENT INCIDENT", EC-93.

INSPECTION END

Simpo PDF Merge and Split Unregistered Version - http://www.simpopdf.com

Camshaft Position Sensor (CMPS) (Cont'd)

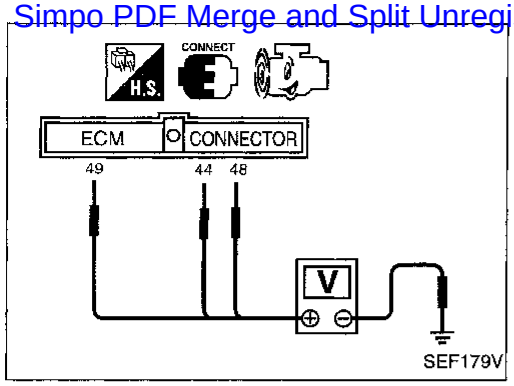

COMPONENT INSPECTION

Camshaft position sensor

1. Start engine and warm it up to the normal operating temperature.
2. Check voltage between ECM terminal ㊾ and ground, ECM terminal ㊹ or ㊽ and ground.

Condition	Terminal	Voltage
Engine running at idle	㊾ and ground	Approximately 2.6V 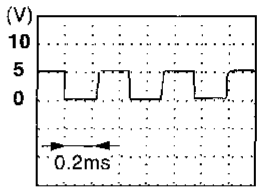 SEF195T
	㊹ or ㊽ and ground	0.2 - 0.5V 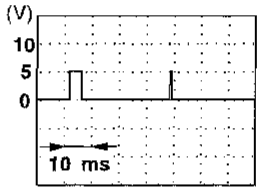 SEF114V
Engine speed is 2,000 rpm	㊾ and ground	Approximately 2.5 - 2.6V 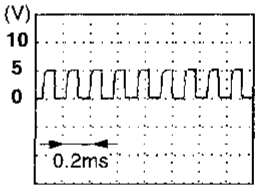 SEF196T
	㊹ or ㊽ and ground	0 - 0.5V 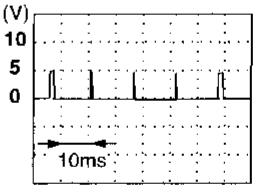 SEF200T

If NG, replace distributor assembly with camshaft position sensor.

Simpo PDF Merge and Split Unregistered Version - http://www.simpopdf.com

EGR Function (Close)

SYSTEM DESCRIPTION

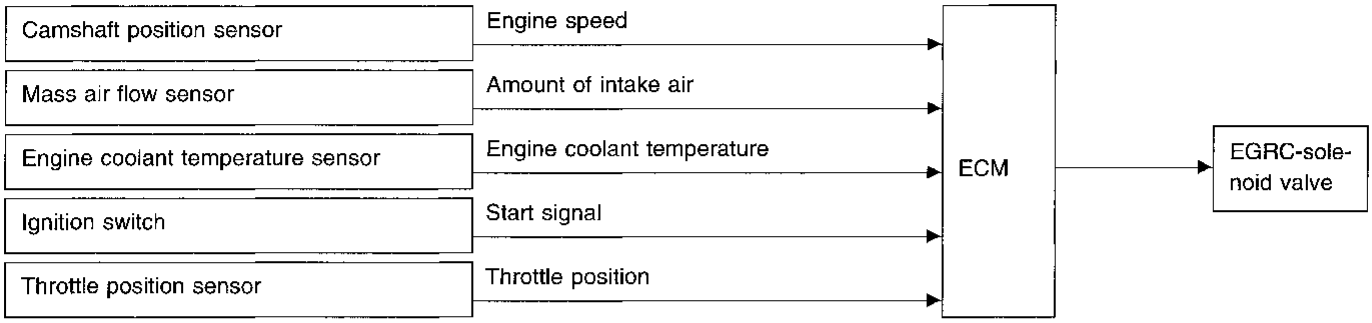

This system cuts and controls vacuum applied to the EGR valve to suit engine operating conditions. This cut-and-control operation is accomplished through the ECM and the EGRC-solenoid valve. When the ECM detects any of the following conditions, current flows through the solenoid valve. This causes the port vacuum to be discharged into the atmosphere. The EGR valve remains closed.

- Low engine coolant temperature
- Engine starting
- High-speed engine operation
- Engine idling
- Excessively high engine coolant temperature
- Mass air flow sensor malfunction

EGR and vacuum

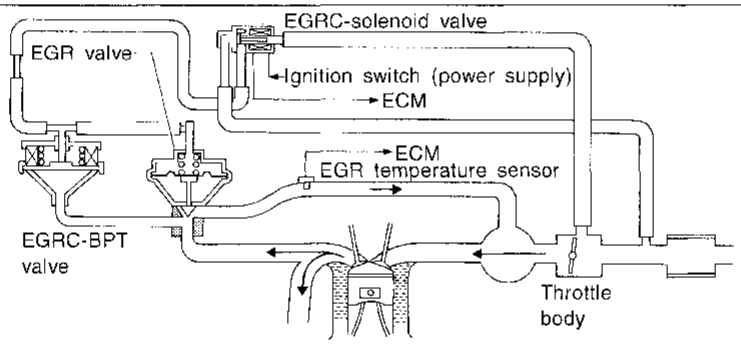

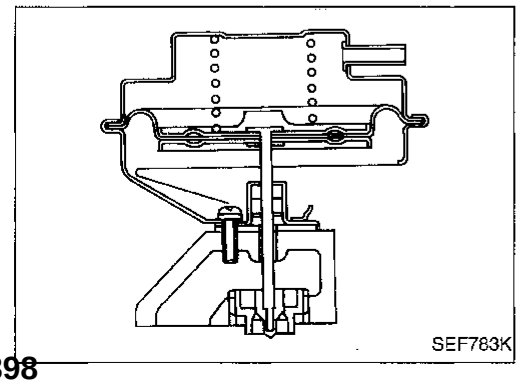

COMPONENT DESCRIPTION

Exhaust gas recirculation (EGR) valve

The EGR valve controls the amount of exhaust gas routed to the intake manifold. Vacuum is applied to the EGR valve in response to throttle valve opening. The vacuum controls the movement of a taper valve connected to the vacuum diaphragm in the EGR valve.

Simpo PDF Merge and Split Unregistered Version - http://www.simpopdf.com

EGR Function (Close) (Cont'd)

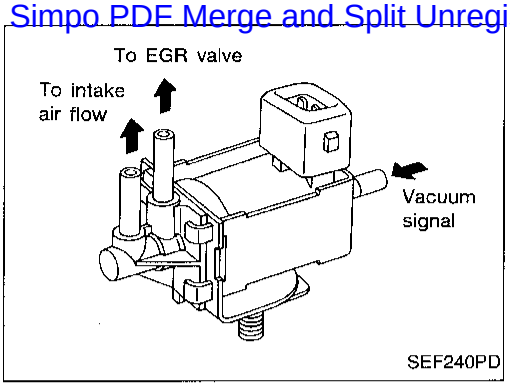

EGRC-solenoid valve

The EGRC-solenoid valve responds to signals from the ECM. When the ECM sends an ON (ground) signal, the coil in the solenoid valve is energized. The vacuum signal passes through the solenoid valve. The signal then reaches the EGR valve.
When the ECM sends an OFF signal, a plunger will then move to cut the vacuum signal from the throttle body to the EGR valve.

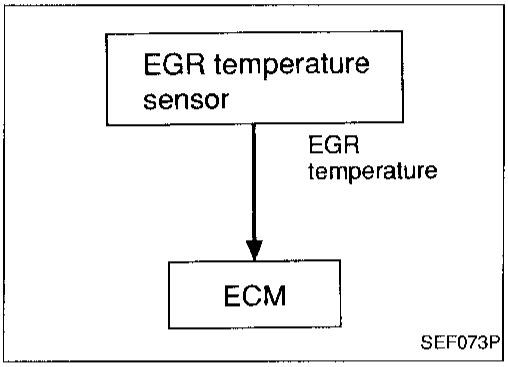

ON BOARD DIAGNOSIS LOGIC

If the absence of EGR flow is detected by EGR temperature sensor under the condition that calls for EGR, a low-flow malfunction is diagnosed.

Diagnostic Trouble Code No.	Malfunction is detected when ...	Check Items (Possible Cause)
P0400 0302	● The exhaust gas recirculation (EGR) flow is excessively low during the specified driving condition.	● EGR valve stuck closed ● EGRC-BPT valve ● Vacuum hose ● EGRC-solenoid valve ● EGR passage ● EGR temperature sensor ● Exhaust gas leaks

Simpo PDF Merge and Split Unregistered Version - http://www.simpopdf.com

EGR Function (Close) (Cont'd)

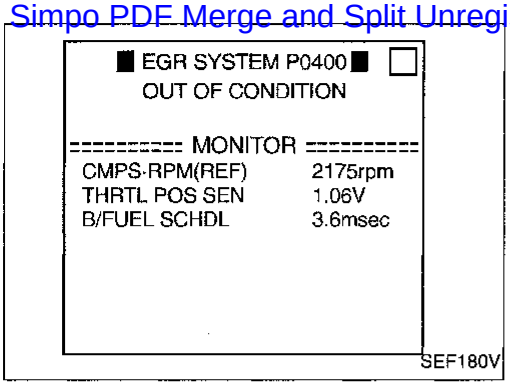

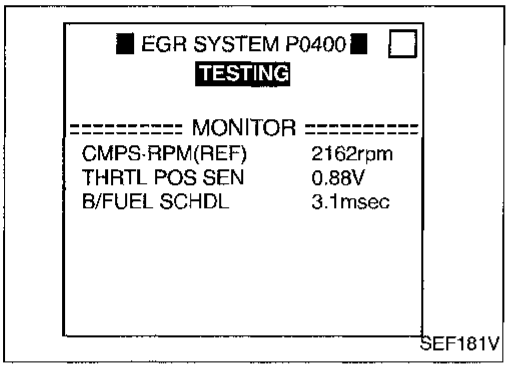

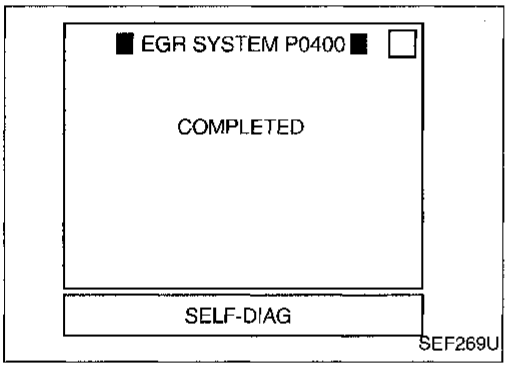

DIAGNOSTIC TROUBLE CODE CONFIRMATION PROCEDURE

CAUTION:
Always drive vehicle at a safe speed.

NOTE:

- **If "DIAGNOSTIC TROUBLE CODE CONFIRMATION PROCEDURE" has been previously conducted, always turn ignition switch "OFF" and wait at least 5 seconds before conducting the next test.**
- **P0400 will not be displayed at "SELF-DIAG RESULTS" mode with CONSULT even though DTC work support test result is "NG".**

TESTING CONDITION:
Always perform the test at a temperature of 5°C (41°F) or higher.

1) Turn ignition switch "ON"
2) Check "COOLAN TEMP/S" in "DATA MONITOR" mode witch CONSULT.
   Confirm COOLAN TEMP/S value is within the range listed below.
   COOLAN TEMP/S: Less than 40°C (104°F)
   If the value is out of range, park the vehicle in a cool place and allow the engine temperature to stabilize. Do not attempt to lower the coolant temperature with a fan or means other than ambient air. Doing so may produce an inaccurate diagnostic result.
3) Start engine and let it idle monitoring the value of "COOLAN TEMP/S". When the engine coolant temperature reaches 70°C (158°F), immediately go to the next step.
4) Select "EGR SYSTEM P0400" of "EGR SYSTEM" in "DTC WORK SUPPORT" mode with CONSULT.
5) Touch "START".
6) Accelerate vehicle to a speed of 40 km/h (25 MPH) once and then stop vehicle with engine running.
   If "COMPLETED" with "OK" appears on CONSULT screen, go to step 9).
   If "COMPLETED" does not appear on CONSULT screen, go to the following step.
7) Check the output voltage of "THRTL POS SEN" (at closed throttle position) and note it.
8) When the following conditions are met, "TESTING" will be displayed on the CONSULT screen. Maintain the conditions until "TESTING" changes to "COMPLETED". (It will take approximately 50 seconds or more.)
   CMPS·RPM (REF): 2,000 - 2,600 rpm
   Vehicle speed: Suitable speed
   B/FUEL SCHDL: 2.5 - 3.5 ms
   THRTL POS SEN: (X + 0.10) – (X + 0.52) V
   X = Voltage value measured at step 7)
   Selector lever: Suitable position
   If "TESTING" is not displayed after 5 minutes, retry from step 2).
9) Make sure that "OK" is displayed after touching "SELF-DIAG RESULTS". If "NG" is displayed, refer to "DIAGNOSTIC PROCEDURE", EC-247.

EGR Function (Close) (Cont'd)

Simpo PDF Merge and Split Unregistered Version - http://www.simpopdf.com

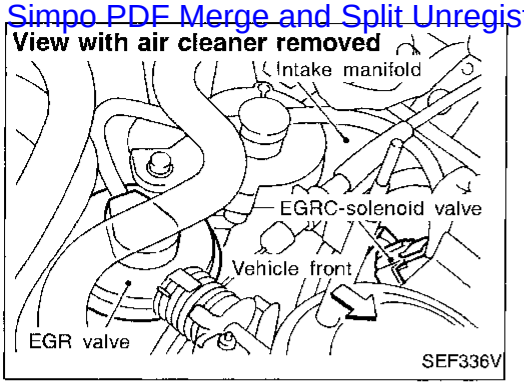

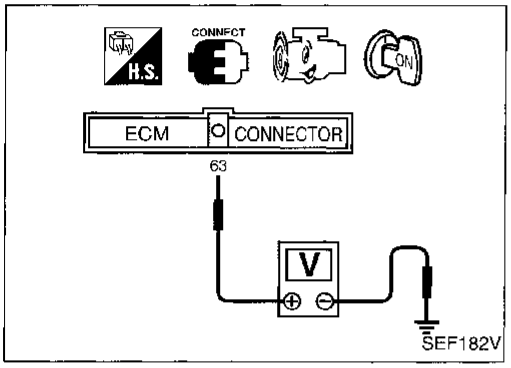

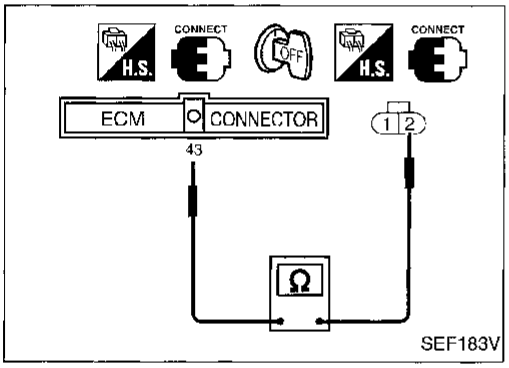

OR

OVERALL FUNCTION CHECK

Use this procedure to check the overall EGR function. During this check, a 1st trip DTC might not be confirmed.

1) Start engine and warm it up to normal operating temperature.
2) Check the EGR valve lifting when revving engine from 2,000 rpm up to 4,000 rpm quickly under no load using the following methods.
   - Disconnect EGRC-solenoid valve harness connector. (The DTC for EGRC-solenoid valve will be displayed, however, ignore it.)

   EGR valve should lift up and down without sticking.

   If NG, go to **A** in DIAGNOSTIC PROCEDURE on EC-247.
3) Check voltage between ECM terminal ⑥③ (EGR temperature sensor) and ground at idle speed.
   Less than 4.5V should exist.
4) Turn ignition switch "OFF".
5) Check harness continuity between EGR temperature sensor harness connector terminal ② and ECM terminal ④③ (ECM ground).
   Continuity should exist.
6) Perform "COMPONENT INSPECTION", "EGR temperature sensor". Refer to EC-249.

Overall function check

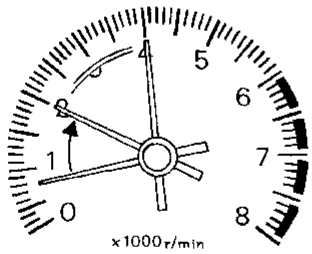

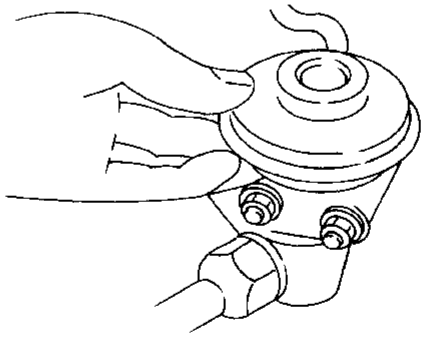

Check the EGR valve lifting when revving engine from 2,000 rpm up to 4,000 rpm.

SEF642Q

Simpo PDF Merge and Split Unregistered Version - http://www.simpopdf.com

EC-EGRC1-01

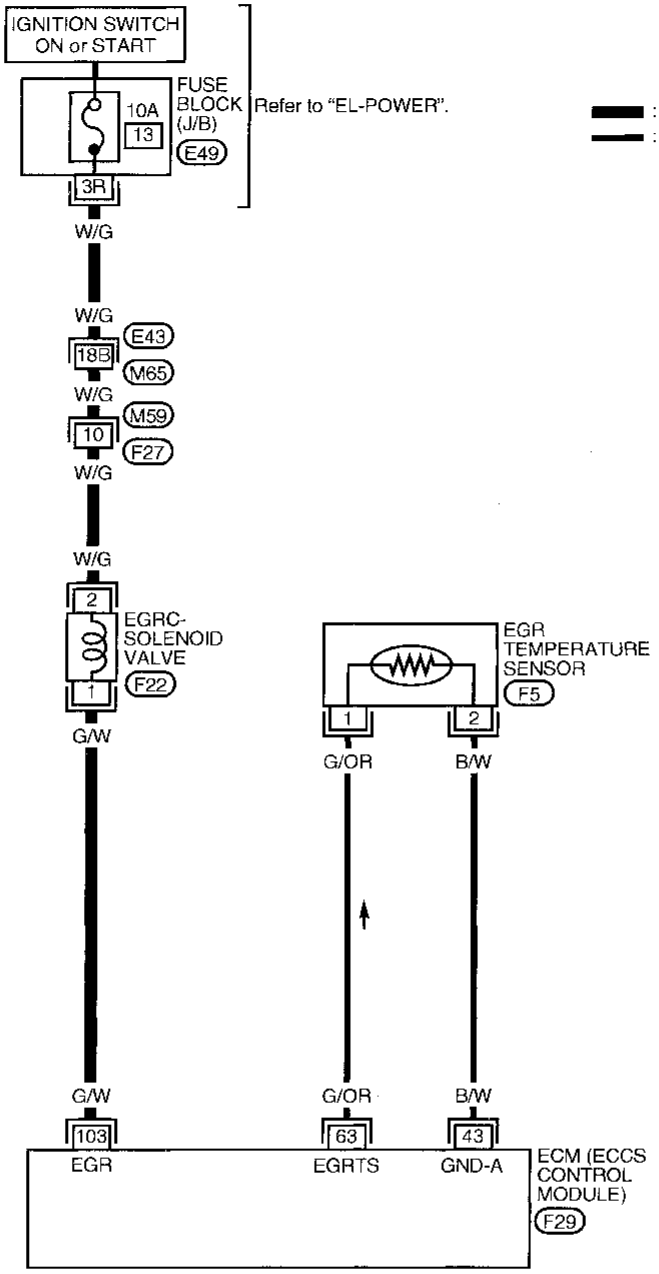

Refer to last page (Foldout page).
M65 , E43

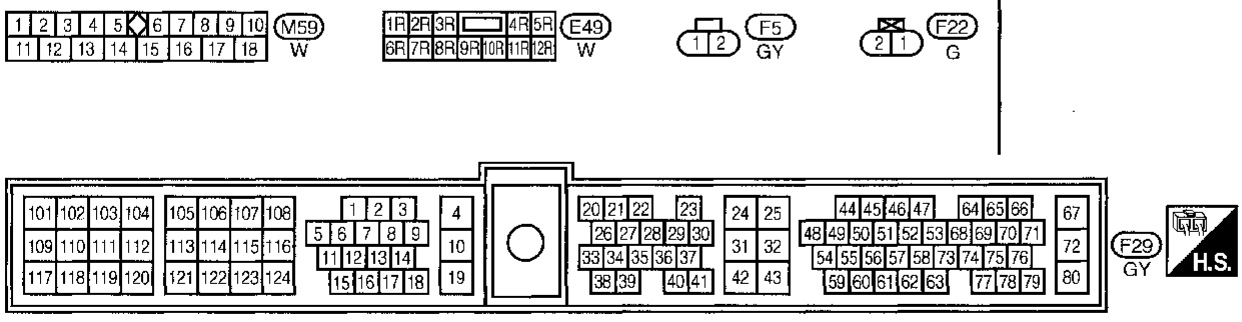

AEC533A

EGR Function (Close) (Cont'd)

Simpo PDF Merge and Split Unregistered Version - http://www.simpopdf.com

DIAGNOSTIC PROCEDURE

A

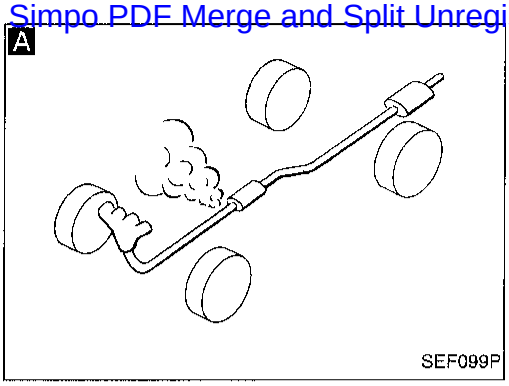

SEF099P

B

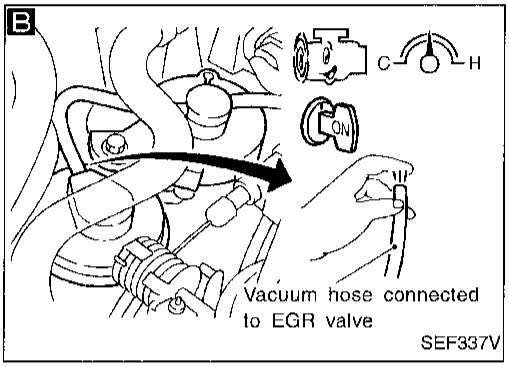

SEF337V

B

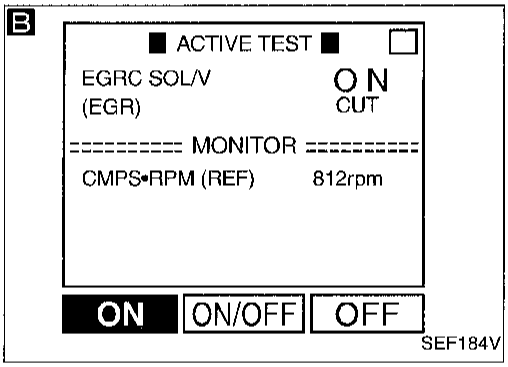

SEF184V

C

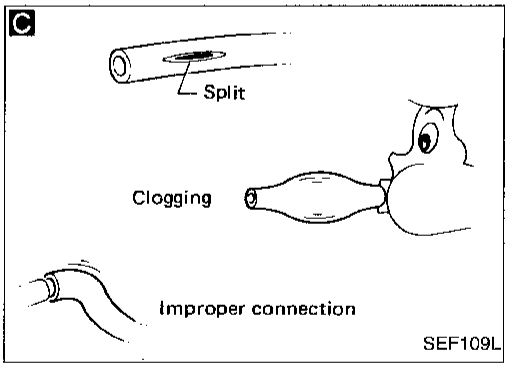

SEF109L

D

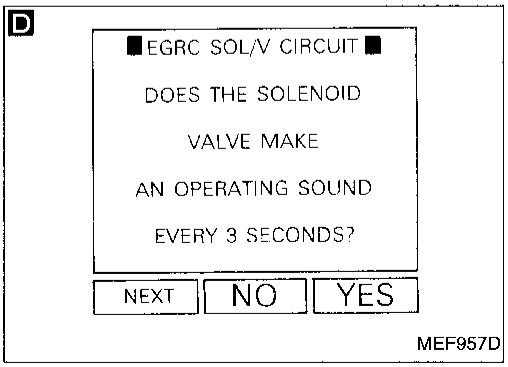

MEF957D

INSPECTION START

A

CHECK EXHAUST SYSTEM.
Check exhaust pipes and muffler for leaks.

NG → Repair or replace exhaust system.

OK ↓

B

CHECK VACUUM SOURCE TO EGR VALVE.
1. Start engine and warm it up to normal operating temperature.
2. Disconnect vacuum hose to EGR valve.
3. Check for vacuum existence.
4. Check for vacuum existence when revving engine from 2,000 rpm up to 4,000 rpm with the following methods.

Vacuum should not exist at idle.

- Select "EGRC SOLENOID VALVE" in "ACTIVE TEST" mode with CONSULT and turn the solenoid valve "OFF".
  Vacuum should exist when revving engine.

OR

- Disconnect EGRC-solenoid valve harness connector. (The 1st trip DTC for EGRC-solenoid valve will be displayed, but ignore it.)
  Vacuum should exist when revving engine.

OK → CHECK COMPONENT (EGR valve). Refer to "COMPONENT INSPECTION", EC-343.

NG → Replace EGR valve.

NG ↓

C

CHECK VACUUM HOSE.
Check vacuum hose for clogging, cracks or improper connection.
Refer to "Vacuum Hose Drawing", EC-13.

NG → Repair or replace vacuum hose.

OK ↓

D

CHECK EGRC-SOLENOID VALVE CIRCUIT.
1. Turn ignition switch "ON".
2. Perform "EGRC SOL/V CIRCUIT" in "FUNCTION TEST" mode with CONSULT.

OR

1. Turn ignition switch "ON".
2. Turn EGRC-solenoid valve "ON" and "OFF" in "ACTIVE TEST" mode with CONSULT and check operating sound.

OR

1. Turn ignition switch "ON".
2. Check operating sound of the solenoid valve when disconnecting and reconnecting EGRC-solenoid valve harness connector. (The DTC or the 1st trip DTC for the EGRC-solenoid valve will be displayed, however, ignore it.)

NG → Check the following.
- Harness connectors (E43), (M65)
- Harness connectors (M59), (F27)
- 10A fuse
- Harness for open or short between fuse block and EGRC-solenoid valve
- Harness for open or short between ECM and EGRC-solenoid valve

If NG, repair open circuit or short to power in harness or connectors.

OK ↓

Ⓐ
(Go to next page.)

EGR Function (Close) (Cont'd)

Simpo PDF Merge and Split Unregistered Version - http://www.simpopdf.com

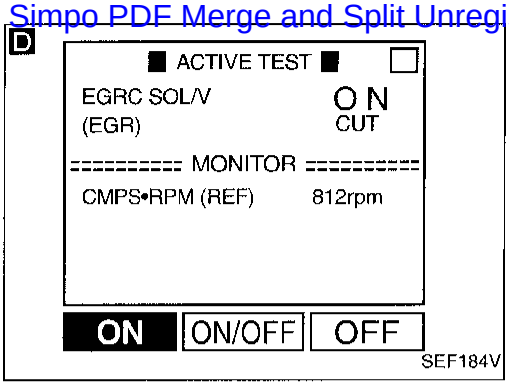

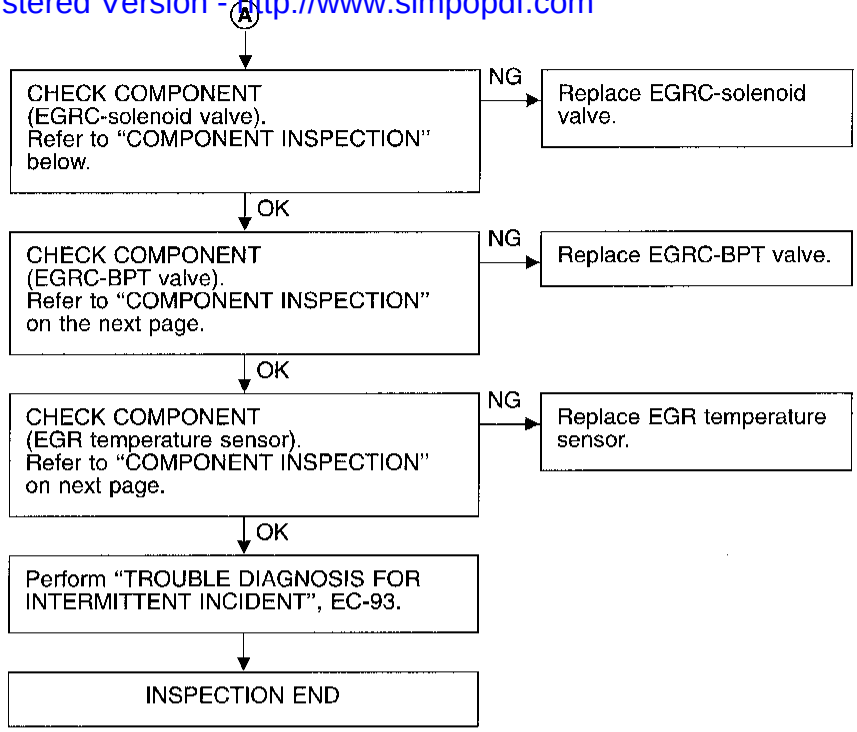

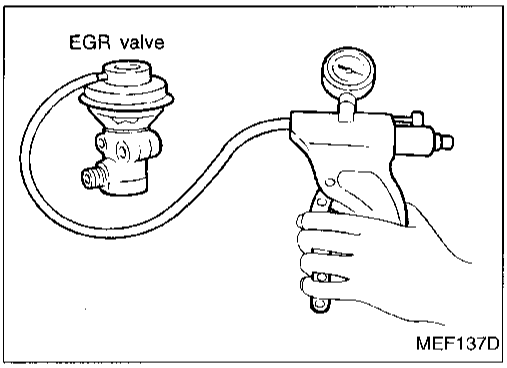

COMPONENT INSPECTION

EGR valve

- Apply vacuum to EGR vacuum port with a hand vacuum pump.

EGR valve spring should lift.

- Check for sticking.

If NG, repair or replace EGR valve.

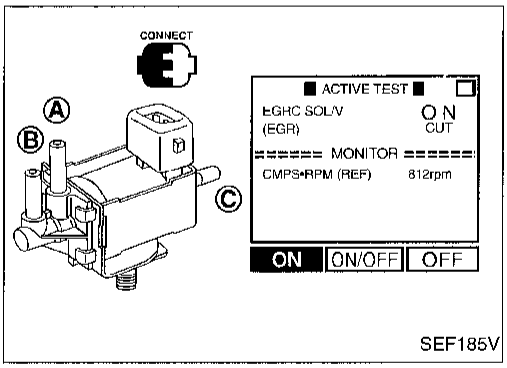

EGRC-solenoid valve

Check air passage continuity.

Perform "EGRC SOLENOID VALVE" in "ACTIVE TEST" mode.

Condition EGRC SOLENOID VALVE	Air passage continuity between Ⓐ and Ⓑ	Air passage continuity between Ⓐ and Ⓒ
ON	Yes	No
OFF	No	Yes

OR

Condition	Air passage continuity between Ⓐ and Ⓑ	Air passage continuity between Ⓐ and Ⓒ
12V direct current supply between terminals ① and ②	Yes	No
No supply	No	Yes

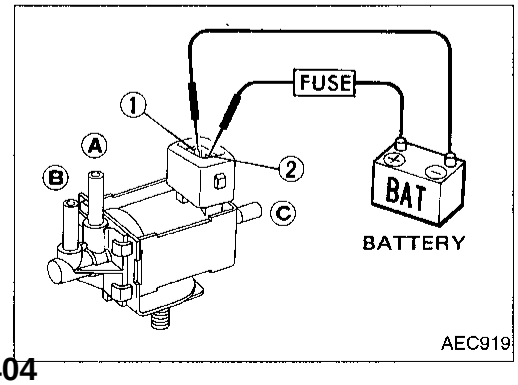

If NG or operation takes more than 1 second, replace EGRC-solenoid valve.

EGR Function (Close) (Cont'd)

Simpo PDF Merge and Split Unregistered Version - http://www.simpopdf.com

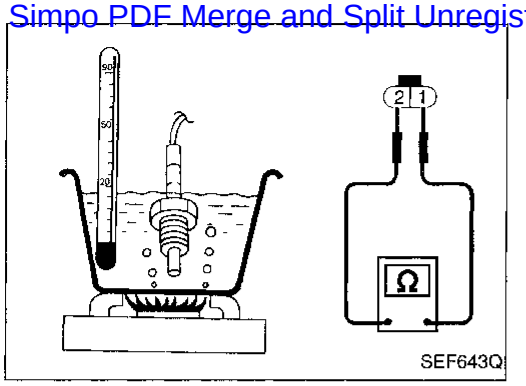

EGR temperature sensor

Check resistance change and resistance value.

<Reference data>

EGR temperature °C (°F)	Voltage V	Resistance MΩ
0 (32)	4.81	7.9 - 9.7
50 (122)	2.82	0.57 - 0.70
100 (212)	0.8	0.08 - 0.10

If NG, replace EGR temperature sensor.

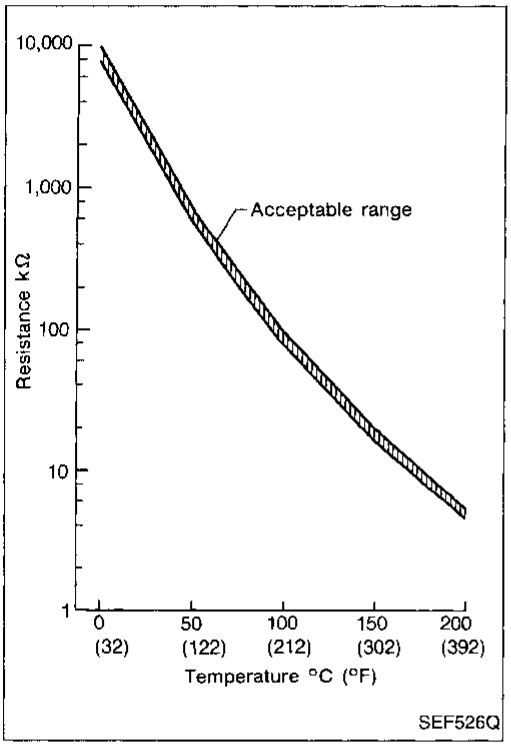

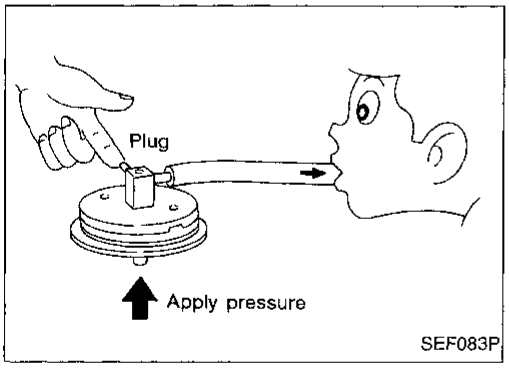

EGRC-BPT valve

1. Plug one of two ports of EGRC-BPT valve.
2. Vacuum from the other port and check for leakage while applying a pressure above 0.981 kPa (100 mmH_2O, 3.94 inH_2O) from under EGRC-BPT valve.
3. If a leakage is noted, replace the valve.

Simpo PDF Merge and Split Unregistered Version - http://www.simpopdf.com

EGRC-BPT Valve Function

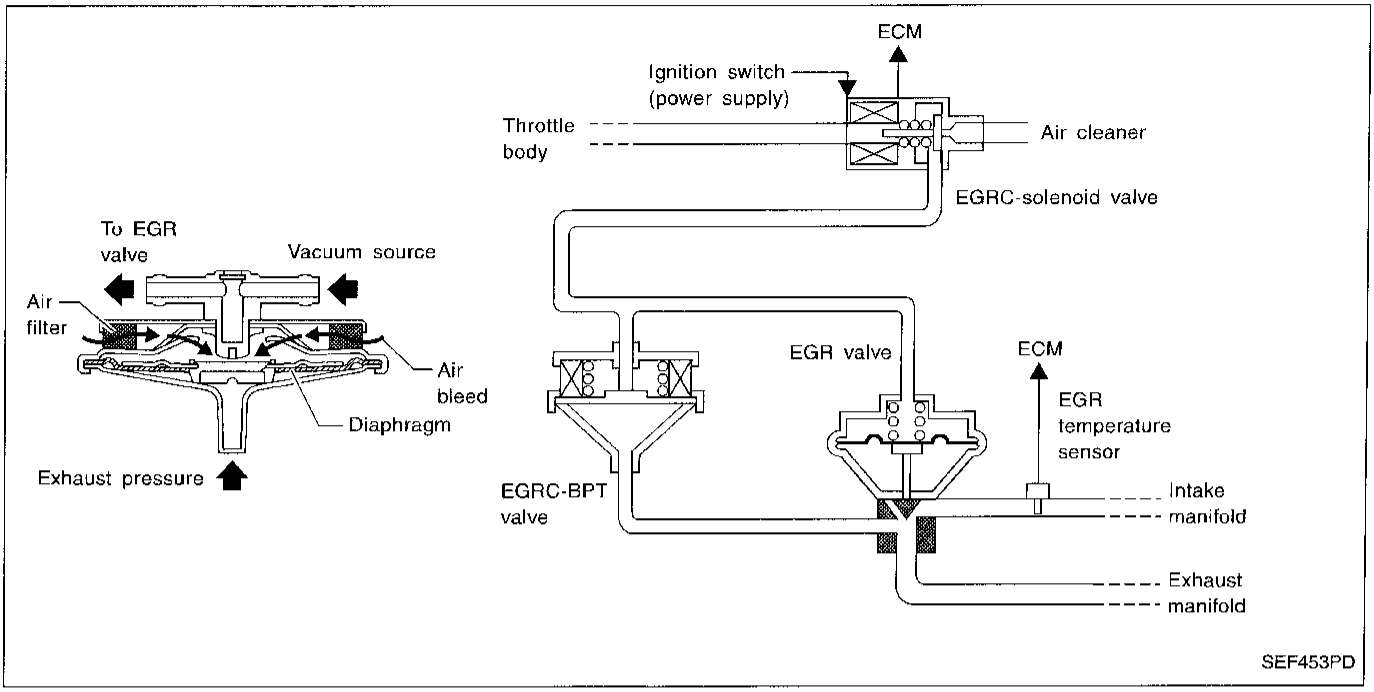

SYSTEM DESCRIPTION

The EGRC-BPT valve monitors exhaust pressure to activate the diaphragm, controlling throttle body vacuum applied to the EGR valve. In other words, recirculated exhaust gas is controlled in response to positioning of the EGR valve or to engine operation.

ON BOARD DIAGNOSIS LOGIC

If too much EGR flow exists due to an EGRC-BPT valve malfunction, off idle engine roughness will increase. If the roughness is large, then the vacuum to the EGR valve is interrupted through the EGRC-solenoid valve. If the engine roughness is reduced at that time, the EGRC-BPT valve malfunction is indicated.

Diagnostic Trouble Code No.	Malfunction is detected when ...	Check Items (Possible Cause)
P0402 0306	● The EGRC-BPT valve does not operate properly.	● EGRC-BPT valve ● EGR valve ● Misconnected rubber tube ● Blocked rubber tube ● Camshaft position sensor ● Blocked exhaust system ● Orifice ● Mass air flow sensor ● EGRC-solenoid valve

Simpo PDF Merge and Split Unregistered Version - http://www.simpopdf.com

EGRC-BPT Valve Function (Cont'd)

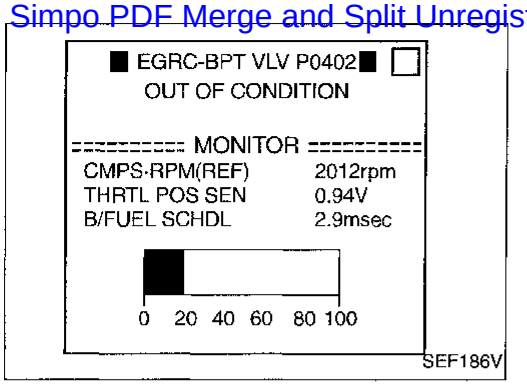

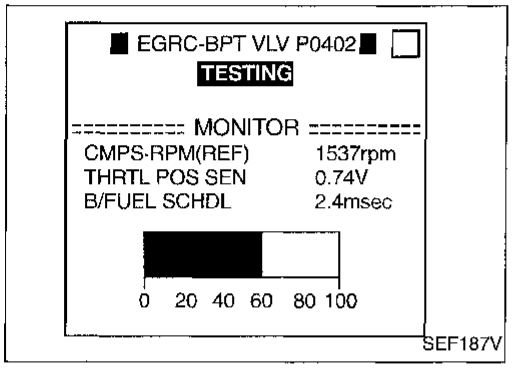

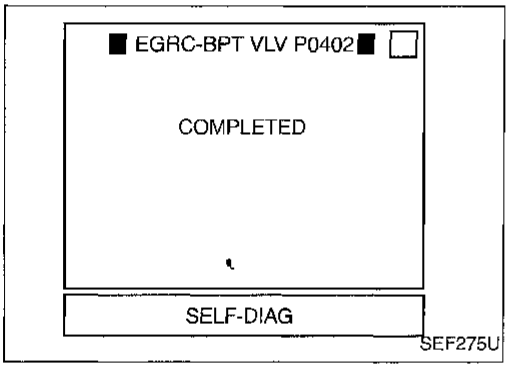

DIAGNOSTIC TROUBLE CODE CONFIRMATION PROCEDURE

CAUTION:
Always perform the test at a temperature of 5°C (41°F) or higher.

NOTE:
If "DIAGNOSTIC TROUBLE CODE CONFIRMATION PROCEDURE" has been previously conducted, always turn ignition switch "OFF" and wait at least 5 seconds before conducting the next test.

TESTING CONDITION:
Always drive vehicle at a safe speed.

1) Start engine and warm it up to normal operating temperature.
2) Stop engine and wait at least 5 seconds.
3) Turn ignition switch "ON" and select "EGRC-BPT/V P0402" of "EGR SYSTEM" in "DTC WORK SUPPORT" mode with CONSULT.
4) Start engine and let it idle.
5) Touch "START".
6) Check the output voltage of "THRTL POS SEN" (at closed throttle position) and note it.
7) When the following conditions are met, "TESTING" will be displayed on the CONSULT screen and the bar chart may increase. Maintain the conditions many times until "COMPLETED" appears.
   Selector lever: Suitable position
   CMPS·RPM (REF): 1,400 - 1,600 rpm (A/T)
   1,600 - 1,800 rpm (M/T)
   Vehicle speed: 30 - 54 km/h (19 - 34 MPH) (A/T)
   30 - 100 km/h (19 - 62 MPH) (M/T)
   B/FUEL SCHDL: 2.3 - 2.5 ms
   THRTL POS SEN: (X + 0.16) – (X + 0.26) V (A/T)
   (X + 0.19) – (X + 0.30) V (M/T)
   X = Voltage value measured at step 6)

- **The bar chart on CONSULT screen indicates the status of this test. However, the test may be finished before the bar chart becomes full scale.**
- **If the bar chart indication does not continue to progress, completely release accelerator pedal once and try to meet the conditions again.**
- **If "TESTING" does not appear on CONSULT screen, retry from step 2).**

8) If "OK" is displayed, carry out "OVERALL FUNCTION CHECK" on next page. If "NG" is displayed, refer to "DIAGNOSTIC PROCEDURE", EC-253.

OR

Simpo PDF Merge and Split Unregistered Version - http://www.simpopdf.com

EGRC-BPT Valve Function (Cont'd)

OVERALL FUNCTION CHECK

Use this procedure to check the overall function of the EGRC-BPT valve. During this check, a 1st trip DTC might not be confirmed.

1) Disconnect the rubber tube to the fuel pressure regulator from the throttle body at the throttle body.
2) Disconnect the rubber tube to the EGRC-solenoid valve at the EGRC-BPT valve.
   Connect the throttle body and the EGRC-BPT valve directly with a rubber tube that has 0.5 mm (0.020 in) dia. orifice. (The intake manifold vacuum will be directly applied to the EGRC-BPT valve.)
3) Start engine.
4) Check for the EGR valve lifting with engine at idle speed.
   EGR valve should remain closed.
5) Check the EGR valve lifting when revving engine from 2,000 rpm up to 4,000 rpm quickly under no load.
   EGR valve should lift up, and go down without sticking when the engine is returned to idle.
6) Check rubber tube between EGRC-solenoid valve and throttle body for misconnection, cracks or blockages.

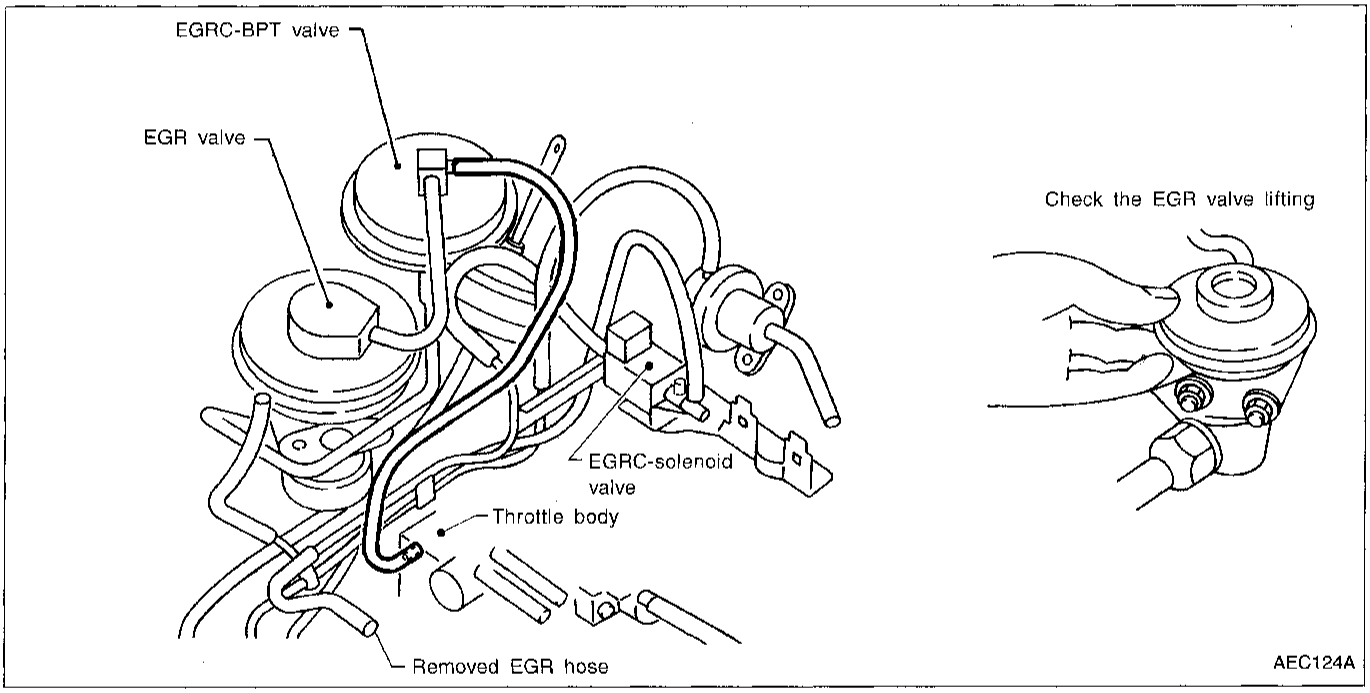

EGRC-BPT Valve Function (Cont'd)

Simpo PDF Merge and Split Unregistered Version - http://www.simpopdf.com

DIAGNOSTIC PROCEDURE

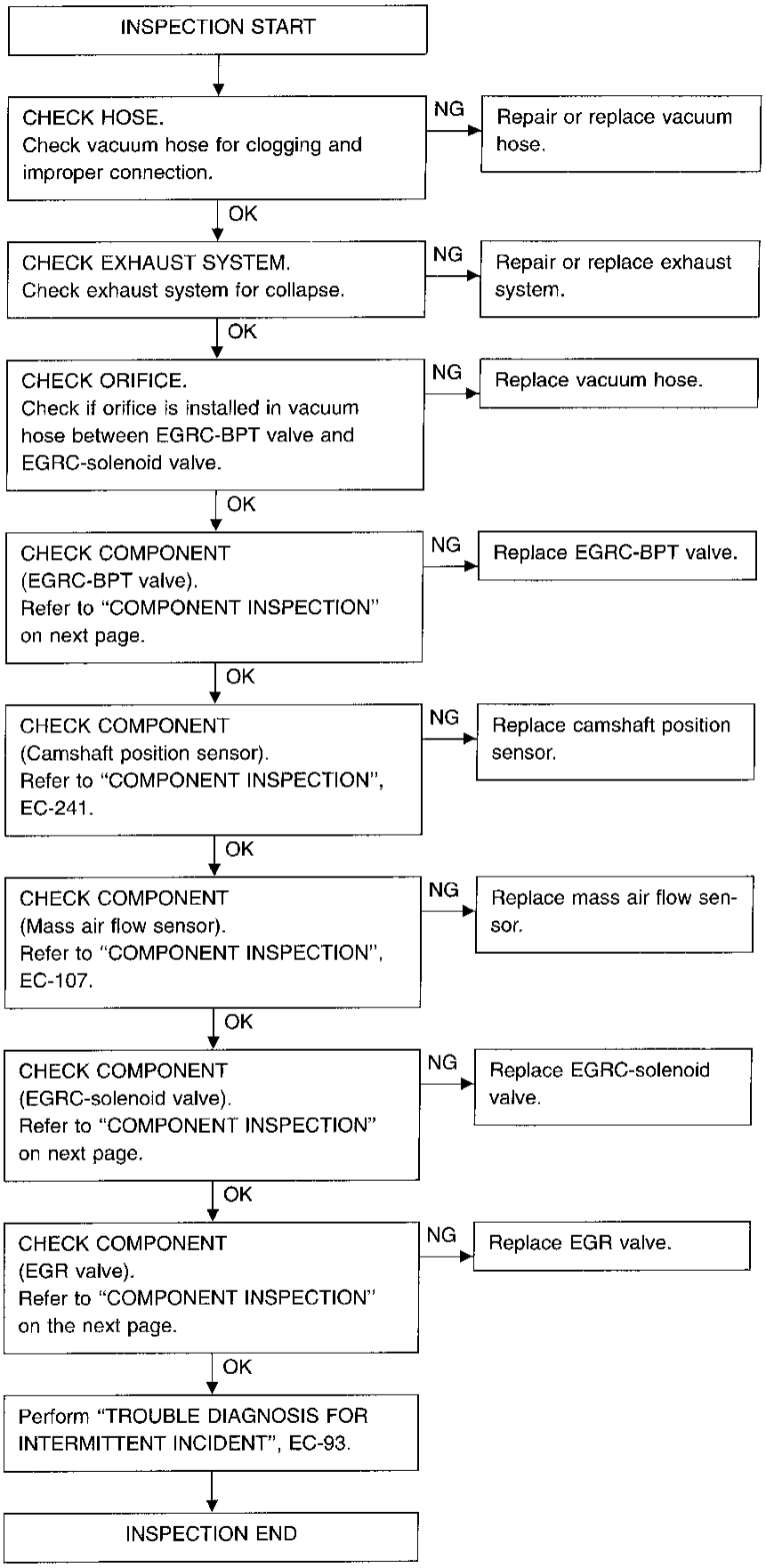

Simpo PDF Merge and Split Unregistered Version - http://www.simpopdf.com

EGRC-BPT Valve Function (Cont'd)

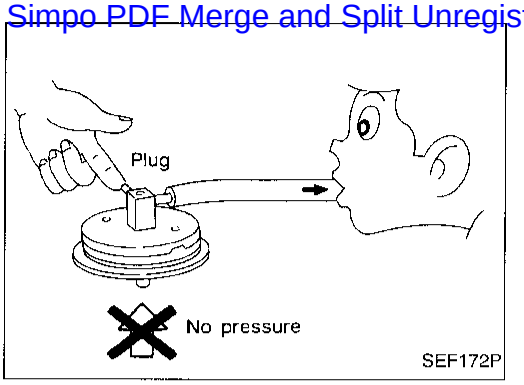

COMPONENT INSPECTION

EGRC-BPT valve

1. Plug one of two ports of EGRC-BPT valve.
2. Vacuum from the other port and check leakage without applying any pressure from under EGR-BPT valve.
   Leakage should exist.

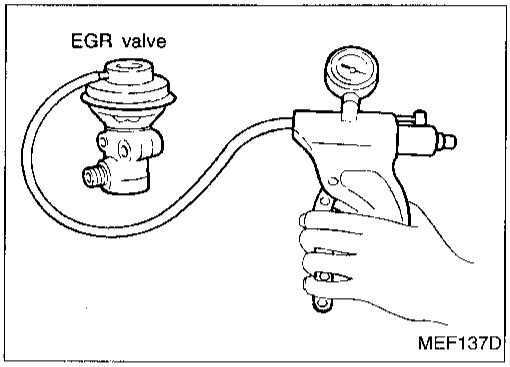

EGR valve

- Apply vacuum to EGR vacuum port with a hand vacuum pump.

EGR valve spring should lift.

- Check for sticking.

If NG, repair or replace EGR valve.

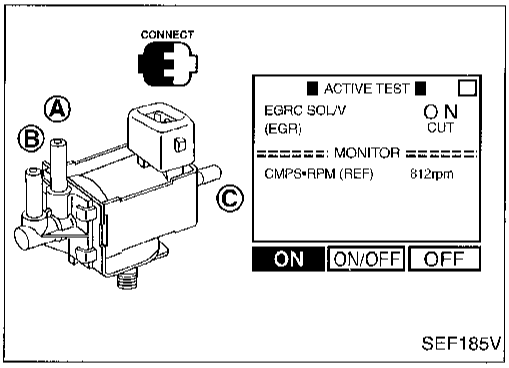

EGRC-solenoid valve

Check air passage continuity.

Perform "EGRC SOLENOID VALVE" in "ACTIVE TEST" mode.

Condition EGRC SOLENOID VALVE	Air passage continuity between Ⓐ and Ⓑ	Air passage continuity between Ⓐ and Ⓒ
ON	Yes	No
OFF	No	Yes

OR

Condition	Air passage continuity between Ⓐ and Ⓑ	Air passage continuity between Ⓐ and Ⓒ
12V direct current supply between terminals ① and ②	Yes	No
No supply	No	Yes

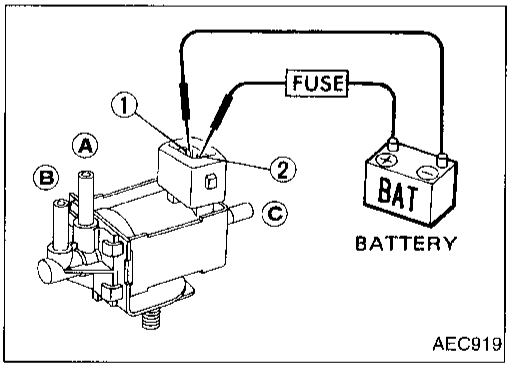

If NG or operation takes more than 1 second, replace EGRC-solenoid valve.

Simpo PDF Merge and Split Unregistered Version - http://www.simpopdf.com

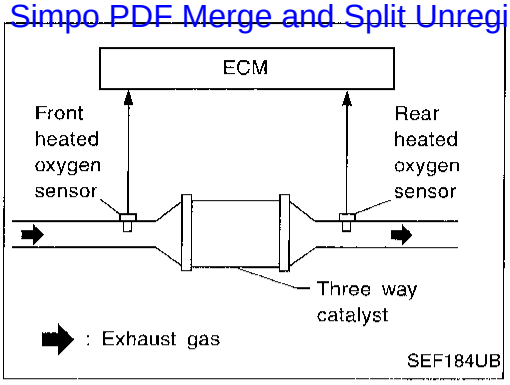

Three-Way Catalyst Function

ON BOARD DIAGNOSIS LOGIC

The ECM monitors the switching frequency ratio of front and rear heated oxygen sensors.
Three-way catalyst* with high oxygen storage capacity will indicate a low switching frequency of rear heated oxygen sensor. As oxygen storage capacity decreases, the rear heated oxygen sensor switching frequency will increase.
When the frequency ratio of front and rear heated oxygen sensors approaches a specified limit value, the three-way catalyst* malfunction is diagnosed.
*: Warm-up three-way catalyst (For California)

Diagnostic Trouble Code No.	Malfunction is detected when ...	Check Items (Possible Cause)
P0420 0702	● Three-way catalyst* does not operate properly. ● Three-way catalyst* does not have enough oxygen storage capacity.	● Three-way catalyst* ● Exhaust tube ● Intake air leaks ● Injectors ● Injector leaks ● Spark plug ● Improper ignition timing

*: Warm-up three-way catalyst (For California)

Simpo PDF Merge and Split Unregistered Version - http://www.simpopdf.com

Three-Way Catalyst Function (Cont'd)

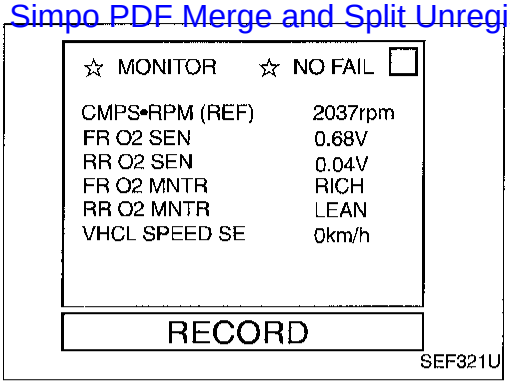

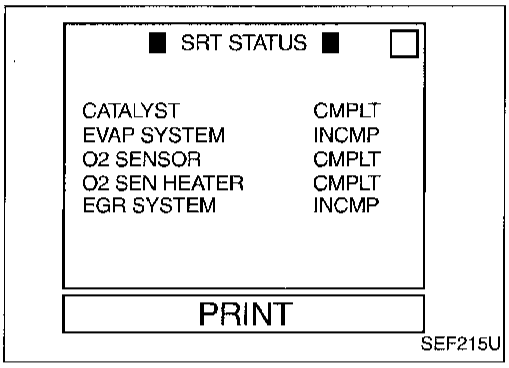

DIAGNOSTIC TROUBLE CODE CONFIRMATION PROCEDURE

CAUTION:
Always drive vehicle at a safe speed.

NOTE:
If "DIAGNOSTIC TROUBLE CODE CONFIRMATION PROCEDURE" has been previously conducted, always turn ignition switch "OFF" and wait at least 5 seconds before conducting the next test.

1) Start engine and warm it up to normal operating temperature.
2) Set "MANU TRIG" and "HI SPEED", then select "FR O2 SENSOR", "RR O2 SENSOR", "FR O2 MNTR", "RR O2 MNTR" in "DATA MONITOR" mode with CONSULT.
3) Touch "RECORD" on CONSULT screen with engine speed held at 2,000 rpm constantly under no load.
4) Make sure that the switching frequency between "RICH" and "LEAN" of "RR O2 MNTR" is much less than that of "FR O2 MNTR" as shown below.
   Switching frequency ratio =

   $$\frac{\text{Rear heated oxygen sensor switching frequency}}{\text{Front heated oxygen sensor switching frequency}}$$

   This ratio should be less than 0.75.
   If the ratio is greater than above, the warm-up three-way catalyst (Models for California), the three-way catalyst (Models except for California) is not operating properly.
   If the "FR O2 MNTR" does not indicate "RICH" and "LEAN" periodically more than 5 times within 10 seconds at step 3), perform "TROUBLE DIAGNOSES FOR DTC P0133" first. (See EC-162.)
   If the result is NG, go to "DIAGNOSTIC PROCEDURE", EC-258.
   If the result is OK, go to following step.
5) Select "AUTO TRIG" in "DATA MONITOR" mode with CONSULT.
6) Drive vehicle at a speed of approximately 84 to 96 km/h (52 to 60 MPH) with the following for at least 10 consecutive minutes.
   (Drive the vehicle in an area where vehicle speed and accelerator pressure can be held steady and constant.)
   M/T: 5th position
   A/T: D position ("OD" ON)
   If the result is NG, go to "DIAGNOSTIC PROCEDURE", EC-258.
7) Select "SRT STATUS" in "DTC CONFIRMATION" mode with CONSULT.
8) Verify that "CATALYST" is "CMPLT".
   If not "CMPLT", repeat the test from step 5).

Three-Way Catalyst Function (Cont'd)

Simpo PDF Merge and Split Unregistered Version - http://www.simpopdf.com

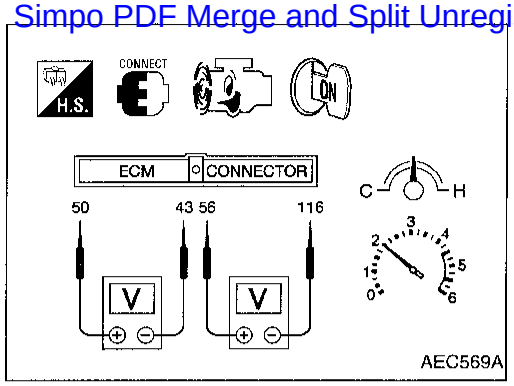

OR

OVERALL FUNCTION CHECK

Use this procedure to check the overall function of the three-way catalyst.

During this check, a 1st trip DTC might not be confirmed.

1) Start engine and warm it up to normal operating temperature.
2) Set voltmeters probes between ECM terminals 50 (front heated oxygen sensor signal) and 43 (ECM ground), and ECM terminals 56 (rear heated oxygen sensor signal) and 116 (ECM ground).
3) Keep engine speed at 2,000 rpm constant under no load.
4) Make sure that the voltage switching frequency (high & low) between ECM terminals 56 and 116 is much less than that of ECM terminals 50 and 43.

Switching frequency ratio =

$$\frac{\text{Rear heated oxygen sensor voltage switching frequency}}{\text{Front heated oxygen sensor voltage switching frequency}}$$

This ratio should be less than 0.75.

If the ratio is greater than above, it means three-way catalyst does not operate properly.

Note: If the voltage at terminal 50 does not switch periodically more than 5 times within 10 seconds at step 3, perform TROUBLE DIAGNOSIS FOR DTC P0133 first. (See EC-144.)

Three-Way Catalyst Function (Cont'd)

Simpo PDF Merge and Split Unregistered Version - http://www.simpopdf.com

DIAGNOSTIC PROCEDURE

A

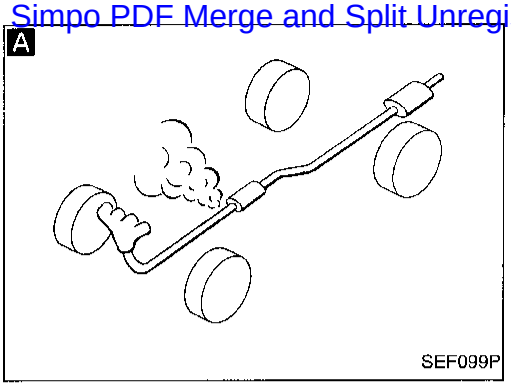

SEF099P

B

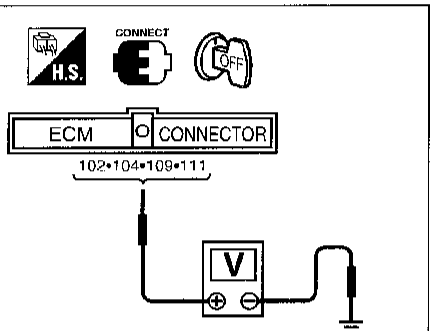

SEF189V

C

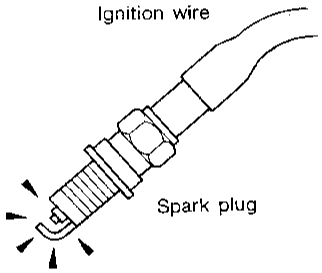

SEF282G

INSPECTION START

CHECK EXHAUST SYSTEM.
Visually check exhaust tubes and muffler for dent.

NG → Repair or replace it.

OK

A

CHECK EXHAUST AIR LEAK.
Start engine and run it at idle. Listen for an exhaust air leak before the warm-up three-way catalyst (California model), the three-way catalyst (Non-California model).

NG → Repair or replace.

OK

CHECK INTAKE AIR LEAK.
Start engine and run it at idle. Listen for an intake air leak after the mass air flow sensor.

NG → Repair or replace.

OK

B

CHECK INJECTORS.
1. Refer to WIRING DIAGRAM for Injectors, EC-404.
2. Stop engine and then turn ignition switch "ON".
3. Check voltage between ECM terminals (102), (104), (109) and (111) and ground with CONSULT or tester.
   Battery voltage should exist.

NG → Perform TROUBLE DIAGNOSIS FOR NON-DETECTABLE ITEMS, "Injector", EC-404. Repair harness or connectors.

OK

C

CHECK IGNITION SPARK.
1. Disconnect ignition wire from spark plug.
2. Connect a known good spark plug to the ignition wire.
3. Place end of spark plug against a suitable ground and crank engine.
4. Check for spark.

NG → CHECK COMPONENT (Ignition wires). Refer to "COMPONENT INSPECTION", EC-226.

OK → Check ignition coil, power transistor and their circuits. Refer to EC-315.

NG → Replace.

OK

Check for ignition timing.
Refer to "Basic Inspection", EC-71.

NG → Adjust ignition timing.

OK

1. Turn ignition switch "OFF".
2. Remove injector assembly.
   Refer to EC-27.
   Keep fuel hose and all injectors connected to injector gallery.

Ⓐ
(Go to next page.)

Simpo PDF Merge and Split Unregistered Version - http://www.simpopdf.com

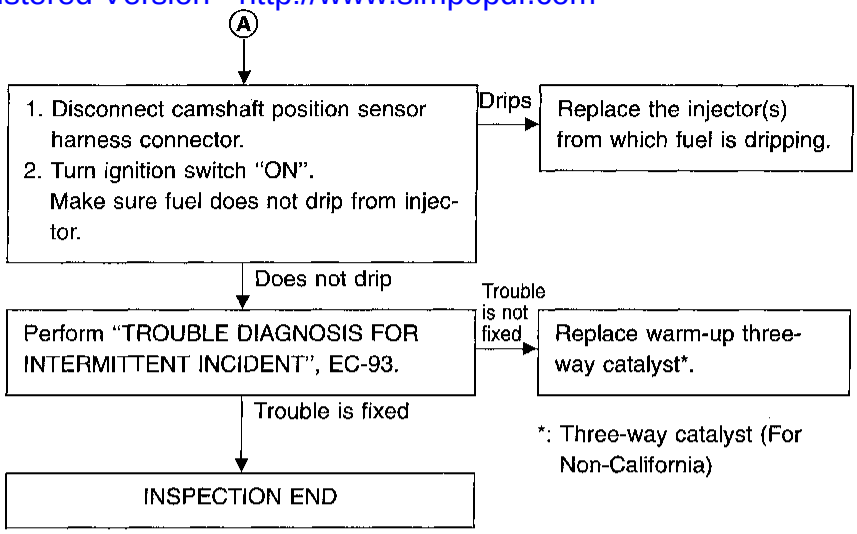

Simpo PDF Merge and Split Unregistered Version - http://www.simpopdf.com

Evaporative Emission (EVAP) Control System (Small Leak) (Negative Pressure)

Note: If both DTC P0440 and P1448 are displayed, perform TROUBLE DIAGNOSIS FOR DTC P1448 first. (See EC-362.)

ON BOARD DIAGNOSIS LOGIC

This diagnosis detects leaks in the EVAP purge line using engine intake manifold vacuum.
If pressure does not increase, the ECM will check for leaks in the line between the fuel tank and EVAP canister purge volume control solenoid valve under the following "Vacuum test" conditions.
The vacuum cut valve bypass valve is opened to clear the line between the fuel tank and the EVAP canister purge volume control solenoid valve. The EVAP canister vent control valve will then be closed to shut the EVAP purge line off. The EVAP canister purge volume control solenoid valve is opened to depressurize the EVAP purge line using intake manifold vacuum. After this occurs, the EVAP canister purge volume control solenoid valve will be closed.

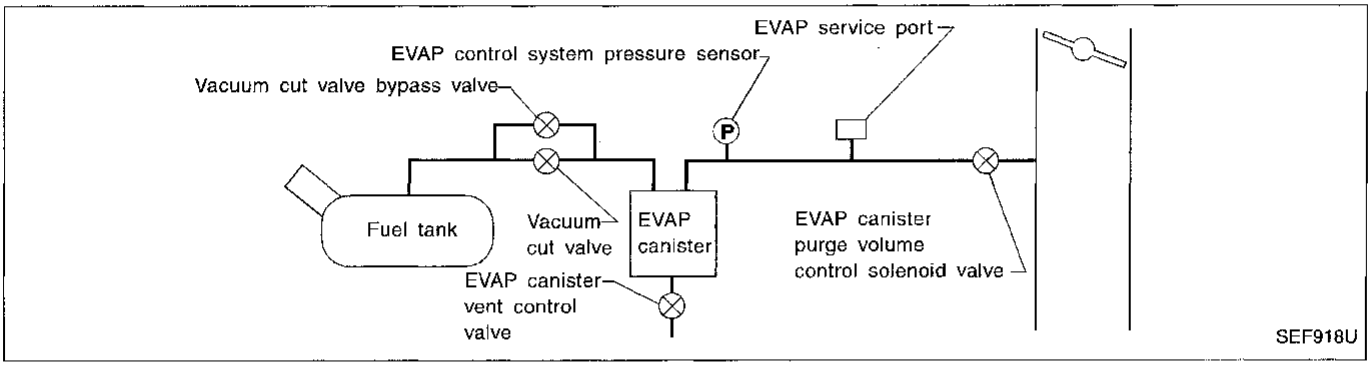

Diagnostic Trouble Code No.	Malfunction is detected when	Check Items (Possible Cause)
P0440 0705	● EVAP control system has a leak. ● EVAP control system does not operate properly.	● Incorrect fuel tank vacuum relief valve ● Incorrect fuel filler cap used ● Fuel filler cap remains open or fails to close. ● Foreign matter caught in fuel filler cap. ● Leak is in line between intake manifold and EVAP canister purge volume control solenoid valve. ● Foreign matter caught in EVAP canister vent control valve. ● EVAP canister or fuel tank leaks ● EVAP purge line (pipe and rubber tube) leaks ● EVAP purge line rubber tube bent. ● Blocked or bent rubber tube to EVAP control system pressure sensor ● Loose or disconnected rubber tube ● EVAP canister vent control valve and the circuit ● EVAP canister purge volume control solenoid valve and the circuit ● Absolute pressure sensor ● Tank fuel temperature sensor ● MAP/BARO switch solenoid valve and the circuit ● Blocked or bent rubber tube to MAP/BARO switch solenoid valve ● O-ring of EVAP canister vent control valve is missing or damaged. ● Water separator ● EVAP canister is saturated with water. ● EVAP control system pressure sensor

CAUTION:

- **Use only a genuine NISSAN fuel filler cap as a replacement. If an incorrect fuel filler cap is used, the MIL may come on.**
- **If the fuel filler cap is not tightened properly, the MIL may come on.**
- **Use only a genuine rubber tube as a replacement.**

Simpo PDF Merge and Split Unregistered Version - http://www.simpopdf.com

Evaporative Emission (EVAP) Control System (Small Leak) (Negative Pressure) (Cont'd)

DIAGNOSTIC TROUBLE CODE CONFIRMATION PROCEDURE

NOTE:

- **If both DTC P0440 and P1448 are displayed, perform TROUBLE DIAGNOSIS FOR DTC P1448 first. (See EC-373.)**
- **If "DIAGNOSTIC TROUBLE CODE CONFIRMATION PROCEDURE" has been previously conducted, always turn ignition switch "OFF" and wait at least 5 seconds before conducting the next test.**

TESTING CONDITION:

- **Perform "DTC WORK SUPPORT" when the fuel level is less than 3/4 full and vehicle is placed on flat level surface.**
- **Always perform test at a temperature of 5 to 30°C (41 to 86°F).**
- **It is better that the fuel level is low.**

1) Turn ignition switch "ON".
2) Turn ignition switch "OFF" and wait at least 5 seconds.
3) Turn ignition switch "ON" and select "DATA MONITOR" mode with CONSULT.
4) Make sure that the following conditions are met.
   COOLAN TEMP/S: 0 - 70°C (32 - 158°F)
   INT/A TEMP SE: 5 - 60°C (41 - 140°F)
5) Select "EVAP SML LEAK P0440" of "EVAPORATIVE SYSTEM" in "DTC WORK SUPPORT" mode with CONSULT.
   Follow the instruction displayed.

NOTE:

- **If the CONSULT screen shown at left is displayed, stop the engine and stabilize the vehicle temperature at 25°C (77°F) or cooler. After "TANK F/TMP SE" becomes less than 30°C (86°F), retest. (Use a fan to reduce the stabilization time.)**
- **If the engine speed cannot be maintained within the range displayed on CONSULT screen, go to "Basic Inspection", EC-71.**
- **The engine idle portion of this test (See illustration at left.) will take approximately 5 minutes.**

6) Make sure that "OK" is displayed.
   If "NG" is displayed, refer to "DIAGNOSTIC PROCEDURE", EC-263.

NOTE:

- **Make sure that EVAP hoses are connected to EVAP canister purge volume control solenoid valve properly.**

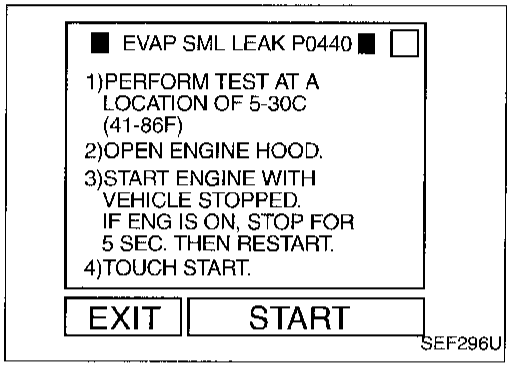

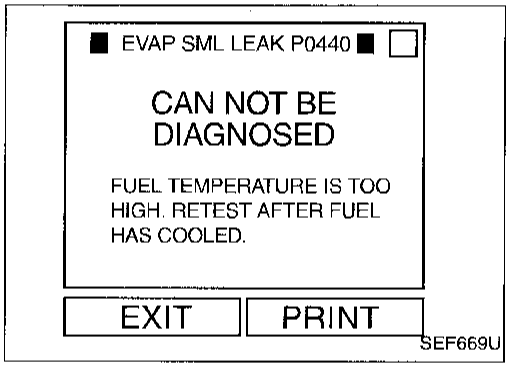

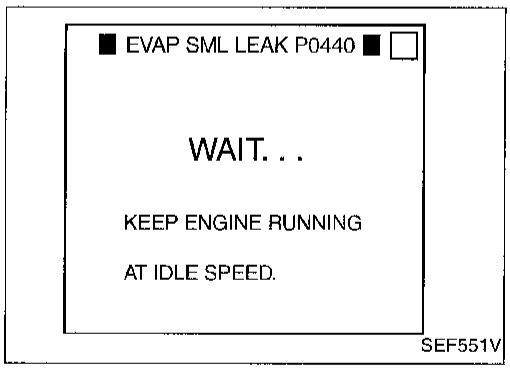

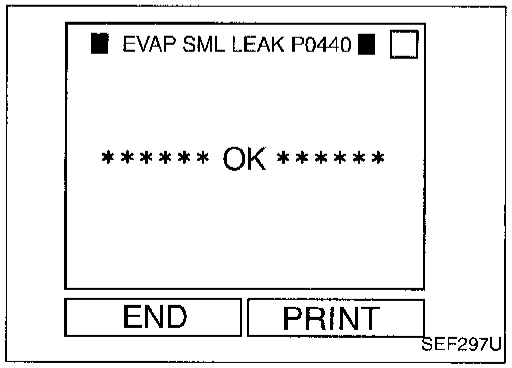

Simpo PDF Merge and Split Unregistered Version - http://www.simpopdf.com

Evaporative Emission (EVAP) Control System (Small Leak) (Negative Pressure) (Cont'd)

OR

NOTE:
Be sure to read the explanation of "Driving pattern" on EC-39 before driving vehicle.

1) Start engine.
2) Drive vehicle according to "Driving pattern", EC-39.
3) Stop vehicle.
4) Select "MODE 1" with GST.
- If SRT of EVAP system is not set yet, go to the following step.
- If SRT of EVAP system is set, the result will be OK.

5) Turn ignition switch "OFF" and wait at least 5 seconds.
6) Start engine.

It is not necessary to cool engine down before driving.

7) Drive vehicle again according to the "Driving pattern", EC-39.
8) Stop vehicle.
9) Select "MODE 3" with GST.
- If P1447 is displayed on the screen, go to "TROUBLE DIAGNOSIS FOR DTC P1447", EC-367.
- If P0440 is displayed on the screen, go to "DIAGNOSTIC PROCEDURE", EC-263.
- If P1440 is displayed on the screen, go to "DIAGNOSTIC PROCEDURE" in "TROUBLE DIAGNOSIS FOR DTC P1440", EC-348.
- If P0440, P1440 and P1447 are not displayed on the screen, go to the following step.

10) Select "MODE 1" with GST.
- If SRT of EVAP system is set, the result will be OK.
- If SRT of EVAP system is not set, go to step 6).

OR

NOTE:
- **Be sure to read the explanation of "Driving pattern" on EC-39 before driving vehicle.**
- **It is better that the fuel level is low.**

1) Start engine.
2) Drive vehicle according to "Driving pattern", EC-39.
3) Stop vehicle.
4) Turn ignition switch "OFF" and wait at least 5 seconds.
5) Perform the step 1) to 4) again.
6) Turn ignition switch "ON" and perform "Diagnostic Test Mode II (Self-diagnostic results)" with ECM.

Simpo PDF Merge and Split Unregistered Version - http://www.simpopdf.com

Evaporative Emission (EVAP) Control System (Small Leak) (Negative Pressure) (Cont'd)

DIAGNOSTIC PROCEDURE

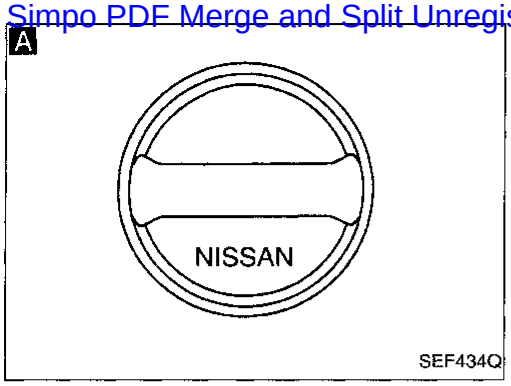

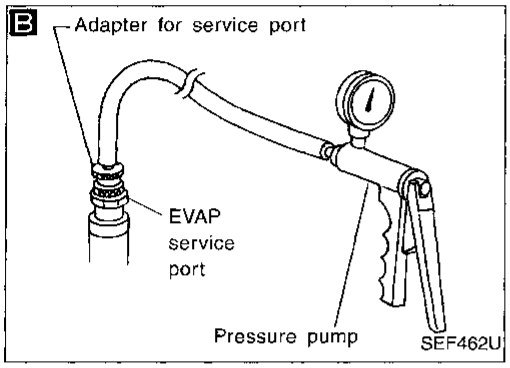

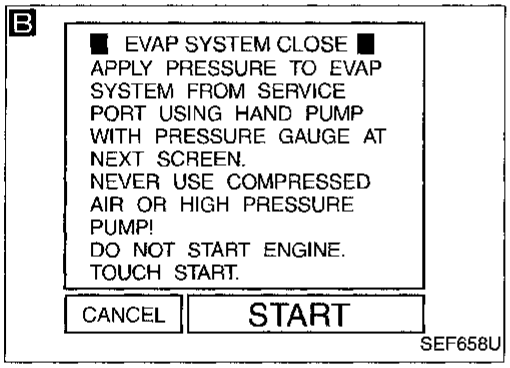

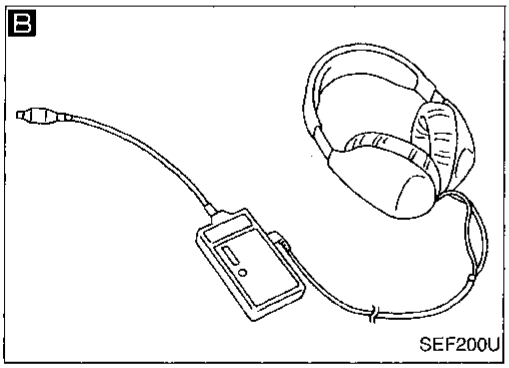

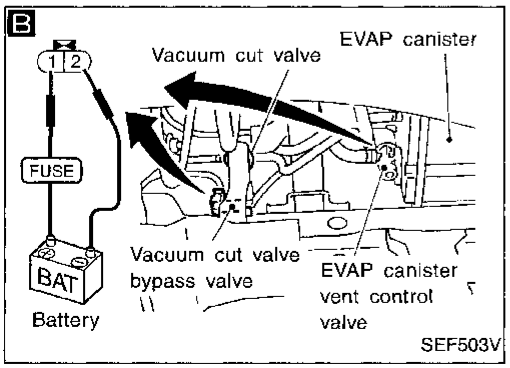

INSPECTION START

A

CHECK FUEL FILLER CAP.
1. Check for genuine NISSAN fuel filler cap design.
2. Check for air releasing sound while opening the fuel filler cap.
   If the air releasing sound is heard, go to **B** .
   If the air releasing sound is not heard, check the following.
   Was the cap tightened properly?
   If Yes, check fuel filler cap vacuum relief valve.
   Refer to "EVAPORATIVE EMISSION SYSTEM", EC-20.
   If No, open fuel filler cap, then clean cap and filler neck thread using air blower. Retighten until ratcheting sound is heard.

NG → If genuine NISSAN filler cap is not used, replace with genuine NISSAN fuel filler cap.

OK ↓

B

CHECK FOR EVAP LEAK.
- **Never use compressed air or high pressure pump.**
- **Improper installation of service port may cause leaking.**
- **Do not exceed 4.12 kPa (0.042 kg/cm², 0.6 psi) of pressure in the system.**

To locate EVAP leak portion, proceed with the following steps.
1. Install the EVAP service port adapter and the pressure pump securely.
2. Turn ignition switch "ON".
   Select "EVAP SYSTEM CLOSE" of "WORK SUPPORT" mode with CONSULT.
3. Touch "START" and apply vacuum into the EVAP line until the pressure indicator reaches the middle of bar graph.
4. Using EVAP leak detector, locate the leak portion. For the leak detector, refer to instruction manual for more details.
   Refer to "EVAPORATIVE EMISSION SYSTEM", EC-20.

NG → Repair or replace.

OR

2. Turn ignition switch "OFF".
3. Apply 12 volts DC to EVAP canister vent control valve. The valve will close. (Continue to apply 12 volts until the end of test.)
4. Apply 12 volts DC to vacuum cut valve bypass valve. The valve will open. (Continue to apply 12 volts until the end of test.)
5. Pressurize the EVAP line using pressure pump with 1.3 to 2.7 kPa (10 to 20 mmHg, 0.39 to 0.79 inHg).
6. Locate the leak using a leak detector. Refer to the instruction manual for more details about the leak detector. Refer to "Evaporative Emission Line Drawing", EC-23.

OK ↓

Ⓐ (Go to next page.)

Simpo PDF Merge and Split Unregistered Version - http://www.simpopdf.com

Evaporative Emission (EVAP) Control System (Small Leak) (Negative Pressure) (Cont'd)

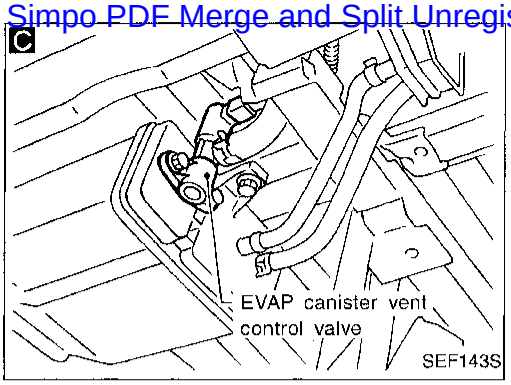

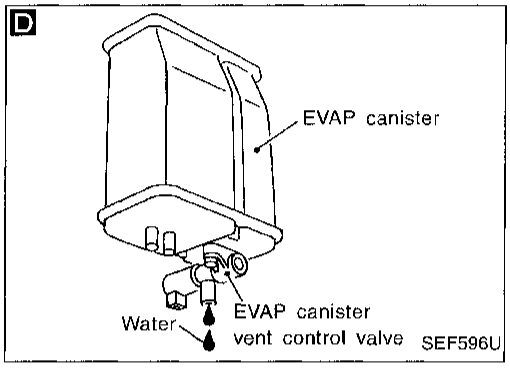

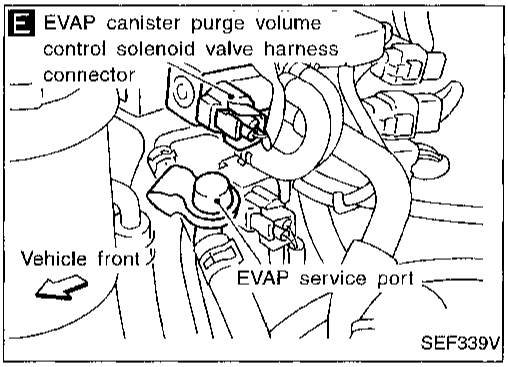

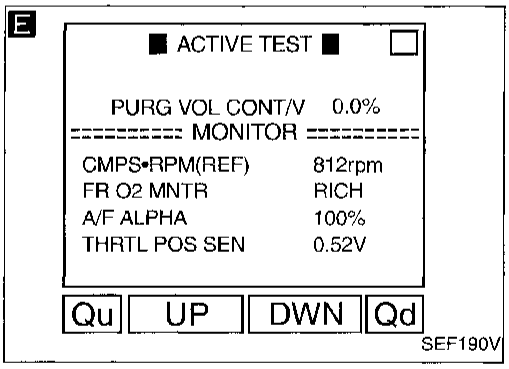

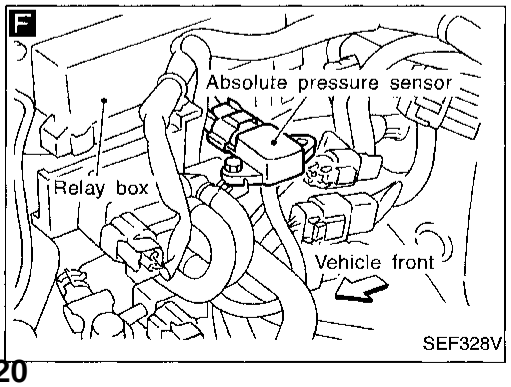

Ⓐ

C

CHECK COMPONENT AND CIRCUIT
(EVAP canister vent control valve, O-ring and water separator).
Refer to "TROUBLE DIAGNOSIS FOR DTC P0446" for circuit, EC-276 and "COMPONENT INSPECTION", EC-280.

NG → Repair or replace EVAP canister vent control valve and O-ring or harness/ connector.

OK ↓

D

CHECK IF EVAP CANISTER SATURATED WITH WATER.
1. Remove EVAP canister with EVAP canister vent control valve attached.
2. Check if water will drain from the EVAP canister. If it will, weigh the EVAP canister with the vent control valve attached.
   If the weight is:
   More than 1.8 kg (4.0 lb) → NG
   Less than 1.8 kg (4.0 lb) → OK

NG → Check the following.
1. Visually check the EVAP canister for damage.
2. Check hose connection between EVAP canister and water separator for clogging and poor connection.
3. Check water separator. Refer to "COMPONENT INSPECTION", EC-366.

If NG, repair hose or replace EVAP canister or water separator.

OK ↓

E

CHECK COMPONENT (EVAP canister purge volume control solenoid valve).

1. Disconnect EVAP hose to EVAP canister purge volume control solenoid valve at EVAP service port.
2. Start engine.
3. Perform "PURG VOL CONT/V" in "ACTIVE TEST" mode.
4. Touch "Qu" on CONSULT screen to increase "PURG VOL CONT/V" opening to 100.0%.
5. Check EVAP hose for vacuum.
   Vacuum should exist.

— OR —

1. Start engine and warm it up to normal operating temperature.
2. Stop engine.
3. Disconnect EVAP hose to EVAP canister purge volume control solenoid valve.
4. Start engine and let it idle for at least 60 seconds.
5. Check EVAP hose for vacuum.
   Vacuum should exist.

NG → Check the following.
- EVAP canister purge volume control solenoid valve
  Refer to "COMPONENT INSPECTION", EC-266.
- Vacuum hoses for clogging or disconnection
  Refer to "Vacuum Hose Drawing", EC-13.

OK ↓

F

CHECK COMPONENT
(Absolute pressure sensor).
Refer to "COMPONENT INSPECTION", EC-353.

NG → Replace absolute pressure sensor.

OK ↓

Ⓑ

(Go to next page.)

Evaporative Emission (EVAP) Control System (Small Leak) (Negative Pressure) (Cont'd)

Simpo PDF Merge and Split Unregistered Version - http://www.simpopdf.com

G

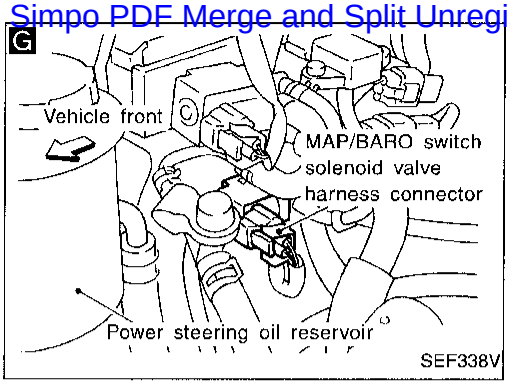

H

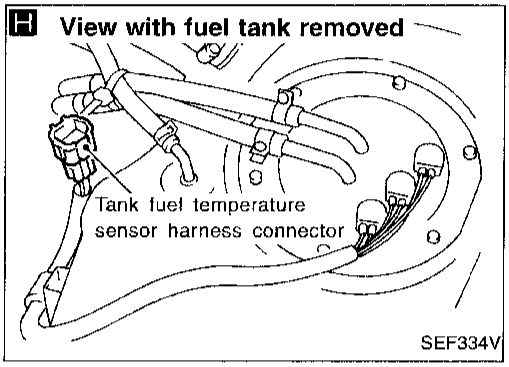

Ⓑ

G

CHECK COMPONENT AND CIRCUIT (MAP/BARO switch solenoid valve). Refer to "TROUBLE DIAGNOSIS FOR DTC P1105", EC-304.

NG → Repair or replace MAP/BARO switch solenoid valve or harness/connector.

OK ↓

H

CHECK COMPONENT (Tank fuel temperature sensor). Refer to "COMPONENT INSPECTION", EC-354.

NG → Replace tank fuel temperature sensor.

OK ↓

CHECK COMPONENT (EVAP control system pressure sensor). Refer to "COMPONENT INSPECTION", EC-365.

NG → Replace EVAP control system pressure sensor.

OK ↓

CHECK COMPONENT. Check EVAP purge line (pipe, rubber tube, fuel tank and EVAP canister) for cracks or improper connection. Refer to "EVAPORATIVE EMISSION SYSTEM", EC-23.

NG → Repair or reconnect the hose.

OK ↓

Clean EVAP purge line (pipe and rubber tube) using air blower.

↓

Perform "TROUBLE DIAGNOSIS FOR INTERMITTENT INCIDENT", EC-93.

↓

INSPECTION END

Simpo PDF Merge and Split Unregistered Version - http://www.simpopdf.com

Evaporative Emission (EVAP) Control System (Small Leak) (Negative Pressure) (Cont'd)

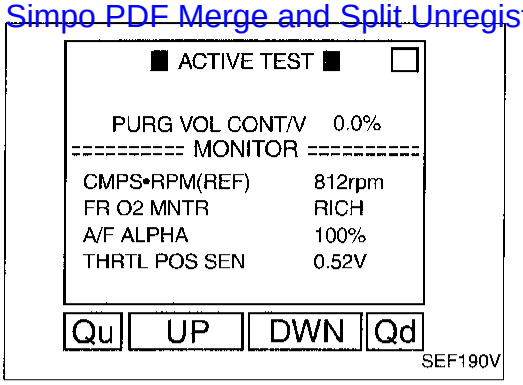

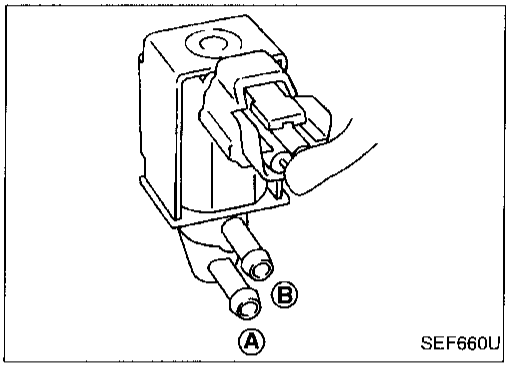

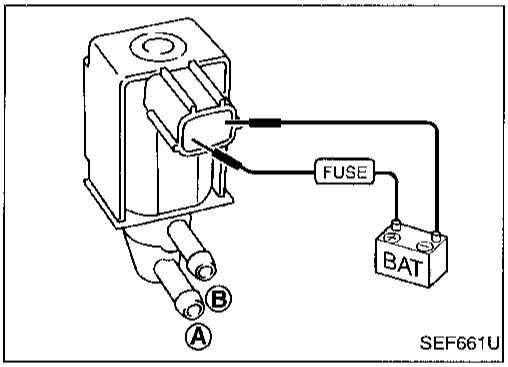

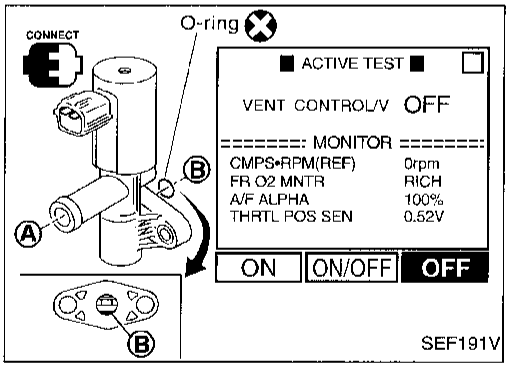

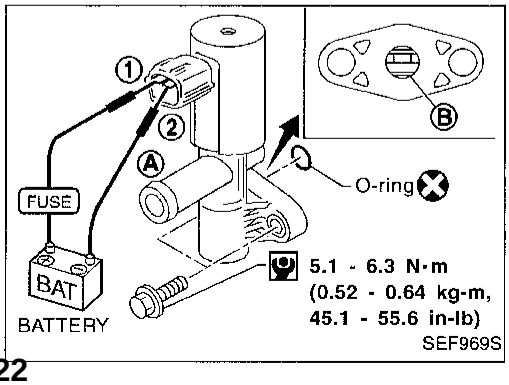

COMPONENT INSPECTION

EVAP canister purge volume control solenoid valve

1. Start engine.
2. Perform "PURG VOL CONT/V" in "ACTIVE TEST" mode with CONSULT. Check that engine speed varies according to the valve opening.
   If OK, inspection end. If NG, go to following step.
3. Check air passage continuity.

Condition PURG VOL CONT/V value	Air passage continuity between (A) and (B)
100.0%	Yes
0.0%	No

If NG, replace the EVAP canister purge volume control solenoid valve.

OR

Check air passage continuity.

Condition	Air passage continuity between (A) and (B)
12V direct current supply between terminals	Yes
No supply	No

If NG or operation takes more than 1 second, replace solenoid valve.

EVAP canister vent control valve

Check air passage continuity.

Perform "VENT CONTROL/V" in "ACTIVE TEST" mode.

Condition VENT CONTROL/V	Air passage continuity between (A) and (B)
ON	No
OFF	Yes

OR

Condition	Air passage continuity between (A) and (B)
12V direct current supply between terminals (1) and (2)	No
No supply	Yes

If NG or operation takes more than 1 second, clean valve using air blower or replace as necessary.
If portion (B) is rusted, replace control valve.
Make sure new O-ring is installed properly.

Simpo PDF Merge and Split Unregistered Version - http://www.simpopdf.com

Evaporative Emission (EVAP) Control System (Small Leak) (Negative Pressure) (Cont'd)

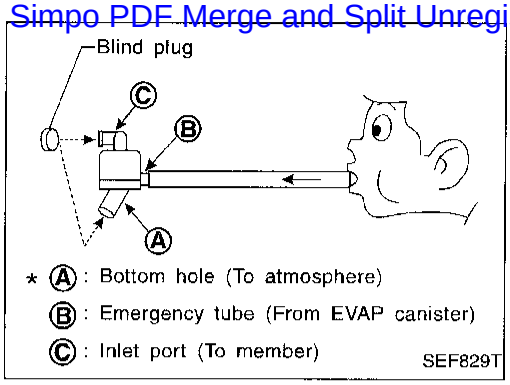

Water separator

1. Check visually for insect nests in the water separator air inlet.
2. Check visually for cracks or flaws in the appearance.
3. Check visually for cracks or flaws in the hose.
4. Check that Ⓐ and Ⓒ are not clogged by blowing air into Ⓑ with Ⓐ, and then Ⓒ plugged.
5. In case of NG in items 2 - 4, replace the parts.

- **Do not disassemble water separator.**

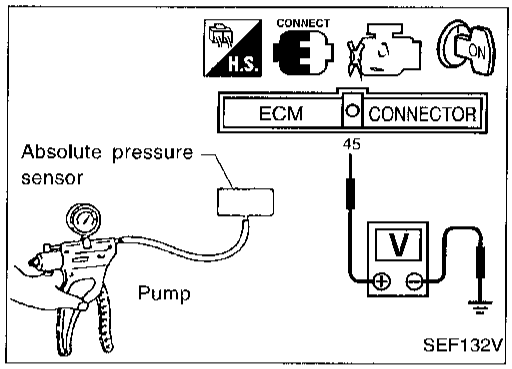

Absolute pressure sensor

1. Remove absolute pressure sensor with its harness connector connected.
2. Remove hose from absolute pressure sensor.
3. Turn ignition switch "ON" and check output voltage between ECM terminal ㊺ and engine ground.
   The voltage should be 3.2 to 4.8V.
4. Use pump to apply vacuum of –26.7 kPa (–200 mmHg, –7.87 inHg) to absolute pressure sensor as shown in figure and check the output voltage.
   The voltage should be 1.0 to 1.4V lower than the value measured in step 3.

CAUTION:

- **Always calibrate the vacuum pump gauge when using it.**
- **Do not apply vacuum below –93.3 kPa (–700 mmHg, –27.56 inHg) or pressure over 101.3 kPa (760 mmHg, 29.92 inHg).**

5. If NG, replace absolute pressure sensor.

Simpo PDF Merge and Split Unregistered Version - http://www.simpopdf.com

Evaporative Emission (EVAP) Control System (Small Leak) (Negative Pressure) (Cont'd)

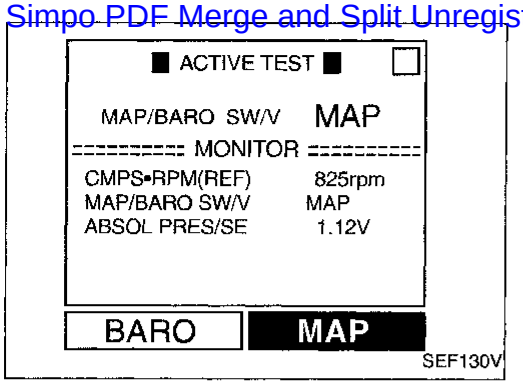

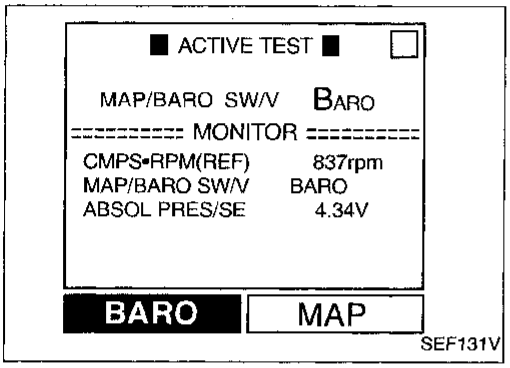

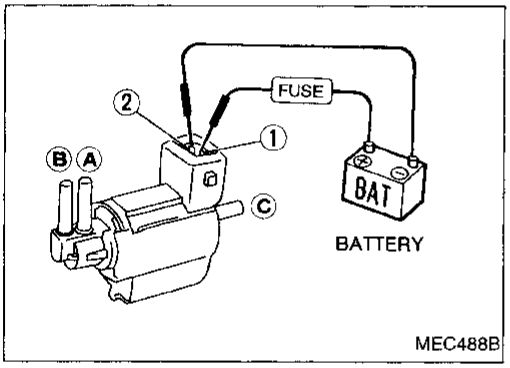

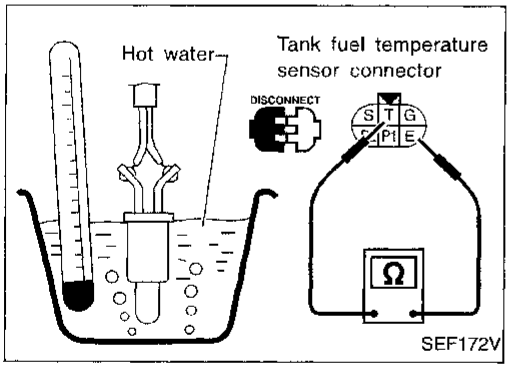

MAP/BARO switch solenoid valve

1. Start engine and warm it up to normal operating temperature.
2. Perform "MAP/BARO SW/V" in "ACTIVE TEST" mode with CONSULT.
3. Check the following.
   - Condition: At idle under no-load
   - CONSULT display

MAP/BARO	ABSOL PRES/SE (Voltage)
BARO	More than 2.6V
MAP	Less than the voltage at BARO

- Time for voltage to change

MAP/BARO SW/V	Time to switch
BARO to MAP	Less than 1 second
MAP to BARO	

4. If NG, check solenoid valve as shown below.

OR

1. Remove MAP/BARO switch solenoid valve.
2. Check air passage continuity.

Condition	Air passage continuity between Ⓐ and Ⓑ	Air passage continuity between Ⓐ and Ⓒ
12V direct current supply between terminals ① and ②	Yes	No
No supply	No	Yes

3. If NG or operation takes more than 1 second, replace solenoid valve.

Tank fuel temperature sensor

Check resistance by heating with hot water or heat gun as shown in the figure.

Temperature °C (°F)	Resistance kΩ
20 (68)	2.3 - 2.7
50 (122)	0.79 - 0.90

If NG, replace tank fuel temperature sensor.

Simpo PDF Merge and Split Unregistered Version - http://www.simpopdf.com

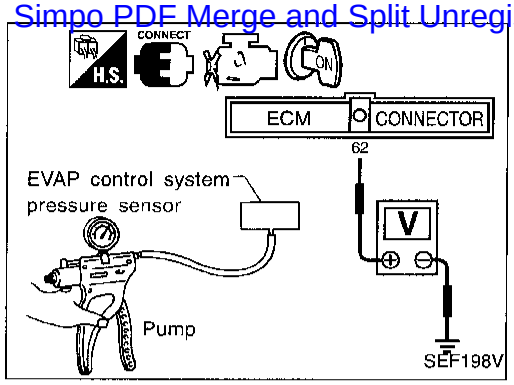

Evaporative Emission (EVAP) Control System (Small Leak) (Negative Pressure) (Cont'd)

COMPONENT INSPECTION

EVAP control system pressure sensor

1. Remove EVAP control system pressure sensor with its harness connector connected.
2. Remove hose from EVAP control system pressure sensor.
3. Use pump to apply vacuum and pressure to EVAP control system pressure sensor as shown in figure.
4. Check output voltage between ECM terminal (62) and engine ground.

Pressure (Relative to atmospheric pressure)	Voltage (V)
0 kPa (0 mmHg, 0 inHg)	3.0 - 3.6
–9.3 kPa (–70 mmHg, –2.76 inHg)	0.4 - 0.6

CAUTION:

- **Always calibrate the vacuum pump gauge when using it.**
- **Do not apply vacuum below –20 kPa (–150 mmHg, –5.91 inHg) or pressure over 20.0 kPa (150 mmHg, 5.91 inHg).**

5. If NG, replace EVAP control system pressure sensor.

Simpo PDF Merge and Split Unregistered Version - http://www.simpopdf.com

Evaporative Emission (EVAP) Canister Purge Volume Control Solenoid Valve (Circuit)

SYSTEM DESCRIPTION

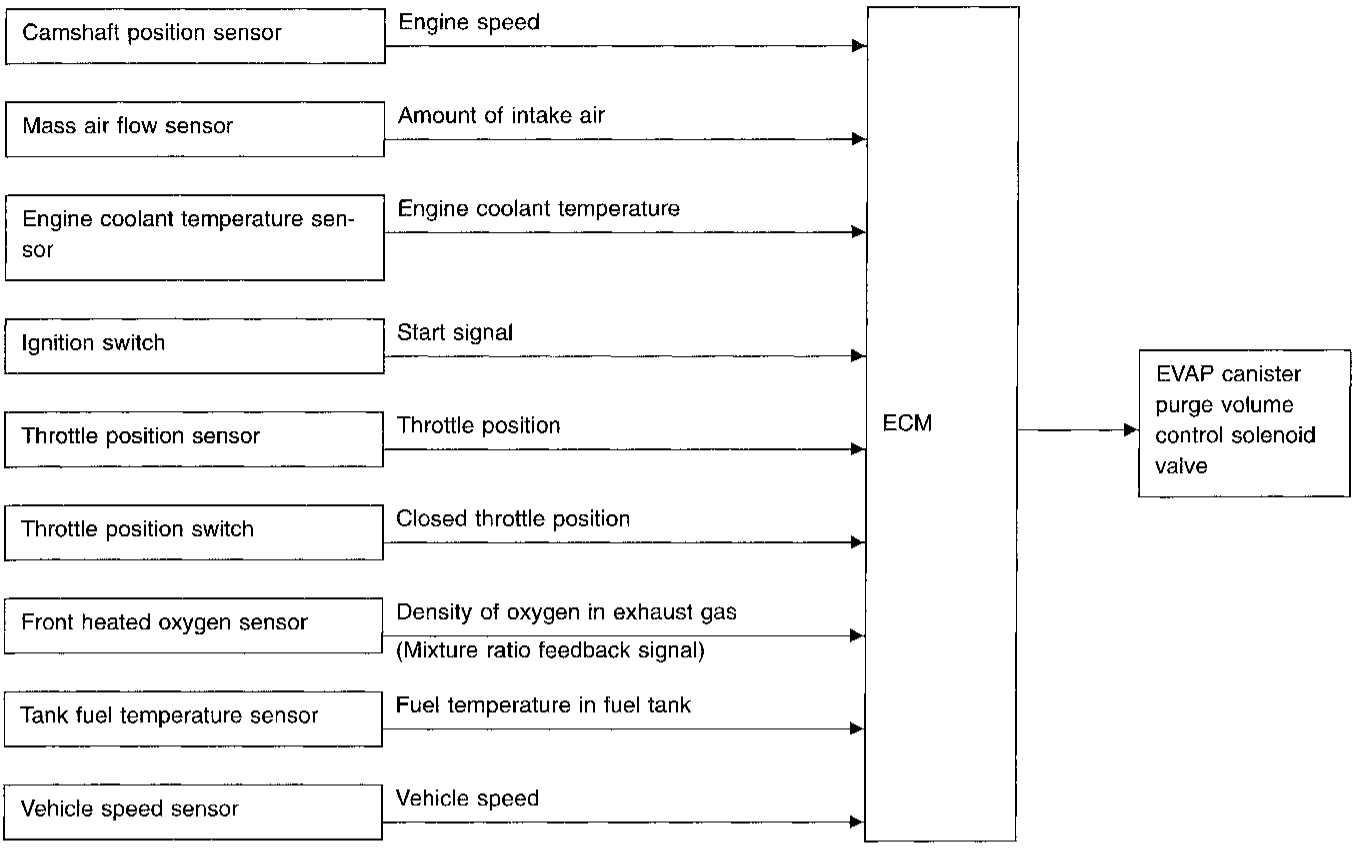

This system controls flow rate of fuel vapor from the EVAP canister. The opening of the vapor by-pass passage in the EVAP canister purge volume control solenoid valve changes to control the flow rate. The EVAP canister purge volume control solenoid valve repeats ON/OFF operation according to the signal sent from the ECM. The opening of the valve varies for optimum engine control. The optimum value stored in the ECM is determined by considering various engine conditions. When the engine is operating, the flow rate of fuel vapor from the EVAP canister is regulated as the air flow changes.

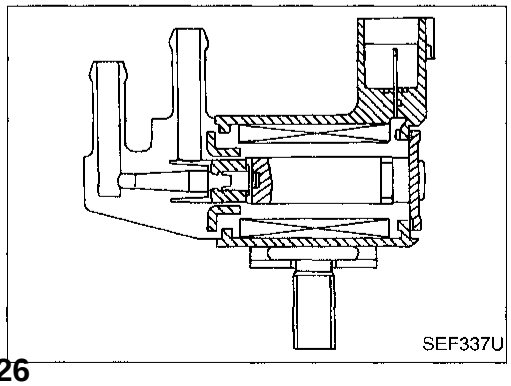

COMPONENT DESCRIPTION

The EVAP canister purge volume control solenoid valve uses a ON/OFF duty to control the flow rate of fuel vapor from the EVAP canister. The EVAP canister purge volume control solenoid valve is moved by ON/OFF pulses from the ECM. The longer the ON pulse, the greater the amount of fuel vapor that will flow through the valve.

Simpo PDF Merge and Split Unregistered Version - http://www.simpopdf.com

Evaporative Emission (EVAP) Canister Purge Volume Control Solenoid Valve (Circuit) (Cont'd)

CONSULT REFERENCE VALUE IN DATA MONITOR MODE

Specification data are reference values.

MONITOR ITEM	CONDITION		SPECIFICATION
PURG VOL C/V	● Engine: After warming up ● Air conditioner switch "OFF" ● No-load	Idle	0 %
		2,000 rpm (More than 200 seconds after starting engine)	—

ECM TERMINALS AND REFERENCE VALUE

Specification data are reference values and are measured between each terminal and ㉜ (ECM ground).

TERMINAL NO.	WIRE COLOR	ITEM	CONDITION	DATA (DC Voltage)
4	LG/R	ECCS relay (Self-shutoff)	Engine is running. Ignition switch "OFF" For a few seconds after turning ignition switch "OFF"	0 - 1V
			Ignition switch "OFF" A few seconds passed after turning ignition switch "OFF"	BATTERY VOLTAGE (11 - 14V)
5	R/Y	EVAP canister purge volume control solenoid valve	Engine is running. Idle speed	BATTERY VOLTAGE (11 - 14V) 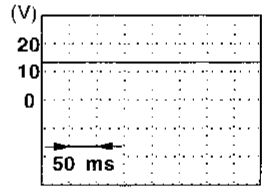 SEF109V
			Engine is running. Engine speed is 2,000 rpm. (More than 200 seconds after starting engine)	12 - 13V 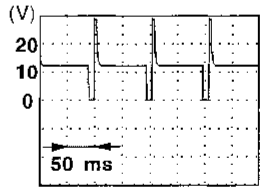 SEF110V
67	B/P	Power supply for ECM	Ignition switch "ON"	BATTERY VOLTAGE (11 - 14V)
72	B/P			
117	B/P	Current return	Engine is running. Idle speed	BATTERY VOLTAGE (11 - 14V)

Simpo PDF Merge and Split Unregistered Version - http://www.simpopdf.com

Evaporative Emission (EVAP) Canister Purge Volume Control Solenoid Valve (Circuit) (Cont'd)

ON BOARD DIAGNOSIS LOGIC

Diagnostic Trouble Code No.	Malfunction is detected when	Check Items (Possible Cause)
P0443 1008	● An improper voltage signal is sent to ECM through the valve.	● Harness or connectors (The valve circuit is open or shorted.) ● EVAP canister purge volume control solenoid valve

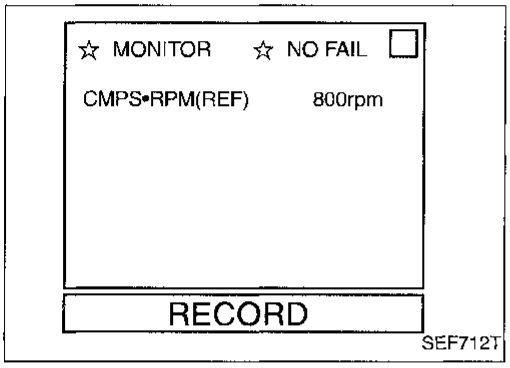

DIAGNOSTIC TROUBLE CODE CONFIRMATION PROCEDURE

NOTE:
If "DIAGNOSTIC TROUBLE CODE CONFIRMATION PROCEDURE" has been previously conducted, always turn ignition switch "OFF" and wait at least 5 seconds before conducting the next test.

TESTING CONDITION:
Before performing the following procedure, confirm battery voltage is between 11V and 16V at idle.

1) Turn ignition switch "ON".
2) Select "DATA MONITOR" mode with CONSULT.
3) Start engine and let it idle for at least 14 seconds.

OR

1) Start engine and let it idle for at least 14 seconds.
2) Select "MODE 7" with GST.

OR

1) Start engine and let it idle for at least 14 seconds.
2) Turn ignition switch "OFF" and wait at least 5 seconds.
3) Turn ignition switch "ON" and perform "Diagnostic Test Mode II (Self-diagnostic results)" with ECM.

Simpo PDF Merge and Split Unregistered Version - http://www.simpopdf.com

Evaporative Emission (EVAP) Canister Purge Volume Control Solenoid Valve (Circuit) (Cont'd)

EC-PGC/V-01

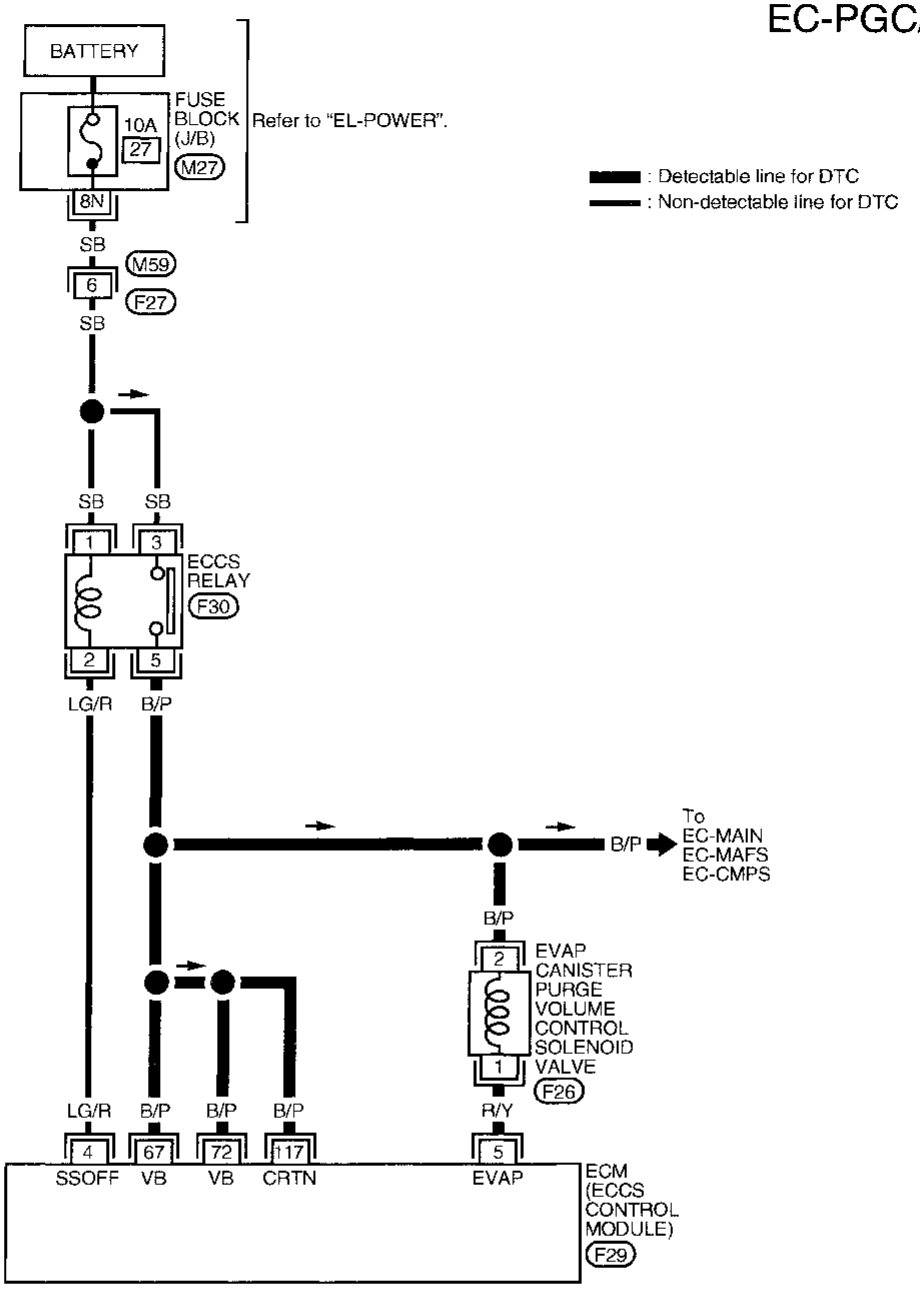

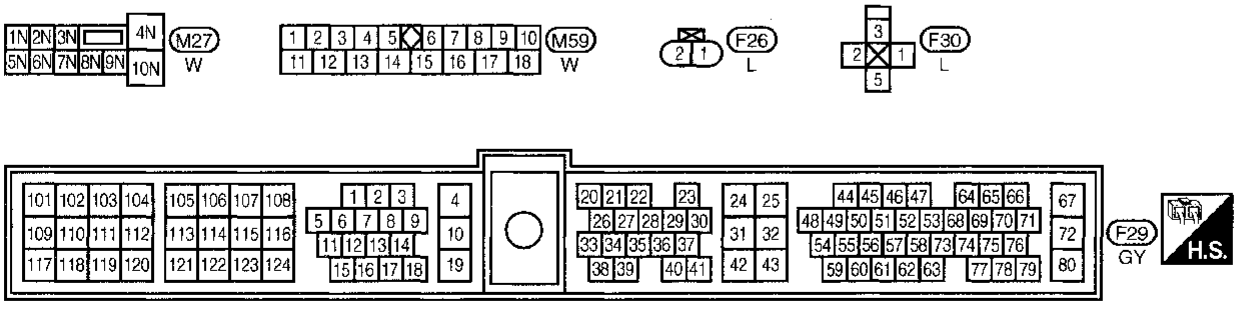

Simpo PDF Merge and Split Unregistered Version - http://www.simpopdf.com

Evaporative Emission (EVAP) Canister Purge Volume Control Solenoid Valve (Circuit) (Cont'd)

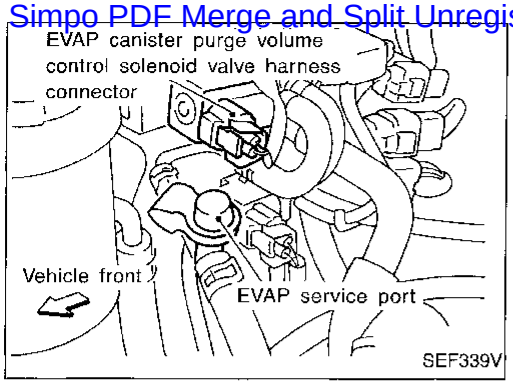

DIAGNOSTIC PROCEDURE

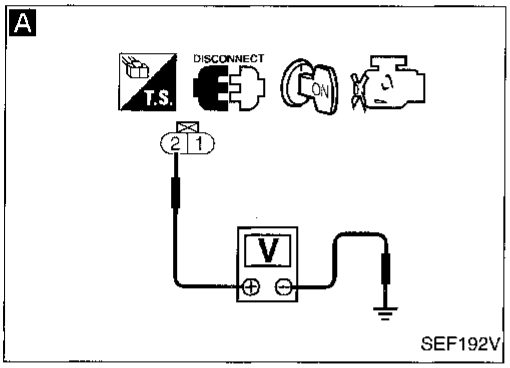

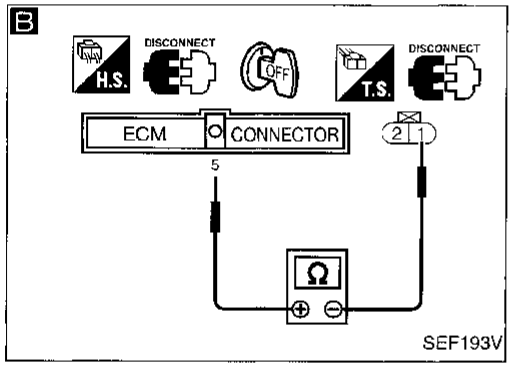

INSPECTION START

A

CHECK POWER SUPPLY.
1. Turn ignition switch "OFF".
2. Disconnect EVAP canister purge volume control solenoid valve harness connector.
3. Turn ignition switch "ON".
4. Check voltage between terminal ② and engine ground with CONSULT or tester.
   Voltage: Battery voltage

NG → Check the following.
- Harness for open or short between EVAP canister purge volume control solenoid valve and ECCS relay
- Harness for open or short between EVAP canister purge volume control solenoid valve and ECM

If NG, repair harness or connectors.

OK ↓

B

CHECK OUTPUT SIGNAL CIRCUIT.
1. Turn ignition switch "OFF".
2. Disconnect ECM harness connector.
3. Check harness continuity between ECM terminal ⑤ and terminal ①.
   Continuity should exist.
   If OK, check harness for short to ground and short to power.

NG → Repair open circuit, short to ground or short to power in harness or connectors.

OK ↓

CHECK COMPONENT
(EVAP canister purge volume control solenoid valve).
Refer to "COMPONENT INSPECTION" on next page.

NG → Replace EVAP canister purge volume control solenoid valve.

OK ↓

Perform "TROUBLE DIAGNOSIS FOR INTERMITTENT INCIDENT", EC-93.

INSPECTION END

Simpo PDF Merge and Split Unregistered Version - http://www.simpopdf.com

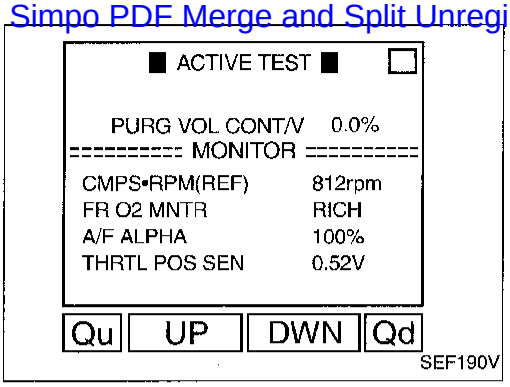

SEF190V

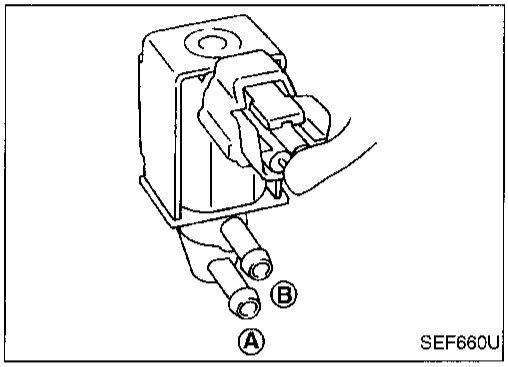

SEF660U

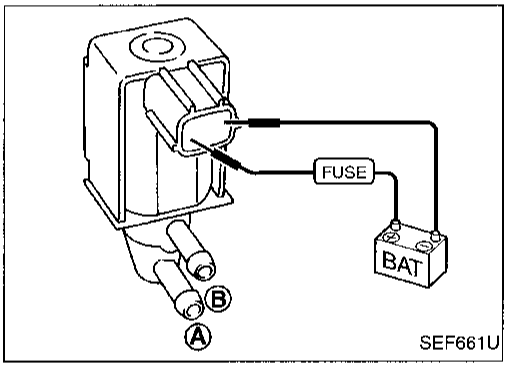

SEF661U

Evaporative Emission (EVAP) Canister Purge Volume Control Solenoid Valve (Circuit) (Cont'd)

COMPONENT INSPECTION

EVAP canister purge volume control solenoid valve

1. Start engine.
2. Perform "PURG VOL CONT/V" in "ACTIVE TEST" mode with CONSULT. Check that engine speed varies according to the valve opening.
   If OK, inspection end. If NG, go to following step.
3. Check air passage continuity.

Condition PURG VOL CONT/V value	Air passage continuity between (A) and (B)
100.0%	Yes
0.0%	No

If NG, replace the EVAP canister purge volume control solenoid valve.

OR

Check air passage continuity.

Condition	Air passage continuity between (A) and (B)
12V direct current supply between terminals	Yes
No supply	No

If NG or operation takes more than 1 second, replace solenoid valve.

Simpo PDF Merge and Split Unregistered Version - http://www.simpopdf.com

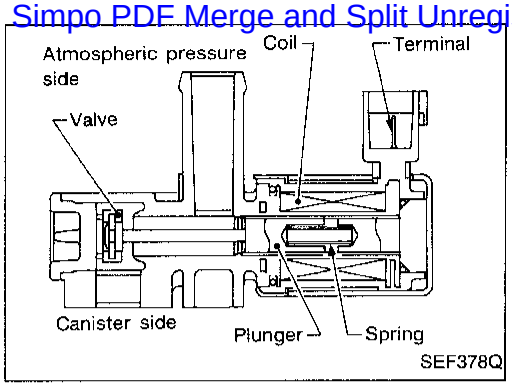

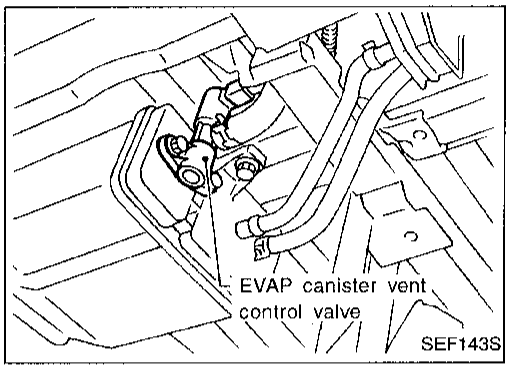

Evaporative Emission (EVAP) Canister Vent Control Valve (Circuit)

COMPONENT DESCRIPTION

The EVAP canister vent control valve is located on the EVAP canister and is used to seal the canister vent.
This solenoid (the EVAP canister vent control valve) responds to signals from the ECM.
When the ECM sends an ON signal, the coil in the solenoid valve is energized.
A plunger will then move to seal the canister vent. The ability to seal the vent is necessary for the on board diagnosis of other evaporative emission control system components.
This solenoid valve is used only for diagnosis, and usually remains opened.
When the vent is closed, under normal purge conditions, the evaporative emission control system is depressurized and allows "EVAP Control System (Small Leak)" diagnosis.

CONSULT REFERENCE VALUE IN DATA MONITOR MODE

Specification data are reference values.

MONITOR ITEM	CONDITION	SPECIFICATION
VENT CONT/V	● Ignition switch: ON	OFF

ECM TERMINALS AND REFERENCE VALUE

Specification data are reference values and are measured between each terminal and ㉜ (ECM ground).

TERMINAL NO.	WIRE COLOR	ITEM	CONDITION	DATA (DC Voltage)
108	R/G	EVAP canister vent control valve	Ignition switch "ON"	BATTERY VOLTAGE (11 - 14V)

ON BOARD DIAGNOSIS LOGIC

Diagnostic Trouble Code No.	Malfunction is detected when	Check Items (Possible Cause)
P0446 0903	● An improper voltage signal is sent to ECM through EVAP canister vent control valve.	● Harness or connectors (EVAP canister vent control valve circuit is open or shorted.) ● EVAP canister vent control valve

Simpo PDF Merge and Split Unregistered Version - http://www.simpopdf.com

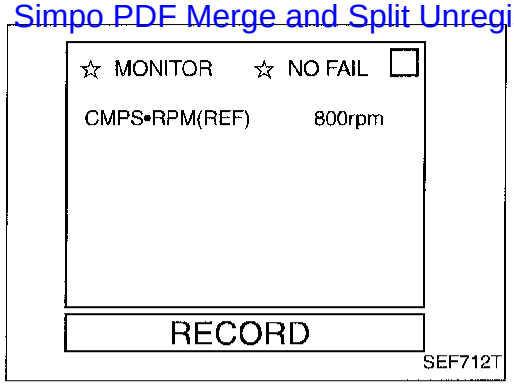

Evaporative Emission (EVAP) Canister Vent Control Valve (Circuit) (Cont'd)

DIAGNOSTIC TROUBLE CODE CONFIRMATION PROCEDURE

CAUTION:
Always drive vehicle at a safe speed.

NOTE:
If "DIAGNOSTIC TROUBLE CODE CONFIRMATION PROCEDURE" has been previously conducted, always turn ignition switch "OFF" and wait at least 5 seconds before conducting the next test.

TESTING CONDITION:
Before performing the following procedure, confirm battery voltage is more than 11V at idle.

1) Turn ignition switch "ON".
2) Select "DATA MONITOR" mode with CONSULT.
3) Start engine and wait at least 5 seconds.

OR

1) Start engine and wait at least 5 seconds.
2) Select "MODE 7" with GST.

OR

1) Start engine and wait at least 5 seconds.
2) Turn ignition switch "OFF", wait at least 5 seconds and then turn "ON".
3) Perform "Diagnostic Test Mode II (Self-diagnostic results)" with ECM.

Evaporative Emission (EVAP) Canister Vent Control Valve (Circuit) (Cont'd)

Simpo PDF Merge and Split Unregistered Version - http://www.simpopdf.com

EC-VENT/V-01

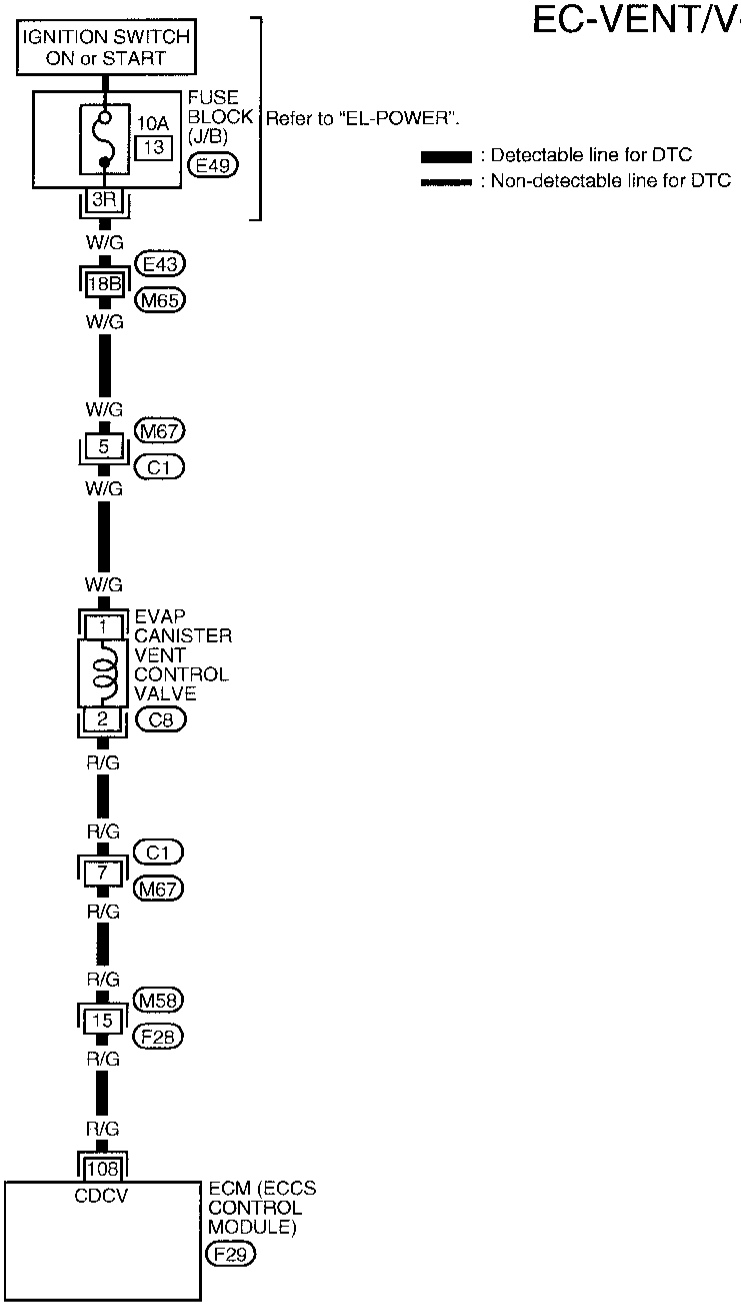

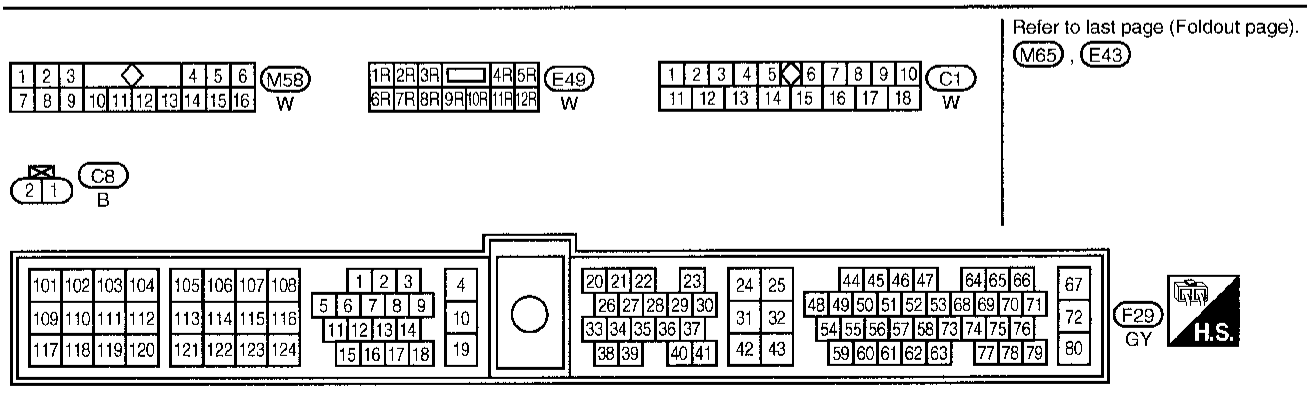

Refer to last page (Foldout page).
M65 , E43

AEC534A

Evaporative Emission (EVAP) Canister Vent Control Valve (Circuit) (Cont'd)

Simpo PDF Merge and Split Unregistered Version - http://www.simpopdf.com

DIAGNOSTIC PROCEDURE

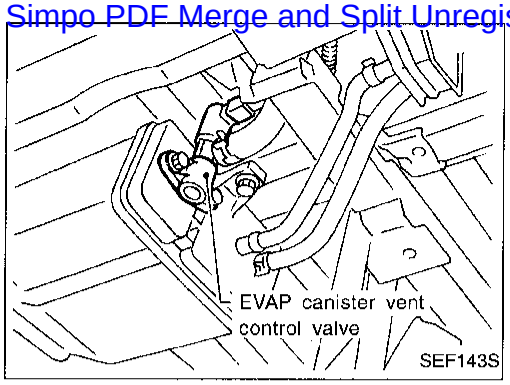

INSPECTION START

With CONSULT

Without CONSULT
Go to CHECK POWER SUPPLY B.

A

CHECK CIRCUIT.
1. Turn ignition switch "ON".
2. Perform "VENT CONTROL/V" in "ACTIVE TEST" mode.
3. Make sure that ratcheting sound is heard from the vent control valve.

OK → Go to "CHECK COMPONENT" after procedure C.

NG

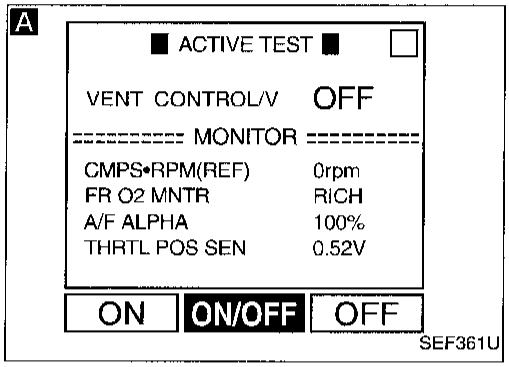

B

CHECK POWER SUPPLY.
1. Disconnect EVAP canister vent control valve harness connector.
2. Turn ignition switch "ON".
3. Check voltage between terminal ① and ground with CONSULT or tester.
Voltage: Battery voltage

NG → Check the following.
- Harness connectors E43, M65
- Harness connectors M67, C1
- 10A fuse
- Harness for open or short between EVAP canister vent control valve and 10A fuse

If NG, repair open circuit, short to ground or short to power in harness or connectors.

OK

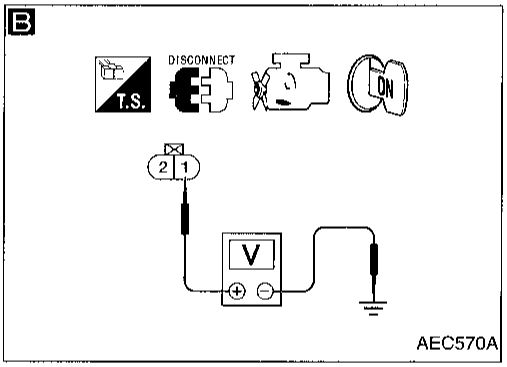

C

CHECK OUTPUT SIGNAL CIRCUIT.
1. Turn ignition switch "OFF".
2. Disconnect ECM harness connector.
3. Check harness continuity between ECM terminal 108 and terminal ②.
Continuity should exist.
If OK, check harness for short to ground and short to power.

NG → Check the following.
- Harness connectors C1, M67
- Harness connectors M58, F28
- Harness for open or short between EVAP canister vent control valve and ECM

If NG, repair open circuit or short to ground or short to power in harness or connectors.

OK

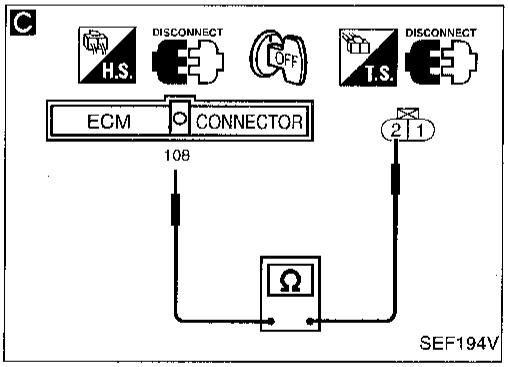

CHECK COMPONENT
(EVAP canister vent control valve and O-ring).
Refer to "COMPONENT INSPECTION" on next page.

NG → Replace EVAP canister vent control valve and O-ring.

OK

Perform "TROUBLE DIAGNOSIS FOR INTERMITTENT INCIDENT", EC-93.

INSPECTION END

Simpo PDF Merge and Split Unregistered Version - http://www.simpopdf.com

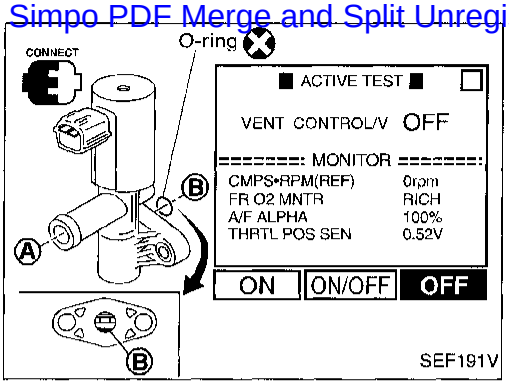

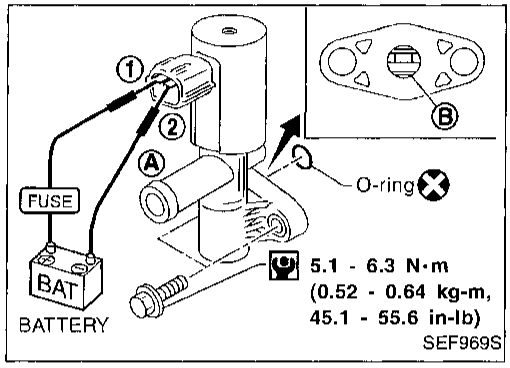

Evaporative Emission (EVAP) Canister Vent Control Valve (Circuit) (Cont'd)

COMPONENT INSPECTION

EVAP canister vent control valve

Check air passage continuity.

Perform "VENT CONTROL/V" in "ACTIVE TEST" mode.

Condition VENT CONTROL/V	Air passage continuity between (A) and (B)
ON	No
OFF	Yes

OR

Condition	Air passage continuity between (A) and (B)
12V direct current supply between terminals (1) and (2)	No
No supply	Yes

If NG or operation takes more than 1 second, clean valve using air blower or replace as necessary.

If portion (B) is rusted, replace EVAP canister vent control valve.

Make sure new O-ring is installed properly.

Simpo PDF Merge and Split Unregistered Version - http://www.simpopdf.com

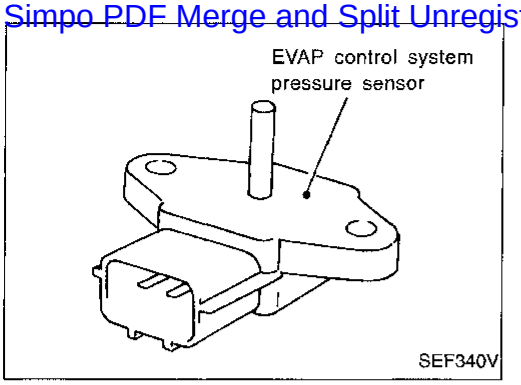

Evaporative Emission (EVAP) Control System Pressure Sensor

COMPONENT DESCRIPTION

The EVAP control system pressure sensor detects pressure in the purge line. The sensor output voltage to the ECM increases as pressure increases. The EVAP control system pressure sensor is not used to control the engine system. It is used only for on board diagnosis.

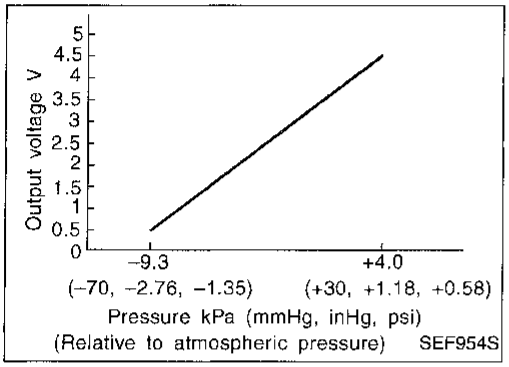

CONSULT REFERENCE VALUE IN DATA MONITOR MODE

Specification data are reference values.

MONITOR ITEM	CONDITION	SPECIFICATION
EVAP SYS PRES	● Ignition switch: ON	Approx. 3.4V

ECM TERMINALS AND REFERENCE VALUE

Specification data are reference values and are measured between each terminal and ㉜ (ECM ground).

TER-MINAL NO.	WIRE COLOR	ITEM	CONDITION	DATA (DC Voltage)
42	BR	Sensors' power supply	Ignition switch "ON"	Approximately 5V
43	B/W	Sensors' ground	Engine is running. (Warm-up condition) └ Idle speed	Approximately 0V
62	Y	EVAP control system pressure sensor	Ignition switch "ON"	Approximately 3.4V

ON BOARD DIAGNOSIS LOGIC

Diagnostic Trouble Code No.	Malfunction is detected when	Check Items (Possible Cause)
P0450 0704	● An improper voltage signal from EVAP control system pressure sensor is sent to ECM.	● Harness or connectors (The EVAP control system pressure sensor circuit is open or shorted.) ● Rubber hose to EVAP control system pressure is clogged, vent, kinked, disconnected or improper connection. ● EVAP control system pressure sensor ● EVAP canister vent control valve ● EVAP canister purge volume control solenoid valve ● EVAP canister ● Rubber hose from EVAP canister vent control valve to water separator

Simpo PDF Merge and Split Unregistered Version - http://www.simpopdf.com

Evaporative Emission (EVAP) Control System Pressure Sensor (Cont'd)

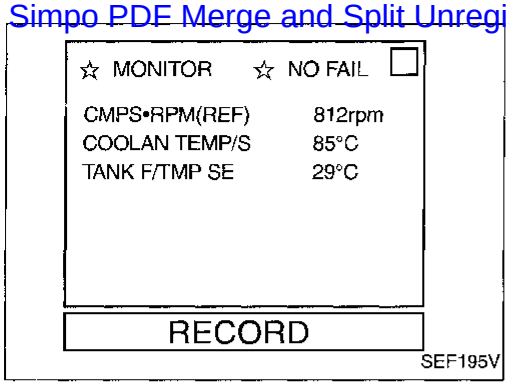

DIAGNOSTIC TROUBLE CODE CONFIRMATION PROCEDURE

NOTE:
If "DIAGNOSTIC TROUBLE CODE CONFIRMATION PROCEDURE" has been previously conducted, always turn ignition switch "OFF" and wait at least 5 seconds before conducting the next test.

TESTING CONDITION:
Always perform test at a temperature of 5°C (41°F) or more.

1) Start engine and warm it up to normal operating temperature.
2) Turn ignition switch "OFF" and wait at least 5 seconds.
3) Turn ignition switch "ON".
4) Select "DATA MONITOR" mode with CONSULT.
5) Make sure that "TANK F/TEMP SE" is more than 0°C (32°F).
6) Start engine and wait at least 20 seconds.

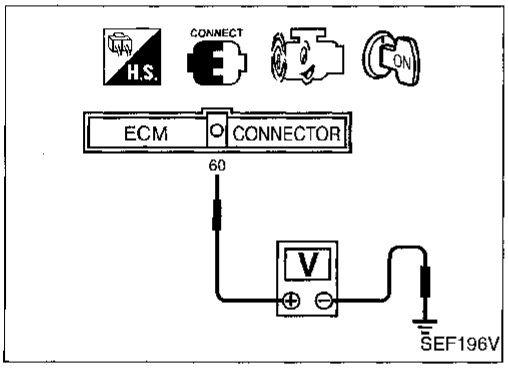

OR

1) Start engine and warm it up to normal operating temperature.
2) Check that voltage between ECM terminal ⑥⓪ and ground is less than 4.2V.
3) Turn ignition switch "OFF" and wait at least 5 seconds.
4) Start engine and wait at least 20 seconds.
5) Select "MODE 7" with GST.

OR

1) Start engine and warm it up to normal operating temperature.
2) Check that voltage between ECM terminal ⑥⓪ and ground is less than 4.2V.
3) Turn ignition switch "OFF" and wait at least 5 seconds.
4) Start engine and wait at least 20 seconds.
5) Turn ignition switch "OFF", wait at least 5 seconds and then turn "ON".
6) Perform "Diagnostic Test Mode II (Self-diagnostic results)" with ECM.

Evaporative Emission (EVAP) Control System Pressure Sensor (Cont'd)

Simpo PDF Merge and Split Unregistered Version - http://www.simpopdf.com

EC-PRE/SE-01

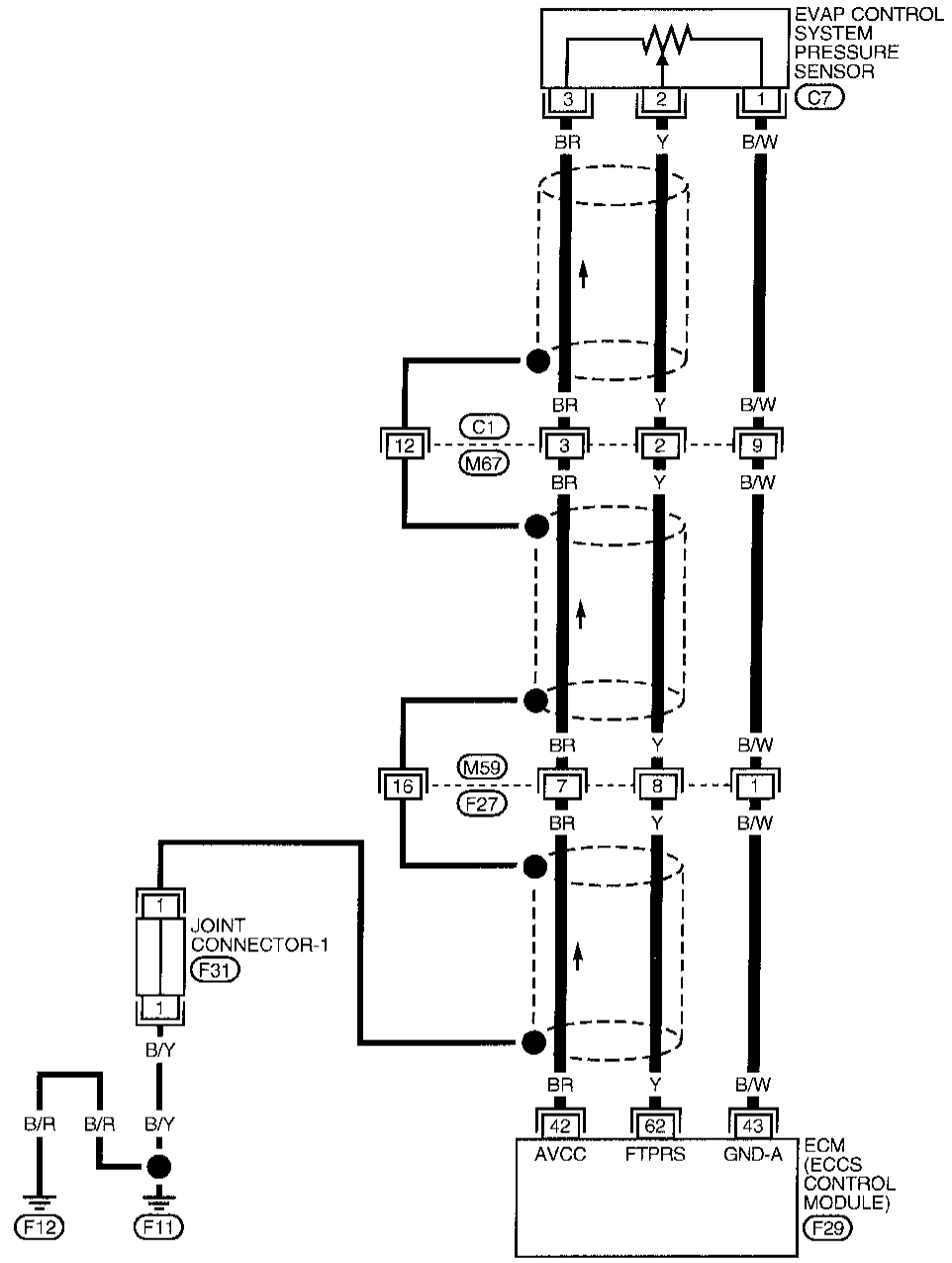

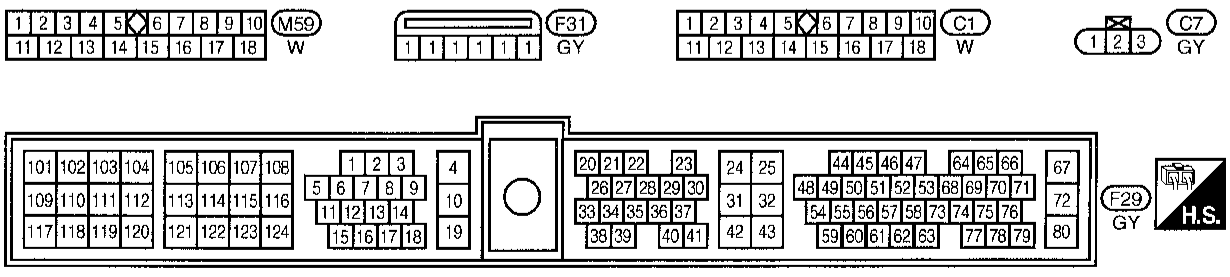

AEC535A

Simpo PDF Merge and Split Unregistered Version - http://www.simpopdf.com

Evaporative Emission (EVAP) Control System Pressure Sensor (Cont'd)

DIAGNOSTIC PROCEDURE

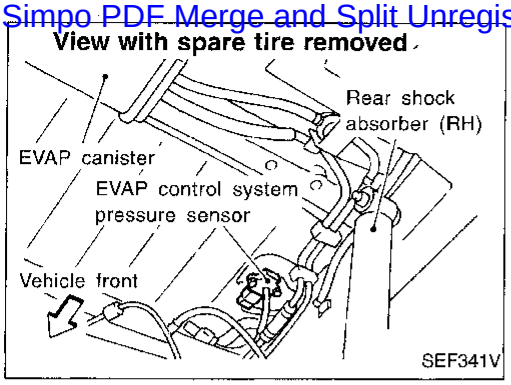

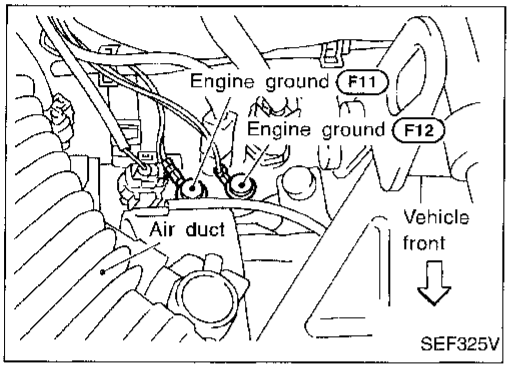

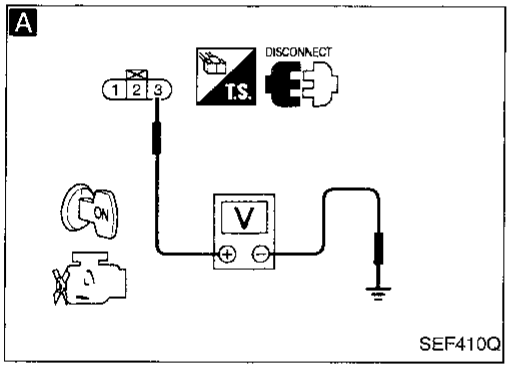

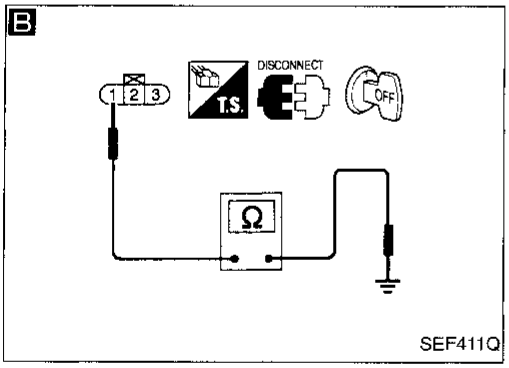

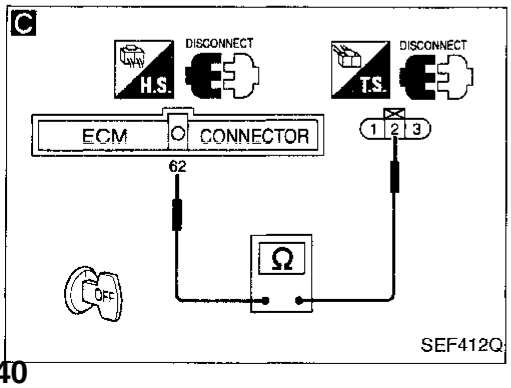

INSPECTION START

CHECK RUBBER TUBE CONNECTED TO THE SENSOR.
Check rubber tube connected to the sensor for clogging, vent, kink, disconnection or improper connection.

NG → Reconnect, repair or replace.

OK

1. Turn ignition switch "OFF".
2. Loosen and retighten engine ground screws.

A

CHECK POWER SUPPLY.
1. Disconnect EVAP control system pressure sensor harness connector.
2. Check sensor harness connector for water.
   Water should not exist.
   If OK, go to step 3. If NG, repair or replace harness connector.
3. Turn ignition switch "ON".
4. Check voltage between terminal ③ and engine ground with CONSULT or tester.
   Voltage: Approximately 5V

NG → Check the following.
- Harness connectors C1, M67
- Harness connectors M59, F27
- Harness for open or short between EVAP control system pressure sensor and ECM

If NG, repair harness or connectors.

OK

B

CHECK GROUND CIRCUIT.
1. Turn ignition switch "OFF".
2. Check harness continuity between terminal ① and engine ground.
   Continuity should exist.
   If OK, check harness for short to ground and short to power.

NG → Check the following.
- Harness connectors C1, M67
- Harness connectors M59, F27
- Harness for open or short between EVAP control system pressure sensor and ECM

If NG, repair open circuit or short to ground or short to power in harness or connectors.

OK

C

CHECK INPUT SIGNAL CIRCUIT.
1. Disconnect ECM harness connector.
2. Check harness continuity between ECM terminal 62 and terminal ②.
   Continuity should exist.
   If OK, check harness for short to ground and short to power.

NG → Check the following.
- Harness connectors C1, M67
- Harness connectors M59, F27
- Harness for open or short between EVAP control system pressure sensor and ECM

If NG, repair open circuit or short to ground or short to power in harness or connectors.

OK

CHECK COMPONENT
(EVAP canister purge volume control solenoid valve).
Refer to "COMPONENT INSPECTION" on EC-275.

NG → Replace EVAP canister purge volume control solenoid valve.

OK

Ⓐ
(Go to next page.)

Simpo PDF Merge and Split Unregistered Version - http://www.simpopdf.com

Evaporative Emission (EVAP) Control System Pressure Sensor (Cont'd)

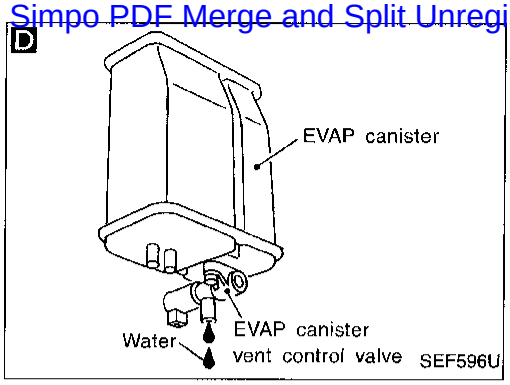

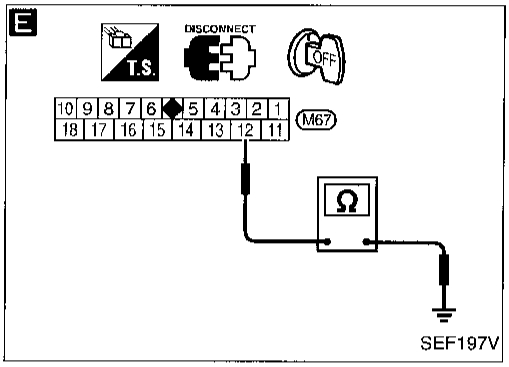

(A)

CHECK COMPONENT (EVAP canister vent control valve). Refer to "COMPONENT INSPECTION", EC-377.
- NG → Replace EVAP canister vent control valve.
- OK ↓

CHECK COMPONENT (EVAP control system pressure sensor). Refer to "COMPONENT INSPECTION", on next page.
- NG → Replace EVAP control system pressure sensor.
- OK ↓

CHECK RUBBER TUBE FOR CLOGGING.
Check obstructed water separator and rubber tube to EVAP canister vent control valve and clean the rubber tube using air blower.
For water separator, refer to EC-366.
- NG → Clean, repair or replace rubber tube and/or water separator.
- OK ↓

D

CHECK IF EVAP CANISTER SATURATED WITH WATER.
1. Remove EVAP canister with EVAP canister vent control valve attached.
2. Check if water will drain from the EVAP canister. If it will, weigh the EVAP canister with the vent control valve attached.

If the weight is:
More than 1.8 kg (4.0 lb) → NG
Less than 1.8 kg (4.0 lb) → OK

- NG → Check the following.
  1. Visually check the EVAP canister for damage.
  2. Check hose connection between EVAP canister and water separator for clogging and poor connection.
  3. Check water separator. Refer to "COMPONENT INSPECTION", EC-366.

  If NG, repair hose or replace EVAP canister or water separator.
- OK ↓

E

CHECK SHIELD CIRCUIT.
1. Turn ignition switch "OFF".
2. Disconnect connector (M67).
3. Check harness continuity between harness connector (M67) terminal (12) and ground.
   Continuity should exist.
   If OK, check harness for short to power.

- NG → Check the following.
  - Harness connectors (M59), (F27)
  - Joint connector-1
  - Harness for open or short between harness connector (M67) and ground

  If NG, repair open circuit or short to power in harness or connectors.
- OK ↓

Perform "TROUBLE DIAGNOSIS FOR INTERMITTENT INCIDENT", EC-93.

INSPECTION END

Simpo PDF Merge and Split Unregistered Version - http://www.simpopdf.com

Evaporative Emission (EVAP) Control System Pressure Sensor (Cont'd)

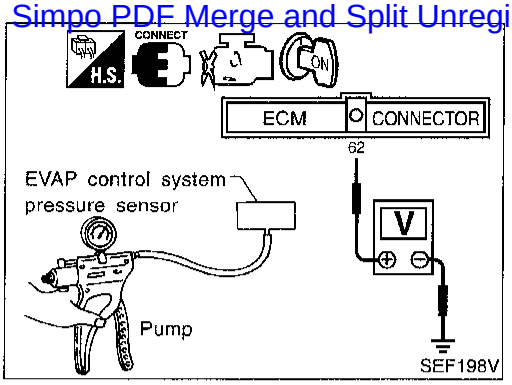

COMPONENT INSPECTION

EVAP control system pressure sensor

1. Remove EVAP control system pressure sensor with its harness connector connected.
2. Remove hose from EVAP control system pressure sensor.
3. Use pump to apply vacuum and pressure to EVAP control system pressure sensor as shown in figure.
4. Check output voltage between ECM terminal (62) and engine ground.

Pressure (Relative to atmospheric pressure)	Voltage (V)
0 kPa (0 mmHg, 0 inHg)	3.0 - 3.6
−9.3 kPa (−70 mmHg, −2.76 inHg)	0.4 - 0.6

CAUTION:

- **Always calibrate the vacuum pump gauge when using it.**
- **Do not apply vacuum below −20 kPa (−150 mmHg, −5.91 inHg) or pressure over 20.0 kPa (150 mmHg, 5.91 inHg).**

5. If NG, replace EVAP control system pressure sensor.

Simpo PDF Merge and Split Unregistered Version - http://www.simpopdf.com

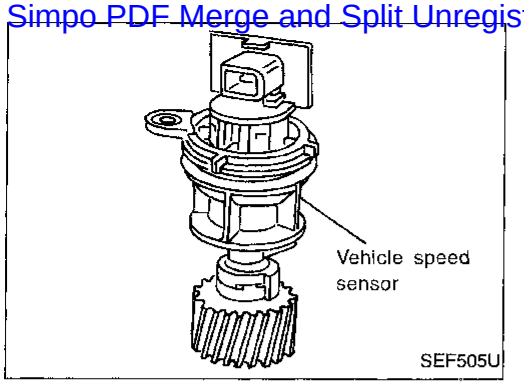

Vehicle Speed Sensor (VSS)

COMPONENT DESCRIPTION

The vehicle speed sensor is installed in the transaxle. It contains a pulse generator which provides a vehicle speed signal to the speedometer. The speedometer then sends a signal to the ECM.

ECM TERMINALS AND REFERENCE VALUE

Specification data are reference values and are measured between each terminal and ㉜ (ECM ground).

TER-MINAL NO.	WIRE COLOR	ITEM	CONDITION	DATA (DC Voltage)
29	G/B	Vehicle speed sensor	Engine is running. — Lift up the vehicle. — In 2nd gear position — 40 km/h (25 MPH)	1 - 4V 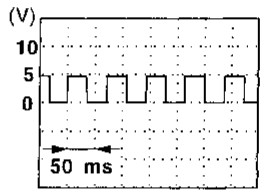 SEF111V

ON BOARD DIAGNOSIS LOGIC

Diagnostic Trouble Code No.	Malfunction is detected when	Check Items (Possible Cause)
P0500 0104	● The almost 0 km/h (0 MPH) signal from vehicle speed sensor is sent to ECM even when vehicle is being driven.	● Harness or connector (The vehicle speed sensor circuit is open or shorted.) ● Vehicle speed sensor

Simpo PDF Merge and Split Unregistered Version - http://www.simpopdf.com

Vehicle Speed Sensor (VSS) (Cont'd)

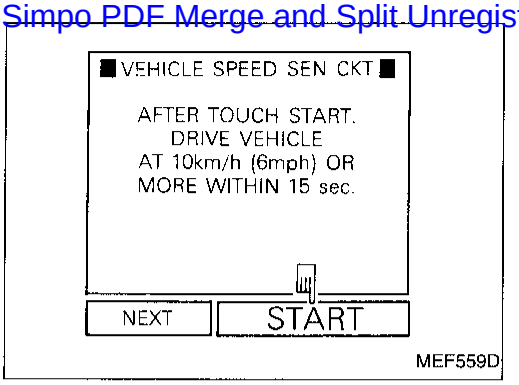

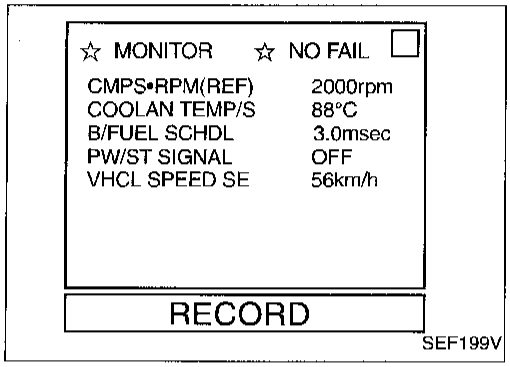

DIAGNOSTIC TROUBLE CODE CONFIRMATION PROCEDURE

CAUTION:

- **Always drive vehicle at a safe speed.**
- **If "DIAGNOSTIC TROUBLE CODE CONFIRMATION PROCEDURE" has been previously conducted, always turn ignition switch "OFF" and wait at least 5 seconds before conducting the next test.**

TESTING CONDITION:

Steps 1 and 2 may be conducted with the drive wheels lifted in the shop or by driving the vehicle. If a road test is expected to be easier, it is unnecessary to lift the vehicle.

1) Start engine.
2) Perform "VEHICLE SPEED SEN CIRCUIT" in "FUNCTION TEST" mode with CONSULT.

OR

1) Start engine
2) Read vehicle speed sensor signal in "DATA MONITOR" mode with CONSULT. The vehicle speed on CONSULT should exceed 10 km/h (6 MPH) when rotating wheels with suitable gear position.
   If NG, go to "DIAGNOSTIC PROCEDURE", EC-290.
   If OK, go to following step.
3) Select "DATA MONITOR" mode with CONSULT.
4) Warm engine up to normal operating temperature.
5) Maintain the following conditions for at least 10 consecutive seconds.
   CMPS·RPM (REF): 1,800 - 2,500 rpm (A/T)
   1,500 - 2,500 rpm (M/T)
   COOLAN TEMP/S: More than 70°C (158°F)
   B/FUEL SCHDL: 2.2 - 3.1 ms (A/T)
   1.9 - 5.2 ms (M/T)
   Selector lever: Suitable position
   PW/ST SIGNAL: OFF

OR

OVERALL FUNCTION CHECK

Use this procedure to check the overall function of the EVAP canister vent control valve circuit. During this check, a DTC might not be confirmed.

1) Lift up drive wheels.
2) Start engine.
3) Read vehicle speed sensor signal in "MODE 1" with GST.
   The vehicle speed sensor on GST should be able to exceed 10 km/h (6 MPH) when rotating wheels with suitable gear position.

OR

1) Lift up drive wheels.
2) Start engine.
3) Read the voltage signal between ECM terminal ㉙ (Vehicle speed sensor signal) and ground with oscilloscope.
4) Verify that the oscilloscope screen shows the signal wave as shown at "ECM TERMINALS AND REFERENCE VALUE" on the previous page.

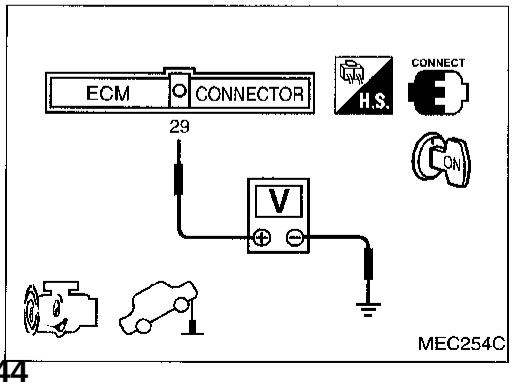

Simpo PDF Merge and Split Unregistered Version - http://www.simpopdf.com

EC-VSS-01

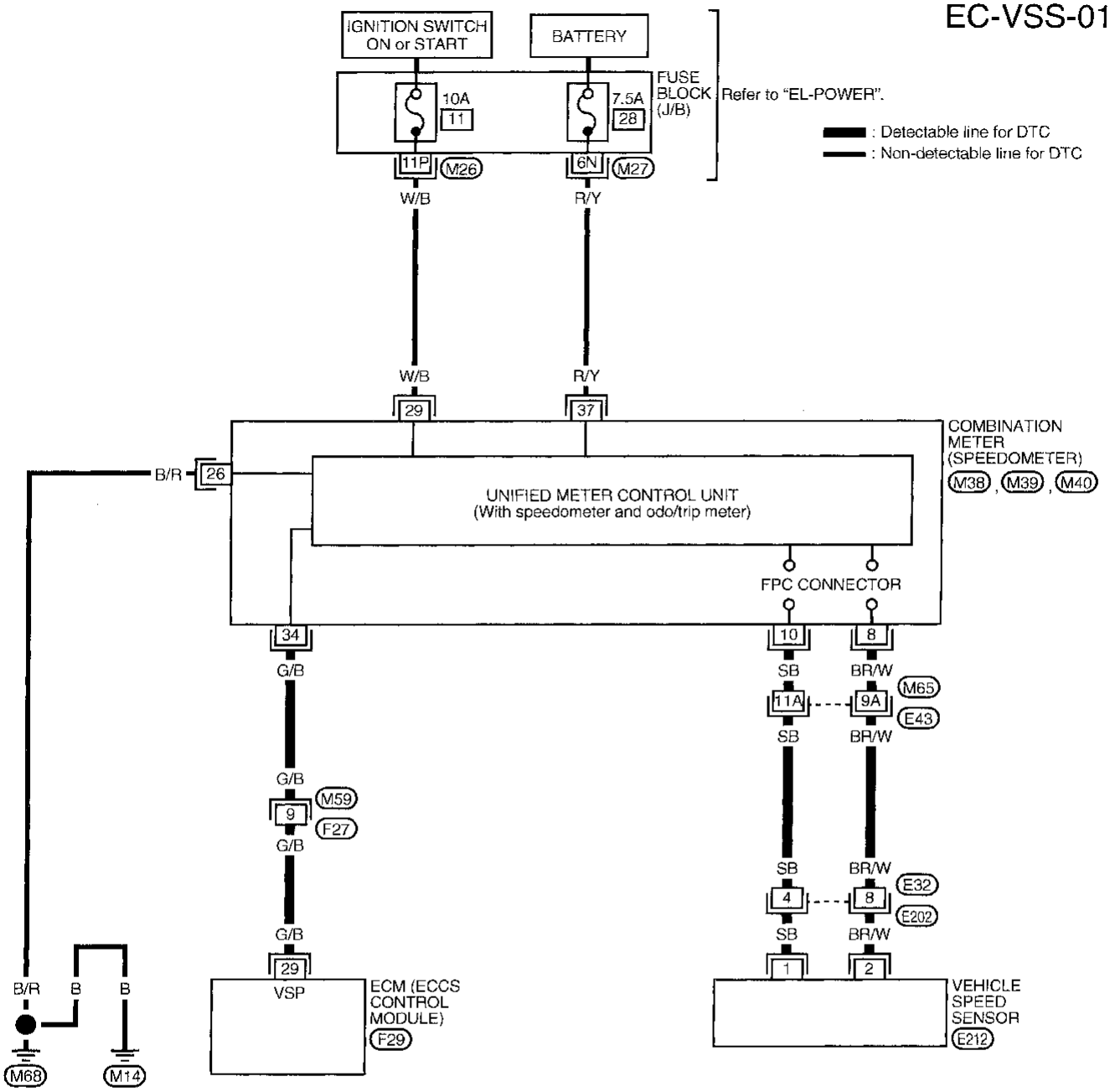

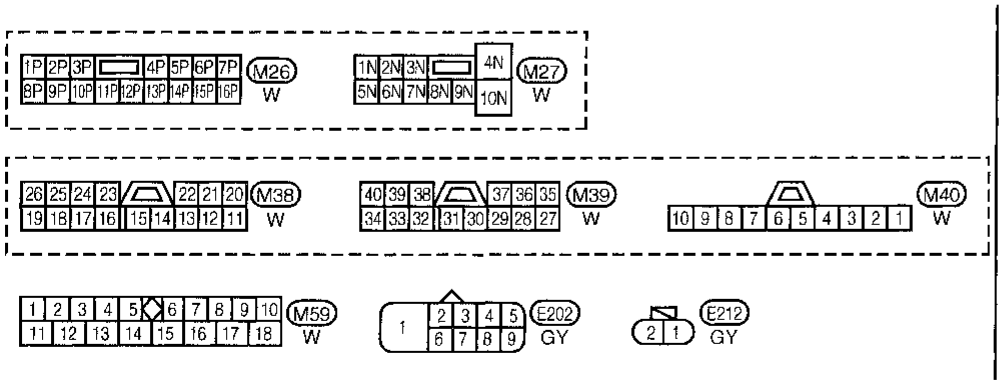

Refer to last page (Foldout page).
M65, E43
F29

AEC536A

Vehicle Speed Sensor (VSS) (Cont'd)

Simpo PDF Merge and Split Unregistered Version - http://www.simpopdf.com

DIAGNOSTIC PROCEDURE

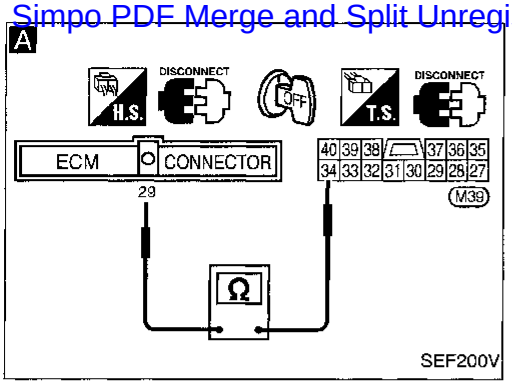

INSPECTION START

A

CHECK INPUT SIGNAL CIRCUIT.
1. Turn ignition switch "OFF".
2. Disconnect ECM harness connector and combination meter harness connector (M39).
3. Check harness continuity between ECM terminal (29) and meter terminal (34).
   Continuity should exist.
   If OK, check harness for short to ground and short to power.

NG → Check the following.
- Harness connectors (M59), (F27)
- Harness for open or short between ECM and combination meter

If NG, repair open circuit or short to ground or short to power in harness or connectors.

OK ↓

CHECK SPEEDOMETER FUNCTION.
Make sure that speedometer functions properly.

NG → Check the following.
- Harness connectors (E43), (E65)
- Harness connectors (E32), (E202)
- Harness for open or short between combination meter and vehicle speed sensor

If NG, repair open circuit or short to ground or short to power in harness or connectors.
Check vehicle speed sensor and its circuit.
Refer to EL section.

OK ↓

Perform "TROUBLE DIAGNOSIS FOR INTERMITTENT INCIDENT", EC-93.

INSPECTION END

Simpo PDF Merge and Split Unregistered Version - http://www.simpopdf.com

Idle Air Control Valve (IACV) — Auxiliary Air Control (AAC) Valve

SYSTEM DESCRIPTION

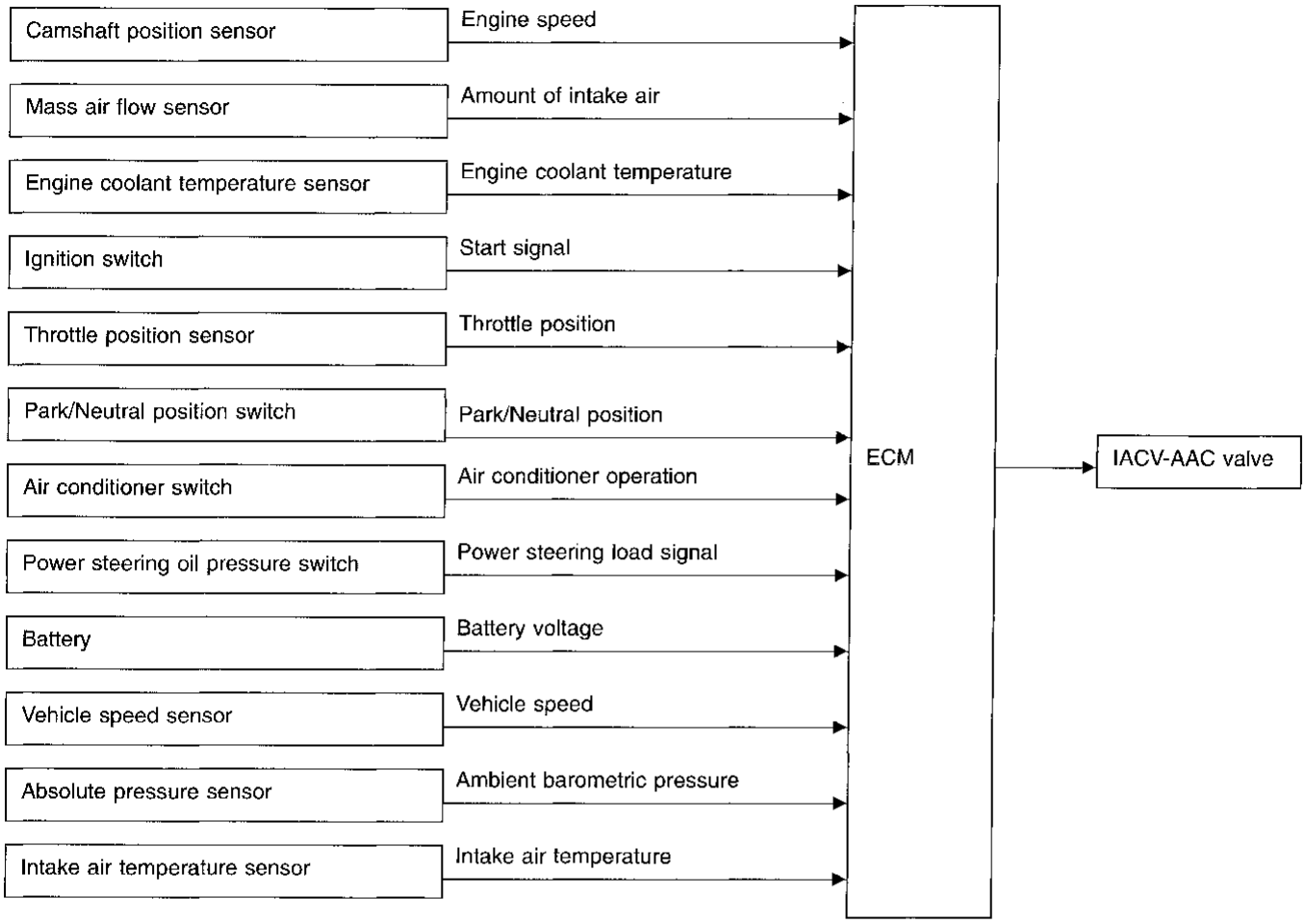

This system automatically controls engine idle speed to a specified level. Idle speed is controlled through fine adjustment of the amount of air which bypasses the throttle valve via IACV-AAC valve. The IACV-AAC valve repeats ON/OFF operation according to the signal sent from the ECM. The camshaft position sensor detects the actual engine speed and sends a signal to the ECM. The ECM then controls the ON/OFF time of the IACV-AAC valve so that engine speed coincides with the target value memorized in ECM. The target engine speed is the lowest speed at which the engine can operate steadily. The optimum value stored in the ECM is determined by taking into consideration various engine conditions, such as during warm up, deceleration, and engine load (air conditioner and power steering).

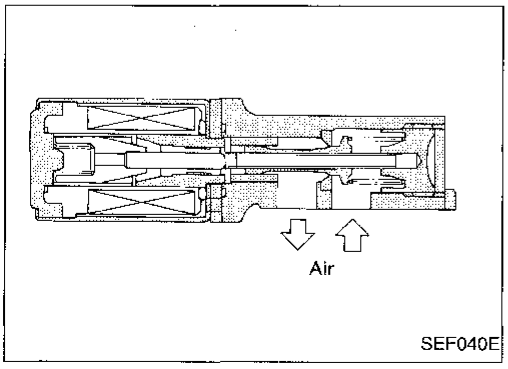

COMPONENT DESCRIPTION

IACV-AAC valve

The IACV-AAC valve is moved by ON/OFF pulses from the ECM. The longer the ON pulse, the greater the amount of air that will flow through the valve. The more air that flows through the valve, the higher the idle speed.

Simpo PDF Merge and Split Unregistered Version - http://www.simpopdf.com

CONSULT REFERENCE VALUE IN DATA MONITOR MODE

Specification data are reference values.

MONITOR ITEM	CONDITION		SPECIFICATION
IACV-AAC/V	● Engine: After warming up ● Air conditioner switch: "OFF" ● Shift lever: "N" ● No-load	Idle	Approx. 30%
		2,000 rpm	—

ECM TERMINALS AND REFERENCE VALUE

Specification data are reference values and are measured between each terminal and ㉜ (ECM ground).

TERMINAL NO.	WIRE COLOR	ITEM	CONDITION	DATA (DC Voltage)
101	OR/L	IACV-AAC valve	Engine is running. (Warm-up condition) └ Idle speed	10.5 - 11.5V 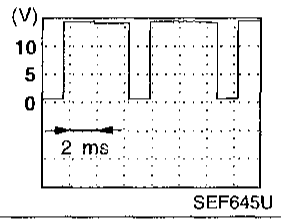 SEF645U
			Engine is running. (Warm-up condition) └ Engine speed is 2,000 rpm.	1 - 13V 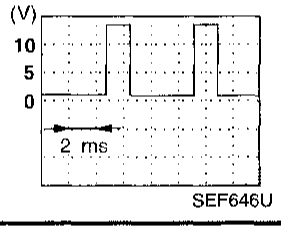 SEF646U

ON BOARD DIAGNOSIS LOGIC

Diagnostic Trouble Code No.	Malfunction is detected when	Check Items (Possible Cause)
P0505 0205	A) The IACV-AAC valve does not operate properly.	● Harness or connectors (The IACV-AAC valve circuit is open.) ● IACV-AAC valve
	B) The IACV-AAC valve does not operate properly.	● Harness or connectors (The IACV-AAC valve circuit is shorted.) ● IACV-AAC valve

Simpo PDF Merge and Split Unregistered Version - http://www.simpopdf.com

Idle Air Control Valve (IACV) — Auxiliary Air Control (AAC) Valve (Cont'd)

DIAGNOSTIC TROUBLE CODE CONFIRMATION PROCEDURE

Perform "Procedure for malfunction A" first. If DTC cannot be confirmed, perform "Procedure for malfunction B".

NOTE:
If "DIAGNOSTIC TROUBLE CODE CONFIRMATION PROCEDURE" has been previously conducted, always turn ignition switch "OFF" and wait at least 5 seconds before conducting the next test.

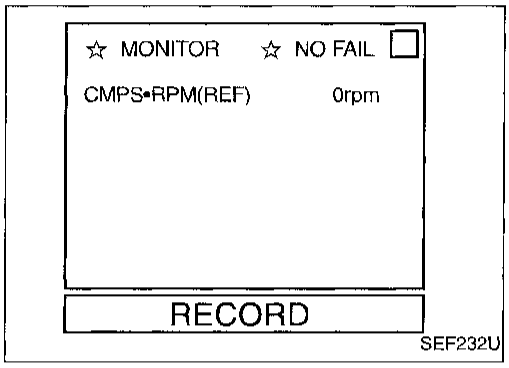

Procedure for malfunction A

TESTING CONDITION:
Before performing the following procedure, confirm battery voltage is more than 10.5V at ignition switch "ON".

1) Turn ignition switch "ON".
2) Select "DATA MONITOR" mode with CONSULT.
3) Wait at least 2 seconds.

OR

1) Turn ignition switch "ON" and wait at least 2 seconds.
2) Select "MODE 7" with GST.

OR

1) Turn ignition switch "ON" and wait at least 2 seconds.
2) Turn ignition switch "OFF", wait at least 5 seconds and then turn "ON".
3) Perform "Diagnostic Test Mode II (Self-diagnostic results)" with ECM.

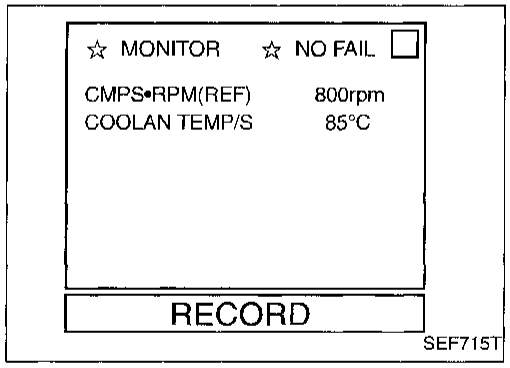

Procedure for malfunction B

TESTING CONDITION:
Before performing the following procedure, confirm battery voltage is more than 11V at idle.

1) Start engine and warm it up to normal operating temperature.
2) Turn ignition switch "OFF" and wait at least 5 seconds.
3) Turn ignition switch "ON" again and select "DATA MONITOR" mode with CONSULT.
4) Start engine and run it for at least 1 minute at idle speed.

OR

1) Start engine and warm it up to normal operating temperature.
2) Turn ignition switch "OFF" and wait at least 5 seconds.
3) Start engine again and run it for at least 1 minute at idle speed.
4) Select "MODE 7" with GST.

Simpo PDF Merge and Split Unregistered Version - http://www.simpopdf.com

Idle Air Control Valve (IACV) — Auxiliary Air Control (AAC) Valve (Cont'd)

OR

NO TOOLS

1) Start engine and warm it up to normal operating temperature.
2) Turn ignition switch "OFF" and wait at least 5 seconds.
3) Start engine again and run it for at least 1 minute at idle speed.
4) Turn ignition switch "OFF", wait at least 5 seconds and then turn "ON".
5) Perform "Diagnostic Test Mode II (Self-diagnostic results)" with ECM.

Idle Air Control Valve (IACV) — Auxiliary Air Control (AAC) Valve (Cont'd)

Simpo PDF Merge and Split Unregistered Version - http://www.simpopdf.com

EC-AAC/V-01

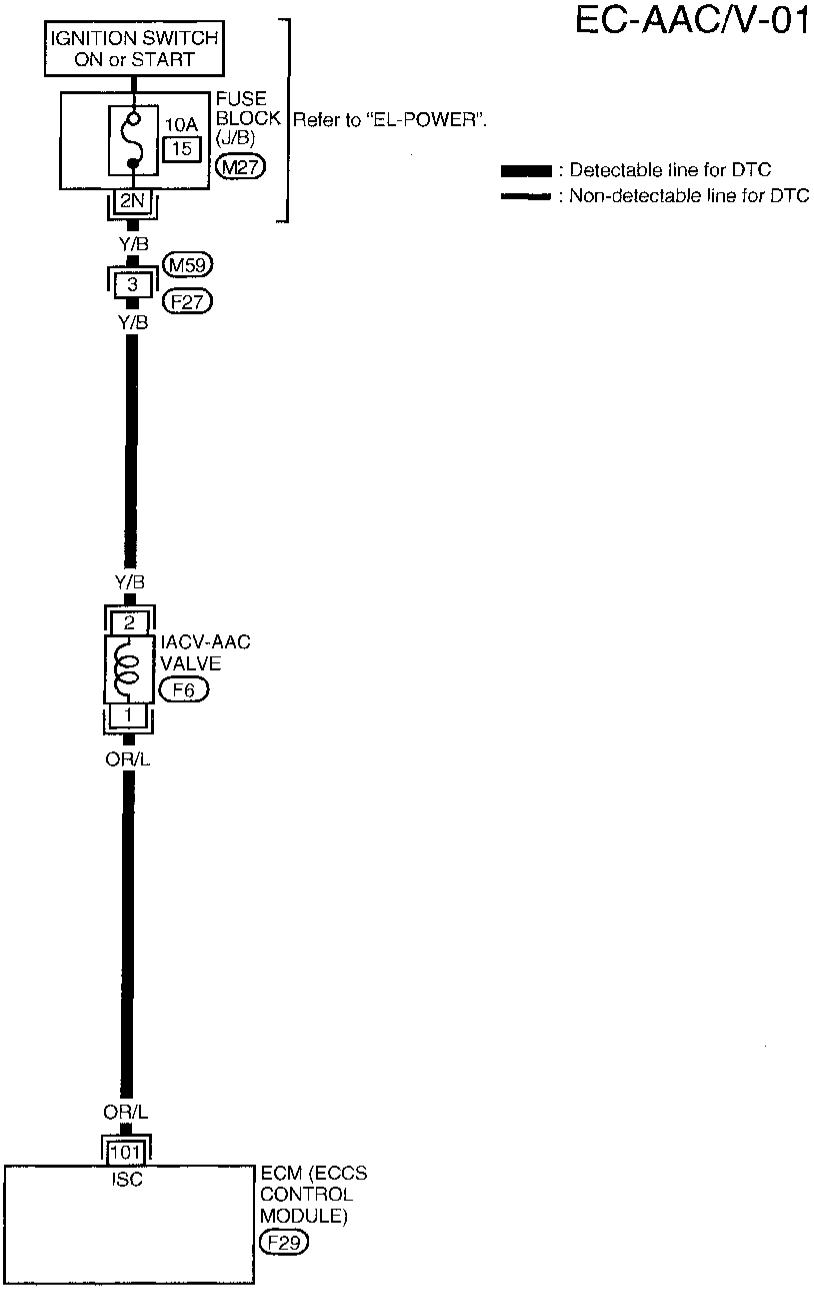

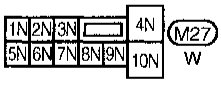

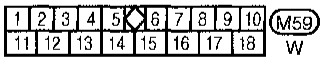



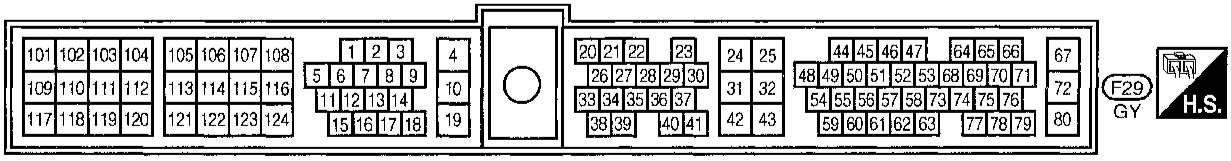

AEC537A

Simpo PDF Merge and Split Unregistered Version - http://www.simpopdf.com

Idle Air Control Valve (IACV) — Auxiliary Air Control (AAC) Valve (Cont'd)

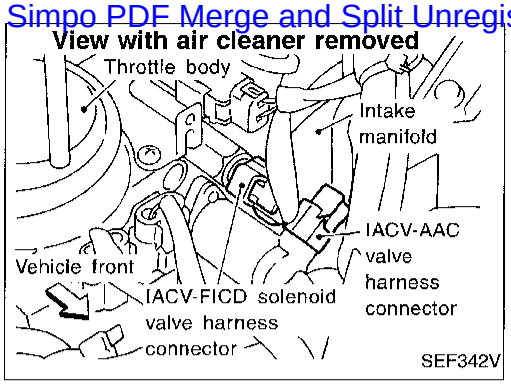

DIAGNOSTIC PROCEDURE

INSPECTION START

A

CHECK POWER SUPPLY.
1. Stop engine.
2. Disconnect IACV-AAC valve harness connector.
3. Turn ignition switch "ON".
4. Check voltage between terminal (2) and ground with CONSULT or tester.
   Voltage: Battery voltage

NG → Check the following.
- Harness connectors (M59), (F27)
- 10A fuse
- Harness for open or short between IACV-AAC valve harness connector and 10A fuse

If NG, repair harness or connectors.

OK ↓

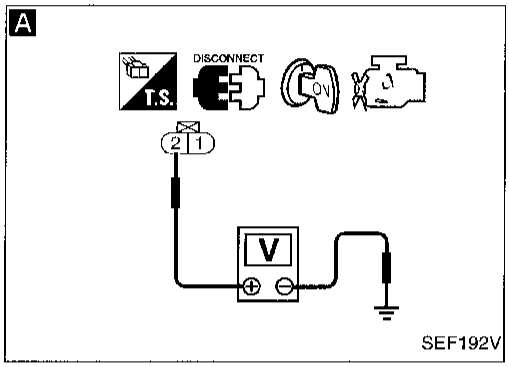

B

CHECK OUTPUT SIGNAL CIRCUIT.
1. Disconnect ECM harness connector.
2. Check harness continuity between ECM terminal (101) and terminal (1).
   Continuity should exist.
   If OK, check harness for short to ground and short to power.

NG → Repair open circuit, short to ground or short to power in harness or connectors.

OK ↓

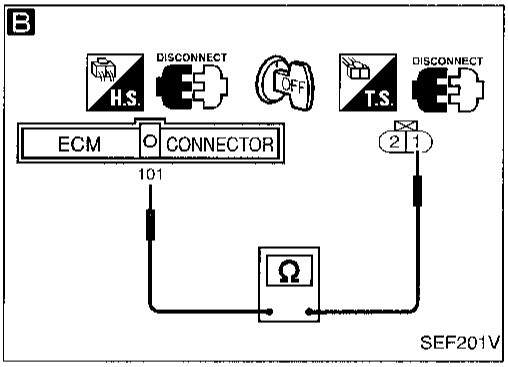

CHECK COMPONENT (IACV-AAC valve).
Refer to "COMPONENT INSPECTION" below.

NG → Replace IACV-AAC valve.

OK ↓

Perform "TROUBLE DIAGNOSIS FOR INTERMITTENT INCIDENT", EC-93.

INSPECTION END

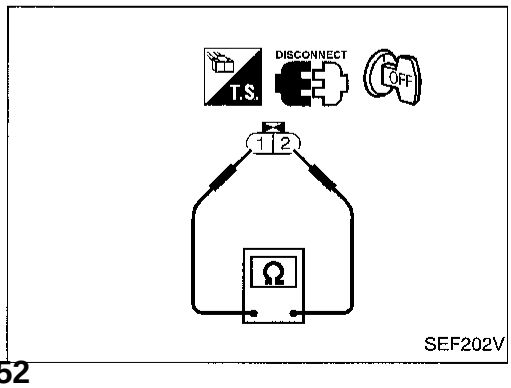

COMPONENT INSPECTION

IACV-AAC valve

Disconnect IACV-AAC valve harness connector.

- Check IACV-AAC valve resistance.
  Resistance:
  Approximately 10Ω [at 25°C (77°F)]
- Check plunger for seizing or sticking.
- Check for broken spring.

Simpo PDF Merge and Split Unregistered Version - http://www.simpopdf.com

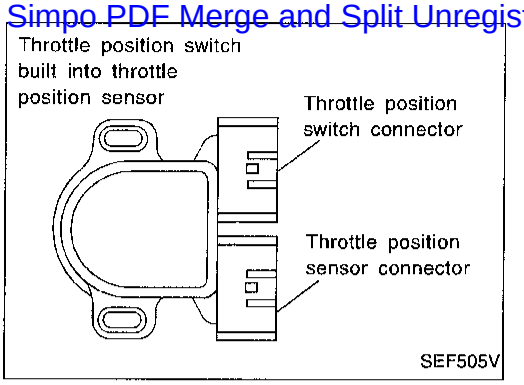

Closed Throttle Position Switch

COMPONENT DESCRIPTION

A closed throttle position switch and wide open throttle position switch are built into the throttle position sensor unit.
When the throttle valve is in the closed position, the closed throttle position switch sends a voltage signal to the ECM. The ECM only uses this signal to open or close the EVAP canister purge volume control solenoid valve when the throttle position sensor is malfunctioning.

ECM TERMINALS AND REFERENCE VALUE

Specification data are reference values and are measured between each terminal and ㉜ (ECM ground).

TERMINAL NO.	WIRE COLOR	ITEM	CONDITION	DATA (DC Voltage)
28	BR/W	Throttle position switch (Closed position)	Ignition switch "ON" (Warm-up condition) └ Accelerator pedal fully released	BATTERY VOLTAGE (11 - 14V)
			Ignition switch "ON" └ Accelerator pedal depressed	Approximately 0V

ON BOARD DIAGNOSIS LOGIC

Diagnostic Trouble Code No.	Malfunction is detected when	Check Items (Possible Cause)
P0510 0203	● Battery voltage from the closed throttle position switch is sent to ECM with the throttle valve opened.	● Harness or connectors (The closed throttle position switch circuit is shorted.) ● Closed throttle position switch ● Throttle position sensor

Simpo PDF Merge and Split Unregistered Version - http://www.simpopdf.com

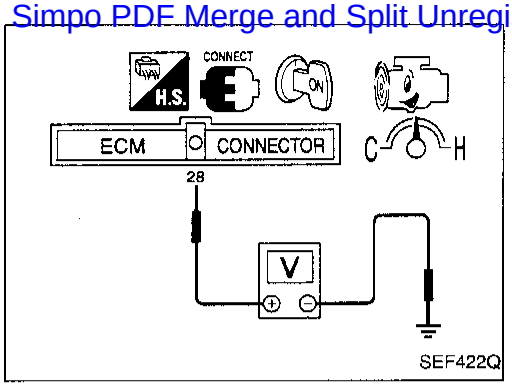

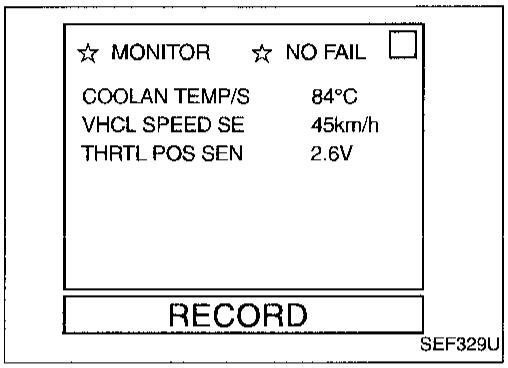

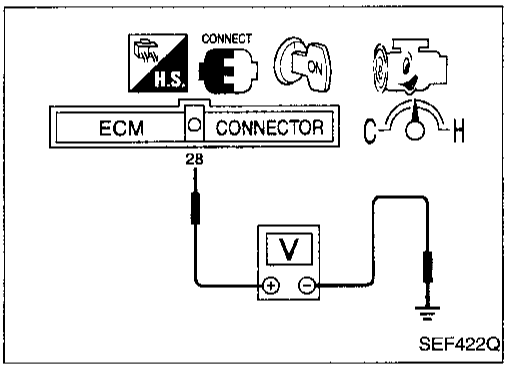

Closed Throttle Position Switch (Cont'd)

DIAGNOSTIC TROUBLE CODE CONFIRMATION PROCEDURE

CAUTION:
Always drive vehicle at a safe speed.

NOTE:
If "DIAGNOSTIC TROUBLE CODE CONFIRMATION PROCEDURE" has been previously conducted, always turn ignition switch "OFF" and wait at least 5 seconds before conducting the next test.

1) Start engine and warm it up to normal operating temperature.
2) Check voltage between ECM terminal ㉘ and ground under the following conditions.
   At idle: Battery voltage
   At 2,000 rpm: 0 - 1V
   If the check result is NG, go to "DIAGNOSTIC PROCEDURE", EC-300.
   If OK, go to following step.
3) Select "DATA MONITOR" mode with CONSULT.
4) Drive the vehicle for at least 5 consecutive seconds under the following condition.
   THRTL POS SEN: More than 2.5V
   VHCL SPEED SE: More than 4 km/h (2 MPH)
   Selector lever: Suitable position
   Driving pattern: Driving vehicle uphill (Increased engine load) will help maintain the driving conditions required for this test.

OR

OVERALL FUNCTION CHECK

Use this procedure to check the overall function of the closed throttle position switch circuit. During this check, a 1st trip DTC might not be confirmed.

1) Start engine and warm it up to normal operating temperature.
2) Check the voltage between ECM terminal ㉘ and ground under the following conditions.
   At idle: Battery voltage
   At 2,000 rpm: 0 - 1V

Closed Throttle Position Switch (Cont'd)

Simpo PDF Merge and Split Unregistered Version - http://www.simpopdf.com

EC-TP/SW-01

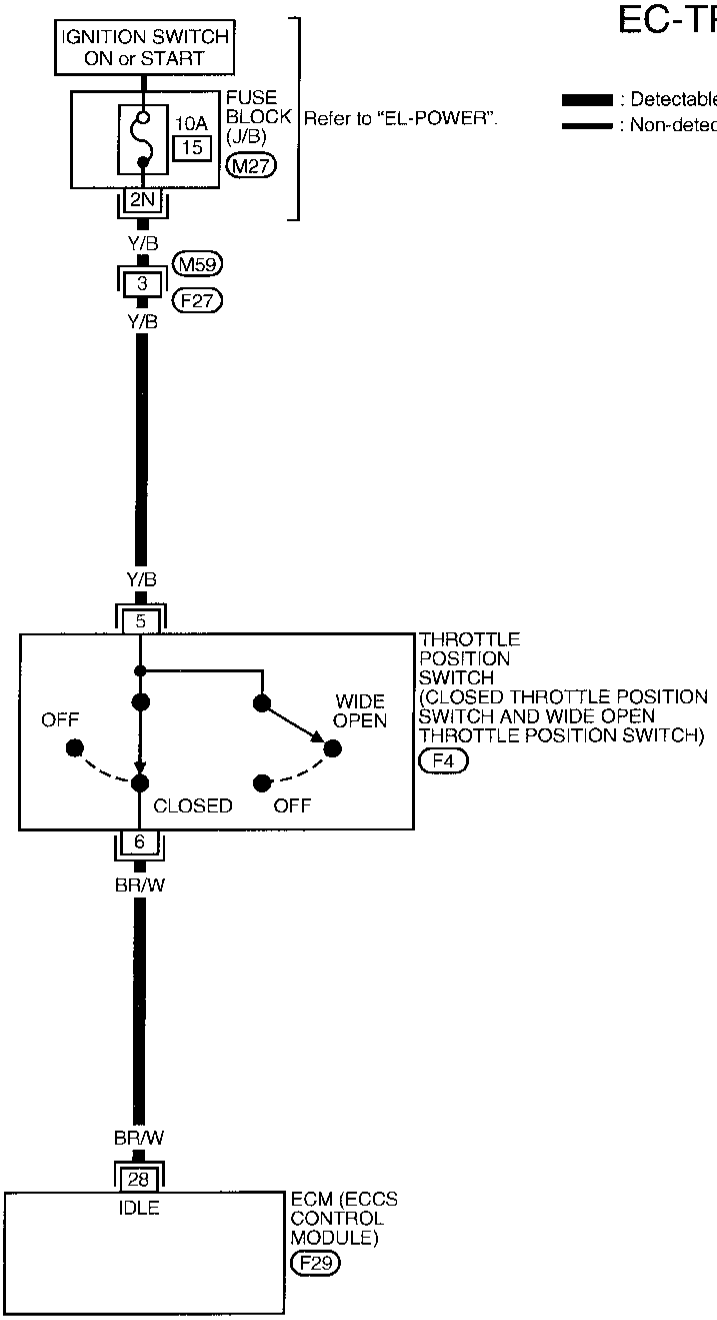

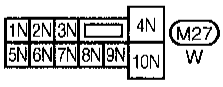

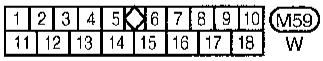

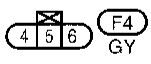

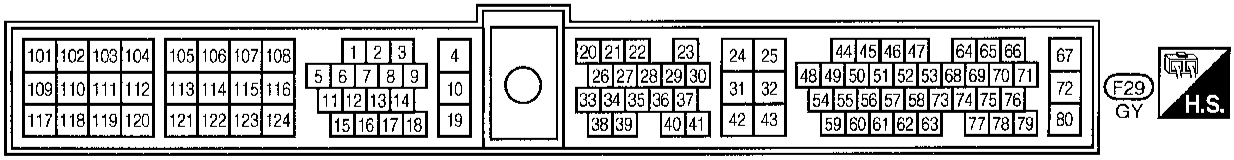

AEC538A

Closed Throttle Position Switch (Cont'd)

Simpo PDF Merge and Split Unregistered Version - http://www.simpopdf.com

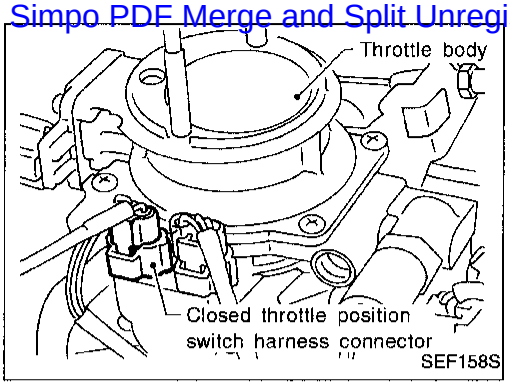

DIAGNOSTIC PROCEDURE

INSPECTION START

A

CHECK POWER SUPPLY.
1. Turn ignition switch "OFF".
2. Disconnect throttle position switch harness connector.
3. Turn ignition switch "ON".
4. Check voltage between terminal (5) and engine ground with CONSULT or tester.

Voltage: Battery voltage

NG → Check the following.
- Harness connectors (M59), (F27)
- 10A fuse
- Harness for open or short between throttle position switch and 10A fuse

If NG, repair harness or connectors.

OK ↓

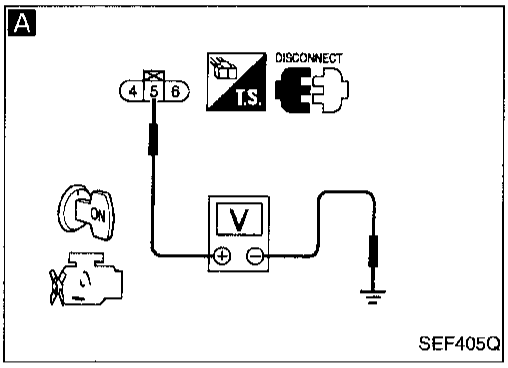

B

CHECK INPUT SIGNAL CIRCUIT.
1. Turn ignition switch "OFF".
2. Disconnect ECM harness connector.
3. Check harness continuity between ECM terminal (28) and terminal (6).

Continuity should exist.

If OK, check harness for short to ground and short to power.

NG → Repair open circuit, short to ground or short to power in harness or connectors.

OK ↓

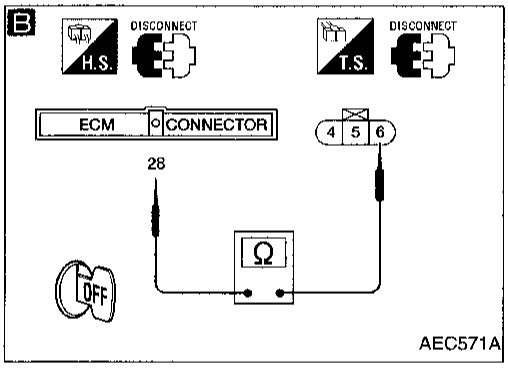

ADJUST THROTTLE POSITION SWITCH IDLE POSITION.
Perform BASIC INSPECTION, EC-71.

OK ↓

CHECK COMPONENT
(Closed throttle position switch).
Refer to "COMPONENT INSPECTION" on next page.

NG → Replace throttle position switch.

OK ↓

CHECK COMPONENT
(Throttle position sensor).
Refer to "COMPONENT INSPECTION" on next page.

NG → Replace throttle position sensor.

OK ↓

Perform "TROUBLE DIAGNOSIS FOR INTERMITTENT INCIDENT", EC-93.

INSPECTION END

Simpo PDF Merge and Split Unregistered Version - http://www.simpopdf.com

Closed Throttle Position Switch (Cont'd)

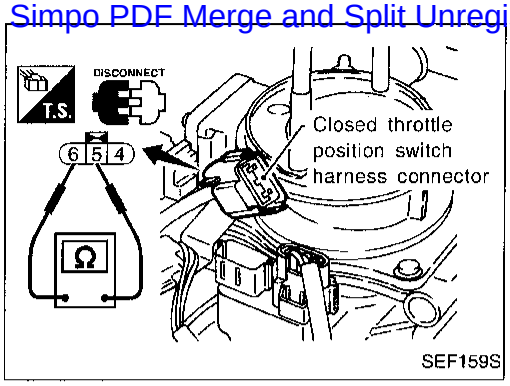

COMPONENT INSPECTION

Closed throttle position switch

1. Start engine and warm it up to normal operating temperature.
2. Turn ignition switch "OFF".
3. Disconnect throttle position switch harness connector.
4. Check continuity between terminals ⑤ and ⑥ while opening throttle valve manually.

Throttle valve conditions	Continuity
Completely closed	Yes
Partially open or completely open	No

If NG, replace throttle position switch.

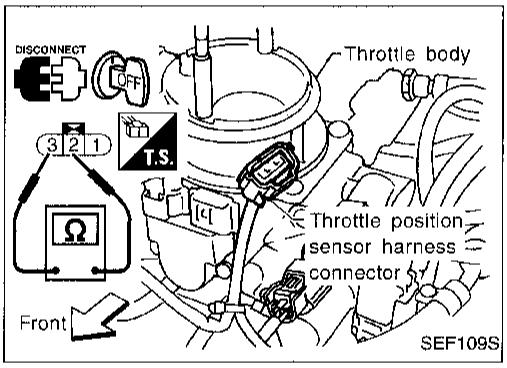

Throttle position sensor

1. Disconnect throttle position sensor harness connector.
2. Make sure that resistance between terminals ② and ③ changes when opening throttle valve manually.

Throttle valve conditions	Resistance [at 25°C (77°F)]
Completely closed	Approximately 0.5 kΩ
Partially open	0.5 - 4 kΩ
Completely open	Approximately 4 kΩ

If NG, replace throttle position sensor.
To adjust it, perform "Basic Inspection", EC-71.

Simpo PDF Merge and Split Unregistered Version - http://www.simpopdf.com

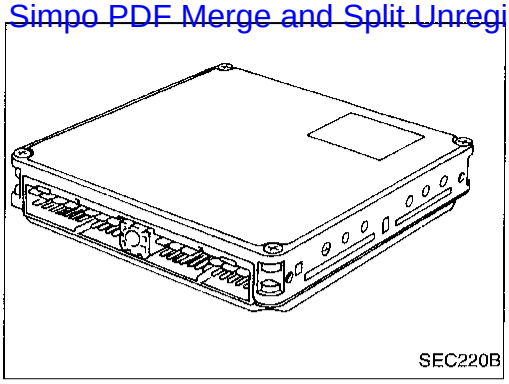
SEC220B

Engine Control Module (ECM)

COMPONENT DESCRIPTION

The ECM consists of a microcomputer, diagnostic test mode selector, and connectors for signal input and output and for power supply. The unit controls the engine.

ON BOARD DIAGNOSIS LOGIC

Diagnostic Trouble Code No.	Malfunction is detected when	Check Item (Possible Cause)
P0605 0301	● ECM calculation function is malfunctioning.	● ECM

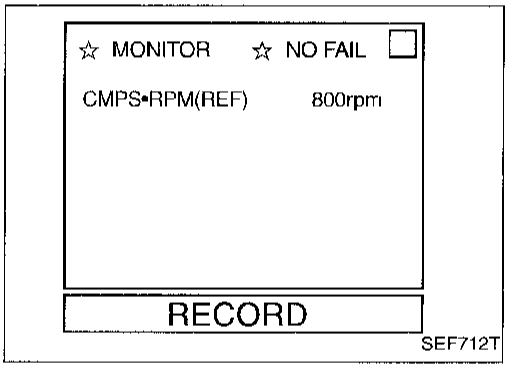

SEF712T

DIAGNOSTIC TROUBLE CODE CONFIRMATION PROCEDURE

NOTE:
If "DIAGNOSTIC TROUBLE CODE CONFIRMATION PROCEDURE" has been previously conducted, always turn ignition switch "OFF" and wait at least 5 seconds before conducting the next test.

1) Turn ignition switch "ON".
2) Select "DATA MONITOR" mode with CONSULT.
3) Start engine.
4) Run engine for at least 30 seconds at idle speed.

OR

1) Turn ignition switch "ON".
2) Start engine.
3) Run engine for at least 30 seconds at idle speed.
4) Select "Mode 7" with GST.

OR

1) Turn ignition switch "ON".
2) Start engine and wait at least 30 seconds.
3) Turn ignition switch "OFF", wait at least 5 seconds and then turn "ON".
4) Perform "Diagnostic Test Mode II" (Self-diagnostic results) with ECM.

Engine Control Module (ECM) (Cont'd)

Simpo PDF Merge and Split Unregistered Version - http://www.simpopdf.com

DIAGNOSTIC PROCEDURE

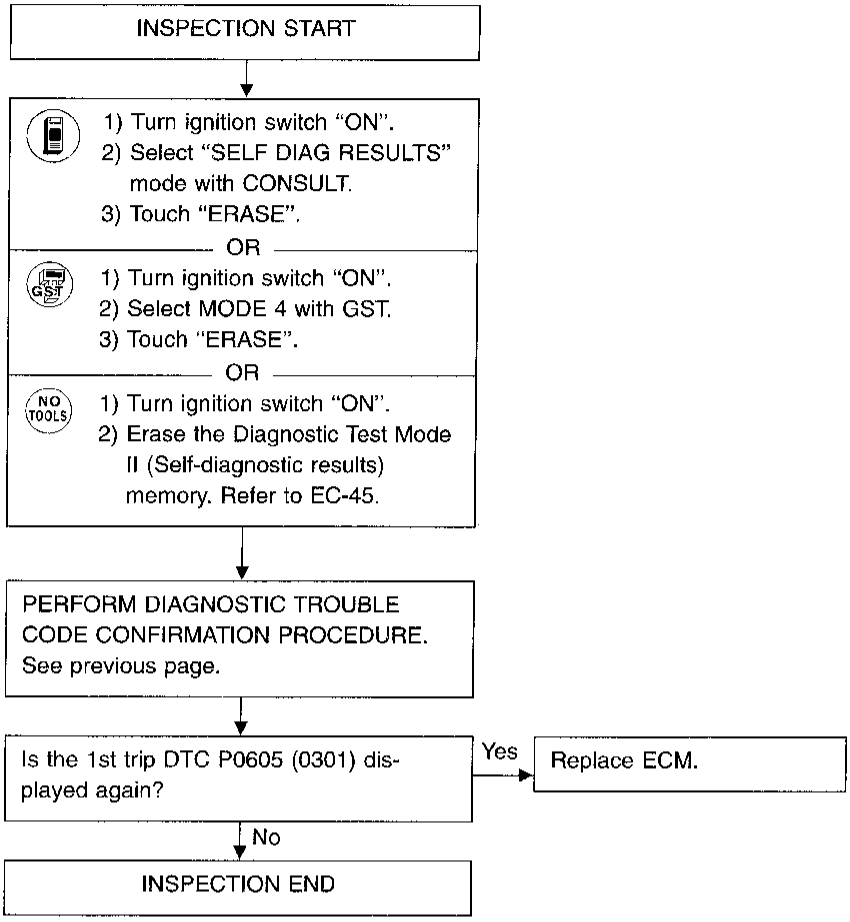

Simpo PDF Merge and Split Unregistered Version - http://www.simpopdf.com

Manifold Absolute Pressure (MAP)/ Barometric Pressure (BARO) Switch Solenoid Valve

SYSTEM DESCRIPTION

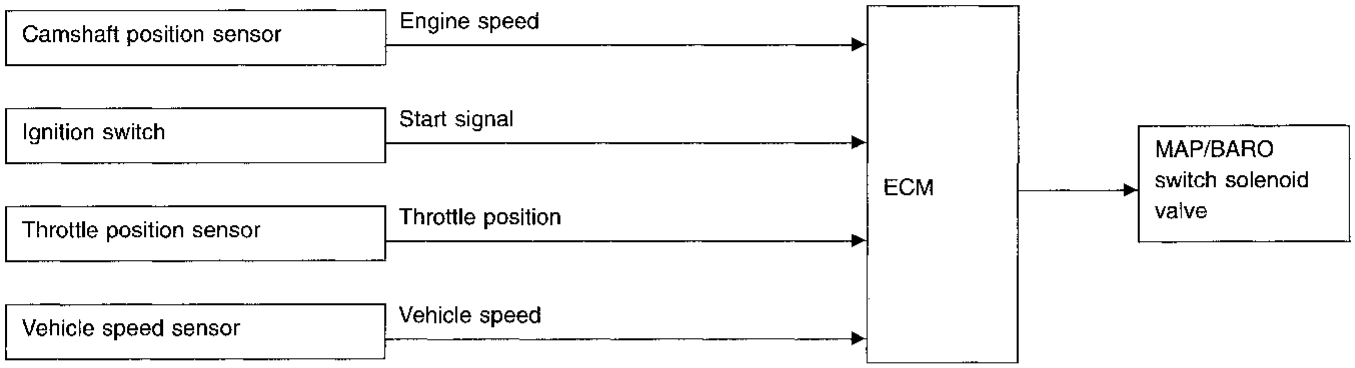

This system allows the absolute pressure sensor to monitor either ambient barometric pressure or intake manifold pressure. The MAP/BARO switch solenoid valve switches between two passages by ON-OFF pulse signals from the ECM. (One passage is from the intake air duct, the other is from the intake manifold.) Either ambient barometric pressure or intake manifold pressure is applied to the absolute pressure sensor.

Solenoid	Conditions
ON	● For 5 seconds after turning ignition switch ON (Engine is not running.) OR ● For 5 seconds after starting engine OR ● More than 5 minutes after the solenoid valve shuts OFF. and ● Throttle valve is shut or almost fully shut for more than 5 seconds and ● Vehicle speed is less than 100 km/h (62 MPH).

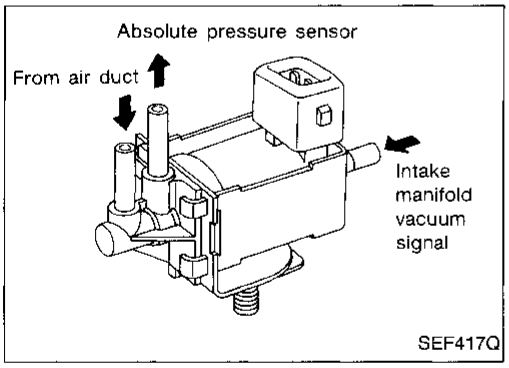

COMPONENT DESCRIPTION

The MAP/BARO switch solenoid valve switches its air flow passage according to the voltage signal sent from the ECM. When voltage is supplied from the ECM, the MAP/BARO switch solenoid turns "ON". Then, the absolute pressure sensor can monitor the ambient barometric pressure. When voltage is not supplied from the ECM, the MAP/BARO switch solenoid valve turns "OFF". Then, the sensor monitors intake manifold pressure.

CONSULT REFERENCE VALUE IN DATA MONITOR MODE

Specification data are reference values.

MONITOR ITEM	CONDITION	SPECIFICATION
MAP/BARO SW/V	● Engine: For 5 seconds after starting engine	BARO
	● Ignition switch: More than 5 seconds after turning ignition switch "ON" ● Engine: More than 5 seconds after starting engine	MAP

Simpo PDF Merge and Split Unregistered Version - http://www.simpopdf.com

Manifold Absolute Pressure (MAP)/ Barometric Pressure (BARO) Switch Solenoid Valve (Cont'd)

ECM TERMINALS AND REFERENCE VALUE

Specification data are reference values and are measured between each terminal and ㉜ (ECM ground).

TERMINAL NO.	WIRE COLOR	ITEM	CONDITION	DATA (DC Voltage)
118	LG/B	MAP/BARO switch solenoid valve	Ignition switch "ON" └ For 5 seconds after turning ignition switch "ON" Engine is running. └ For 5 seconds after starting engine	0 - 1V
			Ignition switch "ON" └ More than 5 seconds after turning ignition switch "ON" Engine is running. └ More than 5 seconds after starting engine	BATTERY VOLTAGE (11 - 14V)

ON BOARD DIAGNOSIS LOGIC

Diagnostic Trouble Code No.	Malfunction is detected when	Check Items (Possible Cause)
P1105 1302	A) MAP/BARO switch solenoid valve receives the voltage supplied though ECM does not supply the voltage to the valve.	● Harness or connectors (MAP/BARO switch solenoid valve circuit is open or shorted.) ● MAP/BARO switch solenoid valve
	B) There is little difference between MAP/BARO switch solenoid valve input voltage at ambient barometric pressure and voltage at intake manifold pressure.	● Harness or connectors (MAP/BARO switch solenoid valve circuit is open or shorted.) ● Hoses (Hoses are clogged, vent, kinked, disconnected or improper connection.) ● Absolute pressure sensor ● MAP/BARO switch solenoid valve

Simpo PDF Merge and Split Unregistered Version - http://www.simpopdf.com

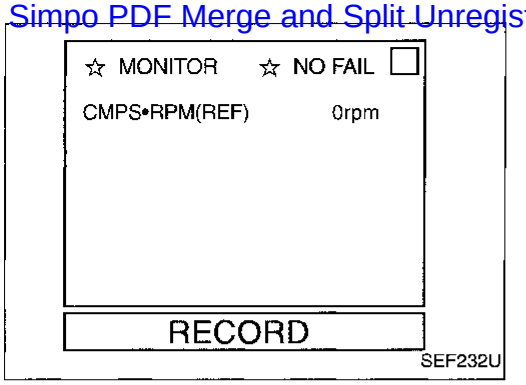

Manifold Absolute Pressure (MAP)/ Barometric Pressure (BARO) Switch Solenoid Valve (Cont'd)

DIAGNOSTIC TROUBLE CODE CONFIRMATION PROCEDURE

Perform "Procedure for malfunction A" first. If the 1st trip DTC cannot be confirmed, perform "Procedure for malfunction B".

NOTE:
If "DIAGNOSTIC TROUBLE CODE CONFIRMATION PROCEDURE" has been previously conducted, always turn ignition switch "OFF" and wait at least 5 seconds before conducting the next test.

Procedure for malfunction A

TESTING CONDITION:
Before performing the following procedure, confirm that battery voltage is more than 11V at ignition switch "ON".

1) Turn ignition switch "ON".
2) Select "DATA MONITOR" mode with CONSULT.
3) Wait at least 10 seconds.

OR

1) Turn ignition switch "ON" and wait at least 10 seconds.
2) Select "Mode 7" with GST.

OR

1) Turn ignition switch "ON" and wait at least 10 seconds.
2) Turn ignition switch "OFF", wait at least 5 seconds and then turn "ON".
3) Perform "Diagnostic Test Mode II (Self-diagnostic results)" with ECM.

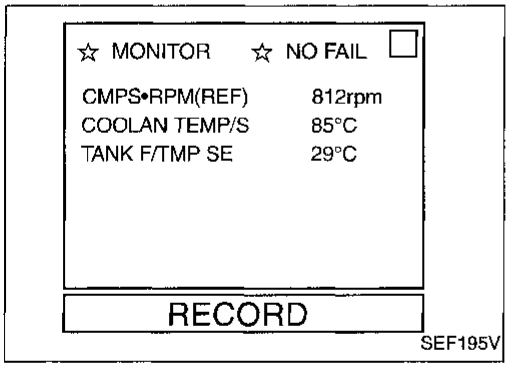

Procedure for malfunction B

TESTING CONDITION:
Always perform the test at a temperature of 5°C (41°F) or higher.

1) Start engine and warm it up to normal operating temperature.
2) Turn ignition switch "OFF" and wait at least 5 seconds.
3) Turn ignition switch "ON" again and select "DATA MONITOR" mode with CONSULT.
4) Make sure that "TANK/F/TEMP SE" is more than 0°C (32°F).
5) Start engine and let it idle for at least 10 seconds.

OR

1) Start engine and warm it up to normal operating temperature.
2) Turn ignition switch "OFF" and wait at least 5 seconds.
3) Turn ignition switch "ON".
4) Check that voltage between ECM terminal ⑥⓪ and ground is less than 4.2V.
5) Start engine and let it idle for at least 10 seconds.
6) Select "MODE 7" with GST.

Simpo PDF Merge and Split Unregistered Version - http://www.simpopdf.com

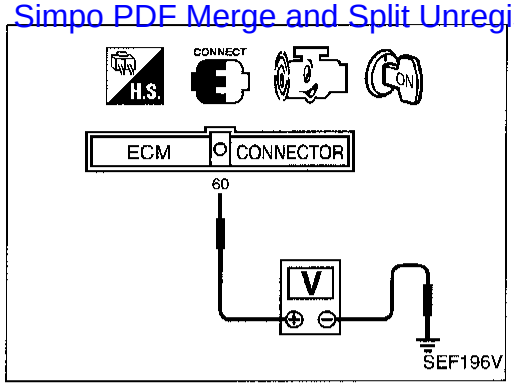

Manifold Absolute Pressure (MAP)/ Barometric Pressure (BARO) Switch Solenoid Valve (Cont'd)

OR

NO TOOLS

1) Start engine and warm it up to normal operating temperature.
2) Turn ignition switch "OFF" and wait at least 5 seconds.
3) Turn ignition switch "ON".
4) Check that voltage between ECM terminal (60) and ground is less than 4.2V.
5) Start engine and let it idle for at least 10 seconds.
6) Turn ignition switch "OFF", wait at least 5 seconds and then turn "ON".
7) Perform "Diagnostic Test Mode II (Self-diagnostic results)" with ECM.

Simpo PDF Merge and Split Unregistered Version - http://www.simpopdf.com

Manifold Absolute Pressure (MAP)/ Barometric Pressure (BARO) Switch Solenoid Valve (Cont'd)

EC-SW/V-01

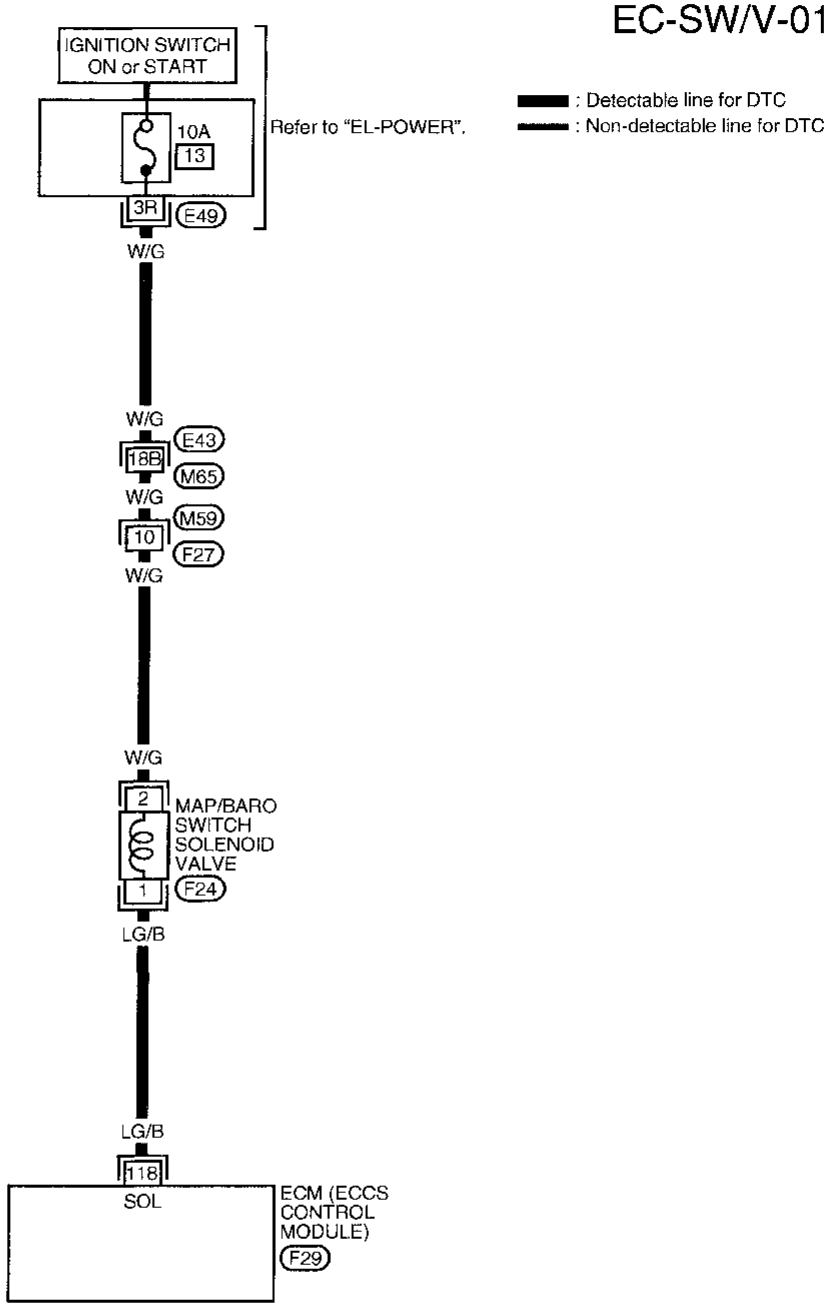

Refer to last page (Foldout page).
M65 , E43

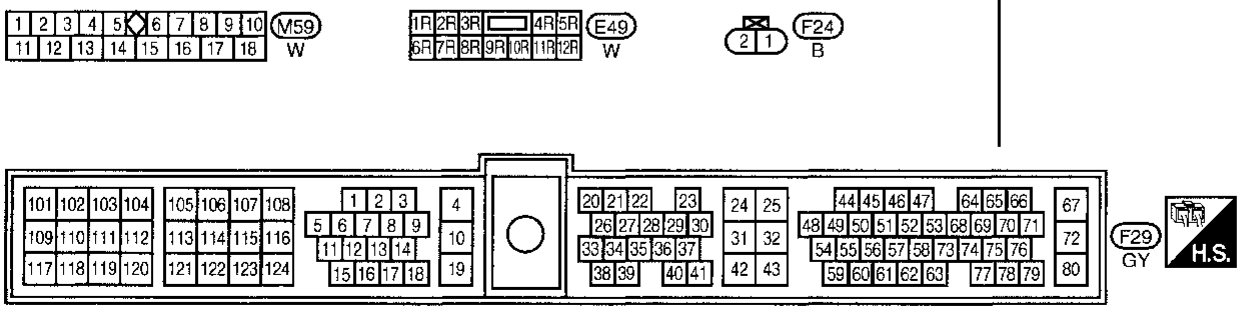

AEC540A

Simpo PDF Merge and Split Unregistered Version - http://www.simpopdf.com

Manifold Absolute Pressure (MAP)/ Barometric Pressure (BARO) Switch Solenoid Valve (Cont'd)

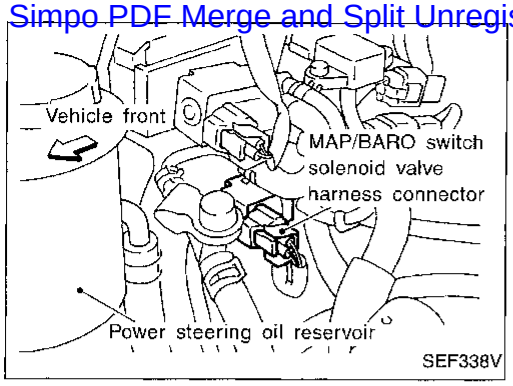

DIAGNOSTIC PROCEDURE

If the trouble is duplicated after "Procedure for malfunction A", perform "Procedure A" below. If the trouble is duplicated after "Procedure for malfunction B", perform "Procedure B" on next page.

Procedure A

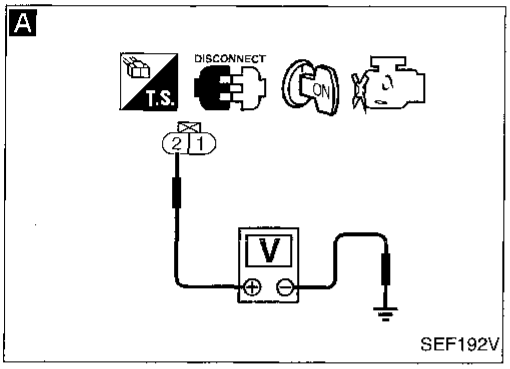

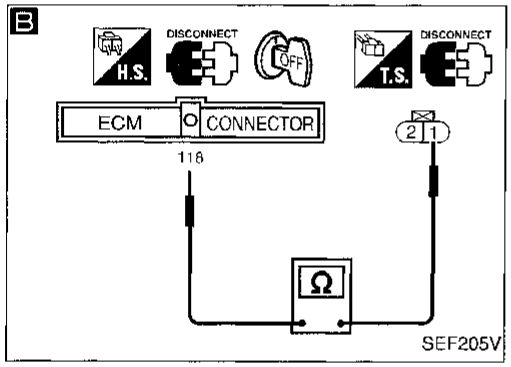

INSPECTION START

A

CHECK POWER SUPPLY.
1. Turn ignition switch "OFF".
2. Disconnect MAP/BARO switch solenoid valve harness connector.
3. Turn ignition switch "ON".
4. Check voltage between terminal (2) and engine ground with CONSULT or tester.

Voltage: Battery voltage

NG → Check the following.
- Harness connectors (E43), (M65)
- Harness connectors (M59), (F27)
- 10A fuse
- Harness for open or short between MAP/BARO switch solenoid valve and 10A fuse

If NG, repair harness or connectors.

OK ↓

B

CHECK OUTPUT SIGNAL CIRCUIT.
1. Turn ignition switch "OFF".
2. Disconnect ECM harness connector.
3. Check harness continuity between ECM terminal (118) and terminal (1) with CONSULT or tester.

Continuity should exist.

If OK, check harness for short to ground and short to power.

NG → Repair open circuit, short to ground or short to power in harness or connectors.

OK ↓

CHECK COMPONENT (MAP/BARO switch solenoid valve). Refer to "COMPONENT INSPECTION", EC-312.

NG → Replace MAP/BARO switch solenoid valve.

OK ↓

Perform "TROUBLE DIAGNOSIS FOR INTERMITTENT INCIDENT", EC-93.

INSPECTION END

Simpo PDF Merge and Split Unregistered Version - http://www.simpopdf.com

Manifold Absolute Pressure (MAP)/ Barometric Pressure (BARO) Switch Solenoid Valve (Cont'd)

Procedure B

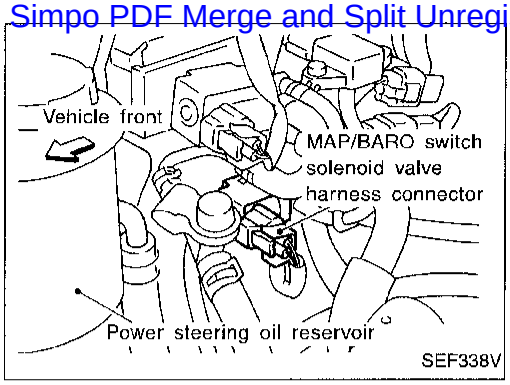

SEF338V

A

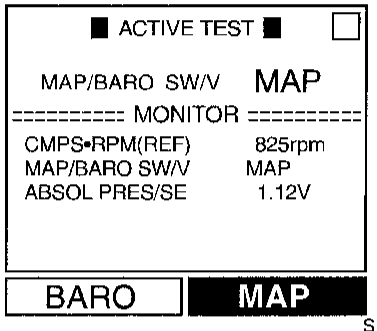

SEF130V

A

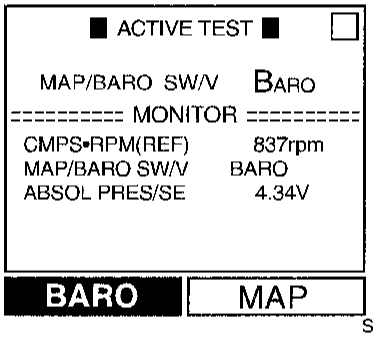

SEF131V

A

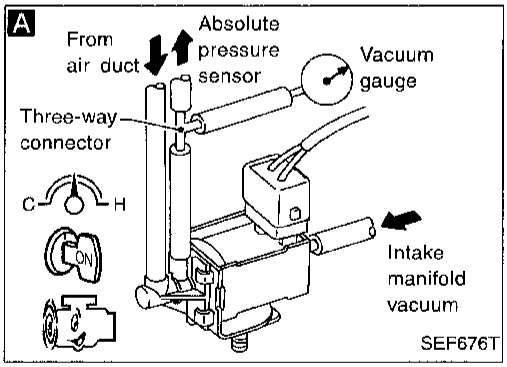

SEF676T

B

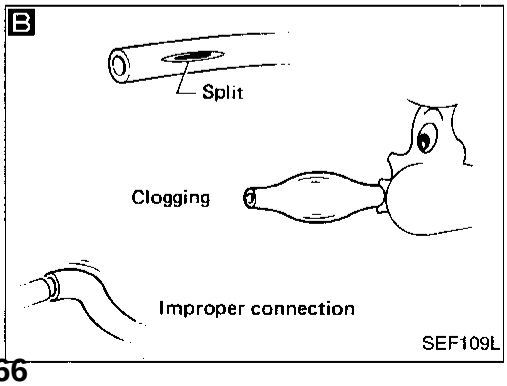

SEF109L

INSPECTION START

A

CHECK VACUUM SOURCE AND CIRCUIT TO MAP/BARO SWITCH SOLENOID VALVE.

1. Start engine and warm it up to normal operating temperature.
2. Turn ignition switch "OFF".
3. Connect MAP/BARO switch solenoid valve and absolute pressure sensor with a rubber tube that has vacuum gauge.
4. Turn ignition switch "ON".
5. Select "MAP/BARO SW/V" in "ACTIVE TEST" mode with CONSULT.
6. Start engine and let it idle.
7. Touch "MAP" and "BARO" alternately and check for vacuum.

MAP/BARO SW/V	Vacuum
BARO	Should not exist.
MAP	Should exist.

OR

4. Turn ignition switch "ON".
5. Start engine and check for vacuum.
   For 5 seconds after starting engine
   Vacuum should not exist.
   More than 5 seconds after starting engine
   Vacuum should exist.

OK → CHECK COMPONENT (Absolute pressure sensor).
1. Check for disconnection of vacuum hose connected to the sensor.
2. Check sensor harness connector for water.
   Water should not exist.

Refer to "COMPONENT INSPECTION" of "TROUBLE DIAGNOSIS FOR DTC P0105", EC-114.

OK → Go to "TROUBLE DIAGNOSIS FOR INTERMITTENT INCIDENT", EC-93.

NG → Replace absolute pressure sensor.

NG

B

CHECK HOSE.
1. Turn ignition switch "OFF".
2. Check hose for clogging, cracks, disconnection or improper connection.

NG → Clean, repair or reconnect the hose.
If NG, check vacuum port for clogging.

OK → CHECK INTAKE SYSTEM. Check the intake system for air leaks.

OK

Ⓐ
(Go to next page.)

Simpo PDF Merge and Split Unregistered Version - http://www.simpopdf.com

Manifold Absolute Pressure (MAP)/ Barometric Pressure (BARO) Switch Solenoid Valve (Cont'd)

C

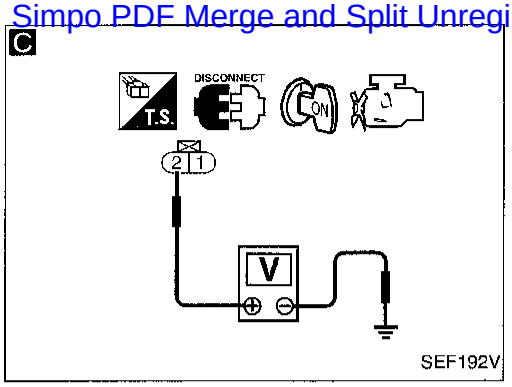

SEF192V

D

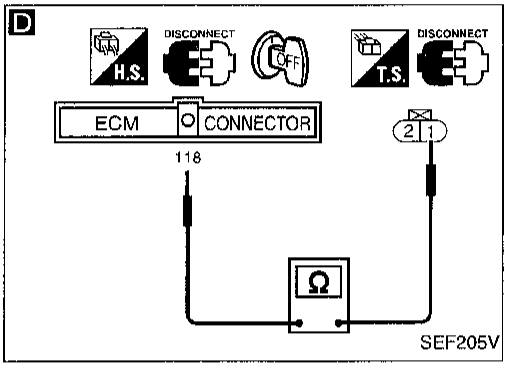

SEF205V

Ⓐ

C

CHECK POWER SUPPLY.
1. Turn ignition switch "OFF".
2. Disconnect MAP/BARO switch solenoid valve harness connector.
3. Turn ignition switch "ON".
4. Check voltage between terminal ② and engine ground with CONSULT or tester.
   Voltage: Battery voltage

NG → Check the following.
- Harness connectors E43, M65
- Harness connectors M59, F27
- 10A fuse
- Harness for open or short between MAP/BARO switch solenoid valve and 10A fuse

If NG, repair harness or connectors.

OK ↓

D

CHECK OUTPUT SIGNAL CIRCUIT.
1. Turn ignition switch "OFF".
2. Disconnect ECM harness connector.
3. Check harness continuity between ECM terminal 118 and terminal ① with CONSULT or tester.
   Continuity should exist.
   If OK, check harness for short to ground and short to power.

NG → Repair open circuit, short to ground or short to power in harness or connectors.

OK ↓

CHECK COMPONENT (MAP/BARO switch solenoid valve).
Refer to "COMPONENT INSPECTION" on next page.

NG → Replace MAP/BARO switch solenoid valve.

OK ↓

Perform "TROUBLE DIAGNOSIS FOR INTERMITTENT INCIDENT", EC-93.

↓

INSPECTION END

Simpo PDF Merge and Split Unregistered Version - http://www.simpopdf.com

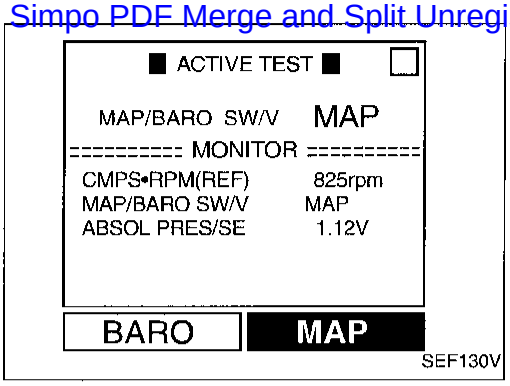

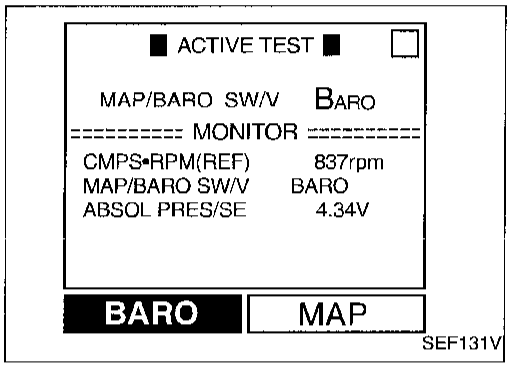

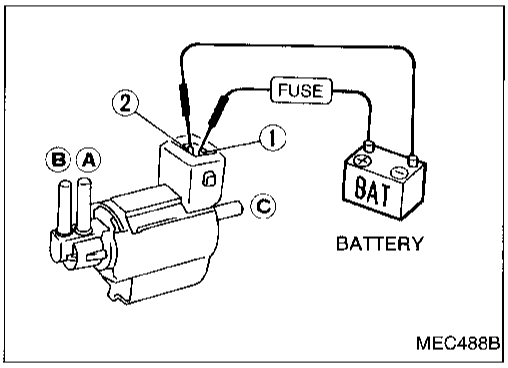

Manifold Absolute Pressure (MAP)/ Barometric Pressure (BARO) Switch Solenoid Valve (Cont'd)

COMPONENT INSPECTION

MAP/BARO switch solenoid valve

1. Start engine and warm it up to normal operating temperature.
2. Perform "MAP/BARO SW/V" in "ACTIVE TEST" mode with CONSULT.
3. Check the following.
   - Condition: At idle under no-load
   - CONSULT display

MAP/BARO	ABSOL PRES/SE (Voltage)
BARO	More than 2.6V
MAP	Less than the voltage at BARO

- Time for voltage to change

MAP/BARO SW/V	Required time to switch
BARO to MAP	Less than 1 second
MAP to BARO	

4. If NG, check solenoid valve as shown below.

OR

1. Remove MAP/BARO switch solenoid valve.
2. Check air passage continuity.

Condition	Air passage continuity between (A) and (B)	Air passage continuity between (A) and (C)
12V direct current supply between terminals (1) and (2)	Yes	No
No supply	No	Yes

3. If NG or operation takes more than 1 second, replace solenoid valve.

Simpo PDF Merge and Split Unregistered Version - http://www.simpopdf.com

Closed Loop Control

ON BOARD DIAGNOSIS LOGIC

★ The closed loop control has the one trip detection logic.

Diagnostic Trouble Code No.	Malfunction is detected when ...	Check Items (Possible Cause)
P1148 0307	● The closed loop control function does not operate even when vehicle is driving in the specified condition.	● The front heated oxygen sensor circuit is open or shorted. ● Front heated oxygen sensor ● Front heated oxygen sensor heater

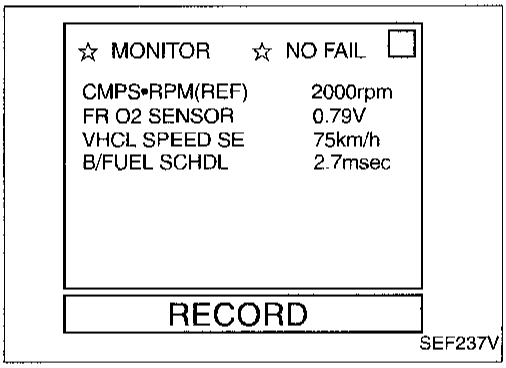

DIAGNOSTIC TROUBLE CODE CONFIRMATION PROCEDURE

CAUTION:
Always drive vehicle at a safe speed.

NOTE:
If "DIAGNOSTIC TROUBLE CODE CONFIRMATION PROCEDURE" has been previously conducted, always turn ignition switch "OFF" and wait at least 5 seconds before conducting the next test.

TESTING CONDITION:

- **Never raise engine speed above 3,000 rpm during the "DIAGNOSTIC TROUBLE CODE CONFIRMATION PROCEDURE". If the engine speed limit is exceeded, retry the procedure from step 5).**
- **Before performing the following procedure, confirm that battery voltage is in between 11V and 16V at idle.**

1) Start engine and warm it up to normal operating temperature.
2) Select "DATA MONITOR" mode with CONSULT.
3) Hold engine speed at 2,000 rpm.
4) While holding engine speed at 2,000 rpm, check the following.
   - "FR O2 SENSOR" voltage should go above 0.61V at least once.

   OR

   - "FR O2 SENSOR" voltage should go below 0.23V at least once.

   If the check result is NG, perform "DIAGNOSIS PROCEDURE", EC-166.
   If the check result is OK, perform the following step.
5) Let engine idle at least 3 minutes.
6) Maintain the following condition at least 50 consecutive seconds.

Closed Loop Control (Cont'd)

Simpo PDF Merge and Split Unregistered Version - http://www.simpopdf.com

B/FUEL SCHDL: 1.5 ms or more (A/T)
1.3 ms or more (M/T)
CMPS·RPM (REF): 1,500 - 3,000 rpm (A/T)
1,700 - 3,000 rpm (M/T)
Selector lever: Suitable position
VHCL SPEED SE: More than 70 km/h (43 MPH)

During this test, P0130 may be displayed on CONSULT screen.

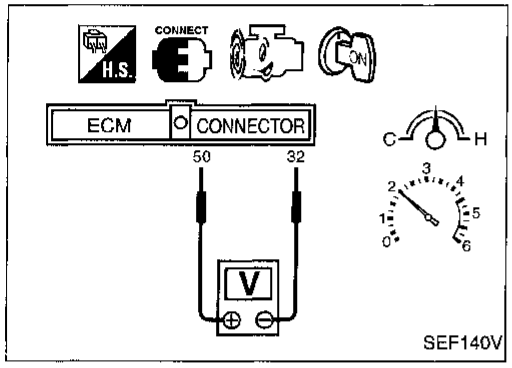

OR

OVERALL FUNCTION CHECK

Use this procedure to check the overall function of the closed loop control. During this check, a 1st trip DTC might not be confirmed.

1) Start engine and warm it up to normal operating temperature.
2) Set voltmeter probes between ECM terminal (50) (sensor signal) and (32) (ECM ground).
3) Check the following with engine speed held at 2,000 rpm constant under no load.

- The voltage should go above 0.7V at least once.

OR

- The voltage should go below 0.21V at least once.

DIAGNOSTIC PROCEDURE

Refer to TROUBLE DIAGNOSIS FOR DTC P0133, EC-166.

Simpo PDF Merge and Split Unregistered Version - http://www.simpopdf.com

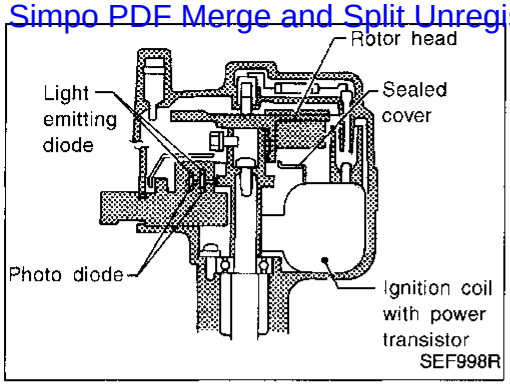

Ignition Signal

COMPONENT DESCRIPTION

Ignition coil & power transistor

The ignition signal from the ECM is sent to the power transistor. The power transistor switches on and off the ignition coil primary circuit. As the primary circuit is turned on and off, the proper high voltage is induced in the coil secondary circuit.

CONSULT REFERENCE VALUE IN DATA MONITOR MODE

Specification data are reference values.

MONITOR ITEM	CONDITION		SPECIFICATION
IGNITION SW	● Ignition switch: ON → OFF → ON		ON → OFF → ON
IGN TIMING	● Engine: After warming up ● Air conditioner switch: "OFF" ● Shift lever: "N" ● No-load	Idle	Approx. 20° BTDC
		2,000 rpm	More than 25° BTDC

ECM TERMINALS AND REFERENCE VALUE

Specification data are reference values and are measured between each terminal and ㉜ (ECM ground).

TER-MINAL NO.	WIRE COLOR	ITEM	CONDITION	DATA (DC Voltage)
1	PU/W	Ignition signal	Engine is running. (Warm-up condition) └ Idle speed	0 - 0.5V 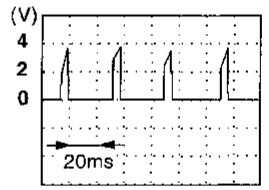 SEF186T
			Engine is running. └ Engine speed is 2,000 rpm.	0.2 - 1.0V 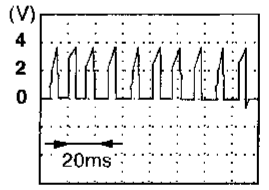 SEF187T

Simpo PDF Merge and Split Unregistered Version - http://www.simpopdf.com

TER-MINAL NO.	WIRE COLOR	ITEM	CONDITION	DATA (DC Voltage)
2	B	Ignition check	Engine is running. (Warm-up condition) └ Idle speed	12 - 14V 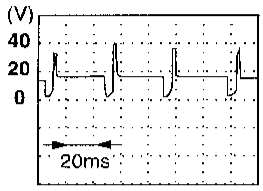 SEF188T
			Engine is running. └ Engine speed is 2,000 rpm.	12 - 13V 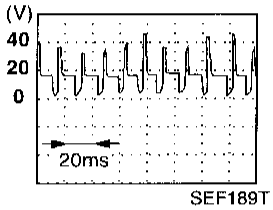 SEF189T

ON BOARD DIAGNOSIS LOGIC

Diagnostic Trouble Code No.	Malfunction is detected when ...	Check Items (Possible Cause)
P1320 0201	● The ignition signal in the primary circuit is not sent to ECM during engine cranking or running.	● Harness or connectors (The ignition primary circuit is open or shorted.) ● Power transistor unit. ● Resistor ● Camshaft position sensor ● Camshaft position sensor circuit

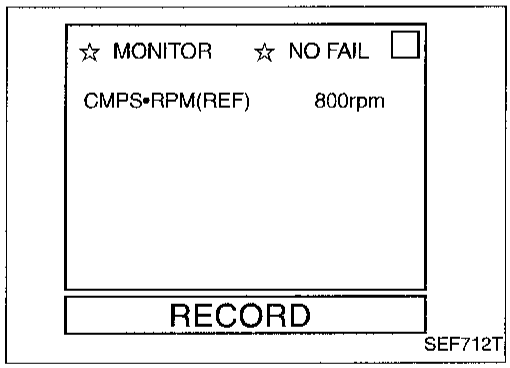

SEF712T

DIAGNOSTIC TROUBLE CODE CONFIRMATION PROCEDURE

NOTE:

- **If "DIAGNOSTIC TROUBLE CODE CONFIRMATION PROCEDURE" has been previously conducted, always turn ignition switch "OFF" and wait at least 5 seconds before conducting the next test.**
- **If both DTC P0340 (0101) and P1320 (0201) are displayed, perform TROUBLE DIAGNOSIS FOR DTC P0340 first. Refer to EC-236.**

1) Turn ignition switch "ON".
2) Select "DATA MONITOR" mode with CONSULT.
3) Start engine. (If engine does not run, turn ignition switch to "START" for at least 5 seconds.)

OR

1) Turn ignition switch "ON".
2) Start engine. (If engine does not run, turn ignition switch to "START" for at least 5 seconds.)
3) Select MODE 7 with GST.

Simpo PDF Merge and Split Unregistered Version - http://www.simpopdf.com

OR

NO TOOLS

1) Turn ignition switch "ON".
2) Start engine. (If engine does not run, turn ignition switch to "START" for at least 5 seconds.)
3) Turn ignition switch "OFF" and wait at least 5 seconds, then turn "ON".
4) Perform "Diagnostic Test Mode II" (Self-diagnostic results) with ECM.

Simpo PDF Merge and Split Unregistered Version - http://www.simpopdf.com

EC-IGN/SG-01

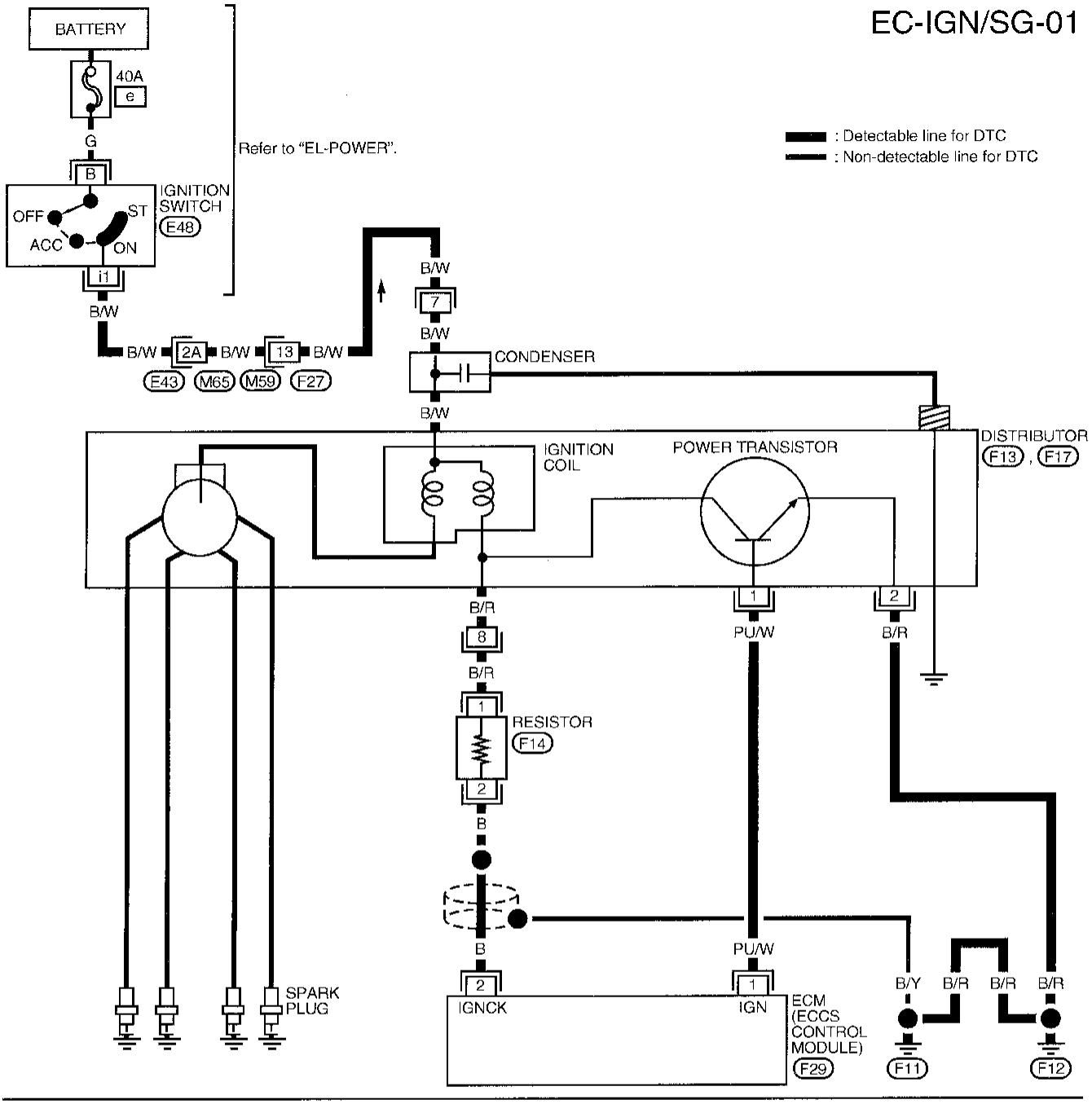

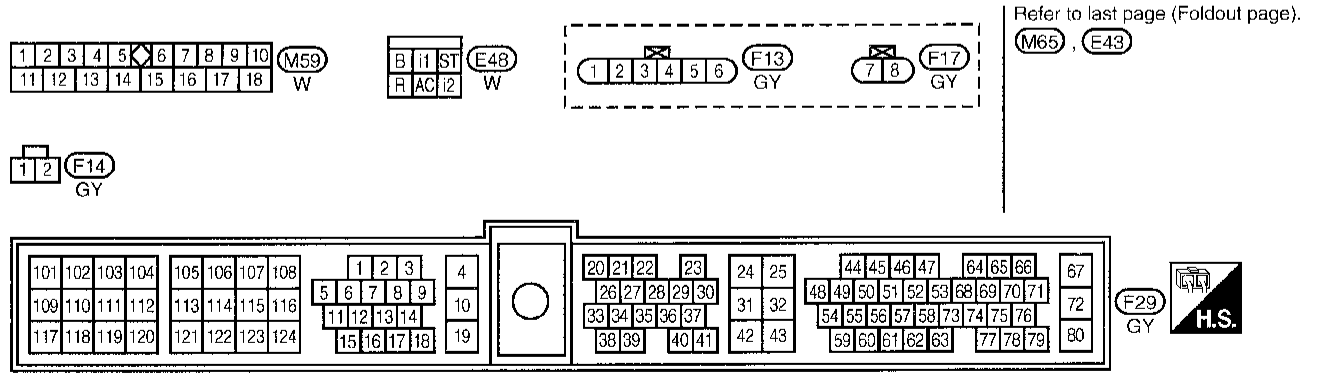

Refer to last page (Foldout page).
M65 , E43

AEC541A

Ignition Signal (Cont'd)

Simpo PDF Merge and Split Unregistered Version - http://www.simpopdf.com

DIAGNOSTIC PROCEDURE

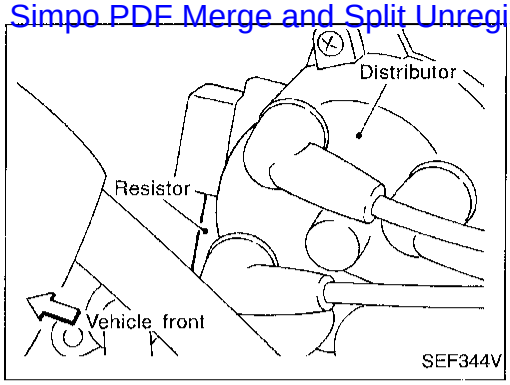

SEF344V

INSPECTION START

Turn ignition switch "OFF", and restart engine.
Is engine running?

Yes → Ⓐ (Go to next page.)

No

A

CHECK POWER SUPPLY.
1. Turn ignition switch "OFF".
2. Disconnect ignition coil harness connector.
3. Turn ignition switch "ON".
4. Check voltage between terminal ⑦ and ground with CONSULT or tester.
Voltage: Battery voltage

NG → Check the following.
- Harness connectors E43, M65
- Harness connectors M59, F27
- Harness for open or short between ignition coil and ignition switch

If NG, repair harness or connectors.

OK

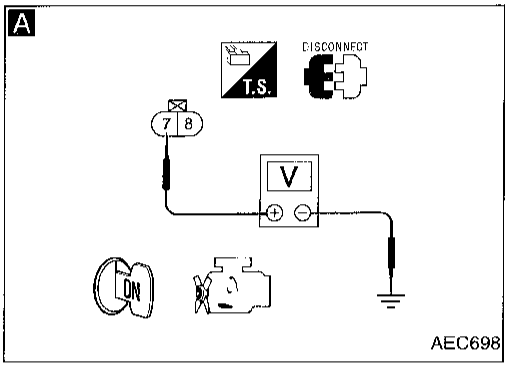

AEC698

B

CHECK GROUND CIRCUIT.
1. Turn ignition switch "OFF".
2. Disconnect power transistor harness connector.
3. Check harness continuity between terminal ② and engine ground.
Continuity should exist.
If OK, check harness for short to ground and short to power.

NG → Repair open circuit, short to ground or short to power in harness or connectors.

OK

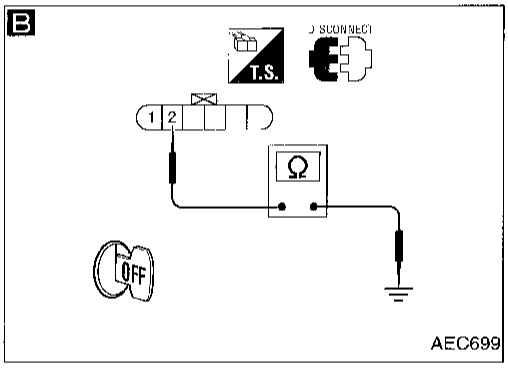

AEC699

C

CHECK OUTPUT SIGNAL CIRCUIT.
1. Disconnect ECM harness connector.
2. Check harness continuity between ECM terminal ① and power transistor terminal ①.
Continuity should exist.
If OK, check harness for short to ground and short to power.

NG → Repair open circuit, short to ground or short to power in harness or connectors.

OK

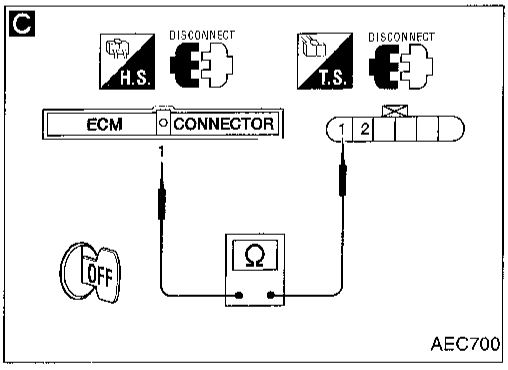

AEC700

CHECK COMPONENTS
(Ignition coil, power transistor).
Refer to "COMPONENT INSPECTION", EC-320.

NG → Replace malfunctioning component(s).

OK

Ⓐ
(Go to next page.)

Simpo PDF Merge and Split Unregistered Version - http://www.simpopdf.com

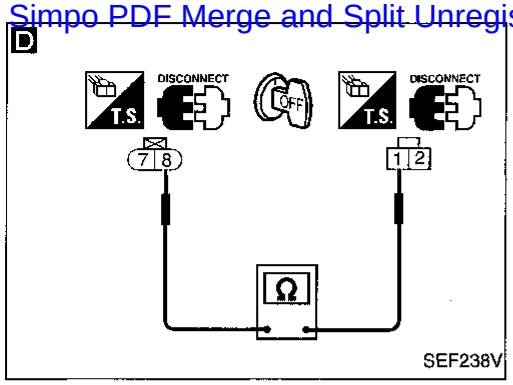

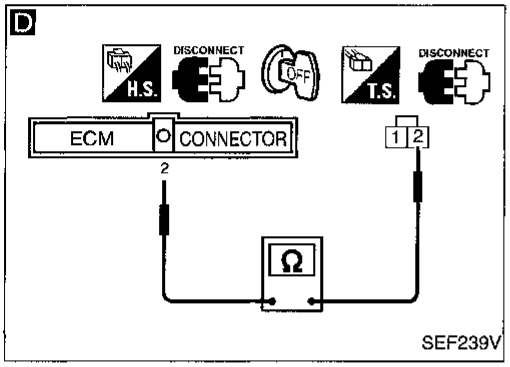

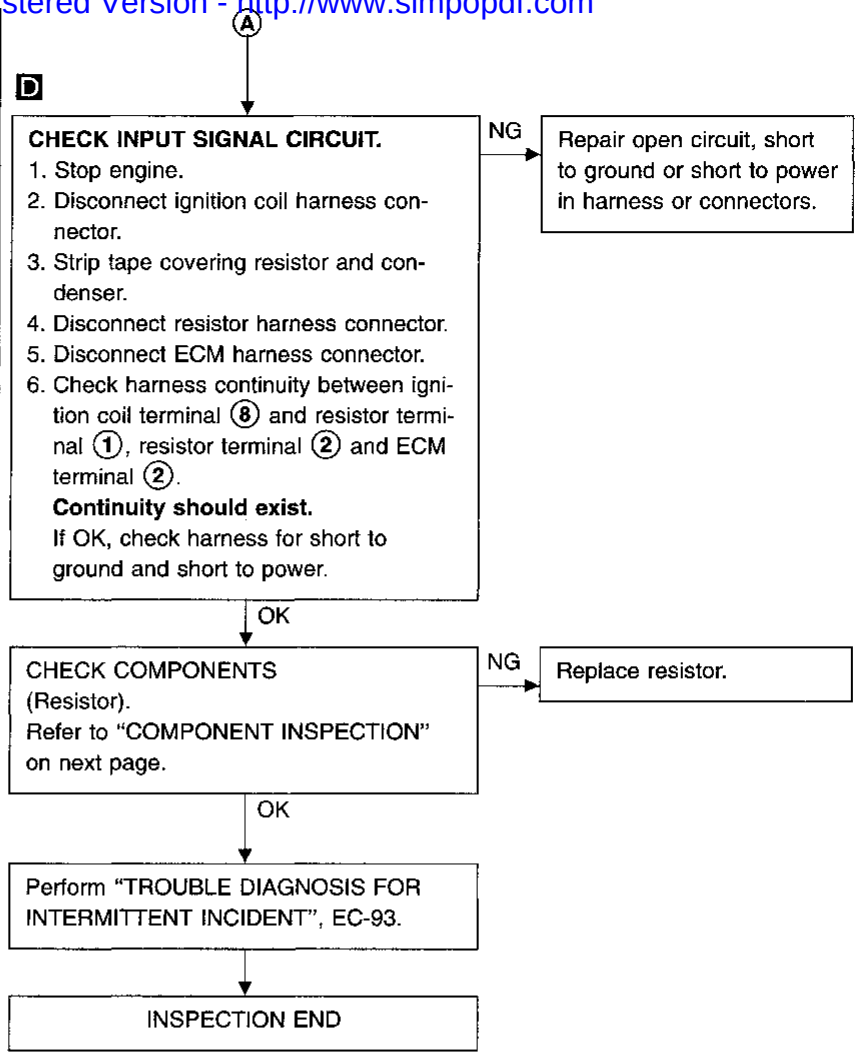

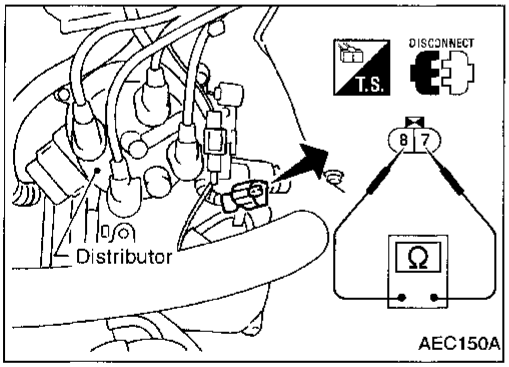

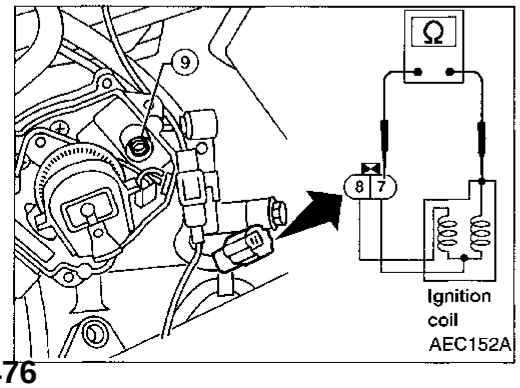

COMPONENT INSPECTION

Ignition coil

1. Disconnect ignition coil harness connector.
2. Remove distributor cap.
3. Check resistance as shown in the figure.

Terminal	Resistance [at 25°C (77°F)]
⑦ - ⑧	Less than 1Ω
⑦ - ⑨	7 - 13 kΩ

If NG, replace distributor assembly as a unit.

Ignition Signal (Cont'd)

Simpo PDF Merge and Split Unregistered Version - http://www.simpopdf.com

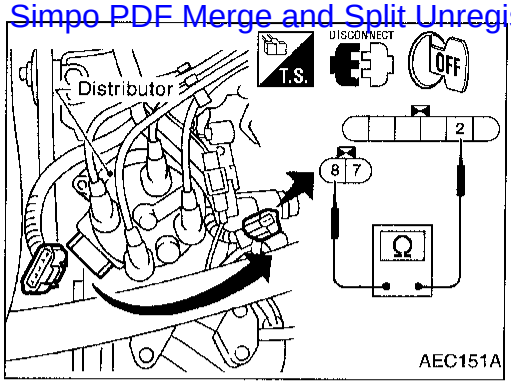

Power transistor

1. Disconnect camshaft position sensor & power transistor harness connector and ignition coil harness connector.
2. Check power transistor resistance between terminals ② and ⑧.

Terminals	Resistance	Result
② and ⑧	Except 0Ω	OK
	0Ω	NG

If NG, replace distributor assembly.

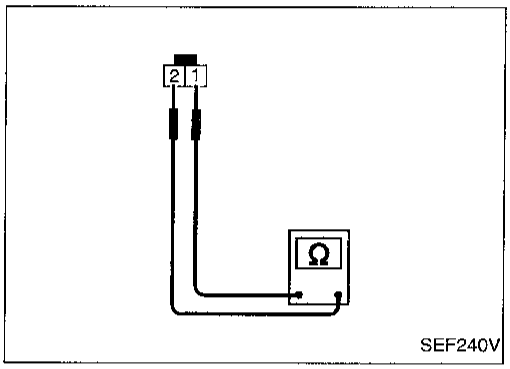

Resistor

1. Disconnect resistor harness connector.
2. Check resistance between terminals ① and ②.
   Resistance: Approximately 2.2 kΩ [at 25°C (77°F)]

If NG, replace resistor.

Simpo PDF Merge and Split Unregistered Version - http://www.simpopdf.com

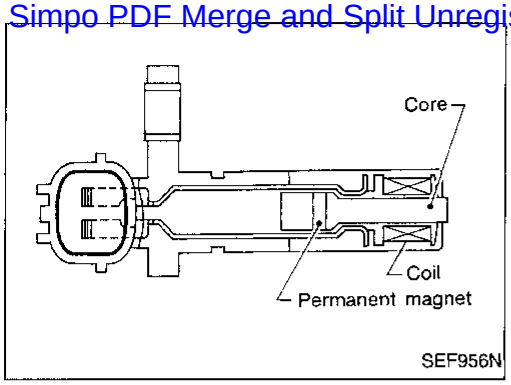

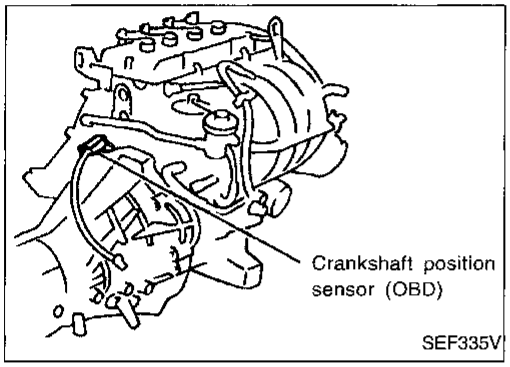

Crankshaft Position Sensor (CKPS) (OBD) (COG)

COMPONENT DESCRIPTION

The crankshaft position sensor (OBD) is located on the transmission housing facing the gear teeth (cogs) of the flywheel or drive plate. It detects the fluctuation of the engine revolution.
The sensor consists of a permanent magnet, core and coil.
When the engine is running, the high and low parts of the teeth cause the gap with the sensor to change.
The changing gap causes the magnetic field near the sensor to change.
Due to the changing magnetic field, the voltage from the sensor changes.
The ECM receives the voltage signal and detects the fluctuation of the engine revolution.
This sensor is not directly used to control the engine system.
It is used only for the on board diagnosis.

ECM TERMINALS AND REFERENCE VALUE

Specification data are reference values and are measured between each terminal and ㉜ (ECM ground).

TERMINAL NO.	WIRE COLOR	ITEM	CONDITION	DATA (DC Voltage)
43	B/W	Sensors' ground	Engine is running. └ Idle speed	Approximately 0V
47	L	Crankshaft position sensor (OBD)	Engine is running. (Warm-up condition) └ Idle speed	Approximately 0V 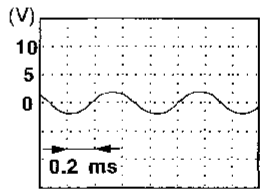 SEF112V
			Engine is running. └ Engine speed is 2,000 rpm.	Approximately 0V 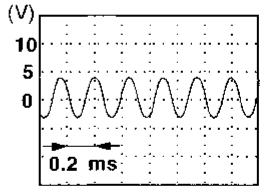 SEF113V

Simpo PDF Merge and Split Unregistered Version - http://www.simpopdf.com

ON BOARD DIAGNOSIS LOGIC

Diagnostic Trouble Code No.	Malfunction is detected when	Check Items (Possible Cause)
P1336 0905	● A chipping of the flywheel or drive plate gear tooth (cog) is detected by the ECM.	● Harness or connectors ● Crankshaft position sensor (OBD) ● Drive plate/Flywheel

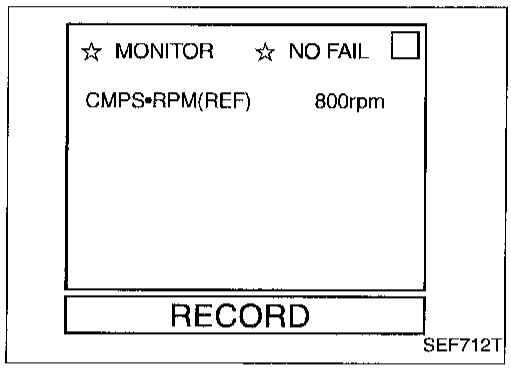

DIAGNOSTIC TROUBLE CODE CONFIRMATION PROCEDURE

NOTE:
If "DIAGNOSTIC TROUBLE CODE CONFIRMATION PROCEDURE" has been previously conducted, always turn ignition switch "OFF" and wait at least 5 seconds before conducting the next test.

1) Turn ignition switch "ON" and select "DATA MONITOR" mode with CONSULT.
2) Start engine and run it for at least 2 minutes at idle speed.

OR

1) Start engine and run it for at least 2 minutes at idle speed.
2) Select "MODE 7" with GST.

OR

1) Start engine and run it for at least 2 minutes at idle speed.
2) Turn ignition switch "OFF", wait at least 5 seconds and then turn "ON".
3) Perform "Diagnostic Test Mode II" (Self-diagnostic results) with ECM.

Simpo PDF Merge and Split Unregistered Version - http://www.simpopdf.com

EC-CKPS-01

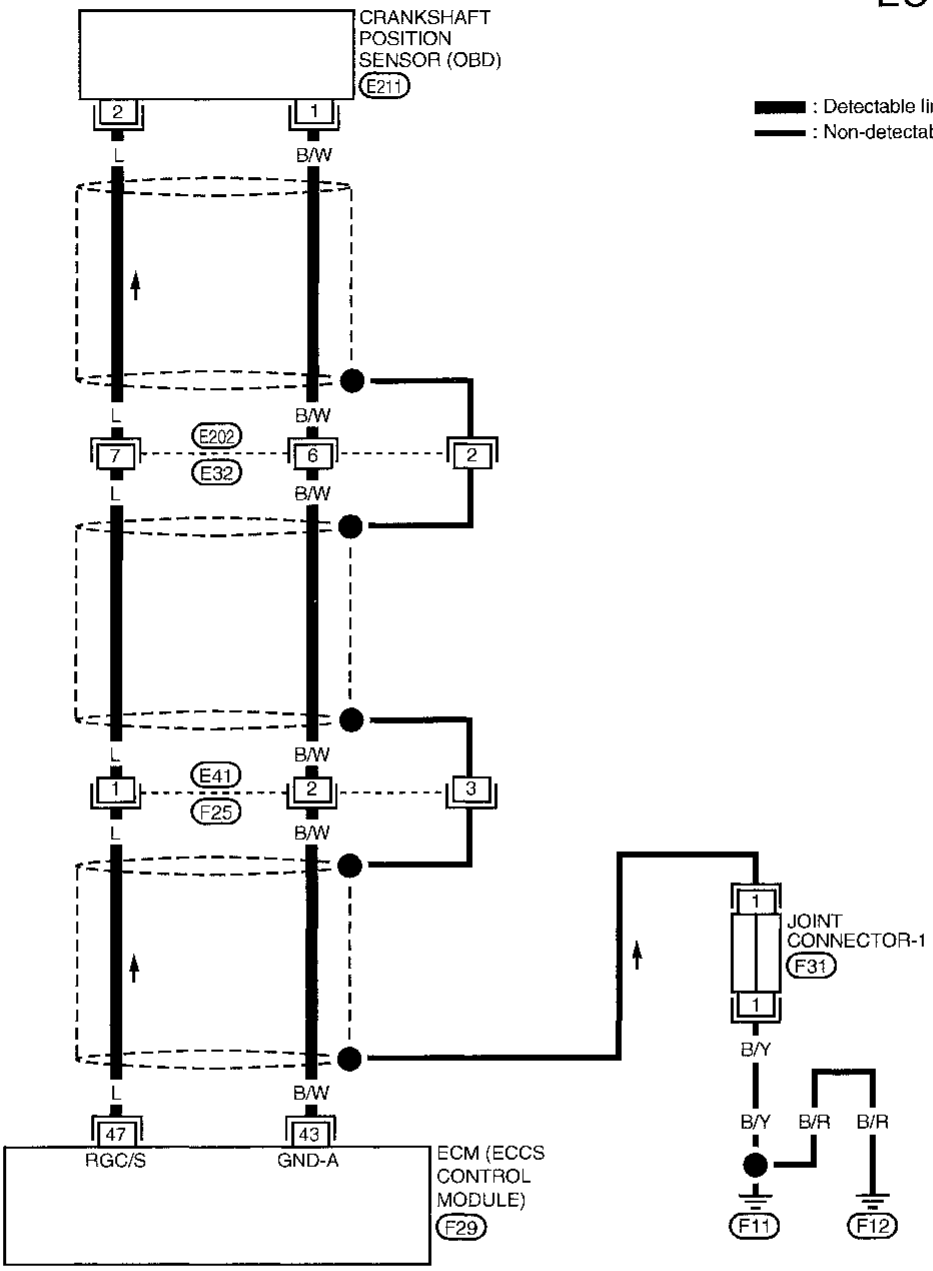

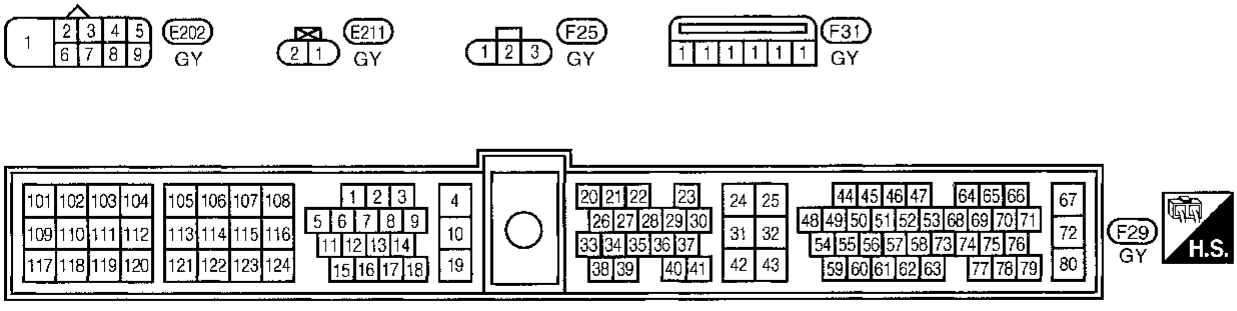

AEC531A

Crankshaft Position Sensor (CKPS) (OBD) (COG) (Cont'd)

Simpo PDF Merge and Split Unregistered Version - http://www.simpopdf.com

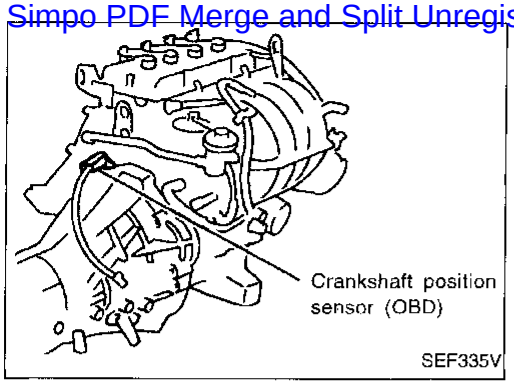

DIAGNOSTIC PROCEDURE

INSPECTION START

1. Turn ignition switch "OFF".
2. Loosen and retighten engine ground screws.

A

CHECK INPUT SIGNAL CIRCUIT.
1. Disconnect crankshaft position sensor (OBD) and ECM harness connectors.
2. Check continuity between ECM terminal (47) and terminal (2).
   Continuity should exist.
   If OK, check harness for short to ground and short to power.

NG → Check the following.
- Harness connectors (E202), (E32)
- Harness connectors (E41), (F25)
- Harness for open or short between ECM and crankshaft position sensor (OBD)

If NG, repair open circuit or short to ground or short to power in harness or connectors.

OK ↓

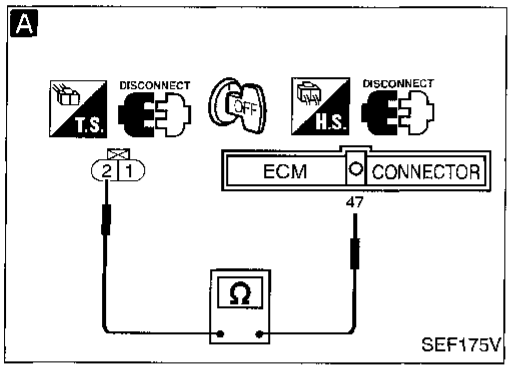

B

CHECK GROUND CIRCUIT.
1. Reconnect ECM harness connector.
2. Check harness continuity between terminal (1) and engine ground.
   Continuity should exist.
   If OK, check harness for short to ground and short to power.

NG → Check the following.
- Harness connectors (E202), (E32)
- Harness connectors (E41), (F25)
- Harness for open or short between crankshaft position sensor (OBD) and ECM

If NG, repair open circuit or short to ground or short to power in harness or connectors.

OK ↓

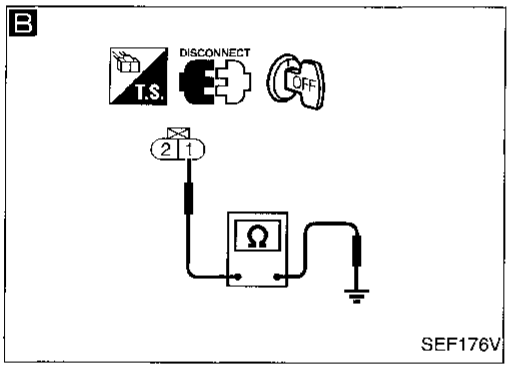

Loosen and retighten the fixing bolt of the crankshaft position sensor (OBD). Then retest.

Trouble is not fixed. ↓

CHECK COMPONENT
[Crankshaft position sensor (OBD)].
Refer to "COMPONENT INSPECTION" on next page.

NG → Replace crankshaft position sensor (OBD).

OK ↓

Ⓐ
(Go to next page.)

Crankshaft Position Sensor (CKPS) (OBD) (COG) (Cont'd)

Simpo PDF Merge and Split Unregistered Version - http://www.simpopdf.com

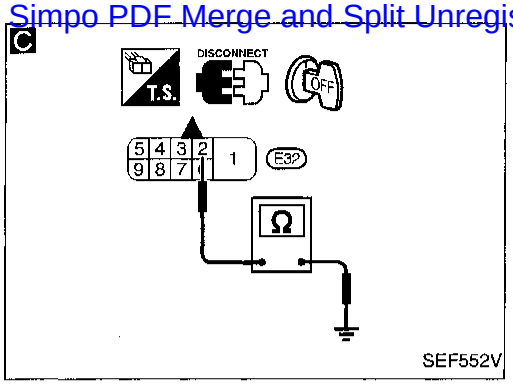

Ⓐ

C

CHECK SHIELD CIRCUIT.
1. Turn ignition switch "OFF".
2. Disconnect connector (E32).
3. Check harness continuity between harness connector (E32) terminal (2) and ground.
   Continuity should exist.
   If OK, check harness for short to power.

NG → Check the following.
- Harness connectors (E41), (F25)
- Joint connector-1
- Harness for open or short between harness connector (E32) and ground

If NG, repair open circuit or short to power in harness or connectors.

OK ↓

Perform "TROUBLE DIAGNOSIS FOR INTERMITTENT INCIDENT", EC-93.

Trouble is not fixed. ↓

Visually check for chipping flywheel or drive plate gear tooth (cog).

NG → Replace the flywheel or drive plate.

OK ↓

INSPECTION END

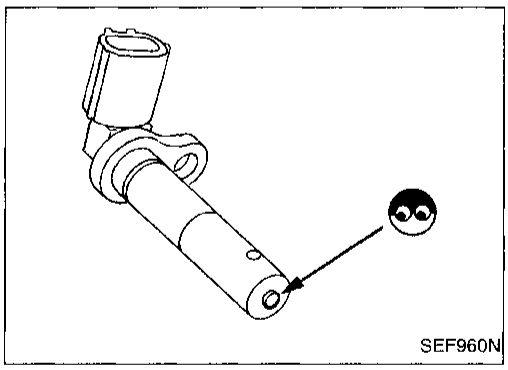

COMPONENT INSPECTION

Crankshaft position sensor (OBD)

1. Disconnect crankshaft position sensor (OBD) harness connector.
2. Loosen the fixing bolt of the sensor.
3. Remove the sensor.
4. Visually check the sensor for chipping.

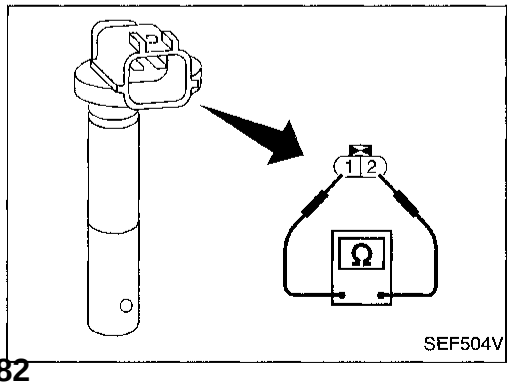

5. Check resistance as shown in the figure.
   Resistance: Approximately 166.5 - 203.5Ω
   [at 20°C (68°F)]

Simpo PDF Merge and Split Unregistered Version - http://www.simpopdf.com

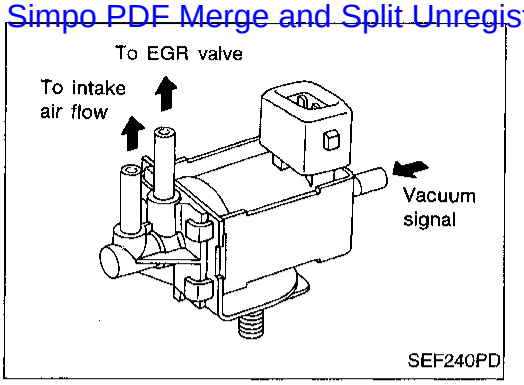

EGRC-Solenoid Valve

COMPONENT DESCRIPTION

The EGRC-solenoid valve responds to signals from the ECM. When the ECM sends an ON (ground) signal, the coil in the solenoid valve is energized. The vacuum signal passes through the solenoid valve. The signal then reaches the EGR valve.
When the ECM sends an ON signal, a plunger will then move to cut the vacuum signal from the throttle body to the EGR valve.

CONSULT REFERENCE VALUE IN DATA MONITOR MODE

Specification data are reference values.

MONITOR ITEM	CONDITION		SPECIFICATION
EGRC SOL/V	● Engine: After warming up ● Air conditioner switch: "OFF" ● Shift lever: "N" ● No-load	Idle	ON
		Engine speed: Revving engine from idle to 3,000 rpm quickly	OFF

ECM TERMINALS AND REFERENCE VALUE

Specification data are reference values and are measured between each terminal and ㉜ (ECM ground).

TERMINAL NO.	WIRE COLOR	ITEM	CONDITION	DATA (DC Voltage)
103	G/W	EGRC-solenoid valve	Engine is running. (Warm-up condition) └ Idle speed	0 - 1V
			Engine is running. (Warm-up condition) └ Revving engine from idle to 3,000 rpm quickly	BATTERY VOLTAGE (11 - 14V)

ON BOARD DIAGNOSIS LOGIC

Diagnostic Trouble Code No.	Malfunction is detected when	Check Items (Possible Cause)
P1400 1005	● The improper voltage signal is sent to ECM through EGRC-solenoid valve.	● Harness or connectors (The EGRC-solenoid valve circuit is open or shorted.) ● EGRC-solenoid valve

Simpo PDF Merge and Split Unregistered Version - http://www.simpopdf.com

EGRC-Solenoid Valve (Cont'd)

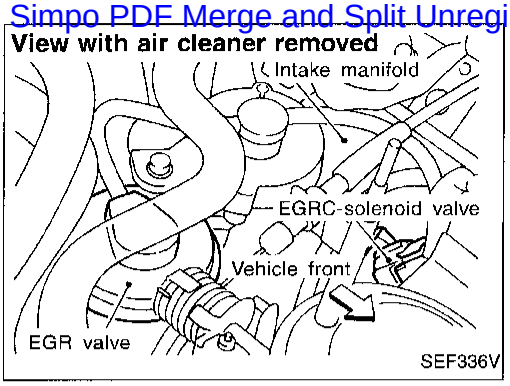

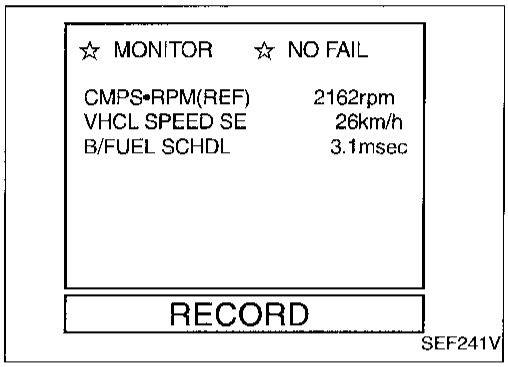

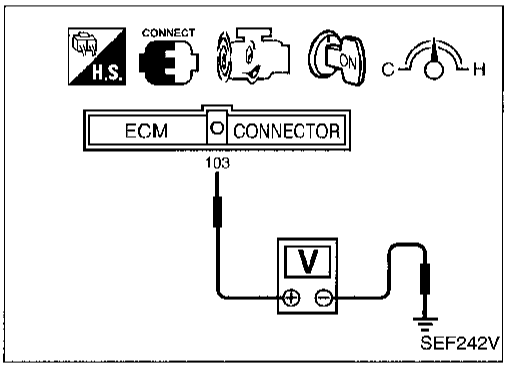

DIAGNOSTIC TROUBLE CODE CONFIRMATION PROCEDURE

CAUTION:
Always drive vehicle at a safe speed.

NOTE:
If "DIAGNOSTIC TROUBLE CODE CONFIRMATION PROCEDURE" has been previously conducted, always turn ignition switch "OFF" and wait at least 5 seconds before conducting the next test.

1) Start engine and warm it up to normal operating temperature.
2) Select "DATA MONITOR" mode with CONSULT.
3) Maintain the following conditions for at least 5 consecutive seconds.
   CMPS·RPM (REF): 1,000 - 3,400 rpm
   B/FUEL SCHDL: 2 ms or more
   VHCL SPEED SE: Suitable speed

OR

OVERALL FUNCTION CHECK

Use this procedure to check the overall function of the EGR temperature sensor. During this check, a 1st trip DTC might not be confirmed.

1) Start engine and warm it up to normal operating temperature.
2) Check the voltage between ECM terminal (103) and ground at idle.
   Voltage: 0 - 1V
3) Check that the voltage changes to battery voltage and returns to 0 - 1V when revving the engine from idle to 3,000 rpm quickly.

Simpo PDF Merge and Split Unregistered Version - http://www.simpopdf.com

EC-EGRC/V-01

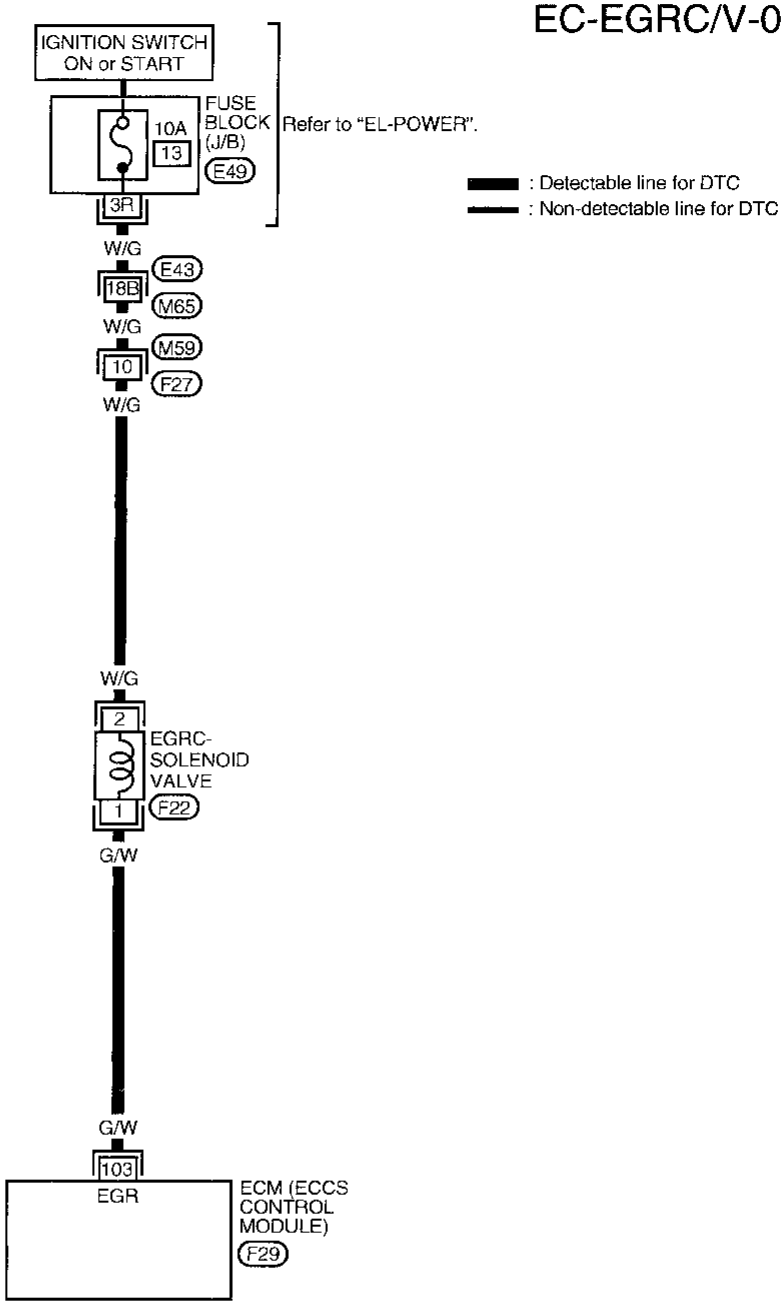

Refer to last page (Foldout page).
M65 , E43

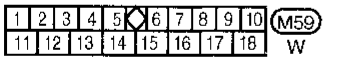



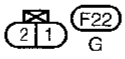

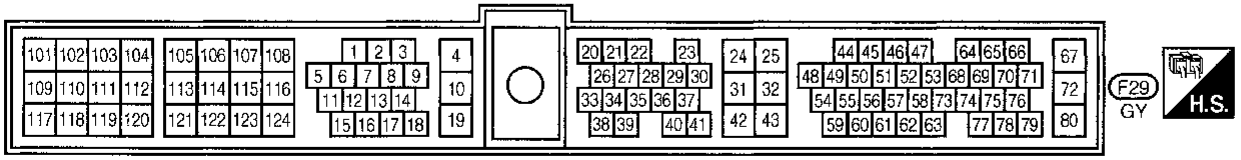

AEC542A

EGRC-Solenoid Valve (Cont'd)

Simpo PDF Merge and Split Unregistered Version - http://www.simpopdf.com

View with air cleaner removed

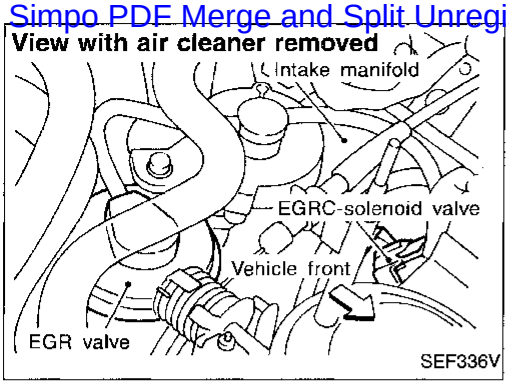

SEF336V

A

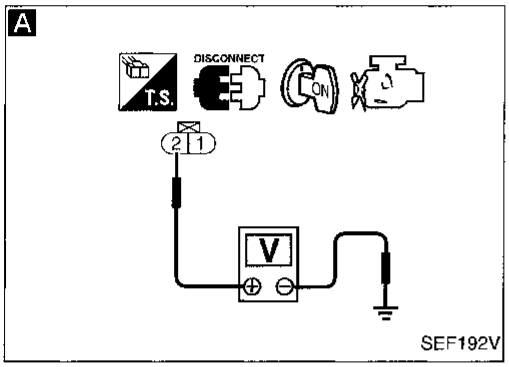

SEF192V

B

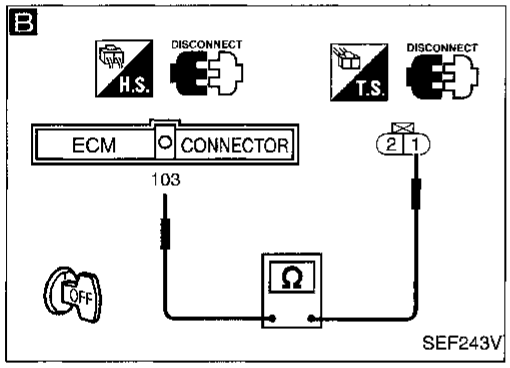

SEF243V

DIAGNOSTIC PROCEDURE

INSPECTION START

A

CHECK POWER SUPPLY.
1. Turn ignition switch "OFF".
2. Disconnect EGRC-solenoid valve harness connector.
3. Turn ignition switch "ON".
4. Check voltage between terminal (2) and ground with CONSULT or tester.

Voltage: Battery voltage

NG → Check the following.
- Harness connectors (E43), (M65)
- Harness connectors (M59), (F27)
- 10A fuse
- Harness for open or short between EGRC-solenoid valve and 10A fuse

If NG, repair harness or connectors.

OK ↓

B

CHECK OUTPUT SIGNAL CIRCUIT.
1. Turn ignition switch "OFF".
2. Disconnect ECM harness connector.
3. Check harness continuity between ECM terminal (103) and terminal (1).

Continuity should exist.

If OK, check harness for short to ground and short to power.

NG → Repair open circuit, short to ground or short to power in harness or connectors.

OK ↓

CHECK COMPONENT (EGRC-solenoid valve).
Refer to "COMPONENT INSPECTION" on next page.

NG → Replace EGRC-solenoid valve.

OK ↓

Perform "TROUBLE DIAGNOSIS FOR INTERMITTENT INCIDENT", EC-93.

INSPECTION END

EGRC-Solenoid Valve (Cont'd)

Simpo PDF Merge and Split Unregistered Version - http://www.simpopdf.com

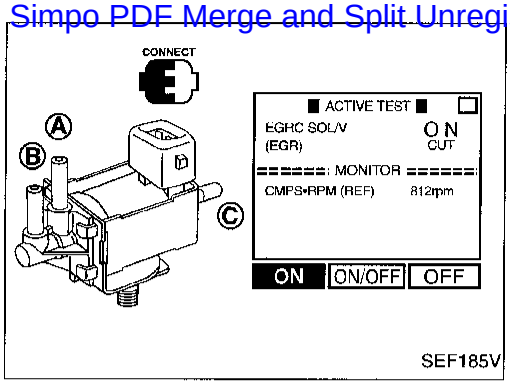

SEF185V

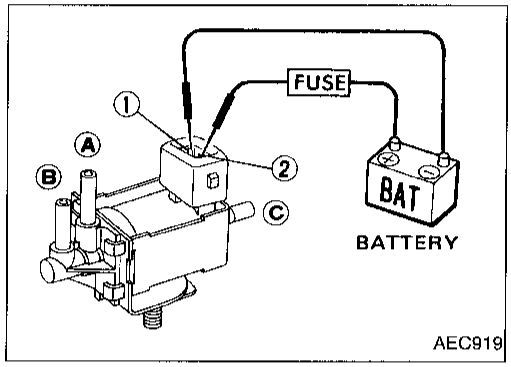

AEC919

COMPONENT INSPECTION

EGRC-solenoid valve

Check air passage continuity.

Perform "EGRC SOLENOID VALVE" in "ACTIVE TEST" mode.

Condition EGRC SOLENOID VALVE	Air passage continuity between Ⓐ and Ⓑ	Air passage continuity between Ⓐ and Ⓒ
ON	Yes	No
OFF	No	Yes

OR

Condition	Air passage continuity between Ⓐ and Ⓑ	Air passage continuity between Ⓐ and Ⓒ
12V direct current supply between terminals ① and ②	Yes	No
No supply	No	Yes

If NG or operation takes more than 1 second, replace EGRC-solenoid valve.

Simpo PDF Merge and Split Unregistered Version - http://www.simpopdf.com

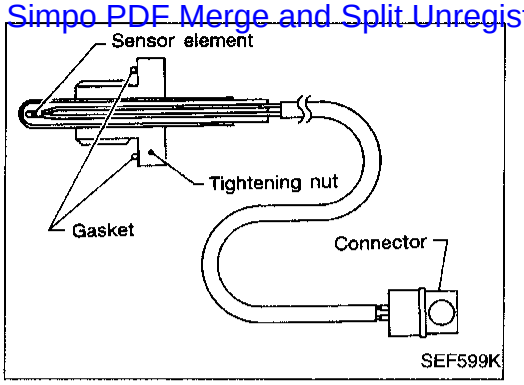

EGR Temperature Sensor

COMPONENT DESCRIPTION

The EGR temperature sensor detects temperature changes in the EGR passage way. When the EGR valve opens, hot exhaust gases flow, and the temperature in the passage way changes. The EGR temperature sensor is a thermistor that modifies a voltage signal sent from the ECM. This modified signal then returns to the ECM as an input signal. As the temperature increases, EGR temperature sensor resistance decreases. This sensor is not used to control the engine system.
It is used only for the on board diagnosis.

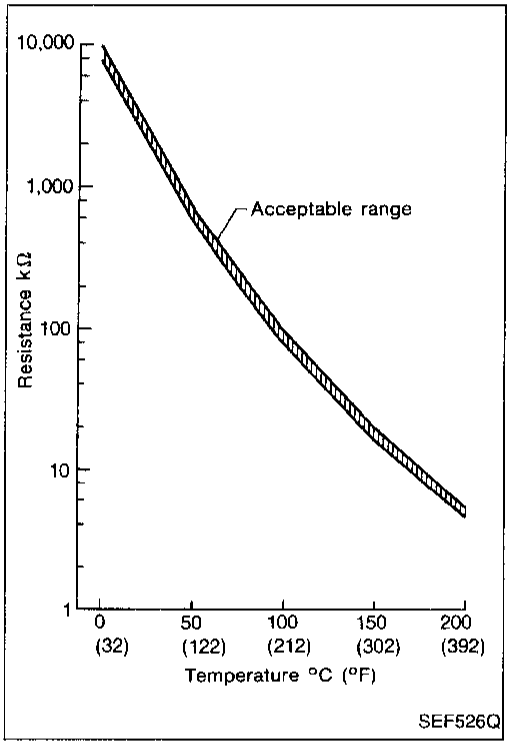

<Reference data>

EGR temperature °C (°F)	Voltage* V	Resistance MΩ
0 (32)	4.81	7.9 - 9.7
50 (122)	2.82	0.57 - 0.70
100 (212)	0.8	0.08 - 0.10

*: These data are reference values and are measured between ECM terminal ⑥③ (EGR temperature sensor) and ECM terminal ③② (ECM ground).
When EGR system is operating.
Voltage: 0 - 1.5V

ON BOARD DIAGNOSIS LOGIC

Diagnostic Trouble Code No.	Malfunction is detected when	Check Items (Possible Cause)
P1401 0305	A) An excessively low voltage from the EGR temperature sensor is sent to ECM even when engine coolant temperature is low.	● Harness or connectors (The EGR temperature sensor circuit is shorted.) ● EGR temperature sensor ● Malfunction of EGR function, EGRC-BPT valve or EGRC-solenoid valve
	B) An excessively high voltage from the EGR temperature sensor is sent to ECM even when engine coolant temperature is high.	● Harness or connectors (The EGR temperature sensor circuit is open.) ● EGR temperature sensor ● Malfunction of EGR function, EGRC-BPT valve or EGRC-solenoid valve

EGR Temperature Sensor (Cont'd)

Simpo PDF Merge and Split Unregistered Version - http://www.simpopdf.com

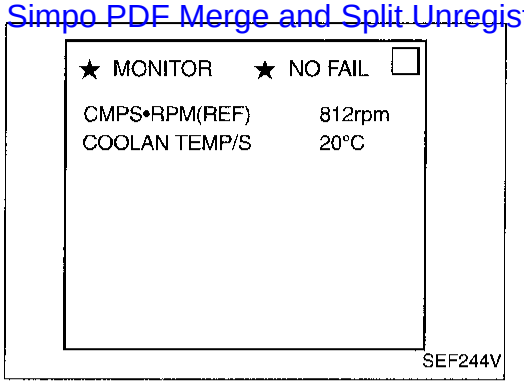

DIAGNOSTIC TROUBLE CODE CONFIRMATION PROCEDURE

Perform "Procedure for malfunction A" first. If DTC cannot be confirmed, perform "Procedure for malfunction B".

Procedure for malfunction A

NOTE:
If "DIAGNOSTIC TROUBLE CODE CONFIRMATION PROCEDURE" has been previously conducted, always turn ignition switch "OFF" and wait at least 5 seconds before conducting the next test.

1) Turn ignition switch "ON".
2) Select "DATA MONITOR" mode with CONSULT.
3) Verify that engine coolant temperature is less than 40°C (104°F).

If the engine coolant temperature is above the range, cool the engine down.

4) Start engine and let it idle for at least 8 seconds.

OR

1) Turn ignition switch "ON".
2) Select "MODE 1" with GST.
3) Verify that engine coolant temperature is less than 40°C (104°F).

If the engine coolant temperature is above the range, cool the engine down.

4) Start engine and let it idle for at least 8 seconds.
5) Select "MODE 7" with GST.

OR

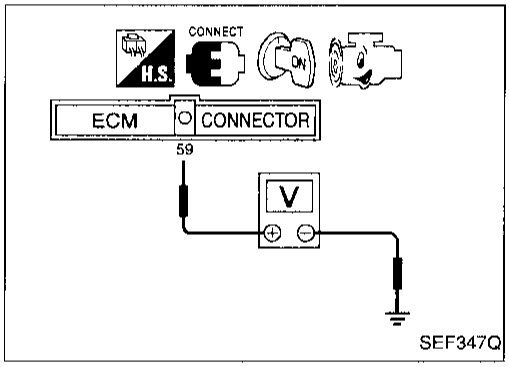

1) Turn ignition switch "ON".
2) Verify that voltage between ECM terminal ⑤⑨ (engine coolant temperature) and ground is more 1.5V.

If the voltage is below the range, cool the engine down.

3) Start engine and let it idle for at least 8 seconds.
4) Turn ignition switch "OFF" and wait at least 5 seconds.
5) Turn ignition switch "ON" and perform "Diagnostic Test Mode II (Self-diagnostic results)" with ECM.

Procedure for malfunction B

CAUTION:
Always drive vehicle at a safe speed.

NOTE:
If "DIAGNOSTIC TROUBLE CODE CONFIRMATION PROCEDURE" has been previously conducted, always turn ignition switch "OFF" and wait at least 5 seconds before conducting the next test.

TESTING CONDITION:
Always perform the test at a temperature of 5°C (41°F) or higher.

1) Start engine and warm it up to normal operating temperature.
2) Run engine at idle for at least 2 minutes.
3) Confirm that EGR valve is not lifting.
   If the check result is NG, go to "TROUBLE DIAGNOSES FOR DTC P1402". (See page EC-338.)
4) Select "DATA MONITOR" mode with CONSULT.
5) Read "EGR TEMP SEN" at about 1,500 rpm while holding the EGR valve in full open position by hand.
   Voltage should decrease to less than 1.0V.

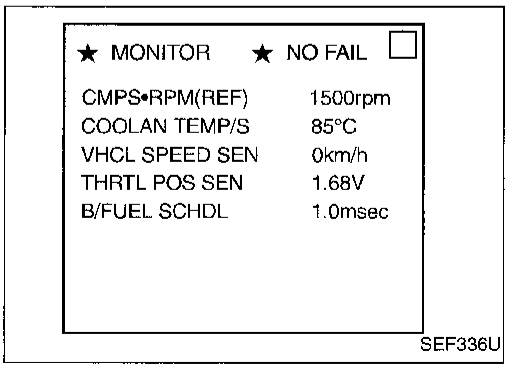

Simpo PDF Merge and Split Unregistered Version - http://www.simpopdf.com

If the check result is NG, go to "DIAGNOSTIC PROCEDURE", EC-336.
If the check result is OK, go to following step.

6) Turn ignition switch "OFF" and wait at least 5 seconds.
7) Turn ignition switch "ON".
8) Check the output voltage of "THRTL POS SEN" (at closed throttle position) and note it.
9) Start engine.
10) Maintain the following conditions for at least 5 consecutive seconds.
CMPS·RPM (REF): 2,000 - 2,600 rpm
VHCL SPEED SE: Suitable speed
B/FUEL SCHDL: 2.5 - 3.5 ms
THRTL POS SEN: (X + 0.10) – (X + 0.52) V
X = Voltage value measured at step 8)
Selector lever: Suitable position

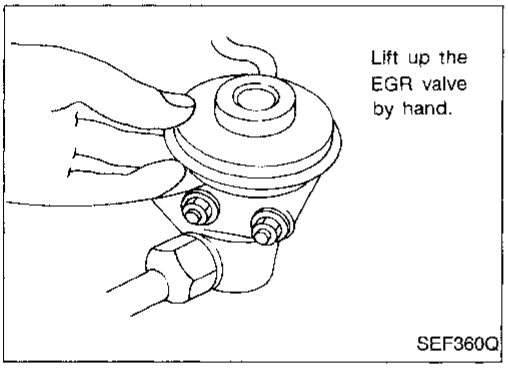

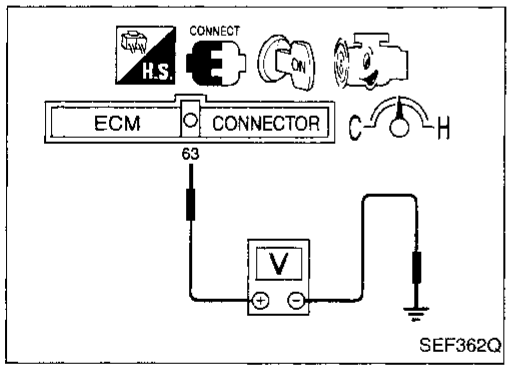

OR

OVERALL FUNCTION CHECK

Use this procedure to check the overall function of the EGR temperature sensor. During this check, a 1st trip DTC might not be confirmed.

Procedure for malfunction B

1) Start engine and warm it up to normal operating temperature.
2) Run engine at idle for at least 2 minutes.
3) Confirm that EGR valve is not lifting. If NG, go to TROUBLE DIAGNOSES FOR DTC P1402 (See page EC-338).
4) Check voltage between ECM terminal ⑥③ (EGR temperature sensor) and ground at about 1,500 rpm with EGR valve lifted up to the full position by hand.
Voltage should decrease to less than 1.0V.
5) If step 4 is OK, perform TROUBLE DIAGNOSES FOR DTC P0400 and P1400 (See pages EC-242 and 327).

Simpo PDF Merge and Split Unregistered Version - http://www.simpopdf.com

EC-EGR/TS-01

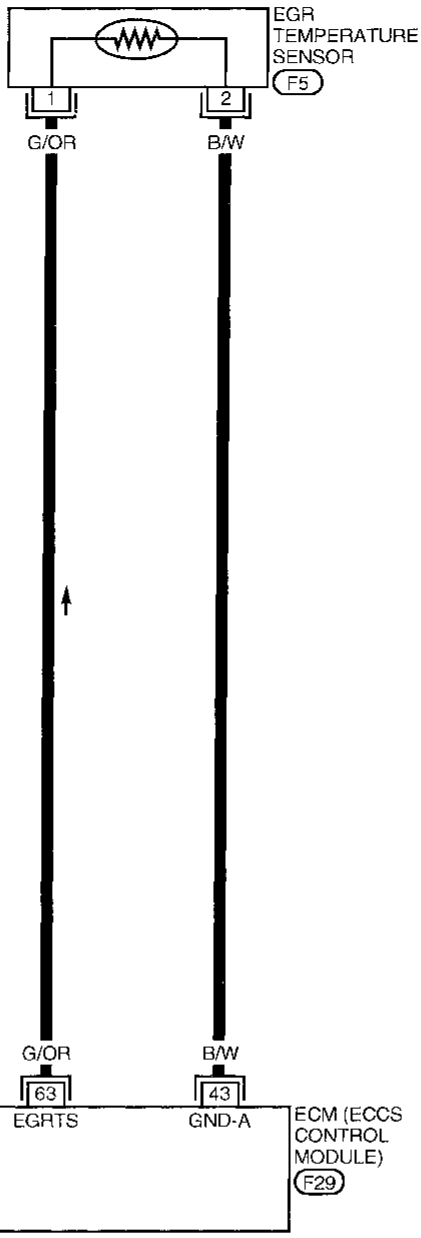

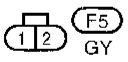

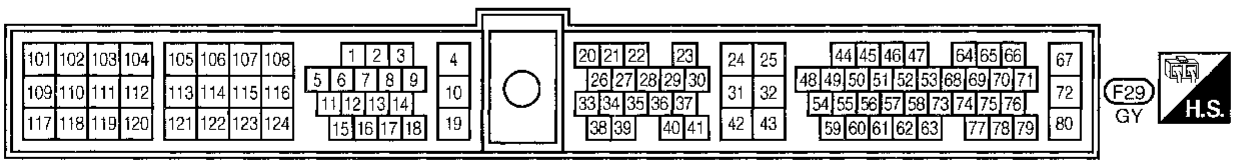

AEC543A

EGR Temperature Sensor (Cont'd)

Simpo PDF Merge and Split Unregistered Version - http://www.simpopdf.com

View with air cleaner removed

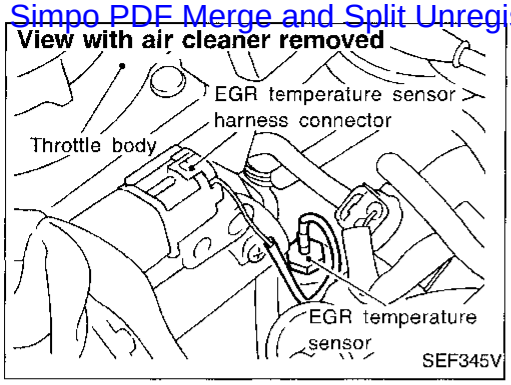

SEF345V

A

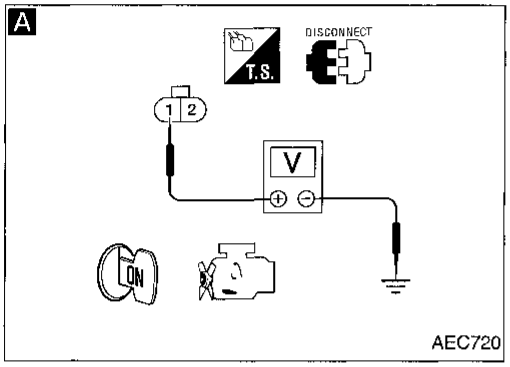

AEC720

B

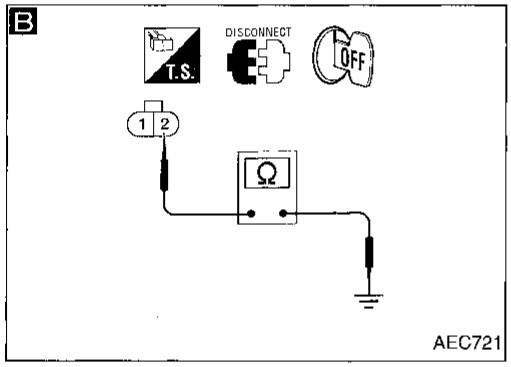

AEC721

DIAGNOSTIC PROCEDURE

INSPECTION START

A

CHECK POWER SUPPLY.
1. Disconnect EGR temperature sensor harness connector.
2. Turn ignition switch "ON".
3. Check voltage between terminal ① and ground with CONSULT or tester.
Voltage: Approximately 5V

NG → Repair harness or connectors.

OK

B

CHECK GROUND CIRCUIT.
1. Turn ignition switch "OFF".
2. Check harness continuity between terminal ② and engine ground.
Continuity should exist.
If OK, check harness for short to ground and short to power.

NG → Repair open circuit, short to ground or short to power in harness or connectors.

OK

CHECK COMPONENT (EGR temperature sensor).
Refer to "COMPONENT INSPECTION" on next page.

NG → Replace EGR temperature sensor.

OK

Perform "TROUBLE DIAGNOSIS FOR INTERMITTENT INCIDENT", EC-93.

INSPECTION END

EGR Temperature Sensor (Cont'd)

Simpo PDF Merge and Split Unregistered Version - http://www.simpopdf.com

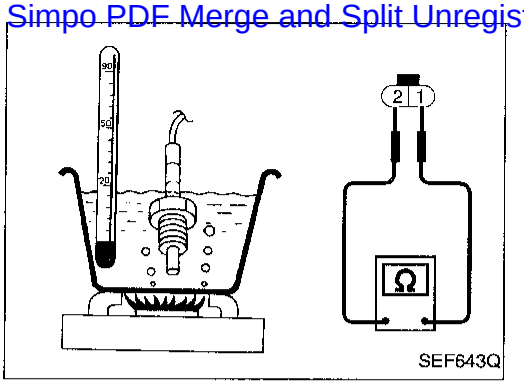

SEF643Q

COMPONENT INSPECTION

EGR temperature sensor

Check resistance change and resistance value.

<Reference data>

EGR temperature °C (°F)	Voltage V	Resistance MΩ
0 (32)	4.81	7.9 - 9.7
50 (122)	2.82	0.57 - 0.70
100 (212)	0.8	0.08 - 0.10

If NG, replace EGR temperature sensor.

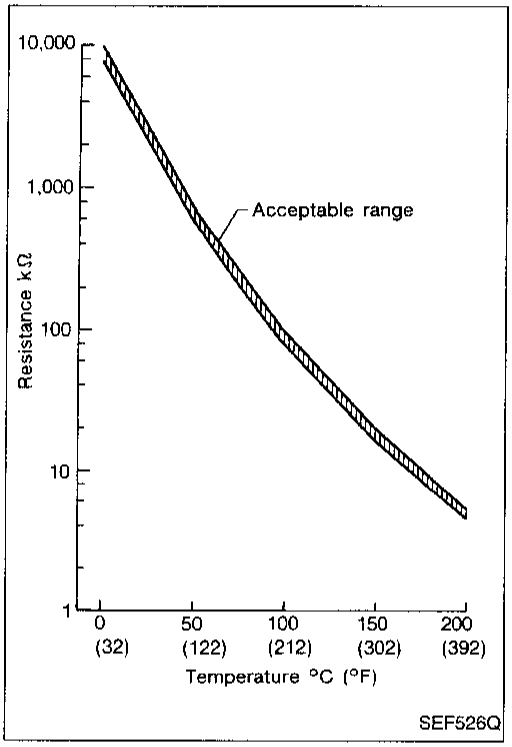

SEF526Q

Simpo PDF Merge and Split Unregistered Version - http://www.simpopdf.com

EGR Function (Open)

SYSTEM DESCRIPTION

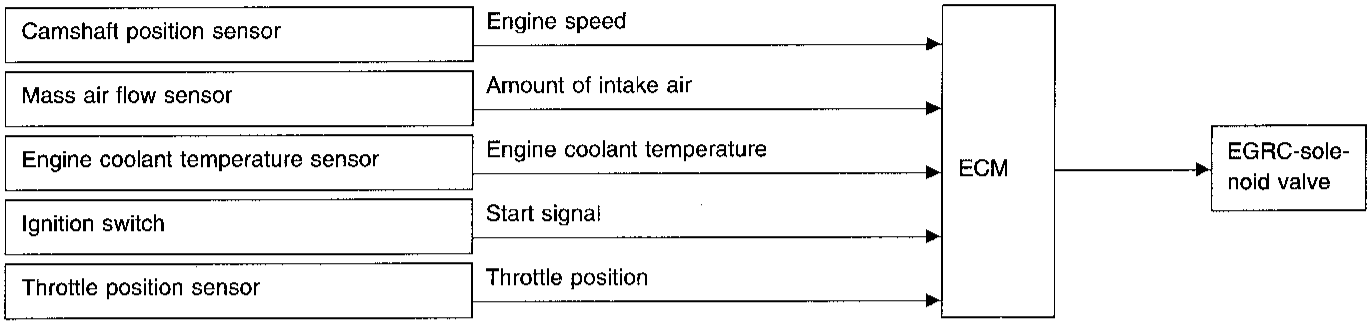

This system cuts and controls vacuum applied to the EGR valve to suit engine operating conditions. This cut-and-control operation is accomplished through the ECM and the EGRC-solenoid valve. When the ECM detects any of the following conditions, current flows through the solenoid valve. This causes the port vacuum to be cut. The EGR valve remains closed.

- Low engine coolant temperature
- Engine starting
- High-speed engine operation
- Engine idling
- Excessively high engine coolant temperature
- Mass air flow sensor malfunction

EGR and vacuum

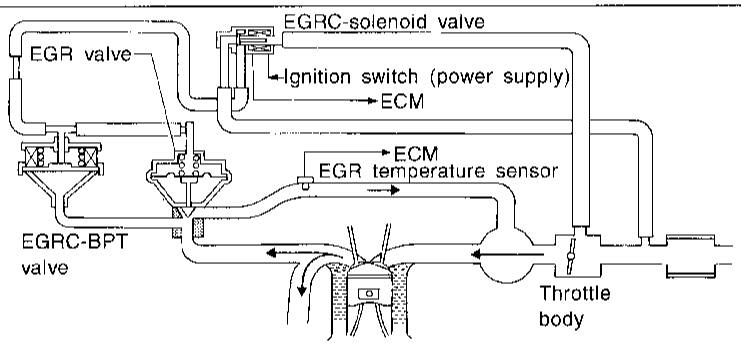

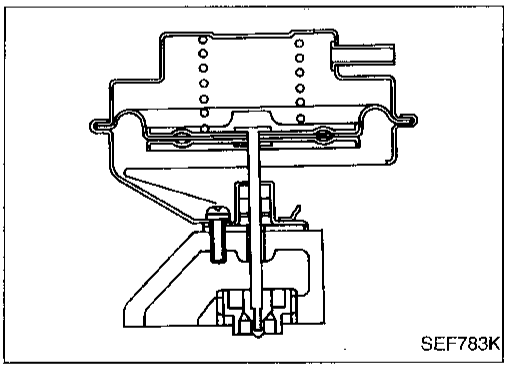

COMPONENT DESCRIPTION

Exhaust gas recirculation (EGR) valve

The EGR valve controls the amount of exhaust gas routed to the intake manifold. Vacuum is applied to the EGR valve in response to throttle valve opening. The vacuum controls the movement of a taper valve connected to the vacuum diaphragm in the EGR valve.

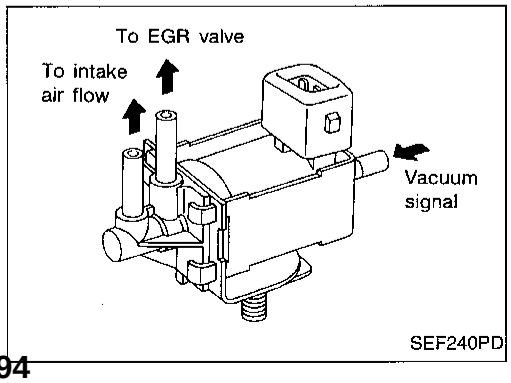

EGRC-solenoid valve

The EGRC-solenoid valve responds to signals from the ECM. When the ECM sends an ON (ground) signal, the coil in the solenoid valve is energized. The vacuum signal passes through the solenoid valve. A plunger will then move to cut the vacuum signal (from the throttle body to the EGR valve).
When the ECM sends an OFF signal, a plunger will then move to cut the vacuum signal from the throttle body to the EGR valve.

EGR Function (Open) (Cont'd)

Simpo PDF Merge and Split Unregistered Version - http://www.simpopdf.com

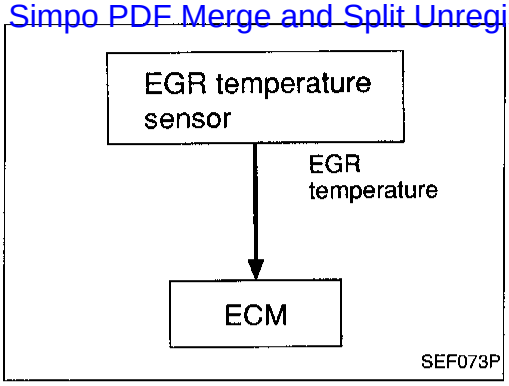

ON BOARD DIAGNOSIS LOGIC

If EGR temperature sensor detects EGR flow under the condition that does not call for EGR, a high-flow malfunction is diagnosed.

Diagnostic Trouble Code No.	Malfunction is detected when ...	Check Items (Possible Cause)
P1402 0514	● The exhaust gas recirculation (EGR) flow is excessively high during the specified driving condition.	● EGRC-solenoid valve ● EGR valve leaking or stuck open ● EGR temperature sensor ● EGRC-BPT valve

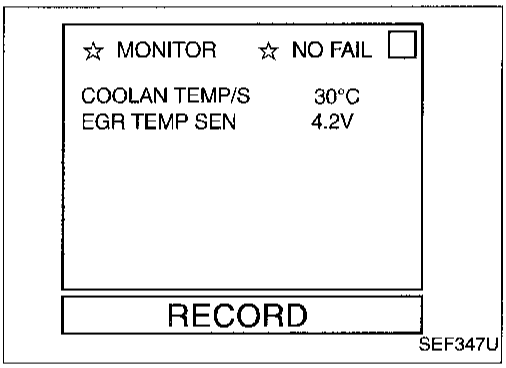

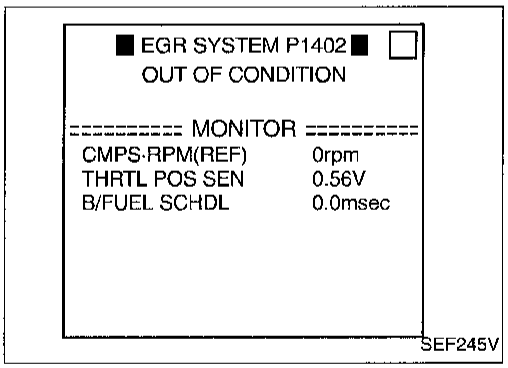

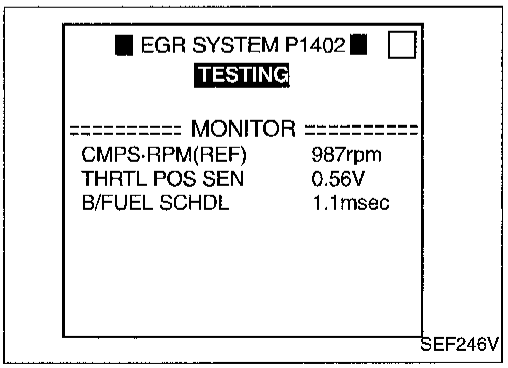

DIAGNOSTIC TROUBLE CODE CONFIRMATION PROCEDURE

NOTE:
If "DIAGNOSTIC TROUBLE CODE CONFIRMATION PROCEDURE" has been previously conducted, always turn ignition switch "OFF" and wait at least 5 seconds before conducting the next test.

TESTING CONDITION:

- **Always perform the test at a temperature of −10°C (14°F) or higher.**
- **Engine coolant temperature and EGR temperature must be verified in "DATA MONITOR" mode with CONSULT before starting DTC WORK SUPPORT test. If it is out of range below, the test cannot be conducted.**
  COOLAN TEMP/S: −10 to 40°C (14 to 104°F)
  EGR TEMP SEN: Less than 4.8V

  If the values are out of the ranges indicated above, park the vehicle in a cool place and allow the engine temperature to stabilize. Do not attempt to reduce the engine coolant temperature or EGR temperature with a fan or means other than ambient air. Doing so may produce an inaccurate diagnostic result.

1) Turn ignition switch "ON".
2) Select "EGR SYSTEM P1402" of "EGR SYSTEM" in "DTC WORK SUPPORT" mode with CONSULT.
3) Touch "START".
4) Start engine and let it idle until "TESTING" on CONSULT screen is turned to "COMPLETED". (It will take 60 seconds or more.)

EGR Function (Open) (Cont'd)

Simpo PDF Merge and Split Unregistered Version - http://www.simpopdf.com

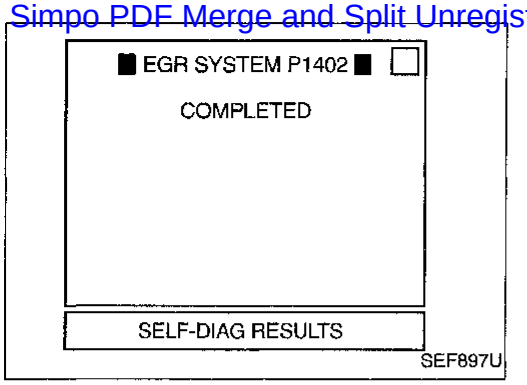

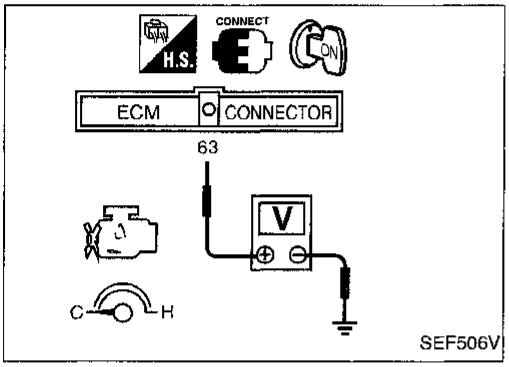

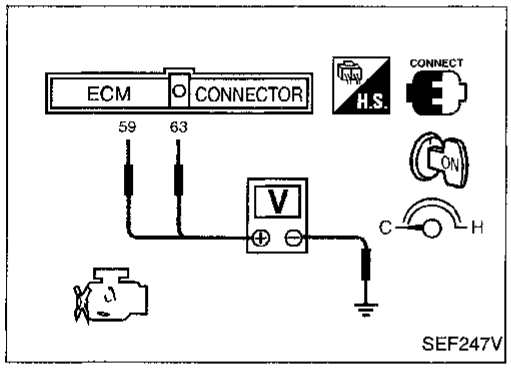

If "TESTING" is not displayed after 5 minutes, turn ignition "OFF" and cool the engine coolant temperature to the range of −10 to 40°C (14 to 104°F). Retry from step 1).

5) Make sure that "OK" is displayed after touching "SELF-DIAG RESULTS". If "NG" is displayed, refer to "DIAGNOSTIC PROCEDURE", EC-342.

OR

1) Turn ignition switch "ON" and select "MODE 1" with GST.
2) Check that engine coolant temperature is within the range of −10 to 40°C (14 to 104°F).
3) Check that voltage between ECM terminal ⑥③ (EGR temperature) and ground is less than 4.8V.
4) Start engine and let it idle for at least 60 seconds.
5) Stop engine.
6) Perform from step 1) to 4).
7) Select "MODE 3" with GST.

OR

1) Turn ignition switch "ON".
2) Check the following voltages.
   ECM terminal ⑤⑨ (engine coolant temperature) and ground:
   1.5 - 4.4V
   ECM terminal ⑥③ (EGR temperature) and ground:
   Less than 4.8V
3) Start engine and let it idle for at least 60 seconds.
4) Turn ignition switch "OFF", wait at least 5 seconds and then turn "ON".
5) Perform "Diagnostic Test Mode II (Self-diagnostic results)" with ECM.

- **When using GST, "DIAGNOSTIC TROUBLE CODE CONFIRMATION PROCEDURE" should be performed twice as much as when using CONSULT or ECM (Diagnostic Test Mode II) because GST cannot display MODE 7 (1st trip DTC) concerning this diagnosis. Therefore, using CONSULT or ECM (Diagnostic Test Mode II) is recommended.**

Simpo PDF Merge and Split Unregistered Version - http://www.simpopdf.com

EC-EGRC1-01

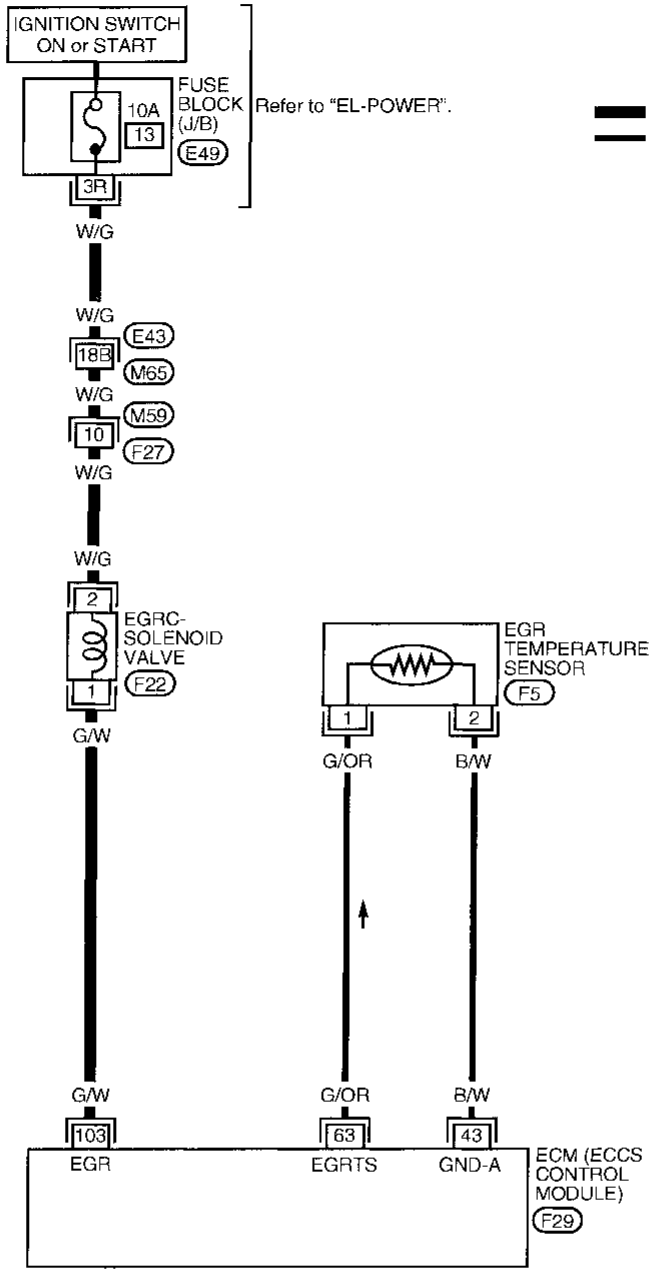

Refer to last page (Foldout page).
M65 , E43

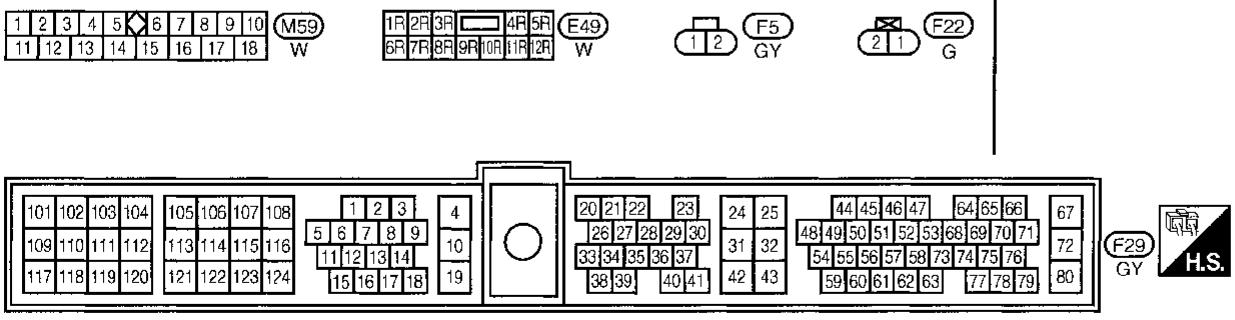

AEC533A

EGR Function (Open) (Cont'd)

Simpo PDF Merge and Split Unregistered Version - http://www.simpopdf.com

DIAGNOSTIC PROCEDURE

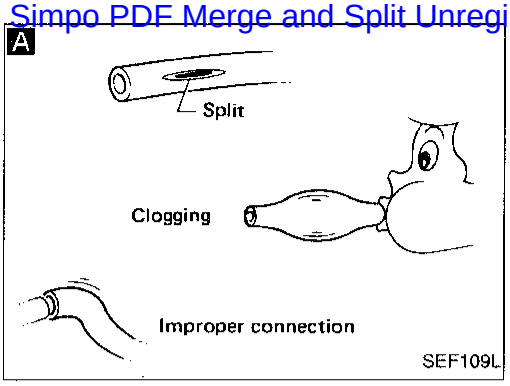

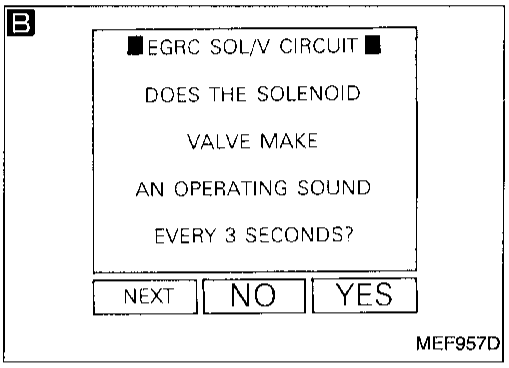

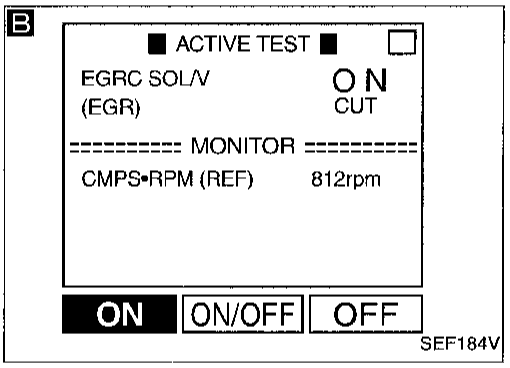

INSPECTION START

A

CHECK VACUUM HOSE.
Check vacuum hose for clogging, cracks or improper connection.
Refer to "Vacuum Hose Drawing", EC-13.

NG → Repair or replace vacuum hose.

OK

B

CHECK EGRC-SOLENOID VALVE CIRCUIT.

1. Turn ignition switch "ON".
2. Perform "EGRC SOL/V CIRCUIT" in "FUNCTION TEST" mode with CONSULT.

OR

1. Turn ignition switch "ON".
2. Turn EGRC-solenoid valve "ON" and "OFF" in "ACTIVE TEST" mode with CONSULT and check operating sound.

OR

1. Turn ignition switch "ON".
2. Check operating sound of the solenoid valve when disconnecting and reconnecting EGRC-solenoid valve harness connector. (The DTC or the 1st trip DTC for the EGRC-solenoid valve will be displayed, however, ignore it.)

NG → Check the following.
- Harness connectors (E43), (M65)
- Harness connectors (M59), (F27)
- 10A fuse
- Harness for open or short between fuse block and EGRC-solenoid valve
- Harness for open or short between ECM and EGRC-solenoid valve

If NG, repair open circuit or short to power in harness or connector.

OK

OK

CHECK COMPONENT (EGRC-solenoid valve).
Refer to "COMPONENT INSPECTION" on next page.

NG → Replace EGRC-solenoid valve.

OK

CHECK COMPONENT (EGR valve).
Refer to "COMPONENT INSPECTION" on the next page.

NG → Replace EGR valve.

OK

CHECK COMPONENT (EGRC-BPT valve).
Refer to "COMPONENT INSPECTION" on EC-344.

NG → Replace EGRC-BPT valve.

OK

CHECK COMPONENT (EGR temperature sensor).
Refer to "COMPONENT INSPECTION" on EC-344.

NG → Replace EGR temperature sensor.

OK

Perform "TROUBLE DIAGNOSIS FOR INTERMITTENT INCIDENT", EC-93.

INSPECTION END

Simpo PDF Merge and Split Unregistered Version - http://www.simpopdf.com

EGR Function (Open) (Cont'd)

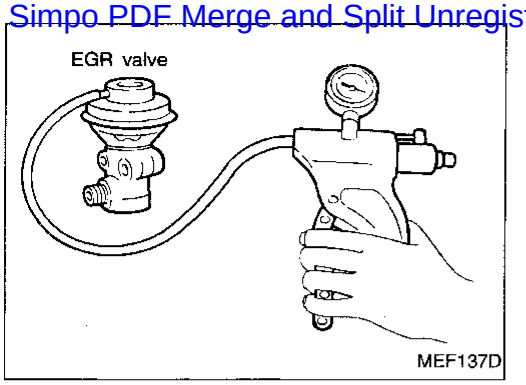

COMPONENT INSPECTION

EGR valve

- Apply vacuum to EGR vacuum port with a hand vacuum pump.

EGR valve spring should lift.

- Check for sticking

If NG, repair or replace EGR valve.

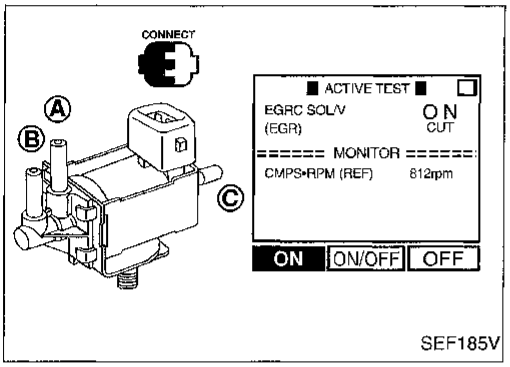

EGRC-solenoid valve

Check air passage continuity.

Perform "EGRC SOLENOID VALVE" in "ACTIVE TEST" mode.

Condition EGRC SOLENOID VALVE	Air passage continuity between Ⓐ and Ⓑ	Air passage continuity between Ⓐ and Ⓒ
ON	Yes	No
OFF	No	Yes

OR

Condition	Air passage continuity between Ⓐ and Ⓑ	Air passage continuity between Ⓐ and Ⓒ
12V direct current supply between terminals ① and ②	Yes	No
No supply	No	Yes

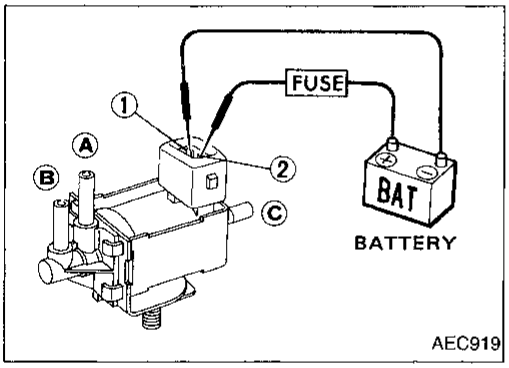

If NG or operation takes more than 1 second, replace EGRC-solenoid valve.

EGR Function (Open) (Cont'd)

Simpo PDF Merge and Split Unregistered Version - http://www.simpopdf.com

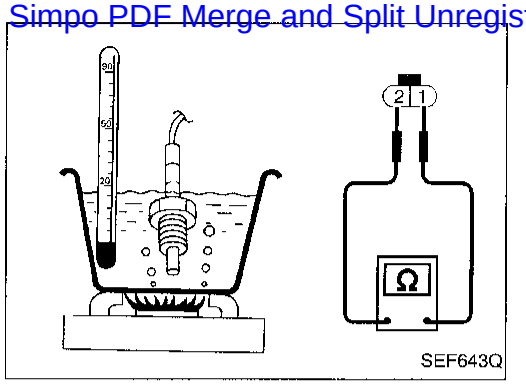

EGR temperature sensor

Check resistance change and resistance value.

<Reference data>

EGR temperature °C (°F)	Voltage V	Resistance MΩ
0 (32)	4.81	7.9 - 9.7
50 (122)	2.82	0.57 - 0.70
100 (212)	0.8	0.08 - 0.10

If NG, replace EGR temperature sensor.

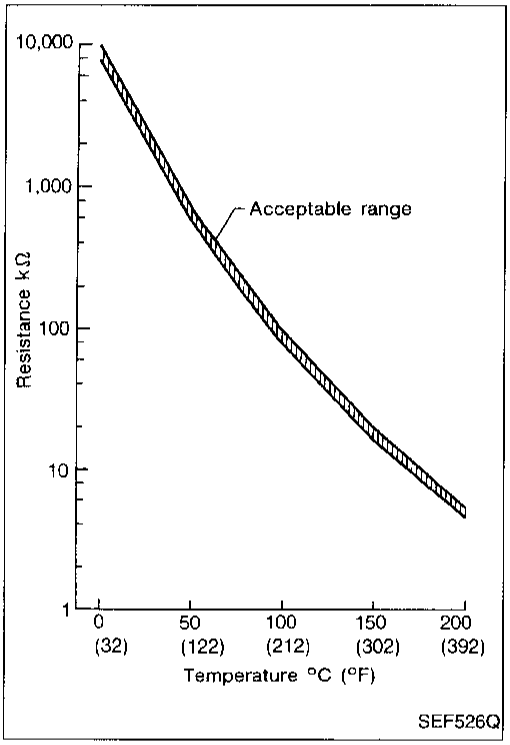

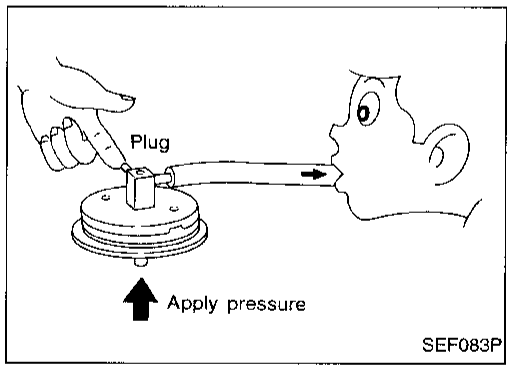

EGRC-BPT valve

1. Plug one of two ports of EGRC-BPT valve.
2. Vacuum from the other port and check for leakage while applying a pressure above 0.981 kPa (100 mmH_2O, 3.94 inH_2O) from under EGRC-BPT valve.
3. If a leakage is noted, replace the valve.

Simpo PDF Merge and Split Unregistered Version - http://www.simpopdf.com

Evaporative Emission (EVAP) Control System (Small Leak) (Positive Pressure)

Note: If both DTC P1440 and P1448 are displayed, perform TROUBLE DIAGNOSIS FOR DTC P1448 first. (See EC-373.)

ON BOARD DIAGNOSIS LOGIC

This diagnosis detects leaks in the EVAP purge line using vapor pressure in the fuel tank.
The EVAP canister vent control valve is closed to shut the EVAP purge line. The vacuum cut valve bypass valve will then be opened to clear the line between the fuel tank and the EVAP canister purge volume control solenoid valve. The EVAP control system pressure sensor can now monitor the pressure inside the fuel tank.
If pressure increases, the ECM will check for leaks in the line between the vacuum cut valve and EVAP canister purge volume control solenoid valve.

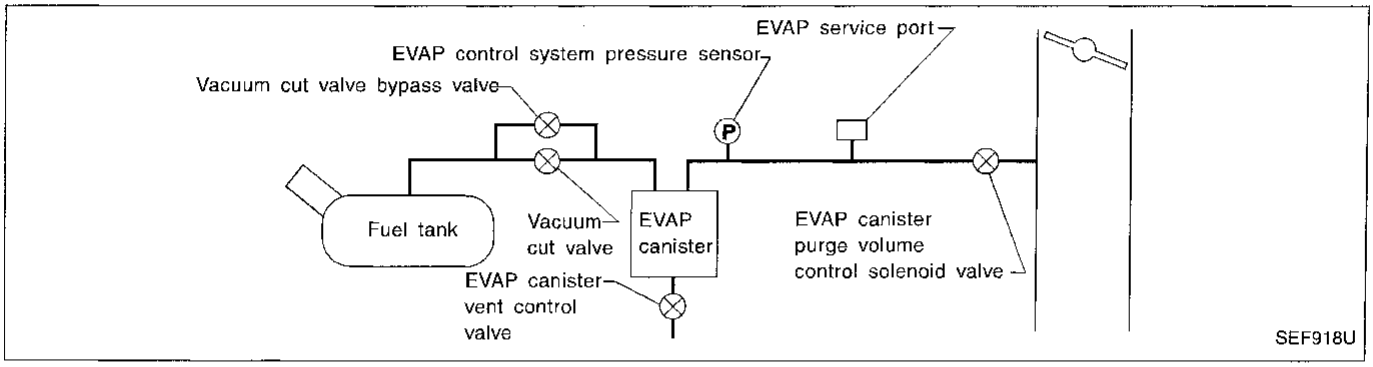

ON BOARD DIAGNOSIS LOGIC

Diagnostic Trouble Code No.	Malfunction is detected when	Check Items (Possible Cause)
P1440 0213	● EVAP control system has a leak. ● EVAP control system does not operate properly.	● Incorrect fuel tank vacuum relief valve ● Incorrect fuel filler cap used ● Fuel filler cap remains open or fails to close. ● Foreign matter caught in fuel filler cap. ● Leak is in line between intake manifold and EVAP canister purge volume control solenoid valve. ● Foreign matter caught in EVAP canister vent control valve. ● EVAP canister or fuel tank leaks ● EVAP purge line (pipe and rubber tube) leaks ● EVAP purge line rubber tube bent. ● Blocked or bent rubber tube to EVAP control system pressure sensor ● Loose or disconnected rubber tube ● EVAP canister vent control valve and the circuit ● EVAP canister purge volume control solenoid valve ● Absolute pressure sensor ● Tank fuel temperature sensor ● MAP/BARO switch solenoid valve ● Blocked or bent rubber tube to MAP/BARO switch solenoid valve ● O-ring of EVAP canister vent control valve is missing or damaged. ● Water separator ● EVAP canister is saturated with water.

CAUTION:

- **Use only a genuine NISSAN fuel filler cap as a replacement. If an incorrect fuel filler cap is used, the MIL may come on.**
- **If the fuel filler cap is not tightened properly, the MIL may come on.**
- **Use only a genuine rubber tube as a replacement.**

Simpo PDF Merge and Split Unregistered Version - http://www.simpopdf.com

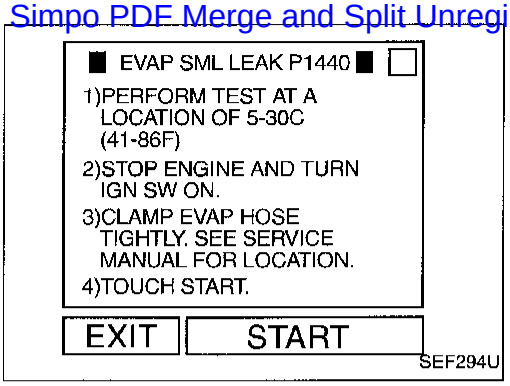

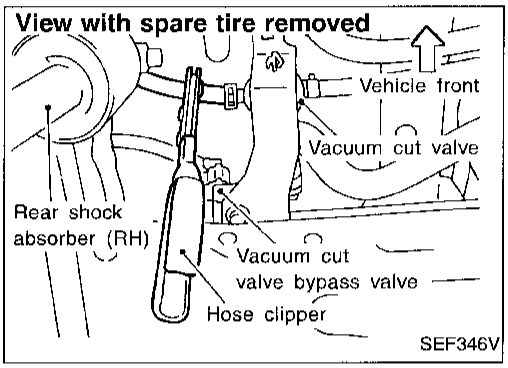

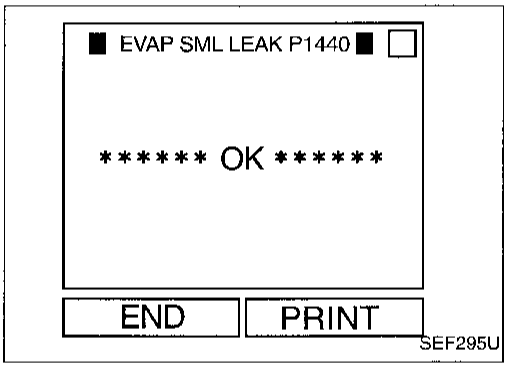

Evaporative Emission (EVAP) Control System (Small Leak) (Positive Pressure) (Cont'd)

DIAGNOSTIC TROUBLE CODE CONFIRMATION PROCEDURE

CAUTION:

- **Never use compressed air or high pressure pump. Otherwise, EVAP system may be damaged.**
- **Do not start engine.**
- **Do not exceed 4.12 kPa (0.042 kg/cm^2, 0.6 psi) of pressure in EVAP system.**

NOTE:

- **If "DIAGNOSTIC TROUBLE CODE CONFIRMATION PROCEDURE" has been previously conducted, always turn ignition switch "OFF" and wait at least 5 seconds before conducting the next test.**
- **Always remove service port adapter from service port when applying air up to 0.69 to 1.38 kPa (5.14 to 10.34 mmHg, 0.202 to 0.407 inHg).**
- **During the test, clamp the EVAP hose tightly as shown at left.**
- **If both DTC P1440 and P1448 are displayed, perform TROUBLE DIAGNOSIS FOR DTC P1448 first. (See EC-373.)**

1) Turn ignition switch "ON".
2) Select "EVAP SML LEAK P1440" of "EVAPORATIVE SYSTEM" in "DTC WORK SUPPORT" mode with CONSULT.
   Follow the instruction displayed.
3) Make sure that "OK" is displayed.
   If "NG" is displayed, refer to "DIAGNOSTIC PROCEDURE", EC-348.

OR

NOTE:
Be sure to read the explanation of "Driving pattern" on EC-39 before driving vehicle.

1) Start engine.
2) Drive vehicle according to "Driving pattern", EC-39.
3) Stop vehicle.
4) Select "MODE 1" with GST.
   - If SRT of EVAP system is not set yet, go to the following step.
   - If SRT of EVAP system is set, the result will be OK.
5) Turn ignition switch "OFF" and wait at least 5 seconds.
6) Start engine.
   It is not necessary to cool engine down before driving.
7) Drive vehicle again according to the "Driving pattern", EC-39.
8) Stop vehicle.
9) Select "MODE 3" with GST.
   - If P1447 is displayed on the screen, go to "TROUBLE DIAGNOSIS FOR DTC P1447", EC-367.
   - If P0440 is displayed on the screen, go to "DIAGNOSTIC PROCEDURE", EC-263.
   - If P1440 is displayed on the screen, go to "DIAGNOSTIC PROCEDURE" in "TROUBLE DIAGNOSIS FOR DTC P1440", EC-348.
   - If P0440, P1440 and P1447 are not displayed on the screen, go to the following step.
10) Select "MODE 1" with GST.
    - If SRT of EVAP system is set, the result will be OK.
    - If SRT of EVAP system is not set, go to step 5).

Simpo PDF Merge and Split Unregistered Version - http://www.simpopdf.com

Evaporative Emission (EVAP) Control System (Small Leak) (Positive Pressure) (Cont'd)

OR

NOTE:

- **Be sure to read the explanation of "Driving pattern" on EC-39 before driving vehicle.**
- **It is better that the fuel level is low.**

NO TOOLS

1) Start engine.
2) Drive vehicle according to "Driving pattern", EC-39.
3) Stop vehicle.
4) Turn ignition switch "OFF" and wait at least 5 seconds.
5) Perform the step 1) to 4) again.
6) Turn ignition switch "ON" and perform "Diagnostic Test Mode II (Self-diagnostic results)" with ECM.

Simpo PDF Merge and Split Unregistered Version - http://www.simpopdf.com

Evaporative Emission (EVAP) Control System (Small Leak) (Positive Pressure) (Cont'd)

DIAGNOSTIC PROCEDURE

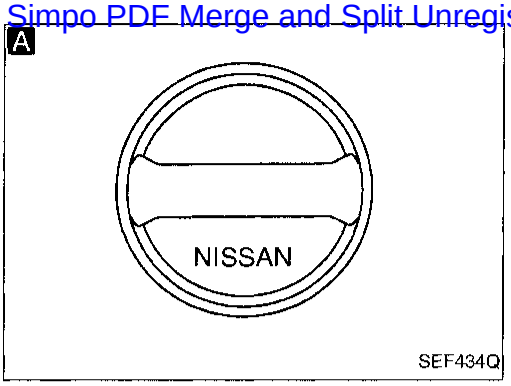

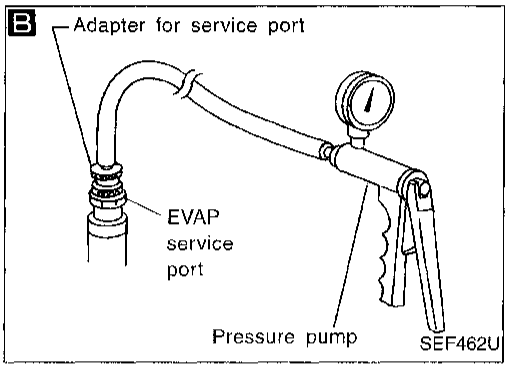

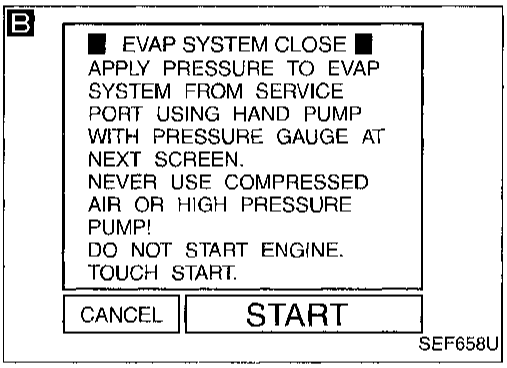

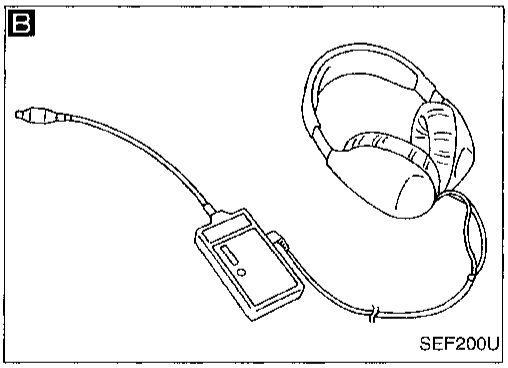

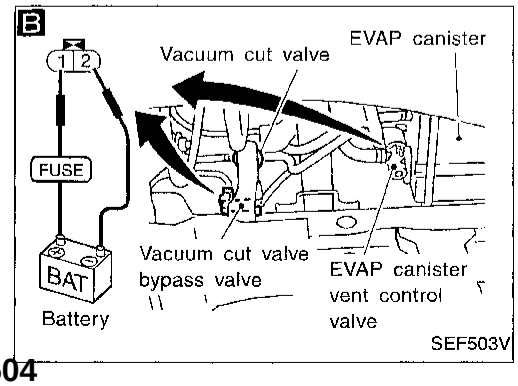

INSPECTION START

A

CHECK FUEL FILLER CAP.
1. Check for genuine NISSAN fuel filler cap design.
2. Check for air releasing sound while opening the fuel filler cap.
   If the air releasing sound is heard, go to **B** .
   If the air releasing sound is not heard, check the following.
   Was the cap tightened properly?
   If Yes, check fuel filler cap vacuum relief valve.
   Refer to "EVAPORATIVE EMISSION SYSTEM", EC-21.
   If No, open fuel filler cap, then clean cap and filler neck thread using air blower. Retighten until ratcheting sound is heard.

NG → If genuine NISSAN filler cap is not used, replace with genuine NISSAN fuel filler cap.

OK ↓

B

CHECK FOR EVAP LEAK.
- **Never use compressed air or high pressure pump.**
- **Improper installation of service port may cause leaking.**
- **Do not exceed 4.12 kPa (0.042 kg/cm^2, 0.6 psi) of pressure in the system.**

To locate EVAP leak portion, proceed with the following steps.
1. Install the EVAP service port adapter and the pressure pump securely.
2. Turn ignition switch "ON".
   Select "EVAP SYSTEM CLOSE" of "WORK SUPPORT" mode with CONSULT.
3. Touch "START" and apply vacuum into the EVAP line until the pressure indicator reaches the middle of bar graph.
4. Using EVAP leak detector, locate the leak portion. For the leak detector, refer to instruction manual for more details.
   Refer to "EVAPORATIVE EMISSION SYSTEM", EC-23.

NG → Repair or replace.

OR

2. Turn ignition switch "OFF".
3. Apply 12 volts DC to EVAP canister vent control valve. The valve will close. (Continue to apply 12 volts until the end of test.)
4. Apply 12 volts DC to vacuum cut valve bypass valve. The valve will open. (Continue to apply 12 volts until the end of test.)
5. Pressurize the EVAP line using pressure pump with 1.3 to 2.7 kPa (10 to 20 mmHg, 0.39 to 0.79 inHg).
6. Locate the leak using a leak detector. Refer to the instruction manual for more details about the leak detector. Refer to "Evaporative Emission Line Drawing", EC-23.

OK ↓

Ⓐ

(Go to next page.)

Simpo PDF Merge and Split Unregistered Version - http://www.simpopdf.com

Evaporative Emission (EVAP) Control System (Small Leak) (Positive Pressure) (Cont'd)

Ⓐ

C

CHECK COMPONENT AND CIRCUIT
(EVAP canister vent control valve, O-ring and water separator).
Refer to "TROUBLE DIAGNOSIS FOR DTC P0446", EC-276.

NG → Repair or replace EVAP canister vent control valve and O-ring or harness/ connector.

OK ↓

D

CHECK IF EVAP CANISTER IS SATURATED WITH WATER.
1. Remove EVAP canister with EVAP canister vent control valve attached.
2. Check if water will drain from the EVAP canister.
   If it will, weigh the EVAP canister with the vent control valve attached.

If the weight is:
More than 1.8 kg (4.0 lb) → NG
Less than 1.8 kg (4.0 lb) → OK

NG → Check the following.
1. Visually check the EVAP canister for damage.
2. Check hose connection between EVAP canister and water separator for clogging and poor connection.
3. Check water separator. Refer to "COMPONENT INSPECTION", EC-366.

If NG, repair hose or replace EVAP canister or water separator.

OK ↓

E

CHECK COMPONENT (EVAP canister purge volume control solenoid valve).

1. Disconnect vacuum hose to EVAP canister purge volume control solenoid valve at EVAP service port.
2. Start engine.
3. Perform "PURG VOL CONT/V" in "ACTIVE TEST" mode.
4. Touch "Qu" on CONSULT screen to increase "PURG VOL CONT/V" opening to 100.0%.
5. Check vacuum hose for vacuum when revving engine up to 2,000 rpm.
   Vacuum should exist.

OR

1. Start engine and warm it up to normal operating temperature.
2. Stop engine and let it idle for at least 60 seconds.
3. Disconnect vacuum hose to EVAP canister purge volume control solenoid valve at EVAP service port.
4. Start engine.
5. Check vacuum hose for vacuum when revving engine up to 2,000 rpm.
   Vacuum should exist.

NG → Check the following.
- EVAP canister purge volume control solenoid valve
  Refer to "COMPONENT INSPECTION", EC-351.
- Vacuum hoses for clogging or disconnection
  Refer to "Vacuum Hose Drawing", EC-13.

OK ↓

F

CHECK COMPONENT
(Absolute pressure sensor).
Refer to "COMPONENT INSPECTION", EC-353.

NG → Replace absolute pressure sensor.

OK ↓

Ⓑ
(Go to next page.)

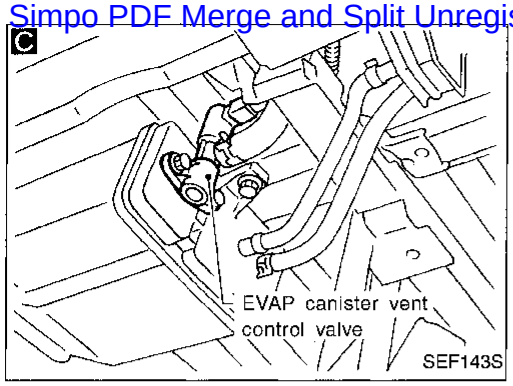

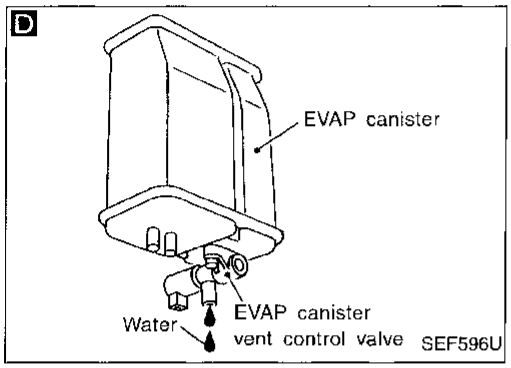

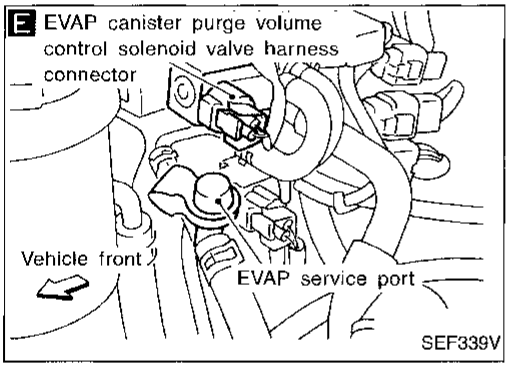

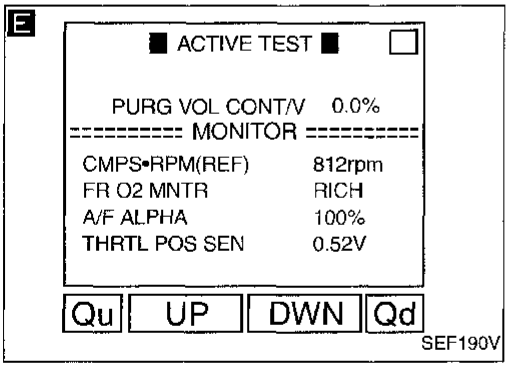

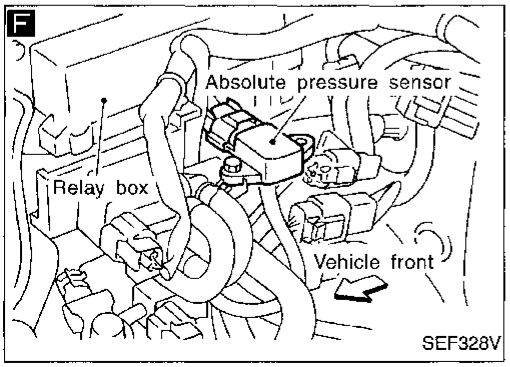

Simpo PDF Merge and Split Unregistered Version - http://www.simpopdf.com

Evaporative Emission (EVAP) Control System (Small Leak) (Positive Pressure) (Cont'd)

G

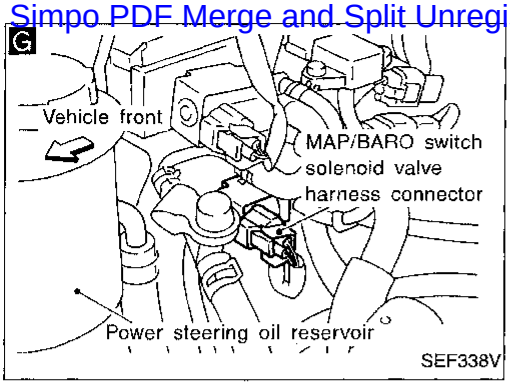

H View with fuel tank removed

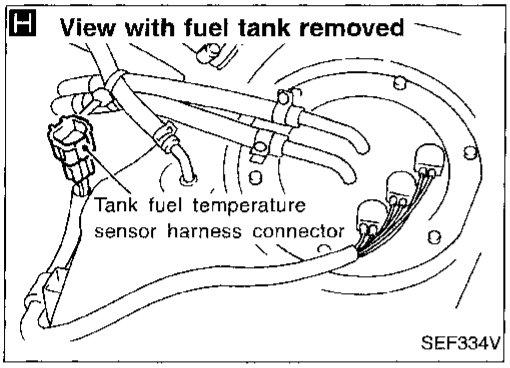

Ⓑ

G

CHECK COMPONENT
(MAP/BARO switch solenoid valve).
Refer to "COMPONENT INSPECTION", EC-353.

NG → Replace MAP/BARO switch solenoid valve.

OK ↓

H

CHECK COMPONENT
(Tank fuel temperature sensor).
Refer to "COMPONENT INSPECTION", EC-354.

NG → Replace tank fuel temperature sensor.

OK ↓

CHECK COMPONENT.
Check EVAP purge line (pipe, rubber tube, fuel tank and EVAP canister) for cracks or improper connection.
Refer to "EVAPORATIVE EMISSION SYSTEM", EC-23.

NG → Repair or reconnect the hose.

OK ↓

Clean EVAP purge line (pipe and rubber tube) using air blower.

↓

Perform "TROUBLE DIAGNOSIS FOR INTERMITTENT INCIDENT", EC-93.

↓

INSPECTION END

Simpo PDF Merge and Split Unregistered Version - http://www.simpopdf.com

Evaporative Emission (EVAP) Control System (Small Leak) (Positive Pressure) (Cont'd)

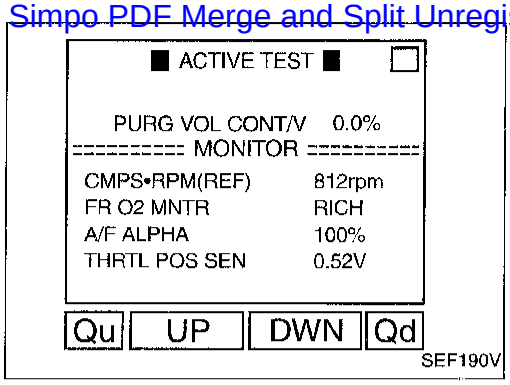

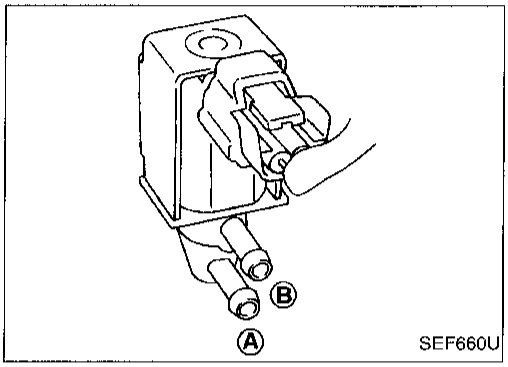

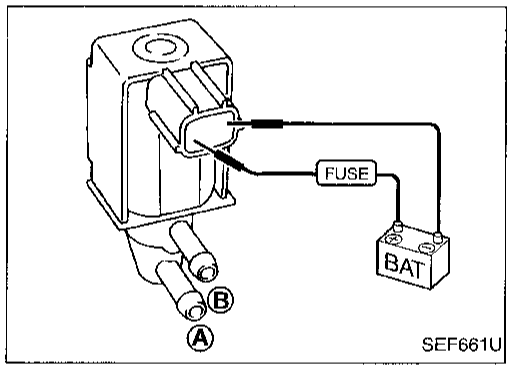

COMPONENT INSPECTION

EVAP canister purge volume control solenoid valve

1. Start engine.
2. Perform "PURG VOL CONT/V" in "ACTIVE TEST" mode with CONSULT. Check that engine speed varies according to the valve opening.
   If OK, inspection end. If NG, go to following step.
3. Check air passage continuity.

Condition PURG VOL CONT/V value	Air passage continuity between (A) and (B)
100.0%	Yes
0.0%	No

If NG, replace the EVAP canister purge volume control solenoid valve.

OR

Check air passage continuity.

Condition	Air passage continuity between (A) and (B)
12V direct current supply between terminals	Yes
No supply	No

If NG or operation takes more than 1 second, replace solenoid valve.

Simpo PDF Merge and Split Unregistered Version - http://www.simpopdf.com

Evaporative Emission (EVAP) Control System (Small Leak) (Positive Pressure) (Cont'd)

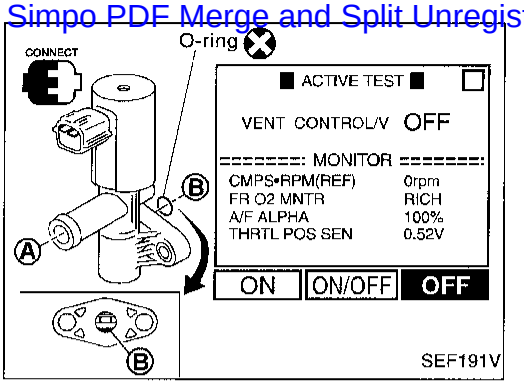

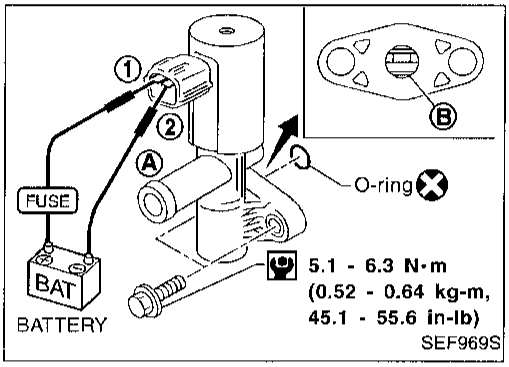

EVAP canister vent control valve

Check air passage continuity.

Perform "VENT CONTROL/V" in "ACTIVE TEST" mode.

Condition VENT CONTROL/V	Air passage continuity between Ⓐ and Ⓑ
ON	No
OFF	Yes

OR

Condition	Air passage continuity between Ⓐ and Ⓑ
12V direct current supply between terminals ① and ②	No
No supply	Yes

If NG or operation takes more than 1 second, clean valve using air blower or replace as necessary.
If the portion Ⓑ is rusted, replace EVAP canister vent control valve.
Make sure new O-ring is installed properly.

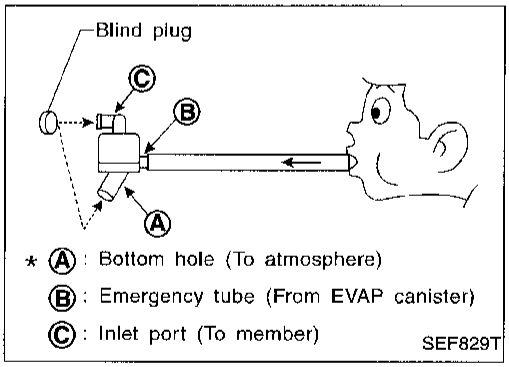

Water separator

1. Check visually for insect nests in the water separator air inlet.
2. Check visually for cracks or flaws in the appearance.
3. Check visually for cracks or flaws in the hose.
4. Check that Ⓐ and Ⓒ are not clogged by blowing air into Ⓑ with Ⓐ, and then Ⓒ plugged.
5. In case of NG in items 2 - 4, replace the parts.

- **Do not disassemble water separator.**

Simpo PDF Merge and Split Unregistered Version - http://www.simpopdf.com

Evaporative Emission (EVAP) Control System (Small Leak) (Positive Pressure) (Cont'd)

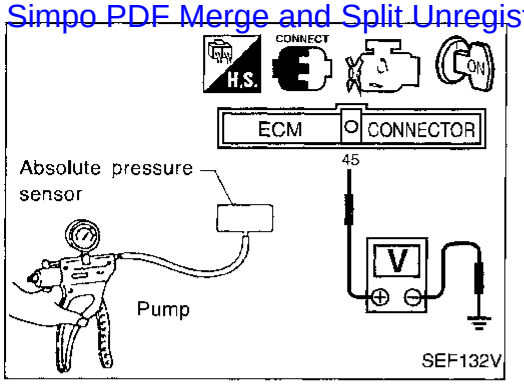

Absolute pressure sensor

1. Remove absolute pressure sensor with its harness connector connected.
2. Remove hose from absolute pressure sensor.
3. Turn ignition switch "ON" and check output voltage between ECM terminal (45) and engine ground.
   The voltage should be 3.2 to 4.8 V.
4. Use pump to apply vacuum of –26.7 kPa (–200 mmHg, –7.87 inHg) to absolute pressure sensor as shown in figure and check the output voltage.
   The voltage should be 1.0 to 1.4 V lower than the value measured in step 3.

CAUTION:

- **Always calibrate the vacuum pump gauge when using it.**
- **Do not apply vacuum below –93.3 kPa (–700 mmHg, –27.56 inHg) or pressure over 101.3 kPa (760 mmHg, 29.92 inHg).**

5. If NG, replace absolute pressure sensor.

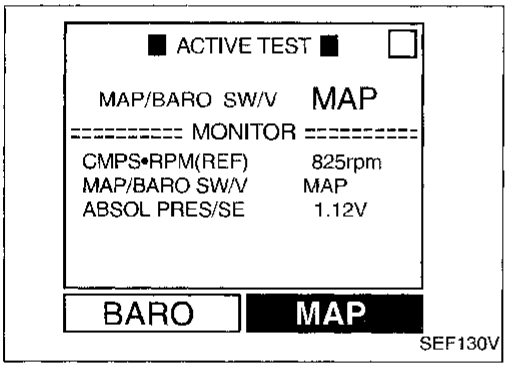

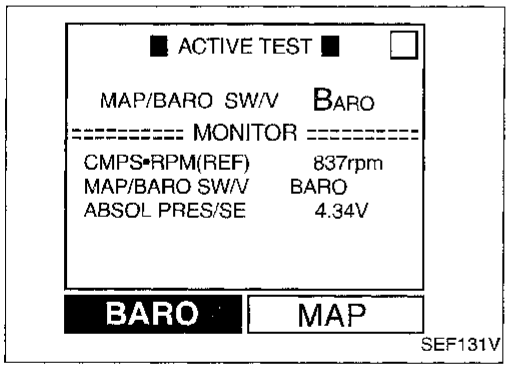

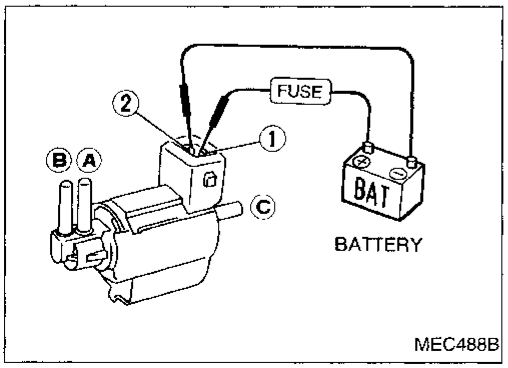

MAP/BARO switch solenoid valve

1. Start engine and warm it up to normal operating temperature.
2. Perform "MAP/BARO SW/V" in "ACTIVE TEST" mode with CONSULT.
3. Check the following.
   - Condition: At idle under no-load
   - CONSULT display

MAP/BARO	ABSOL PRES/SE (Voltage)
BARO	More than 2.6V
MAP	Less than the voltage at BARO

- Time for voltage to change

MAP/BARO SW/V	Required time to switch
BARO to MAP	Less than 1 second
MAP to BARO	

4. If NG, check solenoid valve as shown below.

OR

1. Remove MAP/BARO switch solenoid valve.
2. Check air passage continuity.

Condition	Air passage continuity between (A) and (B)	Air passage continuity between (A) and (C)
12V direct current supply between terminals (1) and (2)	Yes	No
No supply	No	Yes

3. If NG or operation takes more than 1 second, replace solenoid valve.

Simpo PDF Merge and Split Unregistered Version - http://www.simpopdf.com

Evaporative Emission (EVAP) Control System (Small Leak) (Positive Pressure) (Cont'd)

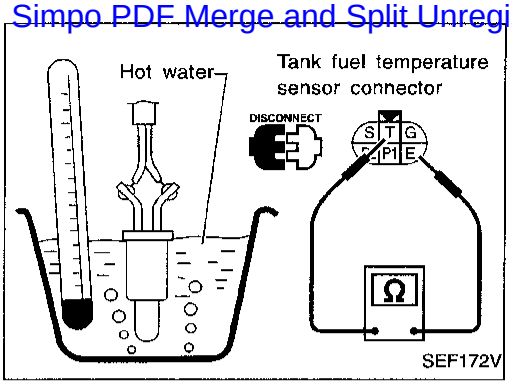

Tank fuel temperature sensor

Check resistance by heating with hot water as shown in the figure or heat gun.

Temperature °C (°F)	Resistance kΩ
20 (68)	2.3 - 2.7
50 (122)	0.79 - 0.90

If NG, replace tank fuel temperature sensor.

Simpo PDF Merge and Split Unregistered Version - http://www.simpopdf.com

Evaporative Emission (EVAP) Canister Purge Volume Control Solenoid Valve

SYSTEM DESCRIPTION

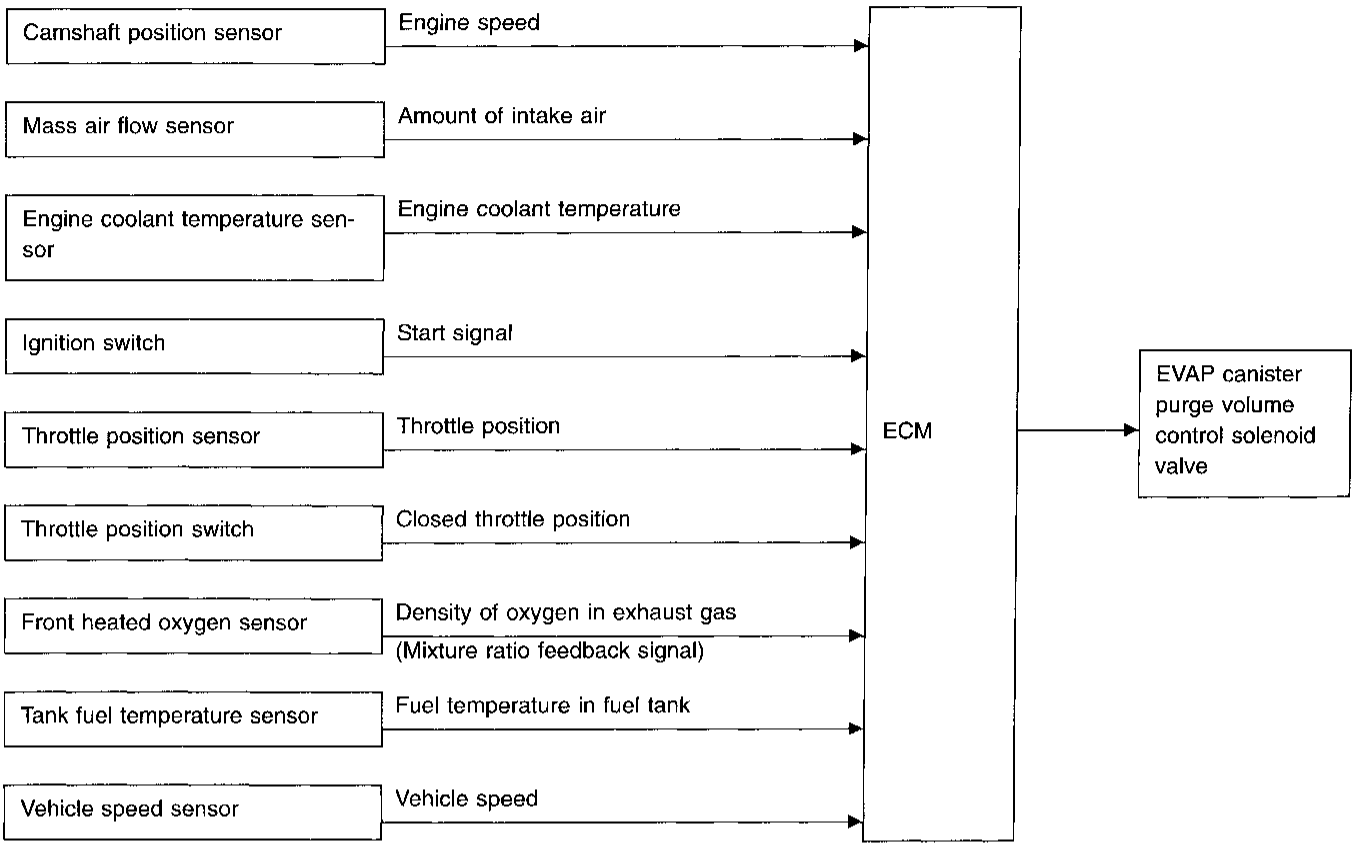

This system controls flow rate of fuel vapor from the EVAP canister. The opening of the vapor by-pass passage in the EVAP canister purge volume control solenoid valve changes to control the flow rate. The EVAP canister purge volume control solenoid valve repeats ON/OFF operation according to the signal sent from the ECM. The opening of the valve varies for optimum engine control. The optimum value stored in the ECM is determined by considering various engine conditions. When the engine is operating, the flow rate of fuel vapor from the EVAP canister is regulated as the air flow changes.

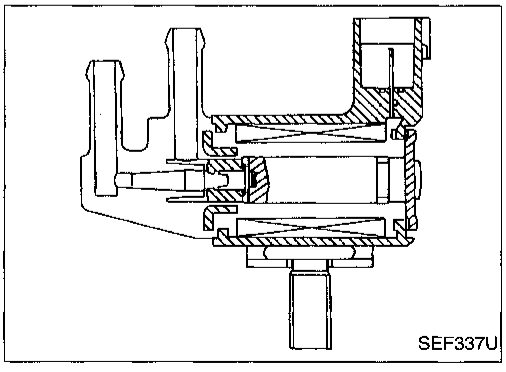

COMPONENT DESCRIPTION

The EVAP canister purge volume control solenoid valve uses ON/OFF duty to control the flow rate of fuel vapor from the EVAP canister. The EVAP canister purge volume control solenoid valve is moved by ON/OFF pulses from the ECM. The longer the ON pulse, the greater the amount of fuel vapor that will flow through the valve.

Simpo PDF Merge and Split Unregistered Version - http://www.simpopdf.com

Evaporative Emission (EVAP) Canister Purge Volume Control Solenoid Valve (Cont'd)

CONSULT REFERENCE VALUE IN DATA MONITOR MODE

Specification data are reference values.

MONITOR ITEM	CONDITION		SPECIFICATION
PURG VOL C/V	● Engine: After warming up ● Air conditioner switch "OFF" ● No-load	Idle	0%
		2,000 rpm (200 seconds after starting engine)	—

ECM TERMINALS AND REFERENCE VALUE

Specification data are reference values and are measured between each terminal and ㉜ (ECM ground).

TERMINAL NO.	WIRE COLOR	ITEM	CONDITION	DATA (DC Voltage)
4	LG/R	ECCS relay (Self-shutoff)	Engine is running. Ignition switch "OFF" For a few seconds after turning ignition switch "OFF"	0 - 1V
			Ignition switch "OFF" A few seconds passed after turning ignition switch "OFF"	BATTERY VOLTAGE (11 - 14V)
5	R/Y	EVAP canister purge volume control solenoid valve	Engine is running. Idle speed	BATTERY VOLTAGE (11 - 14V) 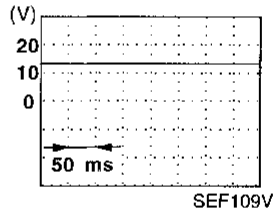 SEF109V
				12 - 13V 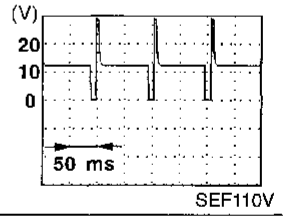 SEF110V
67	B/P	Power supply for ECM	Ignition switch "ON"	BATTERY VOLTAGE (11 - 14V)
72	B/P			
117	B/P	Current return	Engine is running. Idle speed	BATTERY VOLTAGE (11 - 14V)

Simpo PDF Merge and Split Unregistered Version - http://www.simpopdf.com

Evaporative Emission (EVAP) Canister Purge Volume Control Solenoid Valve (Cont'd)

ON BOARD DIAGNOSIS LOGIC

Diagnostic Trouble Code No.	Malfunction is detected when	Check Items (Possible Cause)
P1444 0214	● The canister purge flow is detected during the specified driving conditions, even when EVAP canister purge volume control solenoid valve is completely closed.	● EVAP control system pressure sensor ● EVAP canister purge volume control solenoid valve (The valve is stuck open.) ● EVAP canister vent control valve ● EVAP canister ● Hoses (Hoses are connected incorrectly or clogged.)

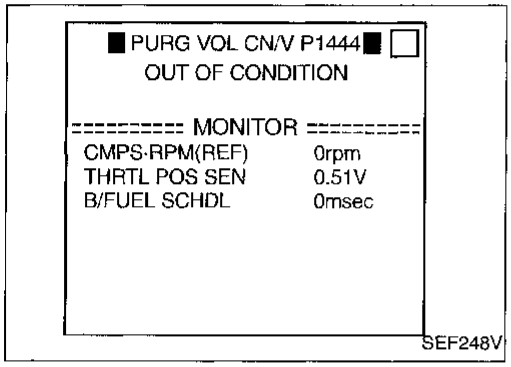

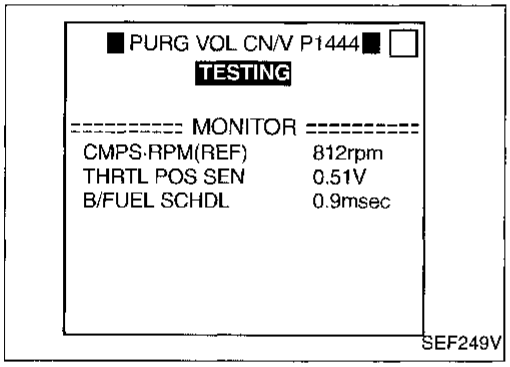

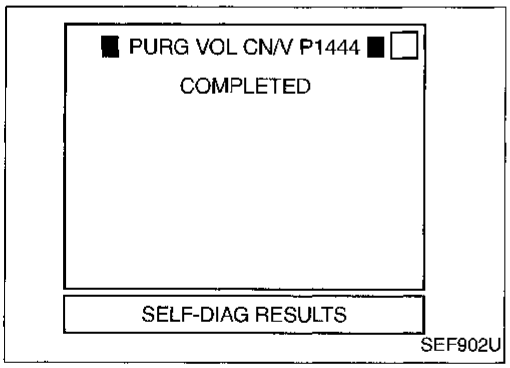

DIAGNOSTIC TROUBLE CODE CONFIRMATION PROCEDURE

NOTE:
If "DIAGNOSTIC TROUBLE CODE CONFIRMATION PROCEDURE" has been previously conducted, always turn ignition switch "OFF" and wait at least 5 seconds before conducting the next test.

TESTING CONDITION:
Always perform test at a temperature of 5°C (41°F) or more.

1) Start engine and warm it up to normal operating temperature.
2) Turn ignition switch "OFF" and wait at least 5 seconds.
3) Turn ignition switch "ON".
4) Select "PURG VOL CN/V P1444" of "EVAPORATIVE SYSTEM" in "DTC WORK SUPPORT" mode with CONSULT.
5) Touch "START".
6) Start engine and let it idle until "TESTING" on CONSULT changes to "COMPLETED". (It will take at least 10 seconds.)

If "TESTING" is not displayed after 5 minutes, retry from step 2).

7) Make sure that "OK" is displayed after touching "SELF-DIAG RESULTS". (If "NG" is displayed, refer to "DIAGNOSTIC PROCEDURE".)

OR

1) Start engine and warm it up to normal operating temperature.
2) Turn ignition switch "OFF" and wait at least 5 seconds.
3) Start engine and let it idle for at least 20 seconds.
4) Select "MODE 7" with GST.

OR

1) Start engine and warm it up to normal operating temperature.
2) Turn ignition switch "OFF" and wait at least 5 seconds.
3) Start engine and let it idle for at least 20 seconds.
4) Turn ignition switch "OFF" and wait at least 5 seconds.
5) Turn ignition switch "ON" and perform "Diagnostic Test Mode II (Self-diagnostic results)" with ECM.

Simpo PDF Merge and Split Unregistered Version - http://www.simpopdf.com

Evaporative Emission (EVAP) Canister Purge Volume Control Solenoid Valve (Cont'd)

EC-PGC/V-01

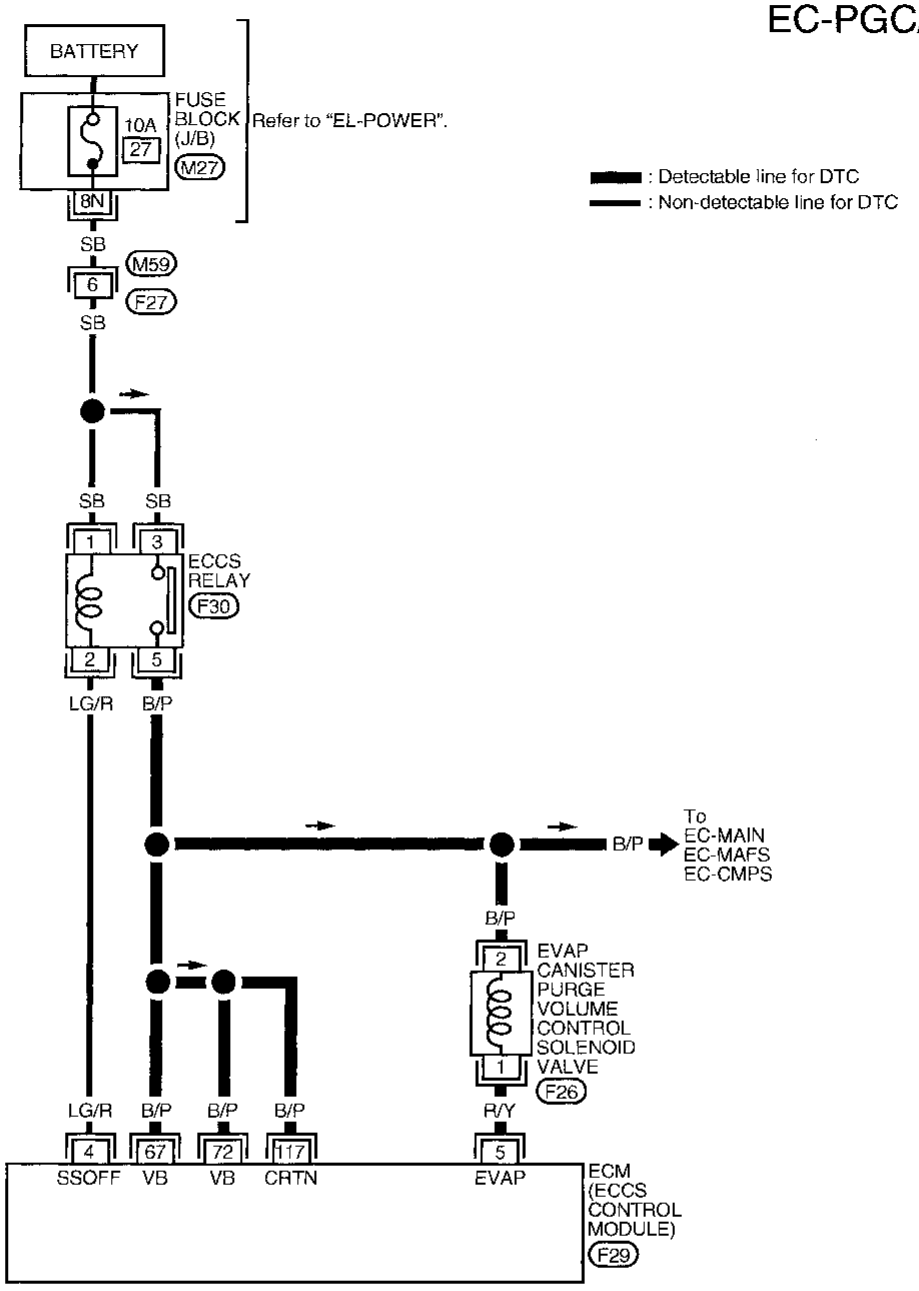

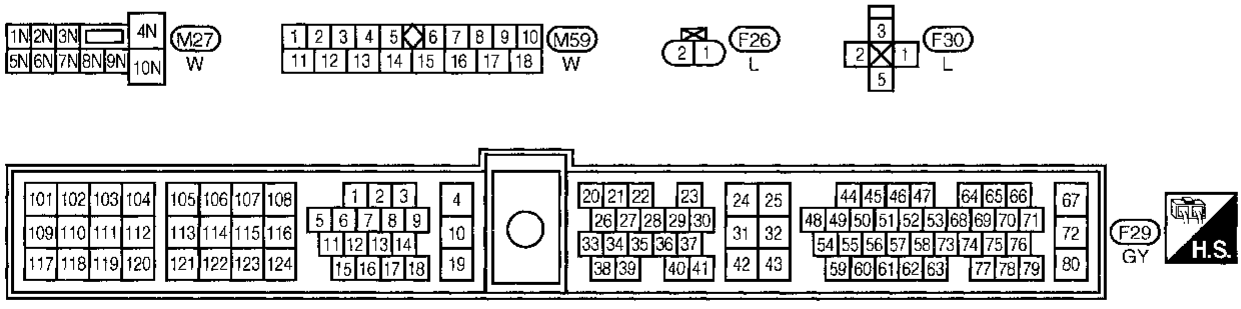

AEC545A

Simpo PDF Merge and Split Unregistered Version - http://www.simpopdf.com

Evaporative Emission (EVAP) Canister Purge Volume Control Solenoid Valve (Cont'd)

DIAGNOSTIC PROCEDURE

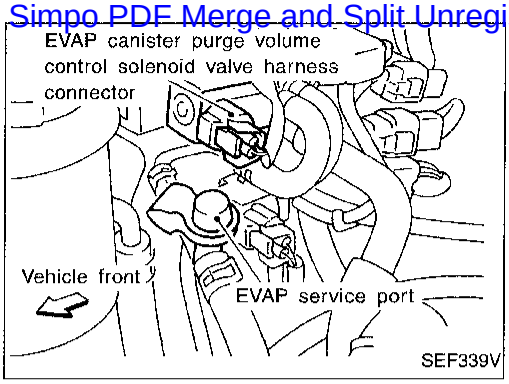

SEF339V

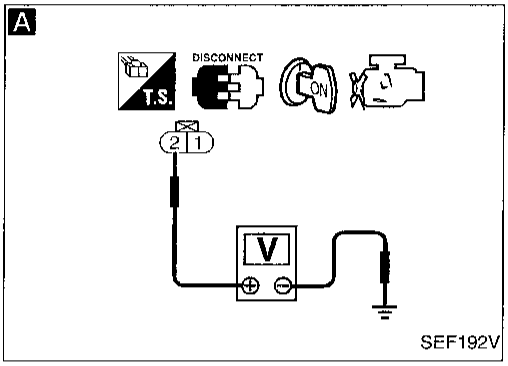

SEF192V

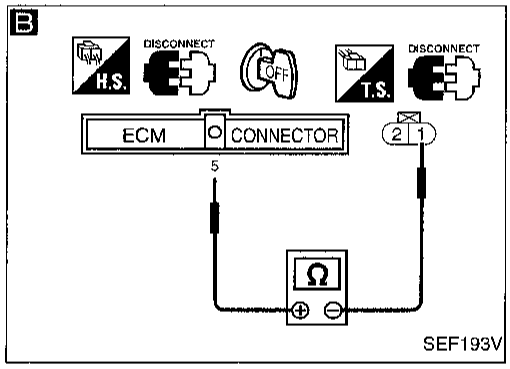

SEF193V

INSPECTION START

A

CHECK POWER SUPPLY.
1. Turn ignition switch "OFF".
2. Disconnect EVAP canister purge volume control solenoid valve harness connector.
3. Turn ignition switch "ON".
4. Check voltage between terminal ② and engine ground with CONSULT or tester.

Voltage: Battery voltage

NG → Check the following.
- Harness for open or short between EVAP canister purge volume control solenoid valve and ECCS relay
- Harness for open or short between EVAP canister purge volume control solenoid valve and ECM

If NG, repair harness or connectors.

OK ↓

B

CHECK OUTPUT SIGNAL CIRCUIT.
1. Turn ignition switch "OFF".
2. Disconnect ECM harness connector.
3. Check harness continuity between ECM terminal ⑤ and terminal ①.

Continuity should exist.

If OK, check harness for short to ground and short to power.

NG → Repair open circuit, short to ground or short to power in harness or connectors.

OK ↓

CHECK COMPONENT
(EVAP control system pressure sensor).
Refer to "COMPONENT INSPECTION" in "TROUBLE DIAGNOSIS FOR DTC P0450", EC-281.

NG → Replace EVAP control system pressure sensor.

OK ↓

CHECK COMPONENT
(EVAP canister purge volume control solenoid valve).
Refer to "COMPONENT INSPECTION", EC-361.

NG → Replace EVAP canister purge volume control solenoid valve.

OK ↓

CHECK COMPONENT
(EVAP canister vent control valve).
Refer to "COMPONENT INSPECTION", EC-280.

NG → Replace EVAP canister vent control valve.

OK ↓

Ⓐ

(Go to next page.)

Simpo PDF Merge and Split Unregistered Version - http://www.simpopdf.com

Evaporative Emission (EVAP) Canister Purge Volume Control Solenoid Valve (Cont'd)

C

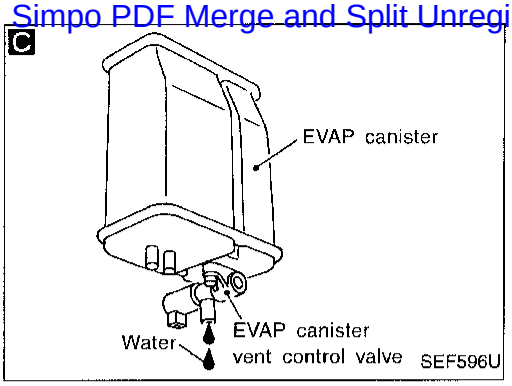

(A)

CHECK RUBBER TUBE FOR CLOGGING.
Check obstructed water separator and rubber tube to EVAP canister vent control valve and clean the rubber tube using air blower.
For water separator, refer to EC-366.

NG → Clean, repair or replace rubber tube and/or water separator.

OK ↓

C

CHECK IF EVAP CANISTER IS SATURATED WITH WATER.

1. Remove EVAP canister with EVAP canister vent control valve attached.
2. Check if water will drain from the EVAP canister.
   If it will, weigh the EVAP canister with the vent control valve attached.

If the weight is:
More than 1.8 kg (4.0 lb) → NG
Less than 1.8 kg (4.0 lb) → OK

NG → Check the following.
1. Visually check the EVAP canister for damage.
2. Check hose connection between EVAP canister and water separator for clogging and poor connection.
3. Check water separator. Refer to "COMPONENT INSPECTION", EC-366.

If NG, repair hose or replace EVAP canister or water separator.

OK ↓

Perform "TROUBLE DIAGNOSIS FOR INTERMITTENT INCIDENT", EC-93.

↓

INSPECTION END

Simpo PDF Merge and Split Unregistered Version - http://www.simpopdf.com

Evaporative Emission (EVAP) Canister Purge Volume Control Solenoid Valve (Cont'd)

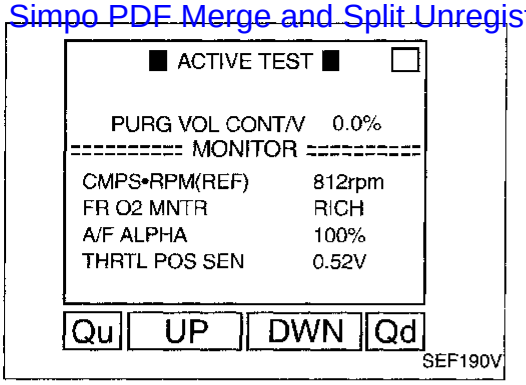

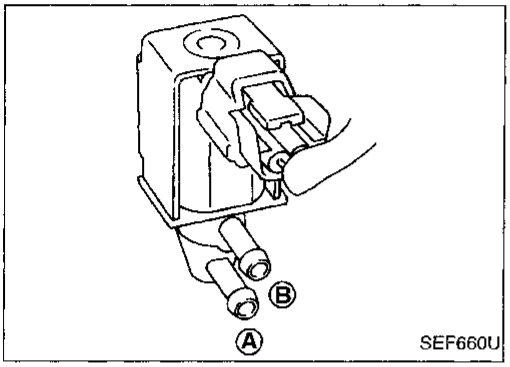

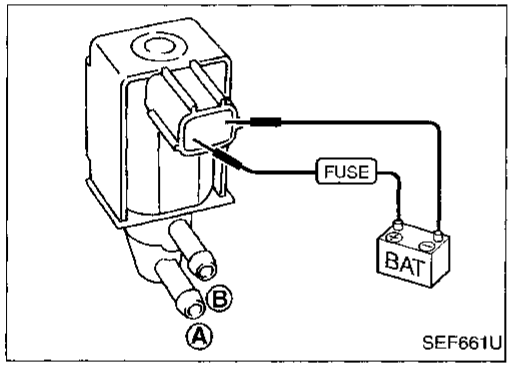

COMPONENT INSPECTION

EVAP canister purge volume control solenoid valve

1. Start engine.
2. Perform "PURG VOL CONT/V" in "ACTIVE TEST" mode with CONSULT. Check that engine speed varies according to the valve opening.
   If OK, inspection end. If NG, go to following step.
3. Check air passage continuity.

Condition PURG VOL CONT/V value	Air passage continuity between Ⓐ and Ⓑ
100.0%	Yes
0.0%	No

If NG, replace the EVAP canister purge volume control solenoid valve.

OR

Check air passage continuity.

Condition	Air passage continuity between Ⓐ and Ⓑ
12V direct current supply between terminals	Yes
No supply	No

If NG or operation takes more than 1 second, replace solenoid valve.

Simpo PDF Merge and Split Unregistered Version - http://www.simpopdf.com

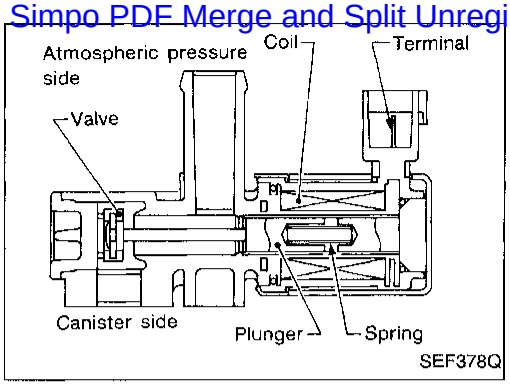

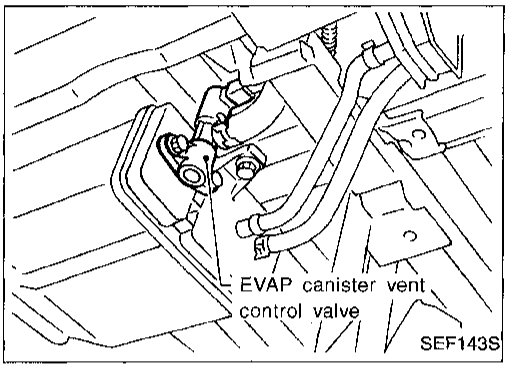

Evaporative Emission (EVAP) Canister Vent Control Valve (Close)

COMPONENT DESCRIPTION

The EVAP canister vent control valve is located on the EVAP canister and is used to seal the canister vent.
This solenoid (the EVAP canister vent control valve) responds to signals from the ECM.
When the ECM sends an ON signal, the coil in the solenoid valve is energized.
A plunger will then move to seal the canister vent. The ability to seal the vent is necessary for the on board diagnosis of other evaporative emission control system components.
This solenoid valve is used only for diagnosis, and usually remains opened.
When the vent is closed, under normal purge conditions, the evaporative emission control system is depressurized and allows "EVAP Control System (Small Leak)" diagnosis.

CONSULT REFERENCE VALUE IN DATA MONITOR MODE

Specification data are reference values.

MONITOR ITEM	CONDITION	SPECIFICATION
VENT CONT/V	● Ignition switch: ON	OFF

ECM TERMINALS AND REFERENCE VALUE

Specification data are reference values and are measured between each terminal and ㉜ (ECM ground).

TERMINAL NO.	WIRE COLOR	ITEM	CONDITION	DATA (DC Voltage)
108	R/G	EVAP canister vent control valve	Ignition switch "ON"	BATTERY VOLTAGE (11 - 14V)

ON BOARD DIAGNOSIS LOGIC

Diagnostic Trouble Code No.	Malfunction is detected when	Check Items (Possible Cause)
P1446 0215	● EVAP canister vent control valve remains closed under specified driving conditions.	● EVAP canister vent control valve ● EVAP control system pressure sensor and the circuit ● Blocked rubber tube to EVAP canister vent control valve ● Water separator ● EVAP canister is saturated with water.

Simpo PDF Merge and Split Unregistered Version - http://www.simpopdf.com

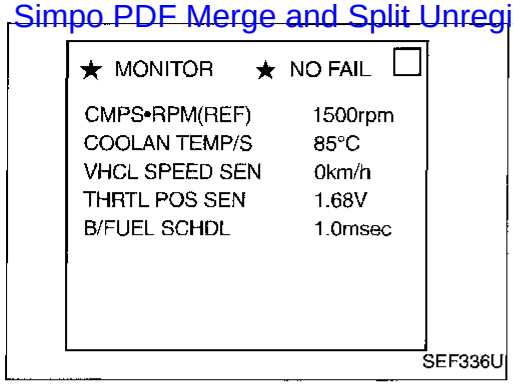

Evaporative Emission (EVAP) Canister Vent Control Valve (Close) (Cont'd)

DIAGNOSTIC TROUBLE CODE CONFIRMATION PROCEDURE

CAUTION:
Always drive vehicle at a safe speed.

NOTE:
If "DIAGNOSTIC TROUBLE CODE CONFIRMATION PROCEDURE" has been previously conducted, always turn ignition switch "OFF" and wait at least 5 seconds before conducting the next test.

1) Turn ignition switch "ON".
2) Select "DATA MONITOR" mode with CONSULT.
3) Start engine.
4) Drive vehicle at a speed of approximately 80 km/h (50 MPH) for a maximum of 15 minutes.

NOTE:
If a malfunction exists, NG result may be displayed quicker.

OR

1) Start engine.
2) Drive vehicle at a speed of approximately 80 km/h (50 MPH) for 15 minutes.
3) Select "MODE 7" with GST.

OR

1) Start engine.
2) Drive vehicle at a speed of approximately 80 km/h (50 MPH) for 15 minutes.
3) Turn ignition switch "OFF" and wait at least 5 seconds.
4) Turn ignition switch "ON" and perform "Diagnostic Test Mode II (Self-diagnostic results)" with ECM.

Simpo PDF Merge and Split Unregistered Version - http://www.simpopdf.com

Evaporative Emission (EVAP) Canister Vent Control Valve (Close) (Cont'd)

A

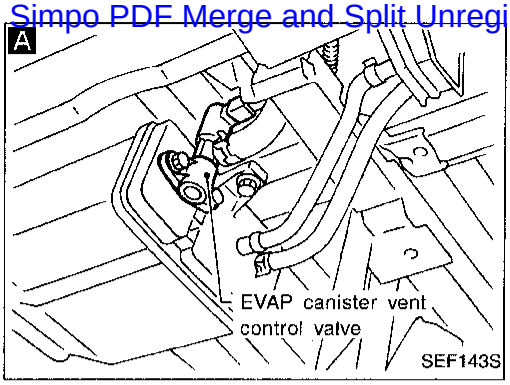

B

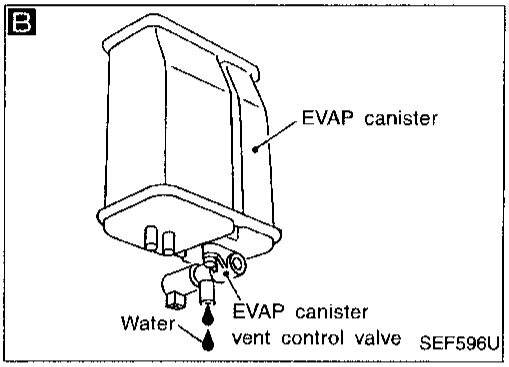

C View with spare tire removed

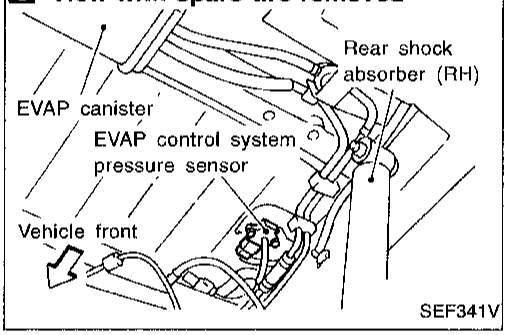

DIAGNOSTIC PROCEDURE

INSPECTION START

CHECK RUBBER TUBE FOR CLOGGING.
Check obstructed water separator and rubber tube to EVAP canister vent control valve and clean the rubber tube using air blower.
For water separator, refer to EC-366.

NG → Clean, repair or replace rubber tube and/or water separator.

OK

A

CHECK COMPONENT
(EVAP canister vent control valve and O-ring).
Refer to "COMPONENT INSPECTION" on next page.

NG → Replace EVAP canister vent control valve and O-ring.

OK

B

CHECK IF EVAP CANISTER IS SATURATED WITH WATER.
1. Remove EVAP canister with EVAP canister vent control valve attached.
2. Check if water will drain from the EVAP canister.
   If it will, weigh the EVAP canister with the vent control valve attached.

If the weight is:
More than 1.8 kg (4.0 lb) → NG
Less than 1.8 kg (4.0 lb) → OK

NG → Check the following.
1. Visually check the EVAP canister for damage.
2. Check hose connection between EVAP canister and water separator for clogging and poor connection.
3. Check water separator. Refer to "COMPONENT INSPECTION", EC-366.

If NG, repair hose or replace EVAP canister or water separator.

OK

C

CHECK COMPONENT AND CIRCUIT
(EVAP control system pressure sensor).
1. Check for disconnection of hose connected to the sensor.
2. Check sensor harness connector for water.
   Water should not exist.
   If OK, go to step 3.
3. Check EVAP control system pressure sensor.

Refer to "P0450 EVAP control system pressure sensor", EC-281.

NG → Repair or replace harness and/or connectors or replace EVAP control system pressure sensor.

OK

Perform "TROUBLE DIAGNOSIS FOR INTERMITTENT INCIDENT", EC-93.

INSPECTION END

Simpo PDF Merge and Split Unregistered Version - http://www.simpopdf.com

Evaporative Emission (EVAP) Canister Vent Control Valve (Close) (Cont'd)

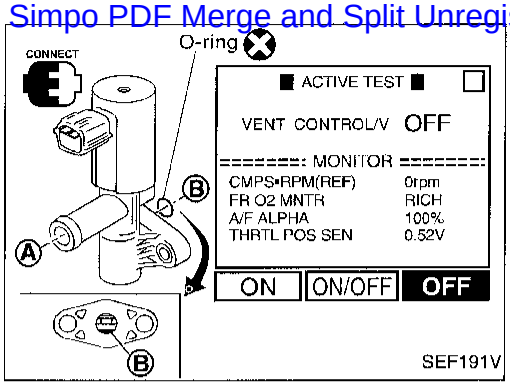

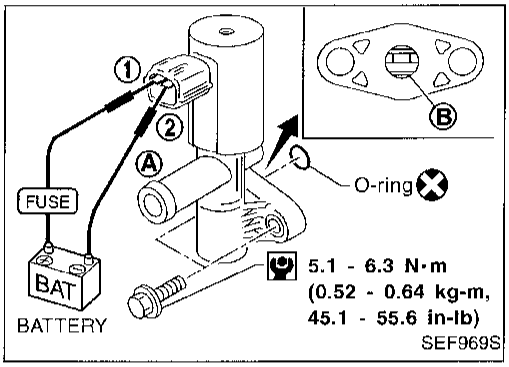

COMPONENT INSPECTION

EVAP canister vent control valve

Check air passage continuity.

Perform "VENT CONTROL/V" in "ACTIVE TEST" mode.

Condition VENT CONTROL/V	Air passage continuity between (A) and (B)
ON	No
OFF	Yes

OR

Condition	Air passage continuity between (A) and (B)
12V direct current supply between terminals (1) and (2)	No
No supply	Yes

If NG or operation takes more than 1 second, clean valve using air blower or replace as necessary.

If the portion (B) is rusted, replace EVAP canister vent control valve.

Make sure new O-ring is installed properly.

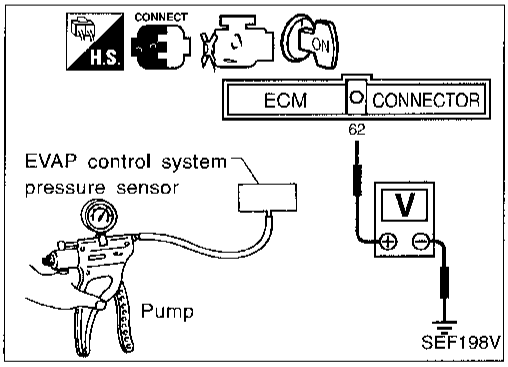

EVAP control system pressure sensor

1. Remove EVAP control system pressure sensor with its harness connector connected.
2. Remove hose from EVAP control system pressure sensor.
3. Use pump to apply vacuum and pressure to EVAP control system pressure sensor as shown in figure.
4. Check output voltage between ECM terminals (62) and engine ground.

Pressure (Relative to atmospheric pressure)	Voltage (V)
0 kPa (0 mmHg, 0 inHg)	3.0 - 3.6
−9.3 kPa (−70 mmHg, −2.76 inHg)	0.4 - 0.6

CAUTION:

- **Always calibrate the vacuum pump gauge when using it.**
- **Do not apply vacuum below −20 kPa (−150 mmHg, −5.91 inHg) or pressure over 20.0 kPa (150 mmHg, 5.91 inHg).**

5. If NG, replace EVAP control system pressure sensor.

Simpo PDF Merge and Split Unregistered Version - http://www.simpopdf.com

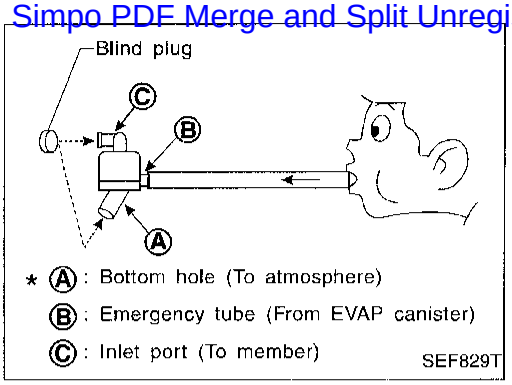

Evaporative Emission (EVAP) Canister Vent Control Valve (Close) (Cont'd)

Water separator

1. Check visually for insect nests in the water separator air inlet.
2. Check visually for cracks or flaws in the appearance.
3. Check visually for cracks or flaws in the hose.
4. Check that Ⓐ and Ⓒ are not clogged by blowing air into Ⓑ with Ⓐ, and then Ⓒ plugged.
5. In case of NG in items 2 - 4, replace the parts.

- **Do not disassemble water separator.**

Simpo PDF Merge and Split Unregistered Version - http://www.simpopdf.com

Evaporative Emission (EVAP) Control System Purge Flow Monitoring

Note: If both DTC P0510 and P1447 are displayed, perform TROUBLE DIAGNOSIS FOR DTC P0510 first. (See EC-297.)

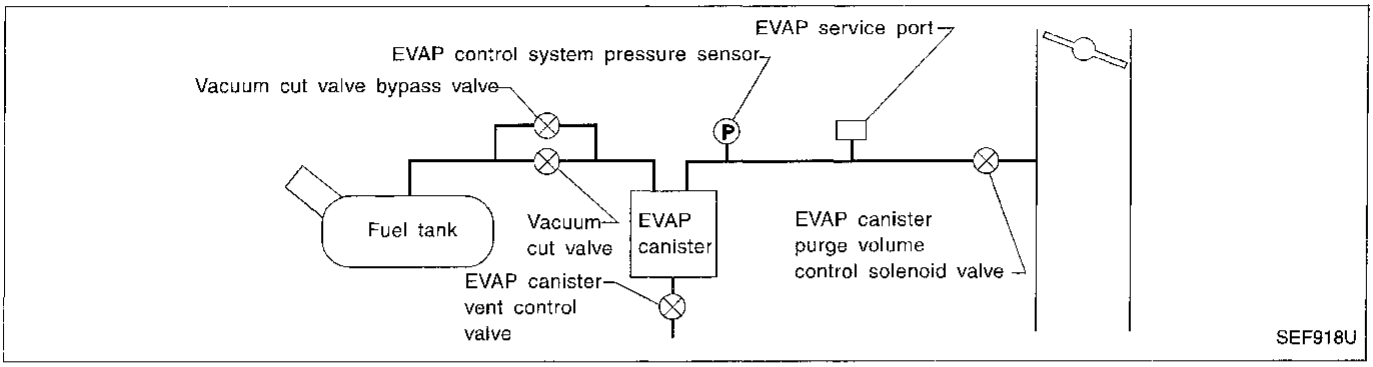

SYSTEM DESCRIPTION

In this evaporative emission (EVAP) control system, purge flow occurs during non-closed throttle conditions. Purge volume is related to air intake volume. Under normal purge conditions (non-closed throttle), the EVAP canister purge volume control solenoid valve is open. Purge flow exposes the EVAP control system pressure sensor to intake manifold vacuum.

ON BOARD DIAGNOSIS LOGIC

Under normal conditions (non-closed throttle), sensor output voltage indicates if pressure drop and purge flow are adequate. If not, a fault is determined.

Diagnostic Trouble Code No.	Malfunction is detected when	Check Items (Possible Cause)
P1447 0111	● EVAP control system does not operate properly. ● EVAP control system has a leak between intake manifold and EVAP control system pressure sensor.	● EVAP canister purge volume control solenoid valve stuck closed ● EVAP control system pressure sensor and the circuit ● Loose, disconnected or improper connection of rubber tube ● Blocked rubber tube ● Blocked or bent rubber tube to MAP/BARO switch solenoid valve ● Cracked EVAP canister ● EVAP canister purge volume control solenoid valve circuit ● Closed throttle position switch ● Blocked purge port ● EVAP canister vent control valve

Simpo PDF Merge and Split Unregistered Version - http://www.simpopdf.com

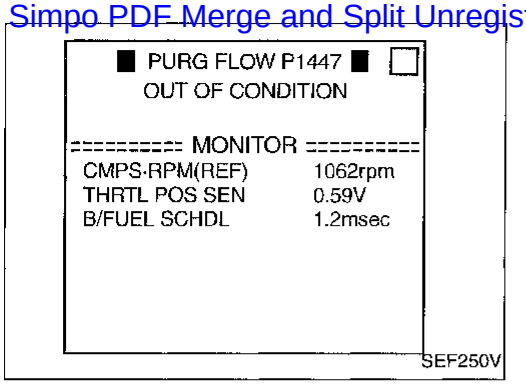

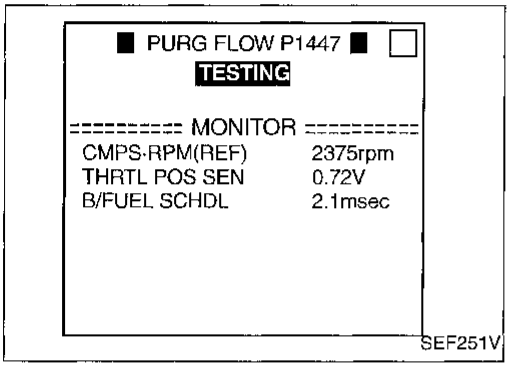

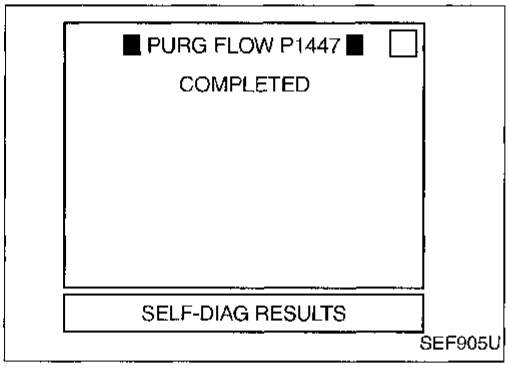

Evaporative Emission (EVAP) Control System Purge Flow Monitoring (Cont'd)

DIAGNOSTIC TROUBLE CODE CONFIRMATION PROCEDURE

CAUTION:
Always drive vehicle at a safe speed.

NOTE:
If "DIAGNOSTIC TROUBLE CODE CONFIRMATION PROCEDURE" has been previously conducted, always turn ignition switch "OFF" and wait at least 5 seconds before conducting the next test.

TESTING CONDITION:
Always perform test at a temperature of 5°C (41°F) or more.

1) Start engine and warm it up to normal operating temperature.
2) Turn ignition switch "OFF" and wait at least 5 seconds.
3) Start engine and let it idle for at least 1 minute.
4) Select "PURG FLOW P1447" of "EVAPORATIVE SYSTEM" in "DTC CONFIRMATION" mode with CONSULT.
5) Touch "START".
6) When the following conditions are met, "TESTING" will be displayed on the CONSULT screen. Maintain the conditions continuously until "TESTING" changes to "COMPLETED". (It will take at least 30 seconds.)
   Selector lever: Suitable position
   Vehicle speed: 32 - 100 km/h (20 - 62 MPH)
   CMPS·RPM (REF): 500 - 3,100 rpm
   B/FUEL SCHDL: 1.6 - 3.5 ms
   Engine coolant temperature: 70 - 100°C (158 - 212°F)

   If "TESTING" is not changed for a long time, retry from step 2).
7) Make sure that "OK" is displayed after touching "SELF-DIAG RESULTS". If "NG" is displayed, refer to "DIAGNOSTIC PROCEDURE", EC-370.

Simpo PDF Merge and Split Unregistered Version - http://www.simpopdf.com

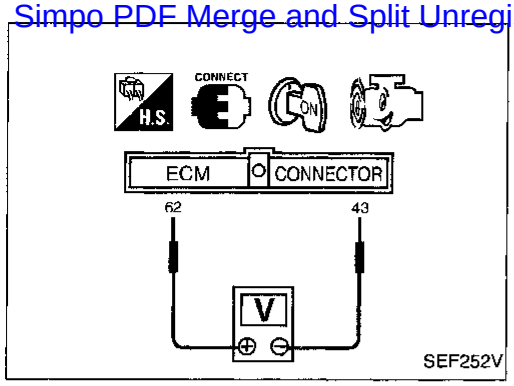

Evaporative Emission (EVAP) Control System Purge Flow Monitoring (Cont'd)

OR

OVERALL FUNCTION CHECK

Use this procedure to check the overall monitoring function of the EVAP control system purge flow. During this check, a 1st trip DTC might not be confirmed.

1) Lift up drive wheels.
2) Start engine and warm it up to normal operating temperature.
3) Turn ignition switch "OFF", wait at least 5 seconds.
4) Start engine and wait at least 60 seconds.
5) Set voltmeter probes to ECM terminals ⑥② (EVAP control system pressure sensor signal) and ④③ (ground).
6) Check EVAP control system pressure sensor value at idle speed.
7) Establish and maintain the following conditions for at least 1 minute.

Air conditioner switch: ON
Steering wheel: Fully turned
Headlamp switch: ON
Engine speed: Approx. 3,000 rpm
Gear position:
M/T models
Any position other than "Neutral" or "Reverse"
A/T models
Any position other than "P", "N" or "R"

Verify that EVAP control system pressure sensor value stays 0.1V less than the value at idle speed for at least 1 second.

Simpo PDF Merge and Split Unregistered Version - http://www.simpopdf.com

Evaporative Emission (EVAP) Control System Purge Flow Monitoring (Cont'd)

DIAGNOSTIC PROCEDURE

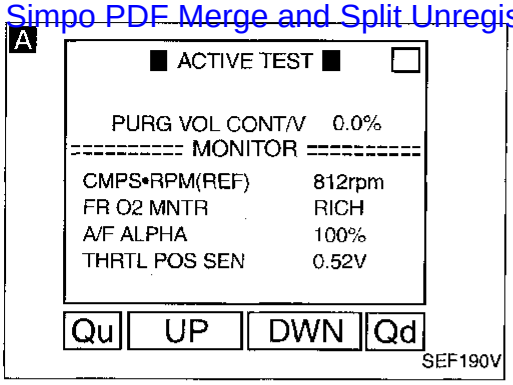

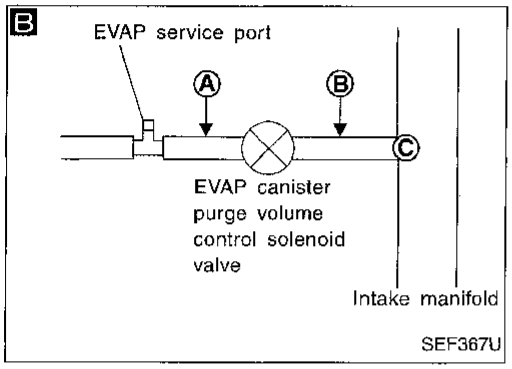

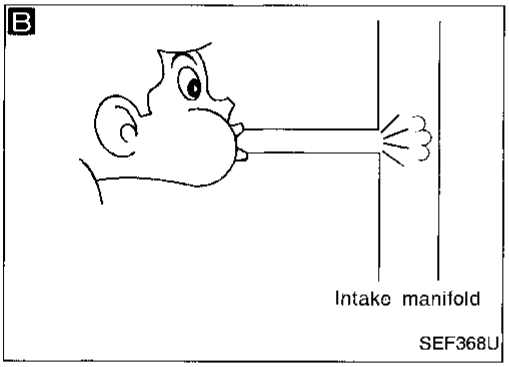

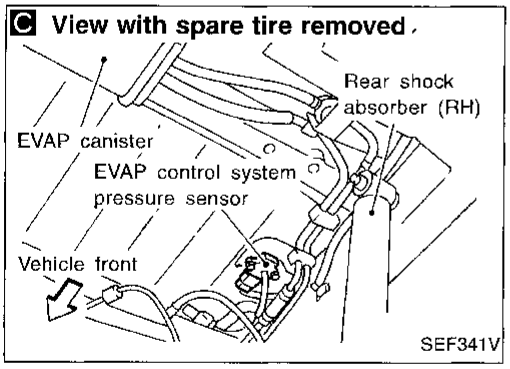

INSPECTION START

CHECK EVAP CANISTER.
Check EVAP canister for cracks.

NG → Replace EVAP canister.

OK

A

CHECK PURGE FLOW.

1. Disconnect EVAP hose to EVAP canister purge volume control solenoid valve at EVAP service port and install vacuum gauge.
2. Start engine and let it idle.
3. Perform "PURG VOL CONT/V" in "ACTIVE TEST" mode.
4. Touch "Qd" and "Qu" on CONSULT screen to adjust "PURG VOL CONT/V" opening.
   100.0%: Vacuum should exist.
   0.0%: Vacuum should not exist.

OR

1. Start engine and warm it up to normal operating temperature.
2. Stop engine.
3. Disconnect vacuum hose to EVAP canister purge volume control solenoid valve at EVAP service port and install vacuum gauge.
4. Start engine and let it idle for at least 60 seconds.
5. Check vacuum hose for vacuum when revving engine up to 2,000 rpm.
   While operating solenoid valve, vacuum should exist.
6. Release the accelerator pedal and let engine idle.
   Vacuum should not exist.

NG → B

CHECK EVAP PURGE LINE.
Check EVAP purge line for improper connection, disconnection and blocked purge port.

1. Turn ignition switch "OFF".
2. Disconnect purge hoses connected to EVAP canister purge volume control solenoid valve (Ⓑ) and EVAP service port (Ⓐ).
3. Blow air into each hose and check that air flows freely.
4. Check EVAP purge port Ⓒ.

If NG, repair or clean hoses and/or purge port.

OK

CHECK COMPONENT (EVAP canister purge volume control solenoid valve).
Refer to "COMPONENT INSPECTION", EC-372.

OK

C

CHECK COMPONENT AND CIRCUIT
(EVAP control system pressure sensor).

1. Check disconnection of hose connected to the sensor.
2. Check sensor harness connector for water.
   Water should not exist.
   If OK, go to step 3.
3. Check EVAP control system pressure sensor.

Refer to "TROUBLE DIAGNOSIS FOR DTC P0450", EC-281.

NG → Replace EVAP control system pressure sensor and repair or replace harness and connector.

OK

Ⓐ

(Go to next page.)

Evaporative Emission (EVAP) Control System Purge Flow Monitoring (Cont'd)

Simpo PDF Merge and Split Unregistered Version - http://www.simpopdf.com

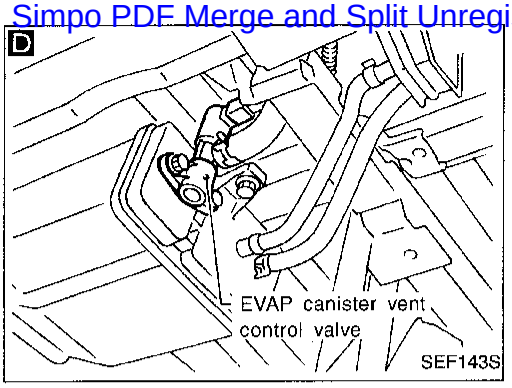

(A)

D

CHECK COMPONENT
(EVAP canister vent control valve and O-ring).
Refer to "COMPONENT INSPECTION", EC-377.

NG → Replace EVAP canister vent control valve and O-ring.

OK

CHECK COMPONENT
(Closed throttle position switch).
Refer to "COMPONENT INSPECTION", EC-301.

NG → Replace throttle position sensor with throttle position switch.

OK

CHECK EVAP PURGE LINE.
Inspect EVAP purge line (pipe and rubber tube). Check for evidence of leaks.

NG → Replace it.

OK

Clean EVAP purge line (pipe and rubber tube) using air blower.

Perform "TROUBLE DIAGNOSIS FOR INTERMITTENT INCIDENT", EC-93.

INSPECTION END

Simpo PDF Merge and Split Unregistered Version - http://www.simpopdf.com

Evaporative Emission (EVAP) Control System Purge Flow Monitoring (Cont'd)

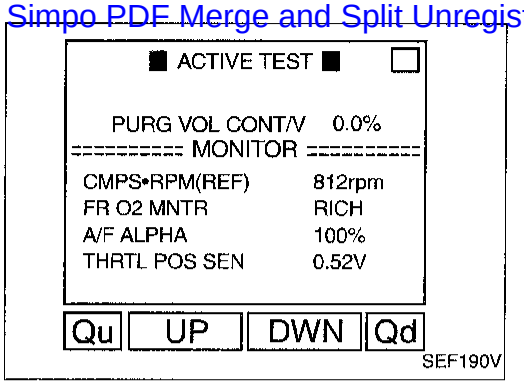

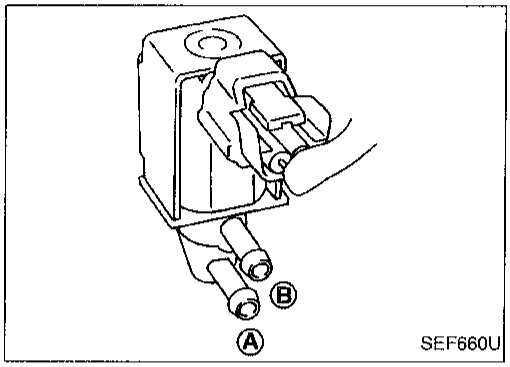

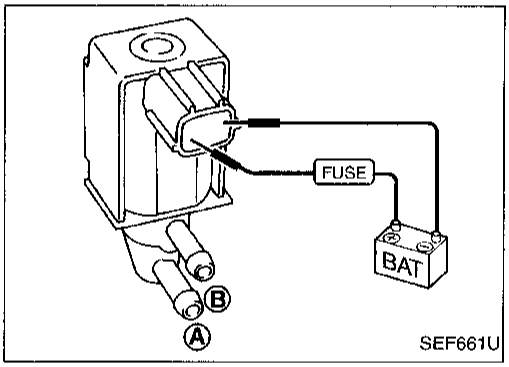

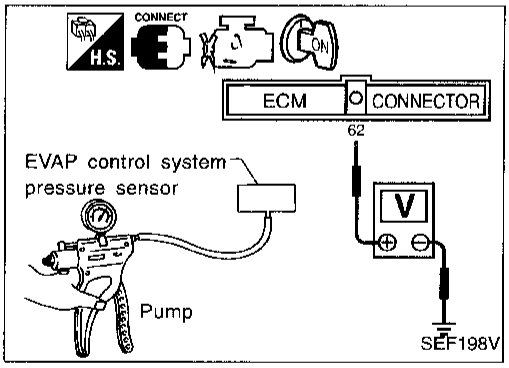

COMPONENT INSPECTION

EVAP canister purge volume control solenoid valve

1. Start engine.
2. Perform "PURG VOL CONT/V" in "ACTIVE TEST" mode with CONSULT. Check that engine speed varies according to the valve opening.
   If OK, inspection end. If NG, go to following step.
3. Check air passage continuity.

Condition PURG VOL CONT/V value	Air passage continuity between (A) and (B)
100.0%	Yes
0.0%	No

If NG, replace the EVAP canister purge volume control solenoid valve.

OR

Check air passage continuity.

Condition	Air passage continuity between (A) and (B)
12V direct current supply between terminals	Yes
No supply	No

If NG or operation takes more than 1 second, replace solenoid valve.

EVAP control system pressure sensor

1. Remove EVAP control system pressure sensor with its harness connector connected.
2. Remove hose from EVAP control system pressure sensor.
3. Use pump to apply vacuum and pressure to EVAP control system pressure sensor as shown in figure.
4. Check output voltage between ECM terminal (62) and engine ground.

Pressure (Relative to atmospheric pressure)	Voltage (V)
0 kPa (0 mmHg, 0 inHg)	3.0 - 3.6
−9.3 kPa (−70 mmHg, −2.76 inHg)	0.4 - 0.6

CAUTION:

- **Always calibrate the vacuum pump gauge when using it.**
- **Do not apply vacuum below −20 kPa (−150 mmHg, −5.91 inHg) or pressure over 20.0 kPa (150 mmHg, 5.91 inHg).**

5. If NG, replace EVAP control system pressure sensor.

Simpo PDF Merge and Split Unregistered Version - http://www.simpopdf.com

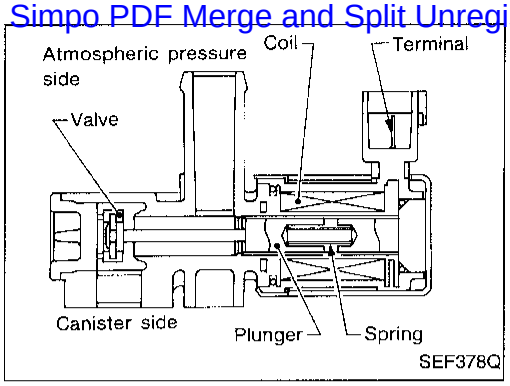

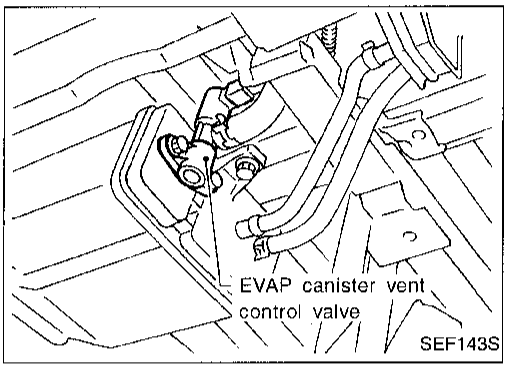

Evaporative Emission (EVAP) Canister Vent Control Valve (Open)

COMPONENT DESCRIPTION

NOTE:
If DTC P0440 or P1440 is displayed with P1448, perform TROUBLE DIAGNOSIS FOR DTC P1448 first.

The EVAP canister vent control valve is located on the EVAP canister and is used to seal the canister vent.
This solenoid (the EVAP canister vent control valve) responds to signals from the ECM.
When the ECM sends an ON signal, the coil in the solenoid valve is energized.
A plunger will then move to seal the canister vent. The ability to seal the vent is necessary for the on board diagnosis of other evaporative emission control system components.
This solenoid valve is used only for diagnosis, and usually remains opened.
When the vent is closed, under normal purge conditions, the evaporative emission control system is depressurized and allows "EVAP Control System (Small Leak)" diagnosis.

CONSULT REFERENCE VALUE IN DATA MONITOR MODE

Specification data are reference values.

MONITOR ITEM	CONDITION	SPECIFICATION
VENT CONT/V	● Ignition switch: ON	OFF

ECM TERMINALS AND REFERENCE VALUE

Specification data are reference values and are measured between each terminal and ㉜ (ECM ground).

TERMINAL NO.	WIRE COLOR	ITEM	CONDITION	DATA (DC Voltage)
108	R/G	EVAP canister vent control valve	Ignition switch "ON"	BATTERY VOLTAGE (11 - 14V)

ON BOARD DIAGNOSIS LOGIC

Diagnostic Trouble Code No.	Malfunction is detected when	Check Items (Possible Cause)
P1448 0309	● EVAP canister vent control valve remains opened under specified driving conditions.	● EVAP canister vent control valve ● EVAP control system pressure sensor ● Blocked rubber tube to EVAP canister vent control valve ● Water separator ● EVAP canister is saturated with water ● Vacuum cut valve

Simpo PDF Merge and Split Unregistered Version - http://www.simpopdf.com

Evaporative Emission (EVAP) Canister Vent Control Valve (Open) (Cont'd)

DIAGNOSTIC TROUBLE CODE CONFIRMATION PROCEDURE

NOTE:

- **If DTC P0440 or P1440 is displayed with P1448, perform TROUBLE DIAGNOSIS FOR DTC P1448 first.**
- **If "DIAGNOSTIC TROUBLE CODE CONFIRMATION PROCEDURE" has been previously conducted, always turn ignition switch "OFF" and wait at least 5 seconds before conducting the next test.**

TESTING CONDITION:

- **Perform "DTC WORK SUPPORT" when the fuel level is less than 3/4 full and vehicle is placed on flat level surface.**
- **Always perform test at a temperature of 5 to 30°C (41 to 86°F).**
- **It is better that the fuel level is low.**

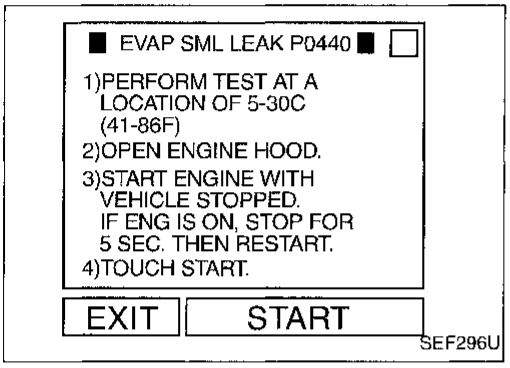

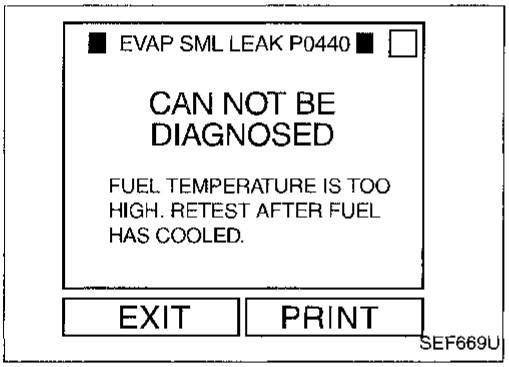

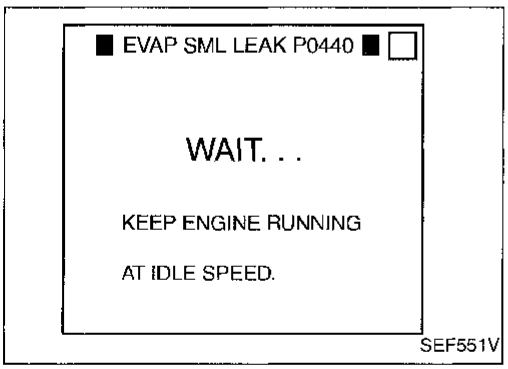

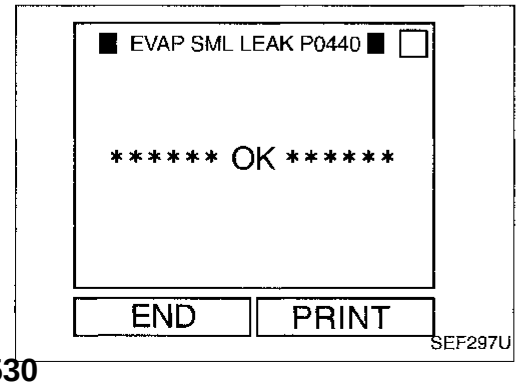

1) Turn ignition switch "ON".
2) Turn ignition switch "OFF" and wait at least 5 seconds.
3) Turn ignition switch "ON" and select "DATA MONITOR" mode with CONSULT.
4) Make sure that the following conditions are met.
   COOLAN TEMP/S: 0 - 70°C (32 - 158°F)
   INT/A TEMP SE: 5 - 60°C (41 - 140°F)
5) Select "EVAP SML LEAK P0440" of "EVAPORATIVE SYSTEM" in "DTC WORK SUPPORT" mode with CONSULT.
   Follow the instruction displayed.

NOTE:

- **If the CONSULT screen shown at left is displayed, stop the engine and stabilize the vehicle temperature at 25°C (77°F) or cooler. After "TANK F/TMP SE" becomes less than 30°C (86°F), retest. (Use a fan to reduce the stabilization time.)**
- **The engine idle portion of this test (See illustration at left.) will take approximately 5 minutes.**

6) Make sure that "OK" is displayed.
   If "NG" is displayed, go to the following step.

NOTE:

Make sure that EVAP hoses are connected to EVAP canister purge volume control solenoid valve properly.

7) Stop engine and wait at least 5 seconds, then turn "ON".
8) Disconnect hose from water separator.
9) Select "VENT CONTROL/V" of "ACTIVE TEST" mode with CONSULT.
10) Touch "ON" and "OFF" alternately.

Simpo PDF Merge and Split Unregistered Version - http://www.simpopdf.com

Evaporative Emission (EVAP) Canister Vent Control Valve (Open) (Cont'd)

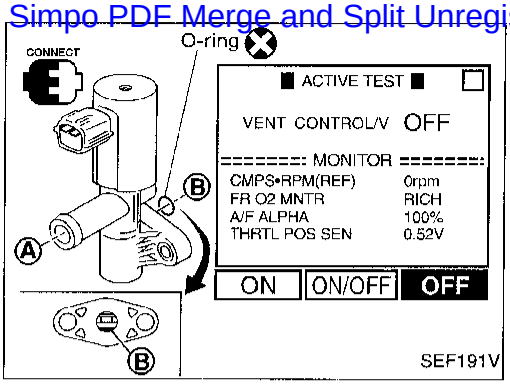

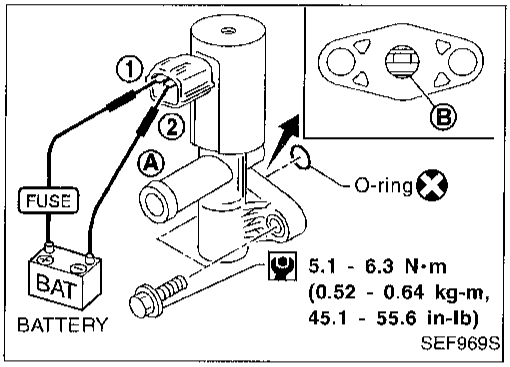

11) Make sure of the following.

Condition VENT CONTROL/V	Air passage continuity between (A) and (B)
ON	No
OFF	Yes

If the result is NG, go to "DIAGNOSTIC PROCEDURE", EC-376.
If the result is OK, go to "DIAGNOSTIC PROCEDURE" for "TROUBLE DIAGNOSIS FOR DTC P0440", EC-263.

OR

OVERALL FUNCTION CHECK

Use this procedure to check the overall function of the EVAP canister vent control valve circuit. During this check, a DTC might not be confirmed.

1) Disconnect hose from water separator.
2) Disconnect EVAP canister vent control valve harness connector.
3) Verify the following.

Condition	Air passage continuity
12V direct current supply between terminals (1) and (2)	No
No supply	Yes

If the result is NG, go to "DIAGNOSTIC PROCEDURE", EC-376.
If the result is OK, go to "TROUBLE DIAGNOSIS FOR DTC P0440", EC-260.

Simpo PDF Merge and Split Unregistered Version - http://www.simpopdf.com

Evaporative Emission (EVAP) Canister Vent Control Valve (Open) (Cont'd)

DIAGNOSTIC PROCEDURE

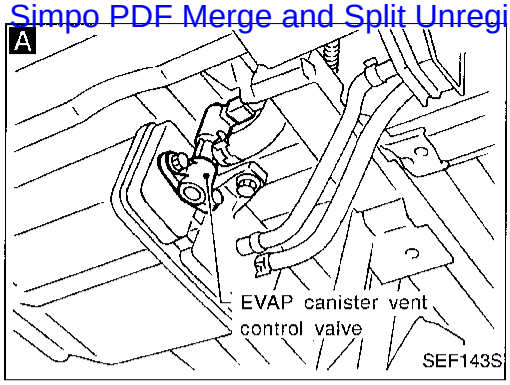

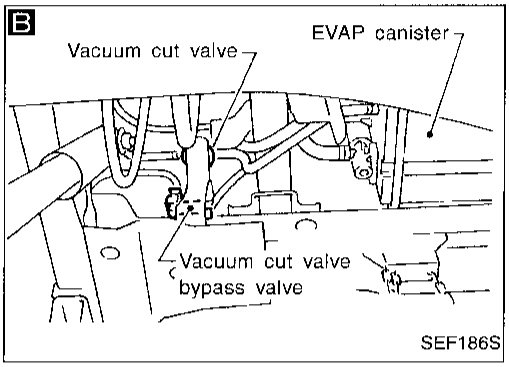

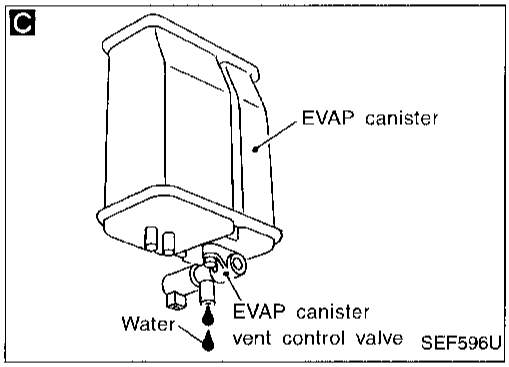

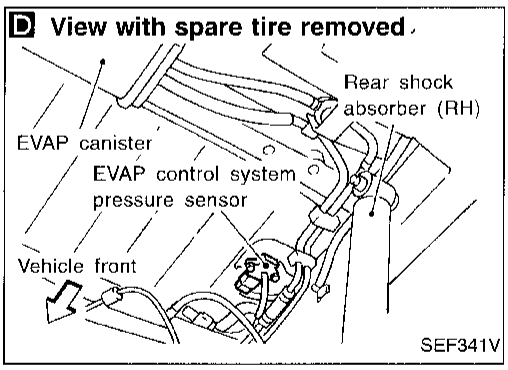

INSPECTION START

CHECK RUBBER TUBE FOR DISCONNECTION.
Check disconnection of rubber tube to EVAP canister vent control valve and clean the rubber hose and/or vent control valve then install properly.

OK

A

CHECK COMPONENT
(EVAP canister vent control valve and O-ring).
Refer to "COMPONENT INSPECTION" on next page.

NG → Replace EVAP canister vent control valve and O-ring.

OK

B

CHECK COMPONENT
(Vacuum cut valve).
Refer to "COMPONENT INSPECTION", EC-387.

NG → Replace vacuum cut valve.

OK

C

CHECK IF EVAP CANISTER IS SATURATED WITH WATER.
1. Remove EVAP canister with EVAP canister vent control valve attached.
2. Check if water will drain from the EVAP canister.
   If it will, weigh the EVAP canister with the vent control valve attached.

If the weight is:
More than 1.8 kg (4.0 lb) → NG
Less than 1.8 kg (4.0 lb) → OK

NG → Check the following.
1. Visually check the EVAP canister for damage.
2. Check hose connection between EVAP canister and water separator for clogging and poor connection.
3. Check water separator. Refer to "COMPONENT INSPECTION", EC-366.

If NG, repair hose or replace EVAP canister or water separator.

OK

D

CHECK COMPONENT
(EVAP control system pressure sensor).
1. Check for disconnection of hose connected to the sensor.
2. Check harness connector for water in the sensor connectors.
   Water should not exist.
   If OK, go to step 3.
3. Check EVAP control system pressure sensor.

Refer to "COMPONENT INSPECTION" on next page.

NG → Replace EVAP control system pressure sensor and repair or replace harness and connector.

OK

Perform "TROUBLE DIAGNOSIS FOR INTERMITTENT INCIDENT", EC-93.

INSPECTION END

Simpo PDF Merge and Split Unregistered Version - http://www.simpopdf.com

Evaporative Emission (EVAP) Canister Vent Control Valve (Open) (Cont'd)

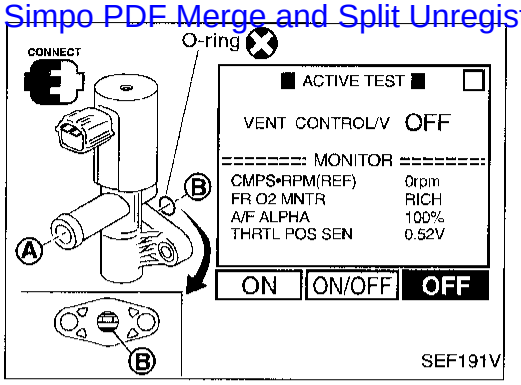

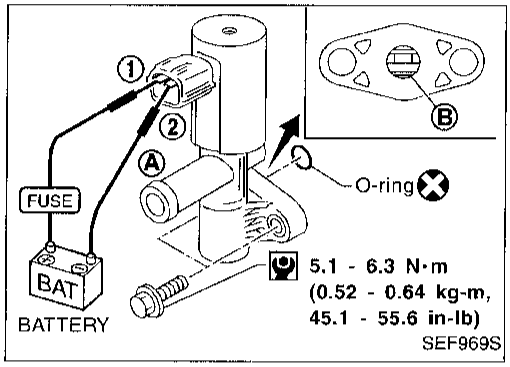

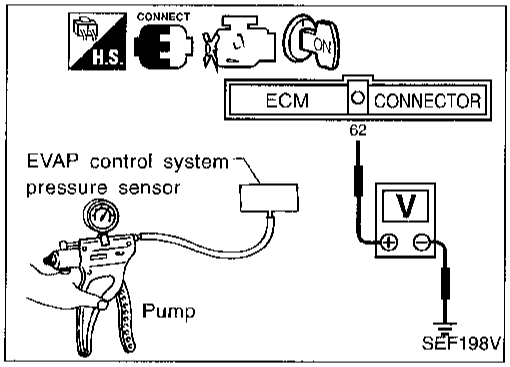

COMPONENT INSPECTION

EVAP canister vent control valve

Check air passage continuity.

Perform "VENT CONTROL/V" in "ACTIVE TEST" mode.

Condition VENT CONTROL/V	Air passage continuity between Ⓐ and Ⓑ
ON	No
OFF	Yes

OR

Condition	Air passage continuity between Ⓐ and Ⓑ
12V direct current supply between terminals ① and ②	No
No supply	Yes

If NG or operation takes more than 1 second, clean valve using air blower or replace as necessary.

If the portion Ⓑ is rusted, replace EVAP canister vent control valve.

Make sure new O-ring is installed properly.

EVAP control system pressure sensor

1. Remove EVAP control system pressure sensor with its harness connector connected.
2. Remove hose from EVAP control system pressure sensor.
3. Use pump to apply vacuum and pressure to EVAP control system pressure sensor as shown in figure.
4. Check output voltage between ECM terminal ⑫ and engine ground.

Pressure (Relative to atmospheric pressure)	Voltage (V)
0 kPa (0 mmHg, 0 inHg)	3.0 - 3.6
−9.3 kPa (−70 mmHg, −2.76 inHg)	0.4 - 0.6

CAUTION:

- **Always calibrate the vacuum pump gauge when using it.**
- **Do not apply vacuum below −20 kPa (−150 mmHg, −5.91 inHg) or pressure over 20.0 kPa (150 mmHg, 5.91 inHg).**

5. If NG, replace EVAP control system pressure sensor.

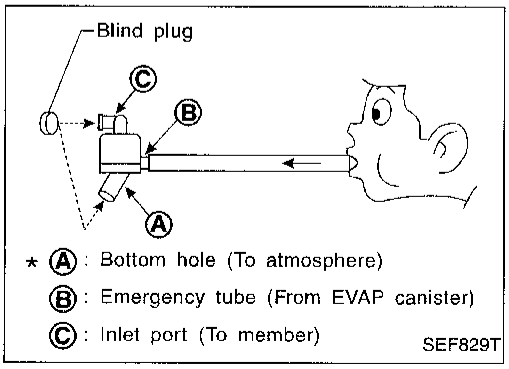

Water separator

1. Check visually for insect nests in water separator air inlet.
2. Check visually for cracks or flaws in the appearance.
3. Check visually for cracks or flaws in the hose.
4. Check that Ⓐ and Ⓒ are not clogged by blowing air into Ⓑ with Ⓐ, and then Ⓒ plugged.
5. In case of NG in items 2 - 4, replace the parts.

- **Do not disassemble water separator.**

Simpo PDF Merge and Split Unregistered Version - http://www.simpopdf.com

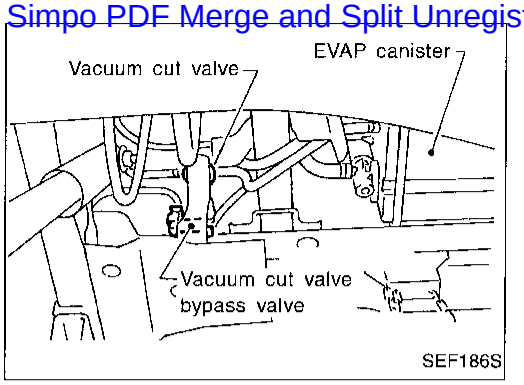

Vacuum Cut Valve Bypass Valve (Circuit)

COMPONENT DESCRIPTION

The vacuum cut valve and vacuum cut valve bypass valve are installed in parallel on the EVAP purge line between the fuel tank and the EVAP canister.

The vacuum cut valve prevents the intake manifold vacuum from being applied to the fuel tank.

The vacuum cut valve bypass valve is a solenoid type valve and generally remains closed. It opens only for on board diagnosis.

The vacuum cut valve bypass valve responds to signals from the ECM. When the ECM sends an ON (ground) signal, the valve is opened. The vacuum cut valve is then bypassed to apply intake manifold vacuum to the fuel tank.

EVAPORATIVE EMISSION SYSTEM DIAGRAM

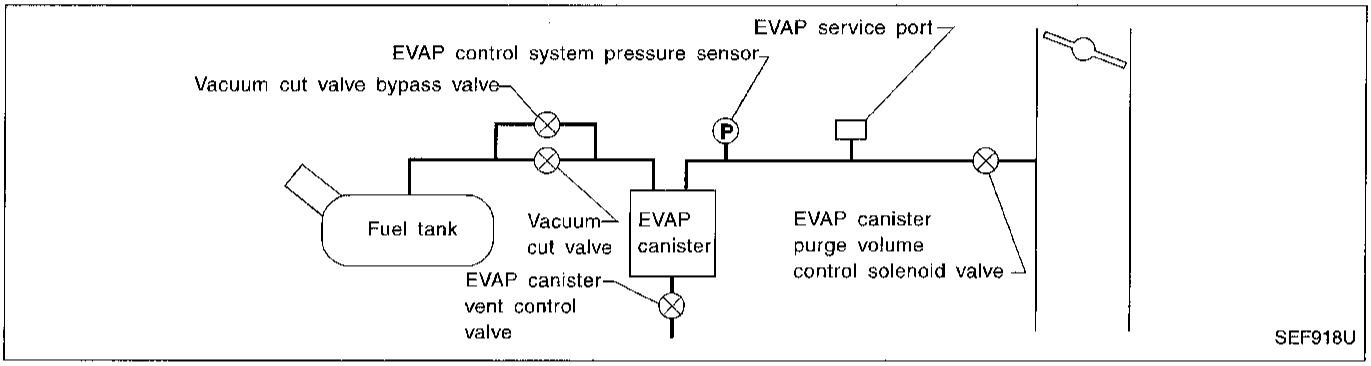

CONSULT REFERENCE VALUE IN DATA MONITOR MODE

Specification data are reference values.

MONITOR ITEM	CONDITION	SPECIFICATION
VC/V BYPASS/V	● Ignition switch: ON	OFF

ECM TERMINALS AND REFERENCE VALUE

Specification data are reference values and are measured between each terminal and ㉜ (ECM ground).

TER-MINAL NO.	WIRE COLOR	ITEM	CONDITION	DATA (DC Voltage)
120	P/B	Vacuum cut valve bypass valve	Ignition switch "ON"	BATTERY VOLTAGE (11 - 14V)

ON BOARD DIAGNOSIS LOGIC

Diagnostic Trouble Code No.	Malfunction is detected when	Check Items (Possible Cause)
P1490 0801	● An improper voltage signal is sent to ECM through vacuum cut valve bypass valve.	● Harness or connectors (The vacuum cut valve bypass valve circuit is open or shorted.) ● Vacuum cut valve bypass valve

Simpo PDF Merge and Split Unregistered Version - http://www.simpopdf.com

Vacuum Cut Valve Bypass Valve (Circuit) (Cont'd)

DIAGNOSTIC TROUBLE CODE CONFIRMATION PROCEDURE

NOTE:
If "DIAGNOSTIC TROUBLE CODE CONFIRMATION PROCEDURE" has been previously conducted, always turn ignition switch "OFF" and wait at least 5 seconds before conducting the next test.

TESTING CONDITION:
Before performing the following procedure, confirm battery voltage is more than 11V at idle.

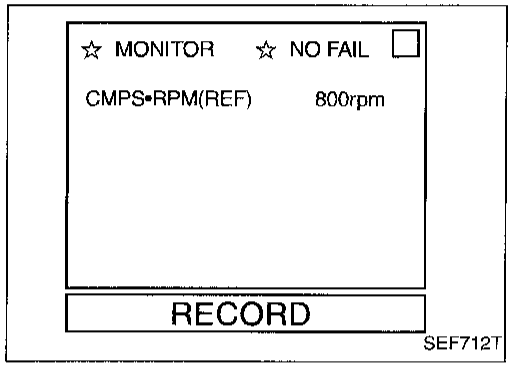

1) Turn ignition switch "ON".
2) Select "DATA MONITOR" mode with CONSULT.
3) Start engine and wait at least 5 seconds.

OR

1) Start engine and wait at least 5 seconds.
2) Select "MODE 7" with GST.

OR

1) Start engine and wait at least 5 seconds.
2) Turn ignition switch "OFF", wait at least 5 seconds and then turn "ON".
3) Perform "Diagnostic Test Mode II (Self-diagnostic results)" with ECM.

Vacuum Cut Valve Bypass Valve (Circuit) (Cont'd)

Simpo PDF Merge and Split Unregistered Version - http://www.simpopdf.com

EC-BYPS/V-01

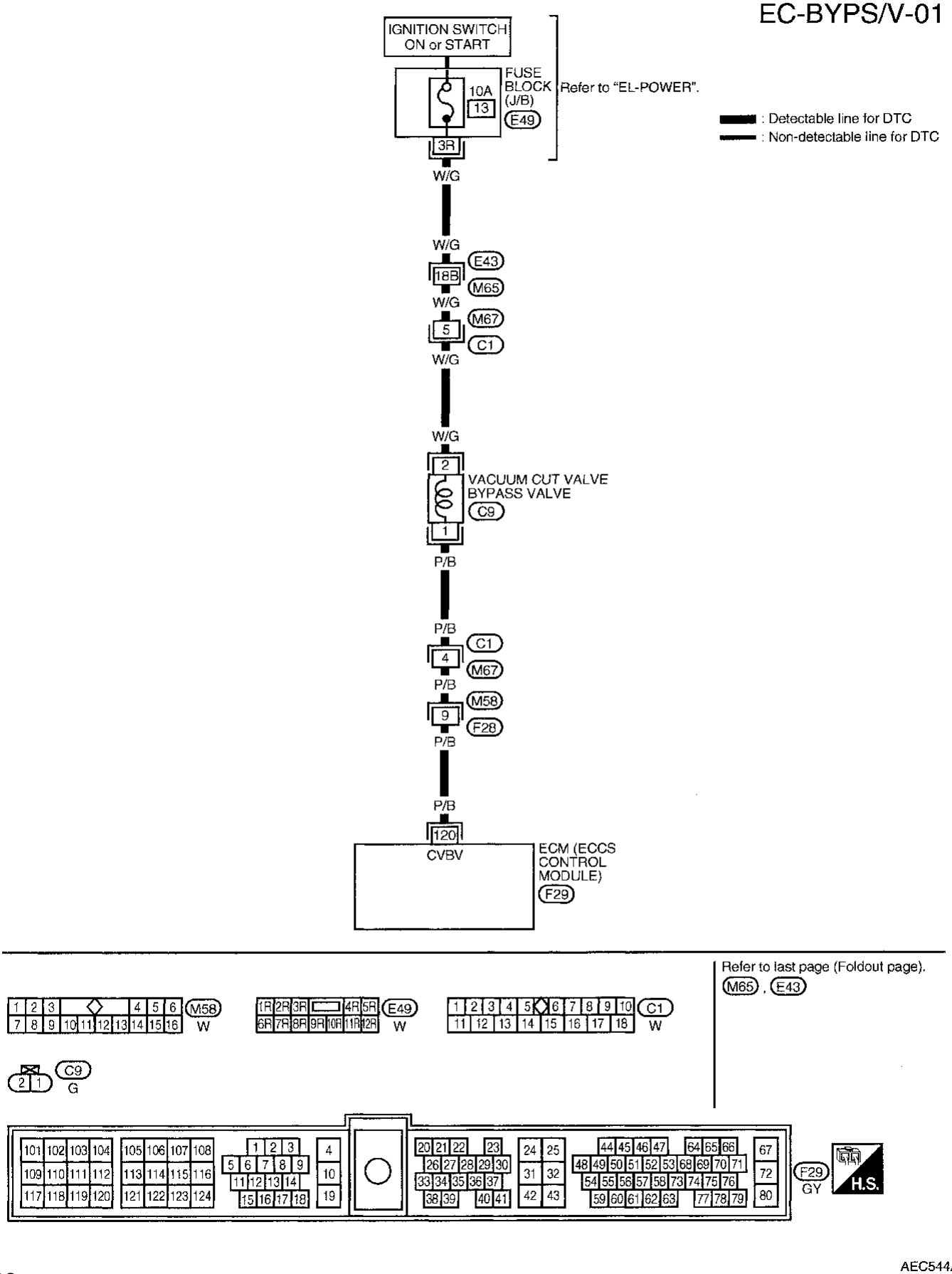

AEC544A

Simpo PDF Merge and Split Unregistered Version - http://www.simpopdf.com

Vacuum Cut Valve Bypass Valve (Circuit) (Cont'd)

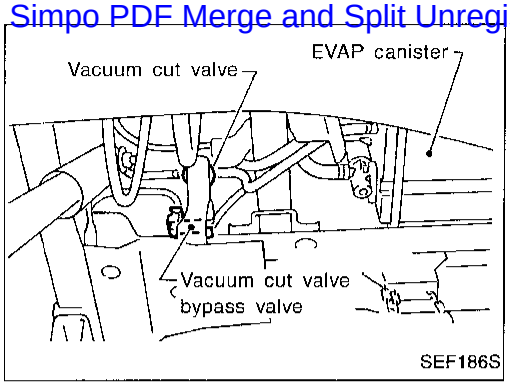

A

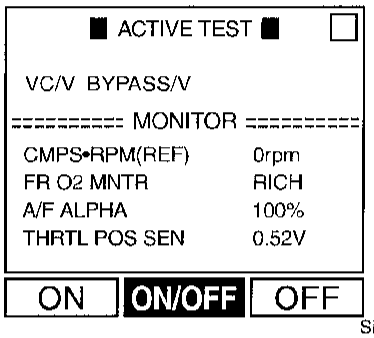

B

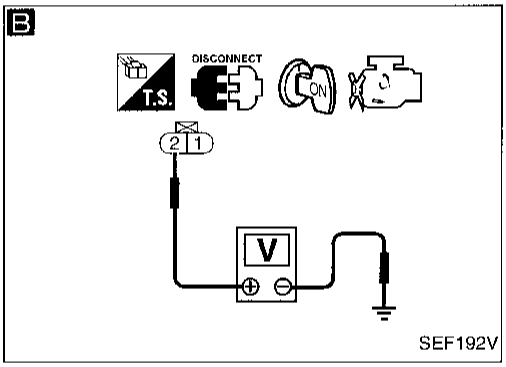

C

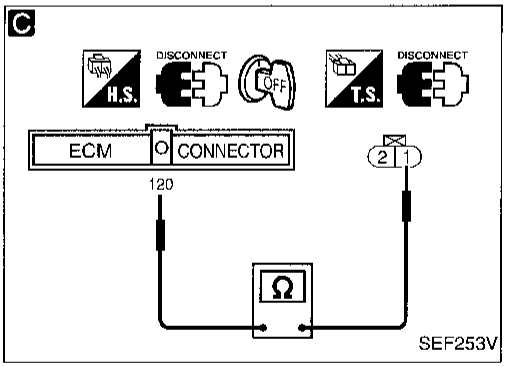

DIAGNOSTIC PROCEDURE

INSPECTION START

With CONSULT

Without CONSULT
Go to CHECK POWER SUPPLY B.

A

CHECK VACUUM CUT VALVE BYPASS VALVE CIRCUIT.
1. Turn ignition switch "ON".
2. Perform "VC/V BYPASS/V" in "ACTIVE TEST" mode.
3. Make sure that clicking sound is heard from the vacuum cut bypass valve.

OK → Go to "CHECK COMPONENT" after procedure C.

NG

B

CHECK POWER SUPPLY.
1. Turn ignition switch "OFF".
2. Disconnect vacuum cut valve bypass valve harness connector.
3. Turn ignition switch "ON".
4. Check voltage between terminal (2) and ground with CONSULT or tester.
Voltage: Battery voltage

NG → Check the following.
- Harness connectors (E43), (M65)
- Harness connectors (M67), (C1)
- 10A fuse
- Harness for open or short between vacuum cut valve bypass valve and 10A fuse

If NG, repair harness or connector.

OK

C

CHECK OUTPUT SIGNAL CIRCUIT.
1. Turn ignition switch "OFF".
2. Disconnect ECM harness connector.
3. Check harness continuity between ECM terminal (120) and terminal (1).
Continuity should exist.
If OK, check harness for short to ground and short to power.

NG → Check the following.
- Harness connectors (M67), (C1)
- Harness connectors (M58), (F28)
- Harness for open or short between vacuum cut valve bypass valve and ECM

If NG, repair open circuit or short to ground or short to power in harness or connectors.

OK

CHECK COMPONENT
(Vacuum cut valve bypass valve).
Refer to "COMPONENT INSPECTION" on next page.

NG → Replace vacuum cut valve bypass valve.

OK

Perform "TROUBLE DIAGNOSIS FOR INTERMITTENT INCIDENT", EC-93.

INSPECTION END

Simpo PDF Merge and Split Unregistered Version - http://www.simpopdf.com

Vacuum Cut Valve Bypass Valve (Circuit) (Cont'd)

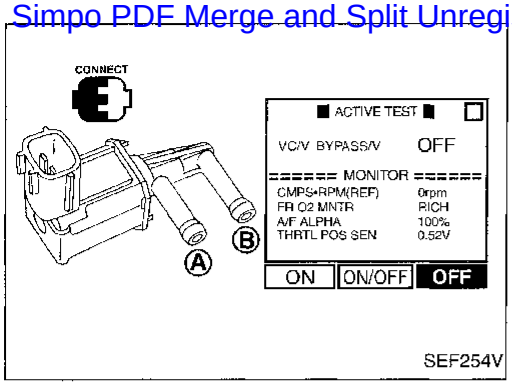

SEF254V

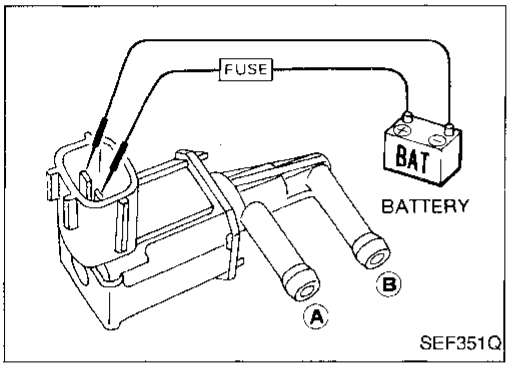

SEF351Q

COMPONENT INSPECTION

Vacuum cut valve bypass valve

Check air passage continuity.

Perform "VC/V BYPASS/V" in "ACTIVE TEST" mode.

Condition VC/V BYPASS/V	Air passage continuity between Ⓐ and Ⓑ
ON	Yes
OFF	No

OR

Condition	Air passage continuity between Ⓐ and Ⓑ
12V direct current supply between terminals	Yes
No supply	No

If NG or operation takes more than 1 second, replace vacuum cut valve bypass valve.

Simpo PDF Merge and Split Unregistered Version - http://www.simpopdf.com

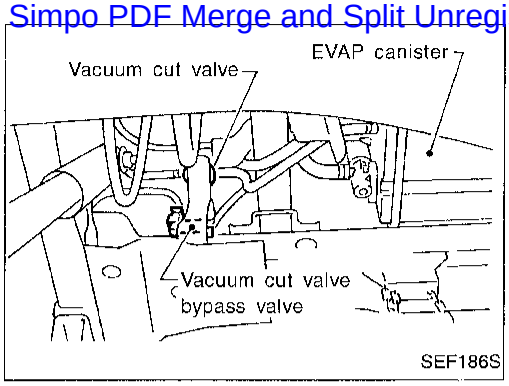

Vacuum Cut Valve Bypass Valve

COMPONENT DESCRIPTION

The vacuum cut valve and vacuum cut valve bypass valve are installed in parallel on the EVAP purge line between the fuel tank and the EVAP canister.

The vacuum cut valve prevents the intake manifold vacuum from being applied to the fuel tank.

The vacuum cut valve bypass valve is a solenoid type valve and generally remains closed. It opens only for on board diagnosis.

The vacuum cut valve bypass valve responds to signals from the ECM. When the ECM sends an ON (ground) signal, the valve is opened. The vacuum cut valve is then bypassed to apply intake manifold vacuum to the fuel tank.

EVAPORATIVE EMISSION SYSTEM DIAGRAM

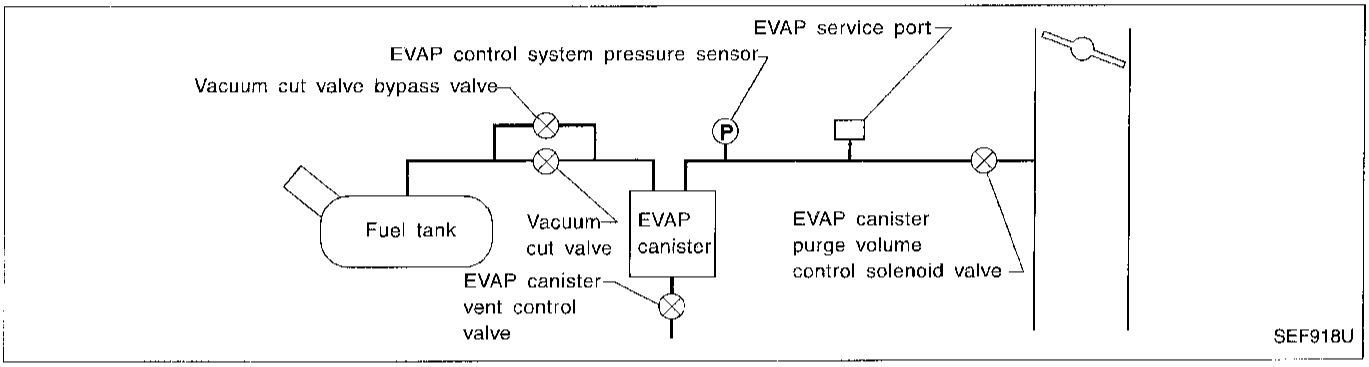

CONSULT REFERENCE VALUE IN DATA MONITOR MODE

Specification data are reference values.

MONITOR ITEM	CONDITION	SPECIFICATION
VC/V BYPASS/V	● Ignition switch: ON	OFF

ECM TERMINALS AND REFERENCE VALUE

Specification data are reference values and are measured between each terminal and ㉜ (ECM ground).

TERMINAL NO.	WIRE COLOR	ITEM	CONDITION	DATA (DC Voltage)
120	P/B	Vacuum cut valve bypass valve	Ignition switch "ON"	BATTERY VOLTAGE (11 - 14V)

ON BOARD DIAGNOSIS LOGIC

Diagnostic Trouble Code No.	Malfunction is detected when	Check Items (Possible Cause)
P1491 0311	● Vacuum cut valve bypass valve does not operate properly.	● Vacuum cut valve bypass valve ● Vacuum cut valve ● Bypass hoses for clogging ● EVAP control system pressure sensor ● EVAP canister vent control valve ● Hose between fuel tank and vacuum cut valve clogged ● Hose between vacuum cut valve and EVAP canister clogged ● EVAP canister

Simpo PDF Merge and Split Unregistered Version - http://www.simpopdf.com

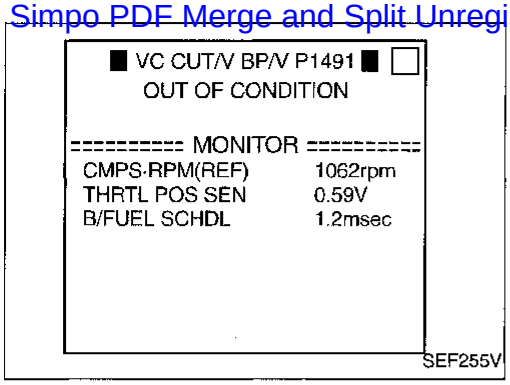

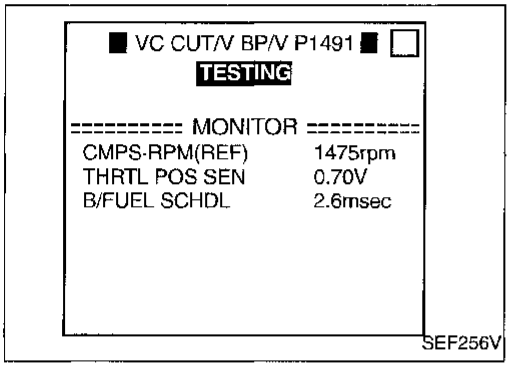

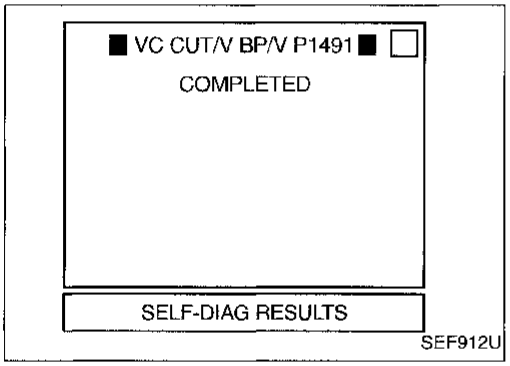

Vacuum Cut Valve Bypass Valve (Cont'd)

DIAGNOSTIC TROUBLE CODE CONFIRMATION PROCEDURE

CAUTION:
Always drive vehicle at a safe speed.

NOTE:
If "DIAGNOSTIC TROUBLE CODE CONFIRMATION PROCEDURE" has been previously conducted, always turn ignition switch "OFF" and wait at least 5 seconds before conducting the next test.

TESTING CONDITION:

- **Always perform test at a temperature of 5 to 30°C (41 to 86°F).**
- **This test may be conducted with the drive wheels lifted in the shop or by driving the vehicle. If a road test is expected to be easier, it is unnecessary to lift the vehicle.**

1) Turn ignition switch "ON".
2) Start engine and warm it up to normal operating temperature.
3) Turn ignition switch "OFF" and wait at least 5 seconds.
4) Start engine and let it idle for at least 1 minute.
5) Select "VC CUT/V BP/V P1491" of "EVAPORATIVE SYSTEM" in "DTC WORK SUPPORT" mode with CONSULT.
6) Touch "START".
7) When the following conditions are met, "TESTING" will be displayed on the CONSULT screen. Maintain the conditions continuously until "TESTING" changes to "COMPLETED". (It will take at least 30 seconds.)
   CMPS·RPM (REF): 1,000 - 2,700 rpm (A/T)
   1,000 - 3,200 rpm (M/T)
   Selector lever: Suitable position
   Vehicle speed: 36 - 100 km/h (22 - 62 MPH)
   B/FUEL SCHDL: 1.2 - 3.4 ms
   If "TESTING" is not displayed after 5 minutes, retry from step 3).
8) Make sure that "OK" is displayed after touching "SELF-DIAG RESULTS". If "NG" is displayed, refer to "DIAGNOSTIC PROCEDURE", EC-386.

Vacuum Cut Valve Bypass Valve (Cont'd)

Simpo PDF Merge and Split Unregistered Version - http://www.simpopdf.com

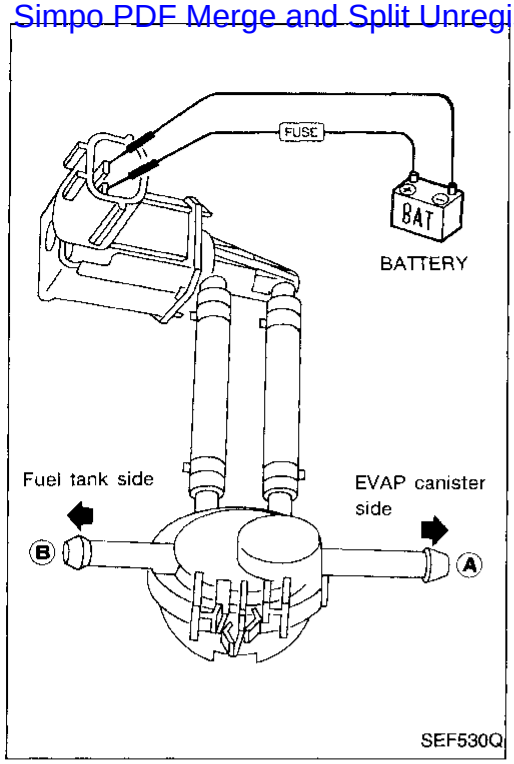

OR

OVERALL FUNCTION CHECK

1) Remove vacuum cut valve and vacuum cut valve bypass valve as an assembly.
2) Apply vacuum to port Ⓐ and check that there is no suction from port Ⓑ.
3) Apply vacuum to port Ⓑ and check that there is suction from port Ⓐ.
4) Blow air in port Ⓑ and check that there is a resistance to flow out of port Ⓐ.
5) Supply battery voltage to the terminal.
6) Blow air in port Ⓐ and check that air flows freely out of port Ⓑ.
7) Blow air in port Ⓑ and check that air flows freely out of port Ⓐ.

Vacuum Cut Valve Bypass Valve (Cont'd)

Simpo PDF Merge and Split Unregistered Version - http://www.simpopdf.com

DIAGNOSTIC PROCEDURE

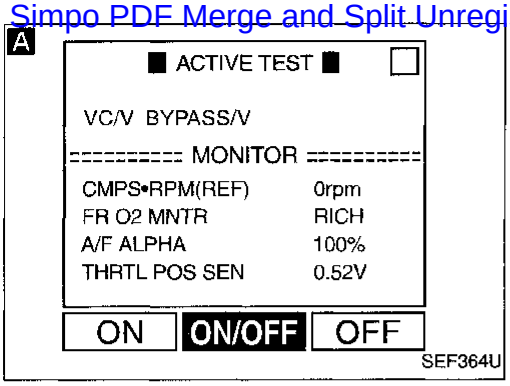

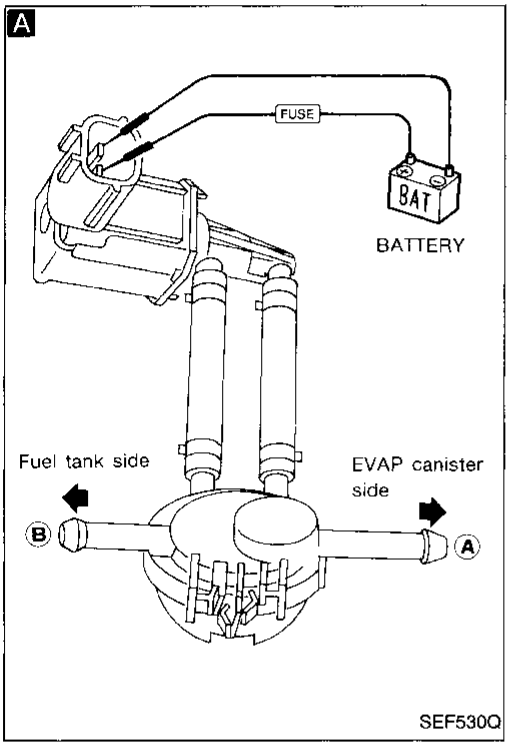

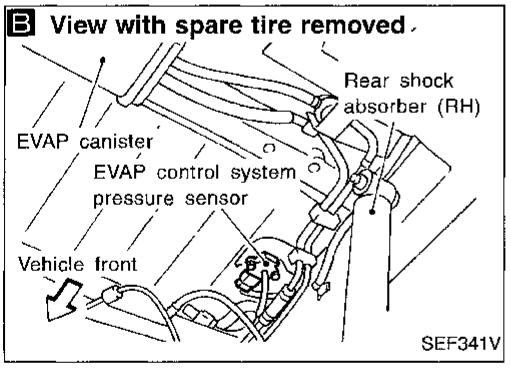

INSPECTION START

A

CHECK COMPONENT.
1. Remove vacuum cut valve and vacuum cut valve bypass valve as an assembly.
2. Apply vacuum to port (A) and check that there is no suction from port (B).
3. Apply vacuum to port (B) and check that there is suction from port (A).
4. Blow air in port (B) and check that there is a resistance to flow out of port (A).
5. Turn ignition switch "ON" and select "VC/V BYPASS/V" in "ACTIVE TEST" mode with CONSULT, and touch "ON".

OR

5. Supply battery voltage to the terminal.
6. Blow air in port (A) and check that air flows freely out of port (B).
7. Blow air in port (B) and check that air flows freely out of port (A).

OK → Check the following.
- EVAP purge line between EVAP canister and fuel tank for clogging or disconnection
- EVAP canister, refer to EC-20.
- EVAP purge port of fuel tank for clogging

If NG, repair or replace.

OK → Go to B "CHECK COMPONENT (EVAP control system pressure sensor)" below.

NG

Check bypass hoses for clogging. NG → Repair or replace hoses.

OK

B

CHECK COMPONENT
(Vacuum cut valve, vacuum cut valve bypass valve).
Refer to "COMPONENT INSPECTION" on next page.

NG → Replace malfunctioning parts.

OK

B

CHECK COMPONENT
(EVAP control system pressure sensor).
1. Check for disconnection of hose connected to the sensor.
2. Check sensor harness connector for water.
   Water should not exist.
   If OK, go to the following step.
3. Check EVAP control system pressure sensor.

Refer to "COMPONENT INSPECTION", EC-365.

NG → Repair or replace harness, connectors and/or replace EVAP control system pressure sensor.

OK

CHECK COMPONENT
(EVAP canister vent control valve).
Refer to "COMPONENT INSPECTION", EC-377.

NG → Repair or replace EVAP canister vent control valve.

OK

INSPECTION END

Simpo PDF Merge and Split Unregistered Version - http://www.simpopdf.com

Vacuum Cut Valve Bypass Valve (Cont'd)

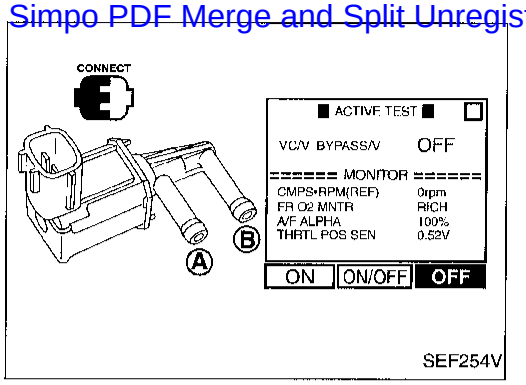

SEF254V

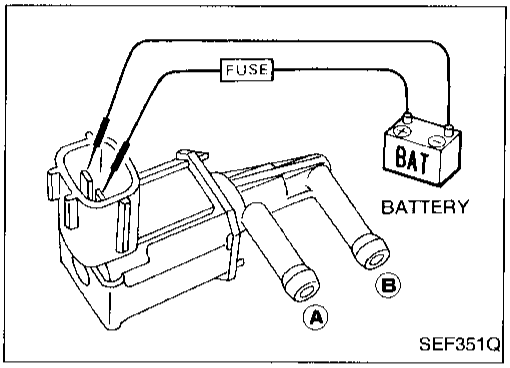

SEF351Q

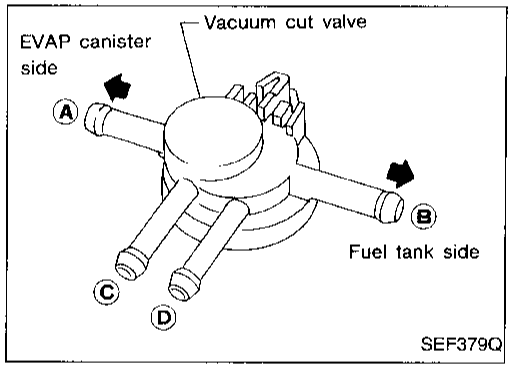

SEF379Q

COMPONENT INSPECTION

Vacuum cut valve bypass valve

Check air passage continuity.

Perform "VC/V BYPASS/V" in "ACTIVE TEST" mode.

Condition VC/V BYPASS/V	Air passage continuity between Ⓐ and Ⓑ
ON	Yes
OFF	No

OR

Condition	Air passage continuity between Ⓐ and Ⓑ
12V direct current supply between terminals	Yes
No supply	No

If NG or operation takes more than 1 second, replace vacuum cut valve bypass valve.

Vacuum cut valve

Check vacuum cut valve as follows:

1. Plug port Ⓒ and Ⓓ with fingers.
2. Apply vacuum to port Ⓐ and check that there is no suction from port Ⓑ.
3. Apply vacuum to port Ⓑ and check that there is suction from port Ⓐ.
4. Blow air in port Ⓑ and check that there is a resistance to flow out of port Ⓐ.
5. Open port Ⓒ and Ⓓ.
6. Blow air in port Ⓐ check that air flows freely out of port Ⓒ.
7. Blow air in port Ⓑ check that air flows freely out of port Ⓓ.

Simpo PDF Merge and Split Unregistered Version - http://www.simpopdf.com

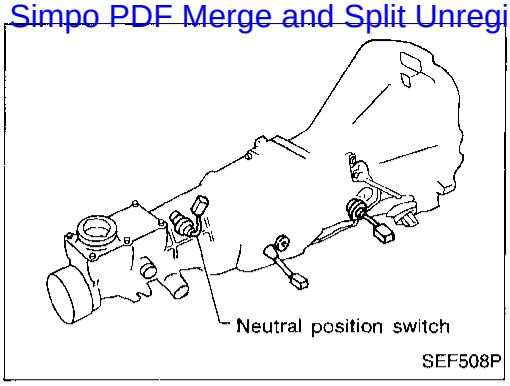

Park/Neutral Position Switch

COMPONENT DESCRIPTION

When the gear position is "P" (A/T models only) or "N", park/neutral position switch is "ON".
ECM detects the park/neutral position when continuity with ground exists.

CONSULT REFERENCE VALUE IN DATA MONITOR MODE

Specification data are reference values.

MONITOR ITEM	CONDITION		SPECIFICATION
P/N POSI SW	● Ignition switch: ON	Shift lever: "P" or "N"	ON
		Except above	OFF

ECM TERMINALS AND REFERENCE VALUE

Specification data are reference values and are measured between each terminal and ㉜ (ECM ground).

TERMINAL NO.	WIRE COLOR	ITEM	CONDITION	DATA (DC Voltage)
22	L/B	Neutral position switch (M/T models) Inhibitor switch (A/T models)	Ignition switch "ON" └ Gear position is "N" or "P".	Approximately 0V
			Ignition switch "ON" └ Except the above gear position	Approximately 5V

ON BOARD DIAGNOSIS LOGIC

Diagnostic Trouble Code No.	Malfunction is detected when	Check Items (Possible Cause)
P1706 1003	● The signal of the park/neutral position switch is not changed in the process of engine starting and driving.	● Harness or connectors (The neutral position switch or inhibitor switch circuit is open or shorted.) ● Inhibitor switch (A/T models) ● Neutral position switch (M/T models)

Park/Neutral Position Switch (Cont'd)

Simpo PDF Merge and Split Unregistered Version - http://www.simpopdf.com

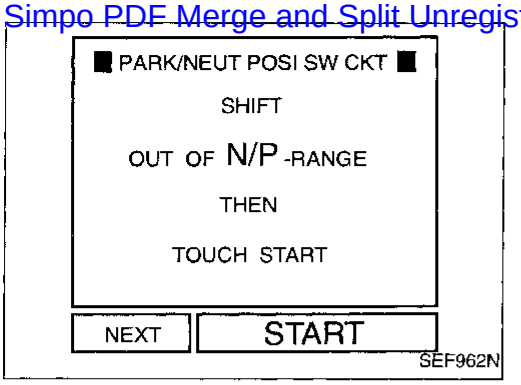

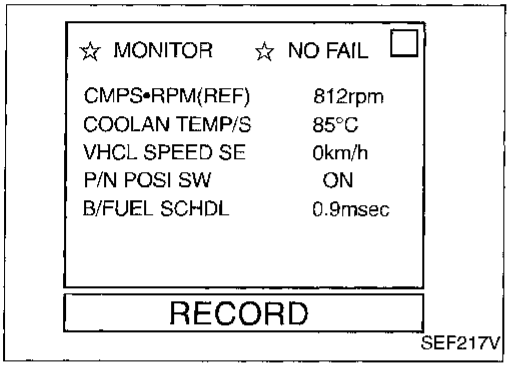

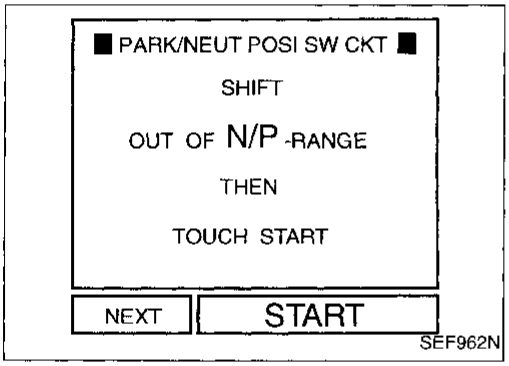

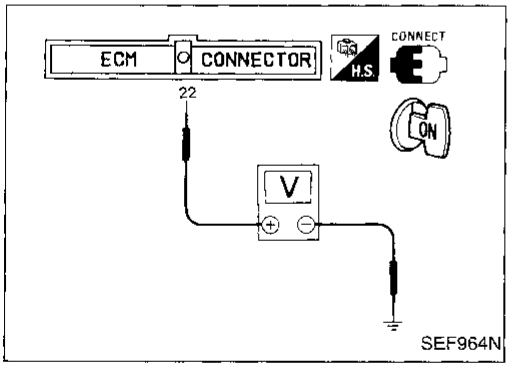

DIAGNOSTIC TROUBLE CODE CONFIRMATION PROCEDURE

CAUTION:
Always drive vehicle at a safe speed.

NOTE:
If "DIAGNOSTIC TROUBLE CODE CONFIRMATION PROCEDURE" has been previously conducted, always turn ignition switch "OFF" and wait at least 5 seconds before conducting the next test.

1) Turn ignition switch "ON".
2) Perform "PARK/NEUT POSI SW CKT" in "FUNCTION TEST" mode with CONSULT.
2) Select "P/N POSI SW" in "DATA MONITOR" mode with CONSULT. Then check the "P/N POSI SW" signal under the following conditions.

Position (Selector lever)	Known good signal
"N" and "P" (A/T only) position	ON
Except the above position	OFF

If NG, go to "DIAGNOSTIC PROCEDURE", EC-391.
If OK, go to following step.

3) Select "DATA MONITOR" mode with CONSULT.
4) Start engine and warm it up to normal operating temperature.
5) Maintain the following conditions for at least 60 consecutive seconds.
   CMPS·RPM (REF): 1,600 - 2,700 rpm (A/T)
   1,800 - 3,200 rpm (M/T)
   COOLAN TEMP/S: More than 70°C (158°F)
   B/FUEL SCHDL: 1 - 4.8 ms
   VHCL SPEED SE: 70 - 100 km/h (43 - 62 MPH)
   Selector lever: Suitable position

OR

OVERALL FUNCTION CHECK

Use this procedure to check the overall function of the park/neutral position switch circuit. During this check, a 1st trip DTC might not be confirmed.

1) Turn ignition switch "ON".
2) Check voltage between ECM terminal ㉒ and body ground under the following conditions.

Condition (Gear position)	Voltage (V) (Known good data)
"P" (A/T only) and "N" position	Approx. 0
Except the above position	Approx. 5

Simpo PDF Merge and Split Unregistered Version - http://www.simpopdf.com

EC-PNP/SW-01

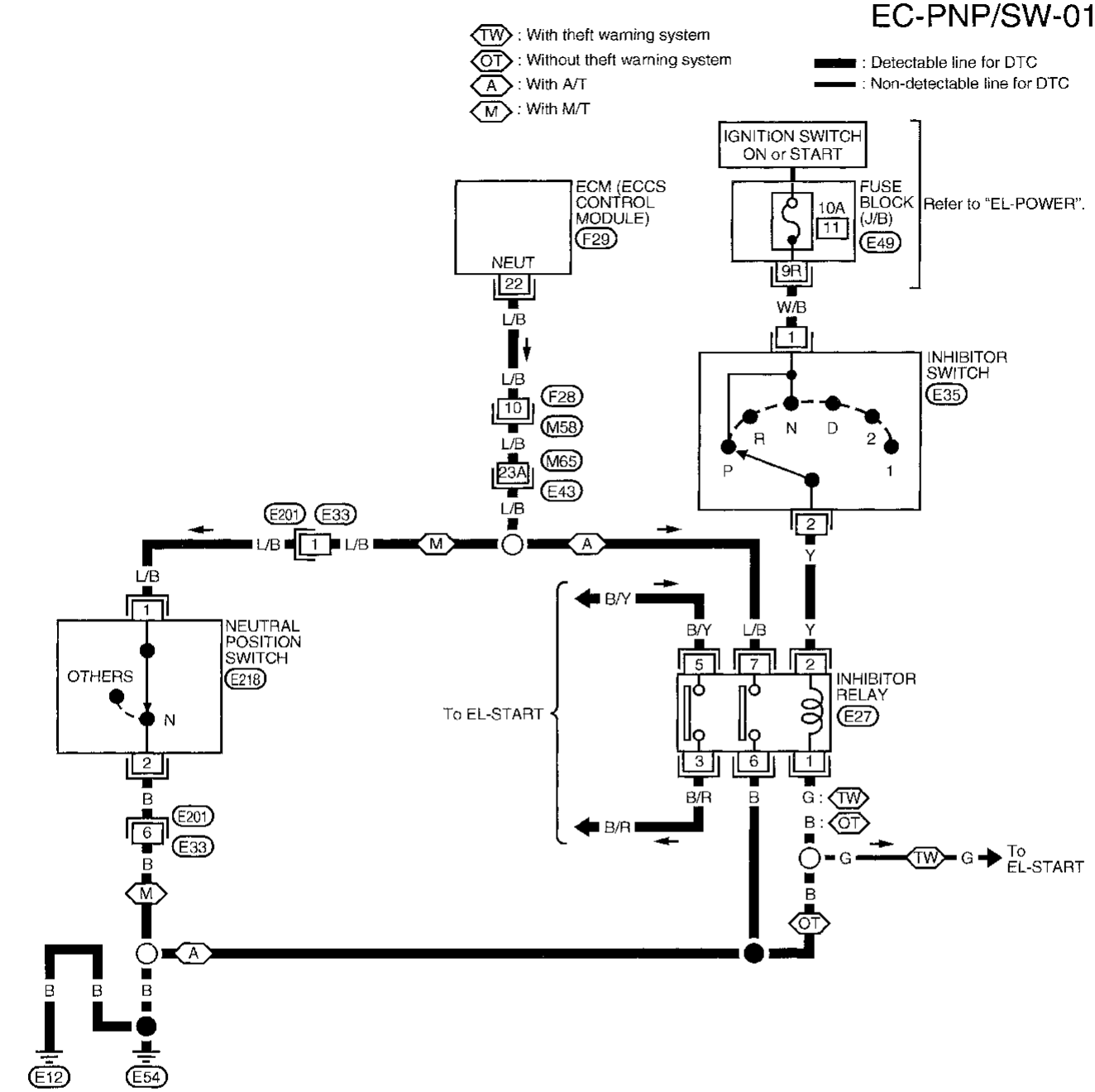

Refer to last page (Foldout page).
M65 , E43

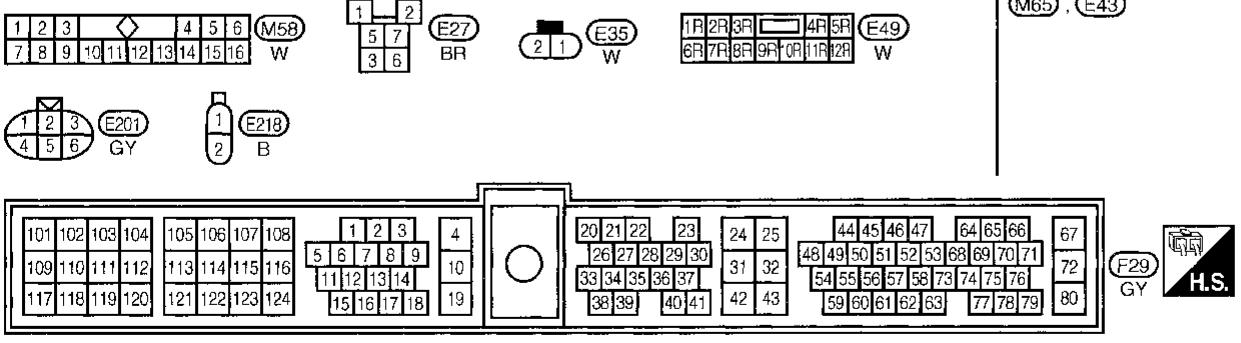

AEC539A

Park/Neutral Position Switch (Cont'd)

Simpo PDF Merge and Split Unregistered Version - http://www.simpopdf.com

DIAGNOSTIC PROCEDURE

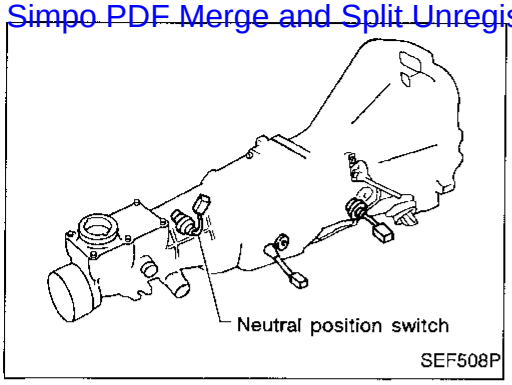

Neutral position switch (M/T models)

INSPECTION START

A

CHECK GROUND CIRCUIT.
1. Turn ignition switch "OFF".
2. Disconnect neutral position switch harness connector.
3. Check harness continuity between terminal (2) and body ground.
Continuity should exist.
If OK, check harness for short to power.

NG → Check the following.
- Harness connectors (E33), (E201)
- Harness for open or short between neutral position switch and body ground

If NG, repair open circuit or short to ground or short to power in harness or connectors.

OK

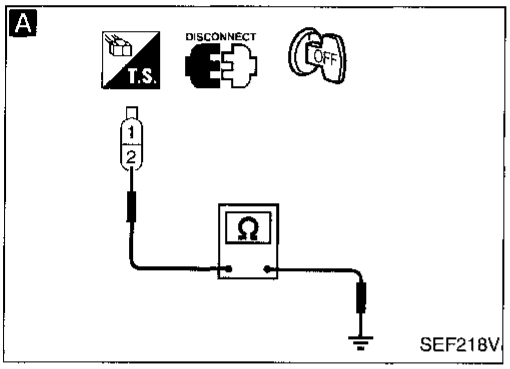

B

CHECK INPUT SIGNAL CIRCUIT.
1. Disconnect ECM harness connector.
2. Check harness continuity between ECM terminal (22) and terminal (1).
Continuity should exist.
If OK, check harness for short to ground and short to power.

NG → Check the following.
- Harness connectors (F28), (M58)
- Harness connectors (M65), (E43)
- Harness connectors (E33), (E201)
- Harness for open or short between ECM and neutral position switch

If NG, repair open circuit or short to ground or short to power in harness or connectors.

OK

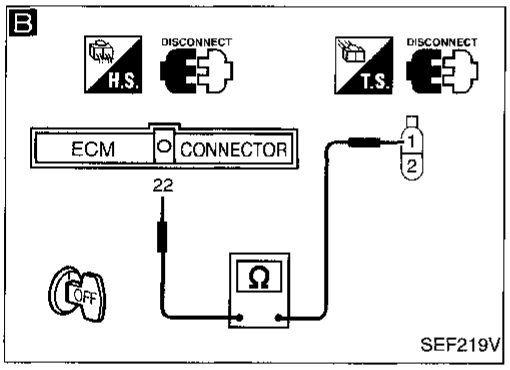

CHECK COMPONENT
(Neutral position switch).
Refer to MT section

NG → Replace neutral position switch.

OK

Perform "TROUBLE DIAGNOSIS FOR INTERMITTENT INCIDENT", EC-93.

INSPECTION END

Park/Neutral Position Switch (Cont'd)

Simpo PDF Merge and Split Unregistered Version - http://www.simpopdf.com

Inhibitor switch (A/T models)

INSPECTION START

A

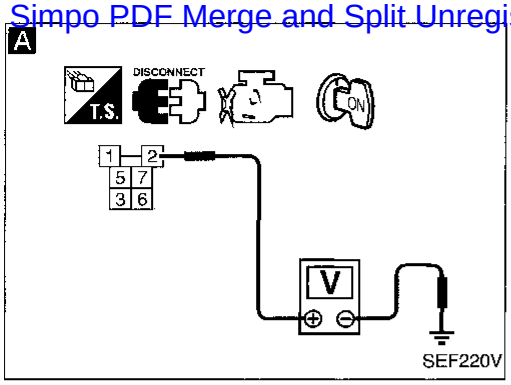

CHECK POWER SUPPLY.
1. Turn ignition switch "OFF".
2. Disconnect inhibitor switch harness connector.
3. Turn ignition switch "ON".
4. Check voltage between terminal ② and ground with CONSULT or tester.

Voltage: Battery voltage

NG → Check the following.
- 10A fuse
- Harness for open or short between inhibitor switch and 10A fuse
- Harness for open or short between inhibitor relay and inhibitor switch

If NG, repair harness or connectors.

OK → CHECK COMPONENT (Inhibitor switch).
Refer to AT section.
If NG, replace inhibitor switch.

OK

B

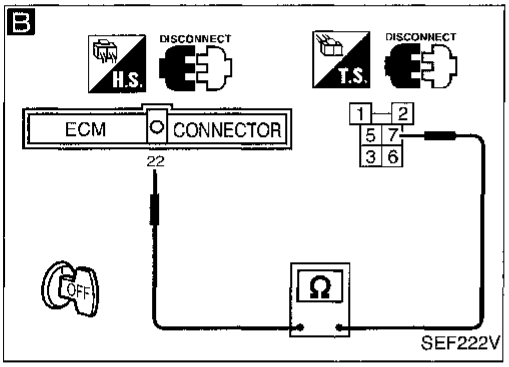

CHECK INPUT SIGNAL CIRCUIT.
1. Disconnect ECM harness connector.
2. Check harness continuity between ECM terminal ㉒ and inhibitor relay terminal ⑦.

Continuity should exist.

If OK, check harness for short to ground and short to power.

NG → Check the following.
- Harness connectors (F28), (M58)
- Harness connectors (M65), (E43)
- Harness for open or short between ECM and inhibitor relay

If NG, repair open circuit or short to ground or short to power in harness or connectors.

OK

C

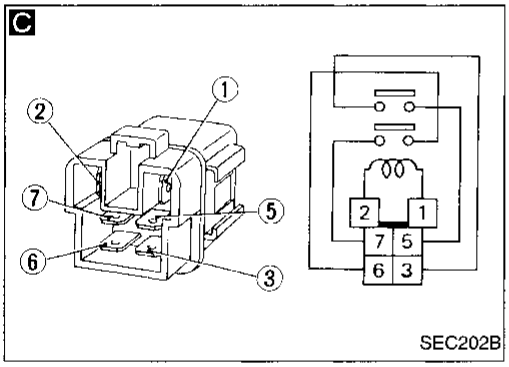

INHIBITOR RELAY
1. Apply 12V direct current between relay terminals ① and ②.
2. Check continuity between relay terminals ③ and ⑤, ⑥ and ⑦.

12V (① - ②) applied:
Continuity should exist.

No voltage applied:
Continuity should not exist.

NG → Replace inhibitor relay.

OK

Perform "TROUBLE DIAGNOSIS FOR INTERMITTENT INCIDENT", EC-93.

INSPECTION END

Simpo PDF Merge and Split Unregistered Version - http://www.simpopdf.com

Torque Converter Clutch Solenoid Valve

SYSTEM DESCRIPTION

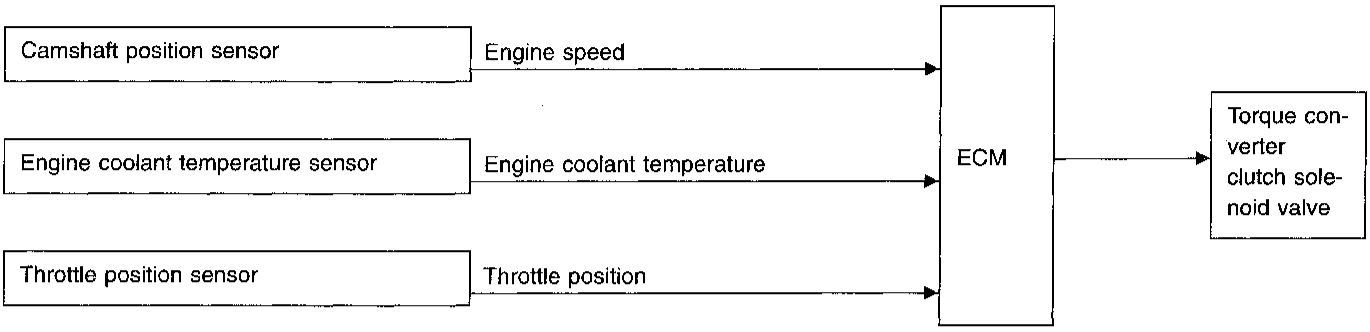

The ECM controls torque converter clutch solenoid valve to cancel the lock-up condition of A/T. When the solenoid valve is **turned on**, lock-up is **cancelled**. When the solenoid valve is turned off, A/T lock-up is operational.

Conditions for lock-up cancel:

Torque converter clutch solenoid valve is turned "ON" when;

- Throttle valve is fully closed (during idling or deceleration)
- Engine coolant temperature is below 40°C (104°F)
- Engine is stopped

Conditions for lock-up operation:

- Under 55 to 63 km/h (34 to 39 MPH) (2/8 throttle on flat road), lock-up does not operate even when the torque converter clutch solenoid valve is "OFF".
- Over 58 to 66 km/h (36 to 41 MPH) (2/8 throttle on flat road), lock-up should operate because the torque converter clutch solenoid valve is "OFF".

To confirm vehicle lock-up, the torque converter clutch solenoid valve must be in operation ("ON" during idle and deceleration, and "OFF" during acceleration) and engine speed should drop.

When the accelerator pedal is depressed (less than 2/8) in lock-up, the engine speed should not change abruptly. If there is a big jump in engine speed, there will be no lock-up.

CONSULT REFERENCE VALUE IN DATA MONITOR MODE

MONITOR ITEM	CONDITION		SPECIFICATION
TCC SOL/V	● Engine: After warming up	Idle	ON
		2,000 rpm	OFF

ECM TERMINALS AND REFERENCE VALUE

Specification data are reference values and are measured between each terminal and ㉜ (ECM ground).

TERMINAL NO.	WIRE COLOR	ITEM	CONDITION	DATA (DC voltage)
115	L/Y	Torque converter clutch solenoid valve (A/T models only)	Engine is running. └ Idle speed	Approximately 1V
			Engine is running. (Warm-up condition) └ Engine speed is 2,000 rpm.	BATTERY VOLTAGE (11 - 14V)

Torque Converter Clutch Solenoid Valve (Cont'd)

Simpo PDF Merge and Split Unregistered Version - http://www.simpopdf.com

ON BOARD DIAGNOSIS LOGIC

Diagnostic Trouble Code No.	Malfunction is detected when	Check Items (Possible Cause)
P1775 0904	● An excessively low voltage from the solenoid is sent to ECM.	● Harness or connectors (The circuit is open or shorted.) ● Torque converter clutch solenoid valve

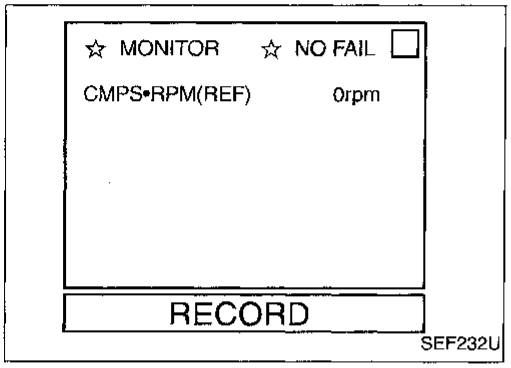

DIAGNOSTIC TROUBLE CODE CONFIRMATION PROCEDURE

NOTE:
If "DIAGNOSTIC TROUBLE CODE CONFIRMATION PROCEDURE" has been previously conducted, always turn ignition switch "OFF" and wait at least 5 seconds before conducting the next test.

1) Turn ignition switch "ON".
2) Select "DATA MONITOR" mode with CONSULT.
3) Wait at least 5 seconds.

OR

1) Turn ignition switch "ON" and wait at least 5 seconds.
2) Select "MODE 7" with GST.

OR

1) Turn ignition switch "ON" and wait at least 5 seconds.
2) Turn ignition switch "OFF", wait at least 5 seconds and then turn "ON".
3) Perform "Diagnostic Test Mode II (Self-diagnostic results)" with ECM.

Torque Converter Clutch Solenoid Valve (Cont'd)

Simpo PDF Merge and Split Unregistered Version - http://www.simpopdf.com

EC-LKUP-01

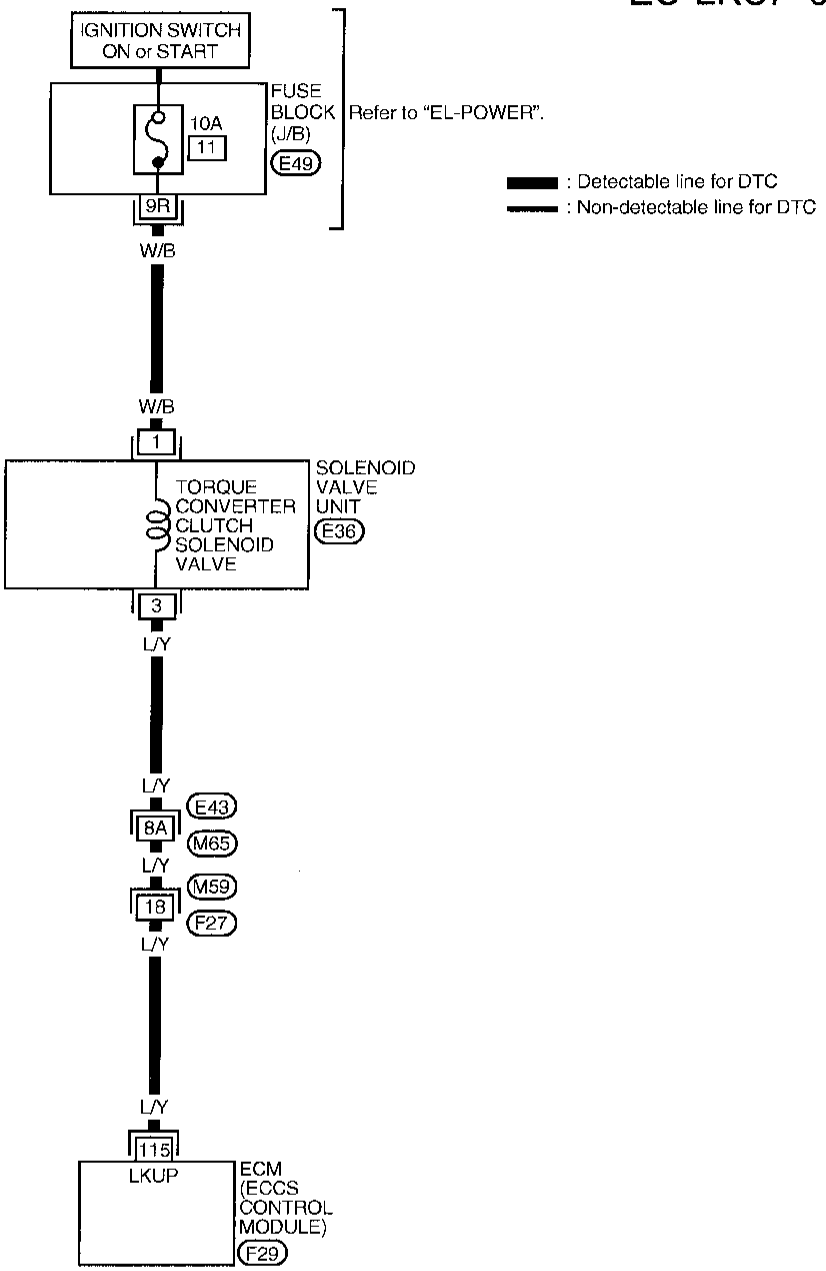

Refer to last page (Foldout page).
(M65), (E43)

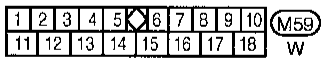

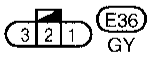



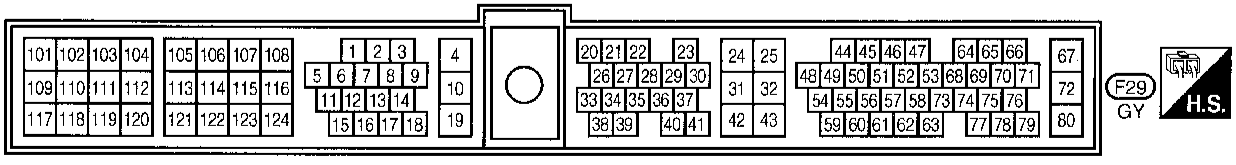

AEC546A

Simpo PDF Merge and Split Unregistered Version - http://www.simpopdf.com

Torque Converter Clutch Solenoid Valve (Cont'd)

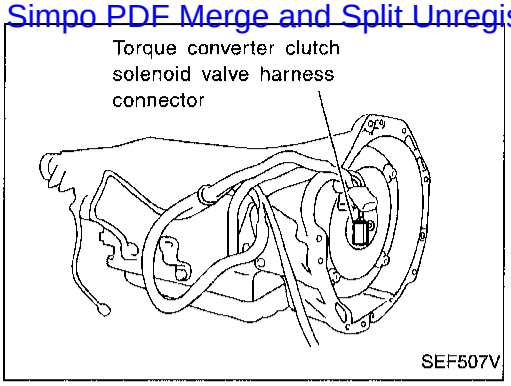

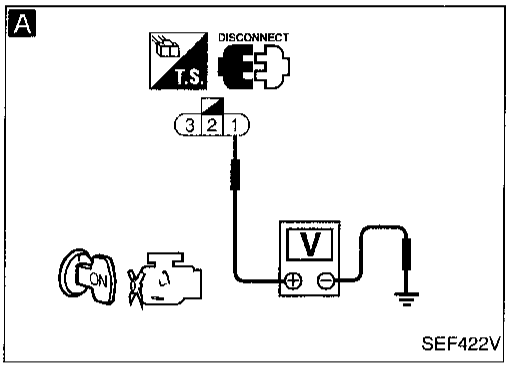

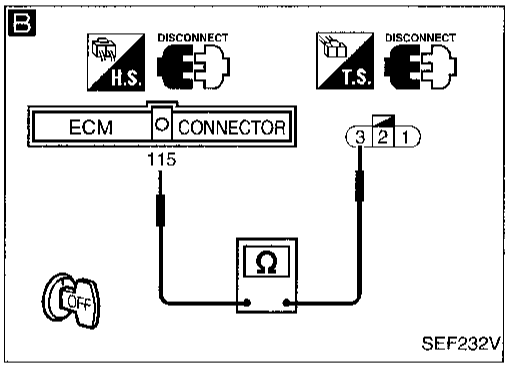

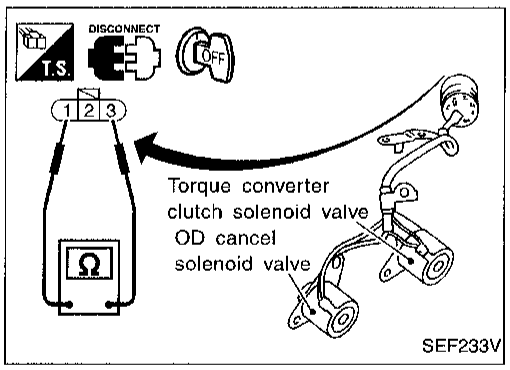

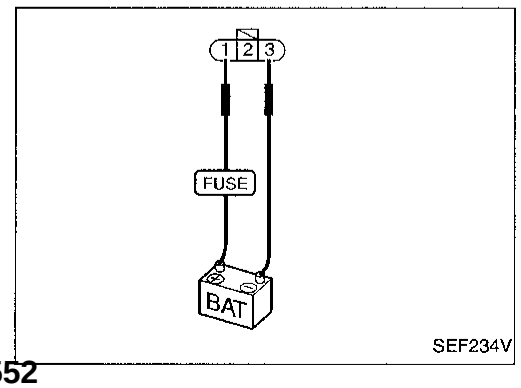

DIAGNOSTIC PROCEDURE

INSPECTION START

A

CHECK POWER SUPPLY.
1. Disconnect torque converter clutch solenoid valve harness connector.
2. Turn ignition switch "ON".
3. Check voltage between terminal ① and ground with CONSULT or tester.
Voltage: Battery voltage

NG → Check the followings.
- 10A fuse
- Harness continuity between torque converter clutch solenoid valve and 10A fuse

If NG, repair harness or connectors.

OK

B

CHECK OUTPUT SIGNAL CIRCUIT.
2. Disconnect ECM harness connector.
3. Check harness continuity between ECM terminal (115) and terminal ③.
Continuity should exist.
If OK, check harness for short.

NG → Check the followings.
- Harness connectors (E43), (M65)
- Harness connectors (M59), (F27)
- Harness continuity between torque converter clutch solenoid valve and ECM

If NG, repair open circuit, short to ground or short to power in harness or connectors.

OK

CHECK COMPONENT
(Torque converter clutch solenoid valve).
Refer to "COMPONENT INSPECTION" on next page.

NG → Replace torque converter clutch solenoid valve.

OK

Perform "TROUBLE DIAGNOSIS FOR INTERMITTENT INCIDENT", EC-93.

INSPECTION END

COMPONENT INSPECTION

Torque converter clutch solenoid valve

1. Check resistance between torque converter clutch solenoid valve terminals ① and ③.
Resistance: Approximately 25Ω [at 25°C (77°F)]
2. Remove torque converter clutch solenoid valve. Refer to "ON-VEHICLE SERVICE" in AT section.
3. Supply the solenoid valve terminals ① and ③ with battery voltage and check the solenoid valve operation.
Torque converter clutch solenoid valve should be operated.
4. If NG, replace torque converter clutch solenoid valve.

Simpo PDF Merge and Split Unregistered Version - http://www.simpopdf.com

Torque Converter Clutch Solenoid Valve

SYSTEM DESCRIPTION

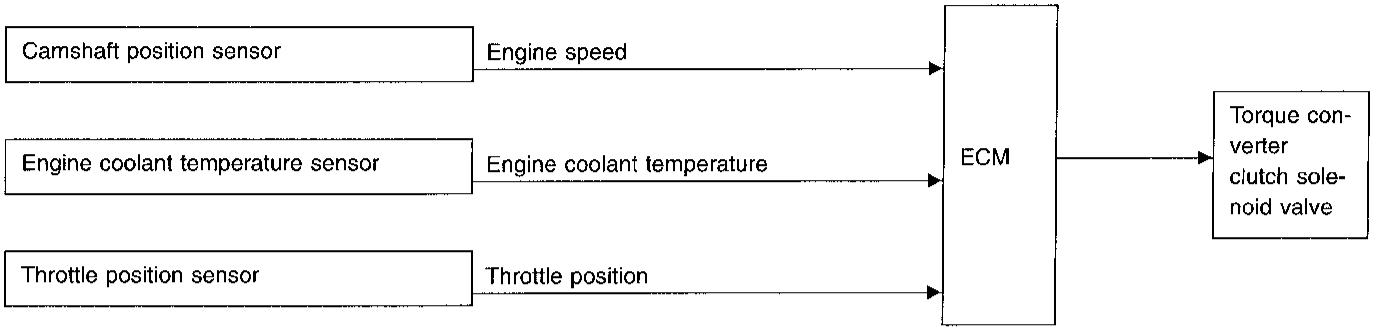

The ECM controls torque converter clutch solenoid valve to cancel the lock-up condition of A/T. When the solenoid valve is **turned on**, lock-up is **cancelled**. When the solenoid valve is turned off, A/T lock-up is operational.

Conditions for lock-up cancel:

Torque converter clutch solenoid valve is turned "ON" when;

- Throttle valve is fully closed (during idling or deceleration)
- Engine coolant temperature is below 40°C (104°F)
- Engine is stopped

Conditions for lock-up operation:

- Under 55 to 63 km/h (34 to 39 MPH) (2/8 throttle on flat road), lock-up does not operate even when the torque converter clutch solenoid valve is "OFF".
- Over 58 to 66 km/h (36 to 41 MPH) (2/8 throttle on flat road), lock-up should operate because the torque converter clutch solenoid valve is "OFF".

To confirm vehicle lock-up, the torque converter clutch solenoid valve must be in operation ("ON" during idle and deceleration, and "OFF" during acceleration) and engine speed should drop.

When the accelerator pedal is depressed (less than 2/8) in lock-up, the engine speed should not change abruptly. If there is a big jump in engine speed, there will be no lock-up.

CONSULT REFERENCE VALUE IN DATA MONITOR MODE

MONITOR ITEM	CONDITION		SPECIFICATION
TCC SOL/V	● Engine: After warming up	Idle	ON
		2,000 rpm	OFF

ECM TERMINALS AND REFERENCE VALUE

Specification data are reference values and are measured between each terminal and ㉜ (ECM ground).

TERMINAL NO.	WIRE COLOR	ITEM	CONDITION	DATA (DC voltage)
115	L/Y	Torque converter clutch solenoid valve (A/T models only)	Engine is running. └ Idle speed	Approximately 1V
			Engine is running. (Warm-up condition) └ Engine speed is 2,000 rpm.	BATTERY VOLTAGE (11 - 14V)

Torque Converter Clutch Solenoid Valve (Cont'd)

Simpo PDF Merge and Split Unregistered Version - http://www.simpopdf.com

ON BOARD DIAGNOSIS LOGIC

Diagnostic Trouble Code No.	Malfunction is detected when	Check Items (Possible Cause)
P1776 0513	● A/T torque converter slip is occurred in lock-up condition.	● Torque converter clutch solenoid valve ● A/T hydraulic control system ● Torque converter

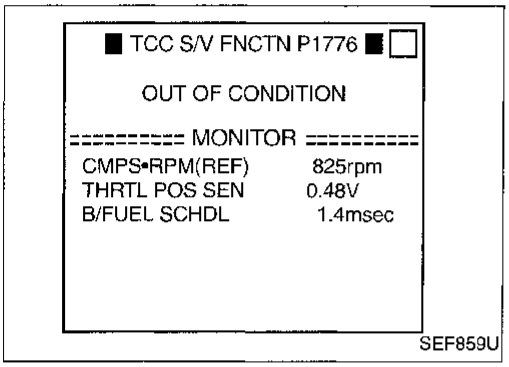

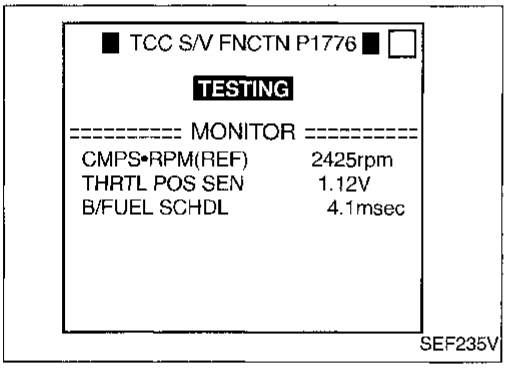

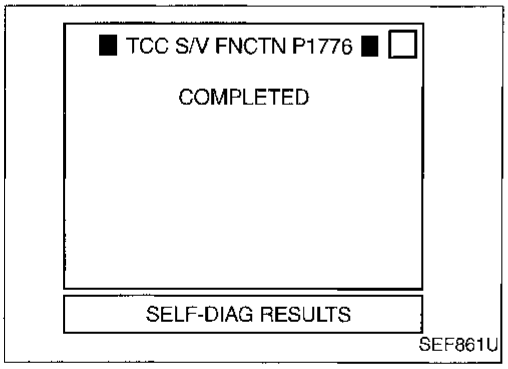

DIAGNOSTIC TROUBLE CODE CONFIRMATION PROCEDURE

CAUTION:
Always drive vehicle at a safe speed.

NOTE:
If "DIAGNOSTIC TROUBLE CODE CONFIRMATION PROCEDURE" has been previously conducted, always turn ignition switch "OFF" and wait at least 5 seconds before conducting the next test.

TESTING CONDITION:
Always perform the test at a temperature of –10°C (14°F) or higher.

1) Start engine and warm it up to normal operating temperature.
2) Turn ignition switch "OFF" and wait at least 5 seconds.
3) Start engine.
4) Select "TCC S/V FNCTN P1776" of "A/T (TCC S/V)" in "DTC WORK SUPPORT" mode with CONSULT.
5) Touch "START".
6) When the following conditions are met, "TESTING" will be displayed on the CONSULT screen. Maintain the conditions continuously until "TESTING" changes to "COMPLETED". (It will take approximately 20 seconds.)
   Selector lever: D (OD "ON")
   Vehicle speed: 76 - 100 km/h (47 - 62 MPH)
   CMPS·RPM (REF): Less than 2,150 rpm (Single cab model)
   Less than 2,300 rpm (King cab model)
   B/FUEL SCHDL: 2.5 - 5 ms
   THRTL POS SEN: Less than 1.3V
   If "TESTING" is not displayed after 5 minutes, retry from step 2).
7) Make sure that "OK" is displayed after touching "SELF-DIAG RESULTS".
   If "NG" is displayed, refer to "DIAGNOSTIC PROCEDURE", EC-400.

OR

1) Start engine and warm it up to normal operating temperature.
2) Perform test drive in "D" position (OD "ON") at least 20 consecutive seconds under the following conditions.

Torque Converter Clutch Solenoid Valve (Cont'd)

Simpo PDF Merge and Split Unregistered Version - http://www.simpopdf.com

Engine speed: Less than 2,150 rpm (Single cab model)
Less than 2,300 rpm (King cab model)
Vehicle speed: 76 - 100 km/h (47 - 62 MPH)

3) Select MODE 7 with GST.

OR

NO TOOLS

1) Start engine and warm it up to normal operating temperature.
2) Perform test drive in "D" position (OD "ON") at least 20 consecutive seconds under the following conditions.
   Engine speed: Less than 2,150 rpm (Single cab model)
   Less than 2,300 rpm (King cab model)
   Vehicle speed: 76 - 100 km/h (47 - 62 MPH)
3) Stop the vehicle, turn ignition switch "OFF", wait at least 5 seconds and then turn "ON".
4) Perform "Diagnostic Test Mode II (Self-diagnostic results)" with ECM.

Simpo PDF Merge and Split Unregistered Version - http://www.simpopdf.com

Torque Converter Clutch Solenoid Valve (Cont'd)

DIAGNOSTIC PROCEDURE

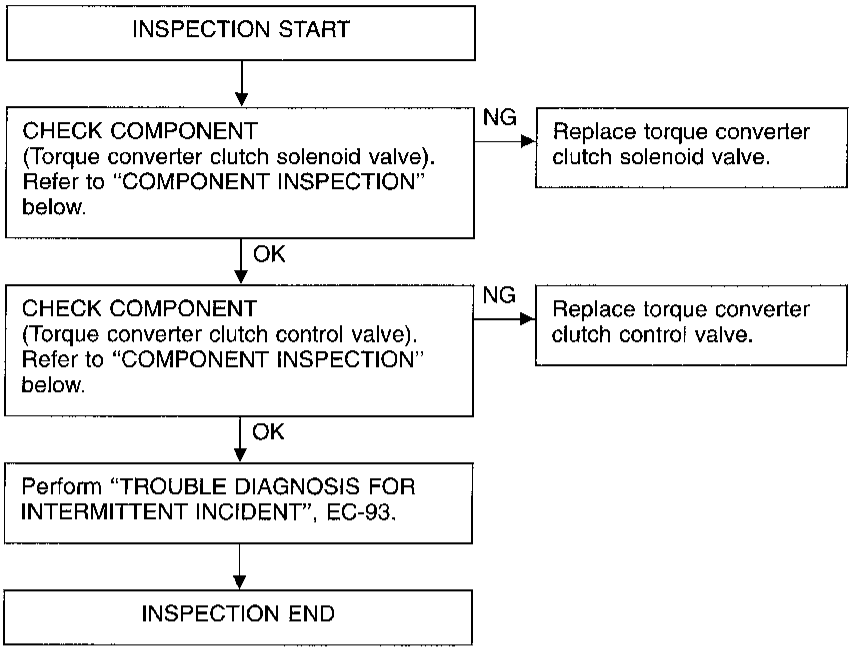

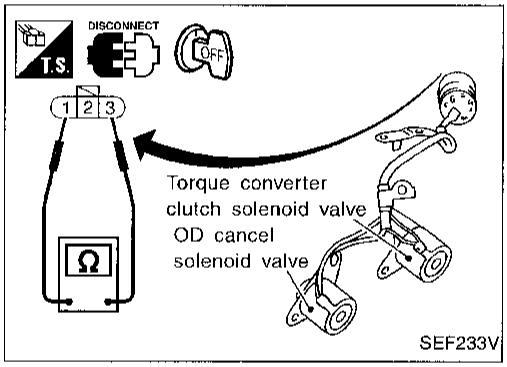

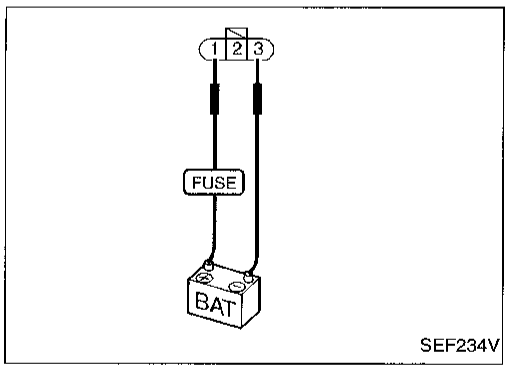

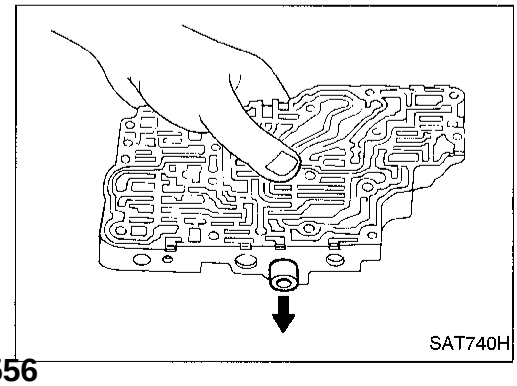

COMPONENT INSPECTION

Torque converter clutch solenoid valve

1. Check resistance between torque converter clutch solenoid valve terminals ① and ③.
   Resistance: Approximately 25Ω [at 25°C (77°F)]
2. Remove torque converter clutch solenoid valve. Refer to "ON-VEHICLE SERVICE" in AT section.
3. Supply the solenoid valve terminals ① and ③ with battery voltage and check the solenoid valve operation.
   Torque converter clutch solenoid valve should be operated.
4. If NG, replace torque converter clutch solenoid valve.

Torque converter clutch control valve

1. Disassemble torque converter clutch control valve assembly. Refer to "REPAIR FOR COMPONENT PARTS" on AT section.
2. Check torque converter clutch control valve.
   - Valve, and sleeve slide along valve bore under their own weight.
   - Valve, and sleeve are free from burrs, dents and scratches.
   - Control valve springs are free from damage, deformation and fatigue.
   - Hydraulic line is free from obstacles.
3. If NG, replace torque converter clutch control valve.

Simpo PDF Merge and Split Unregistered Version - http://www.simpopdf.com

Overheat

ON BOARD DIAGNOSIS LOGIC

If the cooling fan or another component in the cooling system malfunctions, the engine coolant temperature will rise.
When the engine coolant temperature reaches an abnormally high temperature condition, a malfunction is indicated.

Diagnostic trouble code No.	Malfunction is detected when ...	Check Items (Possible Cause)
OVERHEAT 0208	● Engine coolant temperature reaches an abnormally high temperature.	● Harness or connectors (The cooling fan circuit is open or shorted.) ● Cooling fan ● Radiator hose ● Radiator ● Radiator cap ● Water pump ● Thermostat For more information, refer to "MAIN 12 CAUSES OF OVERHEATING", EC-403.

CAUTION:
When a malfunction is indicated, be sure to replace the coolant following the procedure in the MA section ("Changing Engine Coolant", "ENGINE MAINTENANCE"). Also, replace the engine oil.

a. Fill radiator with coolant up to specified level with a filling speed of 2 liters per minute like pouring coolant by kettle. Be sure to use coolant with the proper mixture ratio. Refer to MA section ("Anti-freeze Coolant Mixture Ratio", "RECOMMENDED FLUIDS AND LUBRICANTS").

b. After refilling coolant, run engine to ensure that no water-flow noise is emitted.

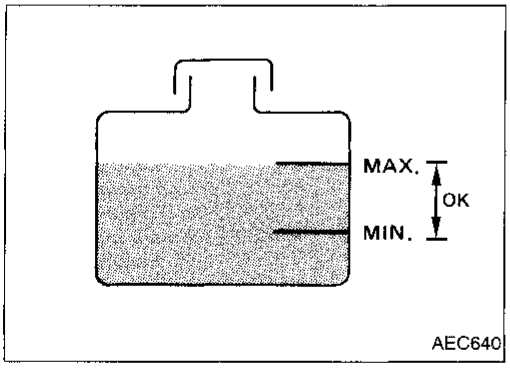

OVERALL FUNCTION CHECK

WARNING:
Never remove the radiator cap when the engine is hot. Serious burns could be caused by high pressure fluid escaping from the radiator.
Wrap a thick cloth around cap. Carefully remove the cap by turning it a quarter turn to allow built-up pressure to escape. Then turn the cap all the way off.

1) Check the coolant level in the reservoir tank and radiator.
Allow engine to cool before checking coolant level.
If the coolant level in the reservoir tank and/or radiator is below the proper range, skip the following steps and go to "DIAGNOSTIC PROCEDURE" on next page.
2) Confirm whether customer filled the coolant or not. If customer filled the coolant, skip the following steps and go to "DIAGNOSTIC PROCEDURE" on next page.

Simpo PDF Merge and Split Unregistered Version - http://www.simpopdf.com

Overheat (Cont'd)

A

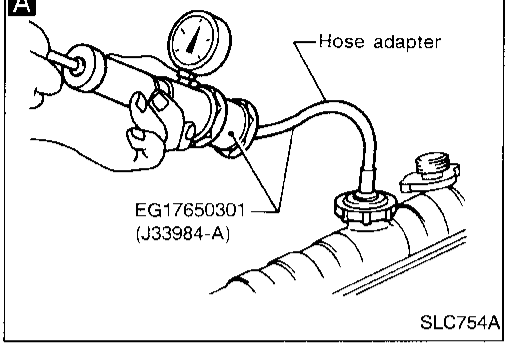

B

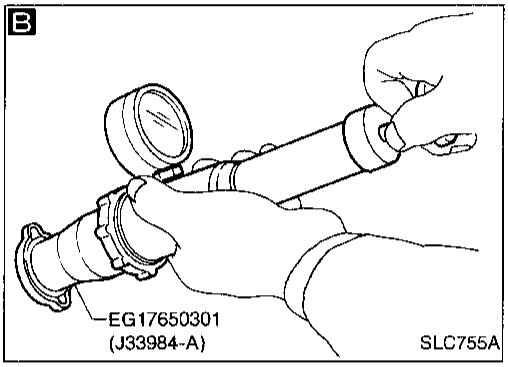

C

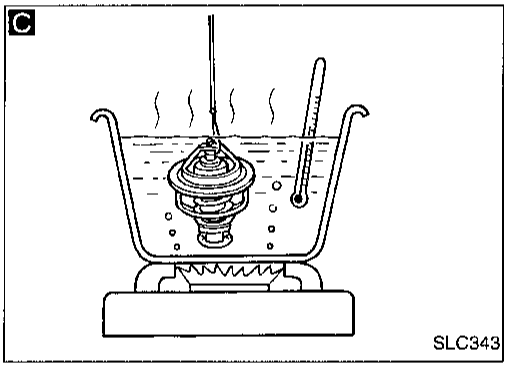

DIAGNOSTIC PROCEDURE

INSPECTION START

A

CHECK COOLING SYSTEM FOR LEAK.
Apply pressure to the cooling system with a tester, and check if the pressure drops.
Testing pressure:
157 kPa (1.6 kg/cm², 23 psi)
Pressure should not drop.
CAUTION:
Higher than the specified pressure may cause radiator damage.

NG → Check the following for leak.
- Hose
- Radiator
- Water pump

Refer to LC section ("Water Pump").

OK

B

CHECK RADIATOR CAP.
Apply pressure to cap with a tester.
Radiator cap relief pressure:
78 - 98 kPa (0.8 - 1.0 kg/cm², 11 - 14 psi)

NG → Replace radiator cap.

OK

C

CHECK THERMOSTAT.
1. Check valve seating condition at normal room temperatures.
   It should seat tightly.
2. Check valve opening temperature and valve lift.
   Valve opening temperature:
   76.5°C (170°F) [standard]
   Valve lift:
   More than 8 mm/90°C
   (0.31 in/194°F)
3. Check if valve is closed at 5°C (9°F) below valve opening temperature.

For details, refer to LC section ("Thermostat").

NG → Replace thermostat

OK

Check engine coolant temperature sensor. Refer to "COMPONENT INSPECTION", EC-125.

NG → Replace engine coolant temperature sensor.

If the cause can not be isolated, go to "MAIN 12 CAUSES OF OVERHEATING" on next page.

INSPECTION END

Perform FINAL CHECK by the following procedure after repair is completed.

1. Warm up engine. Run the vehicle for at least 20 minutes. Pay attention to engine coolant temperature gauge on the instrument panel. If the reading shows an abnormally high temperature, another part may be malfunctioning.
2. Stop vehicle and let engine idle. Check the intake and exhaust systems for leaks by listening for noise or visually inspecting the components.
3. Allow engine to cool and visually check for oil and coolant leaks. Then, perform "OVERALL FUNCTION CHECK".

Overheat (Cont'd)

Simpo PDF Merge and Split Unregistered Version - http://www.simpopdf.com

MAIN 12 CAUSES OF OVERHEATING

Engine	Step	Inspection item	Equipment	Standard	Reference page
OFF	1	● Blocked radiator ● Blocked condenser ● Blocked radiator grille ● Blocked bumper	● Visual	No blocking	—
	2	● Coolant mixture	● Coolant tester	50 - 50% coolant mixture	See "RECOMMENDED FLUIDS AND LUBRICANTS" in MA section.
	3	● Coolant level	● Visual	Coolant up to MAX level in reservoir tank and radiator filler neck	See "Changing Engine Coolant", "ENGINE MAINTENANCE" in MA section.
	4	● Radiator cap	● Pressure tester	78 - 98 kPa (0.8 - 1.0 kg/cm^2, 11 - 14 psi) 59 - 98 kPa (0.6 - 1.0 kg/cm^2, 9 - 14 psi) (Limit)	See "System Check", "ENGINE COOLING SYSTEM" in LC section.
ON*2	5	● Coolant leaks	● Visual	No leaks	See "System Check", "ENGINE COOLING SYSTEM" in LC section.
ON*2	6	● Thermostat	● Touch the upper and lower radiator hoses	Both hoses should be hot	See "Thermostat" and "Radiator", "ENGINE COOLING SYSTEM" in LC section.
ON*1	7	● Cooling fan	● CONSULT	Operating	See "Cooling Fan", "ENGINE COOLING SYSTEM" in LC section.
OFF	8	● Combustion gas leak	● Color checker chemical tester 4 Gas analyzer	Negative	—
ON*3	9	● Coolant temperature gauge	● Visual	Gauge less than 3/4 when driving	—
		● Coolant overflow to reservoir tank	● Visual	No overflow during driving and idling	See "Changing Engine Coolant", "ENGINE MAINTENANCE" in MA section.
OFF*4	10	● Coolant return from reservoir tank to radiator	● Visual	Should be initial level in reservoir tank	See "ENGINE MAINTENANCE" in MA section.
OFF	11	● Cylinder head	● Straight gauge feeler gauge	0.1 mm (0.004 in) Maximum distortion (warping)	See "Inspection", "CYLINDER HEAD" in EM section.
	12	● Cylinder block and pistons	● Visual	No scuffing on cylinder walls or piston	See "Inspection", "CYLINDER BLOCK" in EM section.

*1: Turn the ignition switch ON.
*2: Engine running at 3,000 rpm for 10 minutes.
*3: Drive at 90 km/h (55 MPH) for 30 minutes and then let idle for 10 minutes.
*4: After 60 minutes of cool down time.
For more information, refer to "OVERHEATING CAUSE ANALYSIS" in LC section.

Simpo PDF Merge and Split Unregistered Version - http://www.simpopdf.com

Injector

EC-INJECT-01

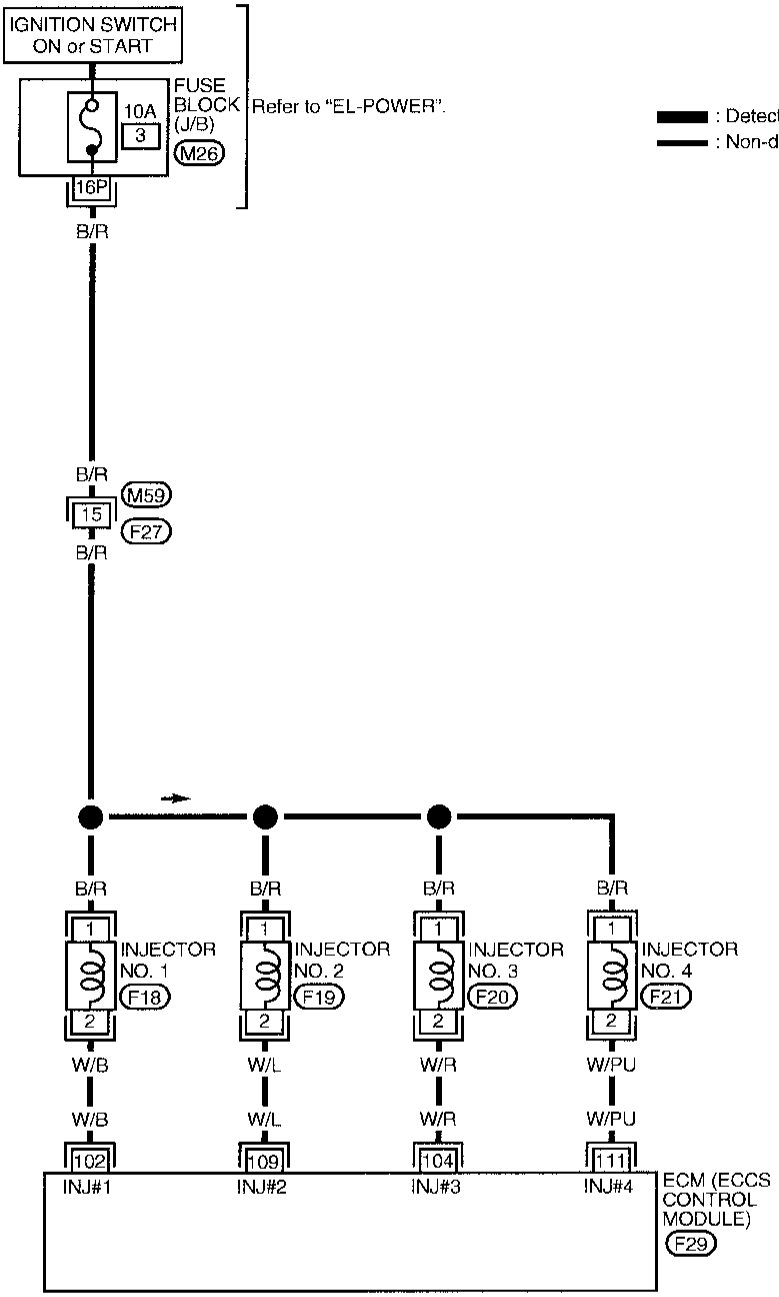

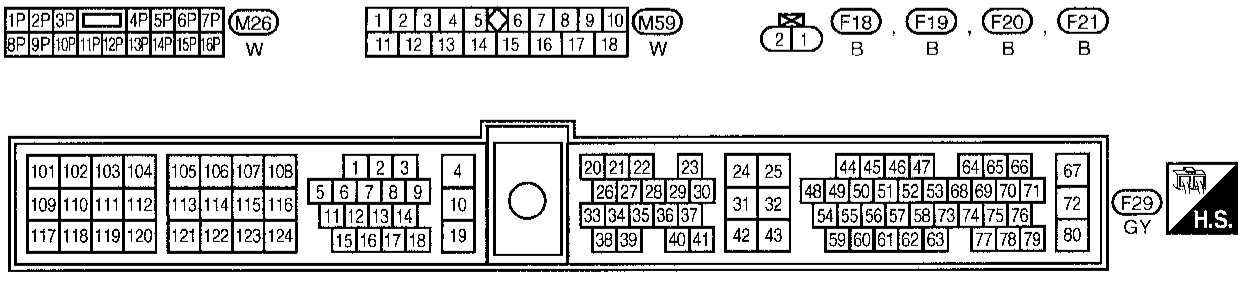

AEC547A

Simpo PDF Merge and Split Unregistered Version - http://www.simpopdf.com

Injector (Cont'd)

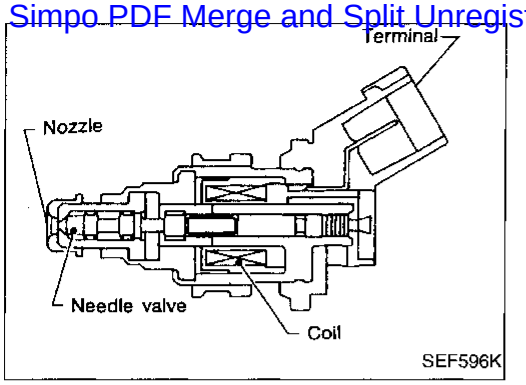

COMPONENT DESCRIPTION

The fuel injector is a small, precise solenoid valve. When the ECM supplies a ground to the injector circuit, the coil in the injector is energized. The energized coil pulls the needle valve back and allows fuel to flow through the injector into the intake manifold. The amount of fuel injected depends upon the injection pulse duration. Pulse duration is the length of time the injector remains open. The ECM controls the injection pulse duration based on engine fuel needs.

ECM TERMINALS AND REFERENCE VALUE

Specification data are reference values and are measured between each terminal and ㉜ (ECM ground).

TERMINAL NO.	WIRE COLOR	ITEM	CONDITION	DATA (DC Voltage)
102	W/B	Injector No. 1	Engine is running. (Warm-up condition) Idle speed	BATTERY VOLTAGE (11 - 14V) 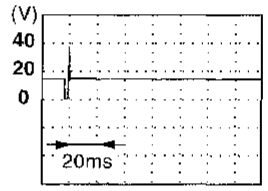 SEF204T
104	W/R	Injector No. 3		
109	W/L	Injector No. 2	Engine is running. (Warm-up condition) Engine speed is 2,000 rpm.	BATTERY VOLTAGE (11 - 14V) 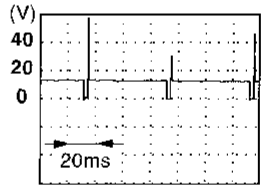 SEF205T
111	W/PU	Injector No. 4		

Injector (Cont'd)

Simpo PDF Merge and Split Unregistered Version - http://www.simpopdf.com

DIAGNOSTIC PROCEDURE

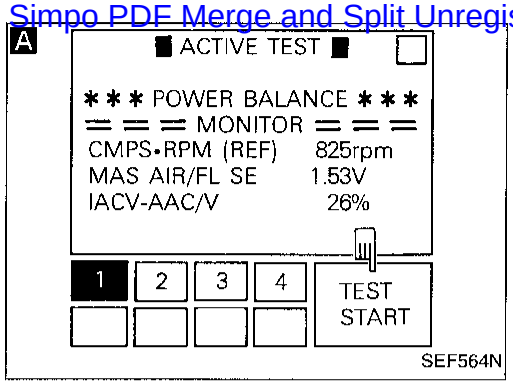

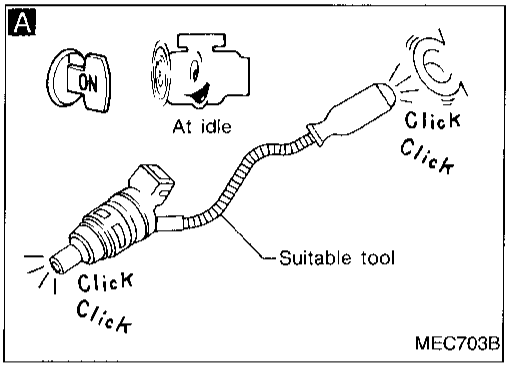

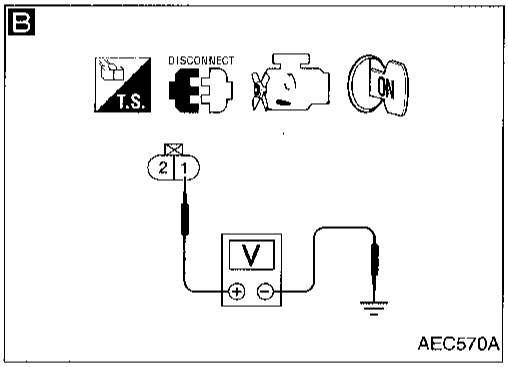

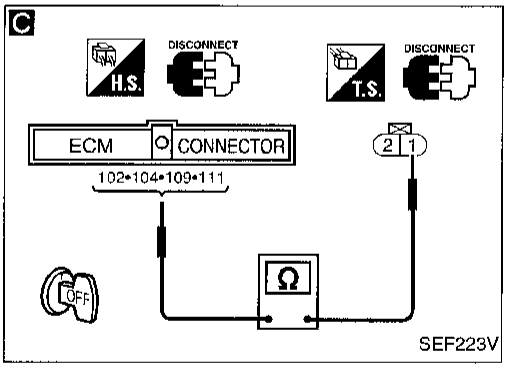

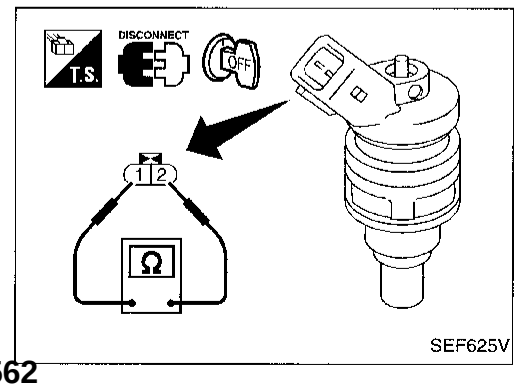

INSPECTION START

A

CHECK OVERALL FUNCTION.
1. Start engine.
2. Perform "POWER BALANCE" in "ACTIVE TEST" mode with CONSULT.
3. Make sure that each circuit produces a momentary engine speed drop.

OR

1. Start engine.
2. Listen to each injector operating sound.
Clicking noise should be heard.

OK → INSPECTION END

NG

B

CHECK POWER SUPPLY.
1. Stop engine.
2. Disconnect injector harness connector.
3. Turn ignition switch "ON".
4. Check voltage between terminal ① and ground with CONSULT or tester.
Voltage: Battery voltage

NG → Check the following.
- Harness connectors (F27), (M59)
- 10A fuse
- Harness for open or short between injector and fuse

If NG, repair harness or connectors.

OK

C

CHECK OUTPUT SIGNAL CIRCUIT.
1. Turn ignition switch "OFF".
2. Disconnect ECM harness connector.
3. Check harness continuity between injector harness connector terminal ① and ECM terminals (102), (104), (109), (111).
Continuity should exist.
If OK, check harness for short to ground and short to power.

NG → Repair open circuit, short to ground or short to power in harness or connectors.

OK

CHECK COMPONENT (Injector).
Refer to "COMPONENT INSPECTION" below.

NG → Replace injector.

OK

Perform "TROUBLE DIAGNOSIS FOR INTERMITTENT INCIDENT", EC-93.

INSPECTION END

COMPONENT INSPECTION

Injector

1. Disconnect injector harness connector.
2. Check resistance between terminals as shown in the figure.
Resistance: 10 - 14Ω [at 25°C (77°F)]
If NG, replace injector.

Simpo PDF Merge and Split Unregistered Version - http://www.simpopdf.com

Start Signal

EC-S/SIG-01

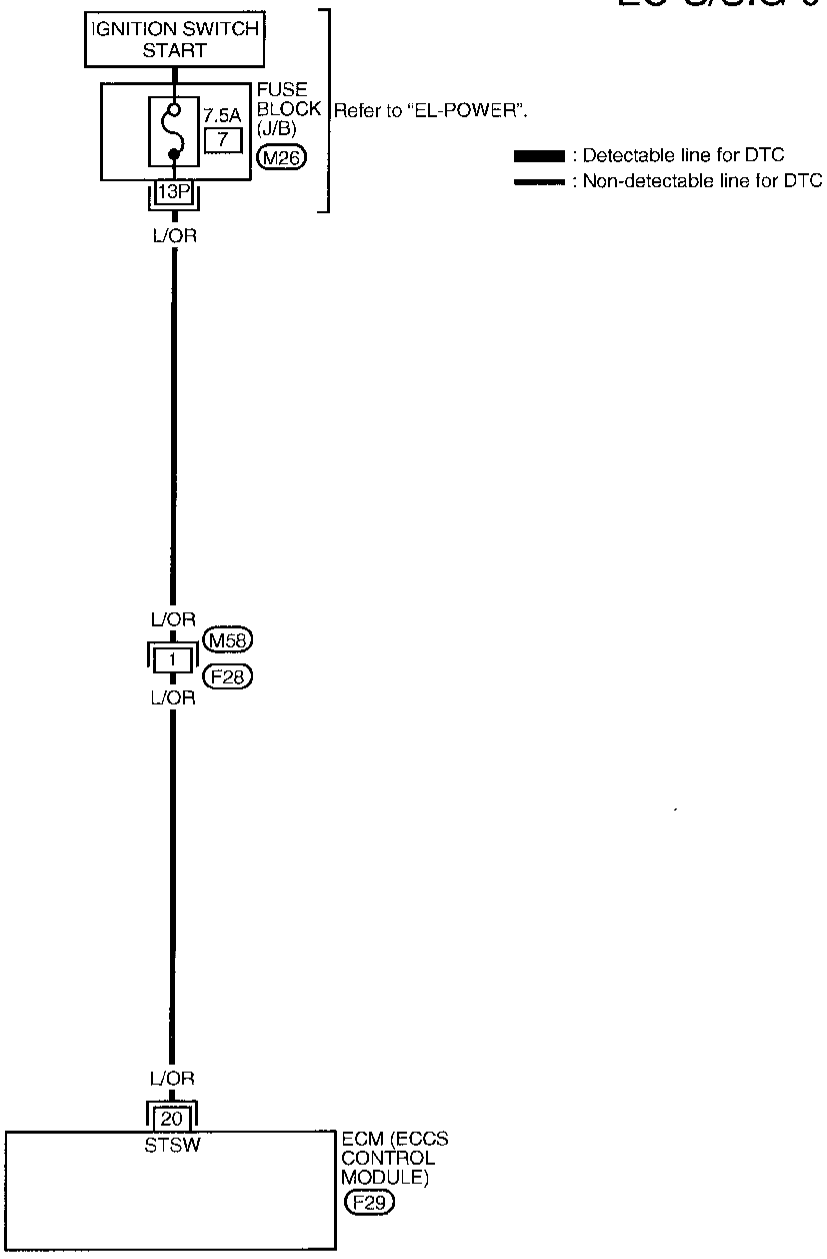

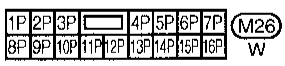

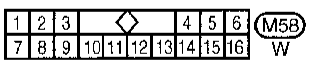

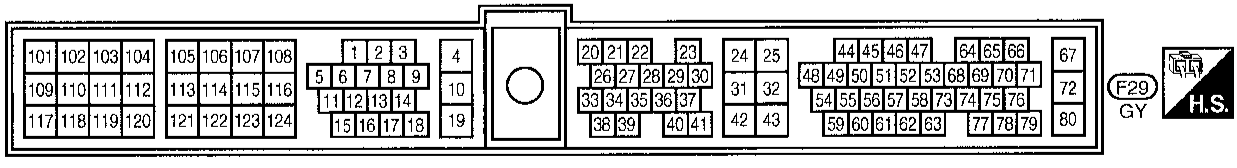

AEC548A

Start Signal (Cont'd)

Simpo PDF Merge and Split Unregistered Version - http://www.simpopdf.com

CONSULT REFERENCE VALUE IN DATA MONITOR MODE

Specification data are reference values.

MONITOR ITEM	CONDITION	SPECIFICATION
START SIGNAL	● Ignition switch: ON → START → ON	OFF → ON → OFF

ECM TERMINALS AND REFERENCE VALUE

Specification data are reference values and are measured between each terminal and ㉜ (ECM ground).

TERMINAL NO.	WIRE COLOR	ITEM	CONDITION	DATA (DC Voltage)
20	L/OR	Start signal	Ignition switch "ON"	Approximately 0V
			Ignition switch "START"	BATTERY VOLTAGE (11 - 14V)

Start Signal (Cont'd)

Simpo PDF Merge and Split Unregistered Version - http://www.simpopdf.com

DIAGNOSTIC PROCEDURE

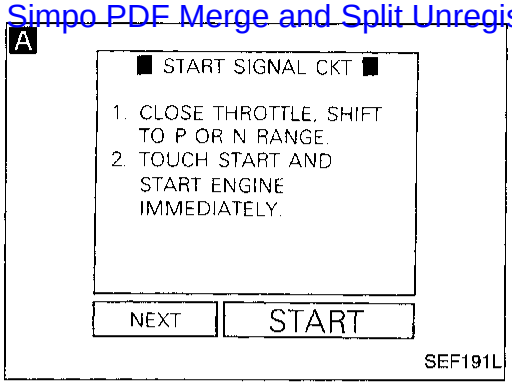

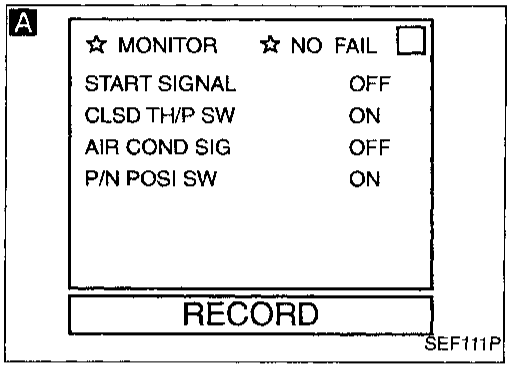

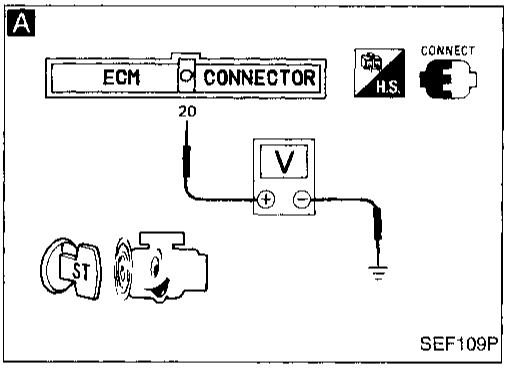

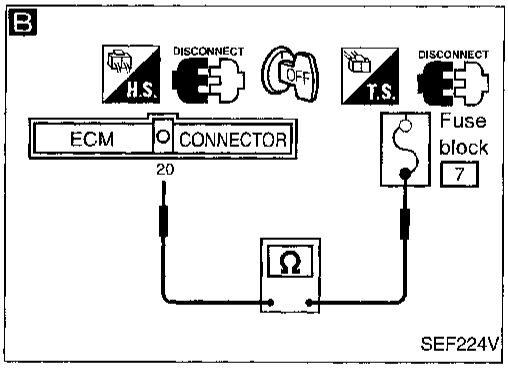

INSPECTION START

A

CHECK OVERALL FUNCTION.

1. Turn ignition switch "ON".
2. Perform "START SIGNAL CKT" in "FUNCTION TEST" mode with CONSULT.

OK → INSPECTION END

OR

1. Turn ignition switch "ON".
2. Check "START SIGNAL" in "DATA MONITOR" mode with CONSULT.

IGN "ON"	OFF
IGN "START"	ON

OR

1. Turn ignition switch to "START".
2. Check voltage between ECM terminal (20) and ground.

Voltage:
Ignition switch "START"
Battery voltage
Except above
Approximately 0V

NG

Check if 7.5A fuse is OK. — NG → Replace 7.5A fuse.

OK

B

CHECK INPUT SIGNAL CIRCUIT.

1. Turn ignition switch "OFF".
2. Disconnect ECM harness connector and 7.5A fuse.
3. Check harness continuity between ECM terminal (20) and fuse block.

Continuity should exist.

If OK, check harness for short to ground and short to power.

NG → Check the following.
- Harness connectors (M58), (F28)
- Harness for open or short between ECM and fuse block

If NG, repair open circuit or short to ground or short to power in harness or connectors.

OK

Perform "TROUBLE DIAGNOSIS FOR INTERMITTENT INCIDENT", EC-93.

INSPECTION END

Simpo PDF Merge and Split Unregistered Version - http://www.simpopdf.com

Fuel Pump

SYSTEM DESCRIPTION

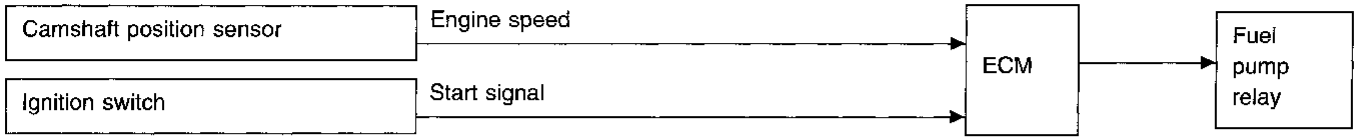

The ECM activates the fuel pump for several seconds after the ignition switch is turned on to improve engine startability. If the ECM receives a 180° signal from the camshaft position sensor, it knows that the engine is rotating, and causes the pump to perform. If the 180° signal is not received when the ignition switch is on, the engine stalls. The ECM stops pump operation and prevents battery discharging, thereby improving safety. The ECM does not directly drive the fuel pump. It controls the ON/OFF fuel pump relay, which in turn controls the fuel pump.

Condition	Fuel pump operation
Ignition switch is turned to ON.	Operates for 5 seconds
Engine running and cranking	Operates
Except as shown above	Stops

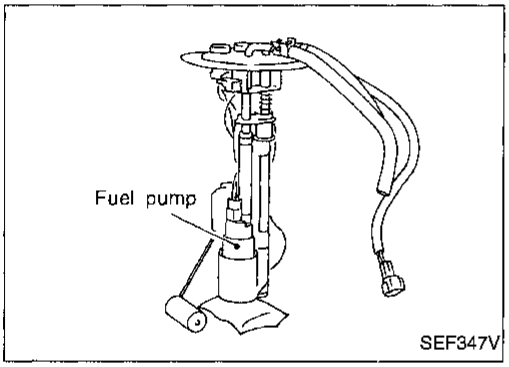

COMPONENT DESCRIPTION

The fuel pump with a fuel damper is an in-tank type (the pump and damper are located in the fuel tank).

CONSULT REFERENCE VALUE IN DATA MONITOR MODE

Specification data are reference values.

MONITOR ITEM	CONDITION	SPECIFICATION
FUEL PUMP RLY	● Ignition switch is turned to ON (Operates for 5 seconds) ● Engine running and cranking	ON
	Except as shown above	OFF

ECM TERMINALS AND REFERENCE VALUE

Specification data are reference values and are measured between each terminal and ㉜ (ECM ground).

TERMINAL NO.	WIRE COLOR	ITEM	CONDITION	DATA (DC Voltage)
11	W/R	Fuel pump relay	Ignition switch "ON" └ For 5 seconds after turning ignition switch "ON" Engine is running.	0 - 1V
			Ignition switch "ON" └ More than 5 seconds after turning ignition switch "ON"	BATTERY VOLTAGE (11 - 14V)

Simpo PDF Merge and Split Unregistered Version - http://www.simpopdf.com

EC-F/PUMP-01

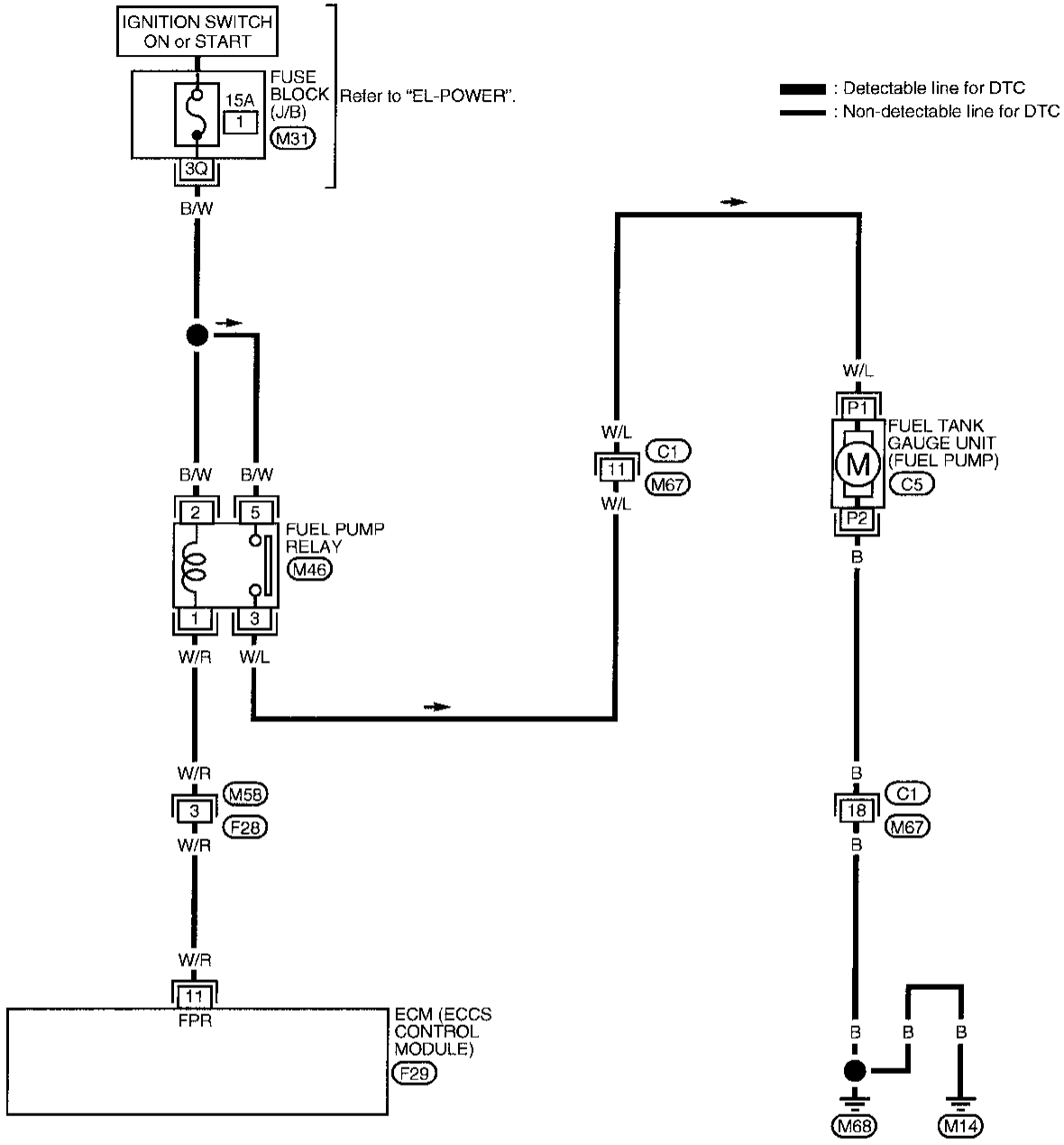

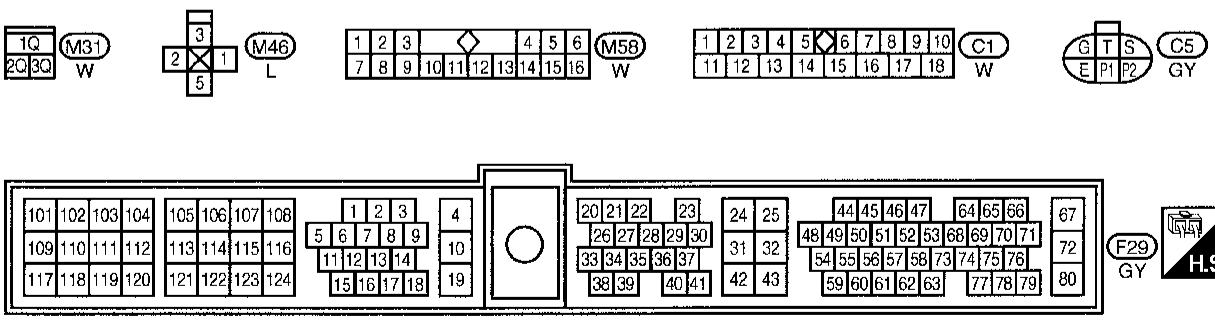

AEC549A

Fuel Pump (Cont'd)

Simpo PDF Merge and Split Unregistered Version - http://www.simpopdf.com

DIAGNOSTIC PROCEDURE

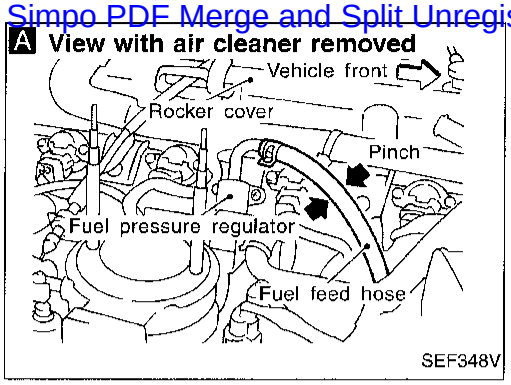

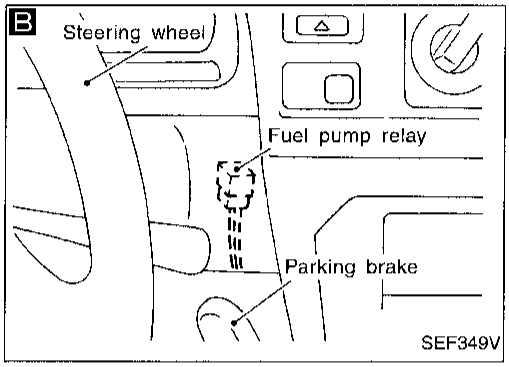

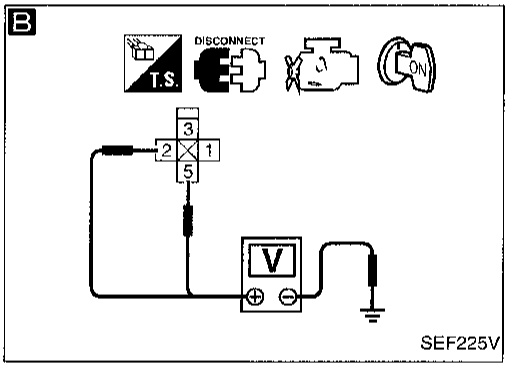

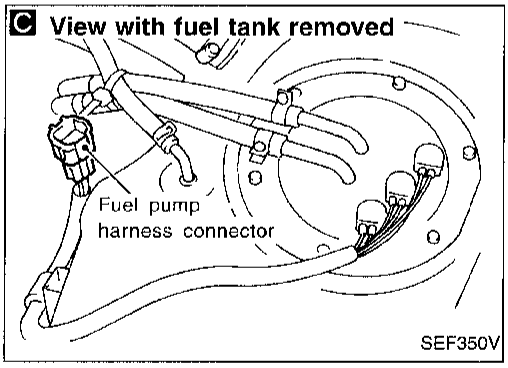

INSPECTION START

A

CHECK OVERALL FUNCTION.
1. Turn ignition switch "ON".
2. Pinch fuel feed hose with fingers.
   Fuel pressure pulsation should be felt on the fuel feed hose for 5 seconds after ignition switch is turned "ON".

OK → INSPECTION END

NG ↓

B

CHECK POWER SUPPLY.
1. Turn ignition switch "OFF".
2. Disconnect fuel pump relay.
3. Turn ignition switch "ON".
4. Check voltage between terminals ②, ⑤ and ground with CONSULT or tester.
   Voltage: Battery voltage

NG → Check the following.
- 15A fuse
- Harness for open or short between fuse and fuel pump relay

If NG, repair harness or connectors.

OK ↓

C

CHECK POWER AND GROUND CIRCUIT.
1. Turn ignition switch "OFF".
2. Disconnect fuel pump harness connector.
3. Check harness continuity between terminal (P2) and body ground, terminal (P1) and fuel pump relay terminal ③.
   Continuity should exist.
   If OK, check harness for short to ground and short to power.

NG → Check the following.
- Harness connectors (C1), (M67)
- Harness for open or short between fuel pump and body ground
- Harness for open or short between fuel pump and fuel pump relay

If NG, repair open circuit or short to ground or short to power in harness or connectors.

OK ↓

D

CHECK OUTPUT SIGNAL CIRCUIT.
1. Disconnect ECM harness connector.
2. Check harness continuity between ECM terminal (11) and fuel pump relay terminal ①.
   Continuity should exist.
   If OK, check harness for short to ground and short to power.

NG → Check the following.
- Harness connectors (F28), (M58)
- Harness for open or short between ECM and fuel pump relay

If NG, repair open circuit or short to ground or short to power in harness or connectors.

OK ↓

Ⓐ

(Go to next page.)

Fuel Pump (Cont'd)

Simpo PDF Merge and Split Unregistered Version - http://www.simpopdf.com

C

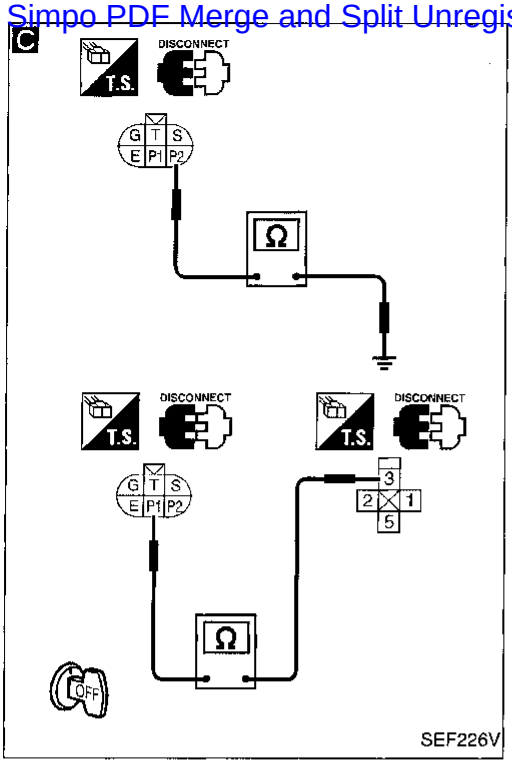

SEF226V

D

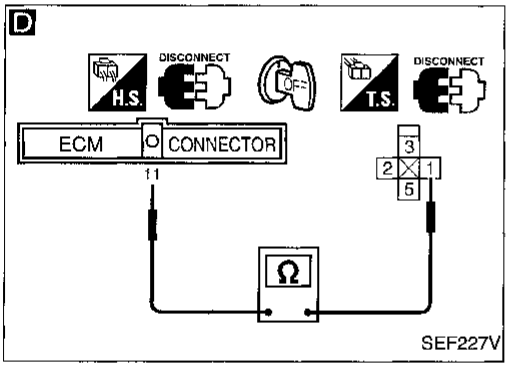

SEF227V

E

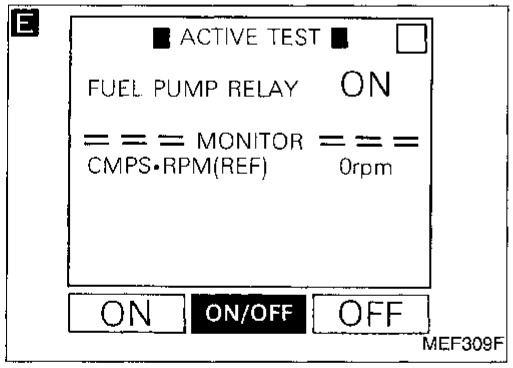

MEF309F

Ⓐ

E

CHECK COMPONENT
(Fuel pump relay).

1. Reconnect fuel pump relay, fuel pump harness connector and ECM harness connector.
2. Turn ignition switch "ON".
3. Turn fuel pump relay "ON" and "OFF" in "ACTIVE TEST" mode with CONSULT and check operating sound.

OR

Refer to "COMPONENT INSPECTION" on next page.

NG → Replace fuel pump relay.

OK ↓

CHECK COMPONENT
(Fuel pump).
Refer to "COMPONENT INSPECTION" on next page.

NG → Replace fuel pump.

OK ↓

Perform "TROUBLE DIAGNOSIS FOR INTERMITTENT INCIDENT", EC-93.

↓

INSPECTION END

Simpo PDF Merge and Split Unregistered Version - http://www.simpopdf.com

Fuel Pump (Cont'd)

COMPONENT INSPECTION

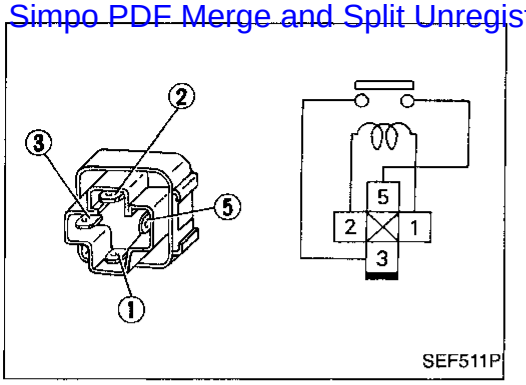

Fuel pump relay

Check continuity between terminals ③ and ⑤.

Conditions	Continuity
12V direct current supply between terminals ① and ②	Yes
No current supply	No

If NG, replace relay.

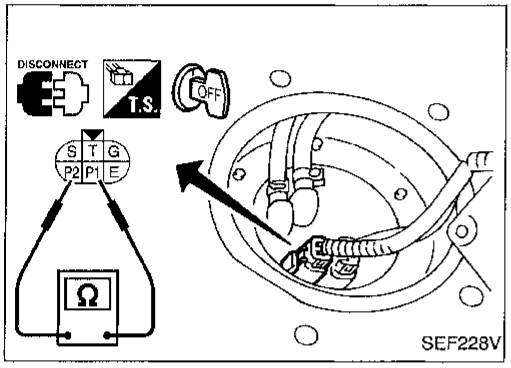

Fuel pump

1. Disconnect fuel pump harness connector.
2. Check resistance between terminals (P1) and (P2).
   Resistance: 0.2 - 5.0Ω [at 25°C (77°F)]
   If NG, replace fuel pump.

Simpo PDF Merge and Split Unregistered Version - http://www.simpopdf.com

Power Steering Oil Pressure Switch

EC-PST/SW-01

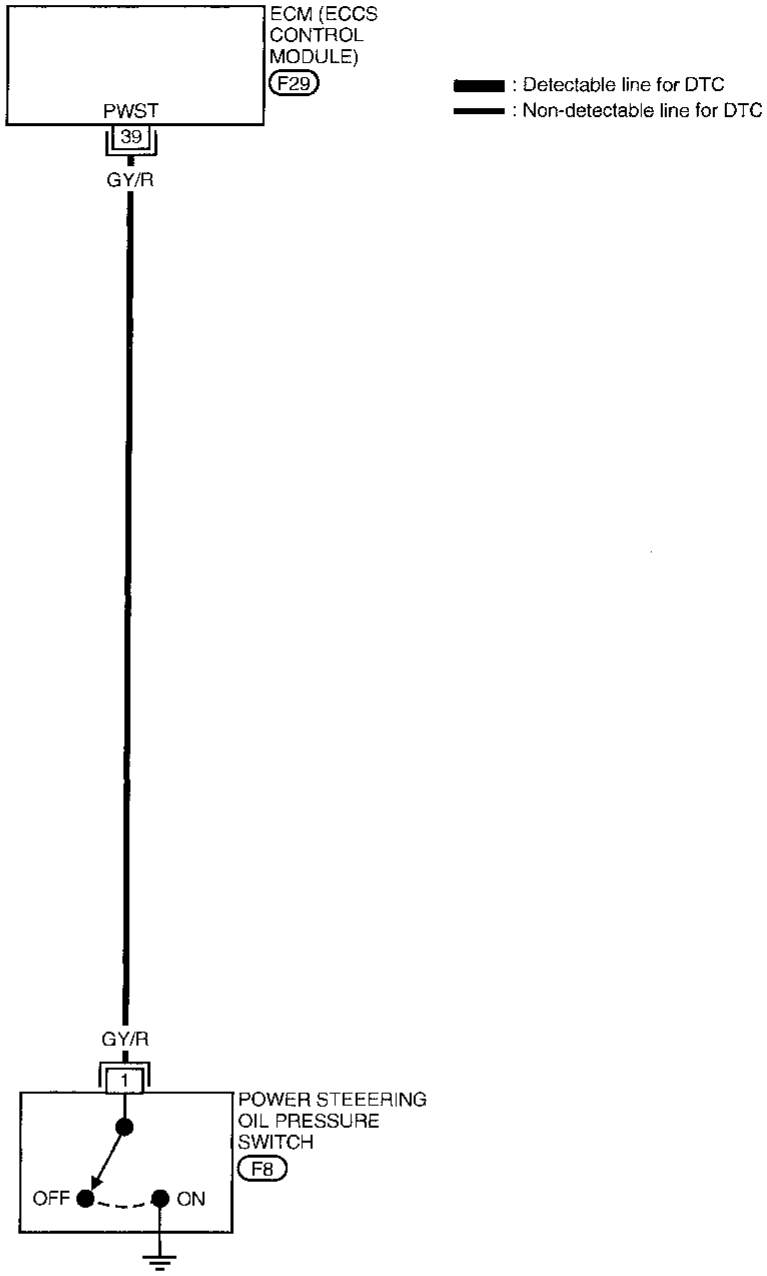

F8
1
B

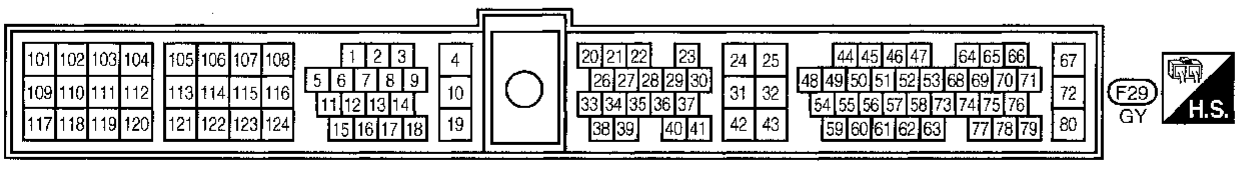

AEC550A

Simpo PDF Merge and Split Unregistered Version - http://www.simpopdf.com

Power Steering Oil Pressure Switch (Cont'd)

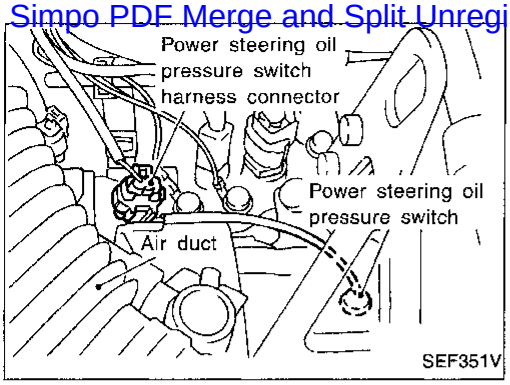

COMPONENT DESCRIPTION

The power steering oil pressure switch is attached to the power steering high-pressure tube and detects a power steering load. When a power steering load is detected, it signals the ECM. The ECM adjusts the IACV-AAC valve to increase the idle speed and adjust for the increased load.

CONSULT REFERENCE VALUE IN DATA MONITOR MODE

Specification data are reference values.

MONITOR ITEM	CONDITION		SPECIFICATION
PW/ST SIGNAL	● Engine: After warming up, idle the engine	Steering wheel is in neutral position (forward direction)	OFF
		The steering wheel is fully turned	ON

ECM TERMINALS AND REFERENCE VALUE

Specification data are reference values and are measured between each terminal and ㉜ (ECM ground).

TERMINAL NO.	WIRE COLOR	ITEM	CONDITION	DATA (DC Voltage)
39	GY/R	Power steering oil pressure switch	Engine is running. └ Steering wheel is fully turned.	Approximately 0V
			Engine is running. └ Steering wheel is not turned.	Approximately 5V

Power Steering Oil Pressure Switch (Cont'd)

Simpo PDF Merge and Split Unregistered Version - http://www.simpopdf.com

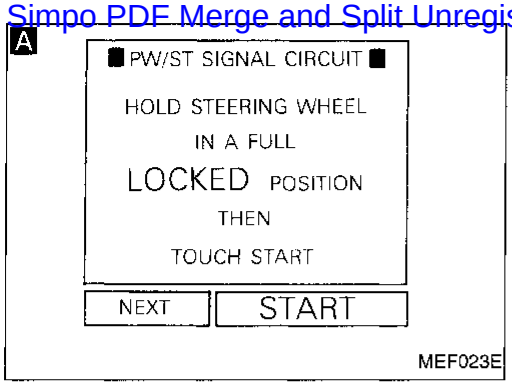

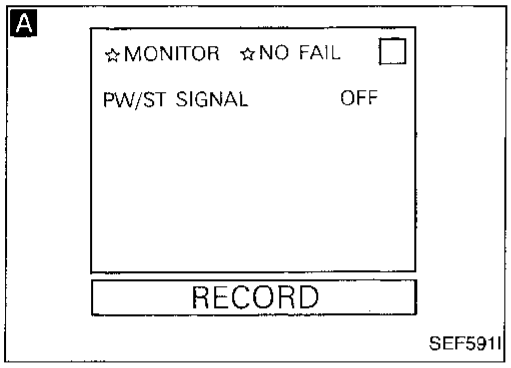

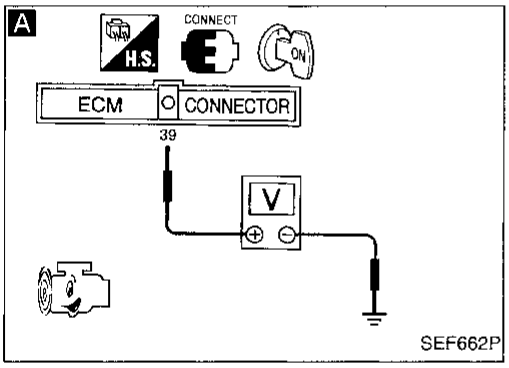

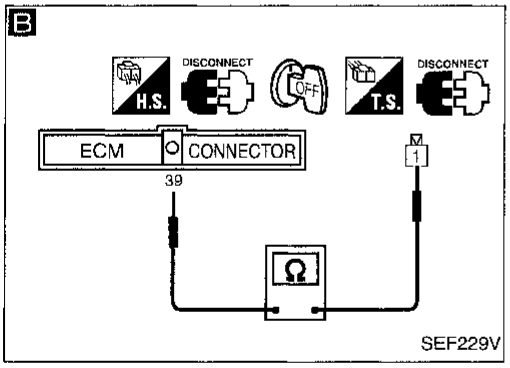

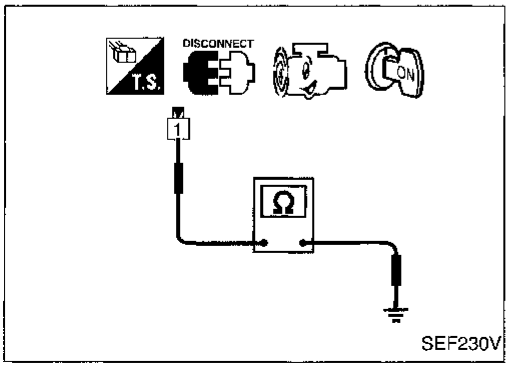

DIAGNOSTIC PROCEDURE

INSPECTION START

A

CHECK OVERALL FUNCTION.

1. Turn ignition switch "ON".
2. Perform "PW/ST SIGNAL CIRCUIT" in "FUNCTION TEST" mode with CONSULT.

OK → INSPECTION END

OR

1. Start engine.
2. Check "PW/ST SIGNAL" in "DATA MONITOR" mode with CONSULT.

Steering is in neutral position:
OFF
Steering is fully turned:
ON

OR

1. Start engine.
2. Check voltage between ECM terminal (39) and ground.

Voltage:
When steering wheel is fully turned.
Approximately 0V
Except above
Approximately 5V

NG

B

CHECK INPUT SIGNAL CIRCUIT.

1. Disconnect ECM harness connector.
2. Check harness continuity between ECM terminal (39) and terminal (1).

Continuity should exist.

If OK, check harness for short to ground and short to power.

NG → Repair open circuit, short to ground or short to power in harness or connectors.

OK

CHECK COMPONENT
(Power steering oil pressure switch).
Refer to "COMPONENT INSPECTION" below.

NG → Replace power steering oil pressure switch.

OK

Perform "TROUBLE DIAGNOSIS FOR INTERMITTENT INCIDENT", EC-93.

INSPECTION END

COMPONENT INSPECTION

Power steering oil pressure switch

1. Disconnect power steering oil pressure switch harness connector then start engine.
2. Check continuity between terminal (1) and ground.

Conditions	Continuity
Steering wheel is fully being turned	Yes
Steering wheel is not being turned	No

If NG, replace power steering oil pressure switch.

Simpo PDF Merge and Split Unregistered Version - http://www.simpopdf.com

IACV-FICD Solenoid Valve

EC-FICD-01

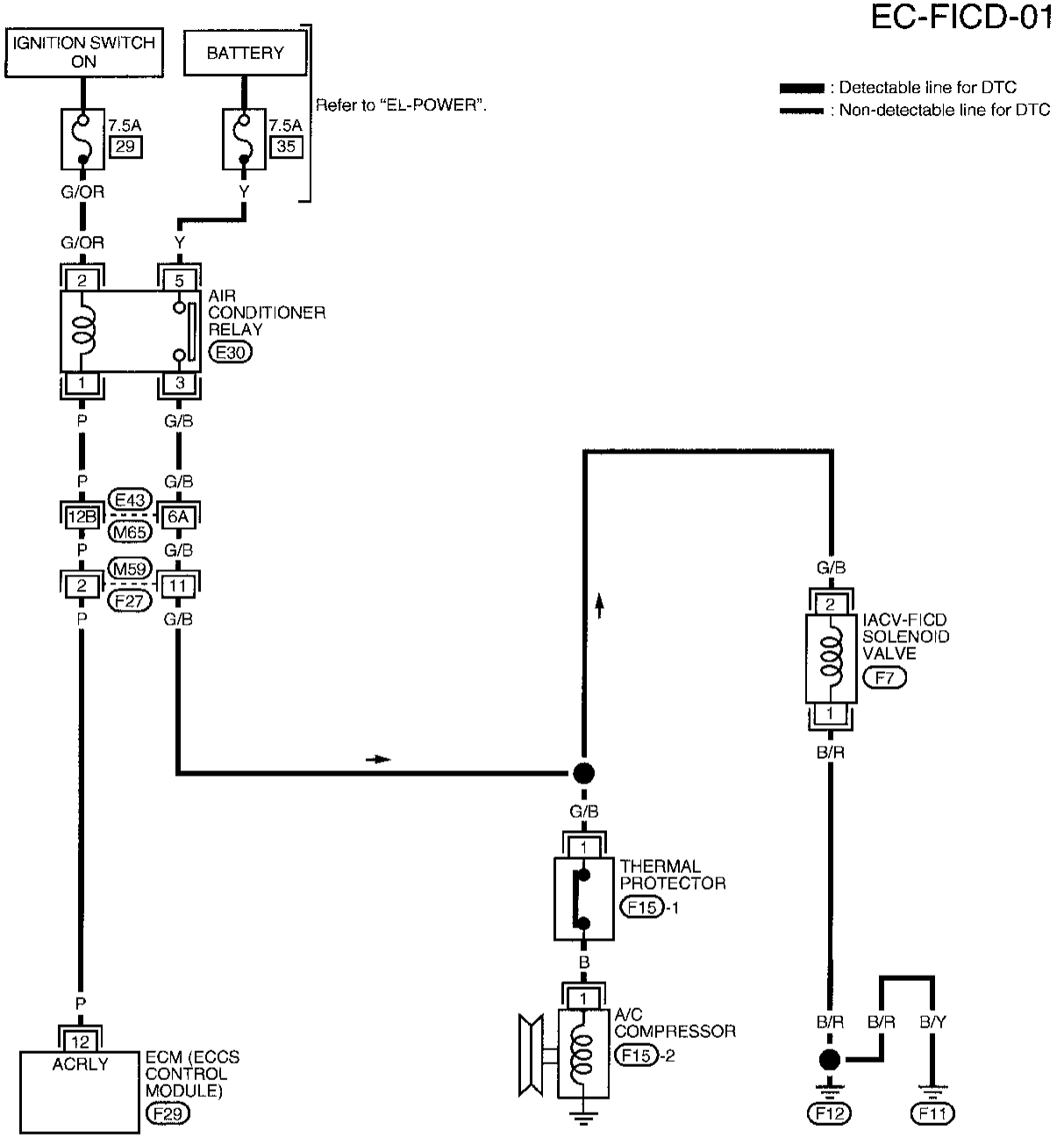

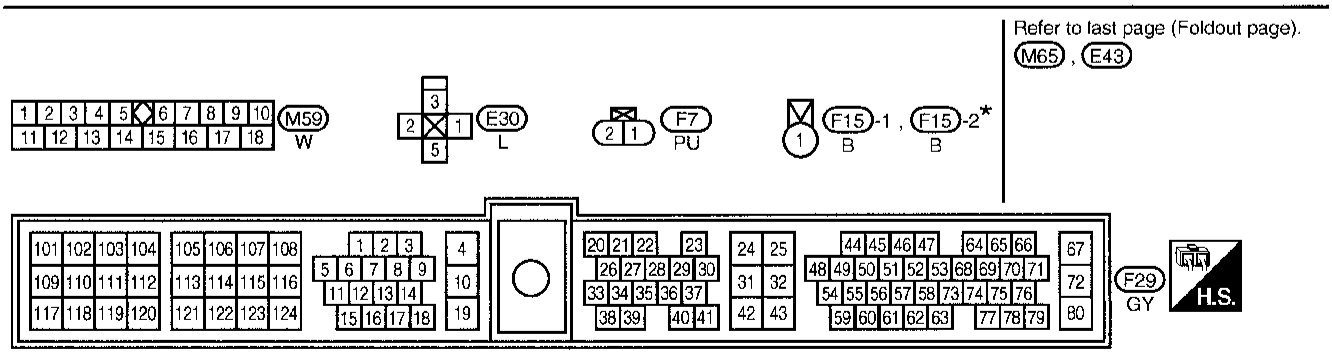

* : This connector is not shown in "HARNESS LAYOUT" of EL section.

AEC551A

IACV-FICD Solenoid Valve (Cont'd)

Simpo PDF Merge and Split Unregistered Version - http://www.simpopdf.com

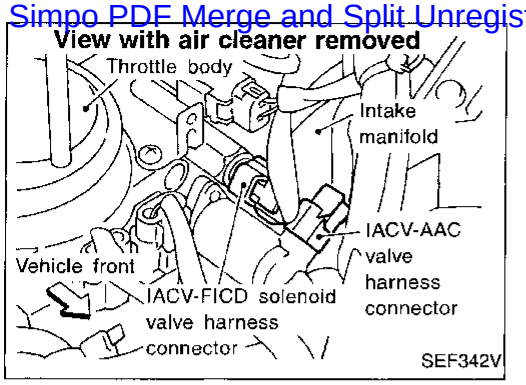

COMPONENT DESCRIPTION

When the air conditioner is on, the IACV-FICD solenoid valve supplies additional air to adjust to the increased load.

ECM TERMINALS AND REFERENCE VALUE

Specification data are reference values and are measured between each terminal and ㉜ (ECM ground).

TERMINAL NO.	WIRE COLOR	ITEM	CONDITION	DATA (DC Voltage)
12	P	Air conditioner relay	Engine is running. └ Both A/C switch and blower switch are "ON"*.	Approximately 0V
			Engine is running. └ A/C switch is "OFF".	BATTERY VOLTAGE (11 - 14V)
21	G/R	Air conditioner dual-pressure switch	Engine is running. └ Both air conditioner switch and blower switch are "ON". (Compressor operates)	Approximately 0V
			Engine is running. └ Air conditioner switch is "OFF".	BATTERY VOLTAGE (11 - 14V)

*: Ambient air temperature above 10°C (50°F) and in any mode except "OFF".

IACV-FICD Solenoid Valve (Cont'd)

Simpo PDF Merge and Split Unregistered Version - http://www.simpopdf.com

DIAGNOSTIC PROCEDURE

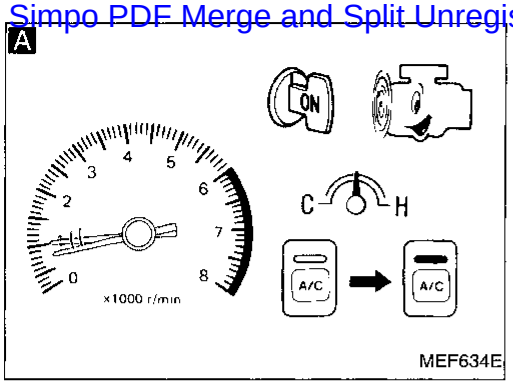

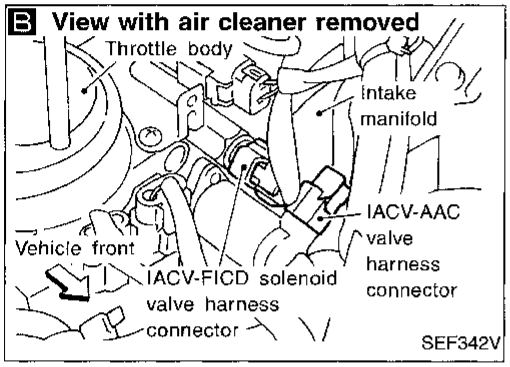

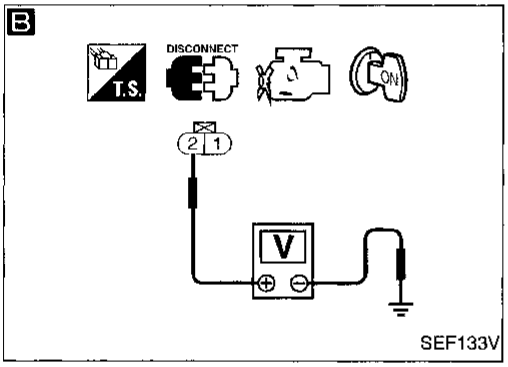

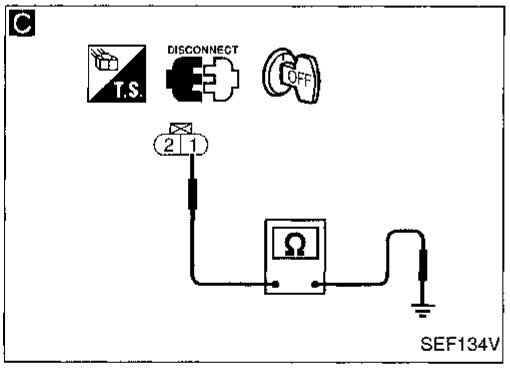

INSPECTION START

A

CHECK OVERALL FUNCTION.
1. Start engine and warm it up to normal operating temperature.
2. Check idle speed.
   800±50 rpm (in "N" position)
   If NG, adjust idle speed.
3. Turn air conditioner switch and blower fan switch "ON".
4. Recheck idle speed.
   875 rpm or more (in "N" position)

OK → INSPECTION END

NG

Check if air conditioner compressor functions normally.

NG → Refer to HA section ("TROUBLE DIAGNOSES").

OK

B

CHECK POWER SUPPLY.
1. Stop engine.
2. Disconnect IACV-FICD solenoid valve harness connector.
3. Start engine, then turn air conditioner switch and blower fan "ON".
4. Check voltage between terminal ② and ground with CONSULT or tester.
   Voltage: Battery voltage

NG → Check the following.
- Harness connectors (E43), (M65)
- Harness connectors (M59), (F27)
- Harness for open or short between IACV-FICD solenoid valve harness connector and air conditioner relay

If NG, repair open circuit, short to ground or short to power in harness or connectors.

OK

C

CHECK GROUND CIRCUIT.
1. Start engine and warm it up to normal operating temperature.
2. Turn ignition switch "OFF".
3. Check harness continuity between terminal ① and body ground.
   Continuity should exist.
   If OK, check harness for short to ground and short to power.

NG → Repair open circuit, short to ground or short to power in harness or connectors.

OK

Ⓐ
(Go to next page.)

Simpo PDF Merge and Split Unregistered Version - http://www.simpopdf.com

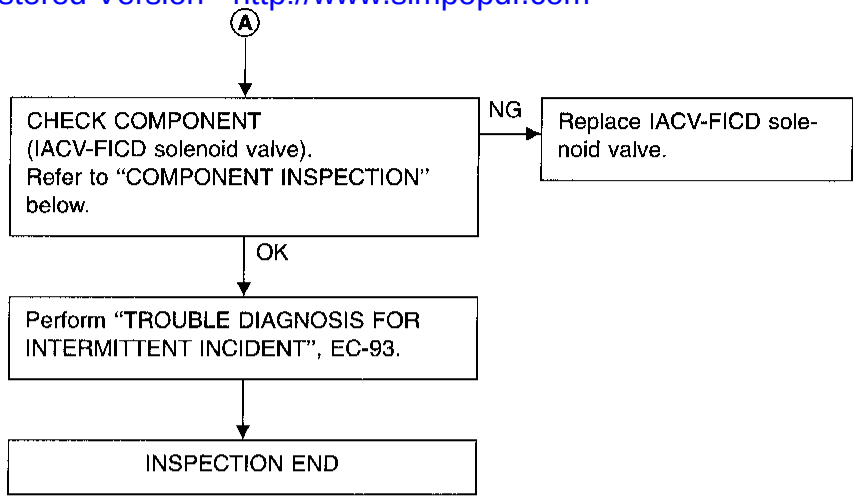

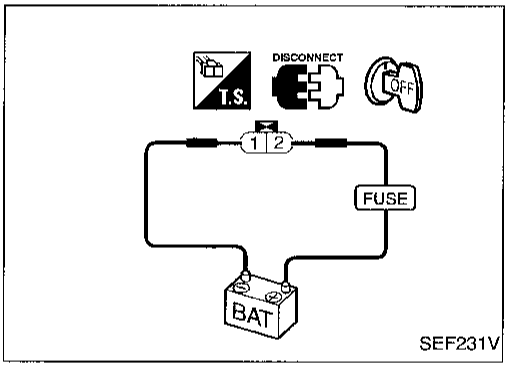

COMPONENT INSPECTION

IACV-FICD solenoid valve

Disconnect IACV-FICD solenoid valve harness connector.

- Check for clicking sound when applying 12V direct current to terminals.

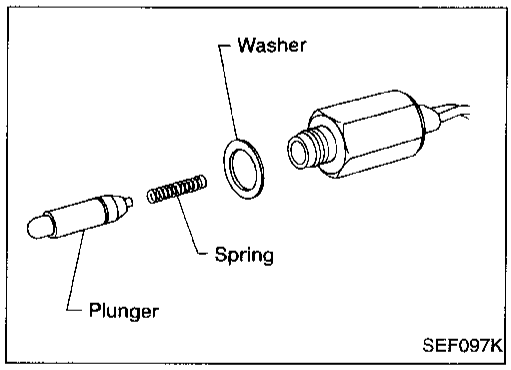

- Check plunger for seizing or sticking.
- Check for broken spring.

Simpo PDF Merge and Split Unregistered Version - http://www.simpopdf.com

MIL & Data Link Connectors

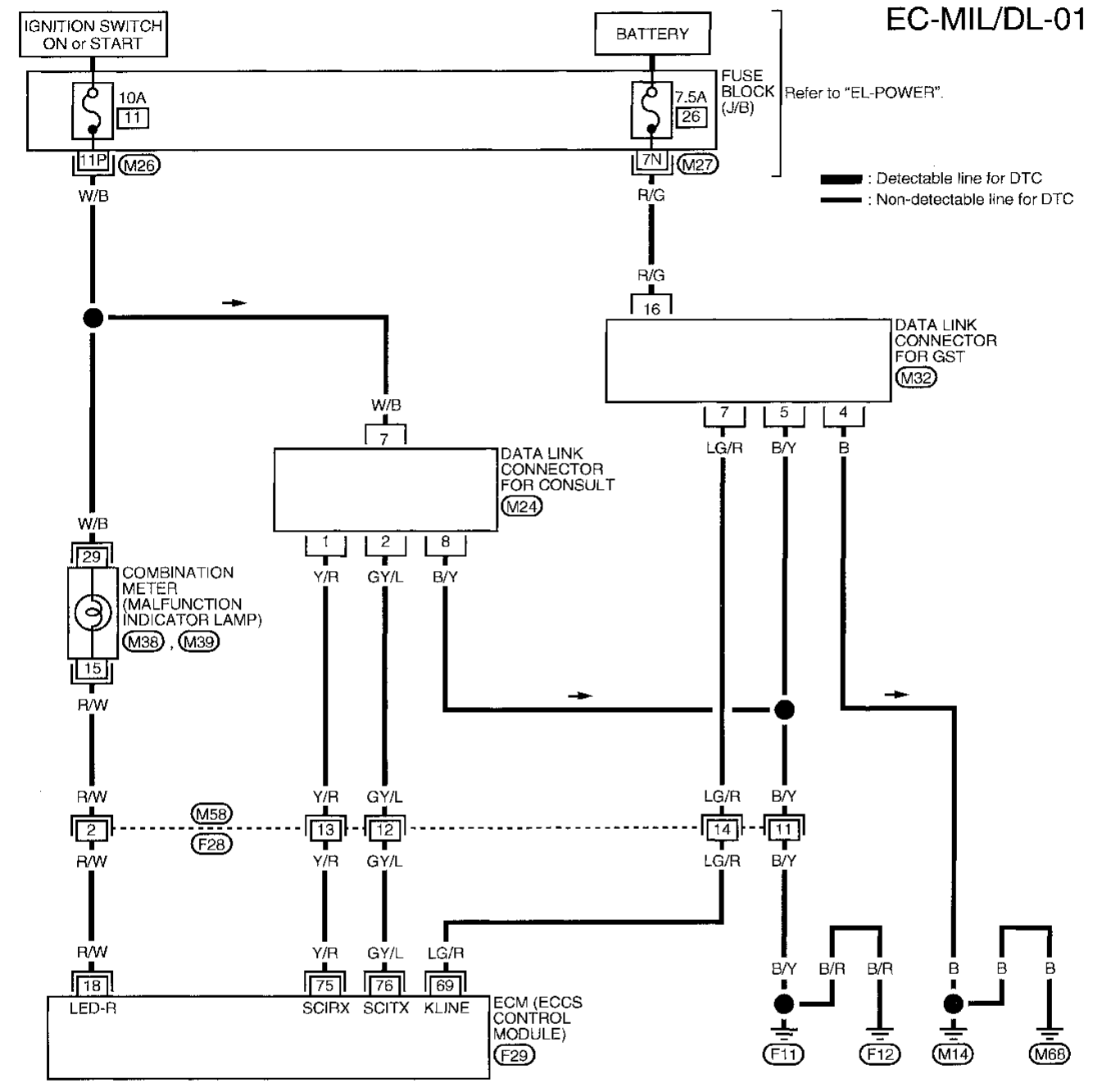

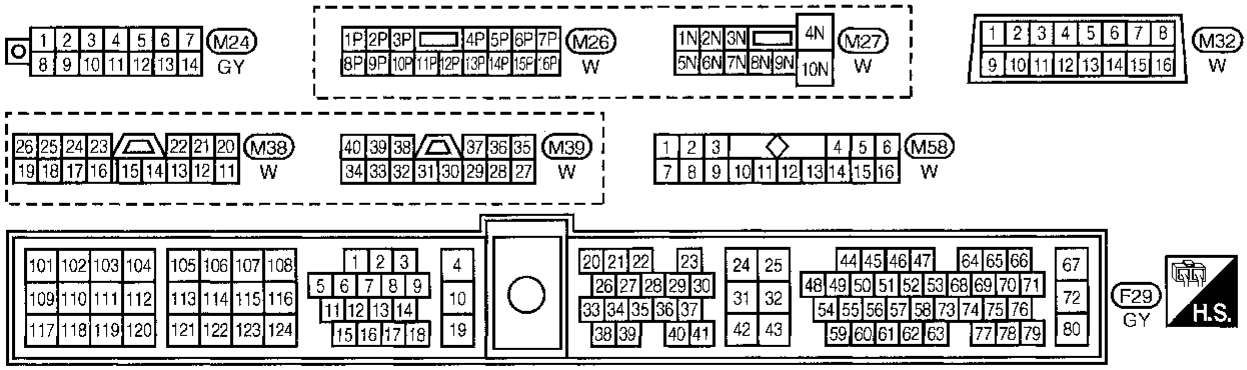

AEC552A

Simpo PDF Merge and Split Unregistered Version - http://www.simpopdf.com

General Specifications

FUEL PRESSURE REGULATOR

Fuel pressure at idling kPa (kg/cm^2, psi)	
Vacuum hose is connected	Approximately 235 (2.4, 34)
Vacuum hose is disconnected	Approximately 294 (3.0, 43)

Inspection and Adjustment

Idle speed*1 rpm	
No-load*2 (in "N" position)	800±50 (750±50*3)
Air conditioner: ON (in "N" position)	875 or more
Ignition timing	20°±2° BTDC*3
Closed throttle position switch touch speed ("OFF" to "ON") (in "N" position) rpm	950±150*3

*1: Feedback controlled and needs no adjustments
*2: Under the following conditions:
- Air conditioner switch: OFF
- Electric load: OFF (Lights & heater fan)
- Steering wheel: Kept in straight-ahead position

*3: Disconnect throttle position sensor

IGNITION COIL

Primary voltage	V	12
Primary resistance [at 20°C (68°F)]	Ω	Approximately 1.0
Secondary resistance [at 20°C (68°F)]	kΩ	Approximately 10

MASS AIR FLOW SENSOR

Supply voltage	V	Battery voltage (11 - 14)
Output voltage at idle	V	0.9 - 1.8*
Mass air flow (Using CONSULT or GST)	g·m/sec	0.9 - 5.8 at idle* 7.5 - 13.2 at 2,500 rpm*

*: Engine is warmed up to normal operating temperature and running under no-load.

ENGINE COOLANT TEMPERATURE SENSOR

Temperature °C (°F)	Resistance kΩ
20 (68)	2.1 - 2.9
50 (122)	0.68 - 1.00
90 (194)	0.236 - 0.260

EGR TEMPERATURE SENSOR

EGR temperature °C (°F)	Voltage V	Resistance MΩ
0 (32)	4.81	7.9 - 9.7
50 (122)	2.81	0.57 - 0.70
100 (212)	0.8	0.08 - 0.10

FRONT HEATED OXYGEN SENSOR HEATER

Resistance [at 25°C (77°F)]	Ω	2.3 - 4.3

FUEL PUMP

Resistance [at 25°C (77°F)]	Ω	0.2 - 5.0

IACV-AAC VALVE

Resistance [at 25°C (77°F)]	Ω	Approximately 10

INJECTOR

Resistance [at 25°C (77°F)]	Ω	10 - 14

RESISTOR

Resistance [at 25°C (77°F)]	kΩ	Approximately 2.2

THROTTLE POSITION SENSOR

Throttle valve conditions	Resistance kΩ [at 25°C (77°F)]
Completely closed	Approximately 0.5
Partially open	0.5 - 4.0
Completely open	Approximately 4.0

Simpo PDF Merge and Split Unregistered Version - http://www.simpopdf.com

CALCULATED LOAD VALUE

	Calculated load value % (Using CONSULT or GST)
At idle	9.5 - 34.0%
At 2,500 rpm	13.9 - 24.9%

INTAKE AIR TEMPERATURE SENSOR

Temperature °C (°F)	Resistance kΩ
20 (68)	2.1 - 2.9
80 (176)	0.27 - 0.38

REAR HEATED OXYGEN SENSOR HEATER

Resistance [at 25°C (77°F)]	Ω	2.3 - 4.3

CRANKSHAFT POSITION SENSOR (OBD)

Resistance [at 20°C (68°F)]	Ω	166.5 - 203.5

Simpo PDF Merge and Split Unregistered Version - http://www.simpopdf.com

SECTION EL

When you read wiring diagrams:
- **Read GI section, "HOW TO READ WIRING DIAGRAMS".**

When you perform trouble diagnoses, read GI section, "HOW TO FOLLOW FLOW CHART IN TROUBLE DIAGNOSES" and "HOW TO PERFORM EFFICIENT DIAGNOSIS FOR AN ELECTRICAL INCIDENT".
- **Check for any service bulletins before servicing the vehicle.**

CONTENTS

PRECAUTIONS AND PREPARATION 2
Supplemental Restraint System (SRS) "AIR BAG" 2
HARNESS CONNECTOR 3
Description 3
STANDARDIZED RELAY 4
Description 4
POWER SUPPLY ROUTING 6
Schematic 6
Wiring Diagram — POWER — 8
Fuse 13
Fusible Link 13
Circuit Breaker Inspection 13
GROUND DISTRIBUTION 14
BATTERY 17
How to Handle Battery 17
Service Data and Specifications (SDS) 20
STARTING SYSTEM 21
System Description 21
Wiring Diagram — START — 23
Construction 25
Removal and Installation 27
Pinion/Clutch Check 27
Service Data and Specifications (SDS) 27
CHARGING SYSTEM 28
System Description 28
Wiring Diagram — CHARGE — 29
Trouble Diagnoses 30
Construction 31
Removal and Installation 32
Service Data and Specifications (SDS) 32
COMBINATION SWITCH 33
Check 33
Replacement 34
STEERING SWITCH 35
Check 35
HEADLAMP 36
System Description (For USA) 36
Wiring Diagram (For USA) — H/LAMP — 37
Trouble Diagnoses 38
Bulb Replacement 39
Aiming Adjustment 39
HEADLAMP — Daytime Light System — 41
System Description (For Canada) 41
Operation (For Canada) 42
Schematic (For Canada) 43
Wiring Diagram (For Canada) — DTRL — 44
Trouble Diagnoses (For Canada) 47
Bulb Replacement 48
Aiming Adjustment 48
PARKING, LICENSE AND TAIL LAMPS 50
Wiring Diagram — TAIL/L — 50
STOP LAMP 52
Wiring Diagram — STOP/L — 52
BACK-UP LAMP 53
Wiring Diagram — BACK/L — 53
TURN SIGNAL AND HAZARD WARNING LAMPS 54
System Description 54
Wiring Diagram — TURN — 56
Trouble Diagnoses 58
Electrical Components Inspection 58
ILLUMINATION 59
System Description 59
Wiring Diagram — ILL — 60
INTERIOR ROOM LAMP 61
Component Parts and Harness Connector Location 61
System Description 62

CONTENTS (Cont'd.)

Simpo PDF Merge and Split Unregistered Version - http://www.simpopdf.com

Wiring Diagram — ROOM/L — 64
Trouble Diagnoses (For models with power door locks) 67
SPOT LAMP 68
Wiring Diagram — INT/L — 68
METER AND GAUGES 69
Component Parts and Harness Connector Location 69
System Description 70
Unified Control Meter 70
How To Change The Display For Odo/Trip Meter 70
Combination Meter 72
With Tachometer 72
Without Tachometer 73
Wiring Diagram — METER — 74
Meter/gauge Operation and Odo/Trip Meter Segment Check in Diagnosis Mode 75
Diagnosis Function 75
How To Alternate Diagnosis Mode 75
Flexible Print Circuit (FPC) 76
Disconnect 76
Connect 76
Trouble Diagnoses 77
Preliminary Check 77
Symptom Chart 1 (Malfunction is indicated in diagnosis mode) 78
Symptom Chart 2 (No malfunction is indicated in diagnosis mode) 78
Power Supply And Ground Circuit Check 79
Inspection/Vehicle Speed Sensor 80
Inspection/Engine Revolution Signal (Models with tachometer) 80
Inspection/Fuel Tank Gauge 81
Inspection/Thermal Transmitter 81
Electrical Components Inspection 82
Meter/Gauge Resistance Check 82
Fuel Tank Gauge Unit Check 82
Thermal Transmitter Check 83
Vehicle Speed Sensor Signal Check 83
WARNING LAMPS 84
System Description 84
Schematic 86
Wiring Diagram — WARN — 87
Electrical Components Inspection 90
A/T INDICATOR 91
Wiring Diagram — AT/IND — 91
WARNING CHIME 92
Component Parts and Harness Connector Location 92
System Description 93
Wiring Diagram — CHIME — 95
Trouble Diagnoses 97
Electrical Components Inspection 103
FRONT WIPER AND WASHER 104
System Description 104
Wiring Diagram — WIPER — 106
Trouble Diagnoses (With intermittent wipers) 108
Removal and Installation 110
Washer Nozzle Adjustment 111
Washer Tube Layout 111
HORN 112
Wiring Diagram — HORN — 112
CIGARETTE LIGHTER 113
Wiring Diagram — CIGAR — 113
AUDIO 114
System Description 114
Base Audio System 114
Premium Audio System 114
Wiring Diagram — AUDIO — 115
Trouble Diagnoses 117
Inspection 118
AUDIO ANTENNA 119
POWER DOOR MIRROR 120
Wiring Diagram — MIRROR — 120
AUTOMATIC SPEED CONTROL DEVICE (ASCD) 121
Component Parts and Harness Connector Location 121
System Description 122
Schematic 124
Wiring Diagram — ASCD — 126
Fail-Safe System Description 130
Fail-Safe System Check 131
Trouble Diagnoses 132
ASCD Wire Adjustment 140
Electrical Components Inspection 141
POWER WINDOW 142
System Description 142
Wiring Diagram — WINDOW — 144
Trouble Diagnoses 146
POWER DOOR LOCK 147
Component Parts and Harness Connector Location 147
System Description 148
Schematic 150
Wiring Diagram — D/LOCK — 151
Trouble Diagnoses 154
MULTI-REMOTE CONTROL SYSTEM 162
Component Parts and Harness Connector Location 162
System Description 163
Schematic 165
Wiring Diagram — MULTI — 166
Trouble Diagnoses 169

CONTENTS (Cont'd.)

Simpo PDF Merge and Split Unregistered Version - http://www.simpopdf.com

Electrical Components Inspection 175
ID Code Entry Procedure 176
THEFT WARNING SYSTEM 177
Component Parts and Harness Connector Location 177
System Description 179
Schematic 182
Wiring Diagram — THEFT — 183
Trouble Diagnoses 186
SMART ENTRANCE CONTROL UNIT 197
Description 197
Input/Output Operation Signal 198
Schematic 200
LOCATION OF ELECTRICAL UNITS 202
Engine Compartment 202
Passenger Compartment 203
HARNESS LAYOUT 205
Outline 205
How to Read Harness Layout 206
Main Harness 208
Engine Room Harness 210
Engine Control Harness 214
Engine No. 2 Harness 216
Chassis and Tail Harness 218
Room Lamp Harness 219
Door Harness 220
Air Bag Harness 221
BULB SPECIFICATIONS 222
Headlamp 222
Exterior Lamp 222
Interior Lamp 222
WIRING DIAGRAM CODES (CELL CODES) 223

WIRING DIAGRAM REFERENCE CHART

ECCS ..... EC SECTION
A/T CONTROL, SHIFT LOCK CONTROL ..... AT SECTION
ANTI-LOCK BRAKE SYSTEM ..... BR SECTION
SRS "AIR BAG" ..... RS SECTION
HEATER AND AIR CONDITIONER ..... HA SECTION

Simpo PDF Merge and Split Unregistered Version - http://www.simpopdf.com

Supplemental Restraint System (SRS) "AIR BAG"

The Supplemental Restraint System "AIR BAG", used along with a seat belt, helps to reduce the risk or severity of injury to the driver and front passenger in a frontal collision. The Supplemental Restraint System consists of air bag modules (located in the center of the steering wheel and in the instrument panel on the passenger side), a diagnosis sensor unit, a crash zone sensor (4WD models), warning lamp, wiring harness and spiral cable.

The vehicle is equipped with a passenger air bag deactivation switch. Because no rear seat exists where a rear-facing child restraint can be placed, the switch is designed to turn off the passenger air bag so that a rear-facing child restraint can be used in the front passenger seat. The switch is located in the center of the instrument panel, near the ashtray. When the switch is turned to the ON position, the passenger air bag is enabled and could inflate in a frontal collision. When the switch is turned to the OFF position, the passenger air bag is disabled and will not inflate in a frontal collision. A passenger air bag OFF indicator on the instrument panel lights up when the passenger air bag is switched OFF. The driver air bag always remains enabled and is not affected by the passenger air bag deactivation switch.

Information necessary to service the system is included in the **RS section** of this Service Manual.

WARNING:

- **To avoid rendering the SRS inoperative, which could increase the risk of personal injury or death in the event of a collision which would result in air bag inflation, all maintenance should be performed by an authorized NISSAN dealer.**
- **Improper maintenance, including incorrect removal and installation of the SRS, can lead to personal injury caused by unintentional activation of the system.**
- **Do not use electrical test equipment on any circuit related to the SRS unless instructed to in this Service Manual. SRS wiring harnesses are covered with yellow insulation either just before the harness connectors or on the complete harness, for easy identification.**
- **The vehicle is equipped with a passenger air bag deactivation switch which can be operated by the customer. When the passenger air bag is switched OFF, the passenger air bag is disabled and will not inflate in a frontal collision. When the passenger air bag is switched ON, the passenger air bag is enabled and could inflate in a frontal collision. After SRS maintenance or repair, make sure the passenger air bag deactivation switch is in the same position (ON or OFF) as when the vehicle arrived for service.**

Simpo PDF Merge and Split Unregistered Version - http://www.simpopdf.com

Description

HARNESS CONNECTOR

- All harness connectors have been modified to prevent accidental looseness or disconnection.
- The connector can be disconnected by pushing or lifting the locking section.

CAUTION:
Do not pull the harness when disconnecting the connector.

[Example]

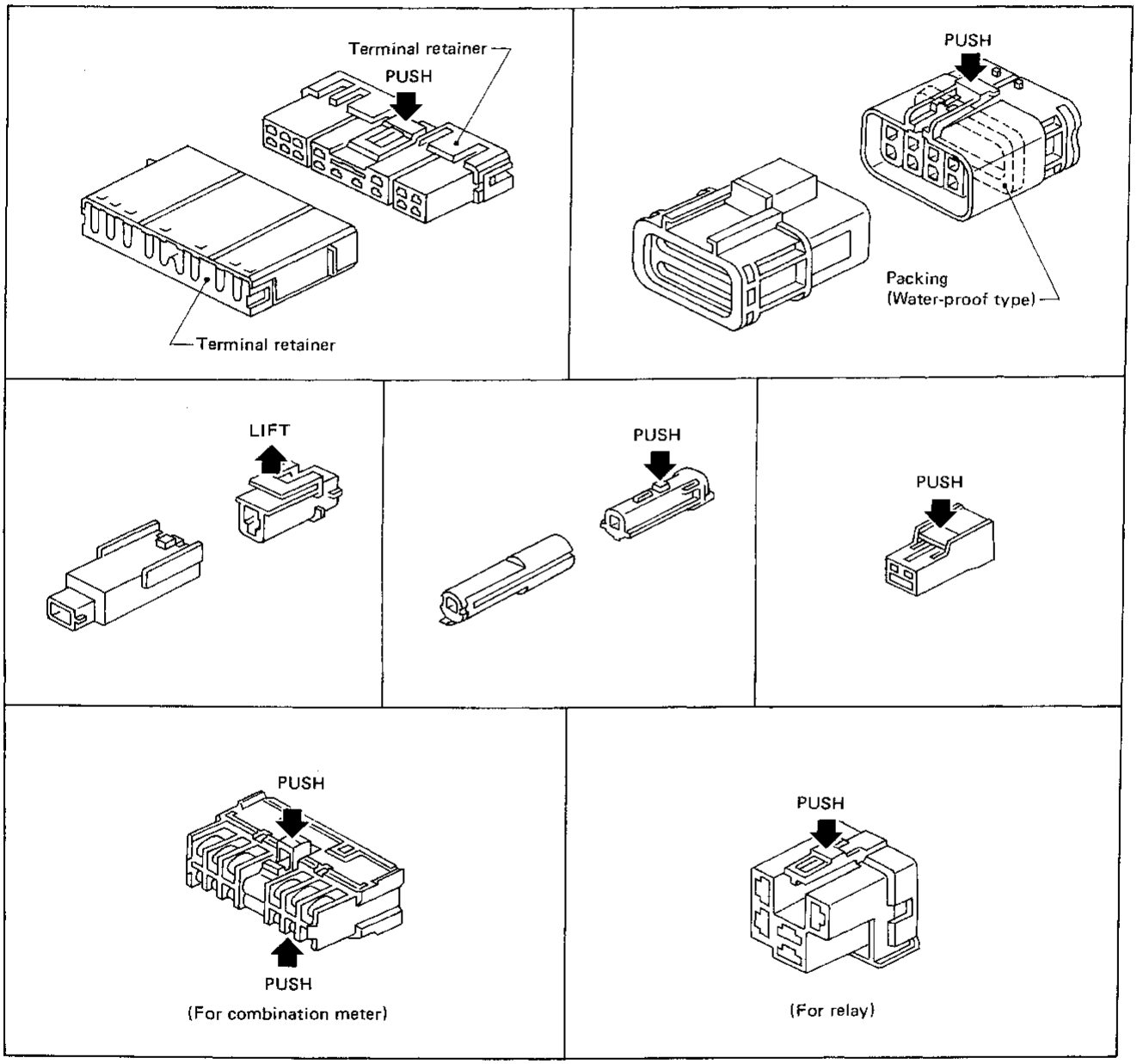

SEL769D

Simpo PDF Merge and Split Unregistered Version - http://www.simpopdf.com

Description

NORMAL OPEN, NORMAL CLOSED AND MIXED TYPE RELAYS

Relays can be divided into three main types: normal open, normal closed and mixed type relays.

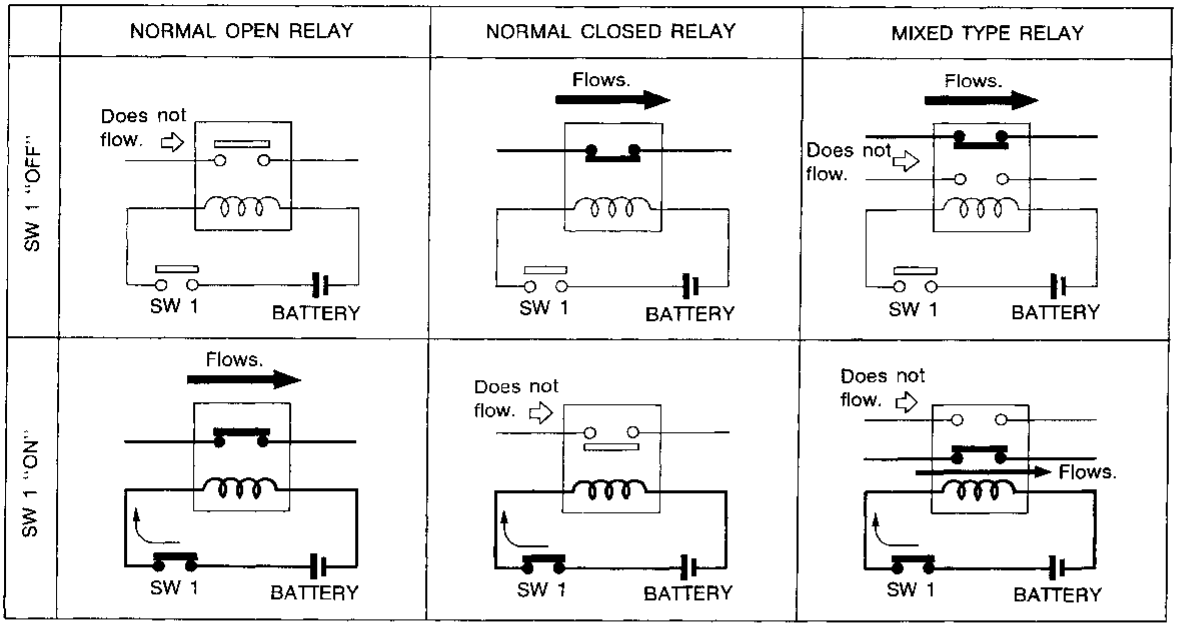

SEL881H

TYPES OF STANDARDIZED RELAYS

1M	1 Make	2M	2 Make
1T	1 Transfer	1M·1B	1 Make 1 Break

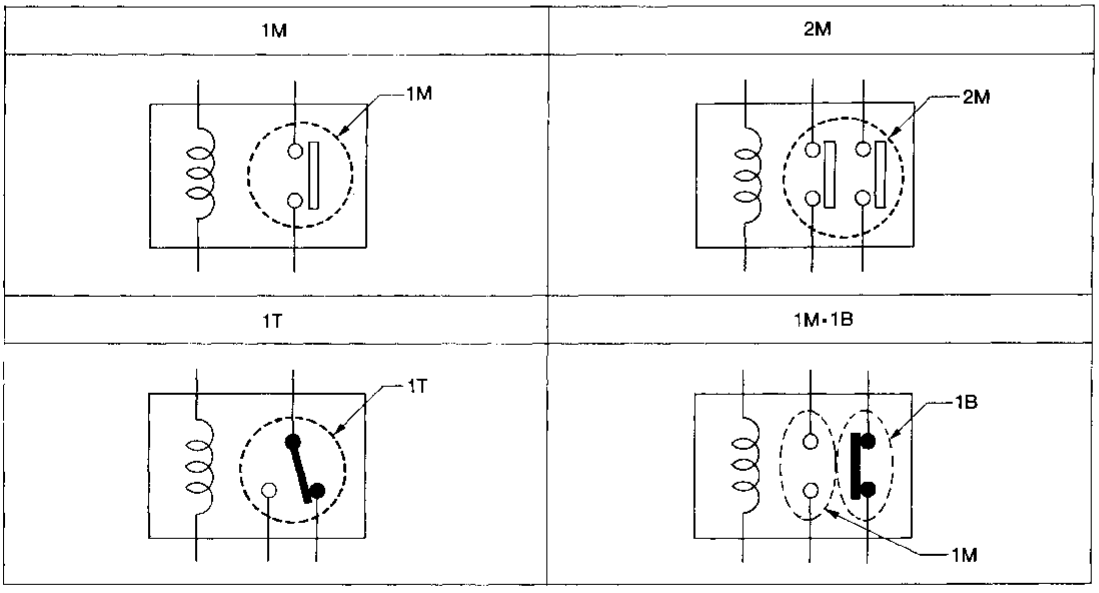

SEL882H

Simpo PDF Merge and Split Unregistered Version - http://www.simpopdf.com

Type	Outer view	Circuit	Connector symbol and connection	Case color
1M	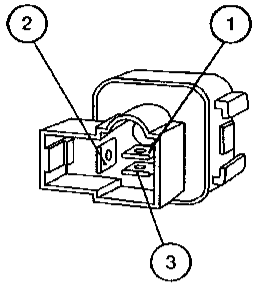	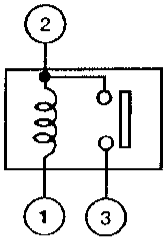	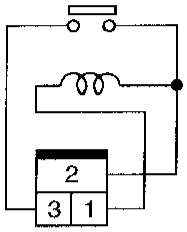	BLACK
1T	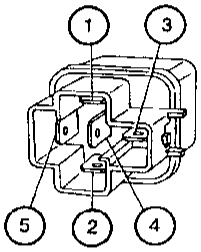	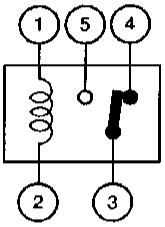	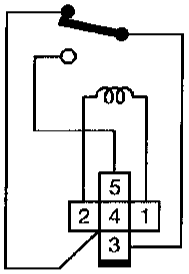	BLACK
2M	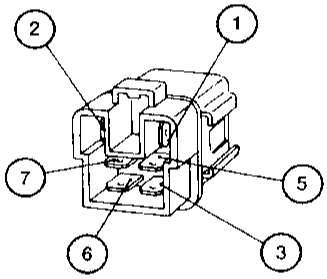	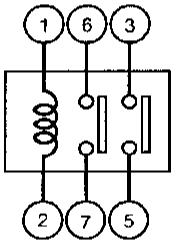	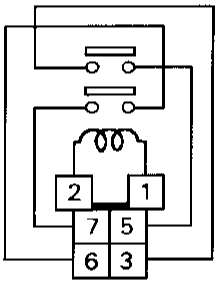	BROWN
1M	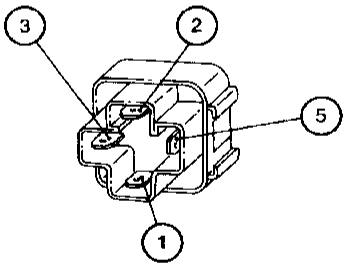	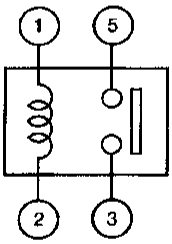	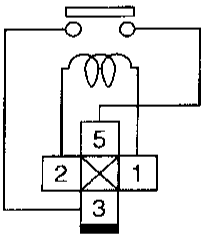	BLUE

The arrangement of terminal numbers on the actual relays may differ from those shown above.

AEL672B

Simpo PDF Merge and Split Unregistered Version - http://www.simpopdf.com

Schematic

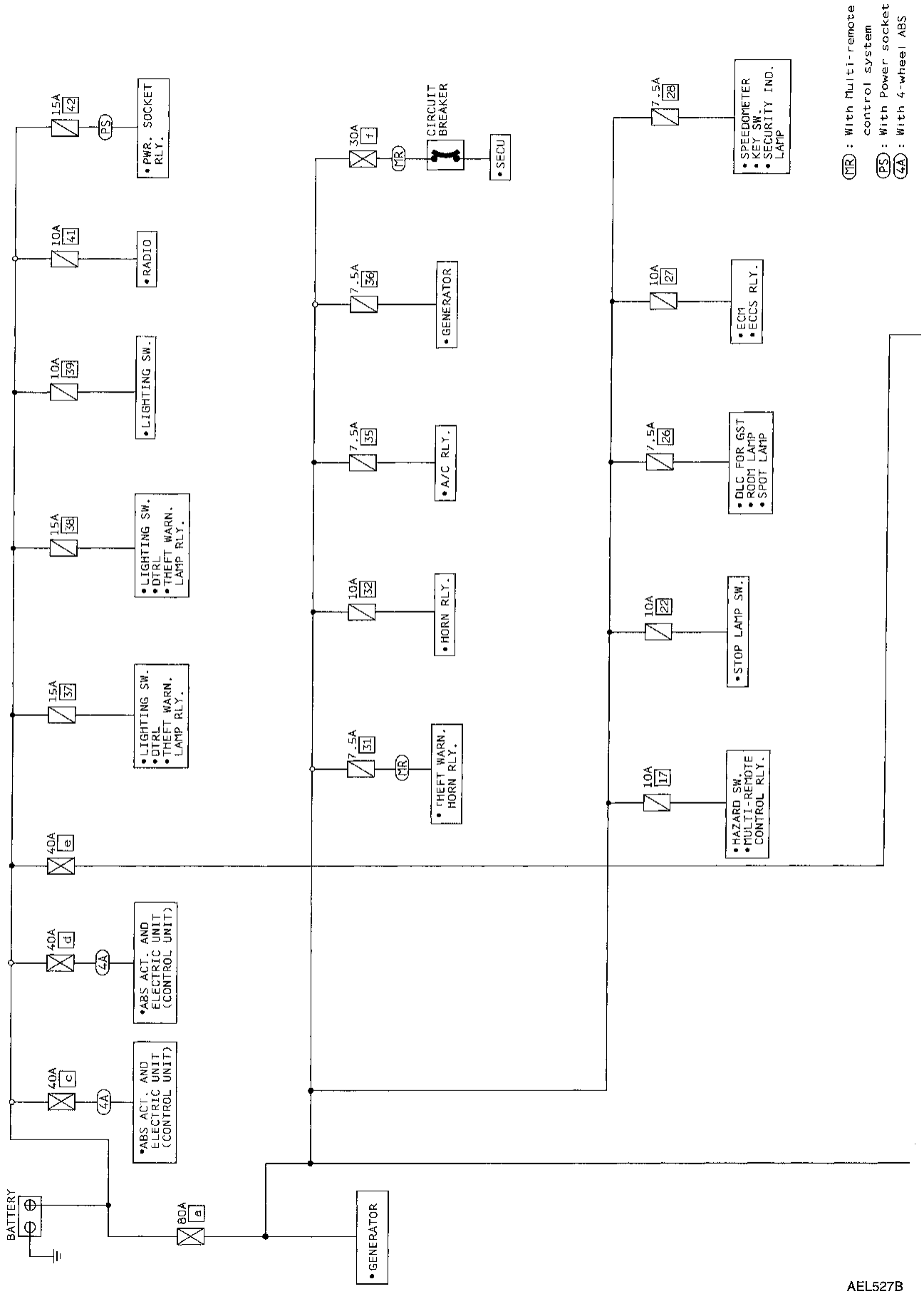

AEL527B

Simpo PDF Merge and Split Unregistered Version - http://www.simpopdf.com

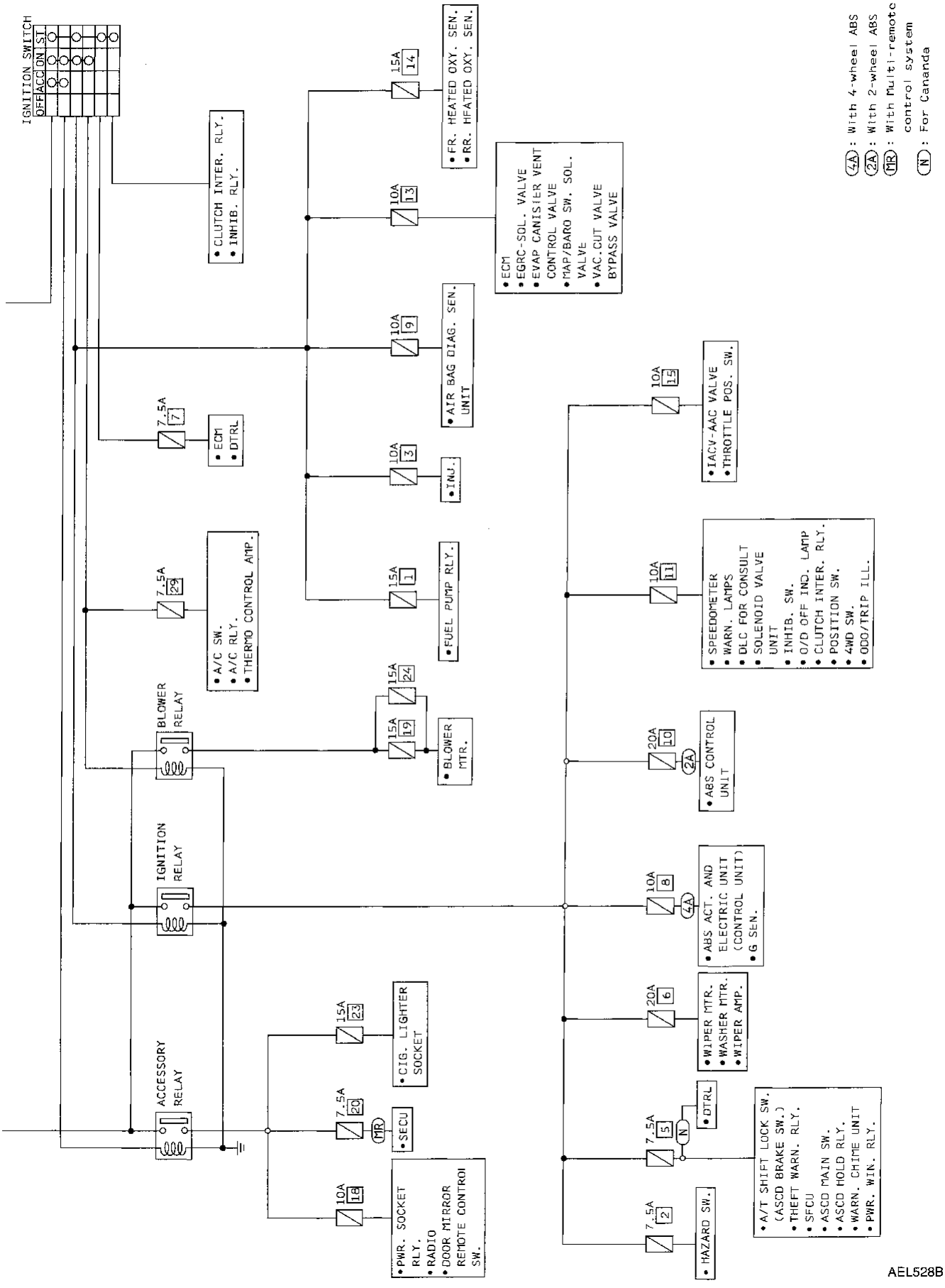

AEL528B

Simpo PDF Merge and Split Unregistered Version - http://www.simpopdf.com

Wiring Diagram — POWER —

BATTERY POWER SUPPLY – IGNITION SW IN ANY POSITION

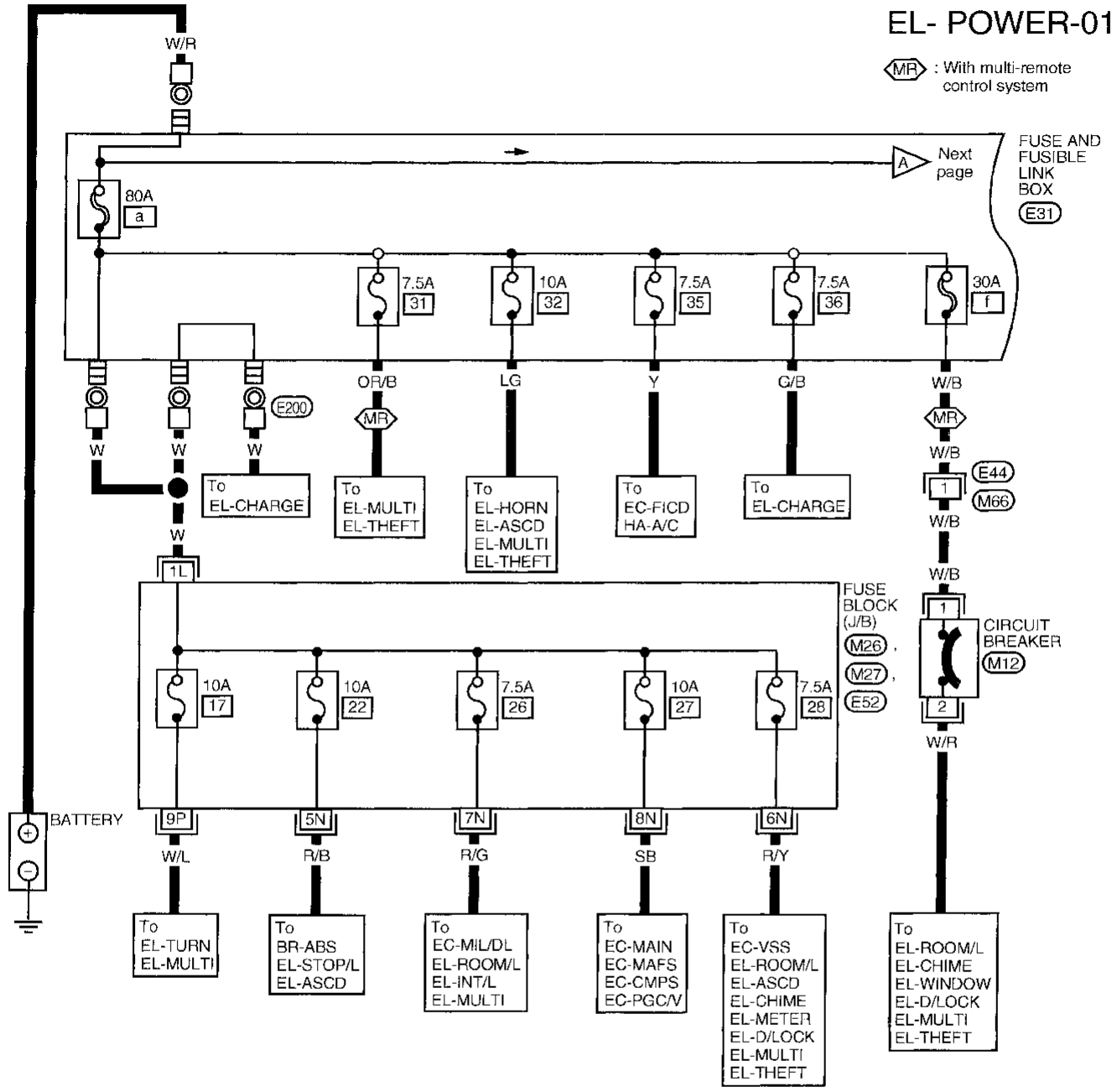

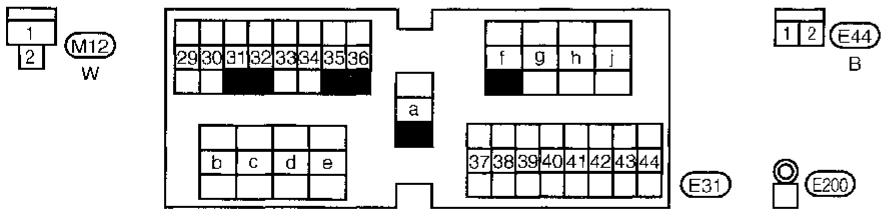

Refer to last page (Foldout page).

M26, M27, E52

1	6	11	16	21	25
2	7	12	17	22	26
3	8	13	18	23	27
4	9	14	19	24	
5	10	15	20		28

AEL529B

Wiring Diagram — POWER — (Cont'd)

Simpo PDF Merge and Split Unregistered Version - http://www.simpopdf.com

EL- POWER-02

4A : With 4-wheel ABS
PS : With Power socket

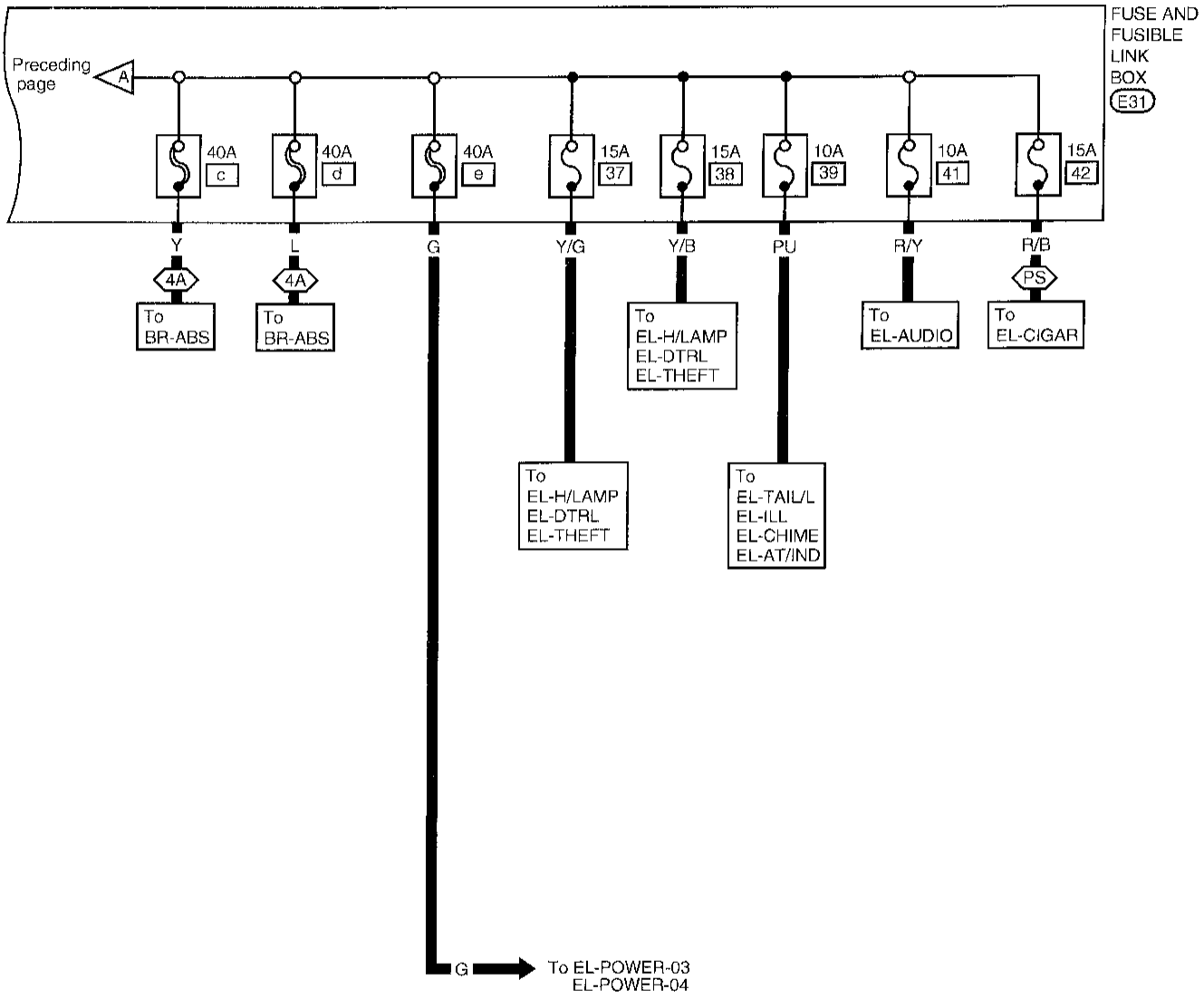

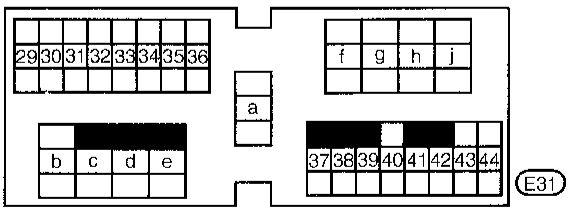

AEL530B

Wiring Diagram — POWER — (Cont'd)

Simpo PDF Merge and Split Unregistered Version - http://www.simpopdf.com

ACCESSORY POWER SUPPLY — IGNITION SW IN "ACC" OR "ON"

EL- POWER-03

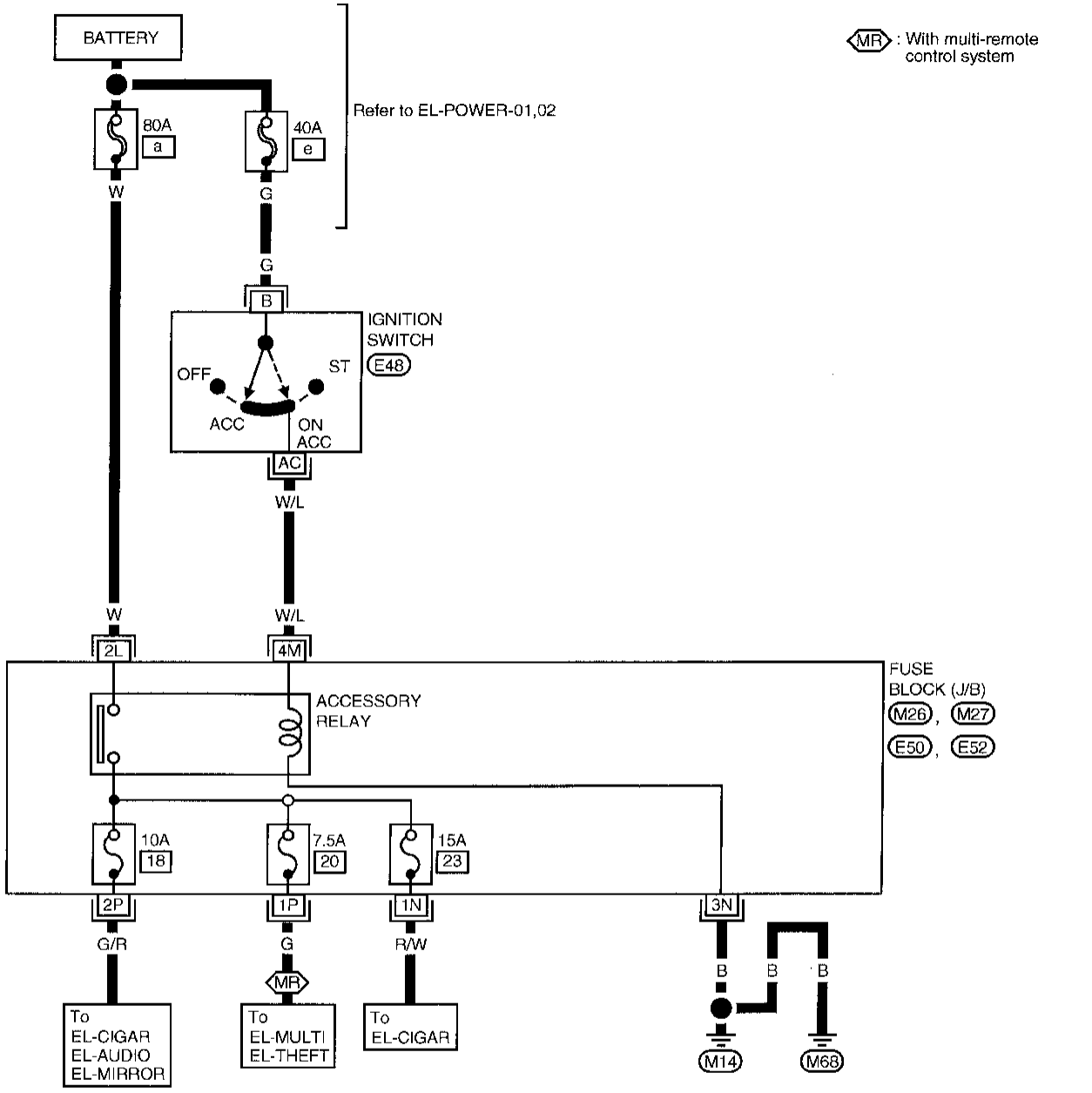



Refer to last page (Foldout page).

M26, M27, E50, E52

1	6	11	16	21	25
2	7	12	17	22	26
3	8	13	18	23	27
4	9	14	19	24	
5	10	15	20		28

AEL531B

Wiring Diagram — POWER — (Cont'd)

Simpo PDF Merge and Split Unregistered Version - http://www.simpopdf.com

IGNITION POWER SUPPLY – IGNITION SW IN "ON" AND/OR "START"

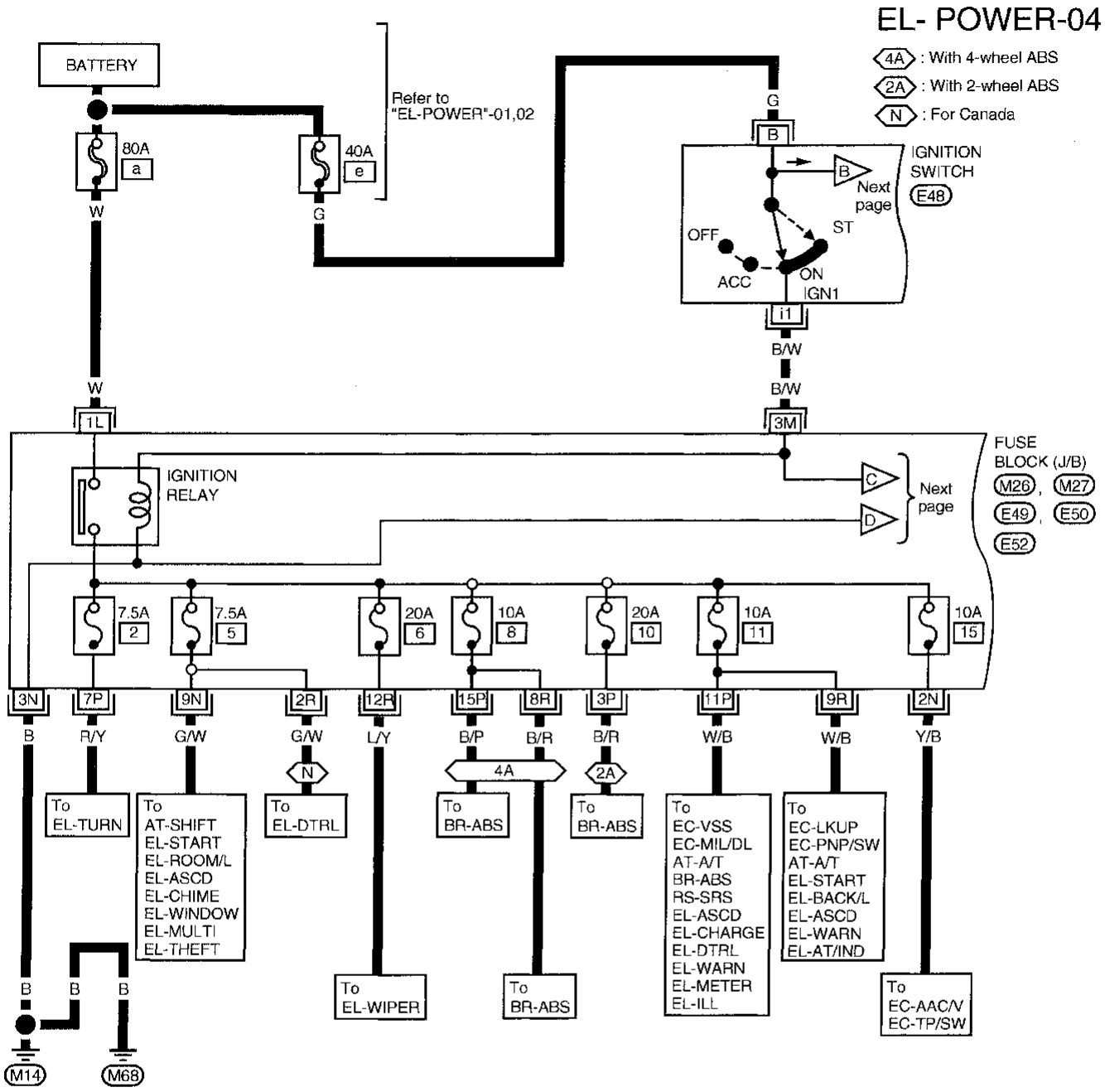



Refer to last page (Foldout page).

M26, M27, E49, E50, E52

1	6	11	16	21	25
2	7	12	17	22	26
3	8	13	18	23	27
4	9	14	19	24	
5	10	15	20		28

AEL532B

Wiring Diagram — POWER — (Cont'd)

Simpo PDF Merge and Split Unregistered Version - http://www.simpopdf.com

EL- POWER-05

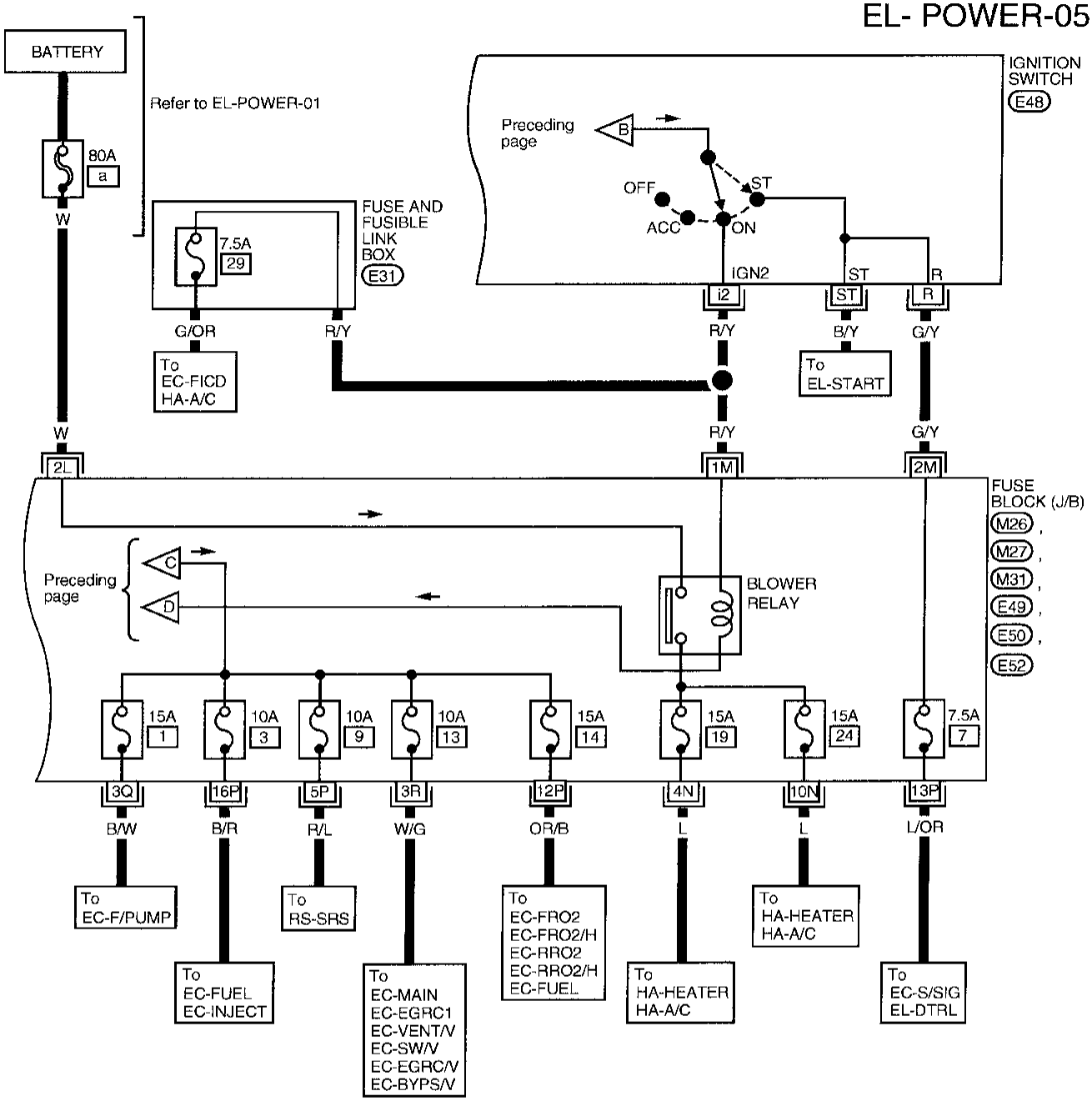

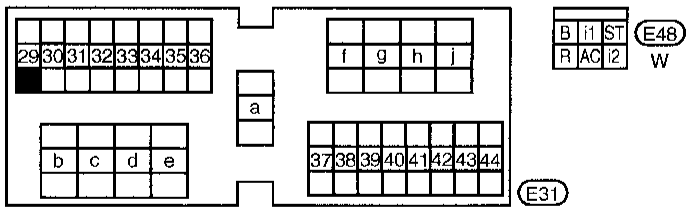

Refer to last page (Foldout page).

M26, M27, M31, E49, E50, E52

1	6	11	16	21	25
2	7	12	17	22	26
3	8	13	18	23	27
4	9	14	19	24	
5	10	15	20		28

AEL533B

Simpo PDF Merge and Split Unregistered Version - http://www.simpopdf.com

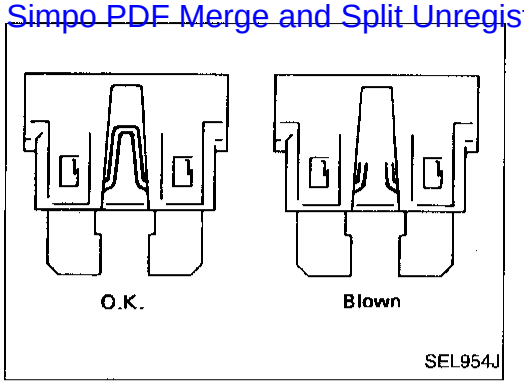

Fuse

a. **If fuse is blown, be sure to eliminate cause of problem before installing new fuse.**
b. **Use fuse of specified rating. Never use fuse of more than specified rating.**
c. **Do not partially install fuse; always insert it into fuse holder properly.**
d. **Remove fuse for "ELECTRICAL PARTS (BAT)" if vehicle is not used for a long period of time.**

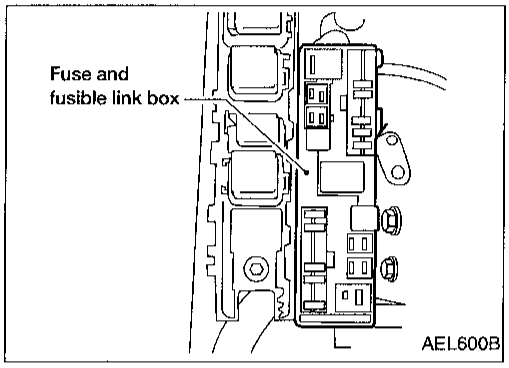

Fusible Link

A melted fusible link can be detected either by visual inspection or by feeling with finger tip. If its condition is questionable, use circuit tester or test lamp.

CAUTION:

- **If fusible link should melt, it is possible that critical circuit (power supply or large current carrying circuit) is shorted. In such a case, carefully check and eliminate cause of problem.**
- **Never wrap outside of fusible link with vinyl tape. Important: Never let fusible link touch any other wiring harness, vinyl or rubber parts.**

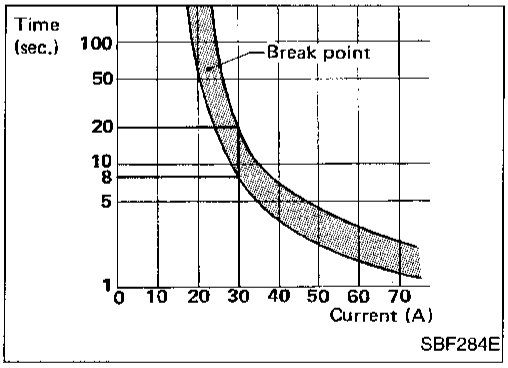

Circuit Breaker Inspection

For example, when current is 30A, the circuit is broken within 8 to 20 seconds.

Circuit breakers are used in the following systems.

- Power window & power door lock
- Multi-remote control system
- Theft warning system
- Warning chime (with power door locks)
- Room lamp (with power door locks)

Simpo PDF Merge and Split Unregistered Version - http://www.simpopdf.com

GROUND	CONNECT TO	CONN. NO.	CELL CODE
M14/M68	A/T DEVICE	M35	AT-SHIFT
	ABS CHECK CONNECTOR	M25	BR-ABS
	ASCD CONTROL UNIT	M33	EL-ASCD
	ASCD HOLD RELAY	M34	EL-ASCD
	ASCD MAIN SWITCH	M29	EL-ASCD
	CIGARETTE LIGHTER SOCKET	M52	EL-CIGAR
	CLUTCH INTERLOCK SWITCH	M5	EL-START
	COMBINATION FLASHER UNIT	M45	EL-TURN
	COMBINATION METER (A/T INDICATOR)	M41	EL-AT/IND
	COMBINATION METER (ABS WARNING LAMP)	M39	BR-ABS, EL-WARN
	COMBINATION METER (AIR BAG WARNING LAMP)	M38	RS-SRS, EL-WARN
	COMBINATION METER (CRUISE INDICATOR LAMP)	M39	EL-ASCD
	COMBINATION METER (FOUR WHEEL DRIVE INDICATOR)	M39	EL-WARN
	COMBINATION METER (FUEL GAUGE)	M38	EL-METER
	COMBINATION METER (HIGH BEAM INDICATOR)	M38	EL-H/LAMP, EL-DTRL
	COMBINATION METER (SPEEDOMETER)	M38	EC-VSS, EL-ASCD, EL-METER
	COMBINATION METER (TURN SIGNAL INDICATOR)	M39	EL-TURN
	COMBINATION METER (WATER TEMPERATURE GAUGE)	M38	EL-METER
	DATA LINK CONNECTOR FOR GST	M32	EC-MIL/DL
	DOOR MIRROR REMOTE CONTROL SWITCH	M72	EL-MIRROR
	DOOR SWITCH LH	M20	EL-ROOM/L, EL-CHIME, EL-D/LOCK, EL-THEFT, EL-MULTI, RS-SRS
	FAN SWITCH	M57	HA-HEATER, HA-A/C
	ILLUMINATION CONTROL SWITCH	M28	EL-ILL
	OVERDRIVE CONTROL SWITCH	M36	AT-A/T
	POWER SOCKET	M54	EL-CIGAR
	POWER WINDOW RELAY	M13	EL-WINDOW
	SEAT BELT BUCKLE SWITCH	M19	EL-CHIME, EL-WARN
	SMART ENTRANCE CONTROL UNIT	M10	EL-ROOM/L, EL-CHIME, EL-D/LOCK, EL-THEFT, EL-MULTI
	WARNING CHIME UNIT	M11	EL-CHIME
	ABS ACTUATOR	C4	BR-ABS
	FUEL TANK GAUGE UNIT	C5	EL-WARN, EL-METER
	FUEL TANK GAUGE UNIT (FUEL PUMP)	C5	EC-F/PUMP
	FUEL TANK GAUGE UNIT (TANK FUEL TEMPERATURE SENSOR)	C5	EC-TFTS
	LICENSE PLATE LAMP LH	T2	EL-TAIL/L
	LICENSE PLATE LAMP RH	T3	EL-TAIL/L
	REAR COMBINATION LAMP LH (BACK-UP LAMP)	T1	EL-BACK/L
	REAR COMBINATION LAMP LH (STOP LAMP)	T1	EL-STOP/L
	REAR COMBINATION LAMP LH (TAIL LAMP)	T1	EL-TAIL/L
	REAR COMBINATION LAMP LH (TURN SIGNAL LAMP)	T1	EL-TURN
	REAR COMBINATION LAMP RH (BACK-UP LAMP)	T5	EL-BACK/L
	REAR COMBINATION LAMP RH (STOP LAMP)	T5	EL-STOP/L
	REAR COMBINATION LAMP RH (TAIL LAMP)	T5	EL-TAIL/L
	REAR COMBINATION LAMP RH (TURN SIGNAL LAMP)	T5	EL-TURN
	HIGH-MOUNTED STOP LAMP	R3	EL-STOP/L
	ROOM LAMP	R4	EL-ROOM/L, EL-MULTI

Simpo PDF Merge and Split Unregistered Version - http://www.simpopdf.com

GROUND	CONNECT TO	CONN. NO.	CELL CODE
M14/M68	SPOT LAMP	R2	EL-INT/L
	DOOR KEY CYLINDER SWITCH LH	D9	EL-D/LOCK, EL-THEFT
	DOOR KEY CYLINDER SWITCH RH	D24	EL-D/LOCK, EL-THEFT
	DOOR LOCK ACTUATOR LH (DOOR UNLOCK SENSOR)	D8	EL-THEFT, EL-D/LOCK, EL-MULTI, EL-ROOM/L
	DOOR LOCK ACTUATOR RH (DOOR UNLOCK SENSOR)	D23	EL-THEFT, EL-D/LOCK, EL-MULTI
	DOOR LOCK AND UNLOCK SWITCH RH	D21	EL-D/LOCK
	MAIN POWER WINDOW AND DOOR LOCK/ UNLOCK SWITCH	D7	EL-WINDOW, EL-D/LOCK
	AIR BAG CUT-OFF INDICATOR	Z2	RS-SRS
	AIR BAG CUT-OFF SWITCH	Z3	RS-SRS
	AIR BAG DIAGNOSIS SENSOR UNIT	Z6	RS-SRS
M22	ABS CONTROL UNIT (2-WHEEL ABS)	M23	BR-ABS
	SHIELD WIRE [(REAR SENSOR) 2-WHEEL ABS]	C6	BR-ABS
E12/E54	THEFT WARNING RELAY	M6	EL-START
	ABS ACTUATOR AND ELECTRIC UNIT (CONTROL UNIT) (4-WHEEL ABS)	E39	BR-ABS
	BRAKE FLUID LEVEL SWITCH	E37	BR-ABS, EL-WARN
	DAYTIME LIGHT CONTROL UNIT	E17	EL-DTRL
	FRONT COMBINATION LAMP LH (PARKING LAMP)	E13	EL-TAIL/L
	FRONT COMBINATION LAMP LH (TURN SIGNAL LAMP)	E13	EL-TURN
	FRONT COMBINATION LAMP RH (PARKING LAMP)	E19	EL-TAIL/L
	FRONT COMBINATION LAMP RH (TURN SIGNAL LAMP)	E19	EL-TURN
	HEADLAMP LH	E7	EL-H/LAMP, EL-THEFT
	HEADLAMP RH	E1	EL-H/LAMP, EL-DTRL, EL-THEFT
	HOOD SWITCH	E9	EL-THEFT
	INHIBITOR RELAY	E27	EC-PNP/SW, AT-A/T, EL-START
	NEUTRAL POSITION SWITCH	E218	EC-PNP/SW
	PARK/NEUTRAL POSITION RELAY	E21	EL-ASCD
	POWER SOCKET RELAY	E26	EL-CIGAR
	THEFT WARNING HORN RELAY	E20	EL-THEFT, EL-MULTI
	WASHER FLUID LEVEL SWITCH	E5	EL-WARN
	WIPER AMPLIFIER	E40	EL-WIPER
	WIPER MOTOR	E42	EL-WIPER
	WIPER SWITCH	E46	EL-WIPER
E14	ABS ACTUATOR AND ELECTRIC UNIT (CONTROL UNIT) (4-WHEEL ABS)	E39	BR-ABS
	SHIELD WIRE (FRONT WHEEL SENSOR LH)	E16	BR-ABS
	SHIELD WIRE (FRONT WHEEL SENSOR RH)	E2	BR-ABS
	SHIELD WIRE [(REAR SENSOR) 4-WHEEL ABS]	C12	BR-ABS
E203	GENERATOR	E206	EL-CHARGE

Simpo PDF Merge and Split Unregistered Version - http://www.simpopdf.com

GROUND	CONNECT TO	CONN. NO.	CELL CODE
F11/F12	DATA LINK CONNECTOR FOR CONSULT	M24	EC-MIL/DL
	DATA LINK CONNECTOR FOR GST	M32	EL-MIL/DL
	SHIELD WIRE (REAR HEATED OXYGEN SENSOR)	M21	EC-RRO2, EC-RRO2/H
	SHIELD WIRE [CRANKSHAFT POSITION SENSOR (OBD)]	E211	EC-CKPS
	DISTRIBUTOR	F13	EC-IGN/SG
	DISTRIBUTOR (CAMSHAFT POSITION SENSOR)	F13	EC-CMPS
	ECM	F29	EC-MAIN, AT-A/T, EC-FRO2, EC-FRO2/H, EC-RRO2, EC-RRO2/H, EC-FUEL
	IACV-FICD SOLENOID VALVE	F7	EC-FICD, HA-A/C
	SHIELD WIRE (ABSOLUTE PRESSURE SENSOR)	F23	EC-AP/SEN
	SHIELD WIRE (CAMSHAFT POSITION SENSOR)	F13	EC-CMPS
	SHIELD WIRE (FRONT HEATED OXYGEN SENSOR)	F16	EC-FRO2, EC-FRO2/H, EC-FUEL
	SHIELD WIRE (KNOCK SENSOR)	F2	EC-KS
	SHIELD WIRE (MASS AIR FLOW SENSOR)	F1	EC-MAFS
	SHIELD WIRE (RESISTOR)	F14	EC-IGN/SG
	SHIELD WIRE (THROTTLE POSITION SENSOR)	F3	EC-TPS, AT-A/T
	SHIELD WIRE (EVAP CONTROL SYSTEM PRESSURE SENSOR)	C7	EC-PRE/SE

Simpo PDF Merge and Split Unregistered Version - http://www.simpopdf.com

CAUTION:
If it becomes necessary to start the engine with a booster battery and jumper cables:
- **Use a 12-volt booster battery.**
- **After connecting battery cables, ensure that they are tightly clamped to battery terminals for good contact.**
- **Never add distilled water through the hole used to check specific gravity.**

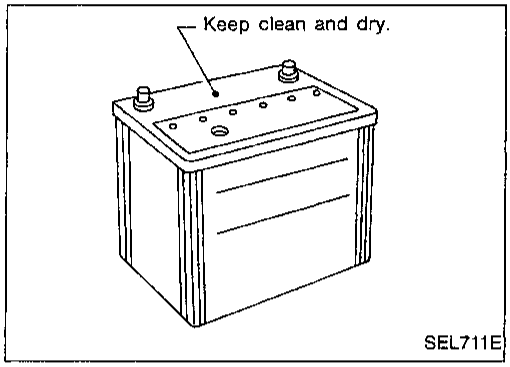

How to Handle Battery

METHODS OF PREVENTING OVER-DISCHARGE

The following precautions must be taken to prevent over-discharging a battery.
- The battery surface (particularly its top) should always be kept clean and dry.
- The terminal connections should be clean and tight.
- At every routine maintenance, check the electrolyte level.

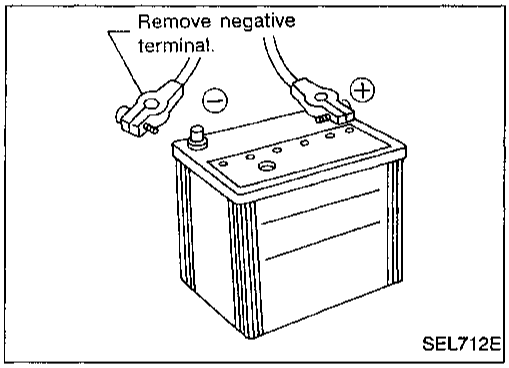

- When the vehicle is not going to be used over a long period of time, disconnect the negative battery terminal. (If the vehicle has an extended storage switch, turn it off.)

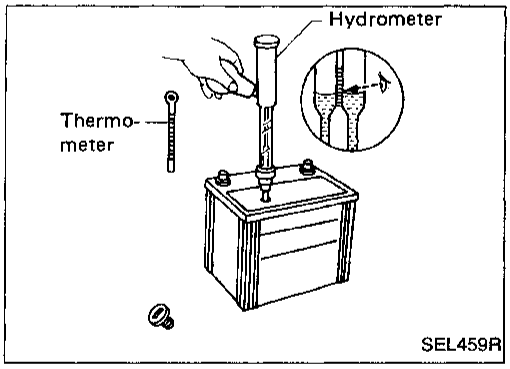

- Check the charge condition of the battery.
  Periodically check the specific gravity of the electrolyte. Keep a close check on charge condition to prevent overdischarge.

Simpo PDF Merge and Split Unregistered Version - http://www.simpopdf.com

How to Handle Battery (Cont'd)

CHECKING ELECTROLYTE LEVEL

WARNING:

Do not allow battery fluid to come in contact with skin, eyes, fabrics, or painted surfaces. After touching a battery, do not touch or rub your eyes until you have thoroughly washed your hands. If the acid contacts the eyes, skin or clothing, immediately flush with water for 15 minutes and seek medical attention.

Normally the battery does not require additional water. However, when the battery is used under severe conditions, adding distilled water may be necessary during the battery life.

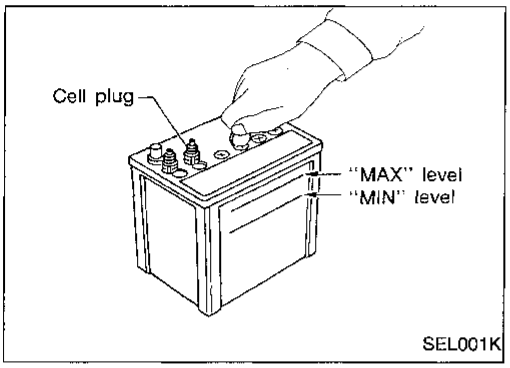

- Remove the cell plug using a suitable tool.
- Add distilled water up to the MAX level.

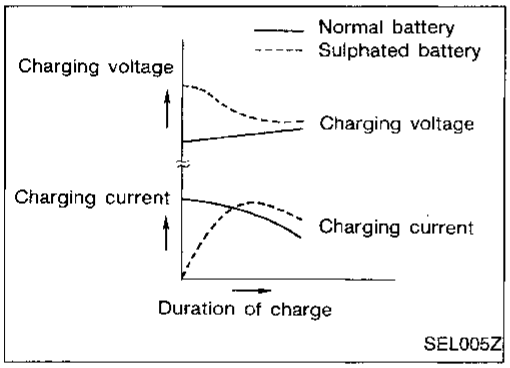

SULPHATION

A battery will be completely discharged if it is left unattended for a long time and the specific gravity becomes less than 1.100. This may result in sulphation on the cell plates.

To determine if a battery has been "sulphated", note its voltage and current when charging it. As shown in the figure, less current and higher voltage are observed in the initial stage of charging sulphated batteries.

A sulphated battery may sometimes be brought back into service by means of a long, slow charge, 12 hours or more, followed by a battery capacity test.

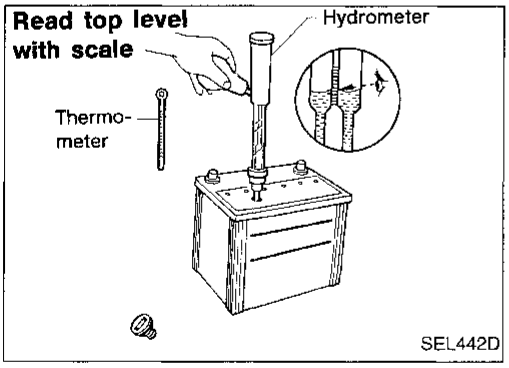

SPECIFIC GRAVITY CHECK

1. Read hydrometer and thermometer indications at eye level.

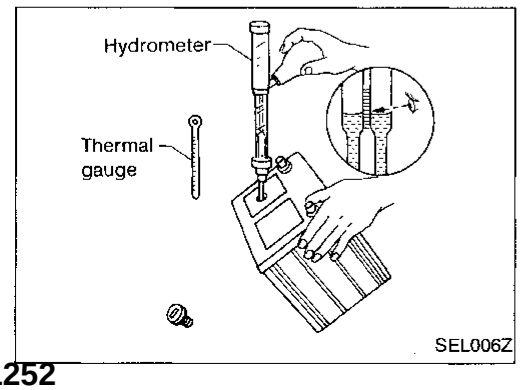

- When electrolyte level is too low, tilt battery case to raise it for easy measurement.

How to Handle Battery (Cont'd)

Simpo PDF Merge and Split Unregistered Version - http://www.simpopdf.com

2. Use the chart below to correct your hydrometer reading according to electrolyte temperature.

Hydrometer temperature correction

Battery electrolyte temperature °C (°F)	Add to specific gravity reading
71 (160)	0.032
66 (150)	0.028
60 (140)	0.024
54 (129)	0.020
49 (120)	0.016
43 (110)	0.012
38 (100)	0.008
32 (90)	0.004
27 (80)	0
21 (70)	−0.004
16 (60)	−0.008
10 (50)	−0.012
4 (39)	−0.016
−1 (30)	−0.020
−7 (20)	−0.024
−12 (10)	−0.028
−18 (0)	−0.032

Corrected specific gravity	Approximate charge condition
1.260 - 1.280	Fully charged
1.230 - 1.250	3/4 charged
1.200 - 1.220	1/2 charged
1.170 - 1.190	1/4 charged
1.140 - 1.160	Almost discharged
1.110 - 1.130	Completely discharged

How to Handle Battery (Cont'd)

Simpo PDF Merge and Split Unregistered Version - http://www.simpopdf.com

CHARGING THE BATTERY

CAUTION:

- **Do not "quick charge" a fully discharged battery.**
- **Keep the battery away from open flame while it is being charged.**
- **When connecting the charger, connect the leads first, then turn on the charger. Do not turn on the charger first, as this may cause a spark.**
- **If battery electrolyte temperature rises above 60°C (140°F), stop charging. Always charge battery at a temperature below 60°C (140°F).**

Charging rates

Amps	Time
50	1 hour
25	2 hours
10	5 hours
5	10 hours

Do not charge at more than 50 ampere rate.

Note: The ammeter reading on your battery charger will automatically decrease as the battery charges. This indicates that the voltage of the battery is increasing normally as the state of charge improves. The charging amps indicated above refer to initial charge rate.

- If, after charging, the specific gravity of any two cells varies more than .050, the battery should be replaced.
- After the battery is charged, always perform a capacity test to assure that the battery is serviceable.

Service Data and Specifications (SDS)

Applied area		USA	Canada
Type		GR21	GR24
Capacity	V-AH	12-49	12-63
Cold cranking current (For reference value)	A	490	550

Simpo PDF Merge and Split Unregistered Version - http://www.simpopdf.com

System Description

M/T MODELS

Power is supplied at all times:
- through 40A fusible link (letter [e], located in the fuse and fusible link box)
- to ignition switch terminal (B).

With the ignition switch in the START position, power is supplied:
- through terminal (ST) of the ignition switch
- to clutch interlock relay terminal (5).

For models with theft warning system

With the ignition switch in the ON or START position, power is supplied:
- through 7.5A fuse [No. [5], located in the fuse block (J/B)]
- to theft warning relay terminal (2).

With the ignition switch in the ON or START position, power is supplied:
- through 10A fuse [No. [11], located in the fuse block (J/B)]
- to clutch interlock relay terminal (2).

If the theft warning system is triggered, terminal (1) of the theft warning relay is grounded through terminal (32) of the smart entrance control unit and ground to the clutch interlock relay is interrupted.

When the theft warning system is not operating and clutch pedal is depressed, ground is supplied:
- from clutch interlock switch terminal (2)
- to theft warning relay terminal (3)
- through theft warning relay terminal (4)
- to clutch interlock relay terminal (1).

For models without theft warning system

With the ignition switch in the ON or START position, power is supplied:
- through 10A fuse [No. [11], located in the fuse block (J/B)]
- to clutch interlock relay terminal (2).

When the clutch pedal is depressed, ground is supplied:
- from clutch interlock switch terminal (2)
- to clutch interlock relay terminal (1).

Ground is supplied to clutch interlock switch terminal (1) through body grounds (M14) and (M68).

The clutch interlock relay is energized and power is supplied:
- from terminal (3) of the clutch interlock relay
- to terminal (2) of the starter motor windings.

The starter motor plunger closes and provides a closed circuit between the battery and the starter motor. The starter motor is grounded to the engine block. With power and ground supplied, cranking occurs and the engine starts.

System Description (Cont'd)

Simpo PDF Merge and Split Unregistered Version - http://www.simpopdf.com

A/T MODELS

Power is supplied at all times:
- through 40A fusible link (letter [e], located in the fuse and fusible link box)
- to ignition switch terminal (B).

With the ignition switch in the START position, power is supplied:
- through terminal (ST) of the ignition switch
- to inhibitor relay terminal (5).

For models with theft warning system

With the ignition switch in the ON or START position, power is supplied:
- through 7.5A fuse [No. [5], located in the fuse block (J/B)]
- to theft warning relay terminal (2).

With the ignition switch in the ON or START position, power is supplied:
- through 10A fuse [No. [11], located in the fuse block (J/B)]
- to inhibitor switch terminal (1).

With the selector lever in the "P" or "N" position, power is supplied:
- from inhibitor switch terminal (2)
- to inhibitor relay terminal (2).

If the theft warning system is triggered, terminal (1) of the theft warning relay is grounded through terminal (32) of the smart entrance control unit and ground to the inhibitor relay is interrupted.

When the theft warning system is not operating, ground is supplied:
- from theft warning relay terminal (3)
- through theft warning relay terminal (4)
- to inhibitor relay terminal (1).

For models without theft warning system

With the ignition switch in the ON or START position, power is supplied:
- through 10A fuse [No. [11], located in the fuse block (J/B)]
- to inhibitor switch terminal (1).

With the selector lever in the "P" or "N" position, power is supplied:
- from inhibitor switch terminal (2)
- to inhibitor relay terminal (2).

Ground is supplied to inhibitor relay terminal (1) through body grounds (E12) and (E54).

The inhibitor relay is energized and power is supplied:
- from terminal (3) of the inhibitor relay
- to terminal (2) of the starter motor windings.

The starter motor plunger closes and provides a closed circuit between the battery and the starter motor. The starter motor is grounded to the engine block. With power and ground supplied, cranking occurs and the engine starts.

THEFT WARNING SYSTEM

The theft warning system will interrupt ground to clutch interlock relay (M/T models) or inhibitor relay (A/T models) if the system is triggered. The starter motor will then not crank, and the engine will not start. Refer to "THEFT WARNING SYSTEM" (EL-177).

Simpo PDF Merge and Split Unregistered Version - http://www.simpopdf.com

Wiring Diagram — START —

M/T MODELS

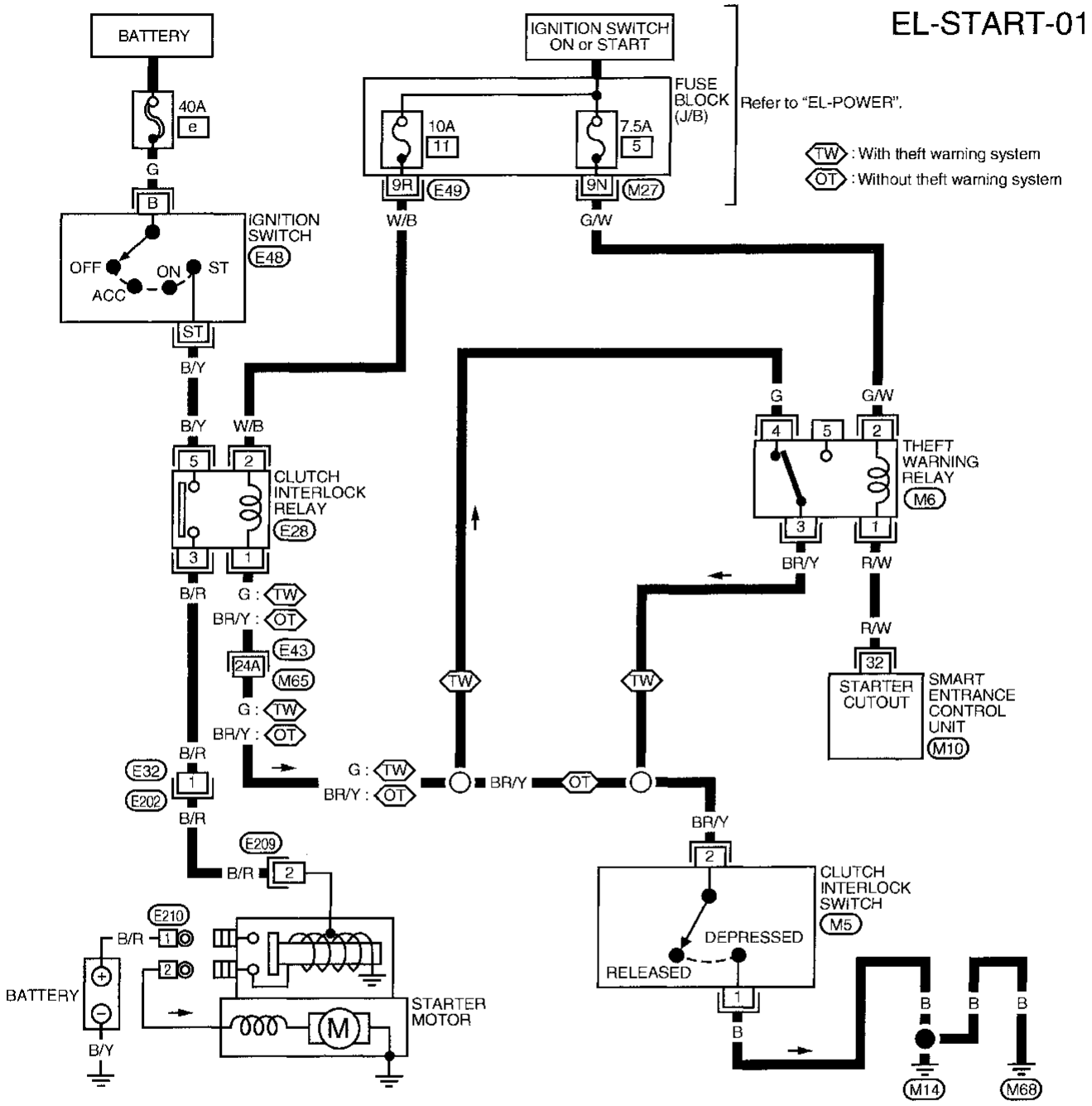

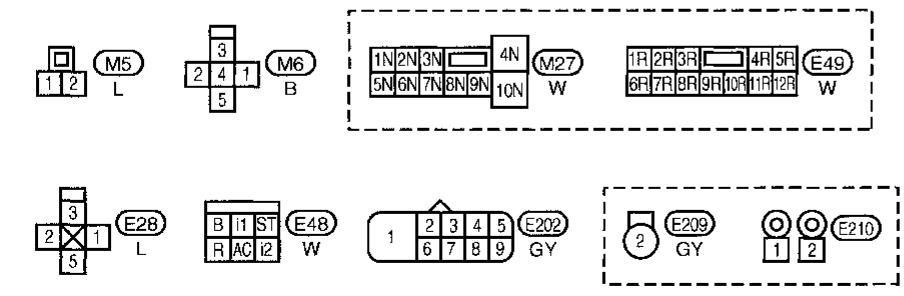

Refer to last page (Foldout page).
M65, E43
M10

AEL336B

Wiring Diagram — START — (Cont'd)

Simpo PDF Merge and Split Unregistered Version - http://www.simpopdf.com

A/T MODELS

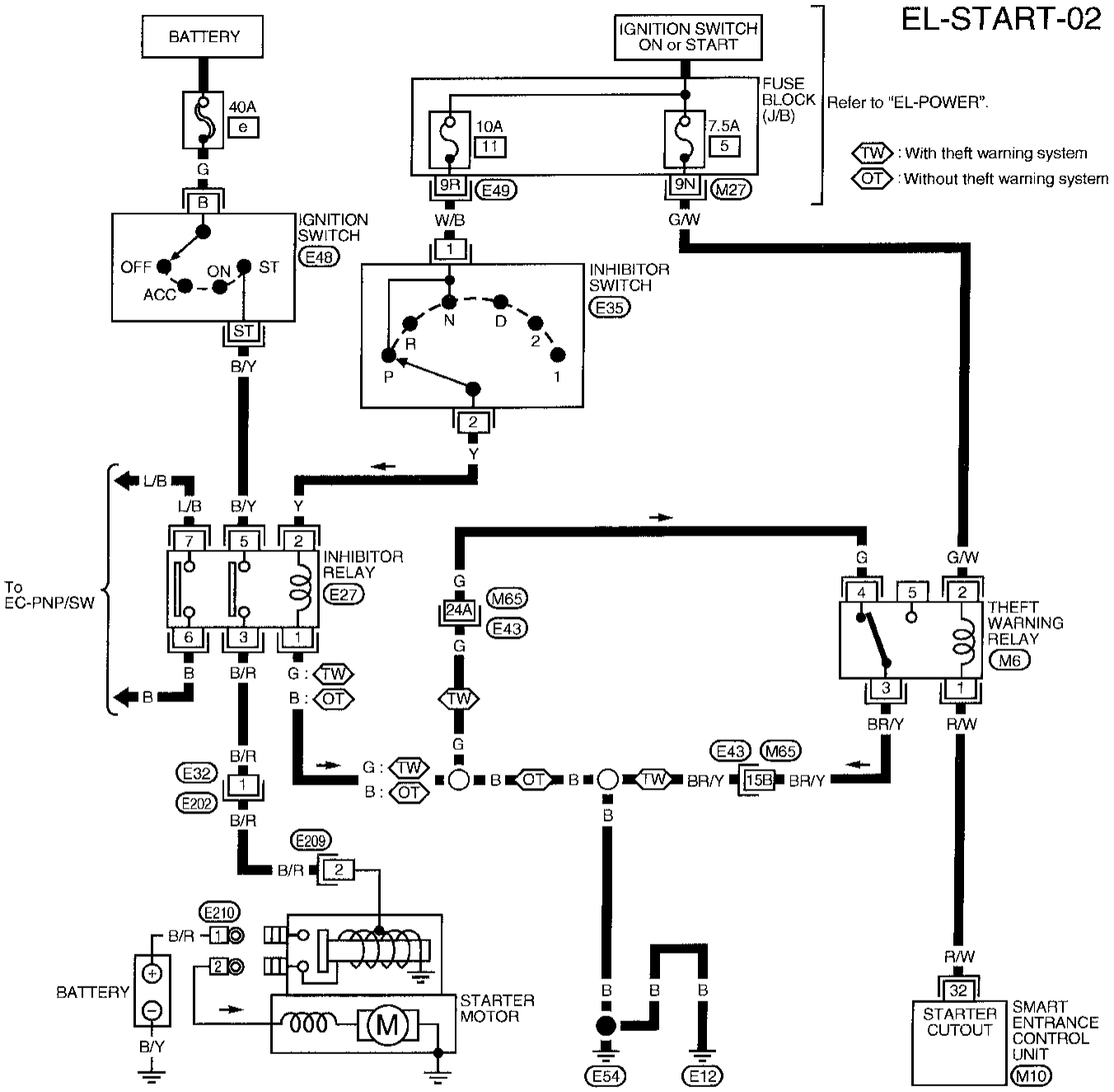

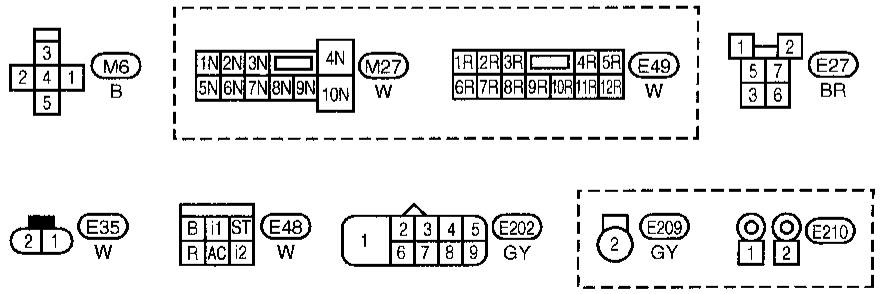

Refer to last page (Foldout page).
M65 , E43
M10

AEL337B

Simpo PDF Merge and Split Unregistered Version - http://www.simpopdf.com

Construction

CALIFORNIA, USA

SEC. 233
M003T70381ZC

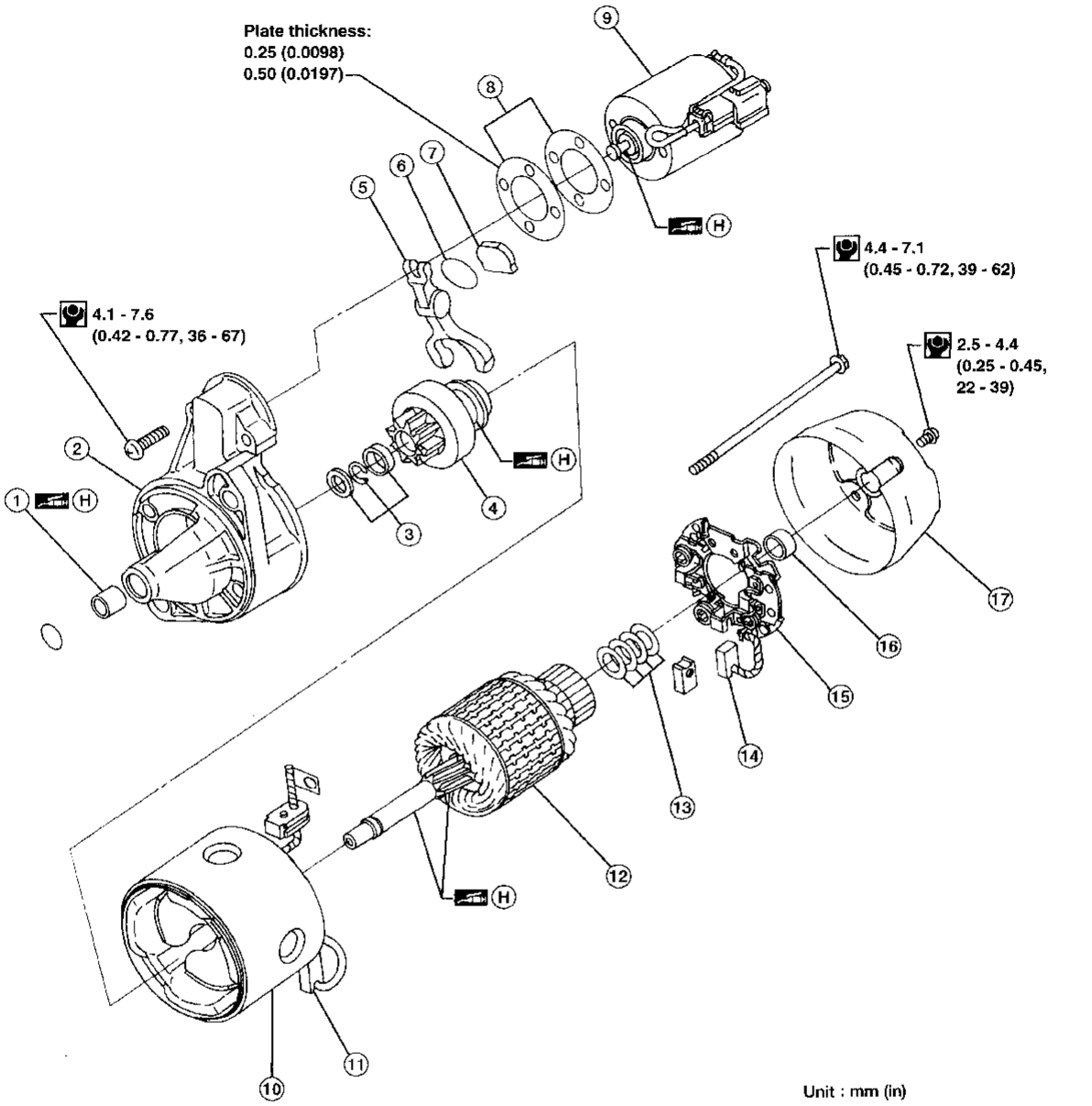

1. Sleeve bearing
2. Gear case
3. Pinion stopper set
4. Pinion assembly
5. Shift lever
6. Plate
7. Packing
8. Adjusting plate
9. Magnetic switch assembly
10. Yoke
11. Brush (+)
12. Armature
13. Washer
14. Brush (–)
15. Brush holder
16. Sleeve bearing
17. Rear cover

Construction (Cont'd)

Simpo PDF Merge and Split Unregistered Version - http://www.simpopdf.com

NON-CALIFORNIA, USA AND CANADA

SEC. 233
M000T60081AC

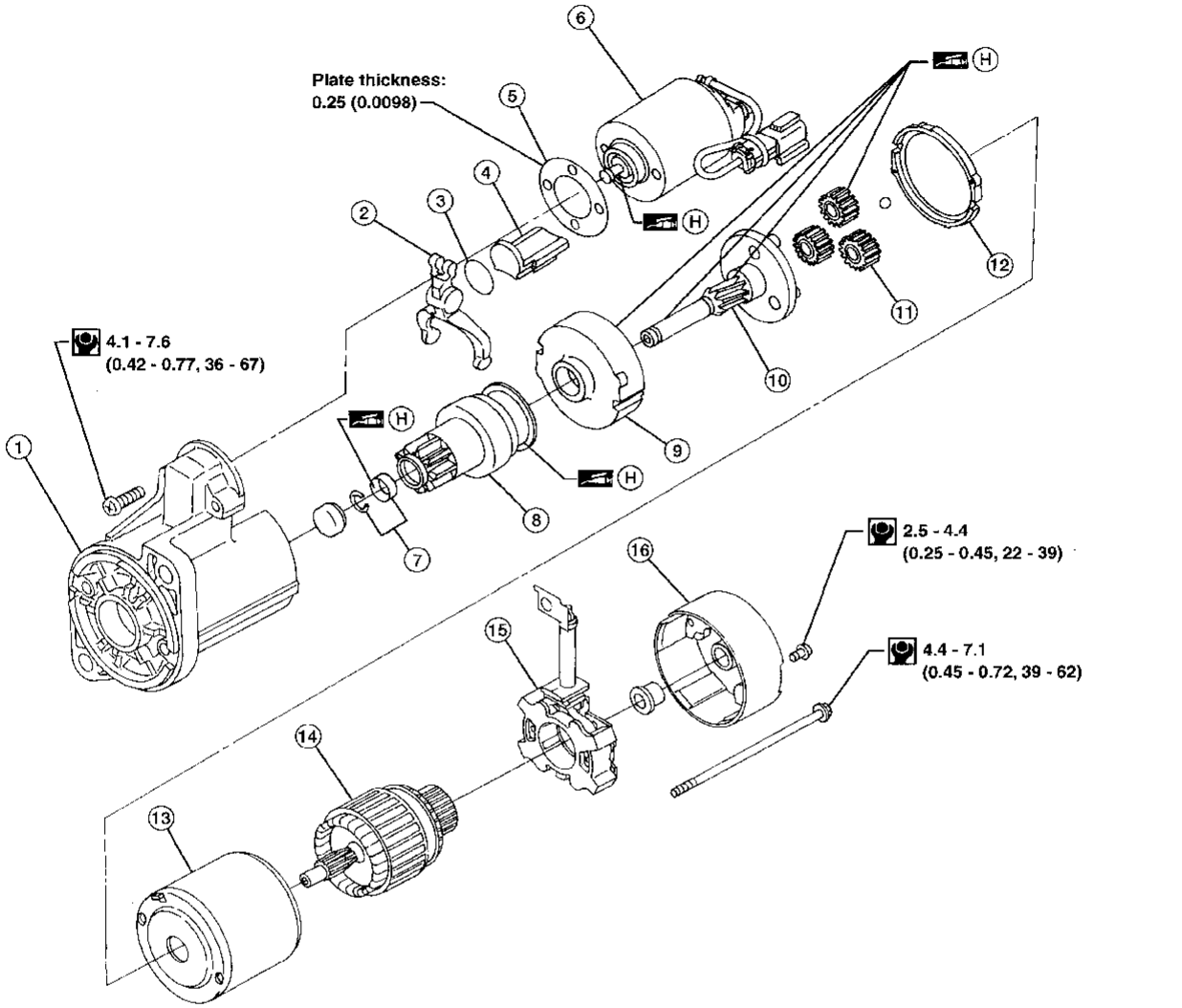

① Gear case
② Shift lever
③ Plate
④ Packing
⑤ Adjusting plate
⑥ Magnetic switch assembly
⑦ Pinion stopper set
⑧ Pinion assembly
⑨ Internal gear
⑩ Pinion shaft
⑪ Planetary gear
⑫ Packing
⑬ Yoke
⑭ Armature
⑮ Brush holder assembly
⑯ Rear cover

Simpo PDF Merge and Split Unregistered Version - http://www.simpopdf.com

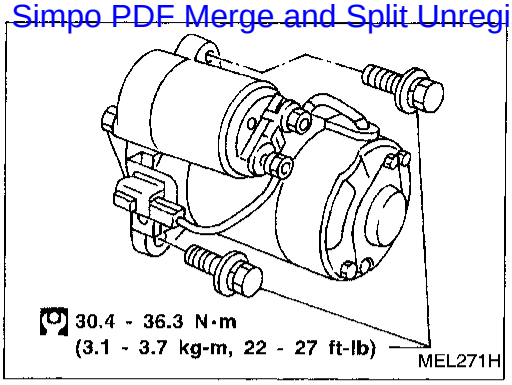

Removal and Installation

REMOVAL

1. Remove engine undercover.
2. Remove two bolts and starter.

INSTALLATION

To install, reverse the removal procedure.

Pinion/Clutch Check

1. Inspect pinion teeth.
- Replace pinion if teeth are worn or damaged. (Also check condition of ring gear teeth.)
2. Inspect reduction gear teeth.
- Replace reduction gear if teeth are worn or damaged. (Also check condition of armature shaft gear teeth.)
3. Check to see if pinion locks in one direction and rotates smoothly in the opposite direction.
- If it locks or rotates in both directions, or unusual resistance is evident, replace.

Service Data and Specifications (SDS)

STARTER

Type		M003T70381ZC	M000T60081AC
		MITSUBISHI	
		Non-reduction	Reduction
Applied model		California, USA	Non-California, USA and Canada
System voltage	V	12	
No-load			
Terminal voltage	V	11.5	11.0
Current	A	60 Max.	90 Max.
Motor revolution	rpm	6,500 Min.	2,500 Min.
Minimum diameter of commutator	mm (in)	31.4 (1.236)	28.8 (1.134)
Minimum length of brush	mm (in)	11.5 (0.453)	7.0 (0.276)
Brush spring tension	N (kg, lb)	13.7 - 25.5 (1.4 - 2.6, 3.1 - 5.7)	11.8 - 23.5 (1.20 - 2.40, 2.65 - 5.28)
Clearance of bearing metal and armature shaft	mm (in)	0.2 (0.008)	0.2 (0.008)
Clearance between pinion front edge and pinion stopper	mm (in)	0.5 - 2.0 (0.020 - 0.079)	0.5 - 2.0 (0.020 - 0.079)

Simpo PDF Merge and Split Unregistered Version - http://www.simpopdf.com

System Description

The generator provides DC voltage to operate the vehicle's electrical system and to keep the battery charged. The voltage output is controlled by the IC regulator.
Power is supplied at all times to generator terminal ④ through:

- 80A fusible link (letter [a], located in the fuse and fusible link box), and
- 7.5A fuse (No. [36], located in the fuse and fusible link box).

Terminal ① supplies power to charge the battery and operate the vehicle's electrical system. Output voltage is controlled by the IC regulator at terminal ④ detecting the input voltage. The charging circuit is protected by the 80A fusible link.
Terminal ② of the generator supplies ground through body ground (E203) .
With the ignition switch in the ON or START position, power is supplied:

- through 10A fuse [No. [11], located in the fuse block (J/B)]
- to combination meter terminal ㉙ for the charge warning lamp.

Ground is supplied to terminal ㉗ of the combination meter through terminal ③ of the generator. With power and ground supplied, the charge warning lamp will illuminate. When the generator is providing sufficient voltage with the engine running, the ground is opened and the charge warning lamp will not illuminate.
If the charge warning lamp illuminates with the engine running, a fault is indicated.

Simpo PDF Merge and Split Unregistered Version - http://www.simpopdf.com

Wiring Diagram — CHARGE —

EL-CHARGE-01

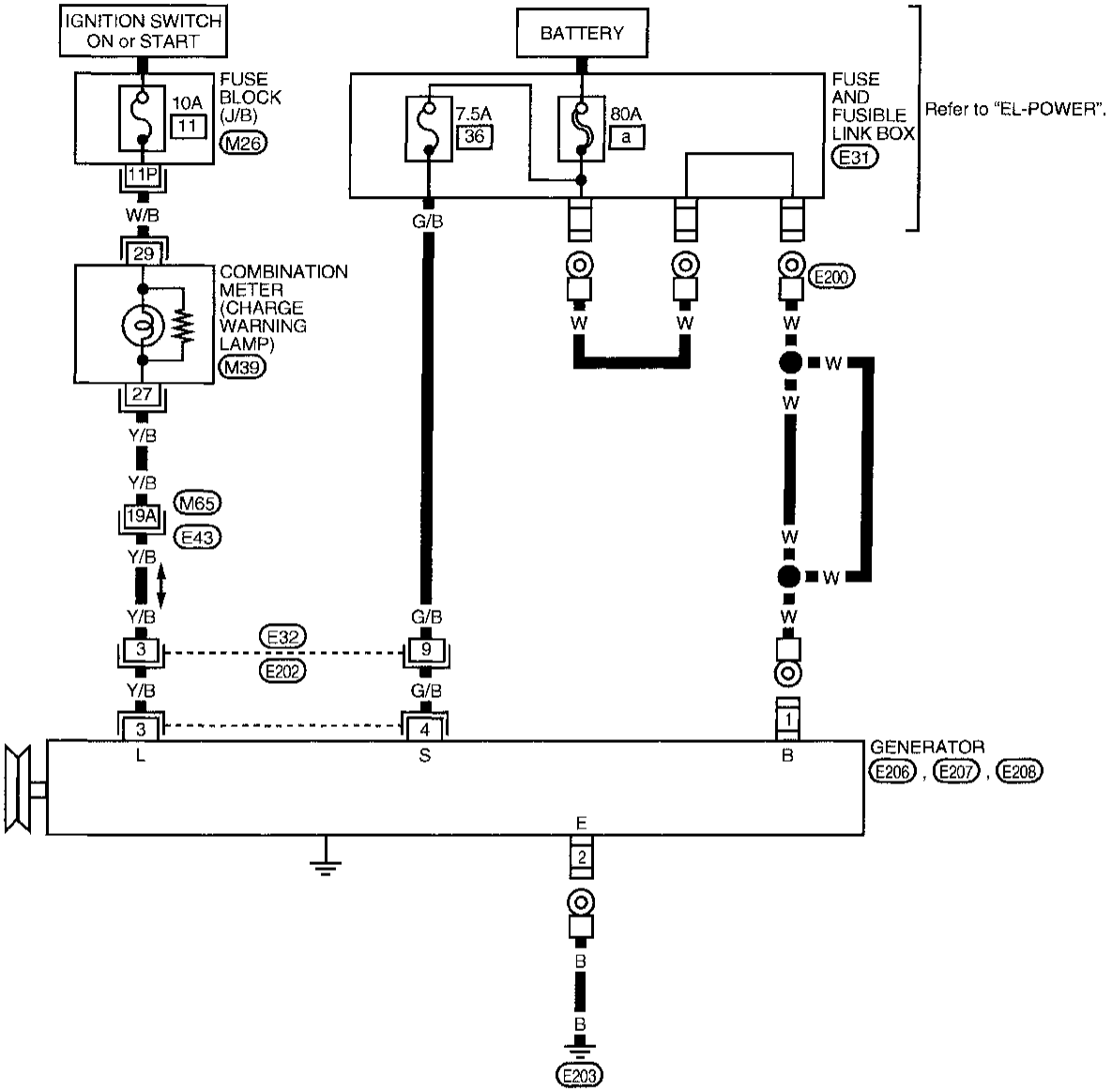

Refer to last page (Foldout page).
M65, E43
E31







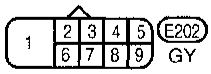

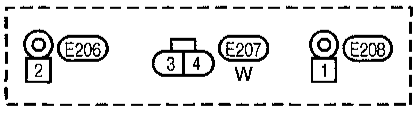

AEL338B

Simpo PDF Merge and Split Unregistered Version - http://www.simpopdf.com

Trouble Diagnoses

Before conducting a generator test, make sure that the battery is fully charged. A 30-volt voltmeter and suitable test probes are necessary for the test. The generator can be checked easily by referring to the Inspection Table.

- **Before starting, inspect the fusible link.**
- **Use fully charged battery.**

WITH IC REGULATOR

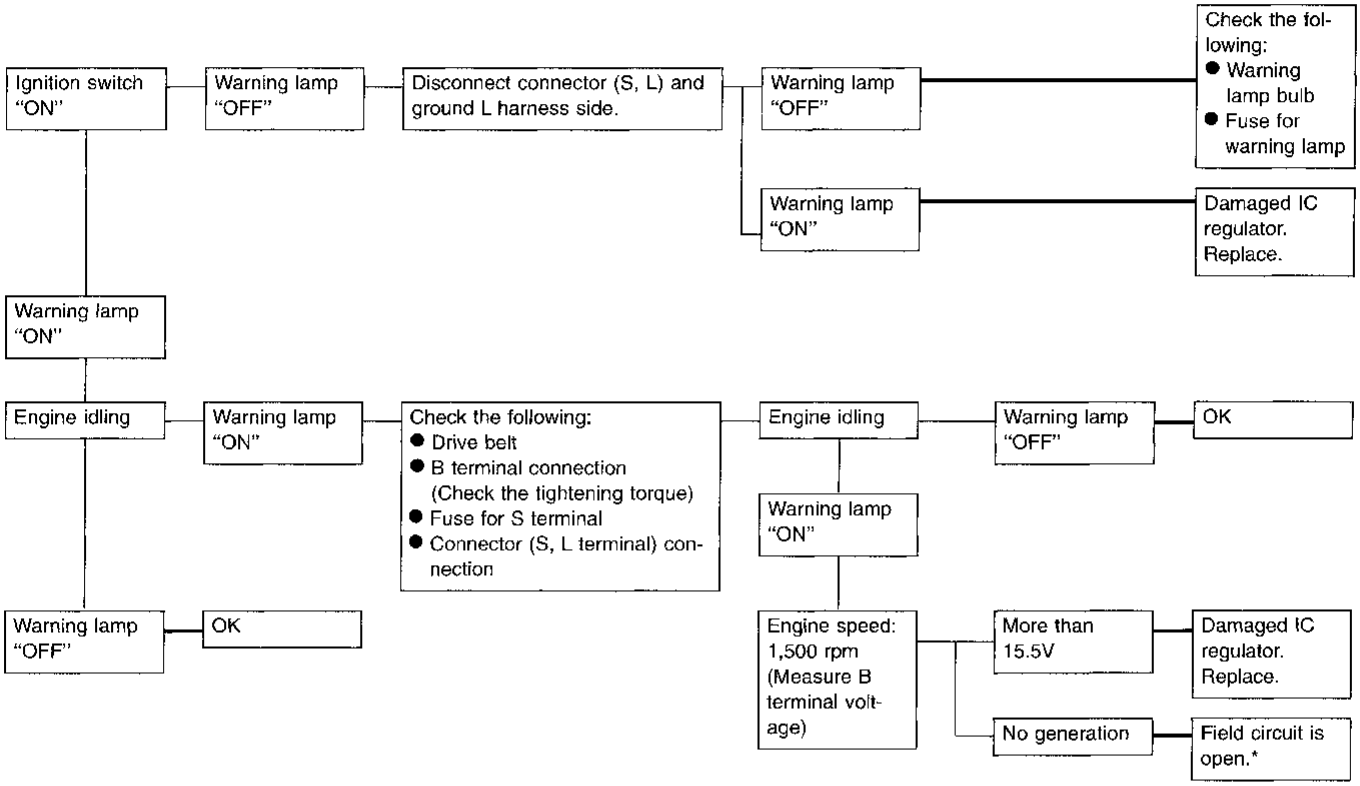

Warning lamp: "CHARGE" warning lamp in combination meter

Note:

★: When field circuit is open, check condition of rotor coil, rotor slip ring and brush. If necessary, replace faulty parts with new ones.

MALFUNCTION INDICATOR

The IC regulator warning function activates to illuminate "CHARGE" warning lamp, if any of the following symptoms occur while generator is operating:

- Excessive voltage is produced.
- No voltage is produced.

Simpo PDF Merge and Split Unregistered Version - http://www.simpopdf.com

Construction

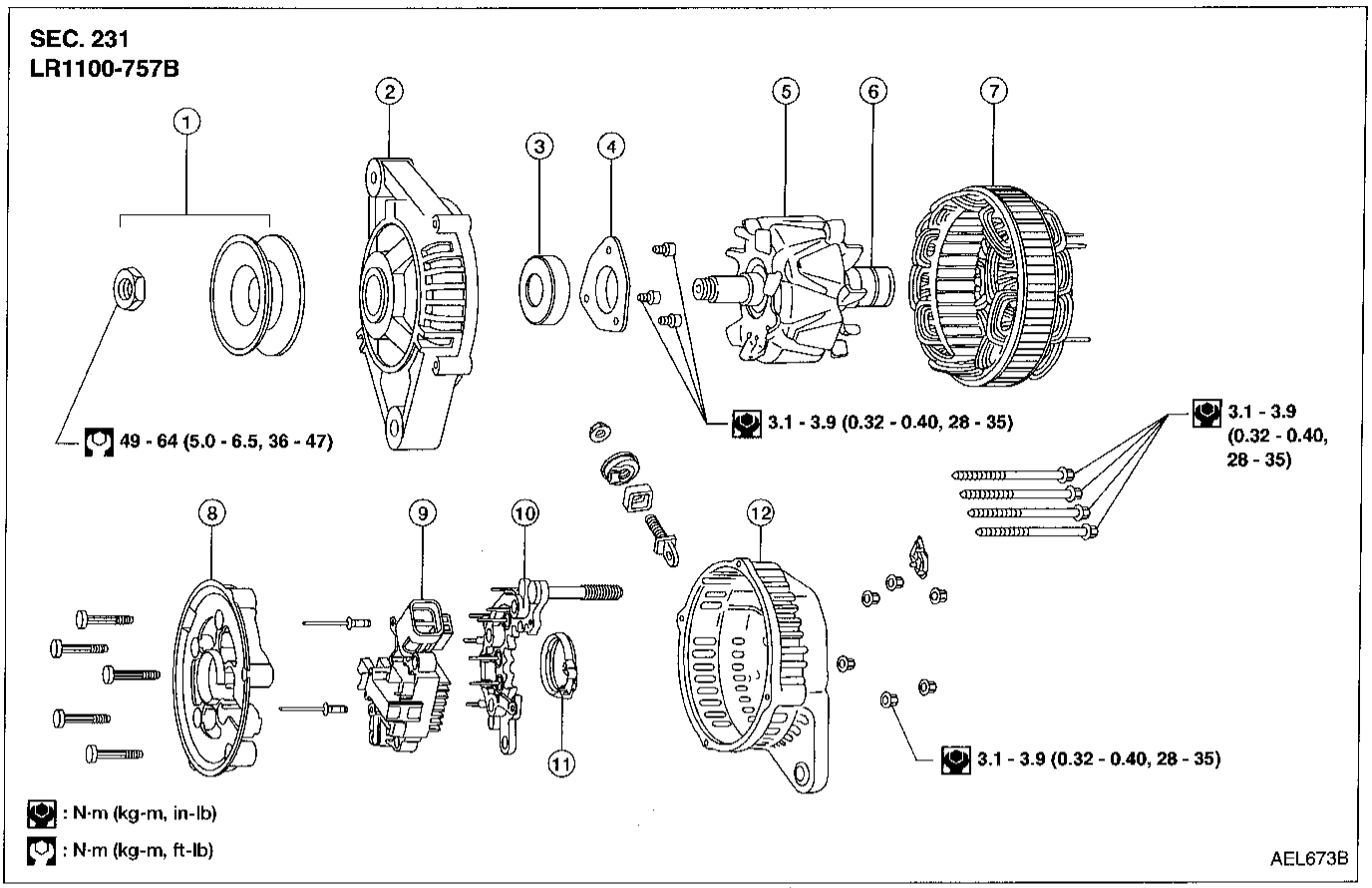

① Pulley assembly
② Front cover
③ Front bearing
④ Retainer
⑤ Rotor
⑥ Slip ring
⑦ Stator
⑧ Fan guide
⑨ IC regulator assembly
⑩ Diode assembly
⑪ Packing
⑫ Rear cover

Simpo PDF Merge and Split Unregistered Version - http://www.simpopdf.com

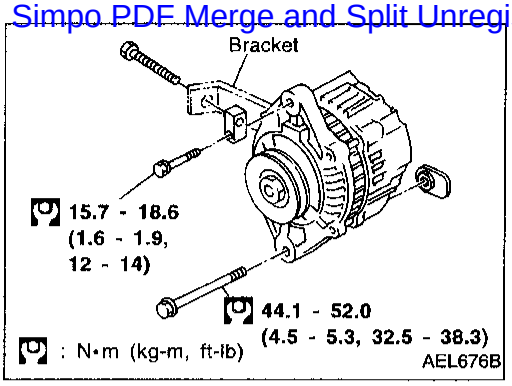

Removal and Installation

REMOVAL

1. Remove engine undercover.
2. Remove side splash shield.
3. Disconnect harness connectors.
4. Back off adjustment bolt, remove belt.
5. Remove two generator bolts and generator.

INSTALLATION

To install, reverse the removal procedure.

Service Data and Specifications (SDS)

GENERATOR

Type		LR1100-757B
		HAP
Nominal rating	V-A	12-70
Ground polarity		Negative
Minimum revolution under no-load (When 13.5 volts is applied)	rpm	Less than 1,000
Hot output current (When 13.5 volts is applied)	A/rpm	More than 17/1,300 More than 54/2,500 More than 72/5,000
Regulated output voltage	V	14.1 - 14.7
Minimum length of brush	mm (in)	6.00 (0.236)
Brush spring pressure	N (g, oz)	1.000 - 2.452 (102 - 250, 3.60 - 8.82)
Slip ring minimum diameter	mm (in)	26.0 (1.024)
Rotor (field coil) resistance	Ω	2.6

Simpo PDF Merge and Split Unregistered Version - http://www.simpopdf.com

Check

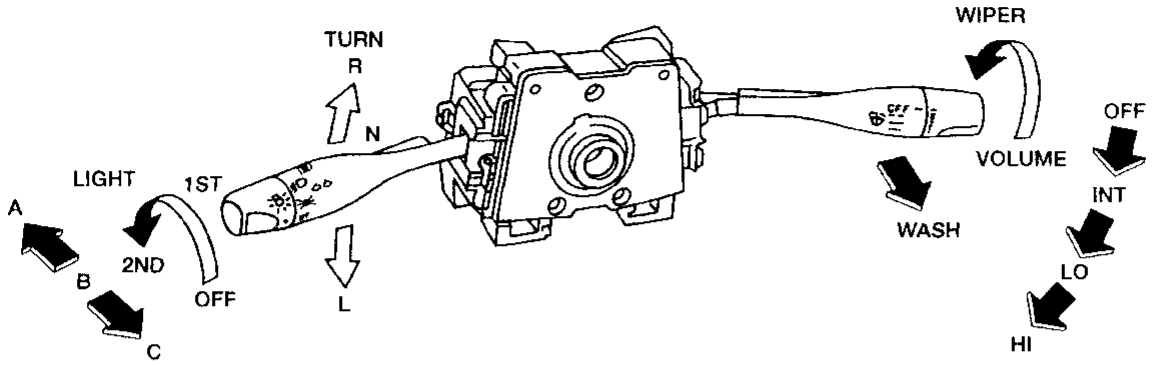

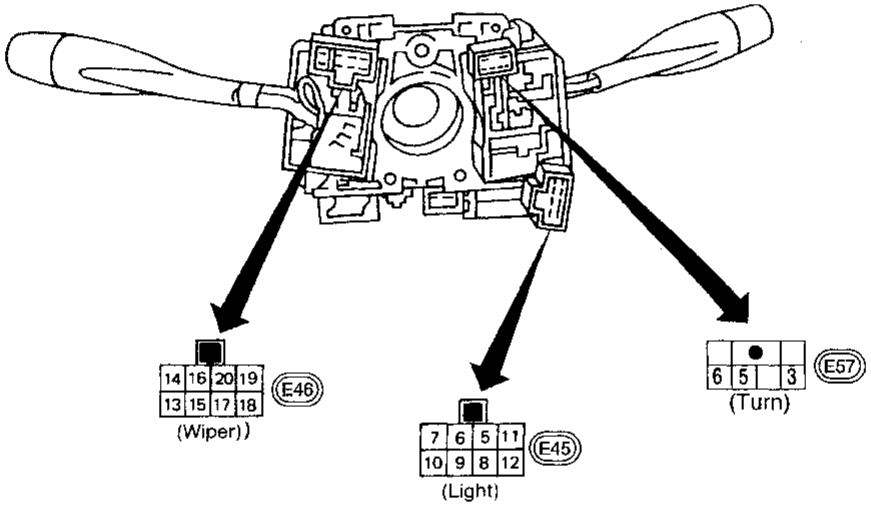

LIGHTING SWITCH

	OFF			1ST			2ND		
	A	B	C	A	B	C	A	B	C
5			○			○	○	○	○
6			○			○	○		○
7								○	
8			○			○	○	○	○
9			○			○	○		○
10								○	
11				○	○	○	○	○	○
12				○	○	○	○	○	○

WIPER SWITCH

	OFF	INT	LO	HI	WASH
13	○	○			
14	○	○			
15		○	○		
16				○	
17		○	○	○	○
18					○

INTERMITTENT WIPER VOLUME

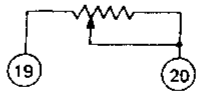

TURN SIGNAL SWITCH

	R	N	L
1	○		○
2	○		
3			○

AEL602B

Simpo PDF Merge and Split Unregistered Version - http://www.simpopdf.com

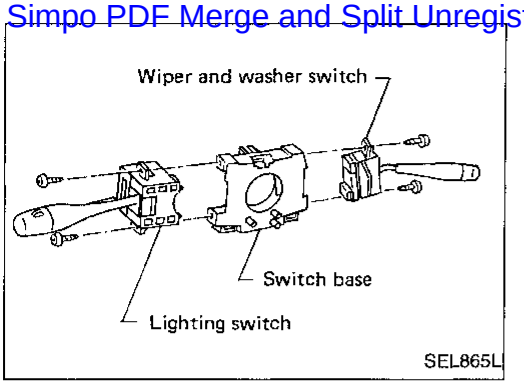

Replacement

For removal and installation of spiral cable, refer to RS section ["Installation — Air Bag Module and Spiral Cable", "SUPPLEMENTAL RESTRAINT SYSTEM (SRS)"].

- Each switch can be replaced without removing combination switch base.

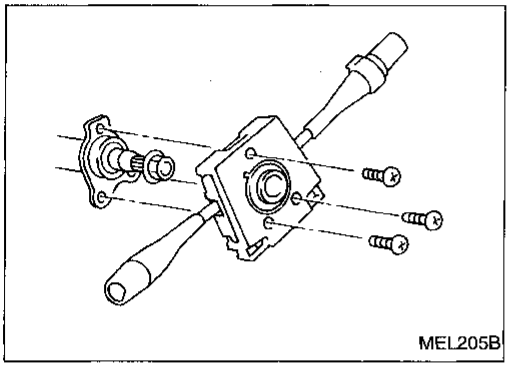

- To remove combination switch base, remove base attaching screws.

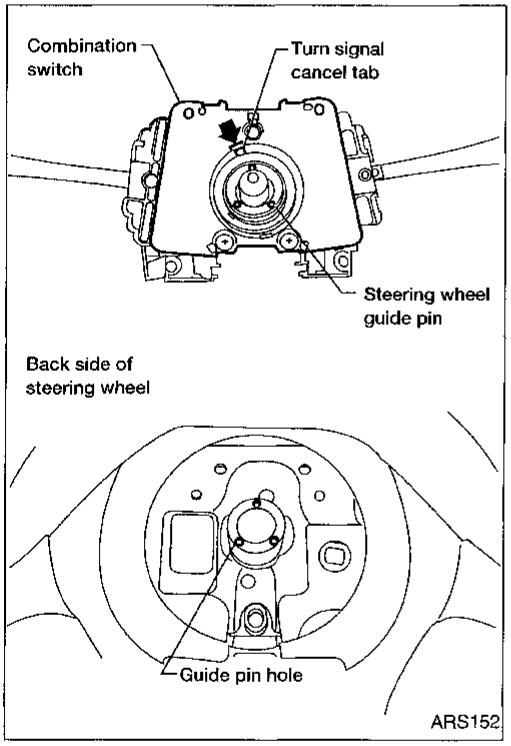

- Before installing the steering wheel, align the turn signal cancel tab with the notch of combination switch. Refer to RS section ("INSTALLATION", "Driver Air Bag Module and Spiral Cable").

Simpo PDF Merge and Split Unregistered Version - http://www.simpopdf.com

Check

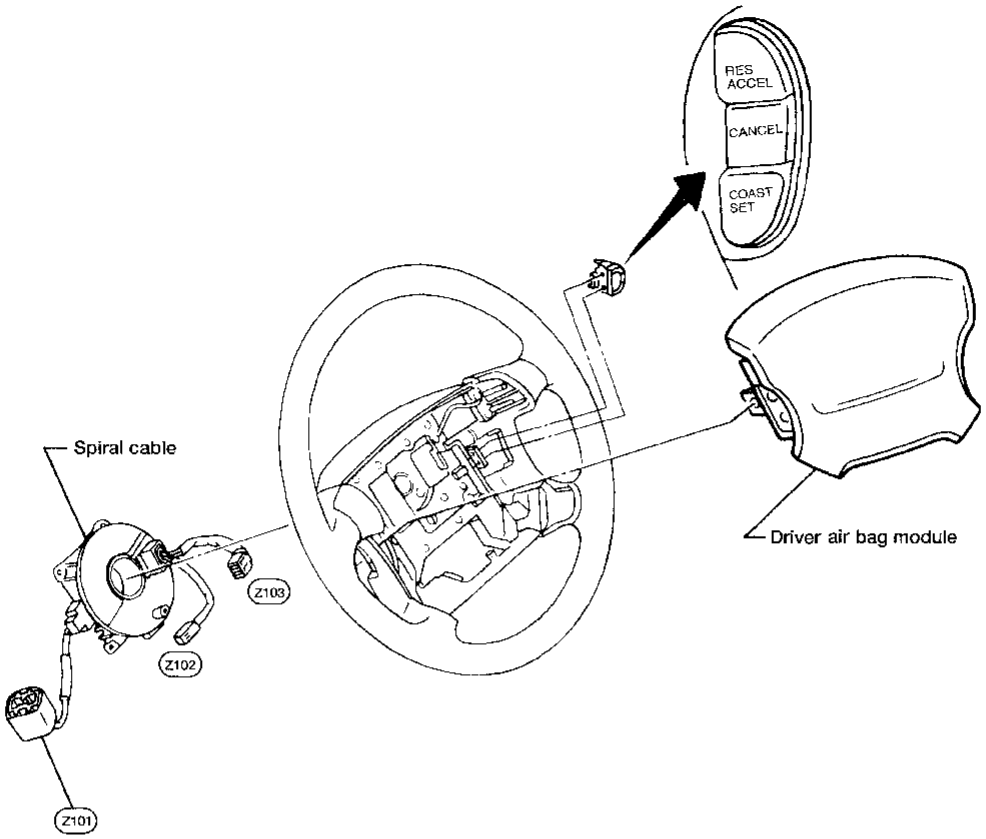

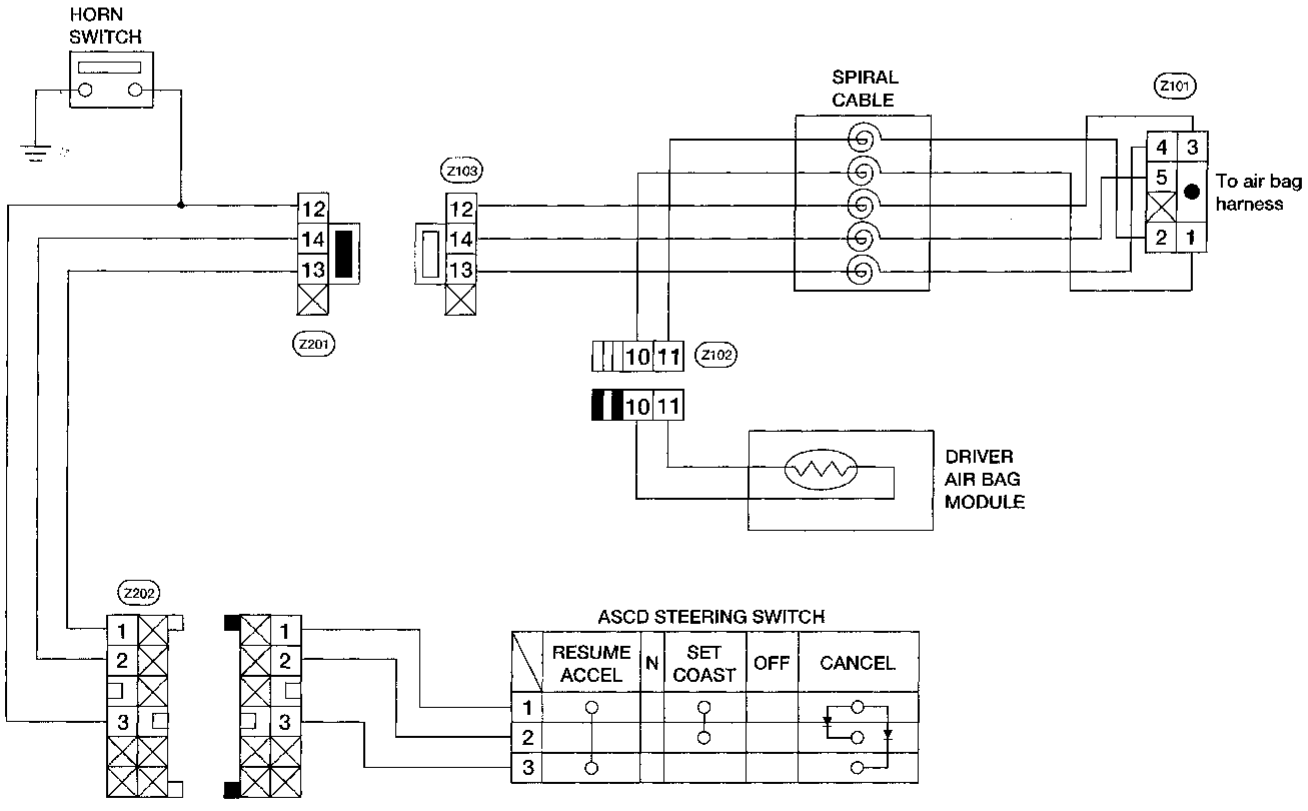

AEL603B

Simpo PDF Merge and Split Unregistered Version - http://www.simpopdf.com

System Description (For USA)

The headlamps are controlled by the lighting switch which is built into the combination switch.
Power is supplied at all times:

- to lighting switch terminal ⑤
- through 15A fuse (No. 37, located in the fuse and fusible link box), and
- to lighting switch terminal ⑧
- through 15A fuse (No. 38, located in the fuse and fusible link box).

Low beam operation

When the lighting switch is turned to headlamp "ON" (2ND) position, "LOW BEAM" (B), power is supplied:

- from lighting switch terminal ⑩
- to terminal Ⓓ of the LH headlamp, and
- from lighting switch terminal ⑦
- to terminal Ⓓ of the RH headlamp.

Terminal Ⓔ of each headlamp supplies ground through body grounds E12 and E54.
With power and ground supplied, the headlamp(s) will illuminate.

High beam operation/flash-to-pass operation

When the lighting switch is turned to headlamp "ON" (2ND) position, "HIGH BEAM" (A) or "FLASH TO PASS" (C) position, power is supplied:

- from lighting switch terminal ⑥
- to terminal Ⓜ of RH headlamp, and
- from lighting switch terminal ⑨
- to terminal Ⓜ of LH headlamp, and
- to combination meter terminal ⑰ for the high beam indicator.

Ground is supplied to terminal ⑯ of the combination meter through body grounds M14 and M68.
Terminal Ⓔ of each headlamp supplies ground through body grounds E12 and E54.
With power and ground supplied, the high beams and the high beam indicator illuminate.

Theft warning system

The theft warning system will flash the high beams if the system is triggered. Refer to "THEFT WARNING SYSTEM" (EL-177).

Simpo PDF Merge and Split Unregistered Version - http://www.simpopdf.com

Wiring Diagram (For USA) — H/LAMP —

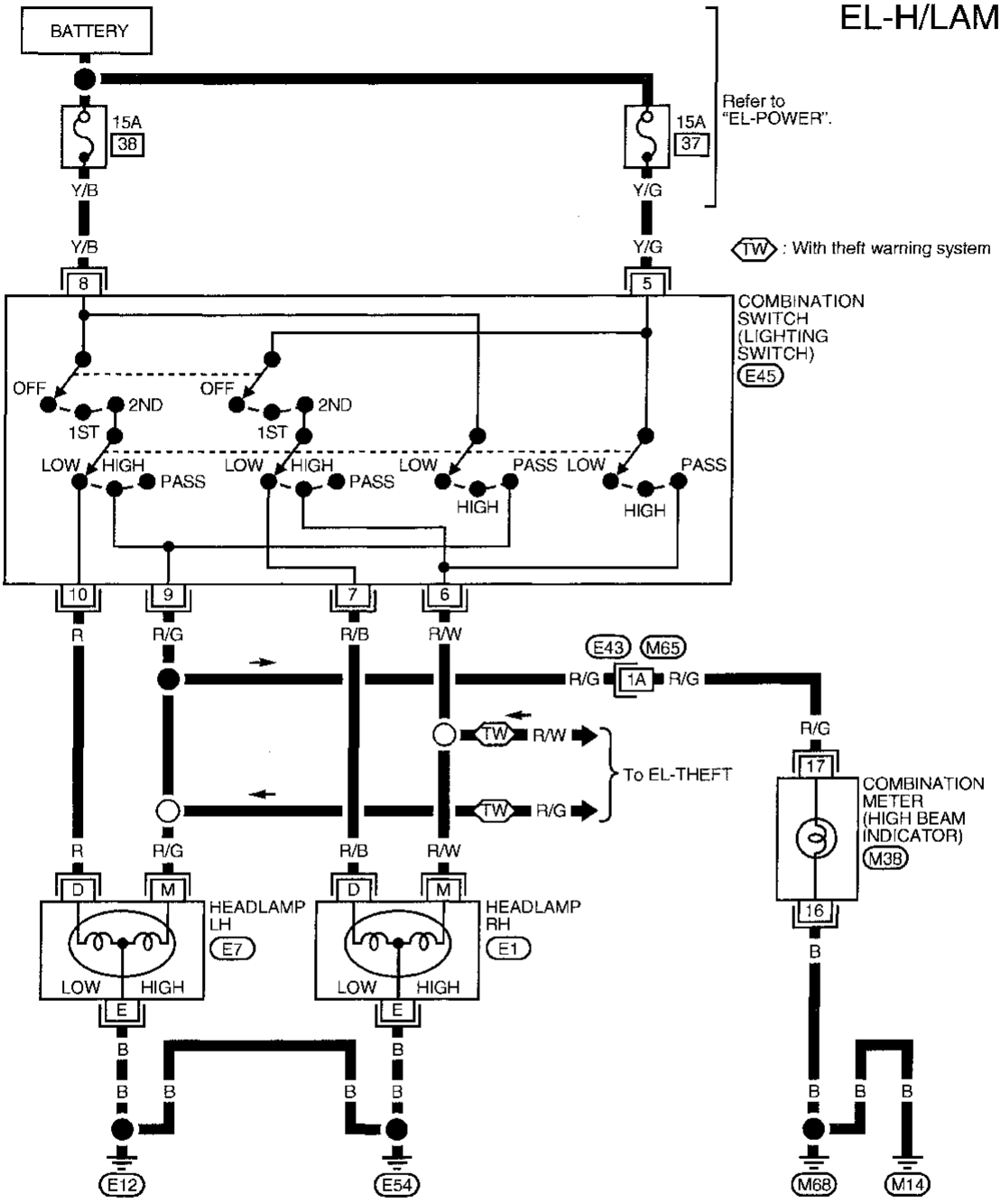

Refer to last page (Foldout page).
M65 , E43



AEL339B

Simpo PDF Merge and Split Unregistered Version - http://www.simpopdf.com

Trouble Diagnoses

Symptom	Possible cause	Repair order
LH headlamp does not operate.	1. Bulb 2. Grounds (E12) and (E54) 3. 15A fuse 4. Lighting switch	1. Check bulb. 2. Check grounds (E12) and (E54). 3. Check 15A fuse (No. 38, located in fuse and fusible link box). Verify battery positive voltage is present at terminal (8) of lighting switch. 4. Check lighting switch.
RH headlamp does not operate.	1. Bulb 2. Grounds (E12) and (E54) 3. 15A fuse 4. Lighting switch	1. Check bulb. 2. Check grounds (E12) and (E54). 3. Check 15A fuse (No. 37, located in fuse and fusible link box). Verify battery positive voltage is present at terminal (5) of lighting switch. 4. Check lighting switch.
LH high beam does not operate, but LH low beam operates.	1. Bulb 2. Open in LH high beam circuit 3. Lighting switch	1. Check bulb. 2. Check R/G wire between lighting switch and LH headlamp for an open circuit. 3. Check lighting switch.
LH low beam does not operate, but LH high beam operates.	1. Bulb 2. Open in LH low beam circuit 3. Lighting switch	1. Check bulb. 2. Check R wire between lighting switch and LH headlamp for an open circuit. 3. Check lighting switch.
RH high beam does not operate, but RH low beam operates.	1. Bulb 2. Open in RH high beam circuit 3. Lighting switch	1. Check bulb. 2. Check R/W wire between lighting switch and RH headlamp for an open circuit. 3. Check lighting switch.
RH low beam does not operate, but RH high beam operates.	1. Bulb 2. Open in RH low beam circuit 3. Lighting switch	1. Check bulb. 2. Check R/B wire between lighting switch and RH headlamp for an open circuit. 3. Check lighting switch.
High beam indicator does not work.	1. Bulb 2. Grounds (M14) and (M68) 3. Open in high beam circuit	1. Check bulb in combination meter. 2. Check grounds (M14) and (M68). 3. Check R/G wire between lighting switch and combination meter for an open circuit.

Simpo PDF Merge and Split Unregistered Version - http://www.simpopdf.com

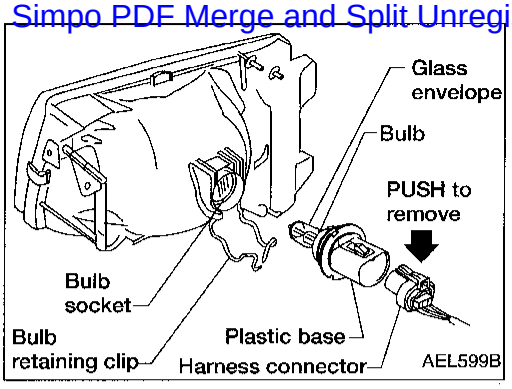

Bulb Replacement

The headlamp is a semi-sealed beam type which uses a replaceable halogen bulb. The bulb can be replaced from the engine compartment side without removing the headlamp body.

- **Grasp only the plastic base when handling the bulb. Never touch the glass envelope.**

1. Disconnect the battery cable.
2. Disconnect the harness connector from the back side of the bulb.
3. Unclip the bulb retaining clip, and then remove it.
4. Remove the headlamp bulb carefully. Do not shake or rotate the bulb when removing it.
5. Install in the reverse order of removal.

CAUTION:

- **Do not leave headlamp reflector without bulb for a long period of time. Dust, moisture, smoke, etc. entering headlamp body may affect the performance of the headlamp. Remove headlamp bulb from the headlamp reflector just before a replacement bulb is installed.**

Aiming Adjustment

When performing headlamp aiming adjustment, use an aiming machine, aiming wall screen or headlamp tester. Aimers should be in good repair, calibrated and operated in accordance with respective operation manuals.
If any aimer is not available, aiming adjustment can be done as follows:

For details, refer to the regulations in your own country.

a. **Keep all tires inflated to correct pressures.**
b. **Place vehicle and tester on one and same flat surface.**
c. **See that there is no-load in vehicle (coolant, engine oil filled up to correct level and full fuel tank) other than the driver (or equivalent weight placed in driver's position).**

Aiming Adjustment (Cont'd)

Simpo PDF Merge and Split Unregistered Version - http://www.simpopdf.com

AIMER ADJUSTMENT MARK

When using a mechanical aimer, adjust adapter legs to the data marked on the headlamps.

Adjustment value for mechanical aimer

	Mechanical aimer level
Horizontal side	–4 to 4
Vertical side	–4 to 4

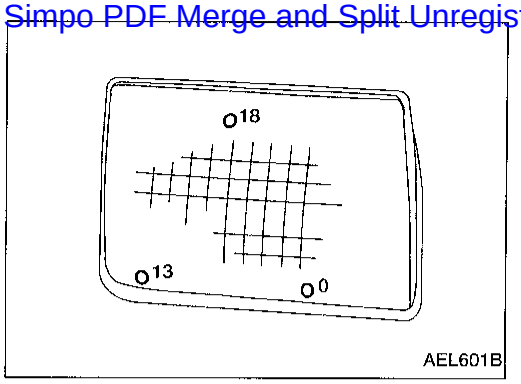

AEL601B

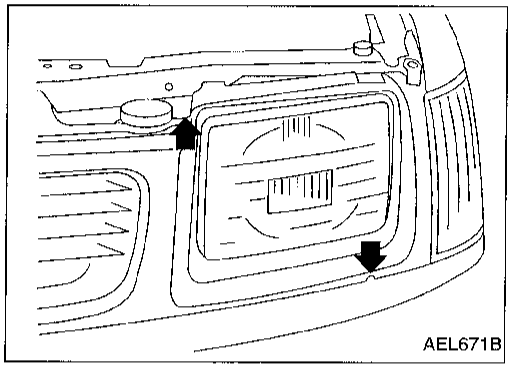
AEL671B

LOW BEAM

1. Turn headlamp low beam on.
2. Use a #2 cross-recessed screwdriver to adjust the aim of the lamp.

- **Cover the opposite lamp.**

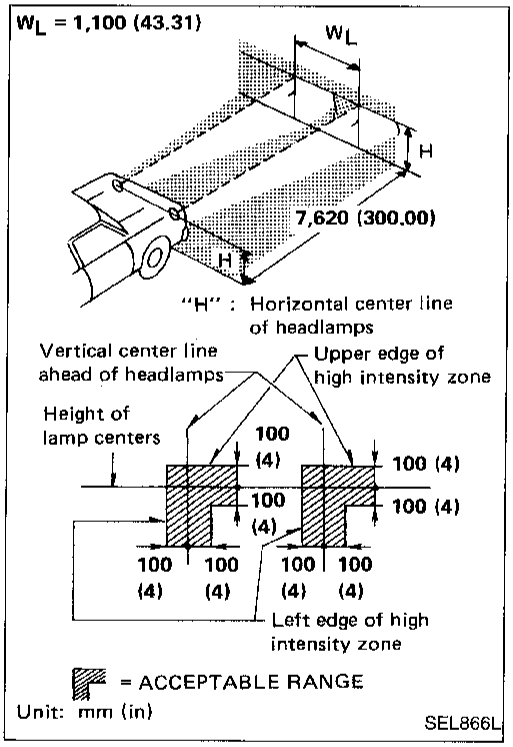

SEL866L

If the vehicle front body has been repaired and/or the headlamp assembly has been replaced, check aiming. Use the aiming chart shown in the figure.

- **Upper edge and left edge of high intensity zone should be within the range shown at left. Adjust headlamps accordingly.**
- **Dotted lines in illustration show center of headlamp.**

"H": Horizontal center line of headlamps
"W_L": Distance between each headlamp center

Simpo PDF Merge and Split Unregistered Version - http://www.simpopdf.com

System Description (For Canada)

The headlamp system for Canada vehicles contains a daytime light control unit that activates the high beam headlamps at approximately half illumination whenever the engine is running. If the parking brake is applied before the engine is started the daytime lights will not be illuminated. The daytime lights will illuminate once the parking brake is released. Thereafter, the daytime lights will continue to operate when the parking brake is applied. If the daytime light control unit receives a ground signal from the generator, the daytime lights will not be illuminated. The daytime lights will illuminate once a battery positive voltage signal is sent to the daytime light control unit from the generator.

Power is supplied at all times:
- through 15A fuse (No. 38, located in the fuse and fusible link box)
- to daytime light control unit terminal ③ and
- to lighting switch terminal ⑧.

Power is also supplied at all times:
- through 15A fuse (No. 37, located in the fuse and fusible link box)
- to daytime light control unit terminal ② and
- to lighting switch terminal ⑤.

With the ignition switch in the ON or START position, power is supplied:
- through 7.5A fuse [No. 5, located in the fuse block (J/B)]
- to daytime light control unit terminal ⑫.

With the ignition switch in the START position, power is supplied:
- through 7.5A fuse [No. 7, located in the fuse block (J/B)]
- to daytime light control unit terminal ①.

Ground is supplied to daytime light control unit terminal ⑨ through body grounds E12 and E54.

HEADLAMP OPERATION

Low beam operation

When the lighting switch is turned to headlamp "ON" (2ND) position, "LOW BEAM" (B), power is supplied:
- from lighting switch terminal ⑦
- to RH headlamp terminal Ⓓ
- to daytime light control unit terminal ④.

Ground is supplied to RH headlamp terminal Ⓔ through body grounds E12 and E54.

Also, when the lighting switch is turned to headlamp "ON" (2ND) position, "LOW BEAM" (B), power is supplied:
- from lighting switch terminal ⑩
- to LH headlamp terminal Ⓓ.

Ground is supplied:
- to LH headlamp terminal Ⓔ
- from daytime light control unit terminal ⑦
- through daytime light control unit terminal ⑨
- through body grounds E12 and E54.

With power and ground supplied, the low beam headlamps illuminate.

High beam operation/flash-to-pass operation

When the lighting switch is turned to headlamp "ON" (2ND) position, "HIGH BEAM" (A) or "FLASH TO PASS" (C) position, power is supplied:
- from lighting switch terminal ⑥
- to terminal Ⓜ of RH headlamp.

When the lighting switch is turned to headlamp "ON" (2ND) position, "HIGH BEAM" (A) or "FLASH TO PASS" (C) position, power is supplied:
- from lighting switch terminal ⑨
- to daytime light control terminal ⑤
- to combination meter terminal ⑰ for the high beam indicator
- through daytime light control terminal ⑥
- to terminal Ⓜ of LH headlamp.

Ground is supplied in the same manner as low beam operation.

Ground is supplied to terminal ⑯ of the combination meter through body grounds M14 and M68.

With power and ground supplied, the high beam headlamps and HI BEAM indicator illuminate.

System Description (For Canada) (Cont'd)

Simpo PDF Merge and Split Unregistered Version - http://www.simpopdf.com

DAYTIME LIGHT OPERATION

With the engine running, the lighting switch in the "OFF" or parking lamp (1ST) position and parking brake released, power is supplied:

- to daytime light control unit terminal ③
- through daytime light control unit terminal ⑥
- to terminal Ⓜ of LH headlamp
- through terminal Ⓔ of LH headlamp
- to daytime light control unit terminal ⑦
- through daytime light control unit terminal ⑧
- to terminal Ⓜ of RH headlamp.

Ground is supplied to terminal Ⓔ of RH headlamp through body grounds (E12) and (E54).
Because the high beam headlamps are now wired in series, they operate at half illumination.

Operation (For Canada)

After starting the engine with the lighting switch in the "OFF" or parking lamp (1ST) position, the headlamp high beam automatically turns on. Lighting switch operations other than the above are the same as conventional light systems.

Engine		With engine stopped									With engine running								
Lighting switch		OFF			1ST			2ND			OFF			1ST			2ND		
		A	B	C	A	B	C	A	B	C	A	B	C	A	B	C	A	B	C
Headlamp	High beam	X	X	○	X	X	○	○	X	○	△*	△*	○	△*	△*	○	○	X	○
	Low beam	X	X	X	X	X	X	X	○	X	X	X	X	X	X	X	X	○	X
Parking and tail lamp		X	X	X	○	○	○	○	○	○	X	X	X	○	○	○	○	○	○
License and instrument illumination lamp		X	X	X	○	○	○	○	○	○	X	X	X	○	○	○	○	○	○

A : "HIGH BEAM" position
B : "LOW BEAM" position
C : "FLASH TO PASS" position
○ : Lamp "ON"
X : Lamp "OFF"
△ : Lamp dims.
□ : Added functions
*: When starting the engine with the parking brake released, the daytime light will come ON.
When starting the engine with the parking brake pulled, the daytime light won't come ON.

Simpo PDF Merge and Split Unregistered Version - http://www.simpopdf.com

Schematic (For Canada)

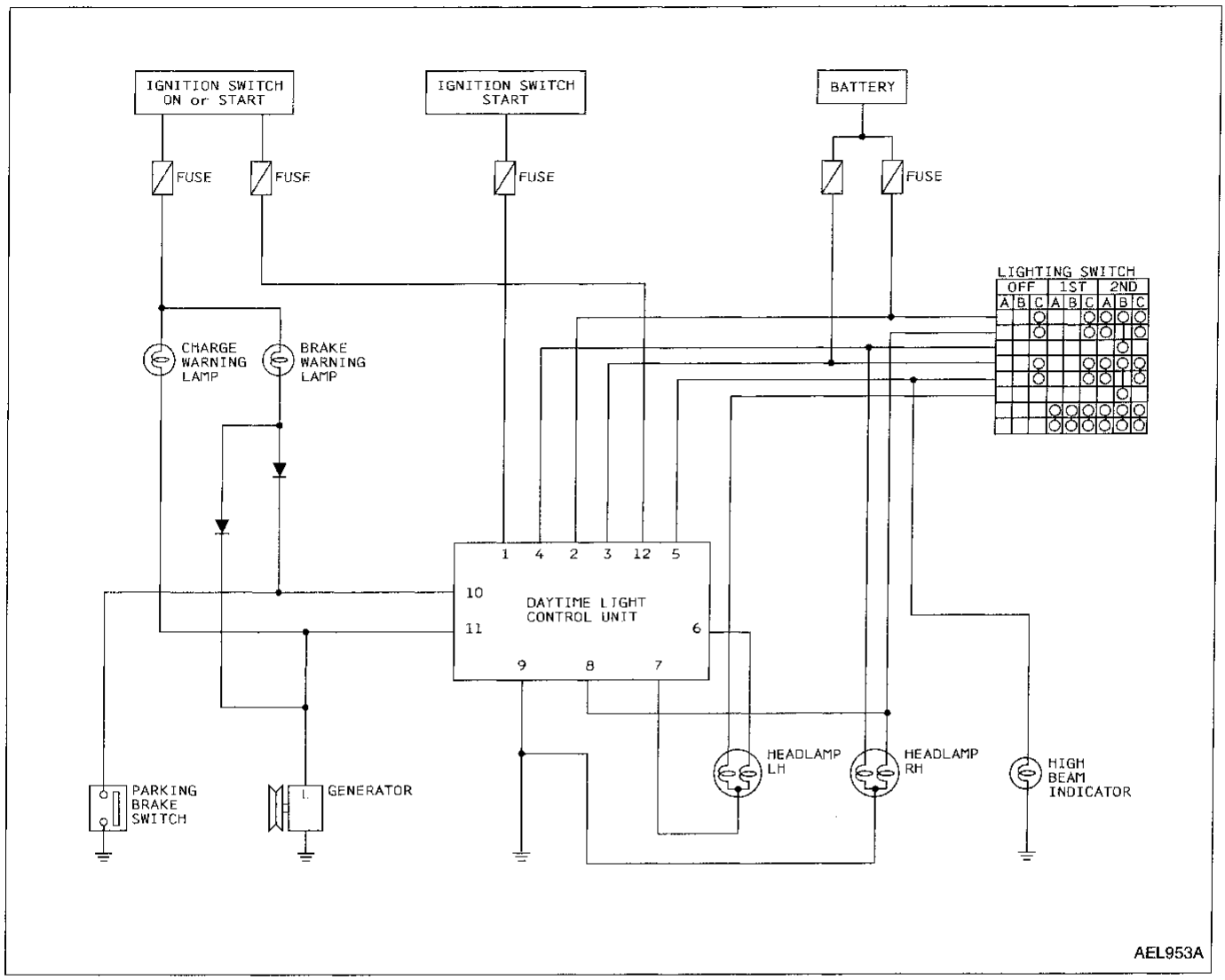

Simpo PDF Merge and Split Unregistered Version - http://www.simpopdf.com

Wiring Diagram (For Canada) — DTRL —

EL-DTRL-01

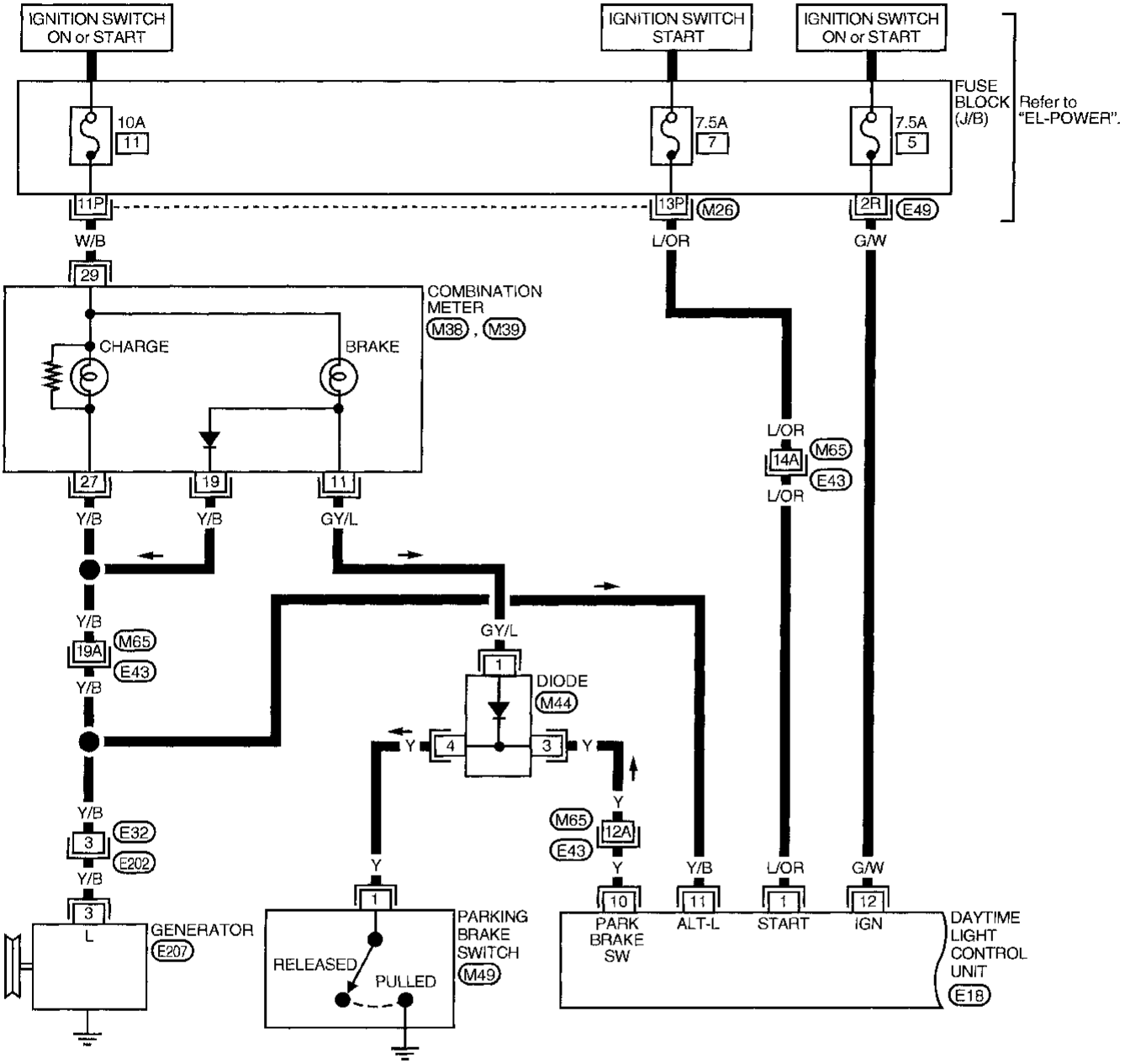

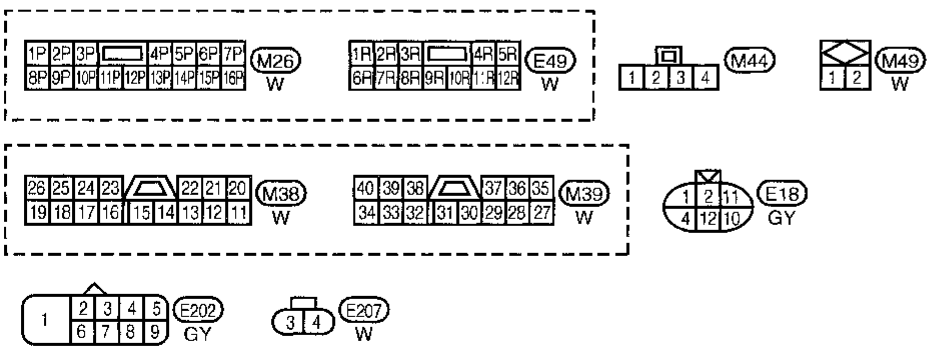

Refer to last page (Foldout page).
M65, E43

AEL340B

Simpo PDF Merge and Split Unregistered Version - http://www.simpopdf.com

EL-DTRL-02

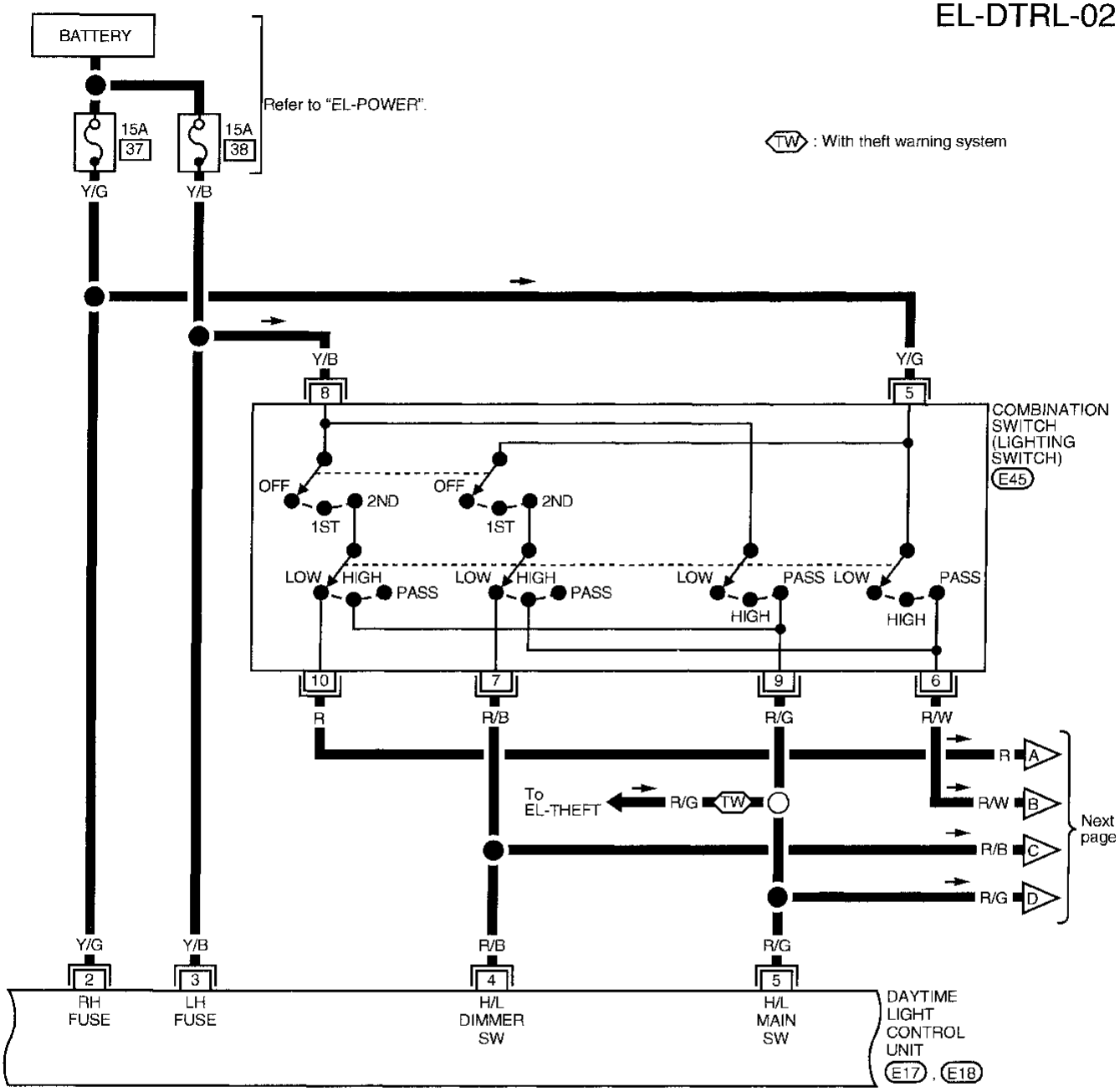

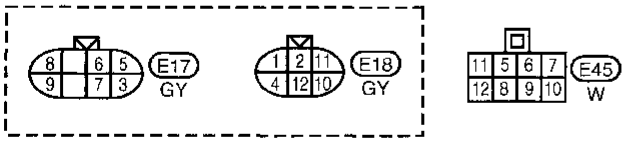

AEL341B

Simpo PDF Merge and Split Unregistered Version - http://www.simpopdf.com

EL-DTRL-03

TW : With theft warning system

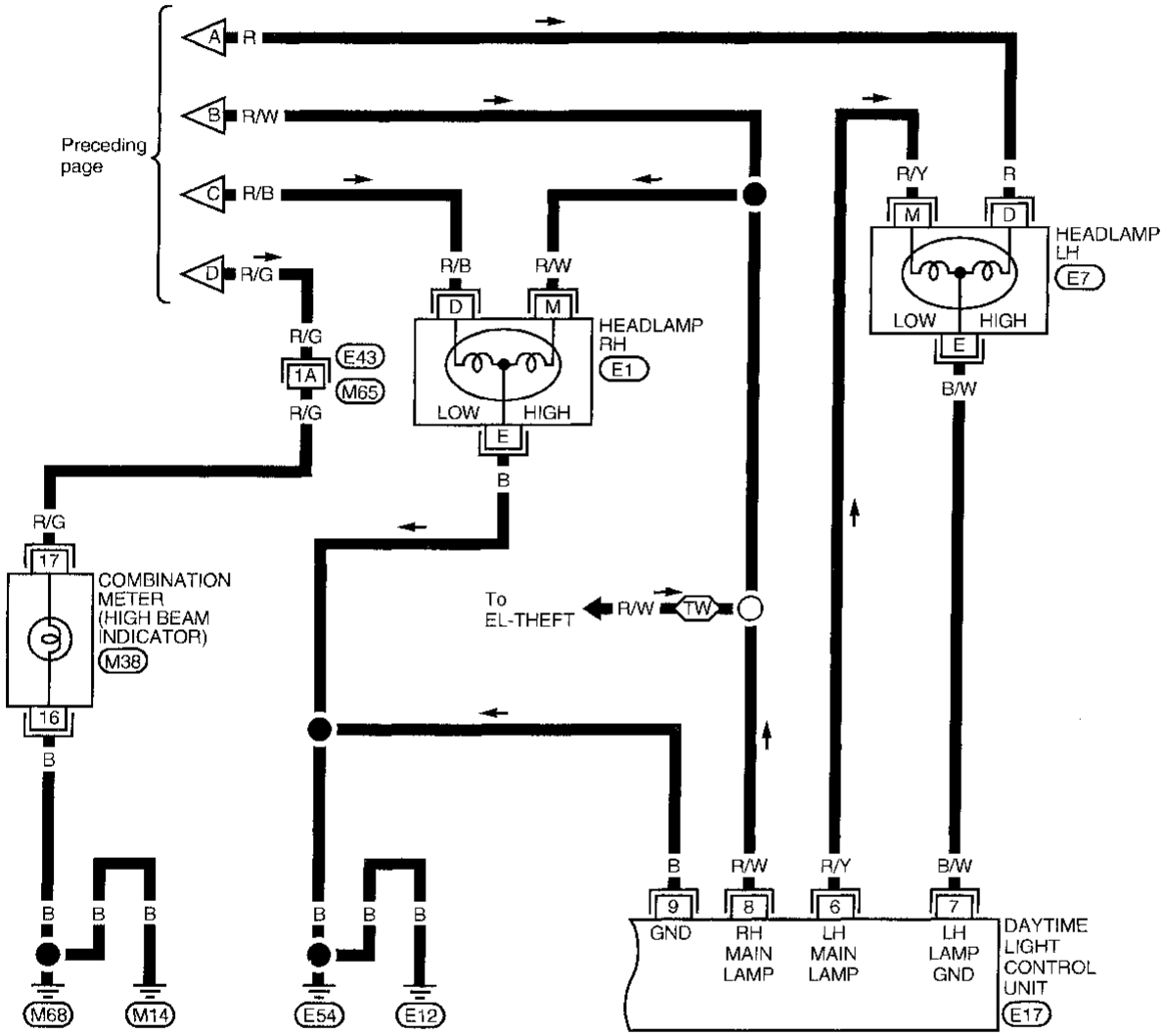

Refer to last page (Foldout page).
M65 , E43

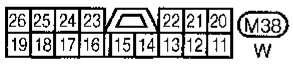

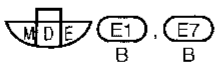

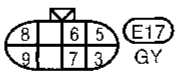

AEL342B

Simpo PDF Merge and Split Unregistered Version - http://www.simpopdf.com

DAYTIME LIGHT CONTROL UNIT INSPECTION TABLE

Terminal No.	Item	Condition		Voltage (Approximate values)
1	Start signal		When turning ignition switch to "ST"	Battery voltage
			When turning ignition switch to "ON" from "ST"	Less than 1V
			When turning ignition switch to "OFF"	Less than 1V
2	Power source		When turning ignition switch to "ON"	Battery voltage
			When turning ignition switch to "OFF"	Battery voltage
3	Power source		When turning ignition switch to "ON"	Battery voltage
			When turning ignition switch to "OFF"	Battery voltage
4	Lighting switch (Lo beam)		When turning lighting switch to headlamp "ON" (2ND) position, "LOW BEAM"	Battery voltage
5	Lighting switch (Hi beam)		When turning lighting switch to "HI BEAM"	Battery voltage
			When turning lighting switch to "FLASH TO PASS"	Battery voltage
6	LH hi beam		When turning lighting switch to "HI BEAM"	Battery voltage
			When releasing parking brake with engine running and turning lighting switch to "OFF" (daytime light operation) **CAUTION: Block wheels and ensure selector lever is in N or P position.**	Battery voltage
7	LH headlamp control (ground)		When lighting switch is turned to headlamp "ON" (2ND) position, "LOW BEAM"	Less than 1V
		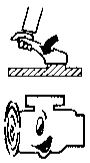	When releasing parking brake with engine running and turning lighting switch to "OFF" (daytime light operation) **CAUTION: Block wheels and ensure selector lever is in N or P position.**	Approx. half battery voltage
8	RH hi beam		When turning lighting switch to "HI BEAM"	Battery voltage
		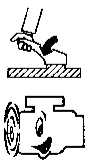	When releasing parking brake with engine running and turning lighting switch to "OFF" (daytime light operation) **CAUTION: Block wheels and ensure selector lever is in N or P position.**	Approx. half battery voltage
9	Ground		—	—

Trouble Diagnoses (For Canada) (Cont'd)

Simpo PDF Merge and Split Unregistered Version - http://www.simpopdf.com

Terminal No.	Item	Condition		Voltage (Approximate values)
10	Parking brake switch		When parking brake is released	Battery voltage
			When parking brake is set	Less than 1.5V
11	Generator		When turning ignition switch to "ON"	Less than 1V
			When engine is running	Battery voltage
			When turning ignition switch to "OFF"	Less than 1V
12	Power source		When turning ignition switch to "ON"	Battery voltage
			When turning ignition switch to "ST"	Battery voltage
			When turning ignition switch to "OFF"	Less than 1V

Bulb Replacement

Refer to "HEADLAMP" (EL-39).

Aiming Adjustment

Refer to "HEADLAMP" (EL-39).

Simpo PDF Merge and Split Unregistered Version - http://www.simpopdf.com

NOTES

Simpo PDF Merge and Split Unregistered Version - http://www.simpopdf.com

Wiring Diagram — TAIL/L —

EL-TAIL/L-01

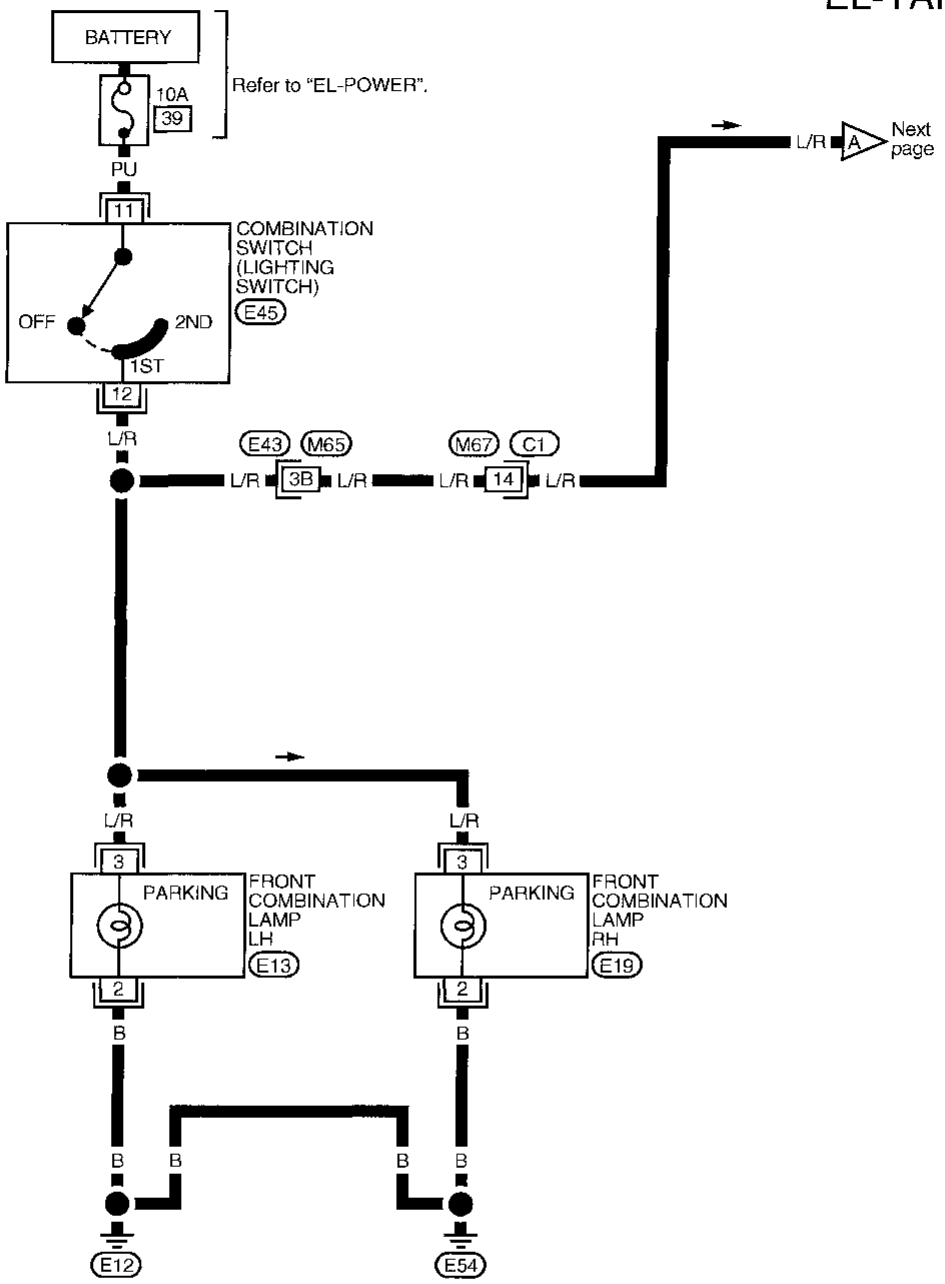

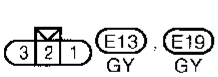

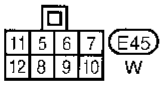

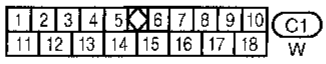

Refer to last page (Foldout page).
M65 , E43

AEL344B

Wiring Diagram — TAIL/L — (Cont'd)

Simpo PDF Merge and Split Unregistered Version - http://www.simpopdf.com

EL-TAIL/L-02

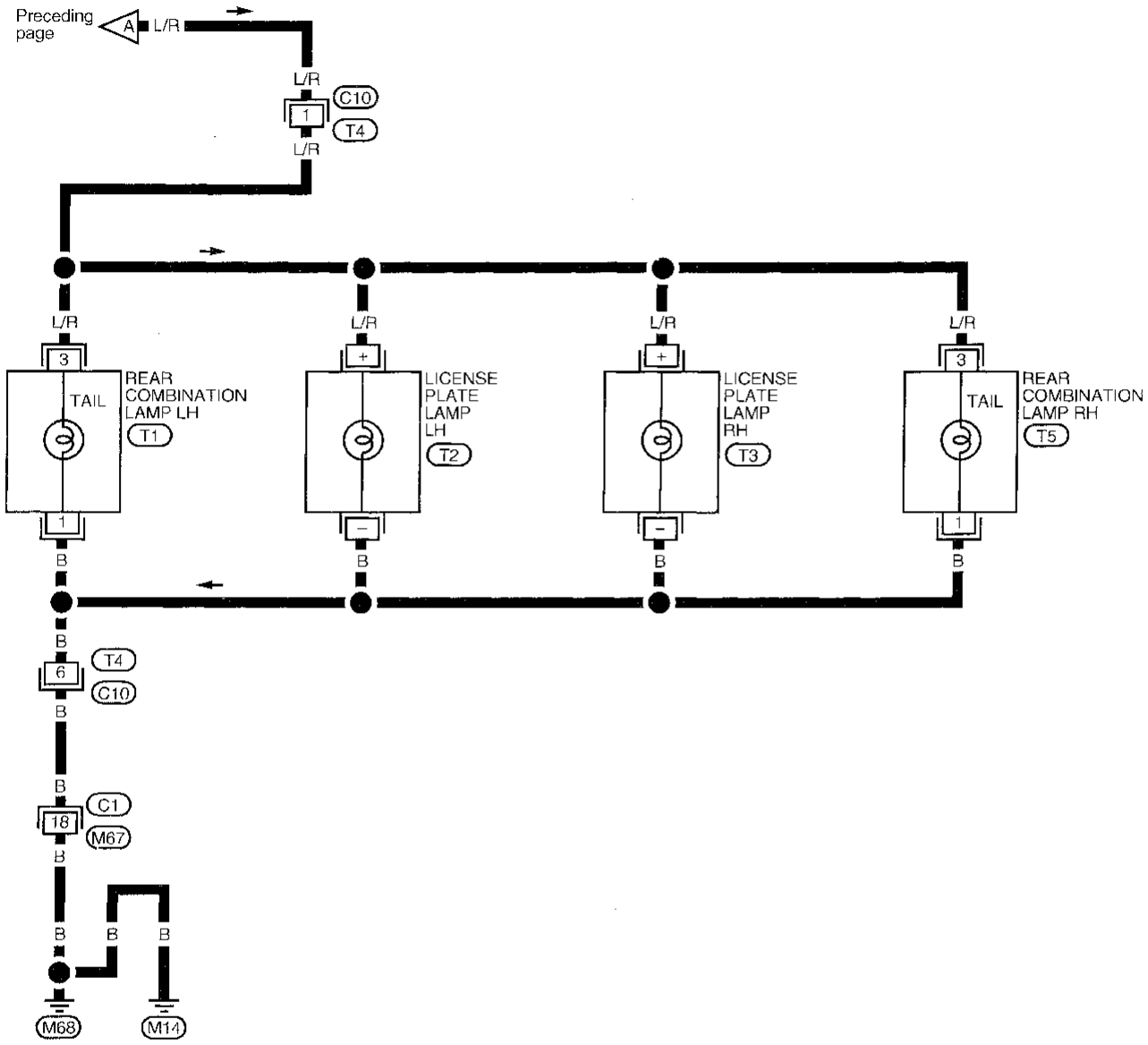

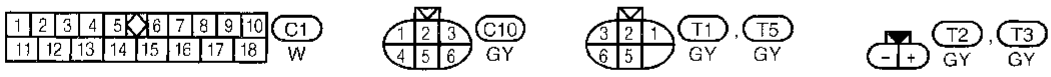

AEL345B

Simpo PDF Merge and Split Unregistered Version - http://www.simpopdf.com

Wiring Diagram — STOP/L —

EL-STOP/L-01

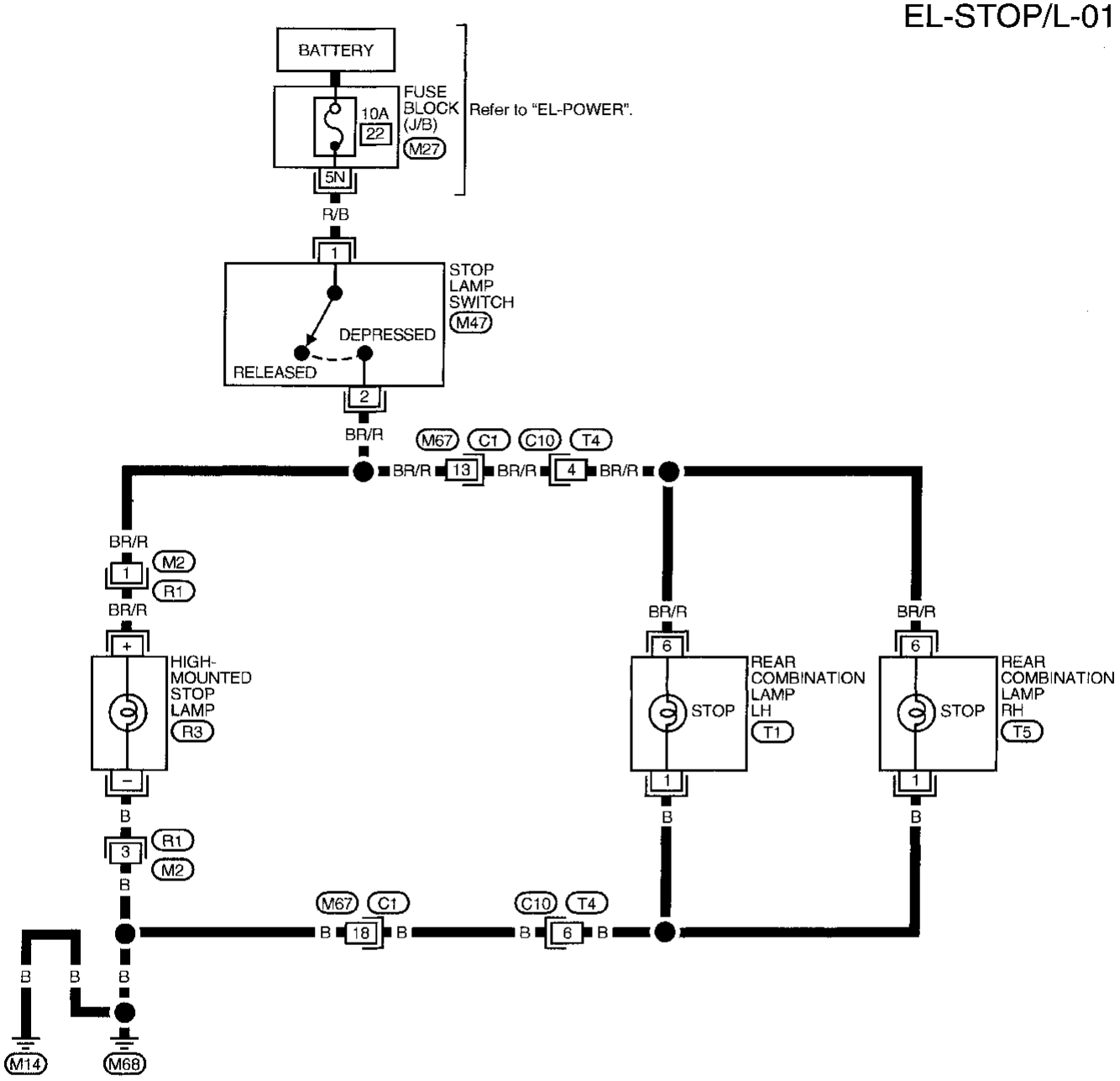

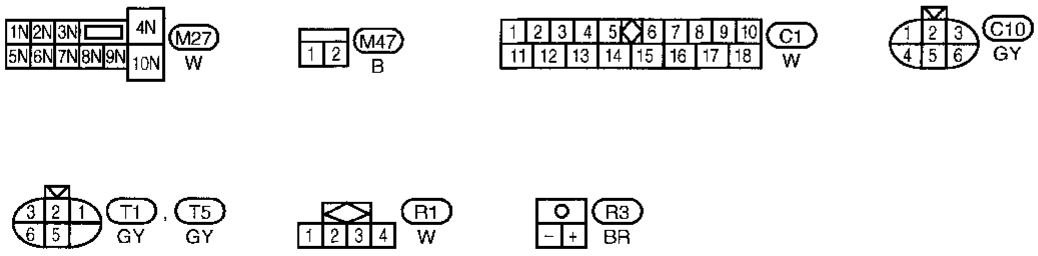

AEL364B

Simpo PDF Merge and Split Unregistered Version - http://www.simpopdf.com

Wiring Diagram — BACK/L —

EL-BACK/L-01

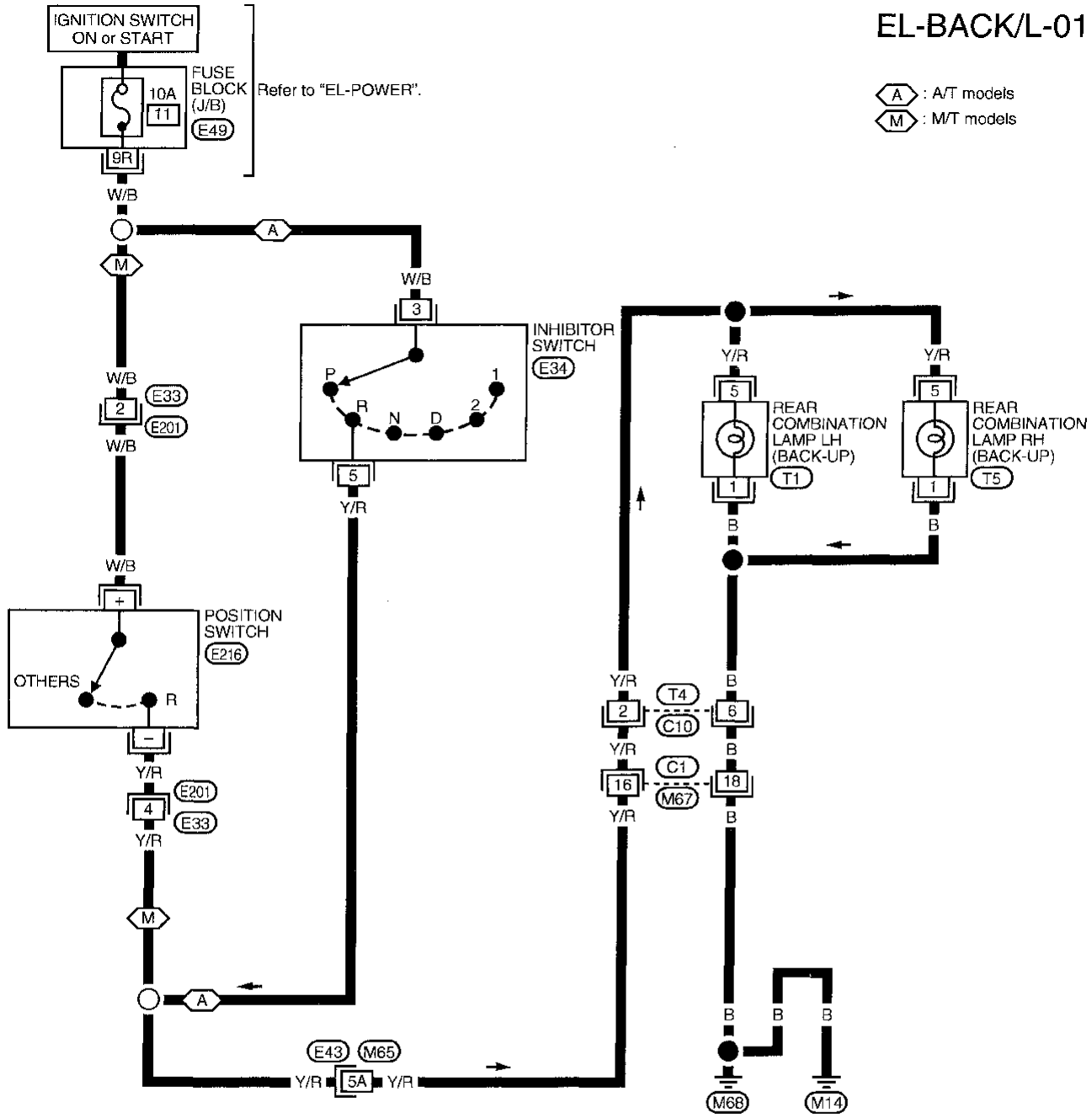

Refer to last page (Foldout page).
M65 , E43

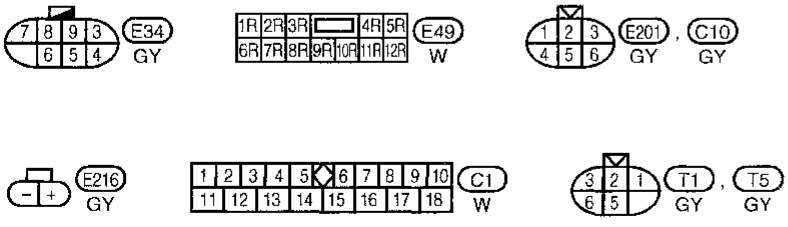

AEL343B

Simpo PDF Merge and Split Unregistered Version - http://www.simpopdf.com

System Description

TURN SIGNAL OPERATION

With the hazard switch in the OFF position and the ignition switch in the ON or START position, power is supplied:

- through 7.5A fuse [No. 2, located in the fuse block (J/B)]
- to hazard switch terminal ②
- through terminal ① of the hazard switch
- to combination flasher unit terminal Ⓑ
- through terminal Ⓛ of the combination flasher unit
- to turn signal switch terminal ①.

Ground is supplied to combination flasher unit terminal Ⓔ through body grounds M14 and M68.

LH turn

When the turn signal switch is moved to the LH position, power is supplied from turn signal switch terminal ③ to:

- front combination lamp LH terminal ①
- combination meter terminal ㉔
- rear combination lamp LH terminal ②.

Ground is supplied to the front combination lamp LH terminal ② through body grounds E12 and E54.
Ground is supplied to the rear combination lamp LH terminal ① through body grounds M14 and M68.
Ground is supplied to combination meter terminal ㉝ through body grounds M14 and M68.
With power and ground supplied, the combination flasher unit controls the flashing of the LH combination lamps.

RH turn

When the turn signal switch is moved to the RH position, power is supplied from turn signal switch terminal ② to:

- front combination lamp RH terminal ①
- combination meter terminal ㊵
- rear combination lamp RH terminal ②.

Ground is supplied to the front combination lamp RH terminal ② through body grounds E12 and E54.
Ground is supplied to the rear combination lamp RH terminal ① through body grounds M14 and M68.
Ground is supplied to combination meter terminal ㉝ through body grounds M14 and M68.
With power and ground supplied, the combination flasher unit controls the flashing of the RH combination lamps.

HAZARD LAMP OPERATION

Power is supplied at all times to hazard switch terminal ③ through:

- 10A fuse [No. 17, located in the fuse block (J/B)].

With the hazard switch in the ON position, power is supplied:

- through terminal ① of the hazard switch
- to combination flasher unit terminal Ⓑ
- through terminal Ⓛ of the combination flasher unit
- to hazard switch terminal ④.

Ground is supplied to combination flasher unit terminal Ⓔ through body grounds M14 and M68.
Power is supplied through terminal ⑤ of the hazard switch to:

- front combination lamp LH terminal ①
- combination meter terminal ㉔
- rear combination lamp LH terminal ②.

Power is supplied through terminal ⑥ of the hazard switch to:

- front combination lamp RH terminal ①
- combination meter terminal ㊵
- rear combination lamp RH terminal ②.

Ground is supplied to terminal ② of each front combination lamp through body grounds E12 and E54.
Ground is supplied to terminal ① of each rear combination lamp through body grounds M14 and M68.
Ground is supplied to combination meter terminal ㉝ through body grounds M14 and M68.
With power and ground supplied, the combination flasher unit controls the flashing of the hazard warning lamps.

Simpo PDF Merge and Split Unregistered Version - http://www.simpopdf.com

WITH MULTI-REMOTE CONTROL SYSTEM

Power is supplied at all times:
- through 10A fuse [No. 17, located in the fuse block (J/B)]
- to multi-remote control relay terminals ②, ⑤ and ⑦.

Ground is supplied to multi-remote control relay terminal ①, when the multi-remote control system is triggered through the smart entrance control unit.
Refer to "MULTI-REMOTE CONTROL SYSTEM" (EL-162).
When multi-remote control relay is energized.
Power is supplied through terminal ③ of the multi-remote control relay:
- to front combinaton lamp LH terminal ①
- to combination meter terminal ㉔
- to rear combination lamp LH terminal ②.

Power is supplied through terminal ⑥ of the multi-remote control relay:
- to front combination lamp RH terminal ①
- to combination meter terminal ㊵
- to rear combination lamp RH terminal ②.

Ground is supplied to terminal ② of each front combination lamp through body grounds E12 and E54.
Ground is supplied to terminal ① of each rear combination lamp through body grounds M14 and M68.
Ground is supplied to combination meter terminal ㉝ through body grounds M14 and M68.
With power and ground supplied, the smart entrance control unit controls the flashing of the hazard warning lamps.

Simpo PDF Merge and Split Unregistered Version - http://www.simpopdf.com

Wiring Diagram — TURN —

EL-TURN-01

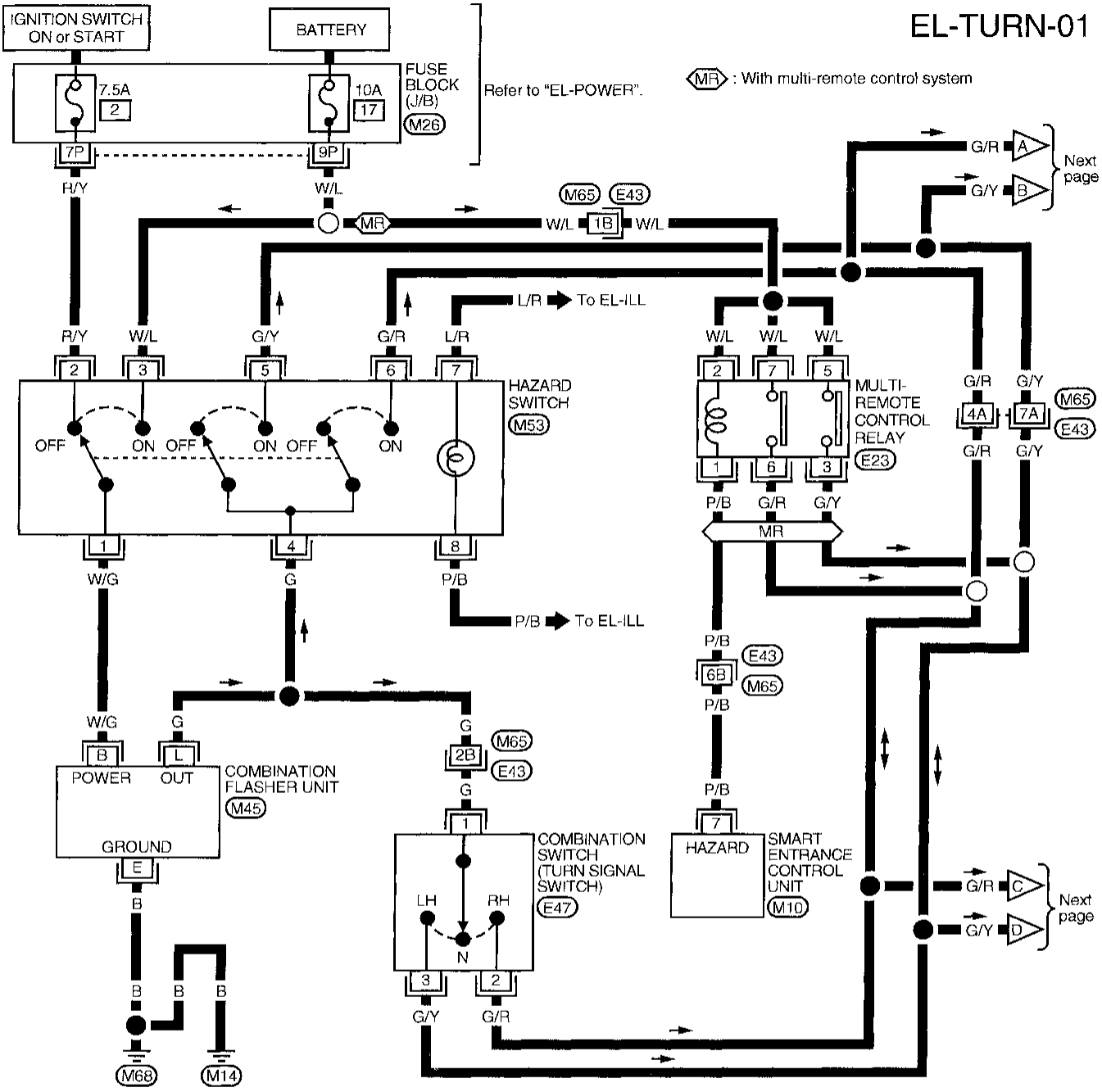

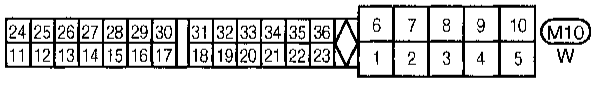





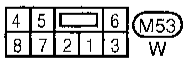

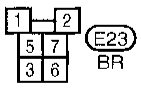

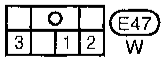

Refer to last page (Foldout page).
M65, E43

AEL360B

Wiring Diagram — TURN — (Cont'd)

Simpo PDF Merge and Split Unregistered Version - http://www.simpopdf.com

EL-TURN-02

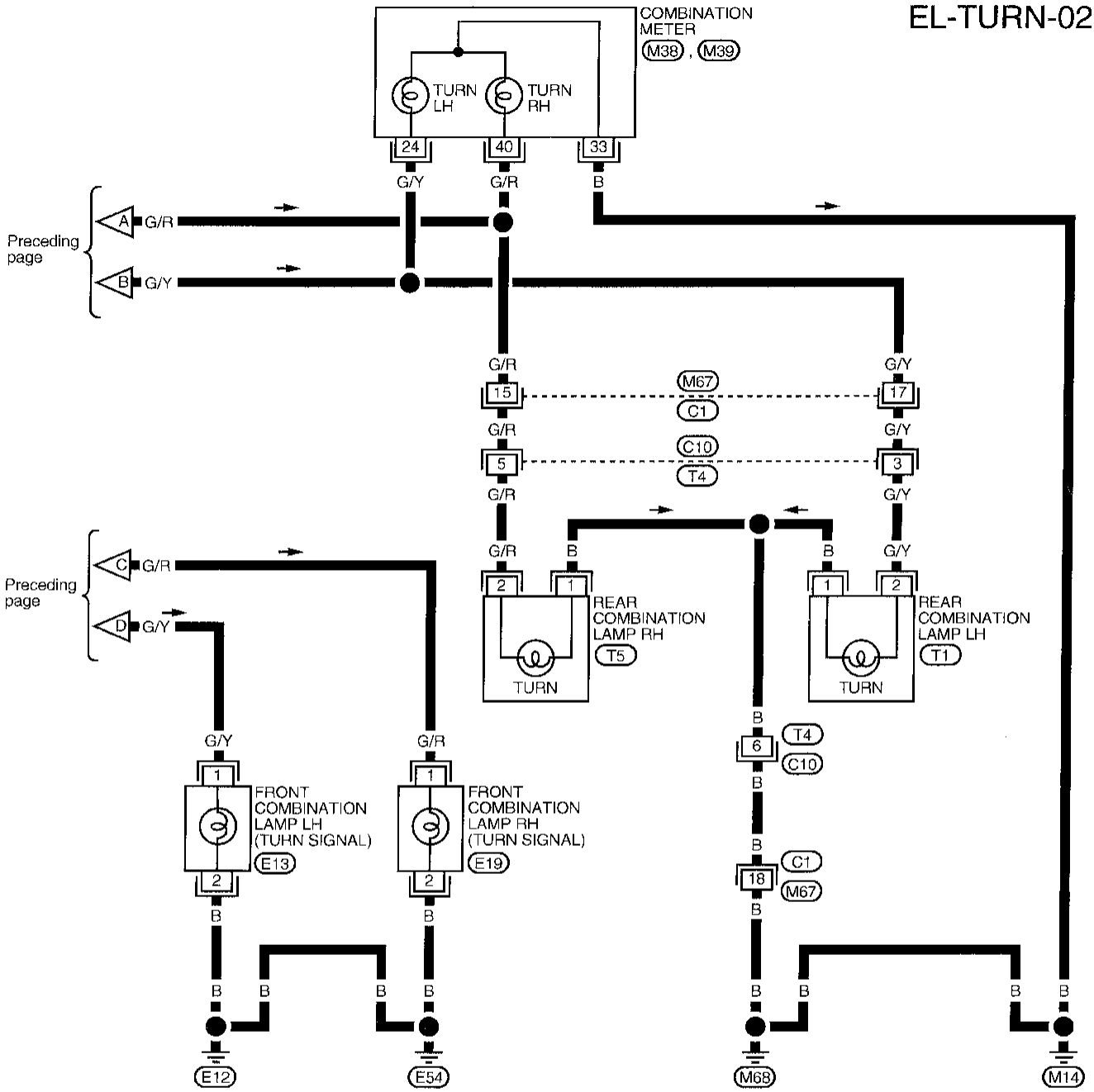

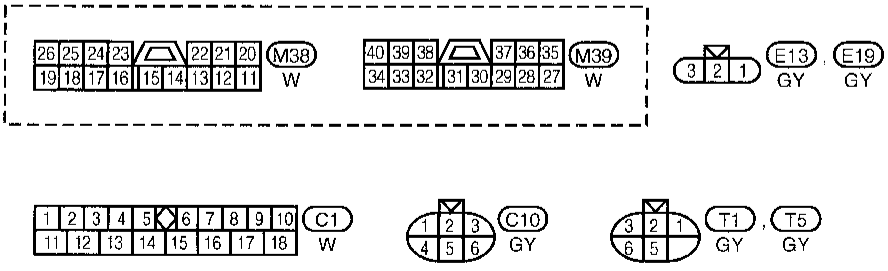

AEL361B

Simpo PDF Merge and Split Unregistered Version - http://www.simpopdf.com

Trouble Diagnoses

Symptom	Possible cause	Repair order
Turn signal and hazard warning lamps do not operate.	1. Hazard switch 2. Combination flasher unit 3. Open in combination flasher unit circuit	1. Check hazard switch. 2. Refer to combination flasher unit check. 3. Check wiring to combination flasher unit for open circuit.
Turn signal lamps do not operate but hazard warning lamps operate.	1. 7.5A fuse 2. Hazard switch 3. Turn signal switch 4. Open in turn signal switch circuit	1. Check 7.5A fuse [No. 2, located in fuse block (J/B)]. Turn ignition switch ON and verify battery positive voltage is present at terminal ② of hazard switch. 2. Check hazard switch. 3. Check turn signal switch. 4. Check G wire between combination flasher unit and turn signal switch for open circuit.
Hazard warning lamps do not operate but turn signal lamps operate.	1. 10A fuse 2. Hazard switch 3. Open in hazard switch circuit	1. Check 10A fuse [No. 17, located in fuse block (J/B)]. Verify battery positive voltage is present at terminal ③ of hazard switch. 2. Check hazard switch. 3. Check G wire between combination flasher unit and hazard switch for open circuit.
Front turn signal lamp LH or RH does not operate.	1. Bulb 2. Grounds E12 and E54	1. Check bulb. 2. Check grounds E12 and E54.
Rear turn signal lamp LH or RH does not operate.	1. Bulb 2. Grounds M14 and M68	1. Check bulb. 2. Check grounds M14 and M68.
LH and RH turn indicators do not operate.	1. Ground	1. Check grounds M14 and M68.
LH or RH turn indicator does not operate.	1. Bulb	1. Check bulb in combination meter.

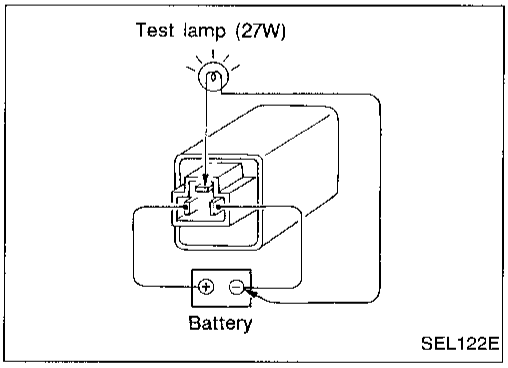

Electrical Components Inspection

COMBINATION FLASHER UNIT CHECK

- Before checking, ensure that bulbs meet specifications.
- Connect a battery and test lamp to the combination flasher unit, as shown. Combination flasher unit is properly functioning if it blinks when power is supplied to the circuit.

Simpo PDF Merge and Split Unregistered Version - http://www.simpopdf.com

System Description

Power is supplied at all times:
- through 10A fuse (No. 39, located in the fuse and fusible link box)
- to lighting switch terminal ⑪.

With the ignition switch in the ON or START position, power is supplied:
- through 10A fuse [No. 11, located in the fuse block (J/B)]
- to combination meter terminal ㉙.

The lighting switch must be in parking lamp (1ST) or headlamp "ON" (2ND) position for illumination.
The illumination control switch controls the amount of current to the illumination system. As the amount of current increases, the illumination becomes brighter.
The following chart shows the power and ground connector terminals for the components included in the illumination system.

Component	Connector No.	Power terminal	Ground terminal
Illumination control switch	M28	①	⑤
ASCD main switch	M29	⑤	⑥
Main power window and door lock/unlock switch	D7	③	④
Combination meter	M39	㉙, ㊴	㊳
Radio	M51	⑧	⑦
Hazard switch	M53	⑦	⑧
Fan switch	M56	②	①

The ground for all of the components is controlled through terminal ④ of the illumination control switch and body grounds (M14) and (M68).

Simpo PDF Merge and Split Unregistered Version - http://www.simpopdf.com

Wiring Diagram — ILL —

EL-ILL-01

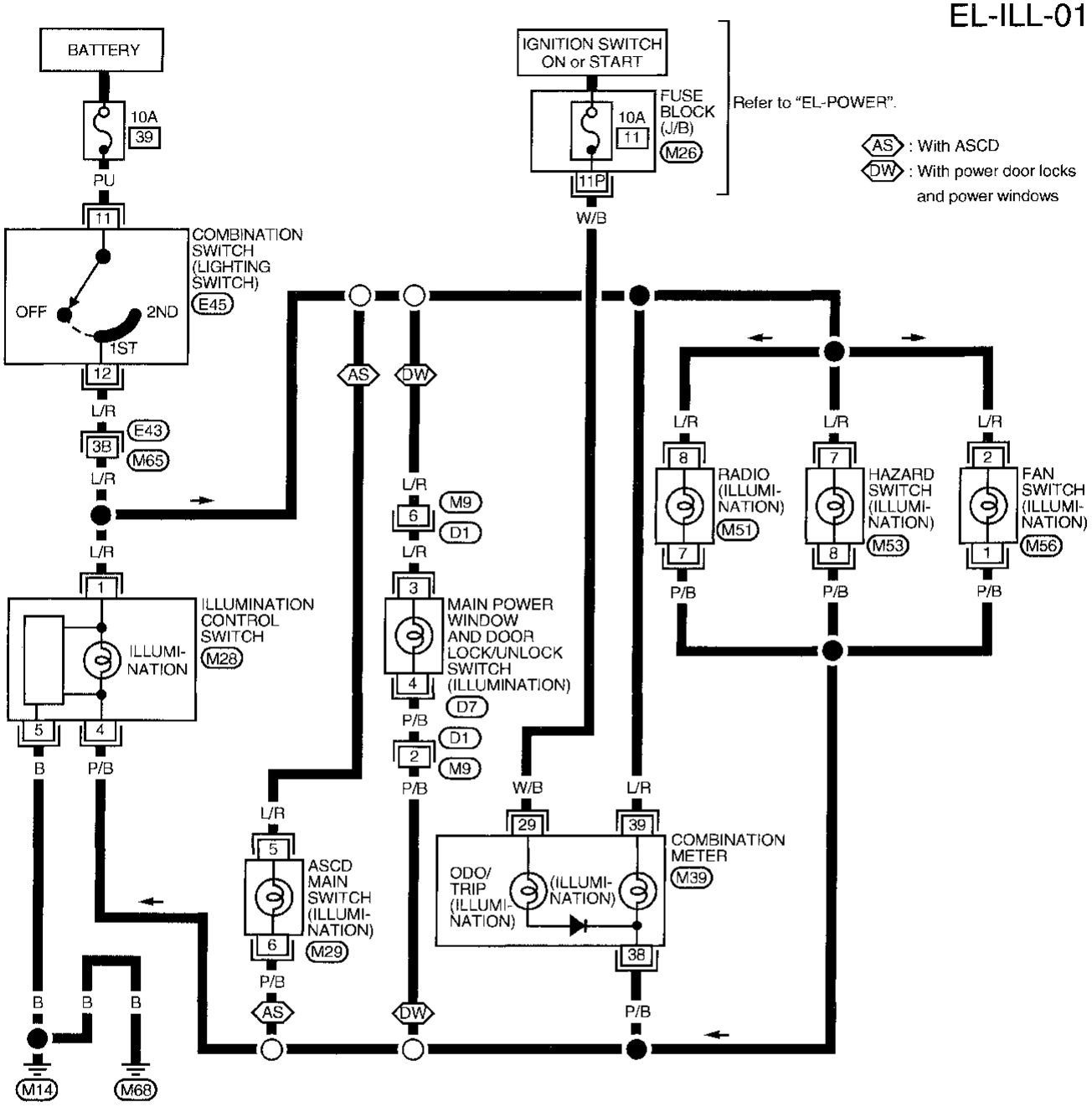

Refer to last page (Foldout page).
M65 , E43

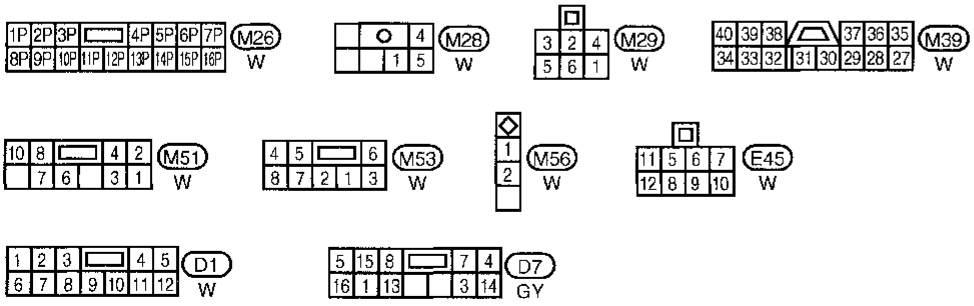

AEL346B

Simpo PDF Merge and Split Unregistered Version - http://www.simpopdf.com

Component Parts and Harness Connector Location

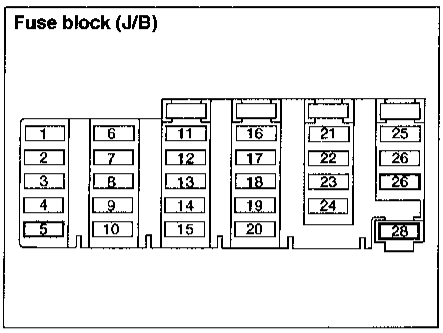

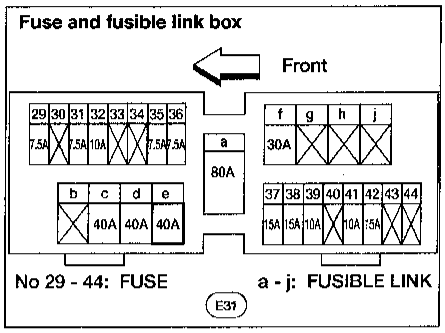

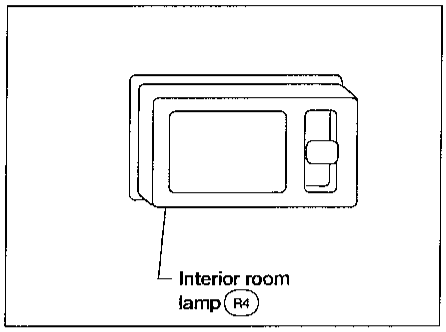

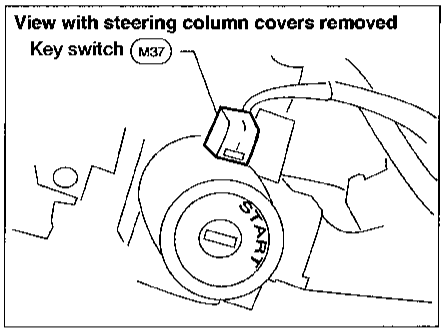

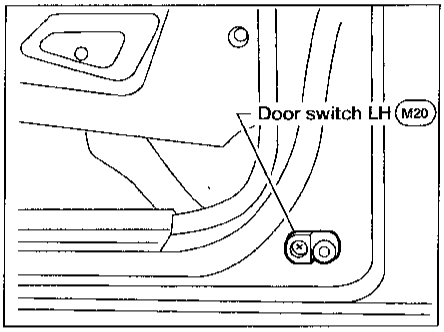

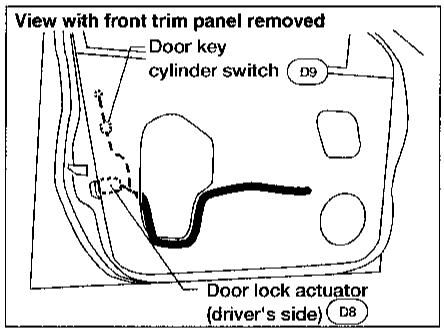

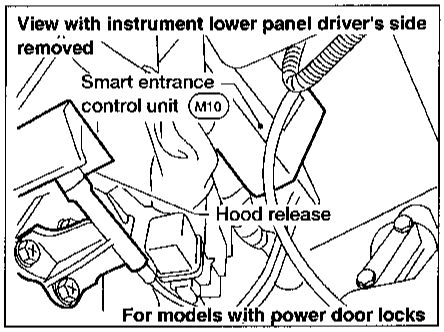

AEL685B

Simpo PDF Merge and Split Unregistered Version - http://www.simpopdf.com

System Description

MODELS WITH POWER DOOR LOCKS

Power supply and ground

Power is supplied at all times:
- through 30A fusible link (Letter f, located in the fuse and fusible link box)
- to circuit breaker terminal ①
- through circuit breaker terminal ②
- to smart entrance control unit terminal ①.

Power is supplied at all times:
- through 7.5A fuse [No. 28, located in the fuse block (J/B)]
- to key switch terminal ①.

Power is supplied at all times:
- through 7.5A fuse [No. 26, located in the fuse block (J/B)]
- to room lamp terminal ⊕.

When the key is inserted into ignition key cylinder, power is supplied:
- from key switch terminal ②
- to smart entrance control unit terminal ㉔.

With the ignition switch in the ON or START position, power is supplied:
- through 7.5A fuse [No. 5, located in the fuse block (J/B)]
- to smart entrance control unit terminal ⑪.

Ground is supplied:
- through body grounds M14 and M68
- to smart entrance control unit terminal ⑩.

When the LH door is opened, ground is supplied:
- from door switch LH terminal ②
- to smart entrance control unit terminal ⑮.

When the RH door is opened, ground is supplied:
- from door switch RH terminal ①
- to smart entrance control unit terminal ㉟.

When the LH door is unlocked, the smart entrance control unit receives a ground signal:
- through body grounds M14 and M68
- to door unlock sensor terminal ④
- from door unlock sensor terminal ②
- to smart entrance control unit terminal ⑫.

When a signal, or combination of signals is received by the smart entrance control unit, ground is supplied:
- through smart entrance control unit terminal ⑨
- to room lamp terminal ㊞.

With power and ground supplied, the interior room lamp illuminates.

Switch operation

When the room lamp switch is ON, ground is supplied:
- through body grounds M14 and M68
- to room lamp terminal ⊖.

With power and ground supplied, the room lamp turns ON and remains ON until the room lamp switch is turned to OFF or turned to the "DOOR" postion and the doors are closed.

Interior room lamp timer operation

When the room lamp switch is in the "DOOR" position, the smart entrance control unit keeps the interior room lamp illuminated for about 30 seconds when:
- LH door is unlocked
- key is removed from ignition key cylinder while driver's door is closed
- driver's door is opened and then closed while ignition switch is not in the ON position.

The timer is canceled, and interior room lamp turns off when:
- driver's door is locked with remote controller, or
- ignition switch is turned ON.

The smart entrance control unit will shut off the room light if left on for 30 minutes.

System Description (Cont'd)

Simpo PDF Merge and Split Unregistered Version - http://www.simpopdf.com

ON-OFF control

When the room lamp switch is in the "DOOR" position, when the driver side door or passenger door is opened the room lamp turns on.
When any door is opened and then closed while the ignition switch is not in the ON position, the room lamp timer operates.

MODELS WITHOUT POWER DOOR LOCKS

Power is supplied at all times:
- through 7.5A fuse [No. 26, located in the fuse block (J/B)]
- to room lamp terminal ⊕.

With the room lamp switch ON, ground is supplied:
- through body grounds (M14) and (M68)
- to room lamp terminal ⊖.

When a door is opened with the room lamp switch in "DOOR" position, ground is supplied:
- through door switch LH or RH terminal ①
- to room lamp switch terminal (SW).

With power and ground supplied, the room lamp turns ON.

Simpo PDF Merge and Split Unregistered Version - http://www.simpopdf.com

Wiring Diagram — ROOM/L —

MODELS WITH POWER DOOR LOCKS

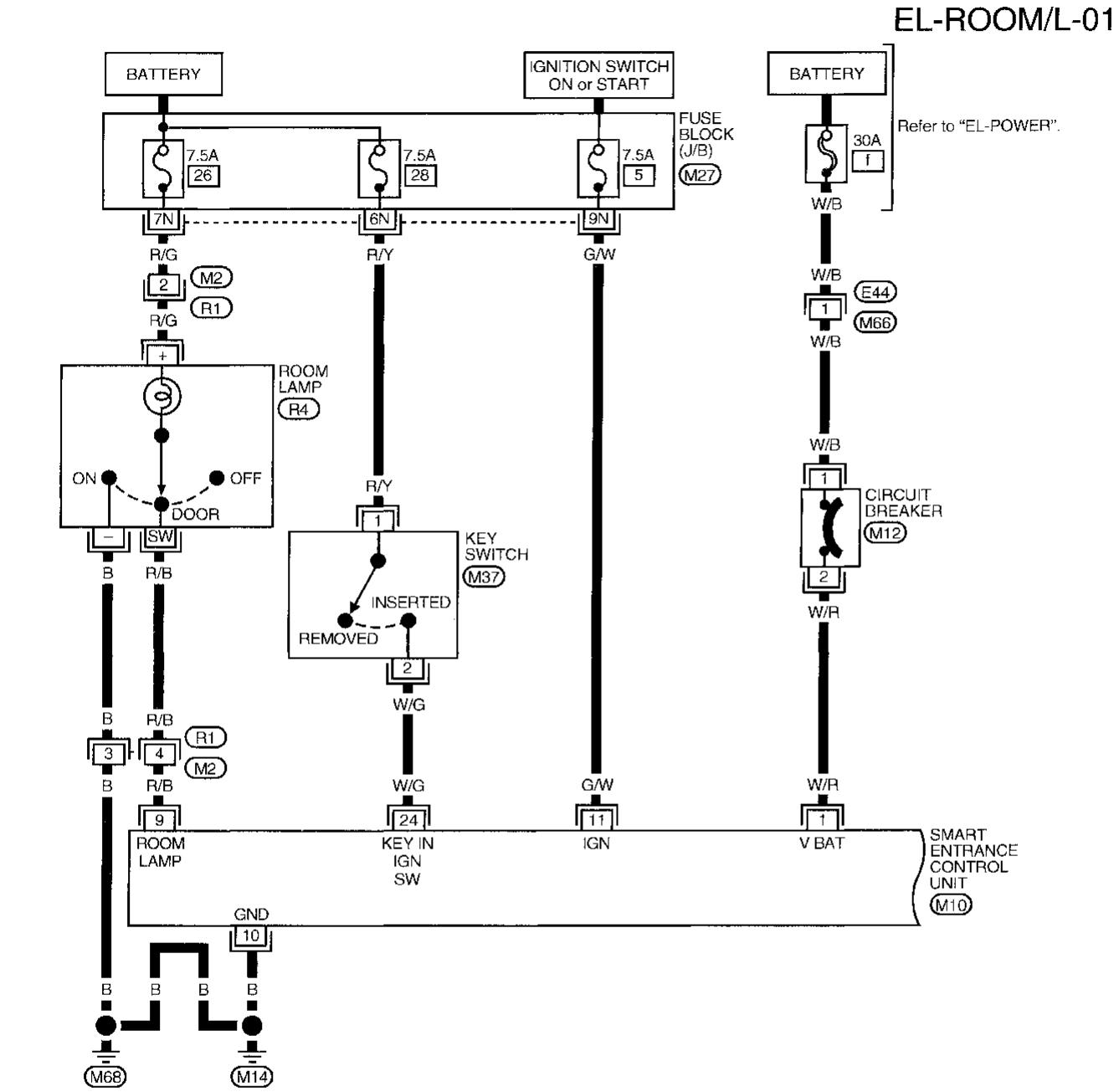

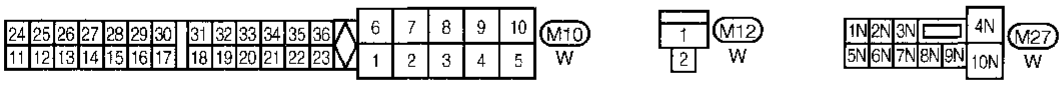



AEL347B

Wiring Diagram — ROOM/L — (Cont'd)

Simpo PDF Merge and Split Unregistered Version - http://www.simpopdf.com

EL-ROOM/L-02

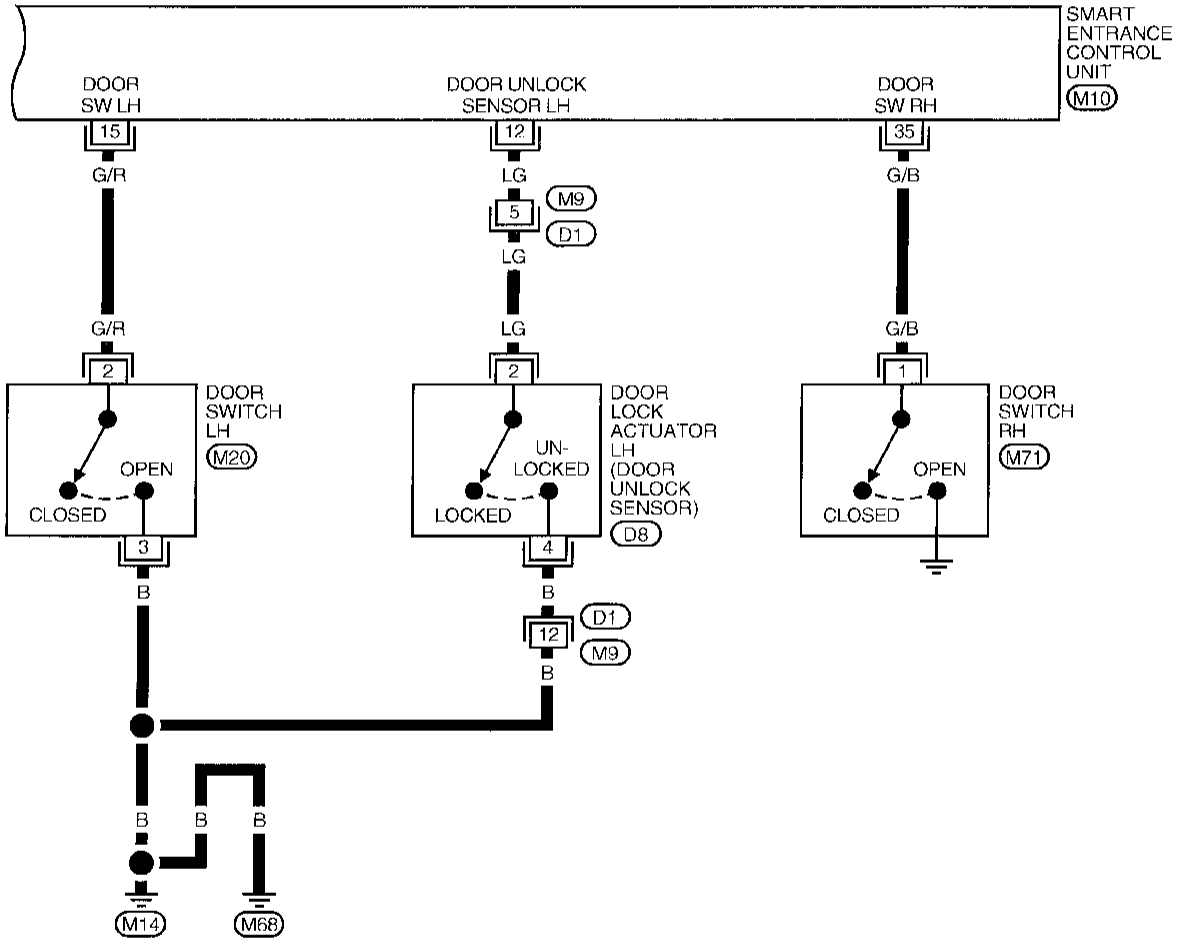

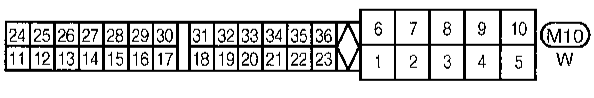

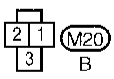



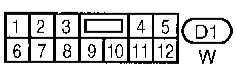



AEL348B

Wiring Diagram — ROOM/L — (Cont'd)

Simpo PDF Merge and Split Unregistered Version - http://www.simpopdf.com

MODELS WITHOUT POWER DOOR LOCKS

EL-ROOM/L-03

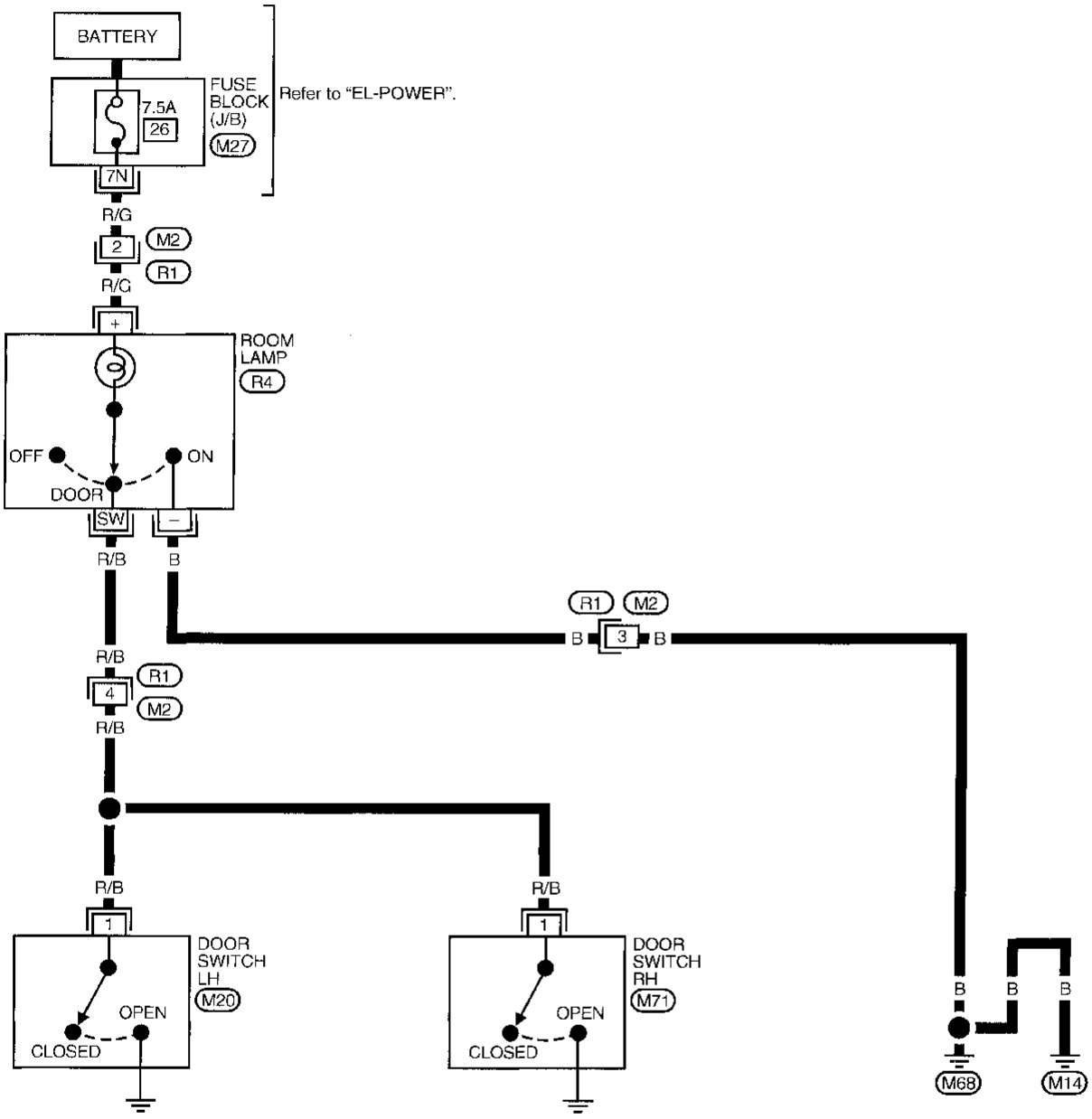



AEL349B

Simpo PDF Merge and Split Unregistered Version - http://www.simpopdf.com

A

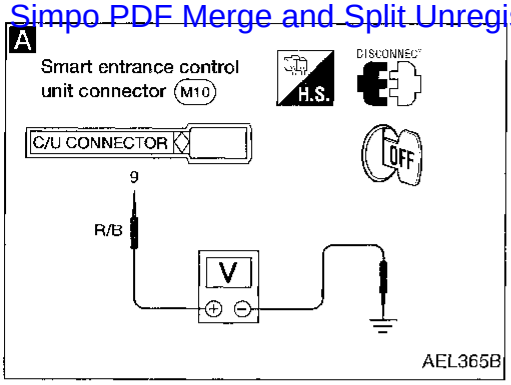

B

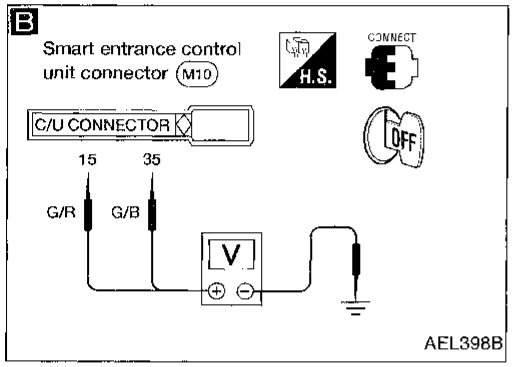

Trouble Diagnoses (For models with power door locks)

DIAGNOSTIC PROCEDURE

SYMPTOM: Room lamp does not turn on when any door is opened, or timer does not operate properly.

Does room lamp turn on when room lamp switch is in "ON" position?

No → Check the following.
- Bulb
- 7.5A fuse [No. 26, located in the fuse block (J/B)]
- Harness for open or short between fuse and room lamp
- Room lamp ground circuit

Yes ↓

Does key warning chime operate properly?

No → Check "WARNING CHIME" system. (Refer to EL-92.)

Yes ↓

Does power door lock operate using driver side knob lock switch?

No → Check "POWER DOOR LOCK" system. (Refer to EL-147.)

Yes ↓

A

CHECK ROOM LAMP OUTPUT SIGNAL.
1. Turn room lamp switch to "DOOR" position.
2. Disconnect control unit connector.
3. Check voltage between control unit terminal (9) and ground.

Battery voltage should exist.

NG → Check harness for open or short between room lamp and control unit.

OK ↓

B

CHECK DOOR SWITCH INPUT SIGNAL.
1. Connect control unit connector.
2. Check voltage between control unit terminal (15), (35) and ground.

	Terminals ⊕	Terminals ⊖	Condition	Voltage [V]
Door switch LH	(15)	Ground	Open	0
			Closed	12
Door switch RH	(35)	Ground	Open	0
			Closed	12

NG → Check the following.
- Door switch
- Door switch ground circuit (LH) or door switch ground condition (RH)
- Harness for open or short between control unit and door switches

OK ↓

Replace control unit.

Simpo PDF Merge and Split Unregistered Version - http://www.simpopdf.com

Wiring Diagram — INT/L —

EL-INT/L-01

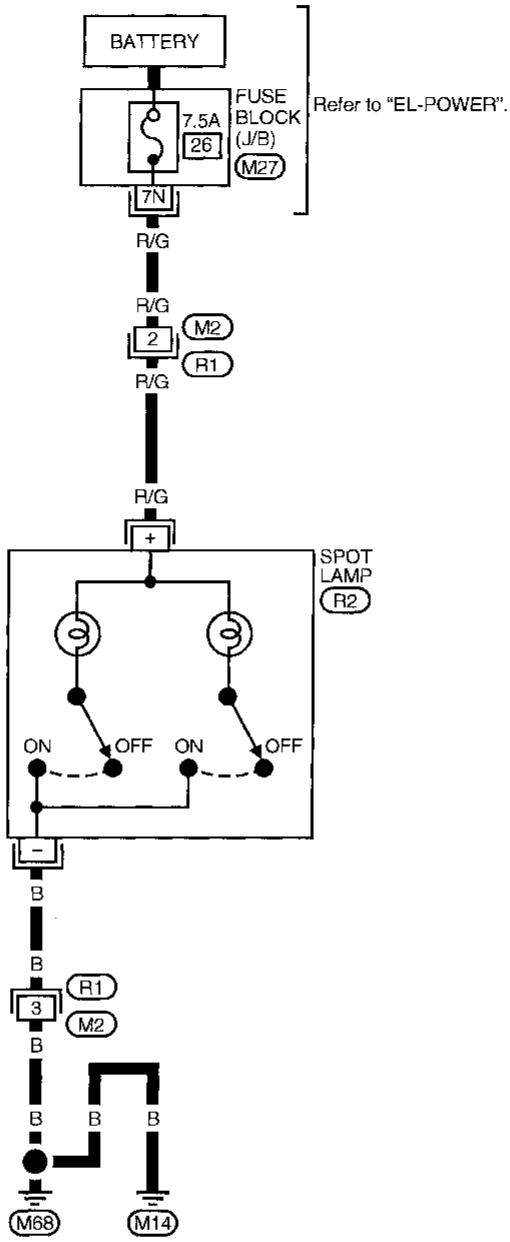

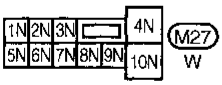

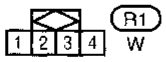



AEL350B

Simpo PDF Merge and Split Unregistered Version - http://www.simpopdf.com

Component Parts and Harness Connector Location

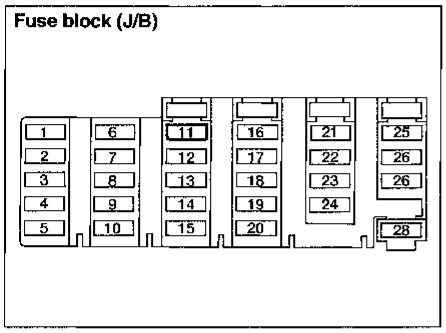

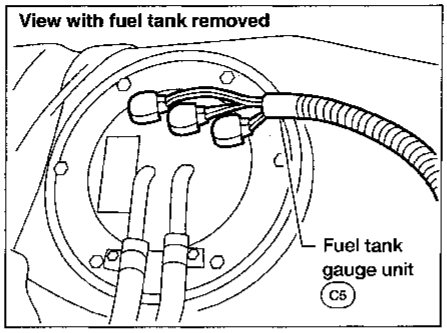

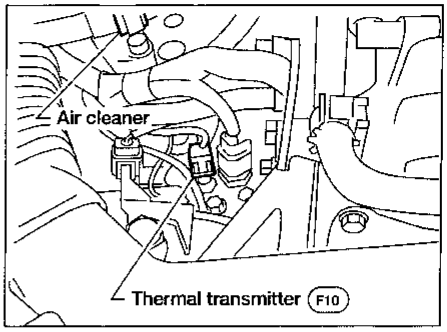

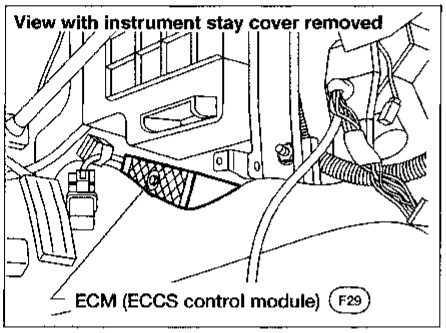

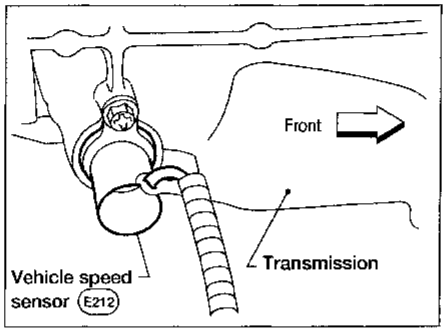

GI
MA
EM
LC
EC
FE
CL
MT
AT
TF
PD
FA
RA
BR
ST
RS
BT
HA
EL
IDX

AEL686B

Simpo PDF Merge and Split Unregistered Version - http://www.simpopdf.com

System Description

UNIFIED CONTROL METER

- Speedometer, odo/trip meter, tachometer, fuel gauge and water temperature gauge are controlled totally by control unit combined with speedometer.
- Digital meter is adopted for odo/trip meter.*
  *The record of the odo meter is kept even if the battery cable is disconnected. The record of the trip meter is erased when the battery cable is disconnected.
- Odo/trip meter segment can be checked in diagnosis mode.
- Meter/gauge can be checked in diagnosis mode.

HOW TO CHANGE THE DISPLAY FOR ODO/TRIP METER

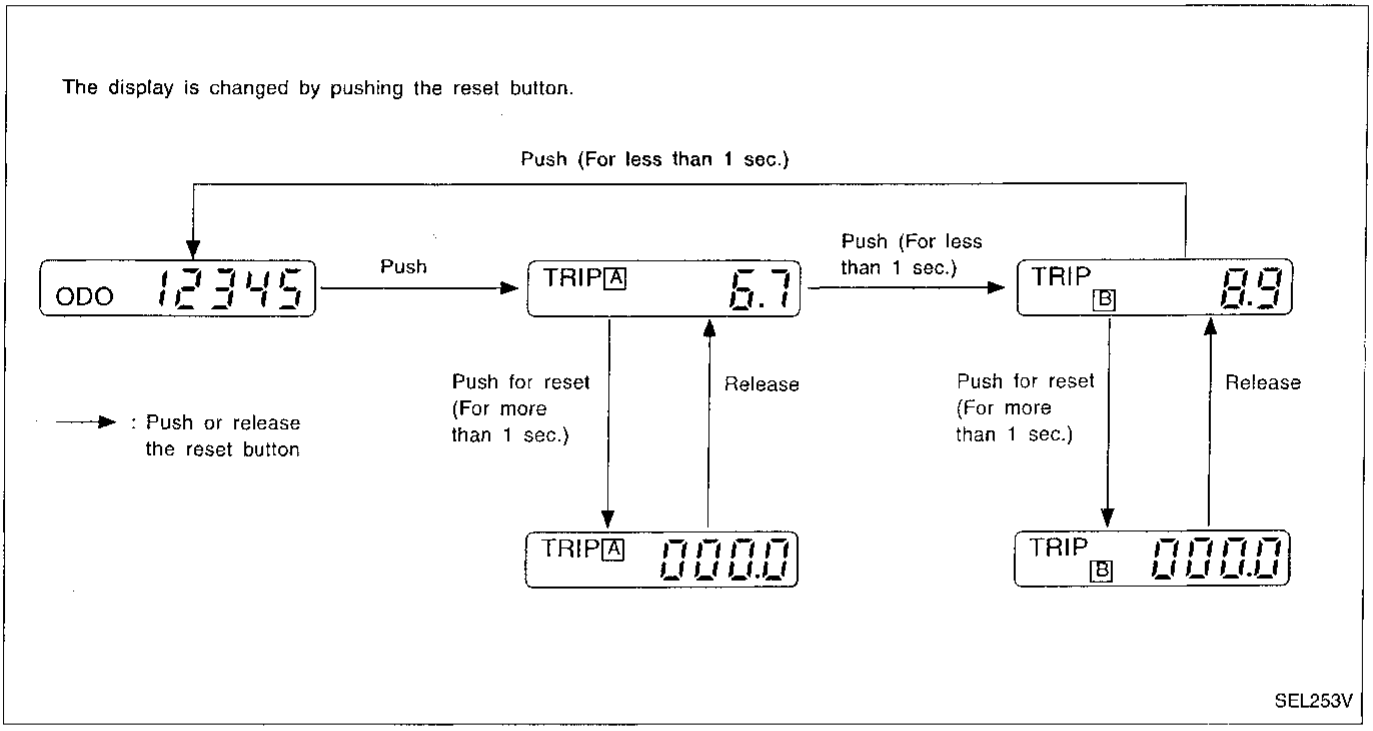

Note: Turn ignition switch to the "ON" position to operate odo/trip meter.

POWER SUPPLY AND GROUND CIRCUIT

With the ignition switch in the ON or START position, power is supplied:

- through 10A fuse [No. 11, located in the fuse block (J/B)]
- to combination meter terminal (29).

Ground is supplied:

- to combination meter terminal (26)
- through body grounds (M14) and (M68).

FUEL GAUGE

The fuel gauge indicates the approximate fuel level in the fuel tank.
The fuel gauge is regulated by a variable ground signal supplied:

- to combination meter terminal (7) for the fuel gauge
- from terminal (G) of the fuel tank gauge unit
- through terminal (E) of the fuel tank gauge unit and
- through body grounds (M14) and (M68).

WATER TEMPERATURE GAUGE

The water temperature gauge indicates the engine coolant temperature. The reading on the gauge is based on the resistance of the thermal transmitter.
As the temperature of the coolant increases, the resistance of the thermal transmitter decreases. A variable ground is supplied to terminal (6) of the combination meter for the water temperature gauge. The needle on the gauge moves from "C" to "H".

Simpo PDF Merge and Split Unregistered Version - http://www.simpopdf.com

TACHOMETER

The tachometer indicates engine speed in revolutions per minute (rpm).
The tachometer is regulated by a signal:

- from terminal ③ of the ECM
- to combination meter terminal ⑨ for the tachometer.

SPEEDOMETER

The vehicle speed sensor provides a voltage signal to the combination meter for the speedometer.
The voltage is supplied:

- to combination meter terminals ⑧ and ⑩ for the speedometer
- from terminals ② and ① of the vehicle speed sensor.

The speedometer converts the voltage into the vehicle speed displayed.

Simpo PDF Merge and Split Unregistered Version - http://www.simpopdf.com

Combination Meter

WITH TACHOMETER

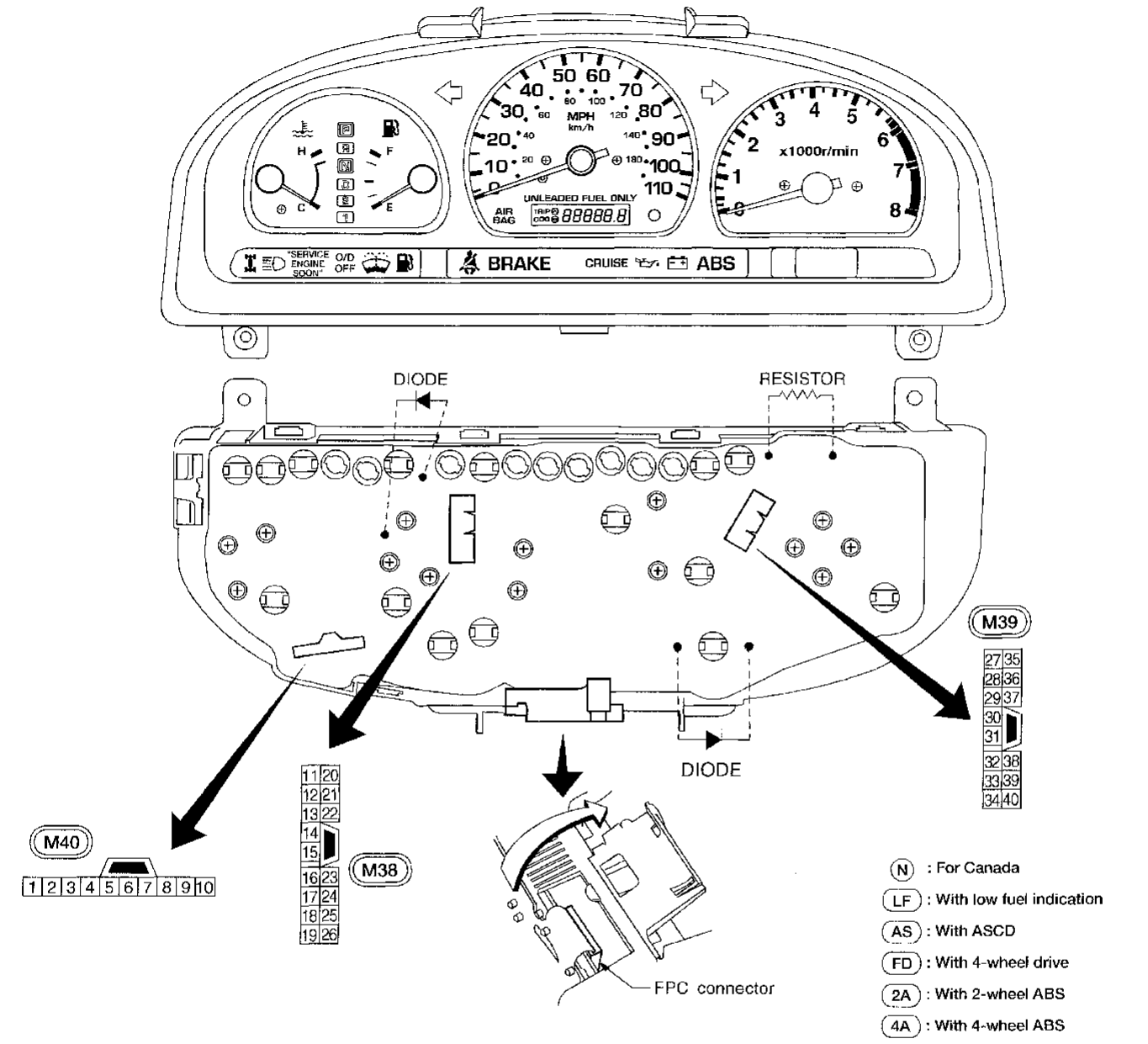

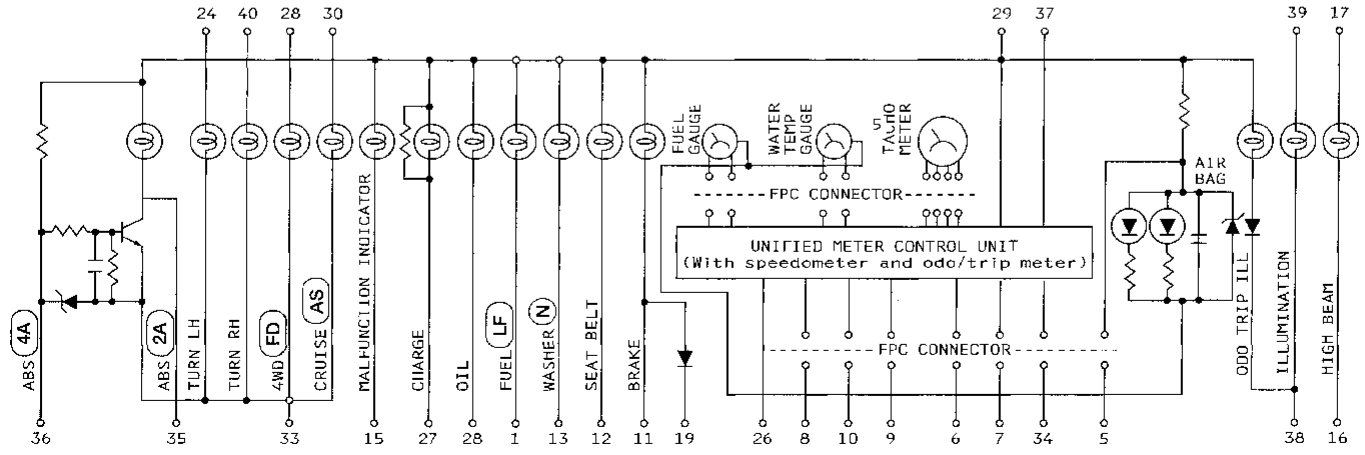

AEL650B

Combination Meter (Cont'd)

Simpo PDF Merge and Split Unregistered Version - http://www.simpopdf.com

WITHOUT TACHOMETER

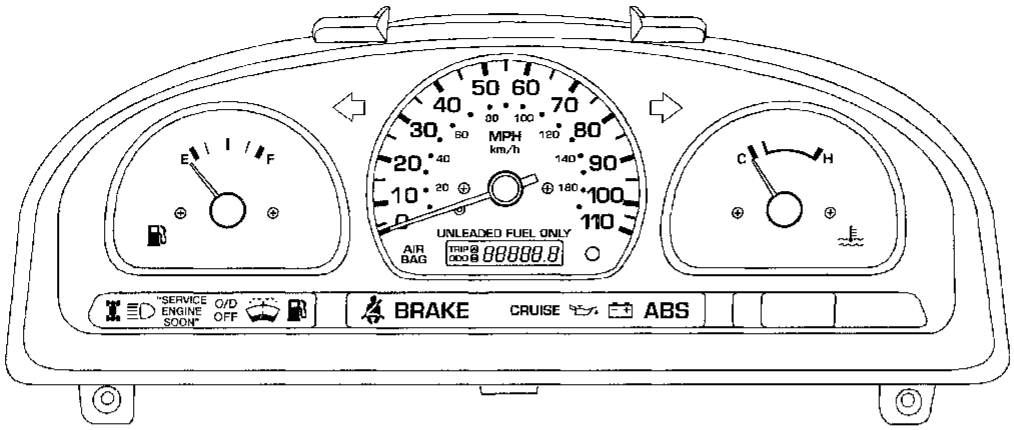

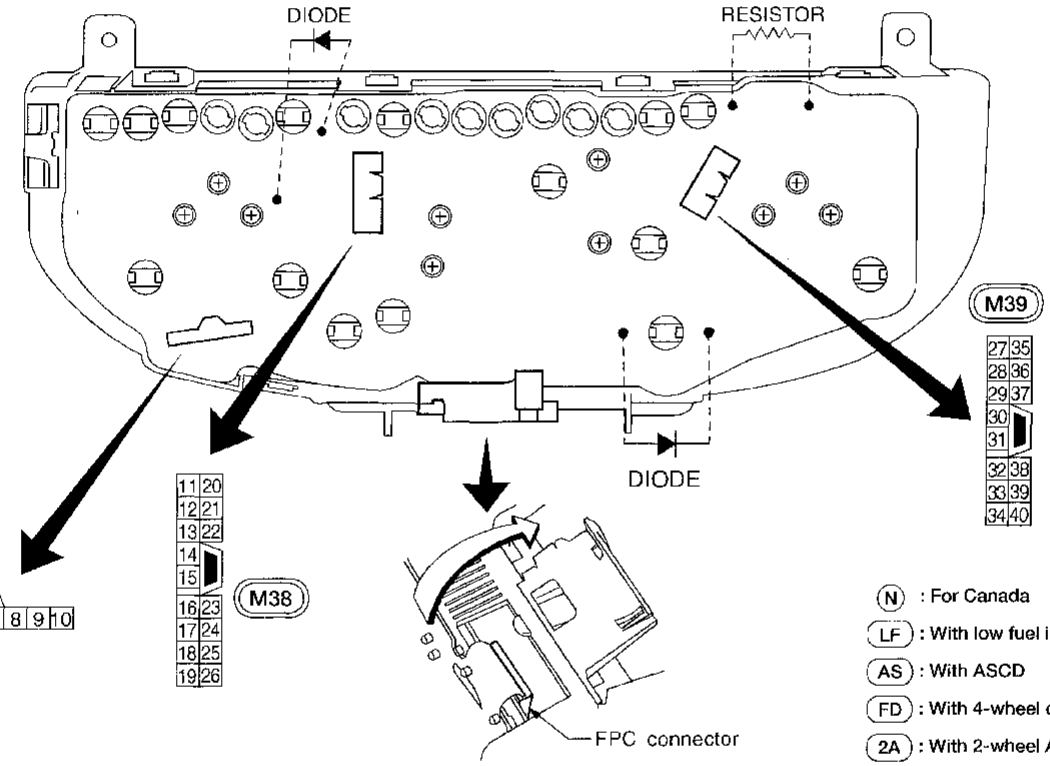

(N) : For Canada
(LF) : With low fuel indication
(AS) : With ASCD
(FD) : With 4-wheel drive
(2A) : With 2-wheel ABS
(4A) : With 4-wheel ABS

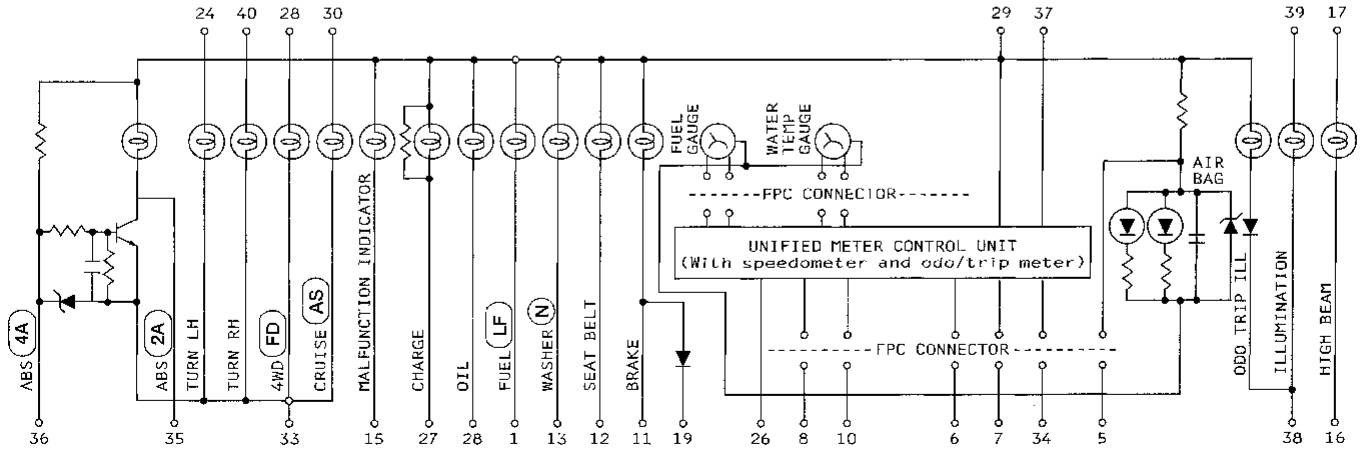

AEL651B

Simpo PDF Merge and Split Unregistered Version - http://www.simpopdf.com

Wiring Diagram — METER —

EL-METER-01

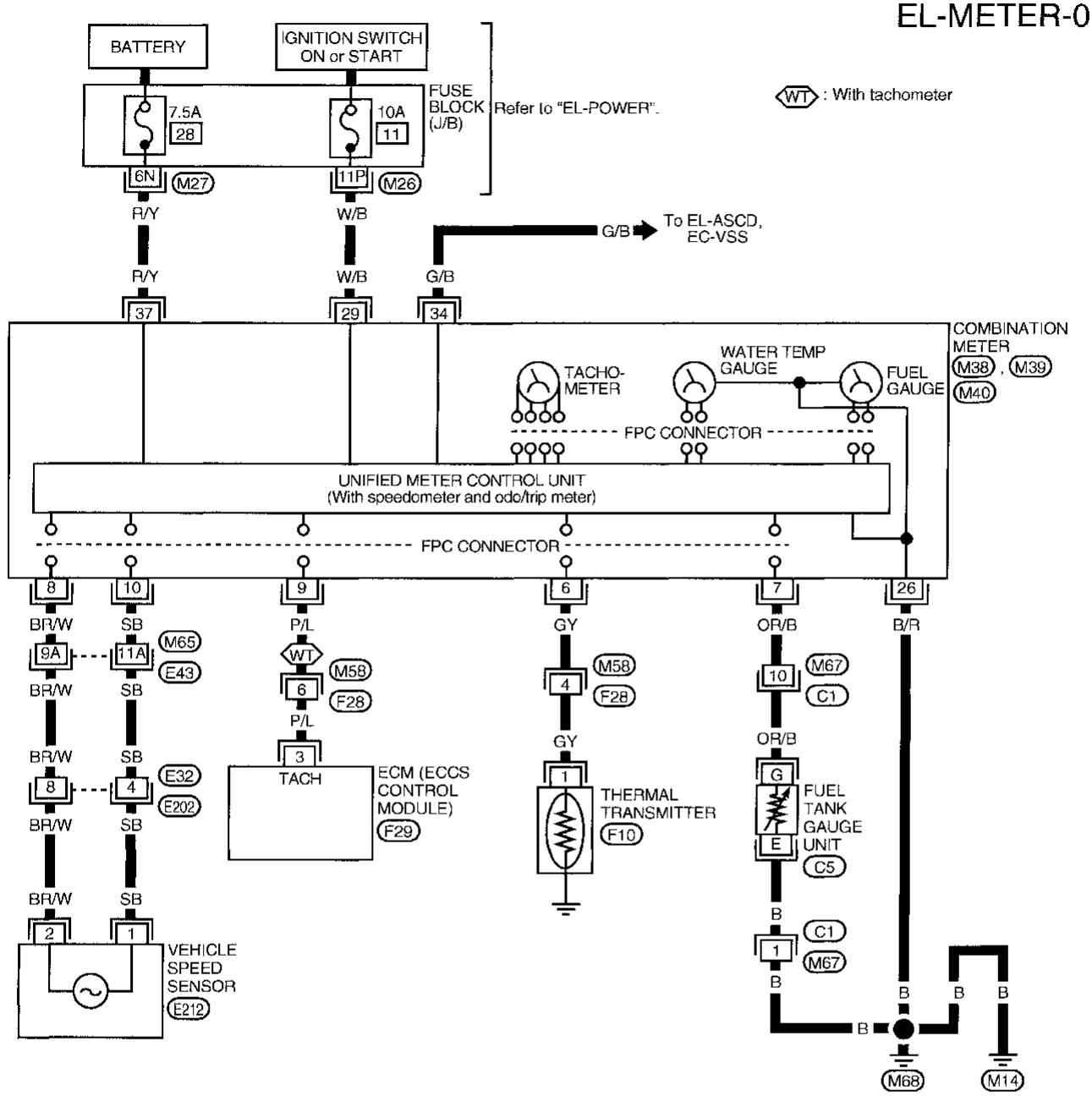

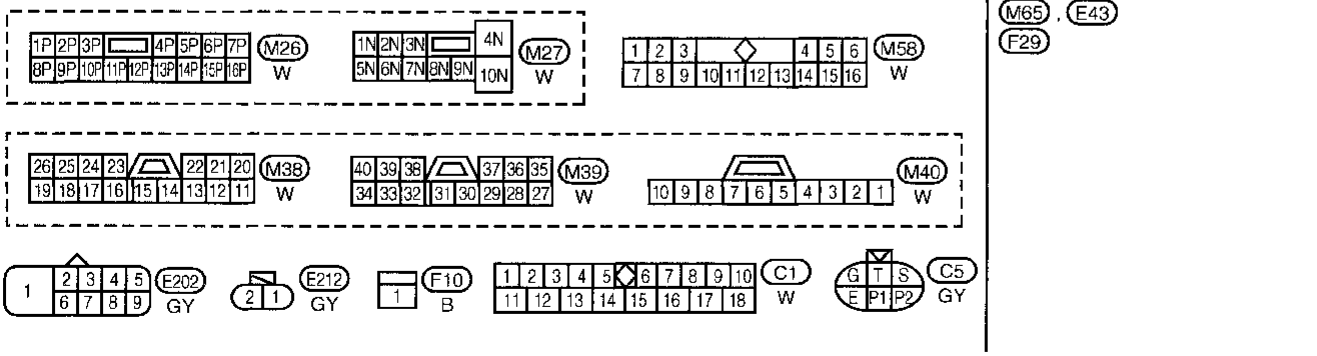

Refer to last page (Foldout page).
M65, E43
F29

AEL454B

Simpo PDF Merge and Split Unregistered Version - http://www.simpopdf.com

Meter/gauge Operation and Odo/Trip Meter Segment Check in Diagnosis Mode

DIAGNOSIS FUNCTION

- Odo/trip meter segment can be checked in diagnosis mode.
- Meters/gauges can be checked in diagnosis mode.

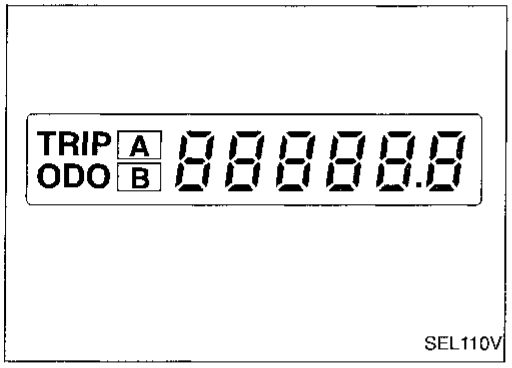

HOW TO ALTERNATE DIAGNOSIS MODE

1. Turn ignition switch to ON and change odo/trip meter to "TRIP A" or "TRIP B".
2. Turn ignition switch to OFF.
3. Turn ignition switch to ON when pushing odo/trip meter switch.
4. Confirm that trip meter indicates "000.0".
5. Push odo/trip meter switch more than three times within 5 seconds.
6. All odo/trip meter segments should be turned on.

NOTE: If some segments are not turned on, speedometer (unified meter control unit) with odo/trip meter should be replaced.

At this point, the unified control meter is turned to diagnosis mode.

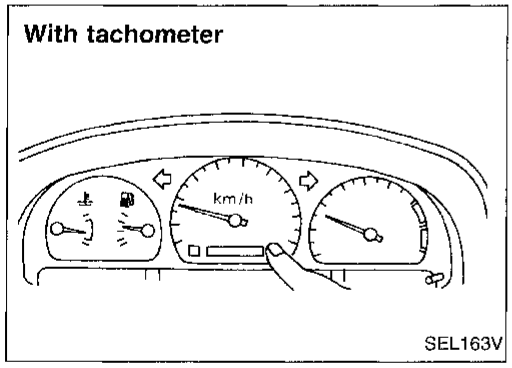

7. Push odo/trip meter switch. Indication of each meter/gauge should be as shown left during pushing odo/trip meter switch if it is not malfunctioning.

NOTE: It takes about 1 minute for indication of fuel gauge to become stable.

Simpo PDF Merge and Split Unregistered Version - http://www.simpopdf.com

Meter/gauge Operation and Odo/Trip Meter Segment Check in Diagnosis Mode (Cont'd)

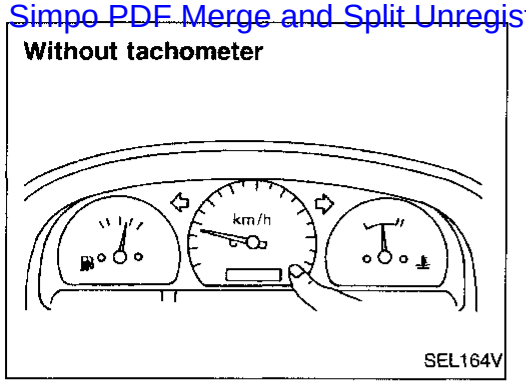

Flexible Print Circuit (FPC)

Tachometer, fuel gauge and water temperature gauge are connected with unified meter control unit (speedometer) by Flexible Print Circuit (FPC) connector. When replacing or removing and installing unified control unit (speedometer), disconnect and connect FPC connector according to the following steps.

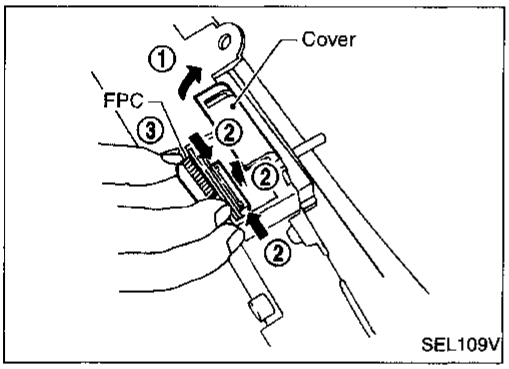

DISCONNECT

1. Open connector cover.
2. Release connector lock by holding both ends of it and pulling it up.
3. Disconnect FPC by pulling it up.

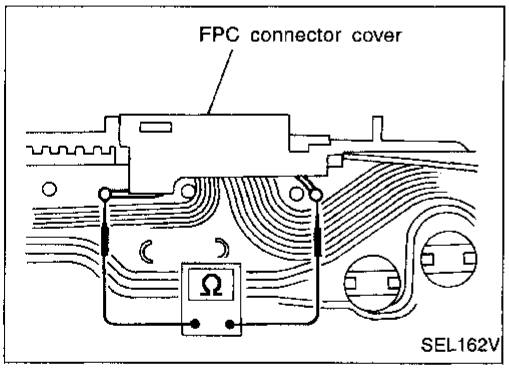

CONNECT

1. Insert FPC into connector and lock connector pushing FPC downward.
2. Check secure connection of FPC.
3. Check continuity of check land terminals for secure connection of FPC.
   Resistance: 0Ω
4. Close connector cover.

Simpo PDF Merge and Split Unregistered Version - http://www.simpopdf.com

Trouble Diagnoses

PRELIMINARY CHECK

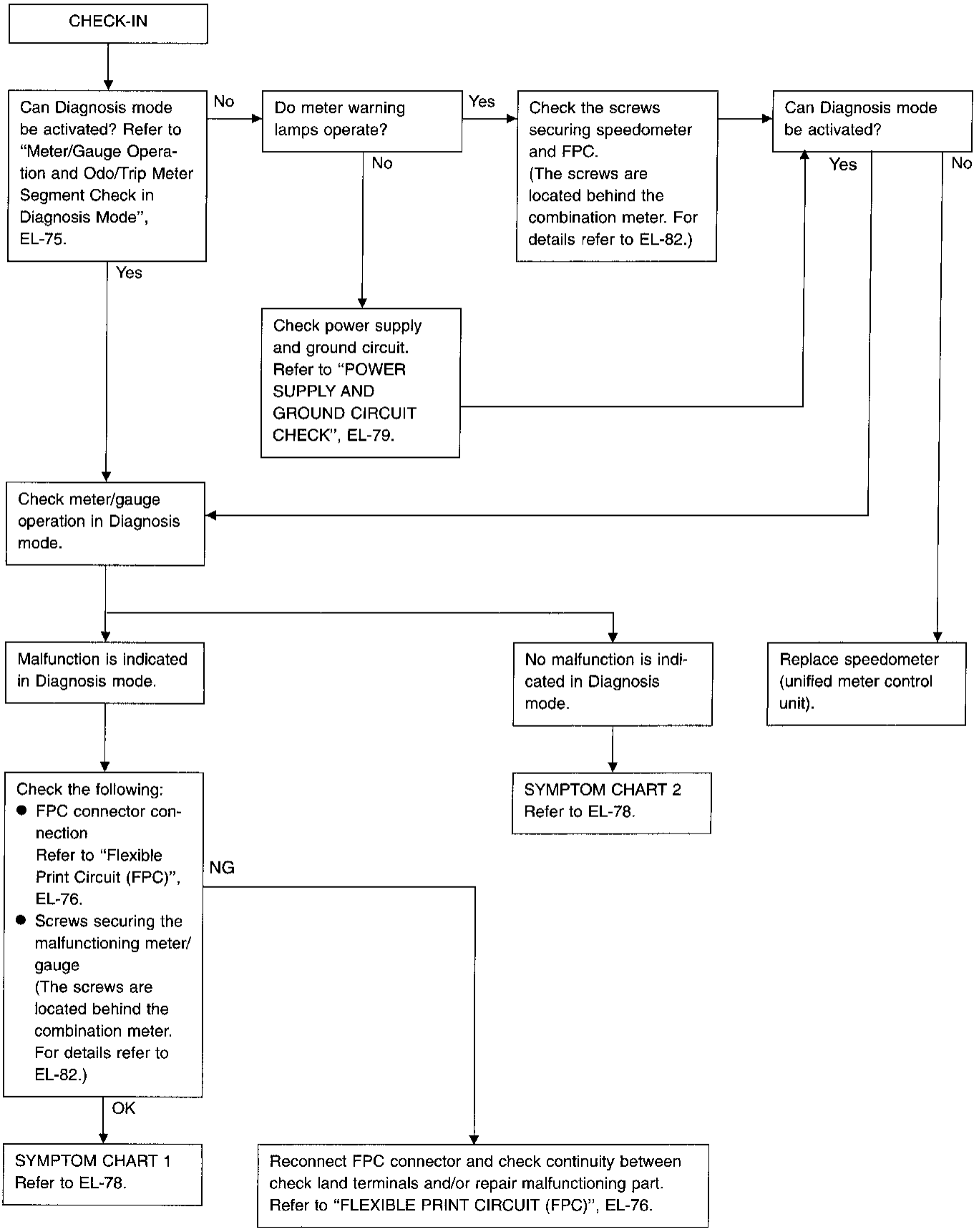

Trouble Diagnoses (Cont'd)

Simpo PDF Merge and Split Unregistered Version - http://www.simpopdf.com

SYMPTOM CHART 1 (Malfunction is indicated in diagnosis mode)

Symptom	Possible causes	Repair order
Speedometer and/or odo/trip meter indicate(s) malfunction in Diagnosis mode.	● Speedometer (Unified meter control unit)	● Replace speedometer (unified meter control unit).
Multiple meter/gauge indicate malfunction in Diagnosis mode.		
One of tachometer/fuel gauge/ water temp. gauge indicates malfunction in Diagnosis mode.	● Meter/Gauge ● Speedometer (Unified meter control unit)	1. Check resistance of meter/gauge indicating malfunction. If the resistance is NG, replace the meter/gauge. Refer to "METER/GAUGE RESISTANCE CHECK", EL-82. 2. If the resistance is OK, replace speedometer (unified meter control unit).

SYMPTOM CHART 2 (No malfunction is indicated in diagnosis mode)

Symptom	Possible causes	Repair order
Speedometer and odo/trip meter are malfunctioning.	1. Sensor - Speedometer, Odo/Trip meter 2. FPC connector 3. Speedometer (Unified meter control unit)	1. Check vehicle speed sensor. INSPECTION/VEHICLE SPEED SENSOR (Refer to EL-80.) 2. Check FPC connector. Refer to "FLEXIBLE PRINT CIRCUIT (FPC)", EL-76. 3. Replace speedometer (unified meter control unit).
Multiple meter/gauge are malfunctioning. (except speedometer, (odo/trip meter)	1. FPC connector 2. Speedometer (Unified meter control unit)	1. Check FPC connector. Refer to "FLEXIBLE PRINT CIRCUIT (FPC)", EL-76. 2. Replace speedometer (unified meter control unit).
One of tachometer/fuel gauge/ water temp. gauge is malfunctioning.	1. Sensor/Engine revolution signal - Tachometer - Fuel gauge - Water temp. gauge 2. FPC connector 3. Speedometer (Unified meter control unit)	1. Check the sensor for malfunctioning meter/gauge. INSPECTION/ENGINE REVOLUTION SIGNAL (Refer to EL-80.) INSPECTION/FUEL TANK GAUGE (Refer to EL-81.) INSPECTION/THERMAL TRANSMITTER (Refer to EL-81.) 2. Check FPC connector. Refer to "FLEXIBLE PRINT CIRCUIT (FPC)", EL-76. 3. Replace speedometer (unified meter control unit).

Before starting trouble diagnoses, perform PRELIMINARY CHECK, EL-77.

Trouble Diagnoses (Cont'd)

Simpo PDF Merge and Split Unregistered Version - http://www.simpopdf.com

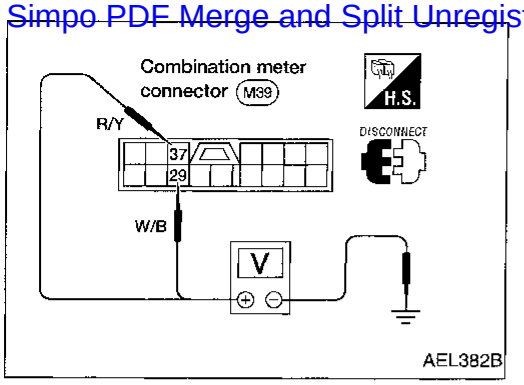

POWER SUPPLY AND GROUND CIRCUIT CHECK

Power supply circuit check

Terminals		Ignition switch position		
⊕	⊖	OFF	ACC	ON
37	Ground	Battery voltage	Battery voltage	Battery voltage
29	Ground	0V	0V	Battery voltage

If NG, check the following.

- 7.5A fuse [No. 28, located in fuse block (J/B)]
- 10A fuse [No. 11, located in fuse block (J/B)]
- Harness for open or short between fuse and combination meter

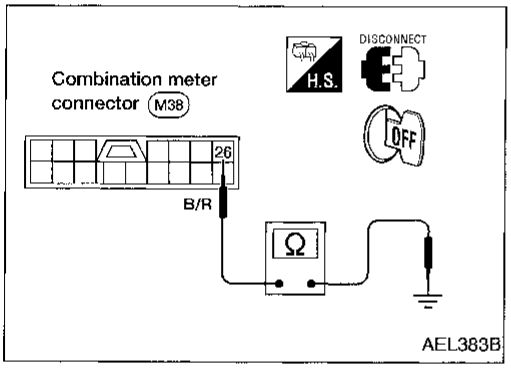

Ground circuit check

Terminals	Continuity
26 - Ground	Yes

Trouble Diagnoses (Cont'd)

Simpo PDF Merge and Split Unregistered Version - http://www.simpopdf.com

INSPECTION/VEHICLE SPEED SENSOR

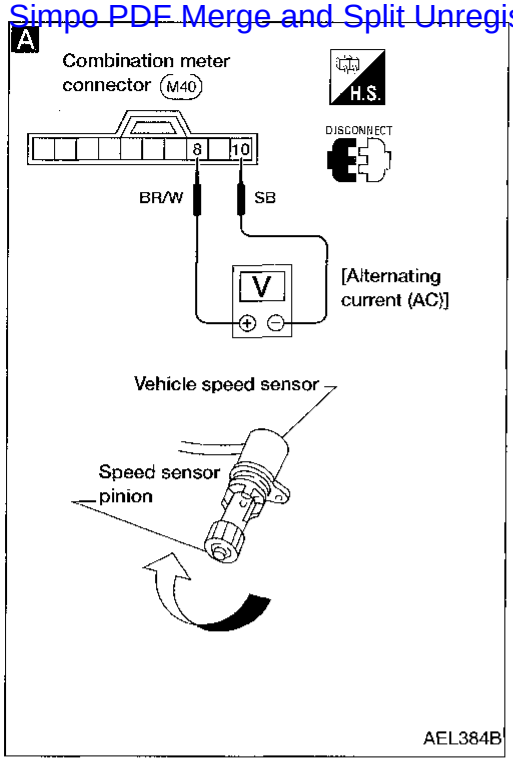

A

CHECK VEHICLE SPEED SENSOR OUTPUT.

1. Remove vehicle speed sensor from transmission and leave vehicle speed sensor connector connected.
2. Check voltage between combination meter terminals (8) and (10) while quickly turning speed sensor pinion.
   Voltage: Approx. 0.5V

OK → Vehicle speed sensor is OK.

NG ↓

B

CHECK VEHICLE SPEED SENSOR.

Check resistance between vehicle speed sensor terminals (1) and (2).
Resistance: Approx. 250Ω

NG → Replace vehicle speed sensor.

OK ↓

Check harness or connector between speedometer and vehicle speed sensor.

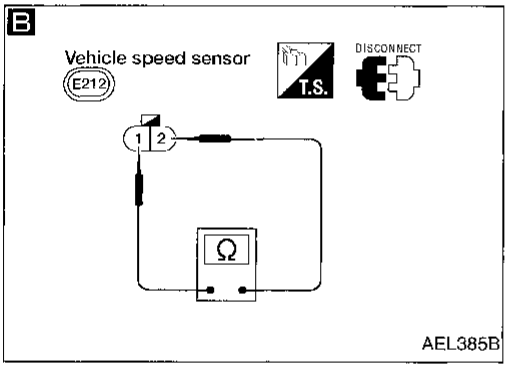

INSPECTION/ENGINE REVOLUTION SIGNAL (Models with tachometer)

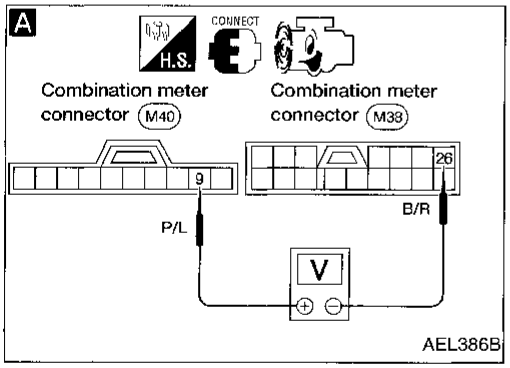

A

CHECK ECM OUTPUT.

1. Start engine.
2. Check voltage between combination meter terminals (9) and (26) at idle and 2,000 rpm.
   Higher rpm = Higher voltage
   Lower rpm - Lower voltage
   Voltage should change with rpm.

OK → Engine revolution signal is OK.

NG ↓

Check the following:

- Harness for open or short between ECM and combination meter.

Trouble Diagnoses (Cont'd)

Simpo PDF Merge and Split Unregistered Version - http://www.simpopdf.com

INSPECTION/FUEL TANK GAUGE

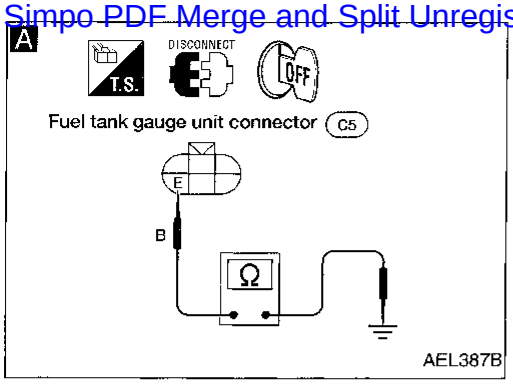

A

CHECK GROUND CIRCUIT FOR FUEL TANK GAUGE UNIT.
Check harness continuity between fuel tank gauge unit terminal (E) and ground.
Continuity should exist.

NG → Repair harness or connector.

OK ↓

CHECK GAUGE UNITS.
Refer to "FUEL TANK GAUGE UNIT CHECK" (EL-82).

NG → Repair or replace. Refer to FE section.

OK ↓

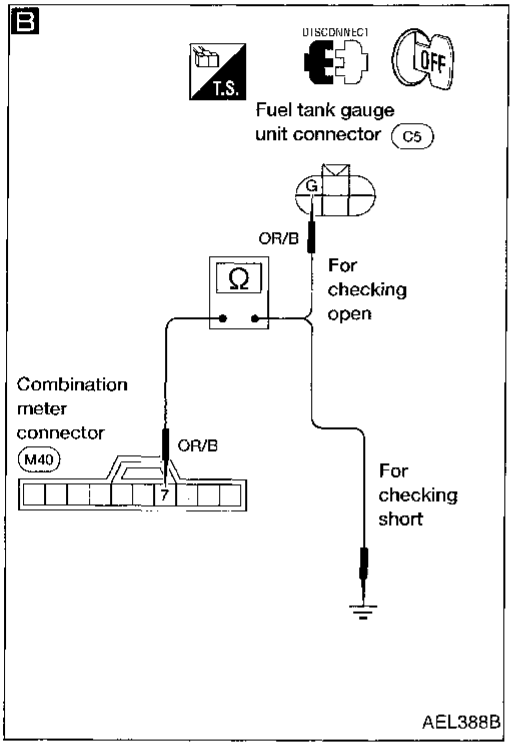

B

CHECK HARNESS.
1. Disconnect combination meter connector (M40) and fuel tank gauge unit connector.
2. Check harness continuity between combination meter terminal (7) and fuel tank gauge unit terminal (G).
Continuity should exist.
3. Check continuity between combination meter terminal (7) and ground.
Continuity should not exist.

NG → Repair harness or connector.

OK ↓

Fuel tank gauge is OK.

INSPECTION/THERMAL TRANSMITTER

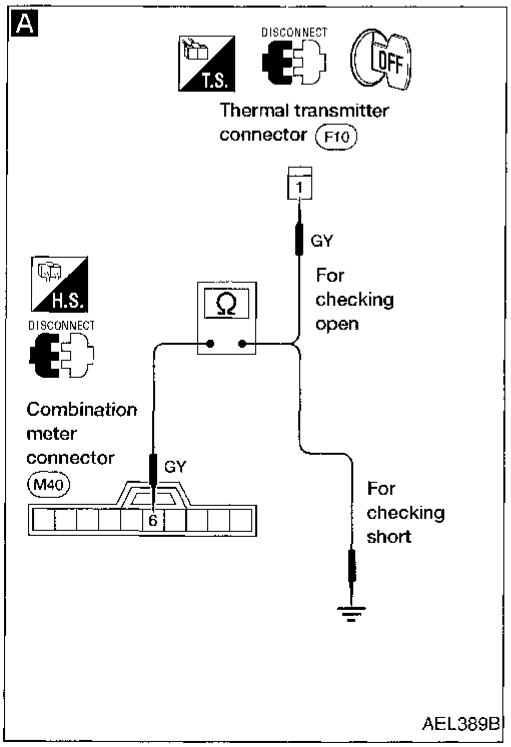

CHECK THERMAL TRANSMITTER.
Refer to "THERMAL TRANSMITTER CHECK" (EL-83).

NG → Repair or replace.

OK ↓

A

CHECK HARNESS.
1. Disconnect combination meter connector (M40) and thermal transmitter connector.
2. Check harness for open or short between combination meter terminal (6) and thermal transmitter terminal (1).
Continuity should exist.
3. Check continuity between combination meter terminal (6) and ground.
Continuity should not exist.

NG → Repair harness or connector.

OK ↓

Thermal transmitter is OK.

Simpo PDF Merge and Split Unregistered Version - http://www.simpopdf.com

Electrical Components Inspection

METER/GAUGE RESISTANCE CHECK

1. Disconnect FPC connector. Refer to EL-76.
2. Check resistance between installation screws of meter/gauge.

Screws		Resistance Ω
Tachometer	Fuel/Temp. gauge	
A - C	A - C	Approx. 70 - Approx. 140
B - D	B - C	Approx. 90 - Approx. 170

With tachometer

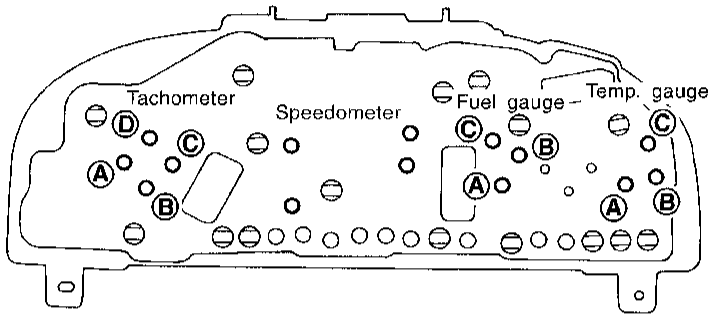

SEL172V

Without tachometer

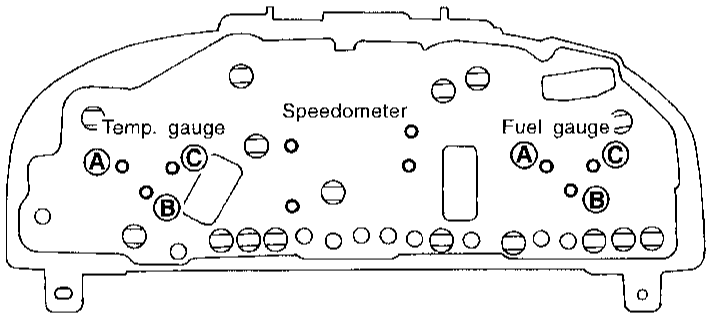

SEL173V

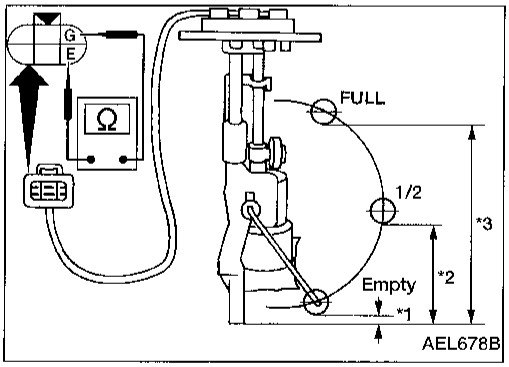

AEL678B

FUEL TANK GAUGE UNIT CHECK

- For removal, refer to FE section.

Check the resistance between terminals Ⓖ and Ⓔ.

Ohmmeter (+)	Ohmmeter (−)	Float position mm (in)			Resistance value (Ω)
Ⓖ	Ⓔ	*1	Empty	8 (0.31)	78 - 85
		*2	1/2	115 (4.53)	27 - 35
		*3	Full	241 (9.49)	Approx. 4 - 6

*1 and *3: When float rod is in contact with stopper.

Electrical Components Inspection (Cont'd)

Simpo PDF Merge and Split Unregistered Version - http://www.simpopdf.com

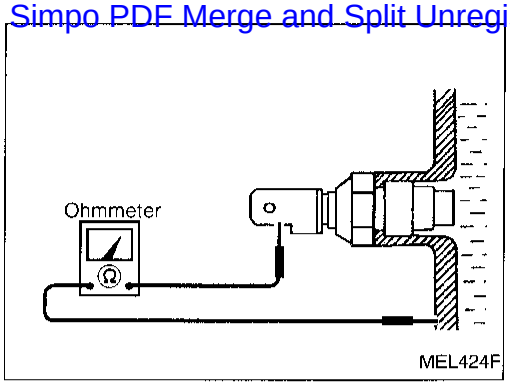

THERMAL TRANSMITTER CHECK

Check the resistance between the terminals of thermal transmitter and body ground.

Water temperature	Resistance
60°C (140°F)	Approx. 167 - 211Ω
100°C (212°F)	Approx. 47 - 53Ω

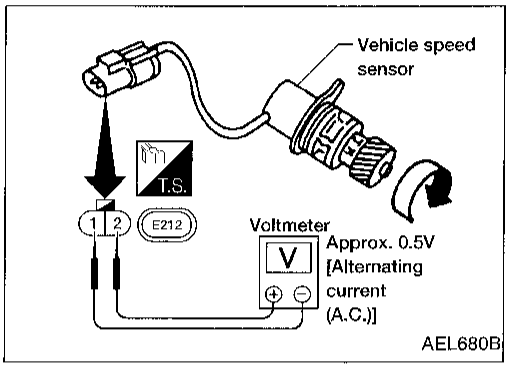

VEHICLE SPEED SENSOR SIGNAL CHECK

1. Remove vehicle speed sensor from transmission.
2. Turn vehicle speed sensor pinion quickly and measure voltage between terminals ① and ②.

Simpo PDF Merge and Split Unregistered Version - http://www.simpopdf.com

System Description

With the ignition switch in the ON or START position, power is supplied:
- through 10A fuse (No. 11, located in the fuse block [J/B])
- to combination meter terminal ㉙ and
- to 4WD switch terminal ①.

Ground is supplied:
- through body grounds M14 and M68
- to combination meter terminals ㉖ and ㉝.

Ground is supplied:
- through body grounds M14 and M68
- to fuel tank gauge unit terminal Ⓔ and
- seat belt buckle switch terminal ②.

Ground is supplied:
- through body grounds E12 and E54
- to brake fluid level switch terminal ② and
- to washer fluid level switch terminal ⊖.

AIR BAG WARNING LAMP

During prove out or when an air bag malfunction occurs, the ground path is interrupted:
- from the air bag diagnosis sensor unit terminal ⑮
- to combination meter terminal ⑤.

Ground is supplied:
- through combination meter terminal ㉖.

With power and ground supplied, the air bag warning lamp (LEDs) illuminate.
For further information, refer to RS section ("TROUBLE DIAGNOSES").

LOW FUEL LEVEL WARNING LAMP

The amount of fuel in the fuel tank is determined by the fuel level sensor in the fuel tank. A signal is sent from fuel tank gauge unit terminal Ⓢ to combination meter terminal ①. The fuel level sensor will illuminate the low fuel level warning lamp when the fuel level is low.
With power and ground supplied, the low fuel level warning lamp illuminates.

ABS WARNING LAMP

During prove out or when an ABS malfunction occurs, ground is supplied:
- from ABS control unit terminal ② (with 2-wheel ABS) or ABS actuator and electric unit (control unit) terminal ㉑ (with 4-wheel ABS)
- to combination meter terminals ㉟ or ㊱

With power and ground supplied, the ABS warning lamp illuminates.
For further information, refer to BR section ("Self-diagnosis", "TROUBLE DIAGNOSES").

4WD INDICATOR LAMP

When the 4WD switch is in the 4H or 4L position, power is supplied:
- from the 4WD switch terminal ①
- to combination meter terminal ⑱.

Ground is supplied:
- through combination meter terminal ㉝.

With power and ground supplied, the 4WD indicator lamp illuminates.

LOW OIL PRESSURE WARNING LAMP

Low oil pressure causes oil pressure switch terminal ① to provide ground to combination meter terminal ㉘.
With power and ground supplied, the low oil pressure warning lamp illuminates.

CHARGE WARNING LAMP

During prove out or when a generator malfunction occurs, ground is supplied:
- from generator terminal ③
- to combination meter terminals ㉗ and ⑲.

With power and ground supplied, the charge warning lamp and brake lamp illuminate.

System Description (Cont'd)

Simpo PDF Merge and Split Unregistered Version - http://www.simpopdf.com

BRAKE WARNING LAMP

When the parking brake is applied, or the brake fluid level is low, ground is supplied:
- from parking brake switch terminal ① or
- brake fluid level switch terminal ①
- to combination meter terminal ⑪.

With power and ground supplied, the brake warning lamp illuminates.

SEAT BELT WARNING LAMP

When the driver's seat belt is unfastened, ground is supplied:
- from seat belt buckle switch terminal ①
- to combination meter terminal ⑫.

With power and ground supplied, the seat belt warning lamp illuminates.

WASHER WARNING LAMP

When the washer fluid level is low, ground is supplied:
- from washer fluid level switch terminal ⊕
- to combination meter terminal ⑬.

With power and ground supplied, the washer warning lamp illuminates.

MALFUNCTION INDICATOR LAMP

During prove out or when an engine control malfunction occurs, ground is supplied:
- from ECM terminal ⑱
- to combination meter terminal ⑮.

With power and ground supplied, the malfunction indicator lamp illuminates.
For further information, refer to EC section ["Malfunction Indicator Lamp (MIL)", "ON BOARD DIAGNOSTIC SYSTEM DESCRIPTION"].

Simpo PDF Merge and Split Unregistered Version - http://www.simpopdf.com

Schematic

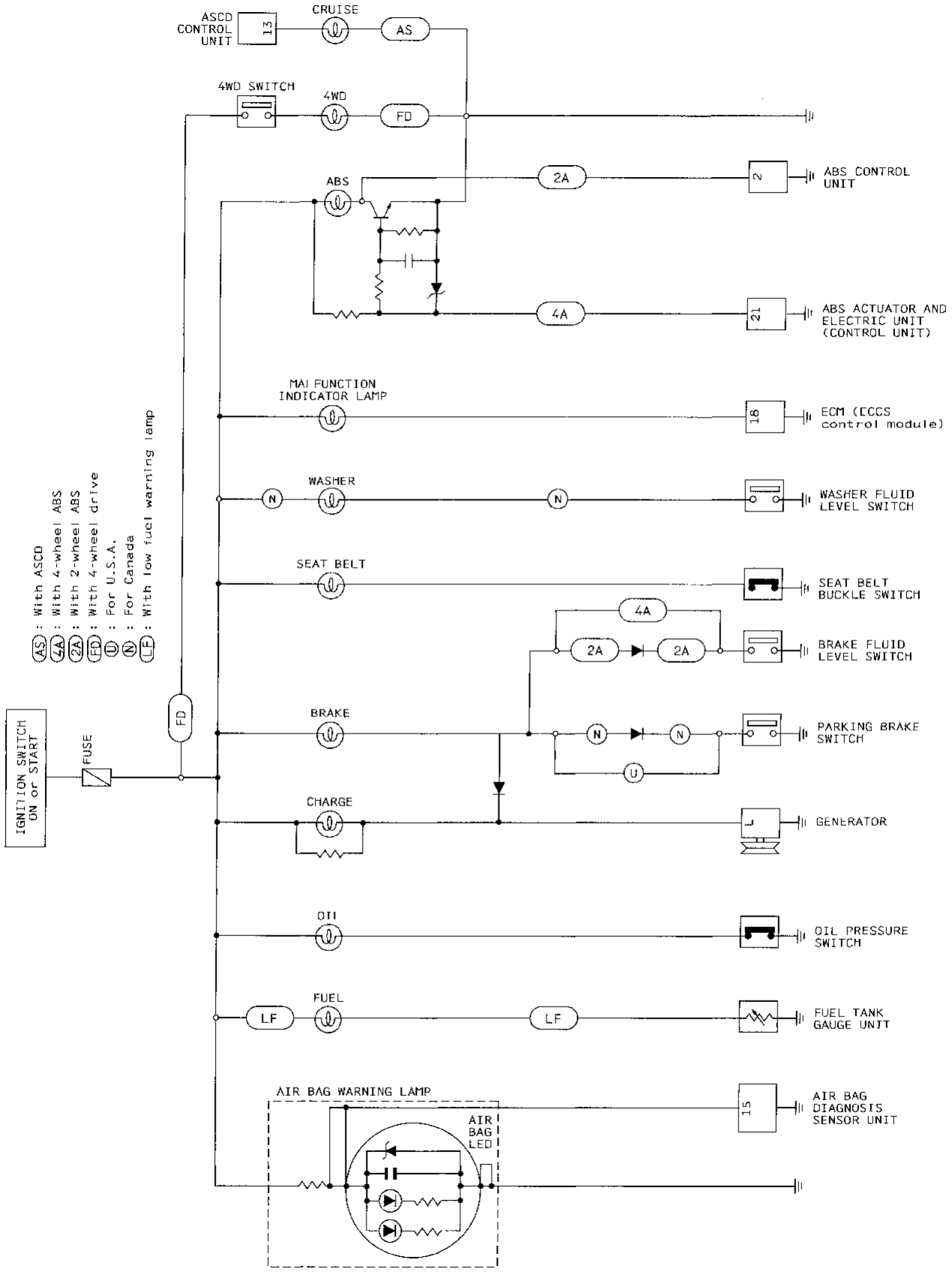

AEL446B

Simpo PDF Merge and Split Unregistered Version - http://www.simpopdf.com

Wiring Diagram — WARN —

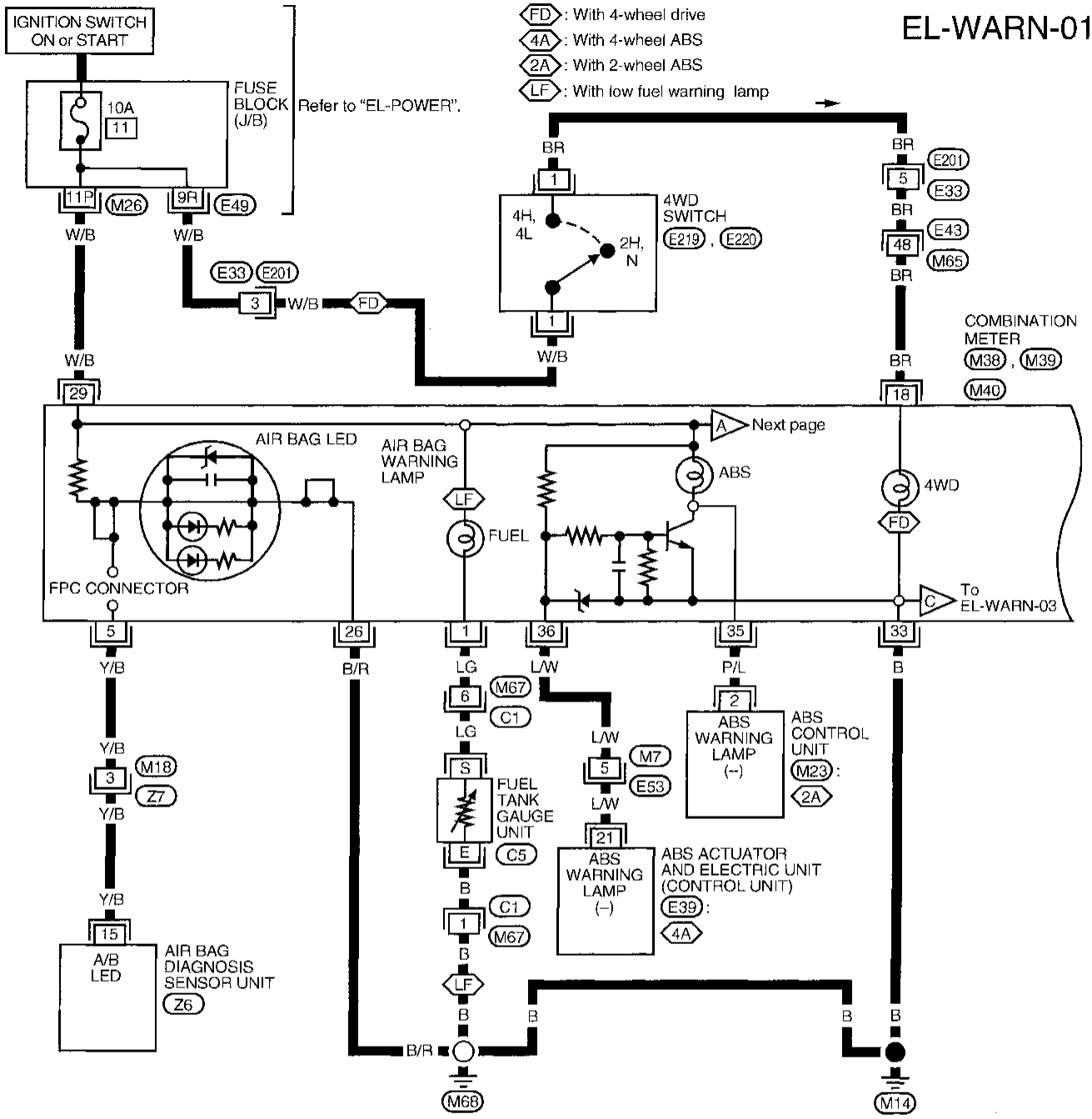

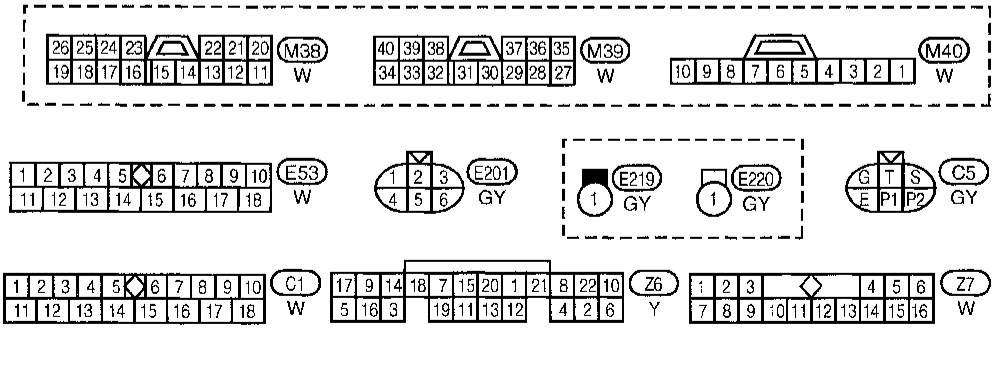

AEL447B

Wiring Diagram — WARN — (Cont'd)

Simpo PDF Merge and Split Unregistered Version - http://www.simpopdf.com

EL-WARN-02

4A : With 4-wheel ABS
2A : With 2-wheel ABS
U : For U.S.A.
N : For Canada

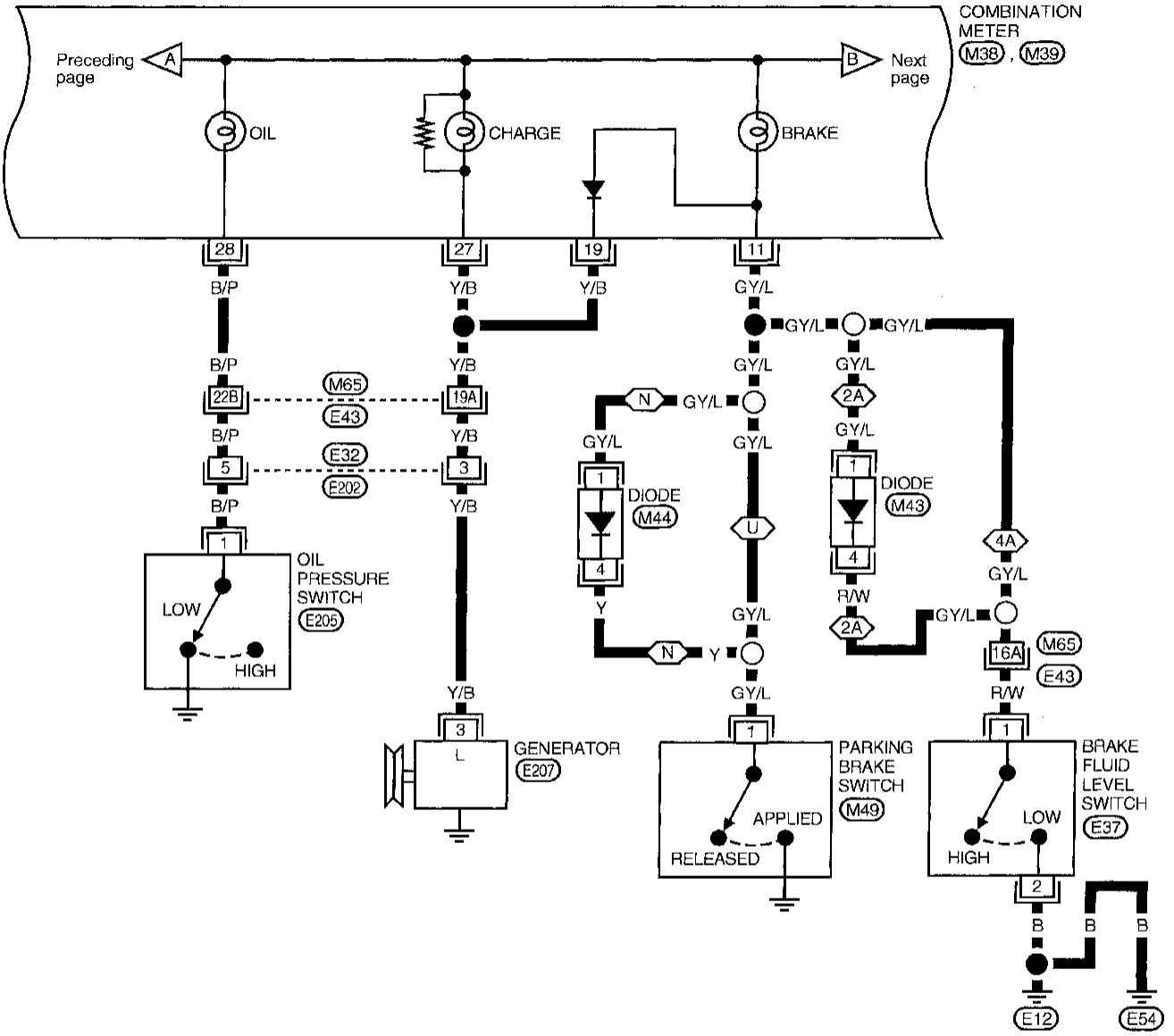

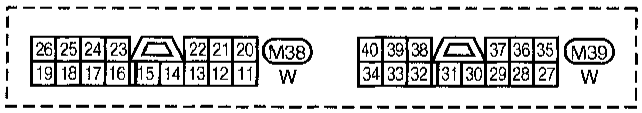

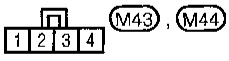

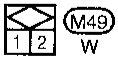



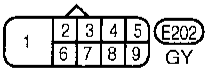





Refer to last page (Foldout page).
M65 , E43

AEL448B

Wiring Diagram — WARN — (Cont'd)

Simpo PDF Merge and Split Unregistered Version - http://www.simpopdf.com

EL-WARN-03

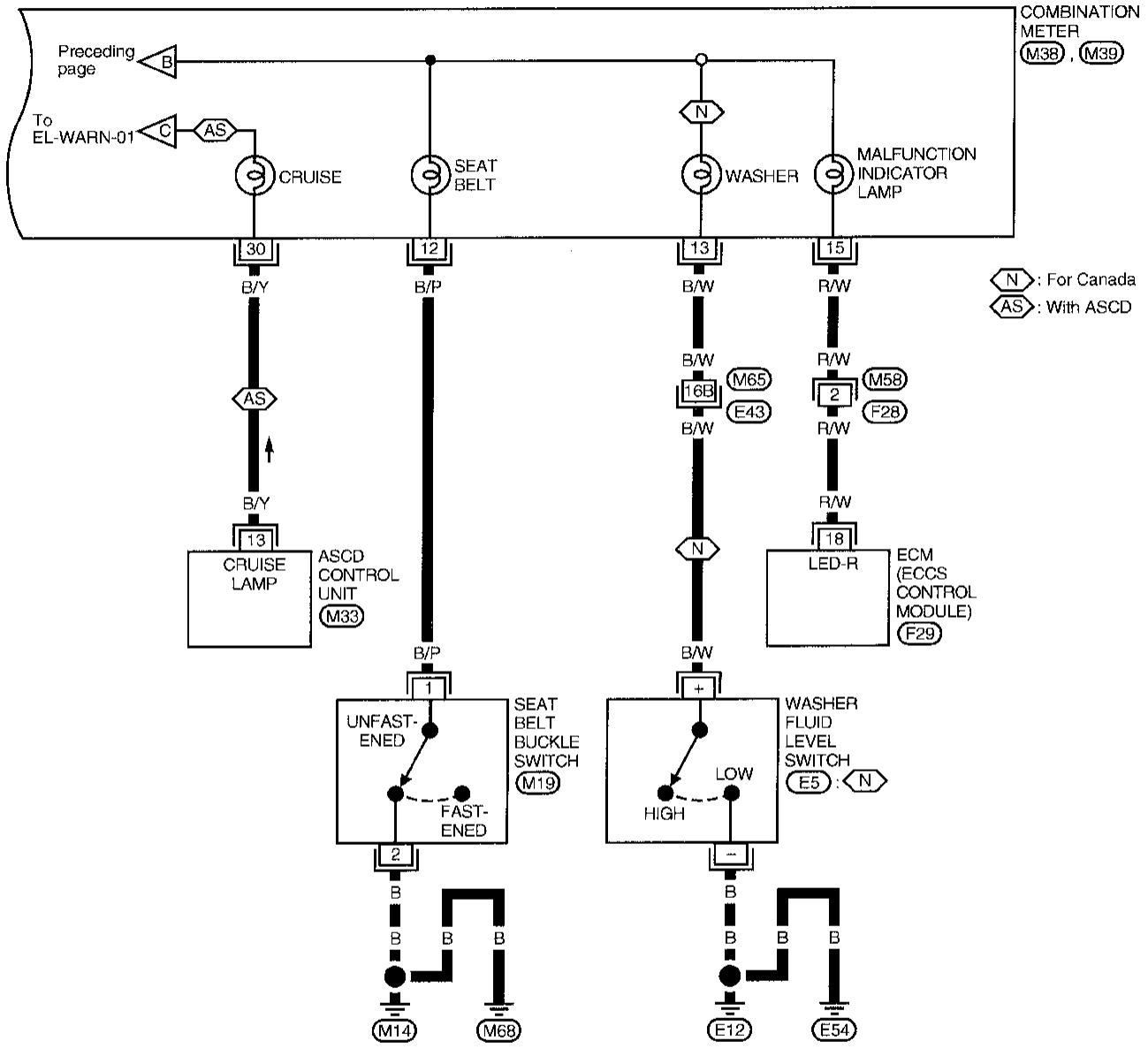

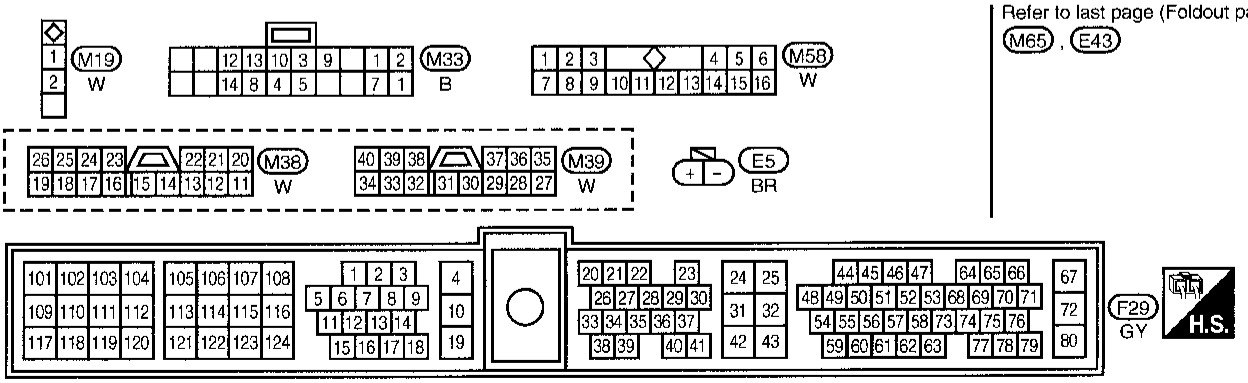

Refer to last page (Foldout page).
M65 , E43

AEL449B

Simpo PDF Merge and Split Unregistered Version - http://www.simpopdf.com

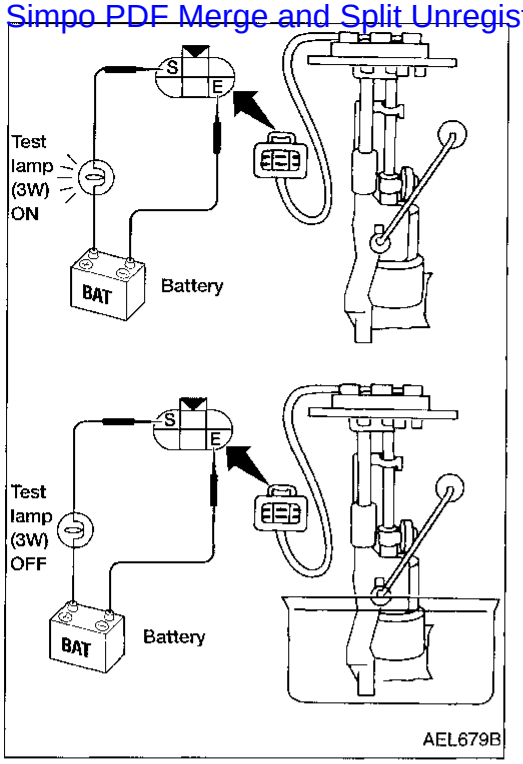

Electrical Components Inspection

FUEL WARNING LAMP SENSOR CHECK

- It will take a short time for the bulb to light.

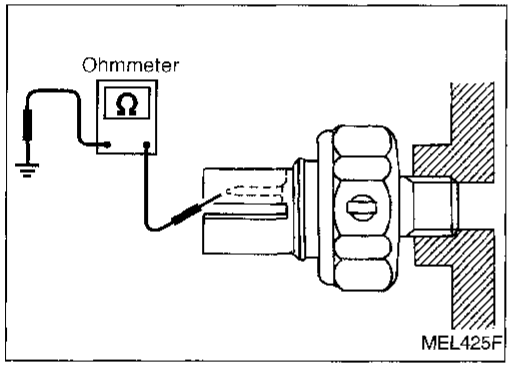

OIL PRESSURE SWITCH CHECK

	Oil pressure kPa (kg/cm^2, psi)	Continuity
Engine start	More than 10 - 20 (0.1 - 0.2, 1 - 3)	NO
Engine stop	Less than 10 - 20 (0.1 - 0.2, 1 - 3)	YES

Check the continuity between the terminals of oil pressure switch and body ground.

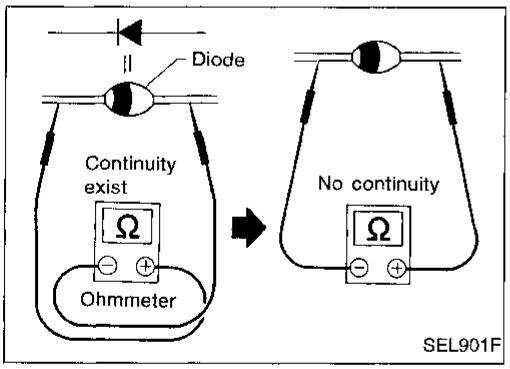

DIODE CHECK

- Check continuity using an ohmmeter.
- Diode is functioning properly if test results are as shown in the figure at left.

NOTE: Specification may vary depending on the type of tester. Before performing this inspection, be sure to refer to the instruction manual for the tester to be used.

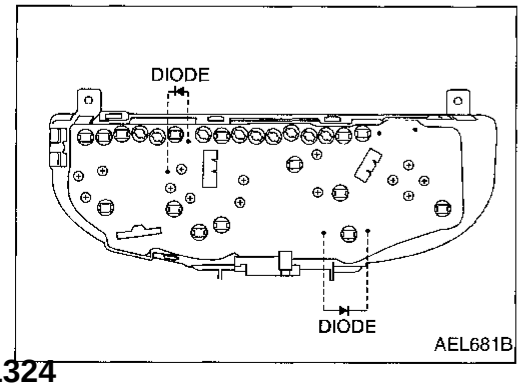

- Diodes for warning lamps are built into the combination meter printed circuit.

Simpo PDF Merge and Split Unregistered Version - http://www.simpopdf.com

Wiring Diagram — AT/IND —

EL-AT/IND-01

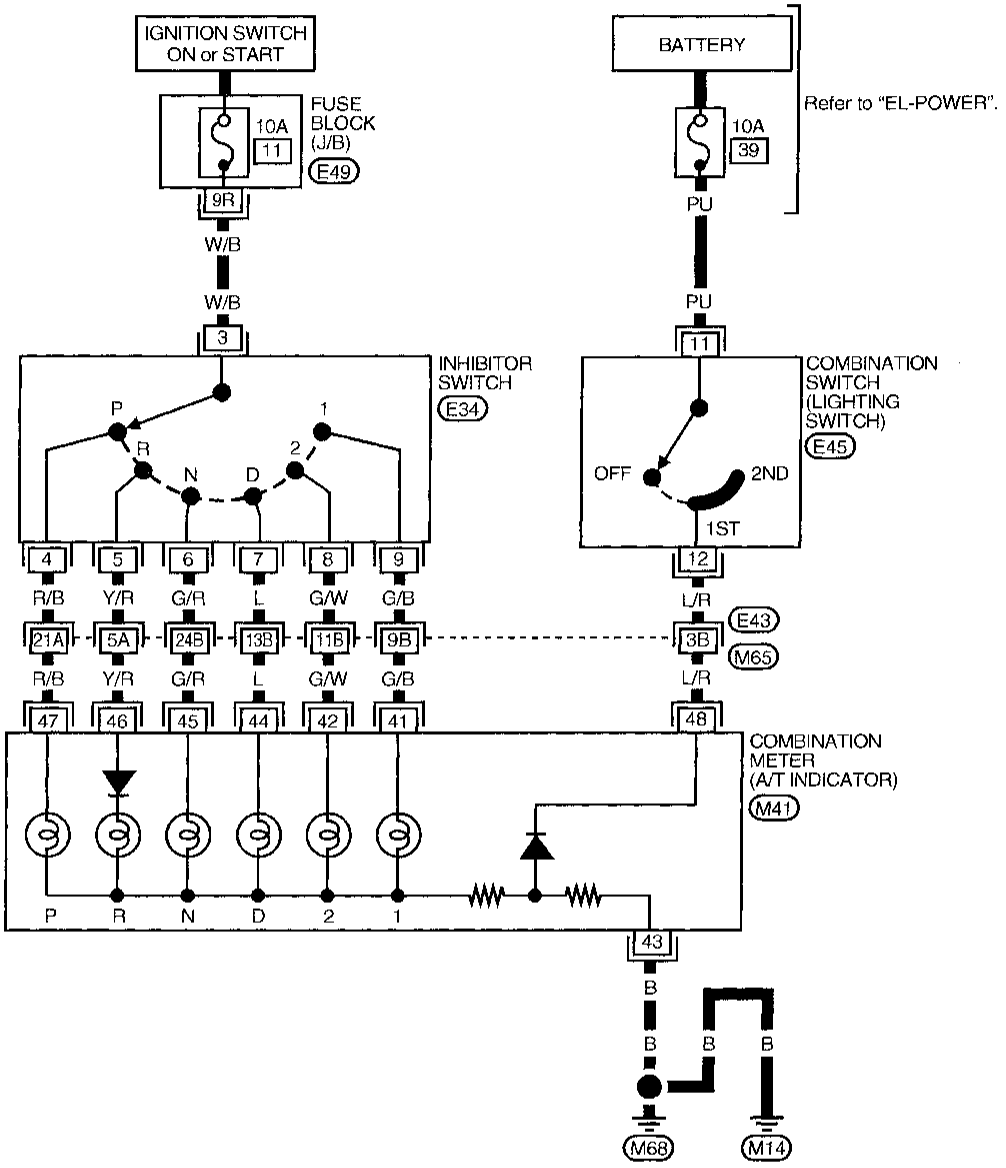



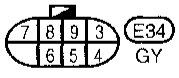

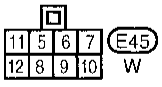



Refer to last page (Foldout page).
M65 , E43

AEL450B

Simpo PDF Merge and Split Unregistered Version - http://www.simpopdf.com

Component Parts and Harness Connector Location

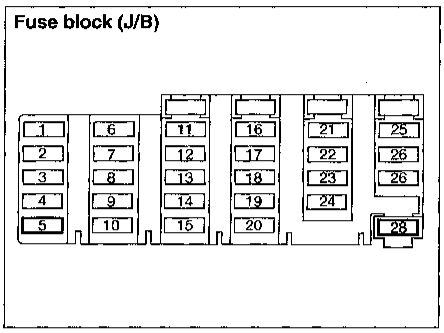

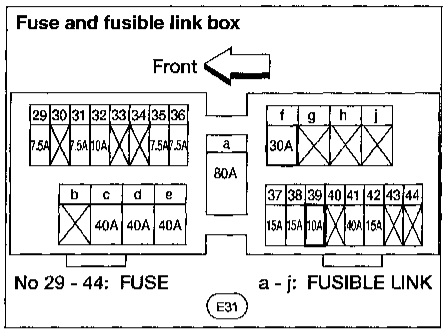

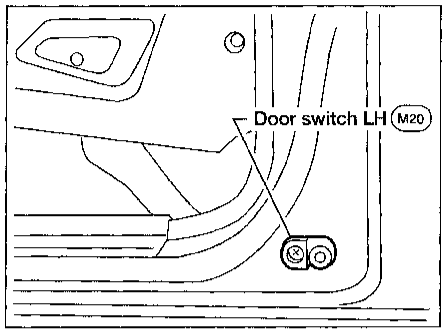

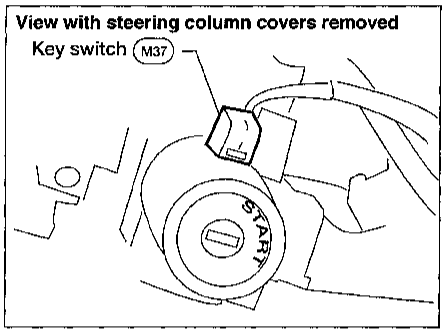

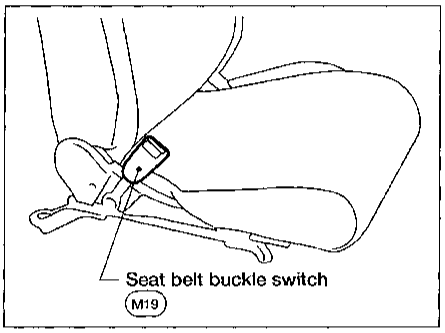

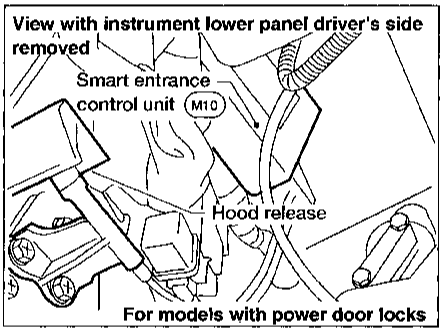

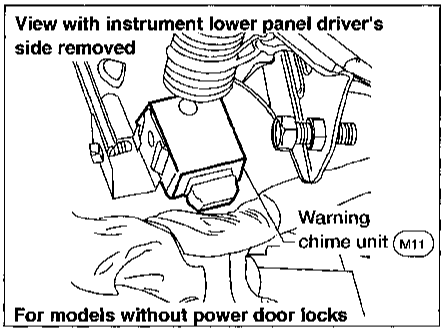

AEL687B

Simpo PDF Merge and Split Unregistered Version - http://www.simpopdf.com

System Description

MODELS WITH POWER DOOR LOCKS

The warning chime is integral with the smart entrance control unit, which controls its operation.
Power is supplied at all times:
- through 7.5A fuse [No. 28, located in the fuse block (J/B)]
- to key switch terminal ①.

Power is supplied at all times:
- through 10A fuse (No. 39, located in the fuse and fusible link box)
- to lighting switch terminal ⑪.

Power is supplied at all times:
- through 30A fusible link (letter f, located in the fuse and fusible link box)
- to circuit breaker terminal ①
- through circuit breaker terminal ②
- to smart entrance control unit terminal ①.

With the ignition switch in the ON or START position, power is supplied:
- through 7.5A fuse [No. 5, located in the fuse block (J/B)]
- to smart entrance control unit terminal ⑪.

Ground is supplied to smart entrance control unit terminal ⑩ through body grounds (M14) and (M68).
When a signal, or combination of signals, is received by the smart entrance control unit, the warning chime will sound.

Ignition key warning chime

With the key in the ignition key cylinder, the ignition switch in the OFF or ACC position, and the driver's door open, the warning chime will sound. A battery positive voltage is supplied:
- from key switch terminal ②
- to smart entrance control unit terminal ㉔.

Ground is supplied:
- from door switch LH terminal ②
- to smart entrance control unit terminal ⑮.

Door switch LH terminal ③ is grounded through body grounds (M14) and (M68).

Light warning chime

With ignition switch in the OFF or ACC position, driver's door open, and lighting switch in 1ST or 2ND position, the warning chime will sound. A battery positive voltage is supplied:
- from lighting switch terminal ⑫
- to smart entrance control unit terminal ㉕.

Ground is supplied:
- from door switch LH terminal ②
- to smart entrance control unit terminal ⑮.

Door switch LH terminal ③ is grounded through body grounds (M14) and (M68).

Seat belt warning chime

The warning chime sounds for about 6 seconds when ignition switch is turned from OFF to ON and seat belt is unfastened.
Ground is supplied:
- from seat belt buckle switch terminal ①
- to smart entrance control unit terminal ㉑.

Seat belt buckle switch terminal ② is grounded through body grounds (M14) and (M68).

System Description (Cont'd)

Simpo PDF Merge and Split Unregistered Version - http://www.simpopdf.com

MODELS WITHOUT POWER DOOR LOCKS

The warning chime is integral with the warning chime unit, which controls its operation.
Power is supplied at all times:
- through 7.5A fuse [No. 28, located in the fuse block (J/B)]
- to key switch terminal ①.

Power is supplied at all times:
- through 10A fuse (No. 39, located in the fuse and fusible link box)
- to lighting switch terminal ⑪.

With the ignition switch in the ON or START position, power is supplied:
- through 7.5A fuse [No. 5, located in the fuse block (J/B)]
- to warning chime unit terminal ①.

Ground is supplied to warning chime unit terminal ⑧ through body grounds M14 and M68.
When a signal, or combination of signals, is received by the warning chime unit, the warning chime will sound.

Ignition key warning chime

With the key in the ignition key cylinder, the ignition switch in the OFF or ACC position, and the driver's door open, the warning chime will sound. A battery positive voltage is supplied:
- from key switch terminal ②
- to warning chime unit terminal ⑤.

Ground is supplied:
- to warning chime unit terminal ⑦
- from door switch LH terminal ②.

Door switch LH terminal ③ is grounded through body grounds M14 and M68.

Light warning chime

With ignition switch OFF or ACC position, driver's door open, and lighting switch in 1ST or 2ND position, the warning chime will sound. A battery positive voltage is supplied:
- from lighting switch terminal ⑫
- to warning chime unit terminal ④.

Ground is supplied:
- to warning chime unit terminal ⑦
- from door switch LH terminal ②.

Door switch LH terminal ③ is grounded through body grounds M14 and M68.

Seat belt warning chime.

The warning chime will sound for approximately 6 seconds when ignition switch is turned from OFF to ON and seat belt is unfastened.
Ground is supplied:
- to warning chime unit terminal ②
- from seat belt buckle switch terminal ①.

Seat belt buckle switch terminal ② is grounded through body grounds M14 and M68.

Simpo PDF Merge and Split Unregistered Version - http://www.simpopdf.com

Wiring Diagram — CHIME —

MODELS WITH POWER DOOR LOCKS

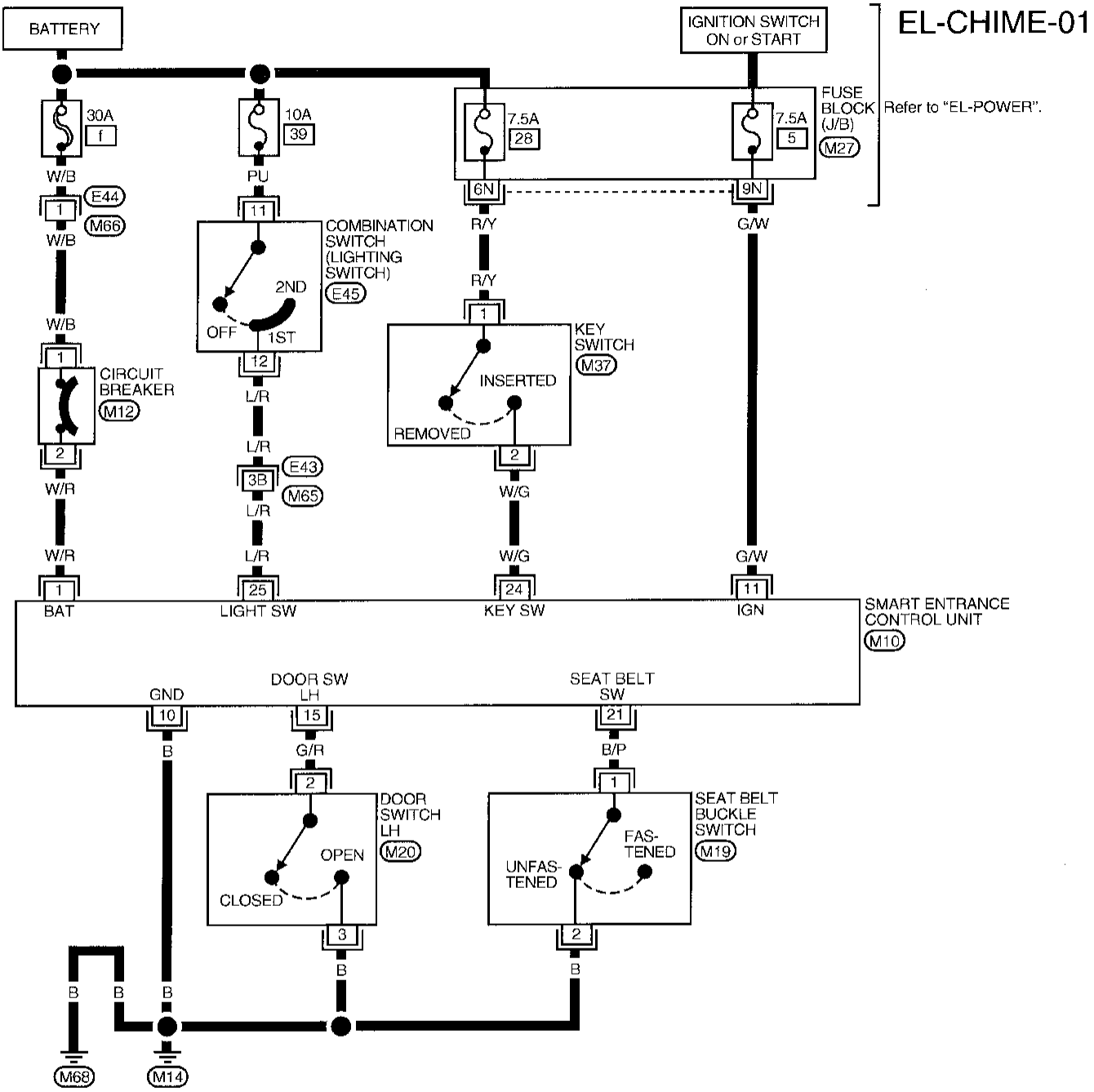

Refer to last page (Foldout page).
M65 , E43

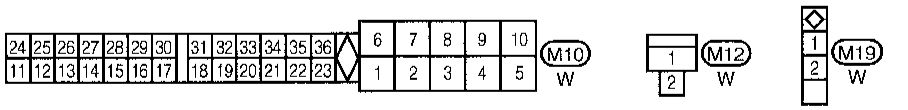



AEL362B

Wiring Diagram — CHIME — (Cont'd)

Simpo PDF Merge and Split Unregistered Version - http://www.simpopdf.com

MODELS WITHOUT POWER DOOR LOCKS

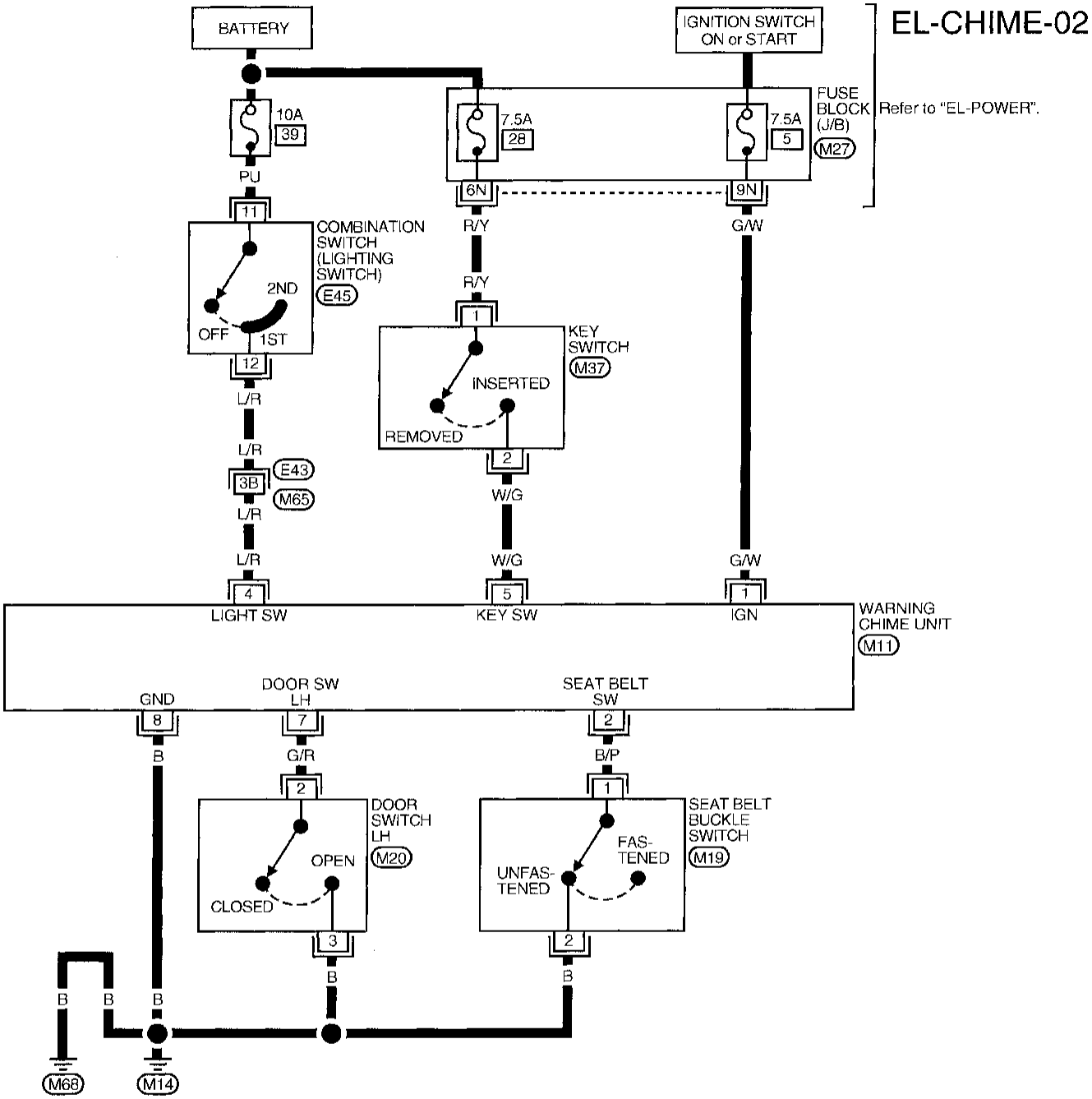

Refer to last page (Foldout page).
M65 , E43

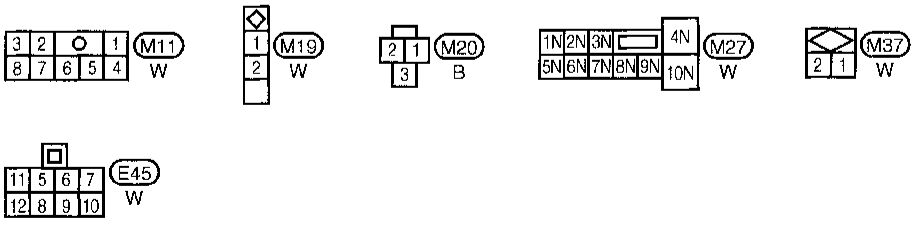

AEL363B

Simpo PDF Merge and Split Unregistered Version - http://www.simpopdf.com

Trouble Diagnoses

SYMPTOM CHART

REFERENCE PAGE	EL-98	EL-99	EL-100	EL-101	EL-102
SYMPTOM	MAIN POWER SUPPLY AND GROUND CIRCUIT CHECK	DIAGNOSTIC PROCEDURE 1 (Lighting switch input signal check)	DIAGNOSTIC PROCEDURE 2 (Key switch input signal check)	DIAGNOSTIC PROCEDURE 3 (Seat belt buckle switch input signal check)	DIAGNOSTIC PROCEDURE 4 (Driver side door switch input signal check)
Light warning chime does not activate.	X	X			X
Ignition key warning chime does not activate.	X		X		X
Seat belt warning chime does not activate.	X			X	X
All warning chimes do not activate.	X				X

Trouble Diagnoses (Cont'd)

Simpo PDF Merge and Split Unregistered Version - http://www.simpopdf.com

MAIN POWER SUPPLY AND GROUND CIRCUIT CHECK

Main power supply circuit check

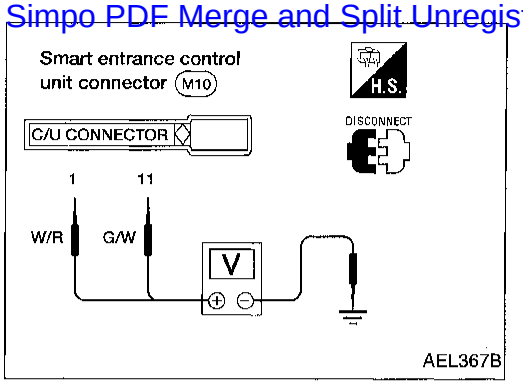

- **Models with power door locks**

Terminals		Ignition switch position		
⊕	⊖	OFF	ACC	ON
①	Ground	Battery voltage	Battery voltage	Battery voltage
⑪	Ground	0V	0V	Battery voltage

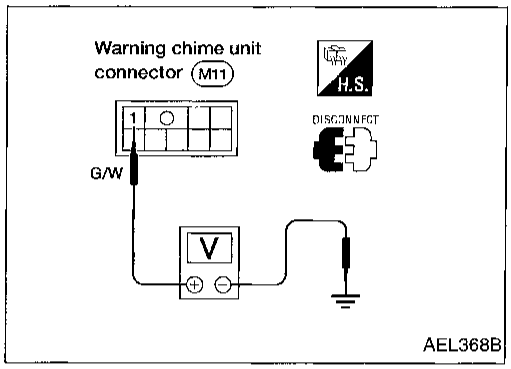

- **Models without power door locks**

Terminals		Battery voltage existence condition		
		Ignition switch position		
⊕	⊖	OFF	ACC	ON
①	Ground	0V	0V	Battery voltage

Ground circuit check

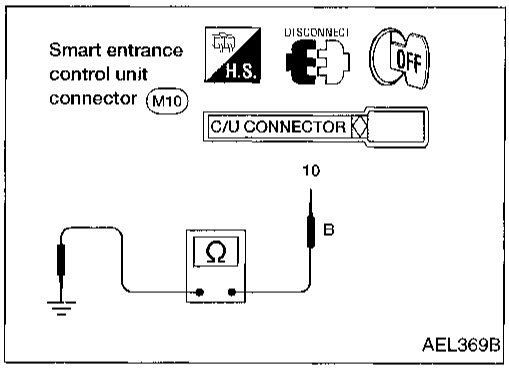

- **Models with power door locks**

Terminals	Continuity
⑩ - Ground	Yes

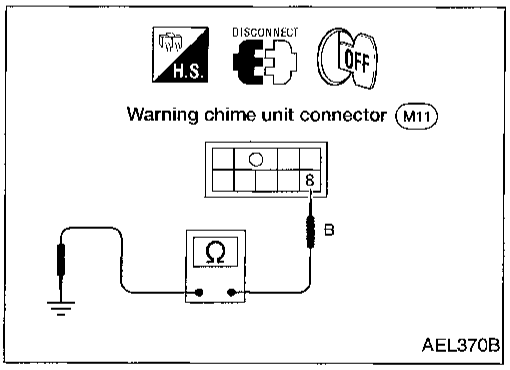

- **Models without power door locks**

Terminals	Continuity
⑧ - Ground	Yes

Trouble Diagnoses (Cont'd)

Simpo PDF Merge and Split Unregistered Version - http://www.simpopdf.com

DIAGNOSTIC PROCEDURE 1

(Lighting switch input signal check)

Models with power door locks

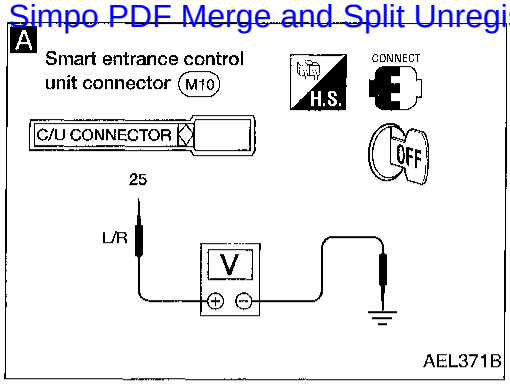

A

CHECK LIGHTING SWITCH INPUT SIGNAL.

Check voltage between control unit terminal 25 and ground.

Condition of lighting switch	Voltage [V]
1ST or 2ND	Approx. 12
OFF	0

NG → Check the following.
- 10A fuse (No. 39, located in the fuse and fusible link box)
- Harness for open or short between control unit and lighting switch

OK → Go to Diagnostic Procedure 4, EL-102.

Models without power door locks

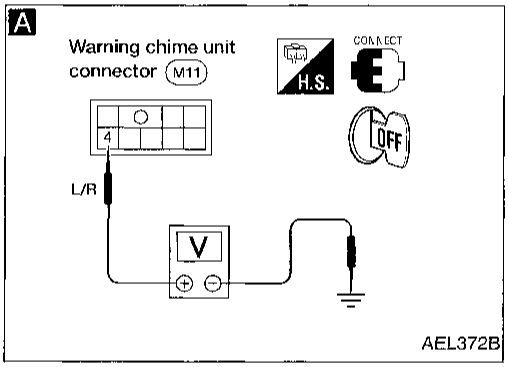

A

CHECK LIGHTING SWITCH INPUT SIGNAL.

Check voltage between warning chime unit terminal 4 and ground.

Condition of lighting switch	Voltage [V]
1ST or 2ND	Approx. 12
OFF	0

NG → Check the following.
- 10A fuse (No. 39, located in the fuse and fusible link box)
- Harness for open or short between warning chime unit and lighting switch

OK → Go to Diagnostic Procedure 4, EL-102.

Trouble Diagnoses (Cont'd)

Simpo PDF Merge and Split Unregistered Version - http://www.simpopdf.com

DIAGNOSTIC PROCEDURE 2

(Key switch input signal check)

Models with power door locks

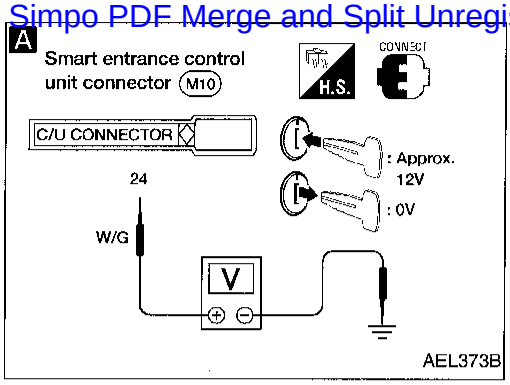

A

CHECK KEY SWITCH INPUT SIGNAL.
Check voltage between control unit terminal 24 and ground.

Condition of key switch	Voltage [V]
Key is inserted.	Approx. 12
Key is removed.	0

NG → Check the following.
- Key switch
  Refer to "Electrical Components Inspection" (EL-103).
- 7.5A fuse [No. 28, located in fuse block (J/B)]
- Harness for open or short between key switch and fuse
- Harness for open or short between control unit and key switch

OK ↓

Go to Diagnostic Procedure 4, EL-102.

Models without power door locks

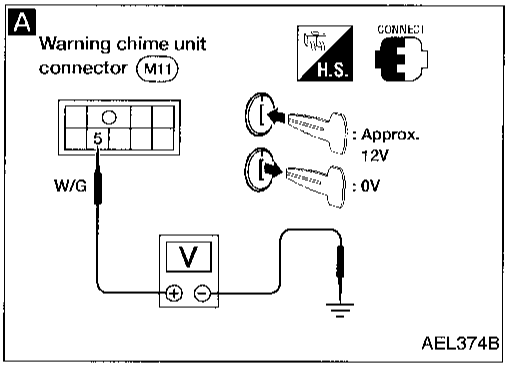

A

CHECK KEY SWITCH INPUT SIGNAL.
Check voltage between warning chime unit terminal 5 and ground.

Condition of key switch	Voltage [V]
Key is inserted.	Approx. 12
Key is removed.	0

NG → Check the following.
- Key switch
  Refer to "Electrical Components Inspection" (EL-103).
- 7.5A fuse [No. 28, located in fuse block (J/B)]
- Harness for open or short between key switch and fuse
- Harness for open or short between warning chime unit and key switch

OK ↓

Go to Diagnostic Procedure 4, EL-102.

Trouble Diagnoses (Cont'd)

Simpo PDF Merge and Split Unregistered Version - http://www.simpopdf.com

DIAGNOSTIC PROCEDURE 3

(Seat belt buckle switch input signal check)

Models with power door locks

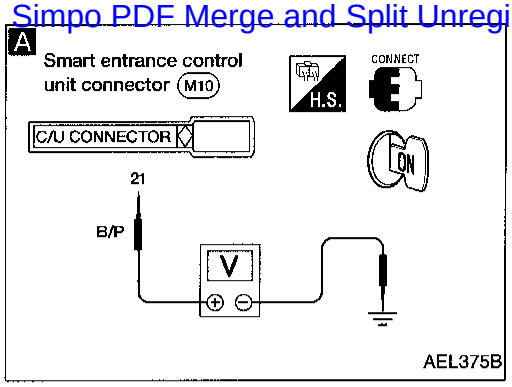

A

CHECK SEAT BELT BUCKLE SWITCH INPUT SIGNAL.

1. Turn ignition switch ON.
2. Check voltage between control unit terminal (21) and ground.

Condition of seat belt buckle switch	Voltage [V]
Fastened	Approx. 12
Unfastened	0

NG → Check the following.
- Seat belt buckle switch Refer to "Electrical Components Inspection" (EL-103).
- Seat belt buckle switch ground circuit
- Harness for open or short between control unit and seat belt buckle switch

OK → Go to Diagnostic Procedure 4, EL-102.

Models without power door locks

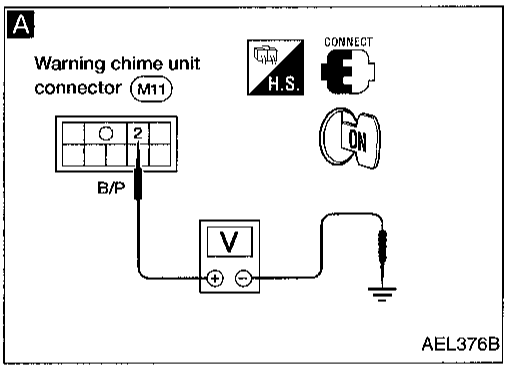

A

CHECK SEAT BELT BUCKLE SWITCH INPUT SIGNAL.

1. Turn ignition switch ON.
2. Check voltage between warning chime unit terminal (2) and ground.

Condition of seat belt buckle switch	Voltage [V]
Fastened	Approx. 12
Unfastened	0

NG → Check the following.
- Seat belt buckle switch Refer to "Electrical Components Inspection" (EL-103).
- Seat belt buckle switch ground circuit
- Harness for open or short between warning chime unit and seat belt buckle switch

OK → Go to Diagnostic Procedure 4, EL-102.

Trouble Diagnoses (Cont'd)

Simpo PDF Merge and Split Unregistered Version - http://www.simpopdf.com

DIAGNOSTIC PROCEDURE 4

(Driver side door switch input signal check)

Models with power door locks

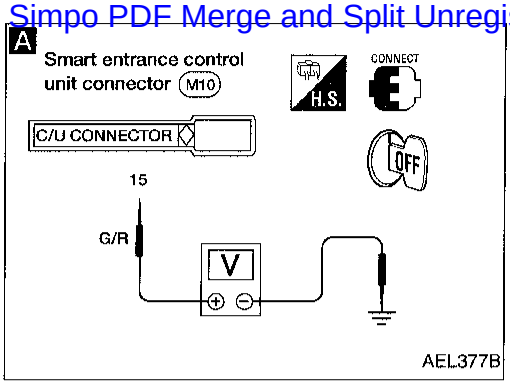

A

CHECK DOOR SWITCH INPUT SIGNAL.
Check voltage between control unit terminal (15) and ground.

Condition of driver's door	Voltage [V]
Driver side door is closed.	Approx. 12
Driver side door is open.	0

NG → Check the following.
- Driver side door switch Refer to "Electrical Components Inspection" (EL-103).
- Door switch ground condition
- Harness for open or short between control unit and door switch

OK ↓

Replace smart entrance control unit.

Models without power door locks

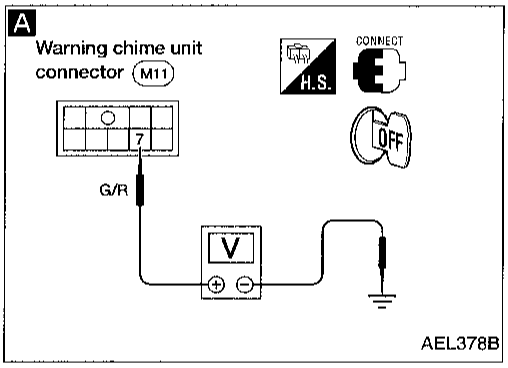

A

CHECK DOOR SWITCH INPUT SIGNAL.
Check voltage between warning chime unit terminal (7) and ground.

Condition of driver's door	Voltage [V]
Driver side door is closed.	Approx. 12
Driver side door is open.	0

NG → Check the following.
- Driver side door switch Refer to "Electrical Components Inspection" (EL-103).
- Door switch ground circuit
- Harness for open or short between warning chime unit and door switch

OK ↓

Replace warning chime unit.

Simpo PDF Merge and Split Unregistered Version - http://www.simpopdf.com

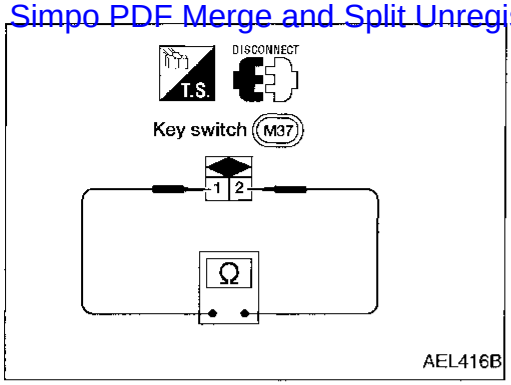

Electrical Components Inspection

KEY SWITCH (insert)

Check continuity between terminals when key is inserted in ignition key cylinder and key is removed from ignition key cylinder.

Terminal No.	Condition	Continuity
① - ②	Key is inserted.	Yes
	Key is removed.	No

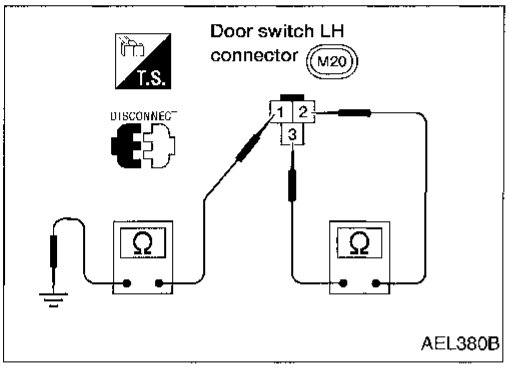

DRIVER SIDE DOOR SWITCH

Check continuity between terminals when door switch is pushed and released.

Terminal No.	Condition	Continuity
① - ground, ② - ③	Door switch is pushed.	No
	Door switch is released.	Yes

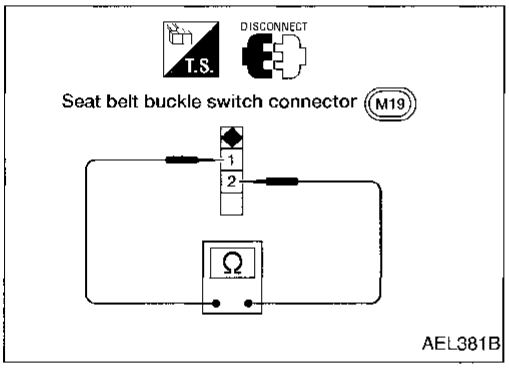

SEAT BELT BUCKLE SWITCH

Check continuity between terminals when seat belt is fastened and unfastened.

Terminal No.	Condition	Continuity
① - ②	Seat belt is fastened.	No
	Seat belt is unfastened.	Yes

Simpo PDF Merge and Split Unregistered Version - http://www.simpopdf.com

System Description

WIPER OPERATION

The wiper switch is controlled by a lever built into the combination switch.
There are three wiper switch positions:

- LO speed
- HI speed
- INT (Intermittent) (If equipped).

With the ignition switch in the ON or START position, power is supplied:

- through 20A fuse [No. 6, located in the fuse block (J/B)]
- to wiper motor terminal Ⓑ and
- to wiper amplifier terminal ⑥ (with intermittent wipers).

Low and high speed wiper operation

Ground is supplied to wiper switch terminal ⑰ through body grounds E12 and E54.
When the wiper switch is placed in the LO position, ground is supplied:

- through terminal ⑭ of the wiper switch
- to wiper motor terminal Ⓛ.

With power and ground supplied, the wiper motor operates at low speed.
When the wiper switch is placed in the HI position, ground is supplied:

- through terminal ⑯ of the wiper switch
- to wiper motor terminal Ⓗ.

With power and ground supplied, the wiper motor operates at high speed.

Auto stop operation

With wiper switch turned OFF, wiper motor will continue to operate until wiper arms reach windshield base.
When wiper arms are not located at base of windshield with wiper switch OFF, ground is supplied:

- from terminal ⑭ of the wiper switch
- to wiper motor terminal Ⓛ, in order to continue wiper motor operation at low speed.

Ground is also supplied:

- through terminal ⑬ of the wiper switch
- to wiper amplifier terminal ④ (with intermittent wipers)
- through terminal ⑧ of the wiper amplifier (with intermittent wipers)
- to wiper motor terminal Ⓟ
- through terminal Ⓔ of the wiper motor, and
- through body grounds E12 and E54.

When wiper arms reach base of windshield, wiper motor terminals Ⓟ and Ⓑ are connected instead of terminals Ⓟ and Ⓔ. Wiper motor will then stop wiper arms at the PARK position.

Intermittent operation

The wiper motor operates the wiper arms one time at low speed at a set interval of approximately 3 to 13 seconds. This feature is controlled by the wiper amplifier.
When the wiper switch is placed in the INT position, ground is supplied:

- to wiper amplifier terminal ①
- from wiper switch terminal ⑮
- through body grounds E12 and E54
- to wiper motor terminal Ⓛ
- through the wiper switch terminal ⑭
- to wiper switch terminal ⑬
- through wiper amplifier terminal ④
- to wiper amplifier terminal ⑦
- through body grounds E12 and E54.

The desired interval time is input:

- to wiper amplifier terminal ②
- from wiper switch terminal ⑲
- to wiper switch terminal ⑳
- through body grounds E12 and E54.

The wiper motor operates at low speed at the desired time interval.

System Description (Cont'd)

Simpo PDF Merge and Split Unregistered Version - http://www.simpopdf.com

WASHER OPERATION

With the ignition switch in the ON or START position, power is supplied:

- through 20A fuse [No. 6], located in the fuse block (J/B)]
- to washer motor terminal ⊕.

When the lever is pulled to the WASH position, ground is supplied:

- to washer motor terminal ⊖, and
- to wiper amplifier terminal ⑤ (with intermittent wipers)
- from terminal ⑱ of the wiper switch
- through terminal ⑰ of the wiper switch, and
- through body grounds (E12) and (E54).

With power and ground supplied, the washer motor operates.

When the lever is pulled to the WASH position for one second or more, the wiper motor operates at low speed for approximately 3 seconds to clean windshield. This feature is controlled by the wiper amplifier in the same manner as the intermittent operation on vehicles equipped with intermittent wipers.

Simpo PDF Merge and Split Unregistered Version - http://www.simpopdf.com

Wiring Diagram — WIPER —

WITH INTERMITTENT WIPERS

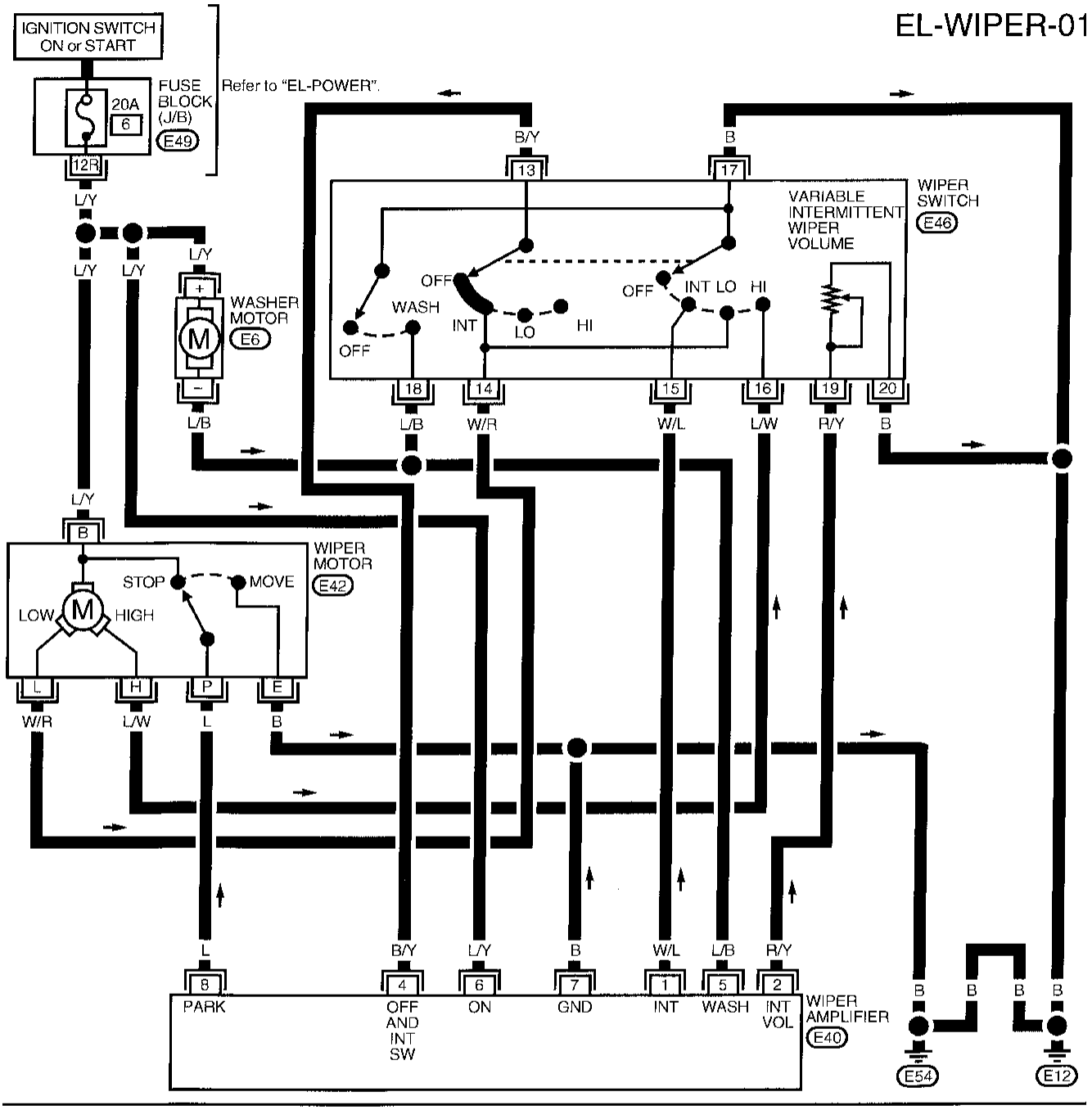

AEL444B

Wiring Diagram — WIPER — (Cont'd)

Simpo PDF Merge and Split Unregistered Version - http://www.simpopdf.com

WITHOUT INTERMITTENT WIPERS

EL-WIPER-02

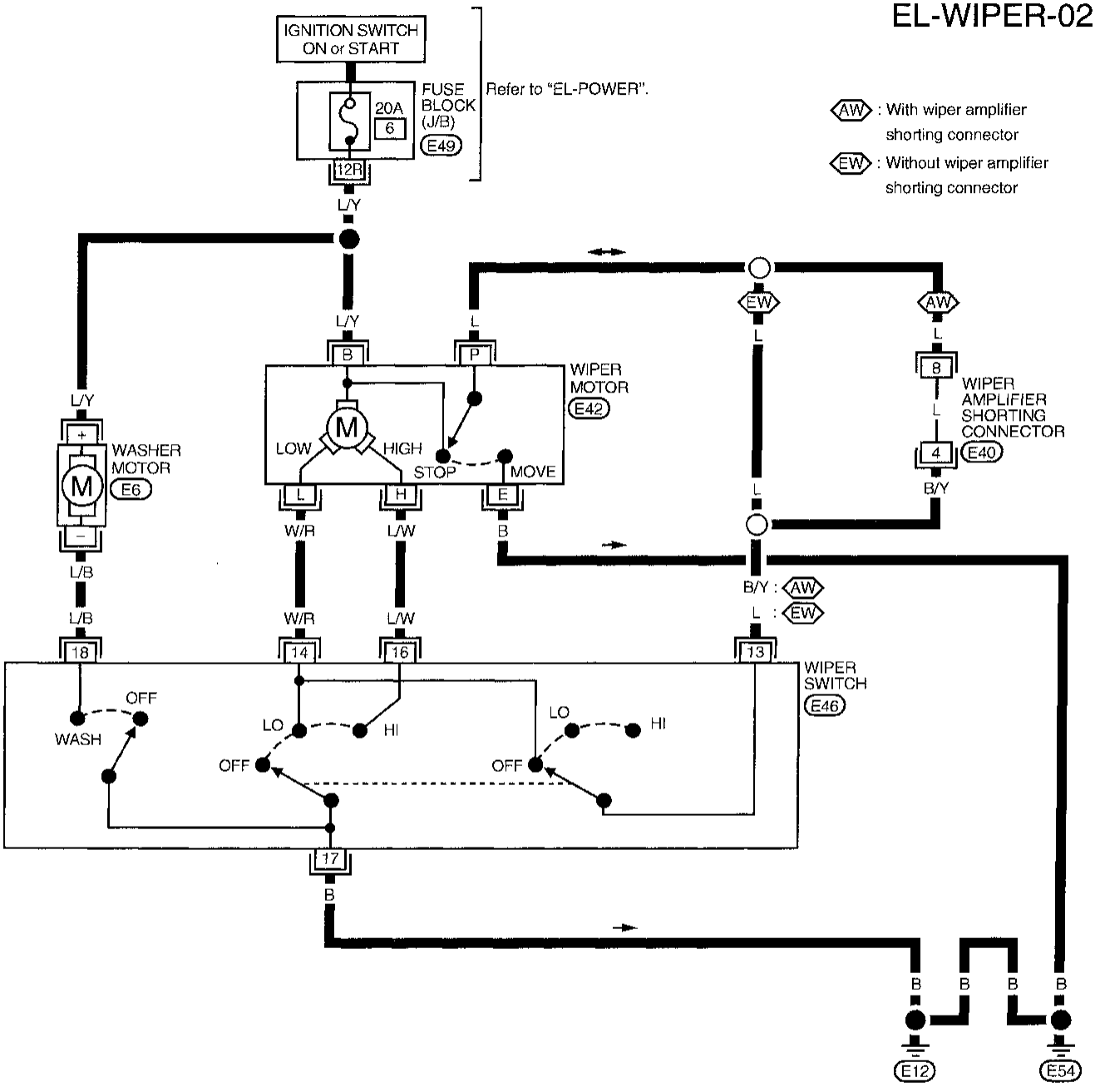

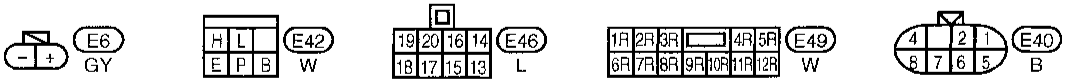

AEL445B

Simpo PDF Merge and Split Unregistered Version - http://www.simpopdf.com

Trouble Diagnoses (With intermittent wipers)

DIAGNOSTIC PROCEDURE 1

SYMPTOM: Intermittent wiper does not operate.

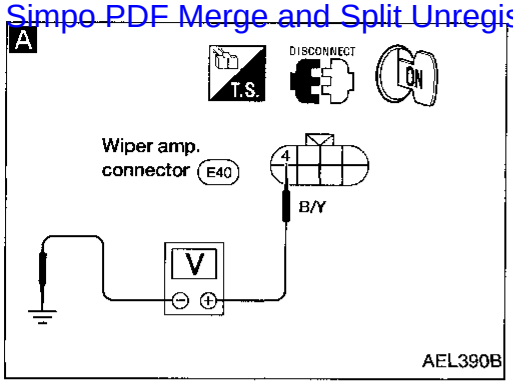

Check whether wiper operates with the wiper switch at LO position.

NG → Check the following.
- 20A fuse [No. 6, located in fuse block (J/B)]
- Wiper motor
- Wiper switch
- Harness for open or short

OK ↓

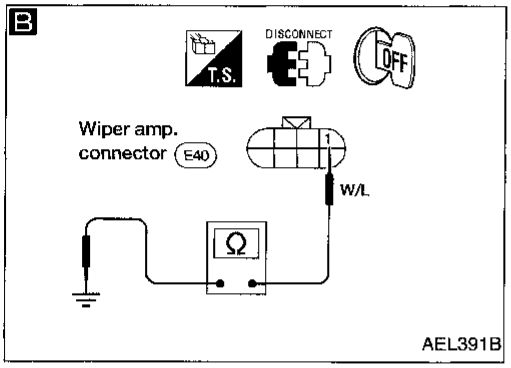

A

1. Turn front wiper switch to OFF.
2. Disconnect wiper amp. connector.
3. Check voltage between wiper amp. terminal ④ and ground.
   Battery voltage should exist.

NG → Check the following.
- Wiper switch
- Harness for open or short between wiper amp. terminal ④ and wiper switch terminal ⑬

OK ↓

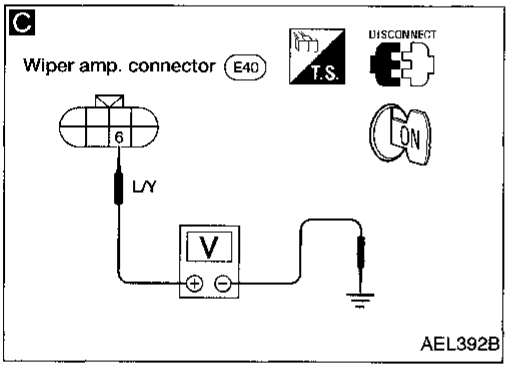

B

CHECK INTERMITTENT SWITCH INPUT SIGNAL.

Check harness continuity between wiper amp. terminal ① and ground.

Condition of wiper switch	Continuity
OFF	No
INT	Yes

NG → Check the following.
- Wiper switch
- Harness for open or short between wiper amp. terminal ① and wiper switch terminal ⑮
- Ground circuit for front wiper switch terminal ⑰

OK ↓

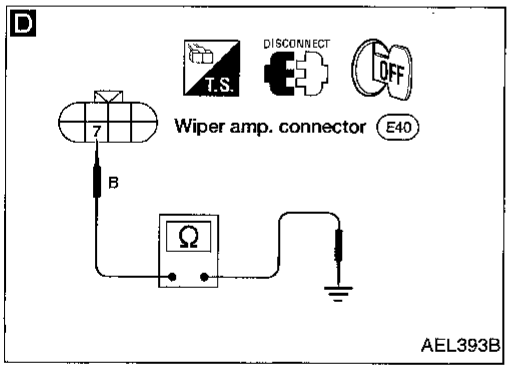

C

CHECK WIPER AMP. POWER SUPPLY CIRCUIT.

Check voltage between wiper amp. terminal ⑥ and ground while ignition switch is in ON.
Battery voltage should exist.

NG → Check the following.
- Harness for open or short between wiper amp. and fuse

OK ↓

D

CHECK WIPER AMP. GROUND CIRCUIT.

Check harness continuity between wiper amp. terminal ⑦ and body ground.
Continuity should exist.

NG → Repair harness or connector.

OK ↓

Replace wiper amp.

Simpo PDF Merge and Split Unregistered Version - http://www.simpopdf.com

Trouble Diagnoses (With intermittent wipers) (Cont'd)

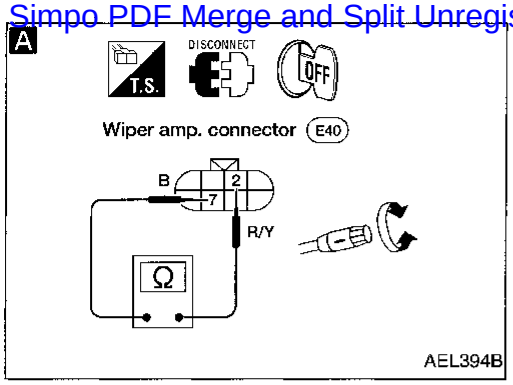

DIAGNOSTIC PROCEDURE 2

SYMPTOM: Intermittent time of wiper cannot be adjusted.

A

CHECK INTERMITTENT WIPER VOLUME INPUT SIGNAL.

1. Disconnect wiper amp. connector.
2. Measure resistance between wiper amp. terminals (2) and (7) while turning intermittent wiper volume.

Position of wiper knob	Resistance [Ω]
S	0
L	Approx. 1 k

OK → Replace wiper amp.

NG →

Check the following.
- Intermittent wiper volume
- Harness for open or short between wiper amp. terminal (2) and wiper switch terminal (19)
- Ground circuit for front wiper switch terminal (20)

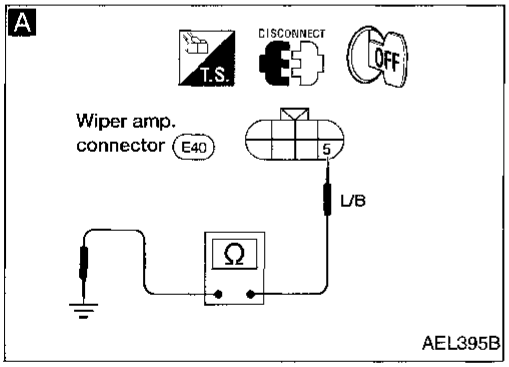

DIAGNOSTIC PROCEDURE 3

SYMPTOM: Wiper and washer activate individually but not in combination.

A

CHECK WASHER SWITCH INPUT SIGNAL.

1. Turn ignition switch and wiper switch OFF.
2. Disconnect wiper amp. connector.
3. Check harness continuity between wiper amp. terminal (5) and ground.

Condition of washer switch	Continuity
OFF	No
ON	Yes

NG → Check harness for open or short between wiper amp. terminal (5) and wiper switch terminal (18).

OK →

Go to DIAGNOSTIC PROCEDURE 1. NG → Replace wiper amp.

Simpo PDF Merge and Split Unregistered Version - http://www.simpopdf.com

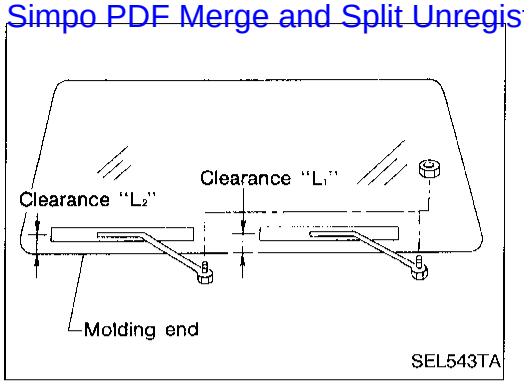

Removal and Installation

WIPER ARMS

1. Prior to wiper arm installation, turn on wiper switch to operate wiper motor and then turn it OFF (Auto Stop).
2. Lift the blade up and then set it down onto glass surface to set the blade center to clearance "L_1" & "L_2" immediately before tightening nut.
3. Eject washer fluid. Turn on wiper switch to operate wiper motor and then turn it OFF.
4. Ensure that wiper blades stop within clearance "L_1" & "L_2".
   Clearance "L_1": 25 mm (.98 in)
   Clearance "L_2": 25 mm (.98 in)

- Tighten wiper arm nuts to specified torque.
  Front wiper: 13 - 18 N·m (1.3 - 1.8 kg-m, 9 - 13 ft-lb)

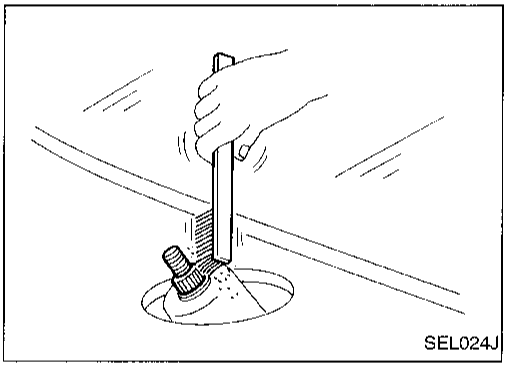

- **Before reinstalling wiper arm, clean up the pivot area as illustrated. This will reduce possibility of wiper arm looseness.**

WIPER LINKAGE

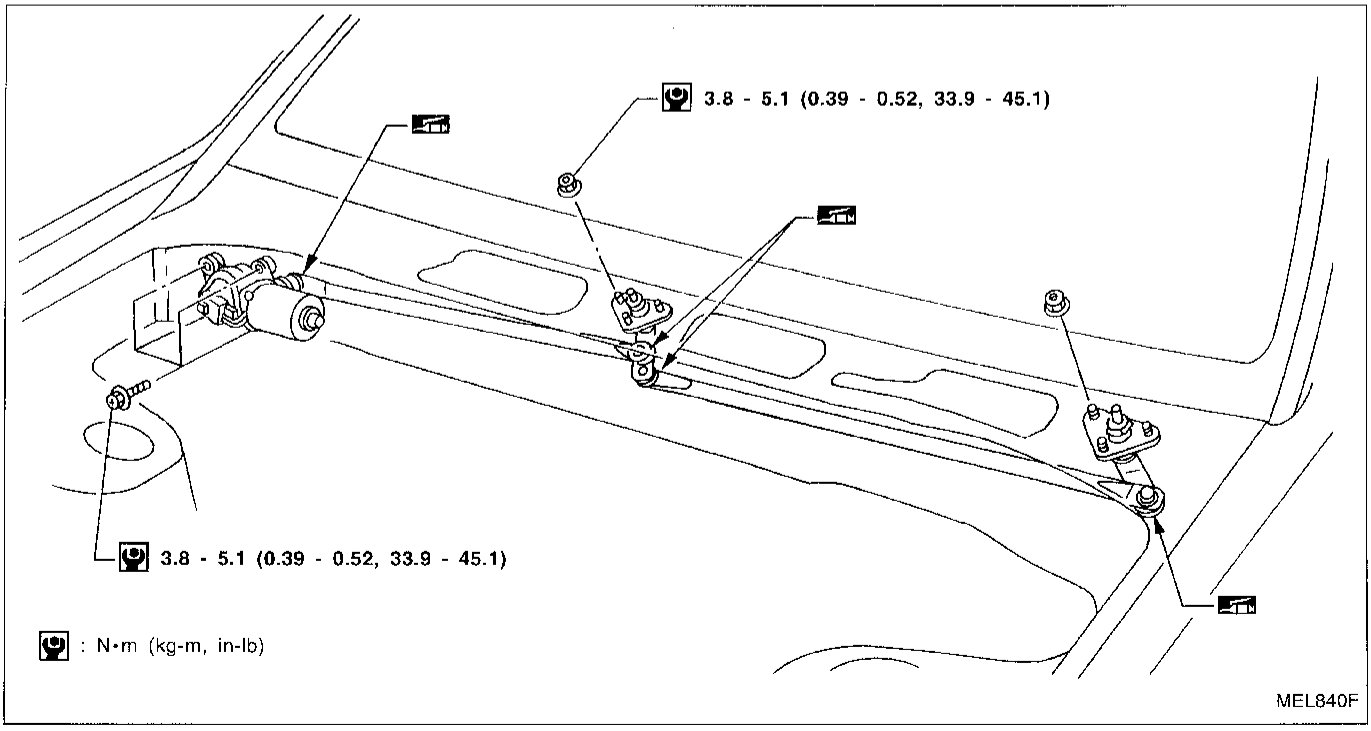

Simpo PDF Merge and Split Unregistered Version - http://www.simpopdf.com

Removal and Installation (Cont'd)

Removal

1. Remove 4 bolts that secure wiper motor.
2. Detach wiper motor from wiper linkage at ball joint.
3. Remove wiper linkage.

Be careful not to break ball joint rubber boot.

Installation

- Grease ball joint portion before installation.

1. Installation is the reverse order of removal.

Washer Nozzle Adjustment

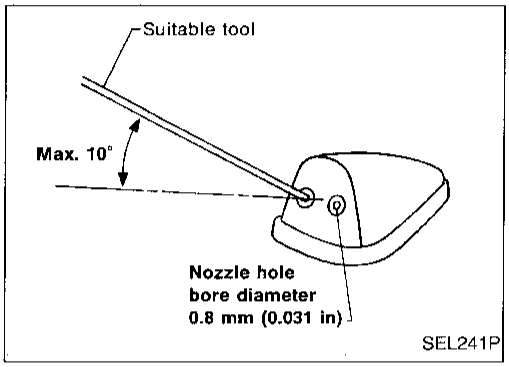

- Adjust washer nozzle with suitable tool as shown in the figure at left.

  Adjustable range: ±10°

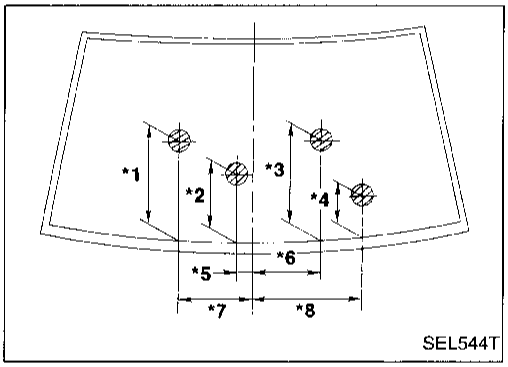

Unit: mm (in)

*1	365 (14.37)	*5	60 (2.36)
*2	215 (8.46)	*6	225 (8.86)
*3	380 (14.96)	*7	210 (8.27)
*4	180 (7.09)	*8	460 (18.11)

*: The diameters of these circles are less than 80 mm (3.15 in).

Washer Tube Layout

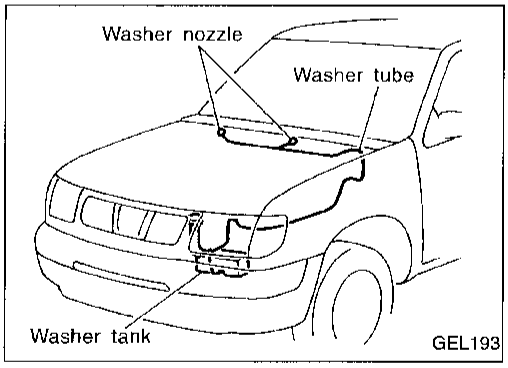

Simpo PDF Merge and Split Unregistered Version - http://www.simpopdf.com

Wiring Diagram — HORN —

EL-HORN-01

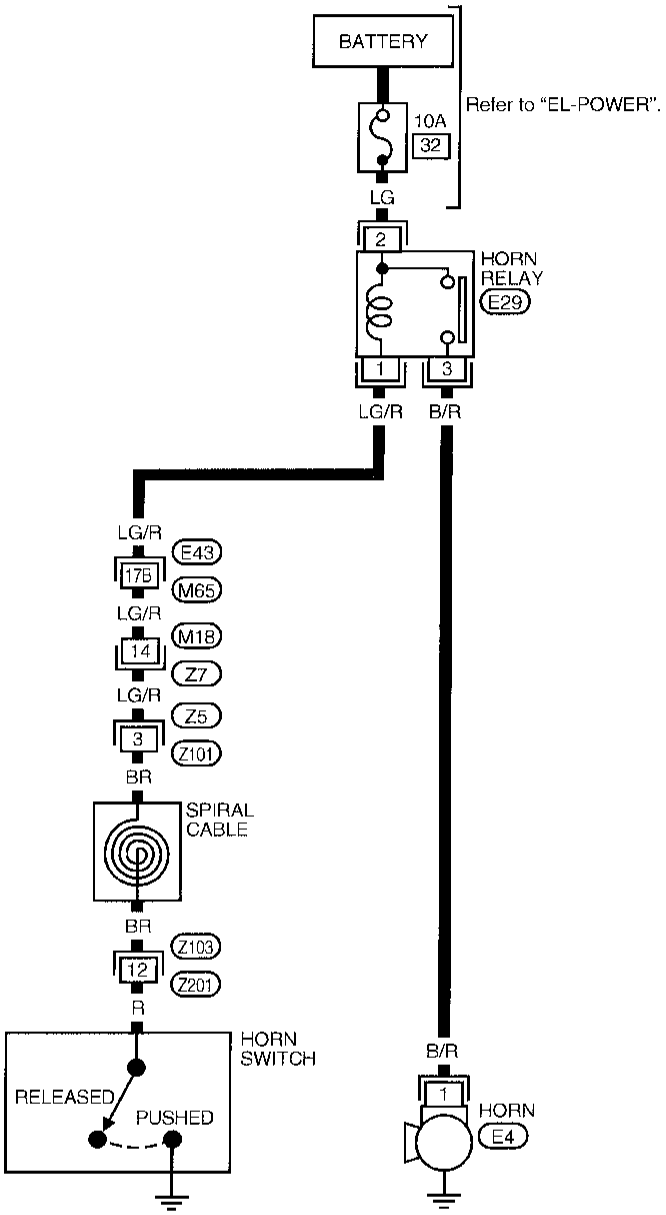

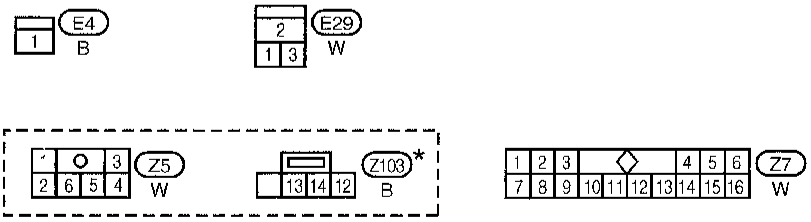

* : This connector is not shown in "HARNESS LAYOUT" of EL section.

Refer to last page (Foldout page).
M65 , E43

AEL351B

Simpo PDF Merge and Split Unregistered Version - http://www.simpopdf.com

Wiring Diagram — CIGAR —

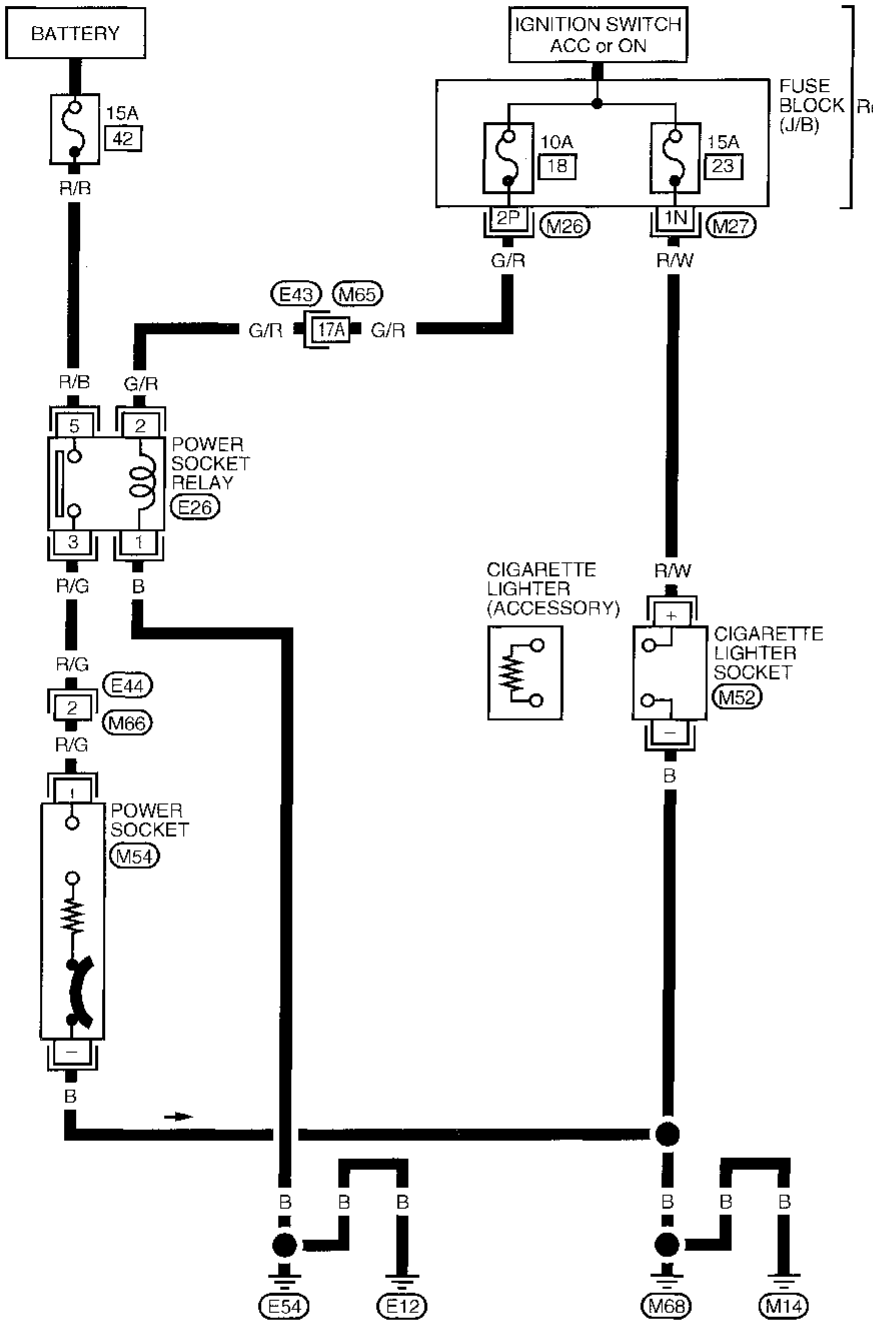

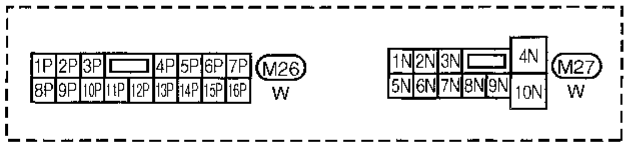

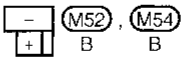

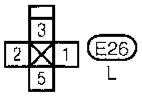

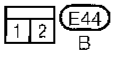

Refer to last page (Foldout page).
M65 , E43

AEL352B

Simpo PDF Merge and Split Unregistered Version - http://www.simpopdf.com

System Description

Refer to Owner's Manual for audio system operating instructions.

BASE AUDIO SYSTEM

Power is supplied at all times:
- through 10A fuse (No. 41, located in the fuse and fusible link box)
- to radio terminal ⑥.

With the ignition switch in the ACC or ON position, power is supplied:
- through 10A fuse [No. 18, located in the fuse block (J/B)]
- to radio terminal ⑩.

Ground is supplied through the case of the radio.
When the radio power knob is pushed to the ON position, radio signals are supplied:
- through radio terminals ⑬, ⑭, ⑮, and ⑯
- to the door speakers.

PREMIUM AUDIO SYSTEM

Power is supplied at all times:
- through 10A fuse (No. 41, located in the fuse and fusible link box)
- to radio terminal ⑥.

With the ignition switch in the ACC or ON position, power is supplied:
- through 10A fuse [No. 18, located in the fuse block (J/B)]
- to radio terminal ⑩.

Ground is supplied through the case of the radio.
When the radio power knob is pushed to the ON position, radio signals are supplied:
- through radio terminals ①, ②, ③, ④, ⑬, ⑭, ⑮, and ⑯
- to the door speakers or tweeters.

Simpo PDF Merge and Split Unregistered Version - http://www.simpopdf.com

Wiring Diagram — AUDIO —

MODELS WITH BASE AUDIO SYSTEM

EL-AUDIO-01

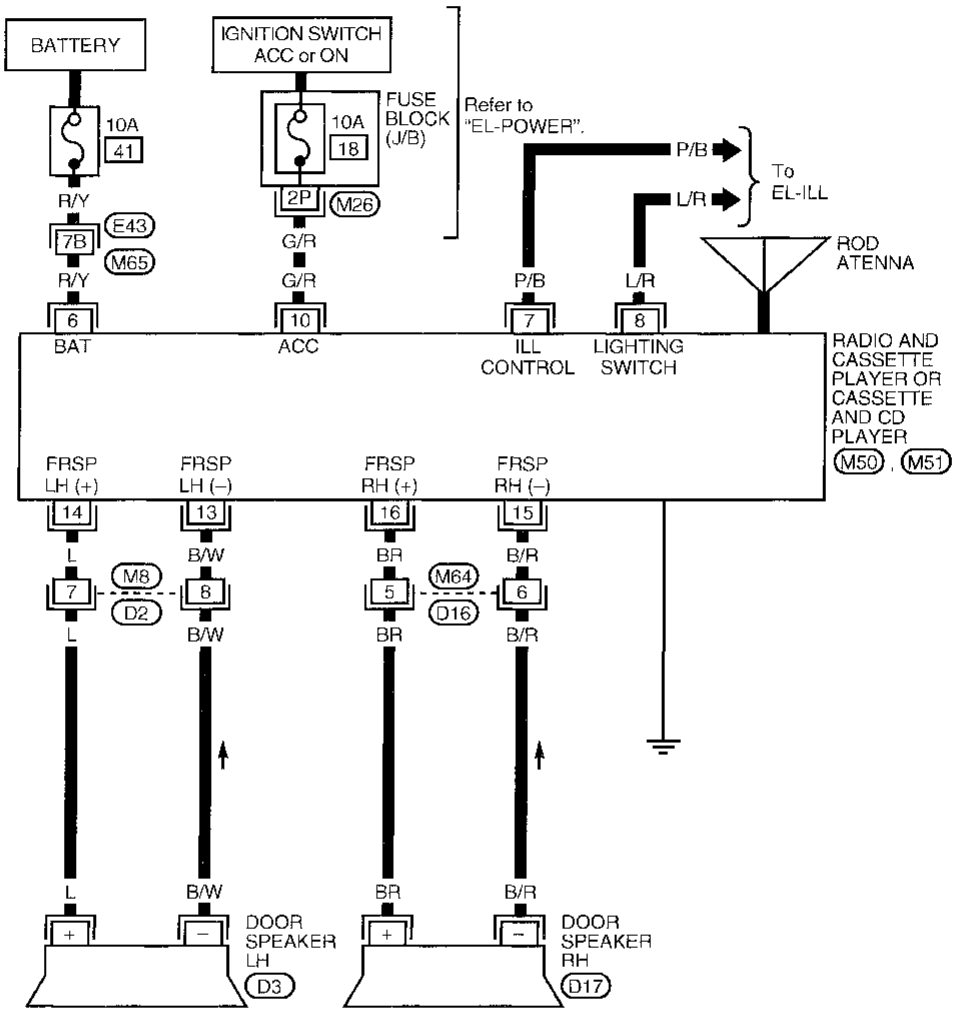



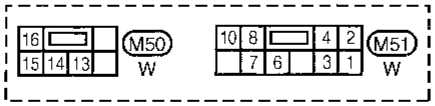

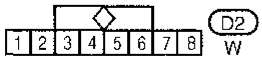

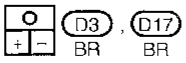

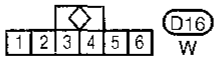

Refer to last page (Foldout page).
M65 , E43

AEL353B

Wiring Diagram — AUDIO — (Cont'd)

Simpo PDF Merge and Split Unregistered Version - http://www.simpopdf.com

MODELS WITH PREMIUM AUDIO SYSTEM

EL-AUDIO-02

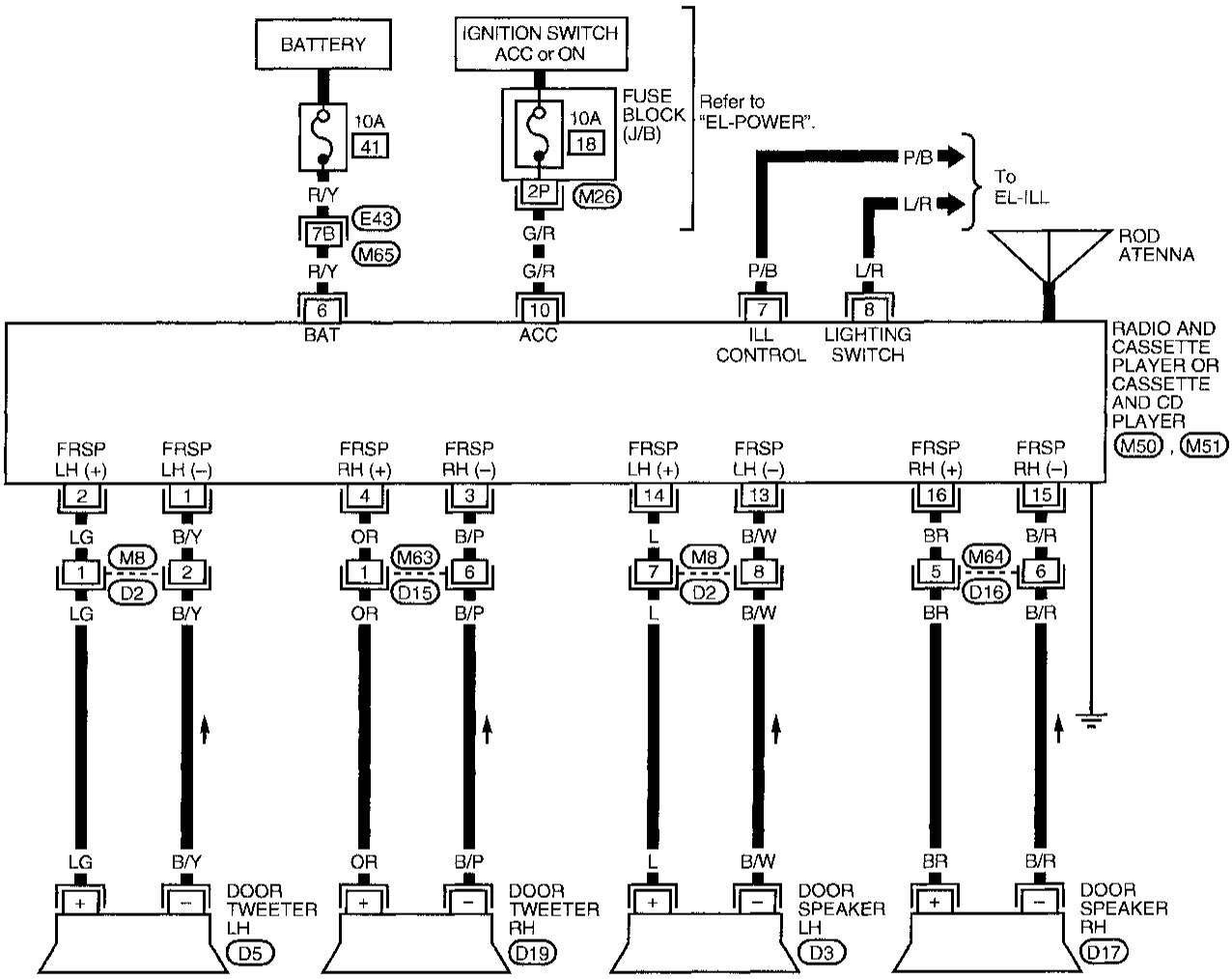

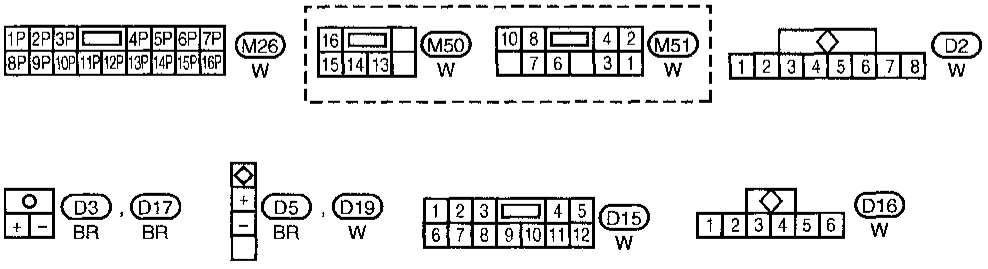

Refer to last page (Foldout page).
M65, E43

AEL354B

Simpo PDF Merge and Split Unregistered Version - http://www.simpopdf.com

Trouble Diagnoses

RADIO

Symptom	Possible causes	Repair order
Radio inoperative (no digital display and no sound from speakers).	1. 10A fuse 2. Poor radio case ground 3. Radio	1. Check 10A fuse [No. 18, located in fuse block (J/B)]. Turn ignition switch ON and verify that battery positive voltage is present at terminal ⑩ of radio. 2. Check radio case ground. 3. Remove radio for repair.
Radio controls are operational, but no sound is heard from any speaker.	1. Radio output 2. Radio	1. Check radio output voltages. 2. Remove radio for repair.
Radio presets are lost when ignition switch is turned OFF.	1. 10A fuse 2. Radio	1. Check 10A fuse (No. 41, located in fuse and fusible link box) and verify that battery positive voltage is present at terminal ⑥ of radio. 2. Remove radio for repair.
Individual speaker is noisy or inoperative.	1. Speaker 2. Radio output 3. Speaker circuit 4. Radio	1. Check speaker. 2. Check radio output voltages. 3. Check wires for open or short between radio and speaker. 4. Remove radio for repair.
Radio stations are weak or noisy	1. Antenna 2. Poor radio ground 3. Radio	1. Check antenna. 2. Check radio ground. 3. Remove radio for repair.
Radio generates noise in AM and FM modes with engine running.	1. Poor radio ground 2. Loose or missing ground bonding straps 3. Ignition condenser 4. Generator 5. Ignition coil or secondary wiring 6. Radio	1. Check radio ground. 2. Check ground bonding straps. 3. Replace ignition condenser. 4. Check generator. 5. Check ignition coil and secondary wiring. 6. Remove radio for repair.
Radio generates noise in AM and FM modes with accessories on (switch pops and motor noise).	1. Poor radio ground 2. Antenna 3. Accessory ground 4. Faulty accessory	1. Check radio ground. 2. Check antenna. 3. Check accessory ground. 4. Replace accessory.

Simpo PDF Merge and Split Unregistered Version - http://www.simpopdf.com

Inspection

SPEAKER

1. Disconnect speaker harness connector.
2. Measure the resistance between speaker terminals ⊕ and ⊖.
- The resistance should be 2 - 4Ω.
3. Using jumper wires, momentarily connect a 9V battery between speaker terminals ⊕ and ⊖.
- A momentary hum or pop should be heard.

ANTENNA

Using a jumper wire, clip an auxiliary ground between antenna and body.
- If reception improves, check antenna ground (at body surface).
- If reception does not improve, check main feeder cable for short circuit or open circuit.

RADIO

All voltage inspections are made with:
- Ignition switch ON or ACC
- Radio ON
- Radio connected (If removed for inspection, supply a ground to the case using a jumper wire).

RADIO VOLTAGES

Terminal	Voltage (V)	
	Base Audio System	Premium Audio System
1	—	5 - 7.5
2	—	5 - 7.5
3	—	5 - 7.5
4	—	5 - 7.5
5	—	—
6	10.8 - 15.6	10.8 - 15.6
7	—	—
8	—	—
9	—	—
10	10.8 - 15.6	10.8 - 15.6
11	—	—
12	—	—
13	5 - 7.5	5 - 7.5
14	5 - 7.5	5 - 7.5
15	5 - 7.5	5 - 7.5
16	5 - 7.5	5 - 7.5

Simpo PDF Merge and Split Unregistered Version - http://www.simpopdf.com

Fender antenna replacement
• Removal

1. Remove one screw securing fender antenna assembly.
2. Disconnect fender antenna cable connector.
3. Remove the fender antenna assembly.

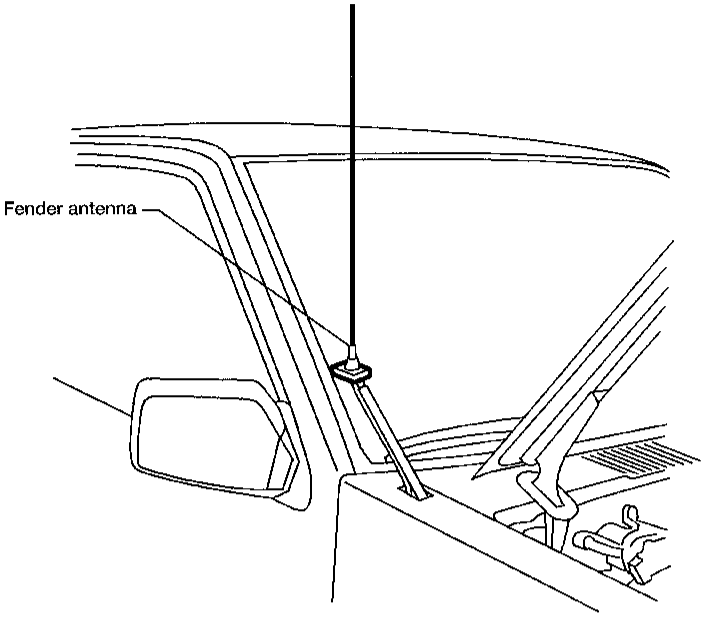

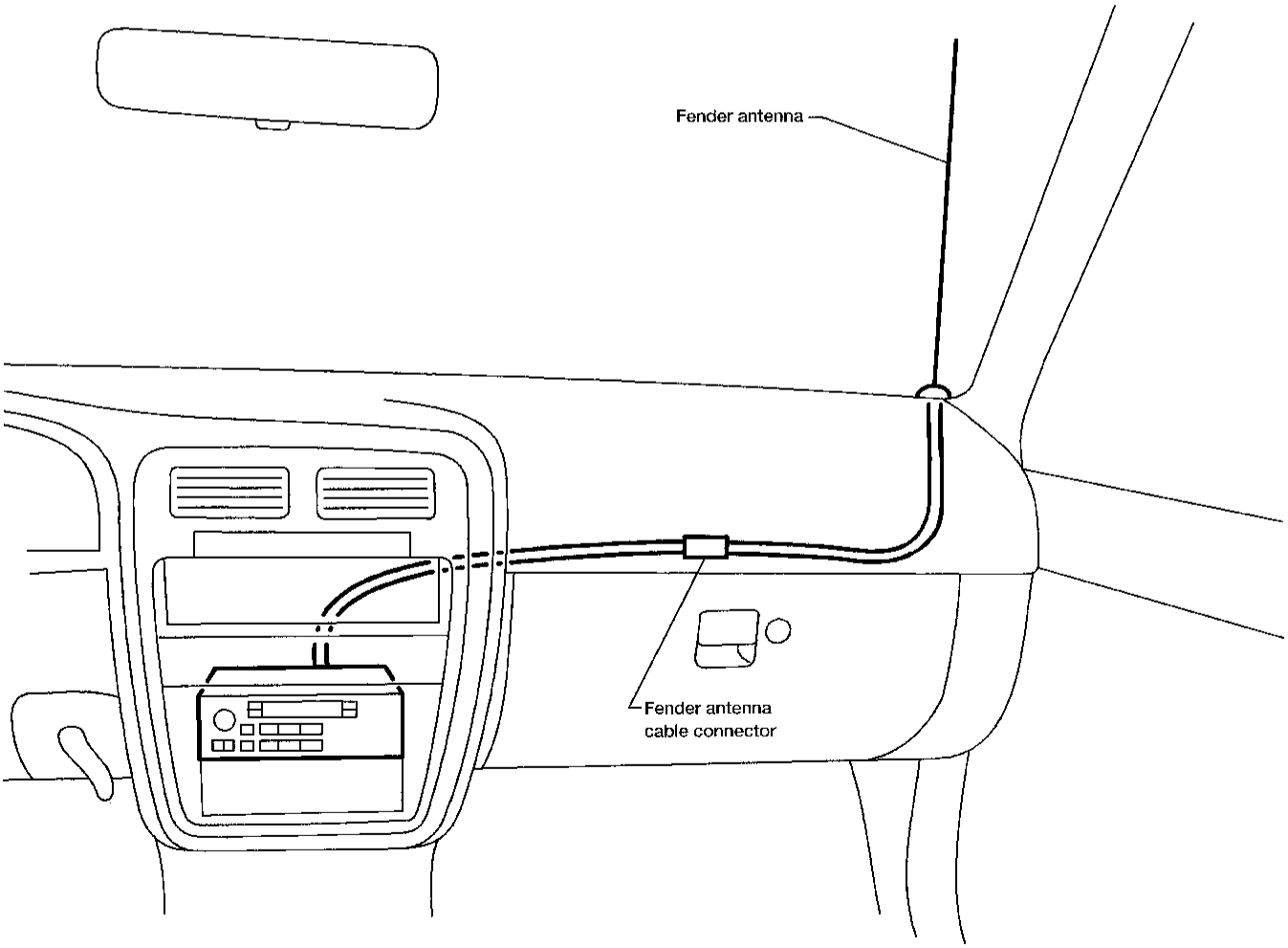

AEL604B

Simpo PDF Merge and Split Unregistered Version - http://www.simpopdf.com

Wiring Diagram — MIRROR —

EL-MIRROR-01

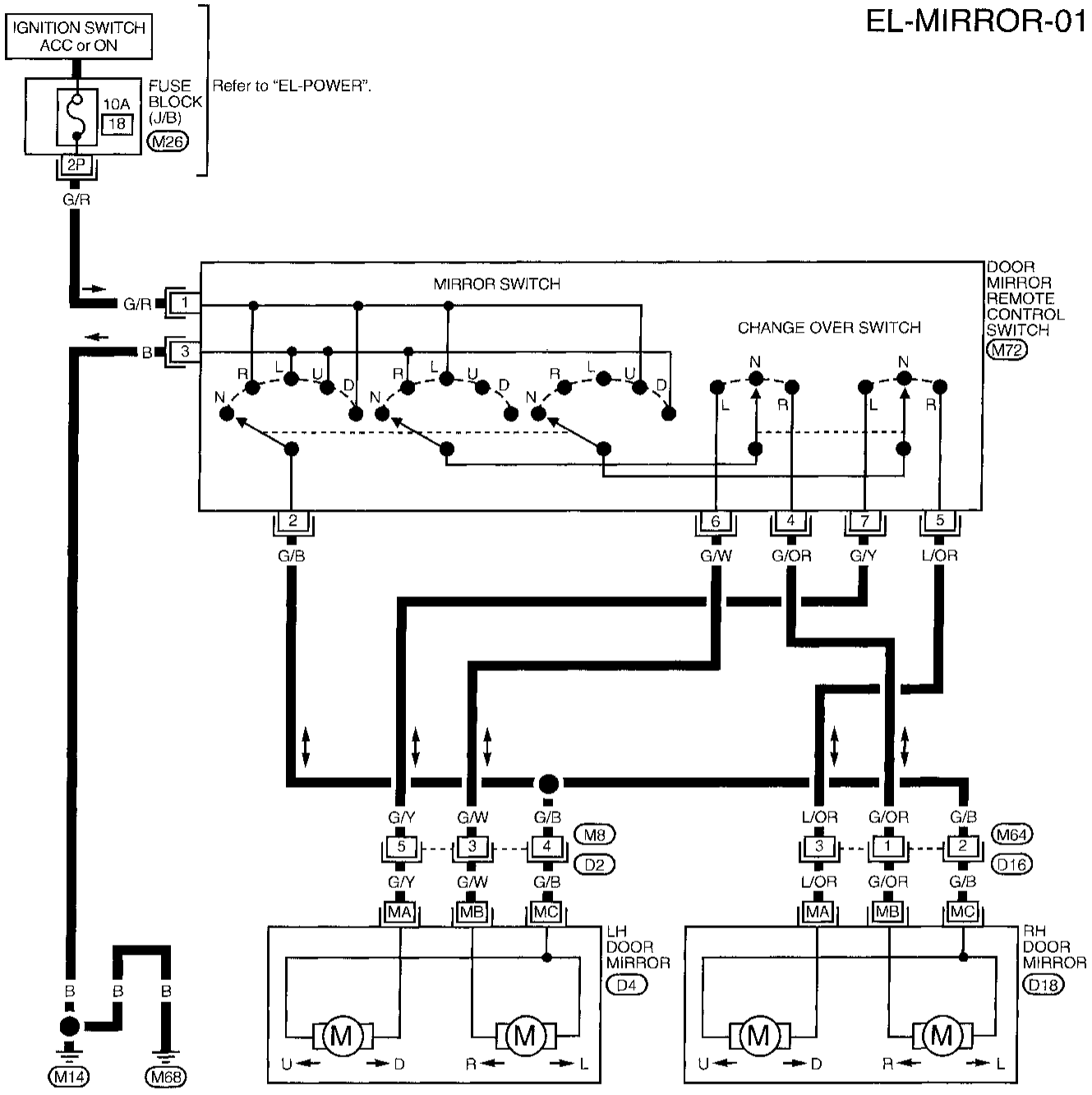



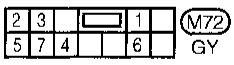

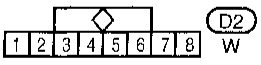



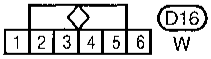

AEL451B

Simpo PDF Merge and Split Unregistered Version - http://www.simpopdf.com

Component Parts and Harness Connector Location

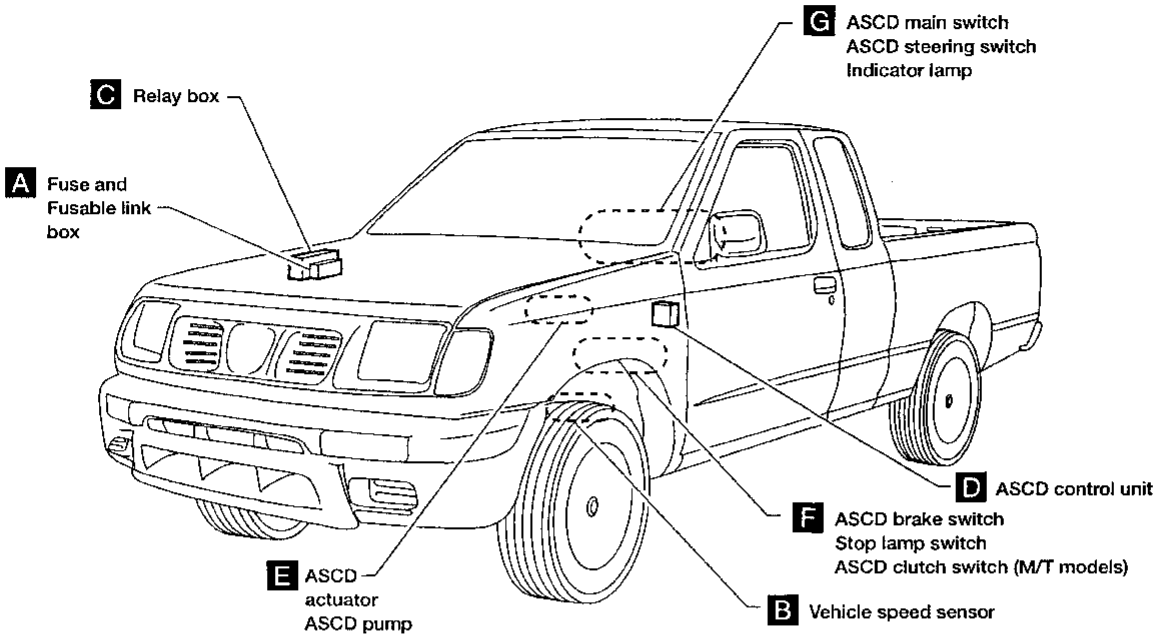

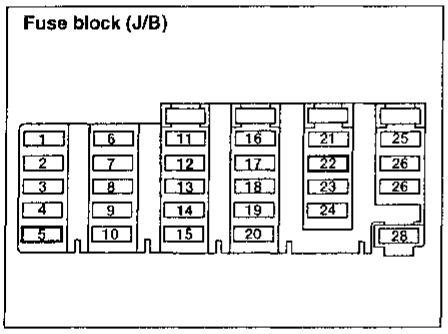

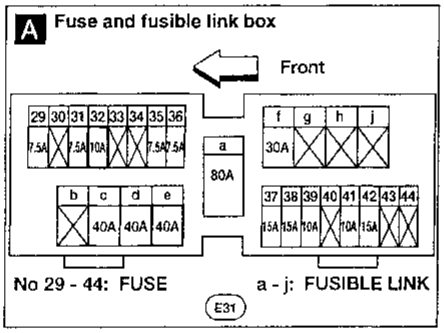

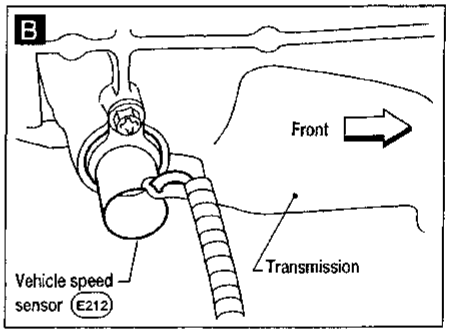

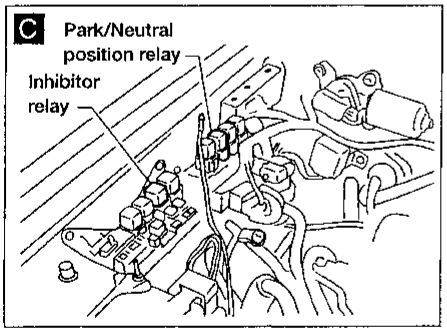

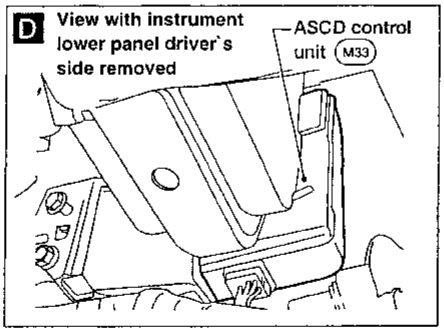

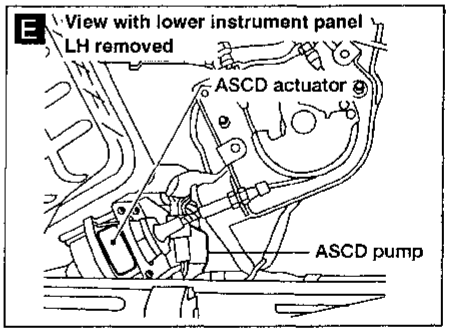

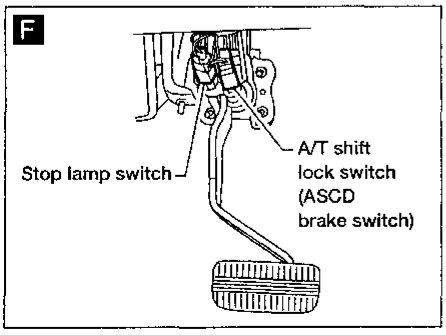

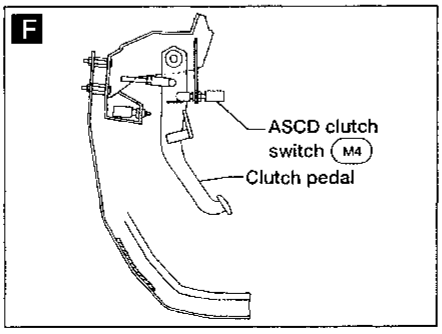

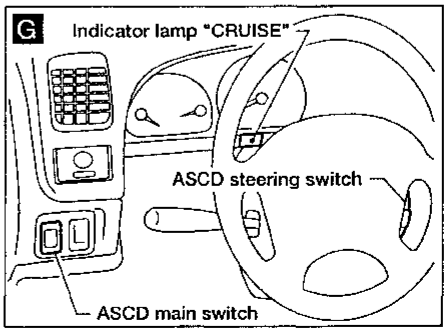

AEL688B

Simpo PDF Merge and Split Unregistered Version - http://www.simpopdf.com

System Description

Refer to Owner's Manual for ASCD operating instructions.
When the ignition switch is in the ON or START position, power is supplied:
- through 7.5A fuse [No. 5, located in the fuse block (J/B)]
- to ASCD main switch terminal ①
- to ASCD hold relay terminal ⑤
- to ASCD brake switch terminal ①
- through ASCD brake switch terminal ②
- to ASCD hold relay terminal ⑦.

When ASCD main switch is in the ON position, power is supplied:
- from ASCD main switch terminal ③
- to ASCD hold relay terminal ②.

Ground is supplied:
- to ASCD hold relay terminal ①
- through body grounds M14 and M68 .

With power and ground supplied, ASCD hold relay is energized, and then power is supplied:
- from ASCD hold relay terminal ③
- to ASCD control unit terminal ④ and
- to ASCD main switch terminal ②.

After the ASCD main switch is released, power remains supplied:
- to the coil circuit of ASCD hold relay
- through ASCD main switch terminal ③.

This power supply is kept until one of following conditions exists.
- Ignition switch is returned to the ACC or OFF position.
- ASCD main switch is pushed to OFF position.

When ASCD hold relay is energized, power is also supplied to ASCD control unit terminal ⑤
- through ASCD brake switch and
- ASCD clutch switch (with M/T) or
- Park/neutral position relay (with A/T).

Ground is supplied:
- to ASCD control unit terminal ③
- through body grounds M14 and M68 .

INPUTS

At this point, the system is ready to activate or deactivate, based on inputs from the following:
- speedometer in the combination meter
- stop lamp switch
- ASCD steering switch
- ASCD clutch switch (with M/T) or
- park/neutral position relay (with A/T)
- ASCD brake switch.

A vehicle speed input is supplied:
- to ASCD control unit terminal ⑦
- from terminal ㉞ of the combination meter.

Power is supplied at all times:
- to stop lamp switch terminal ①
- through 10A fuse [No. 22, located in the fuse block (J/B)].

When the brake pedal is depressed, power is supplied:
- from terminal ② of the stop lamp switch
- to ASCD control unit terminal ⑪.

Power is supplied at all times:
- through 10A fuse [No. 32, located in the fuse and fusible link box]
- to horn relay terminal ②
- through terminal ① of the horn relay
- to ASCD steering switch terminal ③.

When the SET/COAST switch is depressed, power is supplied:
- from terminal ② of the ASCD steering switch
- to ASCD control unit terminal ②.

System Description (Cont'd)

Simpo PDF Merge and Split Unregistered Version - http://www.simpopdf.com

When the RESUME/ACCEL switch is depressed, power is supplied:
- from terminal ① of the ASCD steering switch
- to ASCD control unit terminal ①.

When the ASCD CANCEL switch is depressed, power is supplied:
- to ASCD control unit terminals ① and ②.

When the system is activated, power is supplied:
- from ASCD clutch switch terminal ② (with M/T) or
- from park/neutral position relay terminal ④ (with A/T)
- to ASCD control unit terminal ⑤.

Power is interrupted when:
- the ASCD main switch is turned to OFF
- the ASCD clutch switch is depressed (with M/T),
- the A/T selector lever is placed in P or N (with A/T) or
- the ASCD brake switch is depressed.

OUTPUTS

The ASCD actuator controls the throttle drum via the ASCD wire based on inputs from the ASCD control unit.
The ASCD pump consists of a vacuum motor, an air valve, and a release valve.
Power is supplied:
- from terminal ⑧ of the ASCD control unit
- to ASCD pump terminal ①.

Ground is supplied to the vacuum motor:
- from terminal ⑨ of the ASCD control unit
- to ASCD pump terminal ②.

Ground is supplied to the air valve:
- from terminal ⑩ of the ASCD control unit
- to ASCD pump terminal ③.

Ground is supplied to the release valve:
- from terminal ⑭ of the ASCD control unit
- to ASCD pump terminal ④.

When the system is activated, power is supplied:
- from terminal ⑬ of the ASCD control unit
- to combination meter terminal ㉚.

Ground is supplied:
- to combination meter terminal ㉝
- through body grounds (M14) and (M68).

With power and ground supplied, the CRUISE indicator illuminates.
When vehicle speed is approximately 8 km/h (5 MPH) below set speed on A/T models, ground is supplied:
- to terminal ② of the solenoid valve unit
- from ASCD control unit terminal ⑫.

When this occurs, the overdrive is canceled.
When vehicle speed reaches approximately 3 km/h (2 MPH) above set speed, overdrive is reactivated.

Simpo PDF Merge and Split Unregistered Version - http://www.simpopdf.com

Schematic

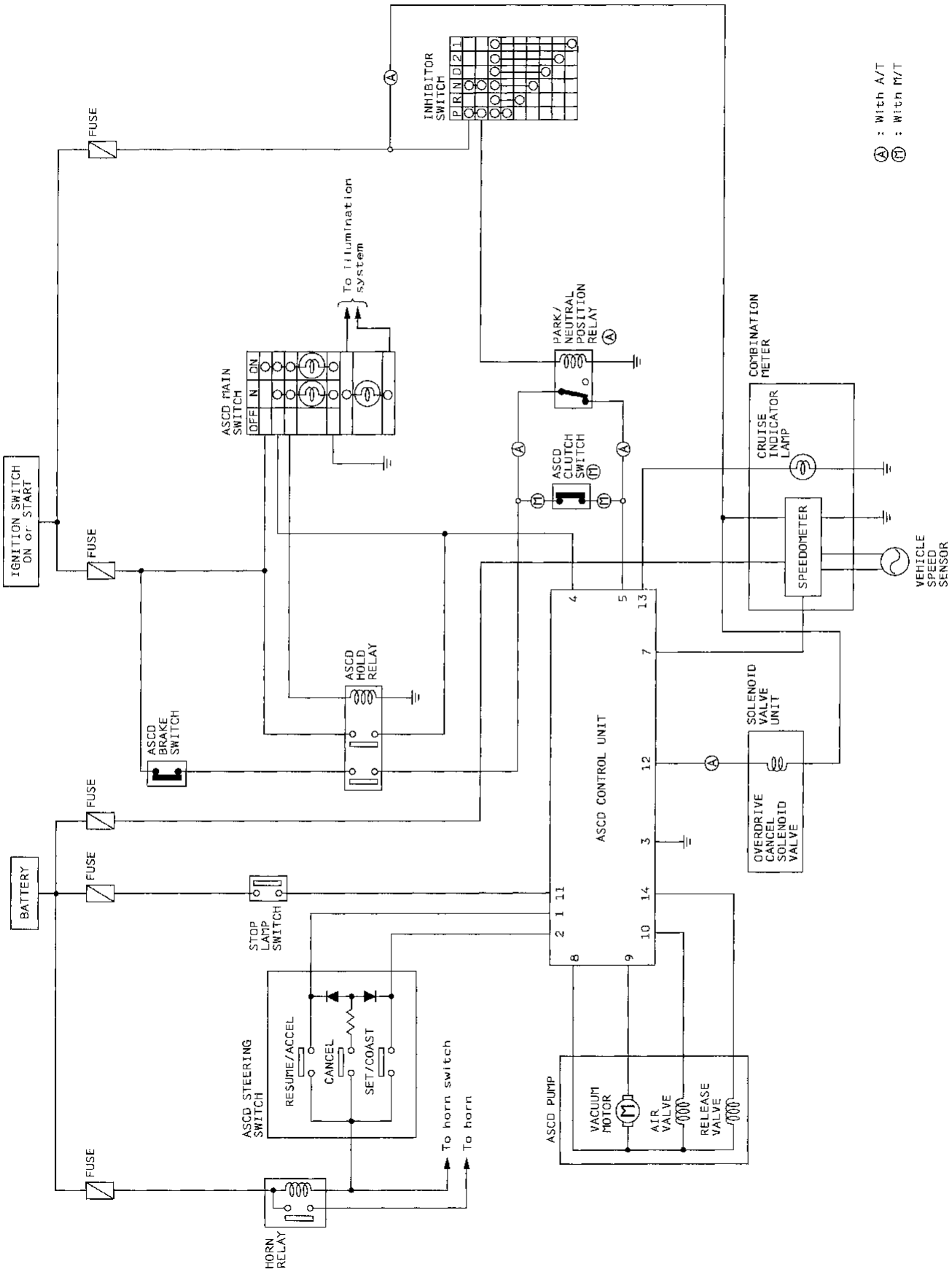

AEL355B

Simpo PDF Merge and Split Unregistered Version - http://www.simpopdf.com

NOTES

Simpo PDF Merge and Split Unregistered Version - http://www.simpopdf.com

Wiring Diagram — ASCD —

EL-ASCD-01

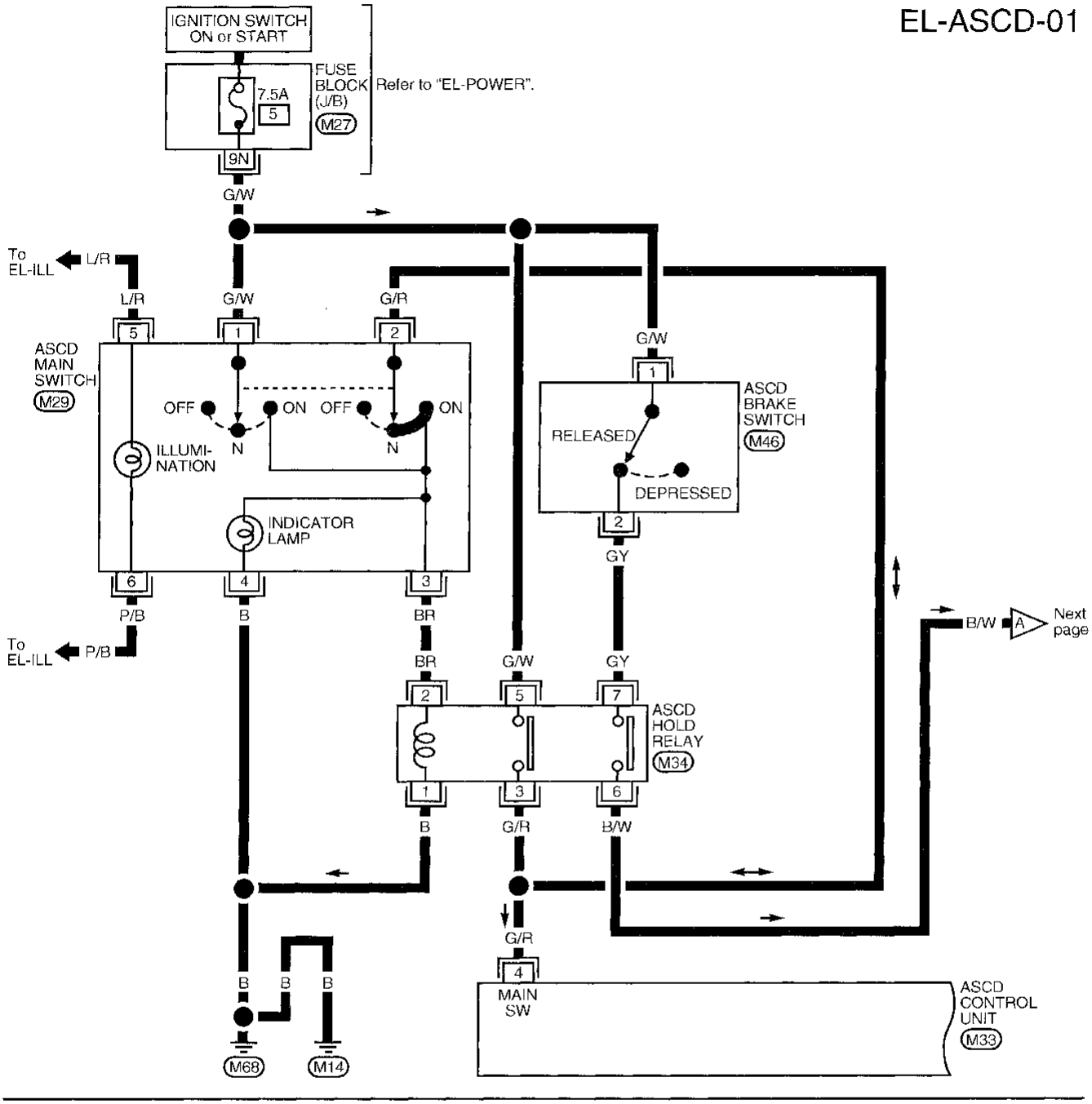

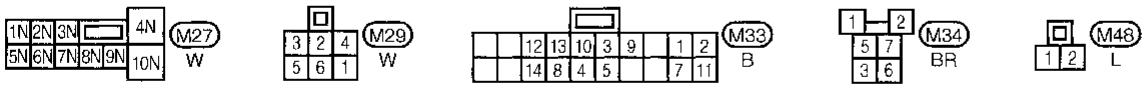

AEL356B

Wiring Diagram — ASCD — (Cont'd)

Simpo PDF Merge and Split Unregistered Version - http://www.simpopdf.com

EL-ASCD-02

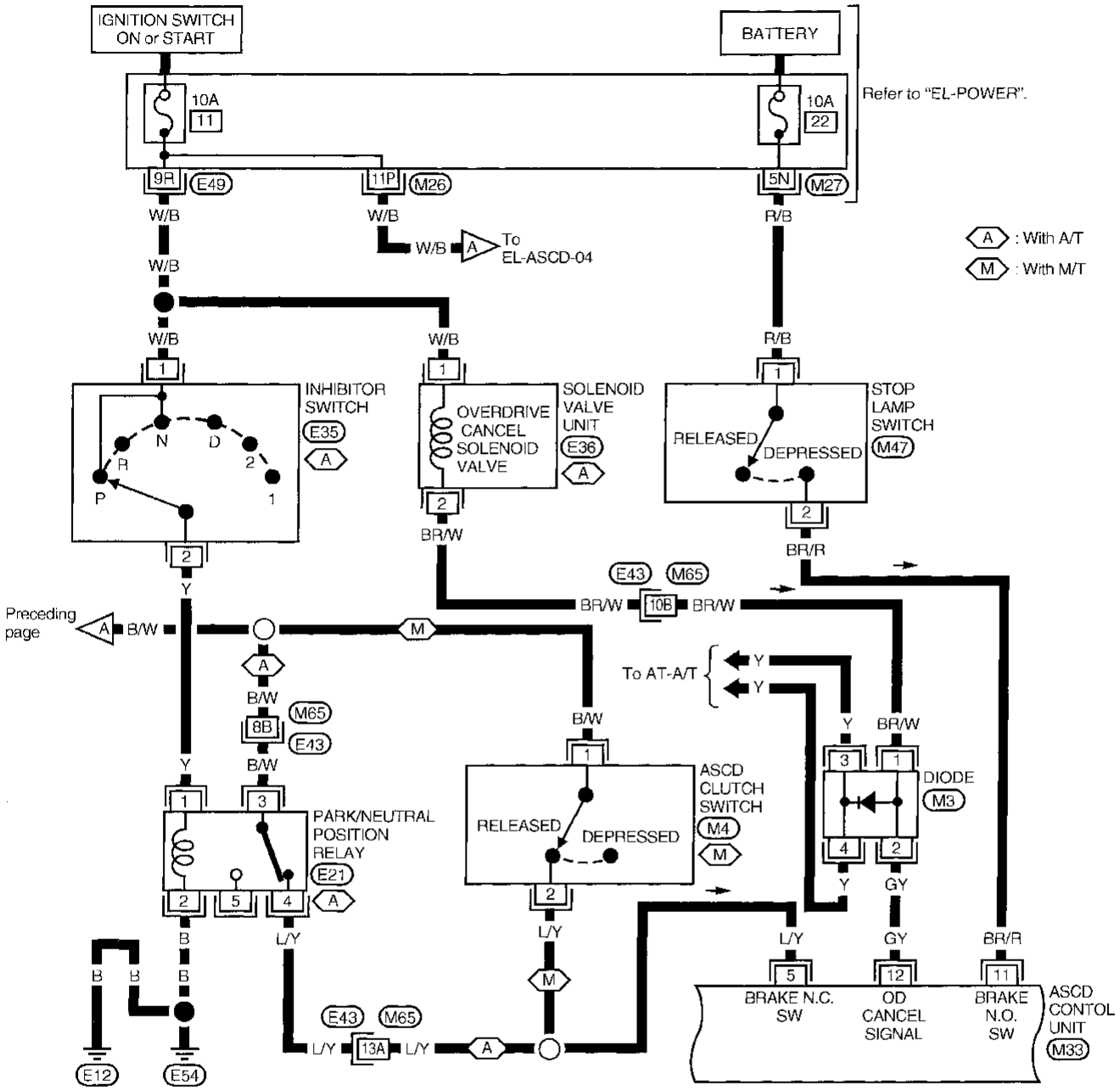

Refer to last page (Foldout page).
M65 , E43

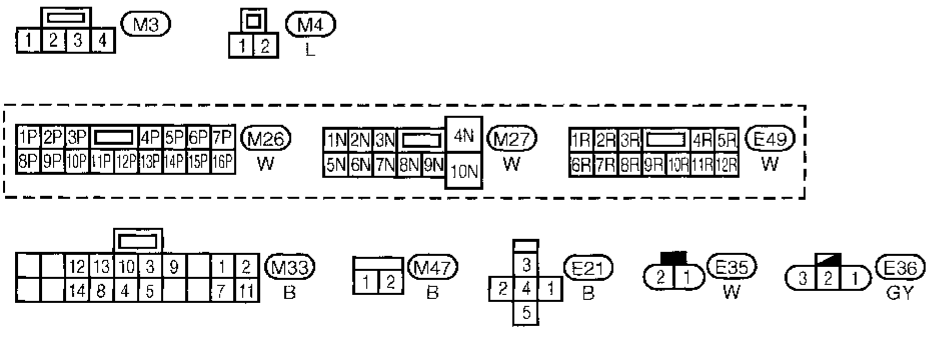

AEL357B

Wiring Diagram — ASCD — (Cont'd)

Simpo PDF Merge and Split Unregistered Version - http://www.simpopdf.com

EL-ASCD-03

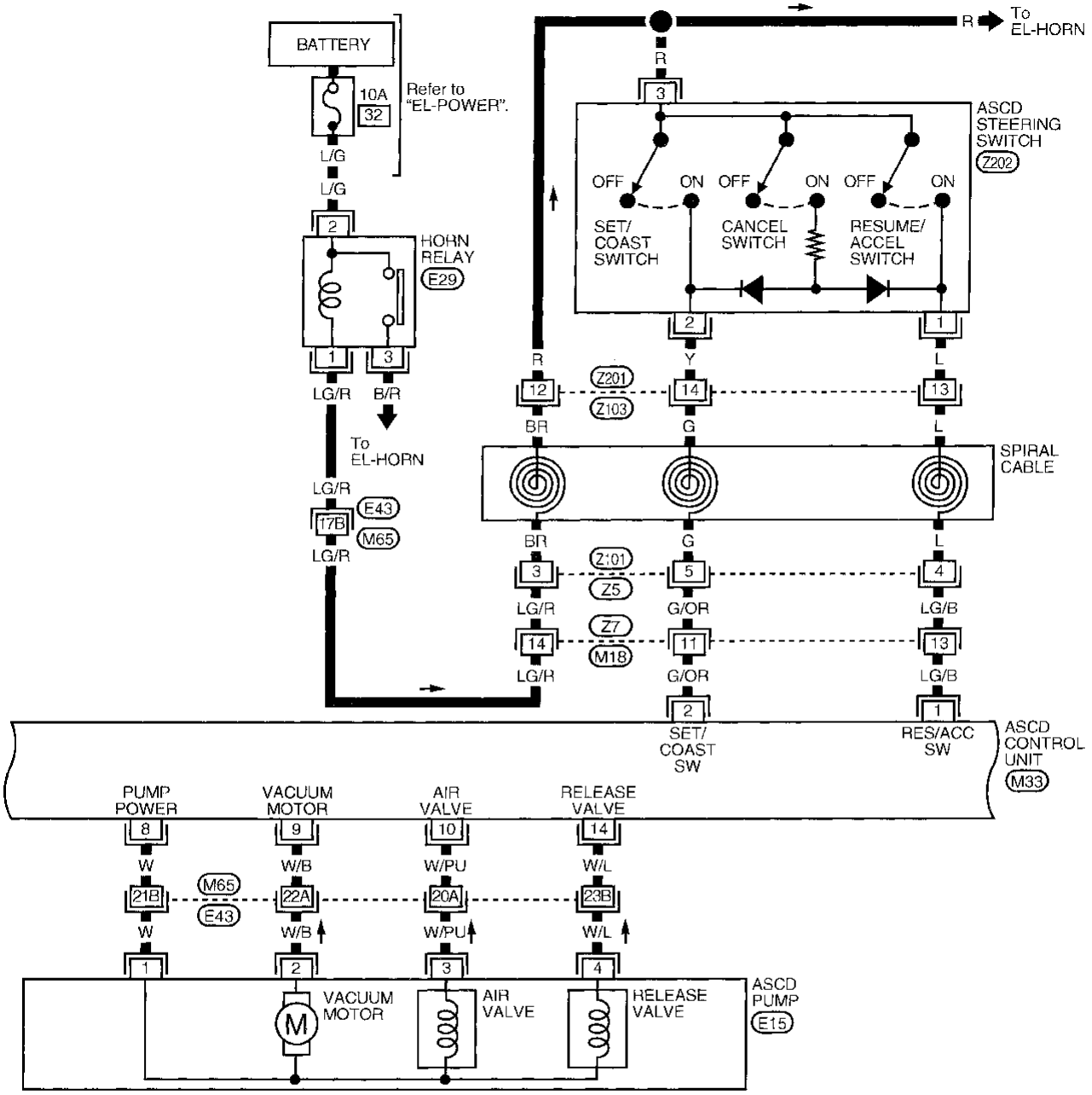

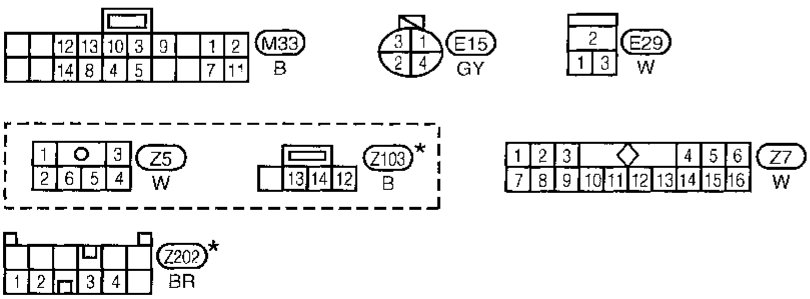

Refer to last page (Foldout page).
M65, E43

* : This connector is not shown in "HARNESS LAYOUT" of EL section.

AEL358B

Wiring Diagram — ASCD — (Cont'd)

Simpo PDF Merge and Split Unregistered Version - http://www.simpopdf.com

EL-ASCD-04

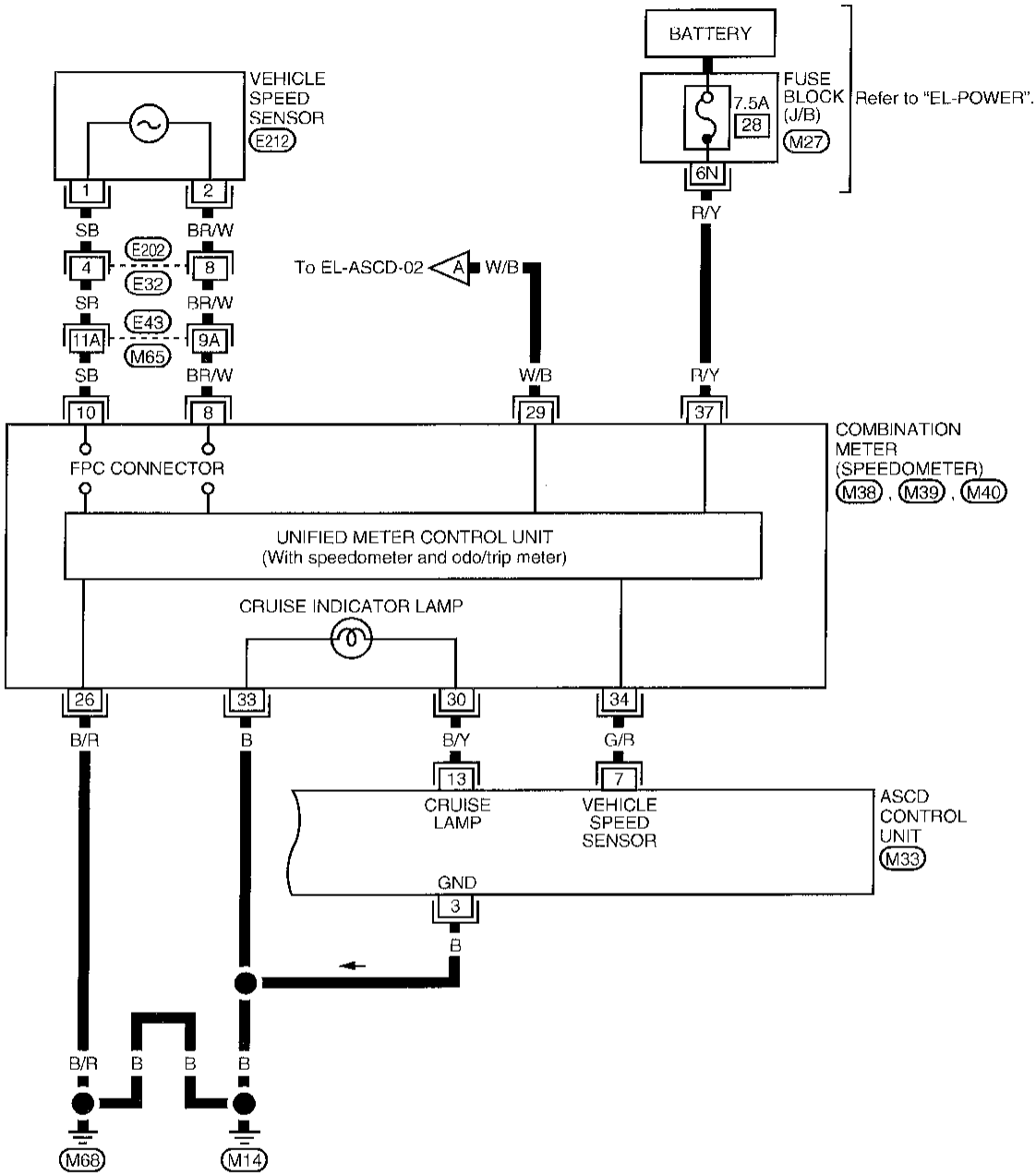

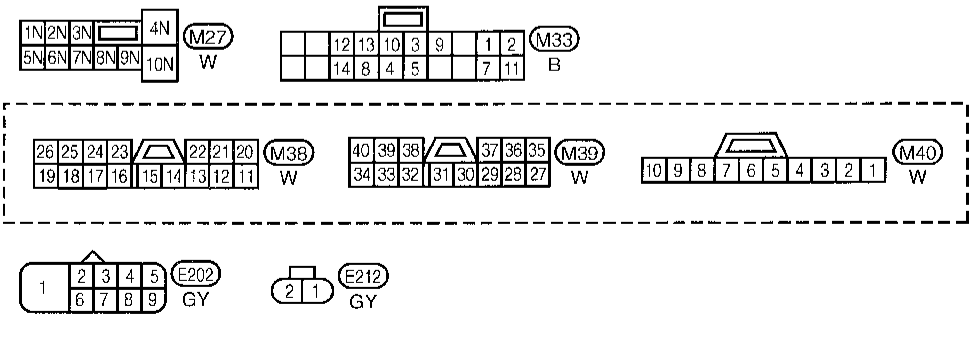

Refer to last page (Foldout page).
M65, E43

AEL359B

Simpo PDF Merge and Split Unregistered Version - http://www.simpopdf.com

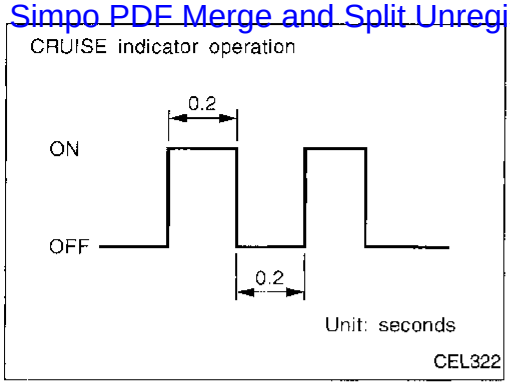

Fail-Safe System Description

When the fail-safe system senses a malfunction, it deactivates ASCD operation. The CRUISE indicator in the combination meter will then flash.

MALFUNCTION DETECTION CONDITIONS

Detection conditions	ASCD operation during malfunction detection
● ASCD steering (RESUME/ACCEL, CANCEL, SET/COAST) switch is stuck. ● Vacuum motor ground circuit or power circuit is open or shorted. ● Air valve ground circuit or power circuit is open or shorted. ● Release valve ground circuit or power circuit is open or shorted. ● Vehicle speed sensor is faulty. ● ASCD control unit internal circuit is malfunctioning.	● ASCD is deactivated. ● Vehicle speed memory is canceled.
● ASCD brake switch or stop lamp switch is faulty.	● ASCD is deactivated. ● Vehicle speed memory is not canceled.

Simpo PDF Merge and Split Unregistered Version - http://www.simpopdf.com

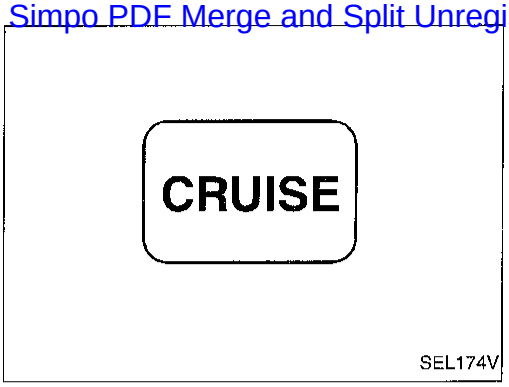

SEL174V

Fail-Safe System Check

1. Turn ignition switch ON.
2. Turn ASCD main switch to ON position and check if the "cruise indicator" blinks.

If the indicator lamp blinks, check the following.

- ASCD steering switch. Refer to "DIAGNOSTIC PROCEDURE 5" (EL-136).

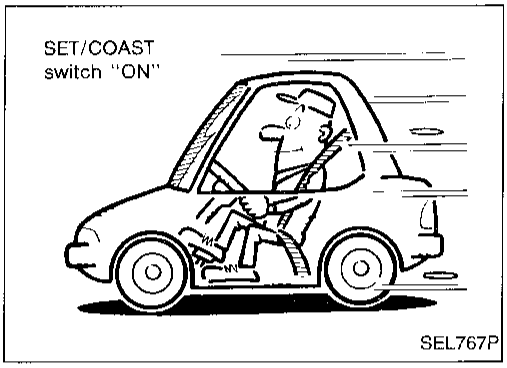

SEL767P

3. Drive the vehicle at more than 48 km/h (30 MPH) and push SET/COAST switch.

If the indicator lamp blinks, check the following:

- Vehicle speed sensor. Refer to "DIAGNOSTIC PROCEDURE 6" (EL-137).
- ASCD pump circuit. Refer to "DIAGNOSTIC PROCEDURE 7" (EL-138).
- Replace control unit.

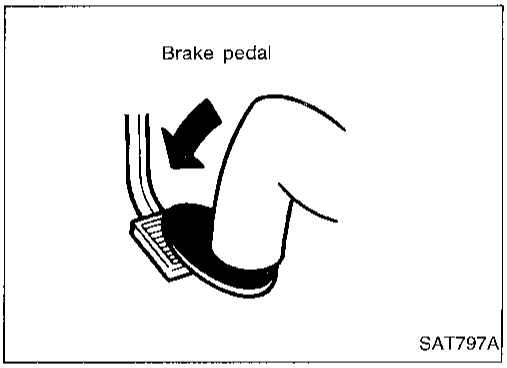

SAT797A

4. Depress brake pedal slowly (brake pedal should be depressed more than 5 seconds).

If the indicator lamp blinks, check the following:

- ASCD brake/stop lamp switch. Refer to "DIAGNOSTIC PROCEDURE 4" (EL-135).

5. END. (System is OK.)

Simpo PDF Merge and Split Unregistered Version - http://www.simpopdf.com

Trouble Diagnoses

SYMPTOM CHART

PROCEDURE	—	Diagnostic procedure							
REFERENCE PAGE	EL-131	EL-133	EL-133	EL-134	EL-135	EL-136	EL-137	EL-138	EL-139
SYMPTOM	Fail-safe system check	DIAGNOSTIC PROCEDURE 1 (POWER SUPPLY AND GROUND CIRCUIT CHECK)	DIAGNOSTIC PROCEDURE 2 (ASCD MAIN SWITCH CHECK)	DIAGNOSTIC PROCEDURE 3 (ASCD HOLD RELAY CHECK)	DIAGNOSTIC PROCEDURE 4 (ASCD BRAKE/STOP LAMP SWITCH CHECK)	DIAGNOSTIC PROCEDURE 5 (ASCD STEERING SWITCH CHECK)	DIAGNOSTIC PROCEDURE 6 (VEHICLE SPEED SENSOR CHECK)	DIAGNOSTIC PROCEDURE 7 (ASCD PUMP CIRCUIT CHECK)	DIAGNOSTIC PROCEDURE 8 (ASCD ACTUATOR/PUMP CHECK)
ASCD cannot be set. ("CRUISE" indicator lamp does not blink.)		X	X	X		X	X		
ASCD cannot be set. ("CRUISE" indicator lamp blinks.★1)	X				X	X	X	X	
Vehicle speed does not decrease after SET/COAST switch has been pressed.						X			X
Vehicle speed does not return to the set speed after RESUME/ACCEL switch has been pressed.★2						X			X
Vehicle speed does not increase after RESUME/ACCEL switch has been pressed.						X			X
System is not released after CANCEL switch (steering) has been pressed.						X			X
Large difference between set speed and actual vehicle speed.									X
Deceleration is greatest immediately after ASCD has been set.									X

X: Applicable

★1: It indicates that system is in fail-safe. After completing diagnostic procedures, perform "Fail-Safe System Check" (EL-131) to verify repairs.

★2: If vehicle speed is greater than 48 km/h (30 MPH) after system has been released, pressing RESUME/ACCEL switch returns vehicle speed to the set speed previously achieved. However, doing so when the ASCD main switch is turned to "OFF", vehicle speed will not return to the set speed since the memory is canceled.

Trouble Diagnoses (Cont'd)

Simpo PDF Merge and Split Unregistered Version - http://www.simpopdf.com

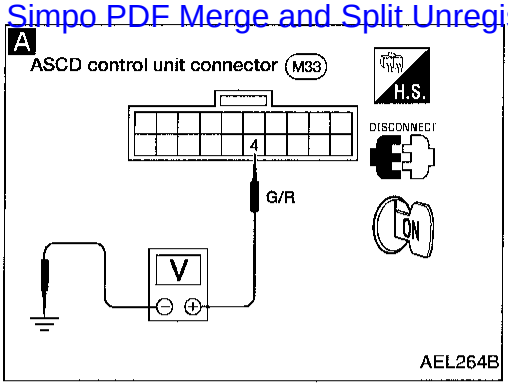

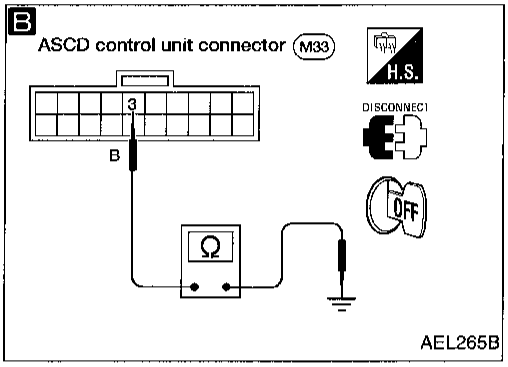

DIAGNOSTIC PROCEDURE 1

(POWER SUPPLY AND GROUND CIRCUIT CHECK)

1. Turn ignition switch ON.
2. Turn ASCD main switch "ON" to make sure indicators illuminate.

NG → Go to DIAGNOSTIC PROCEDURE 2 (ASCD MAIN SWITCH CHECK).

OK ↓

A

CHECK POWER SUPPLY CIRCUIT FOR ASCD CONTROL UNIT.

1. Disconnect ASCD control unit connector.
2. Turn ignition switch ON.
3. Turn ASCD main switch "ON".
4. Check voltage between control unit connector terminal ④ and ground.
   Battery voltage should exist.

   Refer to wiring diagram in EL-126.

NG → Go to DIAGNOSTIC PROCEDURE 3 (ASCD HOLD RELAY CHECK). Refer to EL-134.

OK ↓

B

CHECK GROUND CIRCUIT FOR ASCD CONTROL UNIT.

Check continuity between ASCD control unit harness terminal ③ and body ground.

Refer to wiring diagram in EL-129.

NG → Repair harness.

OK ↓

Power supply and ground circuit is ok.

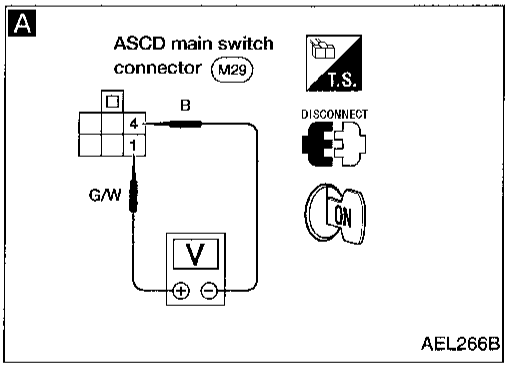

DIAGNOSTIC PROCEDURE 2

(ASCD MAIN SWITCH CHECK)

A

CHECK POWER SUPPLY FOR ASCD MAIN SWITCH.

1. Disconnect ASCD main switch connector.
2. Measure voltage between main switch terminals ① and ④.
   Battery voltage should exist.

   Refer to wiring diagram in EL-126.

NG → Check the following.
- 7.5A fuse [No. 5], located in the fuse block (J/B)]
- Harness for open or short between fuse and ASCD main switch
- Ground circuit for ASCD main switch

OK ↓

CHECK ASCD MAIN SWITCH.
Refer to "Electrical Components Inspection", EL-141.

NG → Replace ASCD main switch.

OK ↓

Go to DIAGNOSTIC PROCEDURE 3 (ASCD HOLD RELAY CHECK), Refer to EL-134.

Trouble Diagnoses (Cont'd)

Simpo PDF Merge and Split Unregistered Version - http://www.simpopdf.com

DIAGNOSTIC PROCEDURE 3

(ASCD HOLD RELAY CHECK)

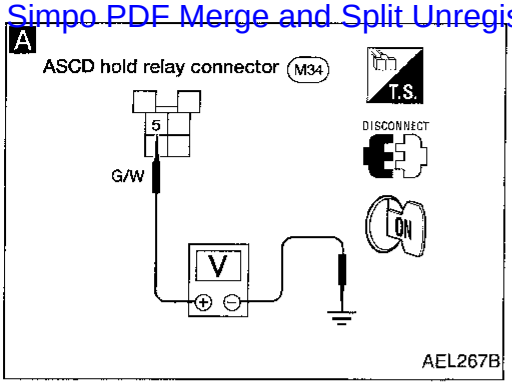

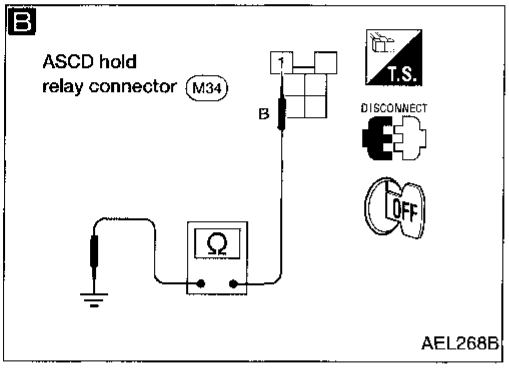

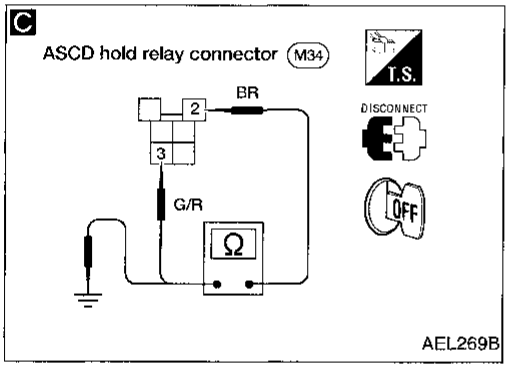

A

CHECK POWER SUPPLY CIRCUIT FOR ASCD HOLD RELAY.
1. Disconnect ASCD hold relay.
2. Do approx. 12 volts exist between ASCD hold relay terminal (5) and ground?

Refer to wiring diagram in EL-126.

No → Check the following.
- 7.5A fuse [No. 5], located in the fuse block (J/B)]
- Harness for open or short between fuse and ASCD hold relay

Yes ↓

B

CHECK GROUND CIRCUIT FOR ASCD HOLD RELAY.
Does continuity exist between ASCD hold relay harness connector terminal (1) and ground?

No → Repair harness.

Yes ↓

CHECK ASCD MAIN SWITCH.
Refer to "Electrical Components Inspection", EL-141.

NG → Replace ASCD main switch.

OK ↓

C

CHECK ASCD HOLD RELAY CIRCUIT.
1. Check continuity between ASCD hold relay terminals (2) and (3).

Continuity should exist.

2. Check continuity between ASCD hold relay terminal (2) and ground.

Continuity should not exist.

NG → Repair harness.

No ↓

CHECK ASCD HOLD RELAY.

NG → Replace ASCD hold relay.

OK ↓

ASCD hold relay circuit is OK.

Trouble Diagnoses (Cont'd)

Simpo PDF Merge and Split Unregistered Version - http://www.simpopdf.com

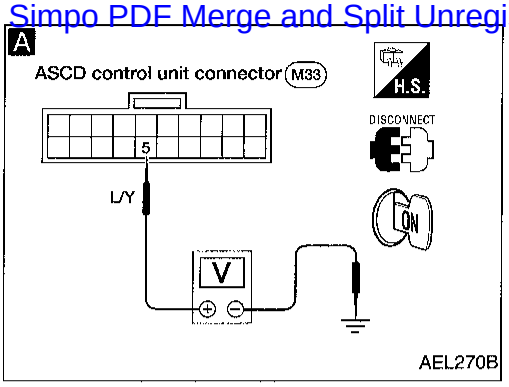

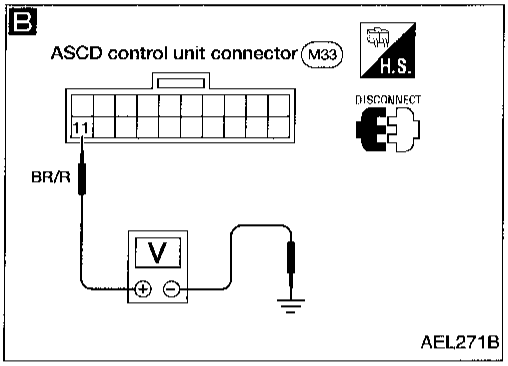

DIAGNOSTIC PROCEDURE 4

(ASCD BRAKE/STOP LAMP SWITCH CHECK)

A

CHECK ASCD BRAKE SWITCH CIRCUIT.

1. Disconnect control unit connector.
2. Turn ignition switch ON.
3. Turn ASCD main switch "ON".
4. Check voltage between control unit connector terminal (5) and ground.
   When brake pedal or clutch pedal (M/T) is depressed or A/T selector lever (A/T) is in "N" or "P" range:
   Approx. 0V
   When brake pedal and clutch pedal (M/T) are released or A/T selector lever (A/T) is not in "N" or "P" range:
   Battery voltage should exist.

   Refer to wiring diagram in EL-127.

NG → Check the following.
- ASCD brake switch
  Refer to "Electrical Components Inspection", EL-141.
- ASCD clutch switch (with M/T)
  Refer to "Electrical Components Inspection", EL-141.
- Inhibitor switch (with A/T)
  Refer to "Electrical Components Inspection", EL-141.
- ASCD hold relay
- Harness for open or short

OK ↓

B

CHECK STOP LAMP SWITCH CIRCUIT.

1. Disconnect control unit connector.
2. Check voltage between control unit terminal (11) and ground.

Condition		Voltage [V]
Stop lamp switch	Depressed	Approx. 12
	Released	0

Refer to wiring diagram in EL-127.

NG → Check the following.
- 10A fuse [No. 22, located in the fuse block (J/B)]
- Harness for open or short between ASCD control unit and stop lamp switch
- Stop lamp switch
  Refer to "Electrical Components Inspection", EL-141.

OK ↓

ASCD brake/stop lamp switch circuit switch is OK.

Trouble Diagnoses (Cont'd)

Simpo PDF Merge and Split Unregistered Version - http://www.simpopdf.com

DIAGNOSTIC PROCEDURE 5

(ASCD STEERING SWITCH CHECK)

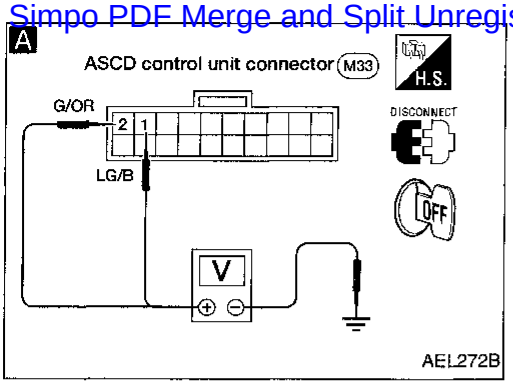

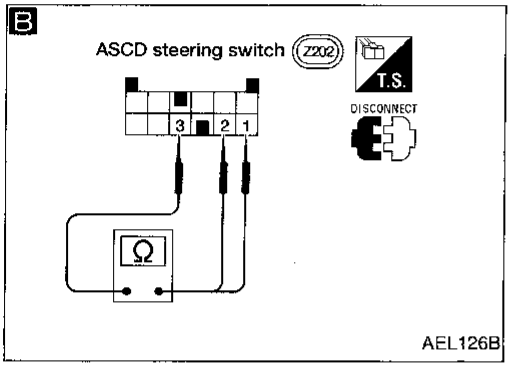

A

CHECK ASCD STEERING SWITCH CIRCUIT FOR ASCD CONTROL UNIT.

1. Disconnect control unit connector.
2. Check voltage between control unit harness terminals and ground.

	Terminal No.		Switch condition	
	⊕	⊖	Pressed	Released
SET/ COAST SW	②	Ground	12V	0V
RESUME/ ACC SW	①	Ground	12V	0V
CANCEL SW	②	Ground	12V	0V
	①	Ground	12V	0V

Refer to wiring diagram in EL-128.

OK → ASCD steering switch is OK.

NG ↓

CHECK POWER SUPPLY FOR ASCD STEERING SWITCH.
Does horn work?

NG → Check the following.
- 10A fuse (No. 32, located in the fuse and fusible link box)
- Horn relay
- Harness for open or short between horn and fuse

OK ↓

B

CHECK ASCD STEERING SWITCH.

1. Disconnect ASCD steering switch.
2. Check continuity between terminals by pushing each switch.

Switch	Terminal ③	②	①
RESUME/ ACCEL	○		○
SET/ COAST	○	○	
CANCEL	○	▶|○	
	○	▶	○

NG → Replace ASCD steering switch.

OK ↓

Check harness for open or short between ASCD steering switch and ASCD control unit.

Trouble Diagnoses (Cont'd)

Simpo PDF Merge and Split Unregistered Version - http://www.simpopdf.com

DIAGNOSTIC PROCEDURE 6

(VEHICLE SPEED SENSOR CHECK)

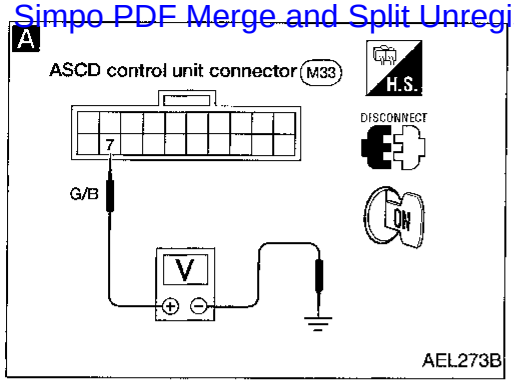

A

CHECK VEHICLE SPEED SENSOR CIRCUIT.

1. Apply wheel chocks and jack up drive wheel.
2. Disconnect control unit connector.
3. Connect voltmeter between control unit terminal ⑦ and ground.
4. Slowly turn drive wheel.
5. Check deflection of voltmeter pointer.

Refer to wiring diagram in EL-129.

OK → Vehicle speed sensor is OK.

NG ↓

Does speedometer operate normally?

No → Check speedometer and vehicle speed sensor circuit. Refer to EL-75.

Yes ↓

Check harness for open or short between ASCD control unit terminal ⑦ and combination meter terminal ㉞.

Trouble Diagnoses (Cont'd)

Simpo PDF Merge and Split Unregistered Version - http://www.simpopdf.com

DIAGNOSTIC PROCEDURE 7

(ASCD PUMP CIRCUIT CHECK)

A

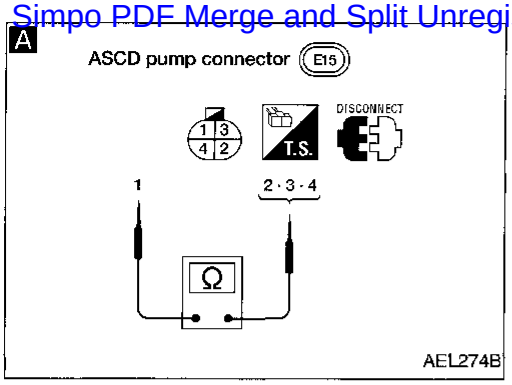

A

CHECK ASCD PUMP.

1. Disconnect ASCD pump connector.
2. Measure resistance between ASCD pump terminals ①and ②, ③, ④.

Terminals		Resistance [Ω]
①	②	Approx. 18.2
	③	Approx. 65.5
	④	Approx. 65.5

Refer to wiring diagram in EL-128.

NG → Replace ASCD pump.

OK ↓

Check harness for open or short between ASCD pump and ASCD control unit.

Trouble Diagnoses (Cont'd)

Simpo PDF Merge and Split Unregistered Version - http://www.simpopdf.com

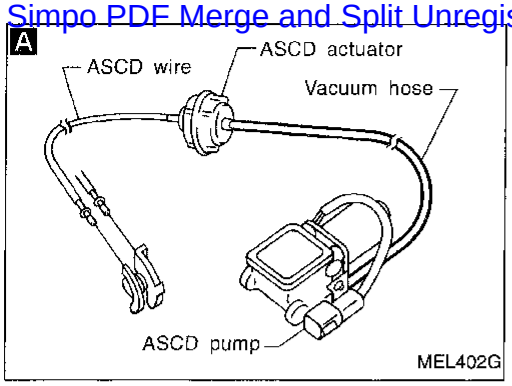

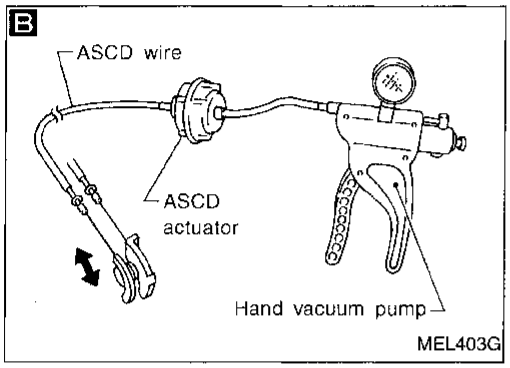

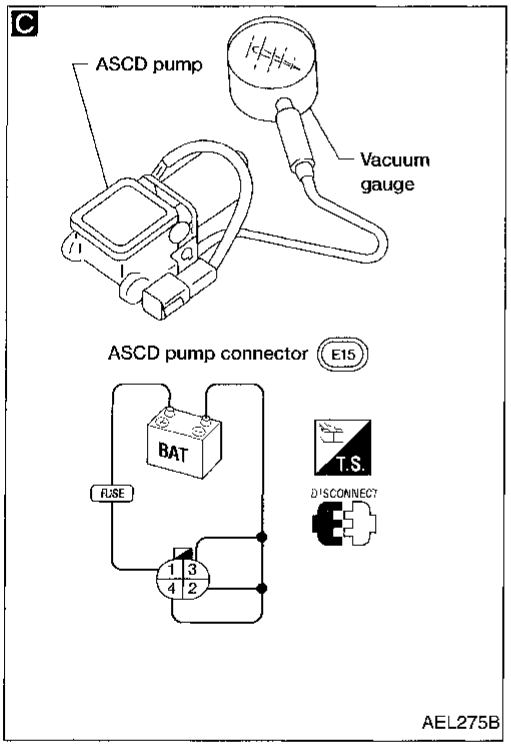

DIAGNOSTIC PROCEDURE 8

(ASCD ACTUATOR/PUMP CHECK)

A

CHECK VACUUM HOSE.
Check vacuum hose (between ASCD actuator and ASCD pump) for breakage, cracks or fracture.

NG → Repair or replace hose.

OK ↓

CHECK ASCD WIRE.
Check wire for improper installation, rust formation or breaks.

NG → Repair or replace wire. Refer to "ASCD Wire Adjustment", EL-140.

OK ↓

B

CHECK ASCD ACTUATOR.
1. Disconnect vacuum hose from ASCD actuator.
2. Apply –40 kPa (–0.400 bar, –0.41 kg/cm^2, –5.8 psi) vacuum to ASCD actuator with hand vacuum pump.

ASCD wire should move to pull throttle drum.

3. Wait 10 seconds and check for decrease in vacuum pressure.

Vacuum pressure decrease:
Less than 2.7 kPa (0.0270 bar, 0.028 kg/cm^2, 0.39 psi)

NG → Replace ASCD actuator.

OK ↓

C

CHECK ASCD PUMP.
1. Disconnect vacuum hose from ASCD pump and ASCD pump connector.
2. If necessary remove ASCD pump.
3. Connect vacuum gauge to ASCD pump.
4. Apply 12V direct current to ASCD pump and check operation.

	12V direct current supply terminals		Operation
	⊕	⊖	
Vacuum motor	①	②	Operate
Release valve		③	Close
Air valve		④	Close

A vacuum pressure of at least –35 kPa (–0.350 bar, –0.36 kg/cm^2, –5.1 psi) should be generated.

NG → Replace ASCD pump.

OK ↓

ASCD actuator/pump is OK.

Simpo PDF Merge and Split Unregistered Version - http://www.simpopdf.com

ASCD Wire Adjustment

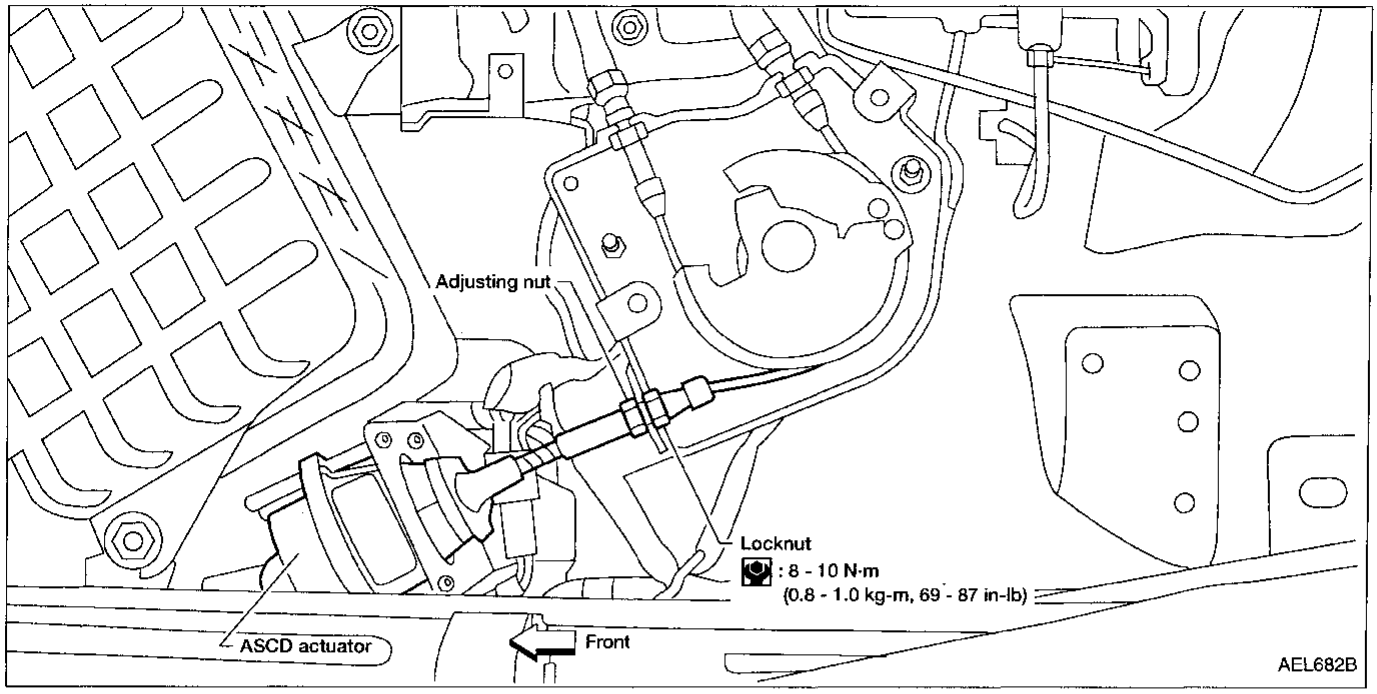

CAUTION:

- **Be careful not to twist ASCD wire when removing it.**
- **Do not tense ASCD wire excessively during adjustment.**

Adjust the tension of ASCD wire in the following manner.

(1) Loosen lock nut and adjusting nut.
(2) Make sure that accelerator wire is properly adjusted. Refer to FE section ("ACCELERATOR CONTROL SYSTEM").
(3) Tighten adjusting nut just until throttle drum starts to move.
(4) Loosen adjusting nut again 1/2 to 1 turn.
(5) Tighten lock nut.

Simpo PDF Merge and Split Unregistered Version - http://www.simpopdf.com

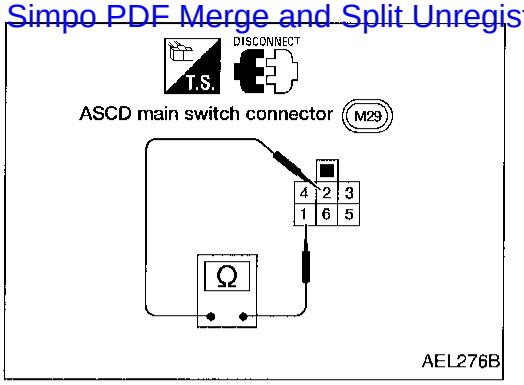

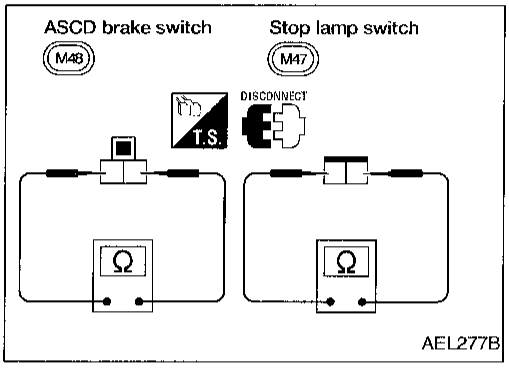

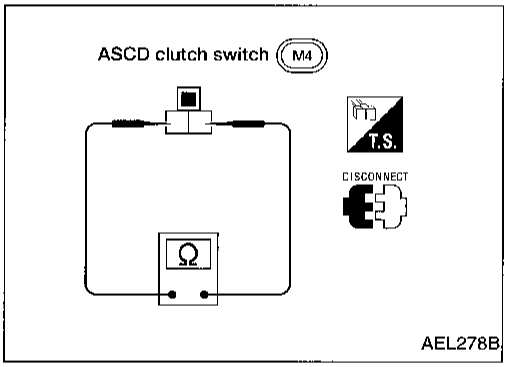

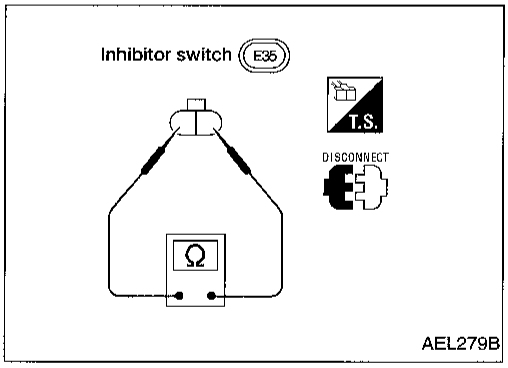

Electrical Components Inspection

ASCD MAIN SWITCH

Check continuity between terminals by pushing switch to each position.

Switch position	Terminals					
	1	2	3	4	5	6
ON	○	○	○	(m)	○	ILL.
N		○	○	(n)	○	(n)
OFF						

ASCD BRAKE SWITCH AND STOP LAMP SWITCH

Condition	Continuity	
	ASCD brake switch	Stop lamp switch
When brake pedal is depressed	No	Yes
When brake pedal is released	Yes	No

Check each switch after adjusting brake pedal — refer to BR section.

ASCD CLUTCH SWITCH (For M/T models)

Condition	Continuity
When clutch pedal is depressed	No
When clutch pedal is released	Yes

INHIBITOR SWITCH (For A/T models)

A/T selector lever position	Continuity
	Between terminals
"P"	Yes
"N"	Yes
Except "P" and "N"	No

Simpo PDF Merge and Split Unregistered Version - http://www.simpopdf.com

System Description

Power is supplied at all times:
- from 30A fusible link (Letter [f], located in the fuse and fusible link box)
- to circuit breaker terminal ①
- through circuit breaker terminal ②
- to power window relay terminal ⑤.

With ignition switch in ON or START position, power is supplied:
- through 7.5A fuse [No. [5] located in the fuse block (J/B)]
- to power window relay terminal ②.

Ground is supplied to power window relay terminal ①:
- through body grounds (M68) and (M14).

The power window relay is energized and power is supplied:
- through power window relay terminal ③
- to main power window and door lock/unlock switch terminal ①,
- to power window switch RH terminal ④.

MANUAL OPERATION

Door LH

Ground is supplied:
- through body grounds (M14) and (M68)
- to main power window and door lock/unlock switch terminal ⑤.

WINDOW UP
When the LH switch in the main power window and door lock/unlock switch is pressed in the up position, power is supplied:
- through main power window and door lock/unlock switch terminal ⑯
- to power window motor LH terminal (UP).

Ground is supplied:
- through main power window and door lock/unlock switch terminal ⑮
- to power window motor LH terminal (DN).

Then, the motor raises the window until the switch is released.

WINDOW DOWN
When the LH switch in the main power window and door lock/unlock switch is pressed in the down position, power is supplied:
- through main power window and door lock/unlock switch terminal ⑮
- to power window motor LH terminal (DN).

Ground is supplied:
- through main power window and door lock/unlock switch terminal ⑯
- to power window motor LH terminal (UP).

Then, the motor lowers the window until the switch is released.

Door RH

Ground is supplied:
- through body grounds (M14) and (M68)
- to main power window and door lock/unlock switch terminal ⑤.

NOTE:
Numbers in parentheses are terminal numbers, when power window switch is pressed in the UP and DOWN positions respectively.

MAIN SWITCH OPERATION
Power is supplied:
- through main power window and door lock/unlock switch terminal (⑭, ⑬)
- to power window switch RH terminal (⑤, ②).

The subsequent operation is the same as the power window switch operation.

Simpo PDF Merge and Split Unregistered Version - http://www.simpopdf.com

POWER WINDOW SWITCH OPERATION

Power is supplied:

- to power window switch RH terminal ④
- through power window switch RH terminal (⑥, ③)
- to power window motor RH terminal (UP, DN).

Ground is supplied:

- to power window motor RH terminal (DN, UP)
- to power window switch RH terminal (③, ⑥)
- through power window switch RH terminal (②, ⑤)
- through power window main switch terminal (⑬, ⑭).

Then, the motor raises or lowers the window until the switch is released.

AUTO OPERATION

The power window AUTO feature enables the driver to lower the driver's window without holding the window switch in the down position.
The AUTO feature only operates on the driver's window downward movement.

POWER WINDOW LOCK

The power window lock is designed to lock operation of the RH door window.
When the lock switch is pressed to lock position, ground of the power window switch RH in the main power window and door lock/unlock switch is disconnected. This prevents the power window motor RH from operating.

Simpo PDF Merge and Split Unregistered Version - http://www.simpopdf.com

Wiring Diagram — WINDOW —

EL-WINDOW-01

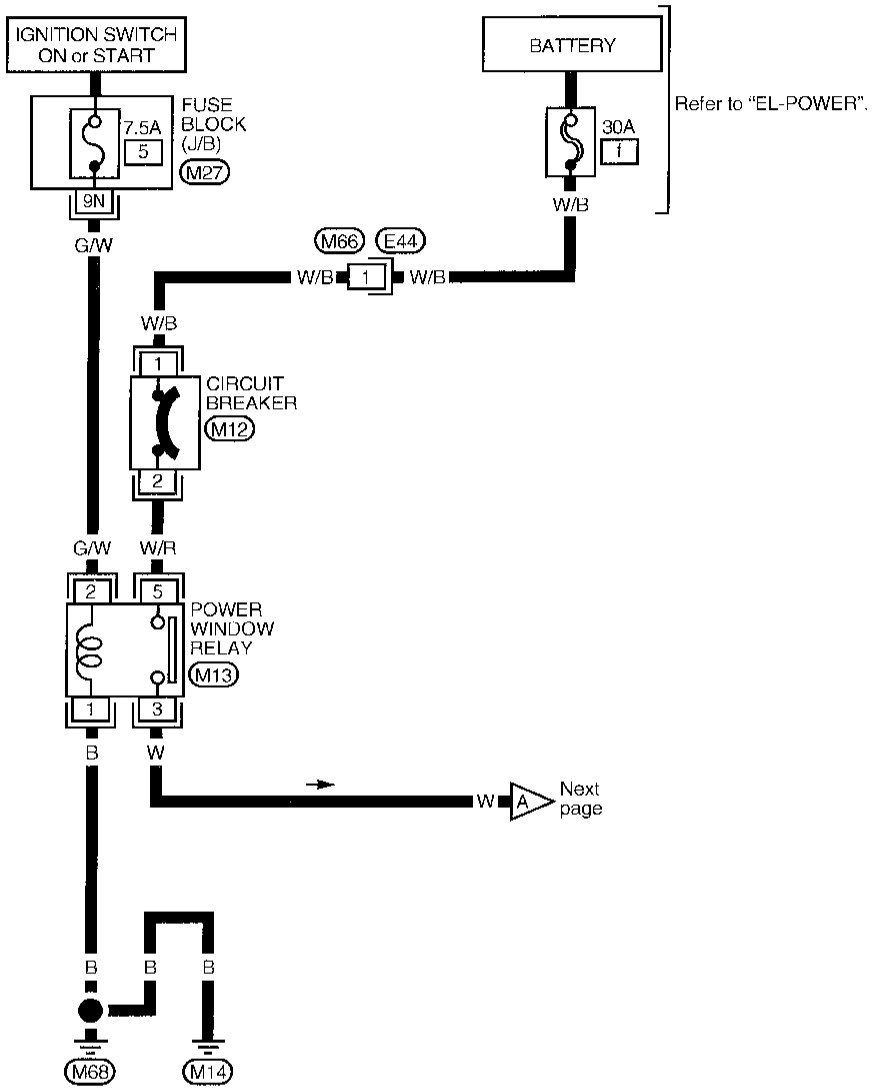

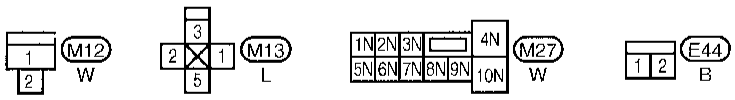

AEL452B

Wiring Diagram — WINDOW — (Cont'd)

Simpo PDF Merge and Split Unregistered Version - http://www.simpopdf.com

EL-WINDOW-02

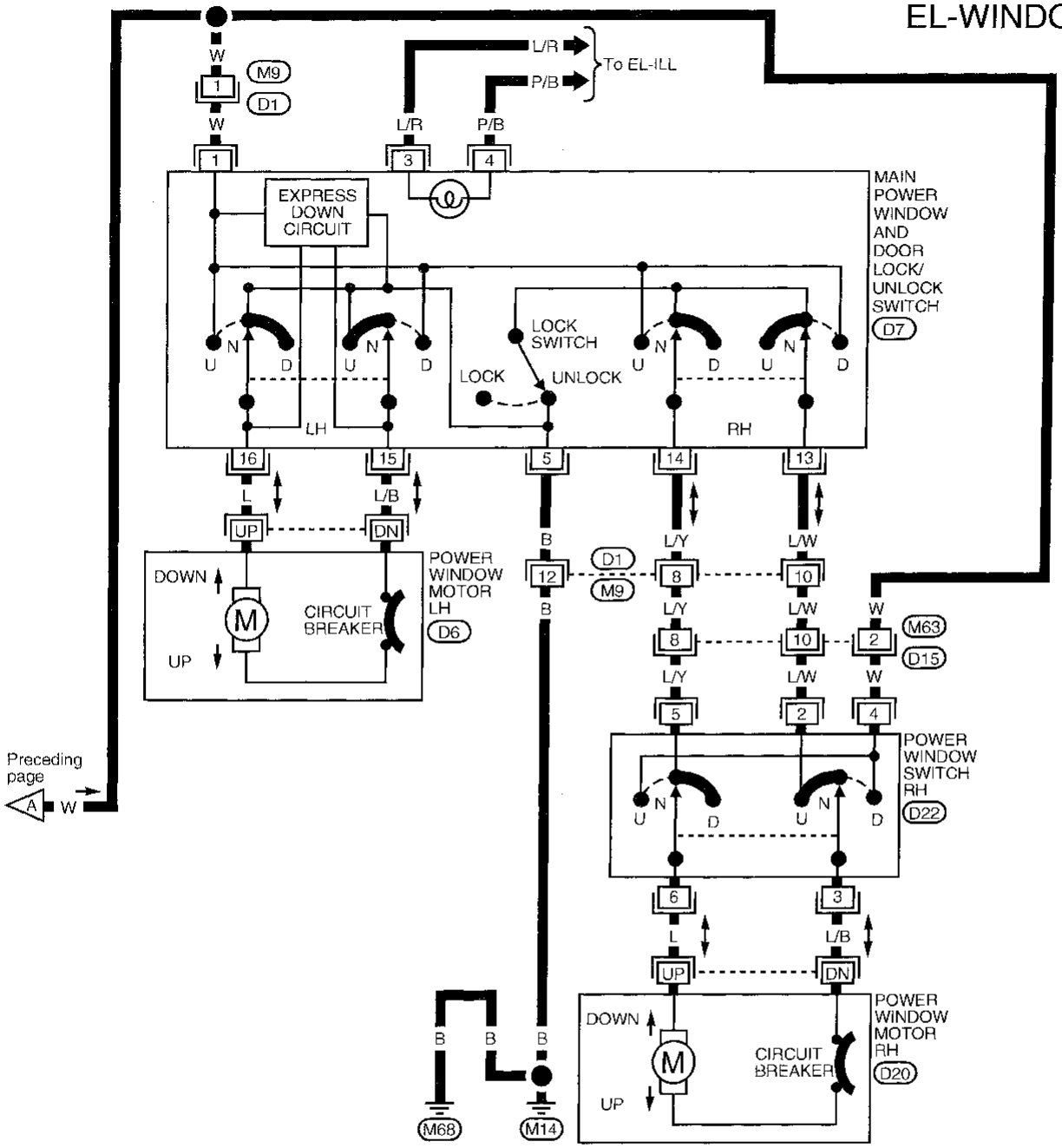

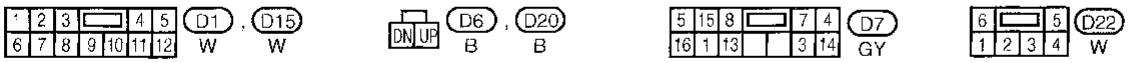

Simpo PDF Merge and Split Unregistered Version - http://www.simpopdf.com

Trouble Diagnoses

Symptom	Possible cause	Repair order
None of the power windows can be operated using any switch.	1. 7.5A fuse, 30A fusible link and (M12) circuit breaker	1. Check 7.5A fuse (No. 5, located in fuse block [J/B]), 30A fusible link (letter f, located in fuse and fusible link box) and (M12) circuit breaker. Turn ignition switch ON and verify battery positive voltage is present at terminal (1) of main power window switch and terminal (4) of passenger switch.
	2. Grounds (M14) and (M68)	2. Check grounds (M14) and (M68).
	3. Power window relay	3. Check power window relay.
	4. Open/short in main power window switch circuit	4. Check W wire between power window relay and main power window switch for open/short circuit.
Driver side power window cannot be operated but passenger window can be operated.	1. Driver side power window motor circuit	1. Check harness between main power window switch and power window motor LH for open or short circuit.
	2. Driver side power window motor	2. Check power window motor LH.
Passenger power window cannot be operated.	1. Passenger power window switch	1. Check passenger power window switch.
	2. Passenger power window motor	2. Check passenger power window motor.
	3. Main power window switch	3. Check main power window switch.
	4. Power window circuit	4-1. Check harnesses between main power window switch and passenger power window switch for open/short circuit.
		4-2. Check harnesses between passenger power window switch and passenger power window motor for open/short circuit.
Passenger power window cannot be operated using main power window switch but can be operated by passenger power window switch.	1. Main power window switch	1. Check main power window switch.
Driver side power window auto function cannot be operated using main power window switch.	1. Main power window switch	1. Check main power window switch.

Simpo PDF Merge and Split Unregistered Version - http://www.simpopdf.com

Component Parts and Harness Connector Location

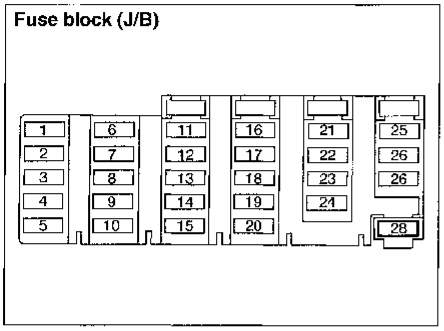

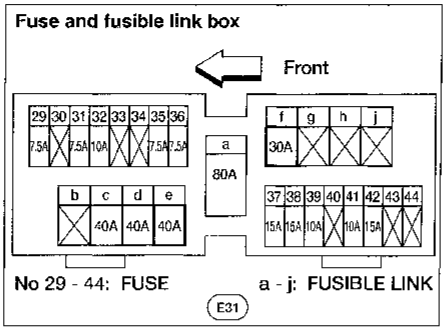

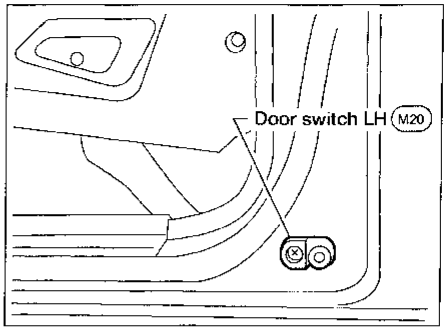

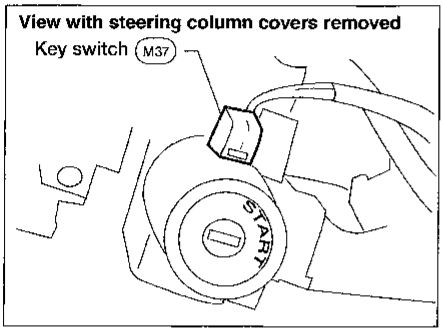

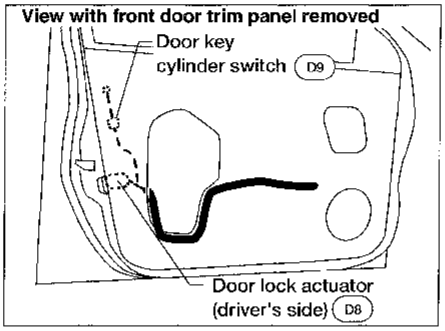

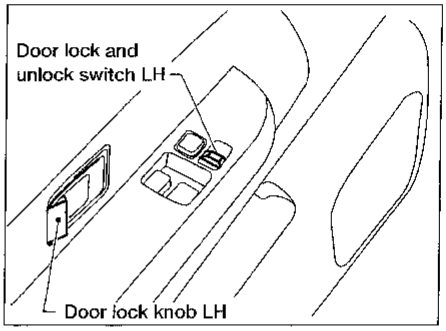

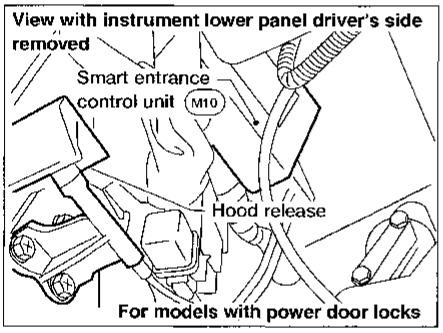

AEL689B

Simpo PDF Merge and Split Unregistered Version - http://www.simpopdf.com

System Description

Power is supplied at all times:
- through 30A fusible link (Letter [f], located in the fuse and fusible link box)
- to circuit breaker terminal ①
- through circuit breaker terminal ②
- to smart entrance control unit terminal ①.

Power is supplied at all times:
- through 7.5A fuse [No. 28, located in the fuse block (J/B)]
- to key switch terminal ①.

Ground is supplied:
- through body grounds (M14) and (M68)
- to smart entrance control unit terminal ⑩.

INPUT

Power is supplied through key switch terminal ② to smart entrance control unit terminal ㉔ when the ignition key is inserted in the key switch.

Ground is supplied:
- through RH door switch terminal ① when RH door is open
- to smart entrance control unit terminal ㉟.

Ground is supplied:
- through body grounds (M14) and (M68)
- to LH door switch terminal ③
- through LH door switch terminal ② when LH door is open
- to smart entrance control unit terminal ⑮.

Ground is supplied:
- through body grounds (M14) and (M68)
- through LH or RH door key cylinder switch terminal ② when door key cylinder is BETWEEN FULL STROKE AND N (to unlock position)
- from LH door key cylinder switch terminal ③ or RH door key cylinder switch terminal ①
- to smart entrance control unit terminal ㉛.

Ground is supplied:
- through body grounds (M14) and (M68)
- through LH or RH door key cylinder switch terminal ② when door key cylinder is BETWEEN FULL STROKE AND N (to lock position)
- from LH door key cylinder switch terminal ① or RH door key cylinder switch terminal ③
- to smart entrance control unit terminal ㉚.

Ground is supplied:
- through body grounds (M14) and (M68)
- from door unlock sensor (in the LH or RH door lock actuator) terminal ④ when door lock is in UNLOCKED position
- through door unlock sensor (in the LH or RH door lock actuator) terminal ②
- to smart entrance control unit terminal ⑫ or ⑬.

Ground is supplied:
- through body grounds (M14) and (M68)
- through main power window and door lock/unlock switch terminal ⑤ (when switch is pressed in lock or unlock position)
- from main power window and door lock/unlock switch terminal ⑦ or ⑧
- to smart entrance control unit terminal ⑱ or ⑲.

Ground is also supplied from door lock/unlock switch RH in the same manner as main power window and door lock/unlock switch.

Simpo PDF Merge and Split Unregistered Version - http://www.simpopdf.com

OUTPUT

Unlock

Power is supplied:
- from smart entrance control unit terminal ③
- to LH door lock actuator terminal ①.

Power is supplied:
- from smart entrance control unit terminal ②
- to RH door lock actuator terminal ①.

Ground is supplied:
- from smart entrance control unit terminal ④
- to LH and RH door lock actuator terminals ③.

With power and ground supplied, the door actuators move to the unlocked position.

Lock

Power is supplied:
- from smart entrance control unit terminal ④
- to LH and RH door lock actuator terminals ③.

Ground is supplied:
- from smart entrance control unit terminal ③
- to LH door lock actuator terminal ①.

Ground is supplied:
- from smart entrance control unit terminal ②
- to RH door lock actuator terminal ①.

With power and ground supplied, the door actuators move to the locked position.

OPERATION

- The lock and unlock switch on driver's door trim can lock and unlock both doors.
- With the lock knob on LH or RH door set to LOCKED, all doors are locked (signal from door unlock sensor).
- With the door key inserted in the key cylinder on LH or RH door, turning it to LOCK will lock both doors; turning it to UNLOCK once unlocks the corresponding door; turning it to UNLOCK again within 5 seconds after the first unlock operation unlocks the other door (signal from door key cylinder switch).

However, if the ignition key is in the ignition key cylinder and one or more of the doors are open, setting the lock and unlock switch, lock knob, or the door key to LOCK locks the doors once but then immediately unlocks them (combination signals from key switch, LH or RH door switch and LH or RH door unlock sensor). — (KEY REMINDER DOOR SYSTEM)

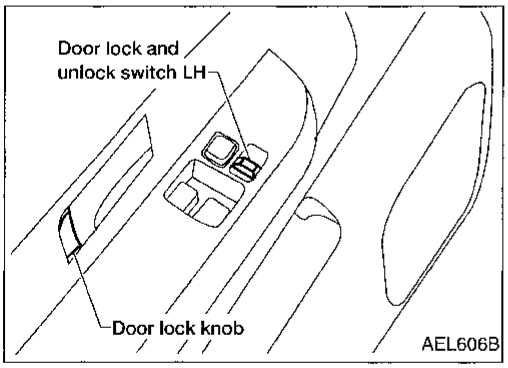

Simpo PDF Merge and Split Unregistered Version - http://www.simpopdf.com

Schematic

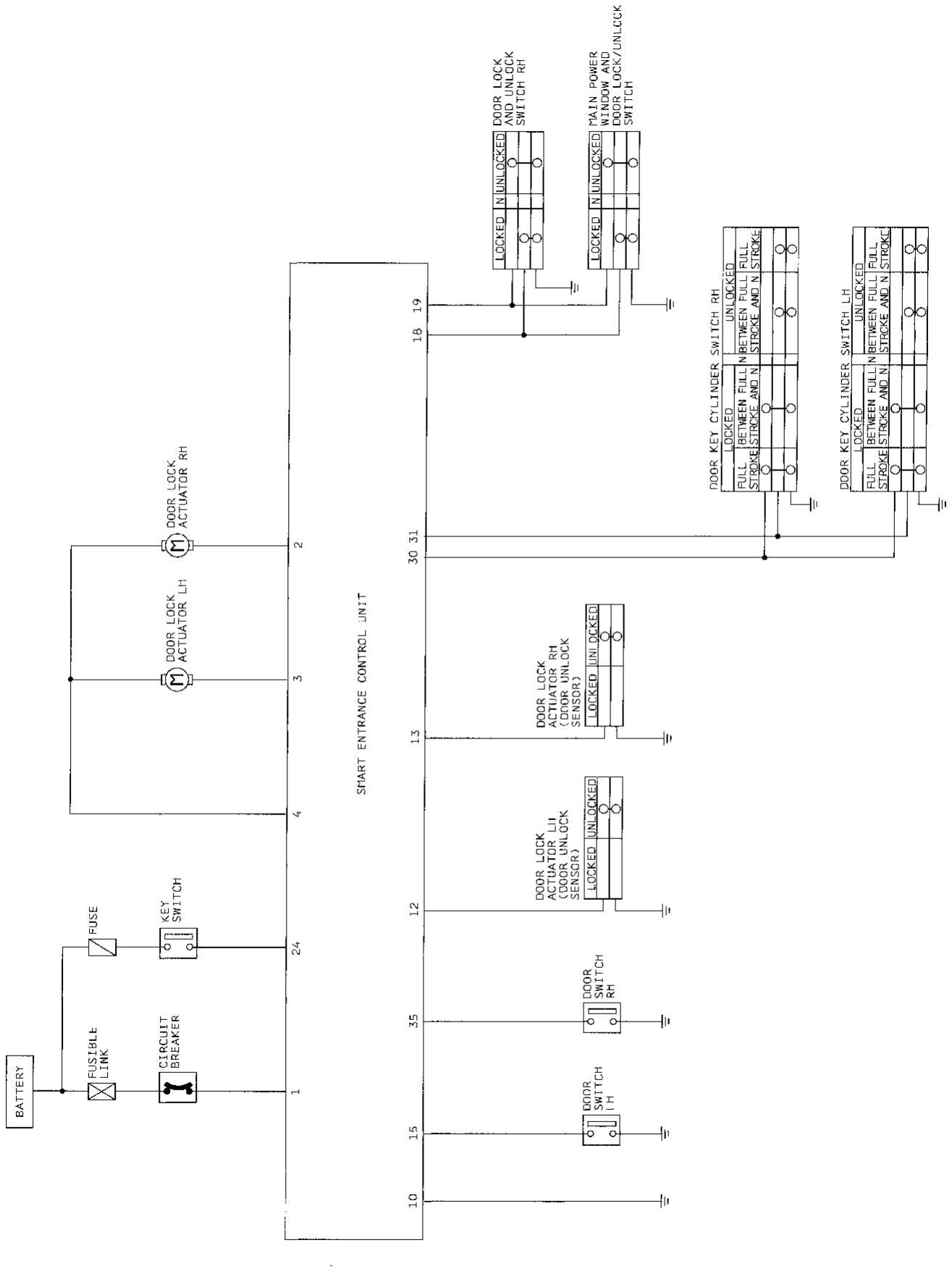

AEL455B

Simpo PDF Merge and Split Unregistered Version - http://www.simpopdf.com

Wiring Diagram — D/LOCK —

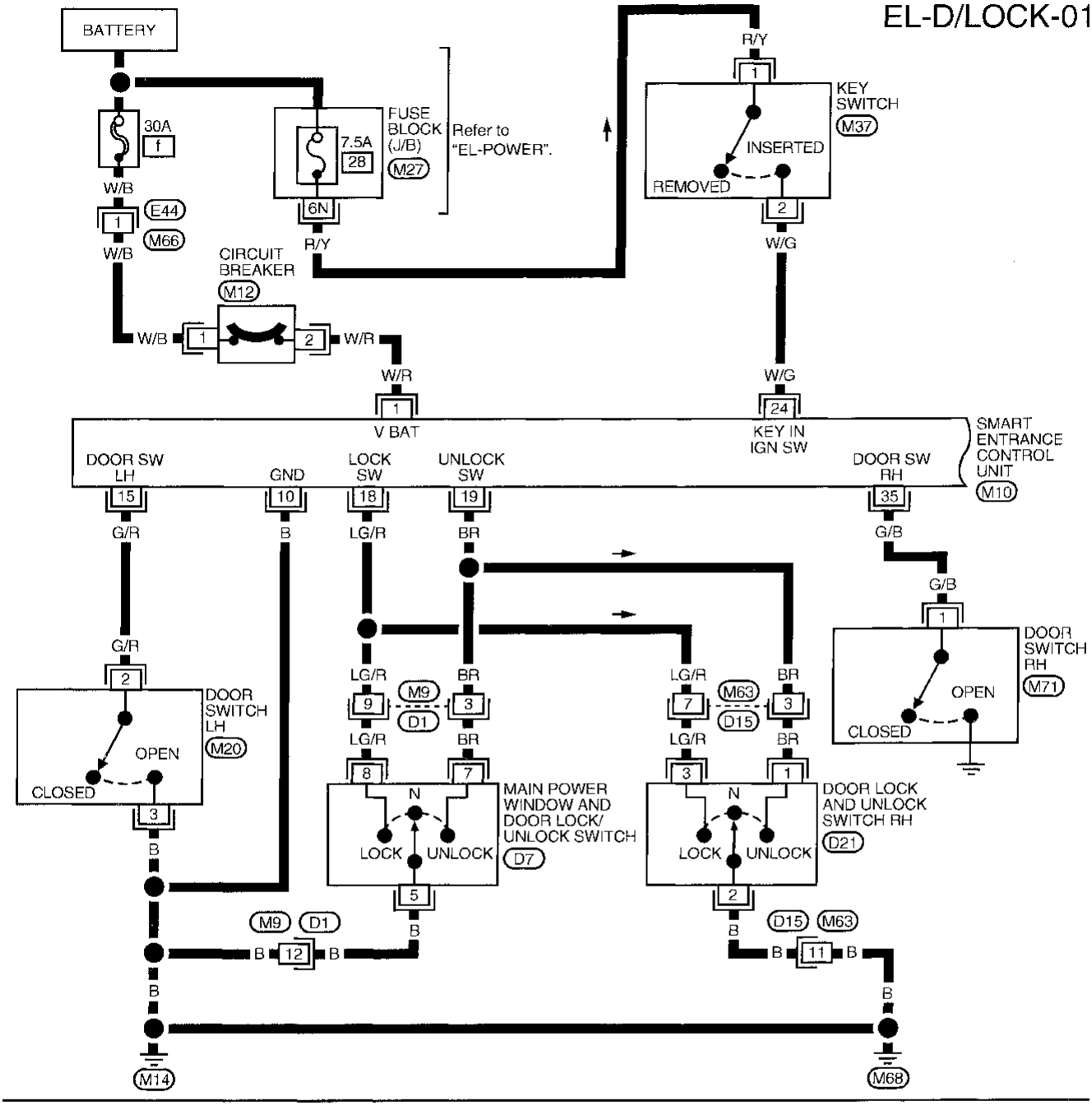

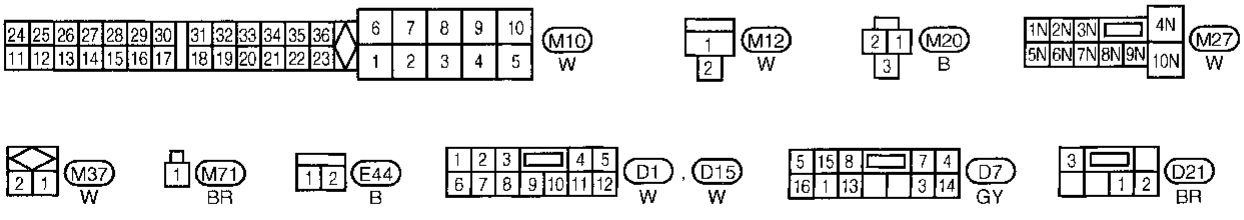

AEL456B

Wiring Diagram — D/LOCK — (Cont'd)

Simpo PDF Merge and Split Unregistered Version - http://www.simpopdf.com

EL-D/LOCK-02

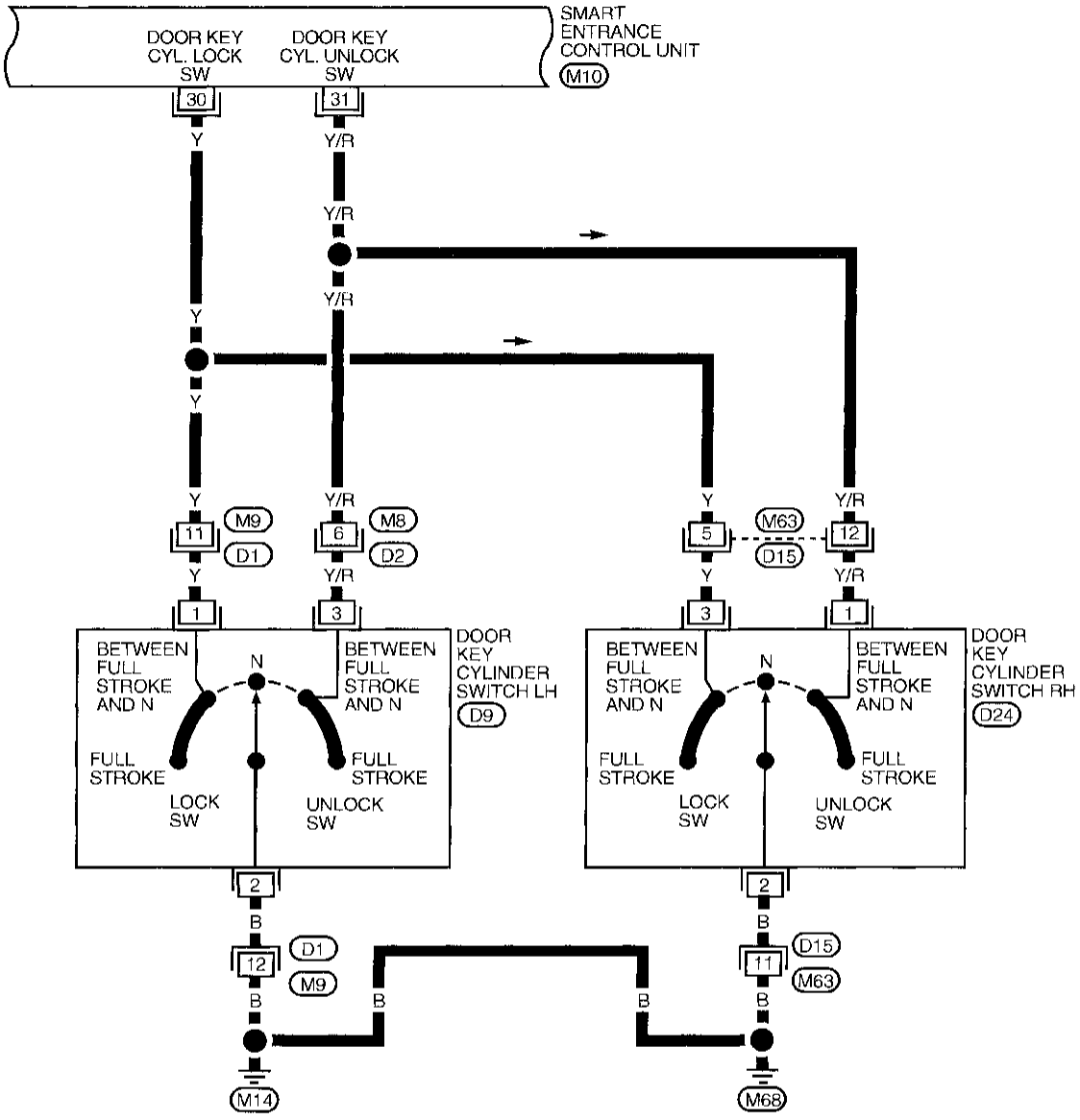



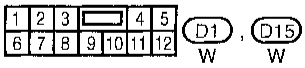

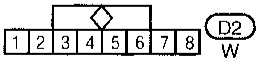

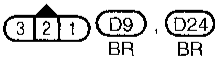

AEL457B

Wiring Diagram — D/LOCK — (Cont'd)

Simpo PDF Merge and Split Unregistered Version - http://www.simpopdf.com

EL-D/LOCK-03

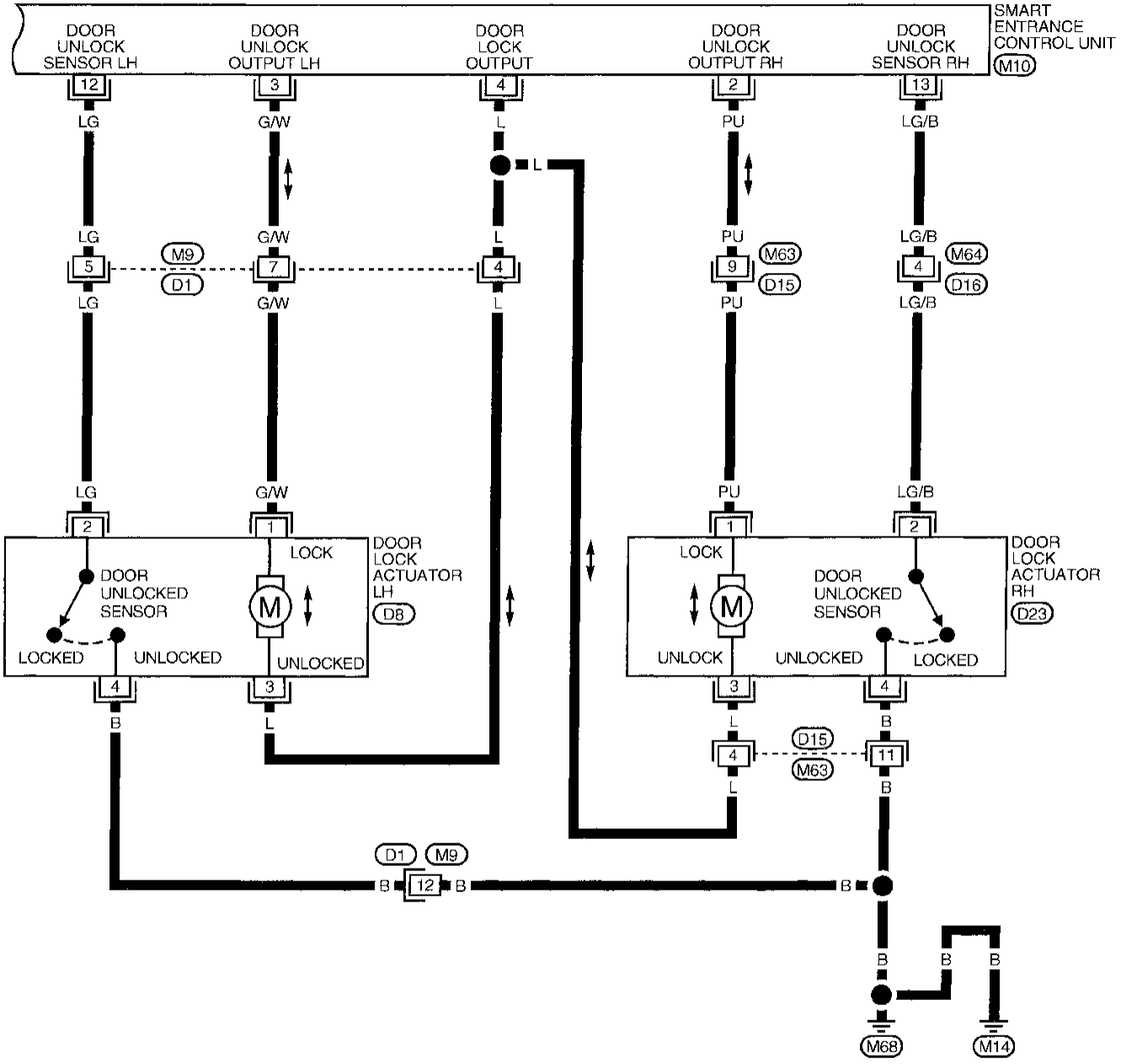

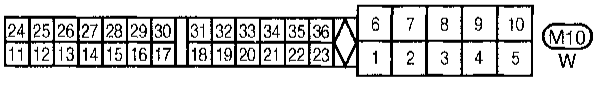

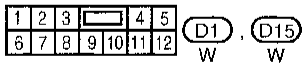

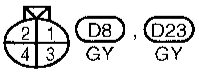

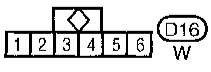

AEL458B

Simpo PDF Merge and Split Unregistered Version - http://www.simpopdf.com

Trouble Diagnoses

SYMPTOM CHART

PROCEDURE	Main power supply and ground circuit check		Diagnostic procedure					
REFERENCE PAGE	EL-155	EL-155	EL-156	EL-157	EL-158	EL-159	EL-160	EL-161
SYMPTOM	Main power supply circuit check	Ground circuit check	Procedure 1 (Door switch check)	Procedure 2 [Key switch (insert) check]	Procedure 3 (Door lock/unlock switch check)	Procedure 4 (Door key cylinder switch check)	Procedure 5 (Door unlock sensor check)	Procedure 6 (Door lock actuator check)
Key reminder door system does not operate properly.	X	X	X	X			X	X
One or more doors are not locked and/or unlocked.	X	X					X	X
Lock & unlock switch does not operate.	X	X			X			
None of the doors lock/unlock when operating door key cylinder switch.	X	X				X		
None of the doors lock when operating door knob lock switch.	X	X					X	

X: Applicable

Perform "Main Power Supply and Ground Circuit Check" before starting with power door lock diagnostic procedure.

Trouble Diagnoses (Cont'd)

Simpo PDF Merge and Split Unregistered Version - http://www.simpopdf.com

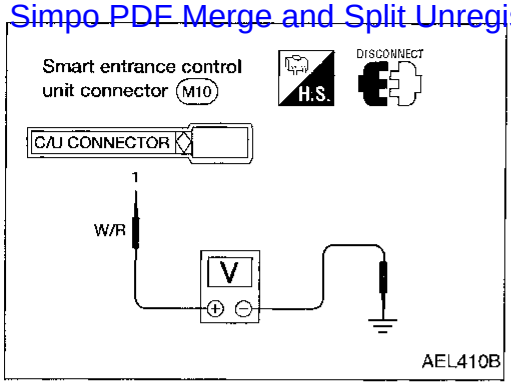

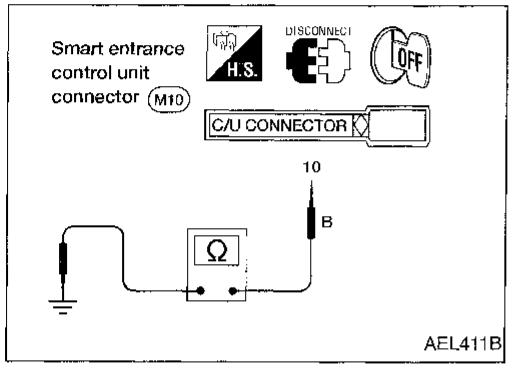

MAIN POWER SUPPLY AND GROUND CIRCUIT CHECK

Main power supply circuit check

Terminal		Ignition switch		
⊕	⊖	OFF	ACC	ON
①	Ground	Battery voltage	Battery voltage	Battery voltage

Ground circuit check

Terminals	Continuity
⑩ - Ground	Yes

Trouble Diagnoses (Cont'd)

Simpo PDF Merge and Split Unregistered Version - http://www.simpopdf.com

DIAGNOSTIC PROCEDURE 1
(Door switch check)

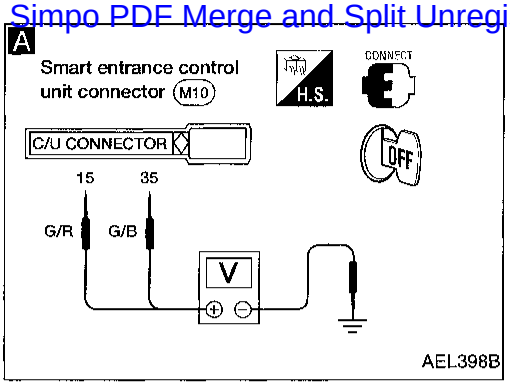

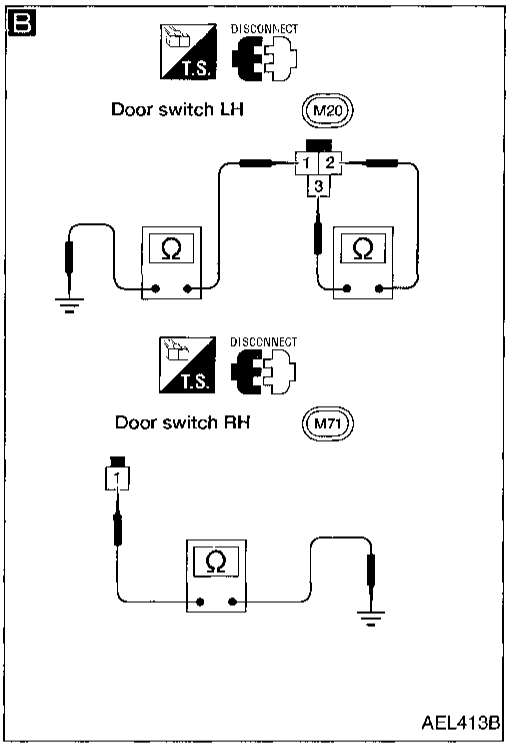

A

CHECK DOOR SWITCH INPUT SIGNAL.
Check voltage between control unit terminals 15 or 35 and ground.

	Terminals ⊕	Terminals ⊖	Condition	Voltage [V]
Door switch LH	15	Ground	Open	0
			Closed	Approx. 12
Door switch RH	35	Ground	Open	0
			Closed	Approx. 12

Refer to wiring diagram in EL-151.

OK → Door switch is OK.

NG ↓

B

CHECK DOOR SWITCH.
1. Disconnect door switch connector.
2. Check continuity between door switch terminals.

	Terminals	Condition	Continuity
Door switch LH	1 - Ground, 2 - 3	Closed	No
		Open	Yes
Door switch RH	1 - Ground	Closed	No
		Open	Yes

NG → Replace door switch.

OK ↓

Check the following.
- Door switch ground circuit (LH) or door switch ground condition
- Harness for open or short between control unit and door switch

Trouble Diagnoses (Cont'd)

Simpo PDF Merge and Split Unregistered Version - http://www.simpopdf.com

DIAGNOSTIC PROCEDURE 2
[Key switch (insert) check]

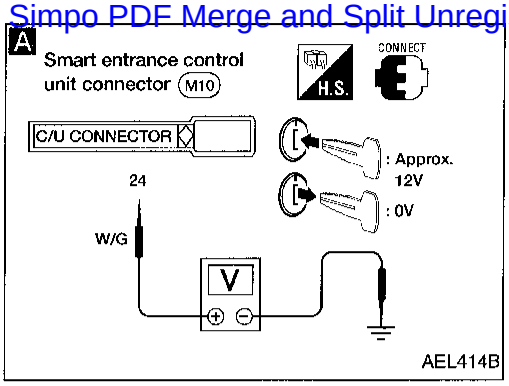

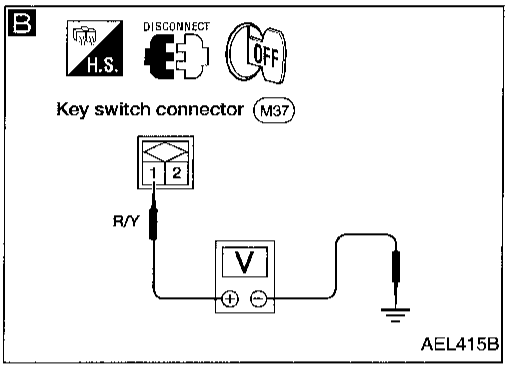

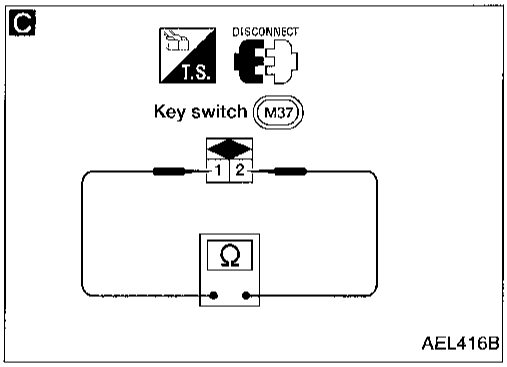

A

CHECK KEY SWITCH INPUT SIGNAL.
Check voltage between control unit terminal (24) and ground.

Condition of key switch	Voltage [V]
Key is inserted.	Approx. 12
Key is withdrawn.	0

Refer to wiring diagram in EL-151.

OK → Key switch (insert) is ok.

NG ↓

B

CHECK KEY SWITCH POWER SUPPLY.
1. Disconnect key switch connector.
2. Check voltage between key switch harness terminal (1) and ground.
Battery voltage should exist.

NG → Check the following.
- 7.5A fuse [No. 28, located in fuse block (J/B)]
- Harness for open or short between key switch and fuse

OK ↓

C

CHECK KEY SWITCH.
Check continuity between key switch terminals.

Terminals	Condition	Continuity
(1) - (2)	Key is inserted.	Yes
	Key is withdrawn.	No

NG → Replace key switch.

OK ↓

Check harness for open or short between control unit and key switch.

Trouble Diagnoses (Cont'd)

Simpo PDF Merge and Split Unregistered Version - http://www.simpopdf.com

DIAGNOSTIC PROCEDURE 3

(Door lock/unlock switch check)

A

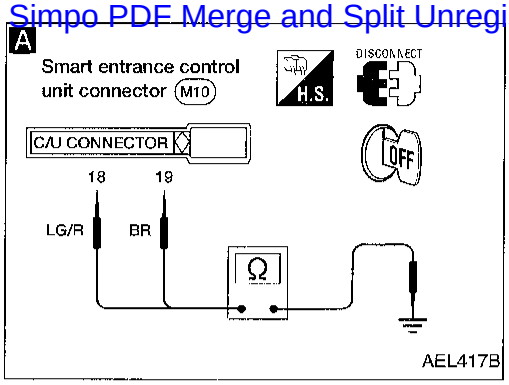

CHECK DOOR LOCK/UNLOCK SWITCH INPUT SIGNAL.

1. Disconnect control unit connector.
2. Check continuity between control unit terminal ⑱ or ⑲ and ground.

Terminals	Door lock/unlock switch (LH or RH) condition	Continuity
⑱ - Ground	Lock	Yes
	N and Unlock	No
⑲ - Ground	Unlock	Yes
	N and Lock	No

Refer to wiring diagram in EL-151.

OK → Door lock/unlock switch is OK.

NG ↓

B C

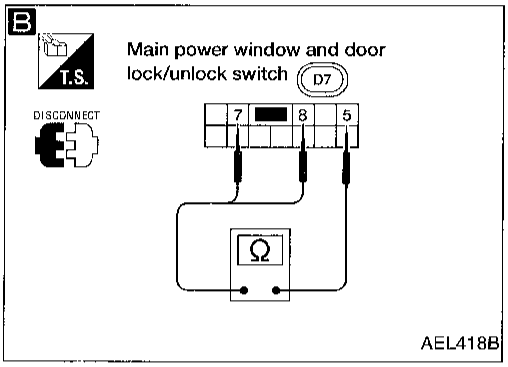

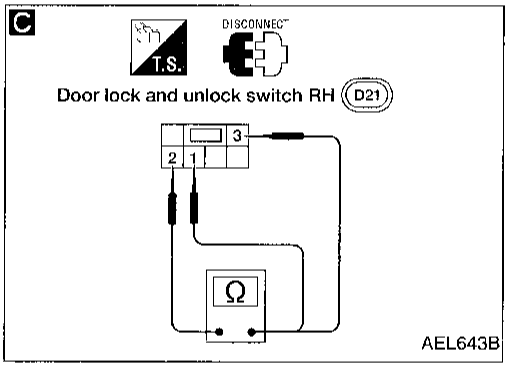

CHECK LH OR RH DOOR LOCK/UNLOCK SWITCH.

1. Disconnect main power window and door lock/unlock switch connector.
2. Check continuity between main power window and door lock/unlock switch terminals.

B Driver side

Condition	Terminals		
	5	7	8
Lock	○		○
N	No continuity		
Unlock	○	○	

3. Disconnect door lock and unlock switch RH connector.
4. Check continuity between door lock and unlock switch RH terminals.

C Passenger side

Condition	Terminals		
	1	2	3
Lock		○	○
N	No continuity		
Unlock	○	○	

NG → Replace main power window and door lock/unlock switch or door lock and unlock switch RH.

OK ↓

Check the following.

- Ground circuit for door lock/unlock switch
- Harness for open or short between door lock/unlock switch and control unit connector

Trouble Diagnoses (Cont'd)

Simpo PDF Merge and Split Unregistered Version - http://www.simpopdf.com

DIAGNOSTIC PROCEDURE 4
(Door key cylinder switch check)

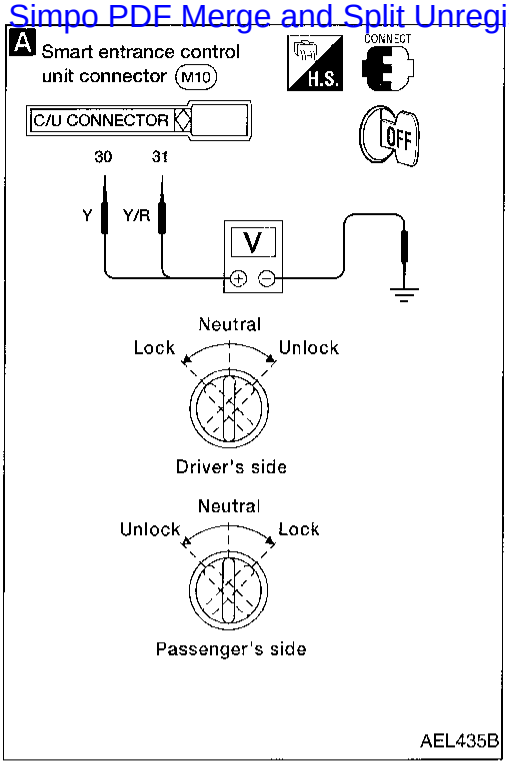

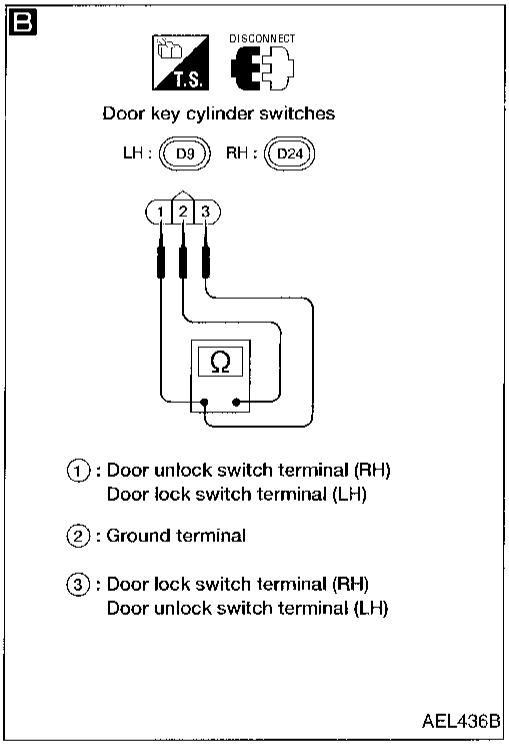

A

CHECK DOOR KEY CYLINDER SWITCH INPUT SIGNAL (LOCK/UNLOCK SIGNAL).

Check voltage between control unit terminals ㉚ or ㉛ and ground.

Terminals ⊕	Terminals ⊖	Key position	Voltage [V]
㉚	Ground	Neutral	Approx. 12
		Lock	0
㉛	Ground	Neutral	Approx. 12
		Unlock	0

Refer to wiring diagram in EL-152.

OK → Door key cylinder switch is OK.

NG ↓

B

CHECK DOOR KEY CYLINDER SWITCH.

1. Disconnect door key cylinder switch connector.
2. Check continuity between door key cylinder switch terminals.

Terminals	Key position	Continuity
LH: ① - ②	Neutral	No
RH: ③ - ②	Lock	Yes
LH: ③ - ②	Neutral	No
RH: ① - ②	Unlock	Yes

NG → Replace door key cylinder switch.

OK ↓

Check the following.
- Door key cylinder switch ground circuit
- Harness for open or short between control unit and door key cylinder switch

Trouble Diagnoses (Cont'd)

Simpo PDF Merge and Split Unregistered Version - http://www.simpopdf.com

DIAGNOSTIC PROCEDURE 5
(Door unlock sensor check)

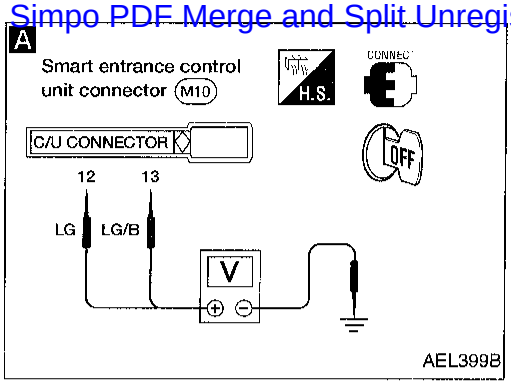

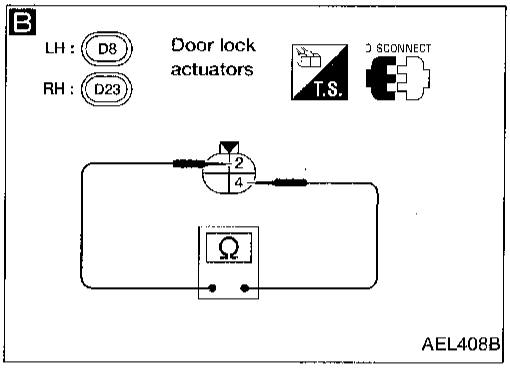

A

CHECK DOOR UNLOCK SENSOR INPUT SIGNAL.

Check voltage between control unit terminals ⑫, ⑬ and ground.

	Terminals ⊕	Terminals ⊖	Condition	Voltage [V]
LH door	⑫	Ground	Locked	Approx. 12
			Unlocked	0
RH door	⑬	Ground	Locked	Approx. 12
			Unlocked	0

Refer to wiring diagram in EL-153.

OK → Door unlock sensor is OK.

NG ↓

B

CHECK DOOR UNLOCK SENSOR.

1. Disconnect door unlock sensor connector.
2. Check continuity between door unlock sensor terminals.

Terminals	Condition	Continuity
④ - ②	Locked	No
	Unlocked	Yes

NG → Replace door unlock sensor.

OK ↓

Check the following.
- Door unlock sensor ground circuit
- Harness for open or short between control unit and door unlock sensor

Trouble Diagnoses (Cont'd)

Simpo PDF Merge and Split Unregistered Version - http://www.simpopdf.com

DIAGNOSTIC PROCEDURE 6

(Door lock actuator check)

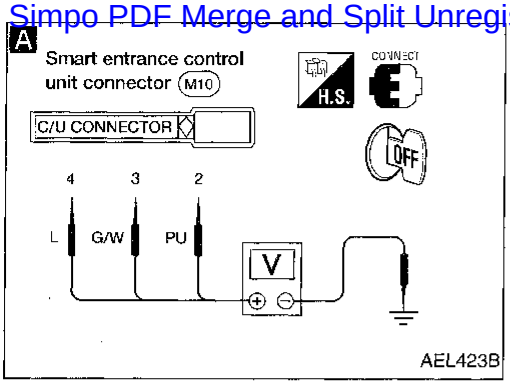

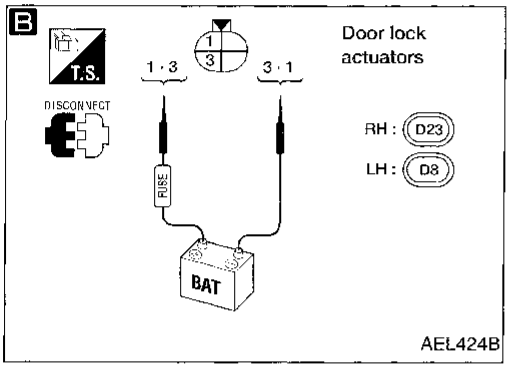

A

CHECK DOOR LOCK ACTUATOR OUTPUT.

Check voltage for door lock actuator.

Door lock/unlock switch condition	Terminals ⊕	Terminals ⊖	Voltage (V)
Lock	④	Ground	Battery voltage
Unlock	③, ②	Ground	

Refer to wiring diagram in EL-153.

NG → Replace smart entrance control unit. (Before replacing control unit, perform other procedures following SYMPTOM CHART.)

OK ↓

B

CHECK DOOR LOCK ACTUATOR.

1. Disconnect door lock actuator connector.
2. Apply 12V direct current to door lock actuator and check operation.

Door lock actuator operation	Terminals ⊕	Terminals ⊖
Unlocked → Locked	③	①
Locked → Unlocked	①	③

NG → Replace door lock actuator.

OK ↓

Check harness for open or short between control unit connector and door lock actuator.

Simpo PDF Merge and Split Unregistered Version - http://www.simpopdf.com

Component Parts and Harness Connector Location

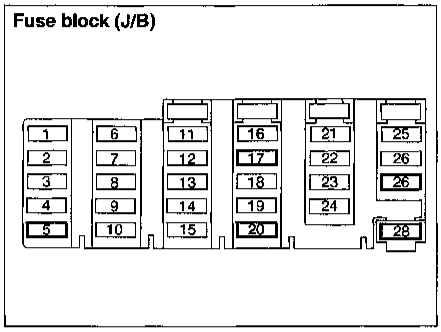

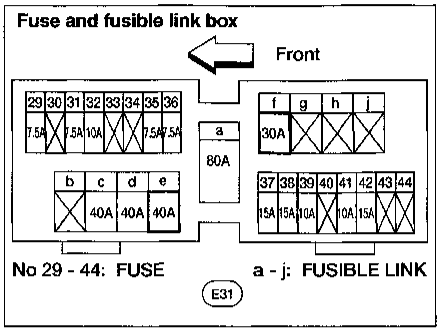

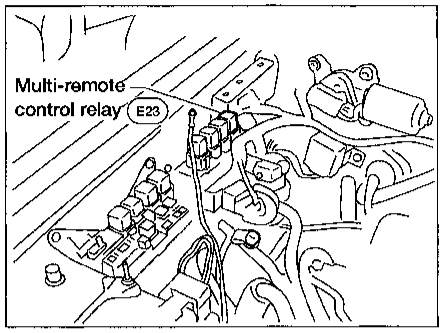

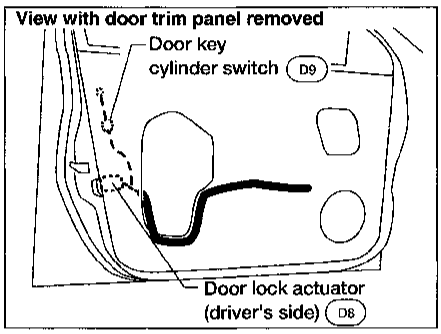

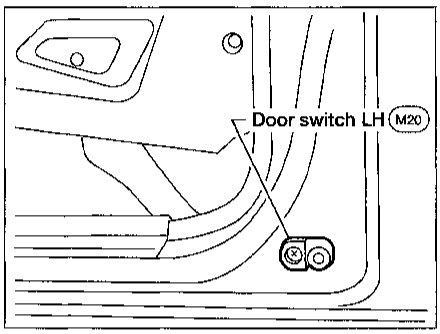

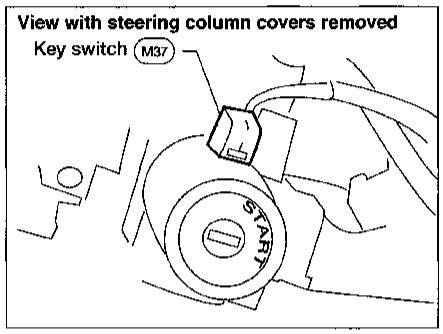

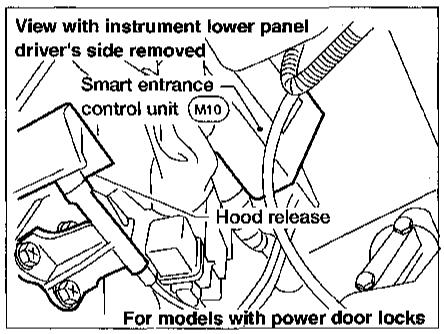

AEL690B

Simpo PDF Merge and Split Unregistered Version - http://www.simpopdf.com

System Description

POWER SUPPLY AND GROUND

Power is supplied at all times:
- through 30A fusible link (letter f, located in the fuse and fusible link box)
- to circuit breaker terminal ①
- through circuit breaker terminal ②
- to smart entrance control unit terminal ①.

Power is supplied at all times:
- through 7.5A fuse [No. 26, located in the fuse block (J/B)]
- to interior lamp terminal ⊕

Power is supplied at all times:
- through 7.5A fuse [No. 28, located in the fuse block (J/B)]
- to key switch terminal ①.

Power is supplied at all times:
- through 10A fuse [No. 17, located in the fuse block (J/B)]
- to multi-remote control relay terminals ②, ⑤ and ⑦.

With the ignition switch in the ON or START position, power is supplied:
- through 7.5A fuse [No. 5, located in the fuse block (J/B)]
- to smart entrance control unit terminal ⑪.

With the ignition switch in the ACC or ON position, power is supplied:
- through 7.5A fuse [No. 20, located in the fuse block (J/B)]
- to smart entrance control unit terminal ⑰.

Ground is supplied:
- to smart entrance control unit terminal ⑩
- through body grounds (M14) and (M68).

INPUTS

When the key switch is ON (ignition key is inserted in key cylinder), power is supplied:
- through key switch terminal ②
- to smart entrance control unit terminal ㉔.

When the door switch LH is OPEN, ground is supplied:
- to smart entrance control unit terminal ⑮
- through door switch LH terminal ②
- from door switch LH terminal ③
- through body grounds (M14) and (M68).

When the door switch RH is OPEN, ground is supplied:
- to smart entrance control unit terminal ㉟
- through door switch RH terminal ①
- through door switch body ground.

When the door lock actuator LH (door unlock sensor) is UNLOCKED, ground is supplied:
- to smart entrance control unit terminal ⑫
- through door lock actuator LH (door unlock sensor) terminal ②
- to door lock actuator LH (door unlock sensor) terminal ④
- through body grounds (M14) and (M68).

When the door lock actuator RH (door unlock sensor) is UNLOCKED, ground is supplied to smart entrance control unit terminal ⑬ in the same manner as door lock actuator LH.

Remote controller signal input:
- through internal antenna.

The multi-remote control system controls operation of the
- power door lock
- interior lamp
- panic alarm
- hazard reminder.

OPERATION PROCEDURE

Power door lock operation

When the following input signals are both supplied:
- key switch REMOVED (when ignition key is not inserted in key cylinder);
- door switch CLOSED (when all the doors are closed).

System Description (Cont'd)

Simpo PDF Merge and Split Unregistered Version - http://www.simpopdf.com

The above two signals are already input into the smart entrance control unit. At this point, smart entrance control unit receives a LOCK signal from the remote controller. The smart entrance control unit locks all doors with input of the LOCK signal from the remote controller.
And then ground is supplied:

- to multi-remote control relay terminal ①
- through smart entrance control unit terminal ⑦.

Multi-remote control relay is now energized, and the hazard warning lamps flash twice as a reminder—**HAZARD REMINDER**. For detailed description, refer to "TURN SIGNAL AND HAZARD WARNING LAMPS", EL-54.
When an UNLOCK signal is sent from the remote controller once, the driver's door will be unlocked.
Then, if an UNLOCK signal is sent from the remote controller again within 5 seconds, the passenger door will be unlocked.
To deactivate the horn chirp when using the remote controller, press both unlock and lock buttons for two seconds. With the horn deactivated, the exterior lights do not flash when the unlock button is pressed. To activate the horn chirp, press both unlock and lock buttons for two seconds.

Interior lamp operation

When the following input signals are both supplied:

- key switch REMOVED (when ignition key is not inserted in key cylinder);
- door switch CLOSED (when all the doors are closed);

multi-remote control system turns on interior lamp (for 30 seconds) with input of UNLOCK signal from remote controller.
For detailed description, refer to "INTERIOR ROOM LAMP", EL-62.

Panic alarm operation

When key switch is OFF (when ignition key is not inserted in key cylinder), multi-remote control system turns on and off horn and headlamps intermittently with input of PANIC ALARM signal from remote controller.
For detailed description, refer to "THEFT WARNING SYSTEM", EL-179.

Simpo PDF Merge and Split Unregistered Version - http://www.simpopdf.com

Schematic

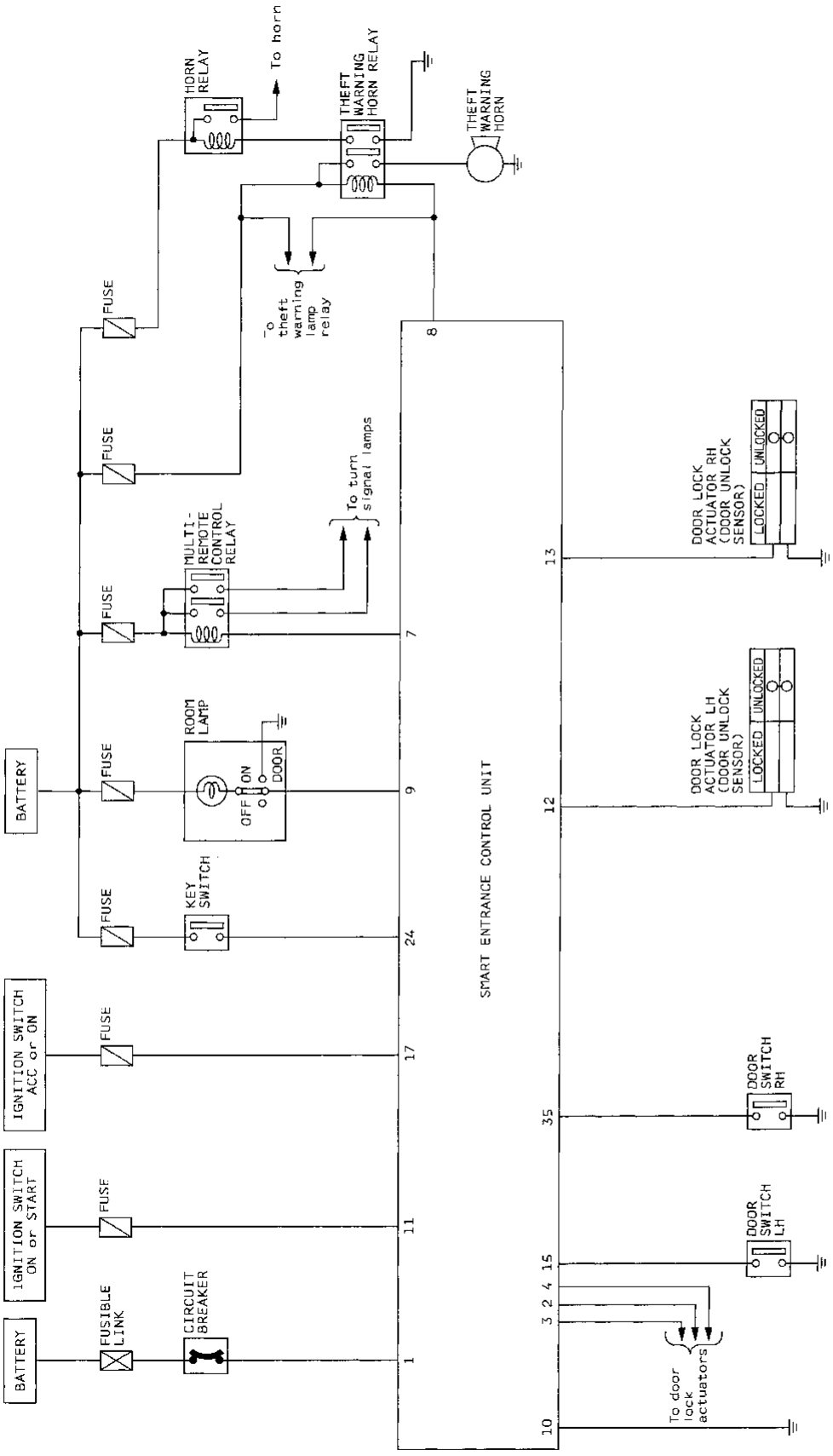

AEL463B

Simpo PDF Merge and Split Unregistered Version - http://www.simpopdf.com

Wiring Diagram — MULTI —

EL-MULTI-01

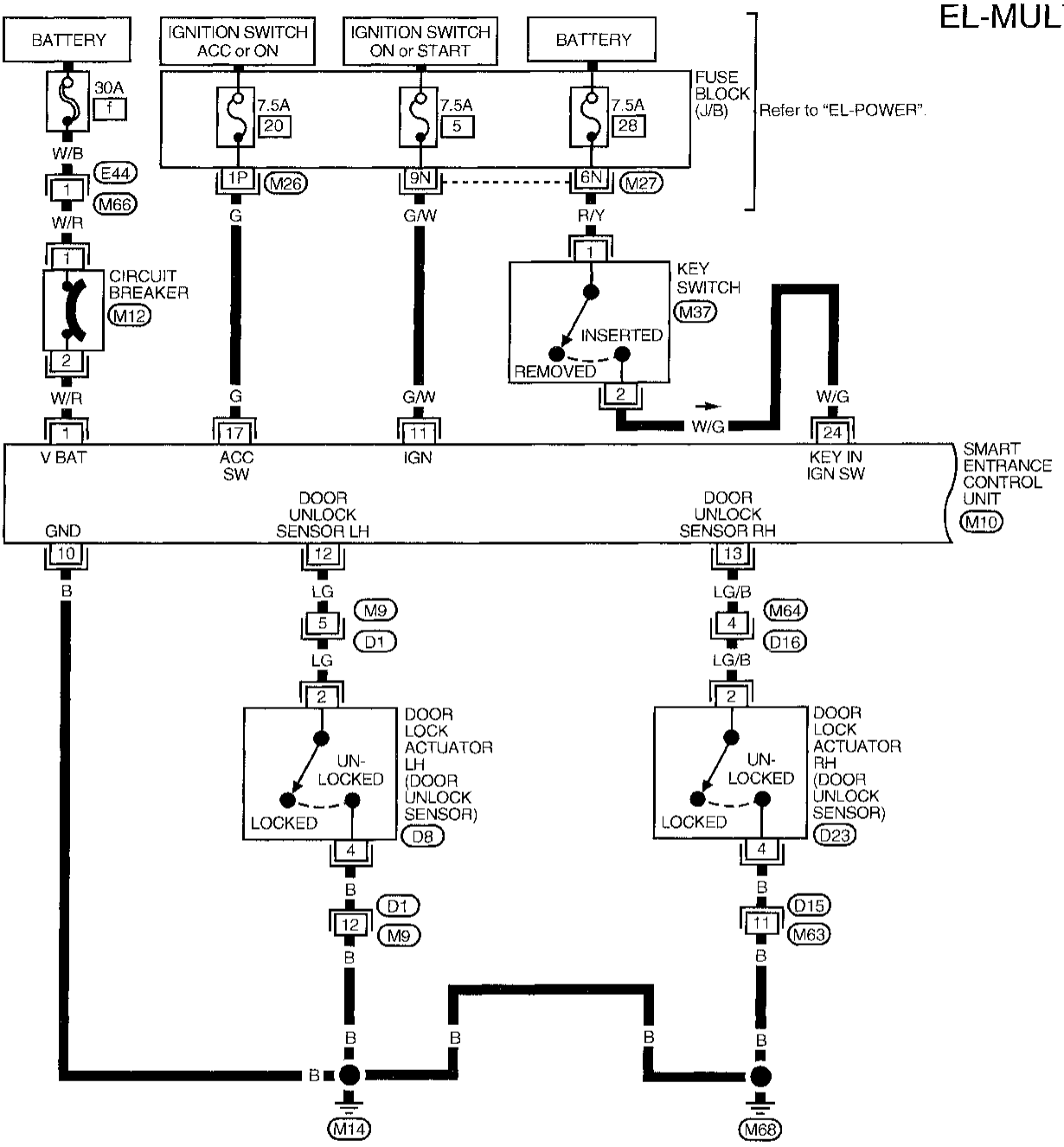

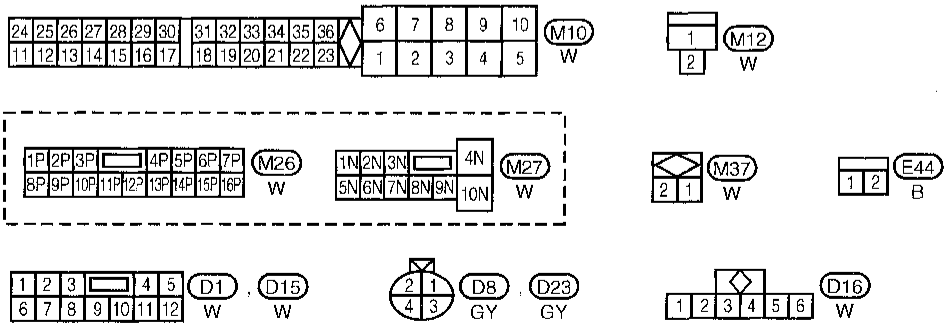

AEL464B

Wiring Diagram — MULTI — (Cont'd)

Simpo PDF Merge and Split Unregistered Version - http://www.simpopdf.com

EL-MULTI-02

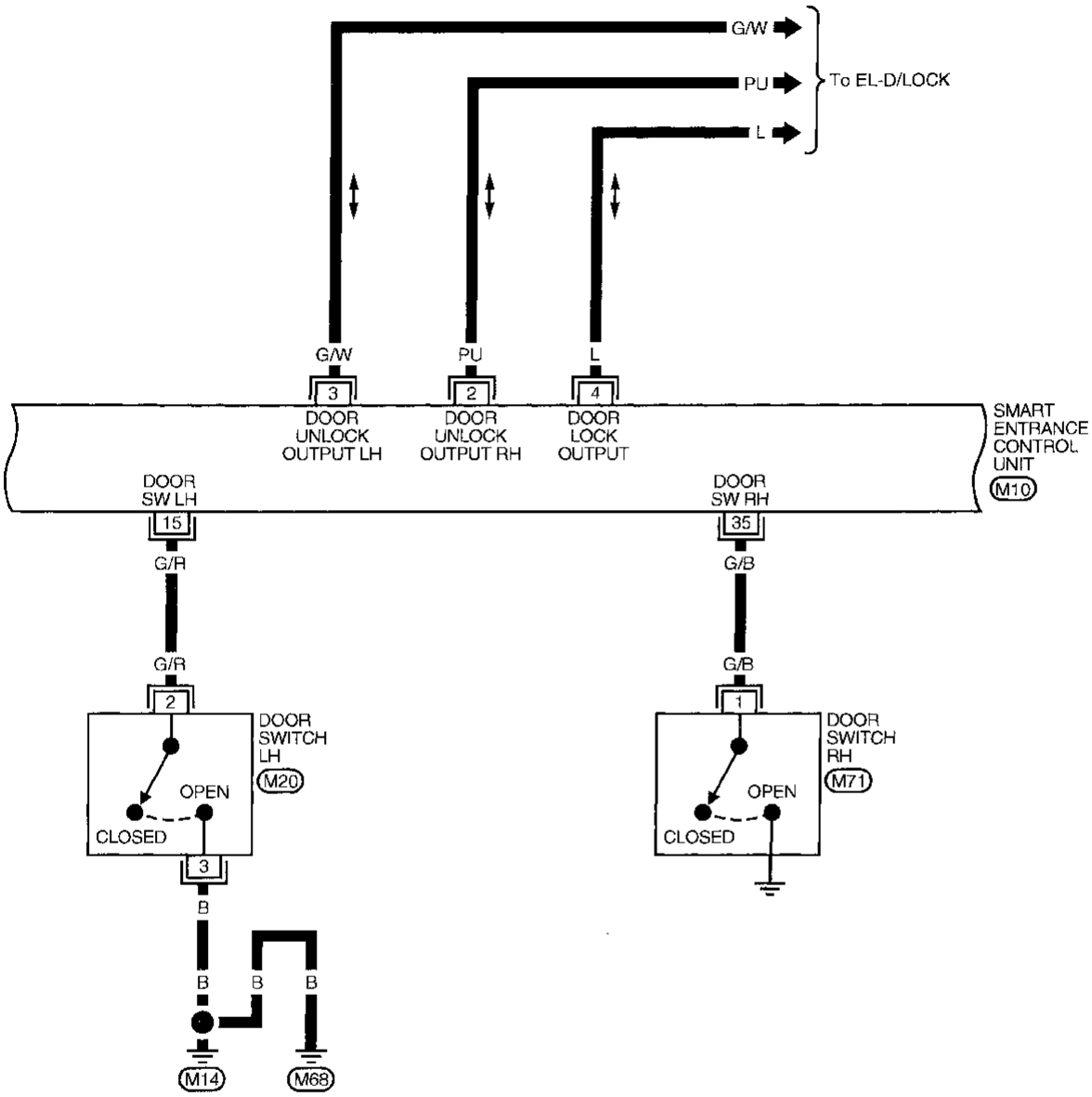

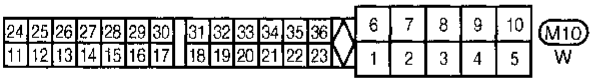

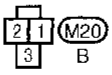



GI MA EM LC EC FE CL MT AT TF PD FA RA BR ST RS BT HA EL IDX

AEL465B

Wiring Diagram — MULTI — (Cont'd)

Simpo PDF Merge and Split Unregistered Version - http://www.simpopdf.com

EL-MULTI-03

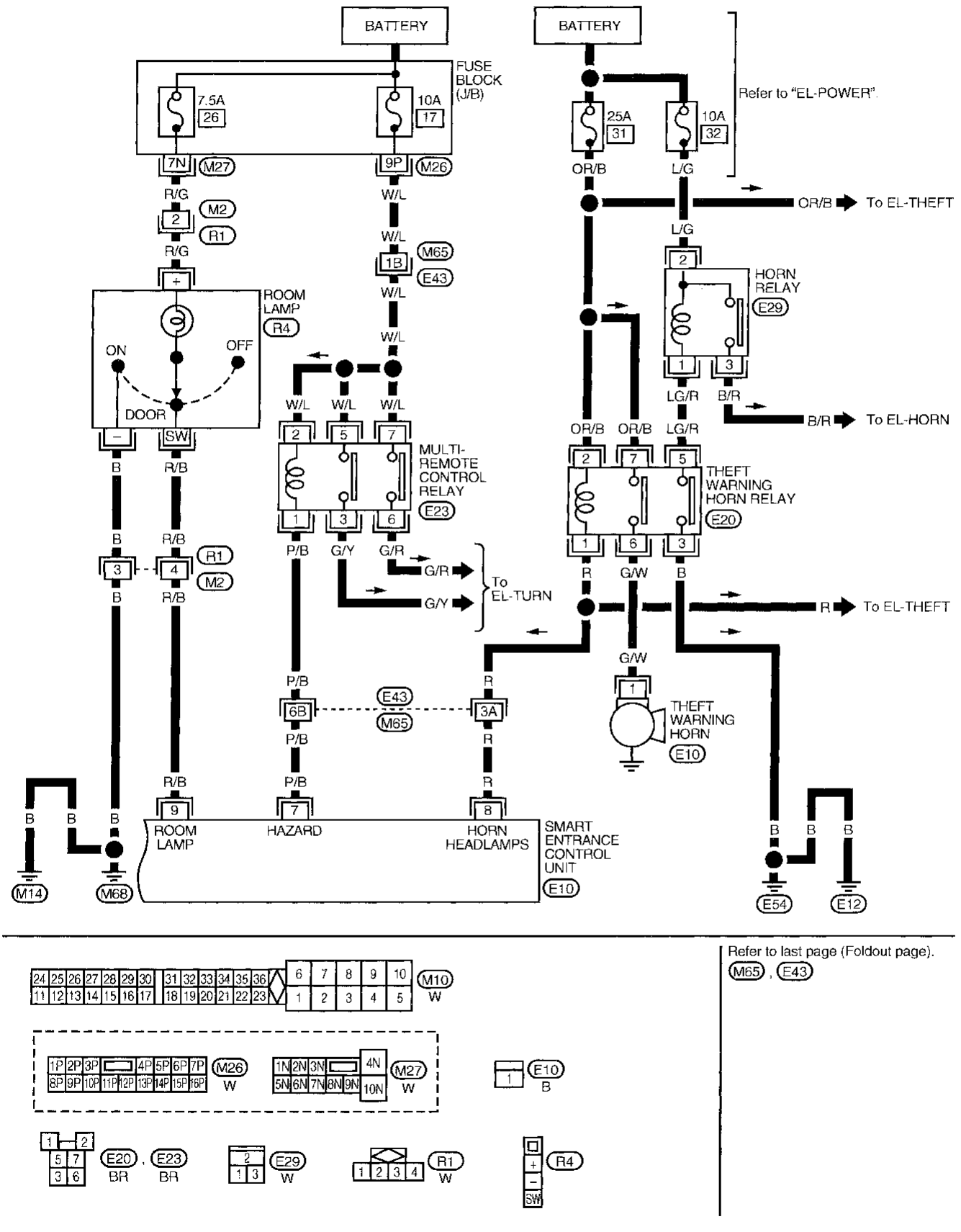

Refer to last page (Foldout page).
M65 , E43

AEL466B

Simpo PDF Merge and Split Unregistered Version - http://www.simpopdf.com

Trouble Diagnoses

TROUBLE SYMPTOM

- All functions of remote control system do not operate.

CHECK REMOTE CONTROLLER BATTERY.
Refer to DIAGNOSTIC PROCEDURE 1, EL-170.
→ NG → Replace battery.
↓ OK

Enter the Identity (ID) code of different or new remote controller. Refer to EL-176.
↓ OK

Can the new ID code be entered?
→ No → Go to DIAGNOSTIC PROCEDURE 2, EL-171.
↓ Yes

Replace with the originally used multi-remote controller.

- Some functions of multi-remote controller do not operate.

① DOOR LOCK OR UNLOCK DOES NOT FUNCTION.
(Pressing lock or unlock button of remote controller normally locks or unlocks all doors.)
● Check if power door lock system functions with door lock & unlock switch.
→ No → Check "POWER DOOR LOCK" system and door switch input signal. (Refer to DIAGNOSTIC PROCEDURE 2, EL-171.)

OR

② INTERIOR LAMP DOES NOT TURN ON FOR 30 SECONDS WHEN PRESSING UNLOCK BUTTON OF REMOTE CONTROLLER.
● Check if the interior lamp switch is in the "door" position, the lamp illuminates when a door is open.
If check is OK, Go to DIAGNOSTIC PROCEDURE 3, EL-173.
→ No → Check "Interior lamp" circuit.

OR

③ HAZARD INDICATOR DOES NOT FLASH TWICE WHEN PRESSING LOCK BUTTON OF REMOTE CONTROLLER.
● Check if hazard indicator flashes with hazard switch.
If check is OK, Go to DIAGNOSTIC PROCEDURE 4, EL-174.
→ No → Check "Hazard indicator lamp" circuit.

OR

④ PANIC ALARM (HORN AND HEADLAMP) DOES NOT ACTIVATE WHEN PANIC ALARM BUTTON IS CONTINUOUSLY PRESSED FOR MORE THAN 1.5 SECONDS.
● Check if horn and headlamps activate when test is conducted as follows:
1. Open the driver's window.
2. Close all doors and hood.
3. Lock doors with the key.
4. Wait for about 30 seconds to make sure that the lighted "SECURITY" warning lamp begins to blink.
5. Open the hood with hood lock opener, then panic alarm should activate. (The alarm will stop when door is unlocked with the key.)

→ No → Check "THEFT WARNING" system.

↓ Yes

Enter the identity (ID) code of different or new remote controller and recheck operation to see if the same trouble as indicated above occurs.
→ Yes → Check multi-remote controller operation again.
If necessary, replace Smart Entrance Control Unit.
↓ No

Replace the multi-remote controller.

Note: ● The unlock and panic alarm operation of the multi-remote control system does not activate with the ignition key inserted in the ignition key cylinder.
● The lock operation of the multi-remote control system does not activate with the key inserted in the ignition key cylinder or if one of the doors is opened.

Trouble Diagnoses (Cont'd)

Simpo PDF Merge and Split Unregistered Version - http://www.simpopdf.com

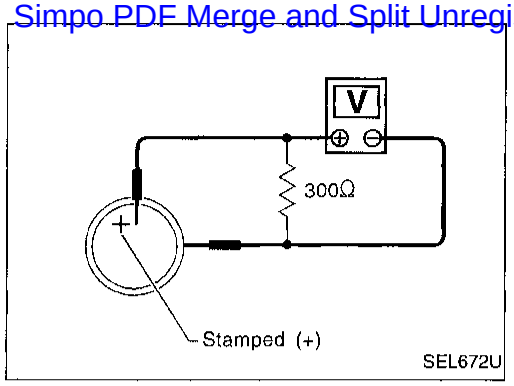

DIAGNOSTIC PROCEDURE 1

Check remote controller battery.

CHECK REMOTE CONTROLLER BATTERY.

Remove battery and measure voltage across battery positive and negative terminals, ⊕ and ⊖.

Measuring terminal		Standard value
⊕	⊖	
Battery positive terminal ⊕	Battery negative terminal ⊖	2.5 - 3.0V

Note:
Remote controller does not function if battery is not set correctly.

Trouble Diagnoses (Cont'd)

Simpo PDF Merge and Split Unregistered Version - http://www.simpopdf.com

DIAGNOSTIC PROCEDURE 2

All remote controls do not function even if remote controller is operated properly.

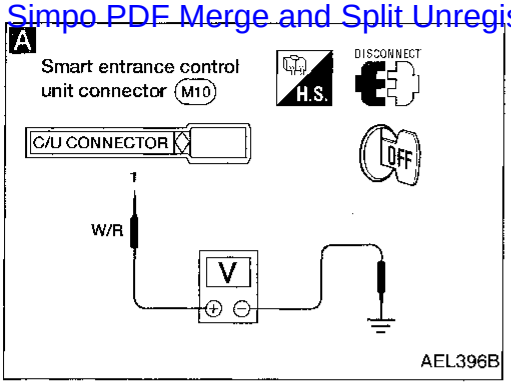

A

CHECK MAIN POWER SUPPLY CIRCUIT FOR CONTROL UNIT.

1. Disconnect connector from control unit.
2. Check voltage between control unit terminal (1) and ground.
   Battery voltage should exist.

Refer to wiring diagram in EL-166.

NG → Check the following:
- 30A fusible link (Letter f, located in fuse and fusible link box)
- M12 circuit breaker
- Harness for open or short between control unit and fusible link

OK ↓

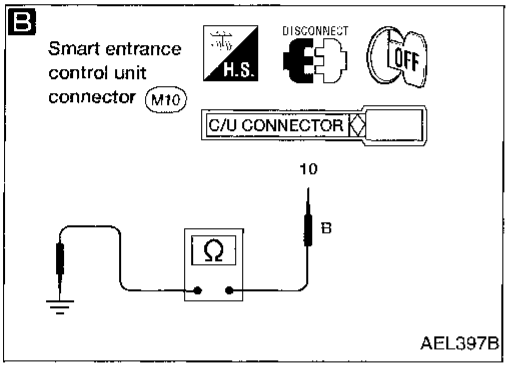

B

CHECK GROUND CIRCUIT FOR CONTROL UNIT.

Check continuity between terminal (10) and ground.
Continuity should exist.

Refer to wiring diagram in EL-166.

NG → Check ground harness.

OK ↓

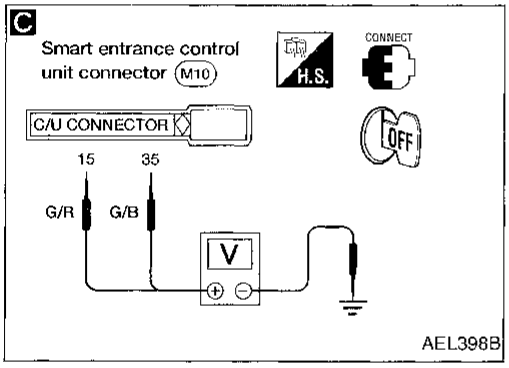

C

CHECK DOOR SWITCH CIRCUIT.

1. Connect control unit connector.
2. Check voltage between control unit terminal (15) and GND and (35) and GND.

	Terminals ⊕	Terminals ⊖	Condition	Voltage [V]
Driver side door switch	(15)	Ground	Open	0
			Close	Approx. 12
Passenger door switch	(35)	Ground	Open	0
			Close	Approx. 12

Refer to wiring diagram in EL-167.

NG → Check the following.
- Door switch
  Refer to "Electrical Components Inspection" (EL-175).
- Door switch ground condition
- Harness for open or short between control unit and door switch

OK ↓

(A)

(Go to next page.)

Trouble Diagnoses (Cont'd)

Simpo PDF Merge and Split Unregistered Version - http://www.simpopdf.com

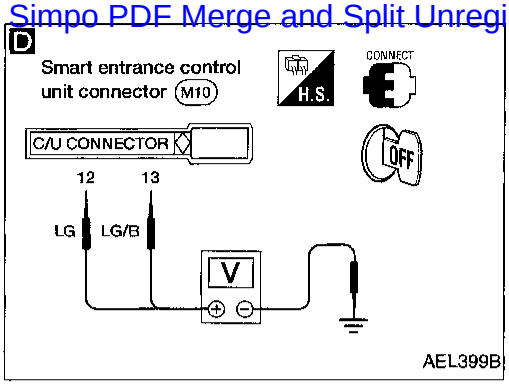

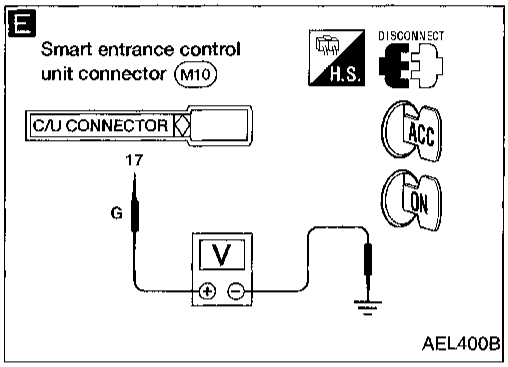

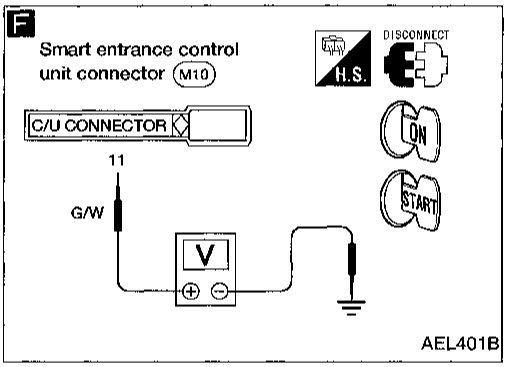

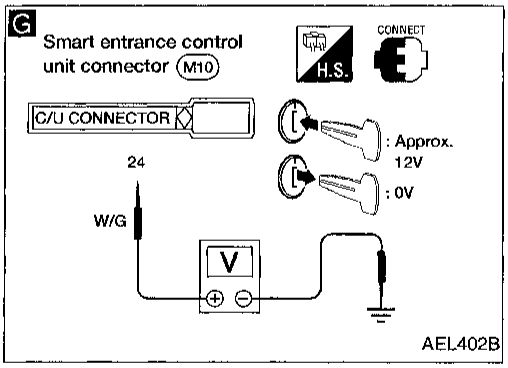

(A)

D

CHECK UNLOCK SENSOR CIRCUIT.

Check voltage between control unit terminal (12) and ground and (13) and ground.

	Terminals ⊕	Terminals ⊖	Condition	Voltage [V]
LH door	(12)	Ground	Unlock	0
			Lock	Approx. 12
RH door	(13)	Ground	Unlock	0
			Lock	Approx. 12

Refer to wiring diagram in EL-166.

NG → Check the following:
- Door unlock sensor
  Refer to "Electrical Components Inspection", EL-175.
- Door unlock sensor ground circuit
- Harness for open or short between control unit and unlock sensor

OK ↓

E

CHECK IGNITION SWITCH "ACC" OR "ON" CIRCUIT.

1. Disconnect control unit connector.
2. Check voltage between control unit terminal (17) and ground while ignition switch is in ACC or ON position.
   Battery voltage should exist.

Refer to wiring diagram in EL-166.

NG → Check the following:
- 7.5A fuse [No. 20, located in fuse block (J/B)]
- Harness for open or short between control unit and fuse

OK ↓

F

CHECK IGNITION SWITCH "ON" OR "START" CIRCUIT.

Check voltage between control unit terminal (11) and ground while ignition switch is in ON or START position.
Battery voltage should exist.

Refer to wiring diagram in EL-166.

NG → Check the following:
- 7.5A fuse [No. 5, located in fuse block (J/B)]
- Harness for open or short between control unit and fuse

OK ↓

G

CHECK KEY SWITCH INPUT SIGNAL.

1. Connect control unit connector.
2. Check voltage between control unit terminal (24) and ground.

Condition	Voltage [V]
Key is inserted.	Approx. 12
Key is withdrawn.	0

Refer to wiring diagram in EL-166.

NG → Check the following:
- 7.5A fuse [No. 28, located in fuse block (J/B)]
- Key switch
  Refer to "Electrical Components Inspection", EL-175.
- Harness for open or short between key switch and fuse
- Harness for open or short between control unit and key switch

OK ↓

Check operation parts in multi-remote control system for function.

Trouble Diagnoses (Cont'd)

Simpo PDF Merge and Split Unregistered Version - http://www.simpopdf.com

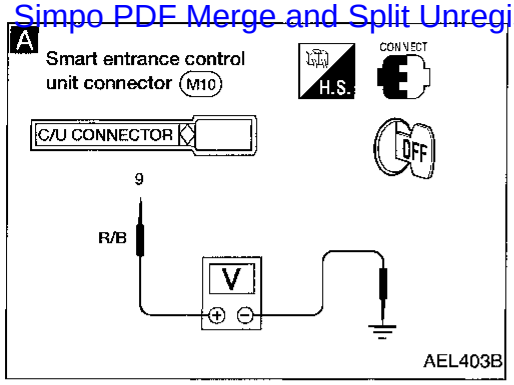

DIAGNOSTIC PROCEDURE 3

Interior lamp does not turn on for 30 seconds when pressing unlock button of remote controller. Everything else functions.

A

CHECK INTERIOR LAMP CIRCUIT.
When interior lamp switch is in "DOOR" position, check voltage between control unit terminal (9) and ground.
Does battery voltage exist?

Refer to wiring diagram in EL-168.

No → Repair harness between control unit and interior lamp.

Yes ↓

A

Push unlock button of remote controller and check voltage between control unit terminal (9) and ground.

Multi-remote controller button condition	Voltage (V)
Unlock button is pushed.	0
Unlock button is not pushed.	Battery voltage

No → Check harness for open or short between interior lamp and control unit.

Yes ↓

Check system again.

Trouble Diagnoses (Cont'd)

Simpo PDF Merge and Split Unregistered Version - http://www.simpopdf.com

DIAGNOSTIC PROCEDURE 4

Hazard indicator does not flash twice when pressing lock button of remote controller. Everything else functions.

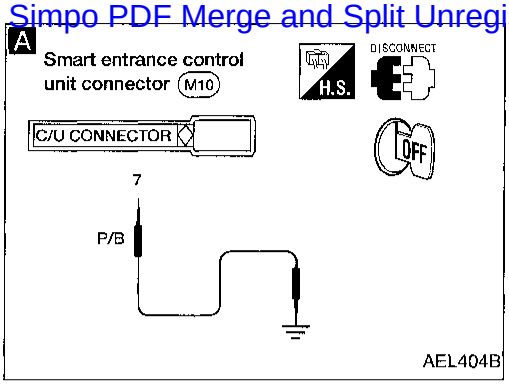

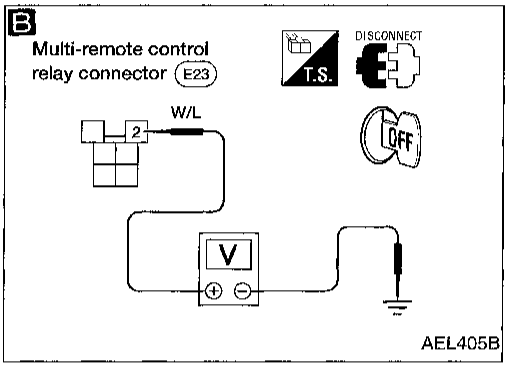

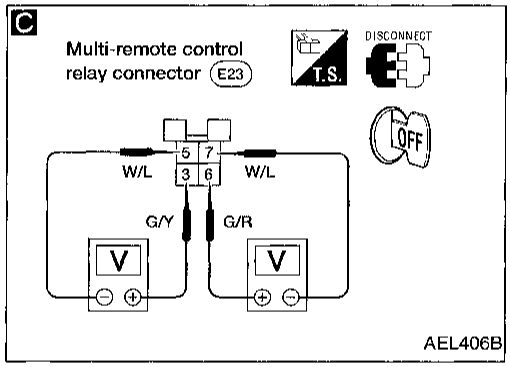

A

CHECK HAZARD INDICATOR OPERATION.
1. Disconnect control unit connector.
2. Apply ground to control unit terminal (7).

Does hazard indicator illuminate?

Refer to wiring diagram in EL-168.

Yes → Check harness connector, if OK, replace smart entrance control unit.

No ↓

Check multi-remote control relay. → NG → Replace.

OK ↓

B

CHECK POWER SUPPLY FOR MULTI-REMOTE CONTROL RELAY.
1. Disconnect multi-remote control relay connector.
2. Check voltage between terminal (2) and ground.

Battery voltage should exist.

NG → Check the following.
- 10A fuse [No. 17, located in fuse block (J/B)]
- Harness for open or short between multi-remote control relay and fuse

OK ↓

C

CHECK MULTI-REMOTE CONTROL RELAY CIRCUIT.
1. Check voltage between terminals (3) and (5).

Battery voltage should exist.
2. Check voltage between terminals (6) and (7).

Battery voltage should exist.

NG → Check harness for open or short.

OK ↓

Check harness for open or short between control unit and multi-remote control relay.

Simpo PDF Merge and Split Unregistered Version - http://www.simpopdf.com

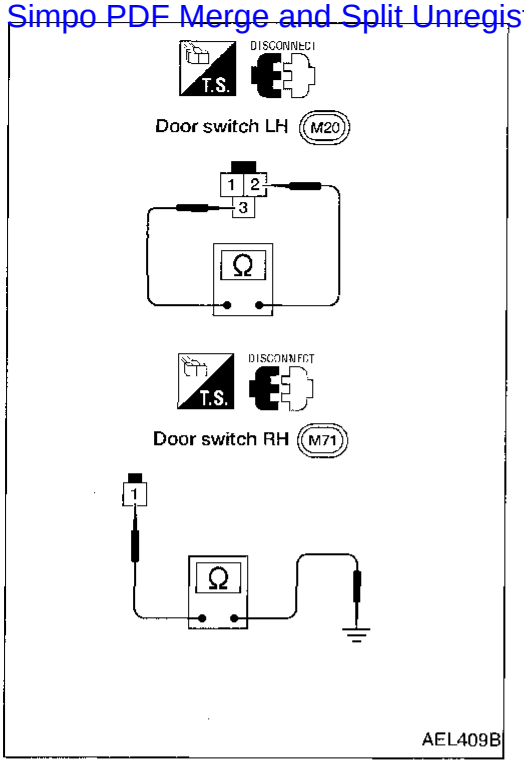

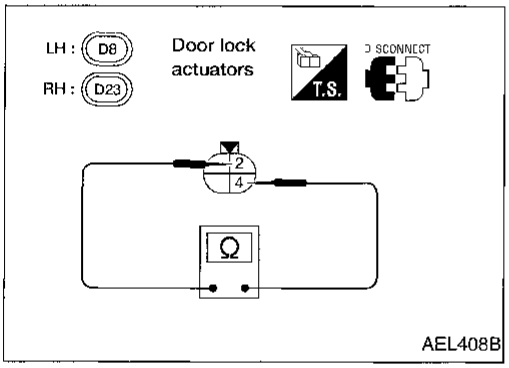

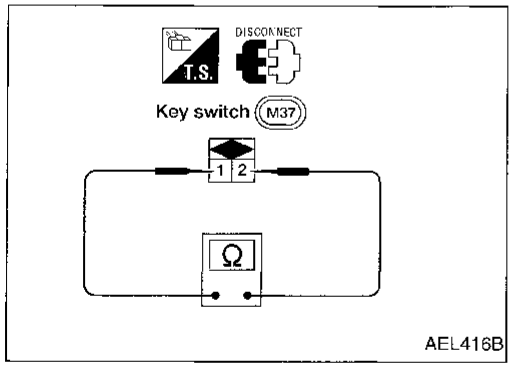

Electrical Components Inspection

DOOR SWITCHES

Check continuity between terminals when door switch is pushed and released.

	Terminal No.	Condition	Continuity
Door switch LH	② - ③	Door switch is pushed.	No
		Door switch is released.	Yes
Door switch RH	① - Ground	Door switch is pushed.	No
		Door switch is released.	Yes

DOOR LOCK ACTUATOR (Door unlock sensor)

Check continuity between terminals when door is locked and unlocked.

Terminal No.	Condition	Continuity
④ - ②	Door is locked.	No
	Door is unlocked.	Yes

KEY SWITCH (insert)

Check continuity between terminals when key is inserted in ignition key cylinder and key is removed from ignition key cylinder.

Terminal No.	Condition	Continuity
① - ②	Key is inserted.	Yes
	Key is removed.	No

Simpo PDF Merge and Split Unregistered Version - http://www.simpopdf.com

ID Code Entry Procedure

Enter the identity (ID) code manually when:

- **remote controller or control unit is replaced.**
- **an additional remote controller is activated.**

To enter the ID code, follow the procedures below.

PROCEDURE

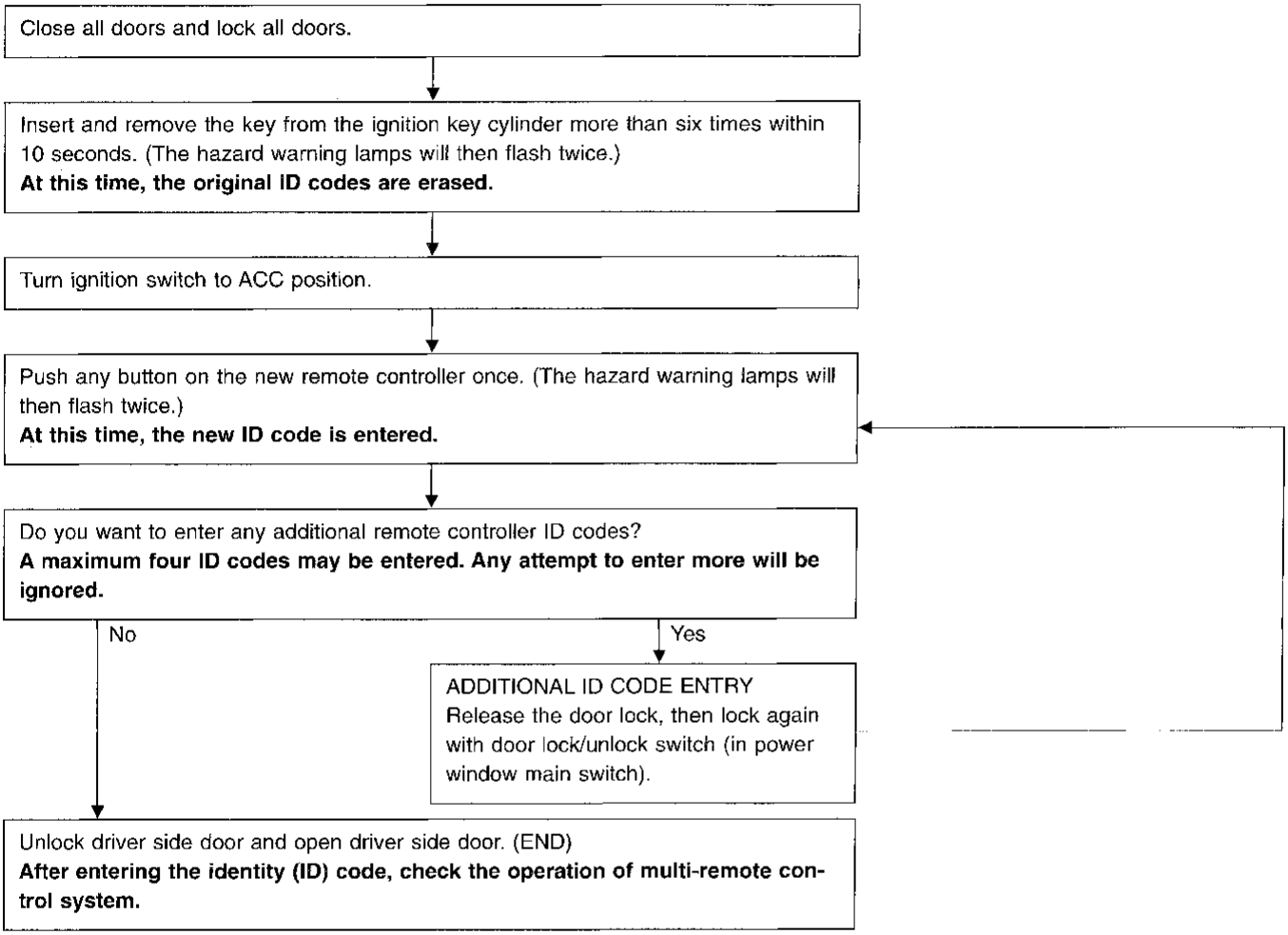

NOTE:

- **If you need to activate more than two additional new remote controllers, repeat the procedure "Additional ID code entry" for each new remote controller.**
- **If the same ID code that exists in the memory is input, the entry will be ignored.**
- **Entry of four ID codes maximum is allowed and any attempt to enter more will be ignored.**
- **Any ID codes entered after termination of the "setting mode" will not be accepted. Additional remote control signals will be inhibited if not entered during the "setting" mode.**

Simpo PDF Merge and Split Unregistered Version - http://www.simpopdf.com

Component Parts and Harness Connector Location

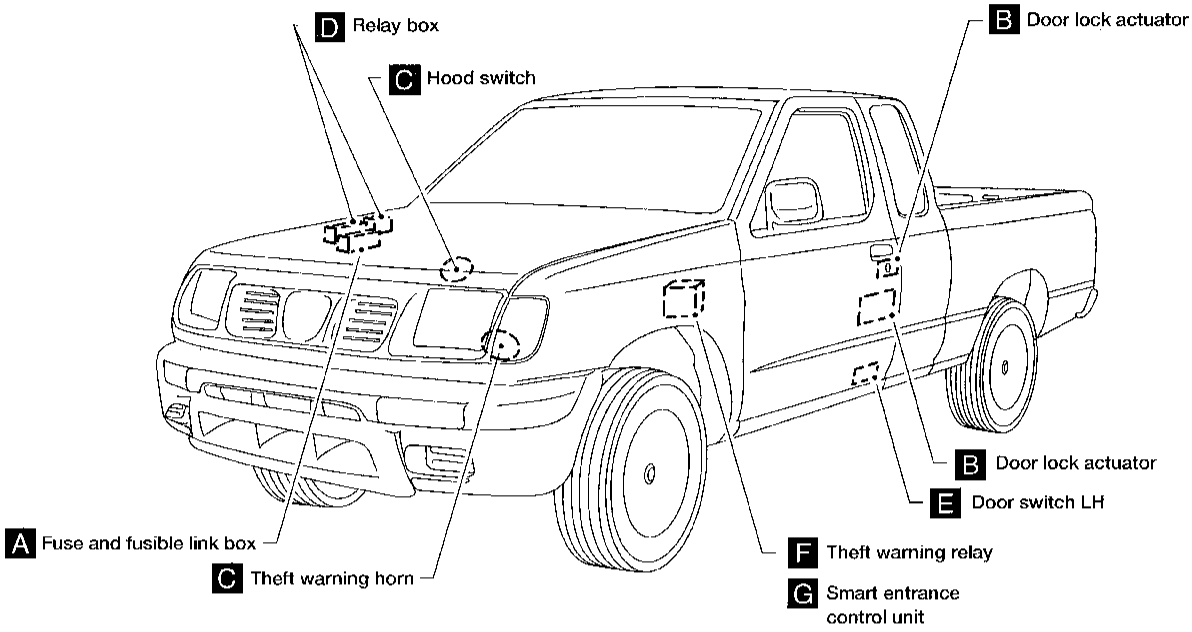

AEL605B

Component Parts and Harness Connector Location (Cont'd)

Simpo PDF Merge and Split Unregistered Version - http://www.simpopdf.com

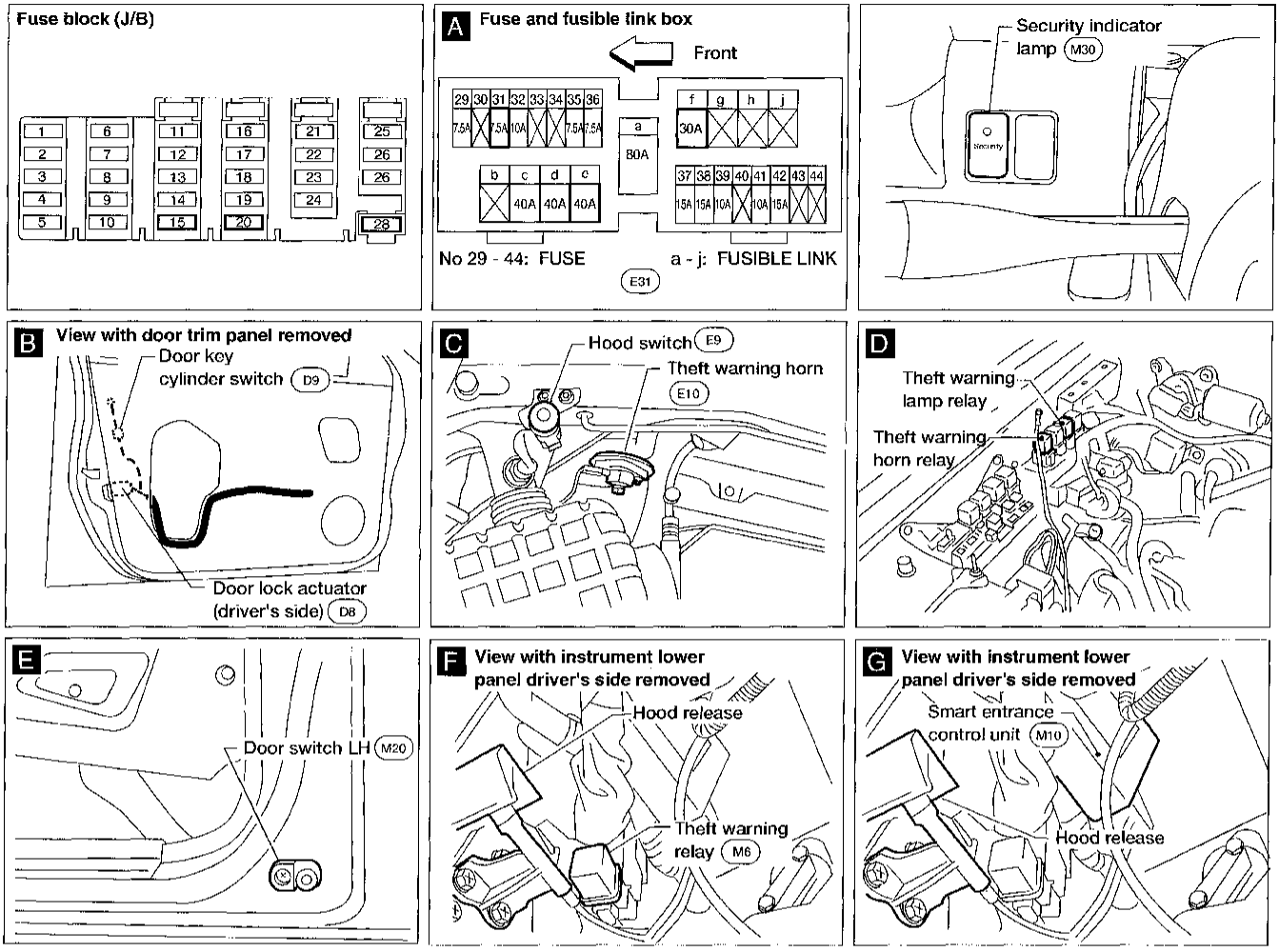

AEL691B

Simpo PDF Merge and Split Unregistered Version - http://www.simpopdf.com

System Description

OPERATION FLOW

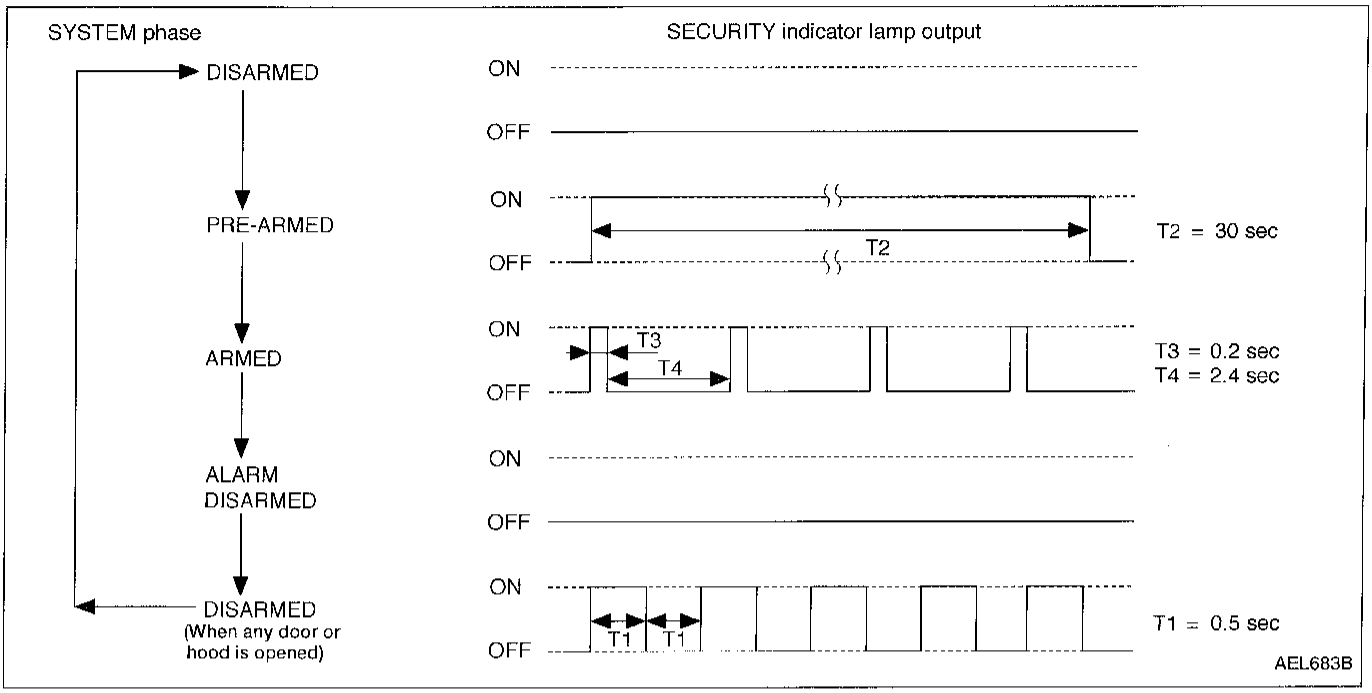

SETTING THE THEFT WARNING SYSTEM

Initial condition

(1) Close all doors.
(2) Close hood.

Disarmed phase

The theft warning system is in the disarmed phase when any door(s) or hood is opened. The security indicator lamp blinks every second.

Pre-armed phase and armed phase

The theft warning system turns into the "pre-armed" phase when hood and all doors are closed and locked by key or multi-remote controller. (The security indicator lamp illuminates.)
After about 30 seconds, the system automatically shifts into the "armed" phase (the system is set). (The security indicator lamp blinks every 2.6 seconds.)

CANCELING THE SET THEFT WARNING SYSTEM

When the following operation is performed, the armed phase is canceled.
Unlock the doors with the key or multi-remote controller.

ACTIVATING THE ALARM OPERATION OF THE THEFT WARNING SYSTEM

Make sure the system is in the armed phase. (The security indicator lamp blinks every 2.6 seconds.)
When the following operation (a) or (b) is performed, the system sounds the horns and flashes the headlamps for about 2.5 minutes. (At the same time, the system disconnects the starting system circuit.)
(a) Engine hood or any door is opened before unlocking door with key or multi remote controller.
(b) Door is unlocked without using key or multi-remote controller.

System Description (Cont'd)

Simpo PDF Merge and Split Unregistered Version - http://www.simpopdf.com

POWER SUPPLY AND GROUND CIRCUIT

Power is supplied at all times:
- through 7.5A fuse [No. 28, located in the fuse block (J/B)]
- to security indicator lamp terminal ① and
- to key switch terminal ①.

When the key switch is INSERTED (ignition key is inserted in key cylinder), power is supplied:
- through key switch terminal ②
- to smart entrance control unit terminal ㉔.

Power is supplied at all times:
- through 30A fusible link (letter f, located in the fuse and fusible link box)
- to circuit breaker terminal ①
- through circuit breaker terminal ②
- to smart entrance control unit terminal ①.

With the ignition switch in the ACC or ON position, power is supplied:
- through 7.5A fuse [No. 20, located in the fuse block (J/B)]
- to smart entrance control unit terminal ⑰.

With the ignition switch in the ON or START position, power is supplied:
- through 7.5A fuse [No. 15, located in the fuse block (J/B)]
- to smart entrance control unit terminal ⑪.

Ground is supplied:
- through body grounds (M14) and (M68)
- to smart entrance control unit terminal ⑩.

INITIAL CONDITION TO ACTIVATE THE SYSTEM

The operation of the theft warning system is controlled by the doors and hood.
To activate the theft warning system, the smart entrance control unit must receive signals indicating the doors and hood are closed and the doors are locked.
When a door is open, smart entrance control unit terminals ⑮ or ㉟ receives a ground signal from each door switch.
When a door is unlocked, smart entrance control unit terminals ⑫ or ⑬ receives a ground signal:
- from terminal ② of each door unlock sensor
- through terminal ④ of each door unlock sensor
- through body grounds (M14) and (M68) for the door unlock sensors LH or RH.

When the hood is open, smart entrance control unit terminal ㉙ receives a ground signal:
- from terminal ⊕ of the hood switch
- through terminal ⊖ of the hood switch
- through body grounds (E12) and (E54).

When the doors are locked using the key or multi-remote controller and none of the described conditions exist, the theft warning system will automatically shift to the armed phase.

THEFT WARNING SYSTEM ACTIVATION (With key or remote controller used to lock doors)

If the key is used to lock doors, smart entrance control unit terminal ㉚ receives a ground signal:
- from terminal ① of the door key cylinder switch LH
- from terminal ③ of the door key cylinder switch RH
- through terminal ② of the front door key cylinder switch LH or RH
- through body grounds (M14) and (M68).

If this signal or lock signal from remote controller is received by the smart entrance control unit, the theft warning system will activate automatically.
Once the theft warning system has been activated, smart entrance control unit terminal ㉝ supplies ground to terminal ② of the security indicator lamp.
The security lamp will illuminate for approximately 30 seconds and then blink every 2.6 seconds.
Now the theft warning system is in armed phase.

THEFT WARNING SYSTEM ALARM OPERATION

The theft warning system is triggered by:
- opening a door
- opening the hood
- unlocking door without using the key or multi-remote controller.

Once the theft warning system is in armed phase, if the smart entrance control unit receives a ground signal

System Description (Cont'd)

Simpo PDF Merge and Split Unregistered Version - http://www.simpopdf.com

at terminal ⑫, ⑬ (door unlock sensor), ⑮, ⑯ (door switch) or ㉙ (hood switch), the theft warning system will be triggered. The headlamps flash and the horns sound intermittently, and the starting system is interrupted.

With the ignition switch in the ON or START position, power is supplied:

- through 7.5A fuse [No. 15, located in the fuse block (J/B)].
- to theft warning relay terminal ②.

If the theft warning system is triggered, ground is supplied:

- from terminal ㉜ of the smart entrance control unit
- to theft warning relay terminal ①.

With power and ground supplied, ground to the clutch interlock relay (M/T models) or inhibitor relay (A/T models) is interrupted. The starter motor will not crank and the engine will not start, refer to EL-START (EL-20).

Power is supplied at all times:

- through 25A fuse (No. 31, located in fuse and fusible link box)
- to theft warning lamp relay terminal ② and
- to theft warning horn relay terminals ② and ⑦.

When the theft warning system is triggered, ground is supplied intermittently:

- from terminal ⑧ of the smart entrance control unit
- to theft warning lamp relay terminal ① and
- to theft warning horn relay terminal ①.

The headlamps flash and the horns sound intermittently.

The alarm automatically turns off after 2 or 3 minutes but will reactivate if the vehicle is tampered with again.

THEFT WARNING SYSTEM DEACTIVATION

To deactivate the theft warning system a door must be unlocked with the key or remote controller.

When the key is used to unlock a door, smart entrance control unit terminal ㉛ receives a ground signal:

- from terminal ③ of the door key cylinder switch LH
- from terminal ① of the door key cylinder switch RH
- through terminal ② of the front door key cylinder switch LH or RH
- through body grounds (M14) and (M68).

When the smart entrance control unit receives this signal or unlock signal from remote controller, the theft warning system is deactivated. (Disarmed phase)

PANIC ALARM OPERATION

Multi-remote control system may or may not operate theft warning system (horn and headlamps) as required.

When the multi-remote control system is triggered, ground is supplied intermittently:

- from smart entrance control unit terminal ⑧
- to theft warning lamp relay terminal ① and
- to theft warning horn relay terminal ①.

The headlamps flash and the horns sound intermittently.

The alarm automatically turns off after 30 seconds or when smart entrance control unit receives any signal from multi-remote controller.

Simpo PDF Merge and Split Unregistered Version - http://www.simpopdf.com

Schematic

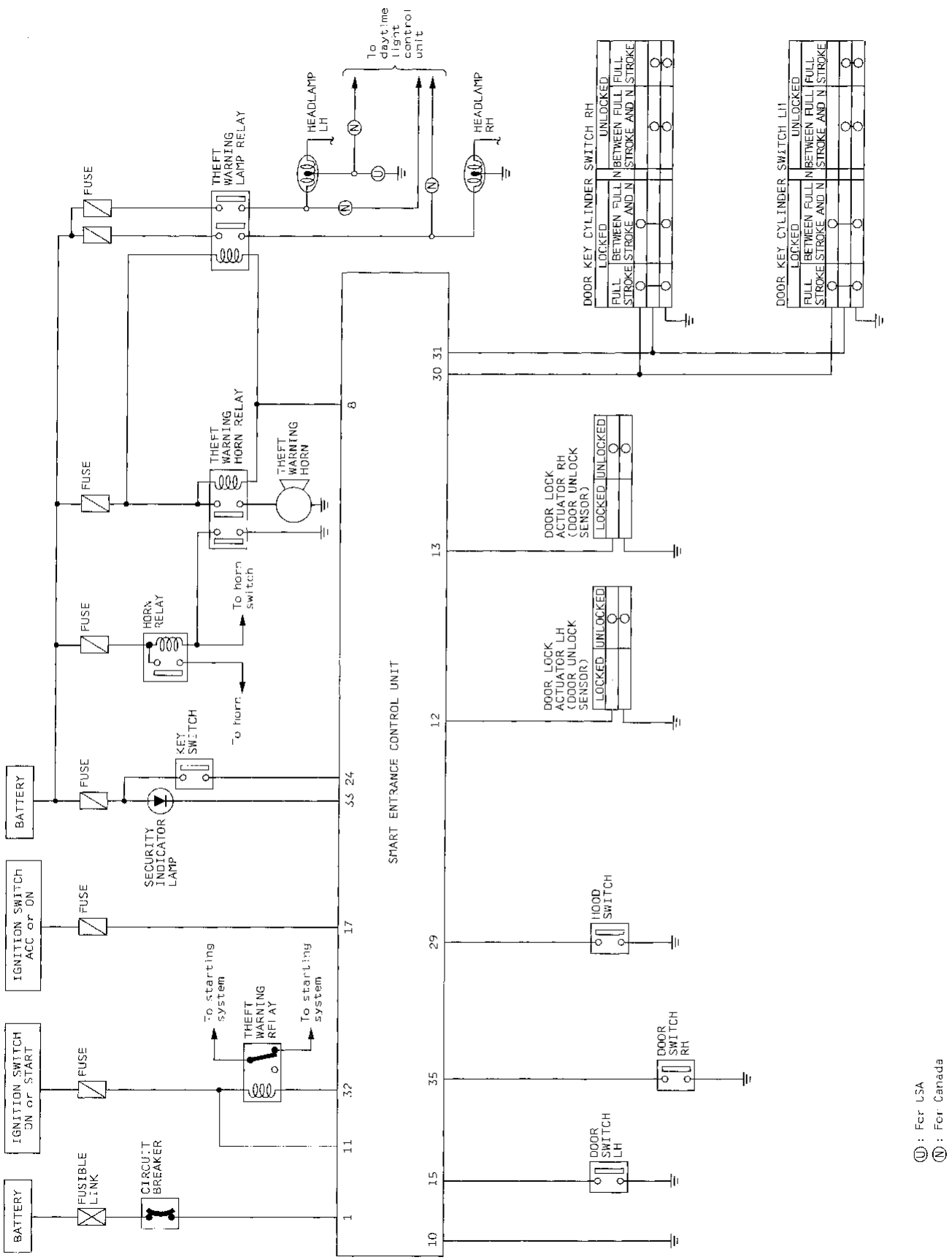

AEL459B

Simpo PDF Merge and Split Unregistered Version - http://www.simpopdf.com

Wiring Diagram — THEFT —

EL-THEFT-01

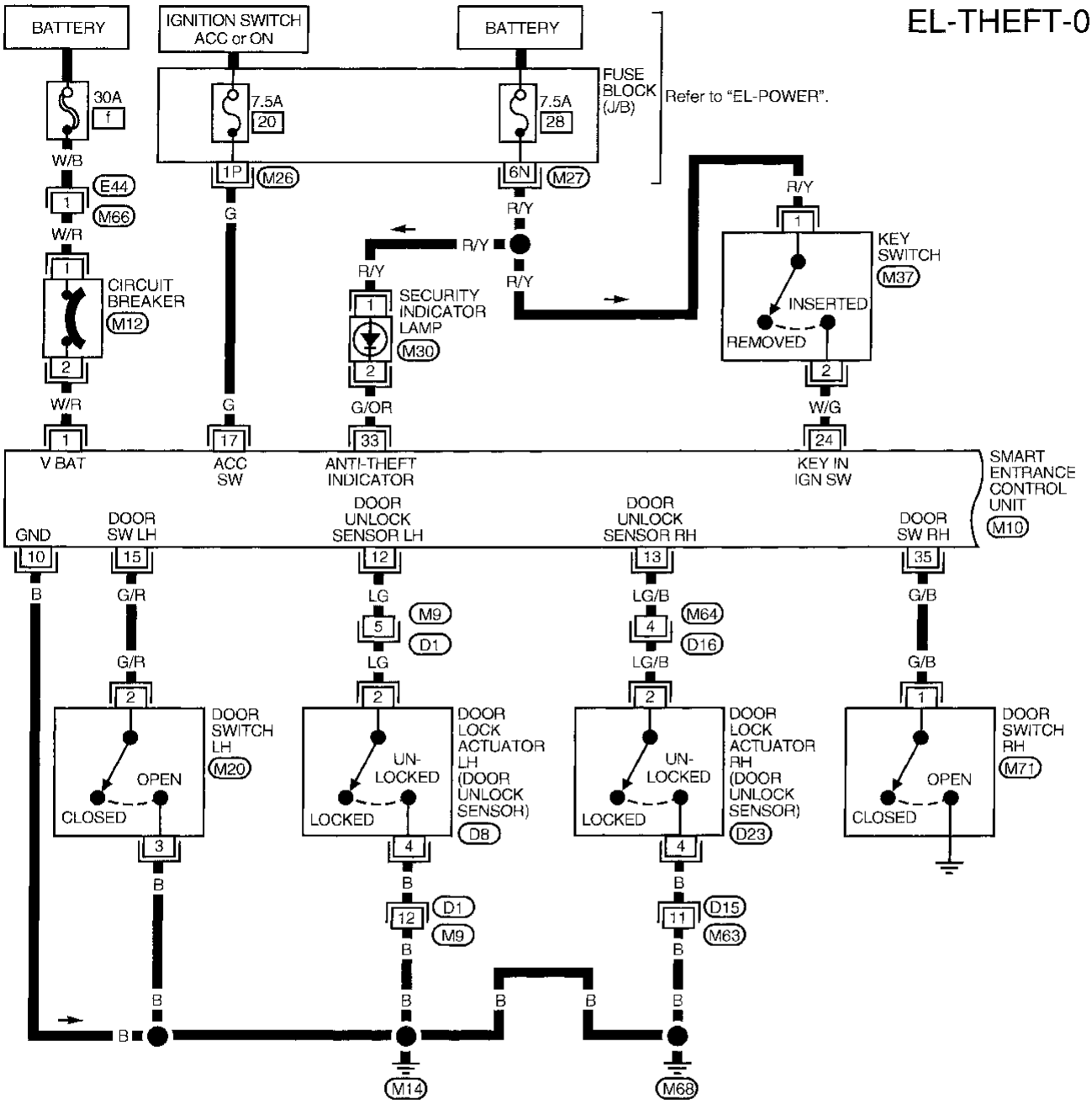

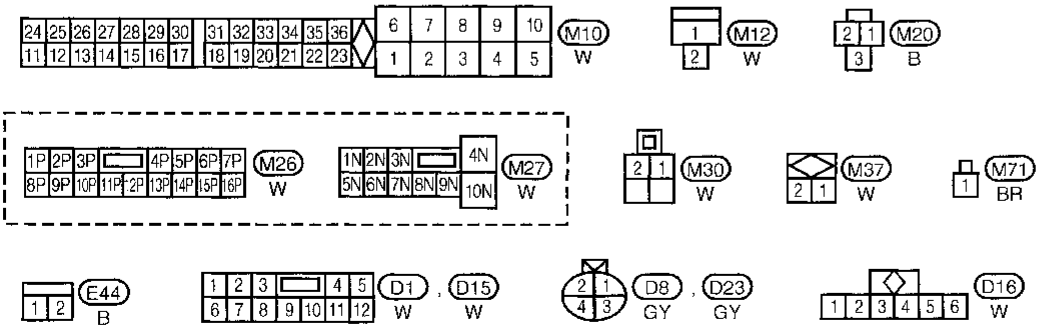

AEL460B

Wiring Diagram — THEFT — (Cont'd)

Simpo PDF Merge and Split Unregistered Version - http://www.simpopdf.com

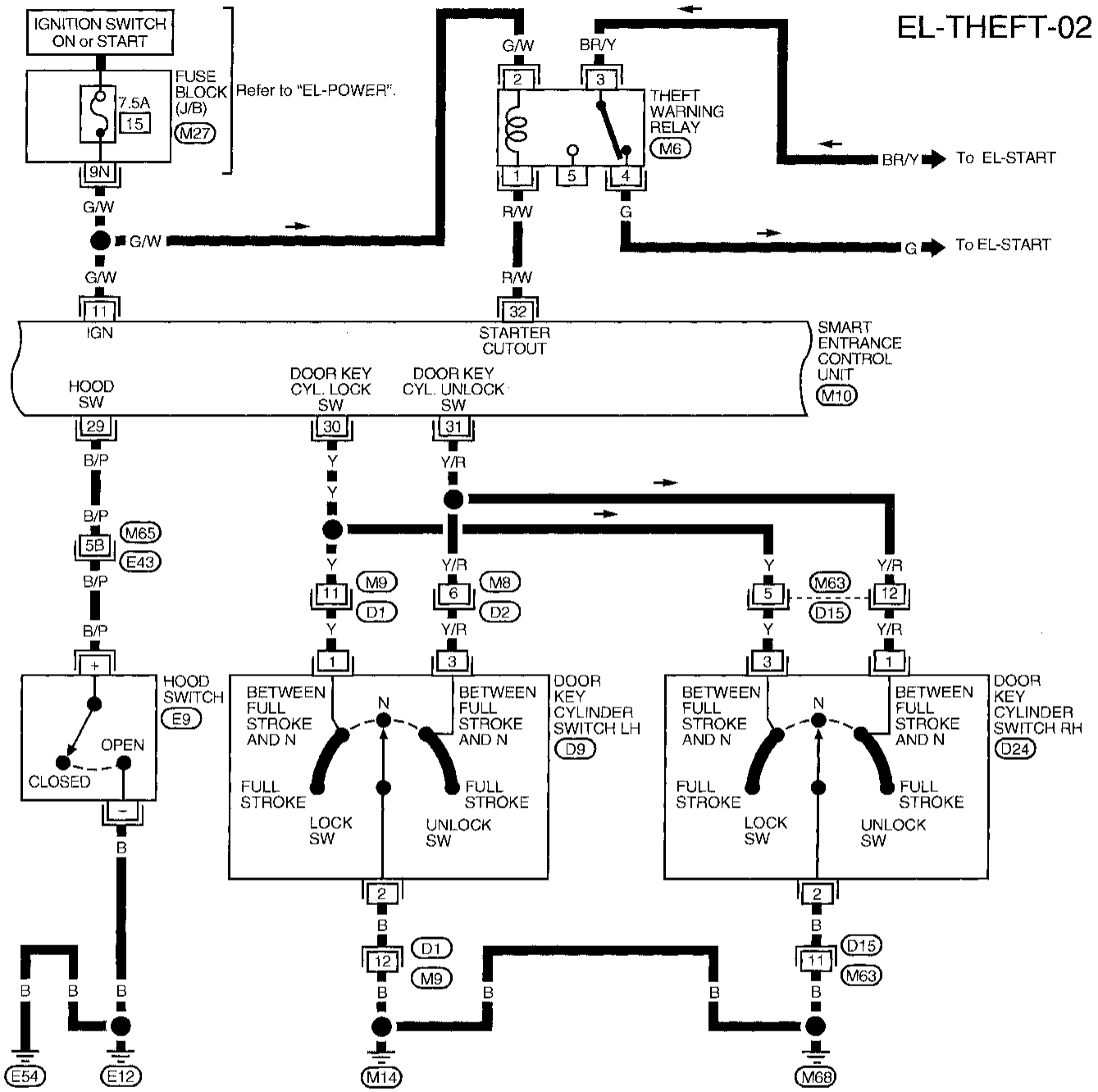

Refer to last page (Foldout page).
M65 , E43

M6 B

M10 W

M27 W

E9 W

D1 W , D15 W

D2 W

D9 BR , D24 BR

AEL461B

Wiring Diagram — THEFT — (Cont'd)

Simpo PDF Merge and Split Unregistered Version - http://www.simpopdf.com

EL-THEFT-03

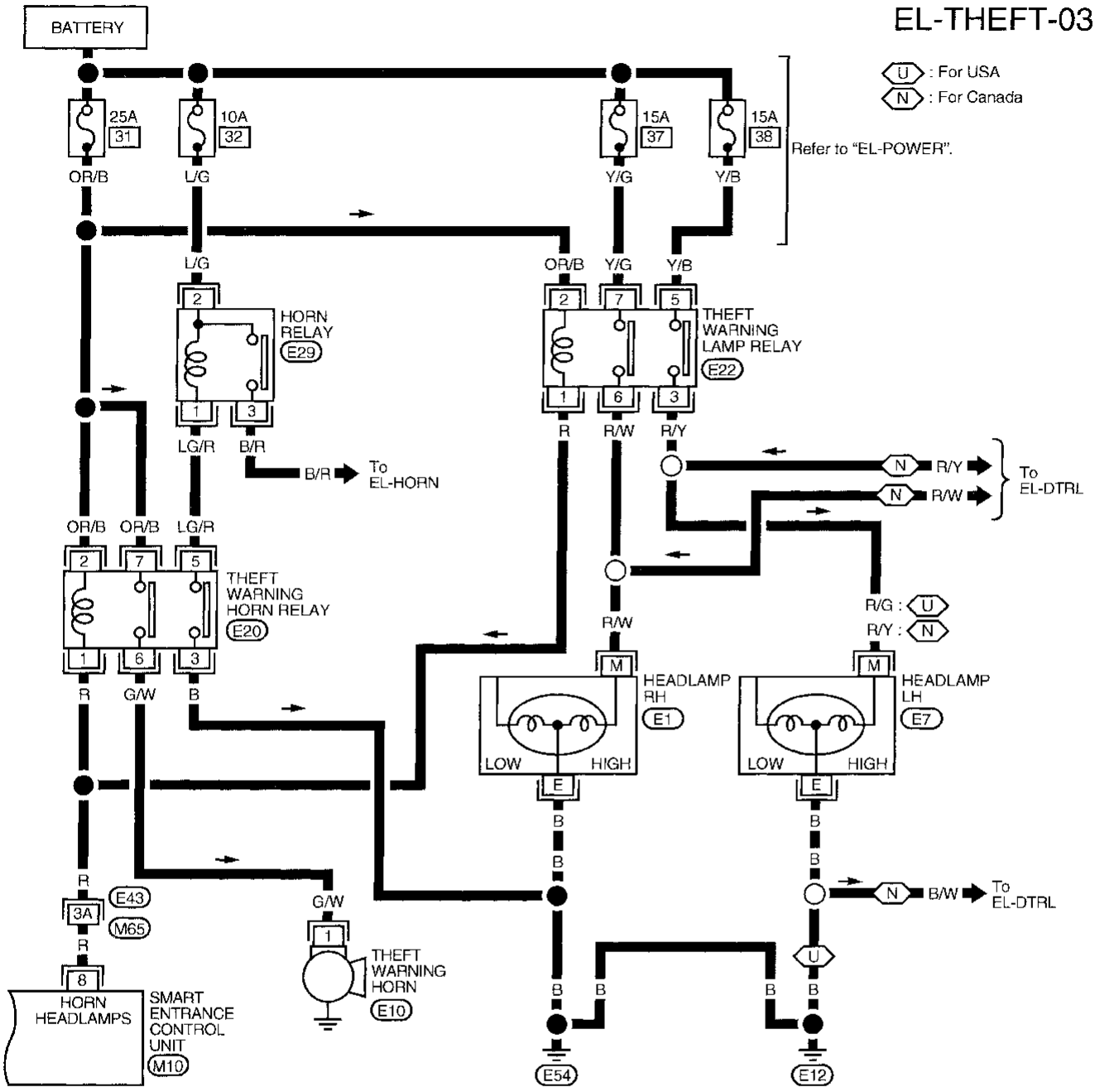

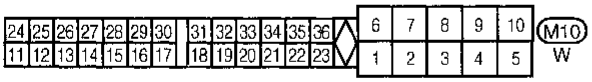

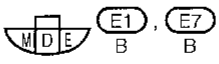

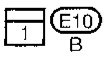



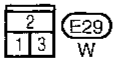

Refer to last page (Foldout page).
M65 , E43

AEL462B

Simpo PDF Merge and Split Unregistered Version - http://www.simpopdf.com

Trouble Diagnoses

PRELIMINARY CHECK

The system operation is canceled by turning ignition switch to ACC at any step between START and ARMED in the following flow chart.

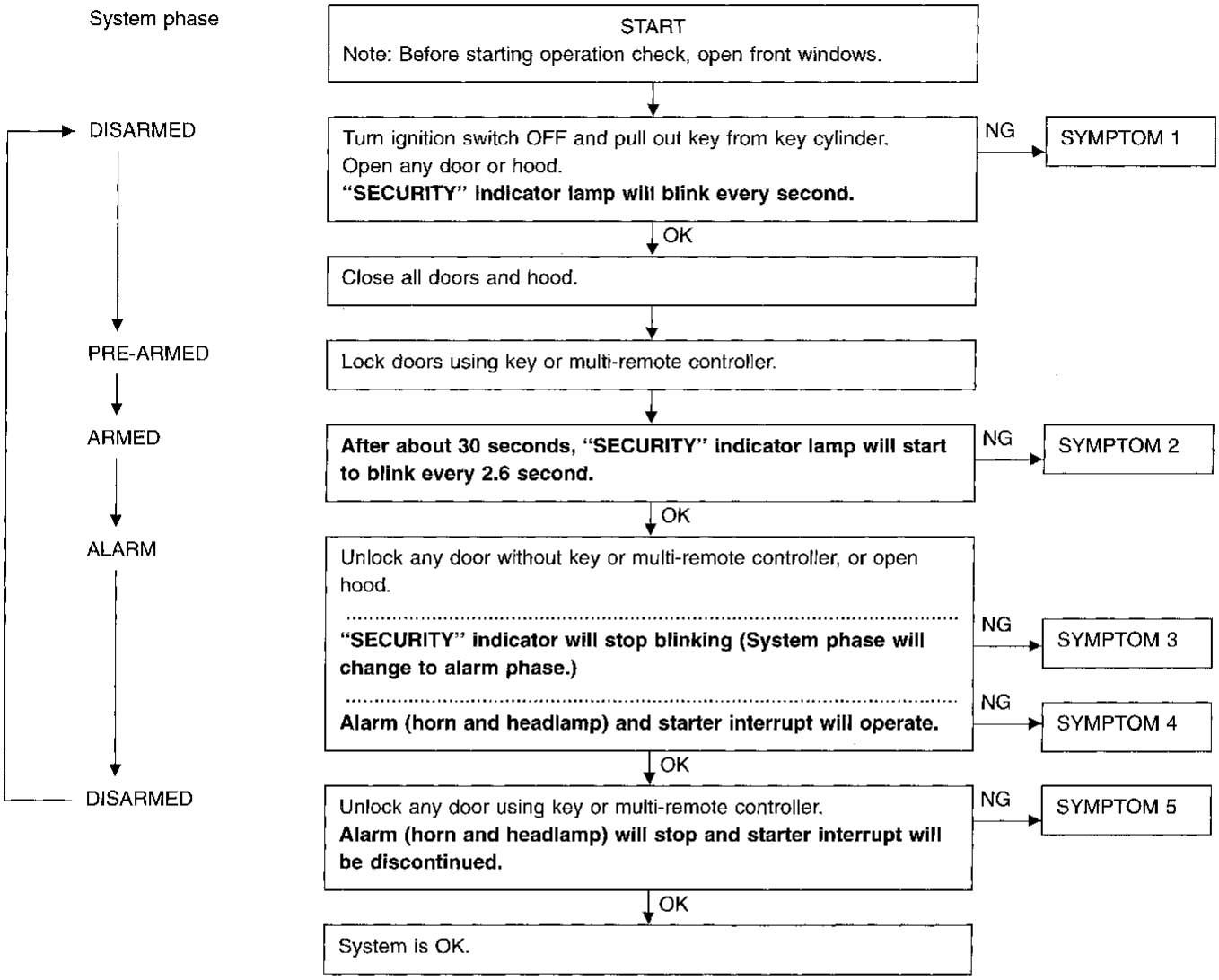

After performing preliminary check, go to symptom chart on next page.

Trouble Diagnoses (Cont'd)

Simpo PDF Merge and Split Unregistered Version - http://www.simpopdf.com

Before starting trouble diagnoses below, perform preliminary check, EL-186.

Symptom numbers in the symptom chart correspond with those of preliminary check.

SYMPTOM CHART

PROCEDURE			—	Power supply and ground circuit check		Diagnostic procedure							—
REFERENCE PAGE			EL-186	EL-188	EL-188	EL-189	EL-191	EL-192	EL-193	EL-194	EL-195	EL-196	EL-169
SYMPTOM			Preliminary check	Power supply circuit check	Ground circuit check	Diagnostic Procedure 1 (Door and hood switch check)	Diagnostic Procedure 2 (Security indicator lamp check)	Diagnostic Procedure 3 (Door unlock sensor check)	Diagnostic Procedure 4 (Door key cylinder switch check)	Diagnostic Procedure 5 (Theft warning horn alarm check)	Diagnostic Procedure 6 (Theft warning headlamp alarm check)	Diagnostic Procedure 7 (Starter interrupt system check)	Check "MULTI-REMOTE CONTROL" system.
1	Theft warning indicator does not turn "ON" or blinking.		X	X	X		X						
2	Theft warning system cannot be set by ...	All items	X	X	X	X		X					
		Door out side key	X	X	X				X				
		Multi-remote control	X	X	X								X
3	*1 Theft warning system does not alarm when ...	Any door is opened.	X	X	X	X							
		Any door is unlocked without using key or multi-remote controller	X	X	X			X					
4	Theft warning system does not activate.	All function	X	X	X	X		X					
		Horn alarm	X	X	X					X			
		Headlamp alarm	X	X	X						X		
		Starter interrupt	X	X	X							X	
5	Theft warning system cannot be canceled by	Door out side key	X	X	X				X				
		Multi-remote control	X	X	X								X

X : Applicable
*1: Make sure the system is in the armed phase.

Trouble Diagnoses (Cont'd)

Simpo PDF Merge and Split Unregistered Version - http://www.simpopdf.com

POWER SUPPLY AND GROUND CIRCUIT CHECK

Power supply circuit check

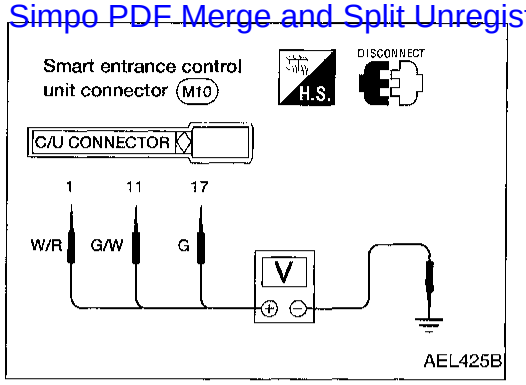

Terminals		Ignition switch position		
⊕	⊖	OFF	ACC	ON
①	Ground	Battery voltage	Battery voltage	Battery voltage
⑪	Ground	0V	0V	Battery voltage
⑰	Ground	0V	Battery voltage	Battery voltage

Ground circuit check

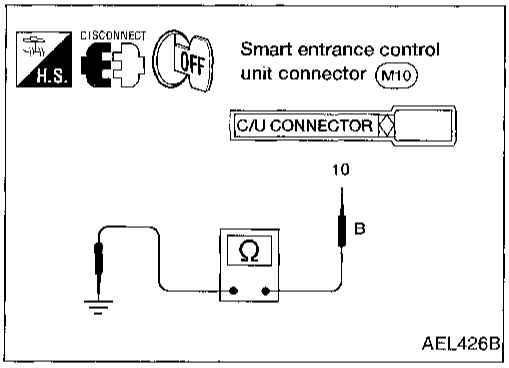

Terminal	Continuity
⑩ - Ground	Yes

Trouble Diagnoses (Cont'd)

Simpo PDF Merge and Split Unregistered Version - http://www.simpopdf.com

DIAGNOSTIC PROCEDURE 1-(1)
(Door switch check)

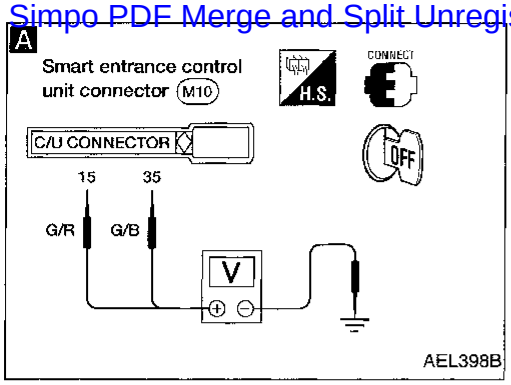

1. Turn ignition switch OFF and remove key from key cylinder.
2. Close all doors and hood.
   "SECURITY" indicator lamp should turn off.
3. Open any door.
   "SECURITY" indicator lamp should blink every second.

OK → Door switch is OK.

NG ↓

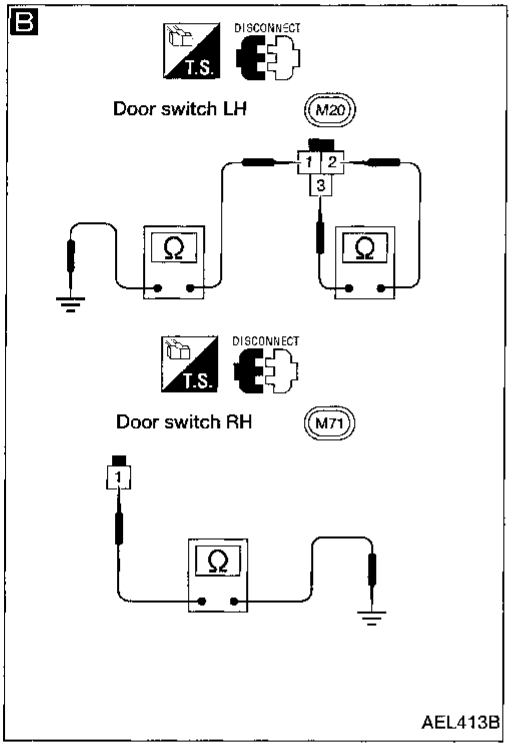

A

CHECK DOOR SWITCH INPUT SIGNAL.
Check voltage between control unit terminals (15) or (35) and ground.

OK → Door switch is OK.

	Terminals ⊕	Terminals ⊖	Condition	Voltage [V]
Door switch LH	(15)	Ground	Open	0
			Closed	Approx. 12
Door switch RH	(35)	Ground	Open	0
			Closed	Approx. 12

Refer to wiring diagram in EL-183.

NG ↓

B

CHECK DOOR SWITCH.
1. Disconnect door switch connector.
2. Check continuity between door switch terminals.

NG → Replace door switch.

	Terminals	Condition	Continuity
Door switch LH	(1) - Ground, (2) - (3)	Closed	No
		Open	Yes
Door switch RH	(1) - Ground	Closed	No
		Open	Yes

OK ↓

Check the following.
- Door switch ground circuit (LH) or door switch ground condition
- Harness for open or short between control unit and door switch

Trouble Diagnoses (Cont'd)

Simpo PDF Merge and Split Unregistered Version - http://www.simpopdf.com

DIAGNOSTIC PROCEDURE 1-(2)
(Hood switch check)

A

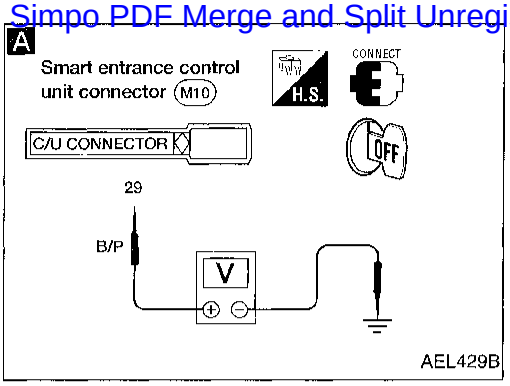

B

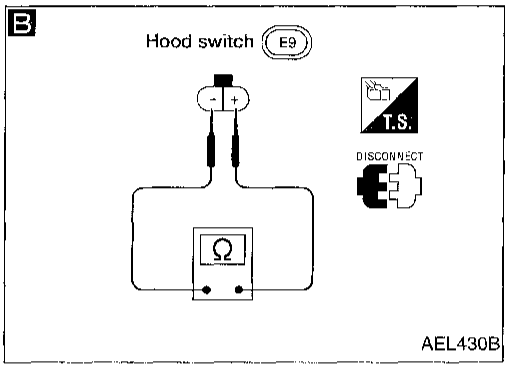

1. Turn ignition switch OFF and remove key from key cylinder.
2. Close all doors and hood.
   "SECURITY" indicator lamp should turn off.
3. Open hood.
   "SECURITY" indicator lamp should blink every second.

OK → Hood switch is OK.

NG

Check hood switch and hood fitting condition.

NG → Adjust installation of hood switch or hood.

OK

A

CHECK HOOD SWITCH INPUT SIGNAL.
Check voltage between control unit terminal (29) and ground.

Condition	Voltage [V]
Hood is open.	0
Hood is closed.	Approx. 12

Refer to wiring diagram in EL-184.

OK → Hood switch is OK.

NG

B

CHECK HOOD SWITCH.
1. Disconnect hood switch connector.
2. Check continuity between hood switch terminals.

Terminals	Condition	Continuity
⊖ - ⊕	Pushed	No
	Released	Yes

NG → Replace hood switch.

OK

Check the following.
- Hood switch ground circuit
- Harness for open or short between control unit and hood switch

Trouble Diagnoses (Cont'd)

Simpo PDF Merge and Split Unregistered Version - http://www.simpopdf.com

DIAGNOSTIC PROCEDURE 2
(Security indicator lamp check)

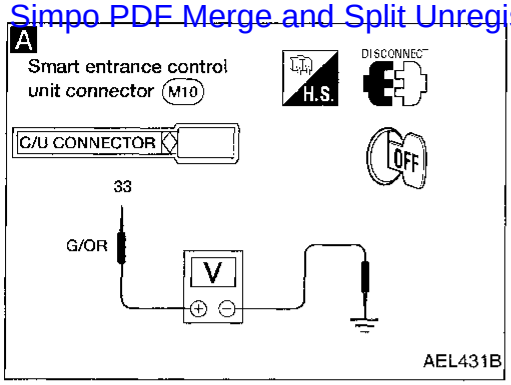

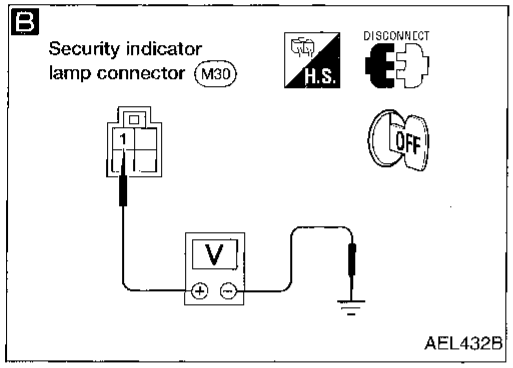

A

CHECK INDICATOR LAMP OUTPUT SIGNAL.
1. Disconnect control unit connector.
2. Check voltage between control unit terminal (33) and ground.
   Battery voltage should exist.

   Refer to wiring diagram in EL-183.

OK → Security indicator lamp is OK.

NG ↓

CHECK INDICATOR LAMP. NG → Replace indicator lamp.

OK ↓

B

CHECK POWER SUPPLY CIRCUIT FOR INDICATOR LAMP.
1. Disconnect security lamp connector.
2. Check voltage between indicator lamp terminal (1) and ground.
   Battery voltage should exist.

NG → Check the following:
- 7.5A fuse [No. 28, located in fuse block (J/B)]
- Harness for open or short between security indicator lamp and fuse

OK ↓

Check harness for open or short between security indicator lamp and control unit.

Trouble Diagnoses (Cont'd)

Simpo PDF Merge and Split Unregistered Version - http://www.simpopdf.com

DIAGNOSTIC PROCEDURE 3 (Door unlock sensor check)

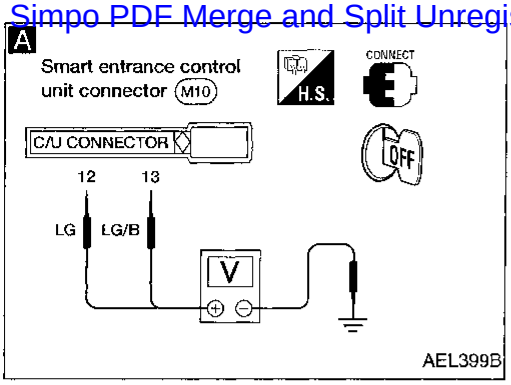

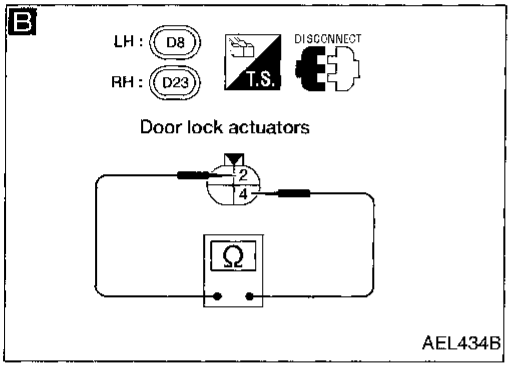

A

CHECK DOOR UNLOCK SENSOR INPUT SIGNAL.

Check voltage between control unit terminals ⑫ or ⑬ and ground.

	Terminals ⊕	Terminals ⊖	Condition	Voltage [V]
Door LH	⑫	Ground	Locked	Approx. 12
			Unlocked	0
Door RH	⑬	Ground	Locked	Approx. 12
			Unlocked	0

Refer to wiring diagram in EL-183.

OK → Door unlock sensor is OK.

NG ↓

B

CHECK DOOR UNLOCK SENSOR.

1. Disconnect door unlock sensor connector.
2. Check continuity between door unlock sensor terminals.

Terminals	Condition	Continuity
④ - ②	Locked	No
	Unlocked	Yes

NG → Replace door unlock sensor.

OK ↓

Check the following.
- Door unlock sensor ground circuit
- Harness for open or short between control unit and door unlock sensor

Simpo PDF Merge and Split Unregistered Version - http://www.simpopdf.com

Trouble Diagnoses (Cont'd)

DIAGNOSTIC PROCEDURE 4
(Door key cylinder switch check)

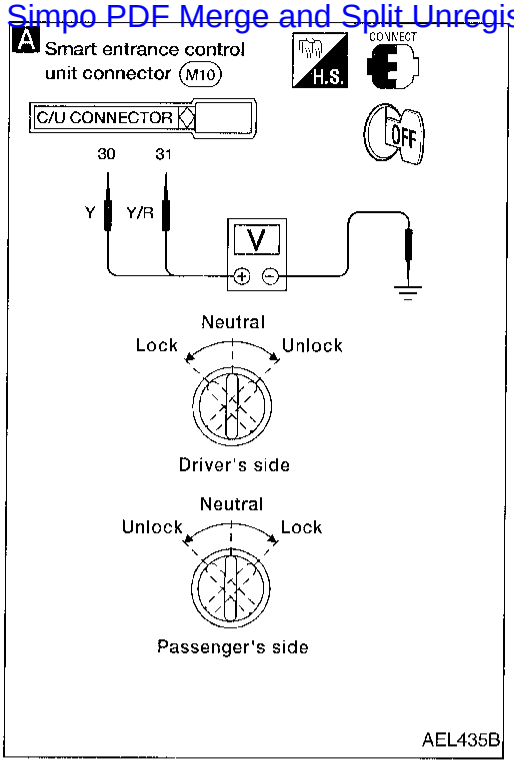

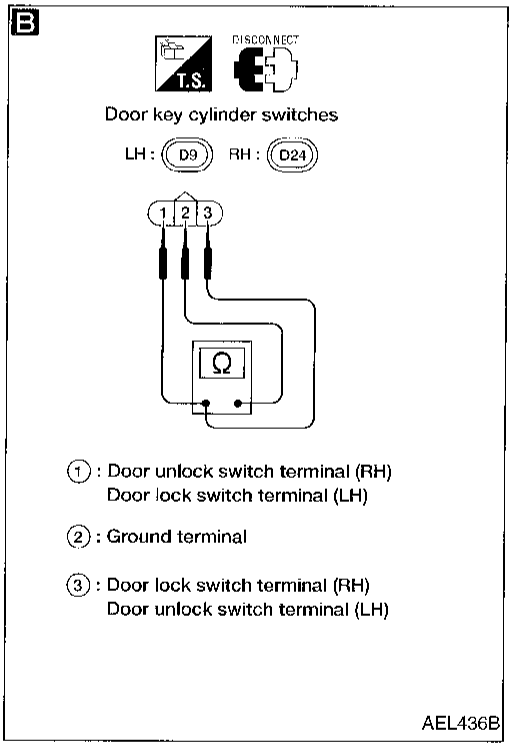

A

CHECK DOOR KEY CYLINDER SWITCH INPUT SIGNAL (LOCK/UNLOCK SIGNAL).

Check voltage between control unit terminals ㉚ or ㉛ and ground.

Terminals ⊕	Terminals ⊖	Key position	Voltage [V]
㉚	Ground	Neutral	Approx. 12
		Lock	0
㉛	Ground	Neutral	Approx. 12
		Unlock	0

Refer to wiring diagram in EL-184.

OK → Door key cylinder switch is OK.

NG ↓

B

CHECK DOOR KEY CYLINDER SWITCH.

1. Disconnect door key cylinder switch connector.
2. Check continuity between door key cylinder switch terminals.

Terminals	Key position	Continuity
LH: ① - ②	Neutral	No
RH: ③ - ②	Lock	Yes
LH: ③ - ②	Neutral	No
RH: ① - ②	Unlock	Yes

NG → Replace door key cylinder switch.

OK ↓

Check the following:
- Door key cylinder switch ground circuit
- Harness for open or short between control unit and door key cylinder switch

Trouble Diagnoses (Cont'd)

Simpo PDF Merge and Split Unregistered Version - http://www.simpopdf.com

DIAGNOSTIC PROCEDURE 5
(Theft warning horn alarm check)

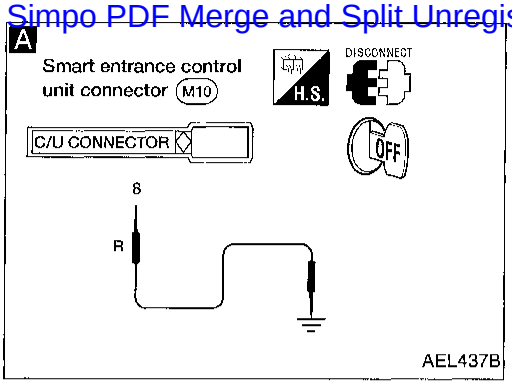

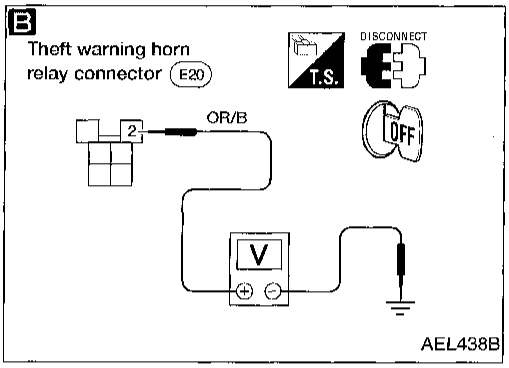

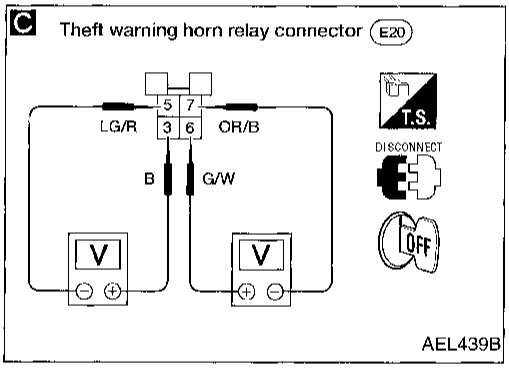

A

CHECK THEFT WARNING HORN ALARM OPERATION.
1. Disconnect control unit connector.
2. Apply ground to control unit terminal (8).

Does horn alarm activate?

Refer to wiring diagram in EL-185.

Yes → Horn alarm is OK.

No ↓

Check theft warning horn relay. — NG → Replace.

OK ↓

B

CHECK POWER SUPPLY FOR THEFT WARNING HORN RELAY.
1. Disconnect theft warning horn relay connector.
2. Check voltage between terminal (2) and ground.

Battery voltage should exist.

NG → Check the following:
- 25A fuse (No. 31, located in the fuse and fusible link box)
- Harness for open or short between theft warning horn relay and fuse

OK ↓

C

CHECK THEFT WARNING HORN RELAY CIRCUIT.
1. Disconnect theft warning horn relay connector.
2. Check voltage between terminals (3) and (5).

Battery voltage should exist.
3. Check voltage between terminals (6) and (7).

Battery voltage should exist.

NG → Check harness for open or short.

OK ↓

Check harness for open or short between theft warning horn relay and control unit.

Trouble Diagnoses (Cont'd)

Simpo PDF Merge and Split Unregistered Version - http://www.simpopdf.com

DIAGNOSTIC PROCEDURE 6
(Theft warning headlamp alarm check)

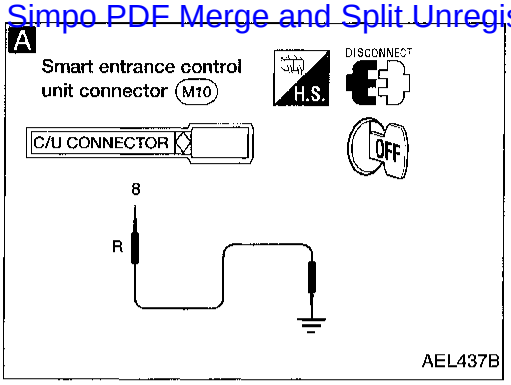

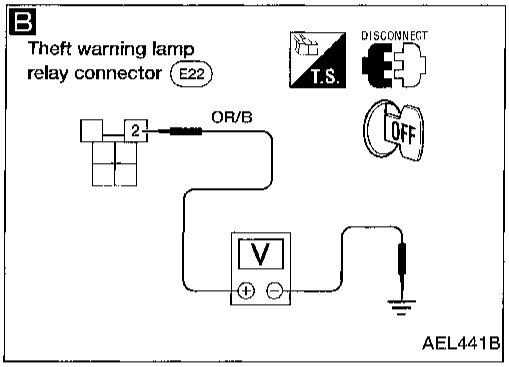

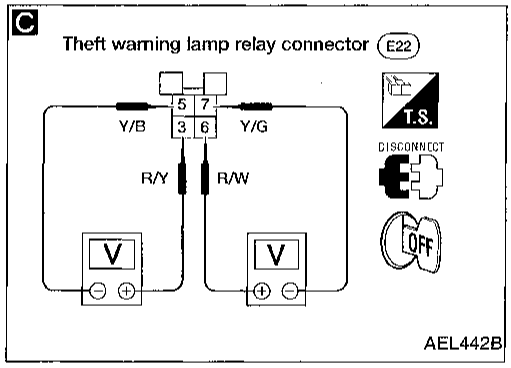

A

CHECK THEFT WARNING HEADLAMP ALARM OPERATION.
1. Disconnect control unit connector.
2. Apply ground to control unit terminal (8).

Does headlamp alarm activate?

Refer to wiring diagram in EL-185.

Yes → Headlamp alarm is OK.

No →

Does headlamp come on when turning lighting switch ON?

No → Check headlamp system. Refer to "HEADLAMP" (EL-36).

Yes →

Check theft warning lamp relay.

NG → Replace.

OK →

B

CHECK POWER SUPPLY FOR THEFT WARNING LAMP RELAY.
1. Disconnect theft warning lamp relay connector.
2. Check voltage between terminal (2) and ground.

Battery voltage should exist.

Refer to wiring diagram in EL-185.

NG → Check the following:
- 25A fuse (No. 31, located in the fuse and fusible link box)
- Harness for open or short between theft warning lamp relay and fuse

OK →

C

CHECK THEFT WARNING LAMP RELAY CIRCUIT.
1. Disconnect theft warning lamp relay connector.
2. Check voltage between terminals (3) and (5).

Battery voltage should exist.
3. Check voltage between terminals (6) and (7).

Battery voltage should exist.

NG → Check harness for open or short.

OK →

Check harness for open or short between theft warning lamp relay and ground.

Trouble Diagnoses (Cont'd)

Simpo PDF Merge and Split Unregistered Version - http://www.simpopdf.com

DIAGNOSTIC PROCEDURE 7
(Starter interrupt system check)

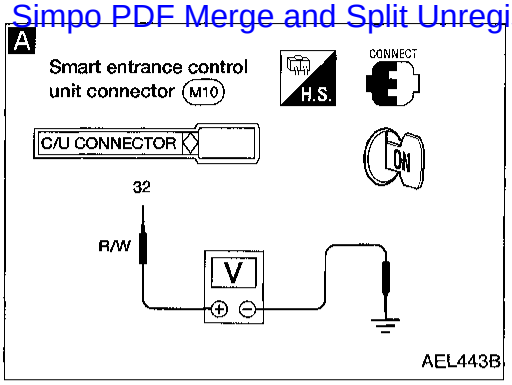

A

CHECK STARTER MOTOR INTERRUPT SIGNAL.

1. Turn ignition switch ON.
2. Check voltage between control unit terminal (32) and ground.

Condition	Voltage [V]
Except starter interrupted phase	Approx. 12
Starter interrupted phase	0

Refer to wiring diagram in EL-184.

NG → Check the following:
- 7.5A fuse [No. 15, located in fuse block (J/B)]
- Harness for open or short between theft warning relay and fuse
- Harness for open or short between control unit and theft warning relay

OK ↓

Check theft warning relay. → NG → Replace relay.

OK ↓

Check starting system. Refer to "STARTING SYSTEM" (EL-21).

Simpo PDF Merge and Split Unregistered Version - http://www.simpopdf.com

Description

The following systems are controlled by the smart entrance control unit.

- Warning chime
- Power door lock
- Multi-remote control system
- Theft warning system.

For detailed description and wiring diagrams, refer to the relevant pages for the each system.
The control unit receives data from the switches and sensors to control their corresponding system relays and actuators.

System	Input	Output
Warning chime	Key switch (Insert) Ignition switch (ON) Lighting switch (1st) Seat belt buckle switch Door switch LH	Warning chime
Power door lock	Door lock and unlock switches Key switch (Insert) Door switches Door unlock sensors Door key cylinder switches (lock/unlock)	Door lock actuators
Multi-remote control	Key switch (Insert) Ignition switch (ACC) Door switches Door unlock sensors Antenna (remote controller signal)	Theft warning horn relay Theft warning lamp relay Interior lamp Multi-remote control relay Door lock actuators
Theft warning	Ignition switch (ACC, ON) Door switches Hood switch Door key cylinder switches (lock/unlock) Door unlock sensors	Theft warning horn relay Theft warning lamp relay Theft warning relay (Starter interrupt) Security indicator

Simpo PDF Merge and Split Unregistered Version - http://www.simpopdf.com

Input/Output Operation Signal

Terminal No.	Connections	Operated condition		Voltage (V) (Approximate values)
1	Power source (C/B)	—		12V
2	Passenger door lock actuator	Door lock & unlock switch	Unlocked	12V
3	Driver door lock actuator		Free	0V
4	Driver and passenger door lock actuators	Door lock & unlock switch	Locked	12V
			Free	0V
7	Multi-remote control relay	When doors are locked using remote controller		12V → 0V
8	Theft warning horn relay Theft warning lamp relay	When panic alarm is operated using remote controller		12V → 0V
9	Room lamp	When interior lamp is operated using remote controller. (Lamp switch in "DOOR" position)		12V → 0V
10	Ground	—		—
11	Ignition switch (ON)	Ignition key is in "ON" position		12V
12	Driver door unlock sensor	Driver door: Locked → Unlocked		12V → 0V
13	Passenger door unlock sensor	Passenger door: Locked → Unlocked		12V → 0V
15	Driver door switch	OFF (Closed) → ON (Open)		12V → 0V
17	Ignition switch (ACC)	"ACC" position		12V
18	Door lock/unlock switches (lock)	Neutral → Locks		12V → 0V
19	Door lock/unlock switches (unlock)	Neutral → Unlocks		12V → 0V
21	Seat belt buckle switch	Unfasten → Fasten (Ignition key is in "ON" position)		0V → 12V
24	Ignition key switch (Insert)	IGN key inserted → IGN key removed from IGN key cylinder		12V → 0V
25	Lighting switch (1ST)	1ST, 2ND positions: ON → OFF		12V → 0V
29	Hood switch	ON (Open) → OFF (Closed)		0V → 12V
30	Door key cylinder lock switch	OFF (Neutral) → ON (Locked)		12V → 0V
31	Door key cylinder unlock switch	OFF (Neutral) → ON (Unlocked)		12V → 0V
32	Theft warning relay (Starter cut)	OFF → ON (Ignition key is in "ON" position)		12V → 0V
33	Theft warning indicator	Goes off → Illuminates		12V → 0V
35	Passenger door switch	OFF (Closed) → ON (Open)		12V → 0V

Simpo PDF Merge and Split Unregistered Version - http://www.simpopdf.com

NOTES

Simpo PDF Merge and Split Unregistered Version - http://www.simpopdf.com

Schematic

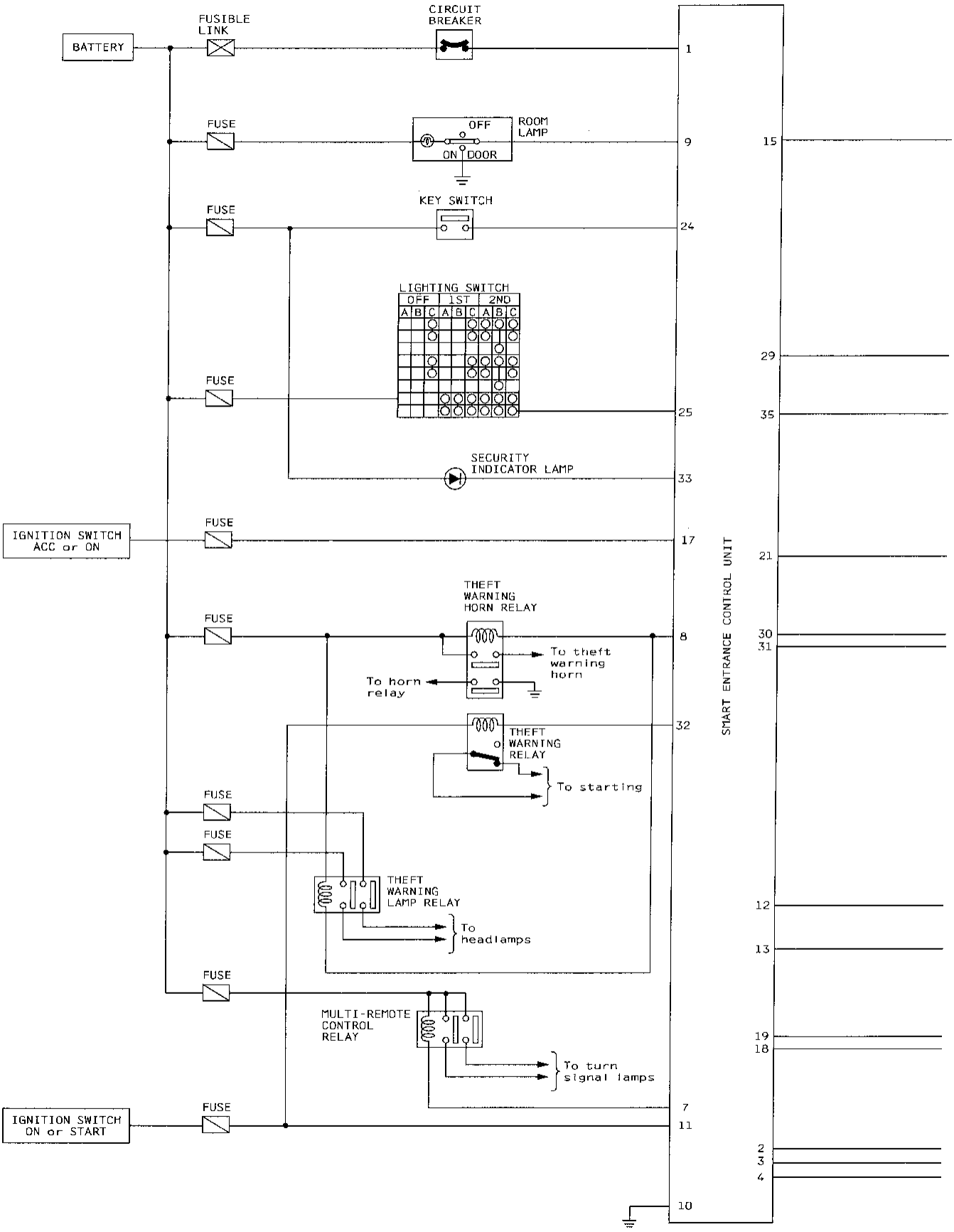

AEL467B

Schematic (Cont'd)

Simpo PDF Merge and Split Unregistered Version - http://www.simpopdf.com

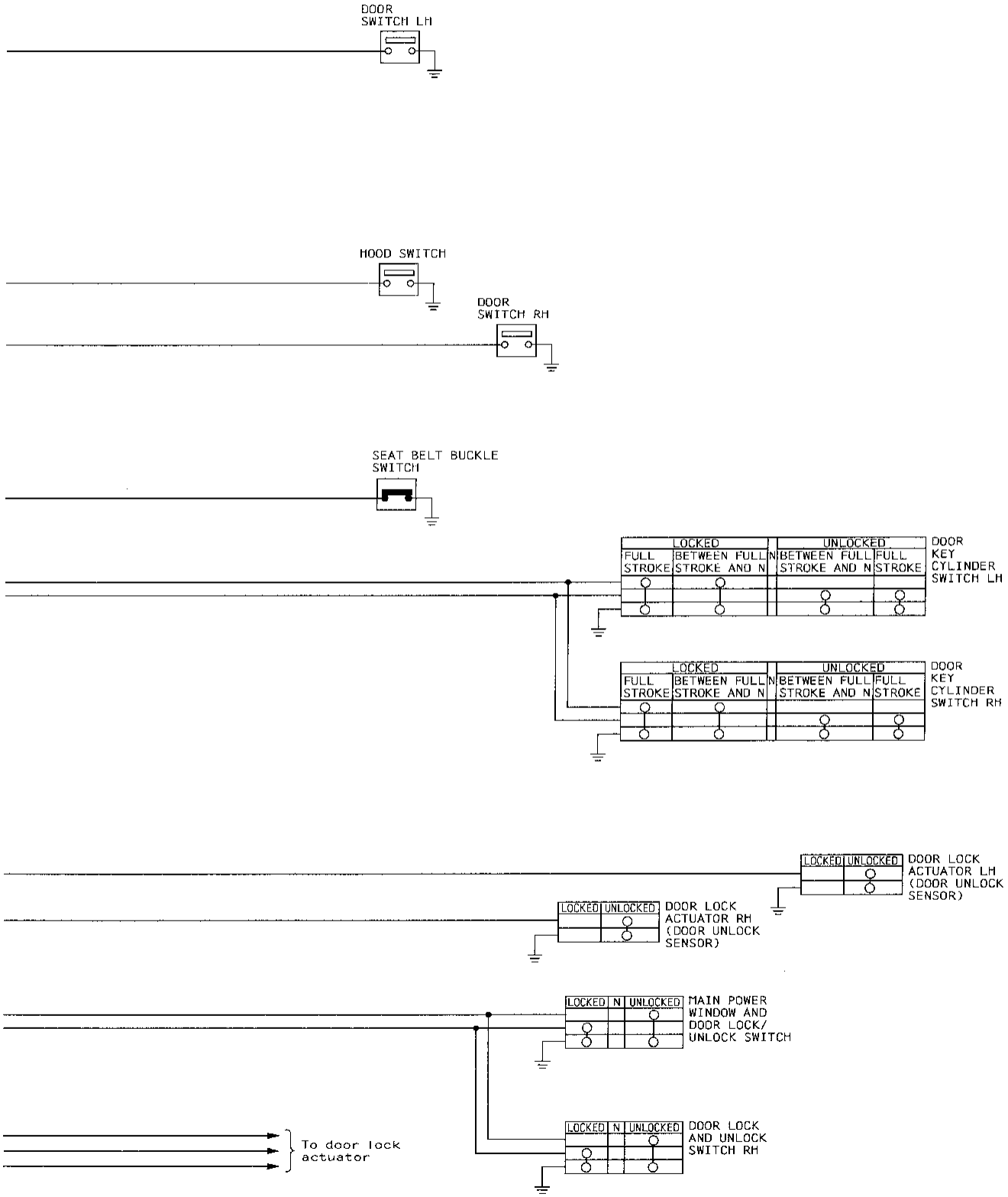

AEL468B

Simpo PDF Merge and Split Unregistered Version - http://www.simpopdf.com

Engine Compartment

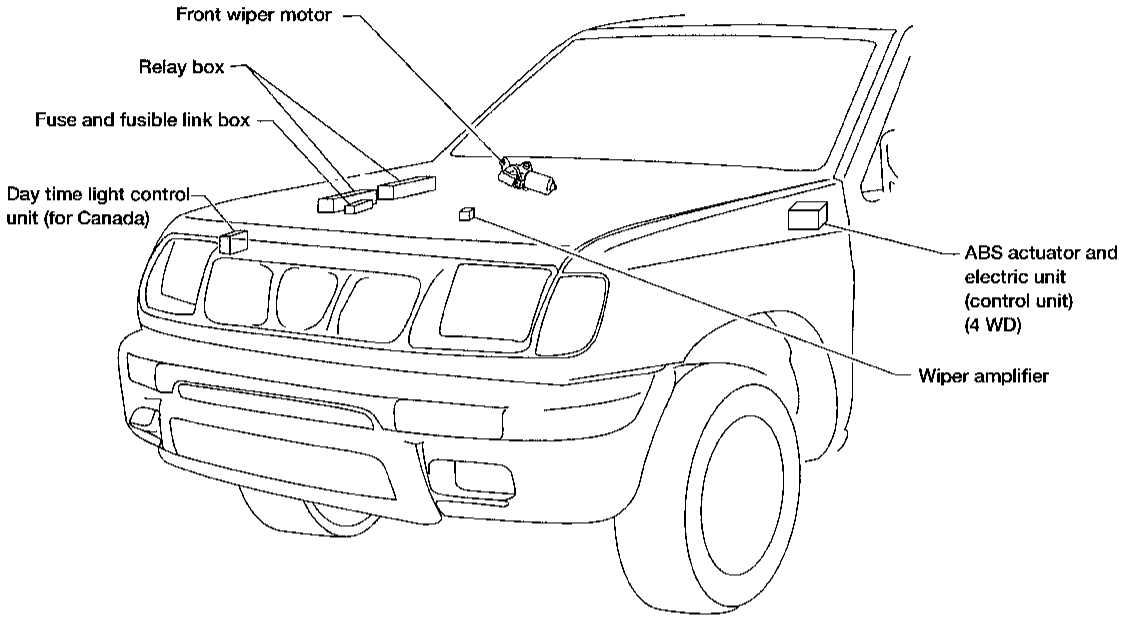

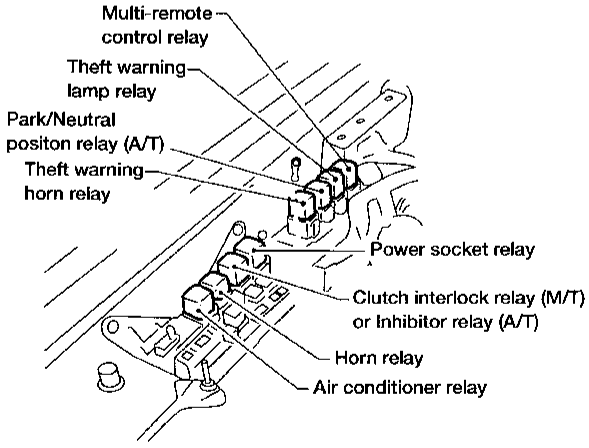

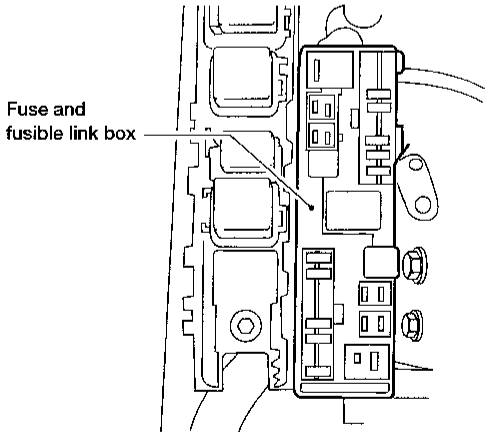

AEL692B

Simpo PDF Merge and Split Unregistered Version - http://www.simpopdf.com

Passenger Compartment

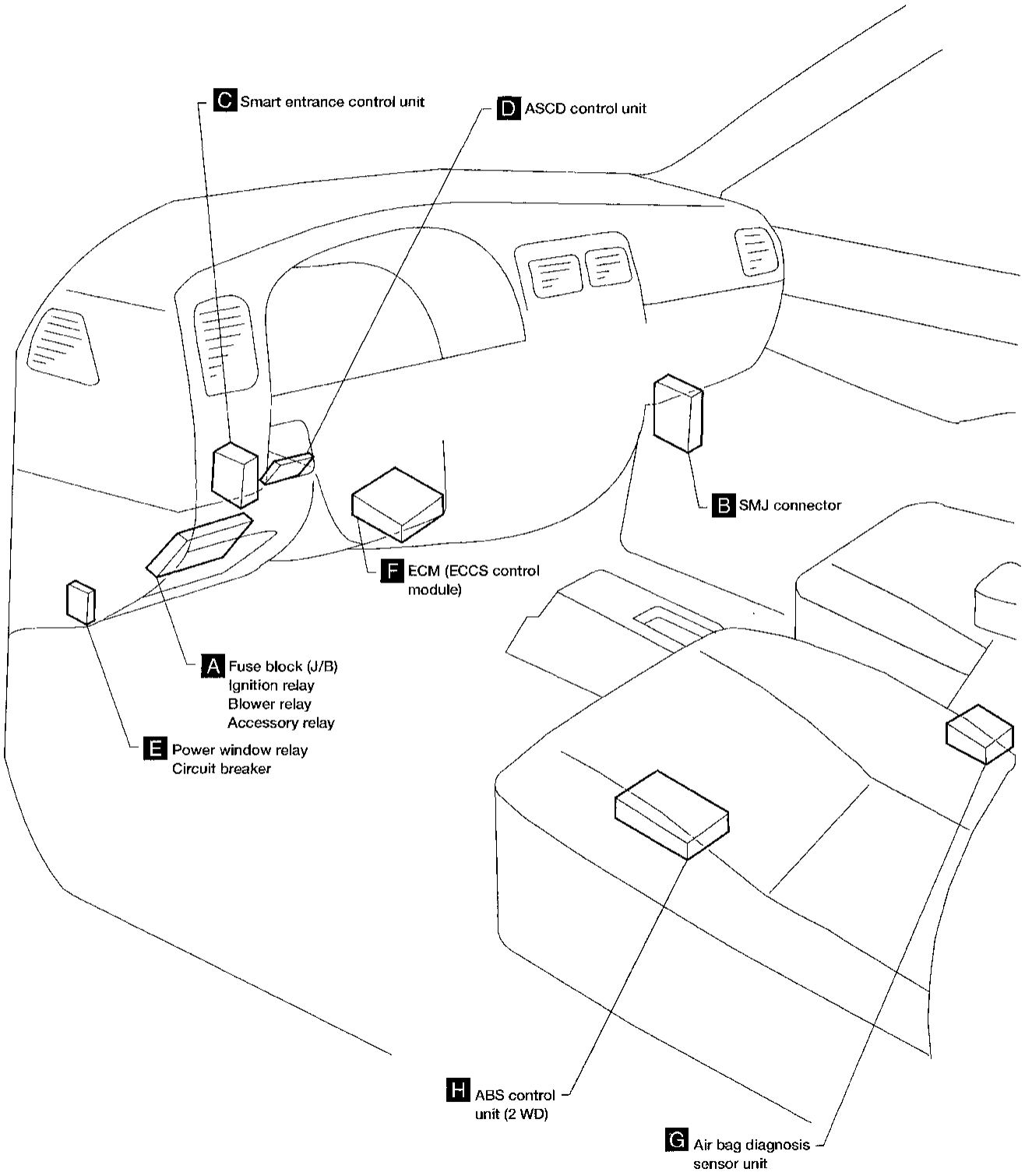

AEL693B

Passenger Compartment (Cont'd)

Simpo PDF Merge and Split Unregistered Version - http://www.simpopdf.com

A

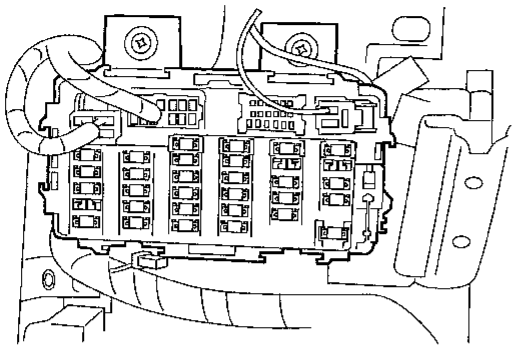

View of rear of fuse block (J/B)

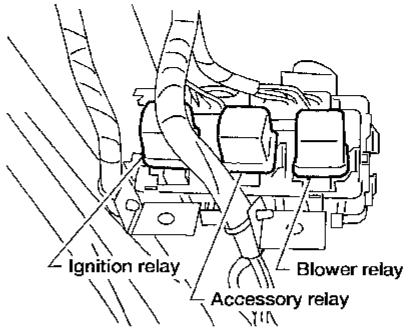

B
SMJ
View with dash side finisher RH removed

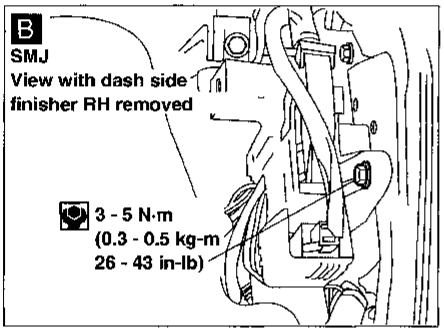

C View with instrument lower panel driver's side removed

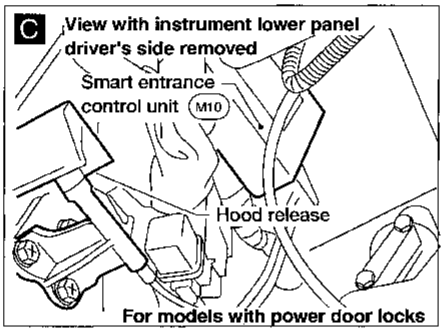

D View with instrument lower panel driver's side removed

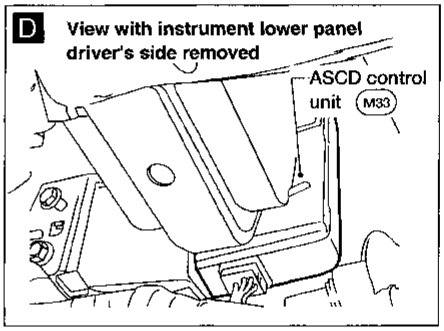

E View with dash side pinisher LH removed

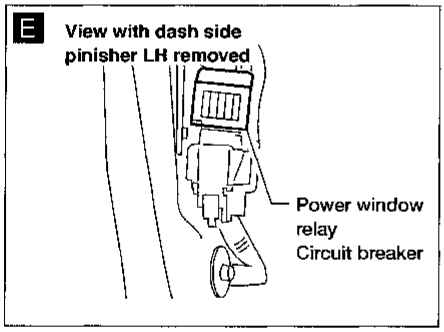

F View with instrument stay cover removed

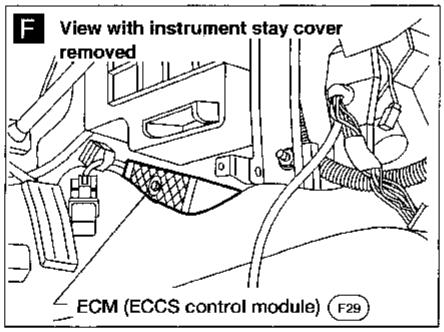

G

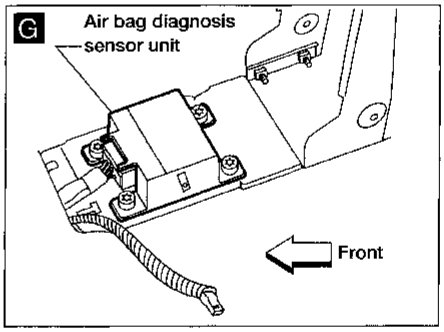

H View with driver's seat removed

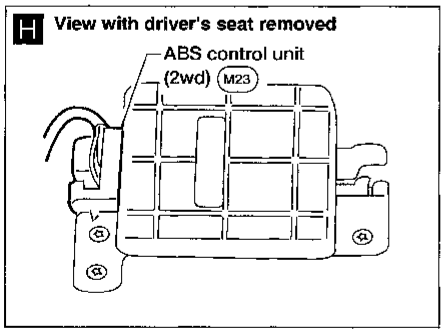

AEL694B

Simpo PDF Merge and Split Unregistered Version - http://www.simpopdf.com

Outline

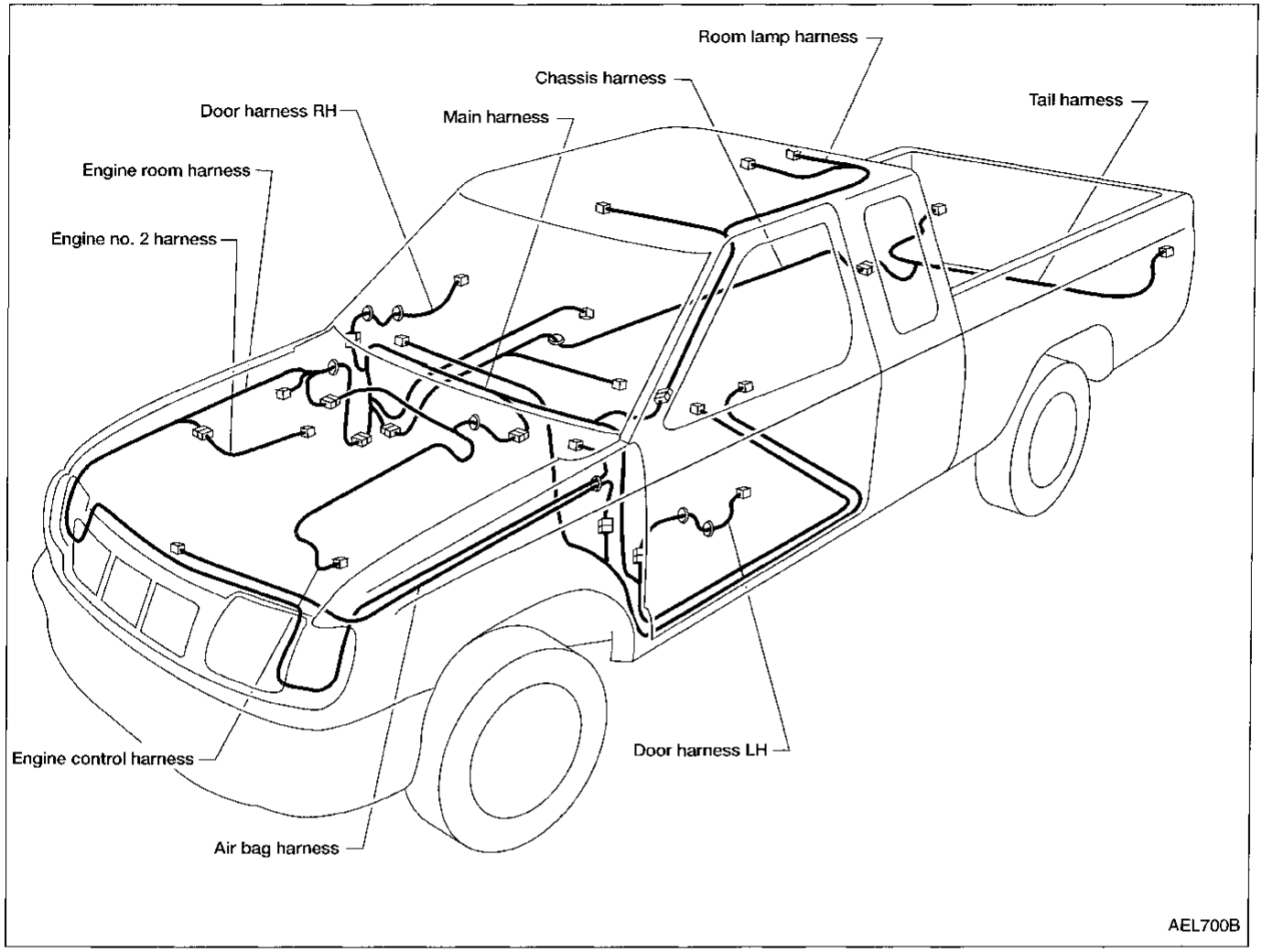

Simpo PDF Merge and Split Unregistered Version - http://www.simpopdf.com

How to Read Harness Layout

Example:

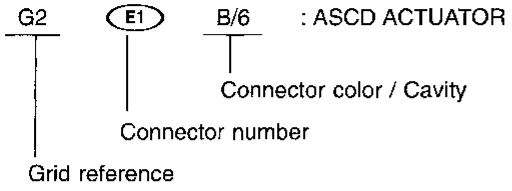

The following Harness Layouts use a map style grid to help locate connectors on the drawings:
- Main Harness
- Engine Room Harness (Engine Compartment)
- Engine Control Harness

To use the grid reference

1) Find the desired connector number on the connector list.
2) Find the grid reference.
3) On the drawing, find the crossing of the grid reference letter column and number row.
4) Find the connector number in the crossing zone.
5) Follow the line (if used) to the connector.

CONNECTOR SYMBOL

Main symbols of connector (in Harness Layout) are indicated in the below.

Connector type	Water proof type		Standard type	
	Male	Female	Male	Female
● Cavity: Less than 4 ● Relay connector				
● Cavity: From 5 to 8				
● Cavity: More than 9				
● Ground terminal etc.	—			

Simpo PDF Merge and Split Unregistered Version - http://www.simpopdf.com

NOTES

Simpo PDF Merge and Split Unregistered Version - http://www.simpopdf.com

Main Harness

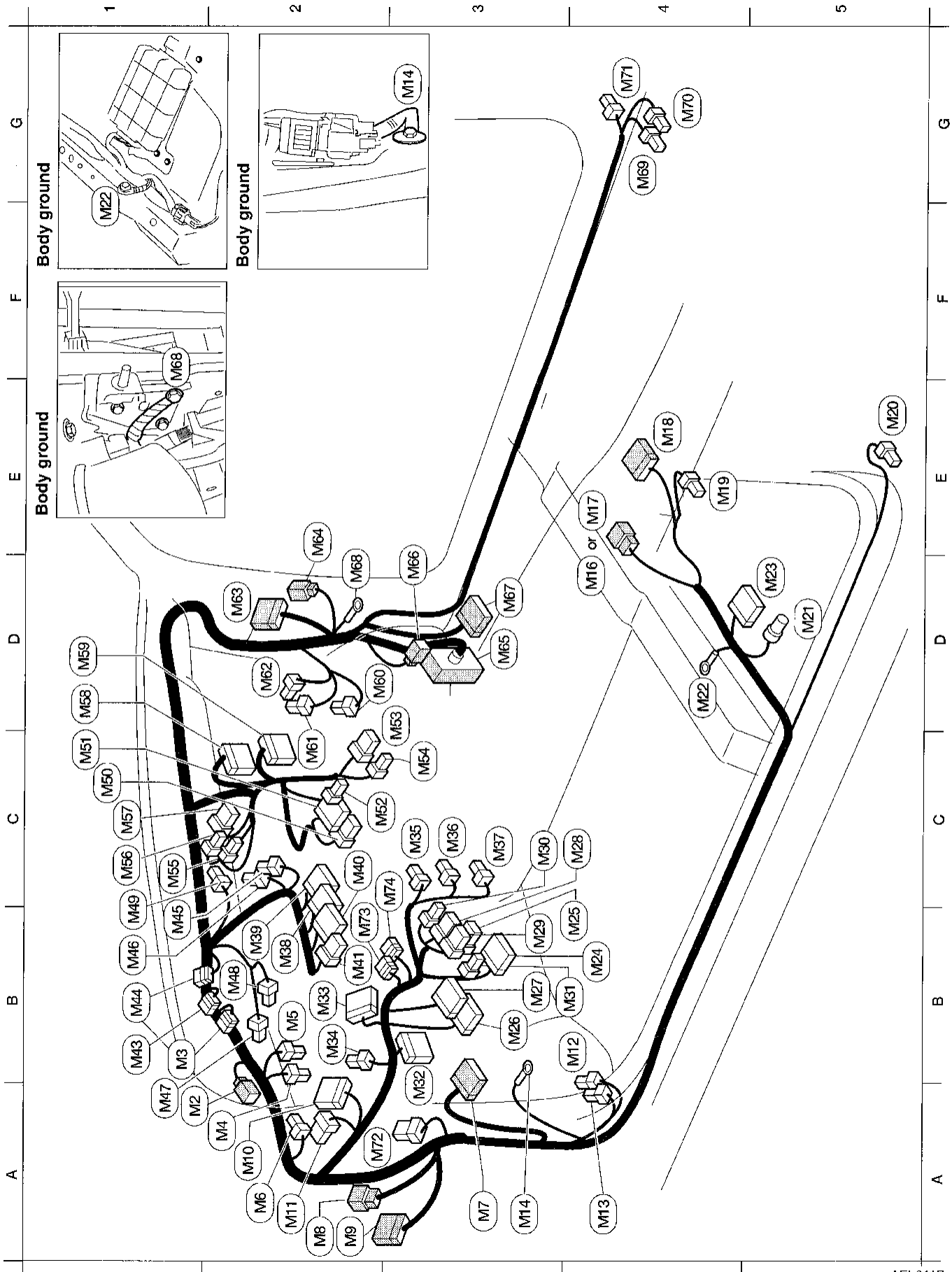

Simpo PDF Merge and Split Unregistered Version - http://www.simpopdf.com

A1 (M2) W/4 : To (R1)
B1 (M3) GY/4 : Diode
A2 (M4) L/2 : ASCD clutch switch (with M/T)
B2 (M5) L/2 : Clutch interlock switch (with M/T)
A2 (M6) B/5 : Theft warning relay
A3 (M7) W/18 : To (E53) (with 4-wheel ABS)
A2 (M8) W/8 : To (D2)
A2 (M9) W/12 : To (D1)
A3 (M10) W/36 : Smart entrance control unit (with power door locks) (without power door locks)
A2 (M11) W/8 : Warning chime unit
B4 (M12) W/2 : Circuit breaker
A4 (M13) L/4 : Power window relay
A3 (M14) — : Body ground
D4 (M16) W/6 : To (C11) (with 4-wheel ABS)
E4 (M17) W/8 : To (C2) (with 2-wheel ABS)
E4 (M18) W/16 : To (Z7)
E4 (M19) W/3 : Seat belt buckle switch
E5 (M20) B/3 : Door switch LH
D5 (M21) GY/4 : Rear heated oxygen sensor
D4 (M22) — : Body ground (with 2-wheel ABS)
D5 (M23) GY/17: ABS control unit (with 2-wheel ABS)
B4 (M24) GY/14: Data link connector for CONSULT
B3 (M25) L/6 : ABS check connector
B3 (M26) W/16 : Fuse block (J/B)
B3 (M27) W/10 : Fuse block (J/B)
C4 (M28) W/6 : Illumination control switch
B3 (M29) W/6 : ASCD main switch
C3 (M30) W/4 : Security indicator lamp
B3 (M31) W/3 : Fuse block (J/B)
B3 (M32) W/16 : Data link connector for GST
B2 (M33) B/20 : ASCD control unit
B2 (M34) BR/6 : ASCD hold relay
C3 (M35) W/3 : A/T device (with A/T)
C3 (M36) W/3 : Overdrive control switch (with A/T)
C3 (M37) W/2 : Key switch
B2 (M38) W/16 : Combination meter
B2 (M39) W/14 : Combination meter
C2 (M40) W/10 : Combination meter
B2 (M41) W/8 : Combination meter (A/T indicator)
B1 (M43) L/4 : Diode
B1 (M44) L/4 : Diode
B1 (M45) B/3 : Combination flasher unit
B1 (M46) L/4 : Fuel pump relay
A1 (M47) B/2 : Stop lamp switch
B2 (M48) L/2 : ASCD brake switch (A/T shift lock switch)
C1 (M49) W/2 : Parking brake switch
C1 (M50) W/6 : Radio
C1 (M51) W/10 : Radio
C2 (M52) B/2 : Cigarette lighter socket
D3 (M53) W/8 : Hazard switch
C3 (M54) B/2 : Power socket
C1 (M55) W/3 : Air conditioner switch
C1 (M56) W/3 : Fan switch illumination
C1 (M57) W/6 : Fan switch
D1 (M58) W/16 : To (F26)
D1 (M59) W/18 : To (F27)
D2 (M60) W/3 : Thermo control amplifier
C2 (M61) BR/4 : Fan resistor
D2 (M62) W/2 : Blower motor
D2 (M63) W/12 : To (D15)
E2 (M64) W/6 : To (D16)
D3 (M65) SMJ : To (E43)
D3 (M66) B/2 : To (E44)
D3 (M67) W/18 : To (C1)
D2 (M68) — : Body ground
G4 (M69) GY/2 : G-sensor (with 4-wheel ABS)
G4 (M70) GY/2 : G-sensor (with 4-wheel ABS)
G4 (M71) BR/1 : Door switch RH
A3 (M72) GY/12: Door mirror remote control switch
B2 (M73) W/6 : Joint connector-3
C3 (M74) W/6 : Joint connector-4

Diode (M3)
Solenoid valve unit
Overdrive control switch
ASCD control unit
Combination meter

Diode (M43)
Combination meter
Combination meter
ABS control unit (2-wheel ABS)
ABS Control unit (2-wheel ABS)

Diode (M44)
DTRL control unit
Combination meter
Parking brake switch

GI MA EM LC EC FE CL MT AT TF PD FA RA BR ST RS BT HA EL IDX

AEL642B

Simpo PDF Merge and Split Unregistered Version - http://www.simpopdf.com

Engine Room Harness

ENGINE COMPARTMENT

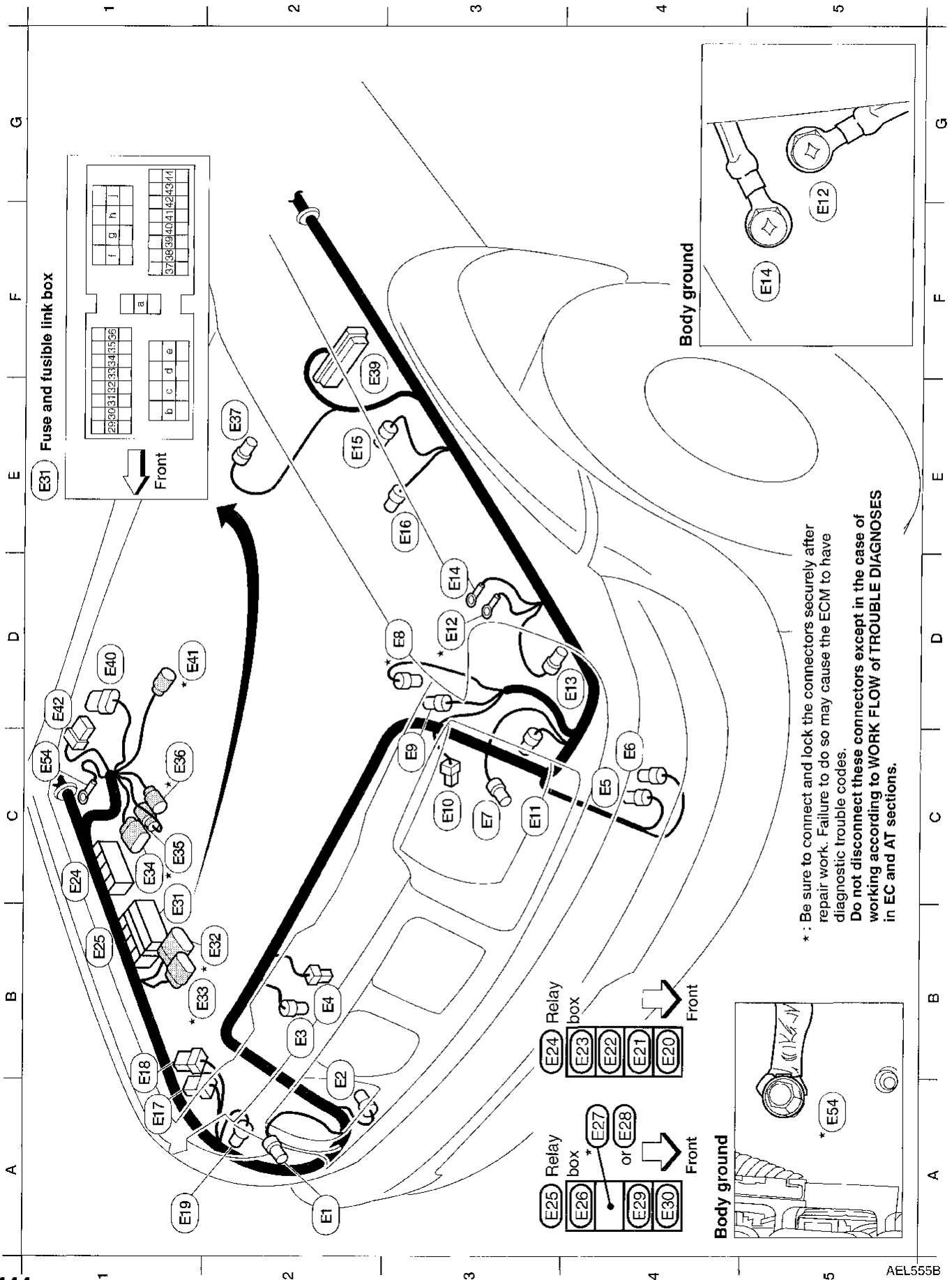

Simpo PDF Merge and Split Unregistered Version - http://www.simpopdf.com

A2 (E1) B/3 : Head lamp RH
B3 (E2) GY/2 : Front wheel sensor RH (with 4-wheel ABS)
B2 (E3) B/2 : Dual pressure sensor
B2 (E4) B/1 : Horn
C4 (E5) BR/2 : Washer fluid level switch (for Canada)
C4 (E6) GY/2 : Washer motor
C3 (E7) B/3 : Headlamp LH
D3 *(E8) W/2 : Intake air temperature sensor
C3 (E9) GY/2 : Hood switch
C3 (E10) B/1 : Theft warning horn
C3 (E11) B/1 : Front fog lamp sub-harness
D3 *(E12) — : Body ground
D4 (E13) GY/3 : Front combination lamp LH
E3 (E14) — : Body ground
E3 (E15) GY/4 : ASCD pump (with ASCD)
E3 (E16) BR/2 : Front wheel sensor LH (with 4-wheel ABS)
A1 (E17) GY/8 : Daytime light control unit (with DTRL)
B1 (E18) GY/6 : Daytime light control unit (with DTRL)
A1 (E19) GY/3 : Front combination lamp RH
B4 (E20) BR/6 : Theft warning horn relay
B4 (E21) B/5 : Park/Neutral position relay
B4 (E22) BR/6 : Theft warning lamp relay
B4 (E23) BR/6 : Multi-remote control relay
B1 (E24) — : Relay box
C1 (E25) — : Relay box
A4 (E26) L/4 : Power socket relay
A4 *(E27) BR/6 : Inhibitor relay (with A/T)
A4 (E28) L/4 : Clutch interlock relay (with M/T)
A4 (E29) W/3 : Horn relay
Relay box
Relay box
A4 (E30) L/4 : Air conditioner relay
B1 (E31) — : Fuse and fusible link box
B2 *(E32) GY/9 : To (E202)
B1 *(E33) GY/6 : To (E20) (with M/T)
C1 (E34) GY/8 : Inhibitor switch (with A/T)
C1 *(E35) W/2 : Inhibitor switch (with A/T)
C1 *(E36) GY/3 : Solenoid valve unit
E2 (E37) GY/2 : Brake fluid level switch
F2 (E38) B/27 : ABS actuator and electric unit (control unit)
D1 (E40) B/8 : Wiper amplifier
D1 *(E41) GY/3 : To (F25)
D1 (E42) W/6 : Wiper motor
C1 *(E54) — : Body ground

*: Be sure to connect and lock the connectors securely after repair work. Failure to do so may cause the ECM to have diagnostic trouble codes.
Do not disconnect these connectors except in the case of working according to WORK FLOW of TROUBLE DIAGNOSES in EC and AT sections.

AEL556B

Engine Room Harness (Cont'd)

Simpo PDF Merge and Split Unregistered Version - http://www.simpopdf.com

PASSENGER COMPARTMENT

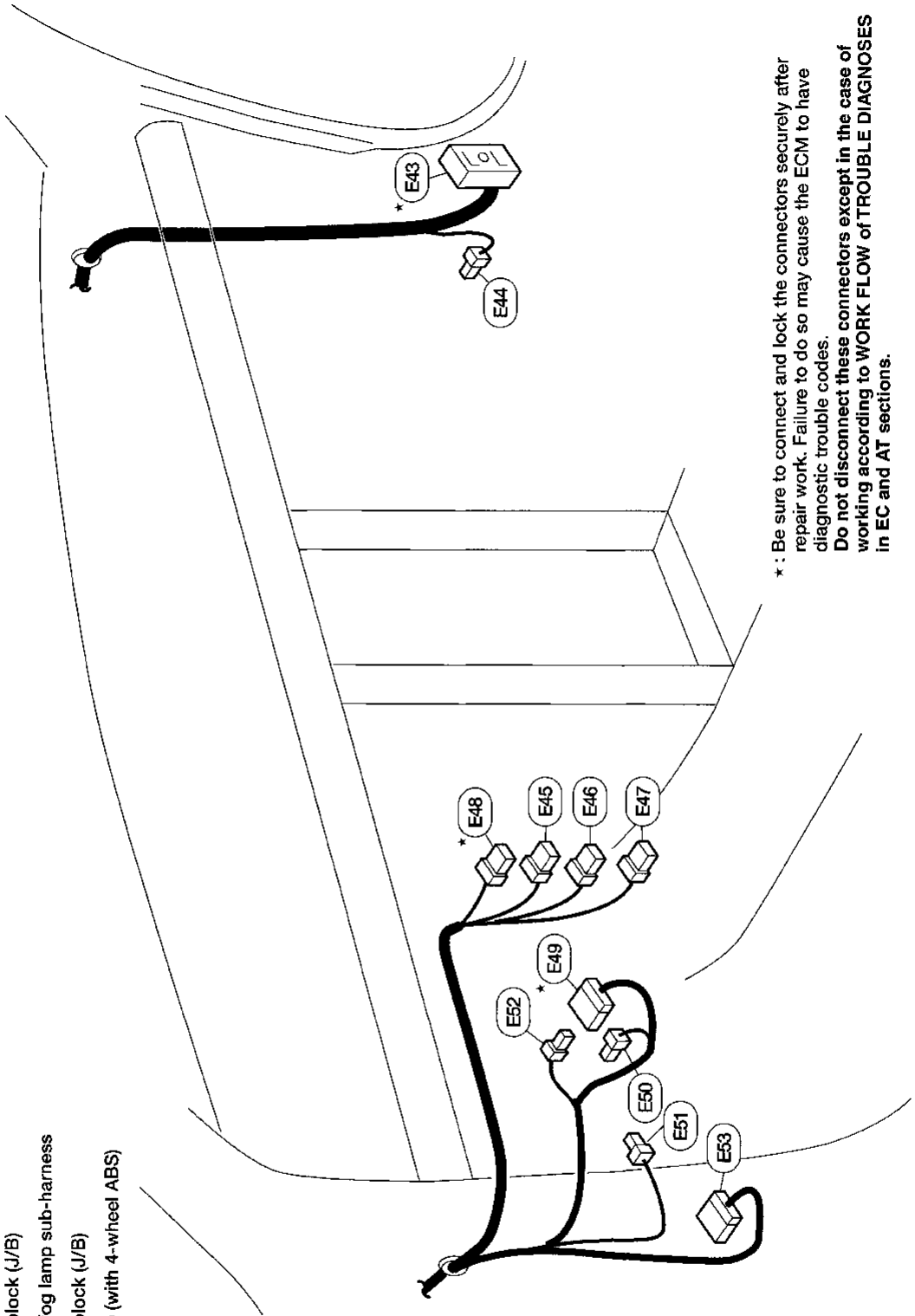

★ : Be sure to connect and lock the connectors securely after repair work. Failure to do so may cause the ECM to have diagnostic trouble codes.
Do not disconnect these connectors except in the case of working according to WORK FLOW of TROUBLE DIAGNOSES in EC and AT sections.

★(E43) W/48 : To (M65)
(E44) B/2 : To (M66)
(E45) W/8 : Combination switch (Lighting switch)
(E46) L/8 : Wiper switch
(E47) W/6 : Combination switch (Turn signal switch)
★(E48) W/6 : Ignition switch
★(E49) W/12 : Fuse block (J/B)
(E50) W/4 : Fuse block (J/B)
(E51) W/2 : Front fog lamp sub-harness
(E52) B/2 : Fuse block (J/B)
(E53) W/18 : To (M7) (with 4-wheel ABS)

AEL698B

Simpo PDF Merge and Split Unregistered Version - http://www.simpopdf.com

NOTES

Simpo PDF Merge and Split Unregistered Version - http://www.simpopdf.com

Engine Control Harness

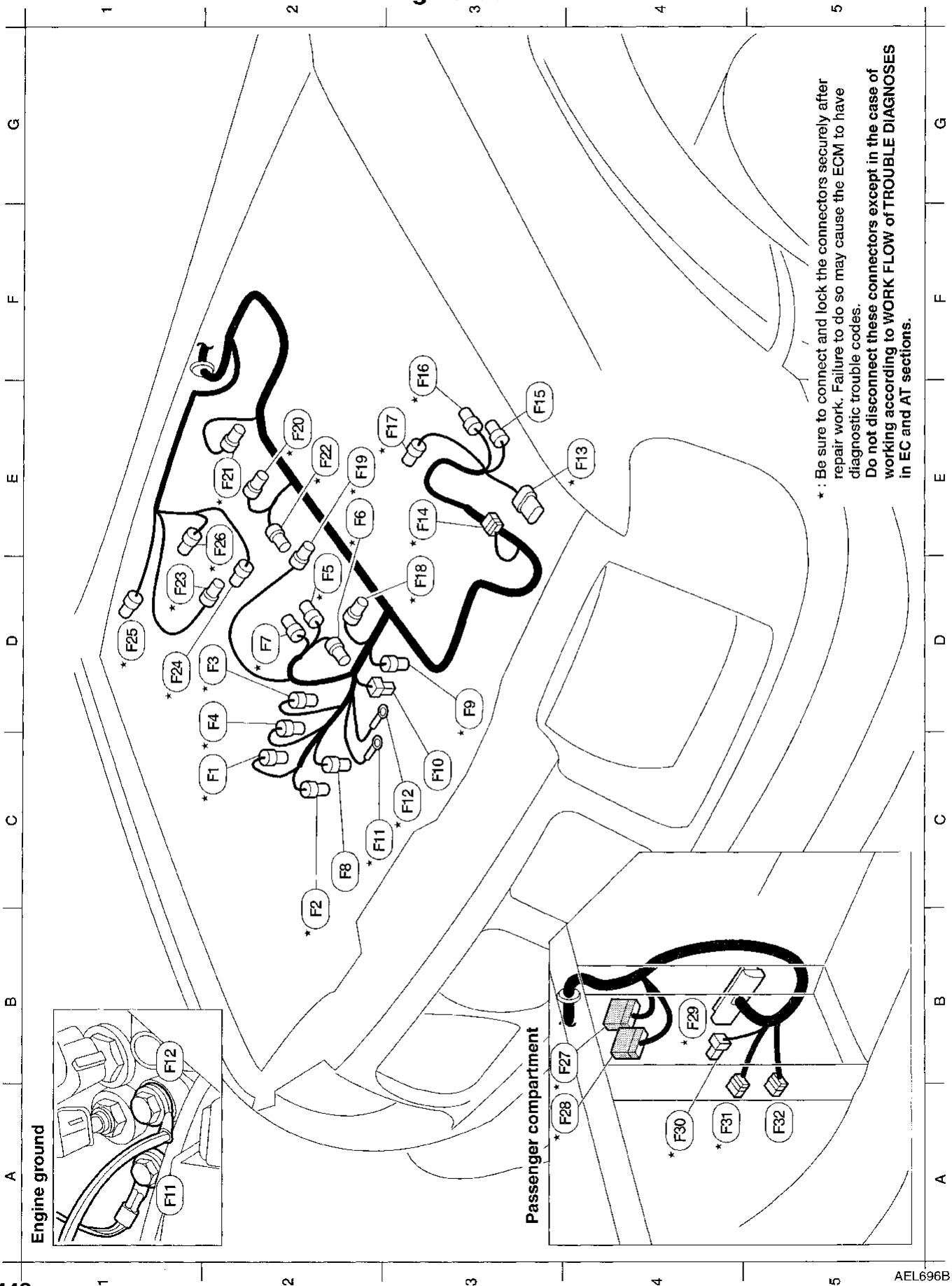

Simpo PDF Merge and Split Unregistered Version - http://www.simpopdf.com

C2 *(F1) BR/4 : Mass air flow sensor
B2 *(F2) GY/2 : Knock sensor
D2 *(F3) BR/3 : Throttle position sensor
D2 *(F4) GY/3 : Throttle position switch
D2 *(F5) GY/2 : EGR temperature sensor
E2 *(F6) BR/2 : IACV-AAC valve
D2 *(F7) PU/2 : IACV-FICD solenoid valve
C2 (F8) B/1 : Power steering oil pressure switch
D3 *(F9) GY/2 : Engine coolant temperature sensor
C3 (F10) B/1 : Thermal transmitter
C2 *(F11) — : Engine ground
C3 *(F12) — : Engine ground
E4 *(F13) GY/6 : Distributor (camshaft position sensor)
E3 *(F14) GY/2 : Resistor
E3 (F15) B/1 : A/C compressor
F3 *(F16) GY/3 : Front heated oxygen sensor
E3 *(F17) GY/2 : Distributor (ignition coil)
D3 *(F18) B/2 : Injector No. 1
E2 *(F19) B/2 : Injector No. 2
E2 *(F20) B/2 : Injector No. 3
E2 *(F21) B/2 : Injector No. 4
E2 *(F22) G/2 : EGRC-solenoid valve
D1 *(F23) GY/3 : Absolute pressure sensor
D1 *(F24) B/2 : MAP/BARO switch solenoid valve
D1 *(F25) GY/3 : To (E41)
E2 *(F26) L/2 : EVAP canister purge volume control solenoid valve
B4 *(F27) W/18 : To (M59)
A4 *(F28) W/16 : To (M58)
B4 *(F29) GY/68 : ECM
A4 *(F30) L/4 : ECCS relay
A4 *(F31) GY/6 : Joint connector-1
A5 (F32) GY/6 : Joint connector-2

*: Be sure to connect and lock the connectors securely after repair work. Failure to do so may cause the ECM to have diagnostic trouble codes.
Do not disconnect these connectors except in the case of working according to WORK FLOW of TROUBLE DIAGNOSES in EC and AT sections.

AEL697B

Simpo PDF Merge and Split Unregistered Version - http://www.simpopdf.com

Engine No. 2 Harness

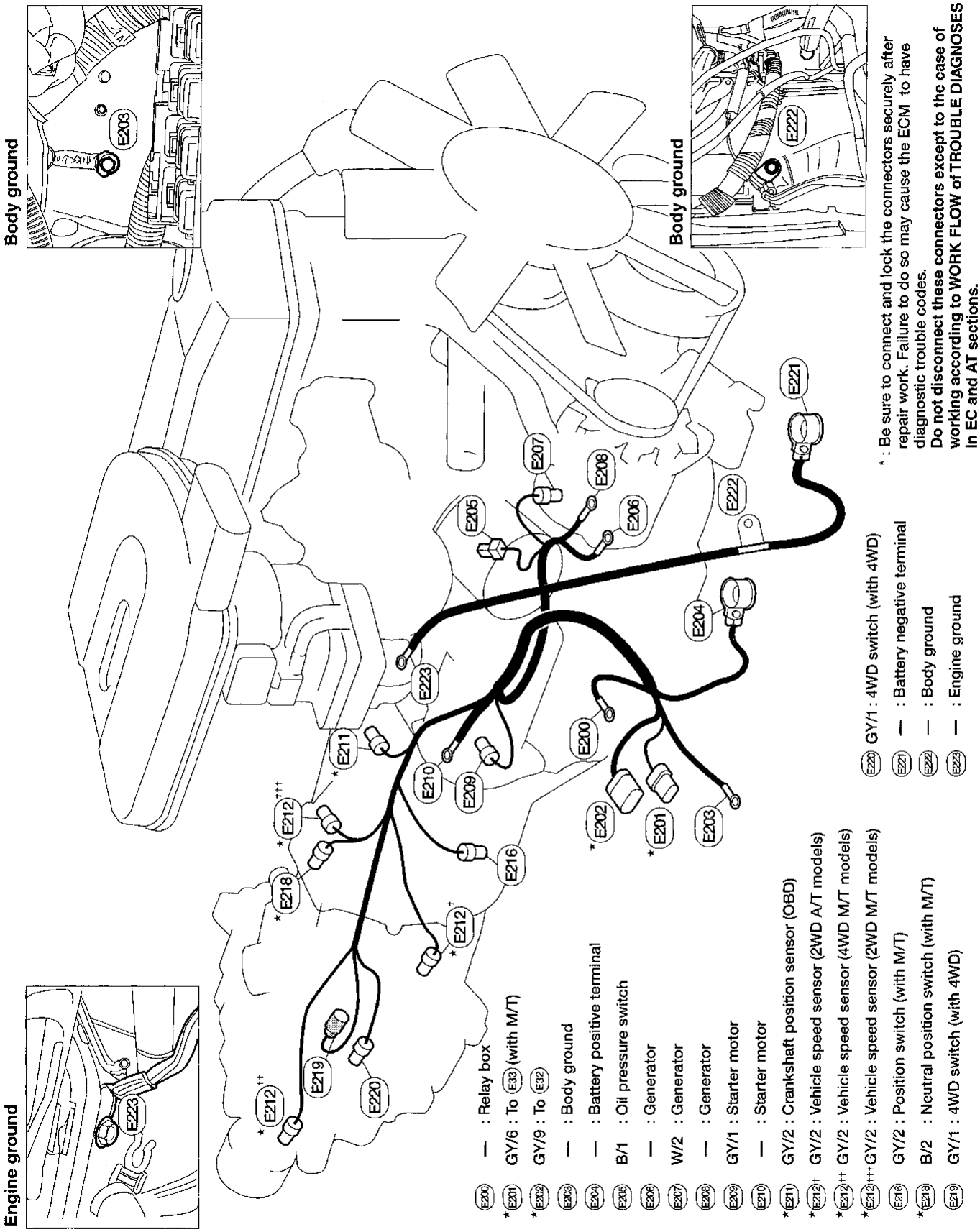

AEL608B

Simpo PDF Merge and Split Unregistered Version - http://www.simpopdf.com

NOTES

Simpo PDF Merge and Split Unregistered Version - http://www.simpopdf.com

Chassis and Tail Harness

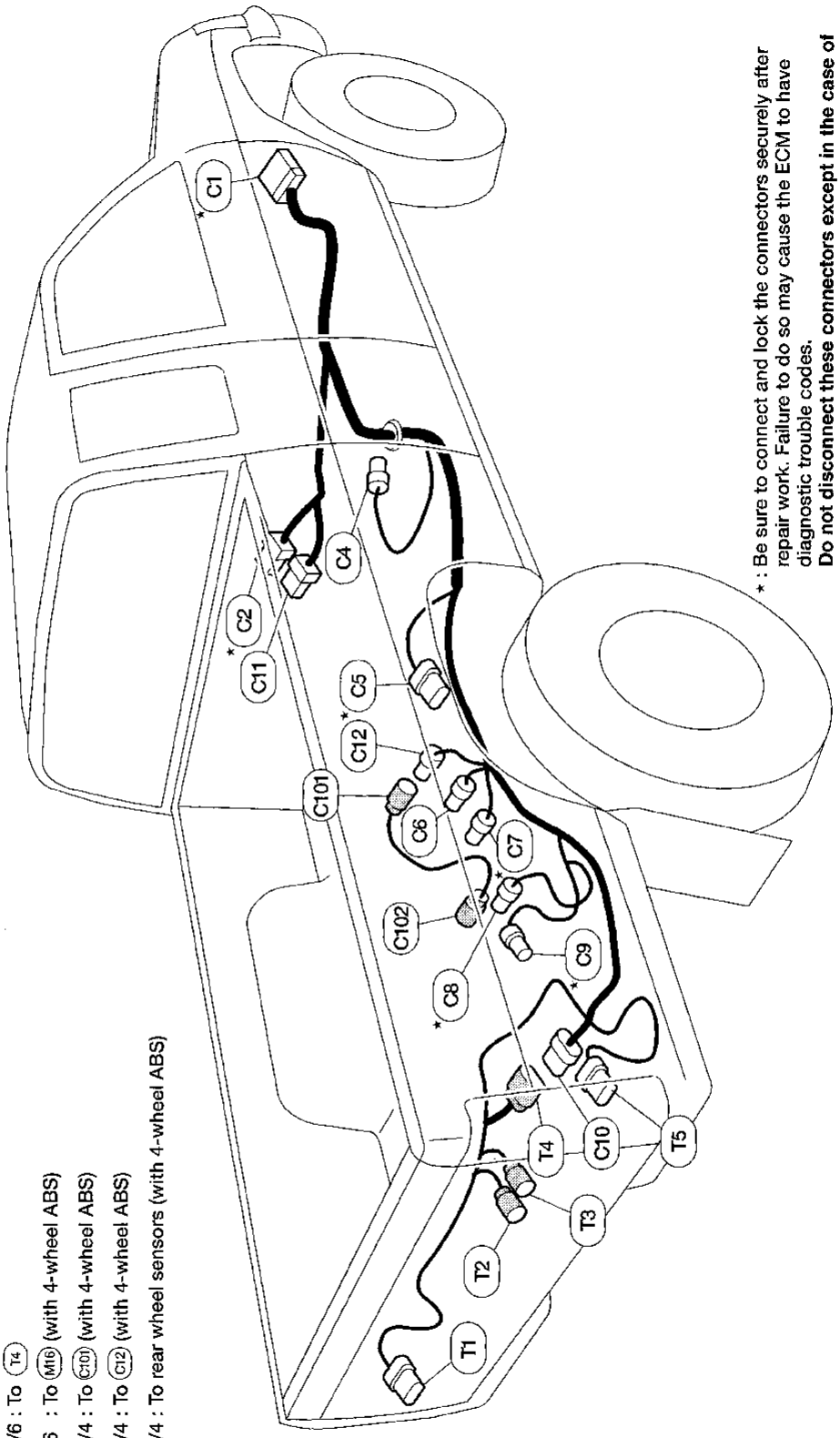

Chassis Harness

- *(C1) W/18 : To (M67)
- *(C2) W/8 : To (M17)
- (C4) GY/4 : ABS actuator (with 2-wheel ABS)
- *(C5) GY/6 : Fuel tank gauge unit
- (C6) GY/2 : Rear wheel sensor (with 2-wheel ABS)
- *(C7) GY/3 : EVAP control system pressure sensor
- *(C8) B/2 : EVAP canister vent control valve
- *(C9) G/2 : Vacuum cut valve bypass valve
- (C10) GY/6 : To (T4)
- (C11) W/6 : To (M16) (with 4-wheel ABS)
- (C12) GY/4 : To (C101) (with 4-wheel ABS)
- (C101) GY/4 : To (C12) (with 4-wheel ABS)
- (C102) GY/4 : To rear wheel sensors (with 4-wheel ABS)

Tail Harness

- (T1) GY/6 : Rear combination lamp LH
- (T2) GY/2 : License plate lamp LH
- (T3) GY/2 : License plate lamp RH
- (T4) GY/6 : To (C10)
- (T5) GY/6 : Rear combination lamp RH

*: Be sure to connect and lock the connectors securely after repair work. Failure to do so may cause the ECM to have diagnostic trouble codes.
Do not disconnect these connectors except in the case of working according to WORK FLOW of TROUBLE DIAGNOSES in EC and AT sections.

AEL590B

Simpo PDF Merge and Split Unregistered Version - http://www.simpopdf.com

Room Lamp Harness

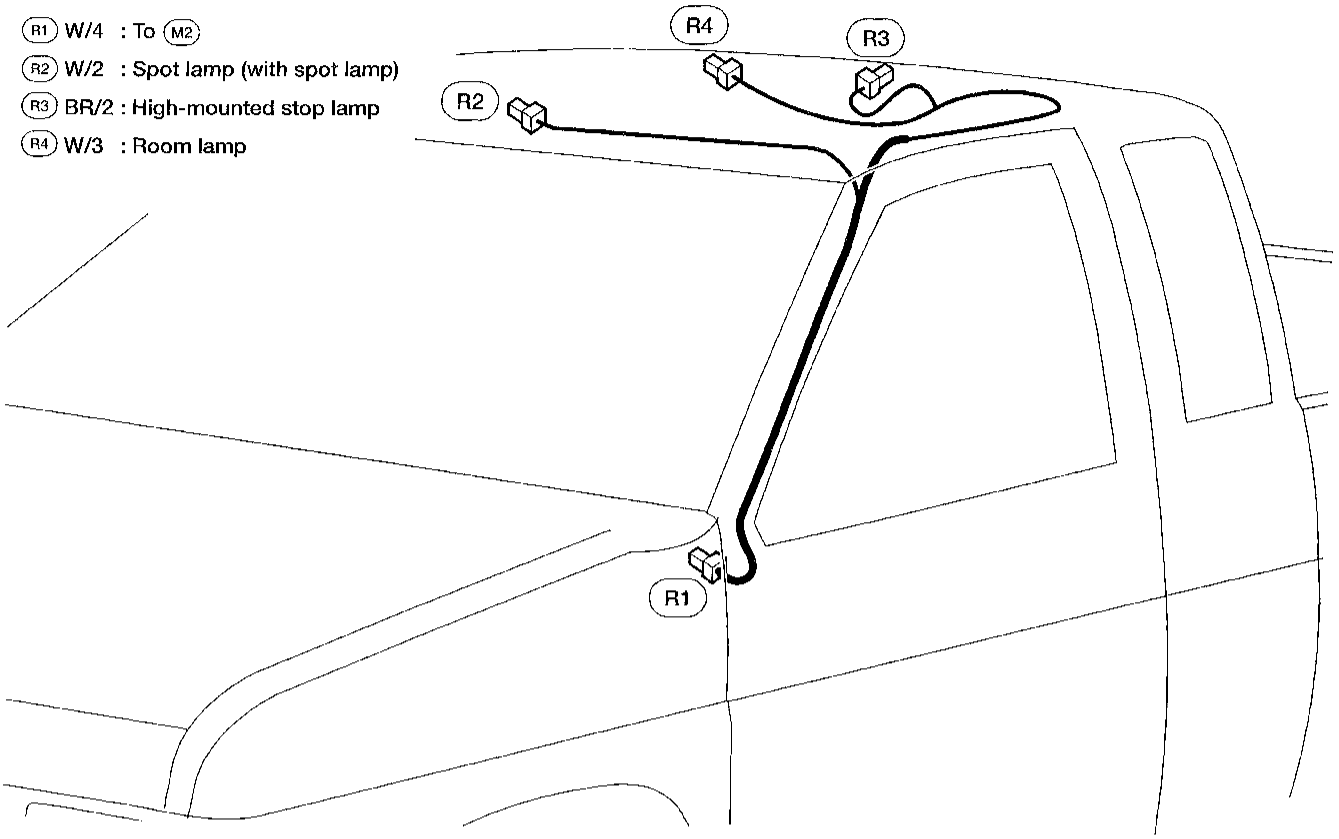

AEL609B

Simpo PDF Merge and Split Unregistered Version - http://www.simpopdf.com

Door Harness

LH side

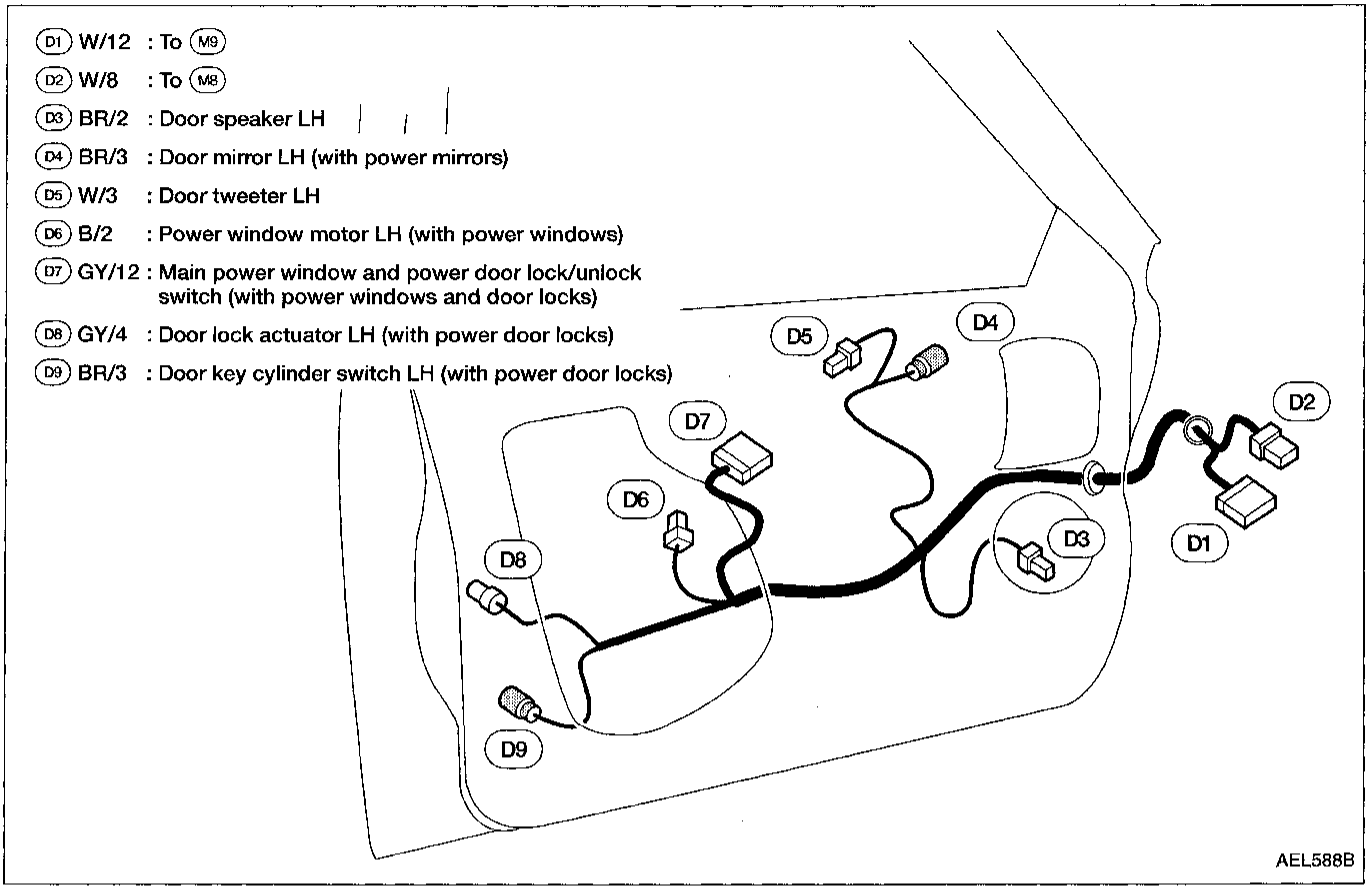

RH side

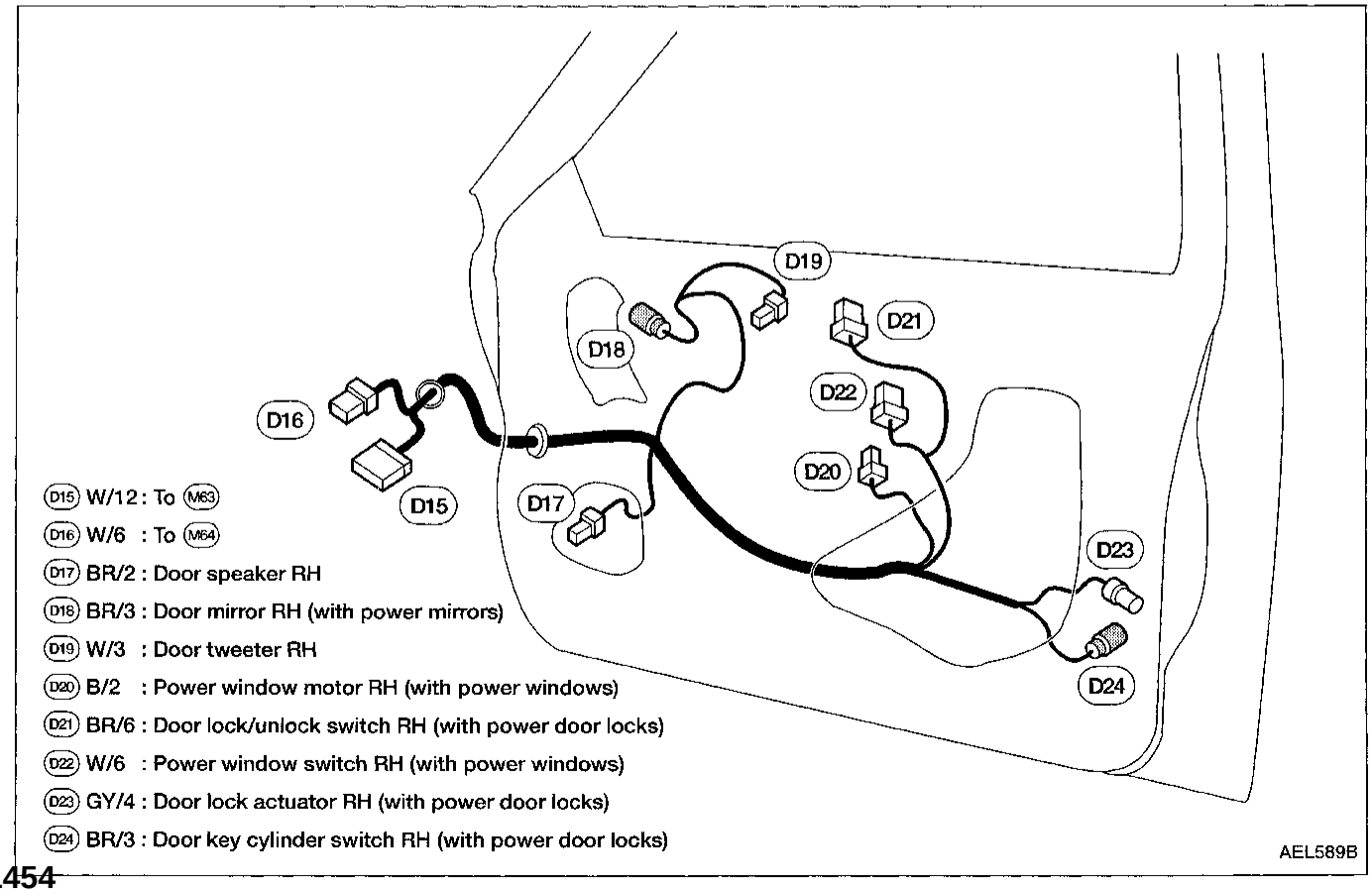

Simpo PDF Merge and Split Unregistered Version - http://www.simpopdf.com

Air Bag Harness

*Z1 W/4 : To Z15
Z2 W/2 : Passenger air bag deactivation switch indicator
Z3 W/6 : Passenger air bag deactivation switch
Z4 B/2 : Passenger air bag module
Z5 W/6 : Spiral cable
Z6 Y/22 : Air bag diagnosis unit
Z7 W/16 : To M18
*Z15 W/4 : To Z1

★ : With 4-wheel drive

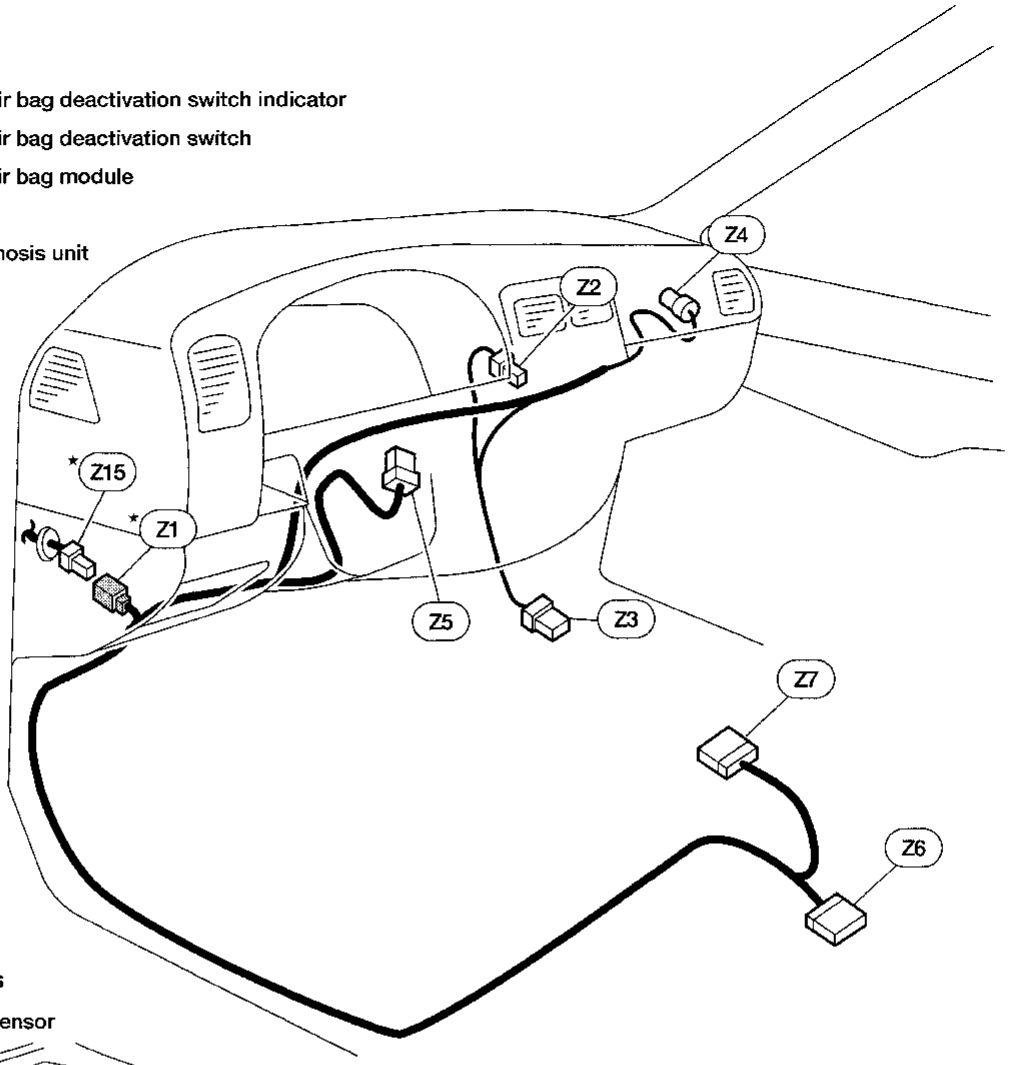

4-wheel drive models

Z16 GY/2 : Crash zone sensor

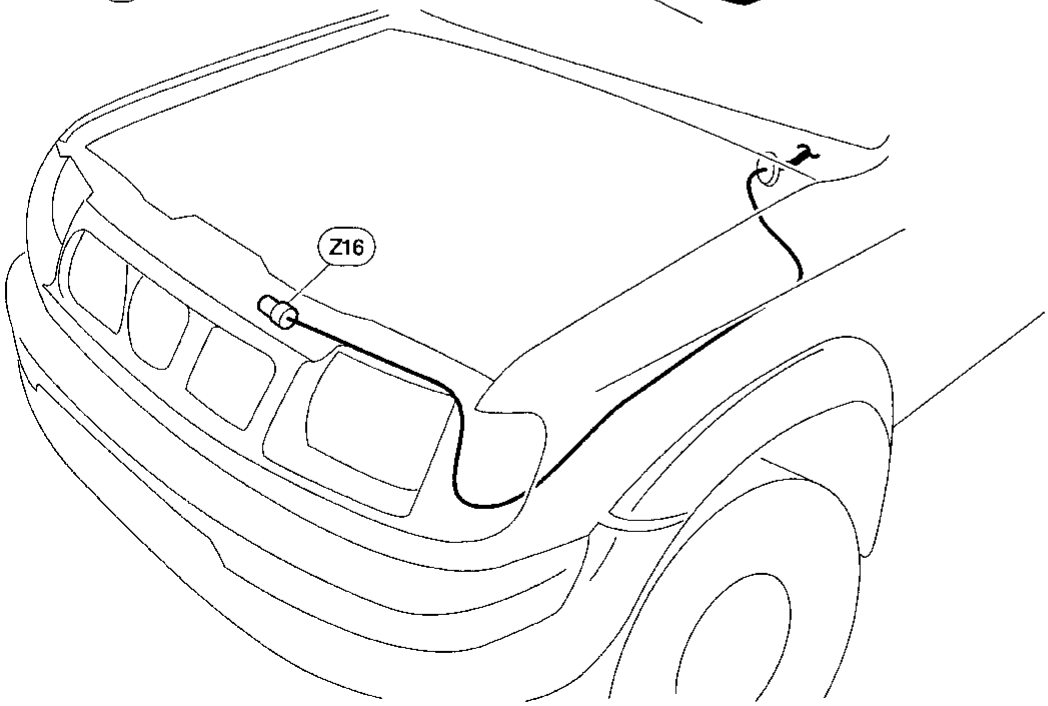

AEL695B

Simpo PDF Merge and Split Unregistered Version - http://www.simpopdf.com

Headlamp

	Wattage (12 volt)
High/low	65/55 (HB5)

Exterior Lamp

		Wattage (12 volt)
Front combination lamp	Turn signal	27
Rear combination lamp	Parking light	3.8
	Turn signal	27
	Stop/Tail	27/9
	Back-up	27
License plate lamp		5
High mounted stop lamp		2.3

Interior Lamp

	Wattage (12 volt)
Interior lamp	10
Spot lamp	8

Simpo PDF Merge and Split Unregistered Version - http://www.simpopdf.com

Use the chart below to find out what each wiring diagram code stands for.

Code	Section	Wiring Diagram Name
A/C	HA	Air Conditioner
A/T	AT	A/T
AAC/V	EC	IACV-AAC Valve
ABS	BR	Anti-Lock Brake System (4WD ABS)
ABS	BR	Anti-Lock Brake System (2WD ABS)
AP/SEN	EC	Absolute Pressure Sensor
ASCD	EL	Automatic Speed Control Device
AT/IND	EL	A/T Indicator Lamp
AUDIO	EL	Audio
BACK/L	EL	Back-up Lamp
BYPS/V	EC	Vacuum Cut Valve Bypass Valve
CHARGE	EL	Charging System
CHIME	EL	Warning Chime
CIGAR	EL	Cigarette Lighter
CKPS	EC	Crank Shaft Position Sensor (OBD)
CMPS	EC	Camshaft Position Sensor
D/LOCK	EL	Power Door Lock
DTRL	EL	Headlamp-With Daytime Light System
ECTS	EC	Engine Coolant Temperature Sensor
EGR/TS	EC	EGR Temperature Sensor
EGRC/V	EC	EGRC-Solenoid Valve
EGRC1	EC	EGR Function
F/PUMP	EC	Fuel Pump
FICD	EC	IACV-FICD Valve
FRO2	EC	Front Heated Oxygen Sensor
FRO2/H	EC	Front Heated Oxygen Sensor Heater
FUEL	EC	Fuel Injection System Function
H/LAMP	EL	Headlamp
HEATER	HA	Heater System
HORN	EL	Horn
IATS	EC	Intake Air Temperature Sensor
IGN/SG	EC	Ignition Signal
ILL	EL	Illumination
INJECT	EC	Injector
INT/L	EL	Spot Lamp
KS	EC	Knock Sensor
LKUP	EC	Torque Converter Clutch Solenoid Valve
MAFS	EC	Mass Air Flow Sensor
MAIN	EC	Main Power Supply and Ground Circuit
METER	EL	Speedometer, Tachometer, Temp. and Fuel Gauges
MIL/DL	EC	MIL and Data Link Connectors
MIRROR	EL	Door Mirror
MULTI	EL	Multi-Remote Control System
PGC/V	EC	EVAP Canister Purge Volume Control Solenoid Valve
PNP/SW	EC	Neutral Position Switch
POWER	EL	Power Supply Routing
PRE/SE	EC	Evap Control System Pressure Sensor
PST/SW	EC	Power Steering Oil Pressure Switch
ROOM/L	EL	Interior Room Lamp
RRO2	EC	Rear Heated Oxygen Sensor
RRO2/H	EC	Rear Heated Oxygen Sensor Heater
S/SIG	EC	Start Signal
SHIFT	AT	A/T Shift Lock System
SRS	RS	Supplemental Restraint System
START	EL	Starting System
STOP/L	EL	Stop Lamp
SW/V	EC	MAP/BARO Switch Solenoid Valve
TAIL/L	EL	Parking, License and Tail Lamps
TFTS	EC	Tank Fuel Temperature Sensor
THEFT	EL	Theft Warning System
TP/SW	EC	Throttle Position Switch
TPS	EC	Throttle Position Sensor
TURN	EL	Turn Signal and Hazard Warning Lamps
VENT/V	EC	Evap Canister Vent Control Valve
VSS	EC	Vehicle Speed Sensor
WARN	EL	Warning Lamps
WINDOW	EL	Power Window
WIPER	EL	Wiper and Washer

Simpo PDF Merge and Split Unregistered Version - http://www.simpopdf.com

SECTION EM

CONTENTS

PRECAUTIONS AND PREPARATION 2
Supplemental Restraint System (SRS) "AIR BAG" 2
Parts Requiring Angular Tightening 2
Liquid Gasket Application Procedure 2
Special Service Tools 4
Commercial Service Tools 7
NOISE, VIBRATION AND HARSHNESS (NVH) TROUBLESHOOTING 8
NVH Troubleshooting Chart—Engine Noise 9
OUTER COMPONENT PARTS 10
COMPRESSION PRESSURE 13
Measurement of Compression Pressure 13
OIL PAN 14
Removal 14
Installation 15
TIMING CHAIN 16
Removal 18
Upper Timing Chain 18
Lower Timing Chain 20
Inspection 21
Installation 21
Lower Timing Chain 21
Upper Timing Chain 22
OIL SEAL REPLACEMENT 25
Valve Oil Seal 25
Oil Seal Installing Direction 25
Front Oil Seal 25
Rear Oil Seal 26
CYLINDER HEAD 28
Removal and Installation 29
Disassembly 29
Inspection 30
Assembly 35
Valve Clearance 35
Checking 35
Adjusting 36
ENGINE REMOVAL 38
Removal 39
Installation 40
CYLINDER BLOCK 41
Disassembly 42
Inspection 42
Assembly 48
SERVICE DATA AND SPECIFICATIONS (SDS) 52
General Specifications 52
Compression Pressure 52
Inspection and Adjustment 52
Cylinder Head 52
Valve 52
Camshaft And Camshaft Bearing 56
Piston, Piston Ring And Piston Pin 57
Connecting Rod 57

Simpo PDF Merge and Split Unregistered Version - http://www.simpopdf.com

Supplemental Restraint System (SRS) "AIR BAG"

The Supplemental Restraint System "AIR BAG", used along with a seat belt, helps to reduce the risk or severity of injury to the driver and front passenger in a frontal collision. The Supplemental Restraint System consists of air bag modules (located in the center of the steering wheel and in the instrument panel on the passenger side), a diagnosis sensor unit, a crash zone sensor (4WD models), warning lamp, wiring harness and spiral cable.
The vehicle is equipped with a passenger air bag deactivation switch. Because no rear seat exists where a rear-facing child restraint can be placed, the switch is designed to turn off the passenger air bag so that a rear-facing child restraint can be used in the front passenger seat. The switch is located in the center of the instrument panel, near the ashtray. When the switch is turned to the ON position, the passenger air bag is enabled and could inflate in a frontal collision. When the switch is turned to the OFF position, the passenger air bag is disabled and will not inflate in a frontal collision. A passenger air bag OFF indicator on the instrument panel lights up when the passenger air bag is switched OFF. The driver air bag always remains enabled and is not affected by the passenger air bag deactivation switch.
Information necessary to service the system safely is included in the **RS section** of this Service Manual.

WARNING:

- **To avoid rendering the SRS inoperative, which could increase the risk of personal injury or death in the event of a collision which would result in air bag inflation, all maintenance should be performed by an authorized NISSAN dealer.**
- **Improper maintenance, including incorrect removal and installation of the SRS, can lead to personal injury caused by unintentional activation of the system.**
- **Do not use electrical test equipment on any circuit related to the SRS unless instructed to in this Service Manual. SRS wiring harnesses are covered with yellow insulation either just before the harness connectors or on the complete harness, for easy identification.**
- **The vehicle is equipped with a passenger air bag deactivation switch which can be operated by the customer. When the passenger air bag is switched OFF, the passenger air bag is disabled and will not inflate in a frontal collision. When the passenger air bag is switched ON, the passenger air bag is enabled and could inflate in a frontal collision. After SRS maintenance or repair, make sure the passenger air bag deactivation switch is in the same position (ON or OFF) as when the vehicle arrived for service.**

Parts Requiring Angular Tightening

- Use an angle wrench for the final tightening of the following engine parts:
  (1) Cylinder head bolts
  (2) Connecting rod cap nuts
- Do not use a torque value for final tightening.
- The torque values for these parts are for a preliminary step.
- Ensure thread and seat surfaces are clean and coated with engine oil.

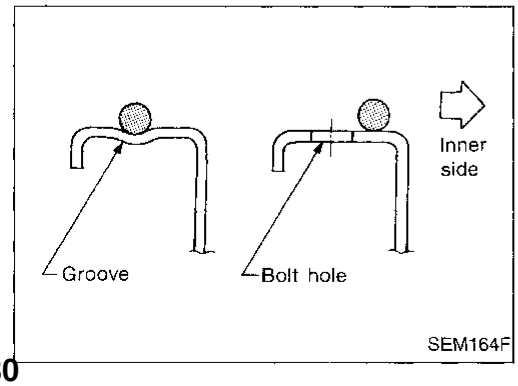

Liquid Gasket Application Procedure

a. **Use a scraper to remove all traces of old liquid gasket from mating surfaces and grooves. Also, completely clean any oil from these areas.**
b. **Apply a continuous bead of liquid gasket to mating surfaces. (Use Genuine RTV Silicone Sealant, Part No. 999 MP-A7007, Three Bond TB1207D or equivalent.)**
   - **For oil pan, be sure liquid gasket diameter is 3.5 to 4.5 mm (0.138 to 0.177 in).**
   - **For areas except oil pan, be sure liquid gasket diameter is 2.0 to 3.0 mm (0.079 to 0.118 in).**

Liquid Gasket Application Procedure (Cont'd)

Simpo PDF Merge and Split Unregistered Version - http://www.simpopdf.com

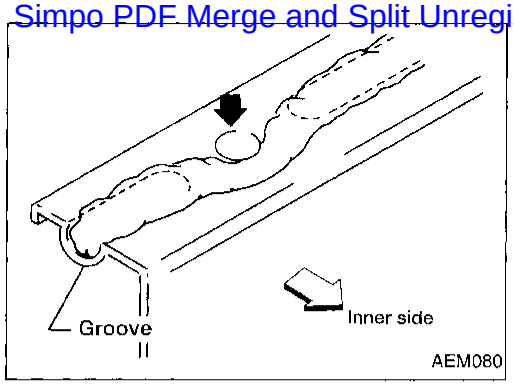

c. Apply liquid gasket around the inner side of bolt holes (unless otherwise specified).
d. Assembly should be done within 5 minutes after coating.
e. Wait at least 30 minutes before refilling engine oil and engine coolant.

Simpo PDF Merge and Split Unregistered Version - http://www.simpopdf.com

Special Service Tools

The actual shapes of Kent-Moore tools may differ from those of special service tools illustrated here.

Tool number (Kent-Moore No.) Tool name	Description	
ST0501S000 (—) Engine stand assembly ① ST05011000 (—) Engine stand ② ST05012000 (—) Base	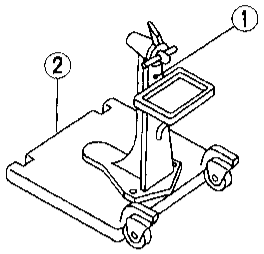 NT042	Disassembling and assembling
KV10105001 (—) Engine attachment	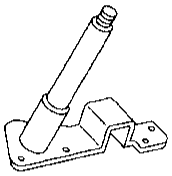 NT031	
KV101092S0 (J26336-B) Valve spring compressor ① KV10109210 (—) Compressor ② KV10109220 (—) Adapter	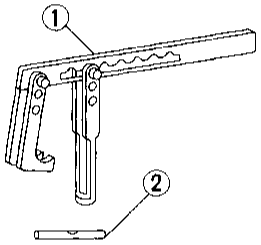 NT021	Disassembling and assembling valve components)
KV10110300 (—) Piston pin press stand assembly ① KV10110310 (—) Cap ② KV10110330 (—) Spacer ③ ST13030020 (—) Press stand ④ ST13030030 (—) Spring ⑤ KV10110340 (—) Drift ⑥ KV10110320 (—) Center shaft	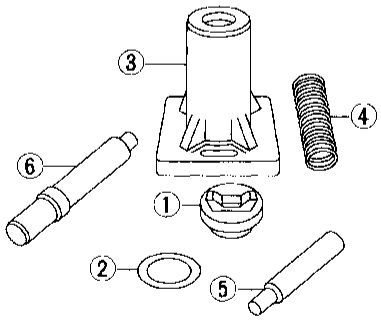 NT036	Disassembling and assembling piston with connecting rod

Special Service Tools (Cont'd)

Simpo PDF Merge and Split Unregistered Version - http://www.simpopdf.com

Tool number (Kent-Moore No.) Tool name	Description	
EM03470000 (J8037) Piston ring compressor	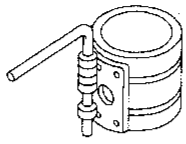 NT044	Installing piston assembly into cylinder bore
(J36467) Valve oil seal remover	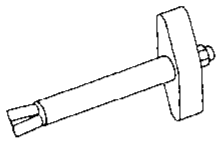 NT034	Removing valve oil seal
ST16610001 (J23907) Pilot bushing puller	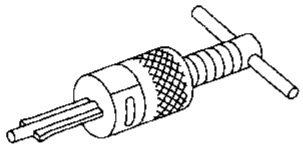 NT045	Removing crankshaft pilot bushing
KV10111100 (J37228) Seal cutter	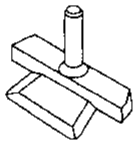 NT046	Removing oil pan
WS39930000 (—) Tube presser	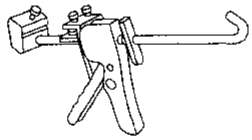 NT052	Pressing the tube of liquid gasket
KV10112100 (BT8653-A) Angle wrench	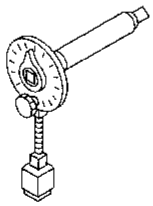 NT014	Tightening bolts for bearing cap, cylinder head, etc.
KV10116300 (J-38955) Valve oil seal drift	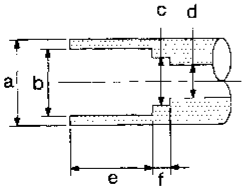 NT602 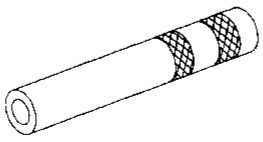	Installing valve oil seal **a: 25 (0.98) dia.** **b: 14.4 (0.567) dia.** **c: 11.8 (0.465) dia.** **d: 10 (0.39) dia.** **e: 11 (0.43)** **f : 9 (0.35)** Unit: mm (in)

Special Service Tools (Cont'd)

Simpo PDF Merge and Split Unregistered Version - http://www.simpopdf.com

Tool number (Kent-Moore No.) Tool name	Description	
ST10120000 (J24239-01) Cylinder head bolt wrench	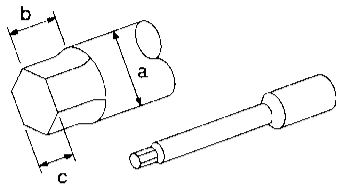 NT583	Loosening and tightening cylinder head bolt **a: 13 (0.51) dia.** **b: 12 (0.47)** **c: 10 (0.39)** Unit: mm (in)
KV101151S0 (J38972) Lifter stopper set ① KV10115110 (J38972-1) Camshaft pliers ② KV10115120 (J38972-2) Lifter stopper	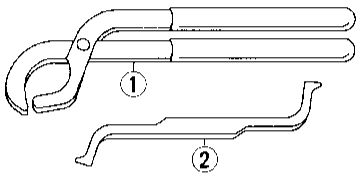 NT041	Changing valve lifter shims
KV10117100 (J36471-A) Front heated oxygen sensor wrench	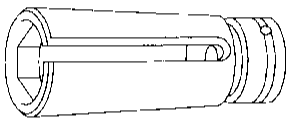 NT630	Removing and installing front heated oxygen sensor [22 mm (0.87 in) type]

Simpo PDF Merge and Split Unregistered Version - http://www.simpopdf.com

Commercial Service Tools

Tool name	Description	
Spark plug wrench	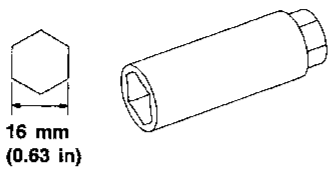 NT047	Removing and installing spark plug
Pulley holder	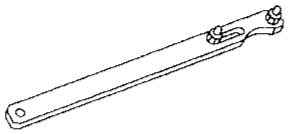 NT035	Holding camshaft pulley while tightening or loosening camshaft bolt
Valve seat cutter set	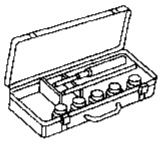 NT048	Finishing valve seat dimensions
Piston ring expander	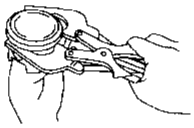 NT030	Removing and installing piston ring
Valve guide drift	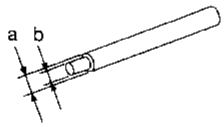 NT015	Removing and installing valve guide Diameter mm (in) Intake & Exhaust a: 10.5 (0.413) b: 6.6 (0.260)
Valve guide reamer	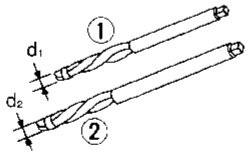 NT016	Reaming valve guide (①) or hole for oversize valve guide (②) Diameter: mm (in) Intake & Exhaust d_1: 7 (0.28) d_2: 11.175 (0.4400)

Simpo PDF Merge and Split Unregistered Version - http://www.simpopdf.com

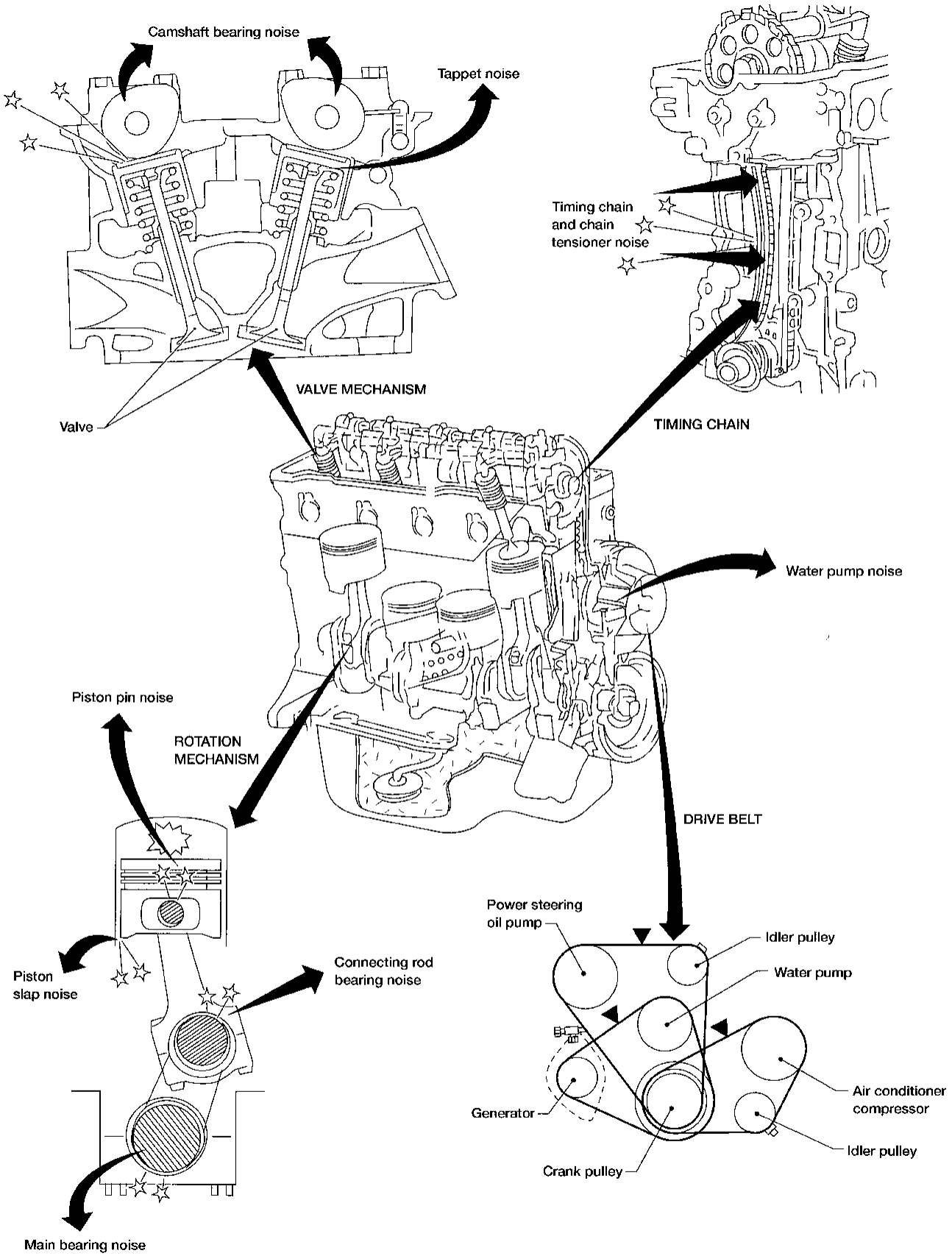

AEM399

Simpo PDF Merge and Split Unregistered Version - http://www.simpopdf.com

NVH Troubleshooting Chart—Engine Noise

Use the chart below to help you find the cause of the symptom.
1. Locate the area where noise occurs.
2. Confirm the type of noise.
3. Specify the operating condition of the engine.
4. Check the specified noise source.

If necessary, repair or replace these parts.

Location of noise	Type of noise	Operating condition of engine						Source of noise	Check item	Reference page
		Before warm-up	After warm-up	When starting	When idling	When revving	While driving			
Top of engine Rocker cover Cylinder head	Ticking or clicking	C	A	—	A	B	—	Tappet noise	Valve clearance	EM-35
	Rattle	C	A	—	A	B	C	Camshaft bearing noise	Camshaft journal clearance Camshaft runout	EM-30
Crankshaft pulley Cylinder block (upper side of engine) Oil pan	Slap or knock	—	A	—	B	B	—	Piston pin noise	Pistion and piston pin clearance Connecting rod bushing clearance	EM-42, 48
	Slap or rap	A	—	—	B	B	A	Piston slap noise	Piston ring side clearance Piston ring end gap Connecting rod bend and torsion Piston-to-bore clearance	EM-43, 44
	Knock	A	B	C	B	B	B	Connecting rod-bearing noise	Connecting rod bearing clearance (Big end) Connecting rod bushing clearance (Small end)	EM-47, 48
	Knock	A	B	—	A	B	C	Main bearing noise	Crankshaft runout Main bearing oil clearance	EM-45
Front of engine Timing chain cover	Tapping or ticking	A	A	—	B	B	B	Timing chain and chain tensioner noise	Timing chain cracks and wear	EM-21
Front of engine	Squeaking or fizzing	A	B	—	B	—	C	Other drive belts (Sticking or slipping)	Drive belt deflection	MA Section ("Checking Drive Belts", "ENGINE MAINTENANCE")
	Creaking	A	B	A	B	A	B	Other drive belts (Slipping)	Idler pulley bearing operation	
	Squall creak	A	B	—	B	A	B	Water pump noise	Water pump operation	LC Section ("Water Pump Inspection", "ENGINE COOLING SYSTEM")

A: Closely related B: Related C: Sometimes related —: Not related

Simpo PDF Merge and Split Unregistered Version - http://www.simpopdf.com

SEC. 120 • 140 • 147 • 150 • 163 • 164 • 210 • 220 • 221 • 230 • 231

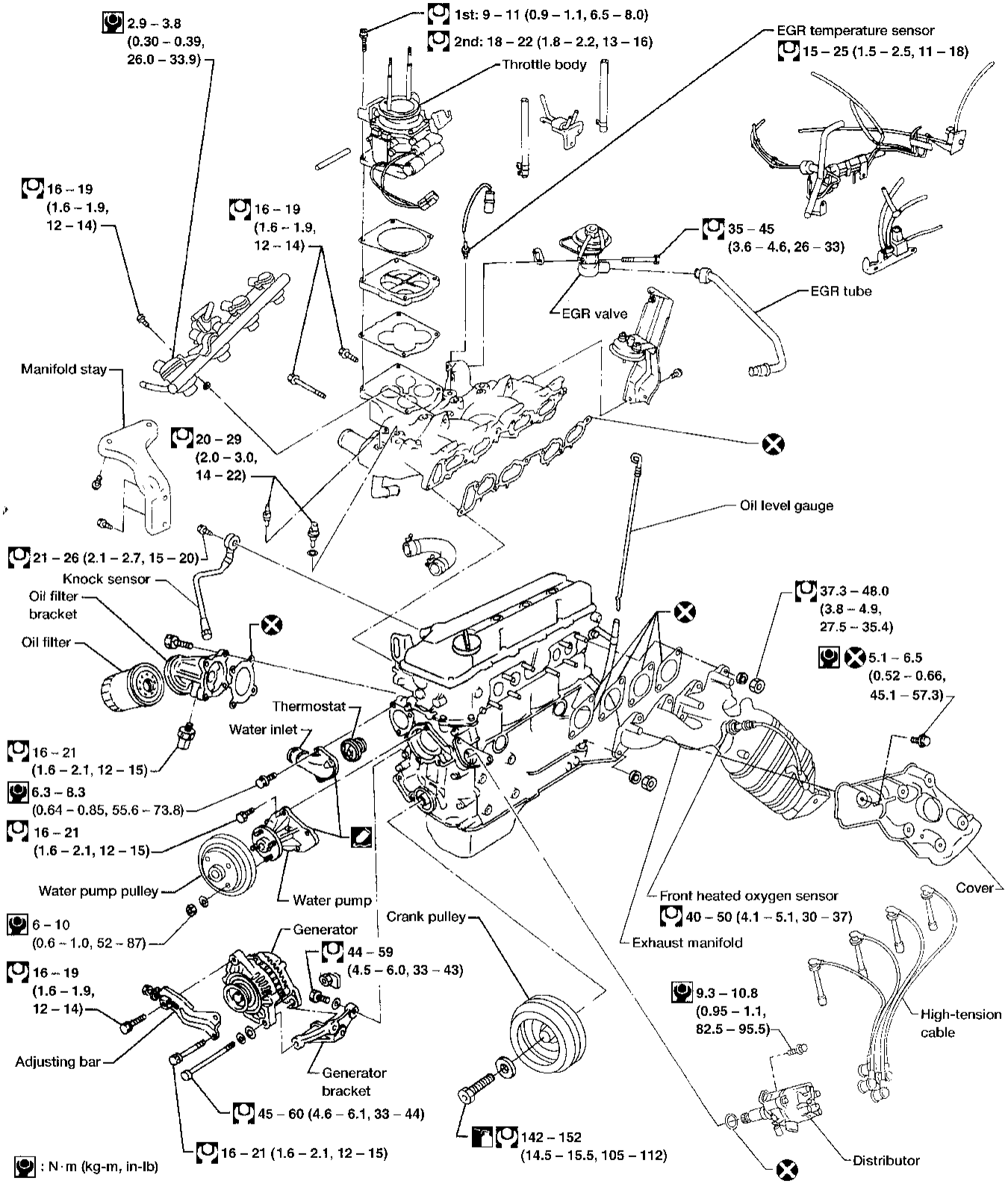

AEM366

Simpo PDF Merge and Split Unregistered Version - http://www.simpopdf.com

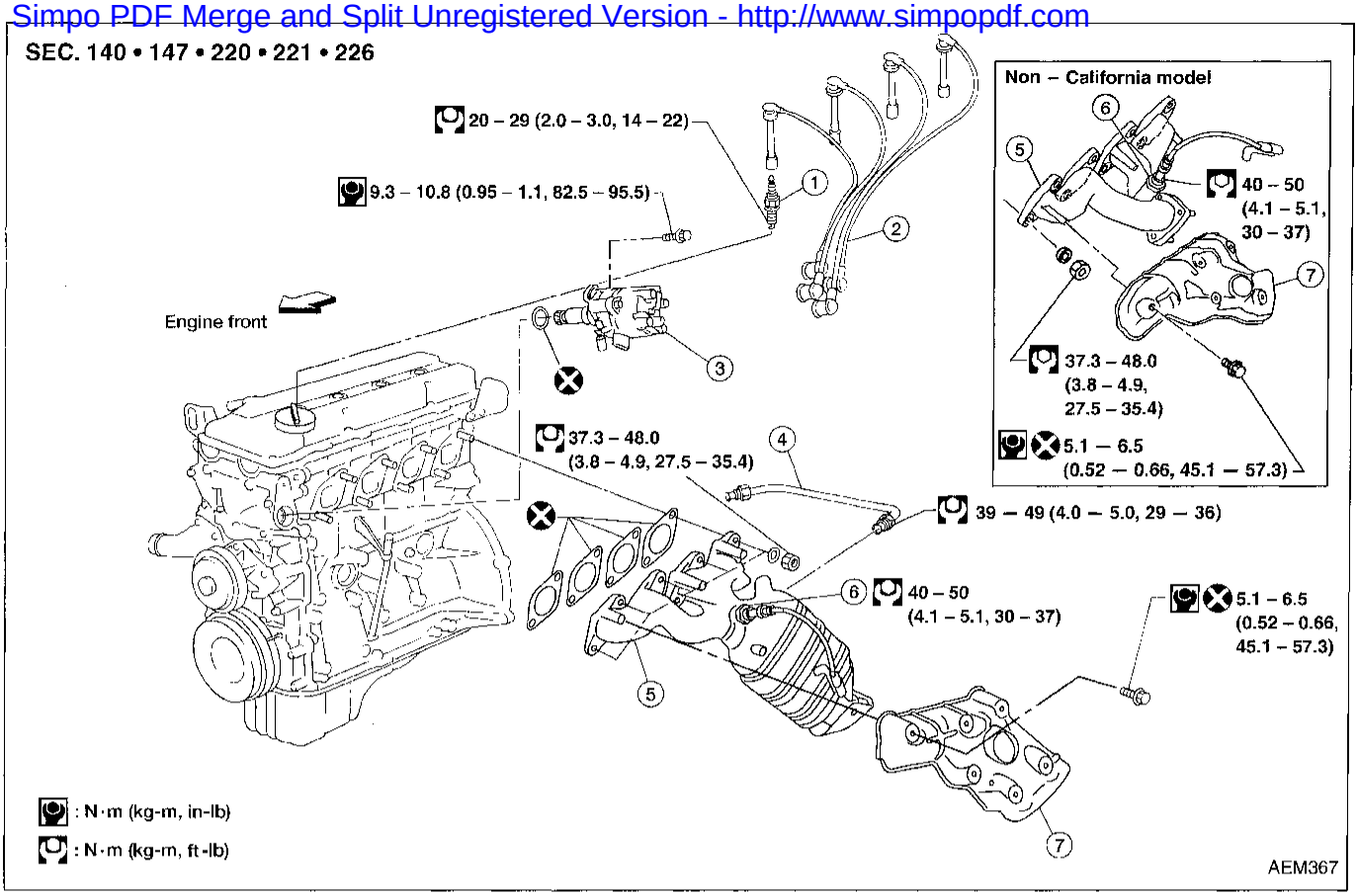

① Spark plug
② Ignition wire
③ Camshaft position sensor built into distributor
④ EGR tube
⑤ Exhaust manifold
⑥ Front heated oxygen sensor
⑦ Exhaust manifold cover

Simpo PDF Merge and Split Unregistered Version - http://www.simpopdf.com

Intake manifold

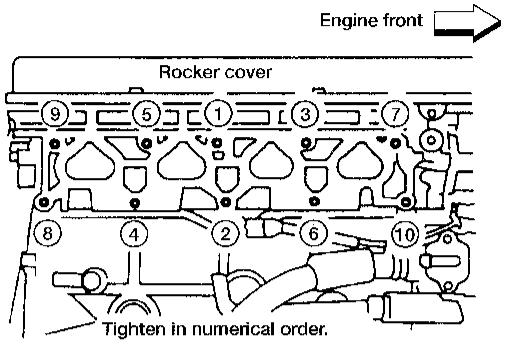

Tighten in numerical order.
Loosen in reverse order.
15.7 – 18.6 (1.6 – 1.9, 11.6 – 13.7)

Exhaust manifold

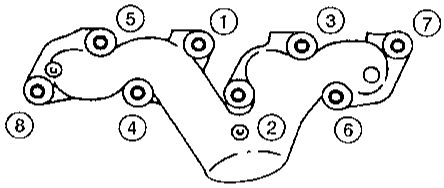

Tighten in numerical order.
Loosen in reverse order.
37.3 – 48.0 (3.8 – 4.9, 27.5 – 35.4)

: N·m (kg-m, ft-lb)

Throttle body

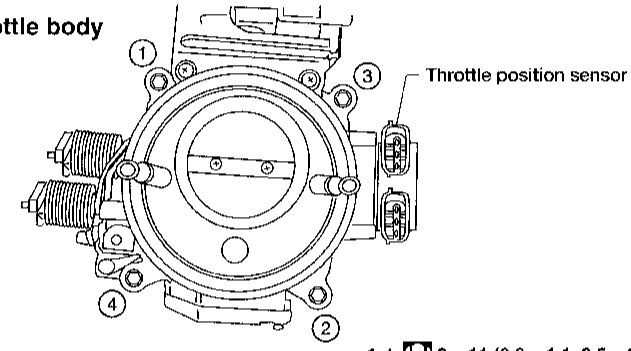

Tighten in numerical order.
Loosen in reverse order.

1st: 9 – 11 (0.9 – 1.1, 6.5 – 8.0)
2nd: 18 – 22 (1.8 – 2.2, 13 – 16)

AEM368

Simpo PDF Merge and Split Unregistered Version - http://www.simpopdf.com

Measurement of Compression Pressure

1. Warm up engine.
2. Turn ignition switch off.
3. Release fuel pressure.
   Refer to EC section ("Fuel Pressure Release", "BASIC SERVICE PROCEDURE").
4. Remove all spark plugs.
5. Disconnect distributor center cable.

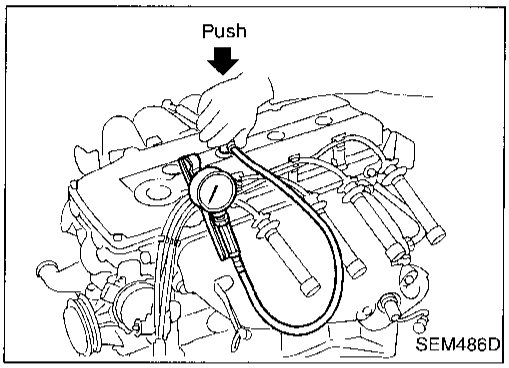

6. Attach a compression tester to No. 1 cylinder.
7. Depress accelerator pedal fully to keep throttle valve wide open.
8. Crank engine and record highest gauge indication.
9. Repeat the measurement on each cylinder as shown above.

- **Always use a fully-charged battery to obtain specified engine speed.**

Compression pressure: kPa (kg/cm^2, psi)/rpm

Standard

1,226 (12.5, 178)/300

Minimum

1,030 (10.5, 149)/300

Difference limit between cylinders

98 (1.0, 14)/300

10. If compression in one or more cylinders is low:
    a. Pour a small amount of engine oil into cylinders through spark plug holes.
    b. Retest compression.

- **If adding oil improves cylinder compression, piston rings may be worn or damaged. If so, replace piston rings after checking piston.**
- **If pressure stays low, a valve may be sticking or seating improperly. Inspect and repair valve and valve seat. (Refer to SDS, EM-52 and EM-54.) If valve or valve seat is damaged excessively, replace it.**
- **If compression stays low in two cylinders that are next to each other:**
  a. The cylinder head gasket may be leaking, or
  b. Both cylinders may have valve component damage. Inspect and repair as necessary.

Simpo PDF Merge and Split Unregistered Version - http://www.simpopdf.com

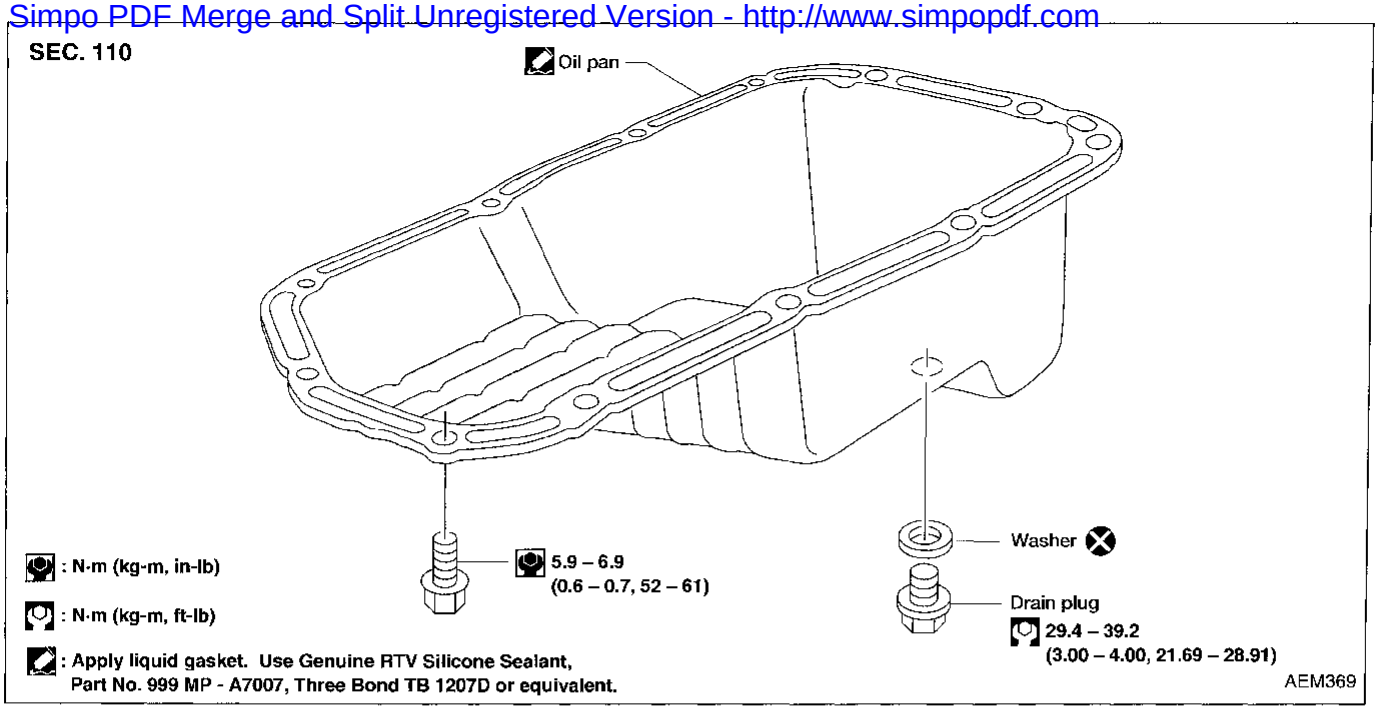

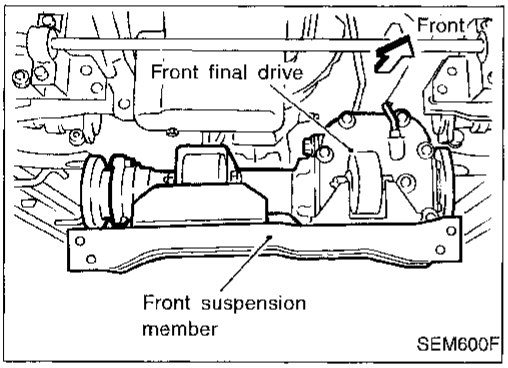

Removal

1. Raise vehicle and support it with safety stands.
2. Remove engine under cover.
3. Drain engine oil.
4. Remove front final drive together with differential mounting member. Refer to PD section ("Removal and Installation", "Front final drive") — 4WD models only.
5. Remove front suspension member.

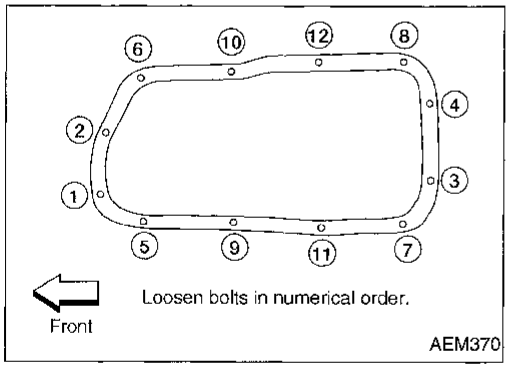

6. Remove oil pan bolts.

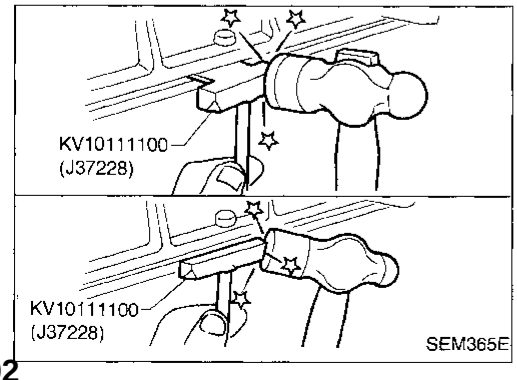

7. Remove oil pan.
a. Insert Tool between cylinder block and oil pan.
- **Be careful not to damage aluminum mating surface.**
- **Do not insert screwdriver, or oil pan flange will be damaged.**

b. Slide Tool by tapping on the side of the Tool with a hammer.
8. Pull out oil pan from front side.

Simpo PDF Merge and Split Unregistered Version - http://www.simpopdf.com

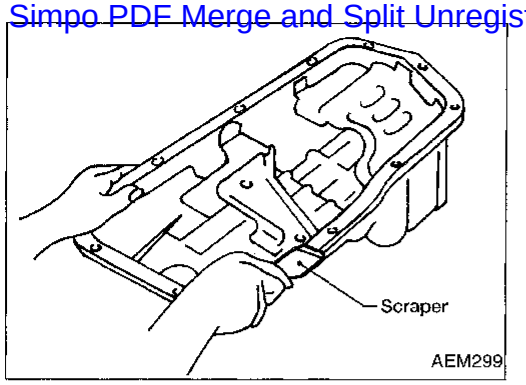

Installation

1. Use a scraper to remove old liquid gasket from mating surface of oil pan.
- **Also remove traces of liquid gasket from mating surface of cylinder block.**

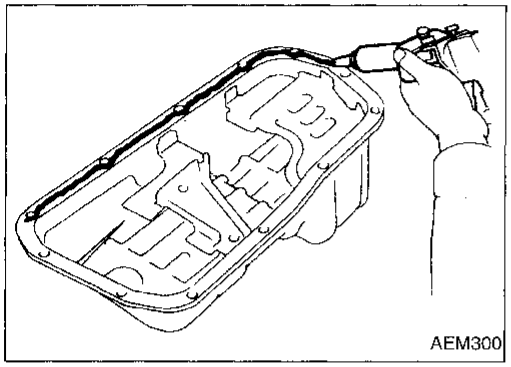

2. Apply a continuous bead of liquid gasket to mating surface of oil pan.
- **Use Genuine RTV Silicone Sealant, Part No. 999 MP-A7007, Three Bond TB1207D or equivalent.**
- **Apply to groove on mating surface.**
- **Allow 7 mm (0.28 in) clearance around bolt hole.**

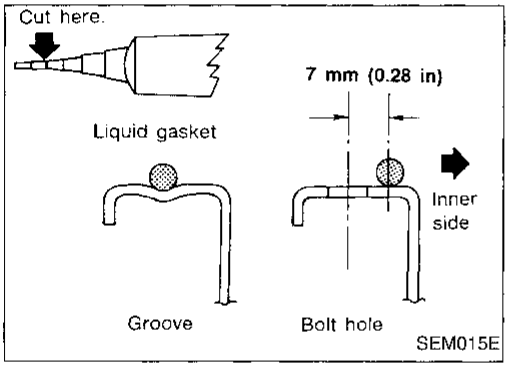

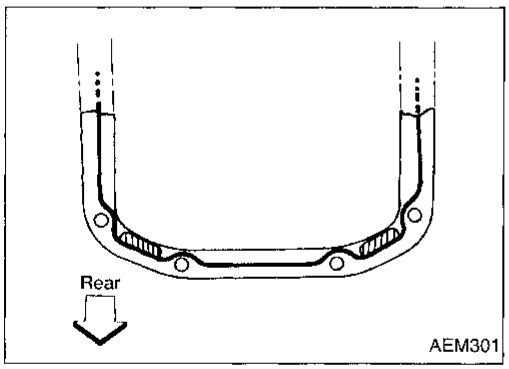

- **Be sure liquid gasket diameter is 3.5 to 4.5 mm (0.138 to 0.177 in).**
- **Attaching should be done within 5 minutes after coating.**

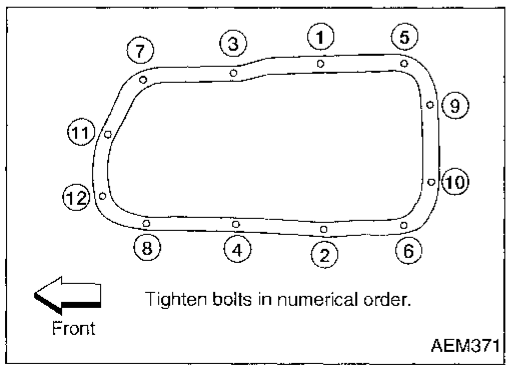

3. Install oil pan.
- **Tighten oil pan bolts in numerical order.**
  : 5.9 - 6.9 N·m (0.6 - 0.7 kg-m, 52 - 61 in-lb)
- **Wait at least 30 minutes before refilling engine oil.**
4. Install parts in reverse order of removal.

Simpo PDF Merge and Split Unregistered Version - http://www.simpopdf.com

SEC. 120 • 130 • 135 • 210

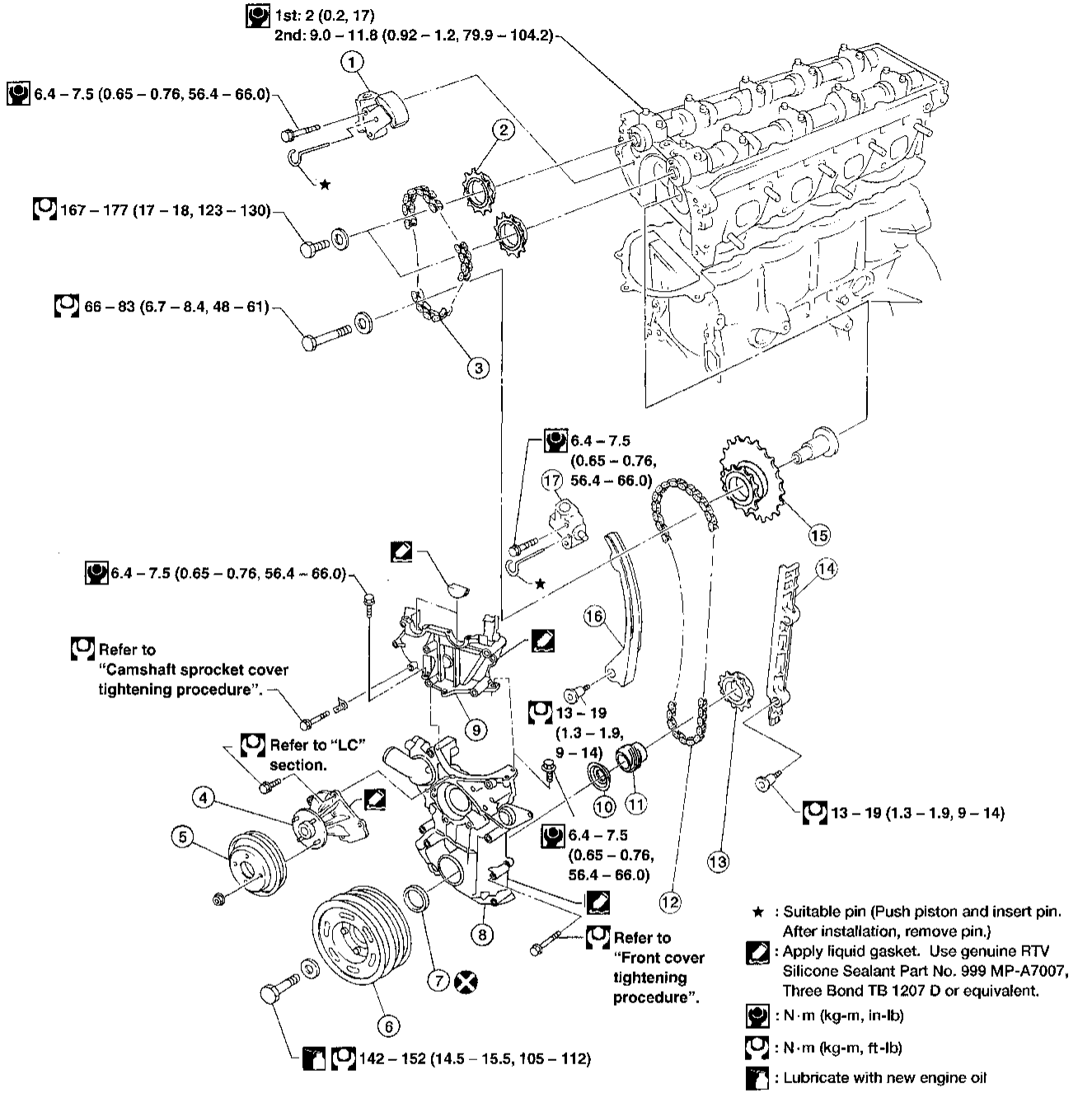

① Upper timing chain tensioner
② Cam sprocket
③ Upper timing chain
④ Water pump
⑤ Water pump pulley
⑥ Crankshaft pulley
⑦ Front oil seal
⑧ Front cover
⑨ Camshaft sprocket cover
⑩ Oil slinger
⑪ Oil pump drive gear
⑫ Lower timing chain
⑬ Crankshaft sprocket
⑭ Chain guide
⑮ Idler sprocket
⑯ Chain tension arm
⑰ Lower timing chain tensioner

Simpo PDF Merge and Split Unregistered Version - http://www.simpopdf.com

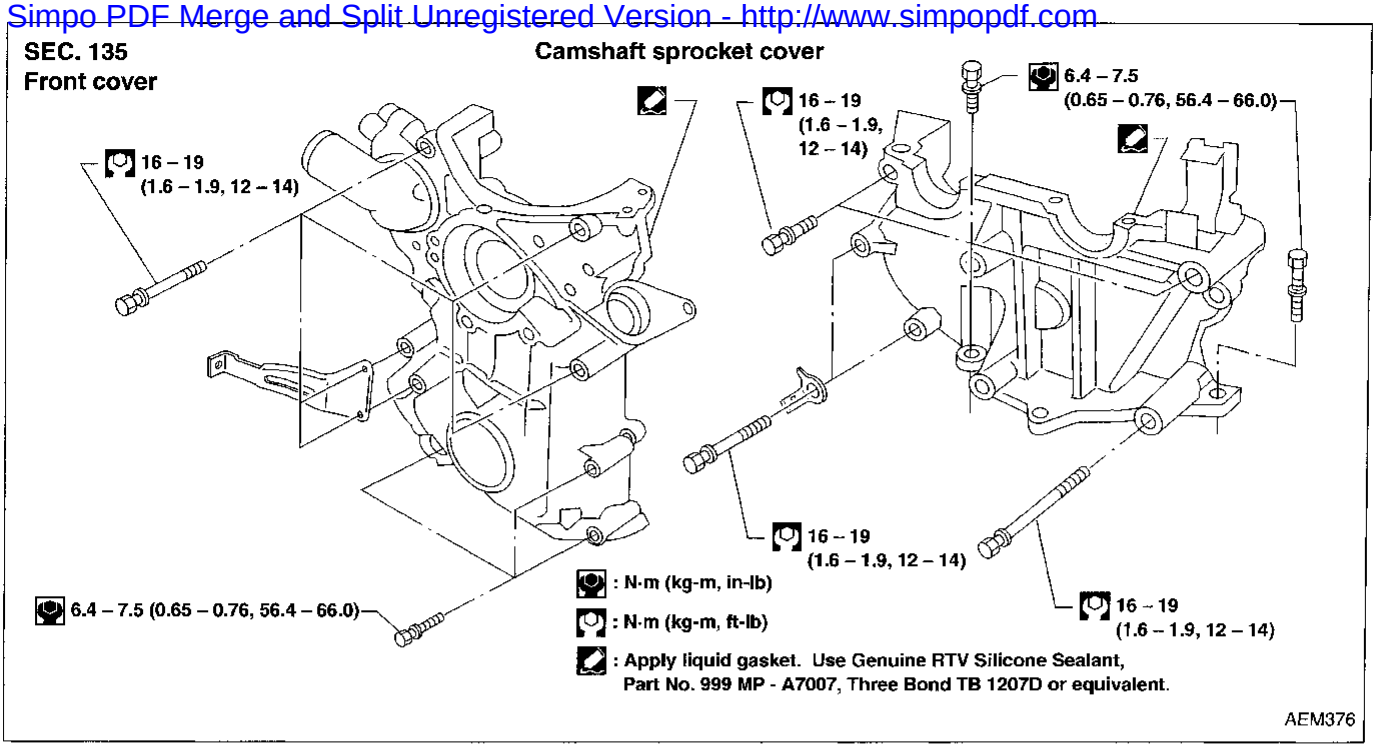

Liquid gasket application places

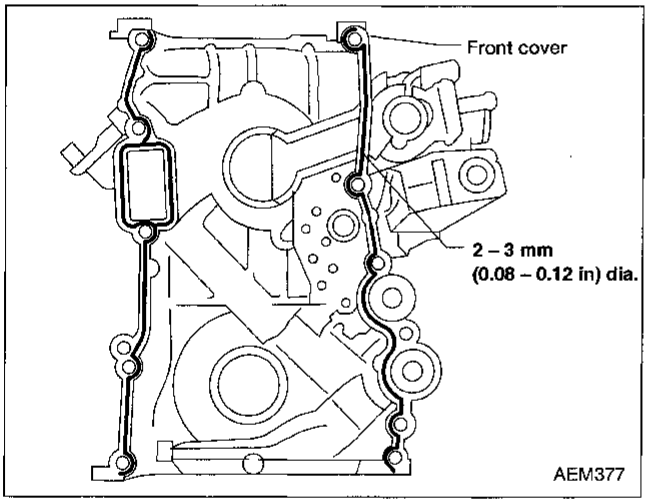

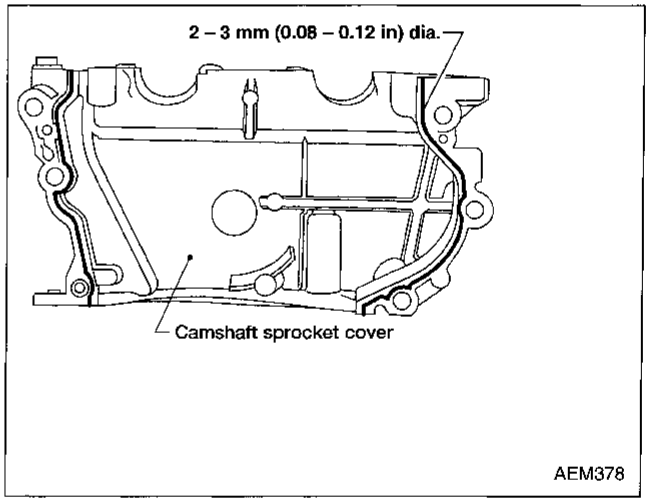

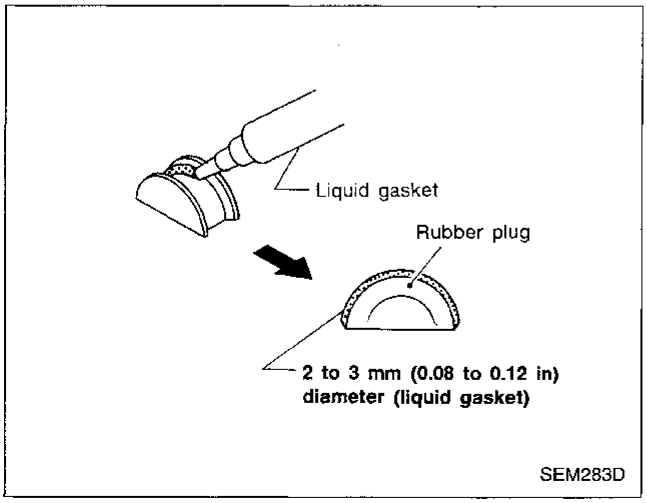

Simpo PDF Merge and Split Unregistered Version - http://www.simpopdf.com

CAUTION:

- **After removing timing chain, do not turn crankshaft and camshaft separately, or valves will strike piston heads.**
- **When installing camshafts, chain tensioners, oil seals, or other sliding parts, lubricate contacting surfaces with new engine oil.**
- **Apply new engine oil to bolt threads and seat surfaces when installing cylinder head, camshaft sprockets, crankshaft pulley, and camshaft brackets.**
- **Before disconnecting fuel hose, release fuel pressure. Refer to EC section ("Fuel Pressure Release", "BASIC SERVICE PROCEDURE").**
- **Do not spill engine coolant on drive belts.**

Removal

UPPER TIMING CHAIN

1. Drain coolant from both cylinder block drain plug and radiator drain cock. Refer to MA section.
2. Remove vacuum hoses, fuel tubes, wires, harness and connectors and so on.
3. Remove exhaust manifold cover and front exhaust tube.
4. Remove exhaust manifold.
5. Remove the following parts.
   - Air duct
   - Cooling fan with coupling
   - Radiator shroud
6. Disconnect injector harness connector and remove injector tube assembly with injectors.
7. Remove all spark plugs and high-tension wires.

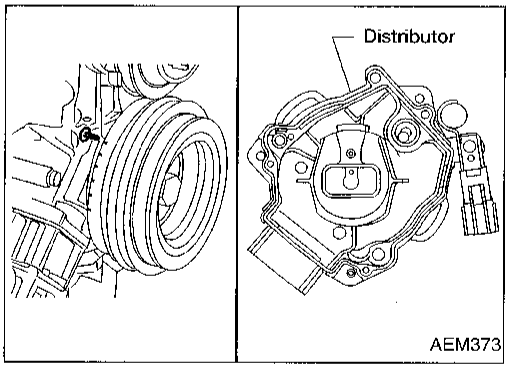

8. Set No. 1 piston at TDC on its compression stroke.
9. Remove distributor.
   - **Mark the position of the distributor and rotor before removing it.**

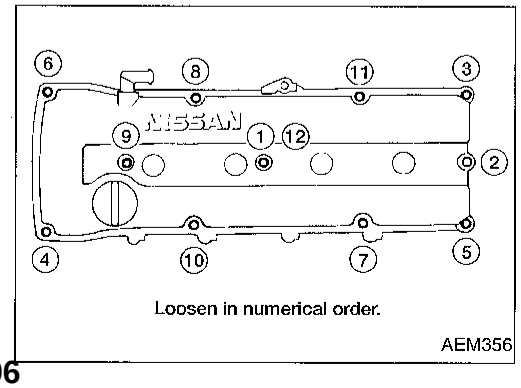

10. Remove rocker cover.
    - **Remove in numerical order, as shown.**

Removal (Cont'd)

Simpo PDF Merge and Split Unregistered Version - http://www.simpopdf.com

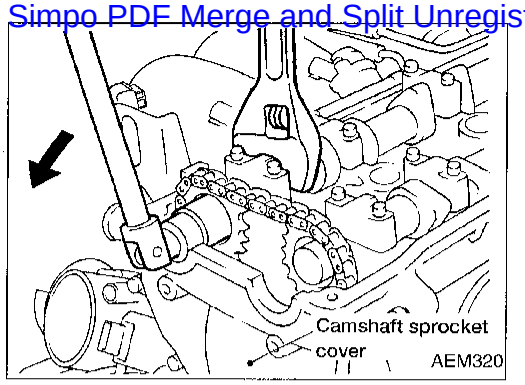

11. Remove intake cam sprocket.
- **For retiming in cylinder head removal, apply paint marks to timing chain matched with mating marks of both cam sprockets.**

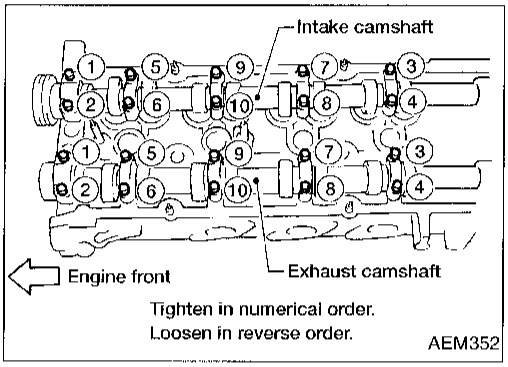

12. Remove cam brackets and camshafts.
- **Mark these parts' original positions for reassembly.**

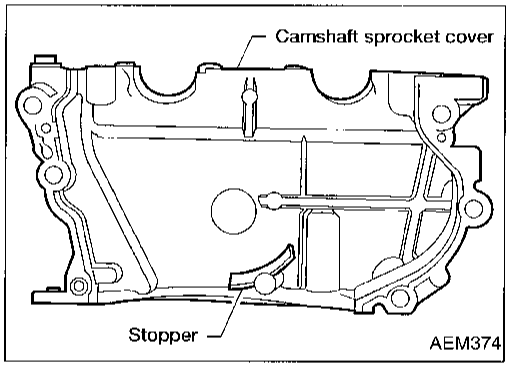

13. Remove camshaft sprocket cover.
- Upper timing chain will not be disengaged from idler sprocket. For this reason, a stopper need not be used.

Cast portion of camshaft sprocket cover is located on lower side of idler sprocket so upper timing chain need not be disengaged from idler sprocket.

14. Remove upper chain tensioner.
(Push piston and insert a suitable pin into pin hole.)

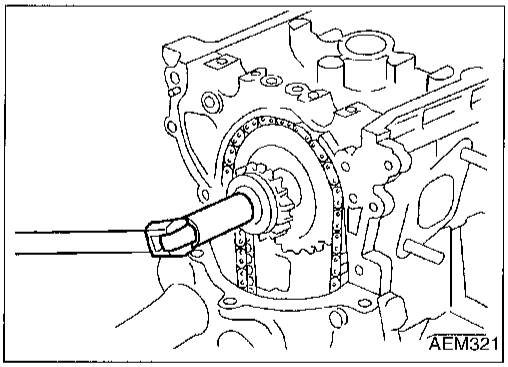

15. Remove upper timing chain.
16. Remove idler sprocket bolt.
- **For retiming in cylinder head removal, apply paint marks to timing chain matched with mating mark of idler sprocket.**

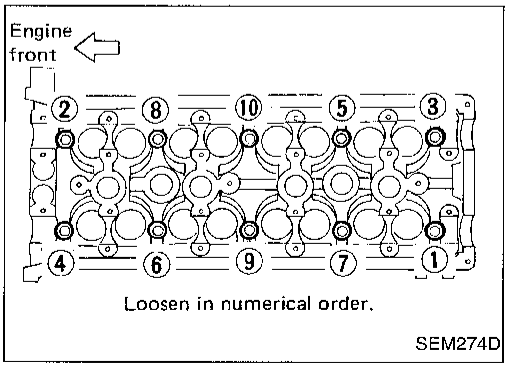

17. Loosen cylinder head bolts in numerical order.
- **A warped or cracked cylinder head could result from removing in incorrect order.**
- **Cylinder head bolts should be loosened in two or three steps.**

Removal (Cont'd)

Simpo PDF Merge and Split Unregistered Version - http://www.simpopdf.com

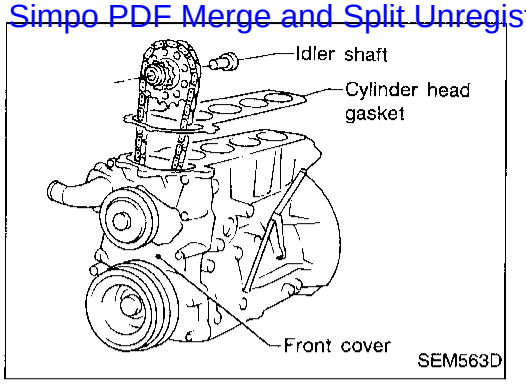

18. Remove cylinder head.
19. Remove cylinder head gasket.

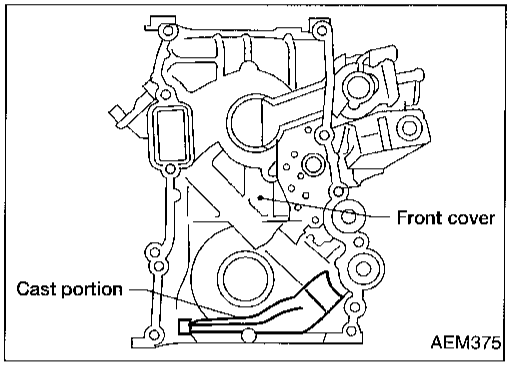

- Lower timing chain will not be disengaged from crankshaft sprocket. For this reason, a stopper need not be used.

Cast portion of front cover is located on lower side of crankshaft sprocket so lower timing chain need not be disengaged from idler sprocket.

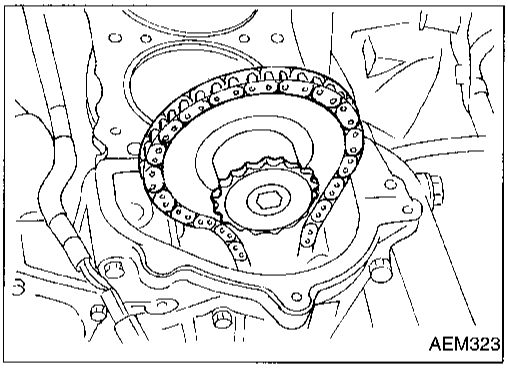

LOWER TIMING CHAIN

1. Remove upper timing chain.

Refer to "UPPER TIMING CHAIN" in "Removal" (EM-18).

2. Drain engine oil from drain plug of oil pan.

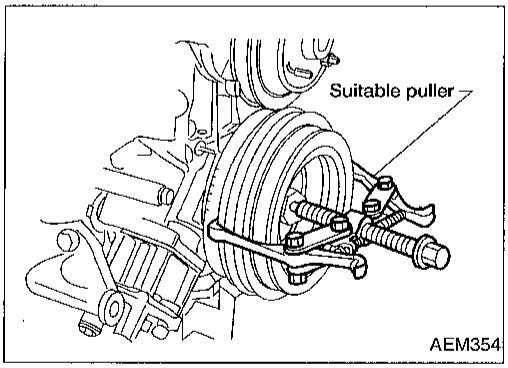

3. Remove oil pan.

Refer to "Removal" in "OIL PAN" (EM-14).

4. Remove oil strainer.
5. Remove the following parts.
- Power steering drive belt
- Alternator drive belt
- A/C compressor drive belt
- A/C compressor idler pulley

6. Remove crankshaft pulley.
7. Remove oil pump.
8. Remove front cover.
- Inspect for oil leakage at front oil seal. Replace seal if oil leak is present.

Removal (Cont'd)

Simpo PDF Merge and Split Unregistered Version - http://www.simpopdf.com

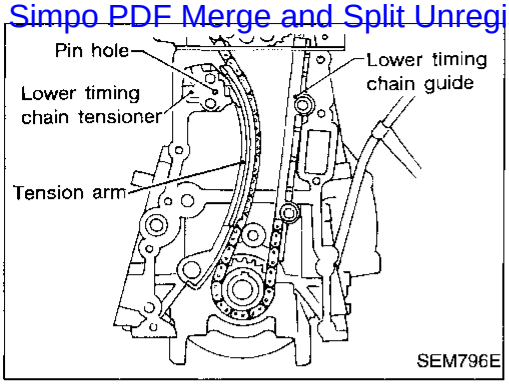

9. Remove the following parts.
   - Lower timing chain tensioner (Push piston and insert a suitable pin into pin hole.)
   - Chain tension arm
   - Lower timing chain guide
10. Remove lower timing chain and idler sprocket.

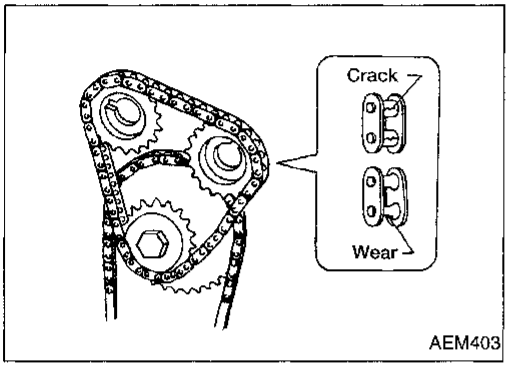

Inspection

Check for cracks and excessive wear at roller links. Replace chain if necessary.

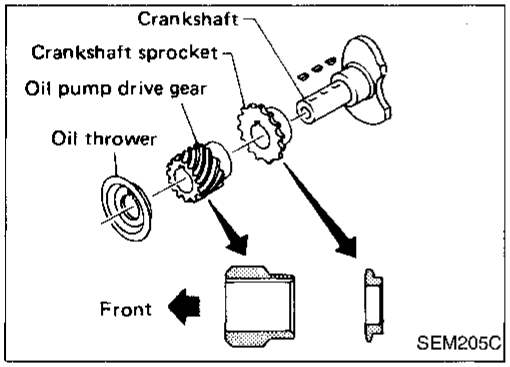

Installation

LOWER TIMING CHAIN

1. Install crankshaft sprocket, oil pump drive gear and oil thrower.
   - **Make sure that mating marks of crankshaft sprocket face front of engine.**
2. Position crankshaft so that No. 1 piston is set at TDC.

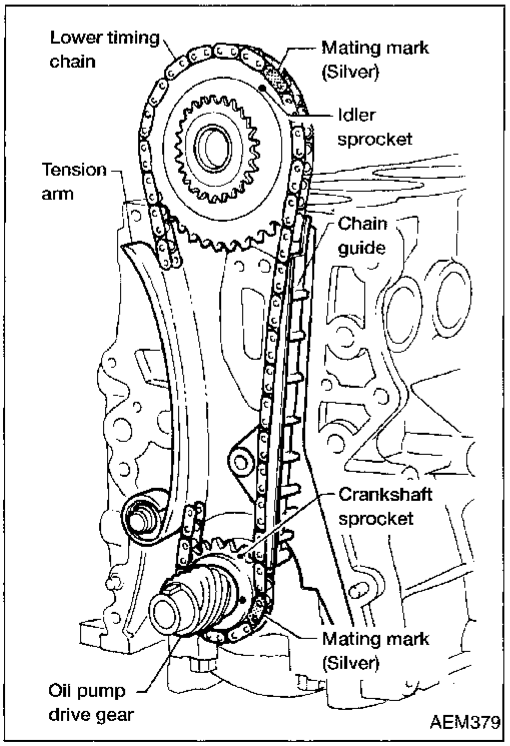

3. Install idler sprocket and lower timing chain.
   - **Set lower timing chain on the sprockets, aligning mating marks.**
   - **Be careful not to damage cylinder head gasket when installing lower timing chain.**
4. Install chain tension arm and chain guide.
5. Install lower timing chain tensioner.
   - **When installing, insert a suitable pin into pin hole to stop piston.**
   - **After installation remove the pin to release piston.**

Installation (Cont'd)

Simpo PDF Merge and Split Unregistered Version - http://www.simpopdf.com

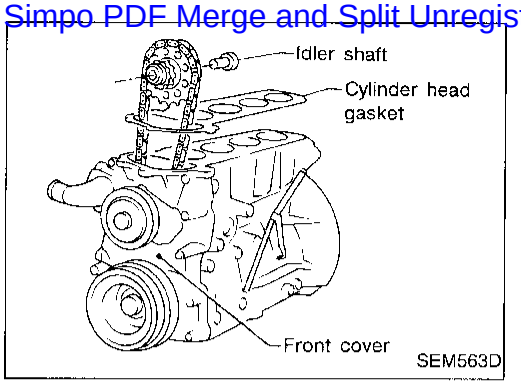

6. Install front cover.
- Use a scraper to remove all traces of liquid gasket from mating surface.
- Also remove traces of liquid gasket from mating surface of cylinder block.
- **Apply a continuous bead of liquid gasket to front cover (Refer to EM-17).**
- **Use Genuine RTV Silicone Sealant, Part No. 999 MP-A7007, Three Bond TB1207D or equivalent.**
- **Be careful not to damage cylinder head gasket.**
- **Be sure to install new front oil seal. Refer to EM-25.**

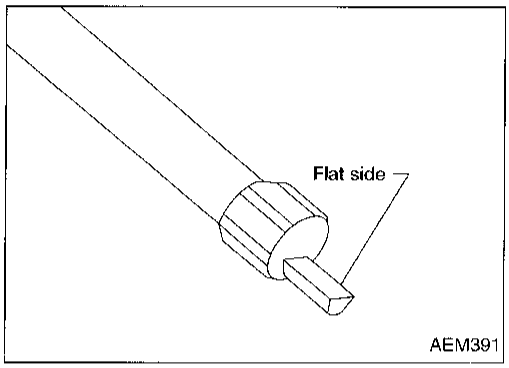

7. Install the following parts:
- Crankshaft pulley
- Oil strainer and oil pan
- Component parts below the engine
- A/C compressor idler pulley
- New cylinder head gasket
- Idler shaft

8. Install the oil pump.
- **Make sure the flat side of the distributor drive shaft is facing the engine.**

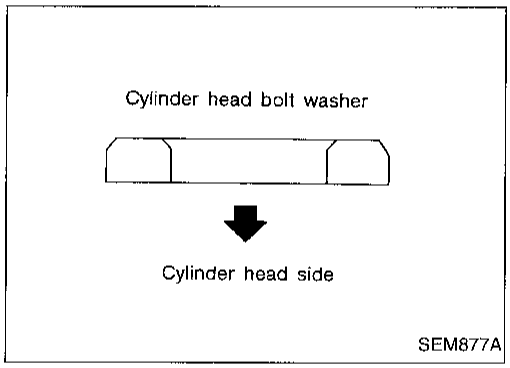

9. Install cylinder head and temporarily tighten cylinder head bolts when installing front cover.
- **Apply new engine oil to bolt threads and seat surfaces.**
- **Temporarily tighten cylinder head bolts. This is necessary to avoid damaging cylinder head gasket.**
- **Be sure to install washers between bolts and cylinder head.**

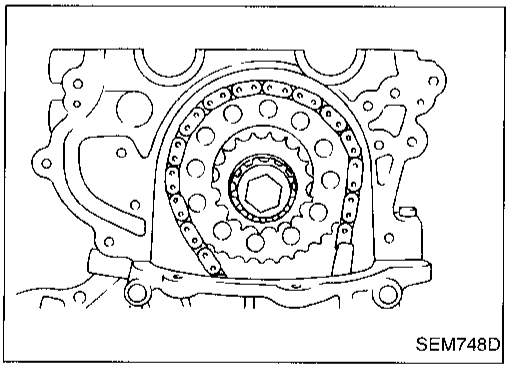

UPPER TIMING CHAIN

1. Install lower timing chain.
Refer to "LOWER TIMING CHAIN" in "Installation" (EM-21).

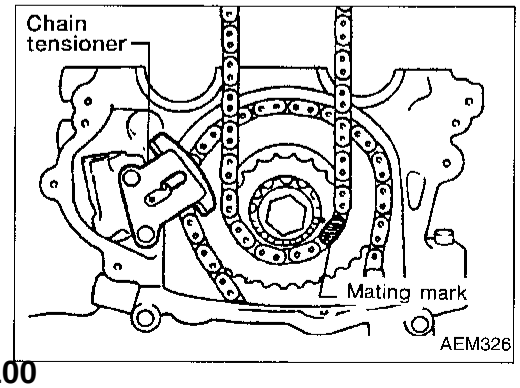

2. Install upper timing chain, chain tensioner.
- **Set upper timing chain on the idler sprockets, aligning mating marks.**
- **When installing chain tensioner, insert a suitable pin into pin hole to stop piston.**
- **After installation remove the pin to release piston.**

Installation (Cont'd)

Simpo PDF Merge and Split Unregistered Version - http://www.simpopdf.com

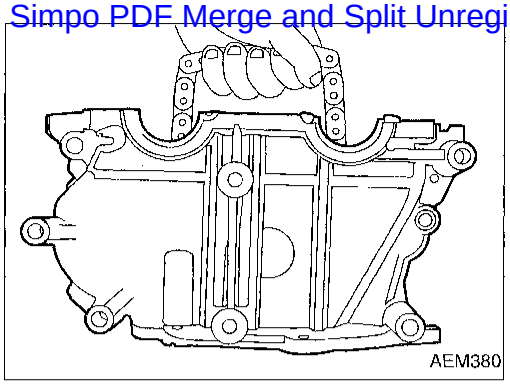
AEM380

3. Install camshaft sprocket cover.
- Use a scraper to remove all traces of liquid gasket from mating surface.
- Also remove traces of liquid gasket from mating surface of cylinder block.
- **Apply a continuous bead of liquid gasket to camshaft sprocket cover (Refer to EM-17).**
- **Use Nissan Genuine RTV Silicone Sealant, Part No. 999 MP-A7007, Three Bond TB1207D or equivalent.**
- **Be careful not to damage cylinder head gasket.**
- **Be careful upper timing chain does not slip or jump when installing camshaft sprocket cover.**

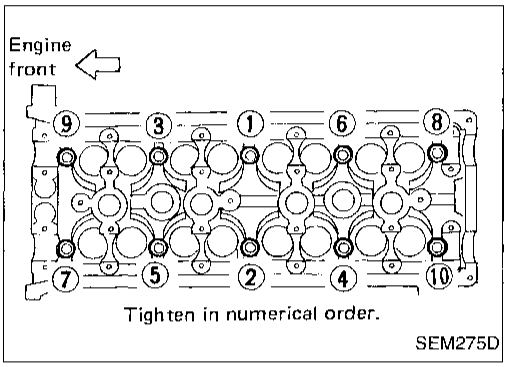

SEM275D

4. Tighten cylinder head bolts in numerical order.
- **Tightening procedure**

a. **Tighten all bolts to 29 N·m (3.0 kg-m, 22 ft-lb).**
b. **Tighten all bolts to 79 N·m (8.1 kg-m, 59 ft-lb).**
c. **Loosen all bolts completely**
d. **Tighten all bolts to 25 to 34 N·m (2.5 to 3.5 kg-m, 18 to 25 ft-lb).**
e. **Turn all bolts 86^{+5}_{-0} degrees clockwise, or if an angle wrench is not available, tighten bolts to 75 to 84 N·m (7.6 to 8.6 kg-m, 55 to 62 ft-lb).**

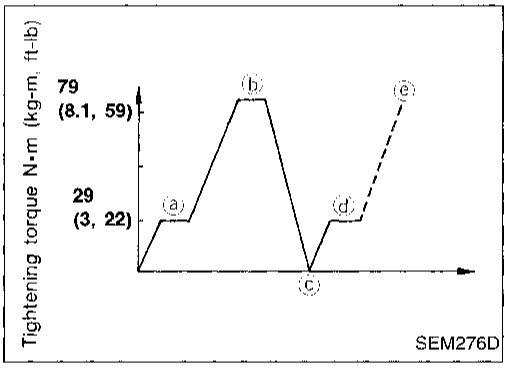

SEM276D

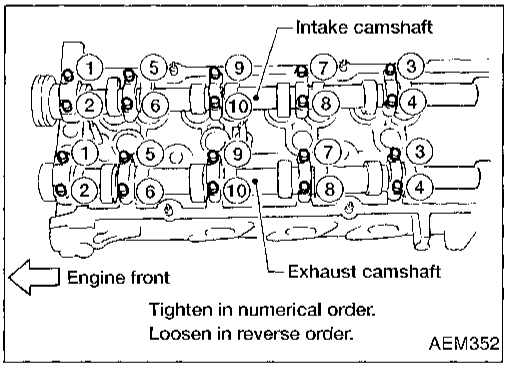

AEM352

5. Install camshafts and camshaft brackets.
- **Tightening procedure**

a. **Tighten all bolts to 2 N·m (0.2 kg-m, 17 in-lb).**
b. **Tighten all bolts to 9.0 to 11.8 N·m (0.92 to 1.2 kg-m, 79.9 - 104.2 in-lb).**
- **Apply new engine oil to bolt threads and seat surfaces.**

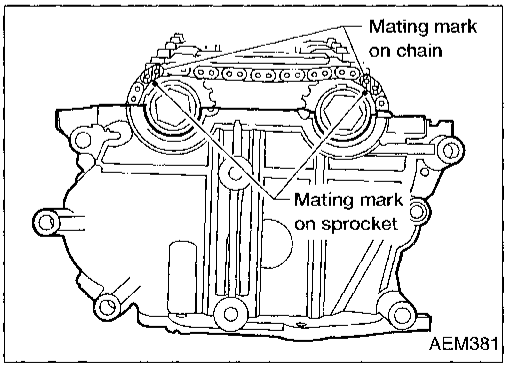

AEM381

6. Install camshaft sprockets.

Installation (Cont'd)

Simpo PDF Merge and Split Unregistered Version - http://www.simpopdf.com

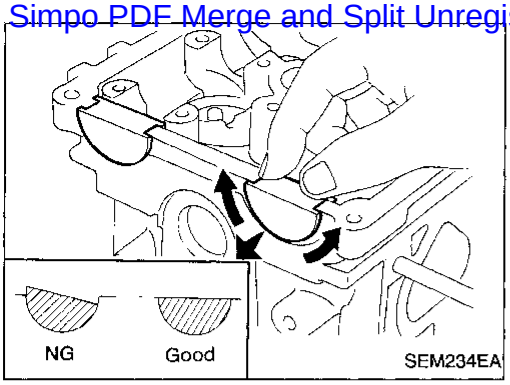

7. Install rubber plugs as follows.
(1) Apply liquid gasket to rubber plugs.
(2) Install rubber plugs, then move them by hand to uniformly spread the gasket on cam sprocket cover surface.
- Rubber plugs should be installed flush with the cylinder head surface.

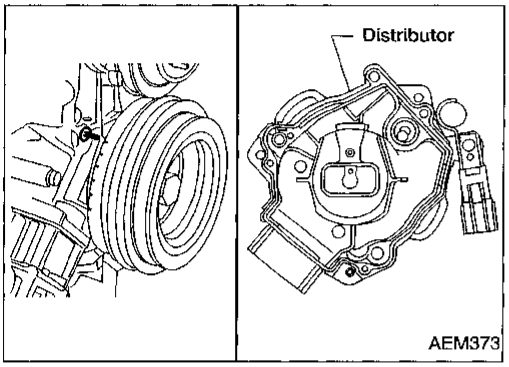

8. Install distributor.
- Make sure that No. 1 piston is set at TDC and that distributor rotor is set at No. 1 cylinder spark position. Refer to marks made at removal.

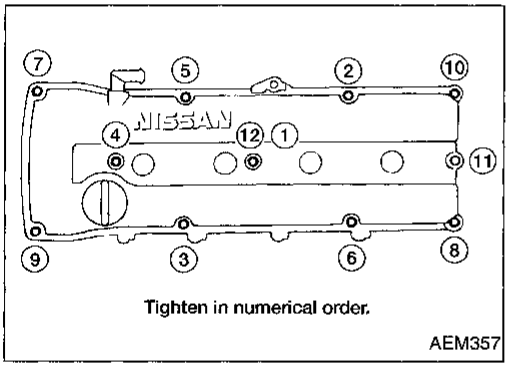

9. Install rocker cover.
: 8 - 11 N·m (0.8 - 1.1 kg-m, 69 - 95 in-lb).
10. Install all spark plugs with high-tension cords.
11. Connect injector harness connector and replace injector tube assembly with injectors.
12. Install the following parts.
- Radiator shroud
- Cooling fan with coupling
- Air duct
13. Install vacuum hoses, fuel tubes, wires, harness and connectors and so on.

Simpo PDF Merge and Split Unregistered Version - http://www.simpopdf.com

VALVE OIL SEAL

1. Remove rocker cover.
2. Remove camshaft. Refer to "TIMING CHAIN" (EM-16).
3. Remove valve spring and valve oil seal with Tool or a suitable tool.

Piston concerned should be set at TDC to prevent valve from falling.

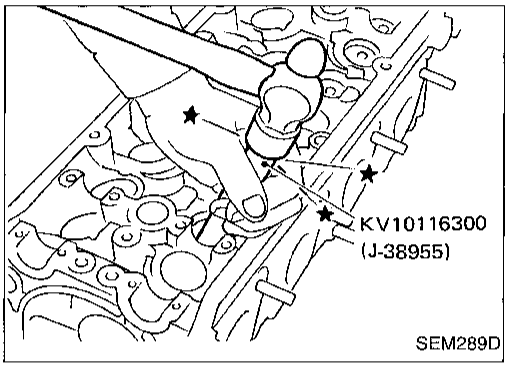

4. Apply engine oil to new valve oil seal and install it with Tool.

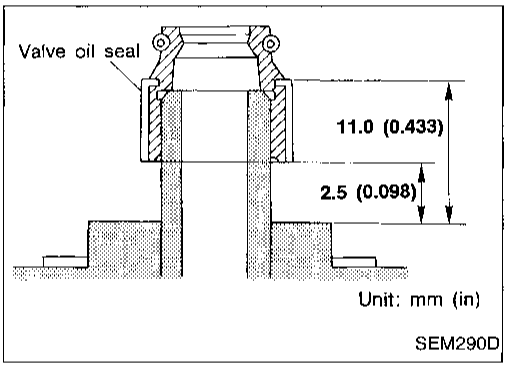

OIL SEAL INSTALLING DIRECTION

- Install new oil seal in the direction shown.

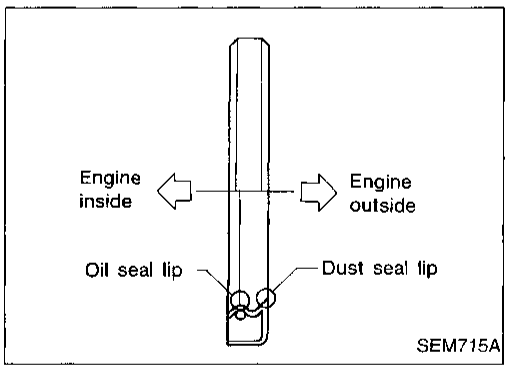

FRONT OIL SEAL

1. Remove radiator shroud and crankshaft pulley.
2. Remove front oil seal

- **Be careful not to scratch front cover.**

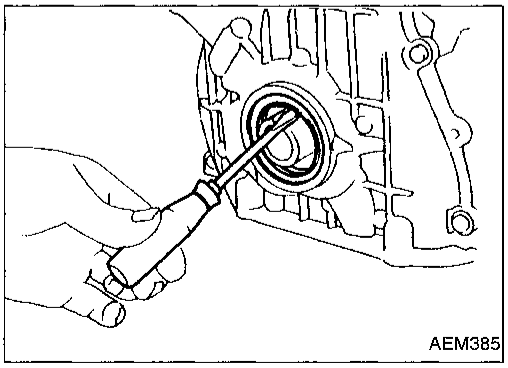

Simpo PDF Merge and Split Unregistered Version - http://www.simpopdf.com

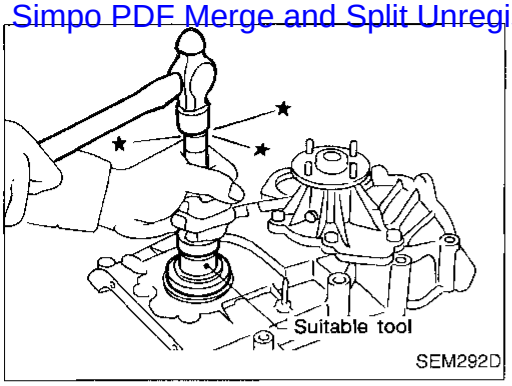

3. Apply engine oil to new oil seal and install it using a suitable tool.

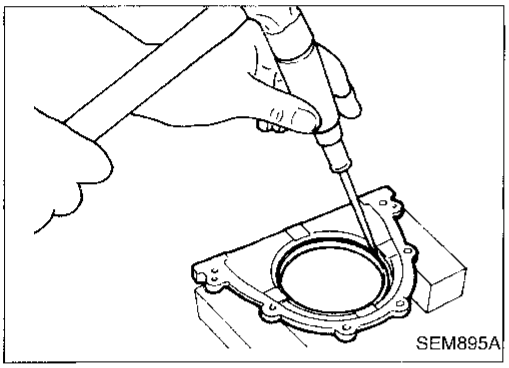

REAR OIL SEAL

1. Remove flywheel or drive plate.
2. Remove rear oil seal retainer.
3. Remove rear oil seal from retainer.

- **Be careful not to scratch rear oil seal retainer.**

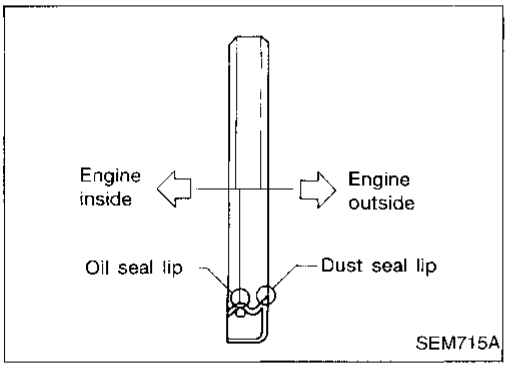

4. Apply engine oil to new oil seal and install it using suitable tool.

- **Install new oil seal in the direction shown.**

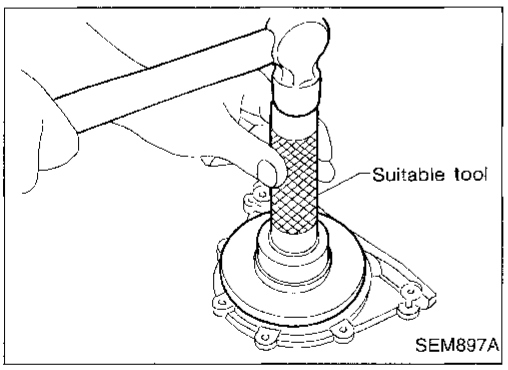

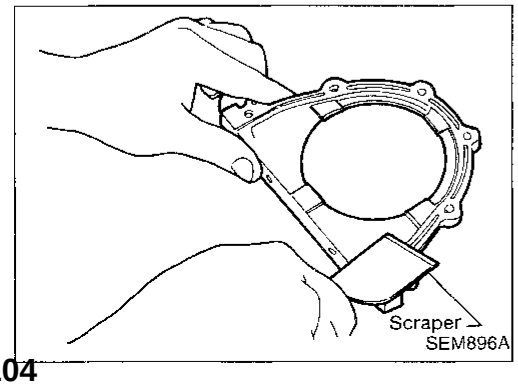

5. Install rear oil seal retainer.

a. Before installing rear oil seal retainer, remove all traces of liquid gasket from mating surface using a scraper.

- **Also remove traces of liquid gasket from mating surface of cylinder block.**

Simpo PDF Merge and Split Unregistered Version - http://www.simpopdf.com

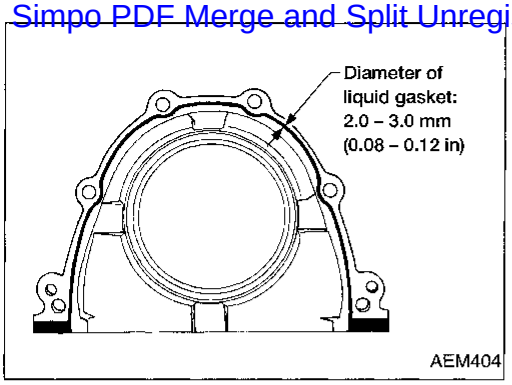

b. Apply a continuous bead of liquid gasket to mating surface of rear oil seal retainer.

- **Use Genuine RTV Silicone Sealant, Part No. 999 MP-A7007, Three Bond TB1207D or equivalent.**
- **Apply around inner side of bolt holes.**

Simpo PDF Merge and Split Unregistered Version - http://www.simpopdf.com

SEC. 111 • 130

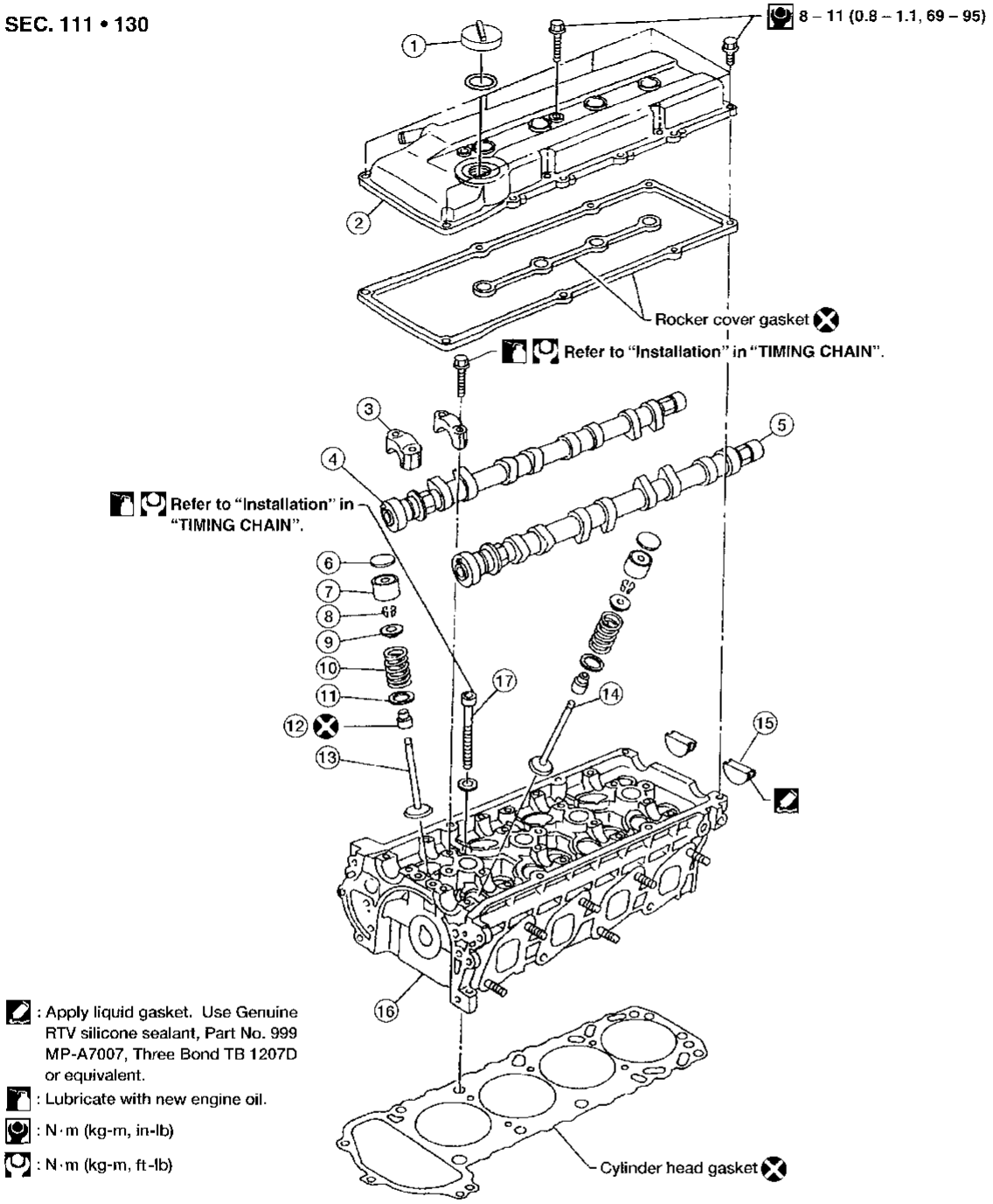

① Oil filler cap
② Rocker cover
③ Camshaft bracket
④ Intake camshaft
⑤ Exhaust camshaft
⑥ Shim
⑦ Valve lifter
⑧ Valve cotter
⑨ Spring retainer
⑩ Valve spring
⑪ Spring seat
⑫ Valve oil seal
⑬ Intake valve
⑭ Exhaust valve
⑮ Rubber plug
⑯ Cylinder head
⑰ Cylinder head bolt

Simpo PDF Merge and Split Unregistered Version - http://www.simpopdf.com

CAUTION:

- **When installing camshafts, chain tensioners, oil seals, or other sliding parts, lubricate contacting surfaces with new engine oil.**
- **Apply new engine oil to threads and seat surfaces when installing cylinder head, camshaft sprocket, crankshaft pulley, and camshaft bracket.**
- **Attach tags to valve lifters so as not to mix them up.**

Removal and Installation

- **Removal and installation procedures are the same as those for timing chain. Refer to "Removal" and "Installation" in "TIMING CHAIN" (EM-18, EM-22).**
- **Before removing camshaft and idler sprockets, apply paint marks to them for retiming.**

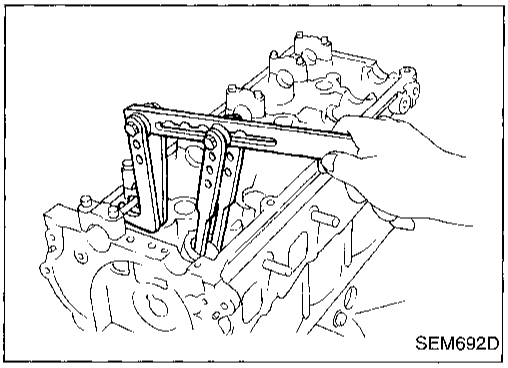
SEM692D

Disassembly

1. Remove intake manifold and exhaust manifold. Refer to "OUTER COMPONENT PARTS" (EM-10).
2. Remove valve components.
3. Remove valve oil seal with a suitable tool.

Simpo PDF Merge and Split Unregistered Version - http://www.simpopdf.com

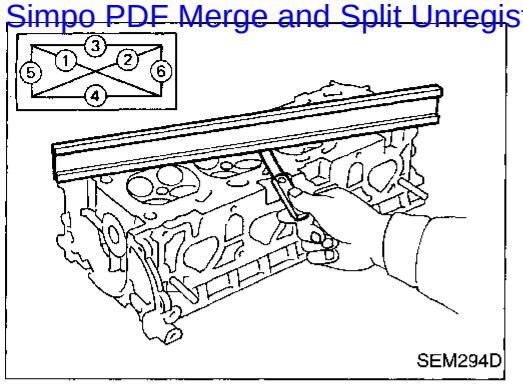

Inspection

CYLINDER HEAD DISTORTION

Clean surface of cylinder head.
Use a reliable straightedge and feeler gauge to check the flatness of cylinder head surface.
Check along six positions shown in the figure.

Head surface flatness:
Standard Less than 0.03 mm (0.0012 in)
Limit 0.1 mm (0.004 in)

If beyond the specified limit, replace it or resurface it.

Resurfacing limit:
The limit of cylinder head resurfacing is determined by the cylinder block resurfacing.
Amount of cylinder head resurfacing is "A".
Amount of cylinder block resurfacing is "B".
The maximum limit:
A + B = 0.2 mm (0.008 in)

After resurfacing cylinder head, check that camshaft rotates freely by hand. If resistance is felt, cylinder head must be replaced.

Nominal cylinder head height:
126.3 - 126.5 mm (4.972 - 4.980 in)

CAMSHAFT VISUAL CHECK

Check camshaft for scratches, seizure and wear.

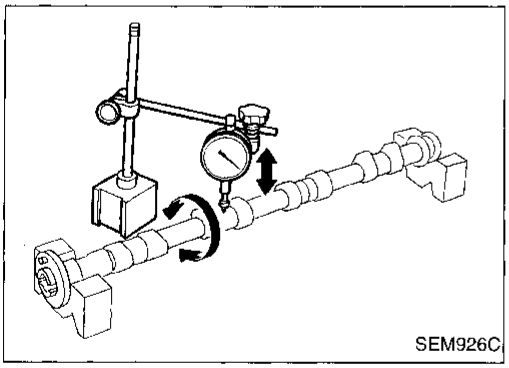

CAMSHAFT RUNOUT

1. Measure camshaft runout at the center journal.
   Runout (Total indicator reading):
   Standard:
   Less than 0.02 mm (0.0008 in)
   Limit:
   0.04 mm (0.0016 in)
2. If it exceeds the limit, replace camshaft.

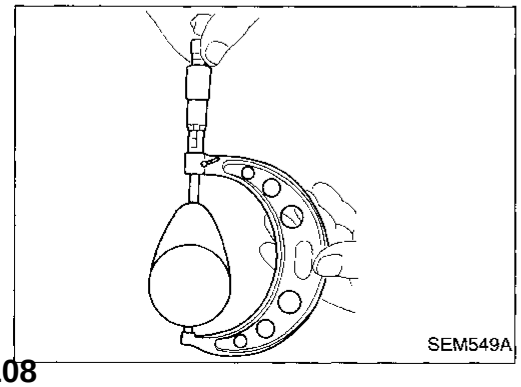

CAMSHAFT CAM HEIGHT

1. Measure camshaft cam height.
   Standard cam height:
   Intake 42.505 - 42.695 mm (1.673 - 1.681 in)
   Exhaust 40.905 - 41.095 mm (1.610 - 1.618 in)
   Cam height wear limit:
   Intake & Exhaust
   0.2 mm (0.008 in)
2. If wear is beyond the limit, replace camshaft.

Inspection (Cont'd)

Simpo PDF Merge and Split Unregistered Version - http://www.simpopdf.com

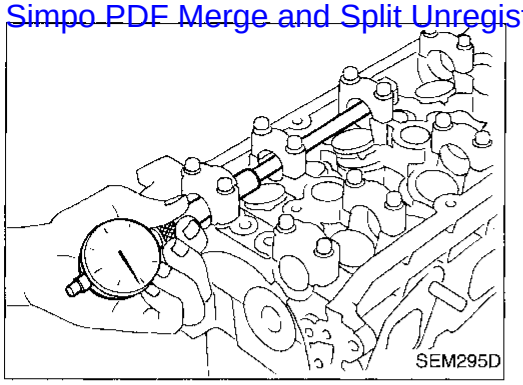
SEM295D

CAMSHAFT JOURNAL CLEARANCE

1. Install camshaft bracket and tighten bolts to the specified torque.
2. Measure inner diameter of camshaft bearing.
   Standard inner diameter:
   #1 to #5 journals
   28.000 - 28.025 mm (1.1024 - 1.1033 in)

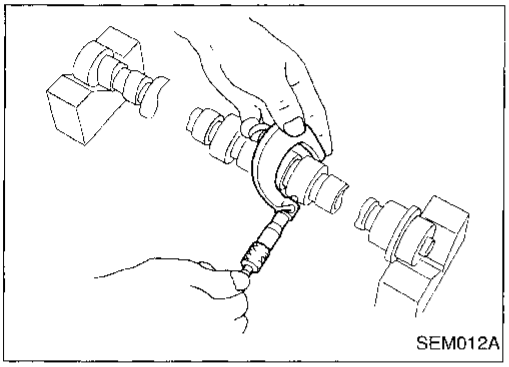
SEM012A

3. Measure outer diameter of camshaft journal.
   Standard outer diameter:
   #1 to #5 journals
   27.935 - 27.955 mm (1.0998 - 1.1006 in)
4. If clearance exceeds the limit, replace camshaft and/or cylinder head.
   Camshaft journal clearance:
   Standard 0.045 - 0.090 mm (0.0018 - 0.0035 in)
   Limit 0.12 mm (0.0047 in)

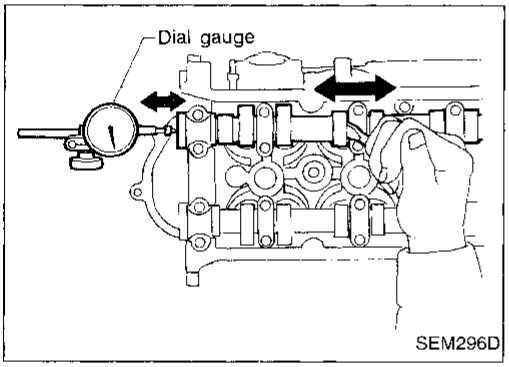

SEM296D

CAMSHAFT END PLAY

1. Install camshaft in cylinder head.
2. Measure camshaft end play.
   Camshaft end play:
   Standard
   0.070 - 0.148 mm (0.0028 - 0.0058 in)
   Limit
   0.2 mm (0.008 in)
3. If end play exceeds the limit, replace camshaft and remeasure camshaft end play.
4. If end play still exceeds the limit after replacing camshaft, replace cylinder head.

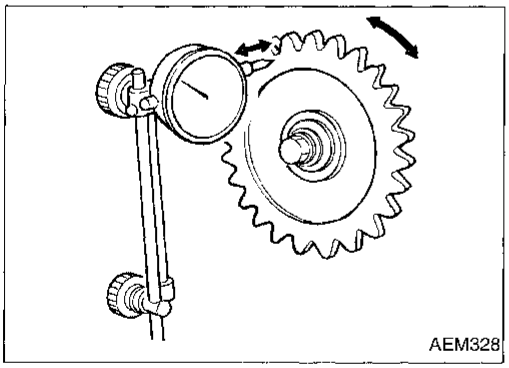
AEM328

CAMSHAFT SPROCKET RUNOUT

1. Install sprocket on camshaft.
2. Measure camshaft sprocket runout.
   Runout (Total indicator reading):
   Limit 0.15 mm (0.0059 in)
3. If it exceeds the limit, replace camshaft sprocket.

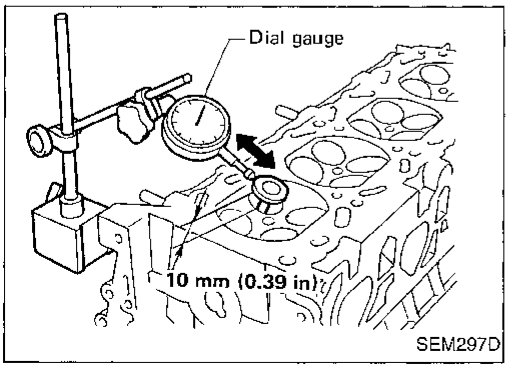

SEM297D

VALVE GUIDE CLEARANCE

1. Measure valve deflection as shown in figure. (Valve and valve guide mostly wear in this direction.)
   Valve deflection limit (Dial gauge reading):
   Intake & Exhaust
   0.2 mm (0.008 in)

Inspection (Cont'd)

Simpo PDF Merge and Split Unregistered Version - http://www.simpopdf.com

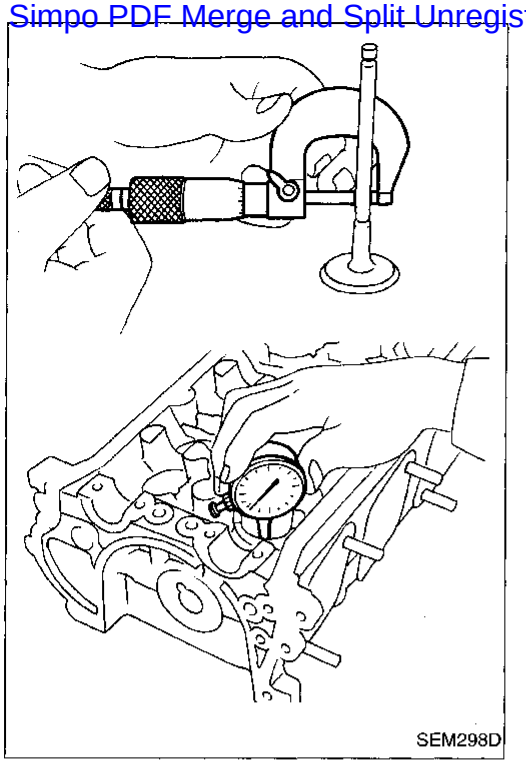
SEM298D

2. If it exceeds the limit, check valve to valve guide clearance.
a. Measure valve stem diameter and valve guide inner diameter.
b. Check that clearance is within specification.

Valve to valve guide clearance = Valve guide inner diameter - Valve stem diameter:

Unit: mm (in)

	Standard	Limit
Intake	0.020 - 0.053 (0.0008 - 0.0021)	0.08 (0.0031)
Exhaust	0.040 - 0.073 (0.0016 - 0.0029)	0.1 (0.004)

c. If it exceeds the limit, replace valve and remeasure clearance.
- If clearance still exceeds the limit after replacing valve, replace the valve guide.

VALVE GUIDE REPLACEMENT

1. To remove valve guide, heat cylinder head to 120 to 140°C (248 to 284°F) by soaking in heated oil.

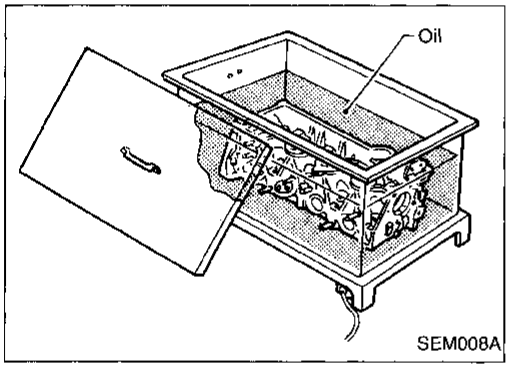

SEM008A

2. Drive out valve guide with a press [under a 20 kN (2 ton, 2.2 US ton, 2.0 Imp ton) pressure] or hammer and suitable tool.

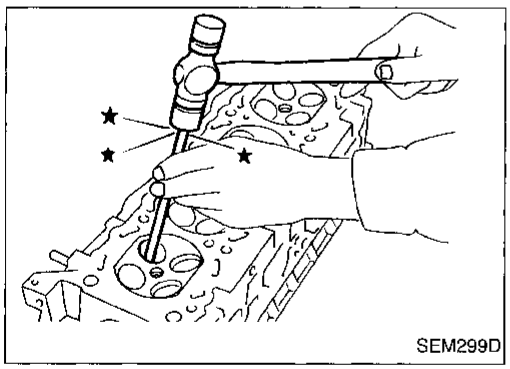
SEM299D

3. Ream cylinder head valve guide hole.
   Valve guide hole diameter
   (for service parts):
   Intake & Exhaust
   11.175 - 11.196 mm (0.4400 - 0.4408 in)

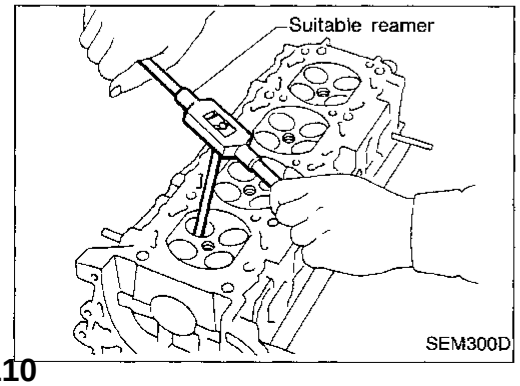

SEM300D

Inspection (Cont'd)

Simpo PDF Merge and Split Unregistered Version - http://www.simpopdf.com

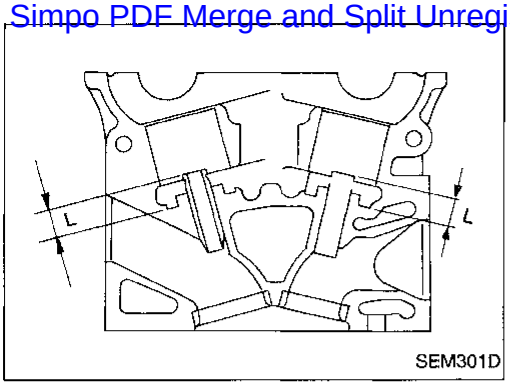

SEM301D

4. Heat cylinder head to 120 to 140°C (248 to 284°F) and press service valve guide onto cylinder head.
   Projection "L":
   13.3 - 13.9 mm (0.524 - 0.547 in)

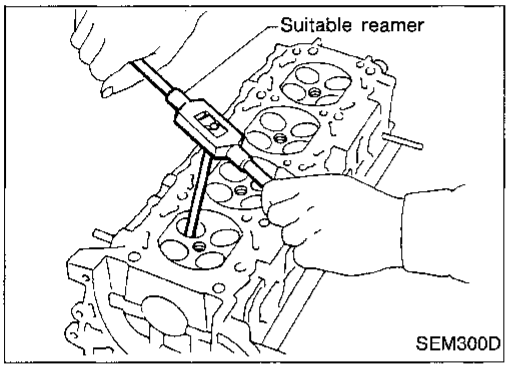

SEM300D

5. Ream valve guide.
   Finished size:
   Intake & Exhaust
   7.000 - 7.018 mm (0.2756 - 0.2763 in)

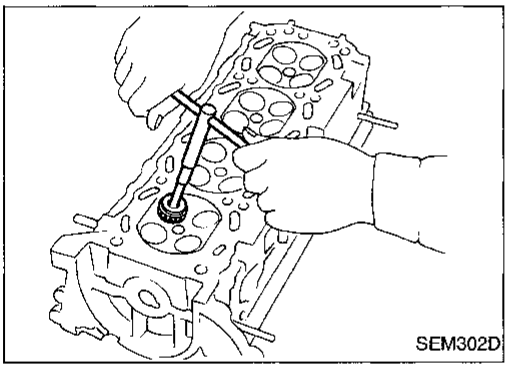
SEM302D

VALVE SEATS

Check valve seats for pitting at contact surface. Resurface or replace if excessively worn.

- **Before repairing valve seats, check valve and valve guide for wear. If they have worn, replace them. Then correct valve seat.**
- **Use both hands to cut uniformly.**

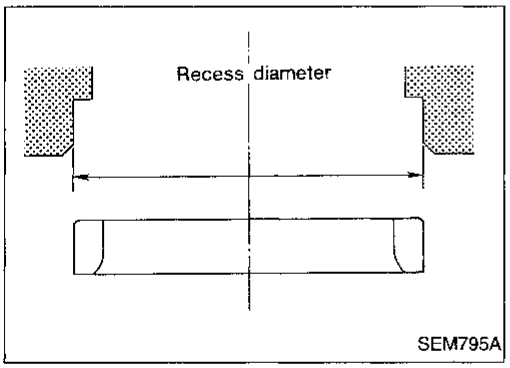

SEM795A

REPLACING VALVE SEAT FOR SERVICE PARTS

1. Bore out old seat until it collapses. Boring should not continue beyond the bottom face of the seat recess in cylinder head. Set the machine depth stop to ensure this.
2. Ream cylinder head recess.
   Reaming bore for service valve seat
   Oversize [0.5 mm (0.020 in)]:
   Intake 38.000 - 38.016 mm (1.4961 - 1.4967 in)
   Exhaust 32.700 - 32.716 mm (1.2874 - 1.2880 in)

Use the valve guide center for reaming to ensure valve seat will have the correct fit.

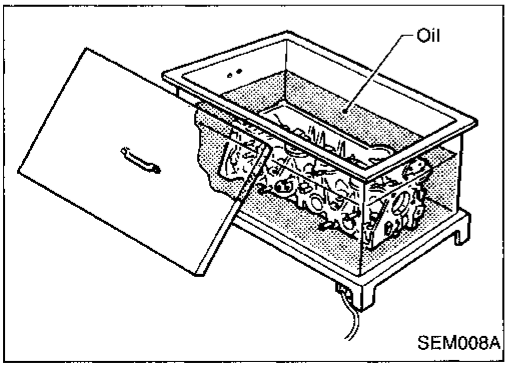

SEM008A

3. Heat cylinder head to 120 to 140°C (248 to 284°F).
4. Press fit valve seat until it seats on the bottom.

Inspection (Cont'd)

Simpo PDF Merge and Split Unregistered Version - http://www.simpopdf.com

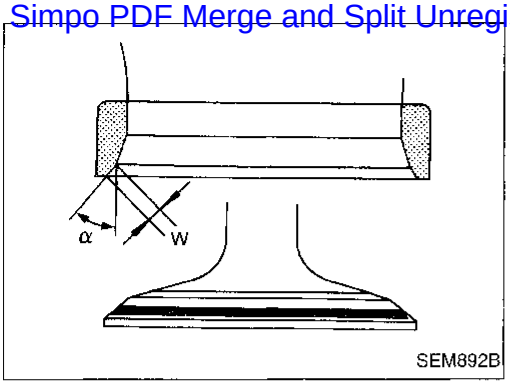

SEM892B

5. Cut or grind valve seat using suitable tool to the specified dimensions as shown in SDS.
6. After cutting, lap valve seat with abrasive compound.
7. Check valve seating condition.
   Seat face angle "α":
   44°53′ - 45°07′ deg.
   Contacting width "W":
   Intake
   1.48 - 1.63 mm (0.0583 - 0.0642 in)
   Exhaust
   1.8 - 2.0 mm (0.071 - 0.079 in)

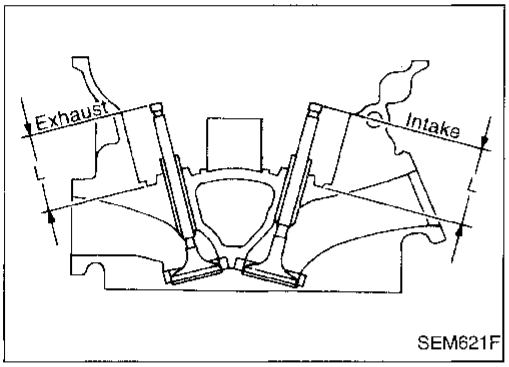

SEM621F

8. Use a depth gauge to measure the distance between the mounting surface of the cylinder head spring seat and the valve stem end. If the distance is shorter than specified, repeat step 5 above to adjust it. If it is longer, replace the valve seat with a new one.
   Valve seat resurface limit "L":
   Intake 42.02 - 42.52 mm (1.6543 - 1.6740 in)
   Exhaust 42.03 - 42.53 mm (1.6547 - 1.6744 in)

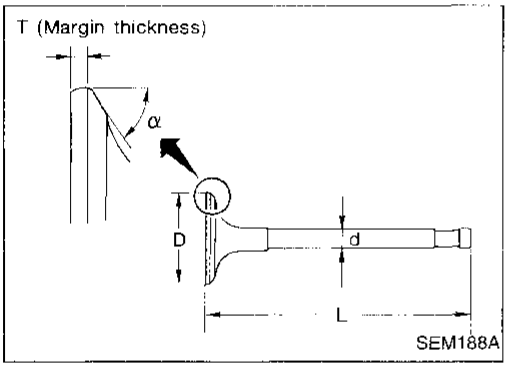

SEM188A

VALVE DIMENSIONS

Check dimensions of each valve. For dimensions, refer to SDS (EM-52).
When valve head has been worn down to 0.5 mm (0.020 in) in margin thickness, replace valve.
Grinding allowance for valve stem tip is 0.2 mm (0.008 in) or less.

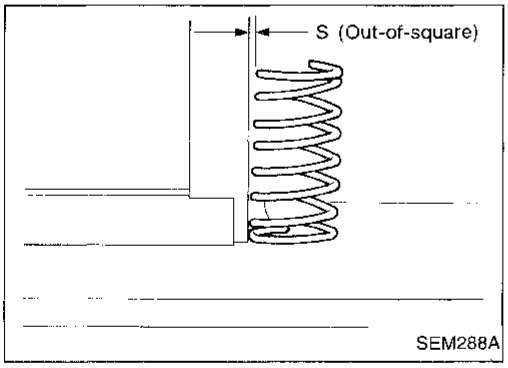

SEM288A

VALVE SPRING

Squareness

1. Measure dimension "S".
   Out-of-square "S":
   Less than 2.2 mm (0.087 in)
2. If it exceeds the limit, replace spring.

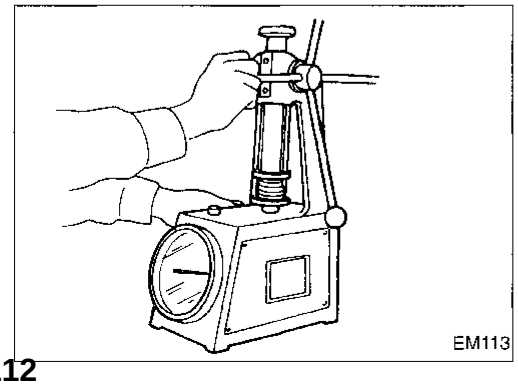
EM113

Pressure

Check valve spring pressure at specified spring height.
Pressure: N (kg, lb) at height mm (in)
Standard
418.0 (42.6, 93.9) at 29.17 (1.1484)
Limit
393.0 (40.1, 88.4) at 29.17 (1.1484)
If it exceeds the limit, replace spring.

Inspection (Cont'd)

Simpo PDF Merge and Split Unregistered Version - http://www.simpopdf.com

VALVE LIFTER AND VALVE SHIM

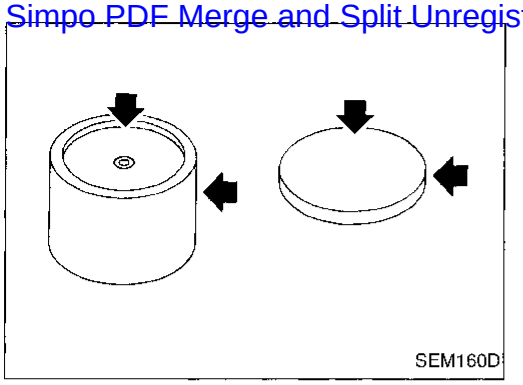
SEM160D

1. Visually check contact and sliding surfaces for wear and scratches.

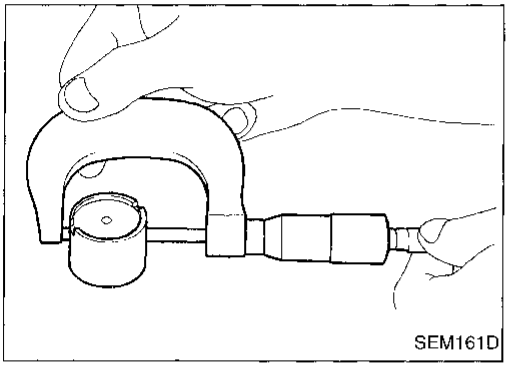
SEM161D

2. Check diameter of valve lifter and valve lifter guide bore.
   Valve lifter diameter:
   33.960 - 33.975 mm (1.3370 - 1.3376 in)

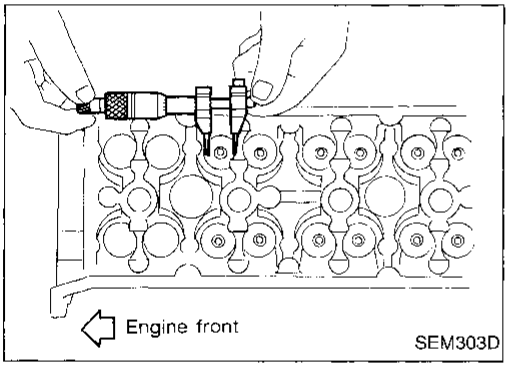

SEM303D

Lifter guide bore diameter:
34.000 - 34.021 mm (1.3386 - 1.3394 in)
Valve lifter to valve lifter guide clearance:
0.025 - 0.061 mm (0.0010 - 0.0024 in)
If it exceeds the standard diameter or clearance, replace valve lifter or cylinder head.

Assembly

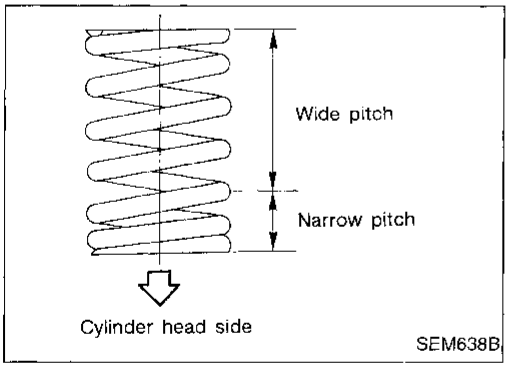

SEM638B

1. Install valve component parts.

- **Always use new valve oil seal. Refer to "OIL SEAL REPLACEMENT" (EM-25).**
- **Before installing valve oil seal, install valve spring seat.**
- **Install outer valve spring (uneven pitch type) with its narrow pitch side toward cylinder head side.**
- **After installing valve component parts, tap valve stem tip with plastic hammer to assure a proper fit.**

Valve Clearance

CHECKING

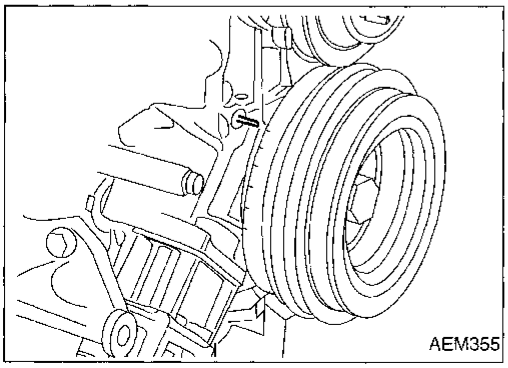
AEM355

Check valve clearance while engine is warm but not running.

1. Remove rocker cover and all spark plugs.
2. Set No. 1 cylinder at TDC on its compression stroke.
- Align pointer with TDC mark on crankshaft pulley.
- Check that valve lifters on No. 1 cylinder are loose and valve lifters on No. 4 are tight.
  If not, turn crankshaft one revolution (360°) and align as above.

Valve Clearance (Cont'd)

Simpo PDF Merge and Split Unregistered Version - http://www.simpopdf.com

3. Check only those valves shown in the figure.

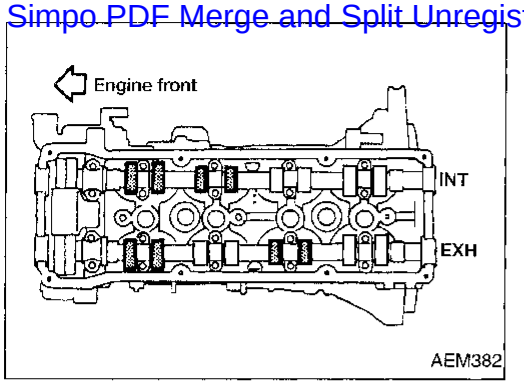

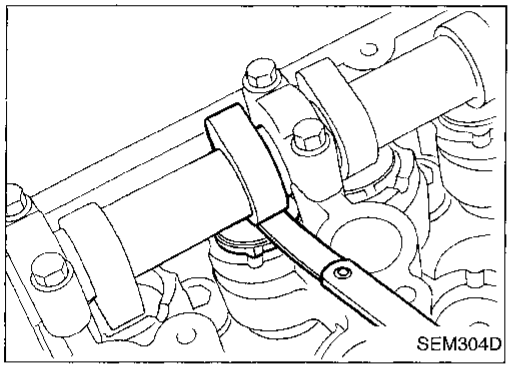

4. Using a feeler gauge, measure clearance between valve lifter and camshaft.
- Record any valve clearance measurements which are out of specification. They will be used later to determine the required replacement adjusting shim.

Valve clearance (Hot):

Intake

0.31 - 0.39 mm (0.012 - 0.015 in)

Exhaust

0.33 - 0.41 mm (0.013 - 0.016 in)

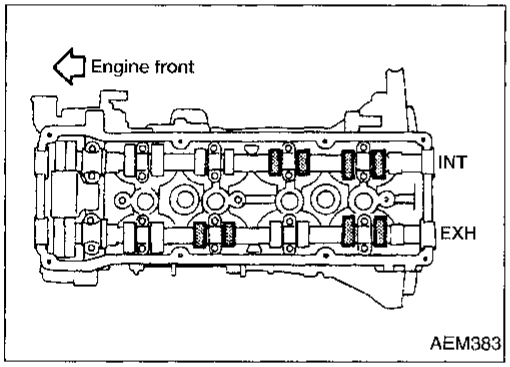

5. Turn crankshaft one revolution (360°) and align mark on crankshaft pulley with pointer.
6. Check those valves shown in the figure.
- Use the same procedure as mentioned in step 4.
7. If all valve clearances are within specification, install the following parts.
- Rocker cover
- All spark plugs

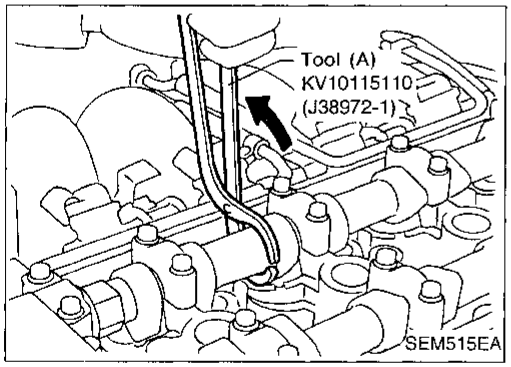

ADJUSTING

Adjust valve clearance while engine is cold.

1. Turn crankshaft to position cam lobe on camshaft of valve that must be adjusted upward.
2. Place Tool (A) around camshaft as shown in figure.
3. Rotate Tool (A) so that lifter is pushed down.

Before placing Tool (A), rotate notch toward center of cylinder head (See figure.), to simplify shim removal later.

CAUTION:

Be careful not to damage cam surface with Tool (A).

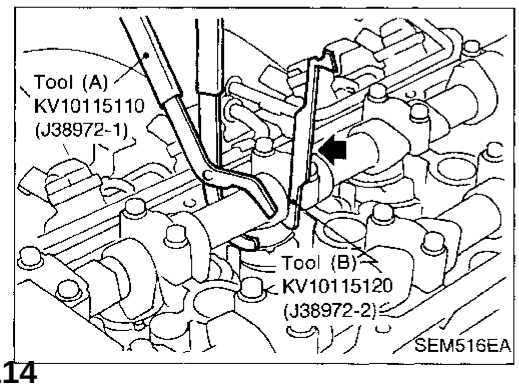

4. Place Tool (B) between camshaft and the edge of the valve lifter to retain valve lifter.

CAUTION:

- **Tool (B) must be placed as close to camshaft bracket as possible.**
- **Be careful not to damage cam surface with Tool (B).**

5. Remove Tool (A).

Valve Clearance (Cont'd)

Simpo PDF Merge and Split Unregistered Version - http://www.simpopdf.com

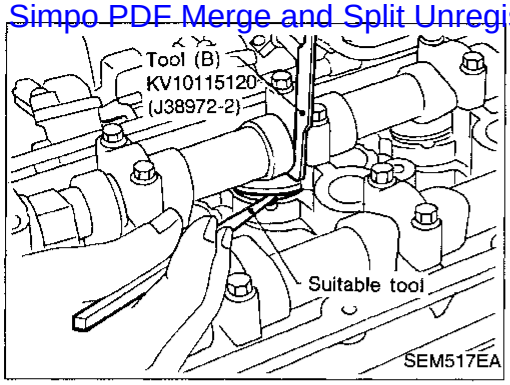

6. Remove adjusting shim using a small screwdriver and a magnetic finger.

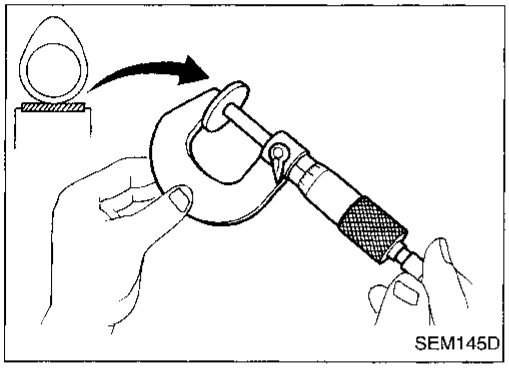

7. Determine replacement adjusting shim size as follows.
a. Using a micrometer determine thickness of removed shim.
b. Calculate thickness of new adjusting shim so valve clearance comes within specified values.
   R = Thickness of removed shim
   N = Thickness of new shim
   M = Measured valve clearance
   Intake & Exhaust:
   N = R + [M – 0.37 mm (0.0146 in)]

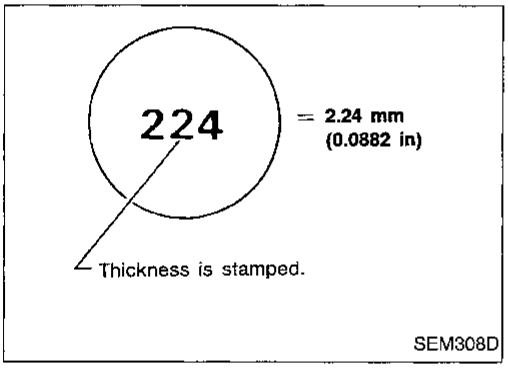

Shims are available in thicknesses from 1.96 mm (0.0772 in) to 2.68 mm (0.1055 in), in steps of 0.02 mm (0.0008 in).
c. Select new shim with thickness as close as possible to calculated value.
   Refer to SDS, EM-53.

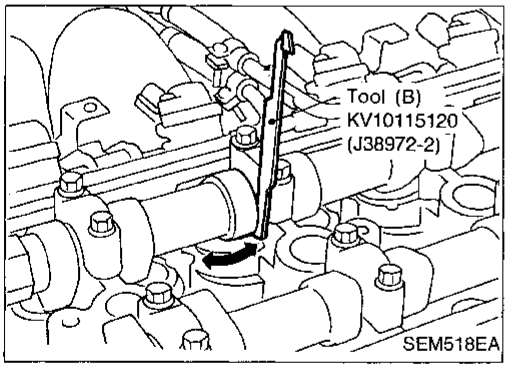

8. Install new shim using a suitable tool.
- **Install with the surface on which the thickness is stamped facing down.**

9. Place Tool (A) as mentioned in steps 2 and 3.
10. Remove Tool (B).
11. Remove Tool (A).
12. Recheck valve clearance.
    Refer to "CHECKING" (EM-35).

Simpo PDF Merge and Split Unregistered Version - http://www.simpopdf.com

SEC. 112

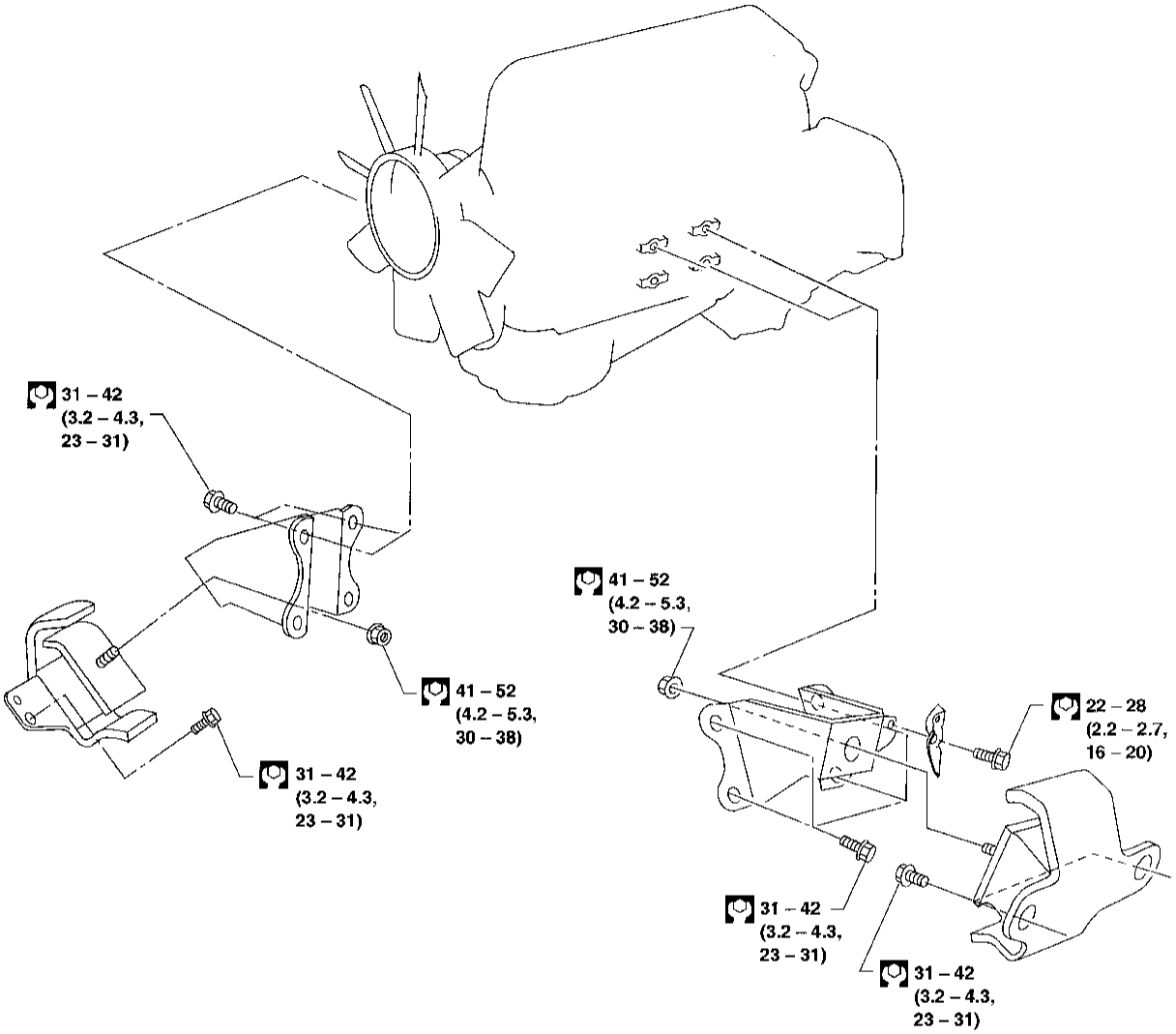

: N·m (kg-m, ft-lb)

AEM398

Simpo PDF Merge and Split Unregistered Version - http://www.simpopdf.com

WARNING:

- **Position vehicle on a flat and solid surface.**
- **Place chocks at front and back of rear wheels.**
- **Do not remove engine until exhaust system has completely cooled off.**
  Otherwise, you may burn yourself and/or fire may break out in fuel line.
- **Before disconnecting fuel hose, release fuel pressure. Refer to EC section ("Fuel Pressure Release", "BASIC SERVICE PROCEDURE").**
- **Be sure to hoist engine and transmission in a safe manner.**
- **For engines not equipped with engine slingers, attach proper slingers and bolts described in PARTS CATALOG.**

CAUTION:

- **When lifting engine, be sure to clear surrounding parts. Take special care near accelerator wire casing, brake lines and brake master cylinder.**
- **In hoisting the engine, always use engine slingers in a safe manner.**
- **Before separating engine and transmission, remove the crankshaft position sensor (OBD) from the assembly.**
- **Always take extra care not to damage edge of crankshaft position sensor (OBD) or ring gear teeth.**

Removal

1. Drain coolant from engine block and radiator. Refer to MA section ("Changing Engine Coolant", "ENGINE MAINTENANCE").
2. Release fuel pressure. Refer to EC section ("Fuel Pressure Release", "BASIC SERVICE PROCEDURE").
3. Remove negative battery cable.
4. Remove hood. Refer to BT section.
5. Remove air cleaner.
6. Remove power steering drive belt, generator drive belt and A/C compressor drive belt.
7. Remove radiator. Refer to LC section ("Radiator", "ENGINE COOLING SYSTEM").
8. Remove exhaust manifold heat shield.
9. Disconnect exhaust system from #1 catalytic converter.
10. Remove A/C compressor from bracket. Refer to HA section ("Compressor Mounting", "SERVICE PROCEDURES").
11. Disconnect accelerator wire, vacuum hoses, electrical connectors, heater hoses and vacuum booster hose.

Removal (Cont'd)

Simpo PDF Merge and Split Unregistered Version - http://www.simpopdf.com

12. Remove four power steering pump bolts.
13. Remove transmission Refer to MT or AT section ("Removal", "REMOVAL AND INSTALLATION").
14. Remove LH and RH engine mounts.
15. Remove engine.

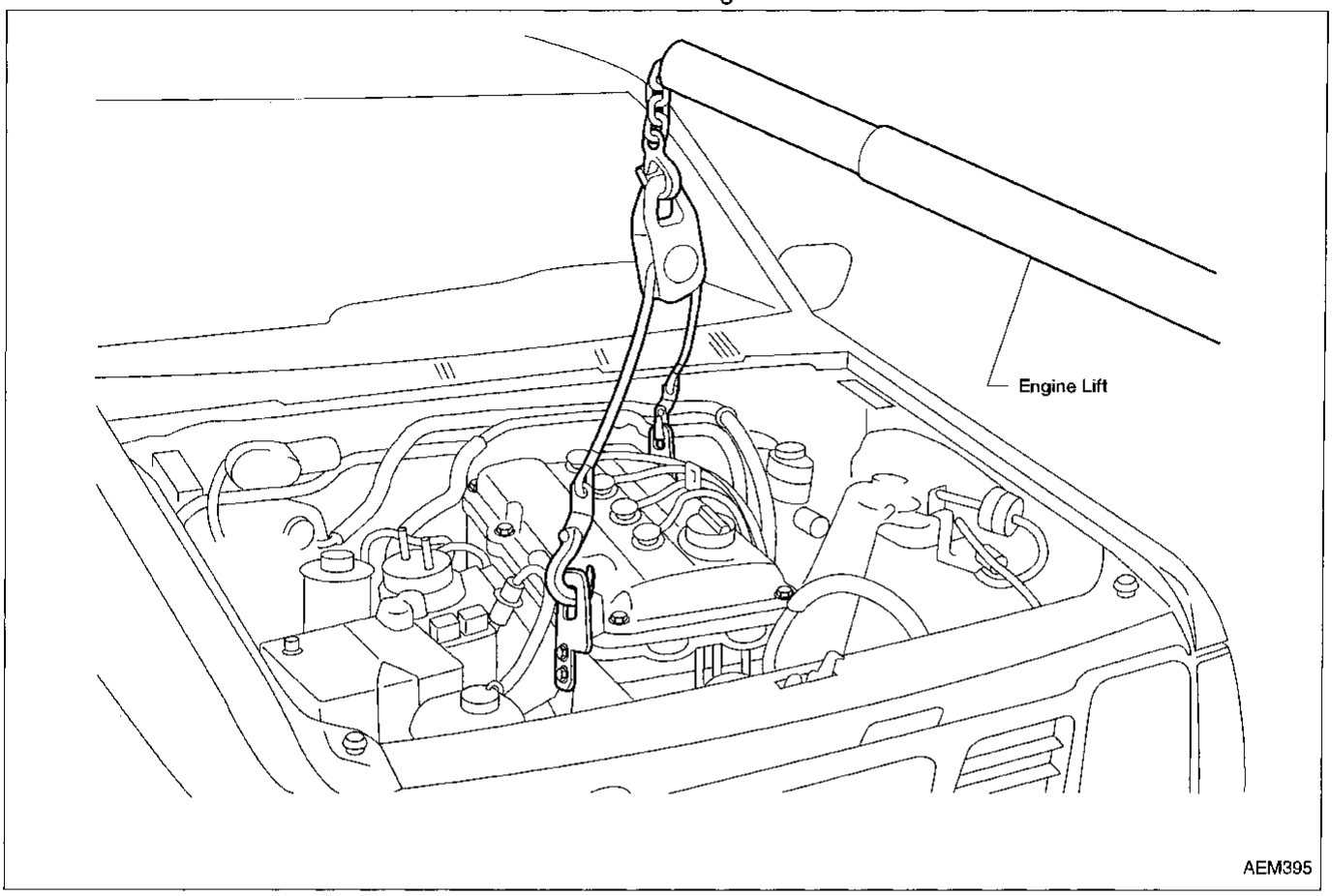

Installation

- Install in reverse order of removal.

Simpo PDF Merge and Split Unregistered Version - http://www.simpopdf.com

SEC. 110 • 120 • 135 • 150 • 210

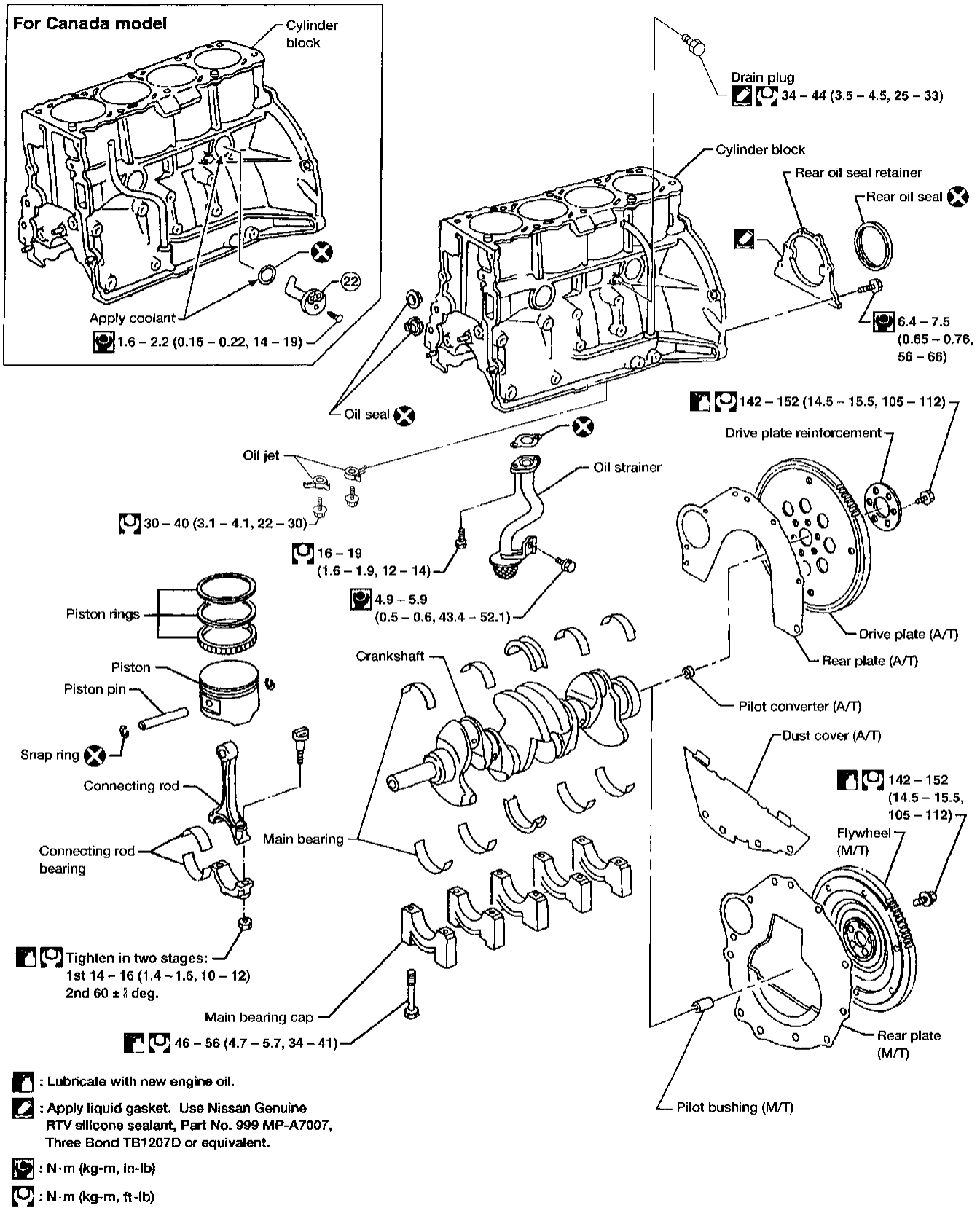

AEM358

Simpo PDF Merge and Split Unregistered Version - http://www.simpopdf.com

CAUTION:

- **When installing sliding parts (bearings, pistons, etc.), lubricate contacting surfaces with new engine oil.**
- **Place removed parts such as bearings and bearing caps in their proper order and direction.**
- **When installing connecting rod nuts and main bearing cap bolts, apply new engine oil to threads and seating surfaces.**
- **Do not allow any magnetic materials to contact the ring gear teeth of flywheel or drive plate.**

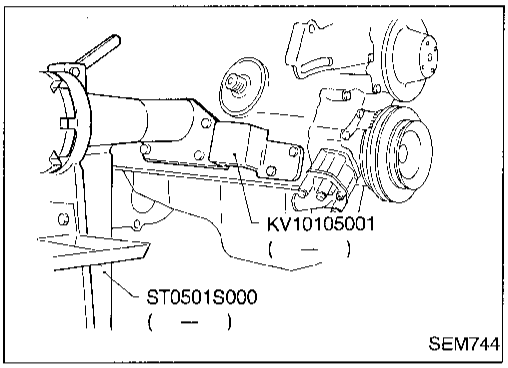

Disassembly

PISTON AND CRANKSHAFT

1. Place engine on a work stand.
2. Drain coolant and oil.
3. Remove oil pan.
4. Remove timing chain. Refer to "Removal" in "TIMING CHAIN" (EM-18).
5. Remove water pump.
6. Remove cylinder head.
7. Remove pistons with connecting rods.

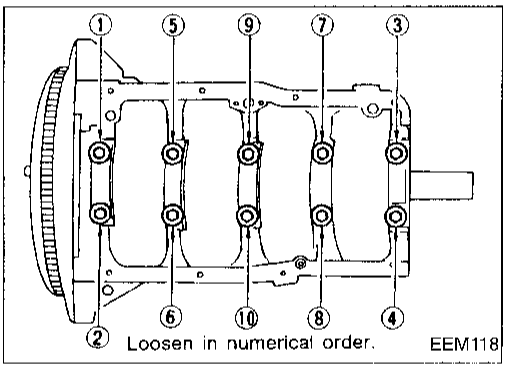

8. Remove bearing caps and crankshaft.

- **Before removing bearing caps, measure crankshaft end play. Refer to EM-49.**
- **Bolts should be loosened in two or three steps.**

Inspection

PISTON AND PISTON PIN CLEARANCE

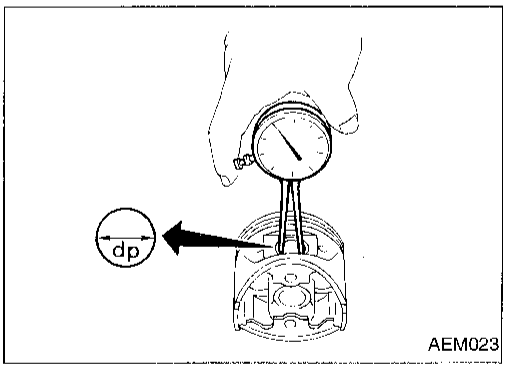

1. Measure inner diameter of piston pin hole "dp".
   Standard diameter "dp":
   20.993 - 21.005 mm (0.8265 - 0.8270 in)

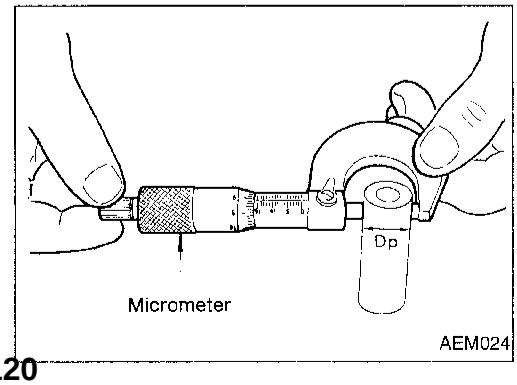

2. Measure outer diameter of piston pin "Dp".
   Standard diameter "Dp":
   20.989 - 21.001 mm (0.8263 - 0.8268 in)
3. Calculate piston pin clearance.
   dp – Dp = –0.002 - 0.01 mm (–0.0001 - 0.0004 in)
   If it exceeds the above value, replace piston assembly with pin.

Inspection (Cont'd)

Simpo PDF Merge and Split Unregistered Version - http://www.simpopdf.com

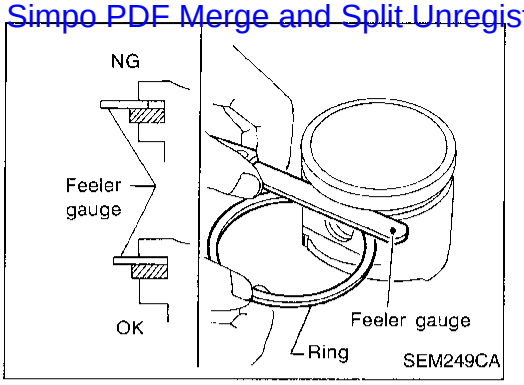

PISTON RING SIDE CLEARANCE

Side clearance:
Top ring 0.04 - 0.08 mm (0.0016 - 0.0031 in)
2nd ring 0.03 - 0.07 mm (0.0012 - 0.0028 in)
Max. limit of side clearance:
0.1 mm (0.004 in)

If out of specification, replace piston ring.
If clearance exceeds maximum limit with new ring, replace piston.

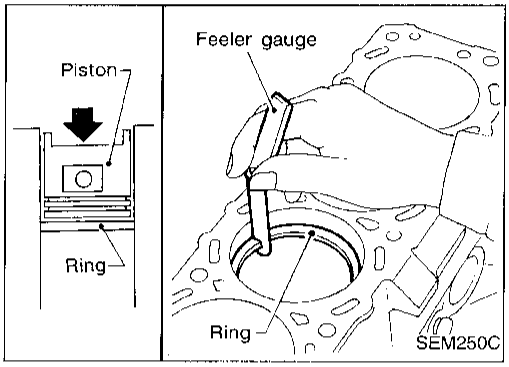

PISTON RING END GAP

End gap:
Top ring
0.28 - 0.52 mm (0.0110 - 0.0205 in)
2nd ring
0.45 - 0.69 mm (0.0177 - 0.0272 in)
(R or T is punched on the ring.)
0.55 - 0.70 mm (0.0217 - 0.0276 in)
(N is punched on the ring.)
Oil ring
0.20 - 0.69 mm (0.0079 - 0.0272 in)
Max. limit of ring gap:
Refer to SDS, EM-57.

If out of specification, replace piston ring. If gap exceeds maximum limit with a new ring, rebore cylinder and use oversized piston and piston rings. Refer to SDS, EM-57.

- When replacing the piston, check cylinder block surface for scratches or seizure. If scratches or seizure are found, hone or replace the cylinder block.

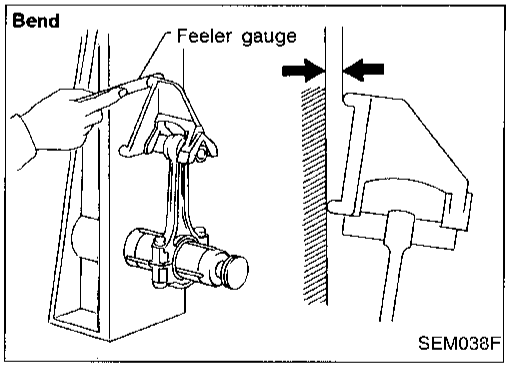

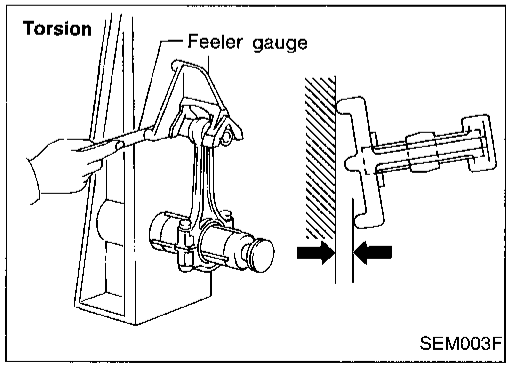

CONNECTING ROD BEND AND TORSION

Bend:
Limit 0.15 mm (0.0059 in)
per 100 mm (3.94 in) length
Torsion:
Limit 0.30 mm (0.0118 in)
per 100 mm (3.94 in) length

If it exceeds the limit, replace connecting rod assembly.

Inspection (Cont'd)

Simpo PDF Merge and Split Unregistered Version - http://www.simpopdf.com

CYLINDER BLOCK DISTORTION AND WEAR

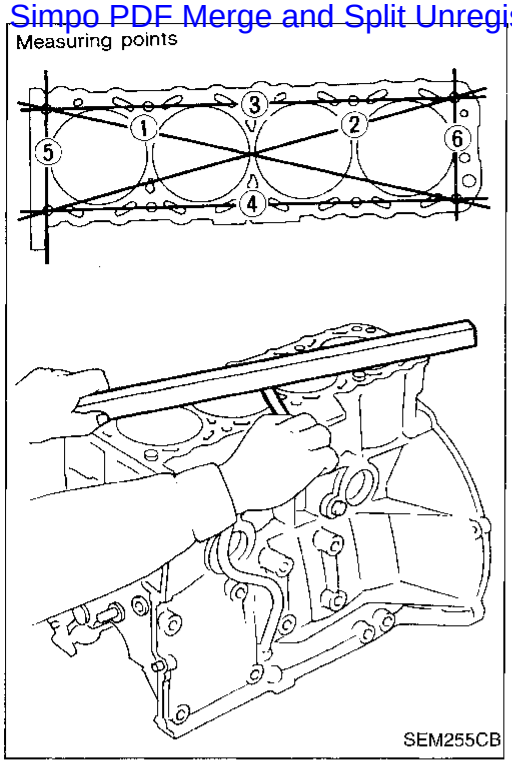

1. Clean upper face of cylinder block.
   Use a reliable straightedge and feeler gauge to check the flatness of cylinder block surface. Check along six positions shown in figure.
   Limit:
   0.1 mm (0.004 in)
2. If out of specification, resurface it.
   The limit for cylinder block resurfacing is determined by cylinder head resurfacing.

Amount of cylinder head resurfacing is "A"
Amount of cylinder block resurfacing is "B"
The maximum limit is as follows:
A + B = 0.2 mm (0.008 in)
Nominal cylinder block height from crankshaft center:
246.95 - 247.05 mm (9.7224 - 9.7264 in)

3. If necessary, replace cylinder block.

PISTON-TO-BORE CLEARANCE

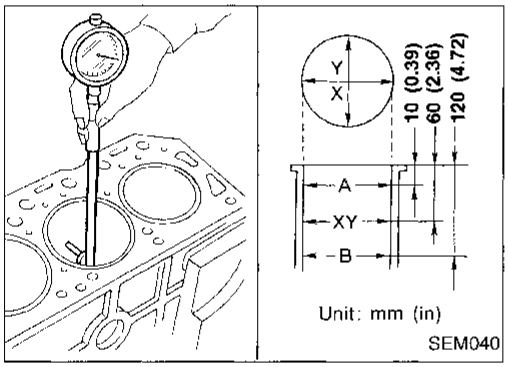

1. Using a bore gauge, measure cylinder bore for wear, out-of-round and taper.
   Standard inner diameter:
   Refer to SDS, EM-55.
   Wear limit: 0.2 mm (0.008 in)
   Out-of-round (X – Y) standard: 0.015 mm (0.0006 in)
   Taper (A – B) standard: 0.010 mm (0.0004 in)
   If it exceeds the limit, rebore all cylinders. Replace cylinder block if necessary.
2. Check for scratches and seizure. If seizure is found, hone it.

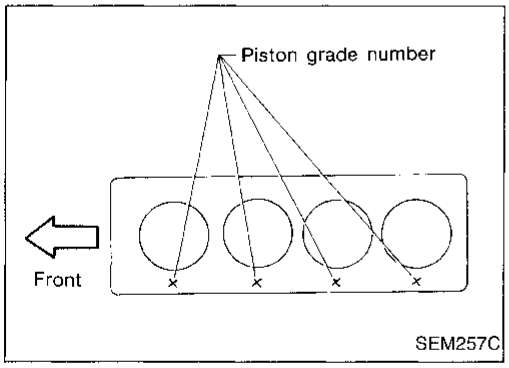

- **If cylinder block and piston are replaced, match piston grade with grade number on cylinder block upper surface.**

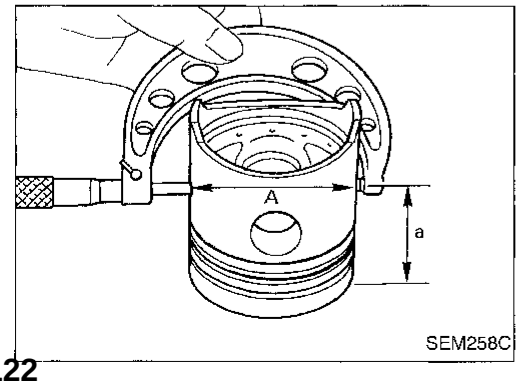

3. Measure piston skirt diameter.
   Piston diameter "A":
   Refer to SDS, EM-57.
   Measuring point "a" (Distance from the top):
   Approximately 48 mm (1.89 in)
4. Check that piston-to-bore clearance is within specification.
   Piston-to-bore clearance "B":
   0.020 - 0.040 mm (0.0008 - 0.0016 in)
5. Determine piston oversize according to amount of cylinder wear.

Simpo PDF Merge and Split Unregistered Version - http://www.simpopdf.com

Inspection (Cont'd)

Oversize pistons are available for service. Refer to SDS, EM-57.

6. Cylinder bore size is determined by adding piston-to-bore clearance to piston diameter "A".
   Rebored size calculation:
   D = A + B – C
   where,
   D: Bored diameter
   A: Piston diameter as measured
   B: Piston-to-bore clearance
   C: Honing allowance 0.02 mm (0.0008 in)
7. Install main bearing caps and tighten bolts to the specified torque. This will prevent distortion of cylinder bores.
8. Cut cylinder bores.

- **When any cylinder needs boring, all other cylinders must also be bored.**
- **Do not cut too much out of cylinder bore at a time. Cut only 0.05 mm (0.0020 in) or so at a time.**

9. Hone cylinders to obtain specified piston-to-bore clearance.
10. Measure finished cylinder bore for out-of-round and taper.

- **Measurement should be done after cylinder bore cools down.**

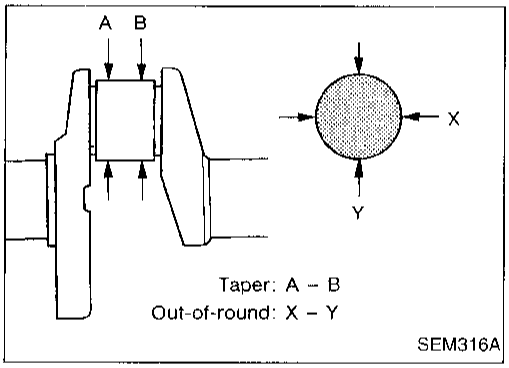

CRANKSHAFT

1. Check crankshaft main and pin journals for score, wear or cracks.
2. With a micrometer, measure journals for taper and out-of-round.
   Out-of-round (X – Y):
   Main journal Less than 0.01 mm (0.0004 in)
   Crank pin Less than 0.005 mm (0.0002 in)
   Taper (A – B):
   Main journal Less than 0.01 mm (0.0004 in)
   Crank pin Less than 0.005 mm (0.0002 in)

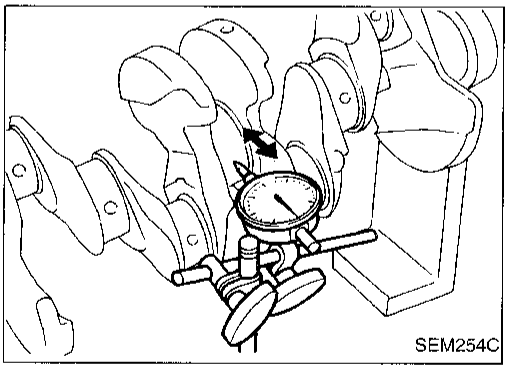

3. Measure crankshaft runout.
   Runout (Total indicator reading):
   Less than 0.10 mm (0.0039 in)

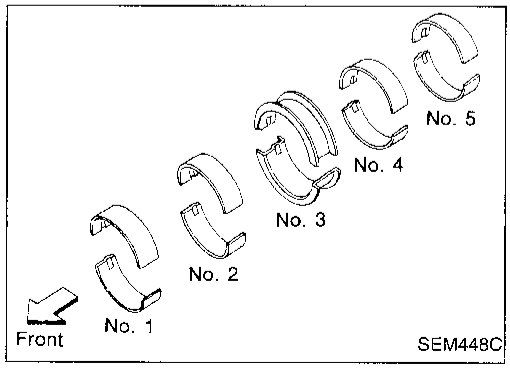

BEARING CLEARANCE

- Use Method A or Method B. Method A is preferred because it is more accurate.

Method A (Using bore gauge and micrometer)

Main bearing

1. Set main bearings in their proper positions on cylinder block and main bearing cap.

Inspection (Cont'd)

Simpo PDF Merge and Split Unregistered Version - http://www.simpopdf.com

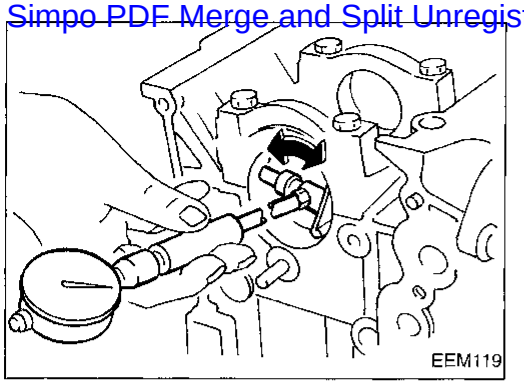
EEM119

2. Install main bearing cap to cylinder block.
- **Tighten all bolts in correct order in two or three stages. Refer to EM-41 and EM-49.**
3. Measure inner diameter "A" of each main bearing.

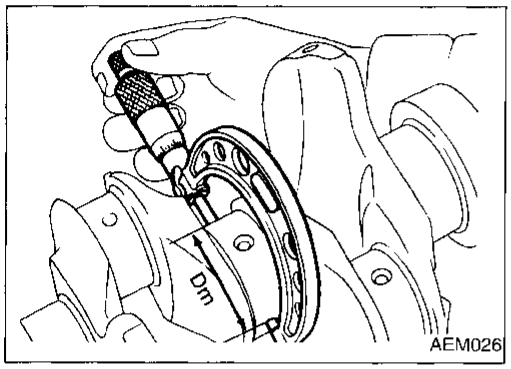

AEM026

4. Measure outer diameter "Dm" of each crankshaft main journal.
5. Calculate main bearing clearance.
   Main bearing clearance = A – Dm
   Standard:
   0.020 - 0.047 mm (0.0008 - 0.0019 in)
   Limit:
   0.1 mm (0.004 in)
6. If it exceeds the limit, replace bearing.
7. If clearance cannot be adjusted within the standard of any bearing, grind crankshaft journal and use undersized bearing.

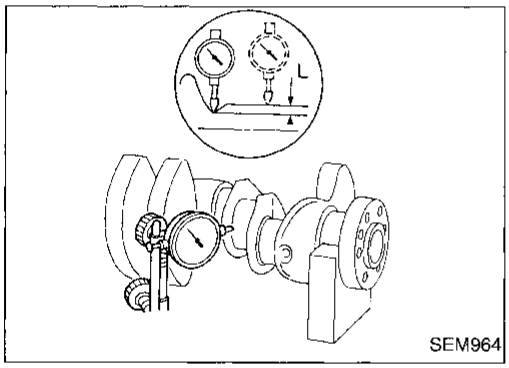

SEM964

a. When grinding crankshaft journal, confirm that "L" dimension in fillet roll is more than the specified limit.
"L": 0.1 mm (0.004 in)
b. Refer to SDS EM-58 & EM-59 for grinding crankshaft and available service parts.

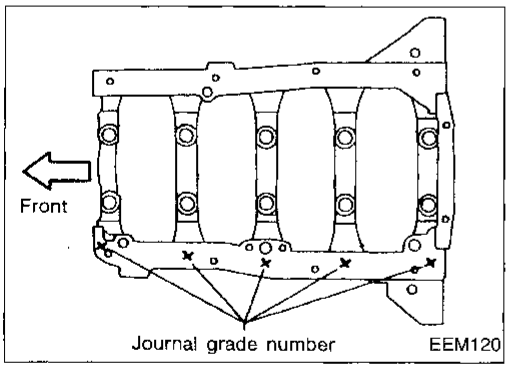

EEM120

8. If crankshaft is reused, measure main bearing clearance and select thickness of main bearing.
   If crankshaft or cylinder block is replaced, select thickness of main bearings as follows:
a. Grade number of each cylinder block main journal is punched on the respective cylinder block. These numbers are punched in either Arabic or Roman numerals.

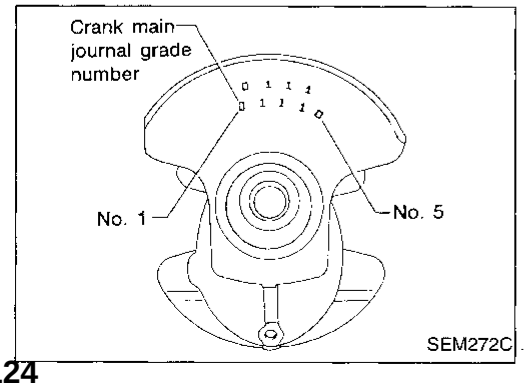

SEM272C

b. Grade number of each crankshaft main journal is punched on crankshaft. These numbers are punched in either Arabic or Roman numerals.
c. Select main bearing with suitable thickness according to the following example or table.
   For example:
   Main journal grade number: 1
   Crankshaft journal grade number: 2
   Main bearing grade number = 1 + 2
   = 3 (Yellow)

Inspection (Cont'd)

Simpo PDF Merge and Split Unregistered Version - http://www.simpopdf.com

Main bearing grade number and identification color:

		Main journal grade number		
		0	1	2
Crankshaft journal grade number	0	0 (Black)	1 (Brown)	2 (Green)
	1 or I	1 (Brown)	2 (Green)	3 (Yellow)
	2 or II	2 (Green)	3 (Yellow)	4 (Blue)

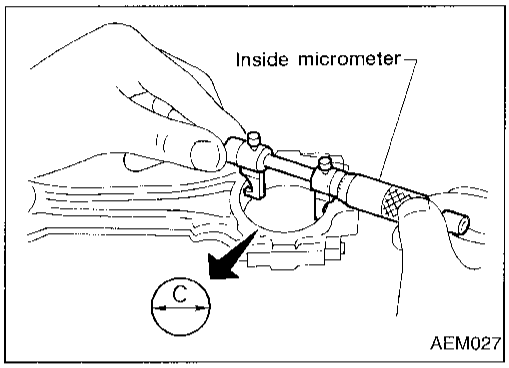

AEM027

Connecting rod bearing (Big end)

1. Install connecting rod bearing to connecting rod and cap.
2. Install connecting rod cap to connecting rod.
- **Tighten bolts to the specified torque.**
3. Measure inner diameter "C" of each bearing.

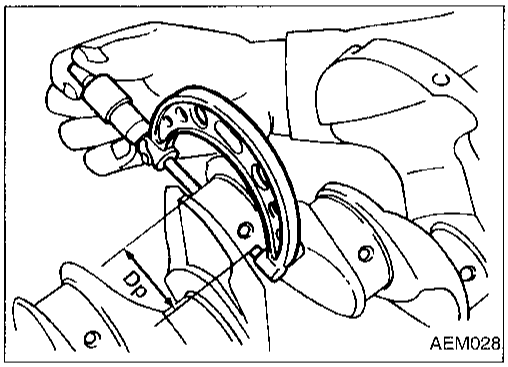

AEM028

4. Measure outer diameter "Dp" of each crankshaft pin journal.
5. Calculate connecting rod bearing clearance.

Connecting rod bearing clearance = C – Dp:

Standard

0.010 - 0.035 mm (0.0004 - 0.0014 in)

Limit

0.09 mm (0.0035 in)

6. If it exceeds the limit, replace bearing.
7. If clearance cannot be adjusted within the standard of any bearing, grind crankshaft journal and use undersized bearing. Refer to step 5 of "BEARING CLEARANCE" EM-45.

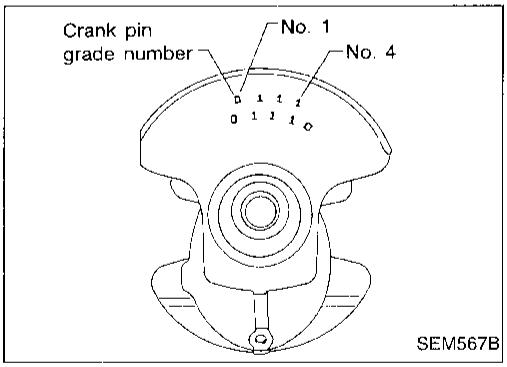

SEM567B

8. If crankshaft is replaced, select connecting rod bearing according to the following table.

Connecting rod bearing grade number:

These numbers are punched in either Arabic or Roman numerals.

Crank pin grade number	Connecting rod bearing grade number
0	0
1 or I	1
2 or II	2

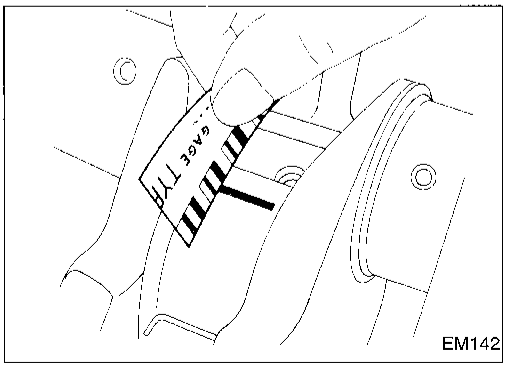

EM142

Method B (Using plastigage)

CAUTION:

- **Do not turn crankshaft or connecting rod while plastigage is being inserted.**
- **When bearing clearance exceeds the specified limit, ensure that the proper bearing has been installed. Then if excessive bearing clearance exists, use a thicker main bearing or undersized bearing so that the specified bearing clearance is obtained.**

Simpo PDF Merge and Split Unregistered Version - http://www.simpopdf.com

Inspection (Cont'd)

CONNECTING ROD BUSHING CLEARANCE (Small end)

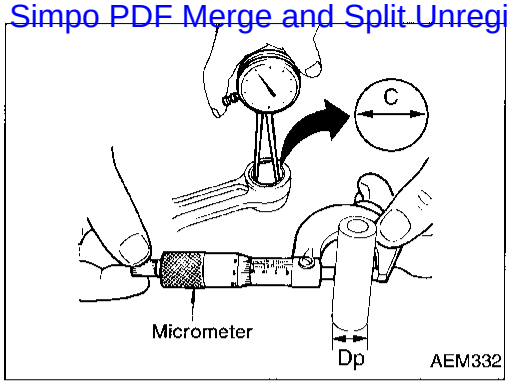

1. Measure inner diameter "C" of bushing.
2. Measure outer diameter "Dp" of piston pin.
3. Calculate connecting rod bushing clearance.

C – Dp =
0.001 to 0.013 mm (0 to 0.0005 in) (Standard)
0.023 mm (0.0009 in) (Limit)

If out of specification, replace connecting rod assembly and/or piston set with pin.

REPLACEMENT OF CONNECTING ROD BUSHING (Small end)

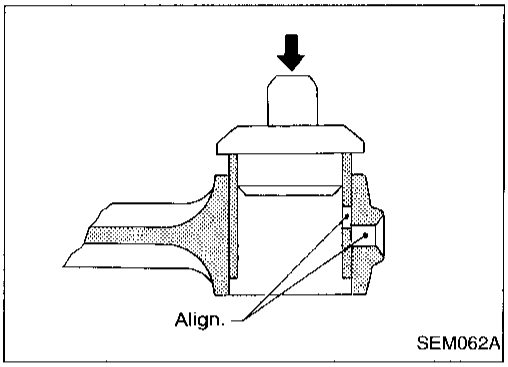

1. Drive in small end bushing until it is flush with end surface of rod.

Be sure to align the oil holes.

2. Ream the bushing until clearance with piston pin is within specification.

Clearance between connecting rod bushing and piston pin:
0.001 - 0.013 mm (0 - 0.0005 in)

FLYWHEEL/DRIVE PLATE RUNOUT

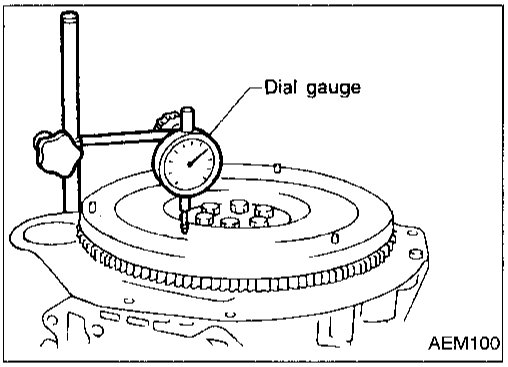

Runout (Total indicator reading):
Flywheel (M/T model)
Less than 0.15 mm (0.006 in)
Drive plate (A/T model)
Less than 0.15 mm (0.006 in)

CAUTION:

- **Be careful not to damage the ring gear teeth.**
- **Check the drive plate for deformation and cracks.**
- **Do not allow any magnetic materials to contact the ring gear teeth.**
- **Do not resurface the flywheel. Replace as necessary.**

Assembly

PISTON

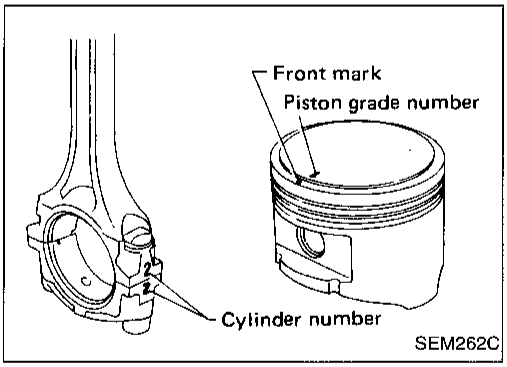

1. Heat piston to 60 to 70°C (140 to 158°F) and assemble piston, piston pin and connecting rod.

- **Align the direction of piston and connecting rod.**
- **Numbers stamped on connecting rod and cap correspond to each cylinder.**
- **After assembly, make sure connecting rod swings smoothly.**

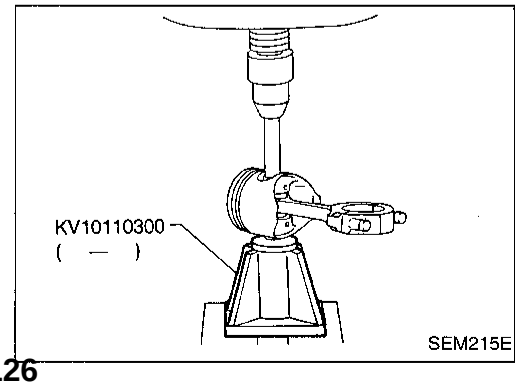

Simpo PDF Merge and Split Unregistered Version - http://www.simpopdf.com

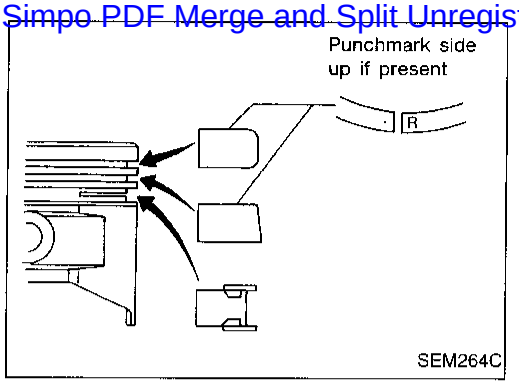

2. Set piston rings as shown.

CAUTION:

- **When piston rings are not replaced, make sure that piston rings are mounted in their original positions.**
- **When piston rings are being replaced and no punchmark is present, piston rings can be mounted with either side up.**

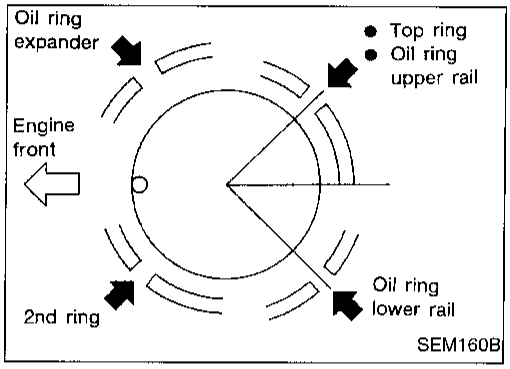

3. Align piston rings so that end gaps are positioned as shown.

CRANKSHAFT

1. Set main bearings in their proper positions on cylinder block and main bearing caps.

- **Confirm that correct main bearings are used. Refer to EM-45.**
- **Apply new engine oil to bearing surfaces.**

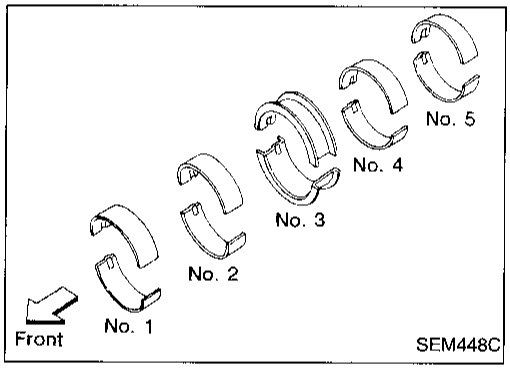

2. Install crankshaft and main bearing caps and tighten bolts to the specified torque. Refer to EM-41.

- **Apply new engine oil to the bolt threads and seat surface.**
- **Prior to tightening bearing cap bolts, place bearing cap in its proper position by shifting crankshaft in the axial direction.**
- **Tighten bearing cap bolts gradually in two or three stages. Start with center bearing and move outward as shown in figure.**
- **After securing bearing cap bolts, make sure crankshaft turns smoothly by hand.**

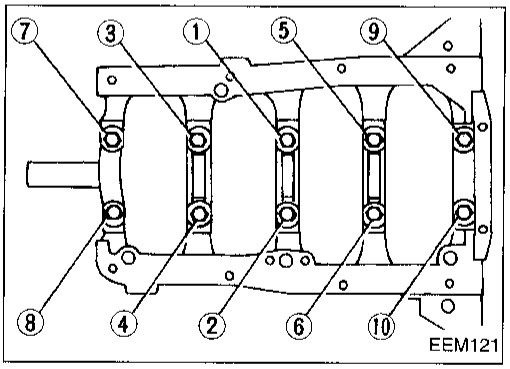

3. Measure crankshaft end play.

Crankshaft end play:
Standard
0.05 - 0.18 mm (0.0020 - 0.0071 in)
Limit
0.3 mm (0.012 in)

If beyond the limit, replace No. 3 bearing with a new one.

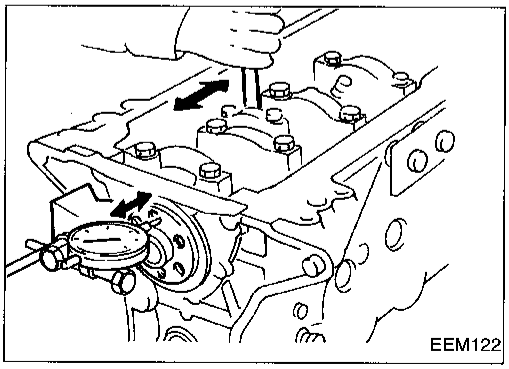

Simpo PDF Merge and Split Unregistered Version - http://www.simpopdf.com

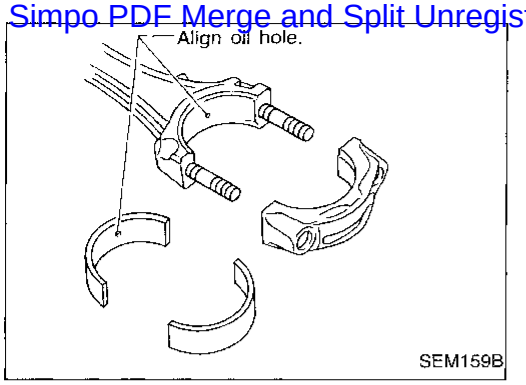

4. Install connecting rod bearings in connecting rods and connecting rod caps.
- **Confirm that correct bearings are used. Refer to EM-47.**
- **Install bearings so that oil hole in connecting rod aligns with oil hole of bearing.**
- **Apply new engine oil to bearing surfaces, bolt threads and seating surfaces.**

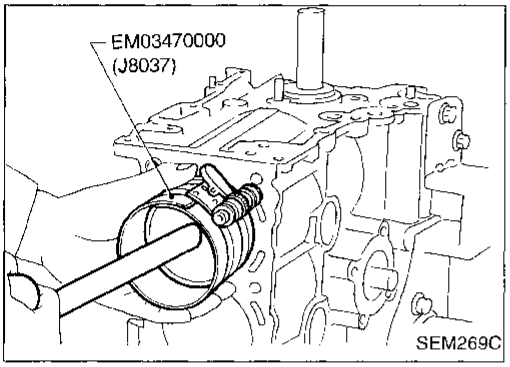

5. Install pistons with connecting rods.

a. Install them into corresponding cylinders with Tool.
- **Arrange so that front mark on piston head faces toward front of engine.**
- **Make sure connecting rod does not scratch cylinder wall.**
- **Make sure connecting rod bolts do not scratch crankshaft journals.**
- **Apply new engine oil to piston rings and sliding surface of piston.**

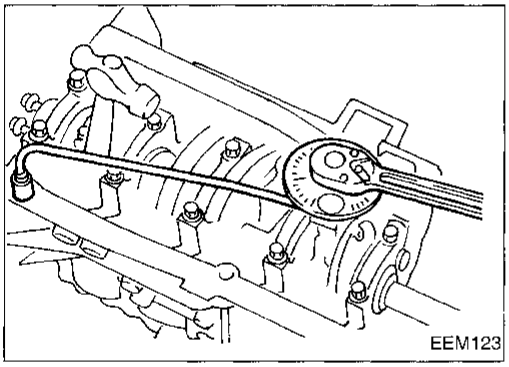

b. Install connecting rod bearing caps.
Tighten connecting rod bearing cap nuts using the following procedure.

Connecting rod bearing nut:

(1) Tighten to 14 to 16 N·m (1.4 to 1.6 kg-m, 10 to 12 ft-lb).

(2) Tighten bolts 60^{+5}_{-0} degrees clockwise with an angle wrench.
If an angle wrench is not available, tighten them to 38 to 44 N·m (3.9 to 4.5 kg-m, 28 to 33 ft-lb).

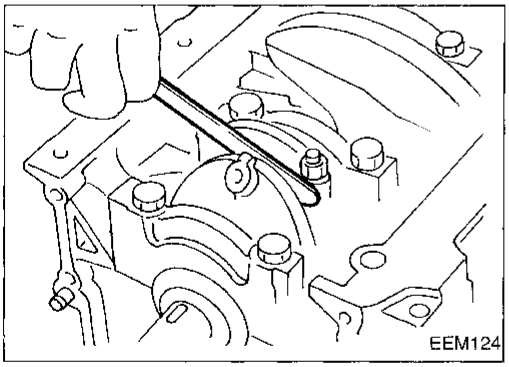

6. Measure connecting rod side clearance.

Connecting rod side clearance:

Standard
0.2 - 0.4 mm (0.008 - 0.016 in)

Limit
0.6 mm (0.024 in)

If beyond the limit, replace connecting rod and/or crankshaft.

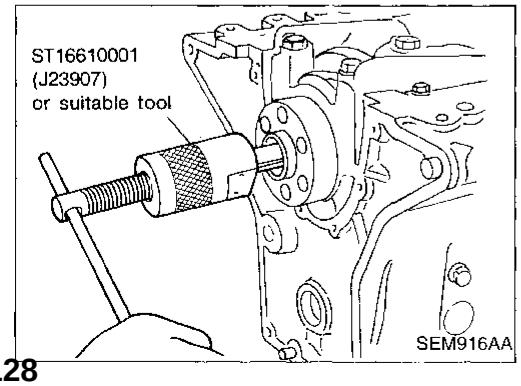

REPLACING PILOT BUSHING

1. Remove pilot bushing (M/T) or pilot convertor (A/T).

Assembly (Cont'd)

Simpo PDF Merge and Split Unregistered Version - http://www.simpopdf.com

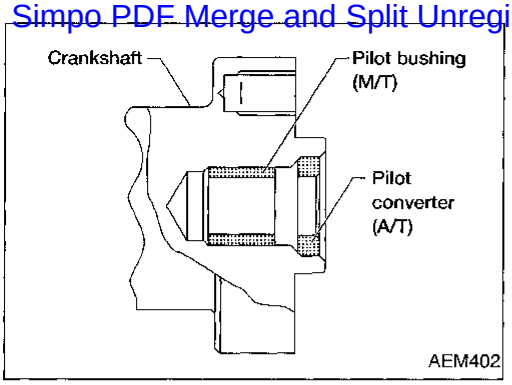

2. Install pilot bushing (M/T) or pilot convertor (A/T).

Simpo PDF Merge and Split Unregistered Version - http://www.simpopdf.com

General Specifications

Cylinder arrangement		In-line 4
Displacement	cm^3 (cu in)	2,389 (145.78)
Bore and stroke	mm (in)	89 x 96 (3.50 x 3.78)
Valve arrangement		DOHC
Firing order		1-3-4-2
Number of piston rings		
Compression		2
Oil		1
Number of main bearings		5
Compression ratio		9.2

COMPRESSION PRESSURE

Unit: kPa (kg/cm^2, psi)/300 rpm

Compression pressure	
Standard	1,226 (12.5, 178)
Minimum	1,030 (10.5, 149)
Differential limit between cylinders	98 (1.0, 14)

Inspection and Adjustment

CYLINDER HEAD

Unit: mm (in)

	Standard	Limit
Head surface distortion	Less than 0.03 (0.0012)	0.1 (0.004)

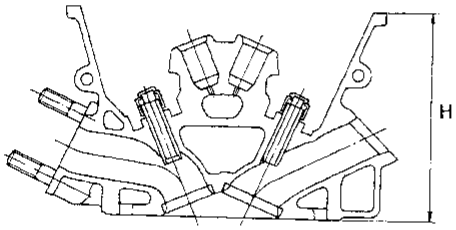

Nominal cylinder head height:
H = 126.3 - 126.5 (4.972 - 4.980)

SEM519E

VALVE

Unit: mm (in)

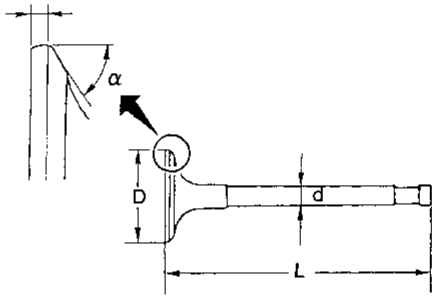

SEM188

Valve head diameter "D"	
Intake	36.5 - 36.7 (1.437 - 1.445)
Exhaust	31.2 - 31.4 (1.228 - 1.236)
Valve length "L"	
Intake	101.17 - 101.47 (3.9831 - 3.9949)
Exhaust	98.67 - 98.97 (3.8846 - 3.8964)
Valve stem diameter "d"	
Intake	6.965 - 6.980 (0.2742 - 0.2748)
Exhaust	6.945 - 6.960 (0.2734 - 0.2740)
Valve seat angle "α"	
Intake & Exhaust	45°15' - 45°07'
Valve margin "T"	
Intake	0.95 - 1.25 (0.0374 - 0.0492)
Exhaust	1.15 - 1.45 (0.0453 - 0.0571)
Valve margin "T" limit	More than 0.5 (0.020)
Valve stem end surface grinding limit	Less than 0.2 (0.008)

Simpo PDF Merge and Split Unregistered Version - http://www.simpopdf.com

Valve spring

Free height	mm (in)	50.3 (1.9831)
Pressure N (kg, lb) at height mm (in)		
Standard		418.0 (42.6, 93.9) at 29.17 (1.1484)
Limit		393.0 (40.1, 88.4) at 29.17 (1.1484)
Out-of-square	mm (in)	Less than 2.2 (0.087)

Valve guide

Unit: mm (in)

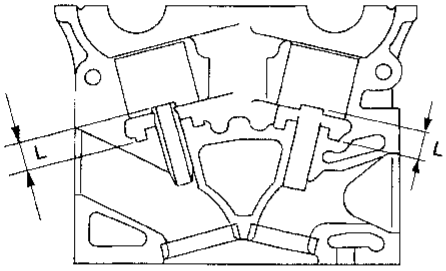

SEM301D

		Standard	Service
Valve guide Outer diameter	Intake	11.023 - 11.034 (0.4340 - 0.4344)	11.223 - 11.234 (0.4418 - 0.4423)
	Exhaust	11.023 - 11.034 (0.4340 - 0.4344)	11.223 - 11.234 (0.4418 - 0.4423)
Valve guide Inner diameter (Finished size)	Intake	7.000 - 7.018 (0.2756 - 0.2763)	
	Exhaust	7.000 - 7.018 (0.2756 - 0.2763)	
Cylinder head valve guide hole diameter	Intake	10.975 - 10.996 (0.4321 - 0.4329)	11.175 - 11.196 (0.4400 - 0.4408)
	Exhaust	10.975 - 10.996 (0.4321 - 0.4329)	11.175 - 11.196 (0.4400 - 0.4408)
Interference fit of valve guide		0.027 - 0.059 (0.0011 - 0.0023)	
		Standard	Limit
Stem to guide clearance	Intake	0.020 - 0.053 (0.0008 - 0.0021)	0.08 (0.0031)
	Exhaust	0.040 - 0.073 (0.0016 - 0.0029)	0.1 (0.004)
Valve deflection limit		0.2 (0.008)	
Projection length "L"		13.3 - 13.9 (0.524 - 0.547)	

Valve lifter

Unit: mm (in)

Valve lifter outer diameter	33.960 - 33.975 (1.3370 - 1.3376)
Lifter guide inner diameter	34.000 - 34.021 (1.3386 - 1.3394)
Clearance between lifter and filter guide	0.025 - 0.061 (0.0010 - 0.0024)

Valve clearance adjustment

Unit: mm (in)

Valve clearance (Hot)	
Intake	0.31 - 0.39 (0.012 - 0.015)
Exhaust	0.33 - 0.41 (0.013 - 0.016)

Available shims

Thickness mm (in)	Identification mark
1.96 (0.0772)	196
1.98 (0.0780)	198
2.00 (0.0787)	200
2.02 (0.0795)	202
2.04 (0.0803)	204
2.06 (0.0811)	206
2.08 (0.0819)	208
2.10 (0.0827)	210
2.12 (0.0835)	212
2.14 (0.0843)	214
2.16 (0.0850)	216
2.18 (0.0858)	218
2.20 (0.0866)	220
2.22 (0.0874)	222
2.24 (0.0882)	224
2.26 (0.0890)	226
2.28 (0.0898)	228
2.30 (0.0906)	230
2.32 (0.0913)	232
2.34 (0.0921)	234
2.36 (0.0929)	236
2.38 (0.0937)	238
2.40 (0.0945)	240
2.42 (0.0953)	242
2.44 (0.0961)	244
2.46 (0.0969)	246
2.48 (0.0976)	248
2.50 (0.0984)	250
2.52 (0.0992)	252
2.54 (0.1000)	254
2.56 (0.1008)	256
2.58 (0.1016)	258
2.60 (0.1024)	260
2.62 (0.1031)	262
2.64 (0.1039)	264
2.66 (0.1047)	266
2.68 (0.1055)	268

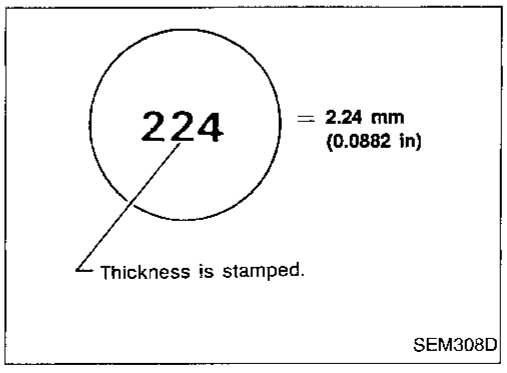

SEM308D

Simpo PDF Merge and Split Unregistered Version - http://www.simpopdf.com

Valve seat

Unit: mm (in)

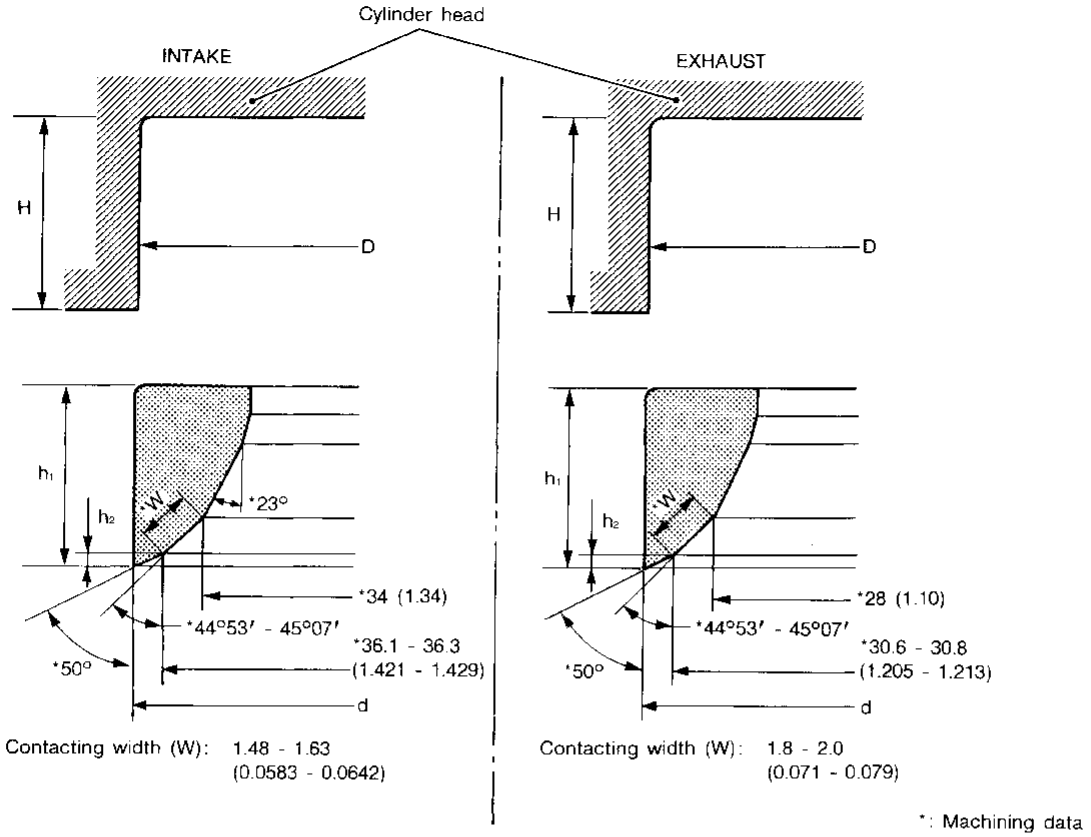

SEM952E

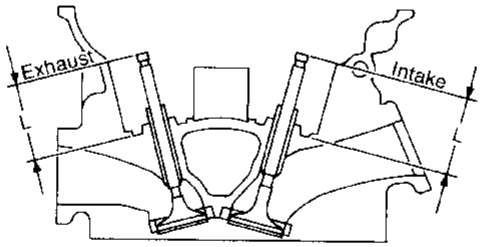

SEM621F

		Standard	Service
Cylinder head seat recess diameter (D)	In.	37.500 - 37.516 (1.4764 - 1.4770)	38.000 - 38.016 (1.4961 - 1.4967)
	Ex.	32.200 - 32.216 (1.2677 - 1.2683)	32.700 - 32.716 (1.2874 - 1.2880)
Valve seat interference fit	In.	0.064 - 0.096 (0.0025 - 0.0038)	
	Ex.	0.064 - 0.096 (0.0025 - 0.0038)	
Valve seat outer diameter (d)	In.	37.580 - 37.596 (1.4795 - 1.4802)	38.080 - 38.096 (1.4992 - 1.4998)
	Ex.	32.280 - 32.296 (1.2709 - 1.2715)	32.780 - 32.796 (1.2905 - 1.2912)
Depth (H)	In.	6.1 - 6.3 (0.240 - 0.248)	
	Ex.	6.1 - 6.3 (0.240 - 0.248)	
Height (h_1)	In.	5.8 - 6.0 (0.228 - 0.236) 5.9 - 6.0 (0.232 - 0.236)	5.3 - 5.5 (0.209 - 0.217)
	Ex.	5.9 - 6.0 (0.232 - 0.236)	5.32 - 5.42 (0.209 - 0.213)
Height (h_2)	In.	0.24 - 0.64 (0.0094 - 0.0252) 0.34 - 0.64 (0.0134 - 0.0252)	
	Ex.	0.43 - 0.73 (0.0169 - 0.0287)	
Depth (L)	In.	42.02 - 42.52	
	Ex.	42.03 - 42.53	

Simpo PDF Merge and Split Unregistered Version - http://www.simpopdf.com

CYLINDER BLOCK

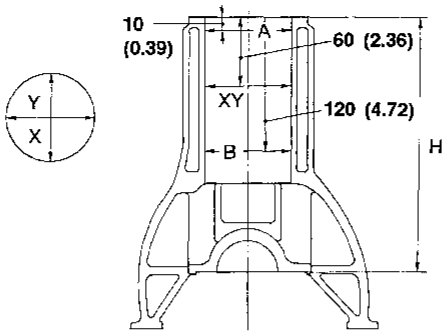

SEM400E

Unit: mm (in)

			Standard	Limit
Distortion			—	0.1 (0.004)
Cylinder bore	Inner diameter	Grade 1	89.000 - 89.010 (3.5039 - 3.5043)	0.2 (0.008)*
		Grade 2	89.010 - 89.020 (3.5043 - 3.5047)	
		Grade 3	89.020 - 89.030 (3.5047 - 3.5051)	
	Out-of-round (X – Y)		Less than 0.015 (0.0006)	—
	Taper (A – B)		Less than 0.010 (0.0004)	—
Difference in inner diameter between cylinders			Less than 0.03 (0.0012)	0.2 (0.008)
Piston-to-cylinder clearance			0.020 - 0.040 (0.0008 - 0.0016)	—
Cylinder block height (From crankshaft center)			246.95 - 247.05 (9.7224 - 9.7264)	0.2 (0.008)**

* Wear limit
** Total amount of cylinder head resurfacing and cylinder block resurfacing

Inspection and Adjustment (Cont'd)

Simpo PDF Merge and Split Unregistered Version - http://www.simpopdf.com

CAMSHAFT AND CAMSHAFT BEARING

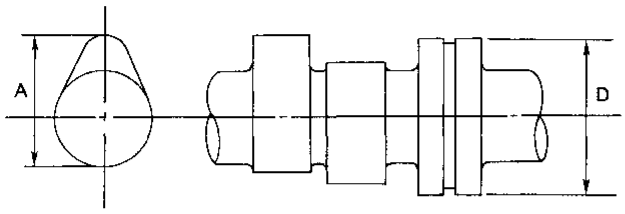

SEM568A

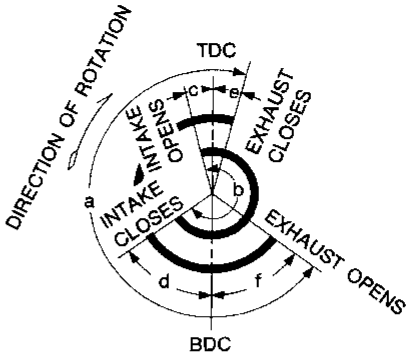

EM120

Unit: mm (in)

		Standard	Limit
Cam height (A)	Intake	42.505 - 42.695 (1.673 - 1.681)	—
	Exhaust	40.905 - 41.095 (1.610 - 1.618)	—
Wear limit of cam height		—	0.2 (0.008)
Camshaft journal to bearing clearance		0.045 - 0.090 (0.0018 - 0.0035)	0.12 (0.0047)
Inner diameter of camshaft bearing	#1 to #5 journals	28.000 - 28.025 (1.1024 - 1.1033)	—
Outer diameter of camshaft journal (D)	#1 to #5 journals	27.935 - 27.955 (1.0998 - 1.1006)	—
Camshaft runout*		Less than 0.02 (0.0008)	0.04 (0.0016)
Camshaft end play		0.070 - 0.148 (0.0028 - 0.0058)	0.2 (0.008)
Valve timing (Degree on crankshaft)	a	216	—
	b	232	—
	c	−1	—
	d	53	—
	e	4	—
	f	32	—

* Total indicator reading

Simpo PDF Merge and Split Unregistered Version - http://www.simpopdf.com

PISTON, PISTON RING AND PISTON PIN

Piston

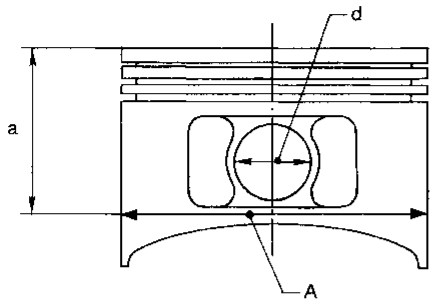

SEM804E

Unit: mm (in)

Piston skirt diameter (A)	Standard	Grade No. 1	88.970 - 88.980 (3.5027 - 3.5031)
		Grade No. 2	88.980 - 88.990 (3.5031 - 3.5035)
		Grade No. 3	88.990 - 89.000 (3.5035 - 3.5039)
	Service (Oversize)	0.5 (0.020)	89.470 - 89.500 (3.5224 - 3.5236)
		1.0 (0.039)	89.970 - 90.000 (3.5421 - 3.5433)
Dimension (a)		Approximately 48 (1.89)	
Piston pin hole diameter (d)		20.993 - 21.005 (0.8265 - 0.8270)	
Piston-to-cylinder bore clearance		0.020 - 0.040 (0.0008 - 0.0016)	

Piston pin

Unit: mm (in)

	Standard	Limit
Piston pin outer diameter	20.989 - 21.001 (0.8263 - 0.8268)	—
Interference fit of piston pin to piston pin hole	−0.002 to 0.01 (−0.0001 to 0.0004)	—
Piston pin to connecting rod bearing clearance	0.001 - 0.013 (0 - 0.0005)	0.023 (0.0009)

Piston ring

Unit: mm (in)

		Standard	Limit
Side clearance	Top	0.040 - 0.080 (0.0016 - 0.0031)	0.1 (0.004)
	2nd	0.030 - 0.070 (0.0012 - 0.0028)	0.1 (0.004)
Ring gap	Top	0.28 - 0.52 (0.0110 - 0.0205)	1.0 (0.039)
	2nd	0.45 - 0.69 (0.0177 - 0.0272)	1.0 (0.039)
	Oil (rail ring)	0.20 - 0.69 (0.0079 - 0.0272)	1.0 (0.039)

CONNECTING ROD

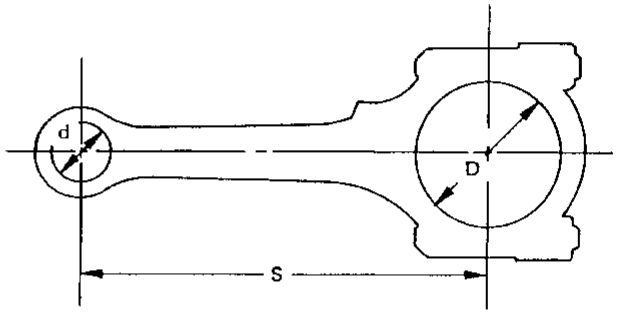

SEM570A

Unit: mm (in)

	Standard	Limit
Center distance (S)	164.95 - 165.05 (6.4941 - 6.4980)	—
Bend [per 100 mm (3.94 in)]	—	0.15 (0.0059)
Torsion [per 100 mm (3.94 in)]	—	0.30 (0.0118)
Connecting rod small end inner diameter (d)*	23.970 - 24.000 (0.9437 - 0.9449)	—
Piston pin bushing inner diameter	21.000 - 21.012 (0.8268 - 0.8272)	—
Connecting rod big end inner diameter (D)*	53.000 - 53.013 (2.0866 - 2.0871)	—
Side clearance	0.2 - 0.4 (0.008 - 0.016)	0.6 (0.024)

* Without bearing

Simpo PDF Merge and Split Unregistered Version - http://www.simpopdf.com

CRANKSHAFT

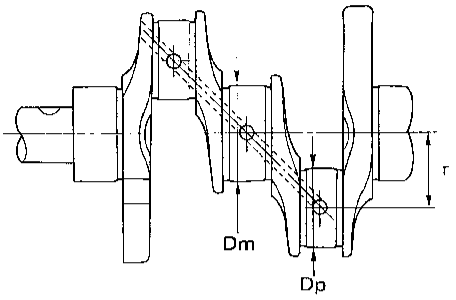

SEM394

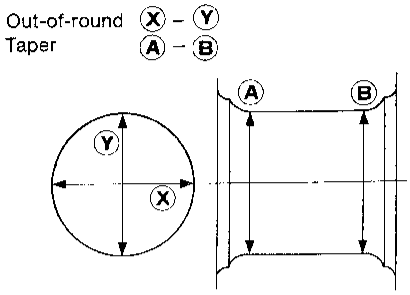

EM715

Unit: mm (in)

Main journal diameter (Dm)	Grade	No. 0	59.967 - 59.975 (2.3609 - 2.3612)
		No. 1	59.959 - 59.967 (2.3606 - 2.3609)
		No. 2	59.951 - 59.959 (2.3603 - 2.3606)
Pin journal diameter (Dp)	Grade	No. 0	49.968 - 49.974 (1.9672 - 1.9675)
		No. 1	49.962 - 49.968 (1.9670 - 1.9672)
		No. 2	49.956 - 49.962 (1.9668 - 1.9670)
Center distance (r)			47.95 - 48.05 (1.8878 - 1.8917)

		Standard	Limit
Taper of journal and pin [Ⓐ – Ⓑ]	Journal	—	0.01 (0.0004)
	Pin	—	0.005 (0.0002)
Out-of-round of journal and pin [Ⓧ – Ⓨ]	Journal	—	0.01 (0.0004)
	Pin	—	0.005 (0.0002)
Runout [TIR]*		—	0.10 (0.0039)
Free end play		0.05 - 0.18 (0.0020 - 0.0071)	0.3 (0.012)
Fillet roil		More than 0.1 (0.004)	

* Total indicator reading

BEARING CLEARANCE

Unit: mm (in)

	Standard	Limit
Main bearing clearance	0.020 - 0.047 (0.0008 - 0.0019)	0.1 (0.004)
Connecting rod bearing clearance	0.010 - 0.035 (0.0004 - 0.0014)	0.09 (0.0035)

Simpo PDF Merge and Split Unregistered Version - http://www.simpopdf.com

AVAILABLE MAIN BEARING

Standard

Grade number	Thickness mm (in)	Identification color
0	1.821 - 1.825 (0.0717 - 0.0719)	Black
1	1.825 - 1.829 (0.0719 - 0.0720)	Brown
2	1.829 - 1.833 (0.0720 - 0.0722)	Green
3	1.833 - 1.837 (0.0722 - 0.0723)	Yellow
4	1.837 - 1.841 (0.0723 - 0.0725)	Blue

Undersize (service)

Unit: mm (in)

	Thickness	Main journal diameter "Dm"
0.25 (0.0098)	1.952 - 1.960 (0.0769 - 0.0772)	Grind so that bearing clearance is the specified value.

AVAILABLE CONNECTING ROD BEARING

Standard

Grade number	Thickness mm (in)	Identification color
0	1.505 - 1.508 (0.0593 - 0.0594)	—
1	1.508 - 1.511 (0.0594 - 0.0595)	Brown
2	1.511 - 1.514 (0.0595 - 0.0596)	Green

Undersize (service)

Unit: mm (in)

	Thickness	Crank pin journal diameter "Dp"
0.08 (0.0031)	1.540 - 1.548 (0.0606 - 0.0609)	Grind so that bearing clearance is the specified value.
0.12 (0.0047)	1.560 - 1.568 (0.0614 - 0.0617)	
0.25 (0.0098)	1.625 - 1.633 (0.0640 - 0.0643)	

MISCELLANEOUS COMPONENTS

Unit: mm (in)

Camshaft sprocket runout	[TIR]*	Less than 0.15 (0.0059)
Flywheel runout	[TIR]*	Less than 0.15 (0.006)
Drive plate runout	[TIR]*	Less than 0.15 (0.006)

* Total indicator reading

Simpo PDF Merge and Split Unregistered Version - http://www.simpopdf.com

SECTION FA

CONTENTS

PRECAUTIONS AND PREPARATION 2
- Precautions 2
- Special Service Tools 2
- Commercial Service Tools 3

NOISE, VIBRATION AND HARSHNESS (NVH) TROUBLESHOOTING 4
- NVH Troubleshooting Chart 4

FRONT AXLE AND FRONT SUSPENSION 5
- 2WD 5
- 4WD 6

ON-VEHICLE SERVICE 7
- Front Axle and Front Suspension Parts 7
- Front Wheel Bearing 7
- Front Wheel Alignment 9
- Drive Shaft 13

FRONT AXLE 14
- Manual-lock Free-running Hub — 4WD — 16
- Auto-lock Free-running Hub — 4WD — 17
- Wheel Hub and Rotor Disc 17
- Knuckle Spindle 19
- Drive Shaft — 4WD — 22

FRONT SUSPENSION 27
- Shock Absorber 29
- Torsion Bar Spring 29
- Stabilizer Bar 31
- Upper Link 32
- Tension Rod 33
- Lower Link 34
- Upper Ball Joint and Lower Ball Joint 35

SERVICE DATA AND SPECIFICATIONS (SDS) 36
- General Specifications 36
- Inspection and Adjustment 36

Simpo PDF Merge and Split Unregistered Version - http://www.simpopdf.com

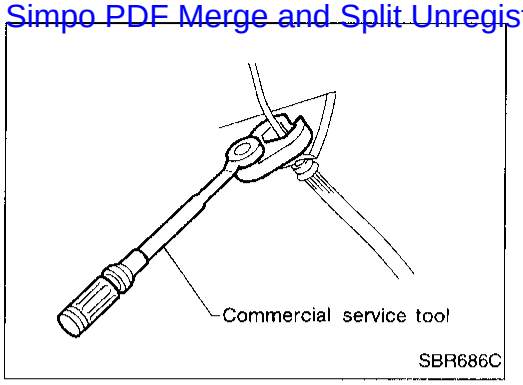

Precautions

- **When installing rubber parts, final tightening must be carried out under unladen condition* with tires on ground.**
  *** Fuel, radiator coolant and engine oil full. Spare tire, jack, hand tools and mats in designated positions.**
- **Use flare nut wrench when removing and installing brake tubes.**
- **After installing removed suspension parts, check wheel alignment and adjust if necessary.**
- **Always torque brake lines when installing.**

Special Service Tools

The actual shapes of Kent-Moore tools may differ from those of special service tools illustrated here.

Tool number (Kent-Moore No.) Tool name	Description		Unit application	
			2WD	4WD
ST29020001 (J24319-01) Gear arm puller	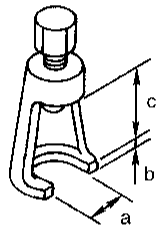 NT694	Removing ball joint for knuckle spindle **a: 34 mm (1.34 in)** **b: 6.5 mm (0.256 in)** **c: 61.5 mm (2.421 in)**	X	X
HT72520000 (J25730-B) Ball joint remover	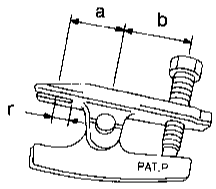 NT546	Removing tie-rod outer end **a: 33 mm (1.30 in)** **b: 50 mm (1.97 in)** **r: R11.5 mm (0.453 in)**	X	X
KV401021S0 (—) Bearing race drift	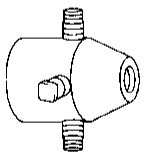 NT153	Installing wheel bearing outer race	X	X
KV40105400 (J36001) Wheel bearing lock nut wrench	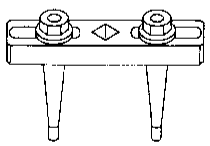 NT154	Removing and installing wheel bearing lock nut	—	X
KV40106800 (—) Lower link bushing puller	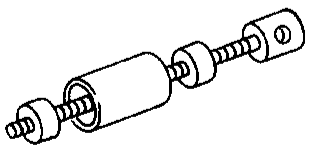 NT685	Removing and installing lower link bushing	X	X

Simpo PDF Merge and Split Unregistered Version - http://www.simpopdf.com

Commercial Service Tools

Tool name	Description	
① Flare nut crowfoot ② Torque wrench	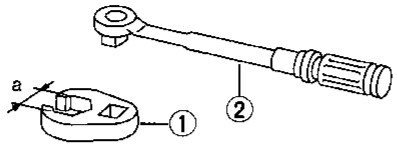 NT360	Removing and installing each brake piping **a: 10 mm (0.39 in)**

Simpo PDF Merge and Split Unregistered Version - http://www.simpopdf.com

NVH Troubleshooting Chart

Use the chart below to help you find the cause of the symptom. If necessary, repair or replace these parts.

		Reference page	—	FA-24	—	FA-5, 6	FA-29	—	—	—	FA-27	FA-9	FA-31	FA-7	FA-9	—	—	—	—	NVH in PD section	NVH in PD section	Refer to DRIVESHAFT in this chart.	Refer to FRONT AXLE AND FRONT SUSPENSION in this chart.	NVH in RA Section	Refer to TIRES in this chart.	Refer to ROAD WHEEL in this chart.	NVH in BR section	NVH in ST section
		Possible cause and SUSPECTED PARTS	Excessive joint angle	Joint sliding resistance	Imbalance	Improper installation, looseness	Shock absorber deflection or damage	Bushing or mounting deterioration	Parts interference	Spring fatigue	Suspension looseness	Incorrect wheel alignment	Stabilizer bar fatigue	Wheel bearing damage	Out-of-round	Incorrect air pressure	Uneven tire wear	Deformation or damage	Non-uniformity	Incorrect tire size	PROPELLER SHAFT	DIFFERENTIAL	DRIVESHAFT	FRONT AXLE AND FRONT SUSPENSION	REAR AXLE AND REAR SUSPENSION	TIRES	ROAD WHEEL	BRAKES	STEERING
Symptom	DRIVESHAFT	Noise, Vibration	X	X																X	X		X	X	X	X	X	X
		Shake	X		X															X			X	X	X	X	X	X
	FRONT AXLE AND FRONT SUSPENSION	Noise				X	X	X	X	X	X									X	X	X		X	X	X	X	X
		Shake				X	X	X	X		X									X		X		X	X	X	X	X
		Vibration				X	X	X	X	X										X		X		X	X			X
		Shimmy				X	X	X	X			X												X	X	X	X	X
		Judder				X	X	X																X	X	X	X	X
		Poor quality ride or handling				X	X	X	X	X		X	X	X										X	X	X		
	TIRES	Noise			X	X									X	X	X	X	X		X	X	X	X	X		X	X	X
		Shake			X	X									X	X	X	X		X	X		X	X	X		X	X	X
		Vibration														X				X	X		X	X	X				X
		Shimmy			X	X									X	X	X	X	X	X				X	X		X	X	X
		Judder			X	X									X	X	X	X		X				X	X		X	X	X
		Poor quality ride or handling			X	X									X	X	X	X		X				X	X		X		
	ROAD WHEEL	Noise			X	X									X			X			X	X	X	X	X	X		X	X
		Shake			X	X									X			X			X		X	X	X	X		X	X
		Shimmy, Judder			X	X									X			X						X	X	X		X	X
		Poor quality ride or handling			X	X									X			X						X	X	X			

X: Applicable

Simpo PDF Merge and Split Unregistered Version - http://www.simpopdf.com

2WD

SEC. 400•401

When installing rubber parts, final tightening must be carried out under unladen condition* with tires on ground.

*** Fuel, radiator coolant and engine oil full. Spare tire, jack, hand tools and mats in designated positions.**

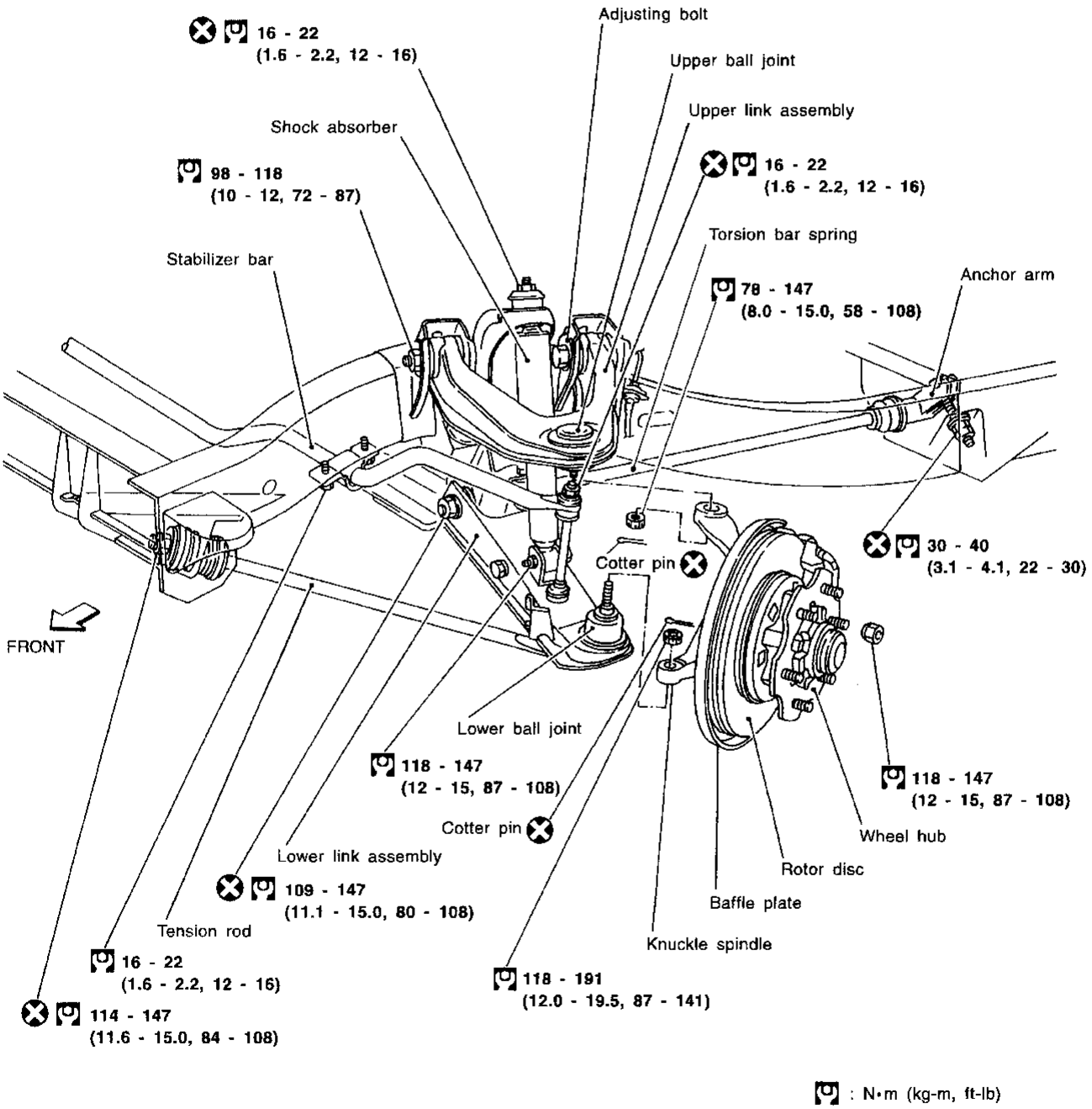

: N•m (kg-m, ft-lb)

SFA811B

Simpo PDF Merge and Split Unregistered Version - http://www.simpopdf.com

4WD

SEC. 391•400•401

When installing rubber parts, final tightening must be carried out under unladen condition* with tires on ground.

* Fuel, radiator coolant and engine oil full. Spare tire, jack, hand tools and mats in designated positions.

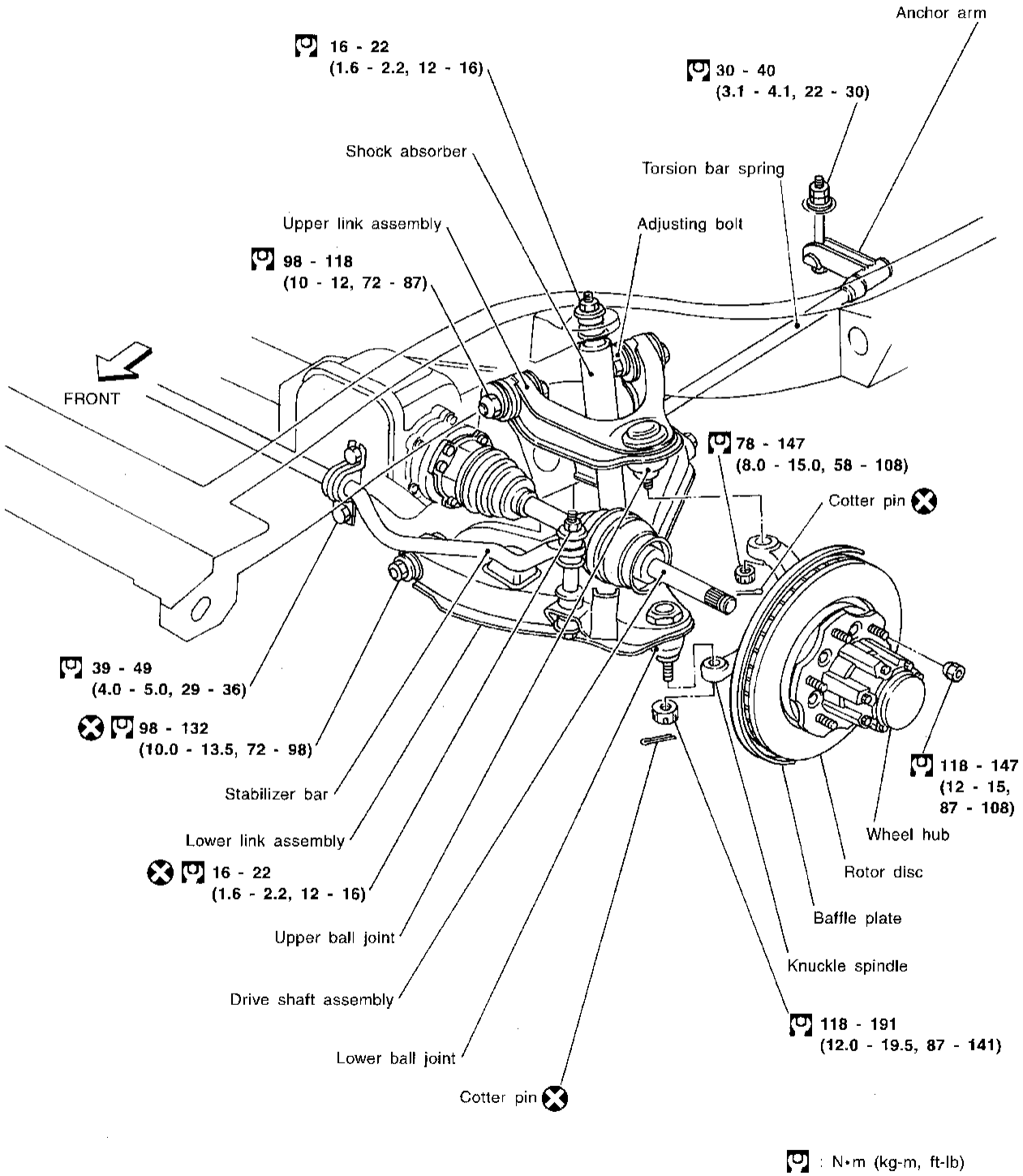

SFA812B

Simpo PDF Merge and Split Unregistered Version - http://www.simpopdf.com

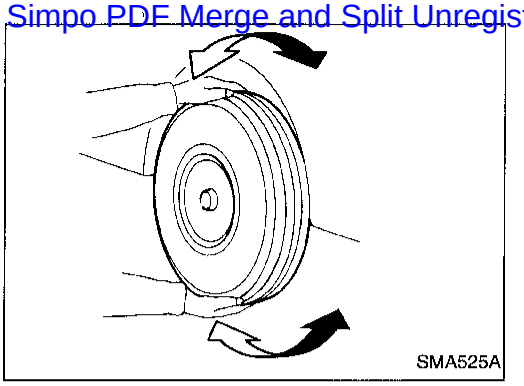
SMA525A

Front Axle and Front Suspension Parts

Check front axle and front suspension parts for excessive play, cracks, wear and other damage.

- Shake each front wheel to check for excessive play.
  If looseness is noted, adjust wheel bearing end play, then check ball joint end play.
- Make sure that the cotter pin is inserted.
- Retighten all nuts and bolts to the specified torque.
  : Refer to "FRONT SUSPENSION", FA-27.
- Check front axle and front suspension parts for wear, cracks and other damage.

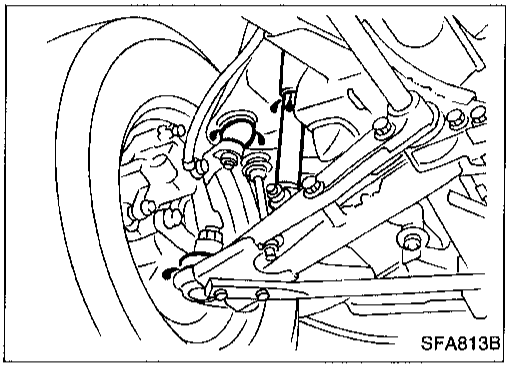
SFA813B

- Check shock absorber for oil leakage and other damage.
- Check suspension ball joint for grease leakage and ball joint dust cover for cracks and other damage.

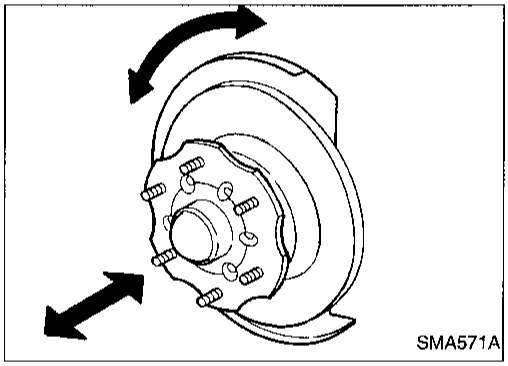
SMA571A

Front Wheel Bearing

- Check that wheel bearings operate smoothly.
- Check axial end play.
  Axial end play: 0 mm (0 in)
- Adjust wheel bearing preload if there is any axial end play or wheel bearing does not turn smoothly.

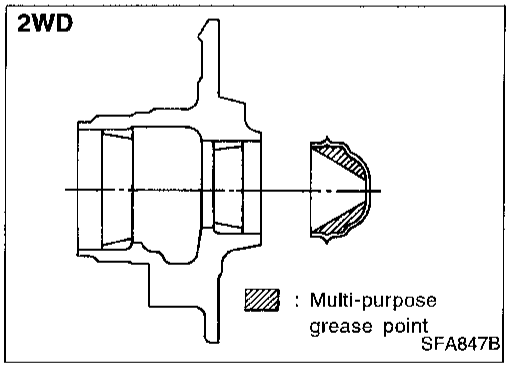

SFA847B

PRELOAD ADJUSTMENT (2WD)

Adjust wheel bearing preload after wheel bearing has been replaced or front axle has been reassembled.

1. Before adjustment, thoroughly clean all parts to prevent dirt entry.
2. Apply multi-purpose grease sparingly to the following parts:
- Threaded area of spindle
- Contact surface between lock washer and outer wheel bearing
- Hub cap (as shown at left) **18 - 22 g (0.63 - 0.78 oz)**
- Grease seal lip

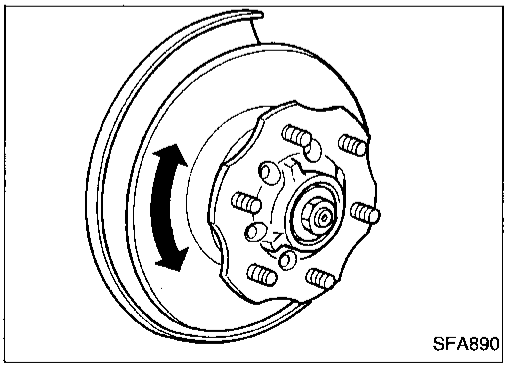
SFA890

3. Tighten wheel bearing lock nut to the specified torque.
   : 34 - 39 N·m (3.5 - 4.0 kg-m, 25 - 29 ft-lb)
4. Turn wheel hub several times in both directions to seat wheel bearing correctly.
5. Again tighten wheel bearing lock nut to the specified torque.
   : 34 - 39 N·m (3.5 - 4.0 kg-m, 25 - 29 ft-lb)

Front Wheel Bearing (Cont'd)

Simpo PDF Merge and Split Unregistered Version - http://www.simpopdf.com

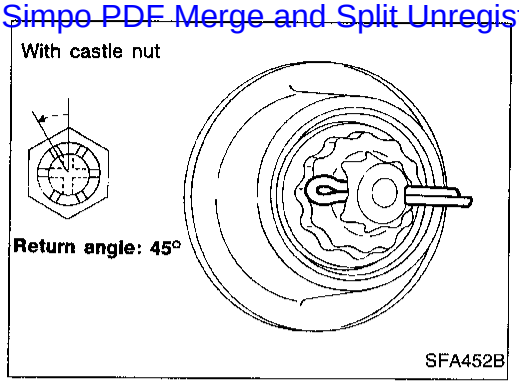

6. Turn wheel bearing lock nut back 45 degrees.
7. Fit adjusting cap and new cotter pin. Align cotter pin slot by loosening nut 15 degrees or less.

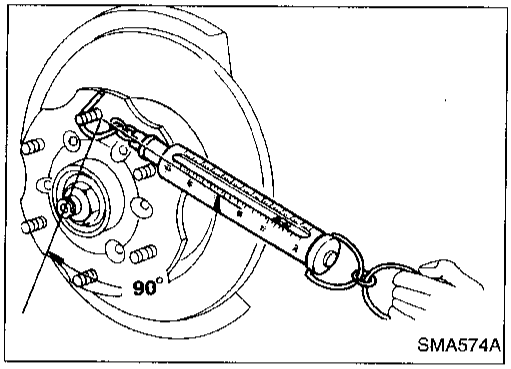

8. Measure wheel bearing preload and axial end play.
   Axial end play: 0 mm (0 in)
   Wheel bearing preload
   (As measured at wheel hub bolt):
   New grease seal
   9.8 - 28.4 N (1.0 - 2.9 kg, 2.2 - 6.4 lb)
   Used grease seal
   9.8 - 23.5 N (1.0 - 2.4 kg, 2.2 - 5.3 lb)

Repeat above procedures until correct bearing preload is obtained.

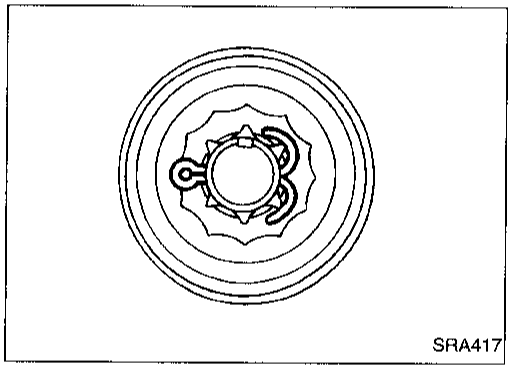

9. Spread cotter pin.
10. Install hub cap.

PRELOAD ADJUSTMENT (4WD)

Adjust wheel bearing preload after wheel bearing has been replaced or front axle has been reassembled.

Adjust wheel bearing preload as follows:

1. Before adjustment, thoroughly clean all parts to prevent dirt entry.

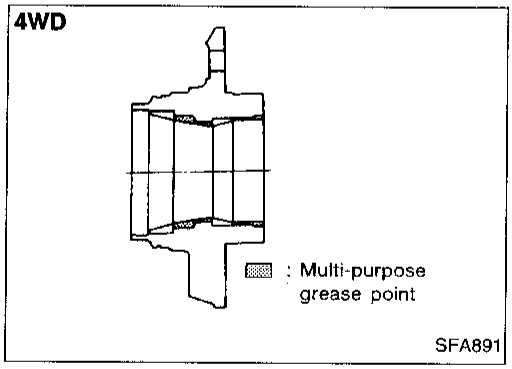

2. Apply multi-purpose grease sparingly to the following parts:
- Threaded portion of spindle
- Contact surface between wheel bearing washer and outer wheel bearing
- Grease seal lip
- Wheel hub (as shown at left) **18 - 23 g (0.63 - 0.81 oz)**

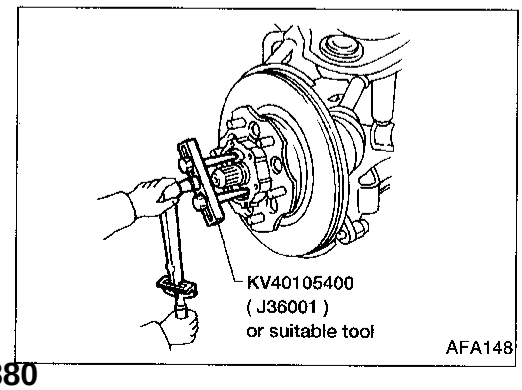

3. Tighten wheel bearing lock nut with Tool.
   : 78 - 98 N·m (8 - 10 kg-m, 58 - 72 ft-lb)
4. Turn wheel hub several times in both directions.
5. Loosen wheel bearing lock nut so that torque becomes 0 N·m (0 kg-m, 0 ft-lb).
6. Retighten wheel bearing lock nut with Tool.
   : 0.5 - 1.5 N·m (0.05 - 0.15 kg-m, 4.3 - 13.0 in-lb)

Front Wheel Bearing (Cont'd)

Simpo PDF Merge and Split Unregistered Version - http://www.simpopdf.com

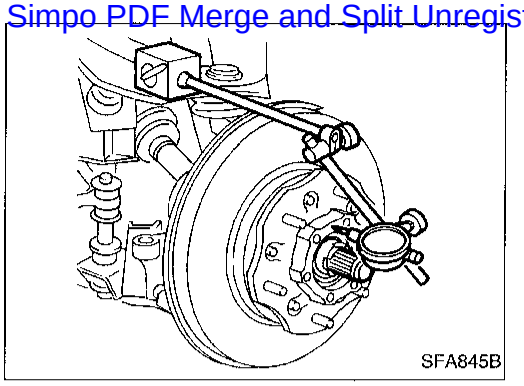
SFA845B

7. Turn wheel hub several times in both directions.
8. Retighten wheel bearing lock nut with Tool.
   : 0.5 - 1.5 N·m (0.05 - 0.15 kg-m, 4.3 - 13.0 in-lb)
9. Measure wheel bearing axial end play.
   Axial end play: 0 mm (0 in)

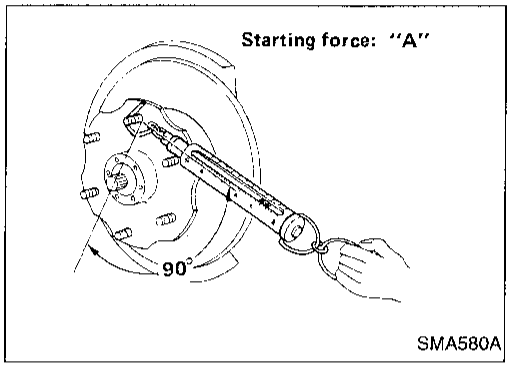

SMA580A

10. Measure starting force "A" at wheel hub bolt.

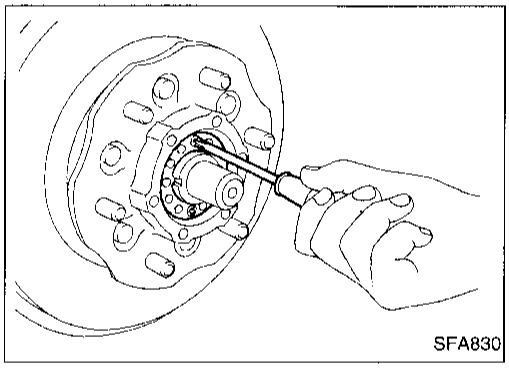
SFA830

11. Install lock washer by tightening the lock nut within 15 to 30 degrees.
12. Turn wheel hub several times in both directions to seat wheel bearing correctly.
13. Measure starting force "B" at wheel hub bolt. Refer to step 10.
14. Wheel bearing preload "C" can be calculated as shown below.

    C = B – A

    Wheel bearing preload "C":
    7.06 - 20.99 N (0.72 - 2.14 kg, 1.59 - 4.72 lb)
15. Repeat steps 3 through 14 until correct axial end play and wheel bearing preload are obtained.
16. Tighten screws.
    : 1.2 - 1.8 N·m (0.12 - 0.18 kg-m, 10.4 - 15.6 in-lb)
17. Install free-running hub.

Front Wheel Alignment

Before checking front wheel alignment, make a preliminary inspection (Unladen*).

*: Fuel, radiator coolant and engine oil full. Spare tire, jack, hand tools and mats in designated positions.

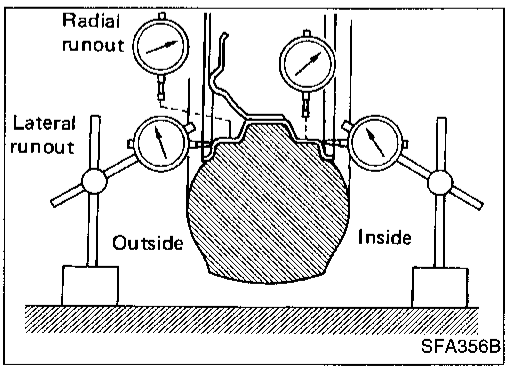

SFA356B

PRELIMINARY INSPECTION

1. Check tires for wear and proper inflation.
2. Check outside and inside wheel runout.
   Wheel runout average
   [(Outside runout value + Inside runout value) x 0.5]:
   Refer to SDS, FA-36.
3. Check front wheel bearings for looseness.
4. Check front suspension for looseness.
5. Check steering linkage for looseness.
6. Check that front shock absorbers work properly by using the standard bounce test.

Front Wheel Alignment (Cont'd)

Simpo PDF Merge and Split Unregistered Version - http://www.simpopdf.com

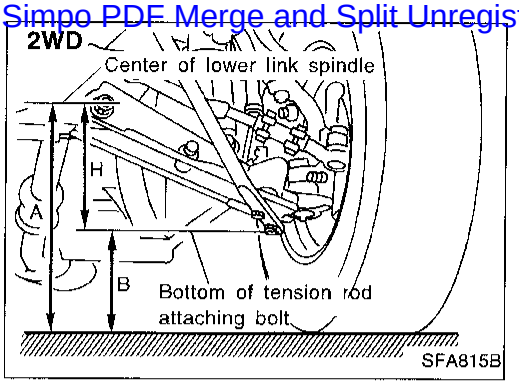

7. Measure vehicle height (Unladen): H = A – B mm (in)
   Refer to SDS, FA-37.

a. Exercise the front suspension by bouncing the front of the vehicle 4 or 5 times to ensure that the vehicle is in a neutral height attitude.
b. Measure wheel alignment.
   Refer to SDS, FA-37.
c. If wheel alignment is not as specified, adjust vehicle posture.
   Refer to SDS, FA-37.
d. Adjust wheel alignment.
   Refer to SDS, FA-37.

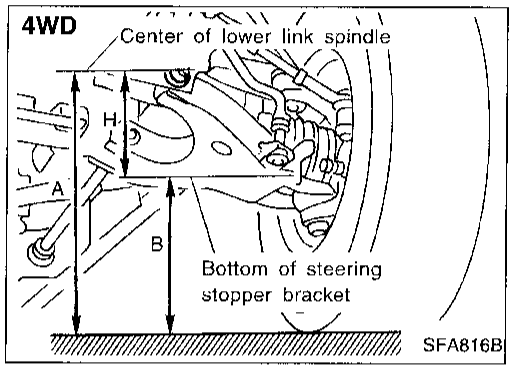

CAMBER, CASTER AND KINGPIN INCLINATION

Before checking camber, caster or kingpin inclination, move vehicle up and down on turning radius gauge to minimize friction. Ensure that the vehicle is in correct posture.

- Measure camber, caster and kingpin inclination of both right and left wheels with a suitable alignment gauge and adjust in accordance with the following procedures.
  Camber, Caster and Kingpin inclination:
  Refer to SDS, FA-37.

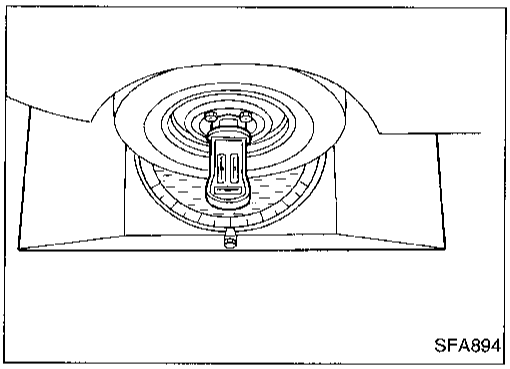

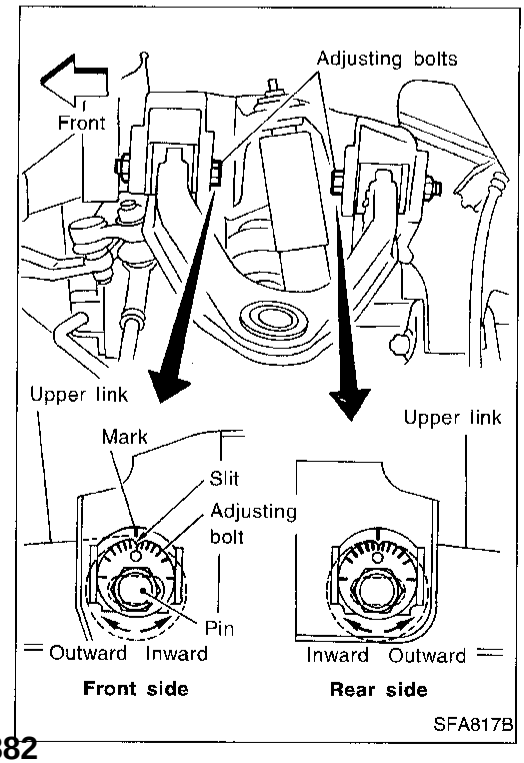

- In the following two cases, temporarily tighten the adjusting bolts while aligning the matching marks with the slits as shown in the figure at the left and measure the camber, caster and kingpin inclination:
  (1) When replacing the upper link or other suspension parts with new ones
  (2) When matching marks were not painted on adjusting bolts before suspension disassembly procedures
- If matching marks were already painted during suspension disassembly, align the matching marks with the slits, then temporarily tighten the adjusting bolts. Measure the camber, caster and kingpin inclination.

Front Wheel Alignment (Cont'd)

Simpo PDF Merge and Split Unregistered Version - http://www.simpopdf.com

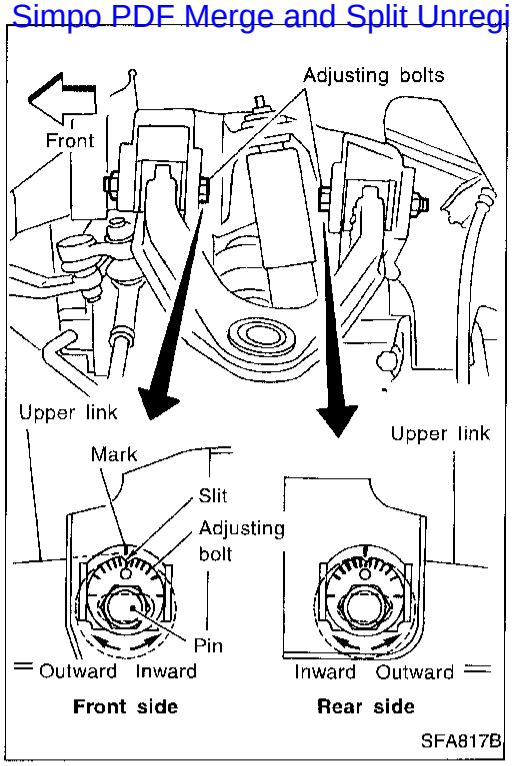

ADJUSTMENT

1. Both camber and caster angles are adjusted by adjusting bolts.
- If the kingpin inclination is outside specifications, check the front suspension parts for wear or damage. Replace faulty parts with new ones.
2. From the measured value, read the coordinate (or: graduation) at the intersecting point in the graph.

a. If the coordinate (or: graduation) at the intersecting point is positive, move the pin outward by turning the corresponding adjusting bolt by the indicated graduation.

b. If the coordinate (or: graduation) at the intersecting point is negative, move the pin inward by turning the corresponding adjusting bolt by the indicated graduation.
After properly moving the pin(s), tighten the front and rear adjusting bolts to specifications.

3. Re-measure to ensure that the camber and caster are within specified tolerances.

[Example]

a. Measured values corresponding with the two values indicated below: (See chart for 4WD model.)
Camber angle: –0°06′ (–0.10°)
Caster angle: 2°10′ (2.17°)

b. Apply the above two values to the graph and determine point "A".

c. The coordinate (or: graduation) indicates that both the front and rear adjusting bolts must be turned outward by 3 graduations.
Turn the adjusting bolts by the amount corresponding with the 3 graduations.

2WD

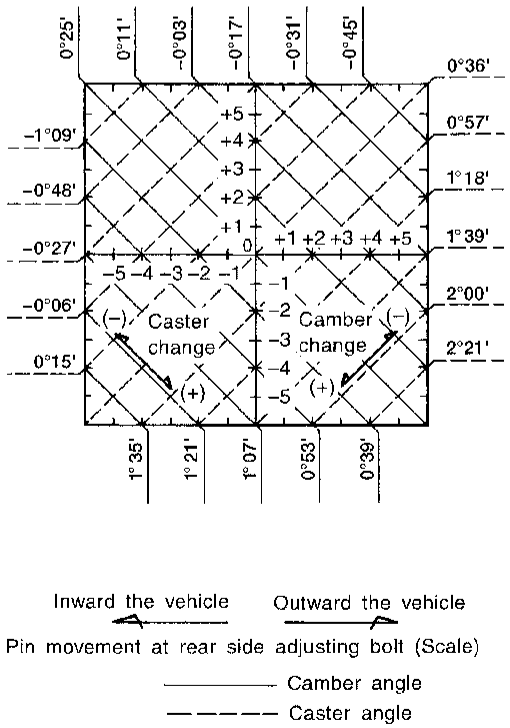

4WD

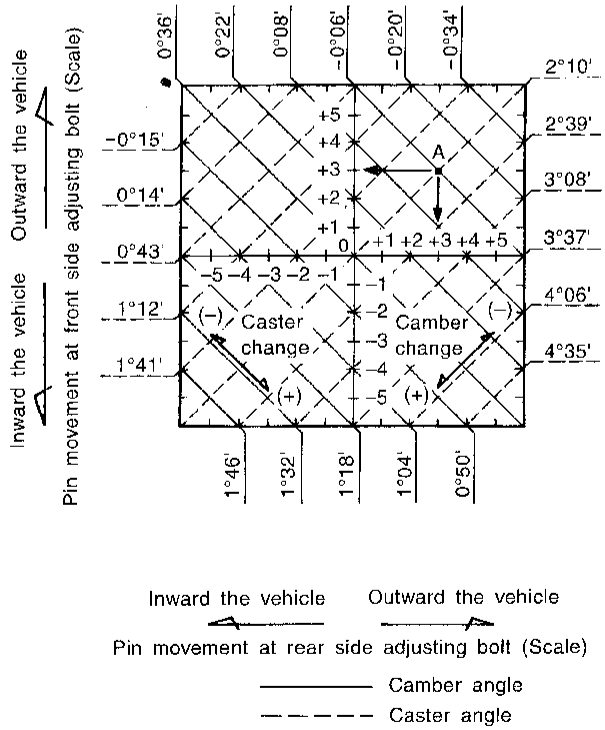

AFA147

Front Wheel Alignment (Cont'd)

Simpo PDF Merge and Split Unregistered Version - http://www.simpopdf.com

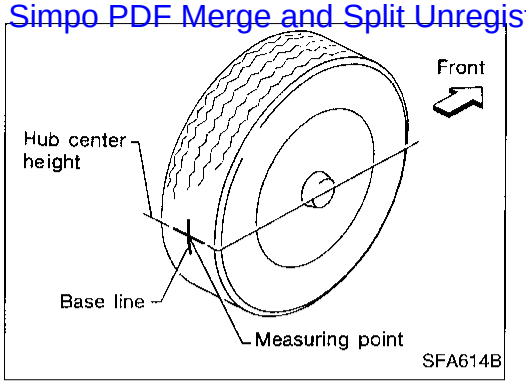

TOE-IN

Measure toe-in using the following procedure.

WARNING:

- **Always perform the following procedure on a flat surface.**
- **Make sure that no one is in front of the vehicle before pushing it.**

1. Bounce front of vehicle up and down to stabilize the posture.
2. Push the vehicle straight ahead about 5 m (16 ft).
3. Put a mark on base line of the tread (rear side) of both tires at the same height of hub center. This mark is a measuring point.
4. Measure distance "A" (rear side).
5. Push the vehicle slowly ahead to rotate the wheels 180 degrees (1/2 turn).

- **If the wheels have rotated more than 180 degrees (1/2 turn), try the above procedure again from the beginning. Never push vehicle backward.**

6. Measure distance "B" (front side).

Total toe-in:

Refer to SDS, FA-37.

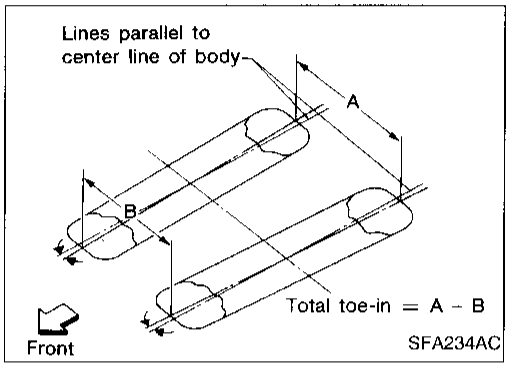

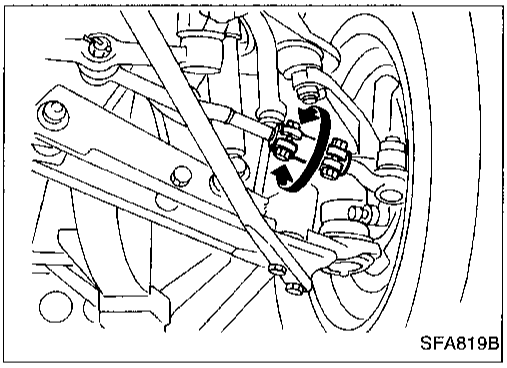

7. Adjust toe-in by varying the length of both steering tie-rods.

a. Loosen clamp bolts or lock nuts.

b. Adjust toe-in by turning both the left and right tie-rod tubes equal amounts.

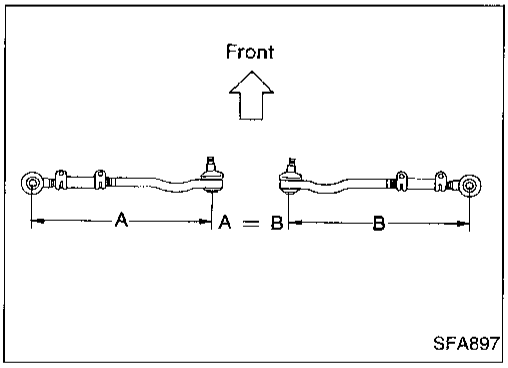

Make sure that the tie-rod bars are screwed into the tie-rod tube more than 35 mm (1.38 in).

Make sure that the tie-rods are the same length.

Standard length (A = B):

2WD

343.9 mm (13.54 in)

4WD

297.6 mm (11.72 in)

c. Tighten clamp bolts or lock nuts, then torque them.

Simpo PDF Merge and Split Unregistered Version - http://www.simpopdf.com

Front Wheel Alignment (Cont'd)

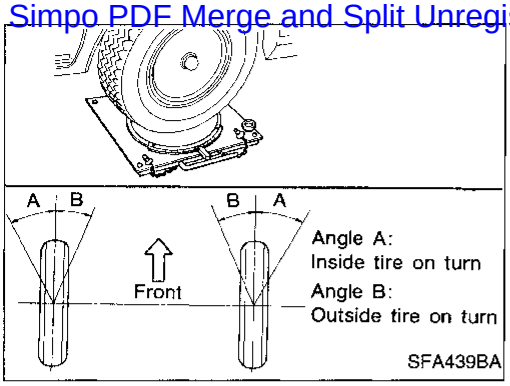

FRONT WHEEL TURNING ANGLE

1. Set wheels in straight-ahead position. Then move vehicle forward until front wheels rest properly on turning radius gauge.
2. Rotate steering wheel all the way right and left; measure turning angle.

- On power steering models, turn steering wheel to full lock and apply force (at circumference of steering wheel) of 98 to 147 N (10 to 15 kg, 22 to 33 lb) with engine at idle.
- **Do not hold the steering wheel at full lock for more than 15 seconds.**

Wheel turning angle (Full turn):
Refer to SDS, FA-37.

3. Adjust stopper bolt if necessary.

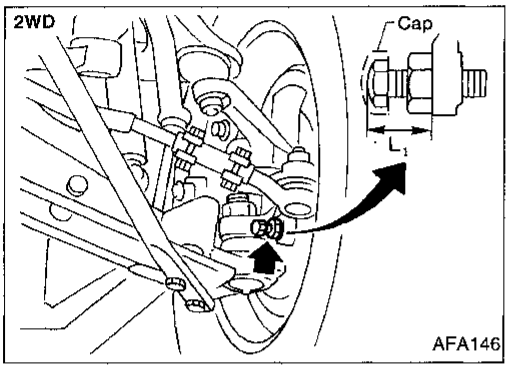

Standard length "L_1" (2WD):
20 mm (0.79 in)
(Length before cap is mounted)

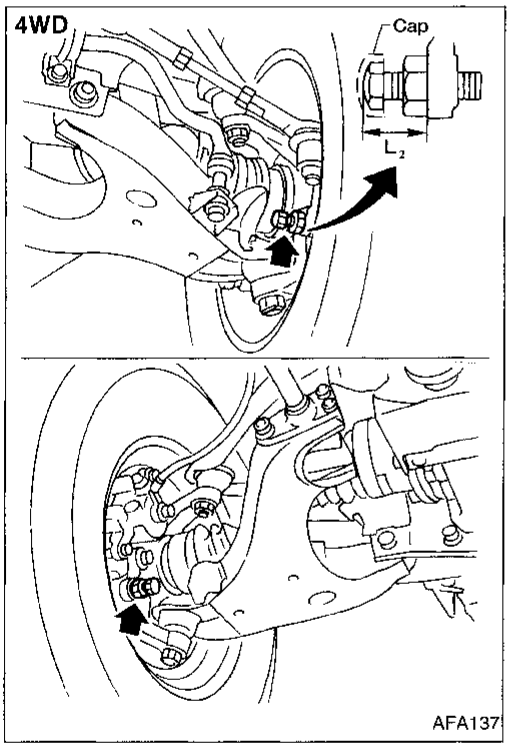

Standard length "L_2" (4WD):
26.5 mm (1.043 in)
(Length before cap is mounted)

Drive Shaft

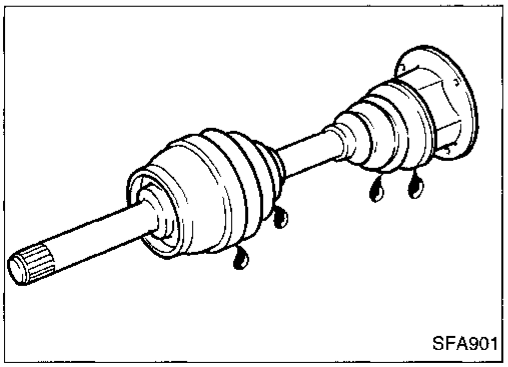

- Check for grease leakage and damage.

Simpo PDF Merge and Split Unregistered Version - http://www.simpopdf.com

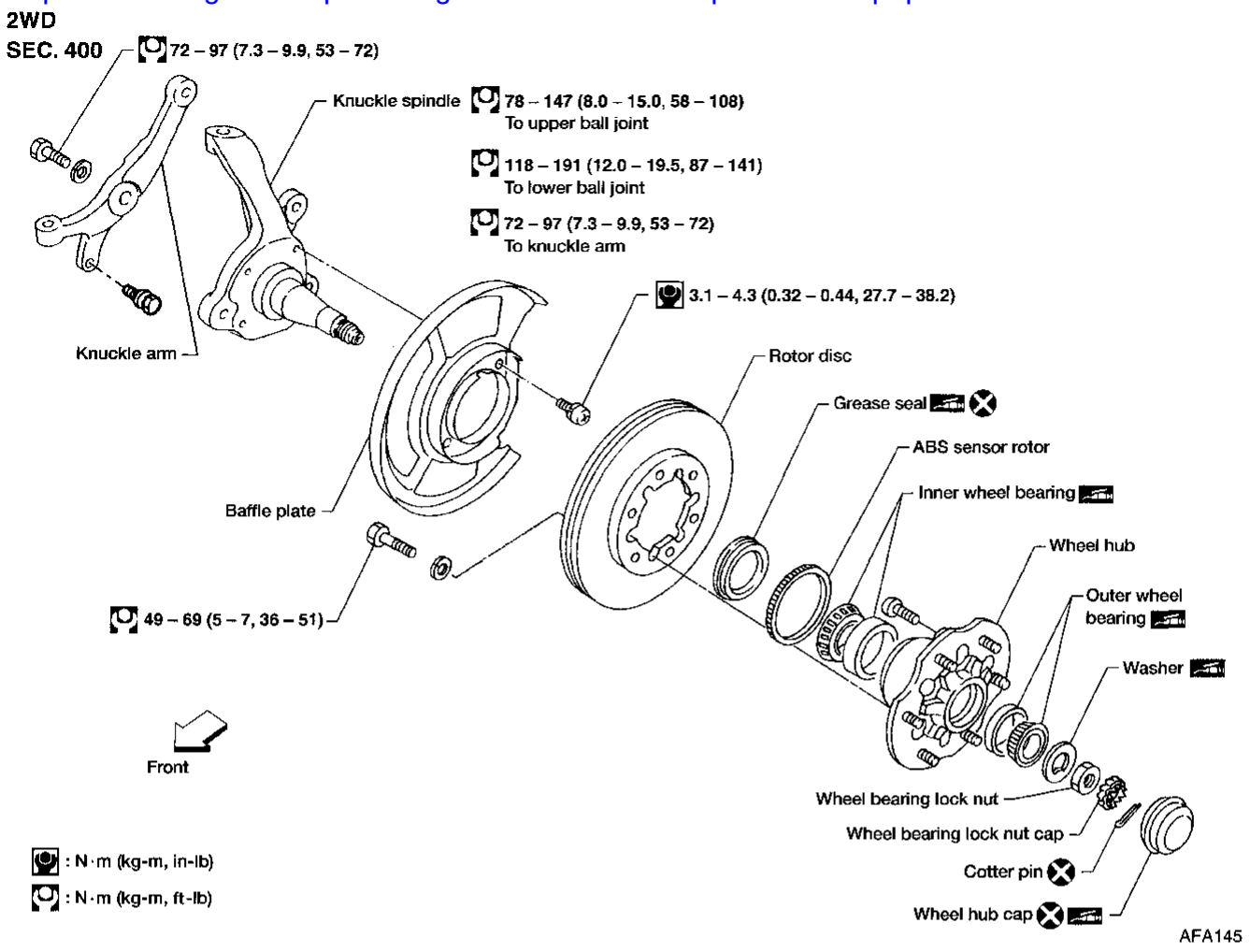

Simpo PDF Merge and Split Unregistered Version - http://www.simpopdf.com

4WD
SEC. 391 • 400

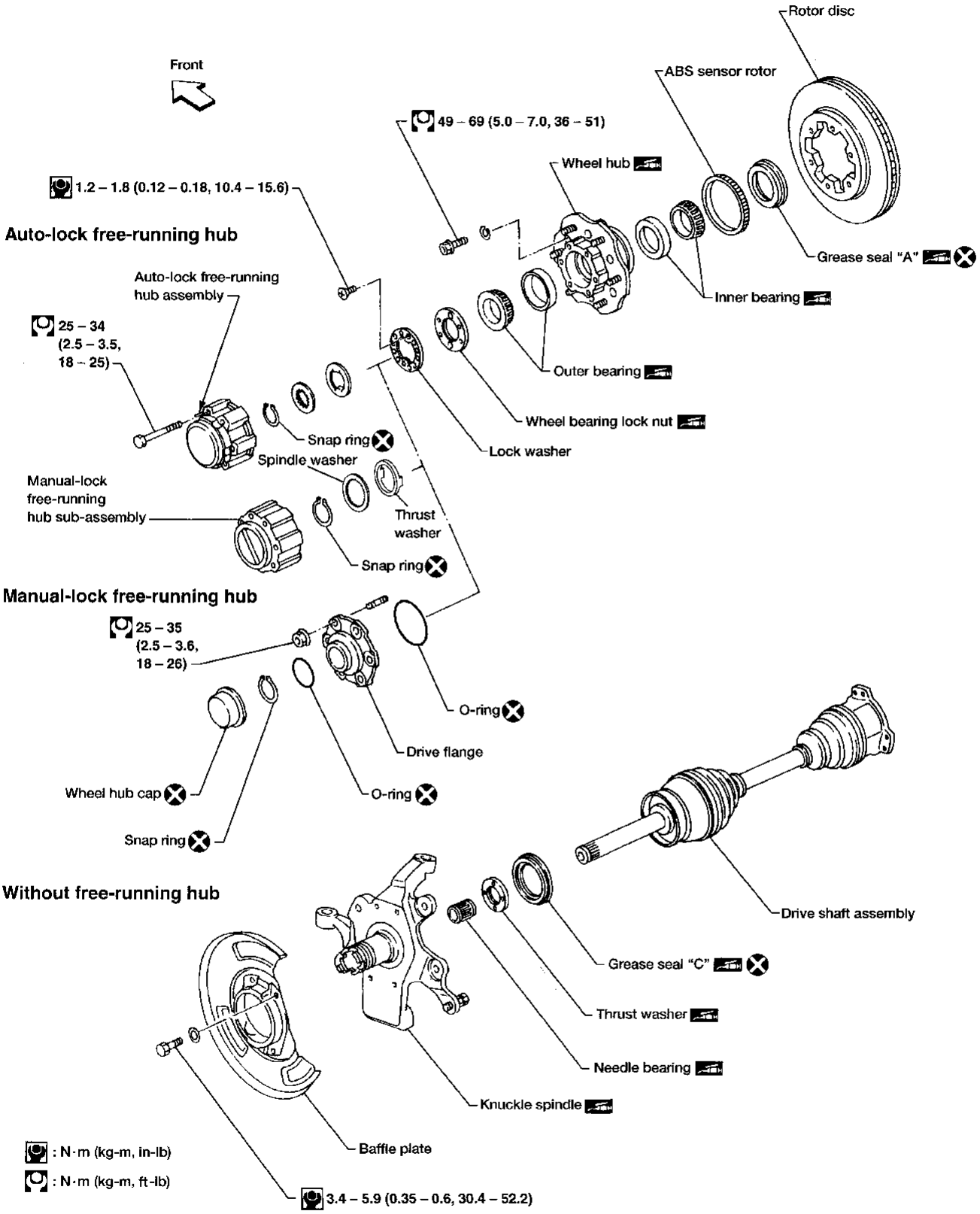

AFA144

Simpo PDF Merge and Split Unregistered Version - http://www.simpopdf.com

Manual-lock Free-running Hub — 4WD —

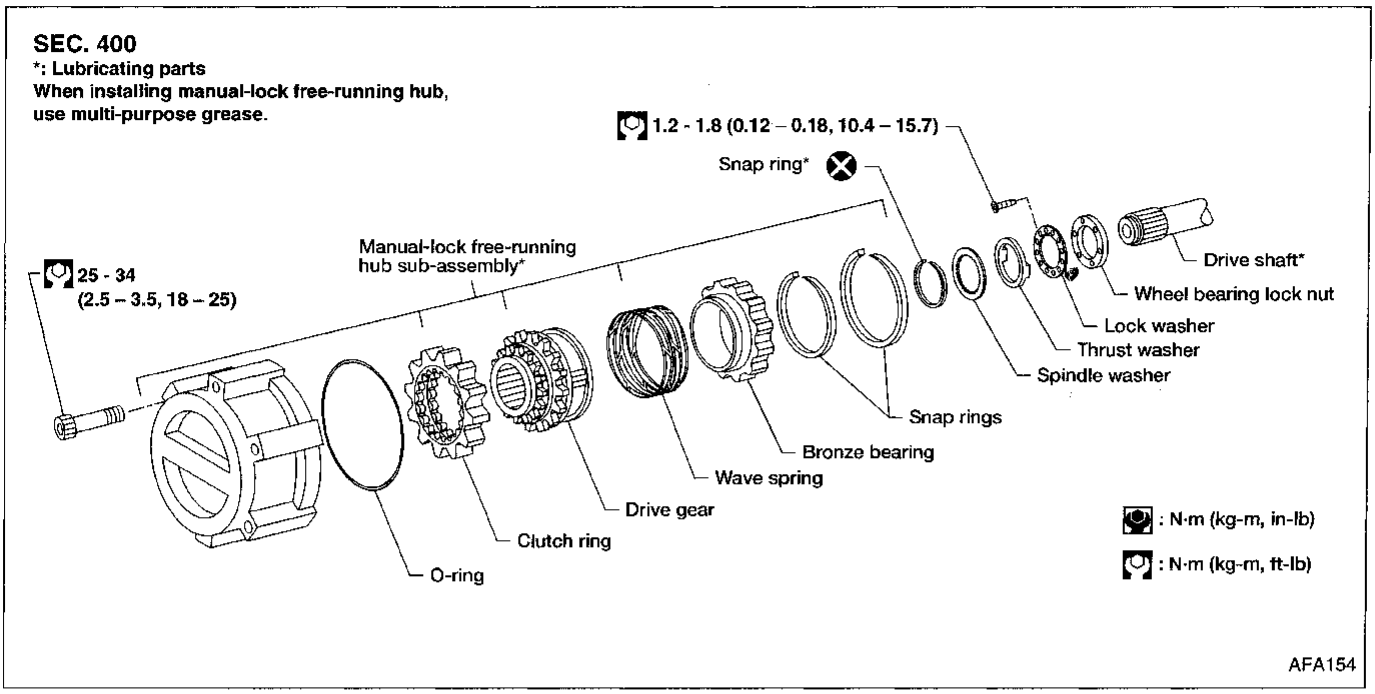

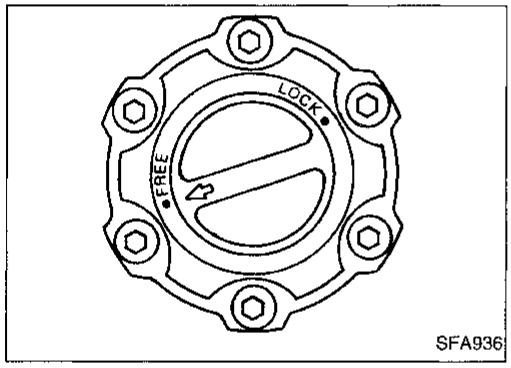

REMOVAL AND INSTALLATION

1. Set knob of manual-lock free-running hub in the FREE position.
2. Remove manual-lock free-running hub.
3. When installing manual-lock free-running hub, make sure the hub is in the FREE position.

Apply multi-purpose grease to the parts shown in the above illustration.

4. Check operation of manual-lock free-running hub after installation.

INSPECTION

- Check that the knob moves smoothly and freely.
- Check that the clutch moves smoothly in the body.

Simpo PDF Merge and Split Unregistered Version - http://www.simpopdf.com

Auto-lock Free-running Hub — 4WD —

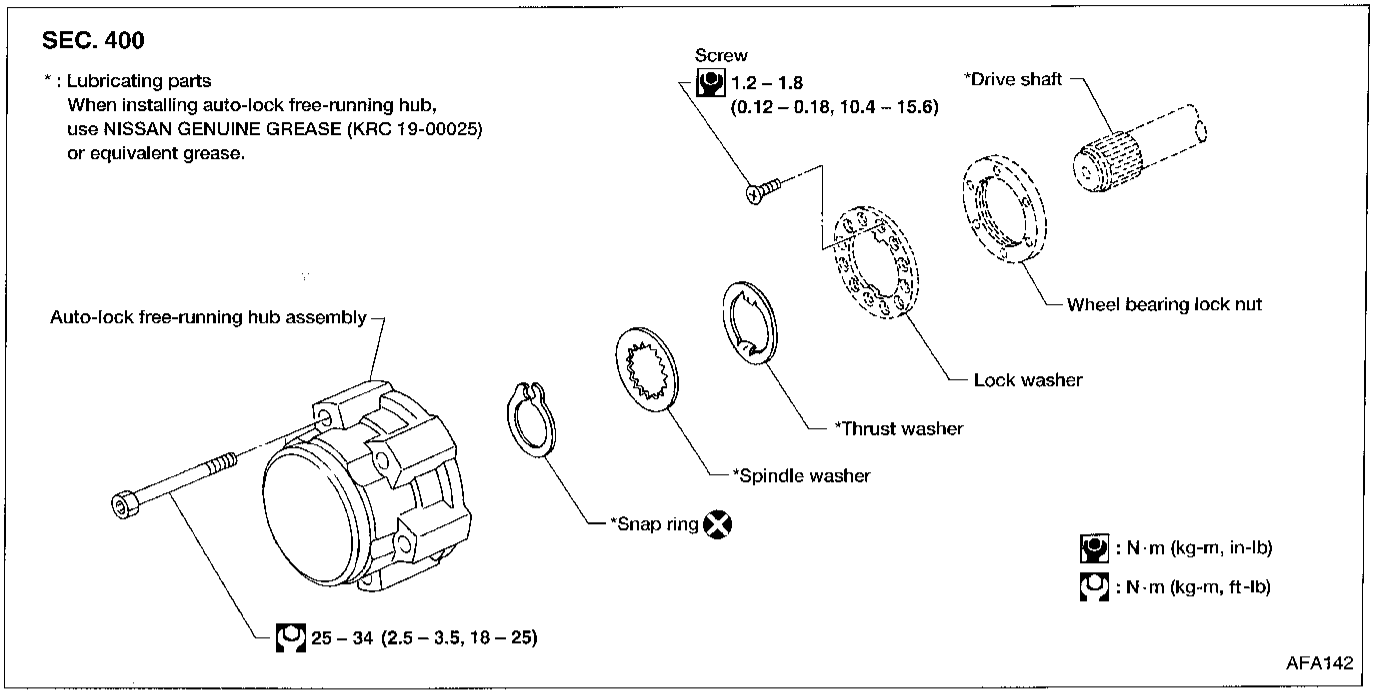

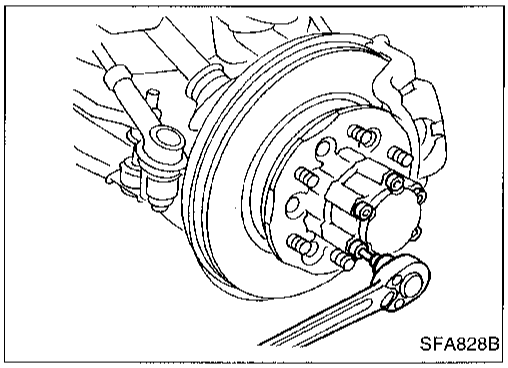

REMOVAL AND INSTALLATION

1. Set auto-lock free-running hub in the FREE position.
2. Remove auto-lock free-running hub.

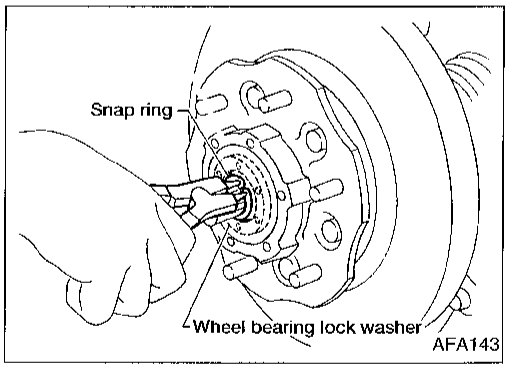

3. Remove snap ring.
4. Remove spindle washer and thrust washer.
5. After installing auto-lock free-running hub, check operation.

When installing it, apply recommended grease to the parts shown in the above illustration.

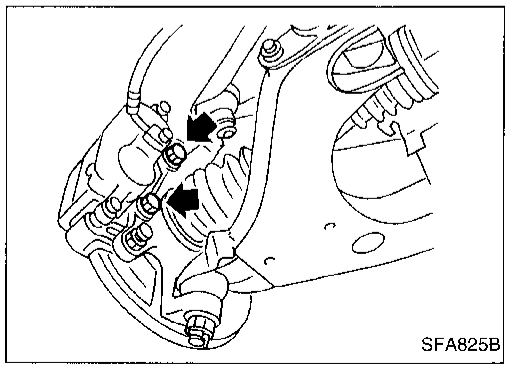

Wheel Hub and Rotor Disc

REMOVAL AND INSTALLATION

1. Remove free-running hub assembly. — 4WD — Refer to "Auto-lock Free-running Hub — 4WD —", FA-17, or "Manual-lock Free-running Hub — 4WD —", FA-16.
2. Remove brake caliper assembly without disconnecting hydraulic line.

Be careful not to depress brake pedal, or piston will pop out. Make sure brake hose is not twisted.

Wheel Hub and Rotor Disc (Cont'd)

Simpo PDF Merge and Split Unregistered Version - http://www.simpopdf.com

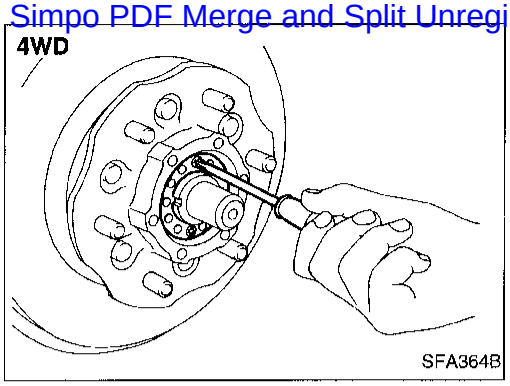

3. Remove lock washer. — 4WD —

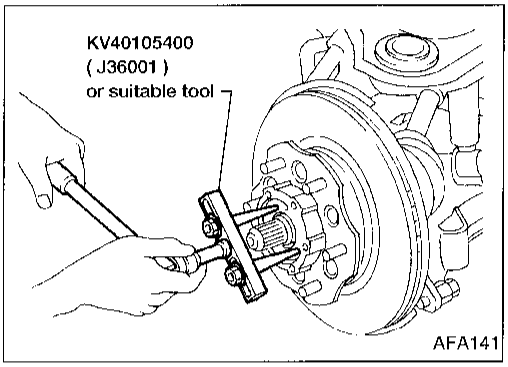

4. Remove wheel bearing lock nut.
   2WD: With suitable tool
   4WD: With Tool

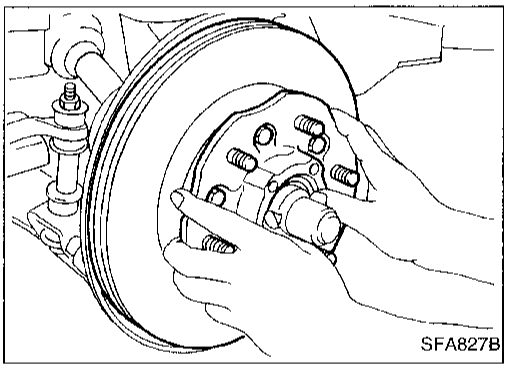

5. Remove wheel hub and wheel bearing.

Be careful not to drop outer bearing.

6. After installing wheel hub and wheel bearing, adjust wheel bearing preload.
   Refer to "PRELOAD ADJUSTMENT", "Front Wheel Bearing", "ON-VEHICLE SERVICE", FA-7.

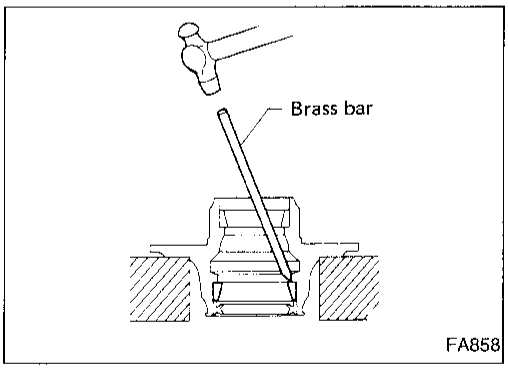

DISASSEMBLY

- Remove bearing outer races with suitable brass bar.

INSPECTION

Thoroughly clean wheel bearings and wheel hub.

Wheel bearings

- Make sure wheel bearings roll freely and are free from noise, cracks, pitting and wear.

Wheel hub

- Check wheel hub for cracks by using a magnetic exploration or dyeing test.

Wheel Hub and Rotor Disc (Cont'd)

Simpo PDF Merge and Split Unregistered Version - http://www.simpopdf.com

ASSEMBLY

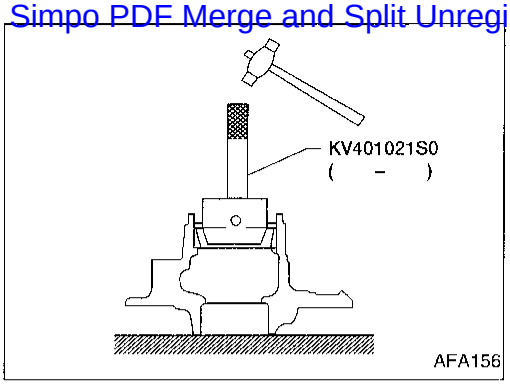

1. Install bearing outer race with Tool until it seats in hub.

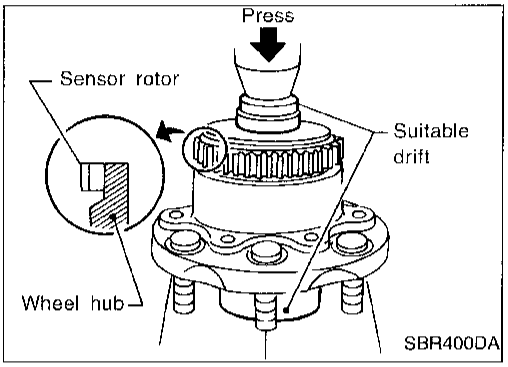

2. Install the sensor rotor using suitable drift and press. (Models with ABS)
   Always replace sensor rotor with new one.
   Pay attention to the direction of front sensor rotor as shown in figure.

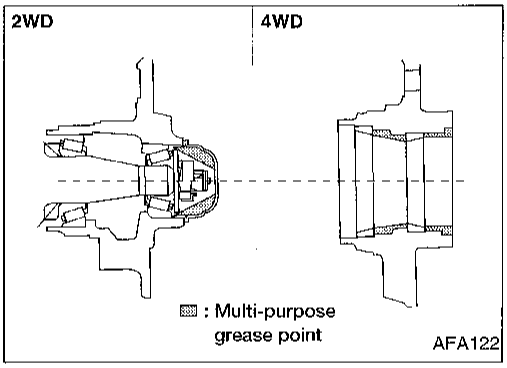

3. Pack multi-purpose grease in wheel hub and hub cap.

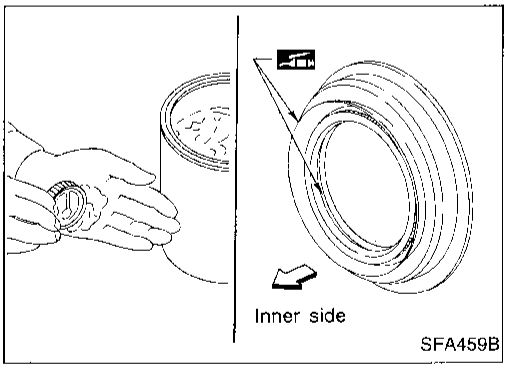

4. Apply multi-purpose grease to each bearing cone.
5. Pack grease seal lip with multi-purpose grease, then install it into wheel hub with suitable drift.

Knuckle Spindle

REMOVAL

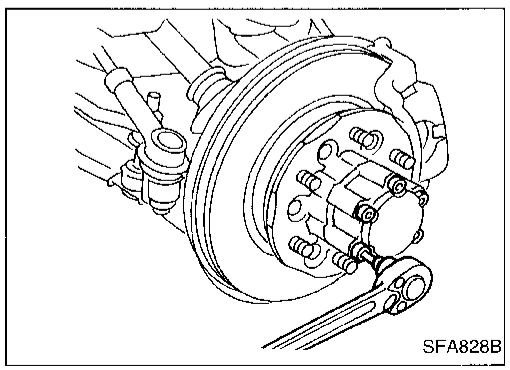

1. Remove free-running hub assembly. — 4WD —
   Refer to "Auto-lock Free-running Hub — 4WD —", FA-17, or "Manual-lock Free-running Hub — 4WD —", FA-16.
2. Remove wheel hub and rotor disc.
   Refer to "Wheel Hub and Rotor Disc", FA-17.

Knuckle Spindle (Cont'd)

Simpo PDF Merge and Split Unregistered Version - http://www.simpopdf.com

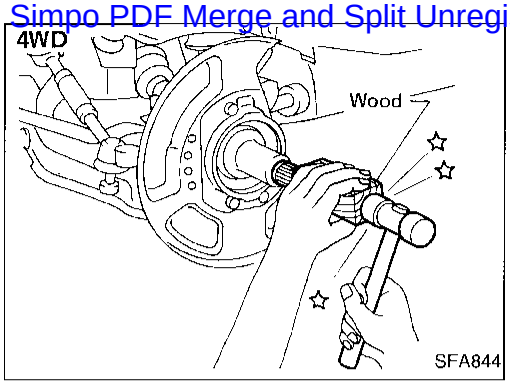

3. Separate drive shaft from knuckle spindle by slightly tapping drive shaft end. — 4WD —

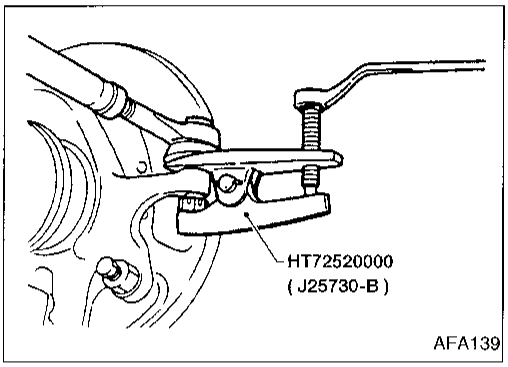

4. Separate tie-rod from knuckle spindle with Tool.

Install stud nut conversely on stud bolt so as not to damage stud bolt.

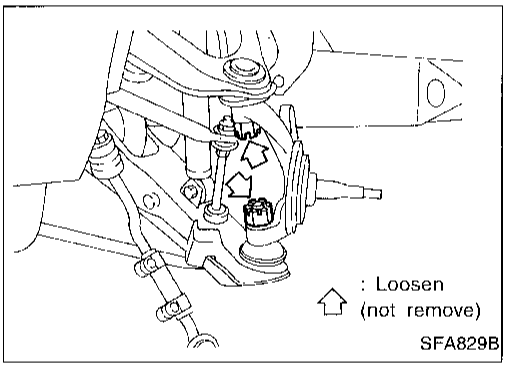

5. Separate knuckle spindle from ball joints.
a. Loosen (do not remove) upper and lower ball joint tightening nuts.

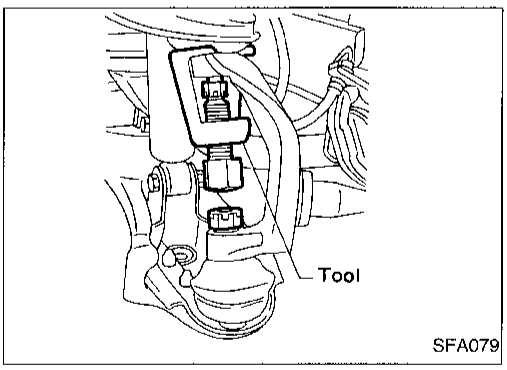

b. Separate knuckle spindle from upper and lower ball joint studs with Tool.

During above operation, never remove ball joint nuts which are loosened in step (a) above.

Tool:
2WD
ST29020001 (J24319-01)
4WD
HT72520000 (J25730-B)

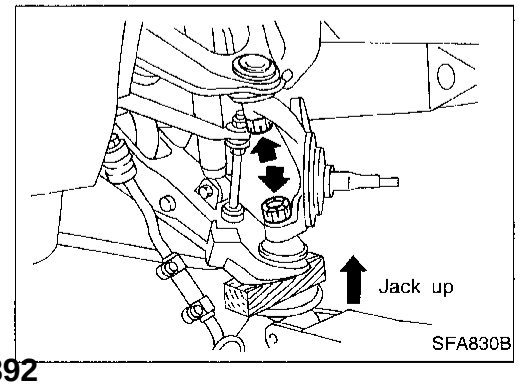

c. Remove ball joint tightening nuts.

Support lower link with jack.

d. Remove knuckle spindle from upper and lower links.

INSPECTION

Knuckle spindle

- Check knuckle spindle for deformation, cracks and other damage by using a magnetic exploration or dyeing test.

Simpo PDF Merge and Split Unregistered Version - http://www.simpopdf.com

Knuckle Spindle (Cont'd)

Bearing spacer — 2WD —

- Check bearing spacer for damage.

Needle bearing — 4WD —

- Check needle bearing for wear, scratches, pitting, flaking and burn marks.

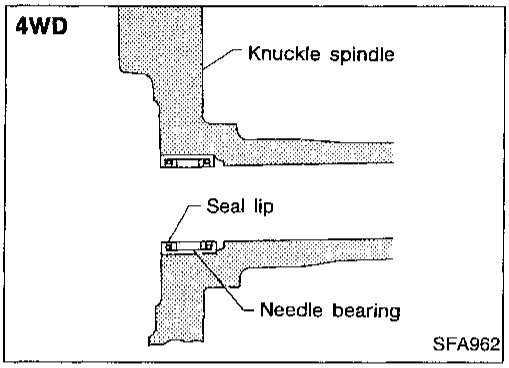

INSTALLATION

1. Install needle bearing into knuckle spindle. — 4WD —

Make sure that needle bearing is facing in the proper direction.
Apply multi-purpose grease.

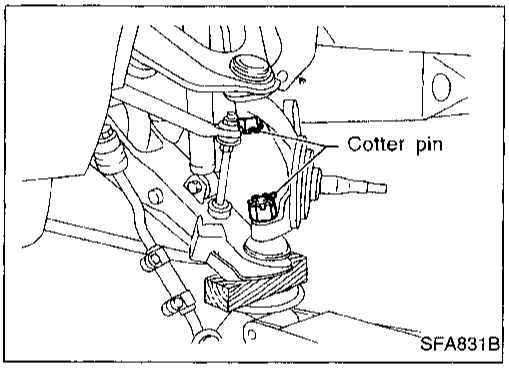

2. Install knuckle spindle to upper and lower ball joints with lower link jacked up.

CAUTION:
Make sure that oil and grease do not come into contact with tapered areas of ball joint, knuckle spindle and threads of ball joint.

3. Connect tie-rod to knuckle spindle.

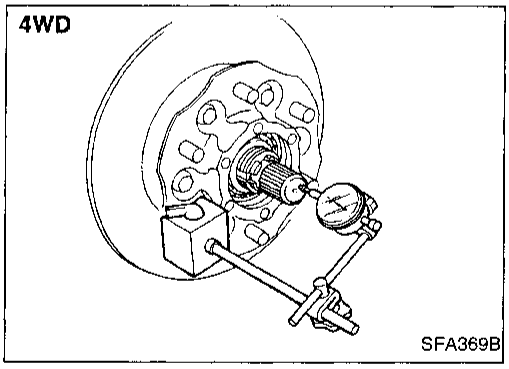

4. After installing knuckle spindle, adjust wheel bearing preload. Refer to "PRELOAD ADJUSTMENT", "Front Wheel Bearing", "ON-VEHICLE SERVICE", FA-7.
5. After installing drive shaft, check drive shaft axial end play.

Do not reuse snap ring once it has been removed.

Refer to "Drive Shaft — 4WD —", FA-22.

Simpo PDF Merge and Split Unregistered Version - http://www.simpopdf.com

Drive Shaft — 4WD —

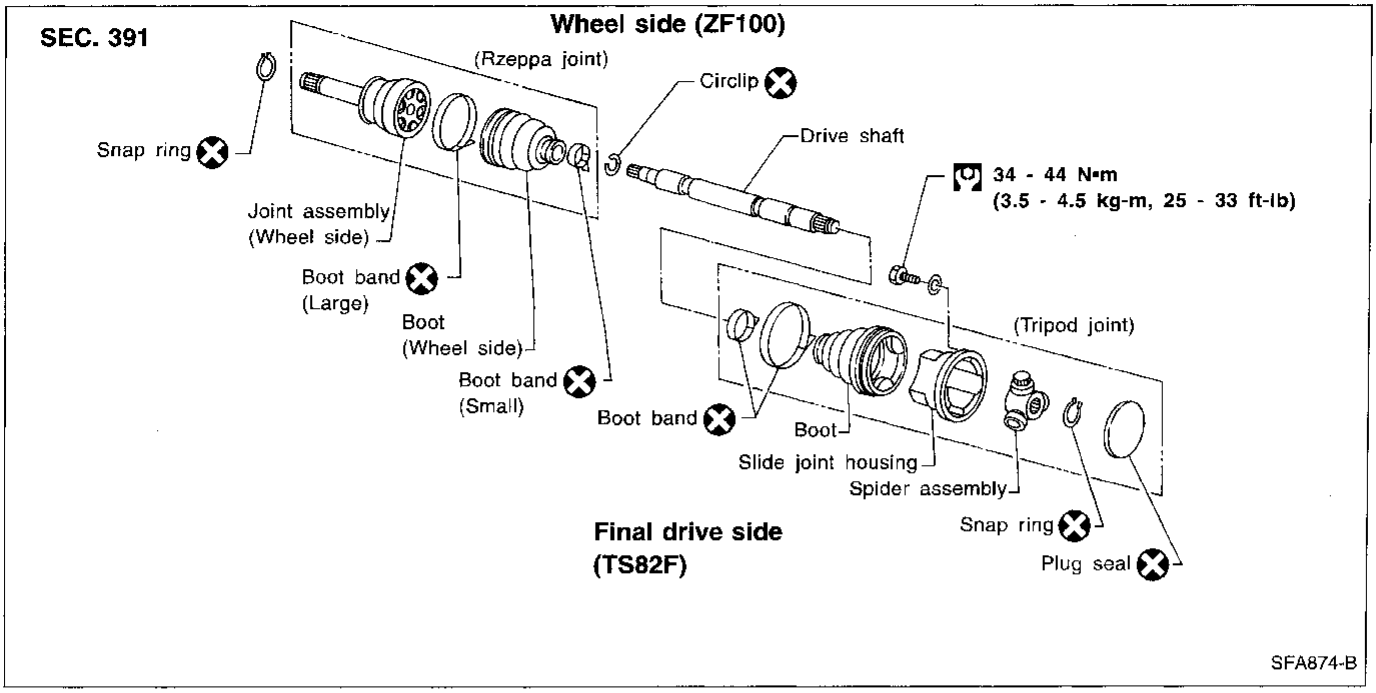

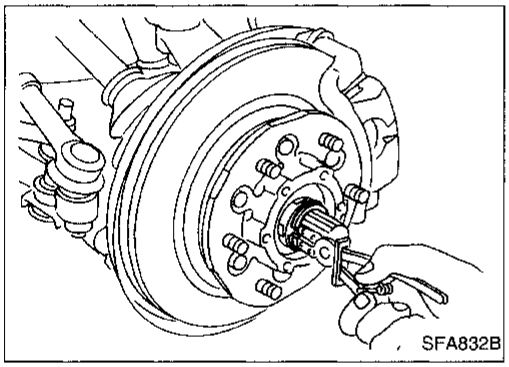

REMOVAL

1. Remove free-running hub or drive flange and snap ring. Refer to "Auto-lock Free-running Hub — 4WD —", FA-17, or "Manual-lock Free-running Hub — 4WD —", FA-16.
2. Remove torsion bar spring. Refer to "Torsion Bar Spring", "FRONT SUSPENSION", FA-29.
3. Remove shock absorber lower fixing bolt.
4. Remove lower link, fixing bolts.

Support lower link with jack.

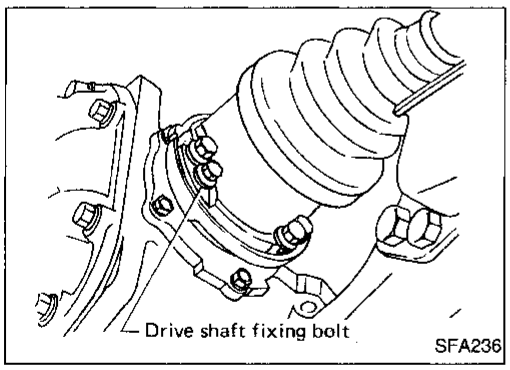

5. Remove bolts fixing drive shaft to final drive.

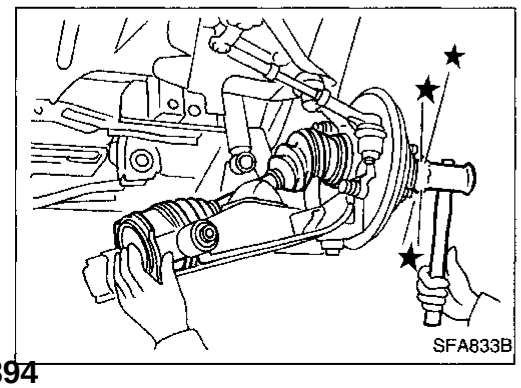

6. Separate drive shaft from knuckle spindle by slightly tapping end of drive shaft.

Drive Shaft — 4WD — (Cont'd)

Simpo PDF Merge and Split Unregistered Version - http://www.simpopdf.com

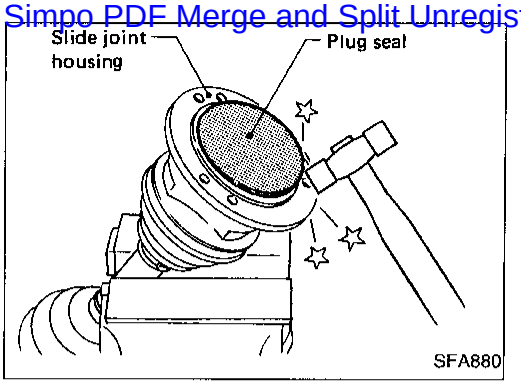

DISASSEMBLY

Final drive side (TS82F)

1. Remove plug seal from slide joint housing by lightly tapping around slide joint housing.
2. Remove boot bands.

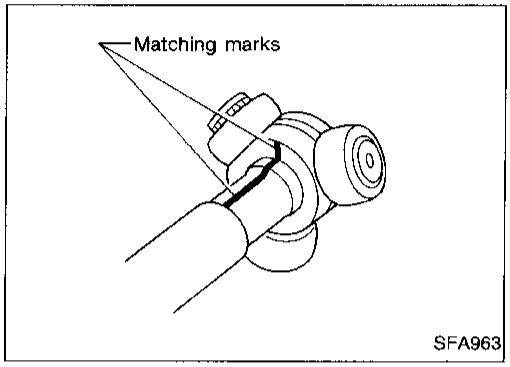

3. Move boot and slide joint housing toward wheel side, and put matching marks.

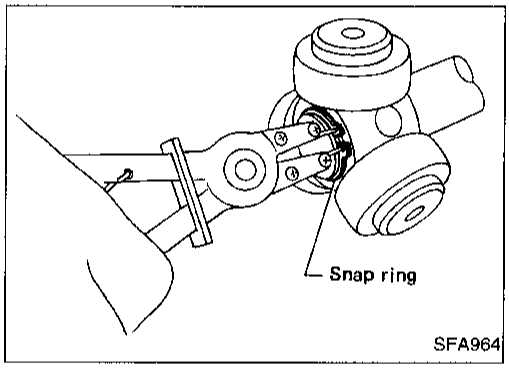

4. Remove snap ring.

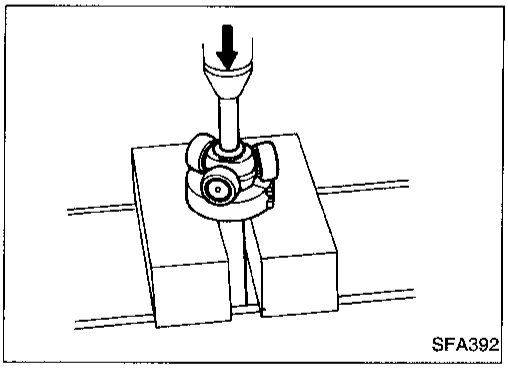

5. Detach spider assembly with press.

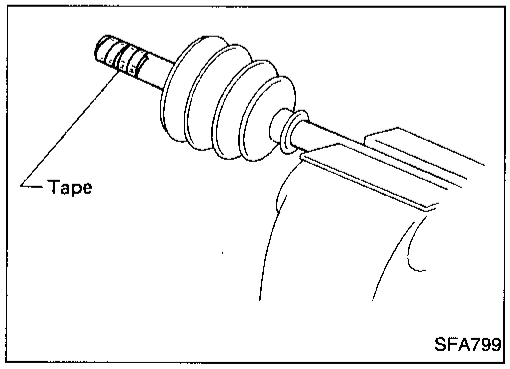

6. Draw out boot.

Cover drive shaft serration with tape to prevent damaging the boot.

Drive Shaft — 4WD — (Cont'd)

Simpo PDF Merge and Split Unregistered Version - http://www.simpopdf.com

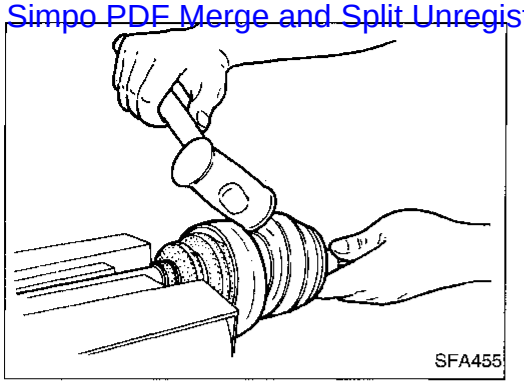

Wheel side (ZF100)

CAUTION:

The joint on the wheel side cannot be disassembled.

- Before separating joint assembly, put matching marks on drive shaft and joint assembly.
- Separate joint assembly with suitable tool.

Be careful not to damage threads on drive shaft.

- Remove boot bands.

INSPECTION

Thoroughly clean all parts in cleaning solvent, and dry with compressed air. Check parts for evidence of deformation and other damage.

Drive shaft

Replace drive shaft if it is twisted or cracked.

Boot

Check boot for fatigue, cracks and wear. Replace boot with new boot bands.

Joint assembly (Final drive side)

- Replace any parts of double offset joint which show signs of scorching, rust, wear or excessive play.
- Check serration for deformation. Replace if necessary.
- Check slide joint housing for any damage. Replace if necessary.

Joint assembly (Wheel side)

Replace joint assembly if it is deformed or damaged.

ASSEMBLY

- **After drive shaft has been assembled, ensure that it moves smoothly over its entire range without binding.**
- **Use NISSAN GENUINE GREASE or equivalent after every overhaul.**

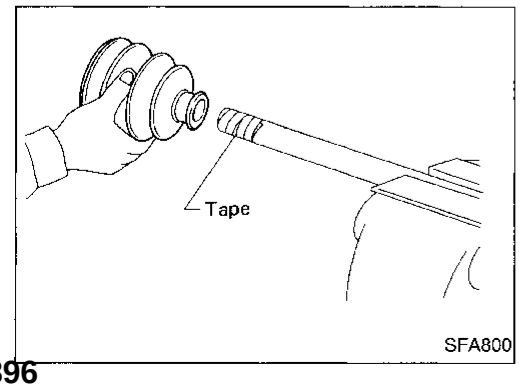

Final drive side (TS82F)

1. Install new small boot band, boot and side joint housing to drive shaft.

Cover drive shaft serration with tape to prevent damaging boot during installation.

Drive Shaft — 4WD — (Cont'd)

Simpo PDF Merge and Split Unregistered Version - http://www.simpopdf.com

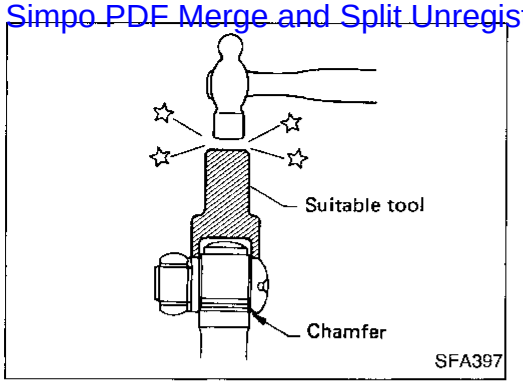

2. Install spider assembly securely, making sure marks are properly aligned.
   - **Press-fit with spider assembly serration chamfer facing shaft.**
3. Install new snap ring.

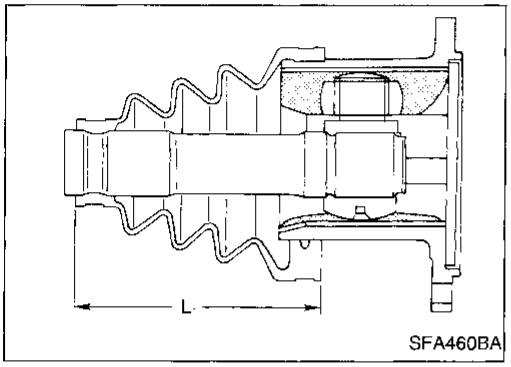

4. Pack with grease.
   Specified amount of grease:
   95 - 105 g (3.35 - 3.70 oz)
5. Make sure that the boot is properly installed on the drive shaft groove. Set the boot so that it does not swell or deform when its length is "L_1".
   Length "L_1": 95 - 97 mm (3.74 - 3.82 in)

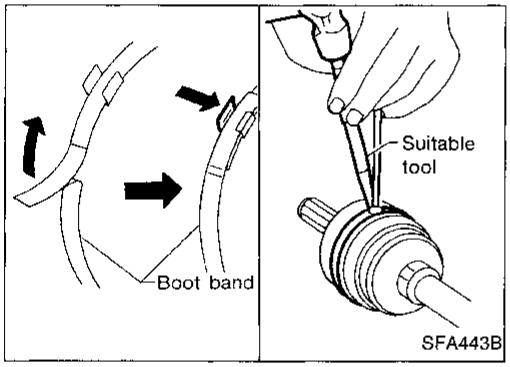

6. Lock new large boot band securely with a suitable tool, then lock new small boot band.
7. Install new plug seal to slide joint housing by lightly tapping it.

Apply sealant to mating surface of plug seal.

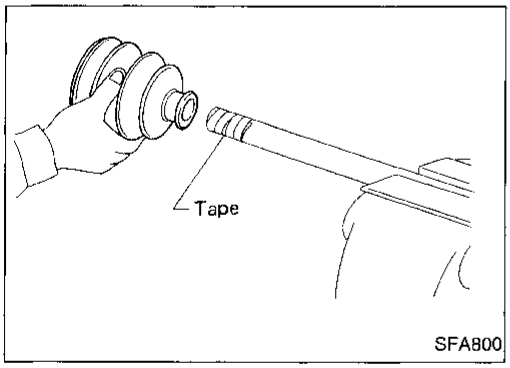

Wheel side (ZF100)

1. Install new small boot band and boot on drive shaft.

Cover drive shaft serration with tape to prevent damaging boot during installation.

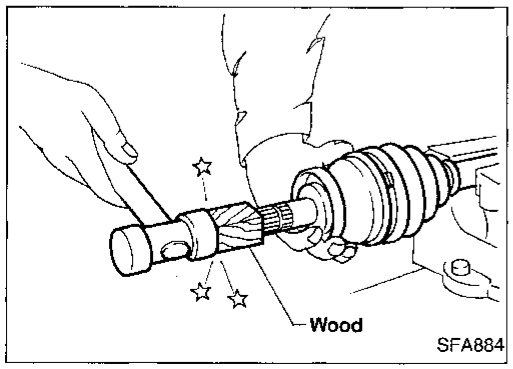

2. Set joint assembly onto drive shaft by lightly tapping it. Install joint assembly securely, ensuring that marks which were made during disassembly are properly aligned.

Drive Shaft — 4WD — (Cont'd)

Simpo PDF Merge and Split Unregistered Version - http://www.simpopdf.com

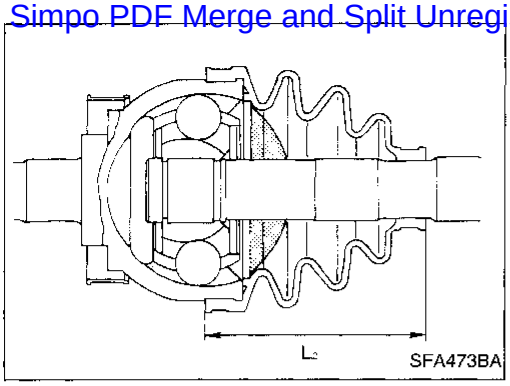

3. Pack drive shaft with specified amount of grease.
   Specified amount of grease:
   135 - 145 g (4.76 - 5.11 oz)
4. Make sure that the boot is properly installed on the drive shaft groove. Set the boot so that it does not swell or deform when its length is "L_2".
   Length "L_2": 96 - 98 mm (3.78 - 3.86 in)
5. Lock new large boot band securely with a suitable tool.
6. Lock new small boot band.

INSTALLATION

1. Apply multi-purpose grease.

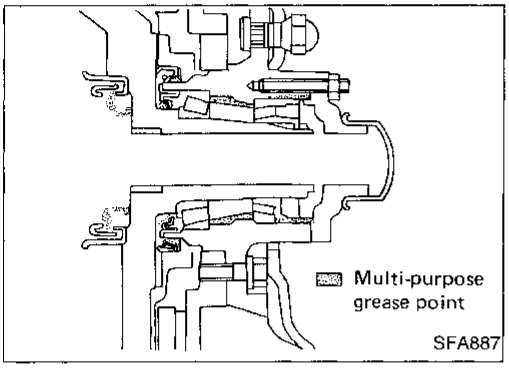

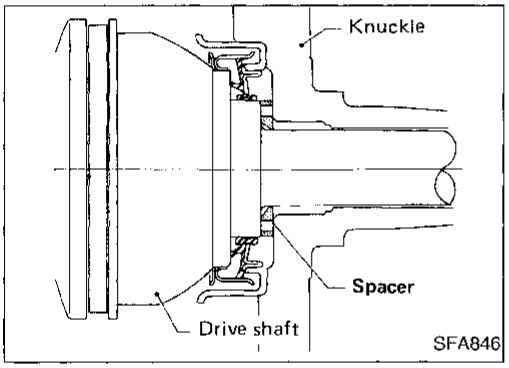

2. Install bearing spacer onto drive shaft.

Make sure that the bearing spacer is facing in the proper direction.

3. After installing wheel hub and wheel bearing, adjust wheel bearing preload. Refer to "PRELOAD ADJUSTMENT", "Front Wheel Bearing", "ON-VEHICLE SERVICE", FA-7.

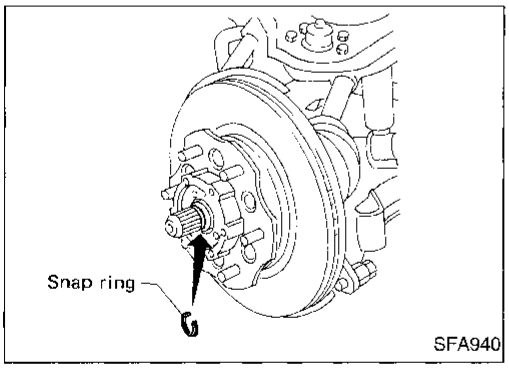

4. When installing drive shaft, adjust drive shaft axial end play by selecting a suitable snap ring.

a. Temporarily install new snap ring on drive shaft in the same thickness as it was installed before removal.

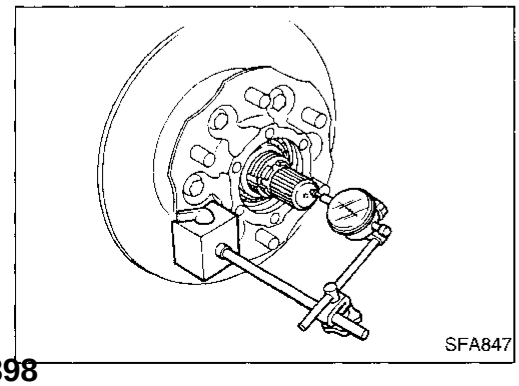

b. Set dial gauge on drive shaft end.
c. Measure axial end play of drive shaft.
   Axial end play:
   0.45 mm (0.0177 in) or less
d. If axial end play is not within the specified limit, select another snap ring.

1.1 mm (0.043 in)	**1.3 mm (0.051 in)**
1.5 mm (0.059 in)	**1.7 mm (0.067 in)**
1.9 mm (0.075 in)	**2.1 mm (0.083 in)**
2.3 mm (0.091 in)	

Simpo PDF Merge and Split Unregistered Version - http://www.simpopdf.com

2WD

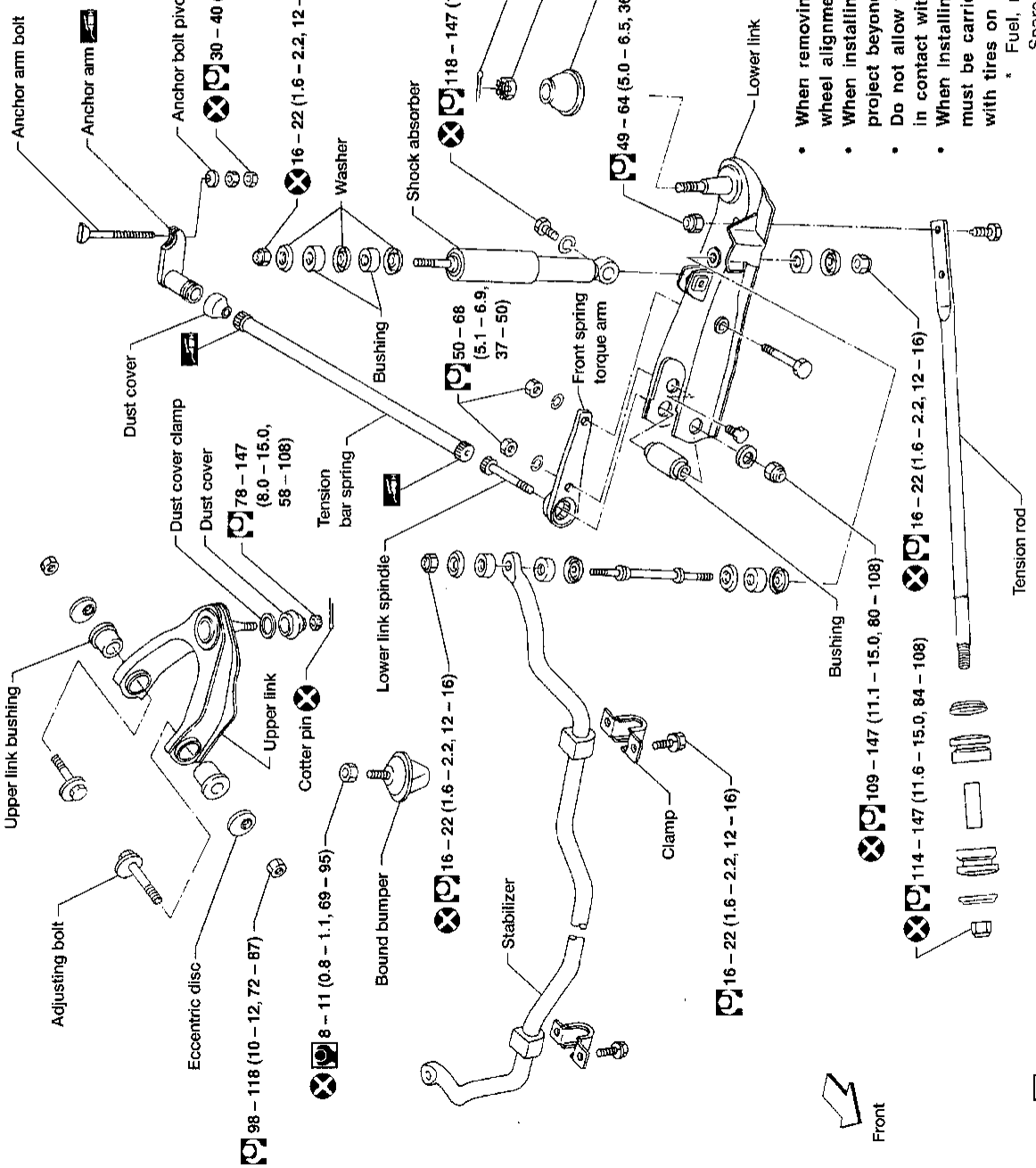

- When removing each suspension part, check wheel alignment and adjust if necessary.
- When installing a bushing, do not allow it to project beyond the surface area of the washer.
- Do not allow the bushings and washers to come in contact with grease, oil, soapy water, etc.
- When installing rubber parts, final tightening must be carried out under unladen condition* with tires on the ground.
  * Fuel, radiator coolant and engine oil full. Spare tire, jack, hand tools and mats in designated positions.
- When removing or installing brake tubes, use flare nut torque wrench.

SEC. 400

AFA150

899

Simpo PDF Merge and Split Unregistered Version - http://www.simpopdf.com

4WD

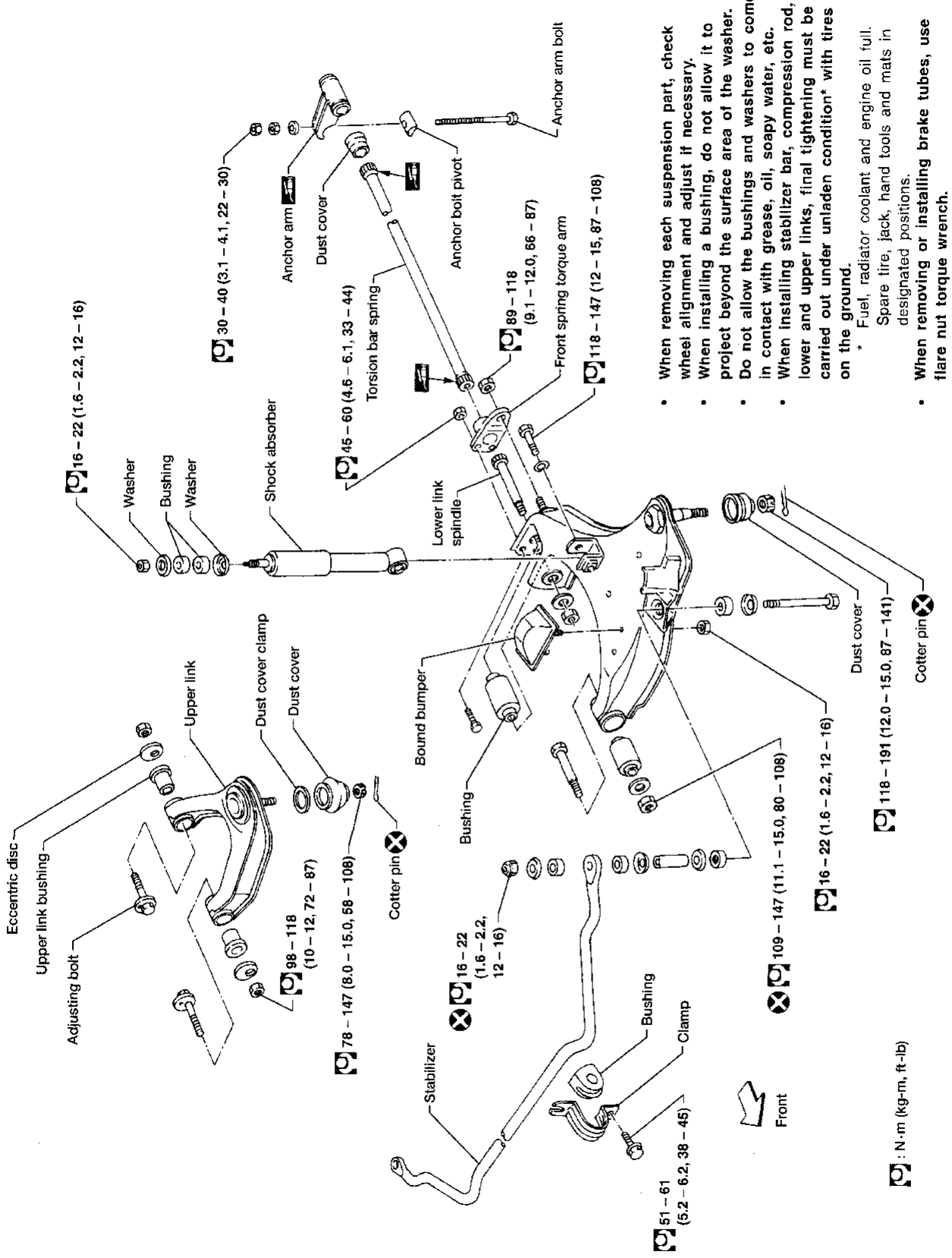

- When removing each suspension part, check wheel alignment and adjust if necessary.
- When installing a bushing, do not allow it to project beyond the surface area of the washer.
- Do not allow the bushings and washers to come in contact with grease, oil, soapy water, etc.
- When installing stabilizer bar, compression rod, lower and upper links, final tightening must be carried out under unladen condition* with tires on the ground.
  * Fuel, radiator coolant and engine oil full. Spare tire, jack, hand tools and mats in designated positions.
- When removing or installing brake tubes, use flare nut torque wrench.

SEC. 401

AFA149

Simpo PDF Merge and Split Unregistered Version - http://www.simpopdf.com

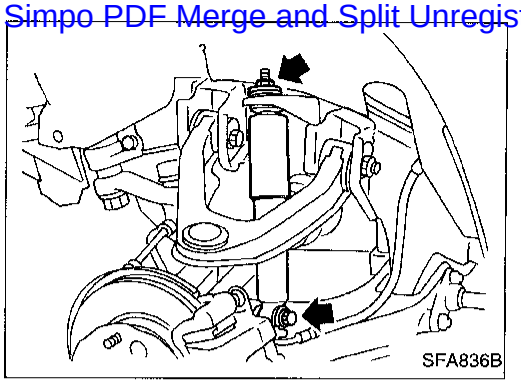

Shock Absorber

REMOVAL AND INSTALLATION

1. Support lower link with jack.
2. Remove bolt and nut that hold shock absorber.

INSPECTION

Except for nonmetallic parts, clean all parts with suitable solvent and dry with compressed air.
Use compressed air to blow dirt and dust off of nonmetallic parts.

- Check for oil leakage and cracks. Replace if necessary.
- Check piston rod for cracks, deformation and other damage. Replace if necessary.
- Check rubber parts for wear, cracks, damage and deformation. Replace if necessary.

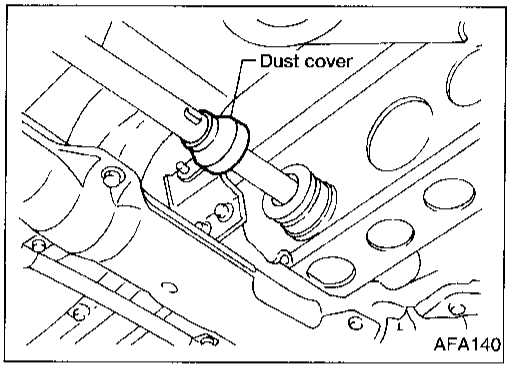

Torsion Bar Spring

REMOVAL

1. Move dust cover.
2. Paint matching marks on the torsion bar spring and the corresponding arm.

Always use paint to place the matching mark; do not scribe the affected parts.

3. Measure anchor bolt protrusion "L" and remove the lock nut and adjusting nut.

Before removing the nuts, ensure that twisting force is eliminated from the torsion bar springs.

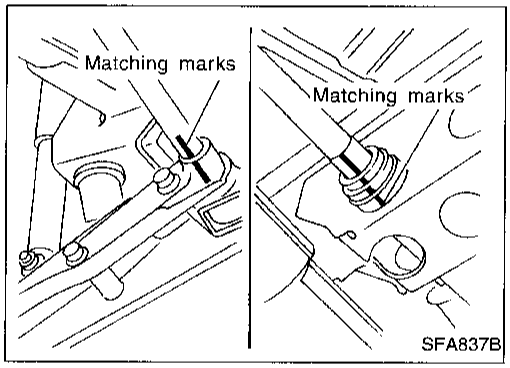

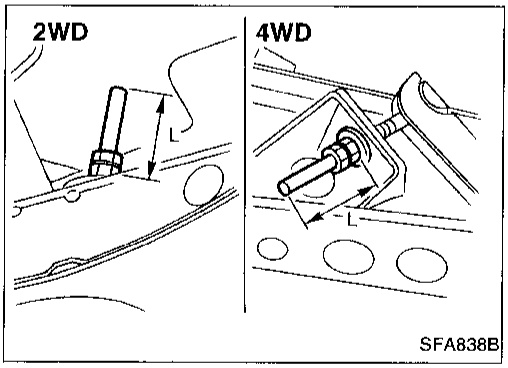

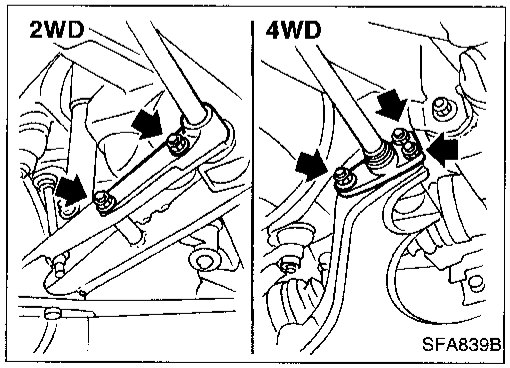

4. Remove torsion bar spring.

- Pull out anchor arm rearward, then withdraw torsion bar spring rearward. — 2WD —
- Remove torque arm. — 2WD —
- Remove torque arm fixing nuts, then withdraw torsion bar spring forward with torque arm. — 4WD —

Simpo PDF Merge and Split Unregistered Version - http://www.simpopdf.com

Torsion Bar Spring (Cont'd)

INSPECTION

- Check torsion bar spring for wear, twist, bend and other damage.
- Check serrations of each part for cracks, wear, twist and other damage.
- Check dust cover for cracks.

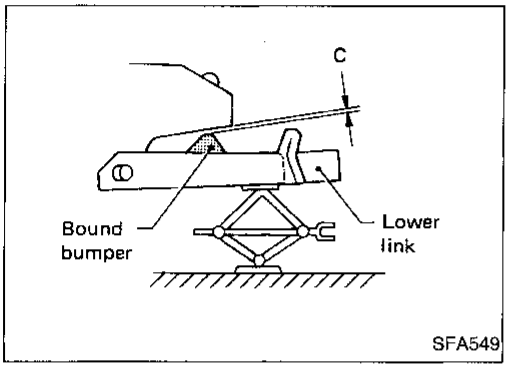

INSTALLATION AND ADJUSTMENT

Adjustment of anchor arm adjusting nut is in tightening direction only.
Do not adjust by loosening anchor arm adjusting nut.

1. Install torque arm to lower link. — 2WD —
2. Coat multi-purpose grease on the serration of torsion bar spring.
3. Place lower link in the position where bound bumper clearance "C" is 0.
   Clearance "C": 0 mm (0 in)

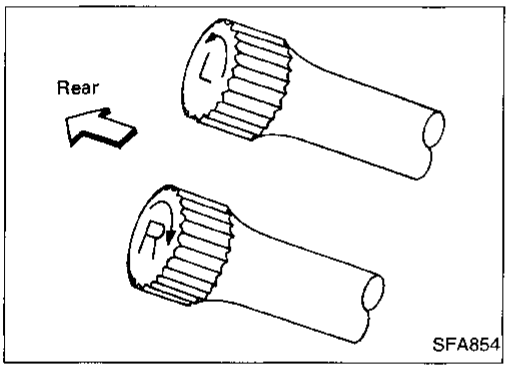

4. Install torsion bar spring. — 2WD —
   Install torsion bar spring with torque arm. — 4WD —

Be sure to install right and left torsion bar springs correctly.

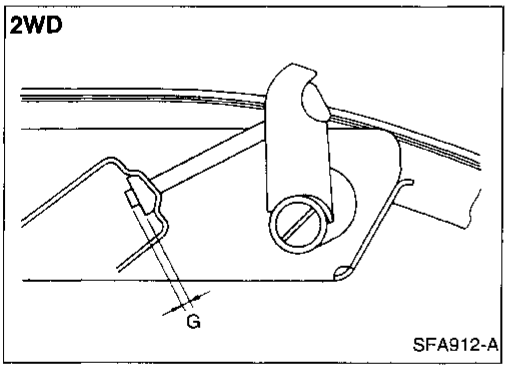

5. While aligning the anchor arm with the matching mark, install the anchor arm to the torsion bar spring.
   If a new torsion bar spring or anchor arm is installed, adjust anchor arm length to the dimension indicated in the figure at the left.
   Standard length "G":
   2WD
   6 - 18 mm (0.24 - 0.71 in)
   4WD
   25 - 39 mm (0.98 - 1.54 in)

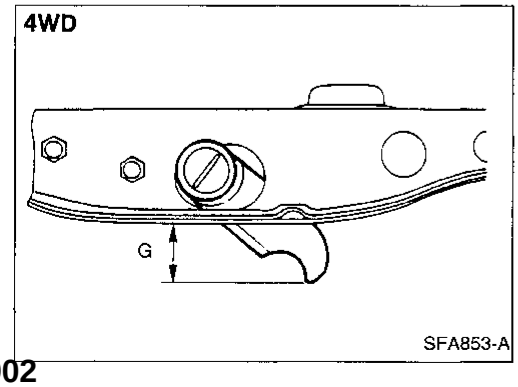

Torsion Bar Spring (Cont'd)

Simpo PDF Merge and Split Unregistered Version - http://www.simpopdf.com

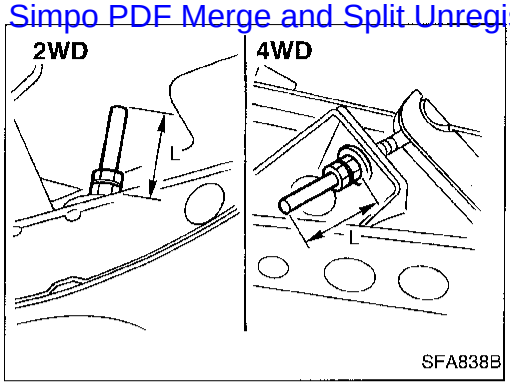

6. Tighten the adjusting nut so the torsion bar length corresponds with dimension "L" previously measured during torsion bar removal. Tighten the lock nut to specifications.
   If a new torsion bar spring or anchor arm is installed, tighten the adjusting nut to the dimension indicated in the figure at the left, then tighten the lock nut to specifications.
   Standard length "L":
   2WD
   54 mm (2.13 in)
   4WD
   70 mm (2.76 in)

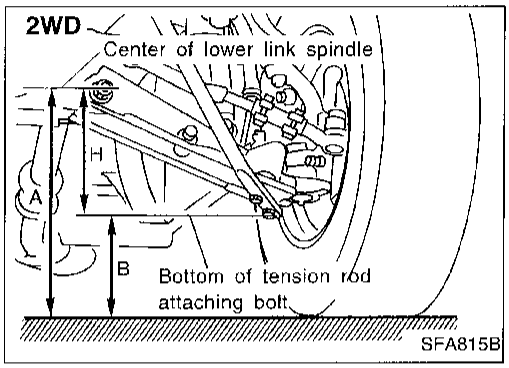

7. Bounce vehicle with tires on ground (Unladen) to eliminate friction of suspension.
8. Measure vehicle posture "H".
a. Exercise the front suspension by bouncing the front of the vehicle 4 or 5 times to ensure that the vehicle is in a neutral height attitude.
b. Measure vehicle posture ... Dimension "H".
   H = A – B mm (in) "Unladen"
   Refer to "WHEEL ALIGNMENT (Unladen)", "SDS", FA-37.

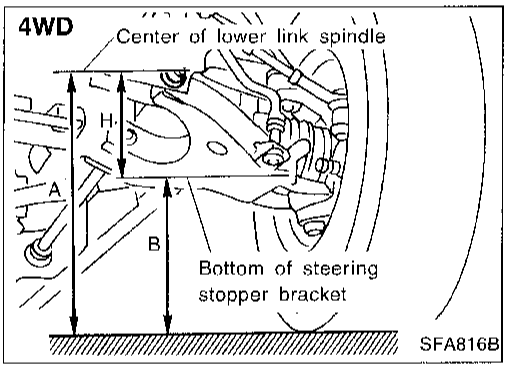

9. If height of the vehicle is not within allowable limit, adjust vehicle posture.
   Refer to "WHEEL ALIGNMENT (Unladen)", "SDS", FA-37.
10. Check wheel alignment if necessary.
    Refer to "WHEEL ALIGNMENT (Unladen)", "SDS", FA-37.

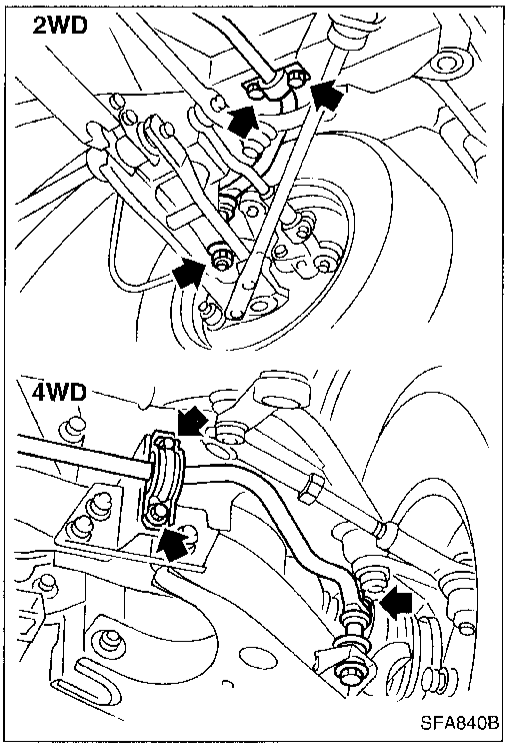

Stabilizer Bar

REMOVAL

- Remove stabilizer bar connecting bolts and clamp bolts.

INSPECTION

- Check stabilizer bar for twist and deformation.
  Replace if necessary.
- Check rubber bushing for cracks, wear and deterioration.
  Replace if necessary.

Stabilizer Bar (Cont'd)

Simpo PDF Merge and Split Unregistered Version - http://www.simpopdf.com

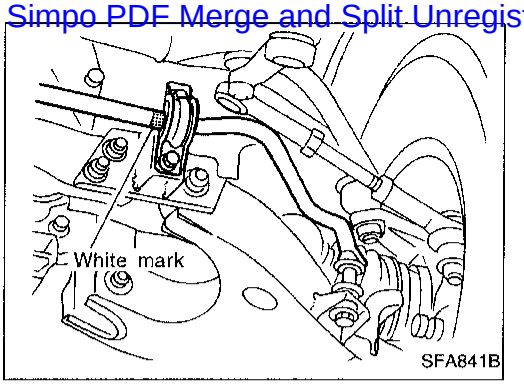

INSTALLATION

- Install bushing outside of white mark painted on stabilizer.

Upper Link

REMOVAL

1. Remove shock absorber. Refer to "Shock Absorber", FA-29.
2. Separate upper ball joint stud from knuckle spindle.

Support lower link with jack.

Refer to "Knuckle Spindle", "FRONT AXLE", FA-19.

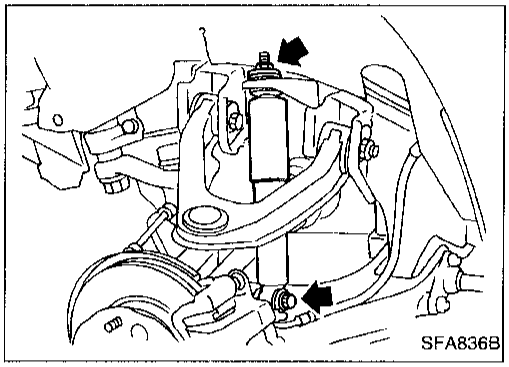

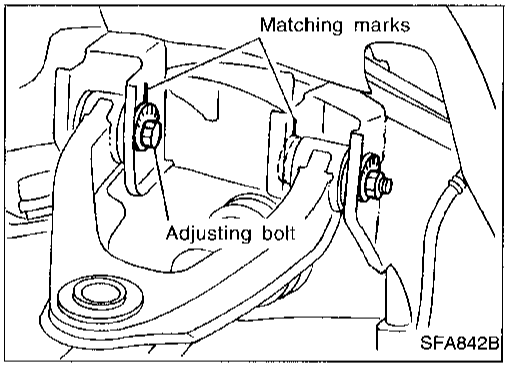

3. Put matching marks on adjusting bolts and remove adjusting bolts.

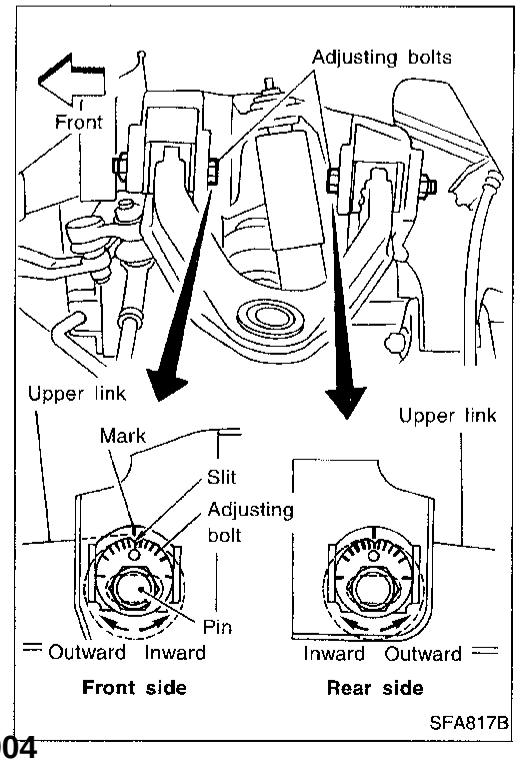

INSTALLATION

1. While aligning the adjusting bolts with the matching marks, install the upper link.
   If a new upper link or any other suspension part is installed, align the matching mark with the slit as indicated in the figure at the left, then install the upper link.
   Refer to "Front Wheel Alignment", "ON-VEHICLE SERVICE", FA-9.
2. Install shock absorber.
3. Tighten adjusting bolts under unladen condition with tires on ground.
4. After installing, check wheel alignment. Adjust if necessary. Refer to FA-9.

Simpo PDF Merge and Split Unregistered Version - http://www.simpopdf.com

Upper Link (Cont'd)

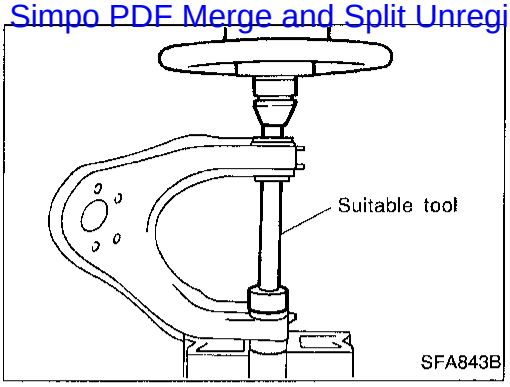

DISASSEMBLY

- Press out upper link bushings.

INSPECTION

- Check adjusting bolts and rubber bushings for damage. Replace if necessary.
- Check upper link for deformation and cracks. Replace if necessary.

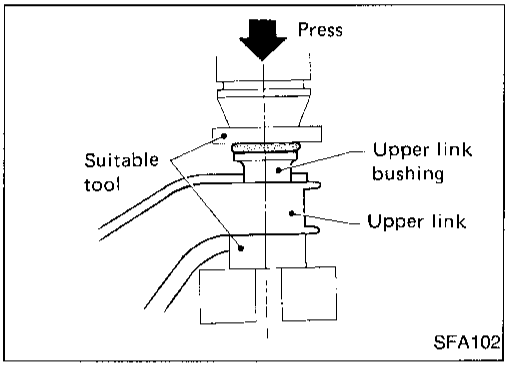

ASSEMBLY

1. Apply soapsuds to rubber bushing.
2. Press upper link bushing.

Press bushing so that the flange of bushing securely contacts the end surface of the upper link collar.

Tension Rod

REMOVAL AND INSTALLATION

1. Remove fixing nuts on lower link and frame.

Support lower link with jack.

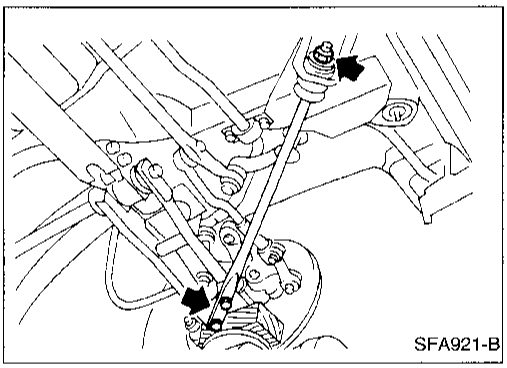

2. Install tension rod.

Make sure that the bushings and washers are installed properly.

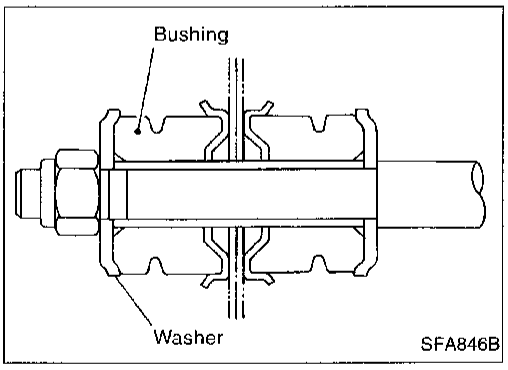

INSPECTION

- Check tension rod for deformation and cracks. Replace if necessary.
- Check rubber bushings for damage. Replace if necessary.

Simpo PDF Merge and Split Unregistered Version - http://www.simpopdf.com

Tension Rod (Cont'd)

Lower Link

REMOVAL AND INSTALLATION

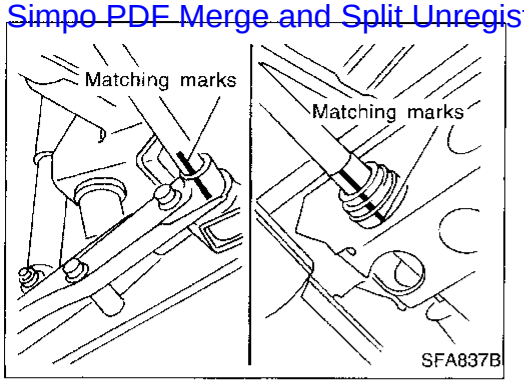

1. Remove torsion bar spring. Refer to "REMOVAL", "Torsion Bar Spring", FA-29.

Make matching marks and measure dimension "L" when loosening adjusting nut until there is no tension on torsion bar spring.

2. Remove shock absorber lower fixing bolt.
3. Remove stabilizer bar connecting bolt.
4. Separate drive shaft from front final drive. — 4WD — Refer to "Drive Shaft —4WD —", "FRONT AXLE", FA-22.
5. Separate lower link ball joint from knuckle spindle. Refer to "Knuckle Spindle", "FRONT AXLE", FA-19.

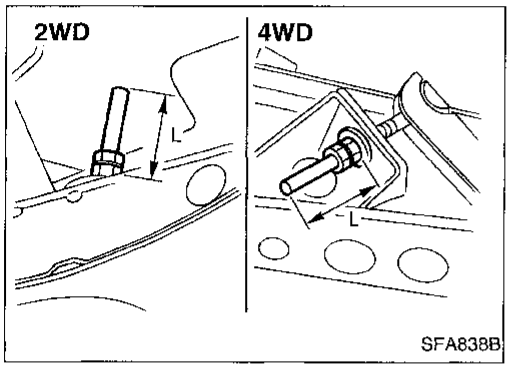

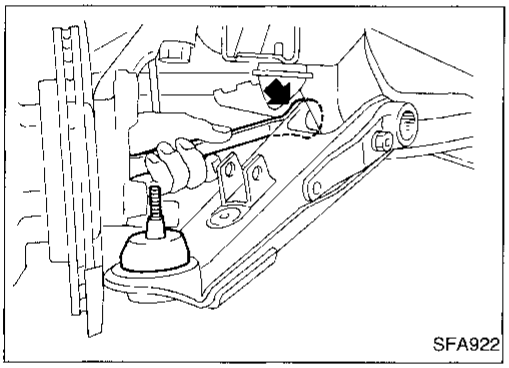

6. Remove front lower link fixing nut.

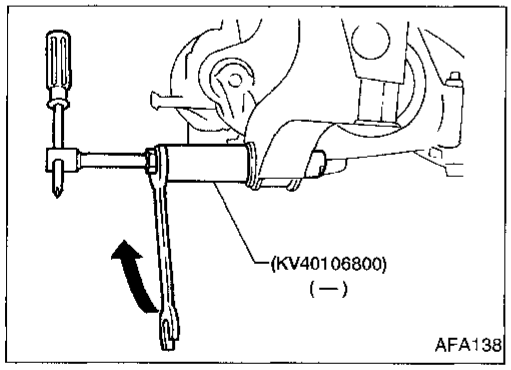

7. Remove bushing of lower link spindle from frame with Tool.
8. After installing lower link, adjust wheel alignment and vehicle height. Refer to "Front Wheel Alignment", "ON-VEHICLE SERVICE", FA-9.

INSPECTION

Lower link and lower link spindle

- Check for deformation and cracks. Replace if necessary.

Lower link bushing

- Check for distortion and damage. Replace if necessary.

Simpo PDF Merge and Split Unregistered Version - http://www.simpopdf.com

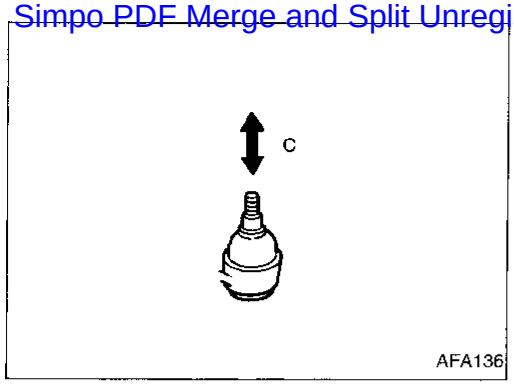

Upper Ball Joint and Lower Ball Joint

REMOVAL AND INSTALLATION

- Separate knuckle spindle from upper and lower links.
  Refer to "Knuckle Spindle", "FRONT AXLE", FA-19.

INSPECTION

- Check joints for play. If ball is worn and play in axial direction is excessive or joint is hard to swing, replace as a upper link or lower link.

  Axial end play "C":
  Upper link
  0 mm (0 in)
  Lower link
  2WD 1.3 mm (0.051 in) or less
  4WD 0.2 mm (0.008 in) or less

- Check dust cover for damage.
  Replace dust cover and dust cover clamp if necessary.

Simpo PDF Merge and Split Unregistered Version - http://www.simpopdf.com

General Specifications

Suspension type	Independent double wishbone torsion bar spring
Shock absorber type	Double-acting hydraulic
Stabilizer	Standard equipment

Inspection and Adjustment

WHEEL BEARING

2WD

Wheel bearing axial end play mm (in)	0 (0)
Wheel bearing lock nut	
Tightening torque N·m (kg-m, ft-lb)	34 - 39 (3.5 - 4.0, 25 - 29)
Return angle degree	45° - 60°
Wheel bearing starting torque	
At wheel hub bolt With new grease seal N (kg, lb)	9.8 - 28.4 (1.0 - 2.9, 2.2 - 6.4)
With used grease seal N (kg, lb)	9.8 - 23.5 (1.0 - 2.4, 2.2 - 5.3)

4WD

Wheel bearing lock nut	
Tightening torque N·m (kg-m, ft-lb)	78 - 98 (8 - 10, 58 - 72)
Retightening torque after loosening wheel bearing lock nut N·m (kg-m, ft-lb)	0.5 - 1.5 (0.05 - 0.15, 0.4 - 1.1)
Axial end play mm (in)	0 (0)
Starting force at wheel hub bolt N (kg, lb)	A
Turning angle degree	15° - 30°
Starting force at wheel hub bolt N (kg, lb)	B
Wheel bearing preload at wheel hub bolt N (kg, lb)	
B – A	7.06 - 20.99 (0.72 - 2.14, 1.59 - 4.72)

WHEEL RUNOUT AVERAGE*

Wheel type	Aluminum	Steel		
		15 inches	14 inches	
			Painted	Plated
Radial runout limit mm (in)	0.3 (0.012)	0.8 (0.031)	0.5 (0.020)	0.6 (0.024)
Lateral runout limit mm (in)	0.3 (0.012)	0.8 (0.031)	0.8 (0.031)	0.8 (0.031)

* Wheel runout average = (Outside runout value + Inside runout value) x 0.5

UPPER BALL JOINT

Vertical end play "C" mm (in)	0 (0)

LOWER BALL JOINT

Applied model	2WD	4WD
Vertical end play "C" mm (in)	1.3 (0.051) or less	0.2 (0.008 in) or less

Simpo PDF Merge and Split Unregistered Version - http://www.simpopdf.com

WHEEL ALIGNMENT (Unladen*1)

2WD

Camber	Degree minute (Decimal degree)	Minimum		−0°05′ (−0.08°)
		Nominal		0°25′ (0.42°)
		Maximum		0°55′ (0.92°)
		Left and right difference		45′ (0.75°) or less
Caster	Degree minute (Decimal degree)	Minimum		0°06′ (0.10°)
		Nominal		0°36′ (0.60°)
		Maximum		1°06′ (1.10°)
		Left and right difference		45′ (0.75°) or less
Kingpin inclination	Degree minute (Decimal degree)	Minimum		8°35′ (8.58°)
		Nominal		9°05′ (9.08°)
		Maximum		9°35′ (9.58°)
Total toe-in				
Distance (A - B)	mm (in)	Radial tire	Minimum	2 (0.08)
			Nominal	3 (0.12)
			Maximum	4 (0.16)
Angle (left plus right)	Degree minute (Decimal degree)	Radial tire	Minimum	10′ (0.17°)
			Nominal	15′ (0.25°)
			Maximum	20′ (0.33°)

				Except P215/65R15	P215/65R15
Wheel turning angle					
Full turn*2	Inside	Degree minute (Decimal degree)	Minimum	36°00′ (36.00°)	35°00′ (35.00°)
			Nominal	38°00′ (38.00°)	37°00′ (37.00°)
			Maximum	38°00′ (38.00°)	37°00′ (37.00°)
	Outside	Degree minute (Decimal degree)	Minimum	32°36′ (32.60°)	31°36′ (31.60°)
			Nominal	34°36′ (34.60°)	33°36′ (33.60°)
			Maximum	34°36′ (34.60°)	33°36′ (33.60°)

Vehicle posture		
Lower arm pivot height (H)	mm (in)	111 - 115 (4.37 - 4.53)

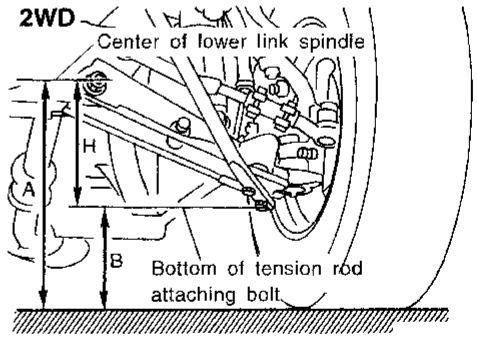

SFA815B

*1: Fuel, radiator coolant and engine oil full. Spare tire, jack, hand tools and mats in designated positions.
*2: On power steering models, wheel turning force (at circumference of steering wheel) of 98 to 147 N (10 to 15 kg, 22 to 33 lb) with engine idle.

Simpo PDF Merge and Split Unregistered Version - http://www.simpopdf.com

4WD

Camber	Degree minute (Decimal degree)	Minimum		0°06′ (0.10°)
		Nominal		0°36′ (0.60°)
		Maximum		1°06′ (1.10°)
		Left and right difference		45′ (0.75°) or less
Caster	Degree minute (Decimal degree)	Minimum		1°40′ (1.67°)
		Nominal		2°10′ (2.17°)
		Maximum		2°40′ (2.67°)
		Left and right difference		45′ (0.75°) or less
Kingpin inclination	Degree minute (Decimal degree)	Minimum		10°18′ (10.30°)
		Nominal		10°48′ (10.80°)
		Maximum		11°18′ (11.30°)
Total toe-in				
Distance (A - B)	mm (in)	Radial tire	Minimum	3 (0.12)
			Nominal	4 (0.16)
			Maximum	5 (0.20)
Angle (left plus right)	Degree minute (Decimal degree)	Radial tire	Minimum	15′ (0.25°)
			Nominal	20′ (0.33°)
			Maximum	25′ (0.42°)

Wheel turning angle				Except P235/70R15	P235/70R15
Full turn*2	Inside	Degree minute (Decimal degree)	Minimum	33°06′ (33.10°)	31°00′ (31.00°)
			Nominal	35°06′ (35.10°)	33°00′ (33.00°)
			Maximum	35°06′ (35.10°)	33°00′ (33.00°)
	Outside	Degree minute (Decimal degree)	Minimum	31°12′ (31.20°)	29°00′ (29.00°)
			Nominal	33°12′ (33.20°)	31°00′ (31.00°)
			Maximum	33°12′ (33.20°)	31°00′ (31.00°)

Vehicle posture		
Lower arm pivot height (H)	mm (in)	45.5 - 49.5 (1.791 - 1.949)

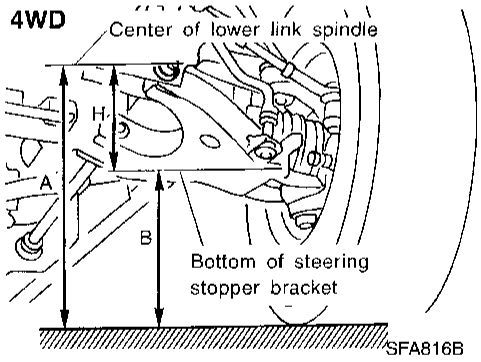

*2: On power steering models, wheel turning force (at circumference of steering wheel) of 98 to 147 N (10 to 15 kg, 22 to 33 lb) with engine idle.

Inspection and Adjustment (Cont'd)

Simpo PDF Merge and Split Unregistered Version - http://www.simpopdf.com

DRIVE SHAFT (4WD)

Drive shaft joint type	
Final drive side	TS82F
Wheel side	ZF100
Fixed joint axial end play limit mm (in)	1 (0.04)
Diameter mm (in)	
Wheel side (D_1)	29.0 (1.142)
Grease	
Quality	Nissan genuine grease or equivalent
Capacity g (oz)	
Final drive side	95 - 105 (3.35 - 3.70)
Wheel side	135 - 145 (4.76 - 5.11)
Boot length mm (in)	
Final drive side (L_1)	95 - 97 (3.74 - 3.82)
Wheel side (L_2)	96 - 98 (3.78 - 3.86)

Final drive side

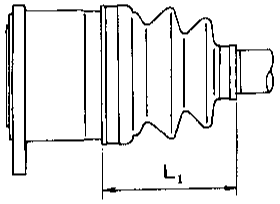

Wheel side

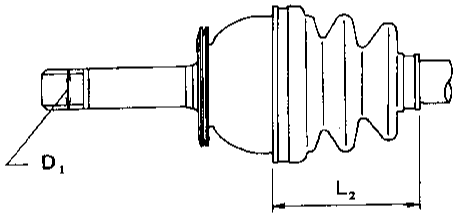

SFA877A

Drive shaft axial end play

Drive shaft axial end play mm (in)	0.45 (0.0177) or less

Drive shaft end snap ring

Thickness mm (in)	Part No.
1.1 (0.043)	39253-88G10
1.3 (0.051)	39253-88G11
1.5 (0.059)	39253-88G12
1.7 (0.067)	39253-88G13
1.9 (0.075)	39253-88G14
2.1 (0.083)	39253-88G15
2.3 (0.091)	39253-88G16

Simpo PDF Merge and Split Unregistered Version - http://www.simpopdf.com

SECTION FE

CONTENTS

PREPARATION 2
Special Service Tool 2
ACCELERATOR CONTROL SYSTEM 3
Adjusting Accelerator Wire 3
FUEL SYSTEM 4
Fuel Tank 4
Fuel Pump and Gauge 7
EXHAUST SYSTEM 8

Simpo PDF Merge and Split Unregistered Version - http://www.simpopdf.com

Special Service Tool

The actual shapes of Kent-Moore tools may differ from those of special service tools illustrated here.

Tool number (Kent-Moore No.) Tool name	Description	
KV10114400 (J-38365) Heated oxygen sensor wrench	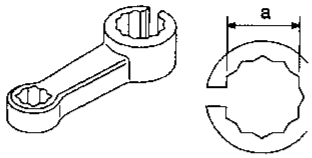 NT636	Loosening or tightening front and rear heated oxygen sensors **a = 22 mm (0.87 in)**

Simpo PDF Merge and Split Unregistered Version - http://www.simpopdf.com

CAUTION:

- **When removing accelerator wire, mark initial position of lock nut.**
- **Check that throttle valve opens fully when accelerator pedal is fully depressed. Check that throttle valve returns to idle position when accelerator pedal is released.**
- **Check accelerator control parts for improper contact with any adjacent parts.**
- **When connecting accelerator wire, do not twist or scratch the inner wire.**
- **For adjustment of A/T throttle wire, refer to AT section ("Throttle Wire Adjustment", "ON-VEHICLE SERVICE").**

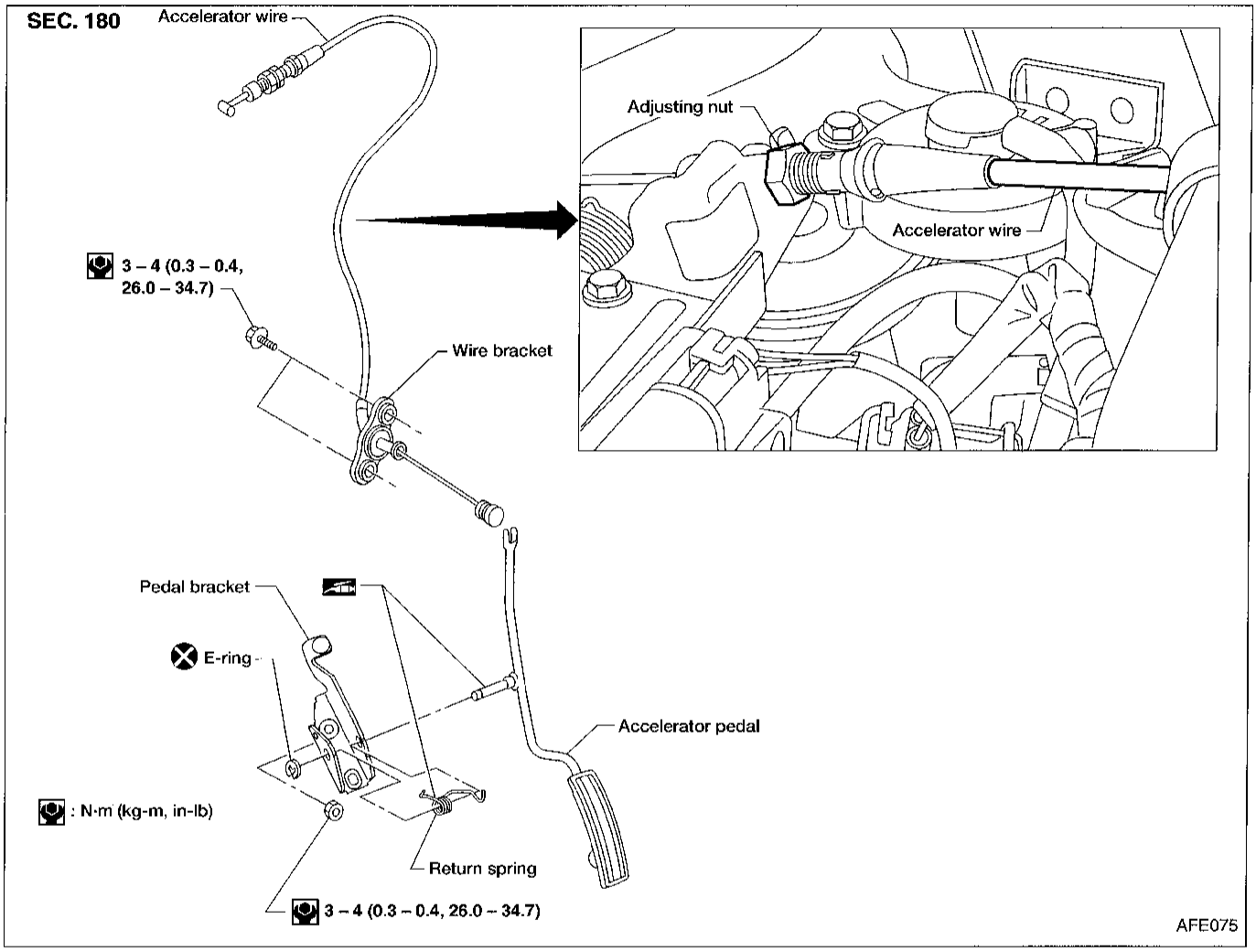

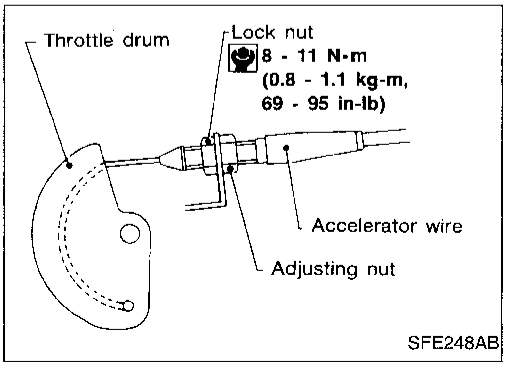

Adjusting Accelerator Wire

CAUTION:

- **Make sure the ASCD wire is not pulling the throttle drum.**
- **For ASCD wire adjustment, refer to EL section ["AUTOMATIC SPEED CONTROL DEVICE (ASCD)"].**

1. Loosen lock nut, and tighten adjusting nut until throttle drum starts to move.
2. Loosen adjusting nut 1.5 to 2 turns and tighten lock nut.

Simpo PDF Merge and Split Unregistered Version - http://www.simpopdf.com

Fuel Tank

WARNING:
When replacing fuel line parts, be sure to observe the following:
- **Put a "CAUTION: FLAMMABLE" sign in workshop.**
- **Do not smoke while servicing fuel system. Keep open flames and sparks away from work area.**
- **Furnish workshop with a CO_2 fire extinguisher.**

CAUTION:
- **Before removing fuel line parts, carry out the following procedures:**

a. **Put drained fuel in an explosion-proof container and put the lid on securely.**
b. **Release fuel pressure from fuel line. Refer to EC section ("Fuel Pressure Release", "BASIC SERVICE PROCEDURE").**
c. **Disconnect battery ground cable.**

- **When installing fuel check valve, install it in the correct direction. Refer to EC section ("EVAPORATIVE EMISSION SYSTEM").**
- **Always replace O-ring with a new one.**
- **Do not kink or twist tubes and hoses during installation.**
- **To avoid damaging hoses, do not tighten hose clamps excessively.**
- **After installing tubes, run engine and check for fuel leaks at connections.**
- **Use only a genuine fuel filler cap as a replacement. If an incorrect fuel filler cap is used, the MIL may turn on.**

SEC. 172

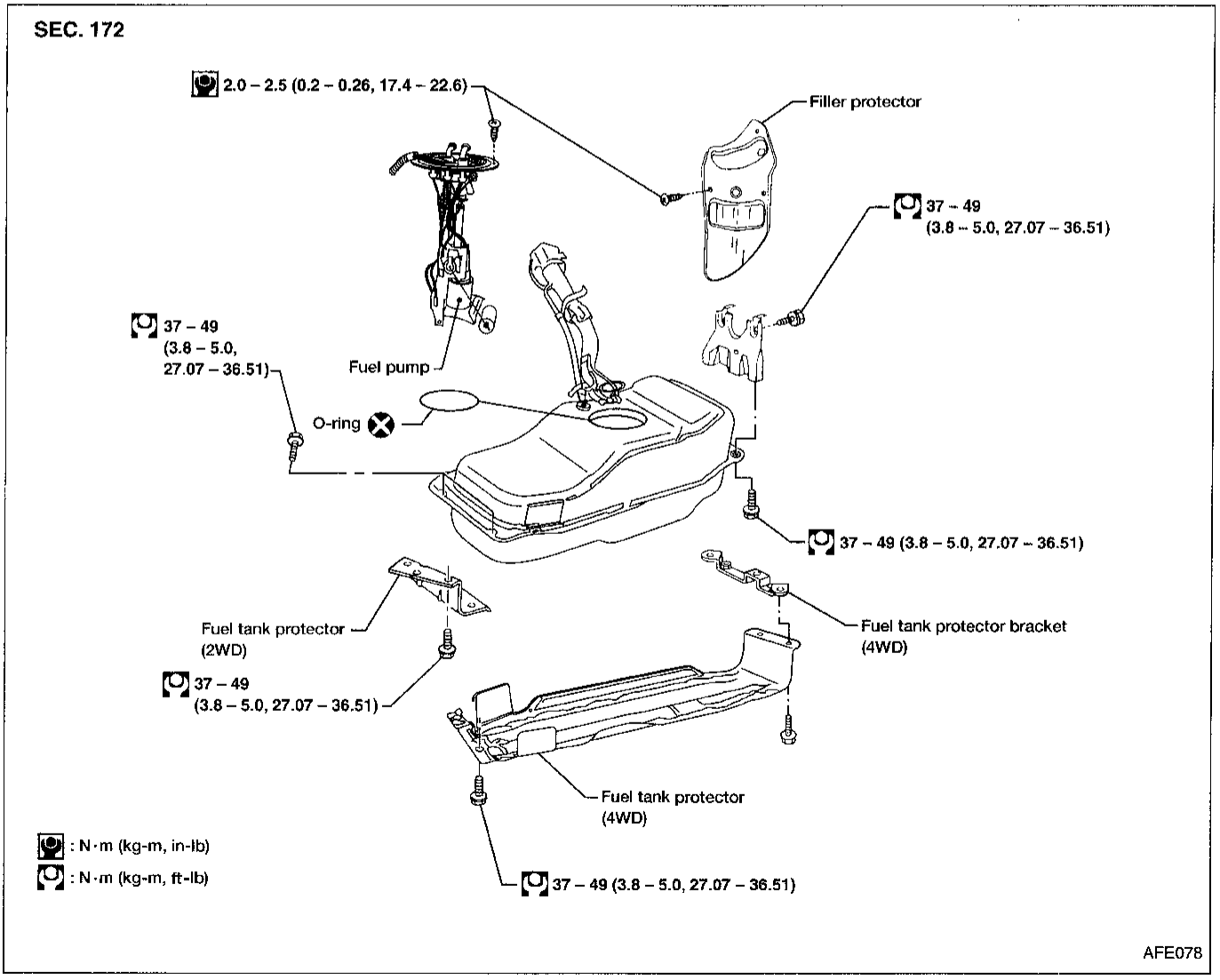

Fuel Tank (Cont'd)

Simpo PDF Merge and Split Unregistered Version - http://www.simpopdf.com

REMOVAL

CAUTION:

- **Do not disconnect any fuel line unless absolutely necessary.**
- **Plug hose and pipe openings to prevent entry of dust and dirt.**

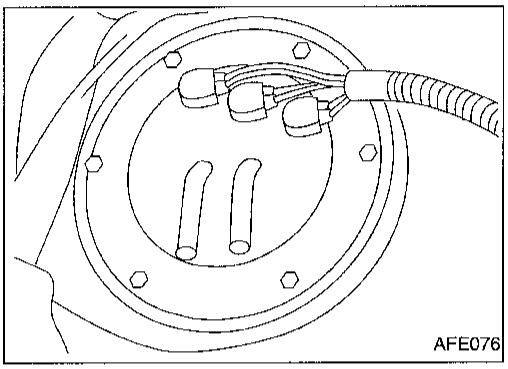

1. Release fuel pressure. Refer to EC section ("Fuel Pressure Release", "BASIC SERVICE PROCEDURE").
2. Disconnect battery ground cable.
3. Drain fuel from fuel tank.
4. Disconnect electrical connector.
5. Remove filler protector.
6. Disconnect filler tubes, EVAP hose, fuel supply tube and fuel return tube.

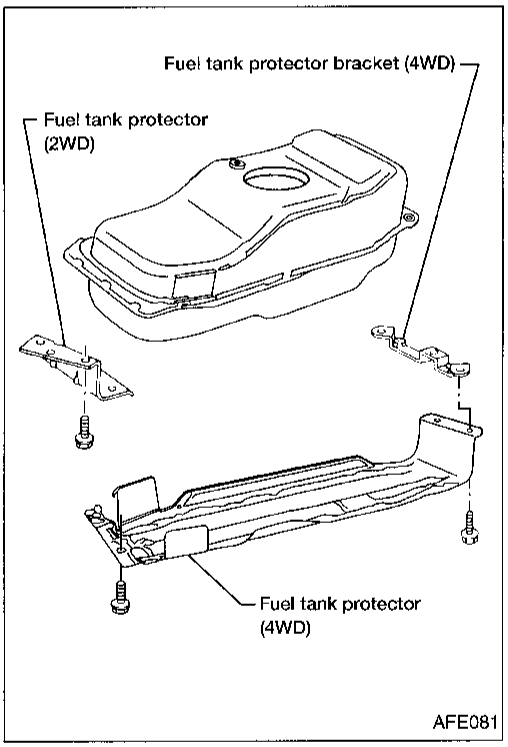

7. Remove fuel tank protector.

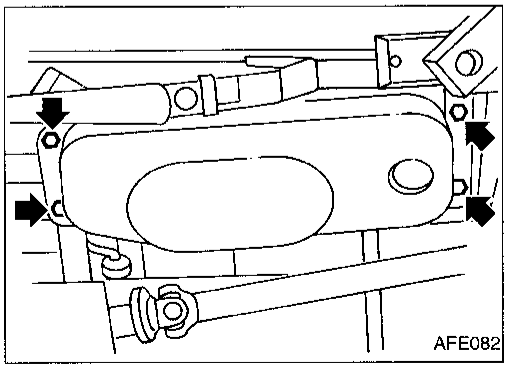

8. Remove four fuel tank mounting bolts while supporting fuel tank.

Fuel Tank (Cont'd)

Simpo PDF Merge and Split Unregistered Version - http://www.simpopdf.com

9. Remove fuel tank.

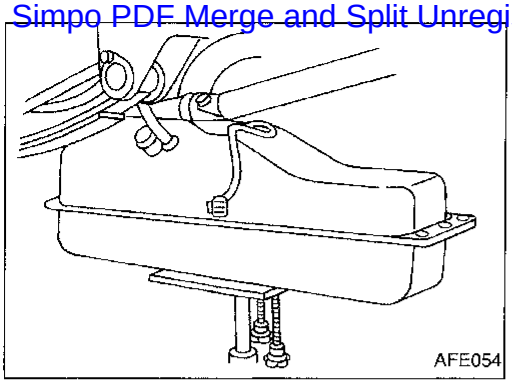

INSTALLATION

To install, reverse the removal procedure.

CAUTION:

- **Do not kink or twist hoses and tubes during installation.**
- **To avoid damaging hoses, do not tighten hose clamps excessively.**
- **Tighten bolts to specified torque.**
- **After installation, run engine and check for leaks at connections.**

Simpo PDF Merge and Split Unregistered Version - http://www.simpopdf.com

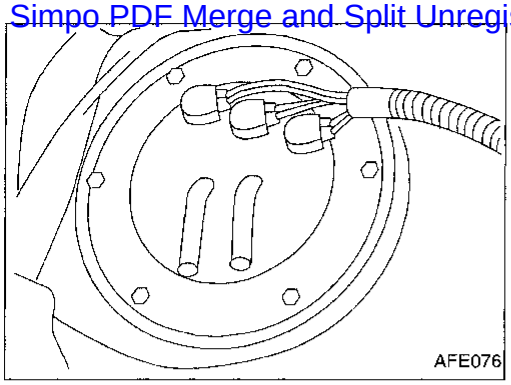

Fuel Pump and Gauge

REMOVAL

1. Remove fuel tank. Refer to FE-5.
2. Disconnect fuel supply tube, fuel return tube and electrical connector.
3. Remove the six screws.

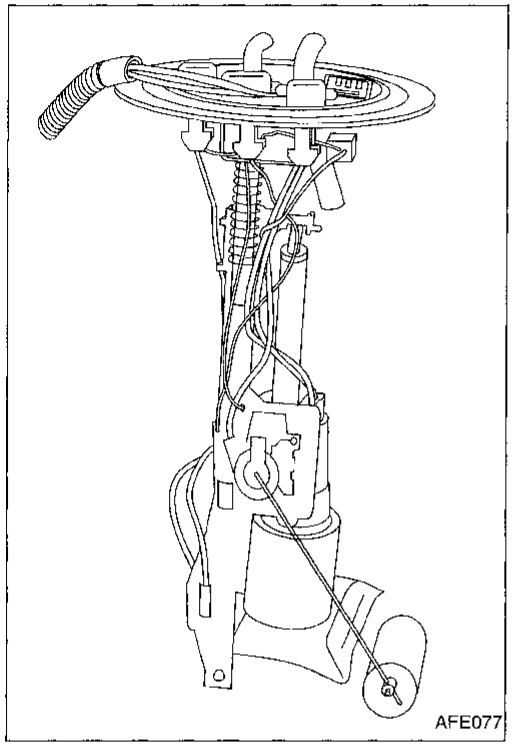

4. Remove fuel pump and gauge.

INSTALLATION

To install, reverse the removal procedure.

CAUTION:

- **Tighten bolts to specified torque.**
  : 2.0 - 2.5 N·m (0.20 - 0.26 kg-m, 17.4 - 22.6 in-lb)
- **Always replace O-ring with a new one.**
- **After installation, run engine and check for leaks at connections.**

Simpo PDF Merge and Split Unregistered Version - http://www.simpopdf.com

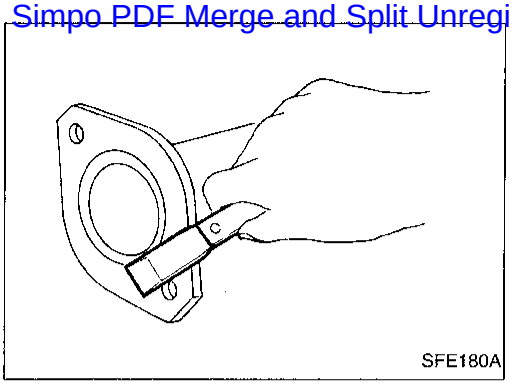

CAUTION:

- **Replace exhaust gaskets with new ones when reassembling.**
  If gasket remains on flange surface, scrape off completely as shown at left.
- **With engine running, check all tube connections for exhaust gas leaks, and entire system for unusual noises.**
- **Check to ensure that mounting brackets and mounting insulators are installed properly and are free from undue stress. Improper installation could result in excessive noise or vibration.**
- **Discard any heated oxygen sensor dropped from a height of more than 0.5 m (19.7 in) onto a hard surface such as a concrete floor; use a new one.**

Simpo PDF Merge and Split Unregistered Version - http://www.simpopdf.com

2WD model
SEC. 200

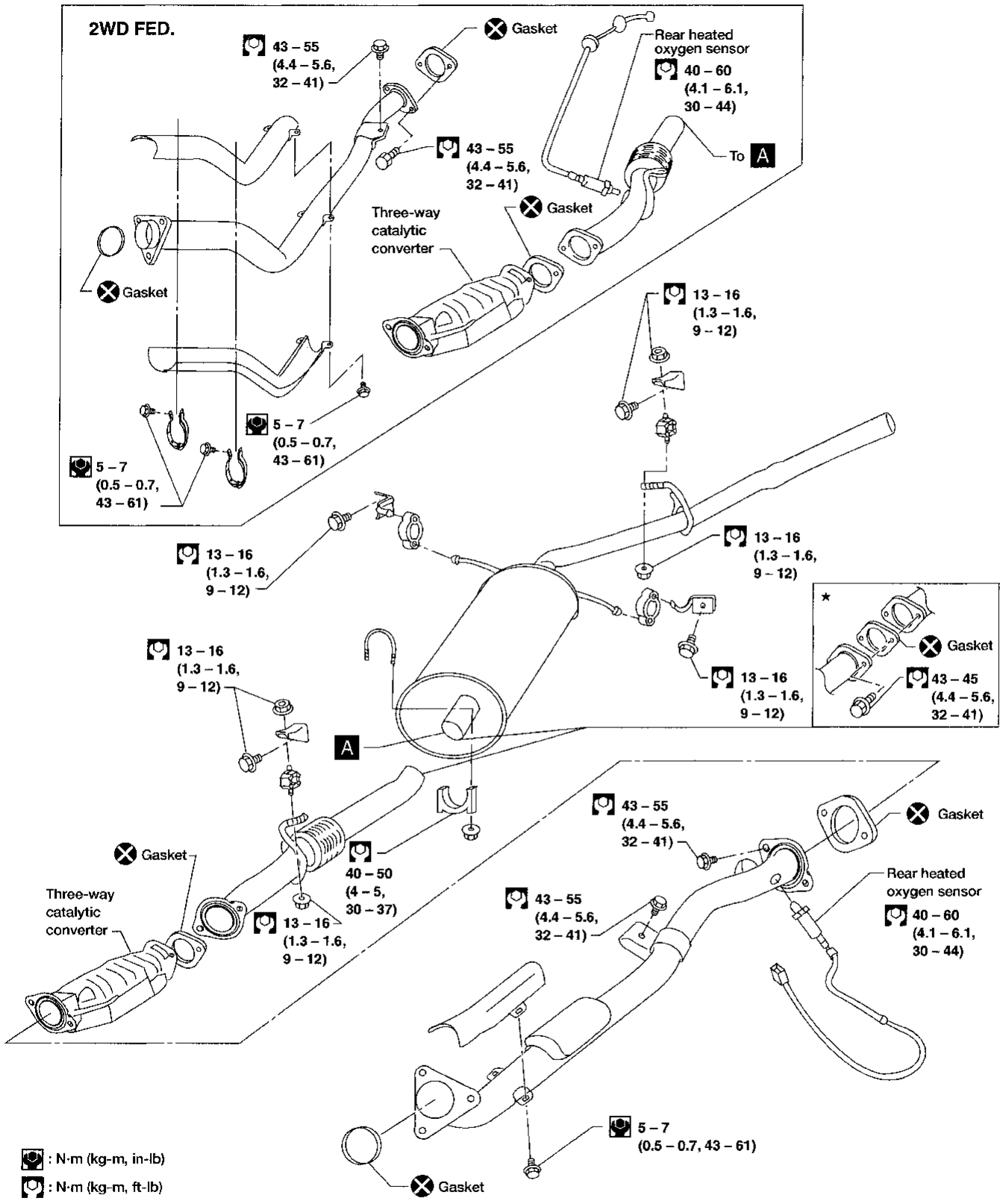

AFE080

Simpo PDF Merge and Split Unregistered Version - http://www.simpopdf.com

4WD model
SEC. 200

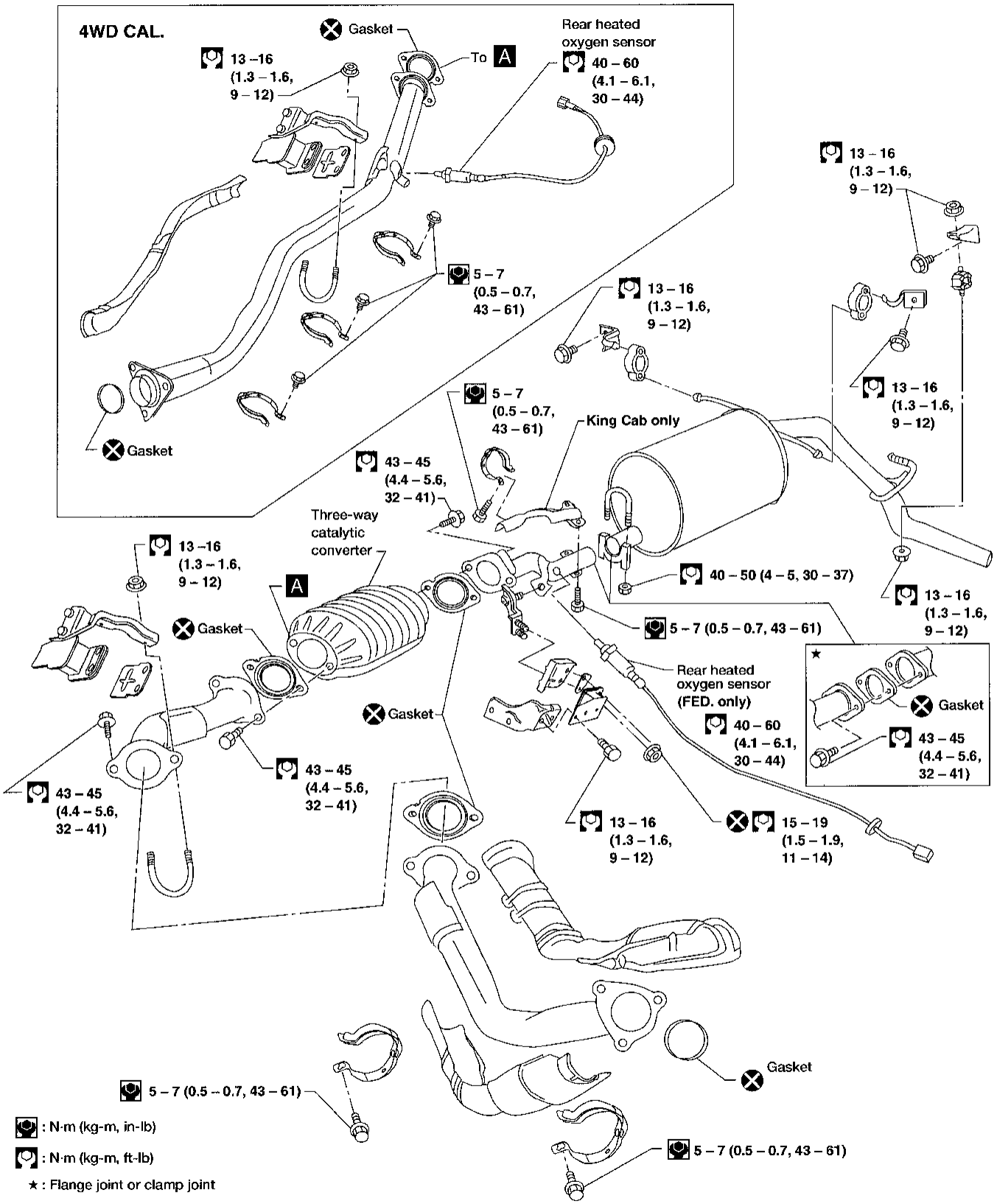

AFE079

Simpo PDF Merge and Split Unregistered Version - http://www.simpopdf.com

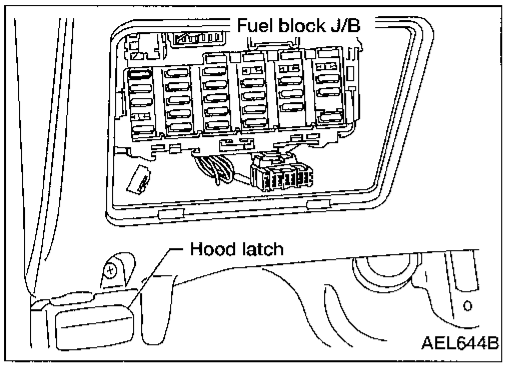

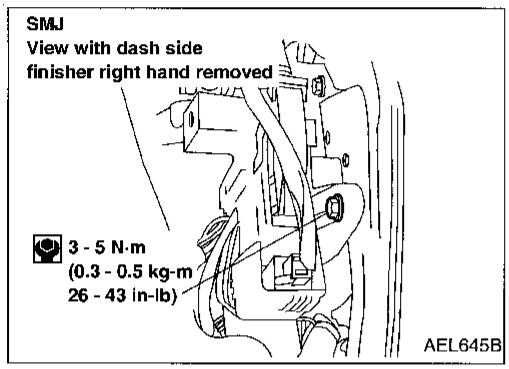

INSTALLATION

To install SMJ, tighten bolts until orange "fulltight" mark appears and then retighten to specified torque as required.

: 3 - 5 N·m
(0.3 - 0.5 kg-m, 26 - 43 in-lb)

CAUTION:
Do not overtighten bolt, otherwise, it may be damaged.

Terminal Arrangement

MAIN HARNESS

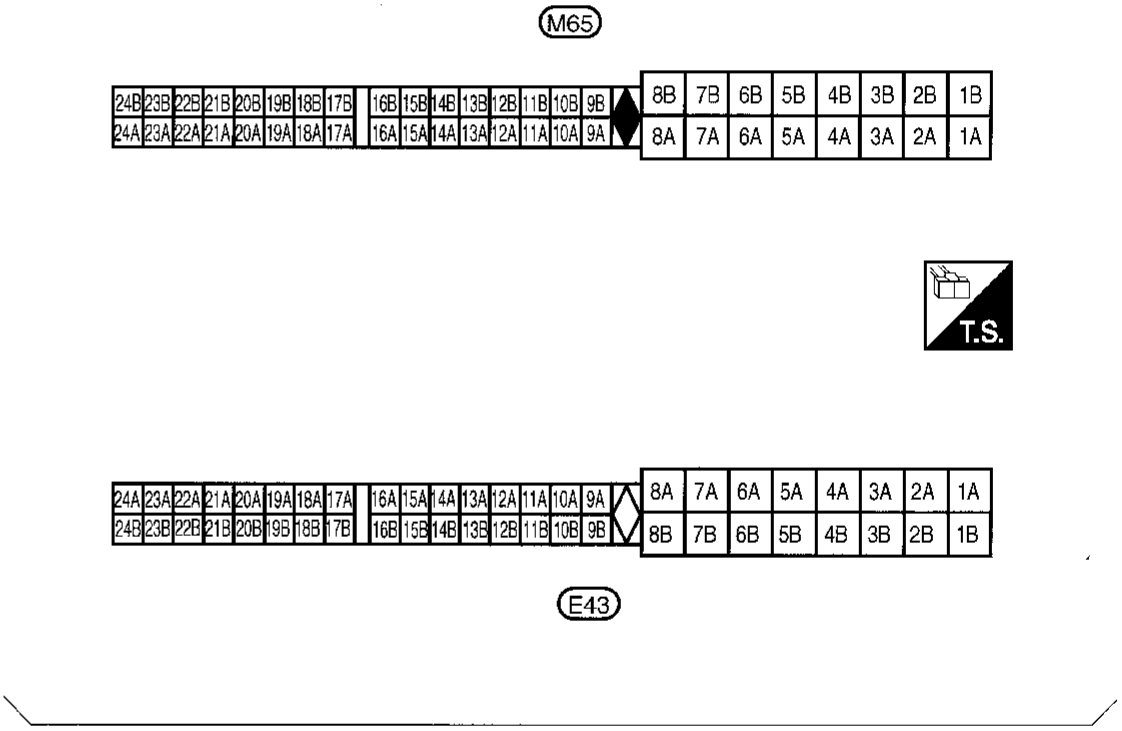

ENGINE ROOM HARNESS

AEL646B

JOINT CONNECTOR (J/C)

Simpo PDF Merge and Split Unregistered Version - http://www.simpopdf.com

Location

JOINT CONNECTOR - 1 (F31)

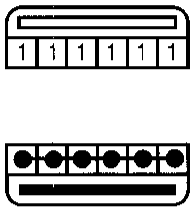

JOINT CONNECTOR - 2 (F32)

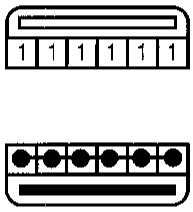

JOINT CONNECTOR - 3 (M73)

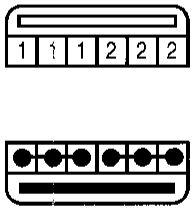

JOINT CONNECTOR - 4 (M74)

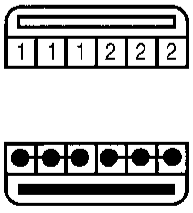

AEL647B

Simpo PDF Merge and Split Unregistered Version - http://www.simpopdf.com

ECM (F29)

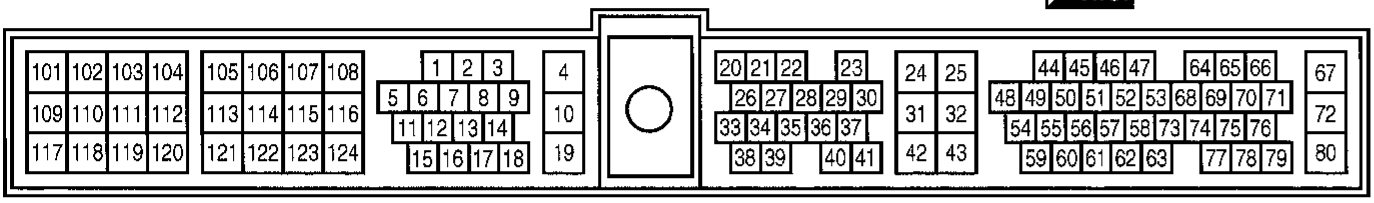

ABS CONTROL UNIT
(WITH 2-WHEEL ABS) (M23)

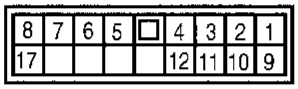

ABS ACTUATOR AND ELECTRIC UNIT
(CONTROL UNIT) (WITH 4-WHEEL ABS) (E39)

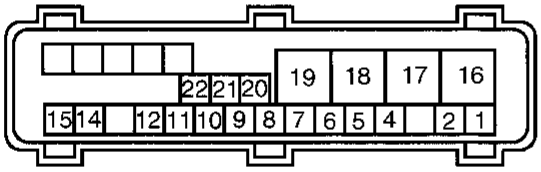

SMART ENTRANCE CONTROL UNIT (M10)

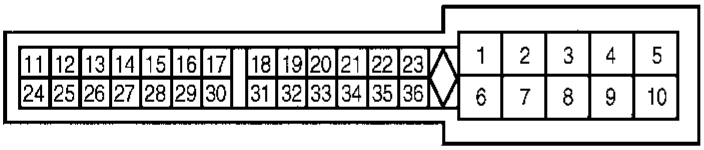

AIR BAG DIAGNOSIS SENSOR UNIT (Z6)

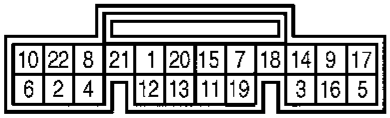

AEL648B

Fuse Arrangement

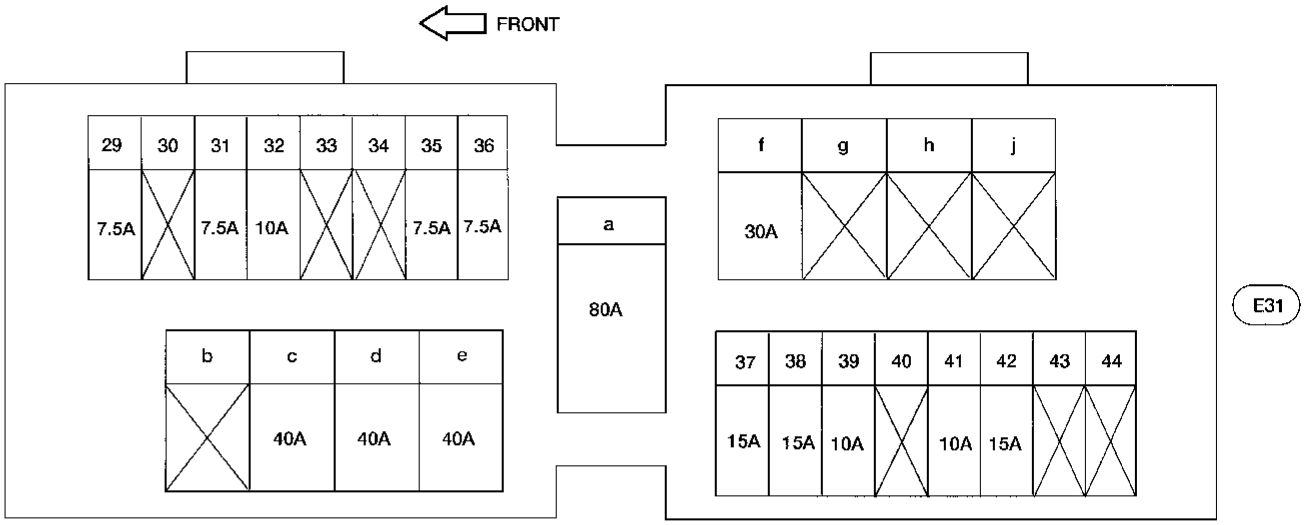

No 29 - 44: FUSE

a - j: FUSIBLE LINK

Simpo PDF Merge and Split Unregistered Version - http://www.simpopdf.com

NISSAN FRONTIER

MODEL D22 SERIES

QUICK REFERENCE INDEX

GENERAL INFORMATION	GI
MAINTENANCE	MA
ENGINE MECHANICAL	EM
ENGINE LUBRICATION & COOLING SYSTEMS	LC
ENGINE CONTROL SYSTEM	EC
ACCELERATOR CONTROL, FUEL & EXHAUST SYSTEMS	FE
CLUTCH	CL
MANUAL TRANSMISSION	MT
AUTOMATIC TRANSMISSION	AT
TRANSFER	TF
PROPELLER SHAFT & DIFFERENTIAL CARRIER	PD
FRONT AXLE & FRONT SUSPENSION	FA
REAR AXLE & REAR SUSPENSION	RA
BRAKE SYSTEM	BR
STEERING SYSTEM	ST
RESTRAINT SYSTEM	RS
BODY & TRIM	BT
HEATER & AIR CONDITIONER	HA
ELECTRICAL SYSTEM	EL
ALPHABETICAL INDEX	IDX

© 1997 NISSAN NORTH AMERICA, INC. Printed in U.S.A.
All rights reserved. No part of this Service Manual may be reproduced or stored in a retrieval system, or transmitted in any form, or by any means, electronic, mechanical, photocopying, recording or otherwise, without the prior written permission of Nissan North America, Inc., Torrance, California.

Simpo PDF Merge and Split Unregistered Version - http://www.simpopdf.com

FOREWORD

This manual contains maintenance and repair procedures for the 1998 Nissan FRONTIER.

In order to assure your safety and the efficient functioning of the vehicle, this manual should be read thoroughly. It is especially important that the PRECAUTIONS in the GI section be completely understood before starting any repair task.

All information in this manual is based on the latest product information at the time of publication. The right is reserved to make changes in specifications and methods at any time without notice.

IMPORTANT SAFETY NOTICE

The proper performance of service is essential for both the safety of the technician and the efficient functioning of the vehicle.
The service methods in this Service Manual are described in such a manner that the service may be performed safely and accurately.
Service varies with the procedures used, the skills of the technician and the tools and parts available. Accordingly, anyone using service procedures, tools or parts which are not specifically recommended by NISSAN must first be completely satisfied that neither personal safety nor the vehicle's safety will be jeopardized by the service method selected.

NISSAN NORTH AMERICA, INC.
Technical Service Information Department
Torrance, California

PLEASE HELP MAKE THIS SERVICE MANUAL BETTER!

Simpo PDF Merge and Split Unregistered Version - http://www.simpopdf.com

Your comments are important to NISSAN and will help us to improve our Service Manuals.
Use this form to report any issues or comments you may have regarding our Service Manuals.
Please photocopy this form and type or print your comments below. Mail or fax to:

Nissan North America, Inc.
Technical Service Information
39001 Sunrise Drive, P.O. Box 9200
Farmington Hills, MI USA 48331
FAX: (248) 488-3910

SERVICE MANUAL: Model:_____ **Year:**_____

PUBLICATION NO. (Please photocopy back cover):_____

VEHICLE INFORMATION VIN:_____ **Production Date:**_____

Please describe any issues or problems in detail:

Page number(s)_____ *Note: Please include a copy of each page, marked with your comments.*

_____

_____

_____

_____

_____

_____

Are the trouble diagnosis procedures logical and easy to use? (circle your answer) YES NO

If no, what page number(s)?_____ *Note: Please include a copy of each page, marked with your comments.*

Please describe the issue or problem in detail:_____

_____

_____

_____

Is the organization of the manual clear and easy to follow? (circle your answer) YES NO

Please comment:_____

_____

_____

_____

_____

What information should be included in NISSAN Service Manuals to better support you in servicing or repairing customer vehicles?

_____

_____

_____

_____

DATE:_____ YOUR NAME:_____ POSITION:_____

DEALER:_____ DEALER NO.:_____ ADDRESS:_____

CITY:_____ STATE/PROV./COUNTRY:_____ ZIP/POSTAL CODE:_____

Simpo PDF Merge and Split Unregistered Version - http://www.simpopdf.com

QUICK REFERENCE CHART: FRONTIER 1998

ENGINE TUNE-UP DATA

Engine model		KA24DE		
Firing order		1-3-4-2		
Idle speed	rpm			
M/T		800 ± 50		
A/T (in "N" position)		800 ± 50		
Ignition timing (degree B.T.D.C. at idle speed)		20° ± 2°		
CO% at idle		Idle mixture screw is preset and sealed at factory		
Spark plug				
Type	Standard	ZFR5E-11		
	Cold	ZFR6E-11 ZFR7E-11		
Gap	mm (in)	1.0 - 1.1 (0.039 - 0.043)		
Drive belt deflection (Cold)	mm (in)	Used belt		
		Limit	Deflection after adjustment	Deflection of new belt
Generator		17 (0.67)	10 - 12 (0.39 - 0.47)	8 - 10 (0.31 - 0.39)
Air conditioner compressor		16 (0.63)	10 - 12 (0.39 - 0.47)	8 - 10 (0.31 - 0.39)
Power steering oil pump		17 (0.67)	10 - 13 (0.39 - 0.51)	8 - 10 (0.31 - 0.39)
Applied pressed force	N (kg, lb)	80-100 (8.2-10.2, 18-22.5)		
Radiator cap relief pressure	kPa (kg/cm^2, psi)	78 - 98 (0.8 - 1.0, 11 - 14)		
Cooling system leakage testing pressure	kPa (kg/cm^2, psi)	157 (1.6, 23)		
Compression pressure kPa (kg/cm2, psi)/rpm	Standard	1,226 (12.5, 178)/300		
	Minimum	1,030 (10.5, 149)/300		
Tightening torque		N-m	kg-m	ft-lb
Spark plug		20 - 29	2.0 - 3.0	14 - 22
Oil pan drain plug		29 - 39	3.0 - 4.0	22 - 29

FRONT WHEEL ALIGNMENT (Unladen*1)

		2WD		4WD	
Camber					
Degree minute (Decimal degree)	Minimum	-0°05' (-0.08°)		0°06' (0.10°)	
	Nominal	0°25' (0.42°)		0°36' (0.60°)	
	Maximum	0°55' (0.92°)		1°06' (1.10°)	
	Left and right difference	45' (0.75°) or less		45' (0.75°) or less	
Caster					
Degree minute (Decimal degree)	Minimum	0°06' (0.10°)		1°40' (1.67°)	
	Nominal	0°36' (0.60°)		2°10' (2.17°)	
	Maximum	1°06' (1.10°)		2°40' (2.67°)	
	Left and right difference	45' (0.75°) or less		45' (0.75°) or less	
Kingpin inclination					
Degree minute (Decimal degree)	Minimum	8°35' (8.58°)		10°18' (10.30°)	
	Nominal	9°05' (9.08°)		10°48' (10.80°)	
	Maximum	9°35' (9.58°)		11°18' (11.30°)	
Total toe-in					
Distance (A - B) mm (in)	Minimum	2 (0.08)		3 (0.12)	
	Nominal	3 (0.12)		4 (0.16)	
	Maximum	4 (0.16)		5 (0.20)	
Angle (left plus right) Degree minute (Decimal degree)	Maximum	10' (0.17°)		15' (0.25°)	
	Nominal	15' (0.25°)		20' (0.33°)	
	Maximum	20' (0.33°)		25' (0.42°)	
Wheel turning angle		Except P215/65R15	P215/65R15	Except P235/70R15	P235/70R15
Full turn *2 Inside Degree minute (Decimal degree)	Minimum	36°00' (36.00°)	35°00' (35.00°)	33°06' (33.10°)	31°00' (31.00°)
	Nominal	38°00' (38.00°)	37°00' (37.00°)	35°06' (35.10°)	33°00' (33.00°)
	Maximum	38°00' (38.00°)	37°00' (37.00°)	35°06' (35.10°)	33°00' (33.00°)
Outside Degree minute (Decimal degree)	Minimum	32°36' (32.60°)	31°36' (31.60°)	31°12' (31.20°)	29°00' (29.00°)
	Nominal	34°36' (34.60°)	33°36' (33.60°)	33°12' (33.20°)	31°00' (31.00°)
	Maximum	34°36' (34.60°)	33°36' (33.60°)	33°12' (33.20°)	31°00' (31.00°)

*1: Fuel, radiator coolant and engine oil full. Spare tire, jack, hand tools and mats in designated positions.
*2: On power steering models, wheel turning force (at circumference of steering wheel) of 98 to 147 N (10 to 15kg, 22 to 33 lb) with engine idle.

CLUTCH PEDAL

Unit: mm (in)

Pedal height	221 - 231 (8.70 - 9.09)
Pedal free play	9 - 16 (0.35 - 0.63)

BRAKE

Unit: mm (in)

Disc brake	
Pad minimum thickness	2.0 (0.079)
Rotor repair limit	
Runout	0.07 (0.0028)
Minimum thickness	24.0 (0.945), CL28VD
Drum brake	
Lining minimum thickness	1.5 (0.059)
Drum repair limit	
Maximum inner diameter	261.5 (10.30), LT26B 296.5, (11.67), LT30A
Parking brake	
Number of notches*1	10 - 12

*1: At pulling force: 196 N (20 kg, 44 lb)

FRONT WHEEL BEARING

Item	Model			
	2WD		4WD	
Tightening torque N-m (kg-m, ft-lb)	34 - 39 (3.5 - 4.0, 25 - 29)		–	
Return angle degree	45° - 60°		–	
Preload (At hub bolt) N (kg, lb)	New seal	9.8 - 28.4 (1.0 - 2.9, 2.2 - 6.4)	Wheel bearing lock nut Tightening torque N-m (kg-m, ft-lb)	78 - 98 (8 - 10, 58 - 72)
			Retightening torque after loosening wheel bearing lock nut N-m (kg-m, ft-lb)	0.5 - 1.5 (0.05 - 0.15, 0.4 - 1.1)
			Axial end play mm (in)	0 (0)
	Used seal	9.8 - 23.5 (1.0 - 2.4, 2.2 - 5.3)	Start force at wheel hub bolt N (kg, lb)	A
			Turning angle degree	15° - 30°
			Starting force at wheel hub bolt N (kg, lb)	B
			Wheel bearing preload at wheel hub bolt B – A N (kg, lb)	7.06 - 20.99 (0.72 - 2.14, 1.59 - 4.72)

REFILL CAPACITIES

Unit			Metric measure	US measure
Fuel tank			60 ℓ	15.9 gal
Coolant (with reservoir)		2WD	8.1 ℓ	8-5/8 qt
		4WD	9.0 ℓ	9-1/2 qt
Engine	2WD	With oil filter	3.5 ℓ	3-3/4 qt
		Without oil filter	3.3 ℓ	3-1/2 qt
	4WD	With oil filter	3.9 ℓ	4-1/8 qt
		Without oil filter	3.7 ℓ	3-7/8 qt
Transmission	M/T	2WD	2.0 ℓ	4-1/4 pt
		4WD	4.9 ℓ	10-3/8 pt
	A/T	–	7.9 ℓ	8-3/8 qt
Transfer		4WD	2.2 ℓ	2-3/8 qt
Final drive	Rear	H190A	1.5 ℓ	3-1/8 pt
		C200	1.3 ℓ	2-3/4 pt
	Front	R180A	1.3 ℓ	2-3/4 pt
Manual steering system			0.62 ℓ	1-3/8 pt
Power steering system		PB48S	0.9-1.0 ℓ	30.4-33.8 fl oz
		PB59K	1.0-1.1 ℓ	33.8-37.2 fl oz
Air conditioner system		Lubricant	0.2 ℓ	6.8 fl oz
		Refrigerant*	0.6-0.7kg	1.32 - 1.54 lb

*R-134a

Simpo PDF Merge and Split Unregistered Version - http://www.simpopdf.com

TEST VALUE AND TEST LIMIT (GST ONLY — NOT APPLICABLE TO CONSULT-II)

The following is the information specified in Mode 6 of SAE J1979.
The test value is a parameter used to determine whether a system/circuit diagnostic test is “OK” or “NG” while being monitored by the ECM during self-diagnosis. The test limit is a reference value which is specified as the maximum or minimum value and is compared with the test value being monitored.
Items for which these data (test value and test limit) are displayed are the same as SRT code items.
These data (test value and test limit) are specified by Test ID (TID) and Component ID (CID) and can be displayed on the GST screen.

: Applicable ·: Not applicable

SRT item	Self-diagnostic test item	DTC	Test value (GST display)		Te s t limit	Application	Unit
			TID	CID			
CATALYST	Three way catalyst function	P0420	01H	01H	Max.	X	–
EVAP SYSTEM	EVAP control system (Small leak)	P0440	05H	03H	Max.	X	–
		P1440	05H	03H	Max.	X	–
	EVAP control system purge flow monitoring	P1447	06H	83H	Min.	X	mV
HO2S	Heated oxygen sensor 1	P0133	09H	04H	Max.	X	ms
		P0131	0AH	84H	Min.	X	mV
		P0130	0BH	04H	Max.	X	mV
		P0132	0CH	04H	Max.	X	mV
		P0134	0DH	04H	Max.	X	s
	Heated oxygen sensor 2	P0139	19H	86H	Min.	X	mV/500ms
		P0137	1AH	86H	Min.	X	mV
		P0140	1BH	06H	Max.	X	mV
		P0138	1CH	06H	Max.	X	mV
HO2S HTR	Heated oxygen sensor 1 heater	P0135	29H	08H	Max.	X	mV
		P0135	2AH	88H	Min.	X	mV
	Heated oxygen sensor 2 heater	P0141	2DH	0AH	Max.	X	mV
		P0141	2EH	8AH	Min.	X	mV
EGR SYSTEM	EGR function	P0400	31H	8CH	Min.	X	℃
		P0400	32H	8CH	Min.	X	℃
		P0400	33H	8CH	Min.	X	℃
		P0400	34H	8CH	Min.	X	℃
		P1402	35H	0CH	Max.	X	℃
	EGRC-BPT valve function	P0402	36H	0CH	Max.	X	–
		P0402	37H	8CH	Min.	X	–

Simpo PDF Merge and Split Unregistered Version - http://www.simpopdf.com

SECTION GI

CONTENTS

PRECAUTIONS AND PREPARATION 2
- Supplemental Restraint System (SRS) "AIR BAG" 2
- General Precautions 3
- Precautions for Multiport Fuel Injection System or ECCS Engine 5
- Precautions for Three Way Catalyst 5
- Precautions for Engine Oils 5
- Precautions for Fuel 6
- Precautions for Air Conditioning 6

HOW TO USE THIS MANUAL 7

HOW TO READ WIRING DIAGRAMS 9
- Sample/Wiring Diagram – EXAMPL – 9
- Description 11

HOW TO CHECK TERMINAL 17
- Connector and Terminal Pin Kit 17
- How to Probe Connectors 17
- How to Check Enlarged Contact Spring of Terminal 18
- Waterproof Connector Inspection 19
- Terminal Lock Inspection 19

HOW TO PERFORM EFFICIENT DIAGNOSIS FOR AN ELECTRICAL INCIDENT 20
- Work Flow 20
- Incident Simulation Tests 21
- Circuit Inspection 23

HOW TO FOLLOW FLOW CHART IN TROUBLE DIAGNOSES 30
- How To Follow This Flow Chart 31

CONSULT CHECKING SYSTEM 33
- Function and System Application 33
- Lithium Battery Replacement 33
- Checking Equipment 33
- Loading Procedure 34
- CONSULT Data Link Connector (DLC) Circuit 34

IDENTIFICATION INFORMATION 35
- Model Variation 35
- Identification Number 37
- Dimensions 39
- Wheels and Tires 39

LIFTING POINTS AND TOW TRUCK TOWING 40
- Pantograph Jack 40
- Garage Jack and Safety Stand 41
- 2-pole Lift 42
- Tow Truck Towing 43
  - 2-WHEEL DRIVE MODELS 43
  - 4-WHEEL DRIVE MODELS 44
- Towing Point 45
  - Vehicle Recovery (Freeing a stuck vehicle) 45

TIGHTENING TORQUE OF STANDARD BOLTS 46

SAE J1930 TERMINOLOGY LIST 47

Simpo PDF Merge and Split Unregistered Version - http://www.simpopdf.com

Observe the following precautions to ensure safe and proper servicing. These precautions are not described in each individual section.



Supplemental Restraint System (SRS) "AIR BAG"

The Supplemental Restraint System "AIR BAG", used along with a seat belt, helps to reduce the risk or severity of injury to the driver and front passenger in a frontal collision. The Supplemental Restraint System consists of air bag modules (located in the center of the steering wheel and in the instrument panel on the passenger side), a diagnosis sensor unit, a crash zone sensor (4WD models), warning lamp, wiring harness and spiral cable.

The vehicle is equipped with a passenger air bag deactivation switch. Because no rear seat exists where a rear-facing child restraint can be placed, the switch is designed to turn off the passenger air bag so that a rear-facing child restraint can be used in the front passenger seat. The switch is located in the center of the instrument panel, near the ashtray. When the switch is turned to the ON position, the passenger air bag is enabled and could inflate in a frontal collision. When the switch is turned to the OFF position, the passenger air bag is disabled and will not inflate in a frontal collision. A passenger air bag OFF indicator on the instrument panel lights up when the passenger air bag is switched OFF. The driver air bag always remains enabled and is not affected by the passenger air bag deactivation switch.

Information necessary to service the system safely is included in the **RS section** of this Service Manual.

WARNING:

- **To avoid rendering the SRS inoperative, which could increase the risk of personal injury or death in the event of a collision which would result in air bag inflation, all maintenance should be performed by an authorized NISSAN dealer.**
- **Improper maintenance, including incorrect removal and installation of the SRS, can lead to personal injury caused by unintentional activation of the system.**
- **Do not use electrical test equipment on any circuit related to the SRS unless instructed to in this Service Manual. SRS wiring harnesses are covered with yellow insulation either just before the harness connectors or on the complete harness, for easy identification.**
- **The vehicle is equipped with a passenger air bag deactivation switch which can be operated by the customer. When the passenger air bag is switched OFF, the passenger air bag is disabled and will not inflate in a frontal collision. When the passenger air bag is switched ON, the passenger air bag is enabled and could inflate in a frontal collision. After SRS maintenance or repair, make sure the passenger air bag deactivation switch is in the same position (ON or OFF) as when the vehicle arrived for service.**

Simpo PDF Merge and Split Unregistered Version - http://www.simpopdf.com

General Precautions

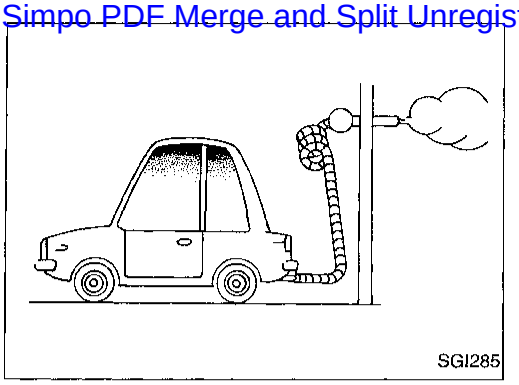
SGI285

- Do not operate the engine for an extended period of time without proper exhaust ventilation.
  Keep the work area well ventilated and free of any inflammable materials. Special care should be taken when handling any inflammable or poisonous materials, such as gasoline, refrigerant gas, etc. When working in a pit or other enclosed area, be sure to properly ventilate the area before working with hazardous materials.
  Do not smoke while working on the vehicle.

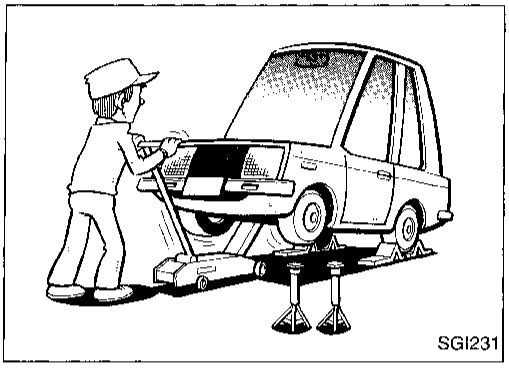
SGI231

- Before jacking up the vehicle, apply wheel chocks or tire blocks to the wheels to prevent the vehicle from moving. After jacking up the vehicle, support the vehicle weight with safety stands at the points designated for proper lifting before working on the vehicle.
  These operations should be done on a level surface.
- When removing a heavy component such as the engine or transaxle, be careful not to lose your balance and drop it. Also, do not allow it to strike adjacent parts, especially the brake tubes and master cylinder.

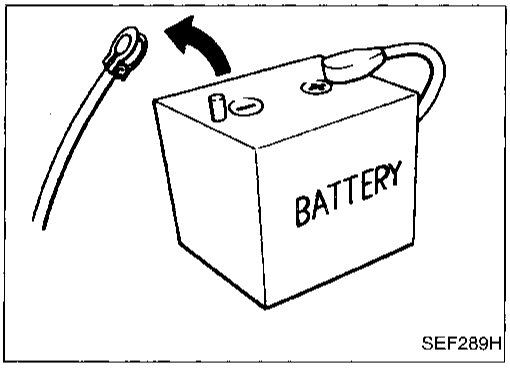

SEF289H

- Before starting repairs which do not require battery power:
  Turn off ignition switch.
  Disconnect the negative battery terminal.

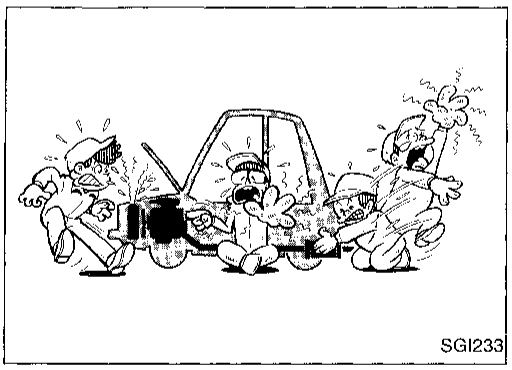
SGI233

- To prevent serious burns:
  Avoid contact with hot metal parts.
  Do not remove the radiator cap when the engine is hot.

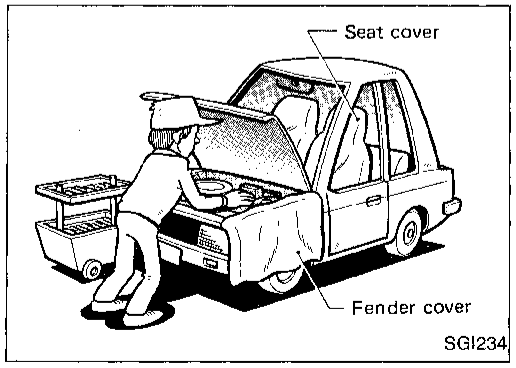

SGI234

- Before servicing the vehicle:
  Protect fenders, upholstery and carpeting with appropriate covers.
  Take caution that keys, buckles or buttons do not scratch paint.

General Precautions (Cont'd)

Simpo PDF Merge and Split Unregistered Version - http://www.simpopdf.com

- Clean all disassembled parts in the designated liquid or solvent prior to inspection or assembly.
- Replace oil seals, gaskets, packings, O-rings, locking washers, cotter pins and self-locking nuts with new ones.
- Replace inner and outer races of tapered roller bearings and needle bearings as a set.
- Arrange the disassembled parts in sequence with their assembled locations.
- Do not touch the terminals of electrical components which use microcomputers (such as electronic control unit).
  Static electricity may damage internal electronic components.
- After disconnecting vacuum or air hoses, attach a tag to indicate the proper connection.
- Use only the fluids and lubricants specified in this manual.
- Use approved bonding agent, sealants or their equivalents when required.
- Use tools and recommended special tools where specified for safe and efficient service repairs.
- When repairing the fuel, oil, water, vacuum or exhaust systems, check all affected lines for leaks.
- Dispose of drained oil or the solvent used for cleaning parts in an appropriate manner.

WARNING:
To prevent ECM from storing the diagnostic trouble codes, do not carelessly disconnect the harness connectors which are related to the ECCS system. The connectors should be disconnected only when working according to the WORK FLOW of TROUBLE DIAGNOSES in EC section.

Simpo PDF Merge and Split Unregistered Version - http://www.simpopdf.com

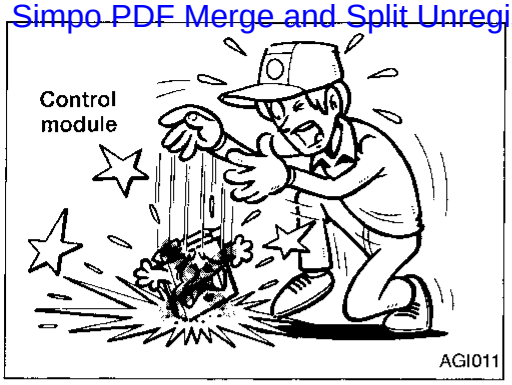

Precautions for Multiport Fuel Injection System or ECCS Engine

- Before connecting or disconnecting any harness connector for the multiport fuel injection system or ECM:
  Turn ignition switch to OFF position.
  Disconnect negative battery terminal; otherwise, there may be damage to ECM.
- Before disconnecting pressurized fuel line from fuel pump to injectors, be sure to release fuel pressure.
- Be careful not to jar components such as ECM and mass air flow sensor.

Precautions for Three Way Catalyst

If a large amount of unburned fuel flows into the catalyst, the catalyst temperature will be excessively high. To prevent this, follow the instructions below:

- Use unleaded gasoline only. Leaded gasoline will seriously damage the three way catalyst.
- When checking for ignition spark or measuring engine compression, make tests quickly and only when necessary.
- Do not run engine when the fuel tank level is low; otherwise, the engine may misfire causing damage to the catalyst.

Do not place the vehicle on inflammable material. Keep inflammable material off the exhaust system.

Precautions for Engine Oils

Prolonged and repeated contact with used engine oil may cause skin cancer. Try to avoid direct skin contact with used oil.
If skin contact is made, wash thoroughly with soap or hand cleaner as soon as possible.

HEALTH PROTECTION PRECAUTIONS

- Avoid prolonged and repeated contact with oils, particularly used engine oils.
- Wear protective clothing, including oil resistant gloves when practicable.
- Do not put oily rags in pockets.
- Avoid contaminating clothes, particularly underclothing, with oil.
- Heavily soiled clothing and oil-impregnated footwear should not be worn. Overalls must be cleaned regularly.
- First aid treatment should be obtained immediately for open cuts and wounds.
- Use barrier creams, applying them before each work period, to help the removal of oil from the skin.
- Wash with soap and water to ensure all oil is removed (skin cleansers and nail brushes will help). Preparations containing lanolin replace the natural skin oils which have been removed.
- Do not use gasoline, kerosene, diesel fuel, gas oil, thinners or solvents for cleaning skin.
- If skin disorders develop, obtain medical advice without delay.
- Where practicable, degrease components prior to handling.
- Where there is a risk of eye contact, eye protection should be worn, for example, chemical goggles or face shields. In addition, an eye wash facility should be provided.

Simpo PDF Merge and Split Unregistered Version - http://www.simpopdf.com

Precautions for Engine Oils (Cont'd)

ENVIRONMENTAL PROTECTION PRECAUTIONS

Burning used engine oil in small space heaters or boilers can be recommended only for units of approved design. The heating system must meet the requirements of HM Inspectorate of Pollution for small burners of less than 0.4 MW. If in doubt, check with the appropriate local authority and/or manufacturer of the approved appliance.

Dispose of used oil and used oil filters through authorized waste disposal contractors to licensed waste disposal sites, or to the waste oil reclamation trade. If in doubt, contact the local authority for advice on disposal facilities.

It is illegal to pour used oil on the ground, down sewers, drains, or into water sources.

The regulations concerning the pollution of the environment will vary between regions.

Precautions for Fuel

Use unleaded gasoline with an octane rating of at least 87 AKI (Anti-Knock Index) number (research octane number 91).

CAUTION:

Using a fuel other than that specified could adversely affect the emission control devices and systems, and could also affect the warranty coverage.

Under no circumstances should a leaded gasoline be used, since this will damage the three way catalyst.

Precautions for Air Conditioning

Use an approved refrigerant recovery unit anytime the air conditioner system must be discharged. Refer to HA section ("R-134a Service Procedure", "SERVICE PROCEDURES") for specific instructions.

Simpo PDF Merge and Split Unregistered Version - http://www.simpopdf.com

- **AN ALPHABETICAL INDEX** is provided at the end of this manual so that you can rapidly find the item and page you are searching for.
- **A QUICK REFERENCE INDEX,** a black tab (e.g., BR) is provided on the first page. You can quickly find each section by matching it to the section's black tabs.
- **THE CONTENTS** are listed on the first page of each section.
- **THE TITLE** is indicated on the upper portion of each page and shows the part or system.
- **THE PAGE NUMBER** of each section consists of two letters designating the particular section combined with a number (e.g., "BR-5").
- **THE LARGE ILLUSTRATIONS** are exploded views (see example below). These contain tightening torques, lubrication points, section number of the **PARTS CATALOG** (e.g., SEC. 440) and other information necessary to perform repairs.
  The illustrations should be used in reference to service matters only. When ordering parts, refer to the appropriate **PARTS CATALOG.**

"Example"

SEC. 440

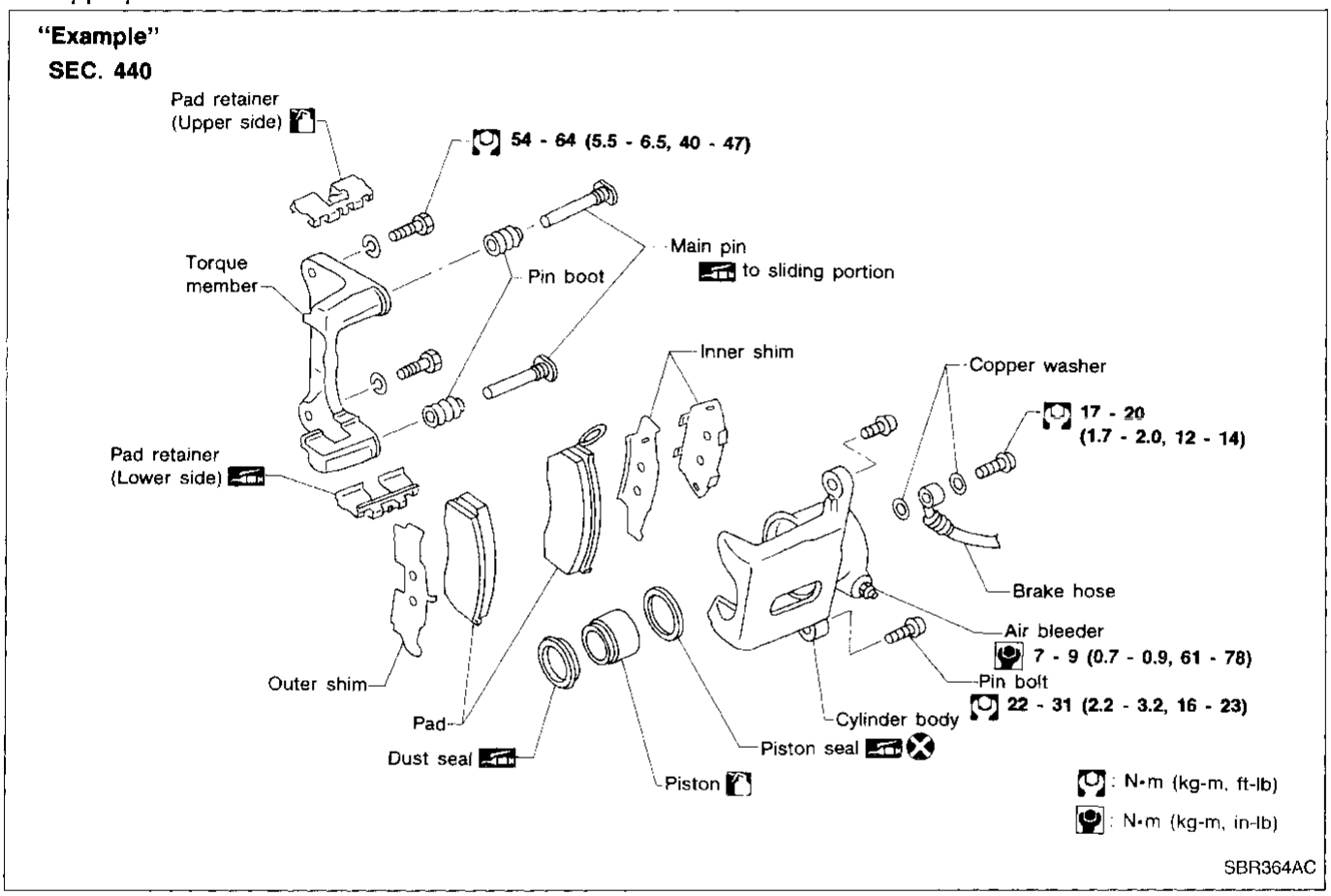

- **THE SMALL ILLUSTRATIONS** show items not shown in the previous large illustrations. These include important steps such as inspection points, use of special tools, hidden fasteners and special or unique procedures.
  A step-by-step format for assembly, inspection and adjustment is presented for complicated units such as the automatic transaxle.

Simpo PDF Merge and Split Unregistered Version - http://www.simpopdf.com

- The following **SYMBOLS AND ABBREVIATIONS** are used.

,	:	Tightening torque
	:	Should be lubricated with grease. Unless otherwise indicated, use recommended multi-purpose grease.
	:	Should be lubricated with oil.
	:	Sealing point
	:	Checking point
	:	Always replace after every disassembly.
Ⓟ	:	Apply petroleum jelly.
ATF	:	Apply ATF.
SDS	:	Service Data and Specifications
LH, RH	:	Left-Hand, Right-Hand
FR, RR	:	Front, Rear
M/T	:	Manual Transaxle/Transmission
A/T	:	Automatic Transaxle/Transmission

4x4 ,		
4WD	:	4-Wheel Drive
2WD	:	2-Wheel Drive
A/C	:	Air Conditioner
P/S	:	Power Steering
Tool	:	Special Service Tools
SAE	:	Society of Automotive Engineers, Inc.
ATF	:	Automatic Transmission Fluid
D_1	:	Drive range 1st gear
D_2	:	Drive range 2nd gear
D_3	:	Drive range 3rd gear
D_4	:	Drive range 4th gear
OD	:	Overdrive
2_2	:	2nd range 2nd gear
2_1	:	2nd range 1st gear
1_2	:	1st range 2nd gear
1_1	:	1st range 1st gear

- The **UNITS** given in this manual are primarily expressed as the SI UNIT (International System of Unit), and alternatively expressed in the metric system and in the yard/pound system.
  "**Example**"
  Tightening torque:
  59 - 78 N·m (6.0 - 8.0 kg-m, 43 - 58 ft-lb)
- **TROUBLE DIAGNOSES** are included in sections dealing with complicated components.
- **SERVICE DATA AND SPECIFICATIONS** are contained at the end of each section for quick reference of data.
- The captions **WARNING** and **CAUTION** warn you of steps that must be followed to prevent personal injury and/or damage to some part of the vehicle.
  WARNING indicates the possibility of personal injury if instructions are not followed.
  CAUTION indicates the possibility of component damage if instructions are not followed.
  BOLD TYPED STATEMENTS except **WARNING** and **CAUTION** give you helpful information.

Simpo PDF Merge and Split Unregistered Version - http://www.simpopdf.com

Sample/Wiring Diagram – EXAMPL –

- For Description, refer to GI-11.

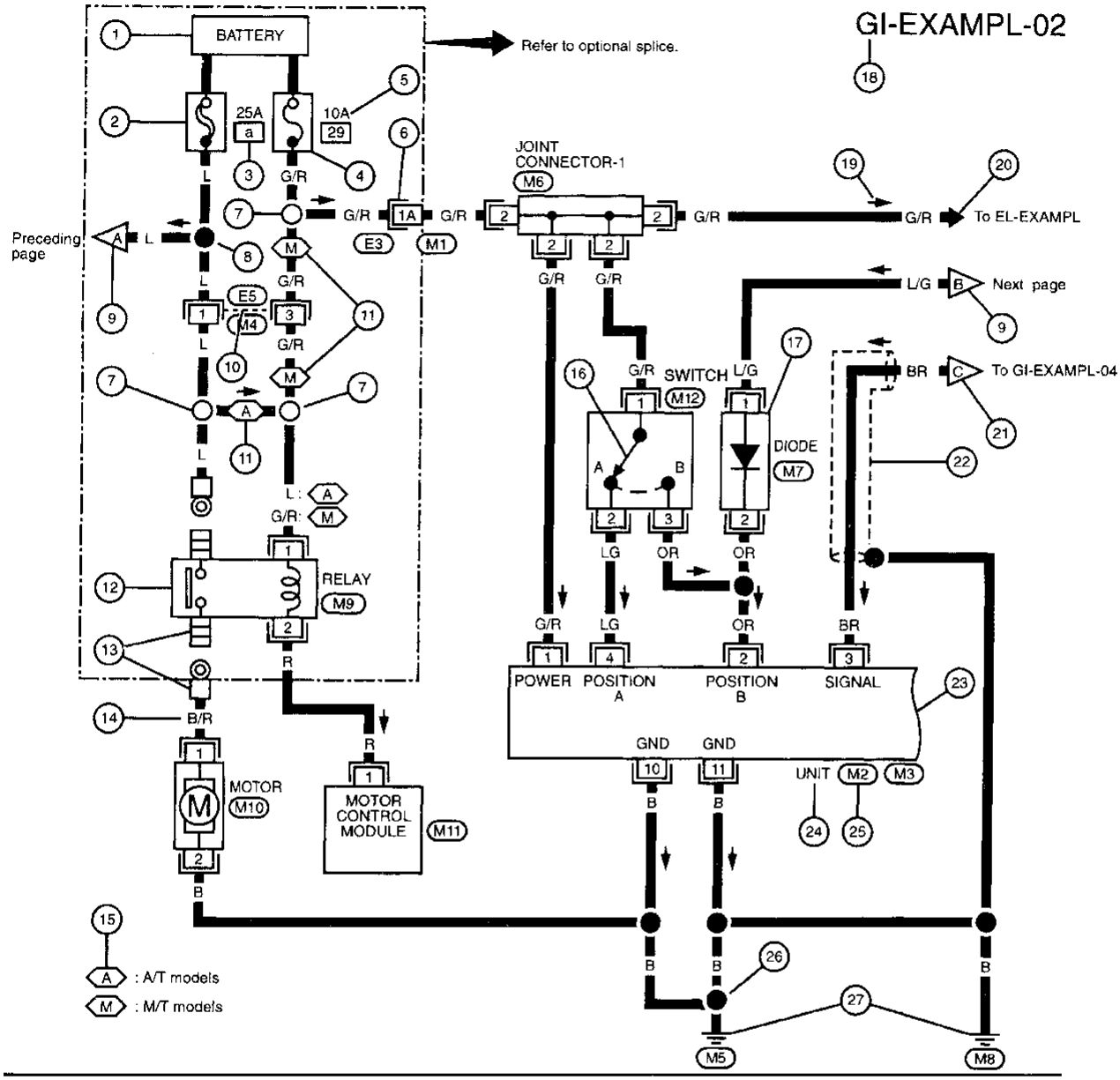

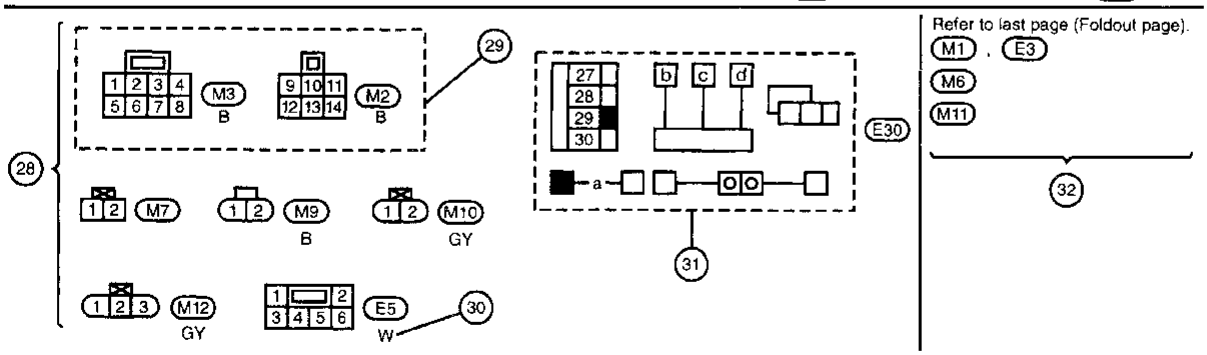

AGI071

Simpo PDF Merge and Split Unregistered Version - http://www.simpopdf.com

OPTIONAL SPLICE

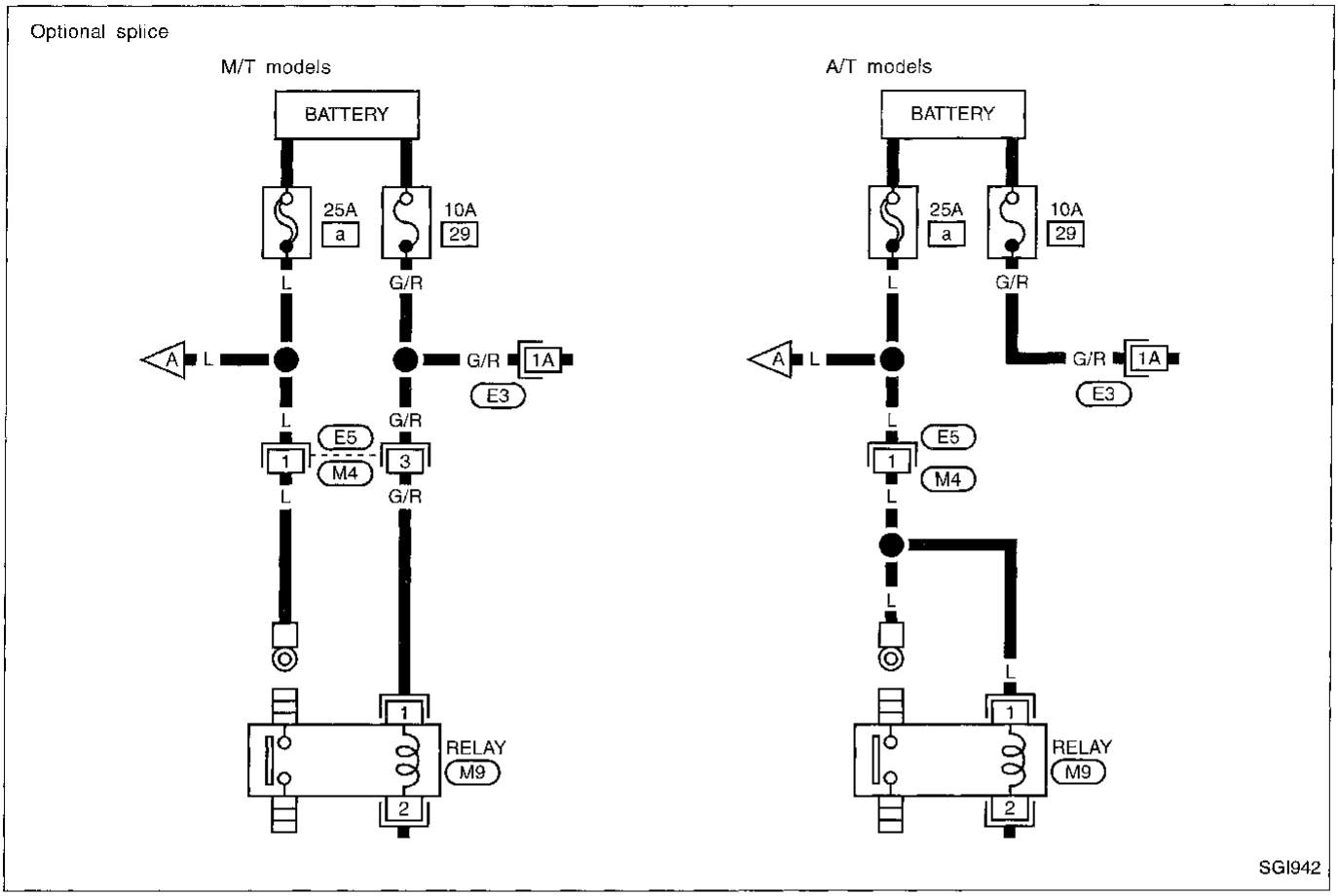

Simpo PDF Merge and Split Unregistered Version - http://www.simpopdf.com

Description

Number	Item	Description
①	Power condition	● This shows the condition when the system receives battery positive voltage (can be operated).
②	Fusible link	● The double line shows that this is a fusible link. ● The open circle shows current flow in, and the shaded circle shows current flow out.
③	Fusible link/fuse location	● This shows the location of the fusible link or fuse in the fusible link or fuse box. For arrangement, refer to EL section ("POWER SUPPLY ROUTING").
④	Fuse	● The single line shows that this is a fuse. ● The open circle shows current flow in, and the shaded circle shows current flow out.
⑤	Current rating	● This shows the current rating of the fusible link or fuse.
⑥	Connectors	● This shows that connector (E3) is female and connector (M1) is male. ● The G/R wire is located in the 1A terminal of both connectors. ● Terminal number with an alphabet (1A, 5B, etc.) indicates that the connector is SMJ connector. Refer to GI-16.
⑦	Optional splice	● The open circle shows that the splice is optional depending on vehicle application.
⑧	Splice	● The shaded circle shows that the splice is always on the vehicle.
⑨	Page crossing	● This arrow shows that the circuit continues to an adjacent page. ● The A will match with the A on the preceding or next page.
⑩	Common connector	● The dotted lines between terminals show that these terminals are part of the same connector.
⑪	Option abbreviation	● This shows that the circuit is optional depending on vehicle application.
⑫	Relay	● This shows an internal representation of the relay. For details, refer to EL section ("STANDARDIZED RELAY").
⑬	Connectors	● This shows that the connector is connected to the body or a terminal with bolt or nut.
⑭	Wire color	● This shows a code for the color of the wire. B = Black, BR = Brown W = White, OR = Orange R = Red, P = Pink G = Green, PU = Purple L = Blue, GY = Gray Y = Yellow, SB = Sky Blue LG = Light Green, CH = Dark Brown DG = Dark Green When the wire color is striped, the base color is given first, followed by the stripe color as shown below: Example: L/W = Blue with White Stripe
⑮	Option description	● This shows a description of the option abbreviation used on the page.
⑯	Switch	● This shows that continuity exists between terminals ① and ② when the switch is in the A position. Continuity exists between terminals ① and ③ when the switch is in the B position.
⑰	Assembly parts	● Connector terminal in component shows that it is a harness incorporated assembly.
⑱	Cell code	● This identifies each page of the wiring diagram by section, system and wiring diagram page number.
⑲	Current flow arrow	● Arrow indicates electric current flow, especially where the direction of standard flow (vertically downward or horizontally from left to right) is difficult to follow. ● A double arrow "◄►" shows that current can flow in either direction depending on circuit operation.

Description (Cont'd)

Simpo PDF Merge and Split Unregistered Version - http://www.simpopdf.com

Number	Item	Description
⑳	System branch	● This shows that the system branches to another system identified by cell code (section and system).
㉑	Page crossing	● This arrow shows that the circuit continues to another page identified by cell code. ● The C will match with the C on another page within the system other than the next or preceding pages.
㉒	Shielded line	● The line enclosed by broken line circle shows shield wire.
㉓	Component box in wave line	● This shows that another part of the component is also shown on another page (indicated by wave line) within the system.
㉔	Component name	● This shows the name of a component.
㉕	Connector number	● This shows the connector number. ● The letter shows which harness the connector is located in. Example: **M**: main harness. For detail and to locate the connector, refer to EL section ("Main Harness", "HARNESS LAYOUT"). A coordinate grid is included for complex harnesses to aid in locating connectors.
㉖	Ground	● The line spliced and grounded under wire color shows that ground line is spliced at the grounded connector.
㉗	Ground	● This shows the ground connection.
㉘	Connector views	● This area shows the connector faces of the components in the wiring diagram on the page.
㉙	Common component	● Connectors enclosed in broken line show that these connectors belong to the same component.
㉚	Connector color	● This shows a code for the color of the connector. For code meaning, refer to wire color codes, number ⑭ of this chart.
㉛	Fuse and fusible link box	● This shows the arrangement of fusible link(s) and fuse(s), used for connector views of "POWER SUPPLY ROUTING" in EL section. The open square shows current flow in, and the shaded square shows current flow out.
㉜	Reference area	● This shows that more information on the Super Multiple Junction (SMJ) and Joint Connectors (J/C) exists on the foldout page. Refer to GI-16 for details.

Simpo PDF Merge and Split Unregistered Version - http://www.simpopdf.com

Description (Cont'd)

CONNECTOR SYMBOLS

Most connector symbols in wiring diagrams are shown from the terminal side.

- Connector symbols shown from the terminal side are enclosed by a single line and followed by the direction mark 

.
- Connector symbols shown from the harness side are enclosed by a double line and followed by the direction mark 

.

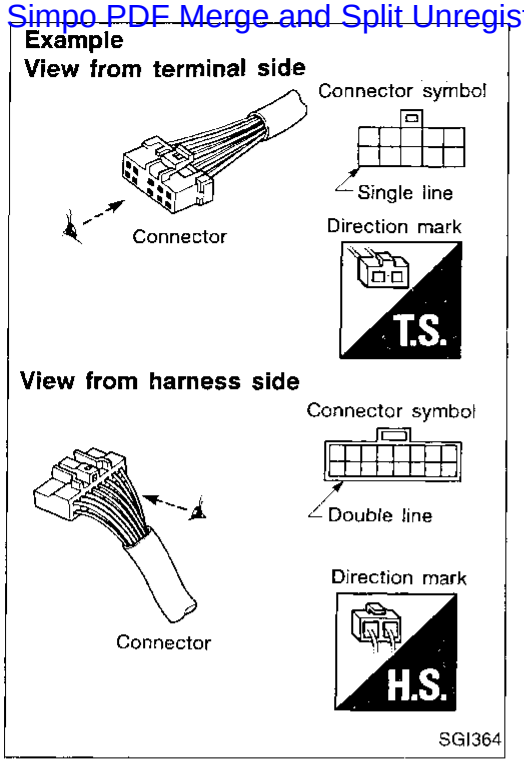

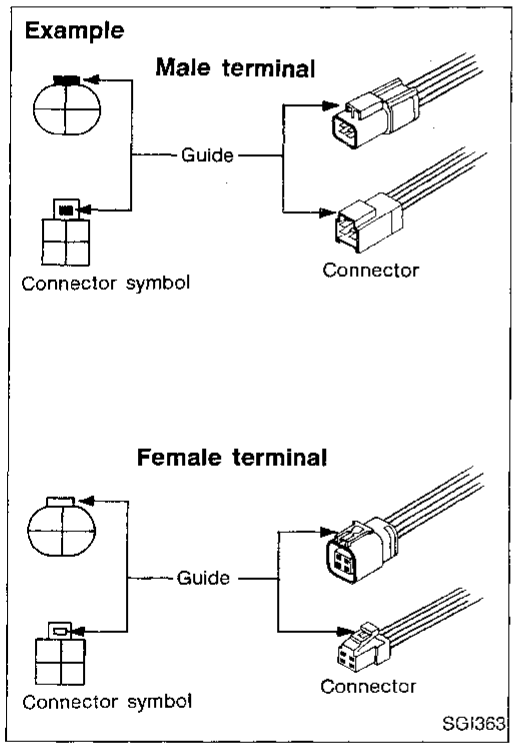

- Connector guides for male terminals are shown in black.
- Connector guides for female terminals are shown in white.

Description (Cont'd)

Simpo PDF Merge and Split Unregistered Version - http://www.simpopdf.com

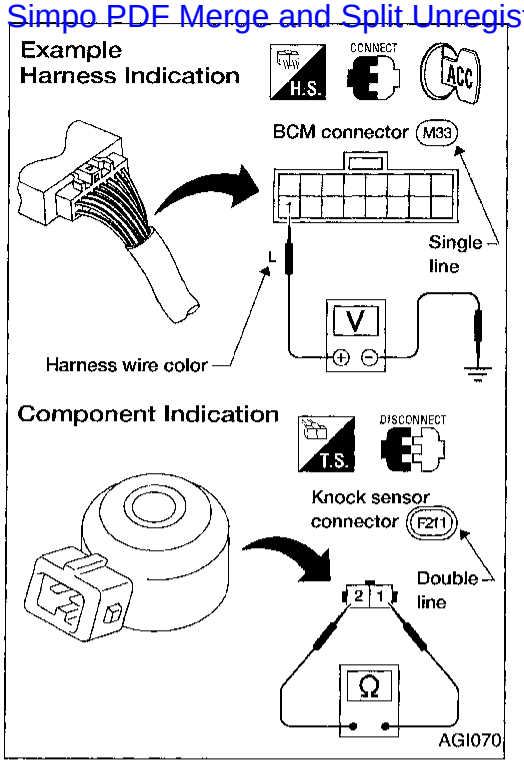

Harness indication

- Connector numbers in a signal oval (M33) indicate harness connectors.
- Letter designations next to test meter probes indicate harness (connector) wire colors.

Component indication

- Connector numbers in a double oval (F211) indicate component connectors.

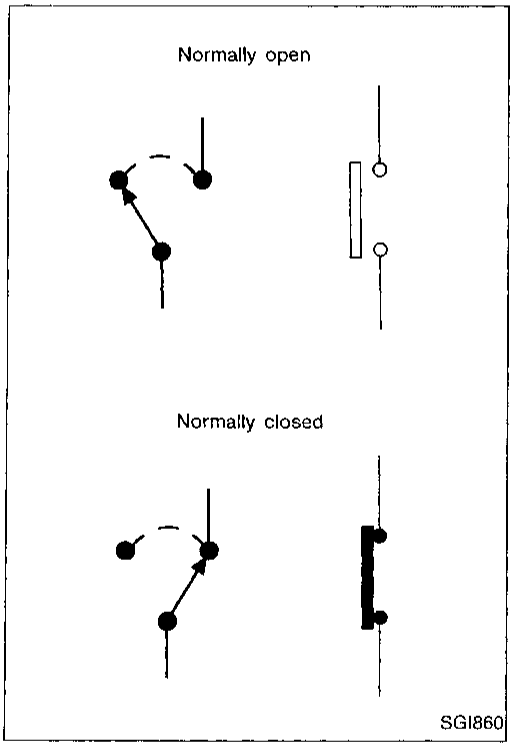

SWITCH POSITIONS

Switches are shown in wiring diagrams as if the vehicle is in the "normal" condition.

A vehicle is in the "normal" condition when:

- ignition switch is OFF,
- doors, hood and trunk lid/back door are closed,
- pedals are not depressed, and
- parking brake is released.

Simpo PDF Merge and Split Unregistered Version - http://www.simpopdf.com

Description (Cont'd)

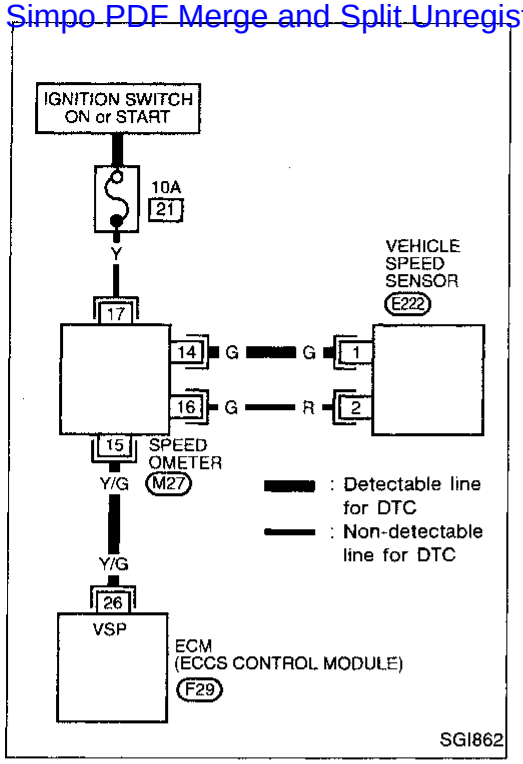

DETECTABLE LINES AND NON-DETECTABLE LINES

In some wiring diagrams, two kinds of lines with different thicknesses are used to represent wires.

- A line with regular thickness (wider line) represents a "detectable line for DTC (Diagnostic Trouble Code)". A "detectable line for DTC" is a circuit in which ECM can detect malfunctions with the on board diagnostic system.
- A line with less thickness (thinner line) represents a "non-detectable line for DTC". A "non-detectable line for DTC" is a circuit in which ECM cannot detect malfunctions with the on board diagnostic system.

MULTIPLE SWITCH

The continuity of multiple switch is described in two ways as shown below.

- The switch chart is used in schematic diagrams.
- The switch diagram is used in wiring diagrams.

Example

(SWITCH CHART)

WIPER SWITCH

	OFF	INT	LO	HI	WASH
1					○
2				○	○
3	○	○	○	○	
4	○	○			
5		○	○	○	○
6		○	○	○	○

(SWITCH DIAGRAM)

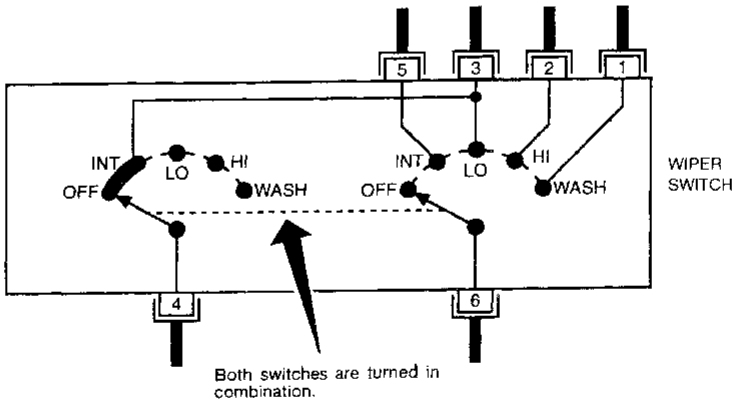

Continuity circuit of wiper switch

SWITCH POSITION	CONTINUITY CIRCUIT
OFF	3 - 4
INT	3 - 4, 5 - 6
LO	3 - 6
HI	2 - 6
WASH	1 - 6

AGI033

Description (Cont'd)

Simpo PDF Merge and Split Unregistered Version - http://www.simpopdf.com

FOLDOUT PAGE

The foldout page should be opened when reading a wiring diagram.

Super multiple junction (SMJ)

In a wiring diagram, SMJ connectors include a letter of the alphabet in the terminal number. SMJ connector numbers are shown in the Reference Area. Terminal arrangement can be found on the foldout page.
If connector numbers are shown in Reference Area, these connector symbols are not shown in Connector Area. For terminal arrangement of these connectors, refer to the foldout page at the end of this manual.

Joint connector

Joint connector symbols are shown in Connector Area of the wiring diagram. Inside wiring layout and joint connector terminal arrangement can be found on the foldout page.

Example

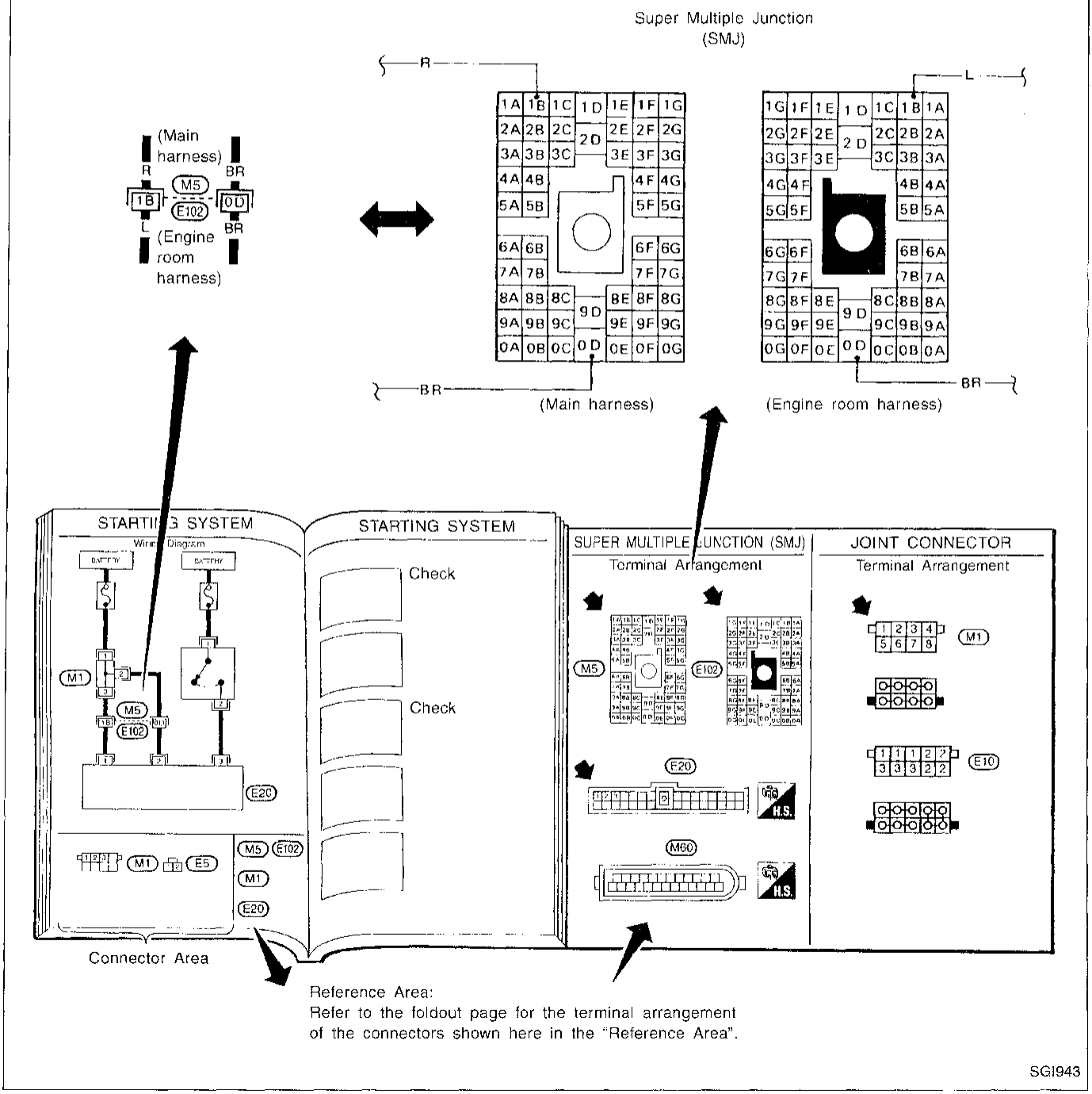

Simpo PDF Merge and Split Unregistered Version - http://www.simpopdf.com

Connector and Terminal Pin Kit

Use the connector and terminal pin kit listed below when replacing connectors or terminals.
The connector and terminal pin kit contains some of the most commonly used NISSAN connectors and terminals.

Tool number (Kent-Moore No.) Tool name	Description
— (J38751-95NI) Connector and terminal pin kit	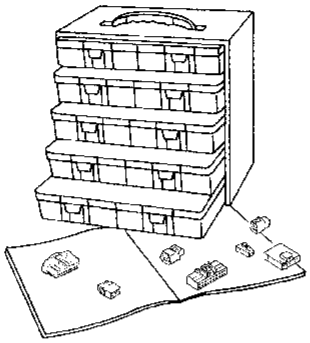 AGI063

How to Probe Connectors

Connector damage and an intermittent connection can result from improperly probing of the connector during circuit checks.
The probe of a digital multimeter (DMM) may not correctly fit the connector cavity. To correctly probe the connector, follow the procedures below using a "T" pin. For the best contact grasp the "T" pin using an alligator clip.

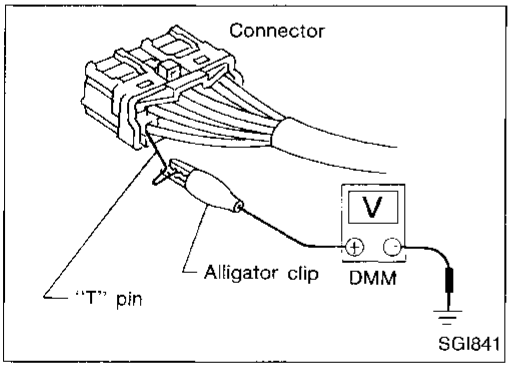

SGI841

PROBING FROM HARNESS SIDE

Standard type (not waterproof type) connector should be probed from harness side with "T" pin.

- **If the connector has a rear cover such as a ECM connector, remove the rear cover before probing the terminal.**
- **Do not probe waterproof connector from harness side. Damage to the seal between wire and connector may result.**

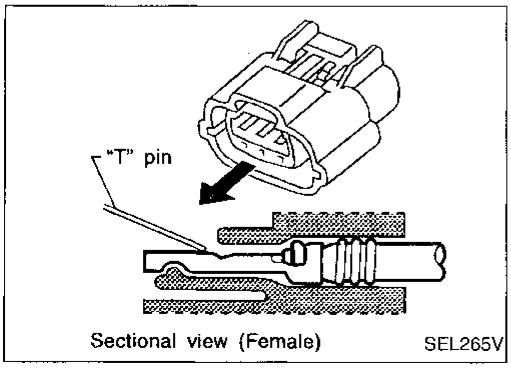

Sectional view (Female) SEL265V

PROBING FROM TERMINAL SIDE

Female terminal

There is a small notch above each female terminal. Probe each terminal with the "T" pin through the notch.

- **Do not insert any object other than the same type male terminal into female terminal.**

Simpo PDF Merge and Split Unregistered Version - http://www.simpopdf.com

How to Probe Connectors (Cont'd)

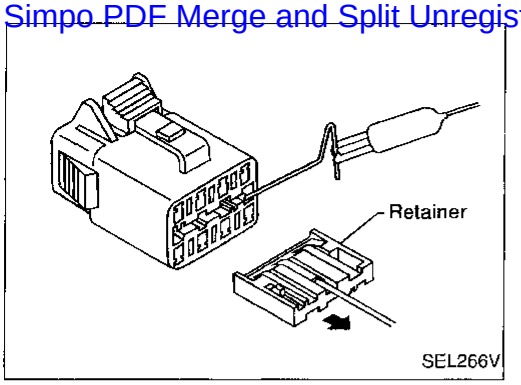

- Some connectors do not have a notch above each terminal. To probe each terminal, remove the connector retainer to make contact space for probing.

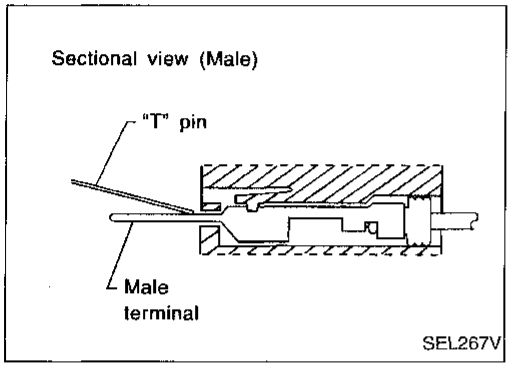

Male terminal

Carefully probe the contact surface of each terminal using a "T" pin
Do not bend terminal.

How to Check Enlarged Contact Spring of Terminal

An enlarged contact spring of a terminal may create intermittent signals in the circuit.
If the intermittent open circuit occurs, follow the procedure below to inspect for open wires and enlarged contact spring of female terminal.

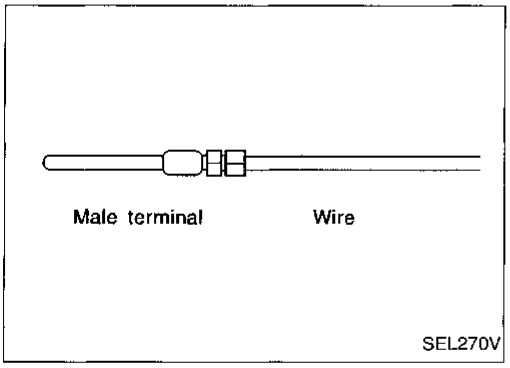

1. Assemble a male terminal and approx. 10 cm (3.9 in) of wire.

Use a male terminal which matches the female terminal.

2. Disconnect the suspected faulty connector and hold it terminal side up.

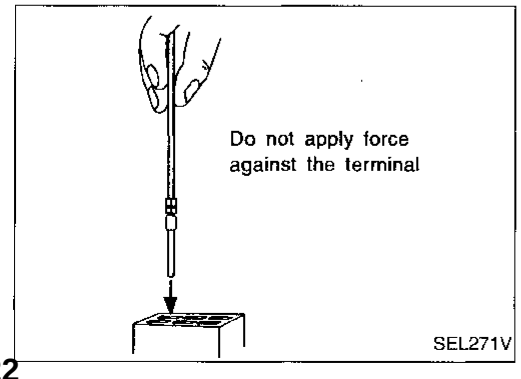

3. While holding the wire of the male terminal, try to insert the male terminal into the female terminal.

Do not force the male terminal into the female terminal with your hands.

Simpo PDF Merge and Split Unregistered Version - http://www.simpopdf.com

How to Check Enlarged Contact Spring of Terminal (Cont'd)

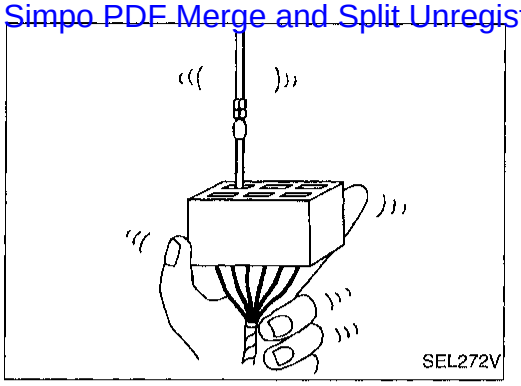

4. While moving the connector, check whether the male terminal can be easily inserted or not.

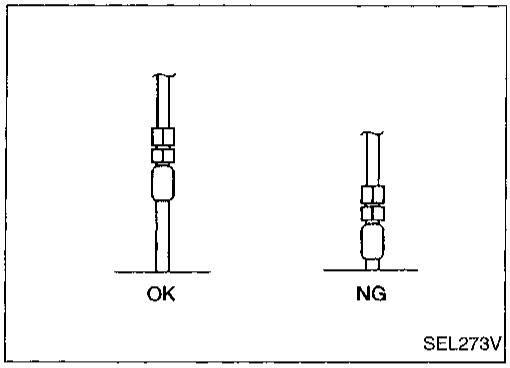

- If the male terminal can be easily inserted into the female terminal, replace the female terminal.

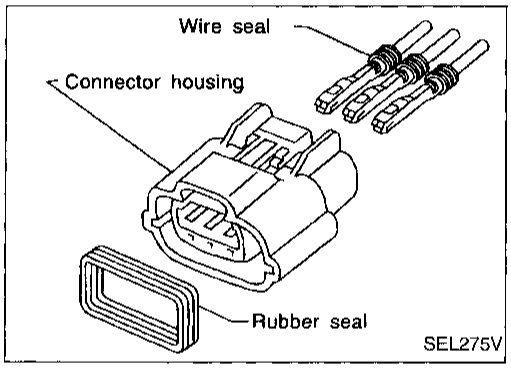

Waterproof Connector Inspection

If water enters the connector, it can short interior circuits. This may lead to intermittent problems.
Check the following items to maintain the original waterproof characteristics.

RUBBER SEAL INSPECTION

Most waterproof connectors are provided with a rubber seal between the male and female connectors. If the seal is missing, the waterproof performance may not meet specifications.
The rubber seal may come off when connectors are disconnected. Whenever connectors are reconnected, make sure the rubber seal is properly installed on either side of male or female connector.

WIRE SEAL INSPECTION

The wire seal must be installed on the wire insertion area of a waterproof connector. Be sure that the seal is installed properly.

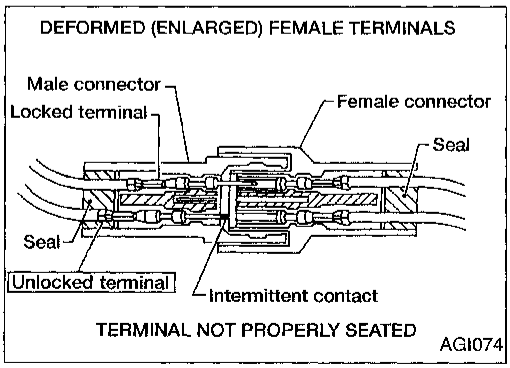

Terminal Lock Inspection

Check for unlocked terminals by pulling wire at the end of connector.
Unlocked terminal may create intermittent signals in the circuit.

Simpo PDF Merge and Split Unregistered Version - http://www.simpopdf.com

Work Flow

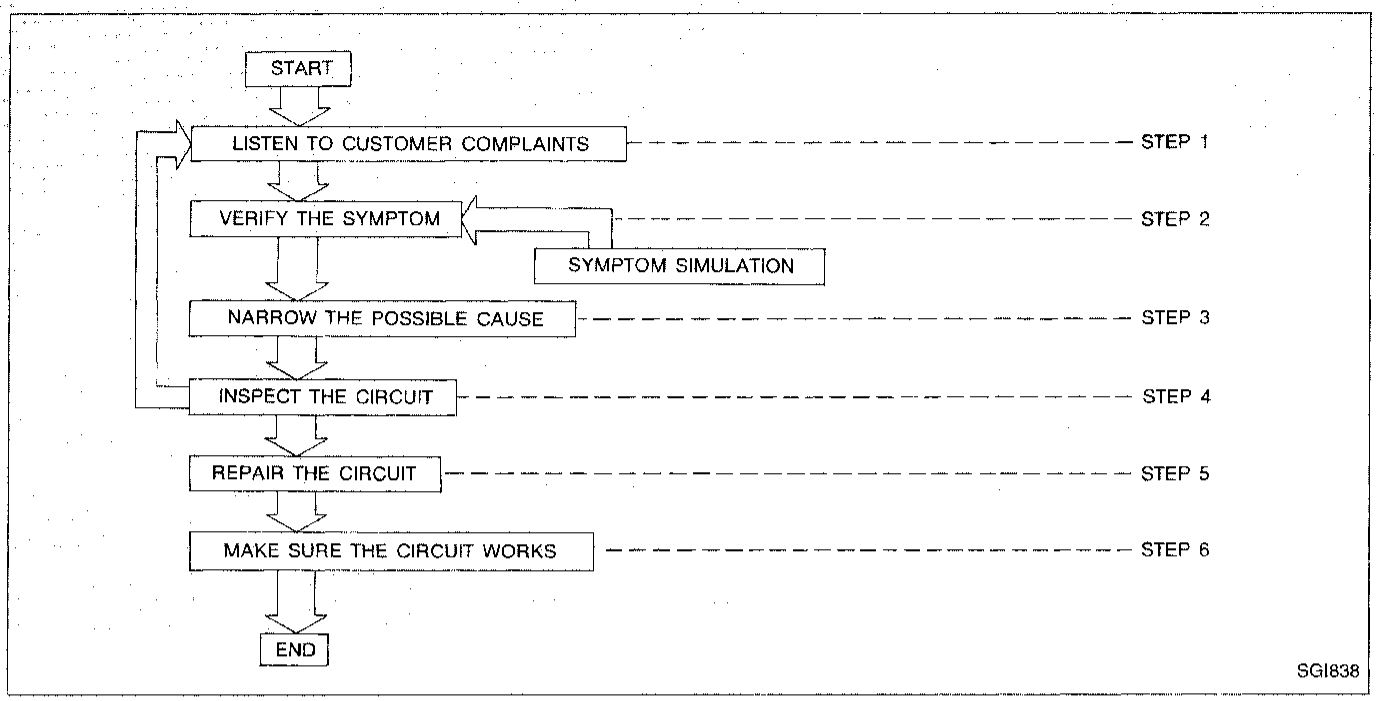

STEP	DESCRIPTION
STEP 1	Get detailed information about the conditions and the environment when the incident occurred. The following are key pieces of information required to make a good analysis: **WHAT** Vehicle Model, Engine, Transmission and the System (i.e., Radio). **WHEN** Date, Time of Day, Weather Conditions, Frequency. **WHERE** Road Conditions, Altitude and Traffic Situation. **HOW** System Symptoms, Operating Conditions (Other Components Interaction). Service History and if any After Market Accessories have been installed.
STEP 2	Operate the system; road test if necessary. Verify the parameter of the incident. If the problem cannot be duplicated, refer to "Incident Simulation Tests" next page.
STEP 3	Get the proper diagnosis materials together including: POWER SUPPLY ROUTING System Operation Descriptions Applicable Service Manual Sections Check For Any Service Bulletins Identify where to begin diagnosis based upon your knowledge of the system operation and the customer comments.
STEP 4	Inspect the system for mechanical binding, loose connectors or wiring damage. Determine which circuits and components are involved and diagnose using the Power Supply Routing and Harness Layouts.
STEP 5	Repair or replace the incident circuit or component.
STEP 6	Operate and verify the system works properly under all conditions. Make sure you have not unintentionally created a new incident during your diagnosis or repair steps.

Simpo PDF Merge and Split Unregistered Version - http://www.simpopdf.com

Incident Simulation Tests

INTRODUCTION

Sometimes the symptom is not present when the vehicle is brought in for service. If possible, recreate the conditions present at the time of the incident. Doing so may help avoid a No Trouble Found Diagnosis. The following section illustrates ways to simulate the conditions/environment under which the owner experiences an electrical incident.

The section is broken into the six following topics:

- Vehicle vibration
- Heat sensitive
- Freezing
- Water intrusion
- Electrical load
- Cold or hot start up

Get a thorough description of the incident from the customer. It is important for simulating the conditions of the problem.

VEHICLE VIBRATION

The problem may occur or become worse while driving on a rough road or when the engine is vibrating (idle with A/C on). In such a case, you will want to check for a vibration-related condition. Refer to the illustration below.

Connectors & harness

Determine which connectors and wiring harness would affect the electrical system you are inspecting. **Gently** shake each connector and harness while monitoring the system for the incident you are trying to duplicate. This test may indicate a loose or poor electrical connection.

Hint

Connectors can be exposed to moisture. It is possible to get a thin film of corrosion on the connector terminals. A visual inspection may not reveal this without disconnecting the connector. If the problem occurs intermittently, perhaps the problem is caused by corrosion. It is a good idea to disconnect, inspect and clean the terminals on related connectors in the system.

Sensors & relays

Gently apply a slight vibration to sensors and relays in the system you are inspecting.
This test may indicate a loose or poorly mounted sensor or relay.

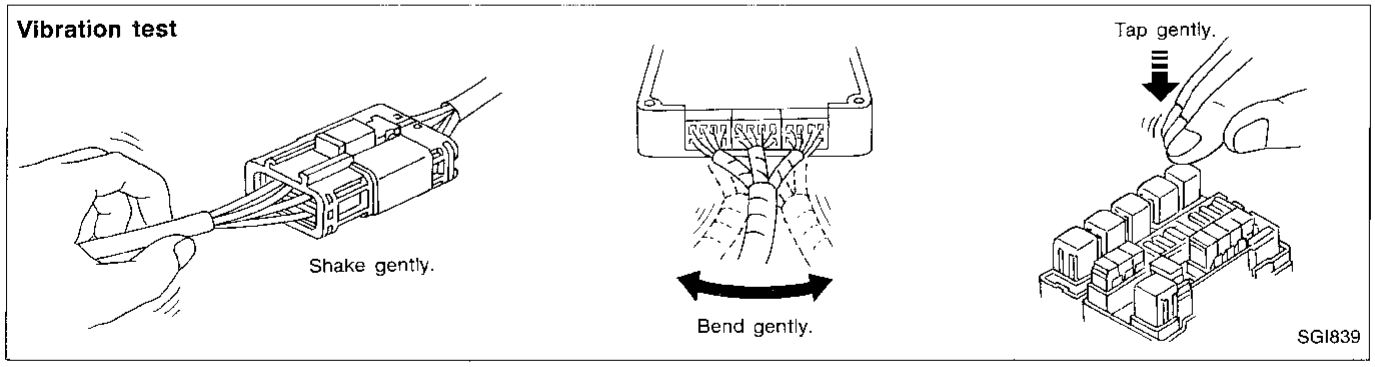

Incident Simulation Tests (Cont'd)

Simpo PDF Merge and Split Unregistered Version - http://www.simpopdf.com

Engine compartment

There are several reasons a vehicle or engine vibration could cause an electrical complaint. Some of the things to check for are:

- Connectors not fully seated.
- Wiring harness not long enough and is being stressed due to engine vibrations or rocking.
- Wires laying across brackets or moving components.
- Loose, dirty or corroded ground wires.
- Wires routed too close to hot components.

To inspect components under the hood, start by verifying the integrity of ground connections. Refer to GI-26. First check that the system is properly grounded. Then, check for loose connection by **gently shaking** the wiring or components as previously explained. Using the wiring diagrams, inspect the wiring for continuity.

Behind the instrument panel

An improperly routed or improperly clamped harness can become pinched during accessory installation. Vehicle vibration can aggravate a harness which is routed along a bracket or near a screw.

Under seating areas

An unclamped or loose harness can cause wiring to be pinched by seat components (such as slide guides) during vehicle vibration. If the wiring runs under seating areas, inspect wire routing for possible damage or pinching.

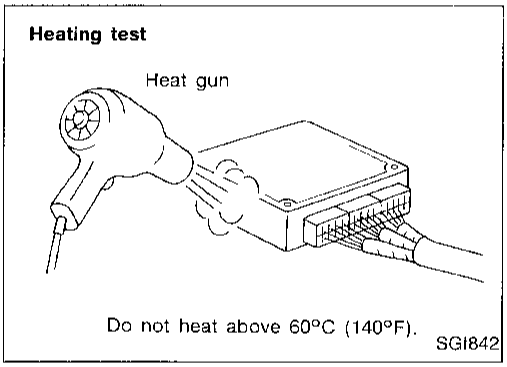

HEAT SENSITIVE

The owner's problem may occur during hot weather or after car has sat for a short time. In such cases, you will want to check for a heat sensitive condition.
To determine if an electrical component is heat sensitive, heat the component with a heat gun or equivalent.
Do not heat components above 60°C (140°F). If incident occurs while heating the unit, either replace or properly insulate the component.

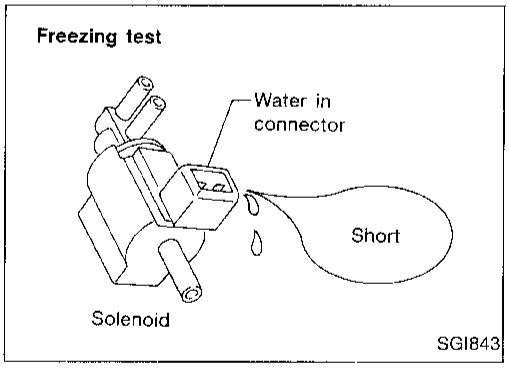

FREEZING

The customer may indicate the incident goes away after the car warms up (winter time). The cause could be related to water freezing somewhere in the wiring/electrical system.
There are two methods to check for this. The first is to arrange for the owner to leave the car overnight. Make sure it will get cold enough to demonstrate the complaint. Leave the car parked outside overnight. In the morning, do a quick and thorough diagnosis of those electrical components which could be affected.
The second method is to put the suspect component into a freezer long enough for any water to freeze. Reinstall the part into the car and check for the reoccurrence of the incident. If it occurs, repair or replace the component.

Simpo PDF Merge and Split Unregistered Version - http://www.simpopdf.com

Incident Simulation Tests (Cont'd)

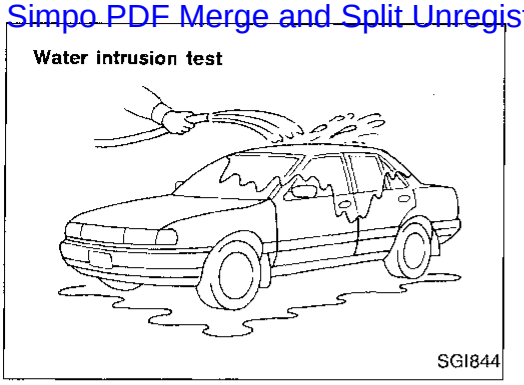

WATER INTRUSION

The incident may occur only during high humidity or in rainy/snowy weather. In such cases, the incident could be caused by water intrusion on an electrical part. This can be simulated by soaking the car or running it through a car wash.

Do not spray water directly on any electrical components.

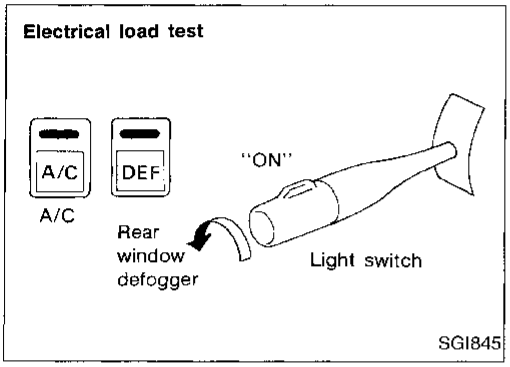

ELECTRICAL LOAD

The incident may be electrical load sensitive. Perform diagnosis with all accessories (including A/C, radio, fog lamps) turned on.

COLD OR HOT START UP

On some occasions, an electrical incident may occur only when the car is started cold. Or it may occur when the car is restarted hot shortly after being turned off. In these cases you may have to keep the car overnight to make a proper diagnosis.

Circuit Inspection

INTRODUCTION

In general, testing electrical circuits is an easy task if approached logically. Before beginning, it is important to have all available information on the system to be tested. Also, get a thorough understanding of system operation. Then you will be able to use the appropriate equipment and follow the correct test procedure.
You may have to simulate vehicle vibrations while testing electrical components. **Gently shake** the wiring harness or electrical component to do this.

OPEN	A circuit is open when there is no continuity through a section of the circuit.	
SHORT	There are two types of shorts.	
	• SHORT CIRCUIT	When a circuit contacts another circuit and causes the normal resistance to change.
	• SHORT TO GROUND	When a circuit contacts a ground source and grounds the circuit.

NOTE:
Refer to "HOW TO CHECK TERMINAL" in GI-17 to probe or check terminal.

Circuit Inspection (Cont'd)

Simpo PDF Merge and Split Unregistered Version - http://www.simpopdf.com

TESTING FOR "OPENS" IN THE CIRCUIT

Before you begin to diagnose and test the system, you should rough sketch a schematic of the system. This will help you to logically walk through the diagnosis process. Drawing the sketch will also reinforce your working knowledge of the system.

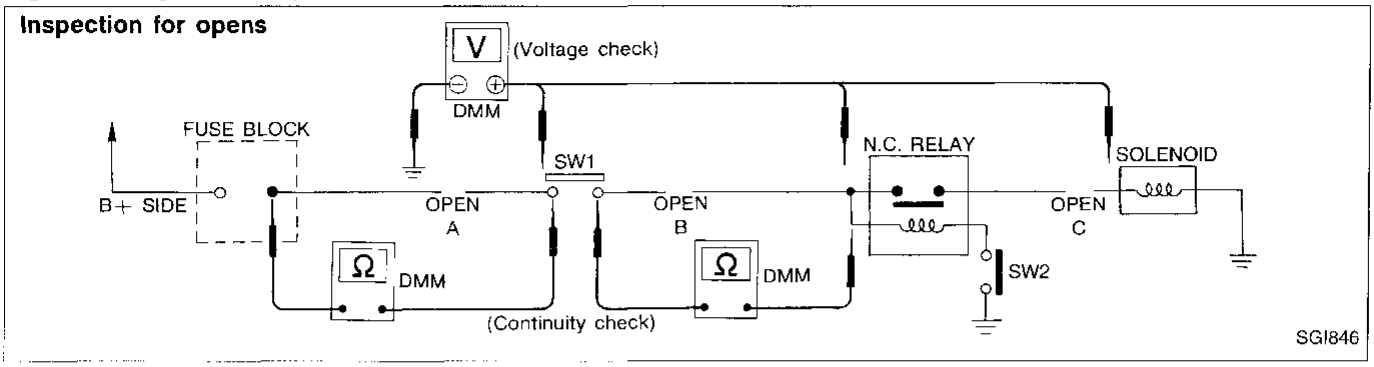

Continuity check method

The continuity check is used to find an open in the circuit. The Digital Multimeter (DMM) set on the resistance function will indicate an open circuit as over limit (OL, no beep tone or no ohms symbol). Make sure no power is supplied to the checked component. Always start with the DMM at the highest resistance level.
To help in understanding the diagnosis of open circuits, please refer to the schematic above.

1. Disconnect the battery negative cable.
2. Start at one end of the circuit and work your way to the other end (At the fuse block in this example).
3. Connect one probe of the DMM to the fuse block terminal on the load side.
4. Connect the other probe to the fuse block (power) side of SW1. Little or no resistance will indicate that portion of the circuit has good continuity. If there was an open in the circuit, the DMM would indicate an over limit or infinite resistance condition (point A).
5. Connect the probes between SW1 and the relay. Little or no resistance will indicate that portion of the circuit has good continuity. If there was an open in the circuit, the DMM would indicate an over limit or infinite resistance condition (point B).
6. Connect the probes between the relay and the solenoid. Little or no resistance will indicate that portion of the circuit has good continuity. If there were an open in the circuit, the DMM would indicate an over limit or infinite resistance condition (point C).

Any circuit can be diagnosed using the approach in the above example.

Voltage check method

To help in understanding the diagnosis of open circuits, please refer to the previous schematic.
In any powered circuit, an open can be found by methodically checking the system for voltage. This is done by switching the DMM to the voltage function.

1. Connect one probe of the DMM to a known good ground.
2. Begin probing at one end of the circuit and work your way to the other end.
3. With SW1 open, probe at SW1 to check for voltage.
   - Voltage: open is further down the circuit than SW1.
   - No voltage: open is between fuse block and SW1 (point A).
4. Close SW1 and probe at relay.
   - Voltage: open is further down the circuit than the relay.
   - No voltage: open is between SW1 and relay (point B).
5. Close the relay and probe at the solenoid.
   - Voltage: open is further down the circuit than the solenoid.
   - No voltage: open is between relay and solenoid (point C).

Any powered circuit can be diagnosed using the approach in the above example.

Circuit Inspection (Cont'd)

Simpo PDF Merge and Split Unregistered Version - http://www.simpopdf.com

TESTING FOR "SHORTS" IN THE CIRCUIT

To simplify the discussion of shorts in the system, please refer to the schematic below.

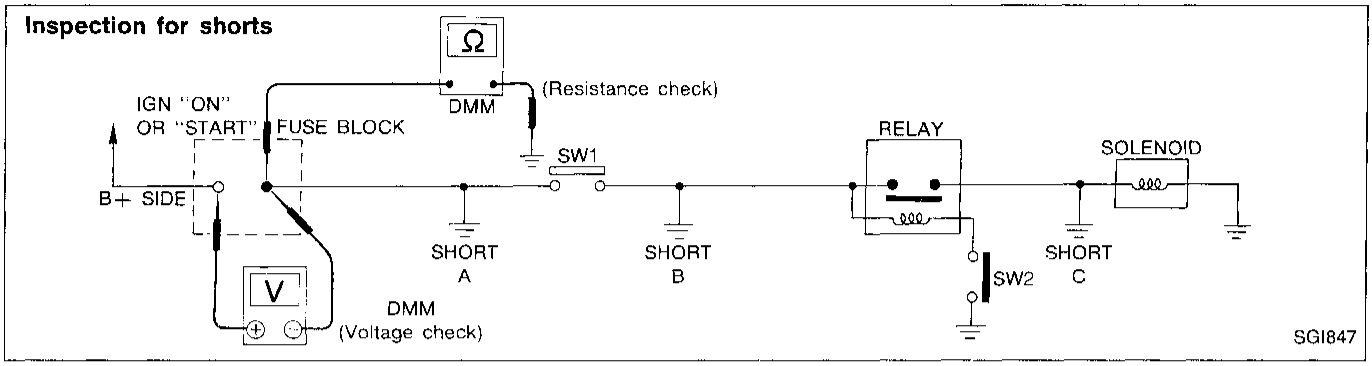

Resistance check method

1. Disconnect the battery negative cable and remove the blown fuse.
2. Disconnect all loads (SW1 open, relay disconnected and solenoid disconnected) powered through the fuse.
3. Connect one probe of the ohmmeter to the load side of the fuse terminal. Connect the other probe to a known good ground.
4. With SW1 open, check for continuity.
   - Continuity: short is between fuse terminal and SW1 (point A).
   - No continuity: short is further down the circuit than SW1.
5. Close SW1 and disconnect the relay. Put probes at the load side of fuse terminal and a known good ground. Then, check for continuity.
   - Continuity: short is between SW1 and the relay (point B).
   - No continuity: short is further down the circuit than the relay.
6. Close SW1 and jump the relay contacts with jumper wire. Put probes at the load side of fuse terminal and a known good ground. Then, check for continuity.
   - Continuity: short is between relay and solenoid (point C).
   - No continuity: check solenoid, retrace steps.

Voltage check method

1. Remove the blown fuse and disconnect all loads (i.e., SW1 open, relay disconnected and solenoid disconnected) powered through the fuse.
2. Turn the ignition key to the ON or START position. Verify battery voltage at the B + side of the fuse terminal (one lead on the B + terminal side of the fuse block and one lead on a known good ground).
3. With SW1 open and the DMM leads across both fuse terminals, check for voltage.
   - Voltage: short is between fuse block and SW1 (point A).
   - No voltage: short is further down the circuit than SW1.
4. With SW1 closed, relay and solenoid disconnected and the DMM leads across both fuse terminals, check for voltage.
   - Voltage: short is between SW1 and the relay (point B).
   - No voltage: short is further down the circuit than the relay.
5. With SW1 closed, relay contacts jumped with fused jumper wire check for voltage.
   - Voltage: short is down the circuit of the relay or between the relay and the disconnected solenoid (point C).
   - No voltage: retrace steps and check power to fuse block.

Circuit Inspection (Cont'd)

Simpo PDF Merge and Split Unregistered Version - http://www.simpopdf.com

GROUND INSPECTION

Ground connections are very important to the proper operation of electrical and electronic circuits. Ground connections are often exposed to moisture, dirt and other corrosive elements. The corrosion (rust) can become an unwanted resistance. This unwanted resistance can change the way a circuit works.

Electronically controlled circuits are very sensitive to proper grounding. A loose or corroded ground can drastically affect an electronically controlled circuit. A poor or corroded ground can easily affect the circuit. Even when the ground connection looks clean, there can be a thin film of rust on the surface.

When inspecting a ground connection follow these rules:

1. Remove the ground bolt screw or clip.
2. Inspect all mating surfaces for tarnish, dirt, rust, etc.
3. Clean as required to assure good contact.
4. Reinstall bolt or screw securely.
5. Inspect for "add-on" accessories which may be interfering with the ground circuit.
6. If several wires are crimped into one ground eyelet terminal, check for proper crimps. Make sure all of the wires are clean, securely fastened and providing a good ground path. If multiple wires are cased in one eyelet, make sure no ground wires have excess wire insulation.

Ground Inspection

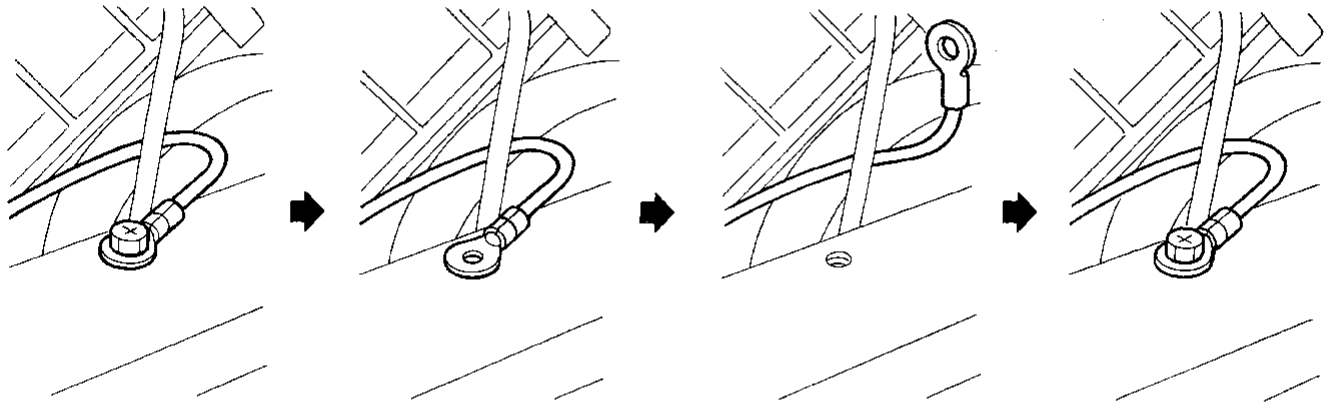

SGI853

Circuit Inspection (Cont'd)

Simpo PDF Merge and Split Unregistered Version - http://www.simpopdf.com

VOLTAGE DROP TESTS

Voltage drop tests are often used to find components or circuits which have excessive resistance. A voltage drop in a circuit is caused by a resistance **when the circuit is in operation**.

Check the wire in the illustration. When measuring resistance with ohmmeter, contact by a single strand of wire will give reading of 0 ohms. This would indicate a good circuit. When the circuit operates, this single strand of wire is not able to carry the current. The single strand will have a high resistance to the current. This will be picked up as a slight voltage drop.

Unwanted resistance can be caused by many situations:

- Undersized wiring (single strand example)
- Corrosion on switch contacts
- Loose wire connections or splices.

If repairs are needed always use wire that is of the same or larger gauge.

Measuring voltage drop — Accumulated method

1. Connect the voltmeter across the connector or part of the circuit you want to check. The positive lead of the voltmeter should be closer to power and the negative lead closer to ground.
2. Operate the circuit.
3. The voltmeter will indicate how many volts are being used to "push" current through that part of the circuit.

Note in the illustration that there is an excessive 4.1 volt drop between the battery and the bulb.

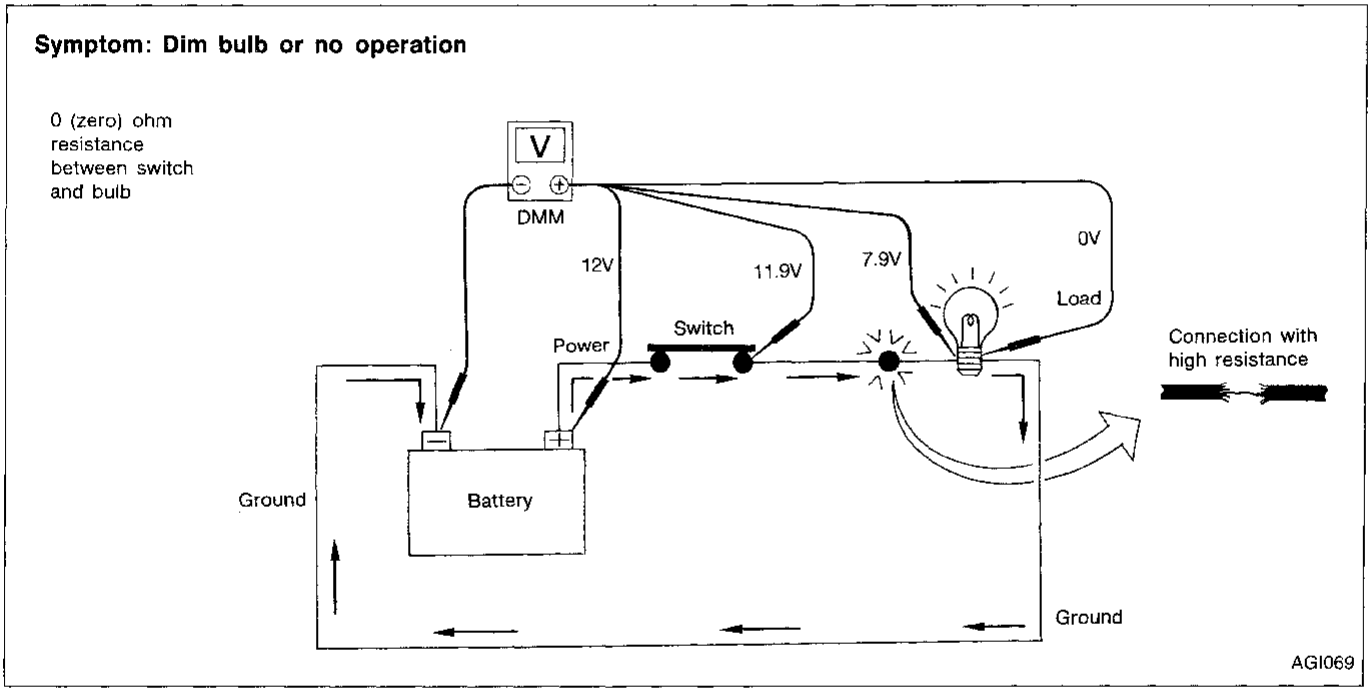

Circuit Inspection (Cont'd)

Simpo PDF Merge and Split Unregistered Version - http://www.simpopdf.com

Measuring voltage drop — Step by step

The step by step method is most useful for isolating excessive drops in low voltage systems (such as those in "Computer Controlled Systems").
Circuits in the computer controlled system operate on very low amperage.
Computer controlled operations can be adversely affected by any variation in resistance in the system. Such resistance variation may be caused by poor connection, improper installation, improper wire gauge or corrosion.
The step by step voltage drop test can identify a component or wire with too much resistance.

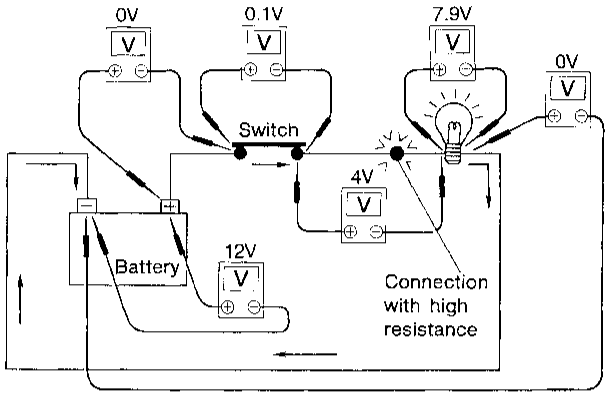

1. Connect the voltmeter as shown, starting at the battery and working your way around the circuit.
2. An unusually large voltage drop will indicate a component or wire that needs to be repaired. In the illustration, the poor connection causes a 4 volt drop.

The chart that follows illustrates some maximum allowable voltage drops. These values are given as a guideline, the exact value for each component may vary.

COMPONENT	VOLTAGE DROP
Wire	negligible <.001 volts
Ground Connections	Approx. 0.1 volts
Switch Contacts	Approx. 0.3 volts

AGI055

Circuit Inspection (Cont'd)

Simpo PDF Merge and Split Unregistered Version - http://www.simpopdf.com

Relationship between open/short (high resistance) circuit and the ECM pin control

System Description: When the switch is ON, the ECM lights up the lamp.

Case 1

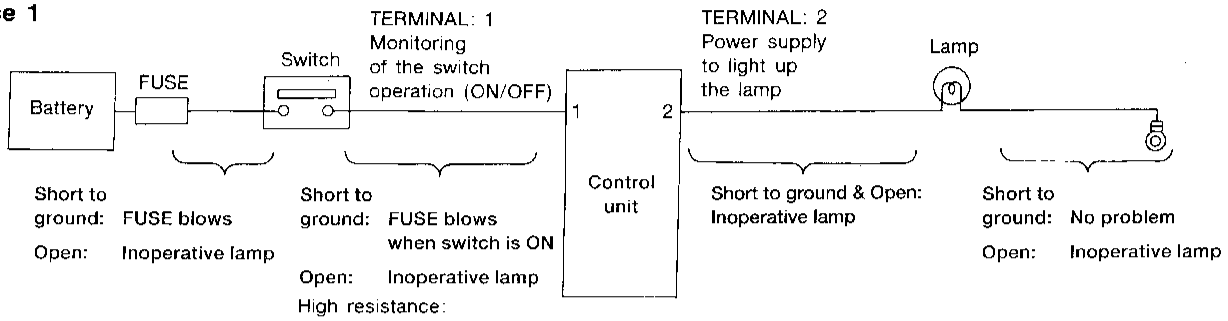

Input-output voltage chart

Pin No.	Item	Condition	Voltage value [V]	In case of high resistance such as single strand [V] *
1	Switch	Switch ON	Battery voltage	Lower than battery voltage Approx. 8 (Example)
		OFF	Approx. 0	Approx. 0
2	Lamp	Switch ON	Battery voltage	Approx. 0 (Inoperative lamp)
		OFF	Approx. 0	Approx. 0

The voltage value is based on the body ground.

*: If high resistance exists in the switch side circuit (caused by a single strand), terminal 1 does not detect battery voltage. Control unit does not detect the switch is ON even if the switch does turn ON. Therefore, the Control unit does not supply power to light up the lamp.

Case 2

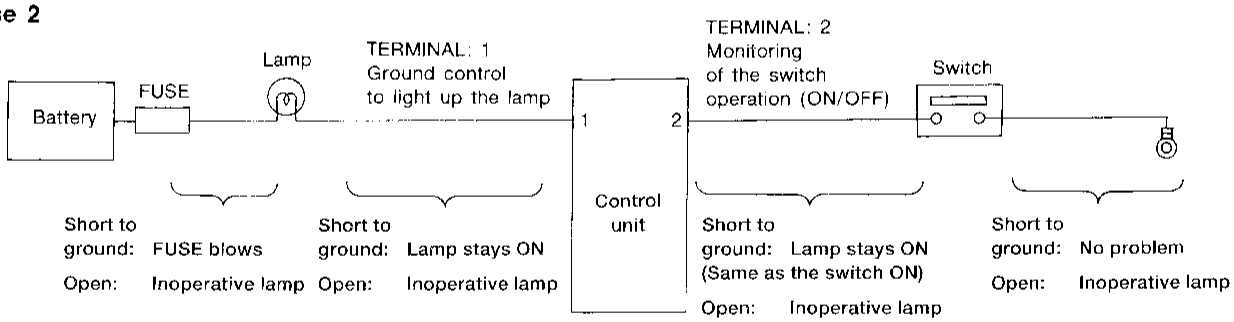

Input-output voltage chart

Pin No.	Item	Condition	Voltage value [V]	In case of high resistance such as single strand [V] *
1	Lamp	Switch ON	Approx. 0	Battery voltage (Inoperative lamp)
		OFF	Battery voltage	Battery voltage
2	Switch	Switch ON	Approx. 0	Higher than 0 Approx. 4 (Example)
		OFF	Approx. 5	Approx. 5

The voltage value is based on the body ground.

*: If high resistance exists in the switch side circuit (caused by a single strand), terminal 2 does not detect approx. 0V. Control unit does not detect the switch is ON even if the switch does turn ON. Therefore, the Control unit does not control ground to light up the lamp.

AGI059

Simpo PDF Merge and Split Unregistered Version - http://www.simpopdf.com

The flow chart indicates work procedures required to diagnose problems effectively. Observe the following instructions before diagnosing.

1) **Use the flow chart after locating probable causes of a problem following the "Preliminary Check", the "Symptom Chart" or the "Work Flow".**
2) **After repairs, re-check that the problem has been completely eliminated.**
3) **Refer to Component Parts and Harness Connector Location for the Systems described in each section for identification/location of components and harness connectors.**
4) **Refer to the Circuit Diagram for quick pinpoint check.**
   If you must check circuit continuity between harness connectors in more detail, such as when a sub-harness is used, refer to Wiring Diagram and Harness Layout in EL section for identification of harness connectors.
5) **When checking circuit continuity, ignition switch should be OFF.**
6) **Before checking voltage at connectors, check battery voltage.**
7) **After accomplishing the Diagnostic Procedures and Electrical Components Inspection, make sure that all harness connectors are reconnected properly.**

Example

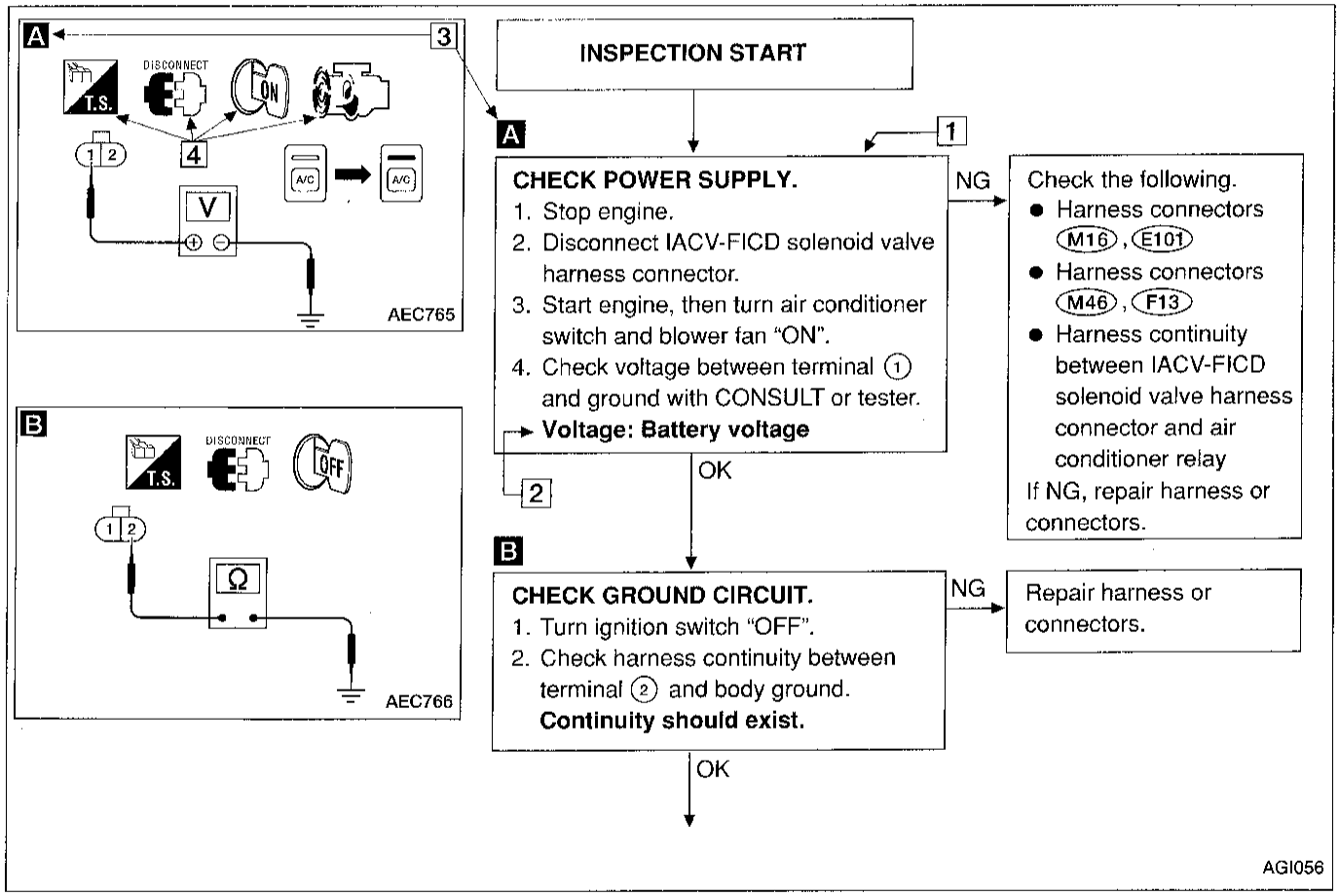

Simpo PDF Merge and Split Unregistered Version - http://www.simpopdf.com

How To Follow This Flow Chart

1 Work and diagnostic procedure

Start to diagnose a problem using procedures indicated in enclosed blocks, as shown in the following example.

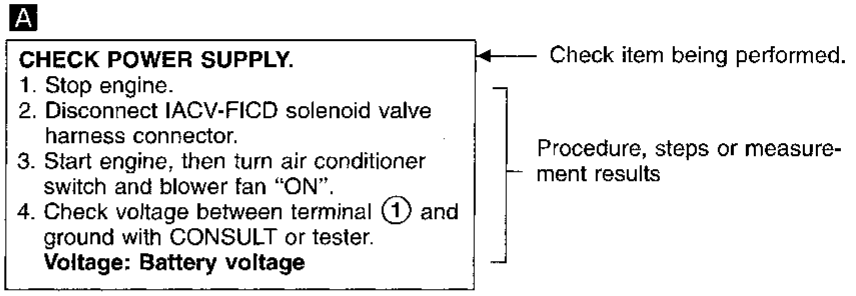

2 Measurement results

Required results are indicated in bold type in the corresponding block, as shown below.
These have the following meanings:

Battery voltage → 11 - 14V or approximately 12V
Voltage: Approximately 0V → Less than 1V
Resistance: Continuity should exist → Approximately 0Ω

3 Cross reference of work symbols in the text and illustrations

Illustrations are provided as visual aids for work procedures. For example, symbol A indicated in the left upper portion of each illustration corresponds with the symbol in the flowchart for easy identification. More precisely, the procedure under the "CHECK POWER SUPPLY" outlined previously is indicated by an illustration A.

4 Symbols used in illustrations

Symbols included in illustrations refer to measurements or procedures. Before diagnosing a problem, familiarize yourself with each symbol.
For connector symbols, refer to "HOW TO READ WIRING DIAGRAMS" on GI-13.

DIRECTION MARK
Refer to "CONNECTOR SYMBOLS" on GI-13.

Simpo PDF Merge and Split Unregistered Version - http://www.simpopdf.com

Key to symbols signifying measurements or procedures

Symbol	Symbol explanation	Symbol	Symbol explanation
	Check after disconnecting the connector to be measured.		Procedure with CONSULT.
	Check after connecting the connector to be measured.		Procedure without CONSULT.
	Insert key into ignition switch.		Procedure with Generic Scan Tool (GST, OBD-II scan tool).
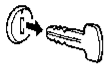	Remove key from ignition switch.		Procedure without CONSULT or GST.
	Turn ignition switch to "OFF" position.		A/C switch is "OFF".
	Turn ignition switch to "ON" position.		A/C switch is "ON".
	Turn ignition switch to "START" position.	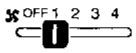	Fan switch is "ON". (At any position except for "OFF" position)
	Turn ignition switch from "OFF" to "ACC" position.	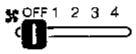	Fan switch is "OFF".
	Turn ignition switch from "ACC" to "OFF" position.		Apply positive voltage from battery with fuse directly to components.
	Turn ignition switch from "OFF" to "ON" position.		Drive vehicle.
	Turn ignition switch from "ON" to "OFF" position.		Disconnect battery negative cable.
	Do not start engine, check with engine stopped.		Depress brake pedal.
	Start engine, check with engine running.		Release brake pedal.
	Apply parking brake.		Depress accelerator pedal.
	Release parking brake.		Release accelerator pedal.
	Check after engine is warmed up sufficiently.	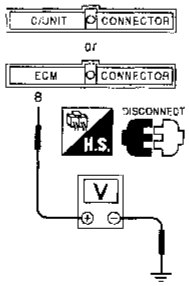	Pin terminal check for SMJ type ECM connectors. **For details regarding the terminal arrangement, refer to the foldout page.** 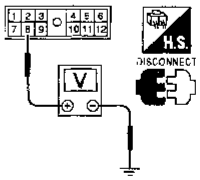
	Voltage should be measured with a voltmeter.		
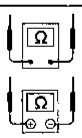	Circuit resistance should be measured with an ohmmeter.		
	Current should be measured with an ammeter.		

Simpo PDF Merge and Split Unregistered Version - http://www.simpopdf.com

Function and System Application

Diagnostic test mode	Function	ECCS	Air bag	ABS
Work support	This mode enables a technician to adjust some devices faster and more accurately by following the indications on CONSULT.	x	—	—
Self-diagnostic results	Self-diagnostic results can be read and erased quickly.	x	x	x
Trouble diagnostic record	Current self-diagnostic results and all trouble diagnostic records previously stored can be read.	—	x	—
ECU discriminated No.	Classification number of a replacement ECU can be read to prevent an incorrect ECU from being installed.	—	x	—
Data monitor	Input/Output data in the ECM can be read.	x	—	x
DTC work support	This mode enables a technician to set operating conditions to confirm self-diagnosis status/result.	—	—	—
Active test	Diagnostic Test Mode in which CONSULT drives some actuators apart from the ECMs and also shifts some parameters in a specified range.	x	—	x
DTC confirmation	The results of SRT (System Readiness Test) and the self-diagnosis status/result can be confirmed.	x	—	—
ECM part number	ECM part number can be read.	x	—	x
Function test	Conducted by CONSULT instead of a technician to determine whether each system is "OK" or "NG".	x	—	—

x: Applicable

Lithium Battery Replacement

CONSULT contains a lithium battery. When replacing the battery, do the following:

WARNING:

Replace the lithium battery with SANYO Electric Co., Ltd., CR2032 only. Use of another battery may present a risk of fire or explosion. The battery may present a fire or chemical burn hazard if mistreated.
Do not recharge, disassemble or dispose of in fire.
Keep the battery out of reach of children and discard used battery conforming to the local regulations.

Checking Equipment

When ordering the below equipment, contact your NISSAN distributor.

Tool name	Description
NISSAN CONSULT ① CONSULT unit and accessories ② Program card UE950, UE951 and UEOBD98 (For Engine and A/T system)	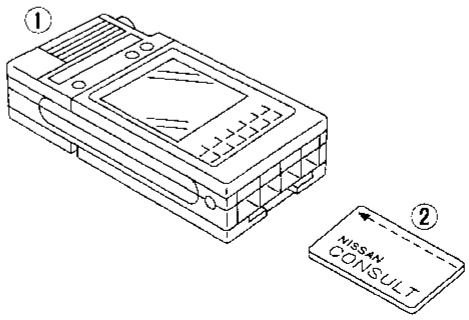 NT004

Simpo PDF Merge and Split Unregistered Version - http://www.simpopdf.com

Loading Procedure

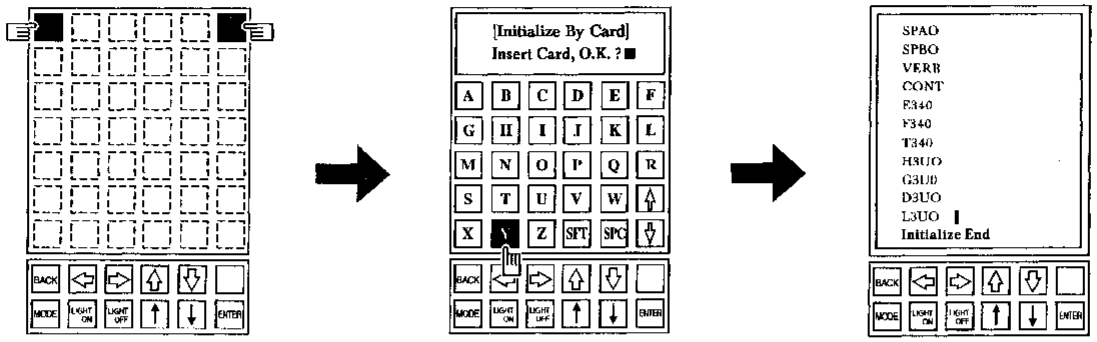

1. While holding down the upper left and right corner keys of the CONSULT touch panel, simultaneously press the power "ON" switch. While pushing the power "ON" switch, hold down both corner keys until the next screen appears.
2. If the initialization was done correctly, the following message will appear at the top of the display: "[Initialize By Card] Insert Card, O.K.?"
3. Insert the program card into the CONSULT program card reader.
4. Press "Y" on the touch panel.
5. Now the program will start to load.
6. After the "Initialize End" message appears, touch the "OFF" switch.

SGI983

CONSULT Data Link Connector (DLC) Circuit

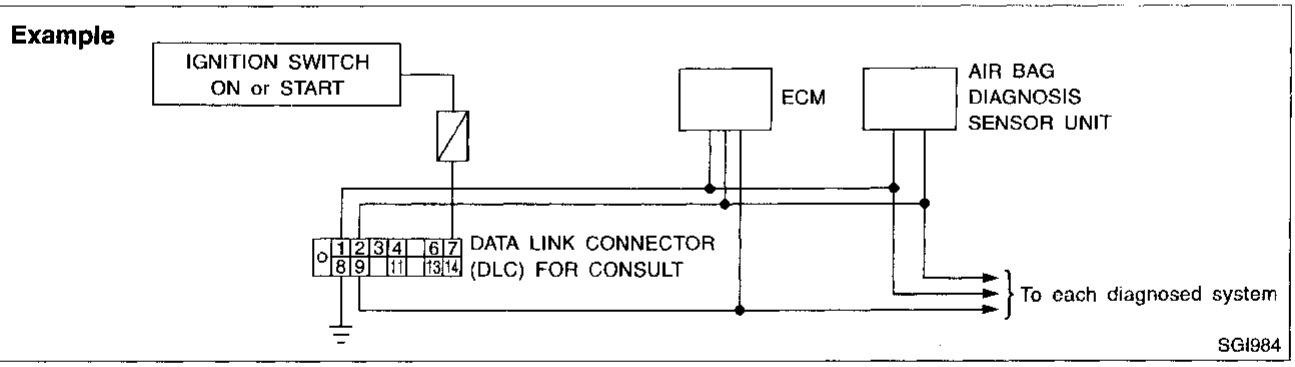

SGI984

INSPECTION PROCEDURE

If the CONSULT cannot diagnose the system properly, check the following items.

Symptom	Check item
CONSULT cannot access any system.	● CONSULT DLC power supply circuit (Terminal 7) and ground circuit (Terminal 8) (For detailed circuit, refer to "MIL & Data Link Connectors Wiring Diagram" in EC section.) ● CONSULT DDL cable
CONSULT cannot access individual system. (Other systems can be accessed.)	● CONSULT program card (Check the appropriate CONSULT program card for the system. Refer to GI-33.) ● Power supply and ground circuit for the control unit of the system (For detailed circuit, refer to wiring diagram for each system.) ● Open or short circuit between the system and CONSULT DLC (For detailed circuit, refer to wiring diagram for each system.)

Simpo PDF Merge and Split Unregistered Version - http://www.simpopdf.com

Model Variation

2-WHEEL DRIVE

Destination	Body		Engine	KA24DE		
			Transmission	FS5W71C	RL4R01A	
			Differential carrier	H190A	H190A	C200
Non-California U.S.A.	Regular Cab	STD	Standard wheelbase	ABGALCFD22EUN		
		XE		ABGALEFD22EUN	ABGALEBD22EUN	
	King Cab	XE	Long wheelbase	BBGGLEFD22EUN		BBGGLEBD22EUN
		SE		BBGGLFFD22EUN		BBGGLFBD22EUN
California, U.S.A.	Regular Cab	STD	Standard wheelbase	ABGALCFD22EVN		
		XE		ABGALEFD22EVN	ABGALEBD22EVN	
	King Cab	XE	Long wheelbase	BBGGLEFD22EVN		BBGGLEBD22EVN
		SE		BBGGLFFD22EVN		BBGGLFBD22EVN
Canada	Regular Cab	STD	Standard wheelbase	ABGALCFD22ENN		
		XE		ABGALEFD22ENN	ABGALEBD22ENN	
	King Cab	XE	Long wheelbase	BBGGLEFD22ENN		BBGGLEBD22ENN
		SE		BBGGLFFD22ENN		BBGGLFBD22ENN

4-WHEEL DRIVE

Destination	Body		Engine	KA24DE	
			Transmission	FS5W71C	
			Transfer	TX10	
			Differential carrier	Front R180A	Rear C200
Non-California U.S.A.	Regular Cab	XE	Standard wheelbase	ABGNLEFD22EUN	
	King Cab	XE	Long wheelbase	BBGULEFD22EUN	
		SE		BBGULFFD22EUN	
California, U.S.A.	Regular Cab	XE	Standard wheelbase	ABGNLEFD22EVN	
	King Cab	XE	Long wheelbase	BBGULEFD22EVN	
		SE		BBGULFFD22EVN	
Canada	Regular Cab	XE	Standard wheelbase	ABGNLEFD22ENN	
	King Cab	XE	Long wheelbase	BBGULEFD22ENN	
		SE		BBGULFFD22ENN	

Model Variation (Cont'd)

Simpo PDF Merge and Split Unregistered Version - http://www.simpopdf.com

Prefix and suffix designations:

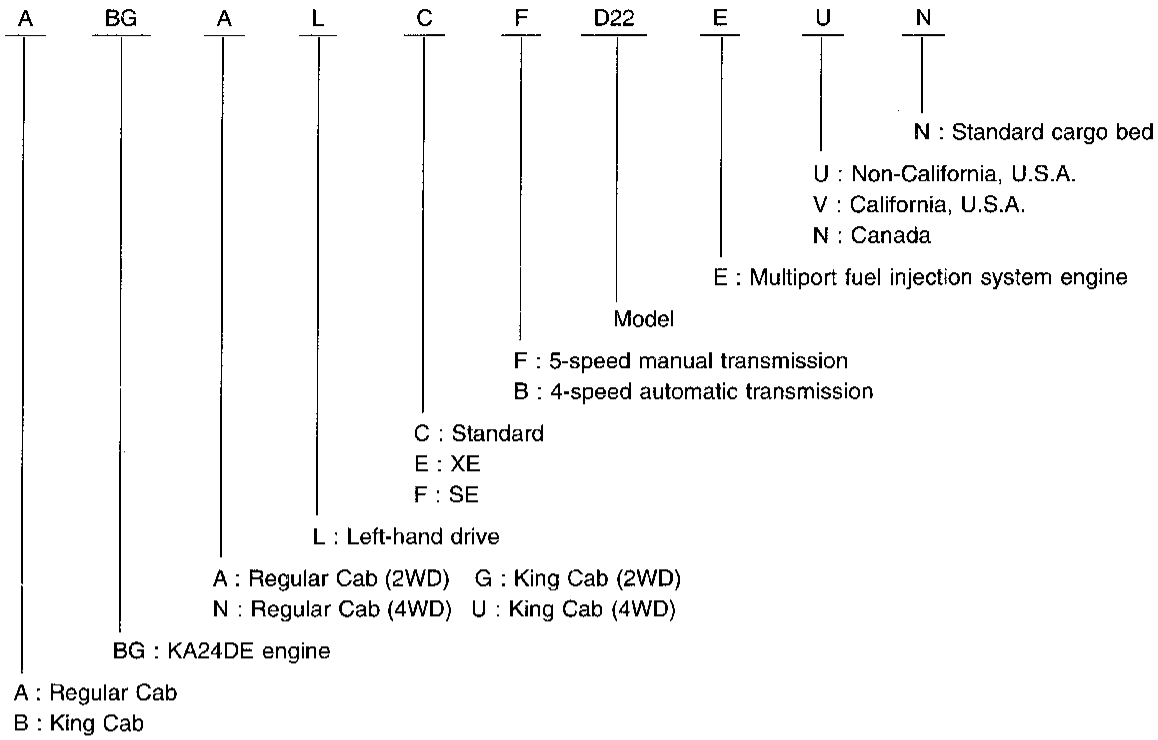

Simpo PDF Merge and Split Unregistered Version - http://www.simpopdf.com

Identification Number

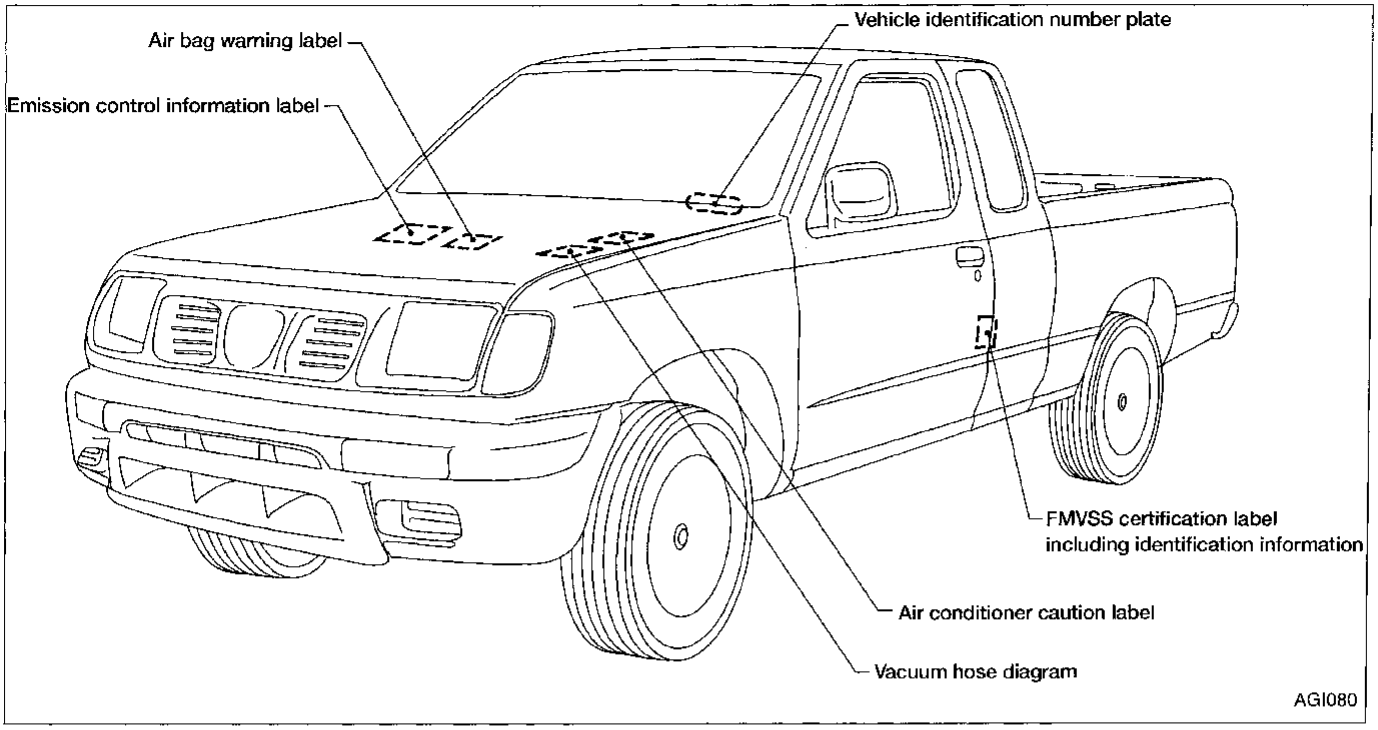

VEHICLE IDENTIFICATION NUMBER ARRANGEMENT

1N6 D D 2 1 S * W C 300001

- 300001: Vehicle serial number (Chassis number)
- C: Manufacturing plant
  C : Smyrna, Tennessee
- W: Model year
  W: 1998 year model
- *: Check digit (0 to 9 or X)
  (The code for the check digit is determined by mathematical computation.)
- S: Gross vehicle weight rating
  S : Standard (2-wheel drive/Rear ABS)
  Y : Standard (4-wheel drive)
- 1: Body type
  1 : Standard body
  6 : King cab
- 2: Model change (0-9)
- D: Vehicle line
  D : Nissan Truck
- D: Engine type
  D : KA24DE engine
- 1N6: Manufacturer
  1N6 : USA produced truck

Identification Number (Cont'd)

Simpo PDF Merge and Split Unregistered Version - http://www.simpopdf.com

ENGINE SERIAL NUMBER

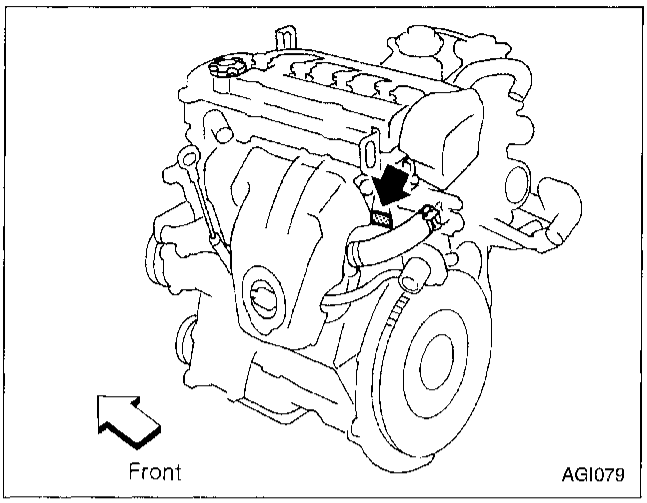

TRANSFER SERIAL NUMBER

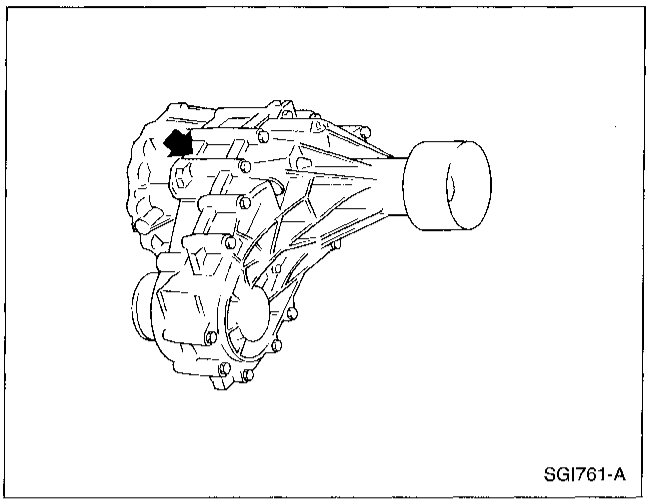

MANUAL TRANSMISSION NUMBER

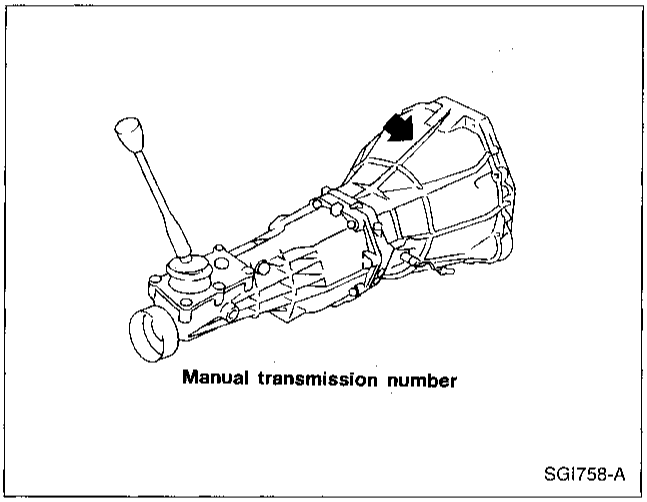

AUTOMATIC TRANSMISSION NUMBER

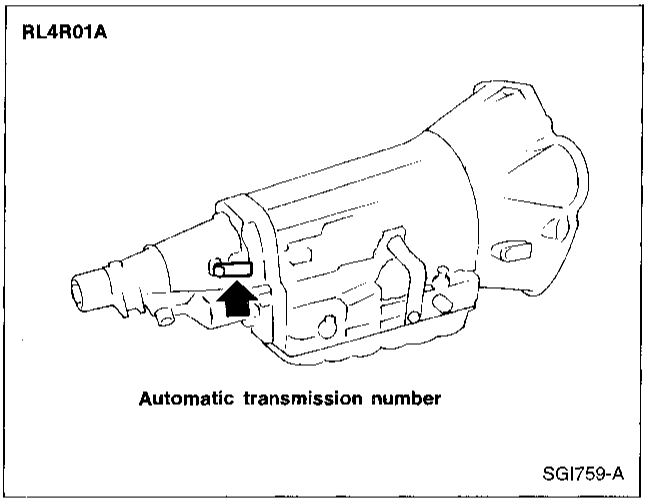

Simpo PDF Merge and Split Unregistered Version - http://www.simpopdf.com

Dimensions

Unit: mm (in)

		2-Wheel drive		4-Wheel drive	
		Regular cab	King cab	Regular cab	King cab
		Standard wheelbase	Long wheelbase	Standard wheelbase	Long wheelbase
Overall length *1		4681.2 (184.3)	4980.9 (196.1)	4681.2 (184.3)	4980.9 (196.1)
Overall width		1689.1 (66.5)	1689.1 (66.5)	1826.3 (71.9)	1826.3 (71.9)
Overall height		STD 1587.5 (62.5), XE 1595.1 (62.8)	1590.0 (62.6)	1678.9 (66.1)	1673.9 (65.9)
Front tread		1394.5 (54.9)	1394.5 (54.9)	1524.0 (60.0)	1524.0 (60.0)
Rear tread		1389.4 (54.7)	1389.4 (54.7)	1506.2 (59.3)	1506.2 (59.3)
Wheel base		2649.2 (104.3)	2948.9 (116.1)	2649.2 (104.3)	2948.9 (116.1)
Cargo space	Length	1966.0 (77.4)	1894.8 (74.6)	1966.0 (77.4)	1894.8 (74.6)
	Width	1518.9 (59.8)	1518.9 (59.8)	1518.9 (59.8)	1518.9 (59.8)
	Height	434.3 (17.1)	434.3 (17.1)	434.3 (17.1)	434.3 (17.1)
Minimum ground clearance		177.8 (7.0)	177.8 (7.0)	236.2 (9.3)	236.2 (9.3)

*1: Without step bumper.
With step bumper add 168 mm (6.6 in) to the overall length.

Wheels and Tires

	Cab type	Grade	Road wheel	Tire	Spare tire size
4x2	Regular	STD	14x5J	P195/75R14	T135/70D16
	Regular & King	XE	15x6J Aluminum	P215/65R15	T135/70D16
	King	SE	15x6J Aluminum	P215/65R15	T135/70D16
4x4	Regular	XE	15x7J 15x7J Aluminum*	P235/70R15	P235/70R15
	King	XE	15x7J 15x7J Aluminum*	P235/70R15	P235/70R15
	King	SE	15x7J 15x7J Aluminum*	P235/70R15	P235/70R15

* : Option

Simpo PDF Merge and Split Unregistered Version - http://www.simpopdf.com

WARNING:

- **Never get under the vehicle while it is supported only by the jack. Always use safety stands to support the frame when you have to get under the vehicle.**
- **Place wheel chocks at both front and back of the wheels on the ground.**

Pantograph Jack

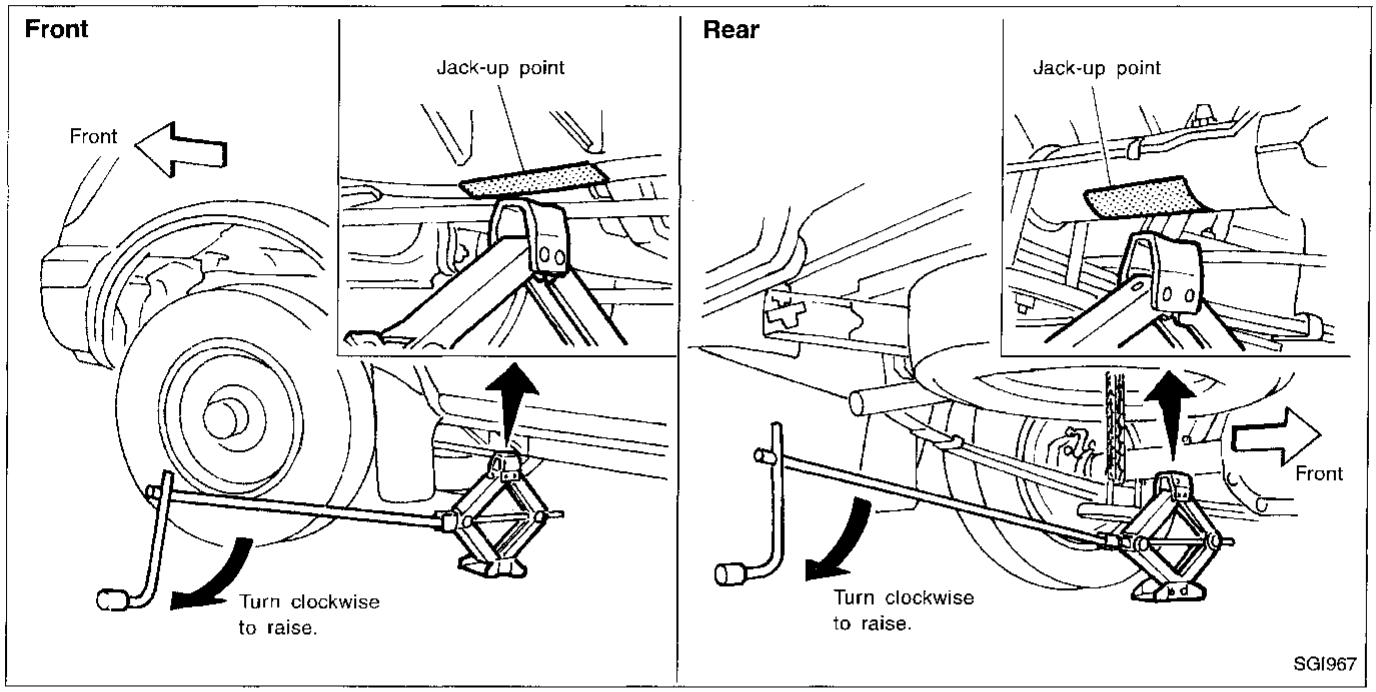

Simpo PDF Merge and Split Unregistered Version - http://www.simpopdf.com

Garage Jack and Safety Stand

CAUTION:
Place a wooden or rubber block between safety stand and vehicle body when the supporting body is flat.

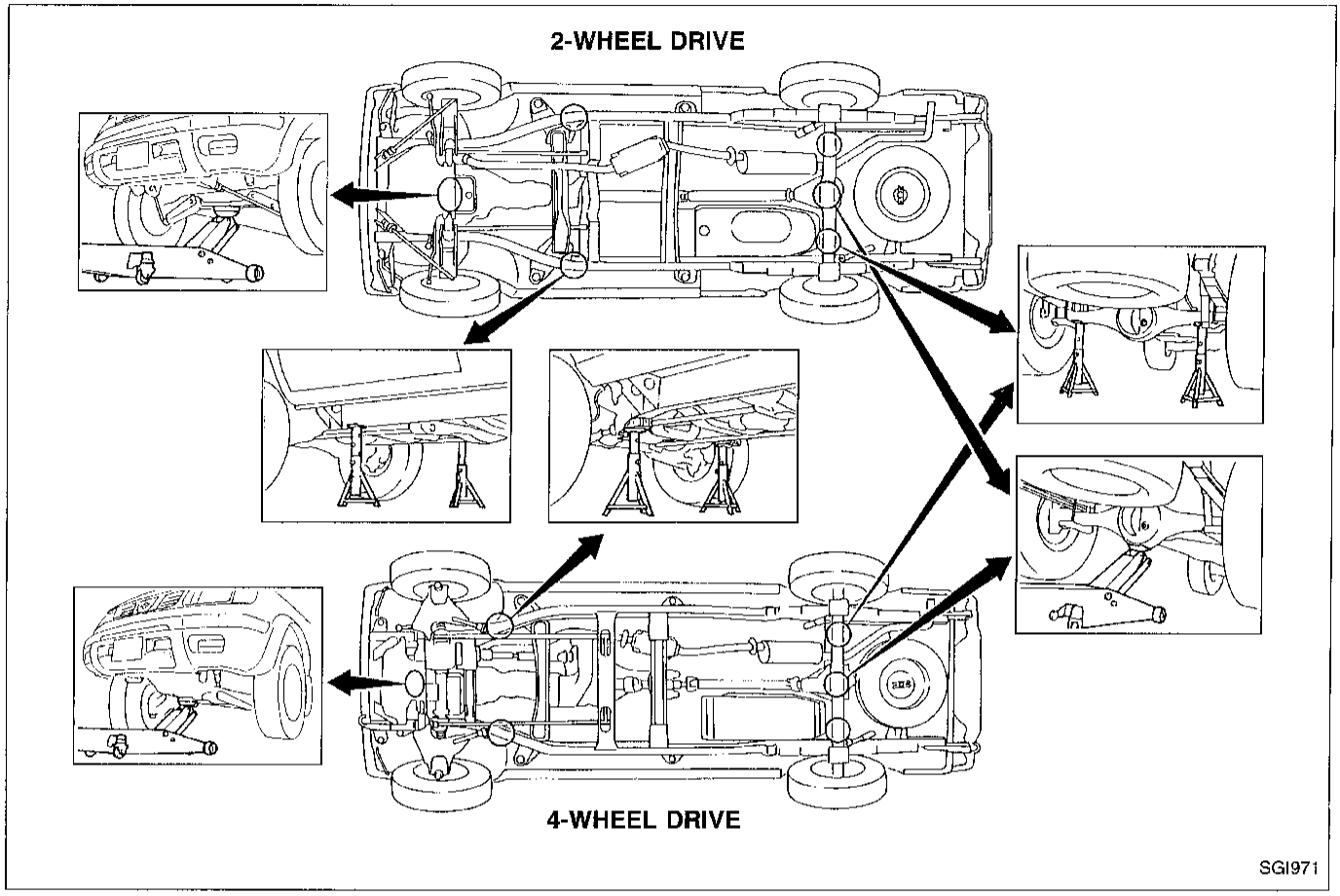

Simpo PDF Merge and Split Unregistered Version - http://www.simpopdf.com

2-pole Lift

WARNING:

When lifting the vehicle, open the lift arms as wide as possible and ensure that the front and rear of the vehicle are well balanced.
When setting the lift arm, do not allow the arm to contact the brake tubes, brake cable or fuel lines.

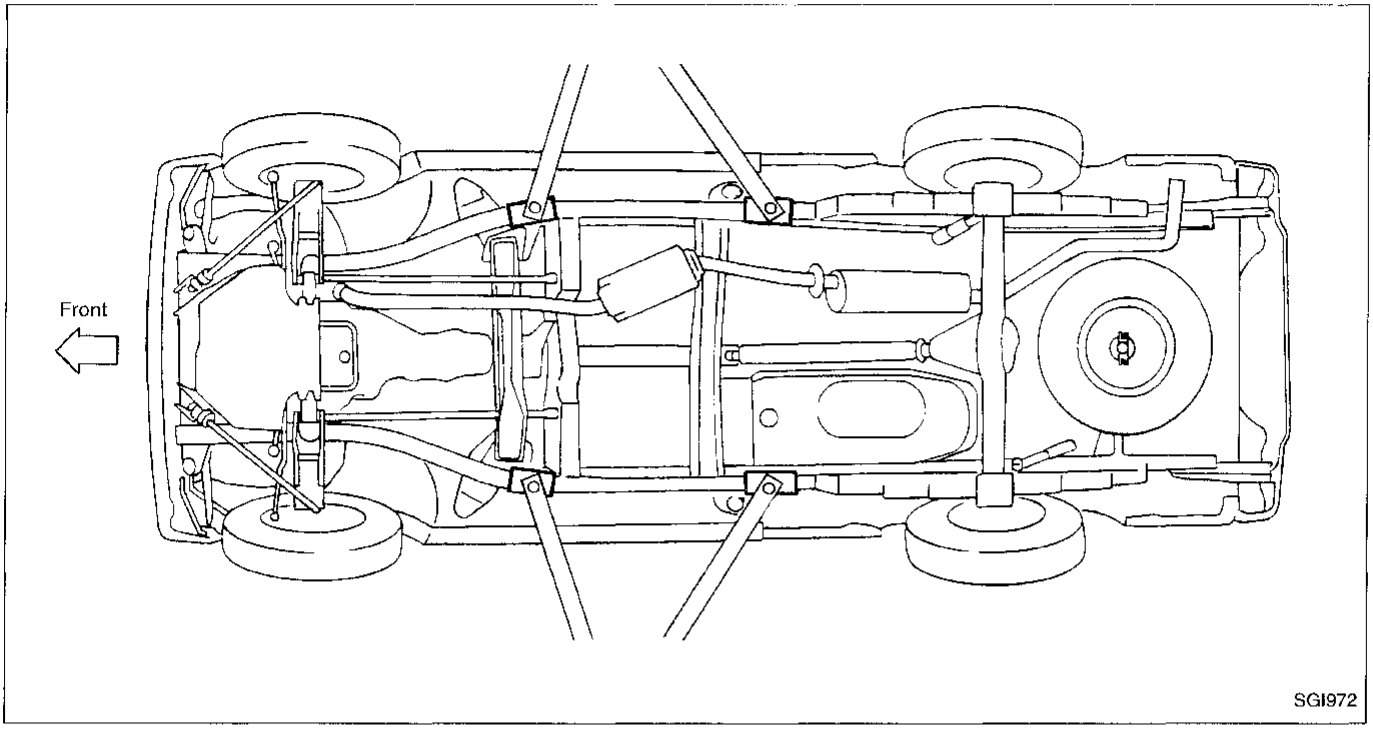

Simpo PDF Merge and Split Unregistered Version - http://www.simpopdf.com

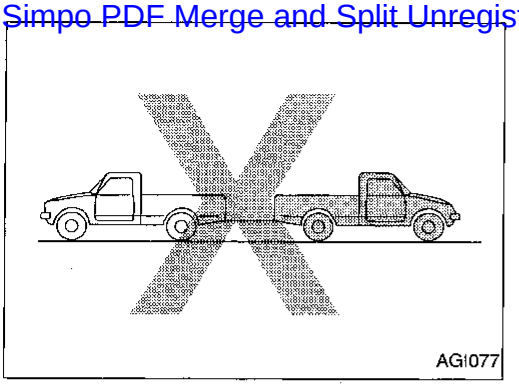
AGI077

Tow Truck Towing

CAUTION:

- **All applicable state or Provincial (in Canada) laws and local laws regarding the towing operation must be obeyed.**
- **It is necessary to use proper towing equipment to avoid possible damage to the vehicle during towing operation. Towing is in accordance with Towing Procedure Manual at dealer.**
- **Always attach safety chains before towing.**
- **When towing, make sure that the transmission, steering system and power train are in good order. If any unit is damaged, dollies must be used.**
- **Never tow an automatic transmission model from the rear (i.e., backward) with four wheels on the ground as this may cause serious and expensive damage to the transmission.**

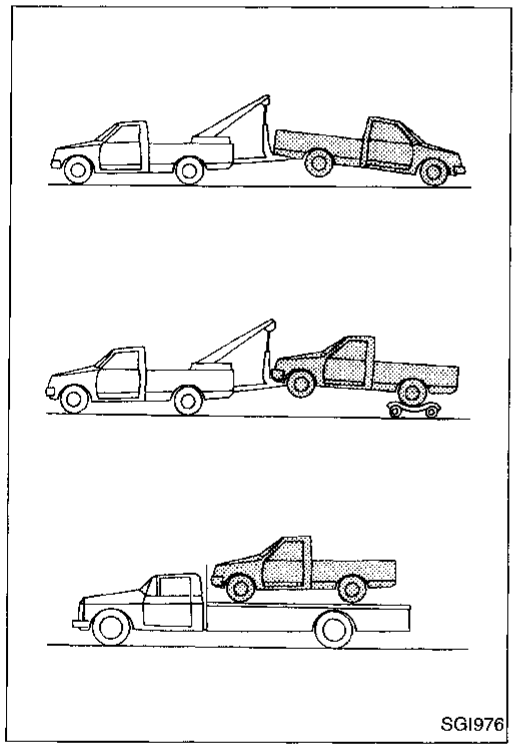
SGI976

2-WHEEL DRIVE MODELS

NISSAN recommends that vehicle be towed with the driving (rear) wheels off the ground as illustrated.

CAUTION:

- **When towing with the front wheels on the ground: Turn the ignition key to the "OFF" position and move the transmission shift lever to the neutral postion. On automatic transmission models, to move the selector lever to "N" (neutral) position, turn the ignition key to "ACC" position. After moving the selector lever to "N" (neutral) position, turn the ignition key to "OFF" position and secure the steering wheel in a straight ahead position with a rope or similar device. Never place the ignition key in the "LOCK" position. This will result in damage to the steering lock mechanism.**
- **When towing manual transmission models with the rear wheels on the ground (if you do not use a towing dollies): Always release the parking brake and move the transmission shift lever to the neutral position.**

Observe the following restricted towing speeds and distances.

Speed: Below 95 km/h (60 MPH)
Distance: Less than 800 km (500 miles)

If the speed or distance must necessarily be greater, remove the propeller shaft beforehand to prevent damage to the transmission.

Simpo PDF Merge and Split Unregistered Version - http://www.simpopdf.com

Tow Truck Towing (Cont'd)

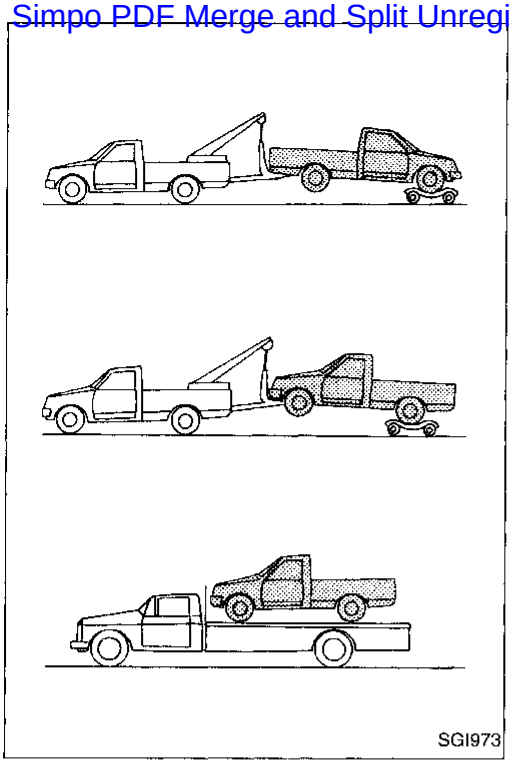
SGI973

4-WHEEL DRIVE MODELS

NISSAN recommends that a dolly be used as illustrated when towing 4-wheel drive models.

CAUTION:

- **When towing with the front wheels on the ground or rear wheels on the ground (If you do not use a towing dollies): Set the free-running hubs to the free position and move the transfer case shift lever into the "2H" position.**
- **When towing with the front wheels on the ground: Turn the ignition key to the "OFF" position and secure the steering wheel in a straight ahead position with a rope or similar device. Never place the ignition key in the "LOCK" position. This will result in damage to the steering lock mechanism.**
- **When towing manual transmission models with the rear wheels on the ground:**
  Always release the parking brake and move the transmission shift lever to the neutral position.

Observe the following restricted towing speeds and distances.

Speed: Below 95 km/h (60 MPH)
Distance: Less than 800 km (500 miles)

If the speed or distance must necessarily be greater, remove the front and rear propeller shafts beforehand to prevent damage to the transmission.

Simpo PDF Merge and Split Unregistered Version - http://www.simpopdf.com

Towing Point

Never tow the vehicle using only the towing points. To avoid damaging the vehicle body, use proper towing equipment when towing.

Front

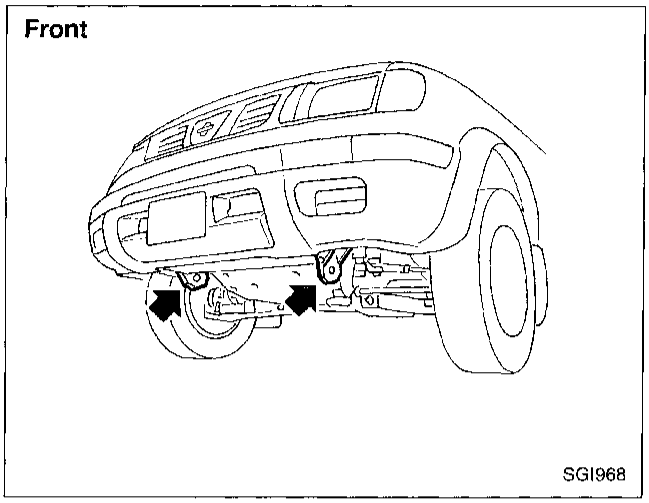

SGI968

Rear

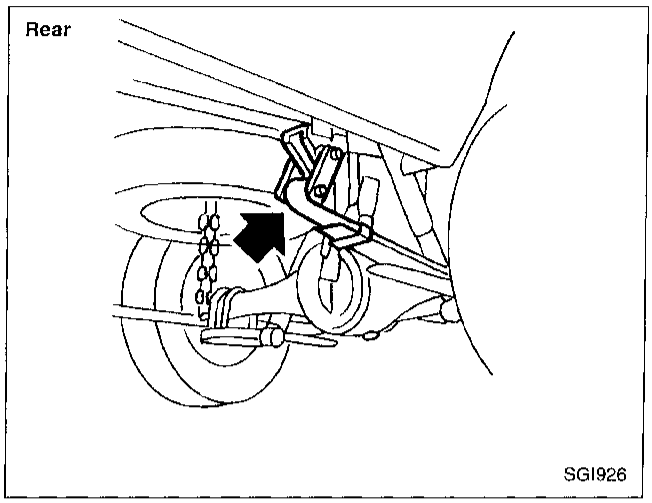

SGI926

VEHICLE RECOVERY (Freeing a stuck vehicle)

- Pulling devices should be routed so they do not touch any part of the suspension, steering, brake or cooling systems.
- Always pull the cable straight out from the front or rear of the vehicle. Never pull the vehicle at a sideways angle.
- Pulling devices such as ropes or canvas straps are not recommended for use for vehicle towing or recovery.

TIGHTENING TORQUE OF STANDARD BOLTS

Simpo PDF Merge and Split Unregistered Version - http://www.simpopdf.com

Grade	Bolt size	Bolt diameter* mm	Pitch mm	Tightening torque (Without lubricant)							
				Hexagon head bolt				Hexagon flange bolt			
				N·m	kg-m	ft-lb	in-lb	N·m	kg-m	ft-lb	in-lb
4T	M6	6.0	1.0	5.1	0.52	3.8	45.1	6.1	0.62	4.5	53.8
	M8	8.0	1.25	13	1.3	9	—	15	1.5	11	—
			1.0	13	1.3	9	—	16	1.6	12	—
	M10	10.0	1.5	25	2.5	18	—	29	3.0	22	—
			1.25	25	2.6	19	—	30	3.1	22	—
	M12	12.0	1.75	42	4.3	31	—	51	5.2	38	—
			1.25	46	4.7	34	—	56	5.7	41	—
	M14	14.0	1.5	74	7.5	54	—	88	9.0	65	—
7T	M6	6.0	1.0	8.4	0.86	6.2	74.6	10	1.0	7	87
	M8	8.0	1.25	21	2.1	15	—	25	2.5	18	—
			1.0	22	2.2	16	—	26	2.7	20	—
	M10	10.0	1.5	41	4.2	30	—	48	4.9	35	—
			1.25	43	4.4	32	—	51	5.2	38	—
	M12	12.0	1.75	71	7.2	52	—	84	8.6	62	—
			1.25	77	7.9	57	—	92	9.4	68	—
	M14	14.0	1.5	127	13.0	94	—	147	15.0	108	—
9T	M6	6.0	1.0	12	1.2	9	—	15	1.5	11	—
	M8	8.0	1.25	29	3.0	22	—	35	3.6	26	—
			1.0	31	3.2	23	—	37	3.8	27	—
	M10	10.0	1.5	59	6.0	43	—	70	7.1	51	—
			1.25	62	6.3	46	—	74	7.5	54	—
	M12	12.0	1.75	98	10.0	72	—	118	12.0	87	—
			1.25	108	11.0	80	—	137	14.0	101	—
	M14	14.0	1.5	177	18.0	130	—	206	21.0	152	—

1. **Special parts are excluded.**
2. **This standard is applicable to bolts having the following marks embossed on the bolt head.**

*: Nominal diameter

Grade		Mark
4T	.....	4
7T	.....	7
9T	.....	9

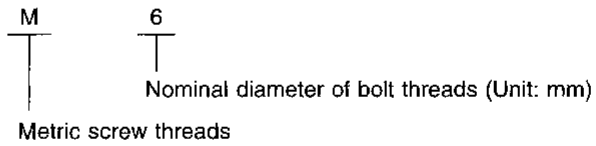

Simpo PDF Merge and Split Unregistered Version - http://www.simpopdf.com

SAE J1930 Terminology List

All emission related terms used in this publication in accordance with SAE J1930 are listed. Accordingly, new terms, new acronyms/abbreviations and old terms are listed in the following chart.

***: Not applicable

NEW TERM	NEW ACRONYM / ABBREVIATION	OLD TERM
Air cleaner	ACL	Air cleaner
Barometric pressure	BARO	***
Barometric pressure sensor-BCDD	BAROS-BCDD	BCDD
Camshaft position	CMP	***
Camshaft position sensor	CMPS	Crank angle sensor
Carburetor	CARB	Carburetor
Charge air cooler	CAC	Intercooler
Closed loop	CL	Closed loop
Closed throttle position switch	CTP switch	Idle switch
Clutch pedal position switch	CPP switch	Clutch switch
Continuous fuel injection system	CFI system	***
Continuous trap oxidizer system	CTOX system	***
Crankshaft position	CKP	***
Crankshaft position sensor	CKPS	***
Data link connector	DLC	***
Data link connector for CONSULT	DLC for CONSULT	Diagnostic connector for CONSULT
Diagnostic test mode	DTM	Diagnostic mode
Diagnostic test mode selector	DTM selector	Diagnostic mode selector
Diagnostic test mode I	DTM I	Mode I
Diagnostic test mode II	DTM II	Mode II
Diagnostic trouble code	DTC	Malfunction code
Direct fuel injection system	DFI system	***
Distributor ignition system	DI system	Ignition timing control
Early fuel evaporation-mixture heater	EFE-mixture heater	Mixture heater
Early fuel evaporation system	EFE system	Mixture heater control
Electrically erasable programmable read only memory	EEPROM	***
Electronic ignition system	EI system	Ignition timing control
Engine control	EC	***
Engine control module	ECM	ECCS control unit
Engine coolant temperature	ECT	Engine temperature
Engine coolant temperature sensor	ECTS	Engine temperature sensor
Engine modification	EM	***
Engine speed	RPM	Engine speed
Erasable programmable read only memory	EPROM	***
Evaporative emission canister	EVAP canister or Canister	Canister

SAE J1930 Terminology List (Cont'd)

Simpo PDF Merge and Split Unregistered Version - http://www.simpopdf.com

***: Not applicable

NEW TERM	NEW ACRONYM / ABBREVIATION	OLD TERM
Evaporative emission system	EVAP system	Evaporative emission control system
Exhaust gas recirculation valve	EGR valve	EGR valve
Exhaust gas recirculation control-BPT valve	EGRC-BPT valve	BPT valve
Exhaust gas recirculation control-solenoid valve	EGRC-solenoid valve	EGR control solenoid valve
Exhaust gas recirculation temperature sensor	EGRT sensor	Exhaust gas temperature sensor
EGR temperature sensor		
Flash electrically erasable programmable read only memory	FEEPROM	***
Flash erasable programmable read only memory	FEPROM	***
Flexible fuel sensor	FFS	***
Flexible fuel system	FF system	***
Fuel pressure regulator	***	Pressure regulator
Fuel pressure regulator control solenoid valve	***	PRVR control solenoid valve
Fuel trim	FT	***
Heated oxygen sensor	HO2S	Exhaust gas sensor
Idle air control system	IAC system	Idle speed control
Idle air control valve-air regulator	IACV-air regulator	Air regulator
Idle air control valve-auxiliary air control valve	IACV-AAC valve	Auxiliary air control (AAC) valve
Idle air control valve-FICD solenoid valve	IACV-FICD solenoid valve	FICD solenoid valve
Idle air control valve-idle up control solenoid valve	IACV-idle up control solenoid valve	Idle up control solenoid valve
Idle speed control-FI pot	ISC-FI pot	FI pot
Idle speed control system	ISC system	***
Ignition control	IC	***
Ignition control module	ICM	***
Indirect fuel injection system	IFI system	***
Intake air	IA	Air
Intake air temperature sensor	IAT sensor	Air temperature sensor
Knock	***	Detonation
Knock sensor	KS	Detonation sensor
Malfunction indicator lamp	MIL	Check engine light
Manifold absolute pressure	MAP	***
Manifold absolute pressure sensor	MAPS	***
Manifold differential pressure	MDP	***
Manifold differential pressure sensor	MDPS	***

SAE J1930 Terminology List (Cont'd)

Simpo PDF Merge and Split Unregistered Version - http://www.simpopdf.com

***: Not applicable

NEW TERM	NEW ACRONYM / ABBREVIATION	OLD TERM
Manifold surface temperature	MST	***
Manifold surface temperature sensor	MSTS	***
Manifold vacuum zone	MVZ	***
Manifold vacuum zone sensor	MVZS	***
Mass air flow sensor	MAFS	Air flow meter
Mixture control solenoid valve	MC solenoid valve	Air-fuel ratio control solenoid valve
Multiport fuel injection system	MFI system	Fuel injection control
Neutral position switch	***	Neutral switch
Nonvolatile random access memory	NVRAM	***
On board diagnostic system	OBD system	Self-diagnosis
Open loop	OL	Open loop
Oxidation catalyst	OC	Catalyst
Oxidation catalytic converter system	OC system	***
Oxygen sensor	O2S	Exhaust gas sensor
Park position switch	***	Park switch
Park/neutral position switch	PNP switch	Park/neutral switch
Periodic trap oxidizer system	PTOX system	***
Positive crankcase ventilation	PCV	Positive crankcase ventilation
Positive crankcase ventilation valve	PCV valve	PCV valve
Powertrain control module	PCM	***
Programmable read only memory	PROM	***
Pulsed secondary air injection control solenoid valve	PAIRC solenoid valve	AIV control solenoid valve
Pulsed secondary air injection system	PAIR system	Air induction valve (AIV) control
Pulsed secondary air injection valve	PAIR valve	Air induction valve
Random access memory	RAM	***
Read only memory	ROM	***
Scan tool	ST	***
Secondary air injection pump	AIR pump	***
Secondary air injection system	AIR system	***
Sequential multiport fuel injection system	SFI system	Sequential fuel injection
Service reminder indicator	SRI	***
Simultaneous multiport fuel injection system	***	Simultaneous fuel injection
Smoke puff limiter system	SPL system	***
Supercharger	SC	***
Supercharger bypass	SCB	***
System readiness test	SRT	***
Thermal vacuum valve	TVV	Thermal vacuum valve
Three way catalyst	TWC	Catalyst
Three way catalytic converter system	TWC system	***
Three way + oxidation catalyst	TWC+OC	Catalyst

SAE J1930 Terminology List (Cont'd)

Simpo PDF Merge and Split Unregistered Version - http://www.simpopdf.com

***: Not applicable

NEW TERM	NEW ACRONYM / ABBREVIATION	OLD TERM
Three way+oxidation catalytic converter system	TWC+OC system	***
Throttle body	TB	Throttle chamber SPI body
Throttle body fuel injection system	TBI system	Fuel injection control
Throttle position	TP	Throttle position
Throttle position sensor	TPS	Throttle sensor
Throttle position switch	TP switch	Throttle switch
Torque converter clutch solenoid valve	TCC solenoid valve	Lock-up cancel solenoid Lock-up solenoid
Transmission control module	TCM	A/T control unit
Turbocharger	TC	Turbocharger
Vehicle speed sensor	VSS	Vehicle speed sensor
Volume air flow sensor	VAFS	Air flow meter
Warm up oxidation catalyst	WU-OC	Catalyst
Warm up oxidation catalytic converter system	WU-OC system	***
Warm up three way catalyst	WU-TWC	Catalyst
Warm up three way catalytic converter system	WU-TWC system	***
Wide open throttle position switch	WOTP switch	Full switch

Simpo PDF Merge and Split Unregistered Version - http://www.simpopdf.com

SECTION HA

CONTENTS

PRECAUTIONS AND PREPARATION 2
Supplemental Restraint System (SRS) "AIR BAG" 2
Precautions for Working with R-134a 2
General Refrigerant Precautions 3
Precautions for Refrigerant Connection 3
Precautions for Servicing Compressor 6
Special Service Tools 7
R-134a Service Tools and Equipment 8
Precautions for Service Equipment 10
DESCRIPTION 12
Refrigeration Cycle 12
Control Operation 13
Component Layout 14
Discharge Air Flow 15
Harness Layout 16
Circuit Diagram 18
Wiring Diagram –HEATER– 19
Wiring Diagram –A/C– 20
Operational Check 22
TROUBLE DIAGNOSES 24
How to Perform Trouble Diagnoses for Quick and Accurate Repair 24
Blower Motor Circuit 25
Air Outlet 29
Intake Door 31
Magnet Clutch Circuit 32
Trouble Diagnosis Procedure For Insufficient Cooling 37
Performance Test Diagnoses 38
Performance Chart 40
Trouble Diagnoses for Abnormal Pressure 41
Trouble Diagnosis for Insufficient Heating 44
Trouble Diagnosis for Noise 46
SERVICE PROCEDURES 47
Refrigerant Lines 47
Checking Refrigerant Leaks 48
R-134a Service Procedure 51
Compressor Lubricant Quantity 53
Compressor Mounting 55
Belt Tension 55
Fast Idle Control Device (FICD) 55
Condenser 55
Compressor 56
Compressor Clutch 56
Thermal Protector 59
Heater Unit (Heater Core) 60
Cooling Unit (A/C Evaporator) 61
Blower Case and Motor 62
Fan Lever and Illumination Bulbs 63
SERVICE DATA AND SPECIFICATIONS (SDS) 64
General Specifications 64
Inspection and Adjustment 64

When you read wiring diagrams:
- **Read GI section, "HOW TO READ WIRING DIAGRAMS".**
- **See EL section, "POWER SUPPLY ROUTING" for power distribution circuit.**

When you perform trouble diagnoses, read GI section, "HOW TO FOLLOW FLOW CHART IN TROUBLE DIAGNOSES" and "HOW TO PERFORM EFFICIENT DIAGNOSIS FOR AN ELECTRICAL INCIDENT".

Simpo PDF Merge and Split Unregistered Version - http://www.simpopdf.com

Supplemental Restraint System (SRS) "AIR BAG"

The Supplemental Restraint System "AIR BAG", used along with a seat belt, helps to reduce the risk or severity of injury to the driver and front passenger in a frontal collision. The Supplemental Restraint System consists of air bag modules (located in the center of the steering wheel and in the instrument panel on the passenger side), a diagnosis sensor unit, a crash zone sensor (4WD models), warning lamp, wiring harness and spiral cable.

The vehicle is equipped with a passenger air bag deactivation switch. Because no rear seat exists where a rear-facing child restraint can be placed, the switch is designed to turn off the passenger air bag so that a rear-facing child restraint can be used in the front passenger seat. The switch is located in the center of the instrument panel, near the ashtray. When the switch is turned to the ON position, the passenger air bag is enabled and could inflate in a frontal collision. When the switch is turned to the OFF position, the passenger air bag is disabled and will not inflate in a frontal collision. A passenger air bag OFF indicator on the instrument panel lights up when the passenger air bag is switched OFF. The driver air bag always remains enabled and is not affected by the passenger air bag deactivation switch.

Information necessary to service the system safely is included in the **RS section** of this Service Manual.

WARNING:

- **To avoid rendering the SRS inoperative, which could increase the risk of personal injury or death in the event of a collision which would result in air bag inflation, all maintenance should be performed by an authorized NISSAN dealer.**
- **Improper maintenance, including incorrect removal and installation of the SRS, can lead to personal injury caused by unintentional activation of the system.**
- **Do not use electrical test equipment on any circuit related to the SRS unless instructed to in this Service Manual. SRS wiring harnesses are covered with yellow insulation either just before the harness connectors or on the complete harness, for easy identification.**
- **The vehicle is equipped with a passenger air bag deactivation switch which can be operated by the customer. When the passenger air bag is switched OFF, the passenger air bag is disabled and will not inflate in a frontal collision. When the passenger air bag is switched ON, the passenger air bag is enabled and could inflate in a frontal collision. After SRS maintenance or repair, make sure the passenger air bag deactivation switch is in the same position (ON or OFF) as when the vehicle arrived for service.**

Precautions for Working with R-134a

WARNING:

- **CFC-12 (R-12) refrigerant and R-134a refrigerant are not compatible. These refrigerants must never be mixed, even in the smallest amounts. If the refrigerants are mixed, compressor malfunction is likely.**
- **Use only specified lubricant for the R-134a A/C system and R-134a components. If lubricant other than that specified is used, compressor malfunction is likely.**
- **The specified R-134a lubricant rapidly absorbs moisture from the atmosphere. The following handling precautions must be observed:**
  - **a: When removing refrigerant components from a vehicle, immediately cap (seal) the component to minimize the entry of moisture from the atmosphere.**
  - **b: When installing refrigerant components to a vehicle, do not remove the caps (unseal) until just before connecting the components. Connect all refrigerant loop components as quickly as possible to minimize the entry of moisture into the system.**
  - **c: Only use the specified lubricant from a sealed container. Immediately reseal containers of lubricant. Without proper sealing, lubricant will become moisture saturated and should not be used.**
  - **d: Avoid breathing A/C refrigerant and lubricant vapor or mist. Exposure may irritate eyes, nose and throat. Remove R-134a from the A/C system using certified service equipment meeting requirements of SAE J2210 (R-134a recycling equipment) or J2209 (R-134a recovery equipment). If accidental system discharge occurs, ventilate work area before resuming service. Additional health and safety information may be obtained from refrigerant and lubricant manufacturers.**
  - **e: Do not allow lubricant to contact styrofoam parts. Damage may result.**

Simpo PDF Merge and Split Unregistered Version - http://www.simpopdf.com

General Refrigerant Precautions

WARNING:

- **Do not release refrigerant into the air. Use approved recovery/recycling equipment to capture the refrigerant every time an air conditioner system is discharged. Always follow the manufacturers recommendations for use of the recovery/recycling equipment.**
- **Always wear eye and hand protection (goggles and gloves) when working with any refrigerant or air conditioner system.**
- **Do not store or heat refrigerant containers above 52°C (125°F).**
- **Do not heat a refrigerant container with an open flame; if container warming is required, place the bottom of the container in a pail of warm water.**
- **Do not intentionally drop, puncture, or incinerate refrigerant containers.**
- **Keep refrigerant away from open flames: poisonous gas will be produced if refrigerant burns.**
- **Refrigerant will displace oxygen, therefore be certain to work in well ventilated areas to prevent suffocation.**
- **Do not introduce compressed air to any refrigerant container or refrigerant component.**

Precautions for Refrigerant Connection

A new type refrigerant connection has been introduced to all refrigerant lines except the following location:

- Expansion valve to cooling unit.

FEATURES OF NEW TYPE REFRIGERANT CONNECTION

- The O-ring has been relocated. It has also been provided with a groove for proper installation. This eliminates the chance of the O-ring being caught in, or damaged by, the mating part. The sealing direction of the O-ring is now set vertically in relation to the contacting surface of the mating part to improve sealing characteristics.
- The reaction force of the O-ring will not occur in the direction that causes the joint to pull out, thereby facilitating piping connections.

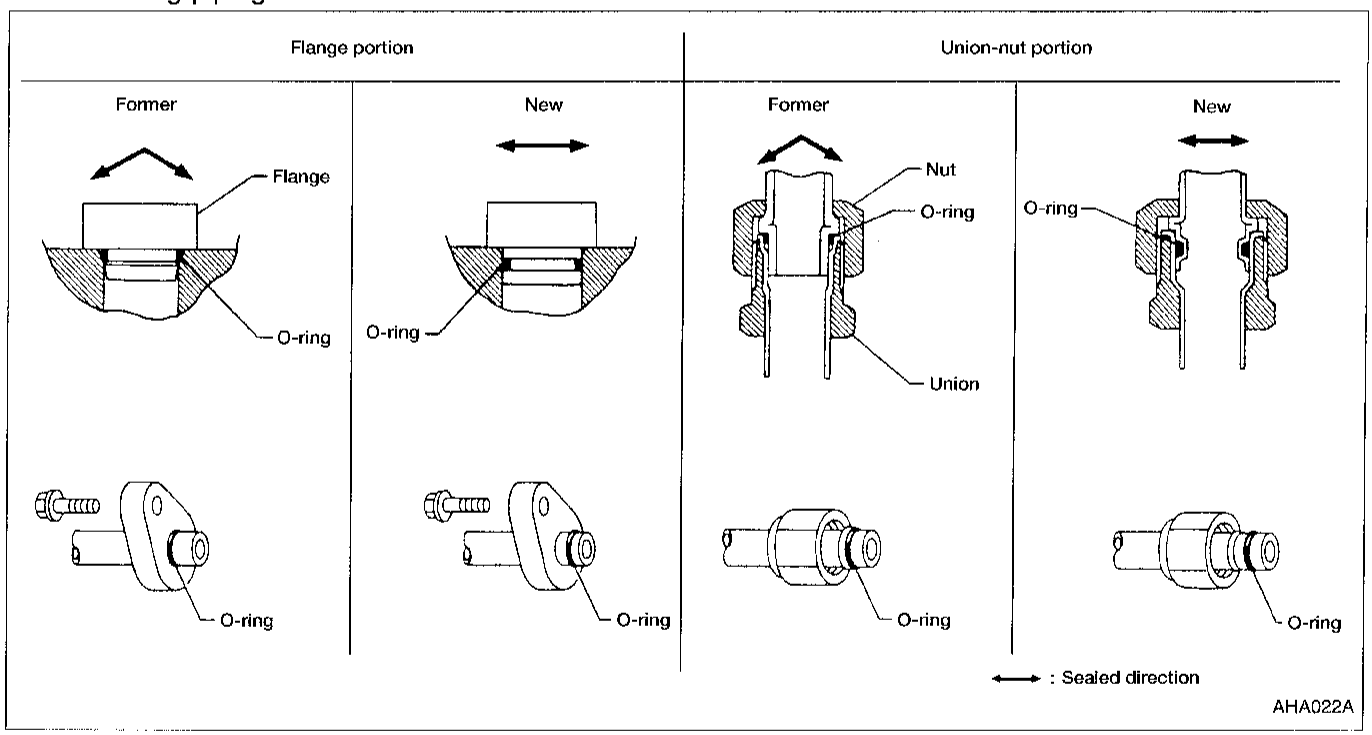

Simpo PDF Merge and Split Unregistered Version - http://www.simpopdf.com

Precautions for Refrigerant Connection (Cont'd)

O-RING AND REFRIGERANT CONNECTION

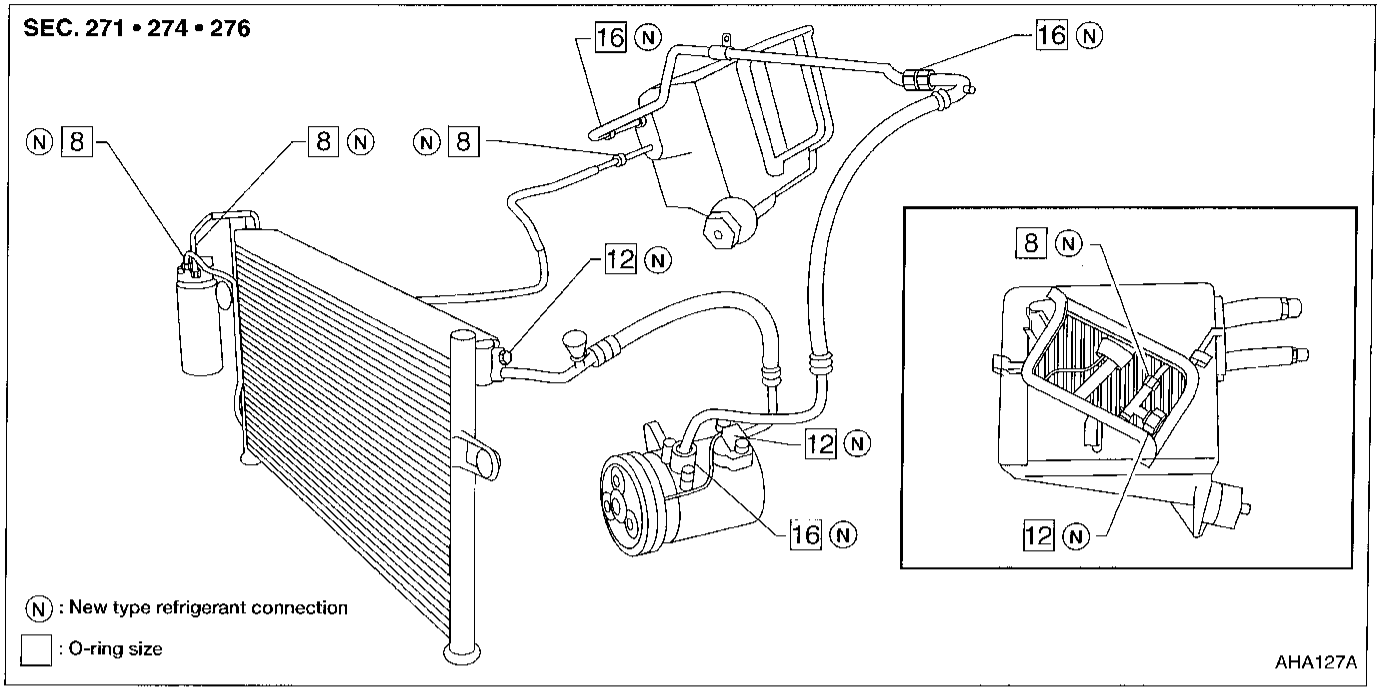

CAUTION:
The new and former refrigerant connections use different O-ring configurations. Do not confuse O-rings since they are not interchangeable. If a wrong O-ring is installed, refrigerant will leak at, or around, the connection.

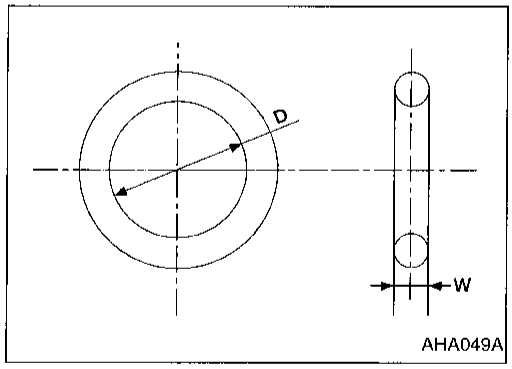

O-ring part numbers and specifications

Connection type	O-ring size	Part number	D mm (in)	W mm (in)
New	8	92471 N8210	6.8 (0.268)	1.85 (0.0728)
Former		92470 N8200	6.07 (0.2390)	1.78 (0.0701)
New	12	92472 N8210	10.9 (0.429)	2.43 (0.0957)
Former		92475 71L00	11.0 (0.433)	2.4 (0.094)
New	16	92473 N8210	13.6 (0.535)	2.43 (0.0957)
Former		92475 72L00	14.3 (0.563)	2.3 (0.0906)

Precautions for Refrigerant Connection (Cont'd)

Simpo PDF Merge and Split Unregistered Version - http://www.simpopdf.com

WARNING:
Make sure all refrigerant is discharged into the recycling equipment and the pressure in the system is less than atmospheric pressure. Then gradually loosen the discharge side hose fitting and remove it.

CAUTION:
When replacing or cleaning refrigerant cycle components, observe the following.

- **Do not leave compressor on its side or upside down for more than 10 minutes. Compressor lubricant will enter low pressure chamber.**
- **When connecting tubes, always use a torque wrench and a back-up wrench.**
- **After disconnecting tubes, plug all openings immediately to prevent entry of dirt and moisture.**
- **When installing an air conditioner unit in the vehicle, connect the pipes as the final stage of the operation. Do not remove seal caps from pipes and other components until just before connection.**
- **Allow components stored in cool areas to warm to working area temperature before removing seal caps. This prevents condensation from forming inside A/C components.**
- **Thoroughly remove moisture from the refrigeration system before charging the refrigerant.**
- **Always replace used O-rings.**
- **When connecting tube, apply lubricant to portions shown in illustration. Be careful not to apply lubricant to threaded portion.**
  Name: Nissan A/C System Lubricant Type R
  Part No.: KLH00-PAGR0
- **O-ring must be closely attached to inflated portion of tube.**
- **After inserting tube into union until O-ring is no longer visible, tighten nut to specified torque.**
- **After connecting line, conduct leak test and make sure that there is no leakage. When the gas leaking point is found, disconnect that line and replace the O-ring. Then tighten connections of seal seat to the specified torque.**

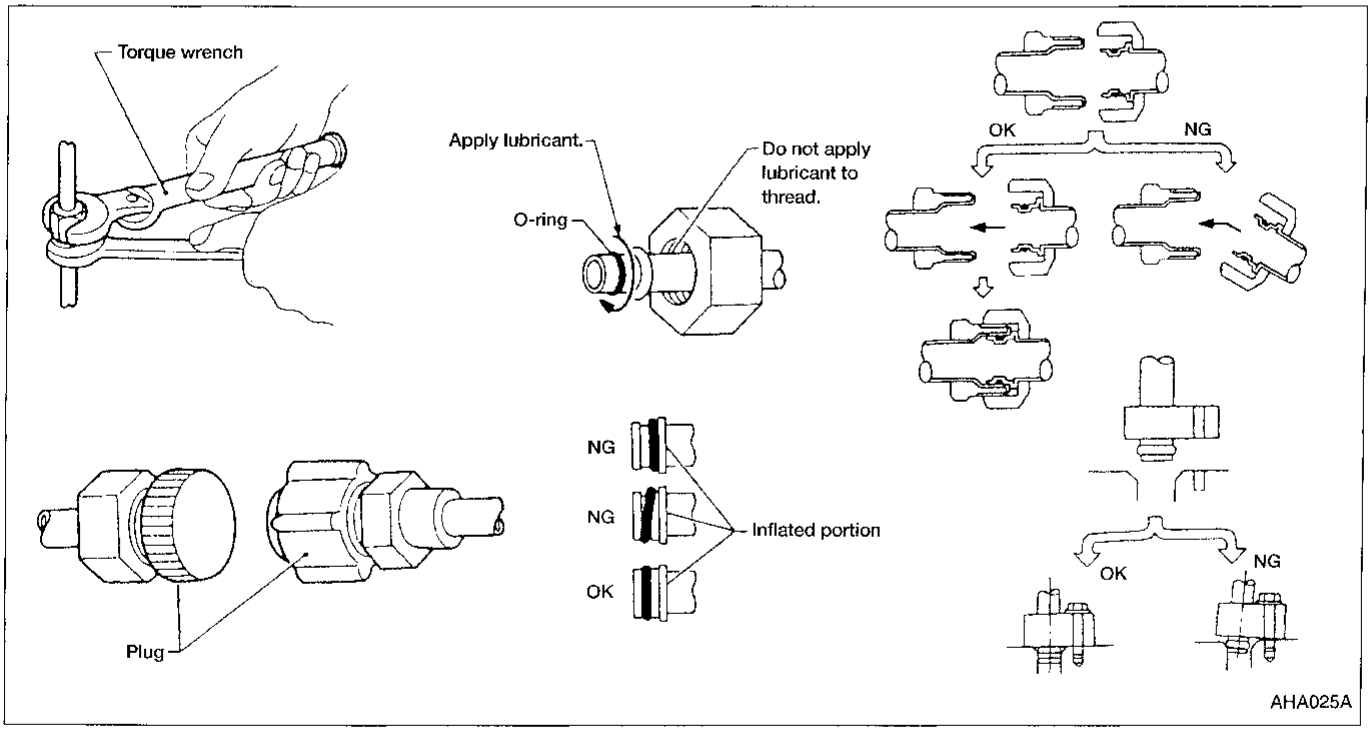

Simpo PDF Merge and Split Unregistered Version - http://www.simpopdf.com

Precautions for Servicing Compressor

- Plug all openings to prevent moisture and foreign matter from entering.
- Do not keep the compressor in the upside down position or laid on its side for more than 10 minutes.
- When replacing or repairing compressor, be sure to remove lubricant from the compressor and check the lubricant quantity extracted.
- When replacing or repairing compressor, follow lubricant checking and adjusting procedure exactly. Refer to "Compressor Lubricant Quantity", "SERVICE PROCEDURES", HA-53.
- Keep friction surfaces between clutch and pulley clean. If the surface is contaminated with oil, wipe it off by using a clean waste cloth moistened with thinner.
- After compressor service operation, turn the compressor shaft by hand more than five turns in both directions. This will equally distribute lubricant inside the compressor. After the compressor is installed, let the engine idle and operate the compressor for one hour.
- After replacing the compressor magnet clutch, apply voltage to the new one and check for normal operation.

Simpo PDF Merge and Split Unregistered Version - http://www.simpopdf.com

Special Service Tools

The actual shapes of Kent-Moore tools may differ from those of special service tools illustrated here.

Tool number (Kent-Moore No.) Tool name	Description	
KV99231260 (J-38874) Clutch disc wrench	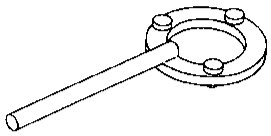 NT204	Removing shaft nut and clutch disc
KV99232340 (J-38874) Clutch disc puller	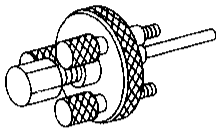 NT206	Removing clutch disc
KV99234330 (J-39024) Pulley installer	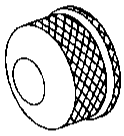 NT207	Installing pulley
KV99233130 (J-39023) Pulley puller	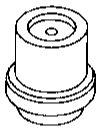 NT208	Removing pulley

Simpo PDF Merge and Split Unregistered Version - http://www.simpopdf.com

R-134a Service Tools and Equipment

Never mix R-134a refrigerant and/or its specified lubricant with CFC-12 (R-12) refrigerant and/or its lubricant.
Separate and non-interchangeable service equipment must be used for each type of refrigerant/lubricant.
Refrigerant container fittings, service hose fittings, and service equipment fittings (equipment which handles refrigerant and/or lubricant) are different between CFC-12 (R-12) and R-134a. This is to avoid mixed use of the refrigerants/lubricants.
Adapters to convert from one size fitting to the other must never be used: refrigerant/lubricant contamination will occur and compressor failure will result.

Tool number (Kent-Moore No.) Tool name	Description	Note
R-134a refrigerant	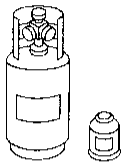 NT196	Container color: Light blue Container marking: R-134a Fitting size: Thread size ● large container 1/2″-16 ACME
KLH00-PAGR0 (—) Nissan A/C System Lubricant Type R	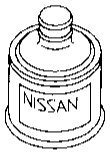 NT197	Type: Polyalkylene glycol oil (PAG), type R Application: R-134a vane rotary compressors (Nissan only) Lubricity: 40 mℓ (1.4 US fl oz, 1.4 Imp fl oz)
(J-39500-NI) Recovery/Recycling equipment (ACR4)	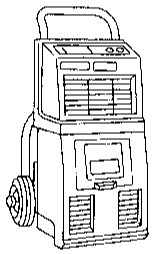 NT195	Function: Refrigerant Recovery and Recycling and Recharging
(J-39400) Electronic leak detector	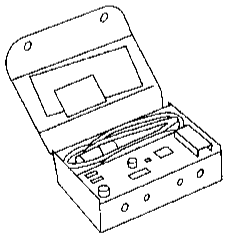 NT198	Power supply: ● DC 12 V (Cigarette lighter)

R-134a Service Tools and Equipment (Cont'd)

Simpo PDF Merge and Split Unregistered Version - http://www.simpopdf.com

Tool number (Kent-Moore No.) Tool name	Description	Note
(J-39183) Manifold gauge set (with hoses and couplers)	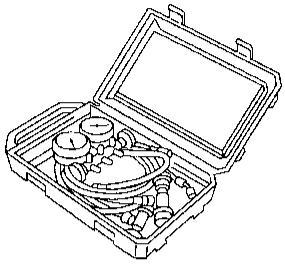 NT199	Identification: ● The gauge face indicates R-134a. Fitting size: Thread size ● 1/2″-16 ACME
Service hoses ● High-side hose (J-39501-72) ● Low-side hose (J-39502-72) ● Utility hose (J-39476-72)	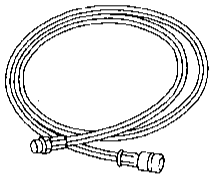 NT201	Hose color: ● Low hose: Blue with black stripe ● High hose: Red with black stripe ● Utility hose: Yellow with black stripe or green with black stripe Hose fitting to gauge: ● 1/2″-16 ACME
Service couplers ● High-side coupler (J-39500-20) ● Low-side coupler (J-39500-24)	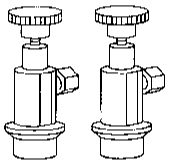 NT202	Hose fitting to service hose: ● M14 x 1.5 fitting (optional) or permanently attached
(J-39650) Refrigerant weight scale	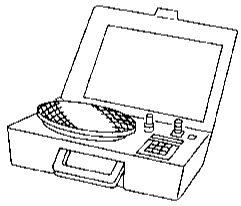 NT200	For measuring of refrigerant Fitting size: Thread size ● 1/2″-16 ACME
(J-39649) Vacuum pump (Including the isolator valve)	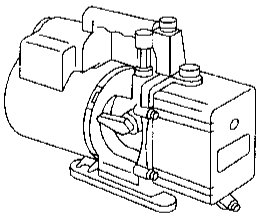 NT203	Capacity: ● Air displacement: 4 CFM ● Micron rating: 20 microns ● Oil capacity: 482 g (17 oz) Fitting size: Thread size ● 1/2″-16 ACME

Simpo PDF Merge and Split Unregistered Version - http://www.simpopdf.com

Precautions for Service Equipment

RECOVERY/RECYCLING EQUIPMENT

Follow the manufacturer's instructions for machine operation and machine maintenance. Never introduce any refrigerant other than that specified into the machine.

ELECTRONIC LEAK DETECTOR

Follow the manufacturer's instructions for tester operation and tester maintenance.

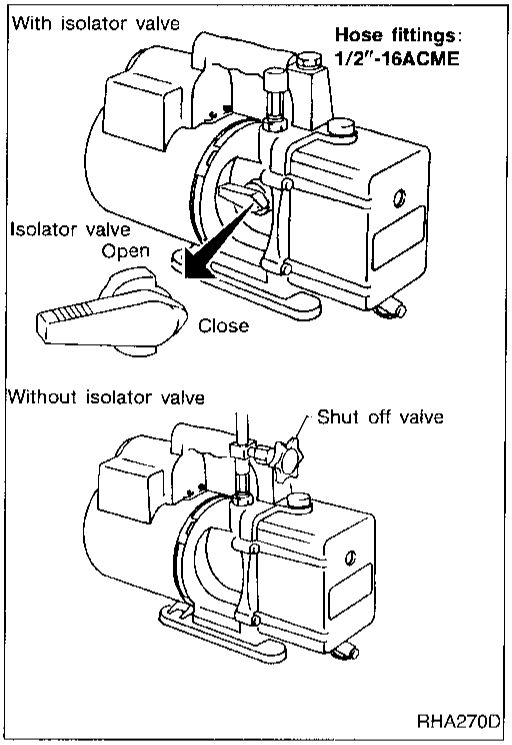

VACUUM PUMP

The lubricating oil contained inside the vacuum pump is not compatible with the specified lubricant for R-134a A/C systems. The vent side of the vacuum pump is exposed to atmospheric pressure. Therefore, if the pump is switched off after evacuation the lubricating oil may migrate into the hose. To prevent this, isolate the pump from the hose after evacuation (vacuuming).
This migration is avoided by placing a manual shut-off valve near the hose-to-pump connection, as follows:

- Usually vacuum pumps have a manual isolator valve as part of the pump. Close this valve to isolate the service hose from the pump.
- For pumps without an isolator valve, use a hose equipped with a manual shut-off valve near the pump end. Close the valve to isolate the hose from the pump.
- If the hose has an automatic shut-off valve, disconnect the hose from the pump. As long as the hose is connected, the valve is open and lubricating oil may migrate.

Some one-way valves open when vacuum is applied and close under a no vacuum condition. Such valves may restrict the pump's ability to pull a deep vacuum and are not recommended.

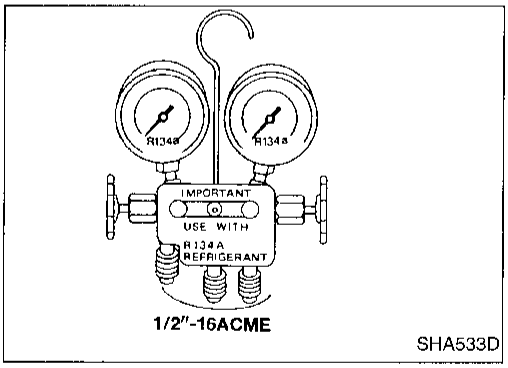

MANIFOLD GAUGE SET

Be sure the gauge set has 1/2"-16 ACME threaded connections for service hoses. Confirm the set has been used only with refrigerant R-134a along with specified lubricants.

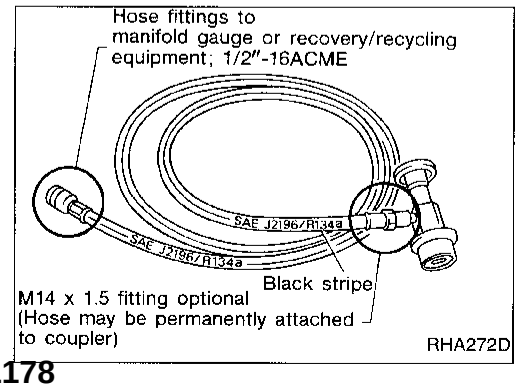

SERVICE HOSES

Be certain that the service hoses display the markings described (colored hose with black stripe). Be certain that all hoses include positive shut-off devices (either manual or automatic) near the end of the hoses opposite the manifold gauge.

Precautions for Service Equipment (Cont'd)

Simpo PDF Merge and Split Unregistered Version - http://www.simpopdf.com

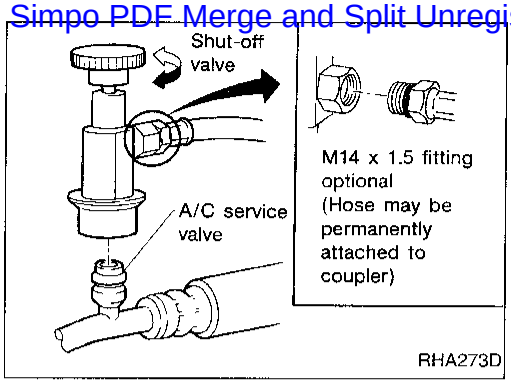

SERVICE COUPLERS

Never attempt to connect R-134a service couplers to a CFC-12 (R-12) A/C system. The R-134a couplers will not properly connect to the CFC-12 (R-12) system. However, if an improper connection is attempted, discharging and contamination can occur.

Shut-off valve rotation	A/C service valve
Clockwise	Open
Counterclockwise	Close

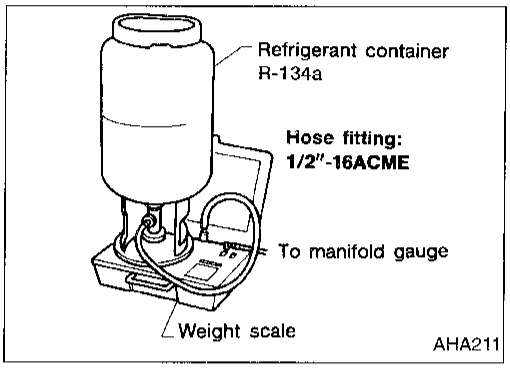

REFRIGERANT WEIGHT SCALE

When using a scale which controls refrigerant flow electronically, assure the following:

- Hose fitting size is 1/2"-16 ACME
- No refrigerant other than R-134a (along with specified lubricant) has been used with the scale.

CHARGING CYLINDER

Using a charging cylinder is not recommended. Refrigerant may be vented into the air through the cylinder's top valve when filling the cylinder.

Simpo PDF Merge and Split Unregistered Version - http://www.simpopdf.com

Refrigeration Cycle

REFRIGERANT FLOW

The refrigerant flow is in the standard pattern. Refrigerant flows through the compressor, condenser, liquid tank, evaporator, and back to the compressor.
The refrigerant evaporation through the evaporator coil is controlled by an externally equalized expansion valve, located inside the evaporator case.

FREEZE PROTECTION

The compressor cycles on and off to maintain the evaporator temperature within a specified range. When the evaporator coil temperature falls below a specified point, the thermo control amplifier interrupts the compressor operation. When the evaporator coil temperature rises above the specification, the thermo control amplifier allows compressor operation.

REFRIGERANT SYSTEM PROTECTION

Dual-pressure switch

The refrigerant system is protected against excessively high or low pressure. The protection is effected by the dual-pressure switch located on the liquid tank. If the pressure rises or falls out of specifications, the switch opens to interrupt the compressor operation.

Pressure relief valve

The refrigerant system is protected by a pressure relief valve. The valve is located on the end of the flexible high pressure hose near the compressor. When refrigerant system pressure increases abnormally [over 3,727 kPa (38 kg/cm^2, 540 psi)], the relief valve's port opens. The valve then releases refrigerant into the atmosphere.

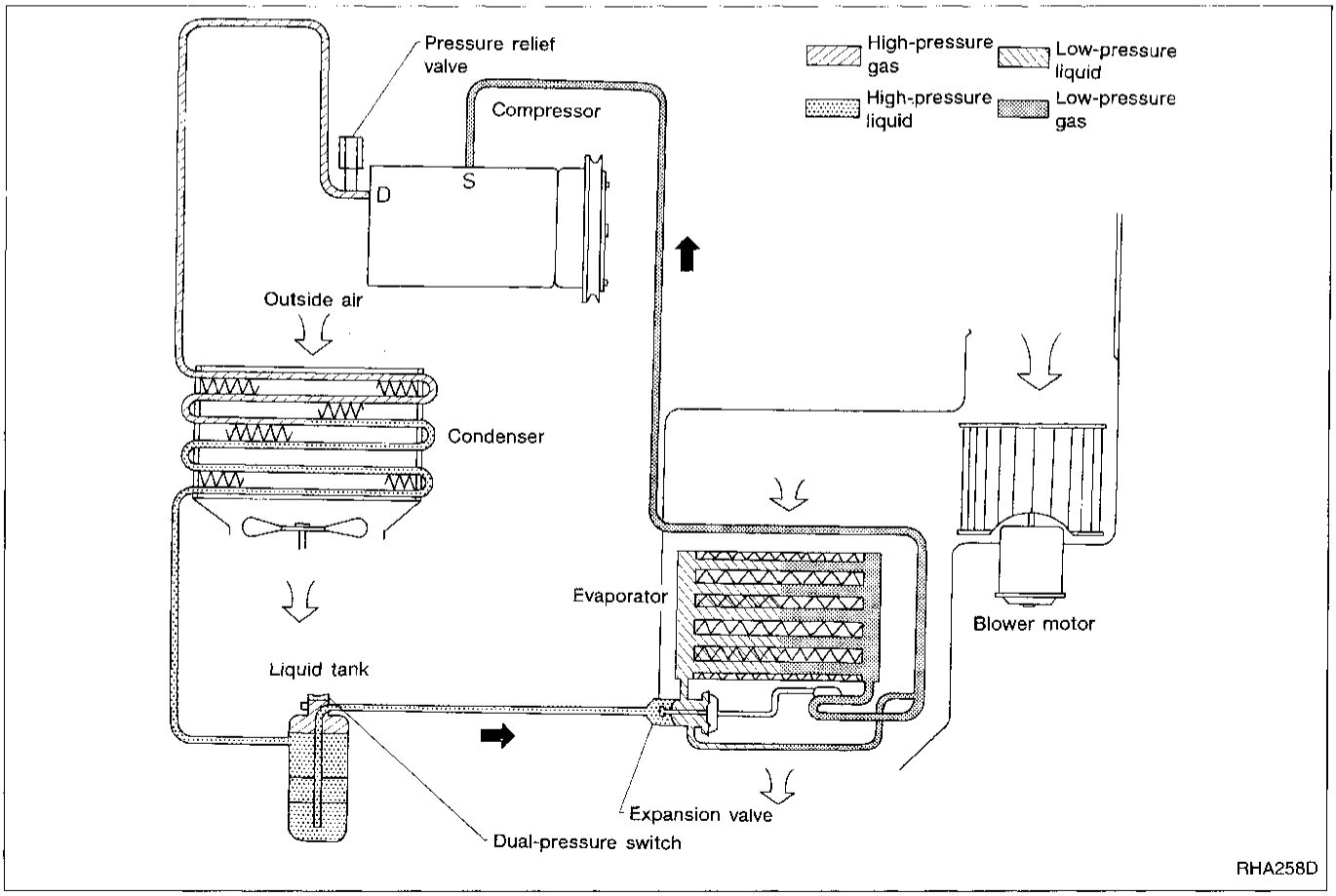

Simpo PDF Merge and Split Unregistered Version - http://www.simpopdf.com

Control Operation

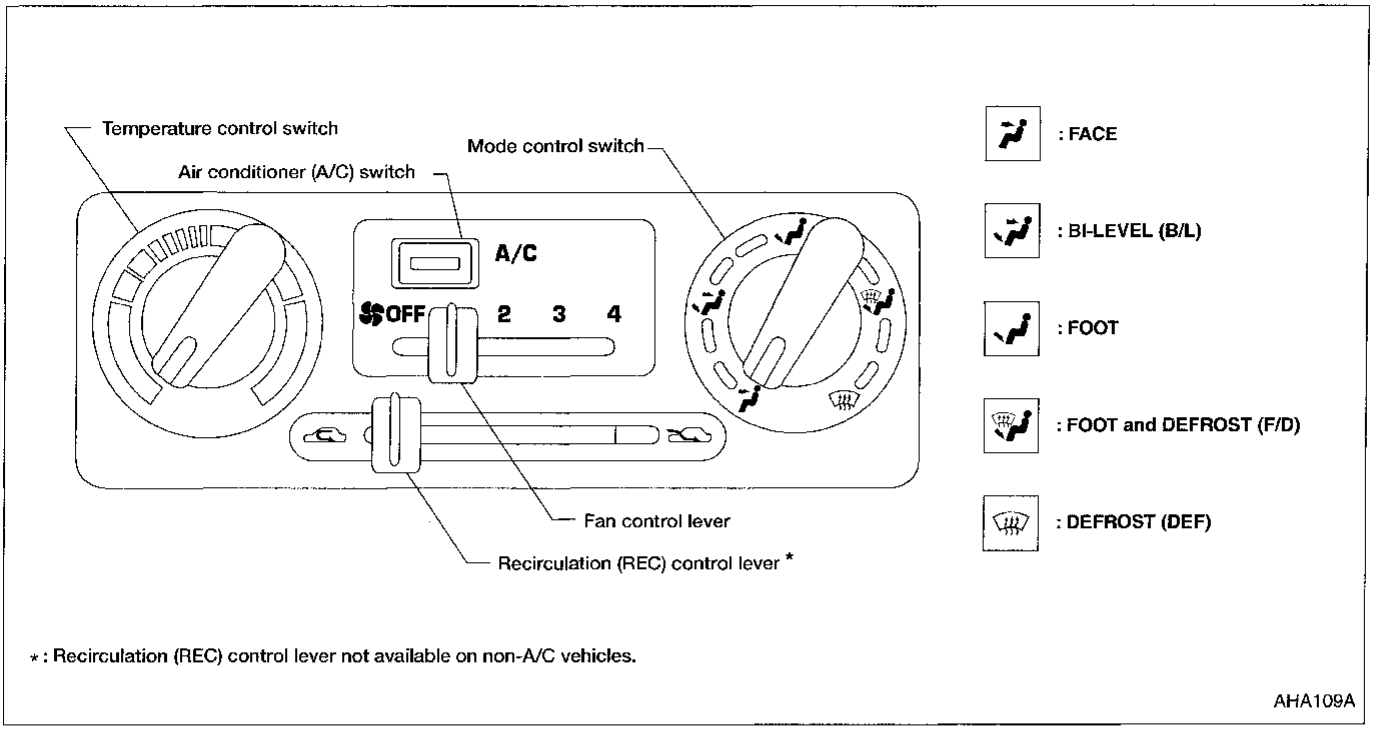

* : Recirculation (REC) control lever not available on non-A/C vehicles.

AHA109A

FAN CONTROL LEVER

This lever turns the fan ON and OFF, and controls fan speed.

MODE CONTROL SWITCH

This switch controls the outlet air flow.

TEMPERATURE CONTROL SWITCH

This switch allows adjustment of the temperature of the outlet air.

RECIRCULATION (REC) CONTROL LEVER

FRESH position:
Outside air is drawn into the passenger compartment.
Recirculation REC position:
Interior air is recirculated inside the vehicle.

AIR CONDITIONER SWITCH

The air conditioner switch controls the A/C system. When the switch is depressed with the fan ON, the compressor will turn ON. The indicator lamp will also light.

The air conditioner cooling function operates only when the engine is running.

Simpo PDF Merge and Split Unregistered Version - http://www.simpopdf.com

Component Layout

SEC. 270 • 271 • 272 • 273 • 685

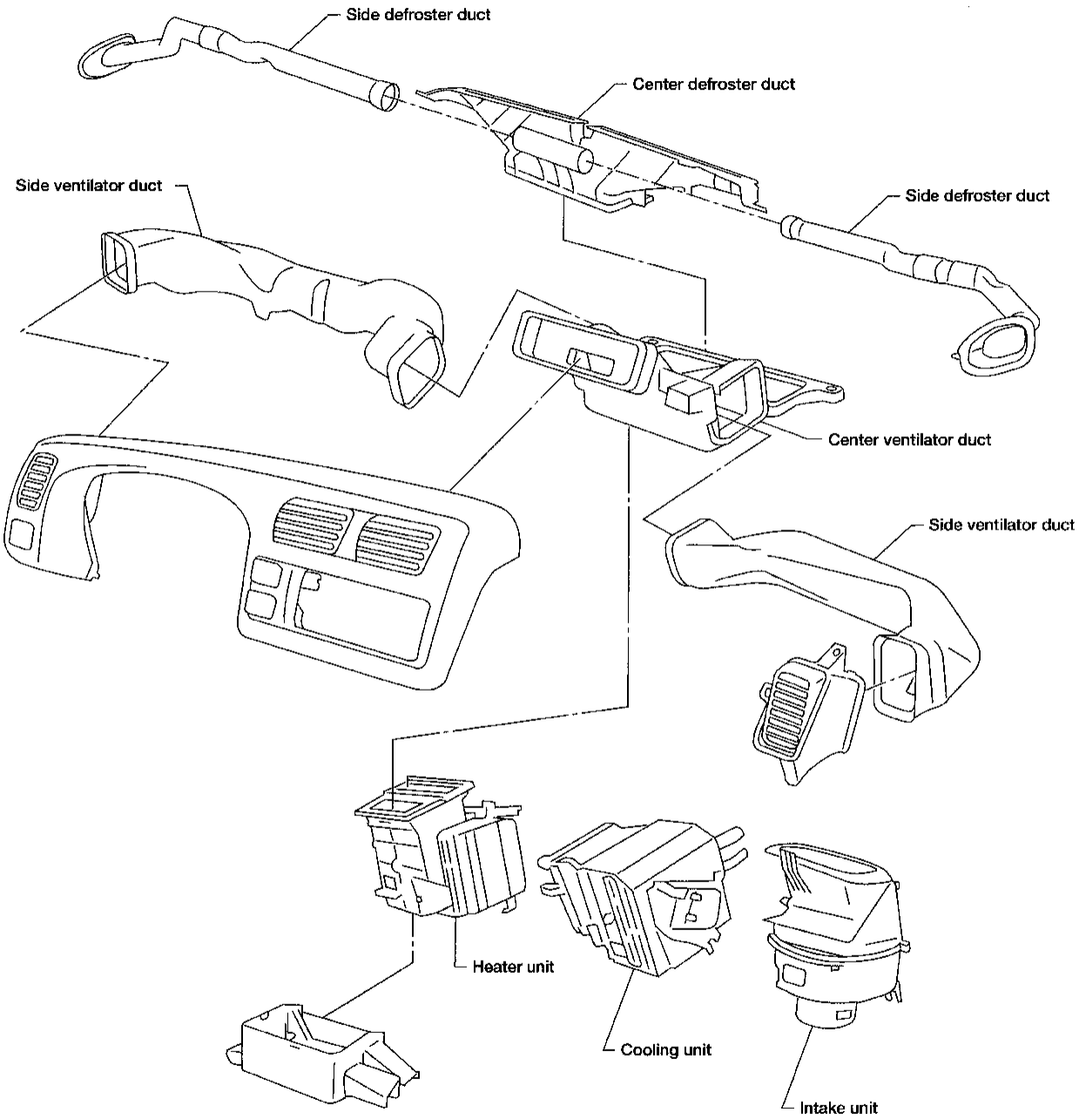

AHA123A

Simpo PDF Merge and Split Unregistered Version - http://www.simpopdf.com

Discharge Air Flow

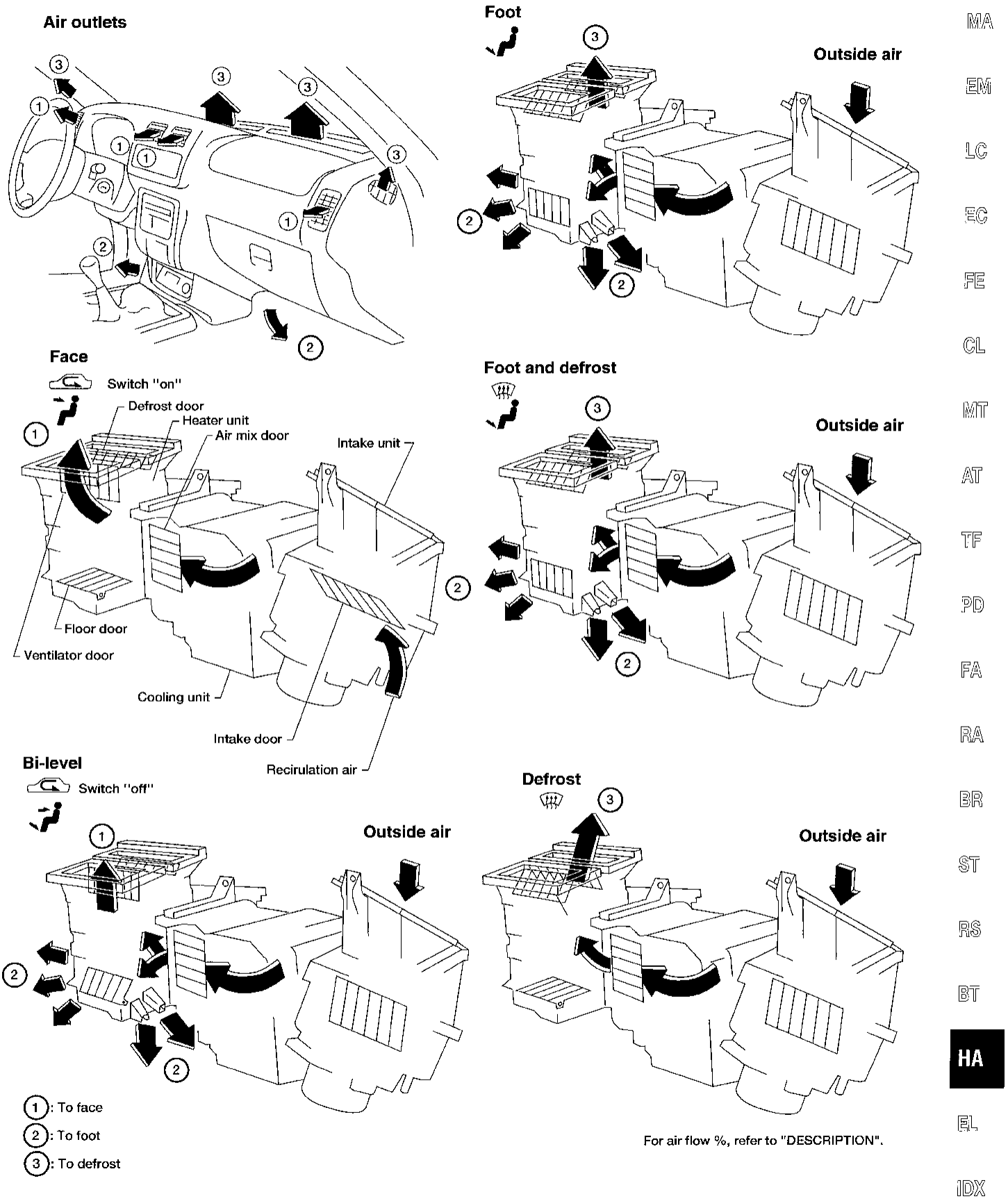

For air flow %, refer to "DESCRIPTION".

AHA119A

Simpo PDF Merge and Split Unregistered Version - http://www.simpopdf.com

Harness Layout

Engine compartment

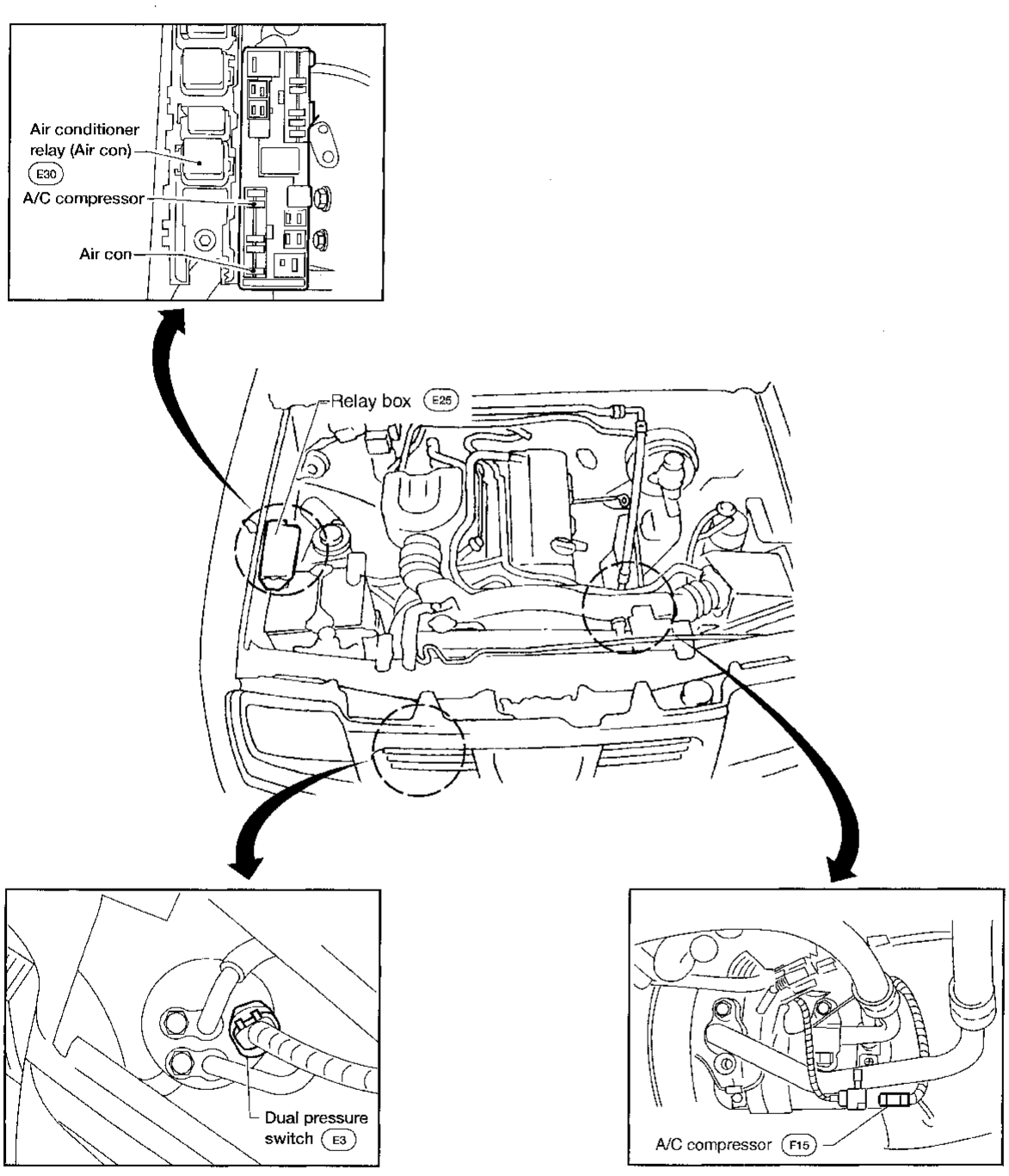

AHA133A

Harness Layout (Cont'd)

Simpo PDF Merge and Split Unregistered Version - http://www.simpopdf.com

Passenger Compartment

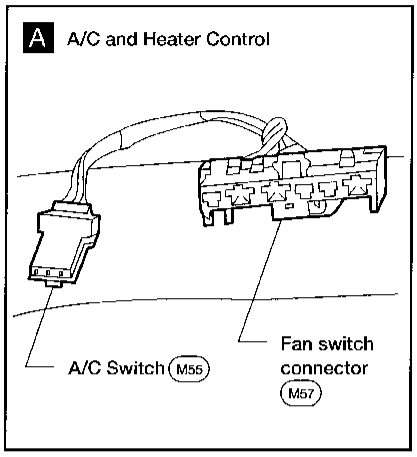

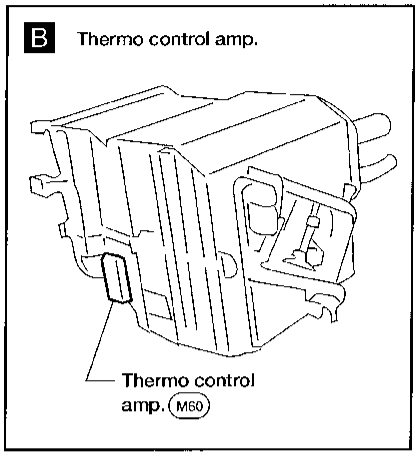

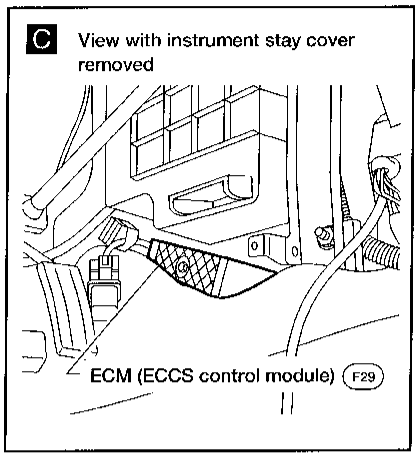

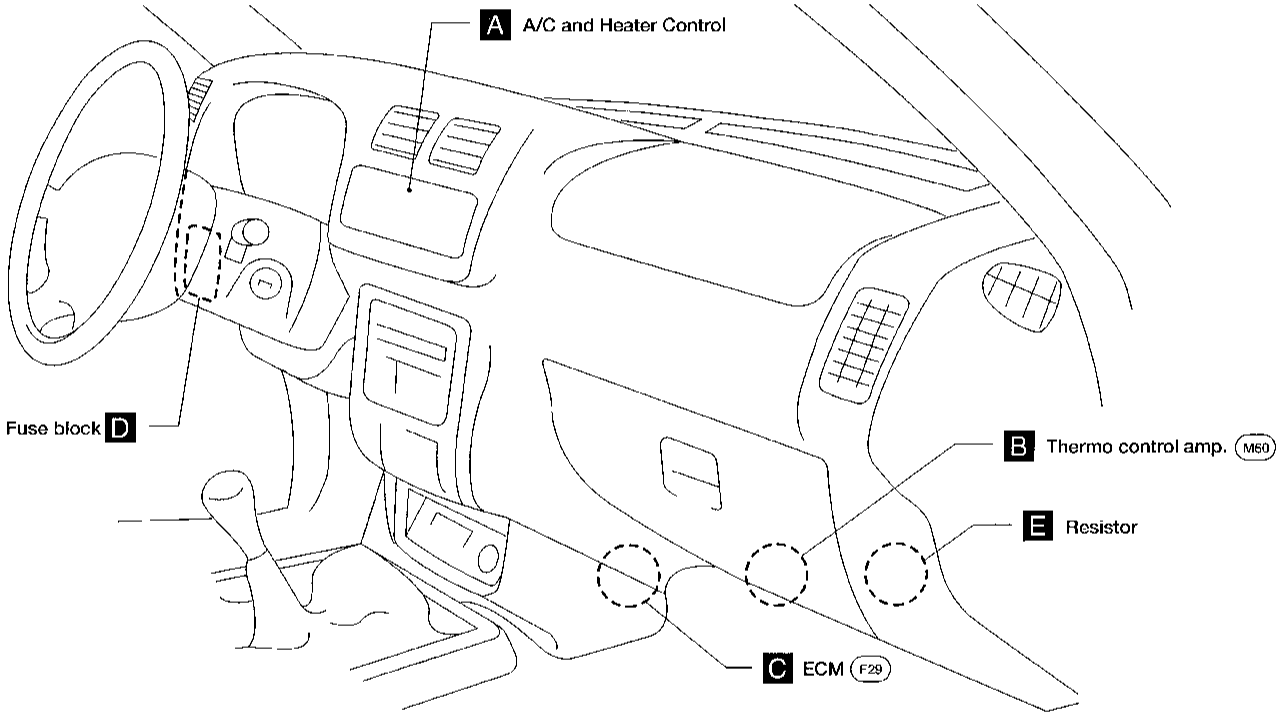

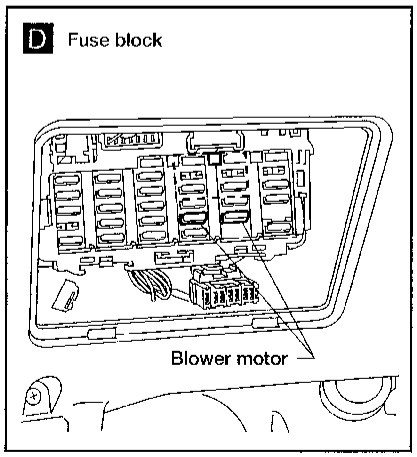

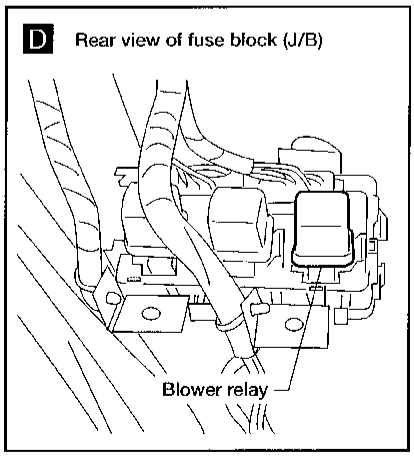

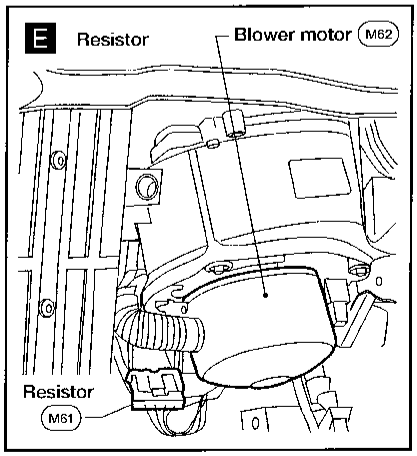

AHA148A

Simpo PDF Merge and Split Unregistered Version - http://www.simpopdf.com

Circuit Diagram

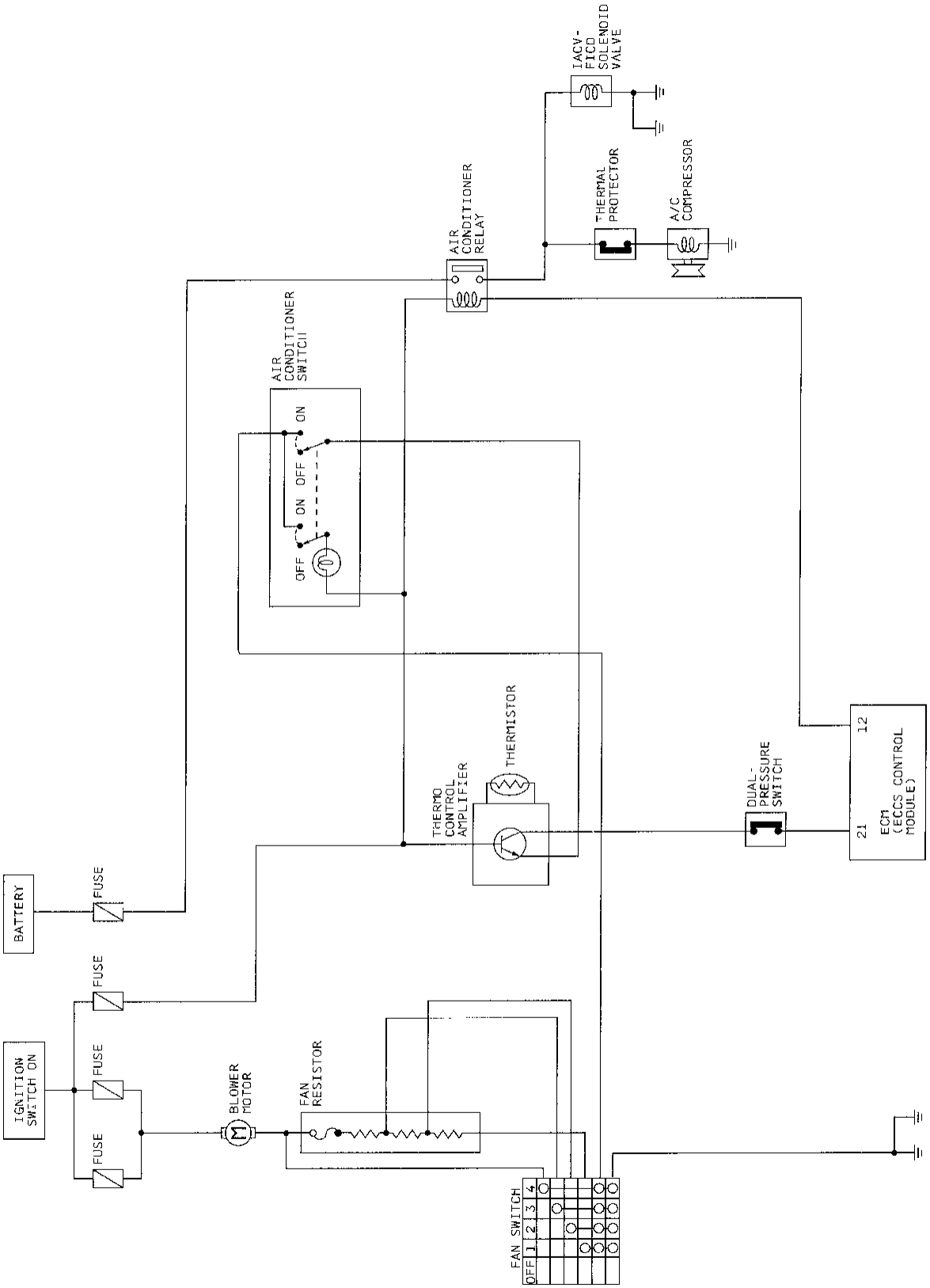

AHA041A

Simpo PDF Merge and Split Unregistered Version - http://www.simpopdf.com

Wiring Diagram –HEATER–

HA-HEATER-01

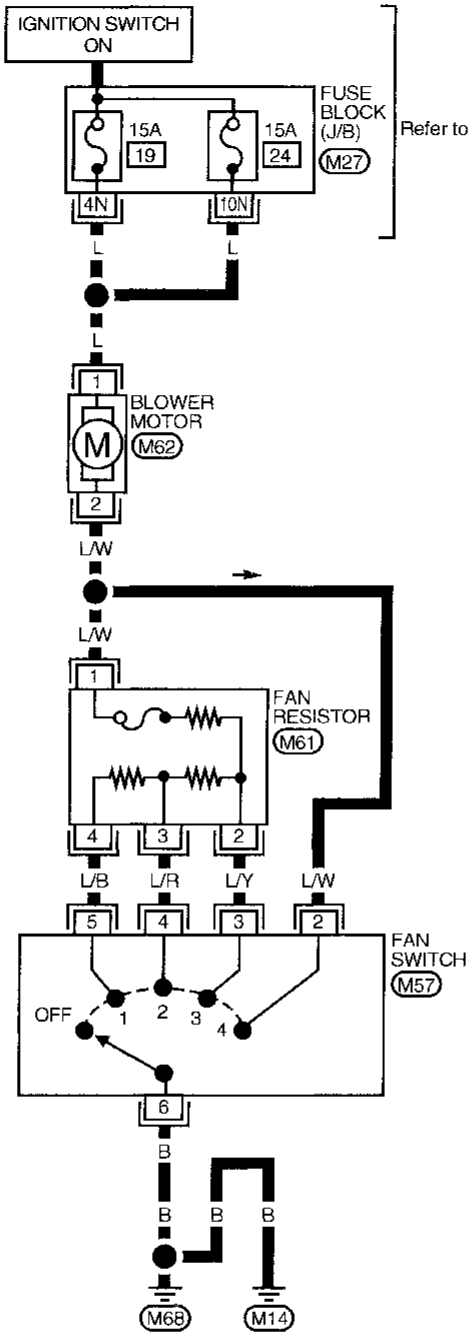

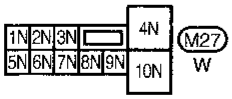

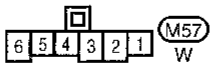

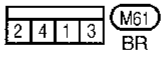

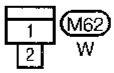

AHA042A

Simpo PDF Merge and Split Unregistered Version - http://www.simpopdf.com

Wiring Diagram –A/C–

HA-A/C-01

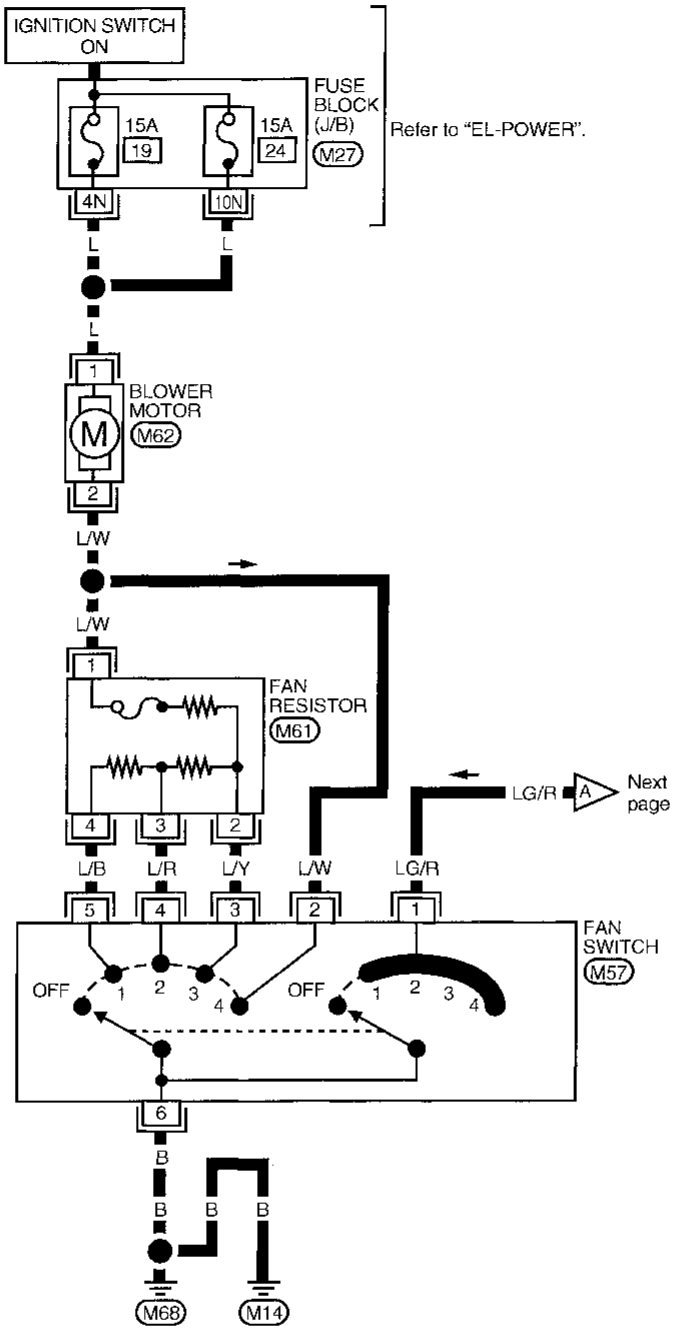

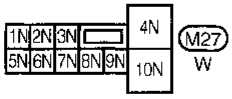

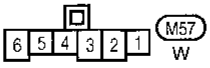

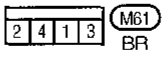

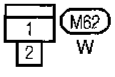

AHA043A

Simpo PDF Merge and Split Unregistered Version - http://www.simpopdf.com

HA-A/C-02

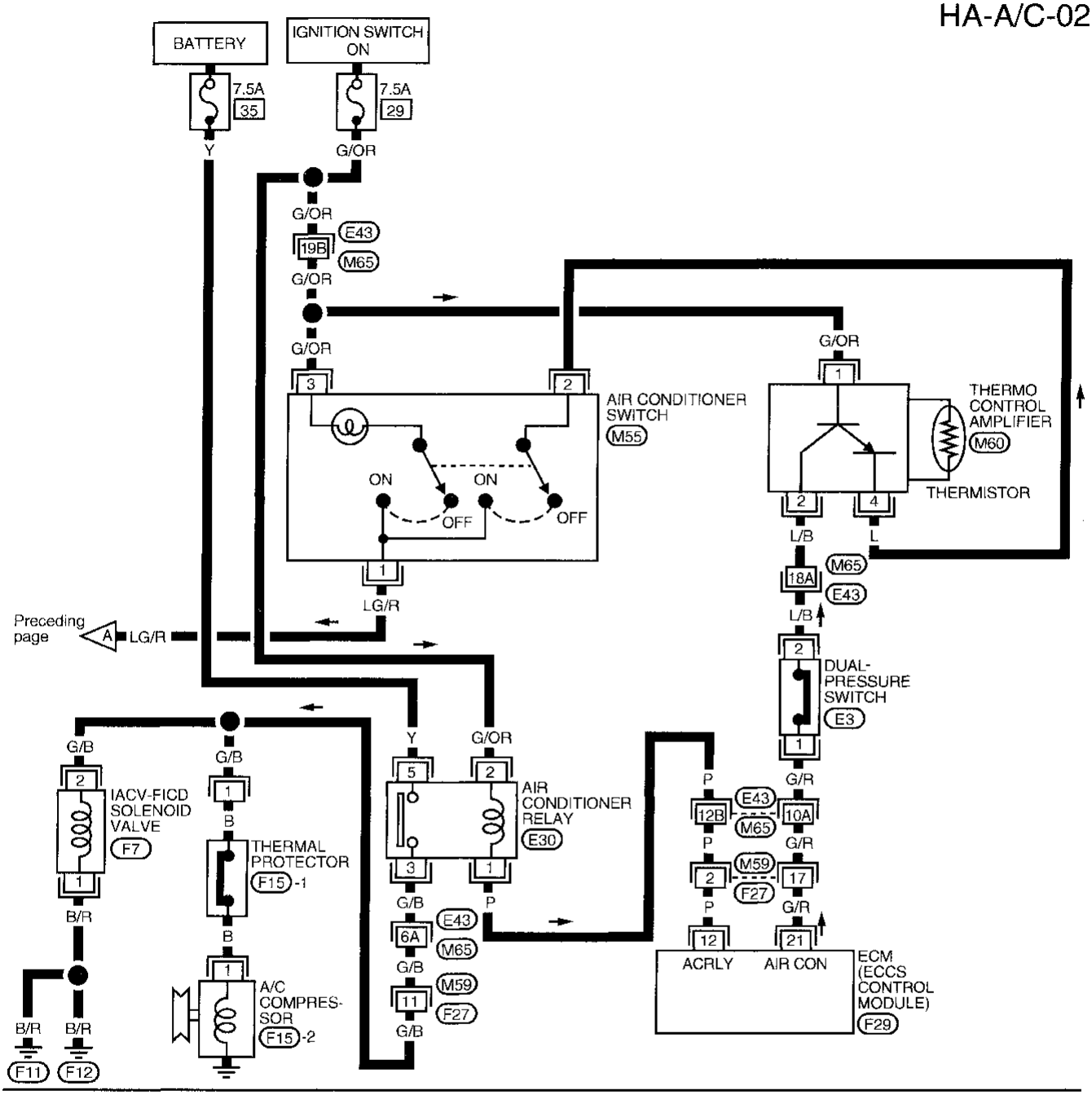

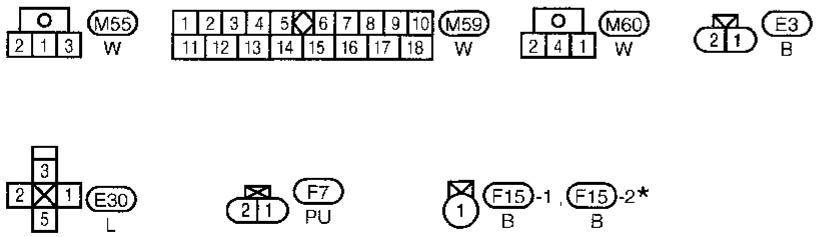

Refer to last page (Foldout page).
M65 , E43
F29

*: This connector is not shown in "HARNESS LAYOUT" of EL section.

AHA044A

Simpo PDF Merge and Split Unregistered Version - http://www.simpopdf.com

Operational Check

The purpose of the operational check is to confirm that the system operates properly.
After operational check is completed, go to SYMPTOM TABLE in How to Perform Trouble Diagnoses for Quick and Accurate Repair, HA-24.

CONDITIONS:

- **Engine running and at normal operating temperature.**

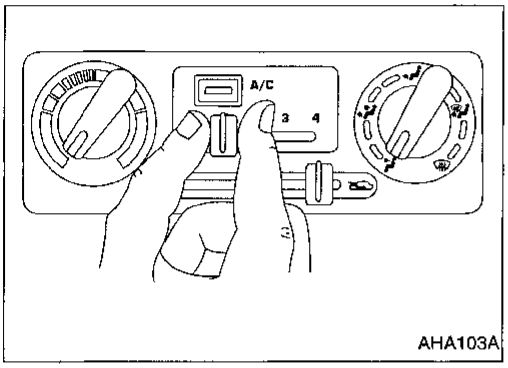

AHA103A

PROCEDURE:

1. Check blower

a. Slide fan control lever to 1-speed.
Blower should operate on 1-speed.
b. Then slide fan control lever to 2-speed, and continue checking blower speed until all speeds are checked.
c. Leave blower on 4-speed.

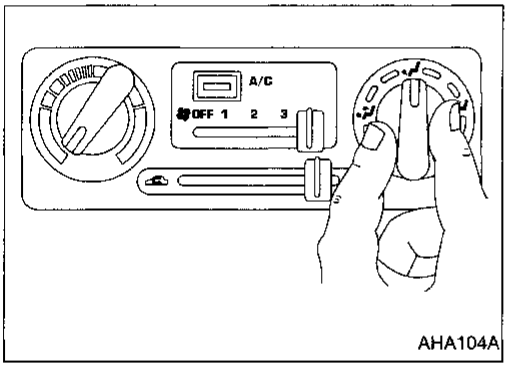

AHA104A

2. Check discharge air

a. Turn mode switch to each mode.
b. Confirm that air discharge comes out each mode.

Discharge air flow

Switch mode/ indicator	Air outlet/distribution		
	Face	Foot	Defrost
	100%	—	—
	60%	40%	—
	—	80%	20%
	—	60%	40%
	—	—	100%

AHA983

NOTE:

Confirm that discharge air comes out according to the air distribution table at left.

Operational Check (Cont'd)

Simpo PDF Merge and Split Unregistered Version - http://www.simpopdf.com

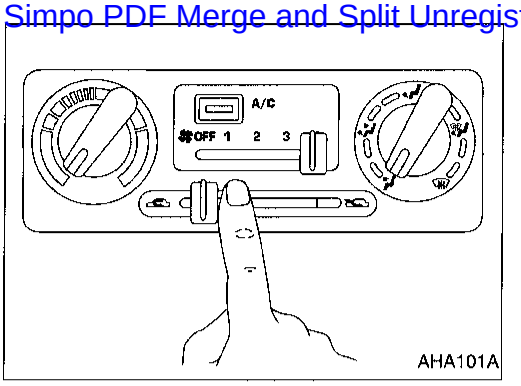

AHA101A

3. Check recirculation

a. Slide REC control lever to REC position.
b. Listen for intake door position to change (you should hear blower sound change slightly).

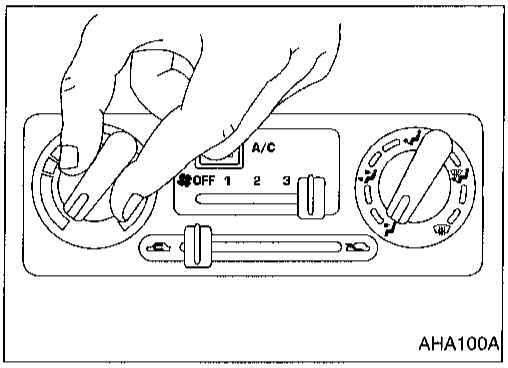

AHA100A

4. Check temperature decrease

a. Turn temperature switch to full cold.
b. Check for cold air at discharge air outlets.

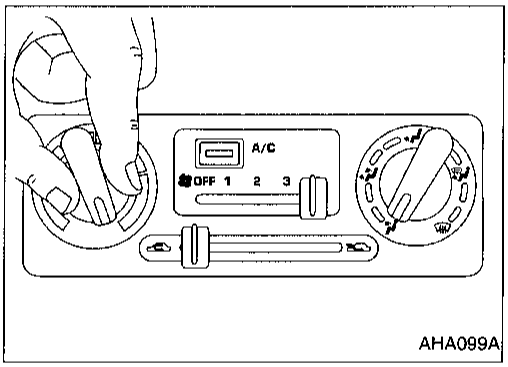

AHA099A

5. Check temperature increase

a. Turn temperature control switch to full hot.
b. Check for hot air at discharge air outlets.

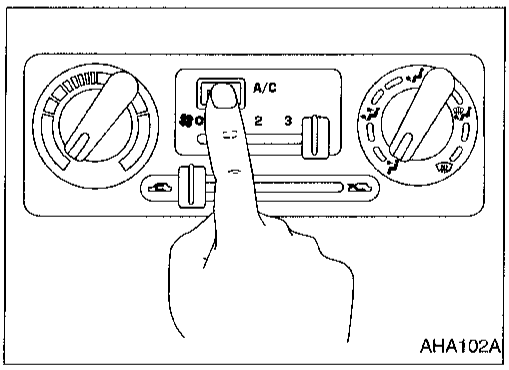

AHA102A

6. Check air conditioner switch

Slide the fan control lever to the desired (1 to 4 speed) position and push the A/C switch to turn ON the air conditioner. The indicator lamp should come on when air conditioner is ON.

Simpo PDF Merge and Split Unregistered Version - http://www.simpopdf.com

How to Perform Trouble Diagnoses for Quick and Accurate Repair

WORK FLOW

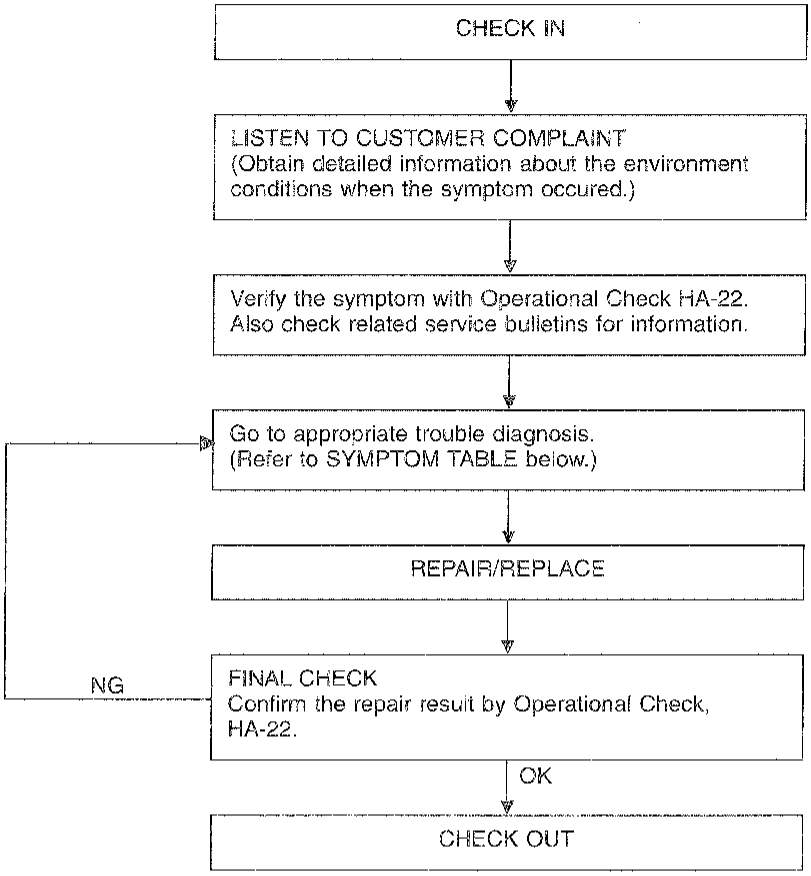

SYMPTOM TABLE

Symptom	Reference page
● Intake door position does not change.	● Go to Trouble Diagnoses for Intake Door, HA-31.
● Blower motor does not rotate.	● Go to Blower Motor Circuit, HA-25.
● Air outlet does not change.	● Go to Air Outlet, HA-29.
● Magnet clutch does not engage when A/C switch and fan switch are ON.	● Go to Magnet Clutch Circuit, HA-32.
● Insufficent Cooling.	● Go to Trouble Diagnosis for Insufficient Cooling, HA-37. ● Go to Performance Test Diagnosis, HA-38. ● Go to Performance Chart, HA-40. ● Go to Trouble Diagnoses for Abnormal Pressure, HA-41.
● Insufficient heating.	● Go to Trouble Diagnoses for Insufficient Heating, HA-44.
● Noise.	● Go to Trouble Diagnoses for Noise, HA-46.

Simpo PDF Merge and Split Unregistered Version - http://www.simpopdf.com

Blower Motor Circuit

SYMPTOM: Blower motor does not rotate.

INSPECTION FLOW

1. Confirm symptom by performing BLOWER MOTOR OPERATION CHECK shown below.

↓

If OK (symptom cannot be duplicated), perform complete Operational Check, HA-22.
If NG (symptom is confirmed), continue with STEP-2 below.

↓

2. Check for any service bulletins.

↓ OK

3. Go to Diagnostic Procedure for Blower Motor Circuit, HA-26.

BLOWER MOTOR OPERATION CHECK

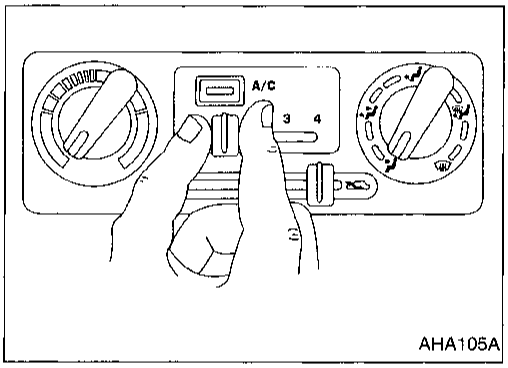

1. Start engine.
2. Check blower motor.
3. Slide fan control lever to 1-speed and blower motor should operate on 1-speed.
4. Slide fan control lever to 2-speed and continue checking blower speed until all speeds are checked.

Blower Motor Circuit (Cont'd)

Simpo PDF Merge and Split Unregistered Version - http://www.simpopdf.com

	INCIDENT	Flow chart
1	Fan fails to rotate.	1
2	Fan does not rotate at 1-speed.	2
3	Fan does not rotate at 2-speed.	3
4	Fan does not rotate at 3-speed.	4
5	Fan does not rotate at 4-speed.	5

DIAGNOSTIC PROCEDURE

Check if blower motor rotates properly at each fan speed.
Conduct check as per flow chart at left.

2 3 4 5 (Go to next page.) → (B)

1

A

CHECK POWER SUPPLY FOR BLOWER MOTOR.
Disconnect blower motor harness connector.
Does approx. 12 volts exist between blower motor harness terminal ① and body ground?

No → Check 15A fuses No. 19 and 24, located in fuse block (J/B).
Refer to EL section ("Wiring Diagram", "POWER SUPPLY ROUTING").

Yes

B

1. Slide fan control lever to 4-speed.
2. Check circuit continuity between blower motor harness terminal ② and body ground.
   Continuity should exist.

OK → Check blower motor.
Refer to HA-28.

NG → Replace blower motor.

NG

Reconnect blower motor harness connector.

C

CHECK BLOWER MOTOR CIRCUIT BETWEEN BLOWER MOTOR AND RESISTOR.
Do approx. 12 volts exist between resistor harness terminal ① and body ground?

No → Disconnect blower motor and resistor harness connectors.

D

Note: Check circuit continuity between blower motor harness terminal ② and resistor harness terminal ①.
Continuity should exist.
If OK, check harness for short.

Yes

(A) (Go to next page.)

Note:
If the result is NG or No after checking circuit continuity, repair harness or connector.

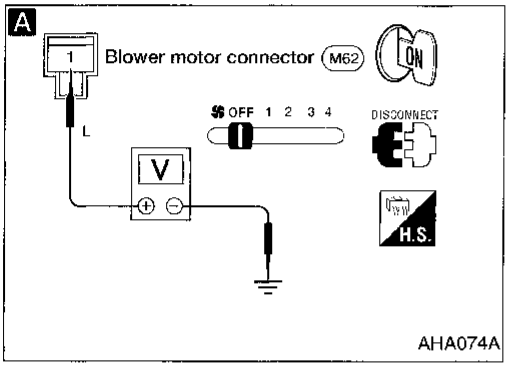

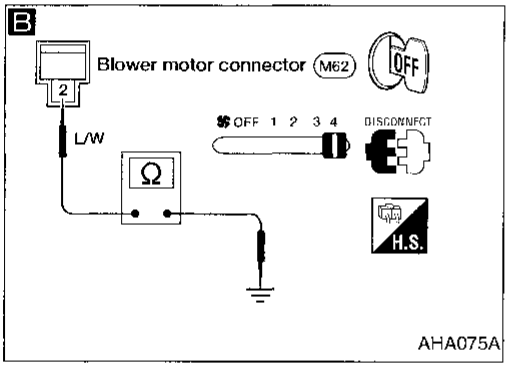

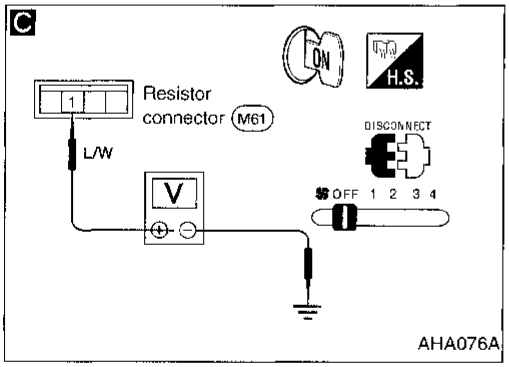

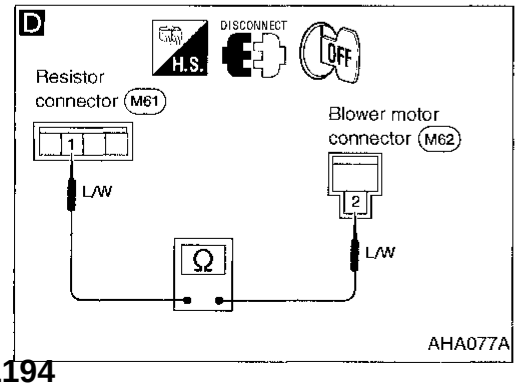

Blower Motor Circuit (Cont'd)

Simpo PDF Merge and Split Unregistered Version - http://www.simpopdf.com

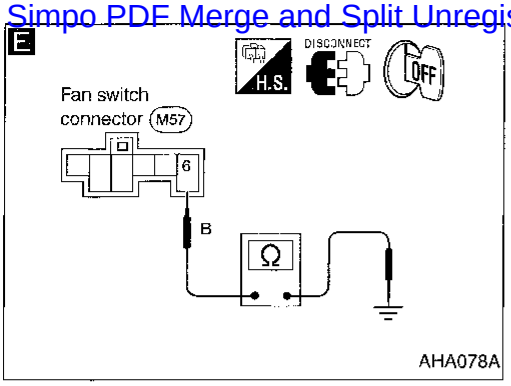

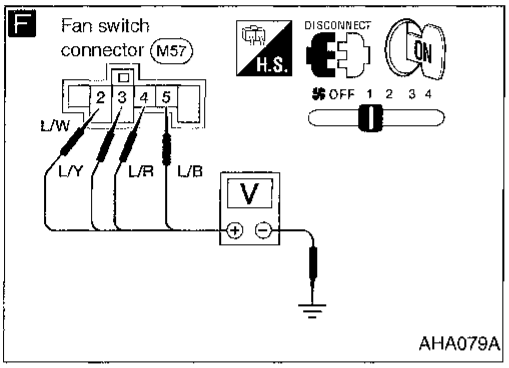

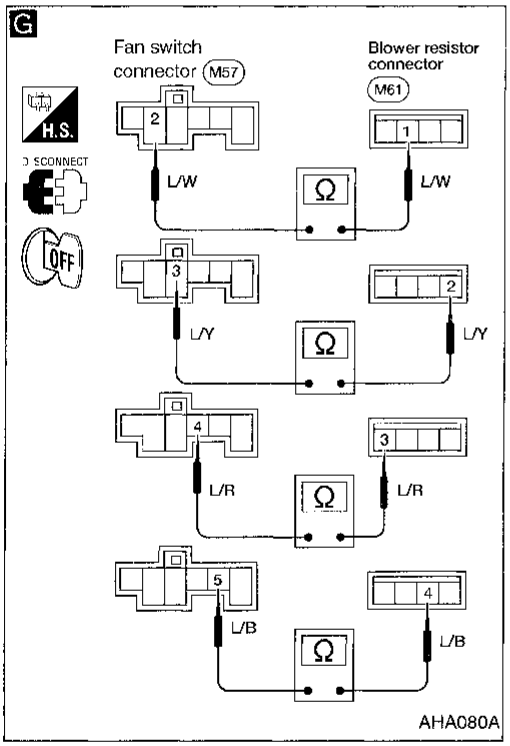

(A)

E

Note

CHECK GROUND CIRCUIT FOR FAN SWITCH.
Check circuit continuity between fan switch harness terminal No. (6) and body ground.

OK

CHECK BLOWER RESISTOR AFTER DISCONNECTING IT.
(Refer to Electrical Components Inspection.)
(HA-28).

OK

NG

Replace resistor.

Reconnect resistor harness connector.

1 2 3 4 5

F

CHECK FAN SWITCH CIRCUIT.
Do approx. 12 volts exist between each fan switch harness terminal and body ground?

Flow chart No.	Terminal No. ⊕	Terminal No. ⊖	Voltage
2	(5)	Body ground	Approx. 12V
3	(4)		
4	(3)		
5	(2)		

Yes

No

G

Note

Check circuit continuity between fan switch harness terminal and resistor harness terminal.

Terminal No. Fan switch	Terminal No. Resistor	Continuity
(2)	(1)	Yes
(3)	(2)	
(4)	(3)	
(5)	(4)	

If OK, check harness for short.

CHECK FAN SWITCH AFTER DISCONNECTING IT.
(Refer to COMPONENT INSPECTION.)
(HA-28)

NG

Replace fan switch.

(B)

Note:
If the result is NG after checking circuit continuity, repair harness or connector.

Blower Motor Circuit (Cont'd)

Simpo PDF Merge and Split Unregistered Version - http://www.simpopdf.com

COMPONENT INSPECTION

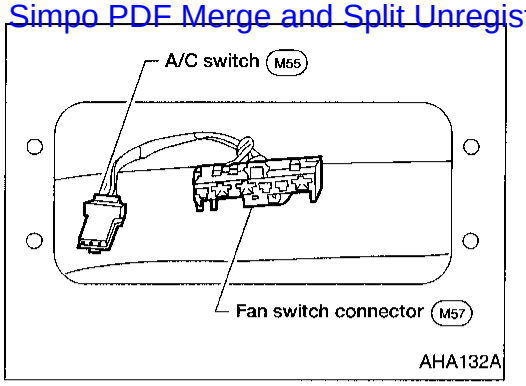

Fan switch

Check continuity between terminals at each position.

TERMINAL	POSITION				
	OFF	1	2	3	4
1		○	○	○	○
2					○
3				○	
4			○		
5		○			
6		○	○	○	○

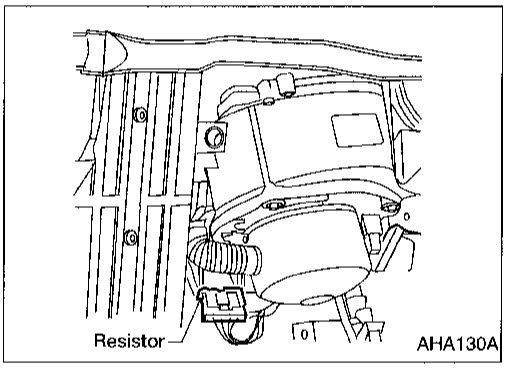

Blower motor

Confirm smooth rotation of the blower motor.

- Check that there are no foreign particles inside the intake unit.

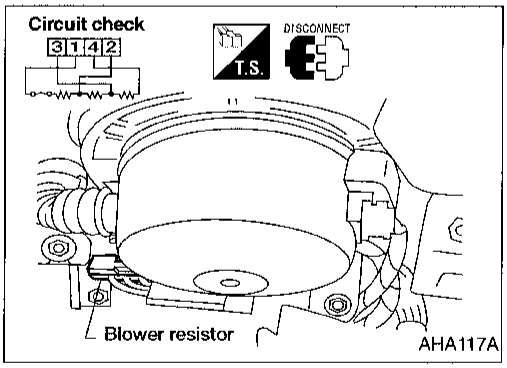

Blower resistor

Check continuity between terminals.

Simpo PDF Merge and Split Unregistered Version - http://www.simpopdf.com

Air Outlet

SYMPTOM: Air outlet does not change.

INSPECTION FLOW

1. Confirm symptom by performing AIR OUTLET CONTROL DOORS OPERATION CHECK.

↓

If OK (symptom cannot be duplicated), perform complete Operational Check, HA-22.
If NG (symptom is confirmed), continue with STEP-2 below.

↓

2. Check for any service bulletins.

↓

3. Repair/adjust control linkage, refer to CONTROL LINKAGE ADJUSTMENT, HA-30.

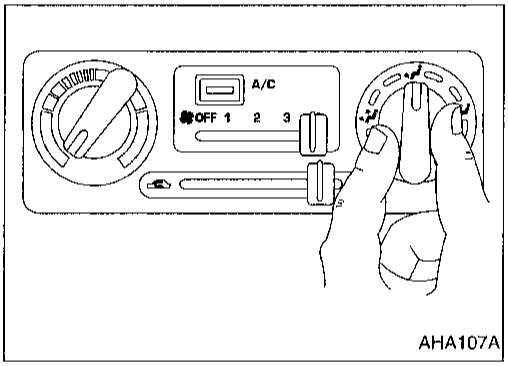

AHA107A

AIR OUTLET CONTROL DOORS OPERATION CHECK

1. Start engine.
2. Slide fan control lever to max speed.
3. Check discharge air.

a. Turn mode control switch to posiiton
b. Confirm that all discharge air comes out of face vents.
c. Turn mode control switch to position.
d. Confirm that discharge air comes out of face vents and foot vents.
e. Turn mode control switch to position.
f. Confirm that discharge air comes out of foot vents, with some air from defrost vents.
g. Turn mode control switch to position.
h. Confirm that discharge air comes out of foot vents with some air from defrost vents.

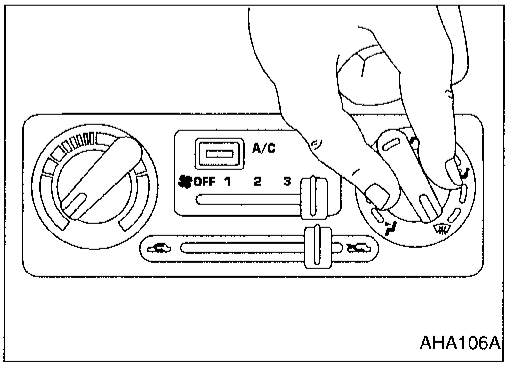

AHA106A

i. Turn mode control switch to position.
j. Confirm that all discharge air comes out of defrost vents.

Note:
Confirm that discharge air comes out according to the air distribution table, HA-22.

Air Outlet (Cont'd)

Simpo PDF Merge and Split Unregistered Version - http://www.simpopdf.com

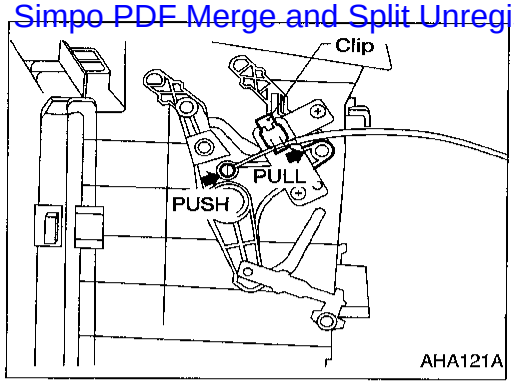

CONTROL LINKAGE ADJUSTMENT

Mode control cable

- Turn mode control switch to position.
  Set side link in DEF mode.
  Pull on outer cable in direction of arrow and then clamp it.
- **After positioning mode control cable, check that it operates properly.**

Simpo PDF Merge and Split Unregistered Version - http://www.simpopdf.com

Intake Door

SYMPTOM: Intake door position does not change.

INSPECTION FLOW

1. Confirm symptom by performing INTAKE DOOR OPERATION CHECK, shown below.

↓

If OK (symptom cannot be duplicated), perform complete Operational Check, HA-22.
If NG (symptom is confirmed), continue with STEP-2 below.

↓

2. Check for any service bulletins.

↓

3. Repair/adjust control linkage, refer to CONTROL LINKAGE ADJUSTMENT, shown below.

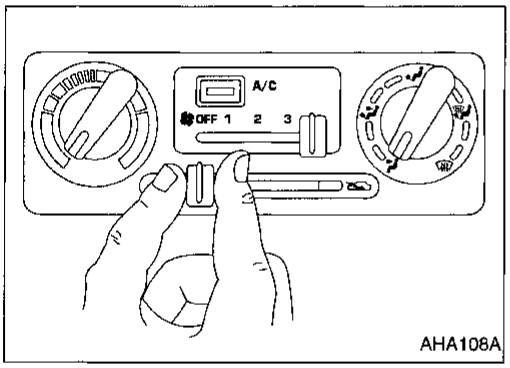

AHA108A

INTAKE DOOR OPERATION CHECK

1. Start engine.
2. Slide fan control switch to max speed.
3. Check recirculation.
   a. Slide recirculation control lever to the REC posiiton.
   b. Listen for intake door position change (you should hear blower sound change slightly).

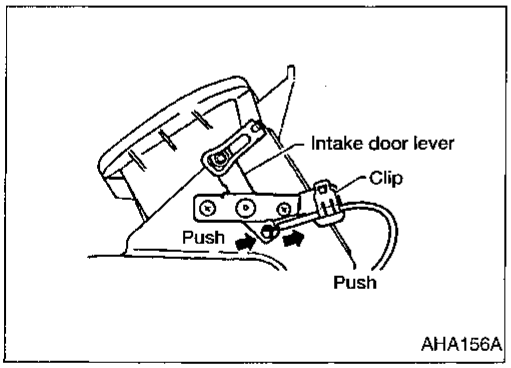

AHA156A

CONTROL LINKAGE ADJUSTMENT

Recirculation control cable

- Move recirculation lever to REC position.
  Set recirculation lever in REC mode.
  Pull on outer cable in direction of arrow and then clamp it.
- **After positioning recirculation control cable, check that it operates properly.**

Simpo PDF Merge and Split Unregistered Version - http://www.simpopdf.com

Magnet Clutch Circuit

SYMPTOM: Magnet clutch does not engage when A/C switch and fan switch are ON.

INSPECTION FLOW

1. Confirm symptom by performing MAGNET CLUTCH OPERATION CHECK, shown below.

↓

If OK (magnet clutch can be engaged), go to Trouble Diagnosis Procedure for Insufficient Cooling, HA-37.
If NG (symptom is confirmed), continue with STEP-2 below.

↓

2. Check for any service bulletins.

↓

3. Check refrigeration cycle pressure with manifold gauge corrected.
   Refer to Trouble Diagnoses for Abnormal Pressure, HA-41.

↓

4. Go to THERMO CONTROL AMP. CHECK, HA-33.

↓

Go to DIAGNOSES PROCEDURE, HA-34.

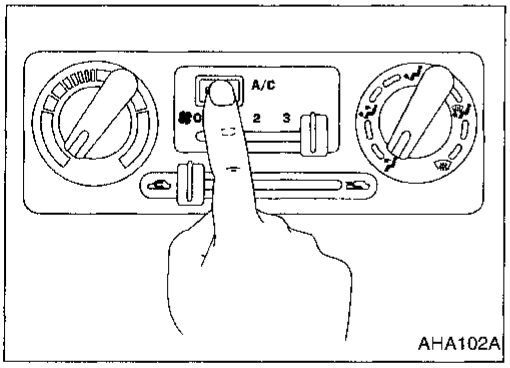

MAGNET CLUTCH OPERATION CHECK

1. Start engine.
2. Slide fan control lever to operate blower motor.
3. Push A/C switch to ON. Make sure that magnet clutch is engaged. (You can hear magnet clutch engage sound.)
4. Push A/C switch to OFF. Make sure that magnet clutch is disengaged.

Note: If magnet clutch sticks, check magnet clutch. Refer to HA-34.

Magnet Clutch Circuit (Cont'd)

Simpo PDF Merge and Split Unregistered Version - http://www.simpopdf.com

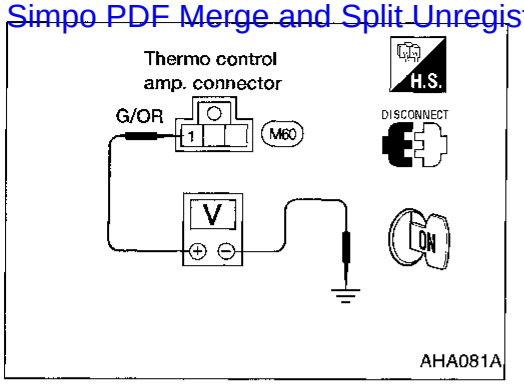

THERMO CONTROL AMP. CHECK

Power supply circuit check

Check power supply circuit for thermo control amp. with ignition switch ON.

1. Disconnect thermo control amp. harness connector.
2. Connect voltmeter from harness side.
3. Measure voltage across terminal ① and body ground.

Voltmeter terminal		Voltage
⊕	⊖	
①	Body ground	Approx. 12V

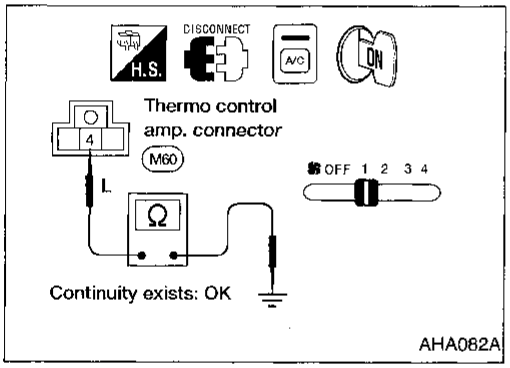

Ground circuit check

Check body ground circuit for thermo control amp. with ignition switch ON, air conditioner switch ON and fan switch ON.

1. Disconnect thermo control amp. harness connector.
2. Connect ohmmeter from harness side.
3. Check for continuity between terminal No. ② and body ground.

Ohmmeter terminal		Continuity
⊕	⊖	
④	Body ground	Yes

If the ground circuit is NG, check the following.

- A/C switch (Refer to HA-36.)
- Fan switch (Refer to HA-28.)
- Harness for open or short between thermo control amp. and A/C switch
- Harness for open or short between A/C switch and fan switch
- Fan switch ground circuit

Magnet Clutch Circuit (Cont'd)

Simpo PDF Merge and Split Unregistered Version - http://www.simpopdf.com

DIAGNOSTIC PROCEDURE

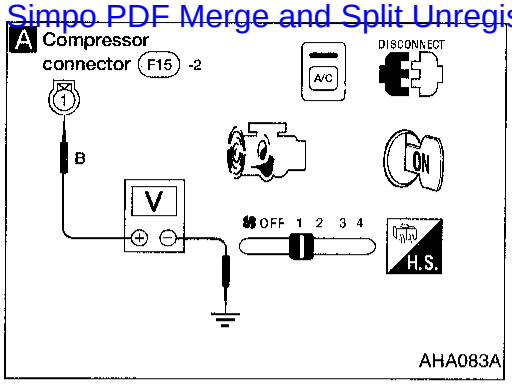

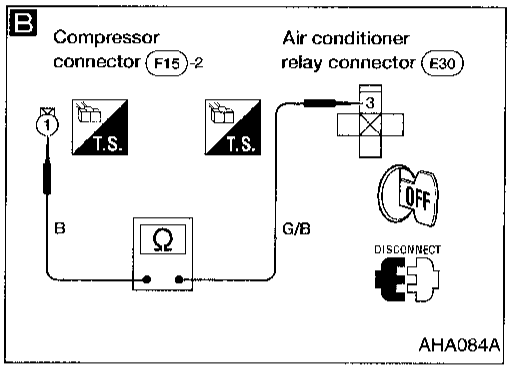

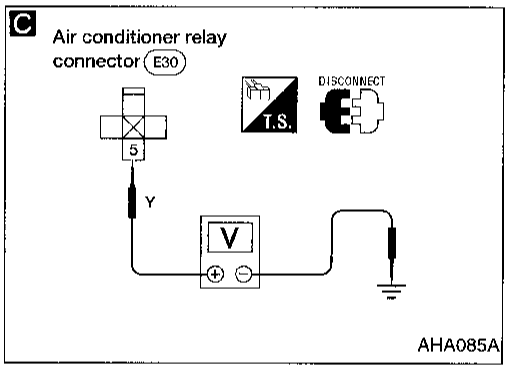

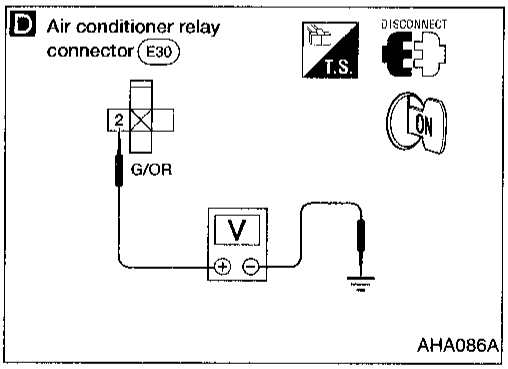

A

CHECK POWER SUPPLY FOR COMPRESSOR.
Disconnect compressor harness connector.
Do approx. 12 volts exist between compressor harness terminal No. ① and body ground?

Yes → Check the following.
- Magnet clutch coil
- Thermal protector

Refer to HA-36.

NG → Replace magnet clutch. Refer to HA-56.

No

B

Note

Check circuit continuity between A/C relay harness terminal No. ③ and compressor harness terminal No. ①. Continuity should exist.
If OK, check harness for short.

OK

C

CHECK POWER SUPPLY FOR A/C RELAY.
Do approx. 12 volts exist between A/C relay harness terminal No. ⑤ and body ground?

No → Check power supply circuit and 7.5A fuse (No. 35, located in the fuse block). (Refer to "POWER SUPPLY ROUTING" in EL section and Wiring Diagram.)

Yes

D

CHECK POWER SUPPLY FOR A/C RELAY.
Do approx. 12 volts exist between A/C relay harness terminal No. ② and body ground?

No → Check power supply circuit and 7.5A fuse (No. 29, located in the fuse block). (Refer to "POWER SUPPLY ROUTING" in EL section and Wiring Diagram.)

Yes

CHECK A/C RELAY AFTER DISCONNECTING IT.
Refer to HA-36.

NG → Replace A/C relay.

OK

Reconnect A/C relay.

Ⓐ
(Go to next page.)

Note:
If the result is NG after checking circuit continuity, repair harness or connector.

Magnet Clutch Circuit (Cont'd)

Simpo PDF Merge and Split Unregistered Version - http://www.simpopdf.com

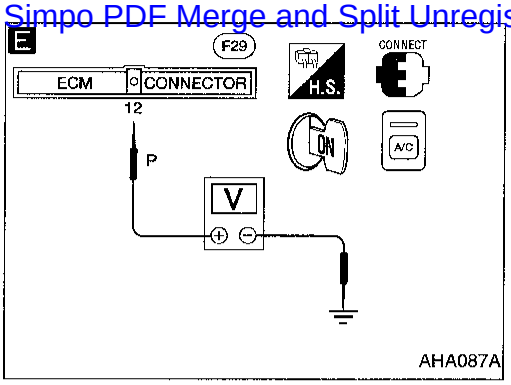

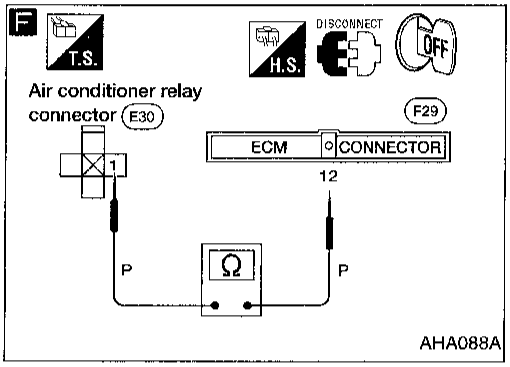

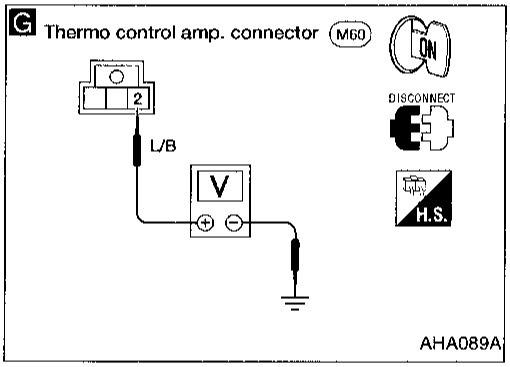

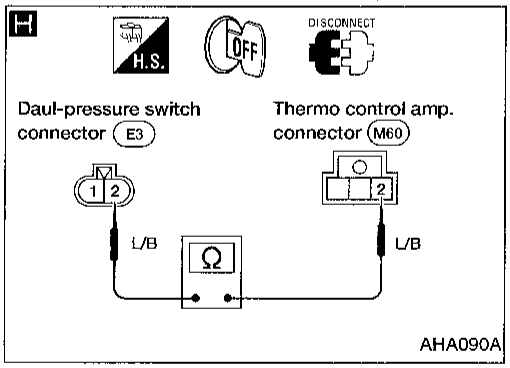

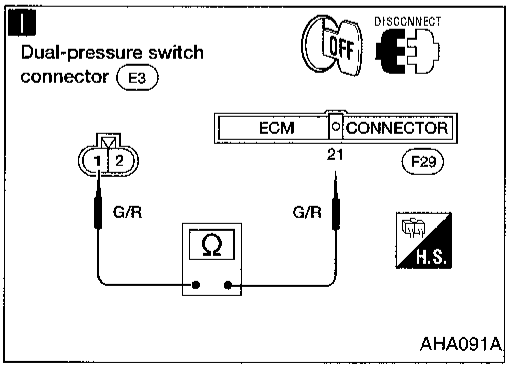

A

E **CHECK COIL SIDE CIRCUIT OF A/C RELAY.**
Do approx. 12 volts exist between ECM harness terminal No. (12) and body ground?

No → **F** Note: Check circuit continuity between A/C relay harness terminal No. (1) and ECM harness terminal No. (12). **Continuity should exist.** If OK, check harness for short.

Yes ↓

CHECK POWER SUPPLY AND GROUND CIRCUIT FOR THERMO CONTROL AMP.
Refer to HA-33.

OK ↓

G **CHECK VOLTAGE FOR THERMO CONTROL AMP.**
Do approx. 5 volts exist between thermo control amp. harness terminal No. (2) and body ground?

Yes → Replace thermo control amp.

No ↓

H **Check circuit continuity between thermo control amp. harness terminal No. (2) and dual-pressure switch harness terminal No. (2). Continuity should exist.**
If OK, check harness for short.

OK ↓

CHECK DUAL-PRESSURE SWITCH.
Refer to HA-36.

NG → Replace thermo control amp.

OK ↓

I Note: **Check circuit continuity between ECM harness terminal No. (21) and dual-pressure switch harness terminal No. (1).**

OK ↓

CHECK ECM.
Refer to EC section.

Note:
If the result is NG or No after checking circuit continuity, repair harness or connector.

Simpo PDF Merge and Split Unregistered Version - http://www.simpopdf.com

Magnet Clutch Circuit (Cont'd)

ELECTRICAL COMPONENT INSPECTION

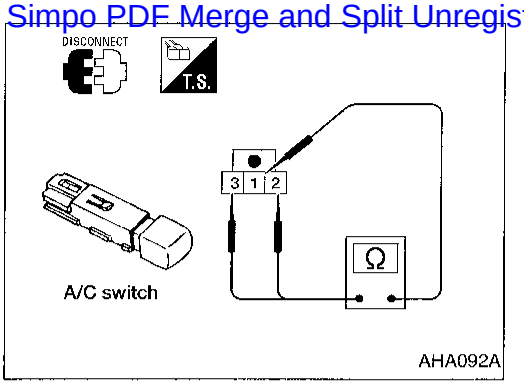

Air conditioner switch

Check continuity between terminals at each switch position

Switch condition	Terminal No.	Continuity
ON	① - ②, ① - ③	Yes
OFF		No

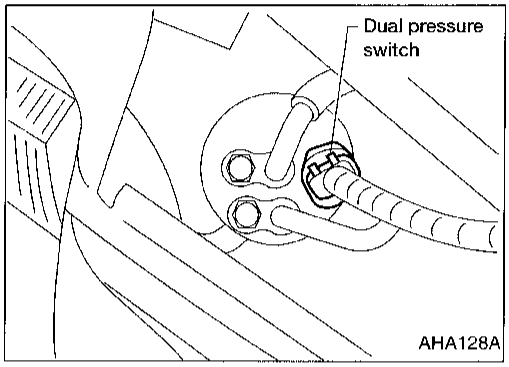

Dual pressure switch

High-pressure side line pressure kPa (kg/cm^2, psi)	Operation	Continuity
Decreasing to 157 - 216 (1.6 - 2.2, 23 - 31) Increasing to 2,648 - 2,844 (27 - 29, 384 - 412)	Turn OFF	Does not exist
Increasing to 157 - 235 (1.6 - 2.4, 23 - 34) Decreasing to 392 - 785 (4 - 8, 57 - 114)	Turn ON	Exists

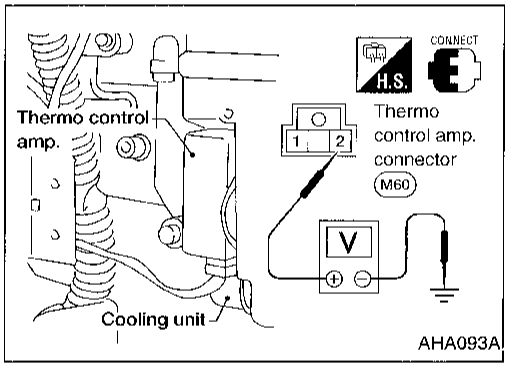

Thermo control amp.

1. Run engine, and operate A/C system.
2. Connect the voltmeter from harness side.
3. Check thermo control amp. operation shown in the table.

Evaporator outlet air temperature °C (°F)	Thermo amp. operation	Tester
Decreasing to 2.5 - 3.5 (37 - 38)	Turn OFF	Approx. 12V
Increasing to 4.0 - 5.0 (39 - 41)	Turn ON	Approx. 0V

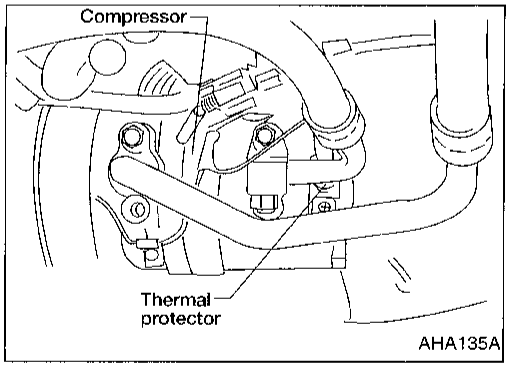

Thermal protector

Temperature of compressor °C (°F)	Operation
Increasing to approx. 145 - 155 (293 - 311)	Turn OFF
Decreasing to approx. 130 - 140 (266 - 284)	Turn ON

If NG, replace thermal protector.

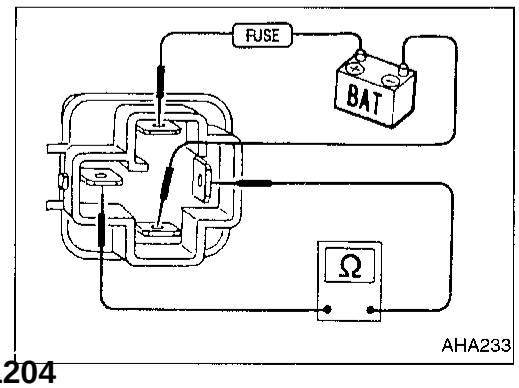

Air conditioner relay

Check circuit continuity between terminals by supplying 12 volts to coil side terminals of air conditioner relay.

Simpo PDF Merge and Split Unregistered Version - http://www.simpopdf.com

Trouble Diagnosis Procedure For Insufficient Cooling

INSPECTION FLOW

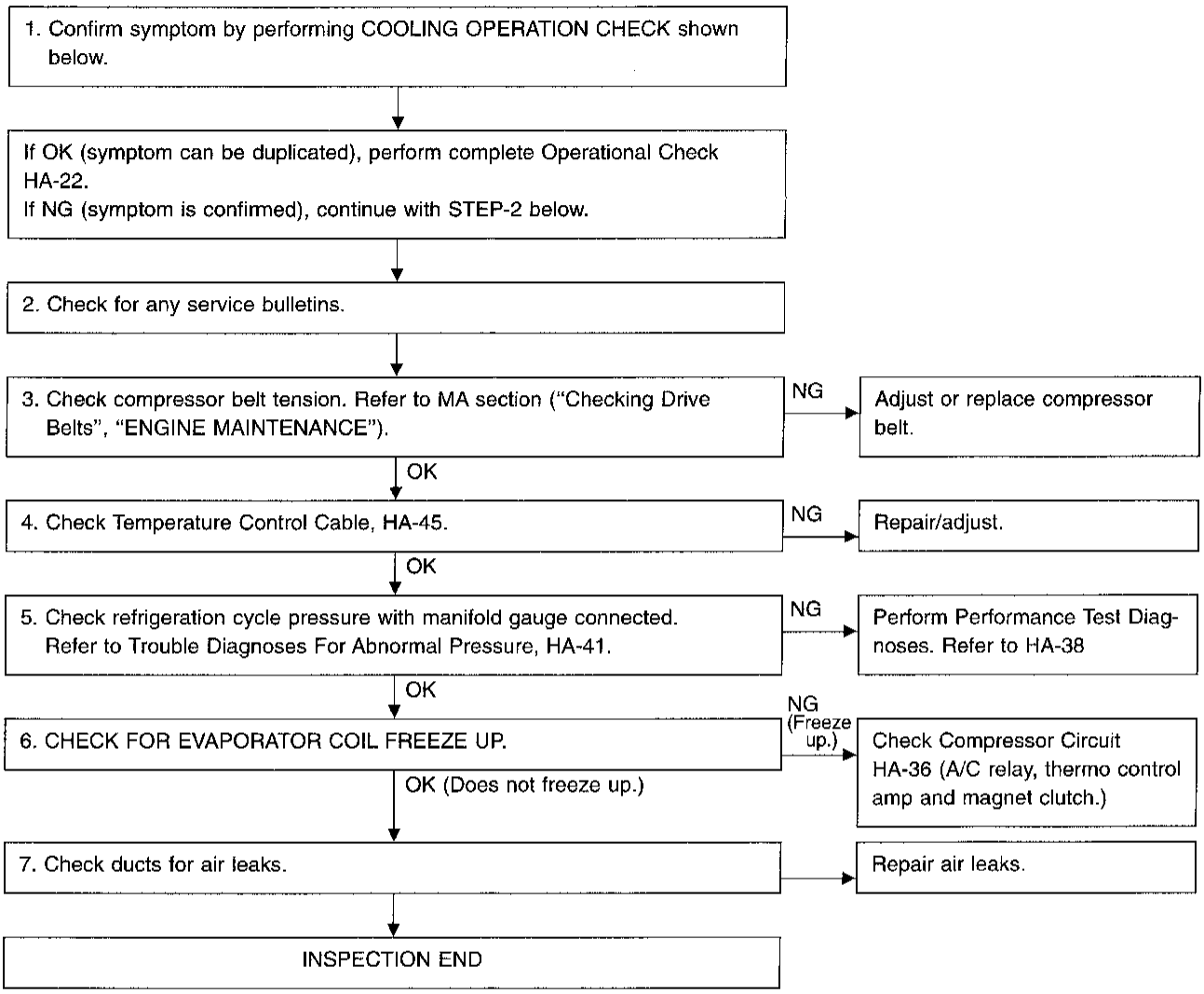

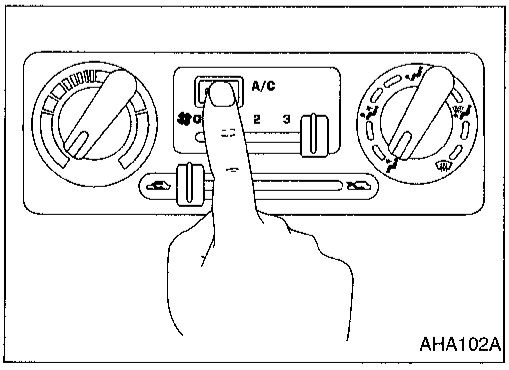

COOLING OPERATION CHECK

1. Start engine.
2. Slide fan control lever to max speed.
3. Turn air conditioner switch ON.
4. Check temperature decrease.
   a. Turn temperature switch to full cold.
   b. Check for cold air at discharge air outlets.

Simpo PDF Merge and Split Unregistered Version - http://www.simpopdf.com

Performance Test Diagnoses

INSUFFICIENT COOLING

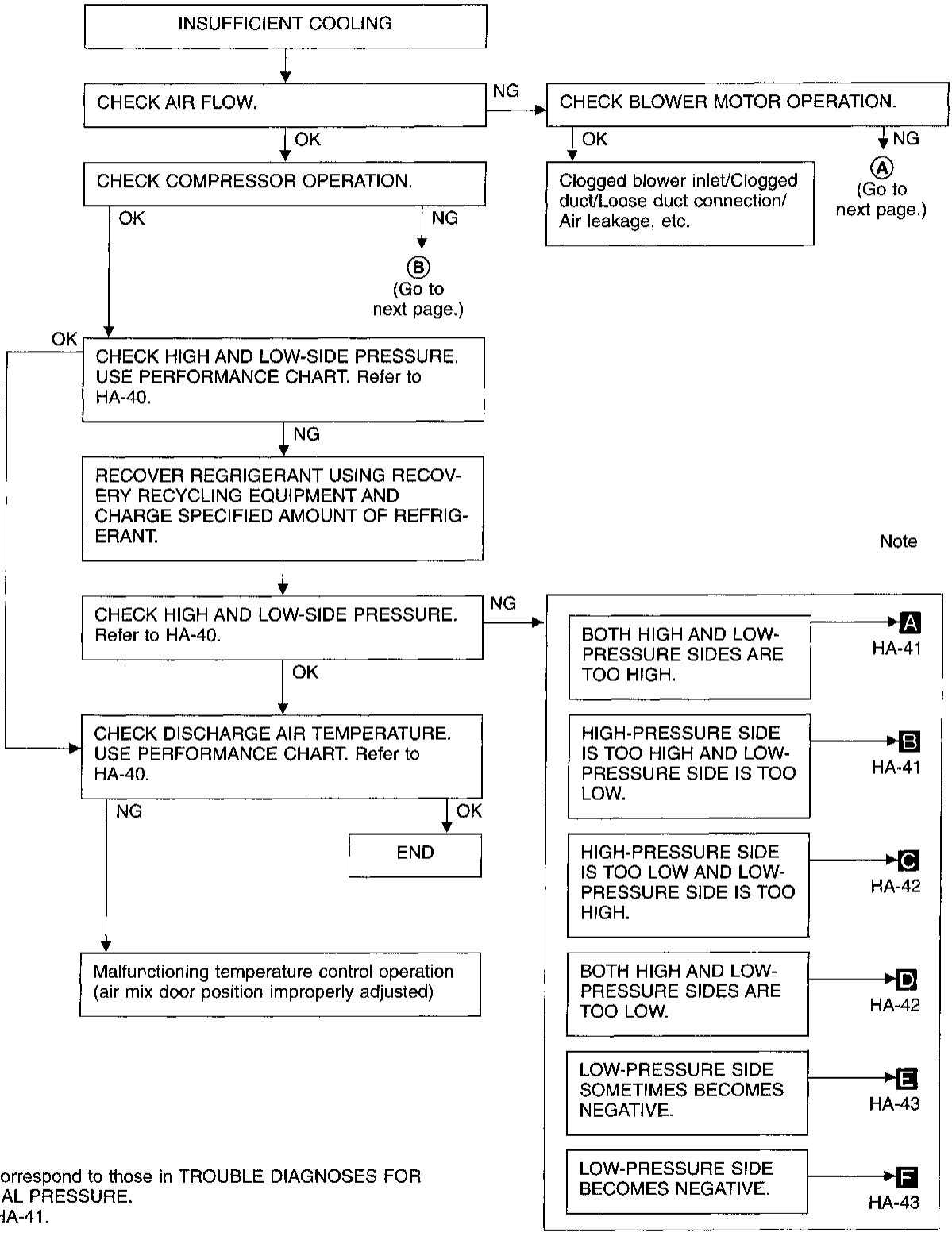

Note: A-F correspond to those in TROUBLE DIAGNOSES FOR ABNORMAL PRESSURE.
Refer to HA-41.

Simpo PDF Merge and Split Unregistered Version - http://www.simpopdf.com

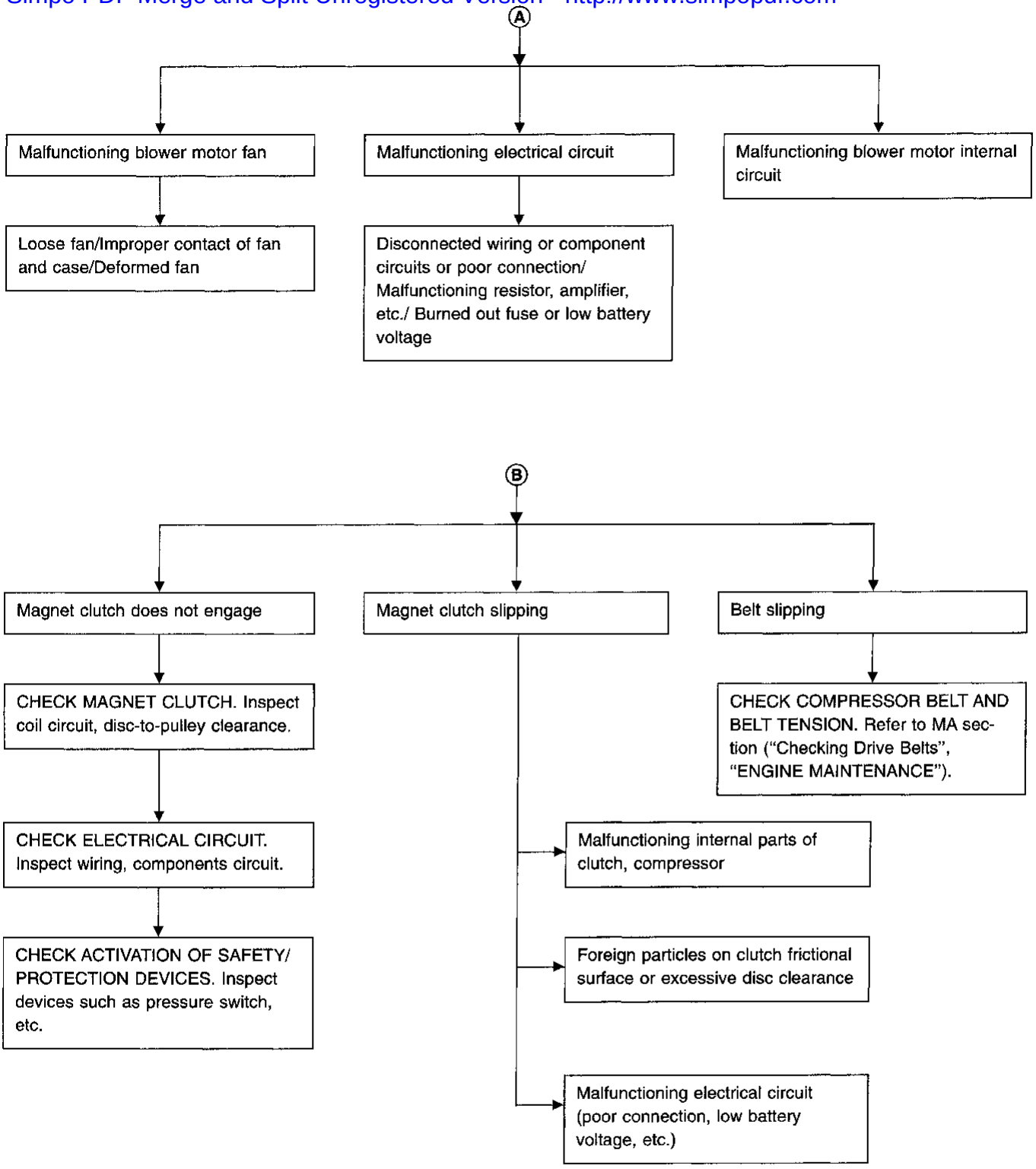

Simpo PDF Merge and Split Unregistered Version - http://www.simpopdf.com

Performance Chart

TEST CONDITION

Testing must be performed as follows:

Vehicle location: Indoors or in the shade (in a well-ventilated place)
Doors: Closed
Door window: Open
Hood: Open
TEMP. setting: Max. COLD
Discharge Air: FACE VENT
INTAKE lever position: (Recirculation)
FAN speed: 4-speed
Engine speed: 1,500 rpm

Operate the air conditioner system for 10 minutes before taking measurements.

TEST READING

Recirculating-to-discharge air temperature table

Inside air (Recirculating air) at blower assembly inlet		Discharge air temperature at center ventilator °C (°F)
Relative humidity %	Air temperature °C (°F)	
50 - 60	20 (68)	6.6 - 8.3 (44 - 47)
	25 (77)	10.4 - 12.4 (51 - 54)
	30 (86)	14.2 - 16.7 (58 - 62)
	35 (95)	18.2 - 21.0 (65 - 70)
	40 (104)	22.0 - 25.2 (72 - 77)
60 - 70	20 (68)	8.3 - 9.8 (47 - 50)
	25 (77)	12.4 - 14.4 (54 - 58)
	30 (86)	16.7 - 18.9 (62 - 66)
	35 (95)	21.0 - 23.6 (70 - 74)
	40 (104)	25.2 - 28.1 (77 - 83)

Ambient air temperature-to-operating pressure table

Ambient air		High-pressure (Discharge side) kPa (kg/cm^2, psi)	Low-pressure (Suction side) kPa (kg/cm^2, psi)
Relative humidity %	Air temperature °C (°F)		
50 - 70	20 (68)	961 - 1,187 (9.8 - 12.1, 139 - 172)	108 - 157 (1.1 - 1.6, 16 - 23)
	25 (77)	1,295 - 1,599 (13.2 - 16.3, 188 - 232)	161.8 - 215.8 (1.65 - 2.2, 23.5 - 31.3)
	30 (86)	1,285 - 1,569 (13.1 - 16, 186 - 228)	167 - 216 (1.7 - 2.2, 24 - 31)
	35 (95)	1,520 - 1,863 (15.5 - 19, 220 - 270)	235 - 284 (2.4 - 2.9, 34 - 41)
	40 (104)	1,765 - 2,158 (18 - 22, 256 - 313)	289.3 - 353.1 (2.95 - 3.6, 41.9 - 51.2)

Simpo PDF Merge and Split Unregistered Version - http://www.simpopdf.com

Trouble Diagnoses for Abnormal Pressure

Whenever system's high or low-side pressure is abnormal, diagnose using a manifold gauge. The marker above the gauge scale in the following table indicates the standard (normal) pressure range. Since the standard normal pressure differs from vehicle to vehicle, refer to HA-40 ("Ambient air temperature-to-operating pressure table").

Pressure measurements are effective only when ambient temperature is in the range indicated under the Performance Chart.

Gauge indication	Refrigerant cycle	Probable cause	Corrective action
Both high and low-pressure sides are too high. A 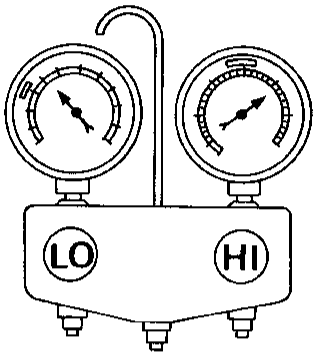 AC359A	● Pressure is reduced soon after water is splashed on condenser.	Excessive refrigerant charge in refrigeration cycle.	Reduce refrigerant until specified pressure is obtained.
	● Air suction by radiator or cooling fan is insufficient.	Insufficient condenser cooling performance. ↓ ① Condenser fins are clogged. ② Improper rotation of cooling fan.	● Clean condenser. ● Check and repair radiator or cooling fan as necessary.
	● Low-pressure pipe is not cold. ● When compressor is stopped high-pressure value quickly drops by approximately 196 kPa (2 kg/cm^2, 28 psi). It then decreases gradually thereafter.	Poor heat exchange in condenser. (After compressor operation stops, high-pressure decreases too slowly.) ↓ Air in refrigeration cycle.	Evacuate repeatedly and recharge system.
	Engine tends to overheat.	Engine cooling systems malfunction.	Check and repair each engine cooling system.
	● An area of the low-pressure pipe is colder than near the evaporator outlet. ● Plates are sometimes covered with frost.	● Excessive liquid refrigerant on low-pressure side. ● Excessive refrigerant discharge flow. ● Expansion valve is open a little compared with the specification. ↓ ① Improper thermal valve installation. ② Improper expansion valve adjustment.	Replace expansion valve.
High-pressure side is too high and low-pressure side is too low. B 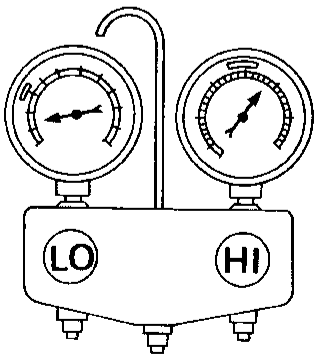 AC360A	Upper side of condenser and high-pressure side are hot, however, liquid tank is not as hot.	High-pressure tube or parts located between compressor and condenser are clogged or crushed.	● Check and repair or replace malfunctioning parts. ● Check lubricant for contamination.

Trouble Diagnoses for Abnormal Pressure (Cont'd)

Simpo PDF Merge and Split Unregistered Version - http://www.simpopdf.com

Gauge indication	Refrigerant cycle	Probable cause	Corrective action
High-pressure side is too low and low-pressure side is too high. C 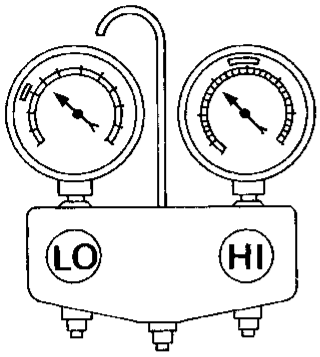 AC356A	High and low-pressure sides become equal soon after compressor operation stops.	Compressor pressure operation is improper. ↓ Damaged inside compressor packings.	Replace compressor.
	No temperature difference between high and low-pressure sides.	Compressor discharge capacity does not change. (Compressor stroke is set at maximum.)	Replace compressor.
Both high and low-pressure sides are too low. D 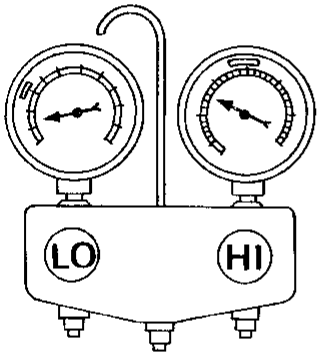 AC353A	● There is a big temperature difference between liquid tank outlet and inlet. Outlet temperature is extremely low. ● Liquid tank inlet and expansion valve are frosted.	Liquid tank is partly clogged.	● Replace liquid tank. ● Check lubricant for contamination.
	● Temperature of expansion valve inlet is extremely low as compared with areas near liquid tank. ● Expansion valve inlet may be frosted. ● Temperature difference occurs somewhere in high-pressure side.	High-pressure pipe located between liquid tank and expansion valve is clogged.	● Check and repair malfunctioning parts. ● Check lubricant for contamination.
	● Expansion valve and liquid tank are warm or only cool to the touch.	Low refrigerant charge. ↓ Leaking fittings or components.	● Check for refrigerant leaks. Refer to "Checking Refrigerant Leaks", HA-48.
Both high and low-pressure sides are too low. D 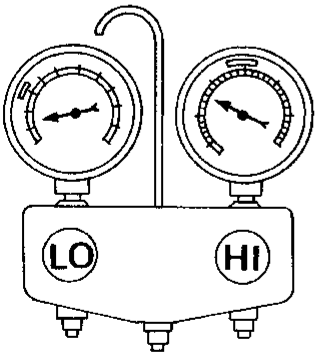 AC353A	There is a big temperature difference between expansion valve inlet and outlet while the valve itself is frosted.	Expansion valve closes a little compared with the specification. ↓ ① Improper expansion valve adjustment. ② Malfunctioning thermal valve. ③ Outlet and inlet may be clogged.	● Remove foreign particles by using compressed air. ● Check lubricant for contamination.
	An area of low-pressure pipe is colder than areas near the evaporator outlet.	Low-pressure pipe is clogged or crushed.	● Check and repair malfunctioning parts. ● Check lubricant for contamination.
	Air flow volume is not enough or is too low.	Compressor pressure operation is improper.	Replace compressor.

Trouble Diagnoses for Abnormal Pressure (Cont'd)

Simpo PDF Merge and Split Unregistered Version - http://www.simpopdf.com

Gauge indication	Refrigerant cycle	Probable cause	Corrective action
Low-pressure side sometimes becomes negative. E 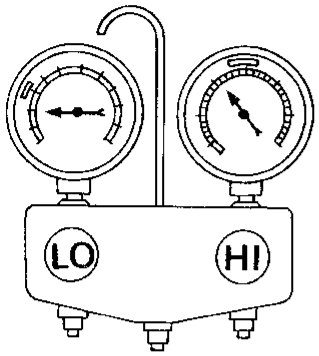 AC354A	● Air conditioner system does not function and does not cyclically cool the compartment air. ● The system constantly functions for a certain period of time after compressor is stopped and restarted.	Refrigerant does not discharge cyclically. ↓ Moisture is frozen at expansion valve outlet and inlet. ↓ Water is mixed with refrigerant.	● Replace refrigerant. ● Replace liquid tank.
Low-pressure side becomes negative. F 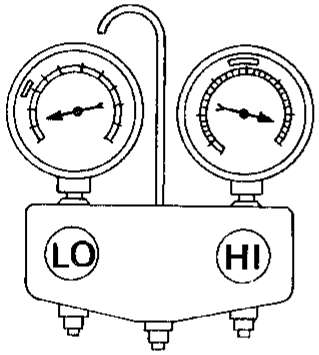 AC362A	Liquid tank or front/rear side of expansion valve's pipe is frosted or dewed.	High-pressure side is closed and refrigerant does not flow. ↓ Expansion valve or liquid tank is frosted.	Leave the system at rest . Start it again to check whether or not the problem is caused by water or foreign particles. ● If water is the cause, initially cooling is okay. Then the water freezes, causing a blockage. Drain water from refrigerant or replace refrigerant. ● If due to foreign particles, remove expansion valve and remove the particles with dry and compressed air. ● If either of the above methods cannot correct the problem, replace expansion valve. ● Replace liquid tank. ● Check lubricant for contamination.

Simpo PDF Merge and Split Unregistered Version - http://www.simpopdf.com

Trouble Diagnosis for Insufficient Heating

INSPECTION FLOW

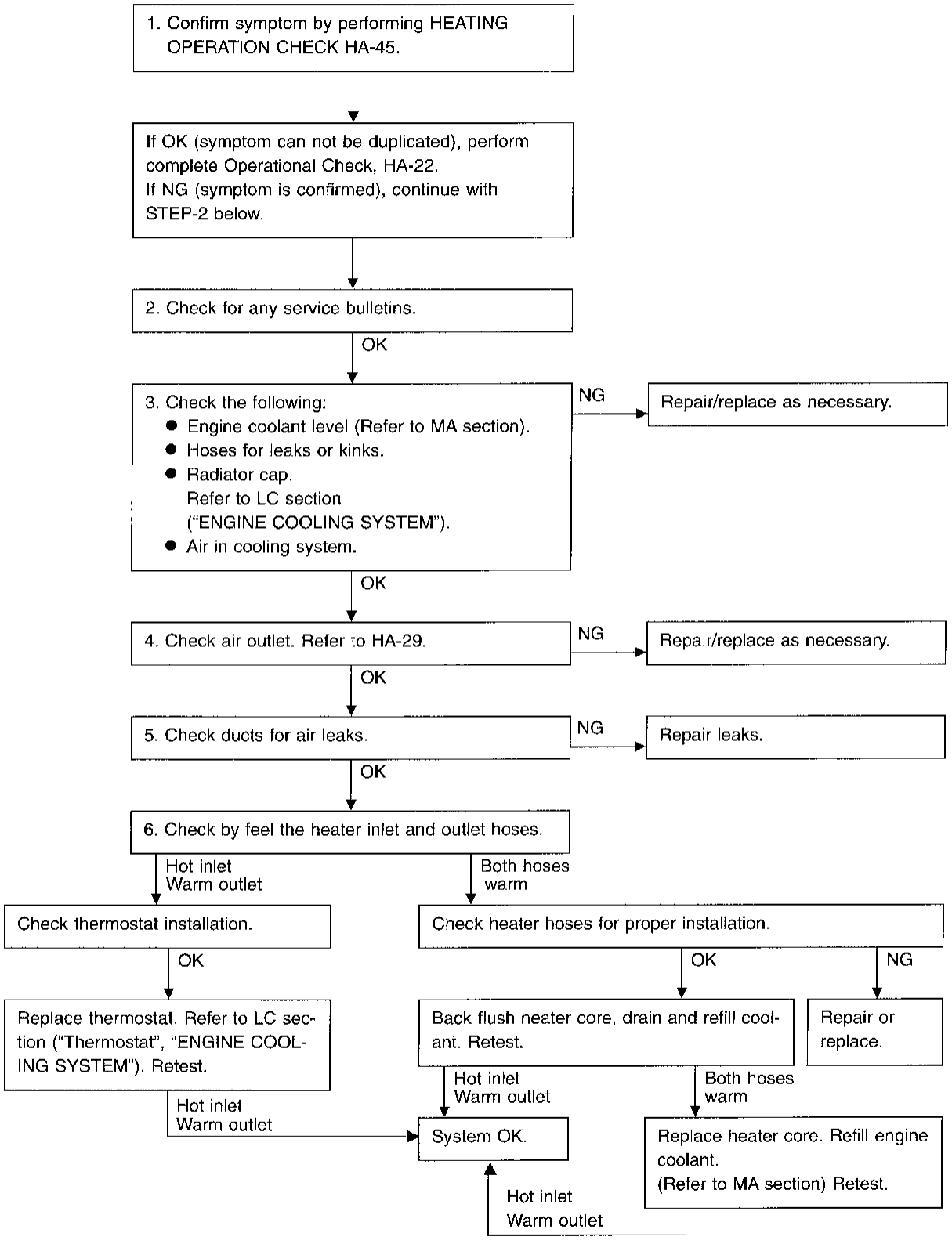

Simpo PDF Merge and Split Unregistered Version - http://www.simpopdf.com

Trouble Diagnosis for Insufficient Heating (Cont'd)

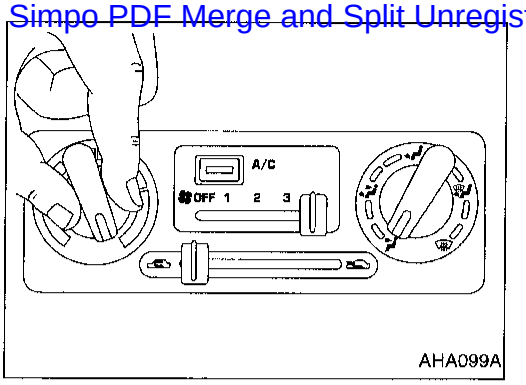

AHA099A

HEATING OPERATION CHECK

1. Start and warm up engine.
2. Slide fan control lever to max speed.
3. Turn air conditioner switch OFF.
4. Check temperature increase.

a. Turn temperature switch to full hot.
b. Check hot air at discharge air outlets.

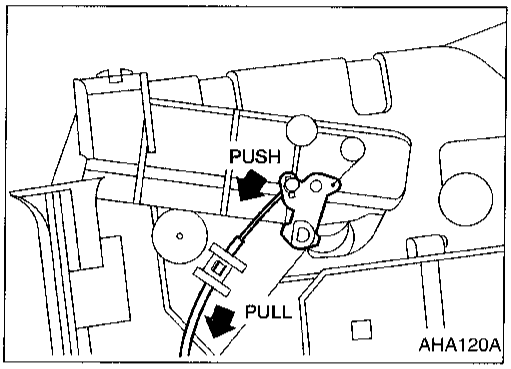

AHA120A

TEMPERATURE CONTROL LINKAGE ADJUSTMENT

Temperature control cable

- **When adjusting ventilator door rod and defrost door rod, first disconnect mode control cable from side link. Reconnect and readjust mode control cable.**
- Move temperature control lever to max. COLD position. Set air mix door lever in full hot mode. Pull on outer cable in direction of arrow and then clamp it.
- **After positioning temperature control cable, check that it operates properly.**

Simpo PDF Merge and Split Unregistered Version - http://www.simpopdf.com

Trouble Diagnosis for Noise

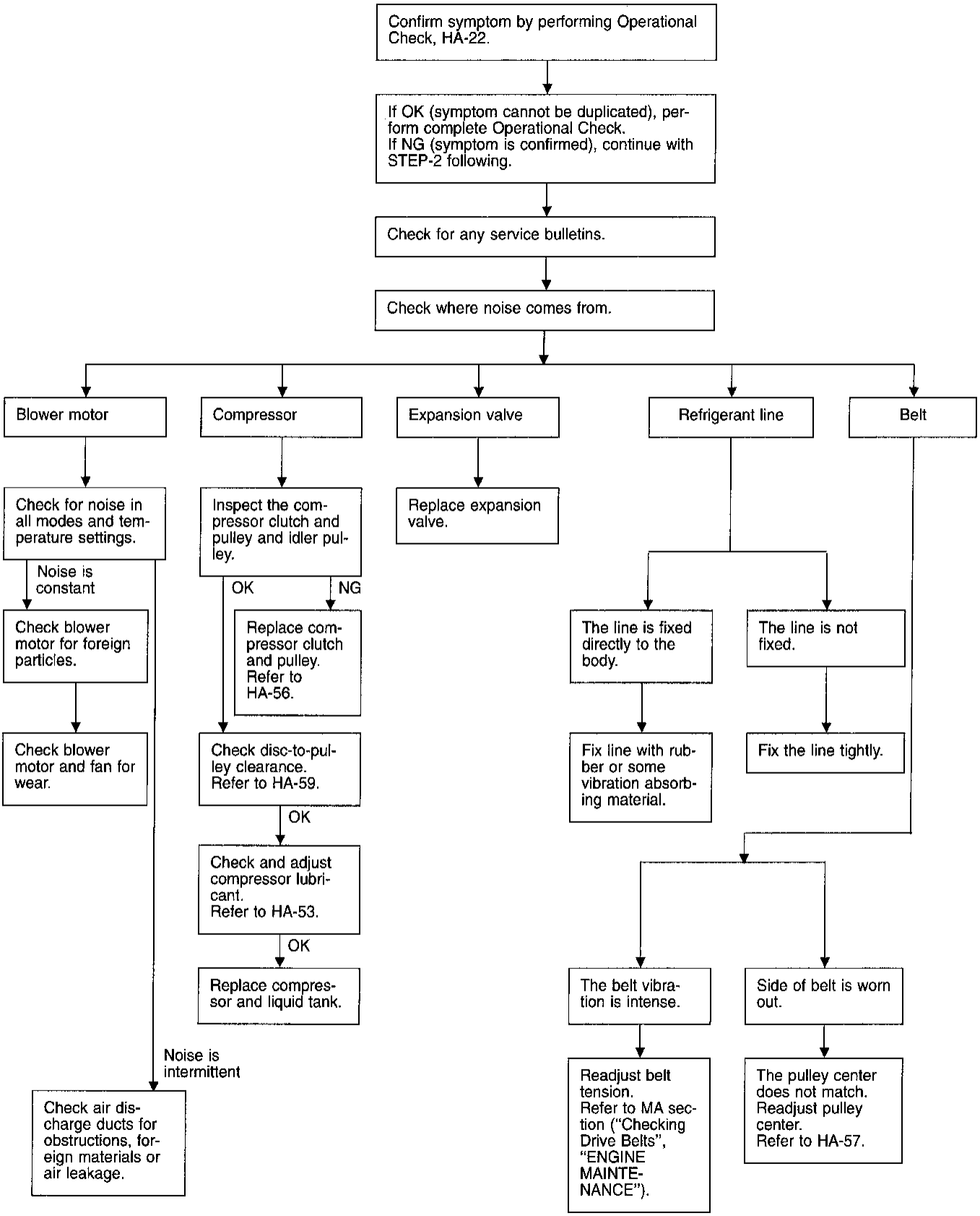

Simpo PDF Merge and Split Unregistered Version - http://www.simpopdf.com

Refrigerant Lines

- Refer to HA-3.

SEC. 271 • 274 • 276

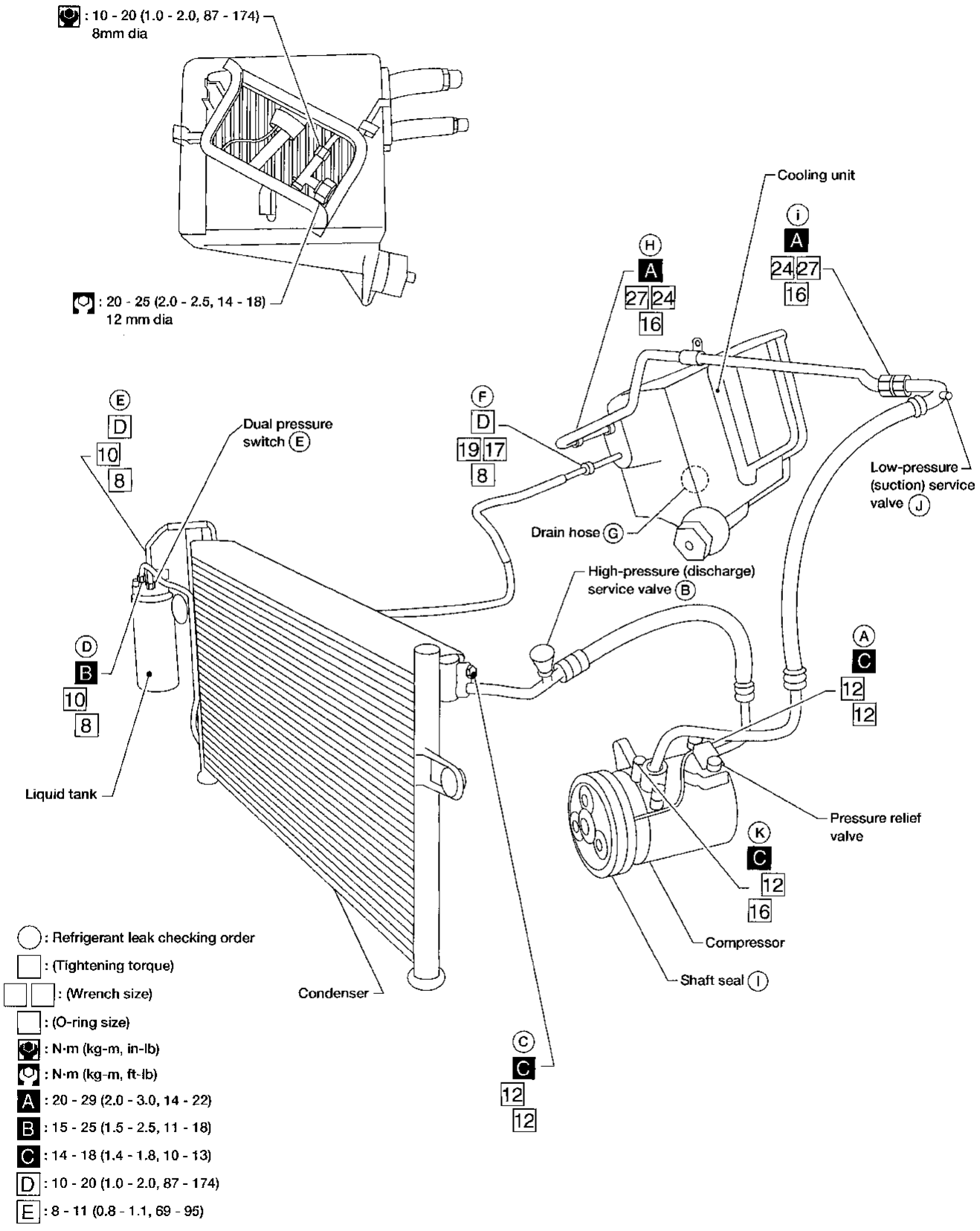

AHA122A

1215

Simpo PDF Merge and Split Unregistered Version - http://www.simpopdf.com

Checking Refrigerant Leaks

PRELIMINARY CHECK

Perform a visual inspection of all refrigeration parts, fittings, hoses, and components for signs of A/C lubricant leakage, damage and corrosion.

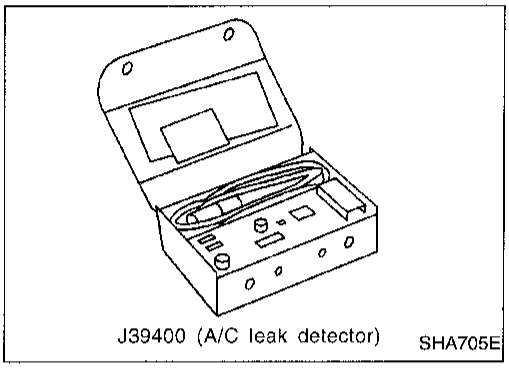

PRECAUTIONS FOR HANDLING LEAK DETECTOR

When performing a refrigerant leak check, use a J39400 A/C leak detector or equivalent. Ensure that the instrument is calibrated and set properly per the operating instructions.

The leak detector is a delicate device. In order to use the leak detector properly, read the operating instructions and perform any specified maintenance.

Other gases in the work area or substances on the A/C components, for example, anti-freeze, windshield washer fluid, solvents and cleaners, may falsely trigger the leak detector. Make sure the surfaces to be checked are clean. Do not allow the sensor tip of the detector to come into contact with any substance. This can also cause false readings and may damage the detector.

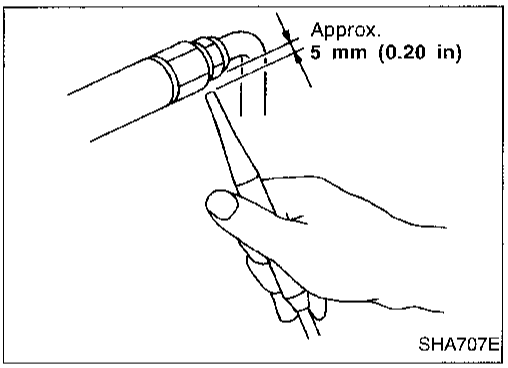

1. Position probe approximately 5 mm (0.20 in) away from point to be checked.

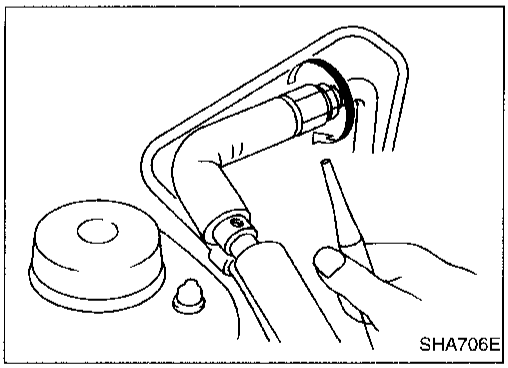

2. When testing, circle each fitting completely with probe.

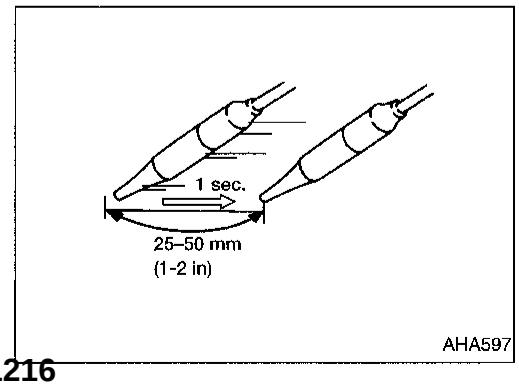

3. Move probe along component approximately 25-50 mm/sec. (1-2 in.)/sec.

Checking Refrigerant Leaks (Cont'd)

Simpo PDF Merge and Split Unregistered Version - http://www.simpopdf.com

CHECKING PROCEDURE

To prevent inaccurate or false readings, make sure there is no refrigerant vapor or tobacco smoke in the vicinity of the vehicle. Perform the leak test in calm area (low air/wind movement) so that the leaking refrigerant is not dispersed.

1. Turn engine off.
2. Connect a suitable A/C manifold gauge set to the A/C service ports.
3. Check if the A/C refrigerant pressure is at least 345 kPa (50 psi) above 16°C (60°F). If less than specification, evacuate and recharge the system with the specified amount of refrigerant.
   NOTE: At temperatures below 16°C (60°F), leaks may not be detected since the system may not reach 345 kPa (50 psi).
4. Conduct the leak test from the high side to the low side at points ⓐ through ⓚ. Refer to HA-4.
   Perform a leak check for the following areas carefully. Clean the component to be checked and move the leak detector probe completely around the connection/component.
   - **Compressor**

   Check the fittings of high and low-pressure hoses, relief valve, and shaft seal.
   - **Liquid tank**

   Check the pressure switch, tube fitting, weld seams and the fusible plug mounts.
   - **Service valves**

   Check all around the service valves. Ensure service valve caps are secured on the service valves (to prevent leaks).
   NOTE: After removing A/C manifold gauge set from service valves, wipe any residue from valves to prevent any false readings by leak detector.
   - **Cooling unit (Evaporator)**

   Slide blower fan on "High" for at least 15 seconds to dissipate any refrigerant trace in the cooling unit. Insert the leak detector probe into the drain hose immediately after stopping engine. (Keep the probe inserted for at least ten seconds.)
5. If the leak detector detects a leak, verify at least once by blowing compressed air into area of suspected leak, then repeat check.
6. Do not stop when one leak is found. Continue to check for additional leaks at all system components.
7. Start engine.
8. Set the heater A/C control as follows:
   a. A/C switch ON
   b. Face mode
   c. Recirculation switch ON
   d. Max cold temperature
   e. Fan speed high
9. Run engine at 1500 rpm for at least 2 minutes.
10. Turn engine off and perform leak check again following steps 4 through 6 above.

Checking Refrigerant Leaks (Cont'd)

Simpo PDF Merge and Split Unregistered Version - http://www.simpopdf.com

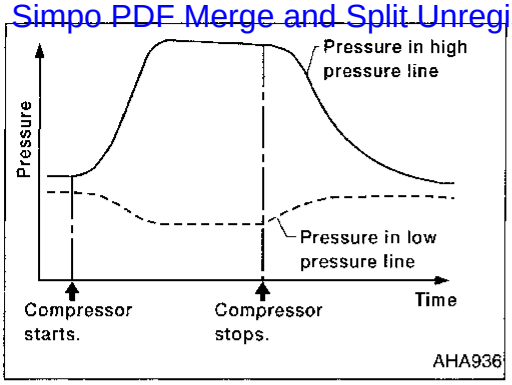

Refrigerant leaks should be checked immediately after stopping the engine. Begin with the leak detector on the high-pressure line. The pressure in the high pressure line will gradually drop after refrigerant circulation stops and pressure in the low pressure line will gradually rise, as shown in the graph. Leaks are more easily detected when pressure is high.

11. Discharge A/C system using approved refrigerant recovery equipment. Repair the leaking fitting or component as necessary.
12. Evacuate and recharge A/C system and perform the leak test to confirm no refrigerant leaks.
13. Conduct A/C performance test to ensure system works properly.

Simpo PDF Merge and Split Unregistered Version - http://www.simpopdf.com

R-134a Service Procedure

DISCHARGING REFRIGERANT

WARNING:

Avoid breathing A/C refrigerant and lubricant vapor or mist. Exposure may irritate eyes, nose and throat. Remove R-134a from the A/C system using certified service equipment meeting requirements of SAE J2210 (R-134a recycling equipment) or J2209 (R-134a recovery equipment). If accidental system discharge occurs, ventilate work area before resuming service. Additional health and safety information may be obtained from refrigerant and lubricant manufacturers.

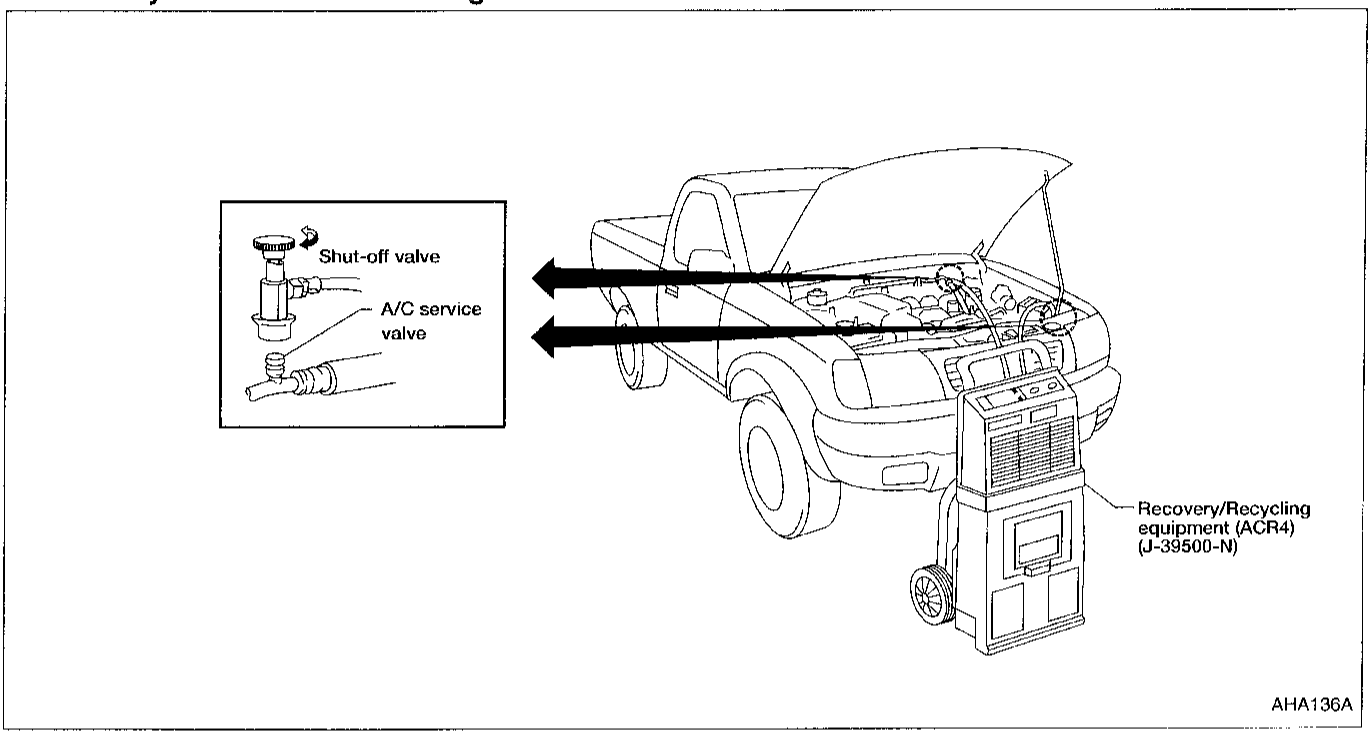

EVACUATING SYSTEM AND CHARGING REFRIGERANT

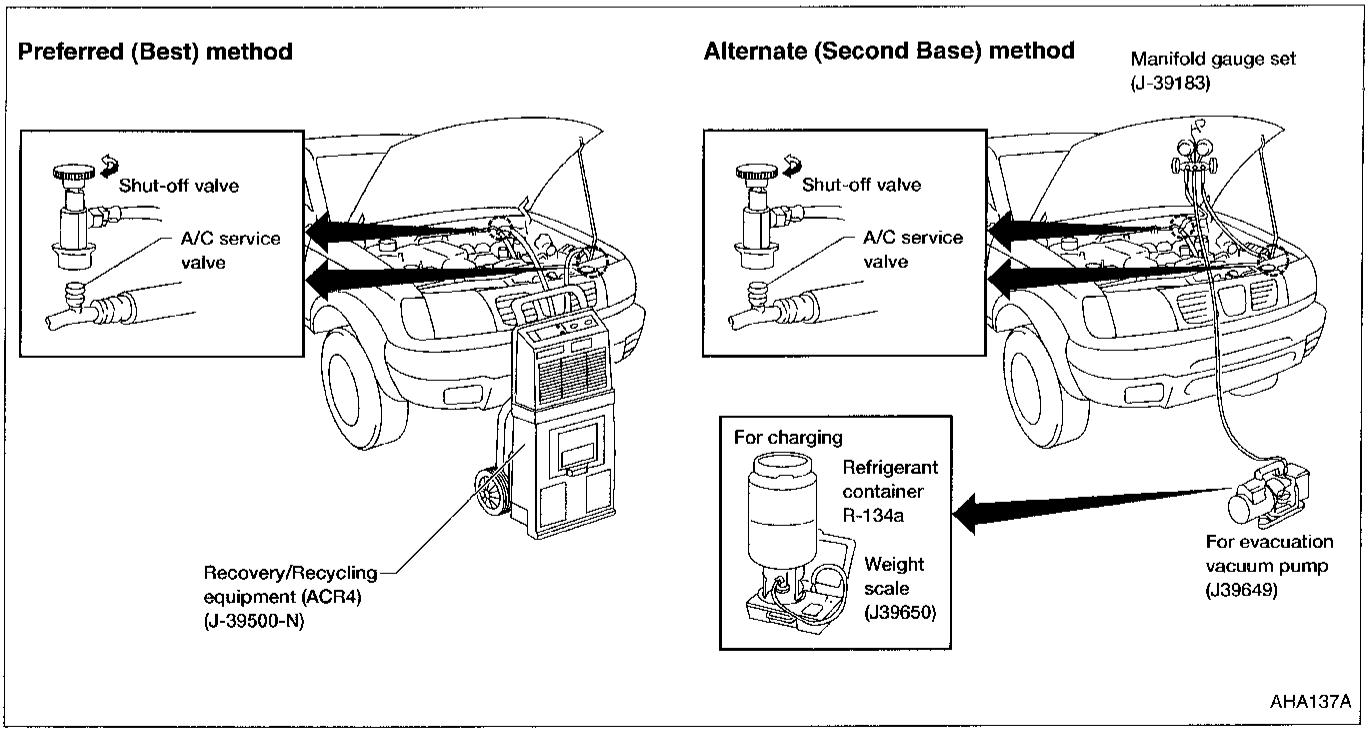

R-134a Service Procedure (Cont'd)

Simpo PDF Merge and Split Unregistered Version - http://www.simpopdf.com

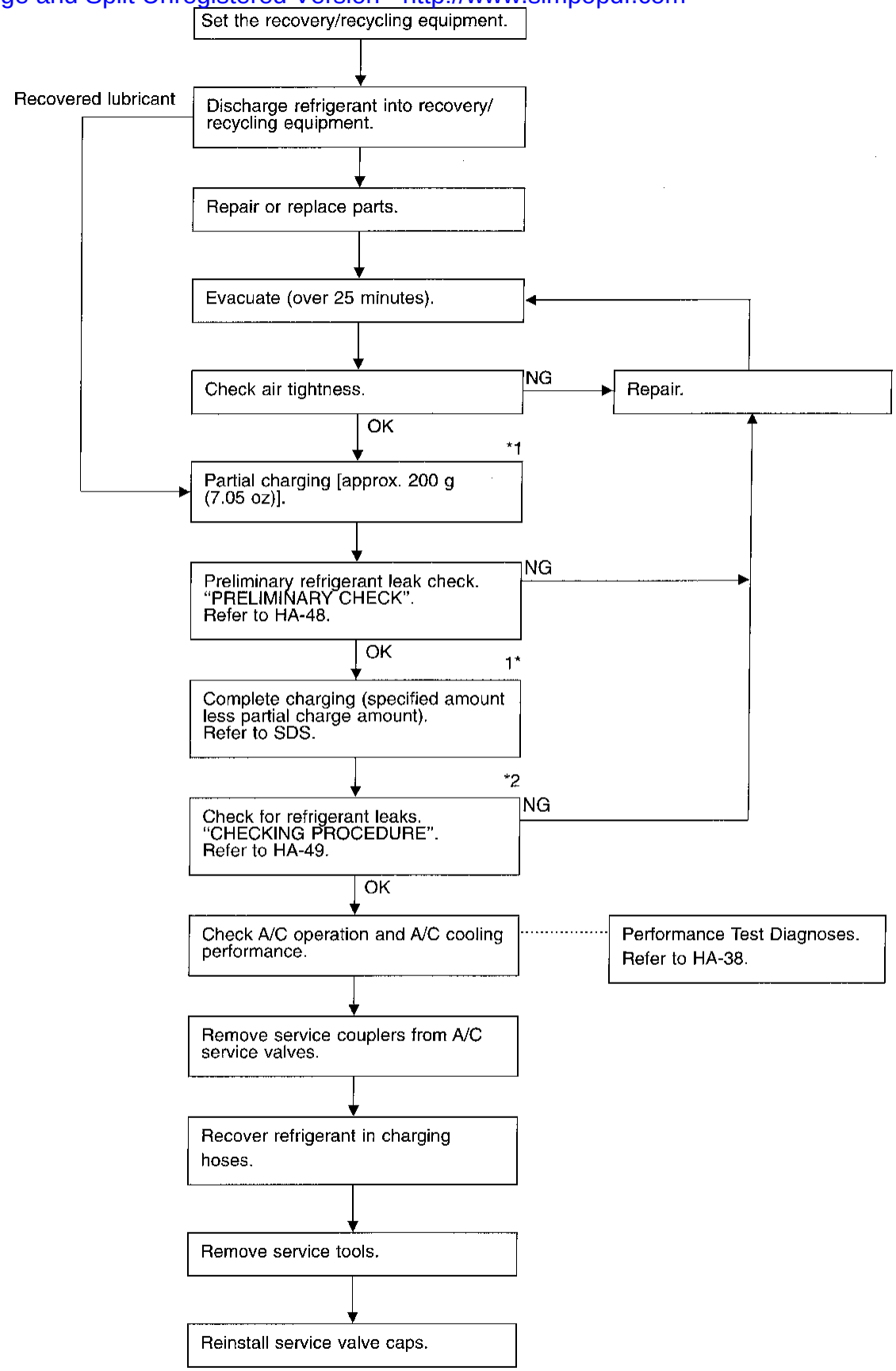

Note: *1 Before charging refrigerant, ensure engine is OFF.
*2 Before checking for leaks, start engine to activate air conditioner system then turn engine OFF. Service valve caps must be installed to prevent leakage.

Simpo PDF Merge and Split Unregistered Version - http://www.simpopdf.com

Compressor Lubricant Quantity

The lubricant used to lubricate the compressor circulates through the system with the refrigerant. Whenever any A/C component is replaced or gas leakage occurs, lubricant must be added.
If lubricant quantity is not maintained properly, the following malfunctions may result:

- Lack of lubricant: May lead to a seized compressor
- Excessive lubricant: Inadequate cooling (thermal exchange interference)

LUBRICANT

Name: Nissan A/C System Lubricant Type R
Part No.: KLH00-PAGR0

CHECKING AND ADJUSTING

Adjust the lubricant quantity according to the flowchart shown below.

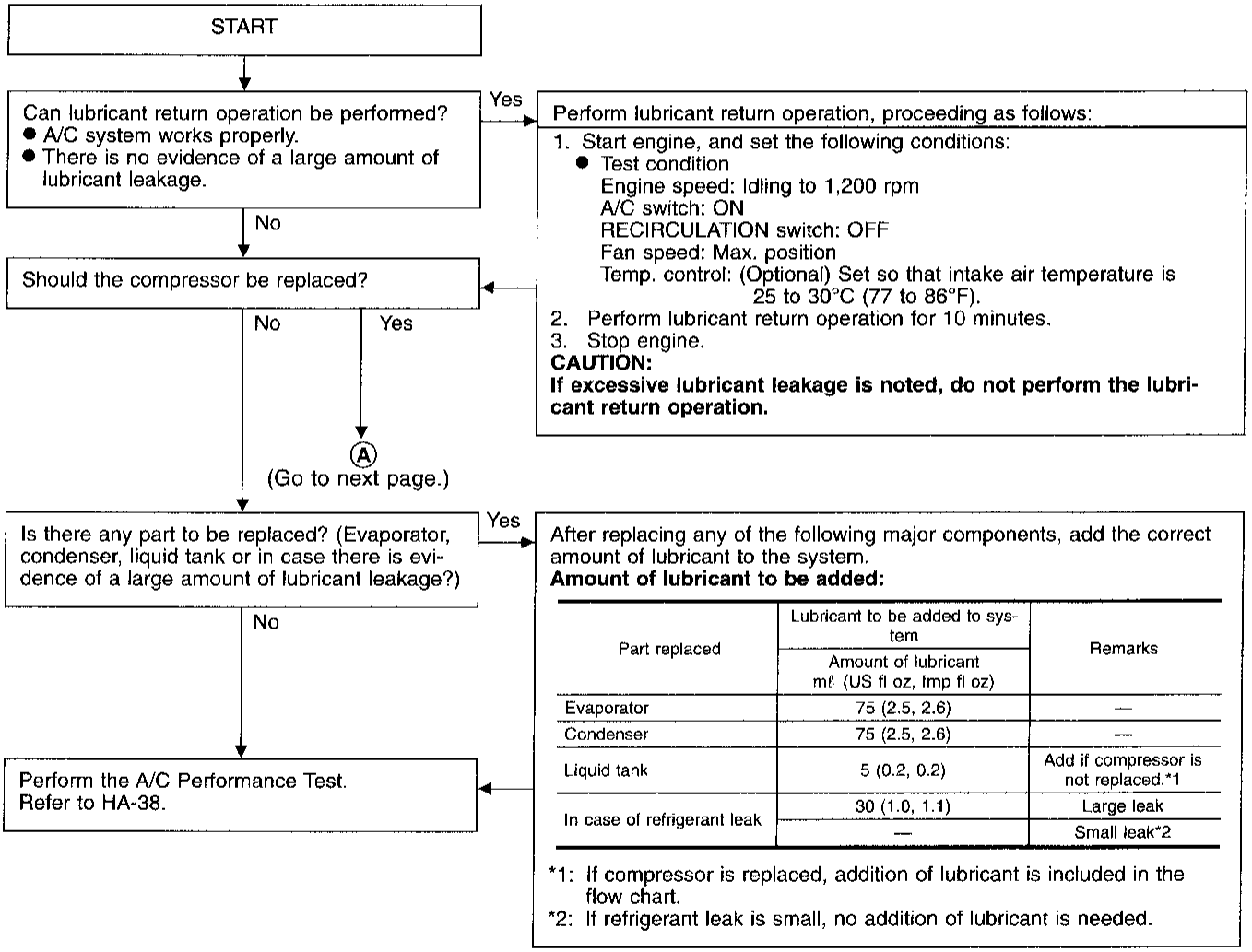

Part replaced	Lubricant to be added to system Amount of lubricant mℓ (US fl oz, Imp fl oz)	Remarks
Evaporator	75 (2.5, 2.6)	—
Condenser	75 (2.5, 2.6)	—
Liquid tank	5 (0.2, 0.2)	Add if compressor is not replaced.*1
In case of refrigerant leak	30 (1.0, 1.1)	Large leak
	—	Small leak*2

*1: If compressor is replaced, addition of lubricant is included in the flow chart.
*2: If refrigerant leak is small, no addition of lubricant is needed.

Compressor Lubricant Quantity (Cont'd)

Simpo PDF Merge and Split Unregistered Version - http://www.simpopdf.com

Ⓐ

1. Discharge refrigerant into refrigerant recovery/recycling equipment. Measure lubricant discharged into the recovery/recycling equipment.
2. Drain the lubricant from the old (removed) compressor into a graduated container and record the amount of lubricant drained.
3. Drain the lubricant from the new compressor into a separate, clean container.
4. Measure an amount of new lubricant equal to amount drained from old compressor. Add this lubricant to new compressor through the suction port opening.
5. Measure an amount of new lubricant equal to the amount recovered during discharging. Add this lubricant to new compressor through the suction port opening.
6. If the liquid tank also needs to be replaced, add an additional 5 mℓ (0.2 US fl oz, 0.2 Imp fl oz) of lubricant at this time.
   Do not add this 5 mℓ (0.2 US fl oz, 0.2 Imp fl oz) of lubricant if only replacing the compressor.

Lubricant adjusting procedure for compressor replacement

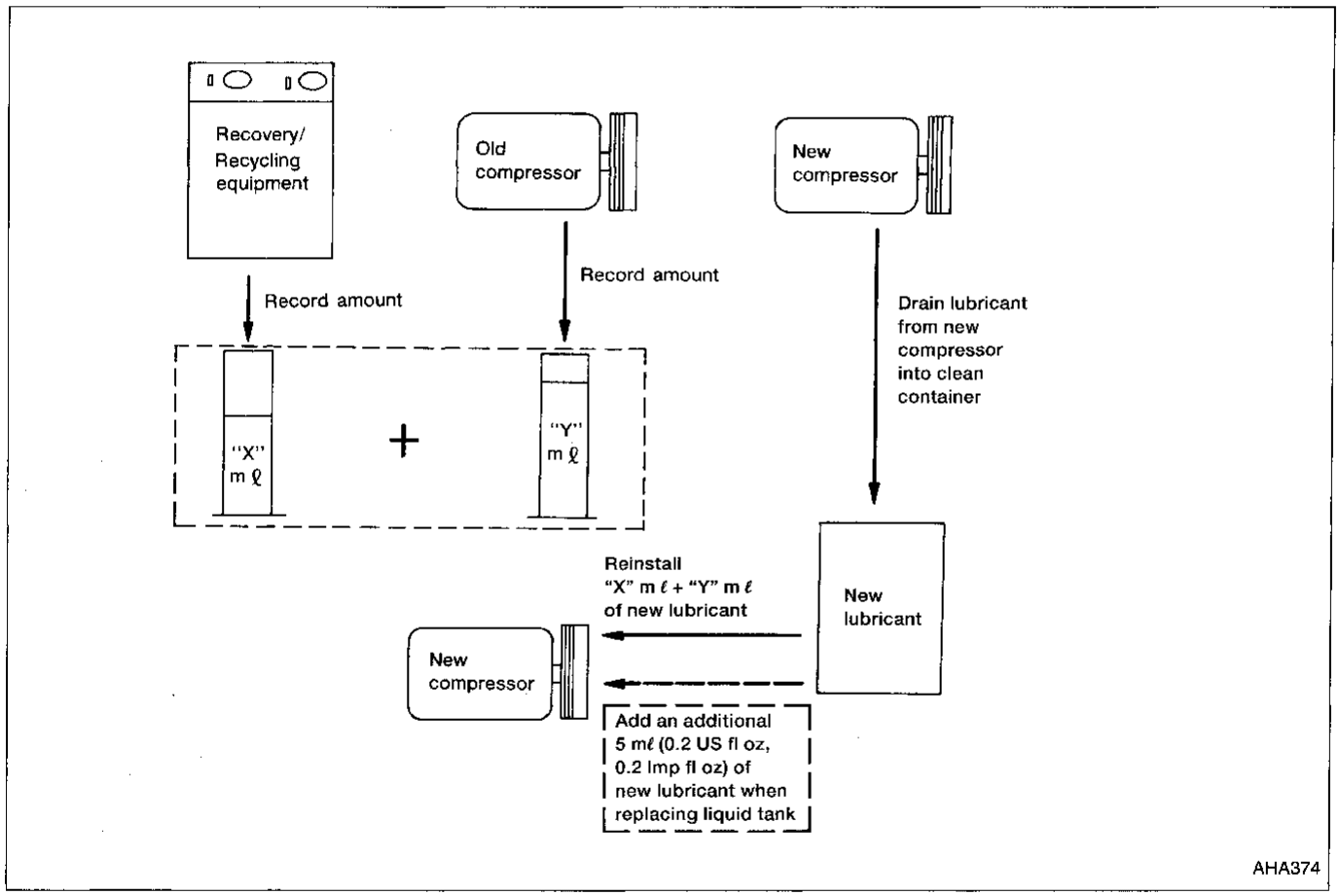

Simpo PDF Merge and Split Unregistered Version - http://www.simpopdf.com

Compressor Mounting

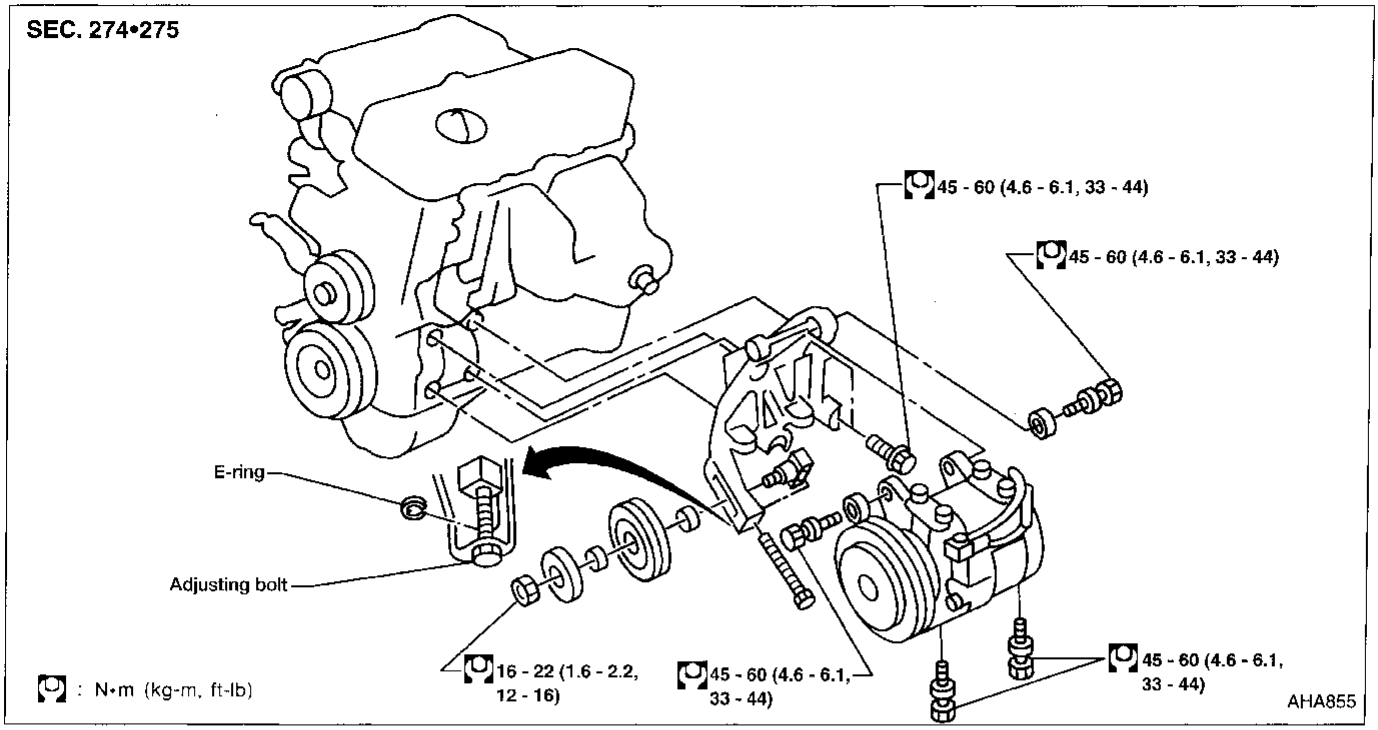

Belt Tension

- **Refer to MA section ("Checking Drive Belts", "ENGINE MAINTENANCE").**

Fast Idle Control Device (FICD)

- **Refer to EC section ("IACV-FICD Solenoid Valve", "TROUBLE DIAGNOSIS FOR NON-DETECTABLE ITEMS").**

Condenser

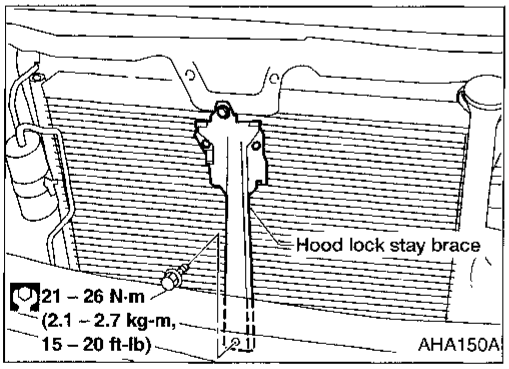

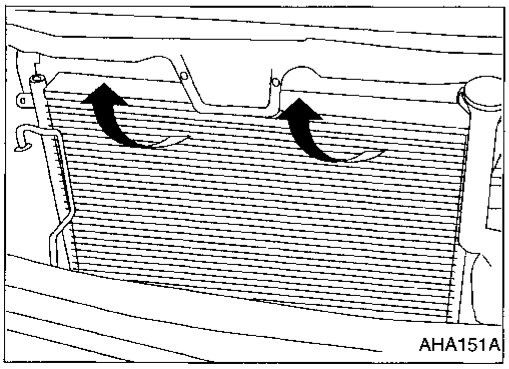

REMOVAL

1. Discharge refrigerant using the recovery/recycling equipment (ACR4).
2. Remove side marker lamps.
3. Remove front grille (4 fasteners).
4. Remove harness clip from hood lock stay, if equipped (gently press out).
5. Remove grille apron (5 nuts).
6. Remove hood lock stay brace (4 bolts). Remove hood latch (3 bolts).
7. Remove hose (high-pressure) clamp bracket from radiator core support.
8. Disconnect high-pressure hose at condenser.
9. Disconnect dual-pressure switch harness connector.
10. Disconnect high-pressure tube (liquid tank to cooling unit) at liquid tank.
11. Remove liquid tank and bracket.
12. Remove lower core support seal (4 bolts).
13. Loosen windshield washer tank bolts.
14. Remove condenser mounting bolts (2 bolts).
15. Remove condenser assembly.

CAUTION:
Carefully lift condenser without damaging radiator (fin and tube).

Simpo PDF Merge and Split Unregistered Version - http://www.simpopdf.com

Compressor

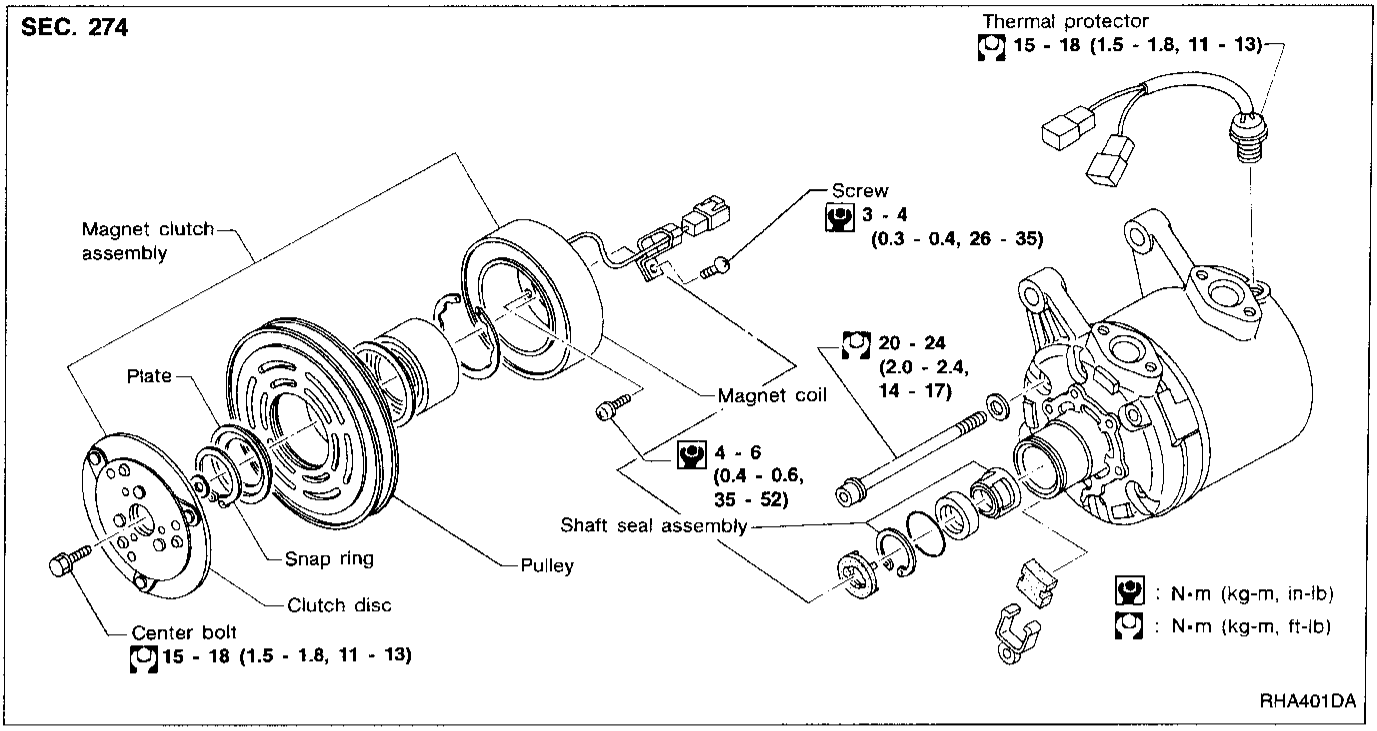

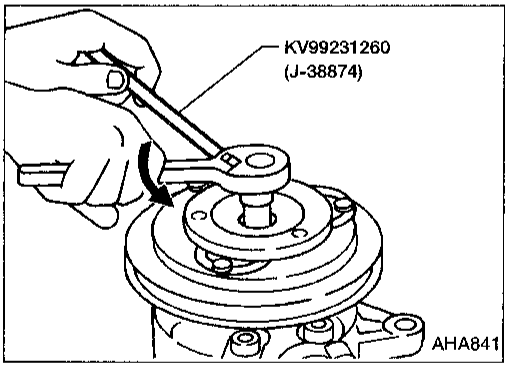

Compressor Clutch

REMOVAL

- When removing center bolt, hold clutch disc with clutch disc wrench.

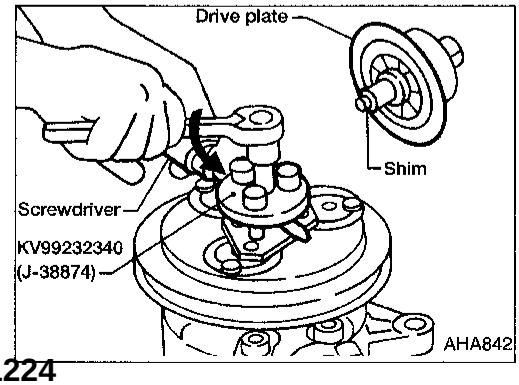

- Remove the drive plate using the clutch disc puller.
  Insert holder's three pins into the drive plate. Rotate the holder clockwise to hook it onto the plate. Then, tighten the center bolt to remove the drive plate.
  While tightening the center bolt, insert a round bar (screwdriver, etc.) between two of the pins (as shown in the figure) to prevent drive plate rotation. After removing the drive plate, remove the shims from either the drive shaft or the drive plate.

Compressor Clutch (Cont'd)

Simpo PDF Merge and Split Unregistered Version - http://www.simpopdf.com

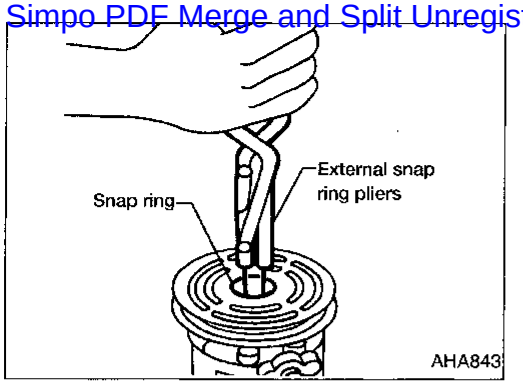

- Remove the snap ring using external snap ring pliers.

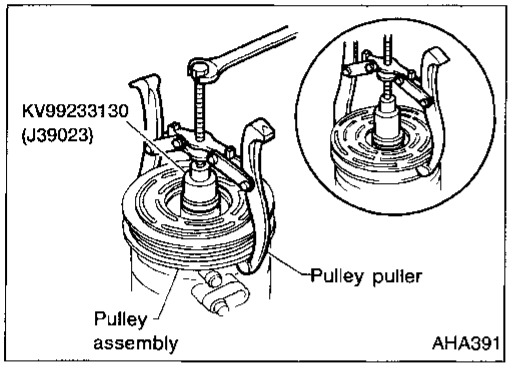

- For pulley removal use pulley puller.
  Use a commercially available pully puller. Position the center of the puller on the end of the drive shaft. Remove the pully assembly with the puller.
  For Pressed Pulleys:
  To prevent deformation of the pulley groove, the puller claws should be hooked under (not into) the pulley groove.
- Remove the field coil harness clip using a screwdriver.

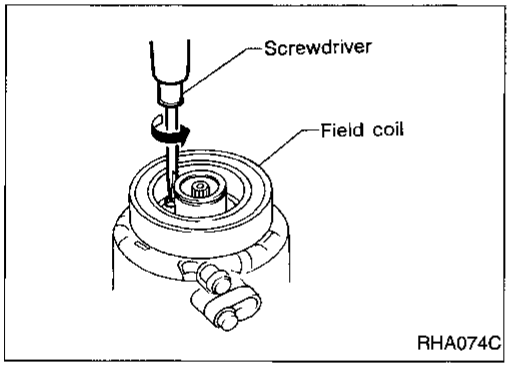

- Remove the three field coil fixing screws and remove the field coil.

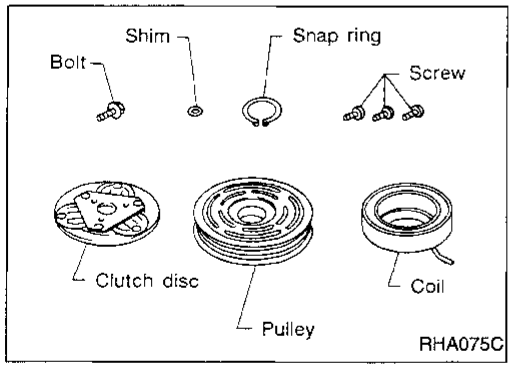

INSPECTION

Clutch disc

If the contact surface shows signs of damage due to excessive heat, replace clutch disc and pully.

Pulley

Check the appearance of the pulley assembly. If contact surface of pulley shows signs of excessive grooving, replace clutch disc and pulley. The contact surfaces of the pulley assembly should be cleaned with a suitable solvent before reinstallation.

Coil

Check coil for loose connection or cracked insulation.

Compressor Clutch (Cont'd)

Simpo PDF Merge and Split Unregistered Version - http://www.simpopdf.com

INSTALLATION

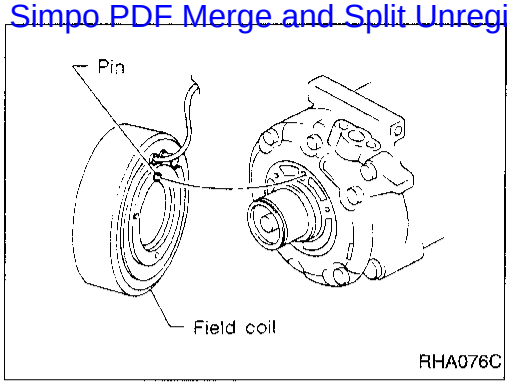

- Install the field coil.
- **Be sure to align the coil's pin with the hole in the compressor's front head.**
- Install the field coil harness clip using a screwdriver.

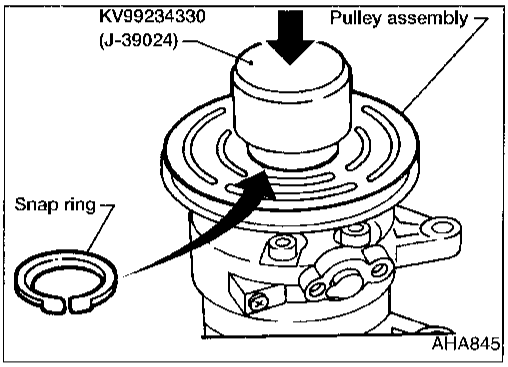

- Install the pulley assembly using the installer and a hand press, and then install the snap ring using snap ring pliers.

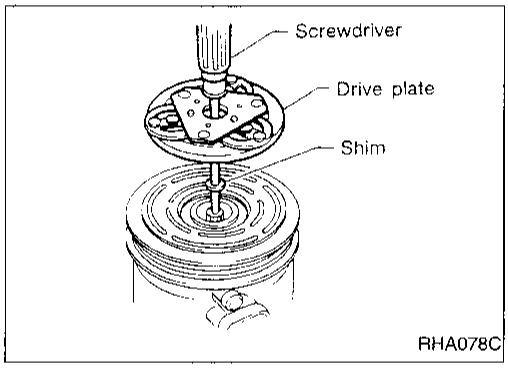

- Install the drive plate on the drive shaft, together with the original shim(s). Press the drive plate down by hand.

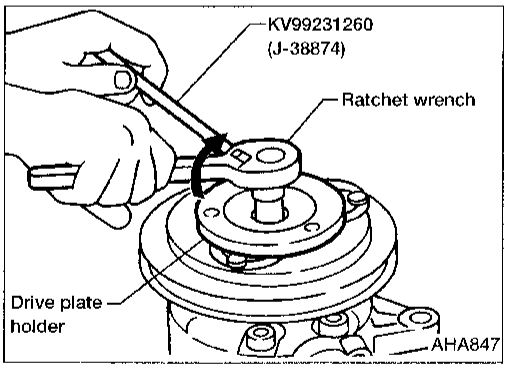

- Using the holder to prevent drive plate rotation, tighten the bolt to 12 to 15 N·m (1.2 to 1.5 kg-m, 9 to 11 ft-lb) torque.
- **After tightening the bolt, check that the pulley rotates smoothly.**

Compressor Clutch (Cont'd)

Simpo PDF Merge and Split Unregistered Version - http://www.simpopdf.com

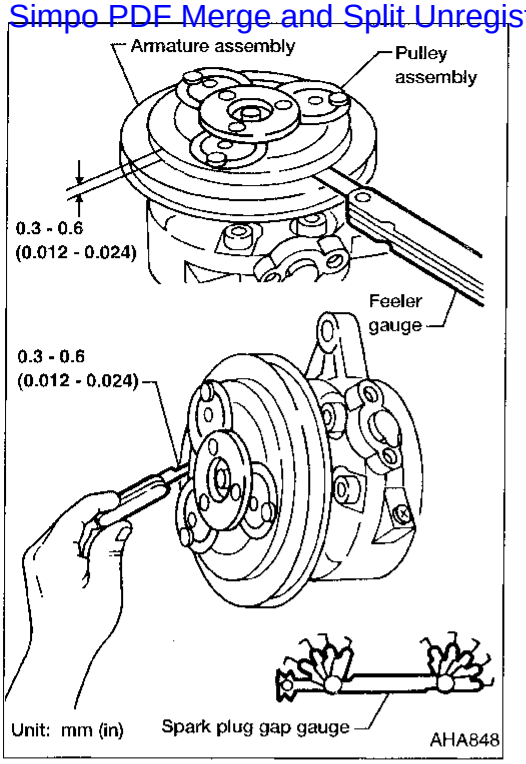

- Check clearance all the way around the clutch disc.

  Disc-to-pulley clearance:

  0.3 - 0.6 mm (0.012 - 0.024 in)

  If the specified clearance is not obtained, replace adjusting spacer and recheck.

BREAK-IN OPERATION

When replacing compressor clutch assembly, always conduct the break-in operation. This is done by engaging and disengaging the clutch about 30 times. Break-in operation raises the level of transmitted torque.

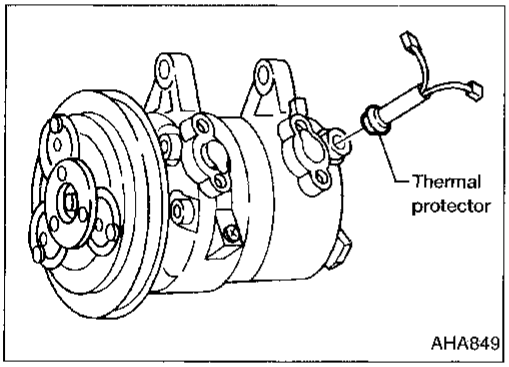

Thermal Protector

INSPECTION

- When servicing, do not allow foreign matter to get into compressor.
- Check continuity between two terminals.

Simpo PDF Merge and Split Unregistered Version - http://www.simpopdf.com

Heater Unit (Heater Core)

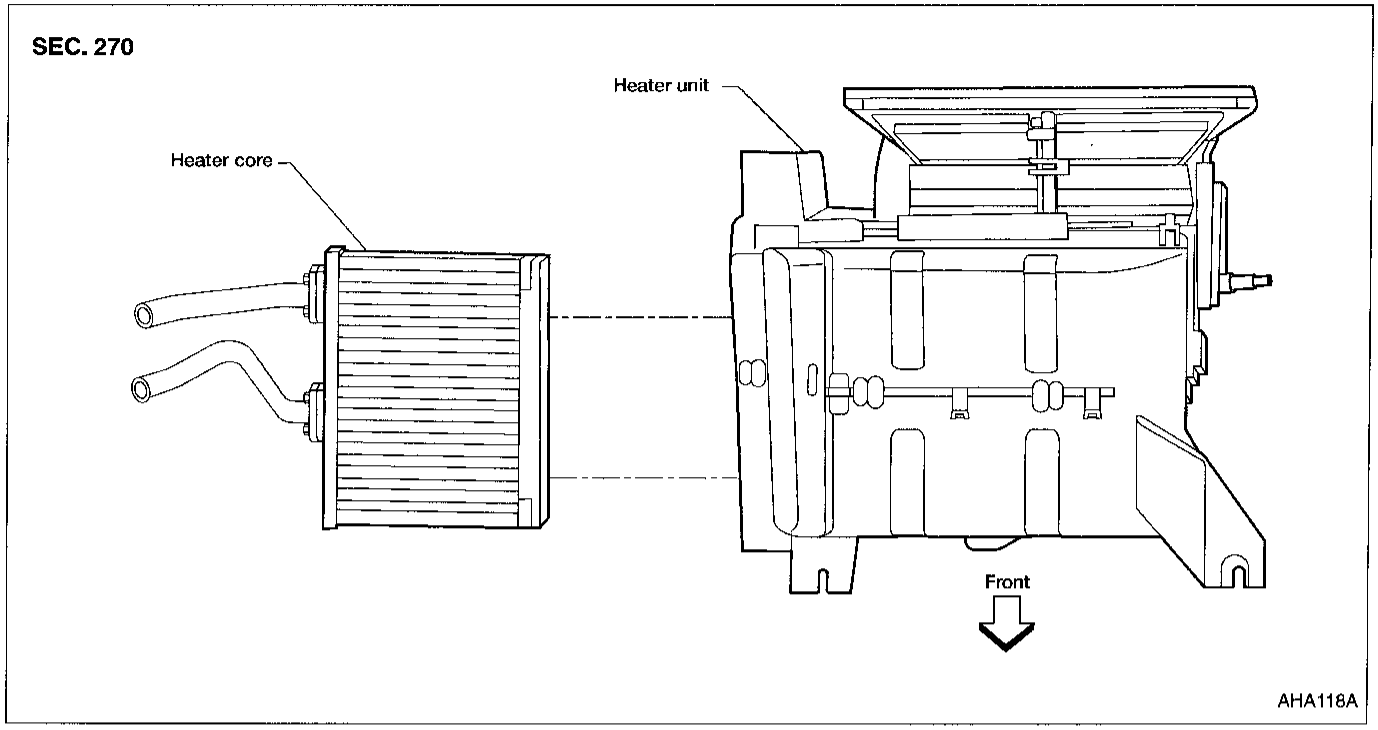

REMOVAL

1. Drain the cooling system. Refer to MA section, ("Changing Engine Coolant").
2. Disconnect the two heater hoses from inside the engine compartment.
3. Remove the cooling unit. Refer to HA-61.
4. Remove the steering member assembly. Refer to BT section ("Instrument Panel").
5. Remove the heater unit.
6. Remove the heater core.

INSTALLATION

Installation is basically the reverse order of removal.

When filling radiator with coolant, refer to MA section ("Changing Engine Coolant").

Simpo PDF Merge and Split Unregistered Version - http://www.simpopdf.com

Cooling Unit (A/C Evaporator)

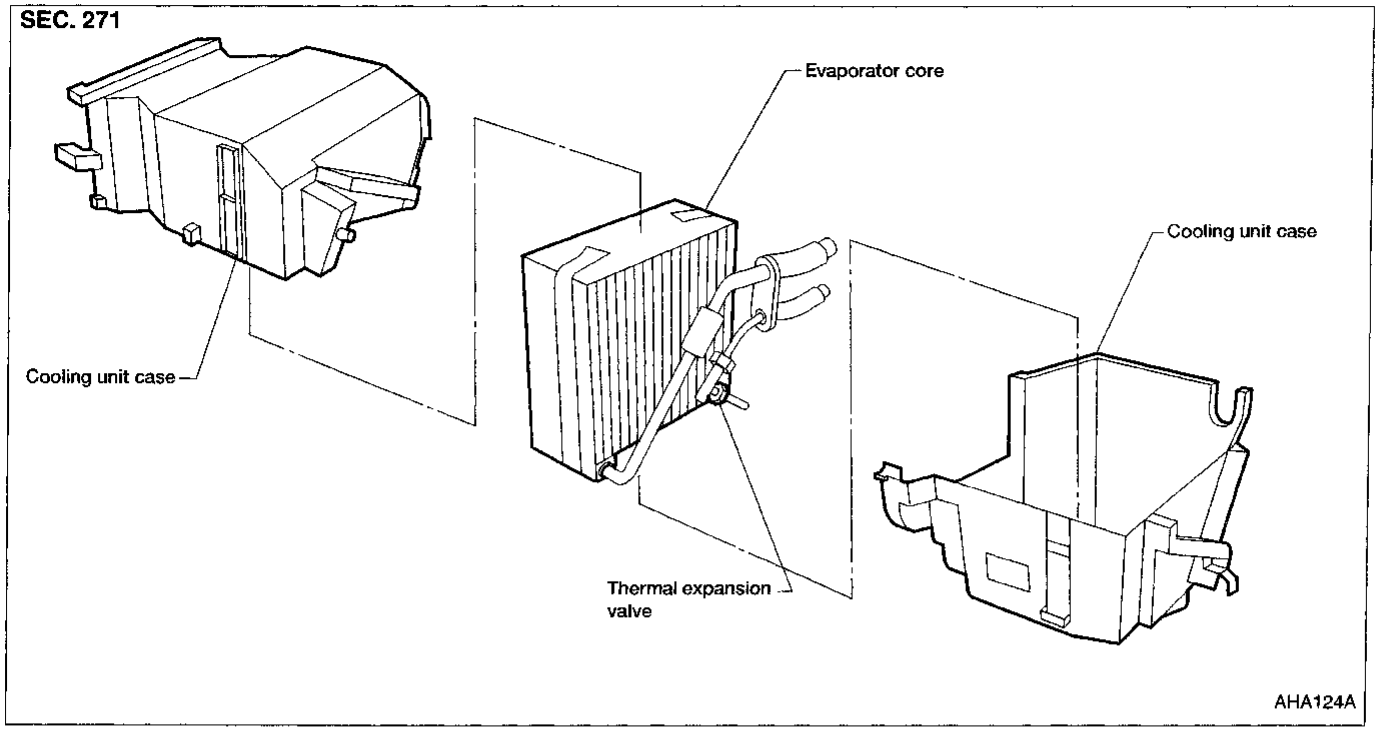

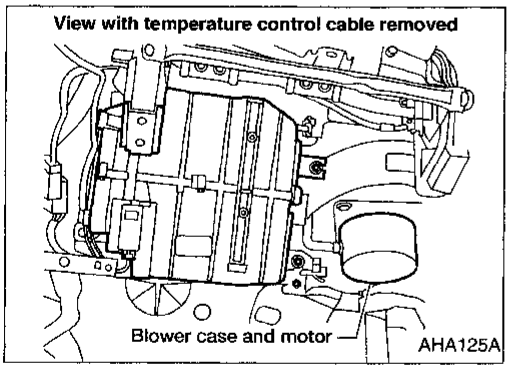

REMOVAL

1. Evacuate the A/C system. Refer to HA-51.
2. Disconnect the two refrigerant lines from the engine compartment.
   - Cap the A/C lines to prevent moisture from entering the system.
3. Remove the glove box and mating trim. Refer to BT section ("Instrument Panel").
4. Disconnect the thermal amp. connector.
5. Remove the cooling unit.
6. Separate the cooling unit case, and remove the evaporator.

INSTALLATION

Installation is basically the reverse order of removal.

Recharge the A/C system. Refer to HA-51.

Simpo PDF Merge and Split Unregistered Version - http://www.simpopdf.com

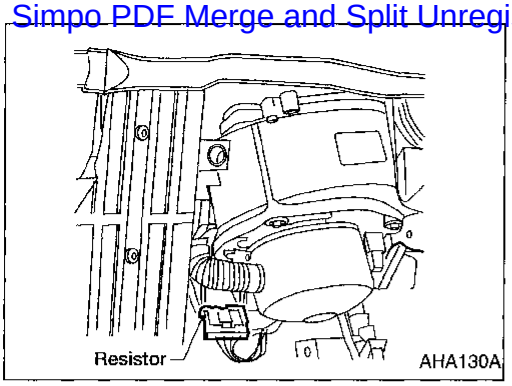

Blower Case and Motor

REMOVAL

1. Remove the glove box and mating trim. Refer to BT section ("Instrument Panel").
2. Remove the cooling unit. Refer to HA-61.
3. Disconnect the fan motor resistor.
4. Disconnect the fan motor.
5. Remove the blower case and motor.
6. Remove the three bolts and remove the motor from the blower case.

INSTALLATION

Installation is basically the reverse order of removal.

- **Recharge the A/C system. Refer to HA-51.**

Simpo PDF Merge and Split Unregistered Version - http://www.simpopdf.com

Fan Lever and Illumination Bulbs

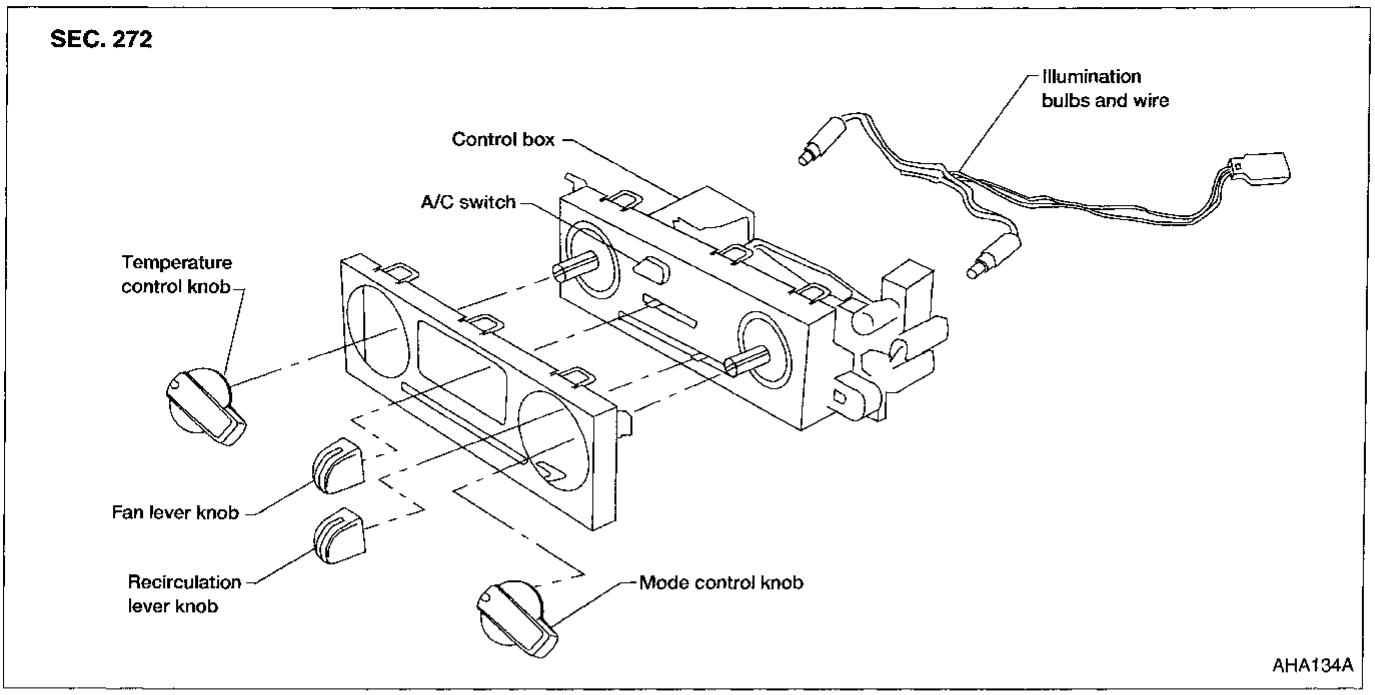

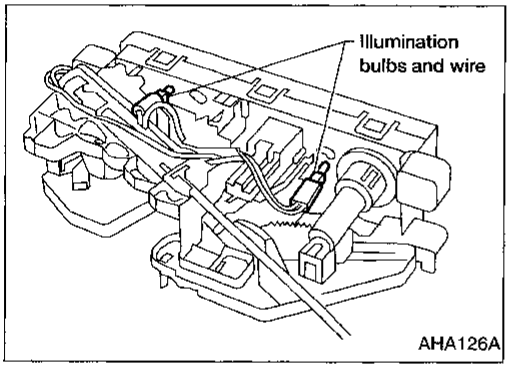

REMOVAL

1. Remove A/C & Heat control. Refer to BT section ("Instrument Panel").
2. Loosen illumination bulbs and wire and pull out.

Simpo PDF Merge and Split Unregistered Version - http://www.simpopdf.com

General Specifications

COMPRESSOR

Model	DKV-14C
Type	Vane rotary
Displacement cm³ (cu in)/Rev	140 (8.54)
Direction of rotation	Clockwise (Viewed from drive end)
Drive belt	Poly V type

LUBRICANT

Model	ZEXEL make DKV-14C
Name	Nissan A/C System Lubricant Type R
Part No.	KLH00-PAGR0
Capacity mℓ (US fl oz, Imp fl oz)	
Total in system	200 (6.8, 7.0)
Compressor (Service part) charging amount	200 (6.8, 7.0)

REFRIGERANT

Type		R-134a
Capacity	kg (lb)	0.60 - 0.70 (1.32 - 1.54)
	g (oz)	600 - 700 (21.16 - 24.69)

Inspection and Adjustment

ENGINE IDLING SPEED
When A/C is ON

- **Refer to EC section (“Inspection and Adjustment”, “SERVICE DATA AND SPECIFICATIONS”).**

BELT TENSION

- **Refer to MA section (“Checking Drive Belts”, “ENGINE MAINTENANCE”).**

COMPRESSOR CLUTCH

Model		DKV-14C
Clutch disc-pulley clearance	mm (in)	0.3 - 0.6 (0.012 - 0.024)

Simpo PDF Merge and Split Unregistered Version - http://www.simpopdf.com

SECTION IDX

Simpo PDF Merge and Split Unregistered Version - http://www.simpopdf.com

A

AAC/V - Wiring diagram EC-291
ABS - Wiring diagram BR-40, BR-65
ABS (anti-lock brake system) BR-31
Absolute pressure sensor EC-108
A/C - Wiring diagram HA-20
A/C air flow HA-15
A/C component layout HA-14
A/C compressor clutch removal and installation HA-56
A/C compressor description HA-6
A/C compressor mounting HA-55
A/C compressor precaution HA-6
A/C compressor special service tool HA-7
A/C control operation (manual A/C) HA-13
A/C diagnostic work flow (manual A/C) HA-24
A/C harness layout (manual A/C) HA-16
A/C HFC134a (R134a) system introduction HA-12
A/C HFC134a (R134a) system precaution HA-2
A/C HFC134a (R134a) system service procedure HA-48, HA-51
A/C HFC134a (R134a) system service tools HA-8
A/C HFC134a system service equipment precaution HA-8
A/C lubricant (R134a) HA-53
A/C operational check HA-22
A/C performance chart HA-40
A/C performance test diagnoses HA-38
A/C pressure switch HA-12
A/C relay HA-36
A/C trouble diagnoses (manual A/C) HA-24
Accelerator control system FE-3
Accelerator wire adjustment FE-3
Air bag RS-9
Air bag disposal RS-23
Air bag precautions GI-2
Air bleeding for brake system BR-6
Air bleeding (hydraulic clutch) CL-7
Air cleaner filter replacement MA-12
Air conditioner cut control EC-18
Air conditioning - See A/C HA-12
Air flow meter - See Mass air flow sensor EC-99
Alternator EL-28
Angular tightening application EM-2
Antenna EL-119
Anti-lock brake system - See ABS BR-31
Anti-lock brake system - Wiring diagram BR-40
AP/SEN - Wiring diagram EC-108
ASCD - Wiring diagram EL-126
ASCD (automatic speed control device) EL-121
A/T - Wiring diagram AT-7
A/T IND - Wiring diagram EL-91
AT indicator lamp EL-91
A/T removal and installation AT-48
A/T shift lock system AT-39
A/T shift lock system - Wiring diagram AT-40
A/T trouble diagnoses AT-23
Audio EL-114
AUDIO - Wiring diagram EL-115
Audio and A/C control removal and installation - See Instrument panel BT-11
Auto lock free running hub FA-17
Automatic speed control system - See ASCD EL-121
Automatic transmission fluid replacement MA-17
Automatic transmission number GI-38
Auxiliary air control (AAC) EC-291
Axle housing (rear) RA-7

B

Back window BT-22, BT-33
BACK/L - Wiring diagram EL-53
Back-up lamp EL-53
Back-up lamp switch (M/T) MT-7
Ball joint front axle FA-35
Battery EL-17
Baulk ring (M/T) MT-12
Blower motor HA-28
Blower relay HA-16
Blower resistor HA-28
Body alignment BT-37
Body mounting BT-36
Boring/honing cylinder block EM-44
BPT valve EC-254
Brake booster BR-17
Brake control valve (Proportioning valve) BR-11
Brake fluid change BR-5
Brake fluid level MA-20
Brake fluid level and line check BR-5
Brake hydraulic line BR-7
Brake inspection MA-20
Brake lines and cables inspection MA-20
Brake master cylinder BR-14
Brake pedal BR-12
Bulb specifications EL-222
Bumper, front BT-5
Bumper, rear BT-8
BYPS/V - Wiring diagram EC-378

C

Cab body BT-36
Camshaft inspection EM-30
Camshaft position sensor (CMPS) EC-236
Camshaft position sensor (PHASE) EC-236
Canister - See EVAP canister EC-20
Center bearing assembly (propeller shaft) PD-11
Center bearing disassembly (propeller shaft) PD-10
CHARGE - Wiring diagram EL-29

Simpo PDF Merge and Split Unregistered Version - http://www.simpopdf.com

Charging system EL-28
Chassis and body maintenance MA-16
CHIME - Wiring diagram EL-95
CIGAR - Wiring diagram EL-113
Cigarette lighter EL-113
Circuit breaker EL-13
CKPS - Wiring diagram EC-231, EC-322
Closed loop control EC-313
Closed throttle position switch EC-297
Clutch cover CL-13
Clutch disc CL-12
Clutch fluid level MA-16
Clutch master cylinder CL-8
Clutch operating cylinder CL-9
Clutch pedal CL-5
Clutch release bearing CL-10
Clutch withdrawal lever CL-10
CMPS - Wiring diagram EC-236
Collision diagnosis RS-51
Combination lamp, front, removal and installation BT-5
Combination lamp, rear, removal and installation BT-22
Combination meter EL-69
Combination meter removal and installation - See Instrument panel BT-11
Combination switch EL-33
Compression pressure EM-13
Compressor clutch removal and installation HA-56
Compressor description HA-6
Compressor mounting HA-55
Compressor precaution HA-6
Compressor special service tool HA-7
Connecting rod EM-43
Connecting rod bearing clearance EM-47
Connecting rod bushing clearance EM-48
Connector inspection GI-17
Console box - See Instrument panel BT-12
CONSULT for ABS BR-71
CONSULT for ECCS EC-54
CONSULT general information GI-33
Control lever (M/T) MT-14
Control lever transfer TF-8
Control valve (A/T) AT-70
Converter housing installation AT-50
Coolant mixture ratio MA-9
Coolant replacement MA-11
Cooling circuit (engine) LC-7
Cooling fan LC-12
Counter gear (M/T) MT-12
Counter gear transfer TF-10
Coupling sleeve (M/T) MT-12
Crank angle sensor built into distributor - See Camshaft position sensor EC-236
Crankcase emission control system - See positive crankcase ventilation EC-25
Crankcase ventilation system - See positive crankcase ventilation EC-25
Crankshaft EM-45
Crankshaft position sensor (OBD) EC-231, EC-322
Crankshaft position sensor (OBD) cog chipping EC-231
Crankshaft position sensor (POS) EC-231
Crankshaft position sensor (POS) chipping EC-231
Crankshaft position sensor (REF) EC-231
Crash zone sensor RS-14
Cruise control - See ASCD EL-121
Cylinder block EM-41
Cylinder block boring EM-44
Cylinder head EM-28
Cylinder head bolt tightening EM-23

D

Data link connector for Consult EC-54, EC-422
Daytime light system EL-41
Daytime running light - See Daytime light system EL-41
Detonation sensor - See Knock sensor EC-227
Diagnosis sensor unit RS-14
Diagnostic trouble code (DTC) chart EC-75
Differential carrier assembly PD-29, PD-46, PD-64
Differential carrier disassembly PD-35, PD-53
Differential gear oil replacement MA-19
Dimensions GI-39
Distributor EC-17
Distributor ignition (DI) system EC-17
D/LOCK - Wiring diagram EL-151
Dome light - See Interior lamp EL-61
Door, front BT-10
Door glass BT-10
Door glass fitting adjustment BT-10
Door lock BT-10
Door mirror BT-35
Door trim BT-17
Drive belt inspection MA-10
Drive pinion diff. inspection PD-39, PD-57
Drive pinion height PD-41, PD-59
Drive plate runout EM-48
Drive shaft (front) FA-22
Drive shaft (rear) RA-7
DTRL - Wiring diagram EL-44
Dual pressure switch HA-36

E

ECCS basic inspection EC-71
ECCS circuit diagram EC-9
ECCS component parts location EC-10
ECCS fail-safe system EC-76
ECCS on board diagnostic system EC-35

Simpo PDF Merge and Split Unregistered Version - http://www.simpopdf.com

ECCS relay EC-94
ECCS symptom matrix chart EC-77
ECCS system diagram and chart EC-12
ECM input/output signal EC-84
ECTS - Wiring diagram EC-121, EC-139
EGR control (EGRC) - BPT valve EC-250
EGR control (EGRC) - solenoid valve EC-327
EGR control valve EC-248, EC-254, EC-343
EGR temperature sensor EC-332
EGRC1 - Wiring diagram EC-242, EC-338
EGRC/V - Wiring diagram EC-327
EGR/TS - Wiring diagram EC-332
Electrical diagnoses GI-20
Electrical unit EL-202
Electrical units location EL-202
Electronic ignition (EI) system EC-17
Electronic ignition system EC-17
Engine compartment BT-38
Engine control module (ECM) EC-302
Engine coolant temperature sensor (ECTS) EC-121, EC-139
Engine oil filter replacement MA-13
Engine oil precautions GI-5
Engine oil replacement MA-13
Engine outer component parts EM-10
Engine removal EM-38
Engine room - See Engine compartment BT-38
Engine serial number GI-38
EVAP canister EC-20
EVAP canister purge control solenoid valve EC-270, EC-355
EVAP canister purge volume control solenoid valve EC-355
EVAP canister purge volume control valve EC-270
EVAP canister vent control valve EC-276
EVAP control system pressure sensor EC-281
EVAP control system purge flow monitoring diagnosis EC-367
EVAP control system (small leak) diagnosis EC-22, EC-260
EVAP system close mode EC-22, EC-56
EVAP vapor lines inspection MA-15
Evaporative emission (EVAP) system EC-20
Exhaust gas recirculation (EGR) valve ... EC-242, EC-338
Exhaust system FE-8
Exhaust system inspection MA-16
Extension tube diff PD-20
Exterior BT-22

F

Fan switch HA-28
Fast idle cam (FIC) EC-28
Fast idle cam (FIC) inspection and adjustment EC-28
FICD - Wiring diagram EC-418
Final drive disassembly PD-35, PD-53
Final drive pre-inspection PD-35, PD-53
Final drive removal and installation PD-15
Floor trim BT-14
Flow charts GI-30
Fluids MA-8
Flywheel (clutch) CL-13
Flywheel runout EM-48
Fork rod (M/T) MT-14
Forward clutch AT-88
F/PUMP - Wiring diagram EC-410
Freeze frame data EC-35
FRO2 - Wiring diagram EC-144
FRO2/H - Wiring diagram EC-175
Front axle FA-14
Front bumper BT-5
Front combination lamp removal and installation BT-5
Front disc brake BR-20
Front door BT-10
Front drive shaft transfer TF-10
Front final drive disassembly (4WD) PD-17
Front final drive pre-inspection (4WD) PD-17
Front final drive removal and installation (4WD) PD-14
Front heated oxygen sensor (HO2S) EC-144
Front heated oxygen sensor (HO2S) heater EC-175
Front heated oxygen sensor (HO2S) monitor EC-162
Front oxygen sensor (O2S) monitor EC-46
Front seat BT-26
Front seat belt RS-4
Front suspension FA-27
Fuel cut control (at no load & high engine speed) EC-19
Fuel damper EC-410
Fuel filter replacement MA-12
Fuel injection system EC-15
Fuel injector EC-27, EC-404
Fuel line inspection MA-12
Fuel precautions GI-6
Fuel pressure check EC-26
Fuel pressure regulator EC-26
Fuel pressure release EC-26
Fuel pump EC-410
Fuel pump and gauge FE-7
Fuel pump relay EC-410
Fuel system FE-4
Fuel tank vacuum relief valve EC-21
Fuel temperature sensor EC-218
Fuse EL-13
Fusible link EL-13

G

Garage jack and safety stand GI-41
Gauges EL-69

Simpo PDF Merge and Split Unregistered Version - http://www.simpopdf.com

Gear components (M/T) MT-12
Generator EL-28
Generic scan tool (GST) EC-65
Glass BT-10
Governer valve assembly AT-81
Grease MA-8
Grille - See Exterior BT-5
Ground clearance GI-39
Ground distribution EL-14

H

Harness connector EL-3
Harness connector inspection GI-17
Harness layout EL-205
Hazard warning lamp EL-54
Headlamp EL-36
Headlamp aiming control EL-39
Headlamp leveler - See Headlamp aiming control EL-39
Headlining - See Roof trim BT-20
Heated oxygen sensor heater EC-154, EC-160, EC-168, EC-175
Heated oxygen sensor (HO2S) (front) EC-144
Heated oxygen sensor (HO2S) heater (front) EC-144, EC-175
Heated oxygen sensor (HO2S) heater (rear) EC-204
Heated oxygen sensor monitor (HO2S) (front) EC-162
Heated oxygen sensor (rear) EC-179
HEATER - Wiring diagram HA-19
Height (Dimensions) GI-39
HFC134a (R134a) system introduction HA-12
HFC134a (R134a) system precaution HA-2
HFC134a (R134a) system service procedure HA-48, HA-51
HFC134a (R134a) system service tools HA-8
HFC134a system service equipment precaution HA-8
High clutch AT-86
H/LAMP - Wiring diagram EL-37
Hood BT-5
Horn EL-112
HORN - Wiring diagram EL-112

I

IACV-AAC valve inspection EC-291
IACV-FICD solenoid valve EC-418
IATS - Wiring diagram EC-115
Identification plate GI-37
Idle air control valve (IACV) EC-291
Idle mixture ratio EC-29
Idle speed EC-29
Ignition coil EC-315
Ignition timing EC-29
Ignition wire inspection EC-226
IGN/SG - Wiring diagram EC-315
ILL - Wiring diagram EL-60
Illumination EL-59
Inhibitor switch AT-37, EC-388
INJECT - Wiring diagram EC-404
Injector EC-406
Injector removal and installation EC-27
Instrument panel BT-11
Intake air temperature sensor EC-115
Intake manifold EM-10
Interior BT-14
Interior lamp EL-61
Interior lamp on-off control EL-62
INT/L - Wiring diagram EL-68

J

Jacking points GI-40
Journal bearing assembly (propeller shaft) PD-12
Journal bearing disassembly (propeller shaft) PD-11
Jump seat BT-29

K

Keyless entry system - See Multi-remote control system EL-162
Knock sensor (KS) EC-227
Knuckle spindle FA-19
KS - Wiring diagram EC-227

L

Leaf spring (rear) RA-15
Length (Dimensions) GI-39
License lamp EL-51
Lifting points GI-40
Line pressure test (A/T) AT-26
Liquid gasket application EM-2
LKUP - Wiring diagram EC-393
Location of electrical units EL-202
Lock, door BT-10
Low and reverse brake AT-92
LSV (Load sensing valve) BR-9
Lubricant (R134a) A/C HA-53
Lubricants MA-8
Lubrication circuit (engine) LC-4
Lubrication-locks, hinges and hood latches MA-22
Luggage room lamp EL-68

Simpo PDF Merge and Split Unregistered Version - http://www.simpopdf.com

M

MAFS - Wiring diagram EC-99
Magnet clutch HA-56
MAIN - Wiring diagram EC-94
Main drive gear (M/T) MT-12
Main gear transfer TF-10
Mainshaft (M/T) MT-12
Mainshaft transfer TF-10
Maintenance MA-3
Maintenance (engine) MA-10
Major overhaul AT-51
Malfunction indicator lamp (MIL) EC-46
Manual lock free running hub FA-16
Manual steering gear ST-15
Manual transmission number GI-38
Manual transmission oil replacement MA-16
MAP/BARO switch solenoid valve EC-304
Mass air flow sensor (MAFS) EC-99
Master cylinder (brake) BR-14
Master cylinder (clutch) CL-8
Meter EL-69
METER - Wiring diagram EL-74
MIL & Data link connectors circuit EC-422
MIL/DL - Wiring diagram EC-422
MIRROR - Wiring diagram EL-120
Mirror, door BT-35
Mirror, out side BT-35
Misfire EC-222
Model variation GI-35
Molding - See Exterior BT-22
M/T major overhaul MT-11
M/T removal and installation MT-8
Mud guard - See Exterior BT-25
MULTI - Wiring diagram EL-166
Multiport fuel injection (MFI) system EC-15
Multiport fuel injection precautions GI-5
Multiport fuel injection system inspection EC-15
Multi-remote control system EL-162

N

Neutral position switch EC-388
Neutral position switch (M/T) MT-7
NVH troubleshooting (BR) BR-4
NVH troubleshooting (CL) CL-3
NVH troubleshooting (EM) EM-8
NVH troubleshooting (FA) FA-4
NVH troubleshooting (PD) PD-6
NVH troubleshooting (RA) RA-4
NVH troubleshooting (ST) ST-5

O

Oil change (capacity) MA-8
Oil change (interval) MA-6
Oil pan (engine) EM-14
Oil pressure (engine) LC-5
Oil pressure relief valve (engine) LC-6
Oil pump (A/T) AT-66
Oil pump regulator valve (engine) LC-6
Oil seal replacement (engine) EM-25
Oil seal replacement (front final drive 4WD) PD-13
Operating cylinder (clutch) CL-9
Out side mirror BT-35
Overdrive control switch AT-36
Overrun clutch AT-88
Oversize piston EM-44

P

Pantograph jack GI-40
Parking brake control BR-29
Parking lamp EL-50
Park/Neutral position switch EC-388
PCV filter replacement MA-15
PCV (positive crankcase ventilation) EC-25
PCV system inspection MA-15
PGC/V - Wiring diagram EC-270, EC-355
Pilot bushing replacement EM-50
Pinion bearing preload diff. PD-24
Pinion gear height diff. PD-24, PD-41, PD-59
Piston assembly EM-48
Piston pin inspection EM-42
Piston ring inspection EM-43
Piston to bore clearance EM-44
PNP/SW - Wiring diagram EC-388
POWER - Wiring diagram EL-8
Power door lock EL-147
Power door mirror EL-120
Power steering fluid level ST-6, MA-21
Power steering gear ST-21, ST-29
Power steering hydraulic pressure ST-10
Power steering oil pressure switch EC-415
Power steering oil pump ST-36
Power steering system bleeding ST-7
Power supply routing EL-6
Power transistor EC-315
Power transistor & ignition coil EC-315
Power window EL-142
Precautions (General) GI-3
PRE/SE - Wiring diagram EC-281
Pressure plate - See Clutch cover CL-13
Pressure test (A/T) AT-26
Propeller shaft PD-7
Propeller shaft inspection MA-18

Simpo PDF Merge and Split Unregistered Version - http://www.simpopdf.com

Propeller shaft on vehicle service PD-9
Propeller shaft vibration PD-9
PST/SW - Wiring diagram EC-415

R

R134a - See HFC134a HA-2
Radiator LC-11
Radiator fan - See Cooling fan LC-12
Radio - See Audio EL-114
Rear axle RA-7
Rear axle (drum brake type) RA-8
Rear body BT-36
Rear bumper BT-8
Rear combination lamp removal and installation BT-22
Rear cover packing replacement diff. PD-13
Rear drum brake BR-25
Rear heated oxygen sensor (HO2S) EC-179
Rear heated oxygen sensor (HO2S) heater EC-204
Rear seat BT-29
Rear seat belt RS-5
Rear side window BT-32
Rear suspension RA-14
Rear wheel anti-lock brake system (R-ABS) BR-31
Rear window BT-33
Refrigerant connection precaution HA-3
Refrigerant discharging evacuating charging HA-51
Refrigerant general precaution HA-3
Refrigerant lines HA-47
Refrigeration cycle HA-12
Release bearing (clutch) CL-10
Resistor EC-321
Reverse clutch AT-82
Reverse idler shaft (M/T) MT-12
Reverse lamp switch (M/T) - See Back-up lamp switch (M/T) MT-7
Reverse main gear (M/T) MT-12
Ring gear diff. inspection PD-39, PD-57
Road wheel size GI-39
Roof trim BT-20
Room lamp EL-61
Room lamp - See Interior lamp EL-61
ROOM/L - Wiring diagram EL-64
Rotor disc (front) FA-17

S

SAE J1930 terminology list GI-47
SAE J1979 - Mode 1 ~ 7 ..... EC-35
Seal - See Exterior BT-22
Seat belt, front RS-4
Seat belt inspection MA-23
Seat belt, rear RS-5
Seat, front BT-26
Seat, rear BT-29
Self-diagnostic results EC-46
SHIFT - Wiring diagram AT-40
Shift control components (M/T) MT-14
Shift control (TF) TF-11
Shift fork (M/T) MT-14
Shift lever MT-14
Shift lock system AT-39
Shift schedule AT-122
Shock absorber (front) FA-29
Shock absorber (rear) RA-15
Side bearing preload diff. PD-40, PD-58
Side bearing preload (front final drive 4WD) PD-23
Side shaft diff. PD-20
Side trim BT-14
Smart entrance control unit EL-162, EL-197
Spare tire size GI-39
Spark plug replacement MA-14
Spiral cable RS-15
Spot lamp EL-68
SRS - See Supplemental Restraint System RS-9
SRS - Wiring diagram RS-32
SRS Trouble diagnoses RS-27
S/SIG - Wiring diagram EC-407
Stabilizer bar (front) FA-31
Stall test (A/T) AT-23
Standardized relay EL-4
START - Wiring diagram EL-23
Start signal EC-407
Starter EL-21
Starting system EL-21
Steering gear and linkage inspection MA-21
Steering gear oil level MA-21
Steering knuckle FA-19
Steering linkage ST-39
Steering switch EL-35
Steering wheel and column ST-11
Steering wheel play ST-8
Steering wheel turning force ST-8
Stop lamp EL-52
STOP/L - Wiring diagram EL-52
Striking rod (M/T) MT-14
Sunroof BT-30
Supplement restraint system - Wiring diagram RS-32
Supplemental Restraint System RS-9
SW/V - Wiring diagram EC-304
Symbols and abbreviations GI-8
Synchronizer (M/T) MT-12
System readiness test (SRT) code EC-35

T

Tail lamp EL-50
TAIL/L - Wiring diagram EL-50
Tank fuel temperature sensor EC-218

Simpo PDF Merge and Split Unregistered Version - http://www.simpopdf.com

Tension rod (front) FA-33
TFTS - Wiring diagram EC-218
THEFT - Wiring diagram EL-183
Theft warning system EL-177
Thermal protector HA-36
Thermo control amp HA-36
Thermostat LC-9
Three way catalyst EC-255
Three way catalyst precautions GI-5
Throttle bodies EM-10
Throttle chambers EM-10
Throttle drum adjustment FE-3
Throttle position sensor adjustment EC-71
Throttle position sensor (TPS) EC-126
Throttle position switch EC-297
Throwout bearing - See Clutch release bearing CL-10
Thrust washer selection diff. PD-71, PD-72, PD-73
Tie-rod ST-39
Tie-rod ball joints ST-39
Tightening torque of standard bolts GI-46
Timing chain EM-16
Tire rotation MA-19
Tire size GI-39
Tooth contact diff. PD-45, PD-63
Tooth contact (front final drive 4WD) PD-28
Torque converter clutch solenoid valve AT-34
Torque converter installation AT-50
Torque convertor clutch solenoid valve ... EC-393, EC-397
Torsion bar spring FA-29
Towing point GI-45
TPS - Wiring diagram EC-126
TP/SW - Wiring diagram EC-297
Transfer case TF-9
Transfer fluid replacement MA-18
Transfer oil replacement MA-18
Transfer overhaul TF-9
Transfer removal and installation TF-7
Transfer serial number GI-38
Transmission case (M/T) MT-11
Tread-FR&RR (Dimensions) GI-39
Trim BT-14
Trouble diagnoses GI-20
Trunk room lamp EL-68
TURN - Wiring diagram EL-56
Turn signal lamp EL-54
Two trip detection logic EC-35
Two-pole lift GI-42

U

Under body BT-40
Upper link (front susp.) FA-32

V

Vacuum cut valve EC-387
Vacuum cut valve bypass valve EC-383
Vacuum hose (brake system) BR-19
Vacuum hose drawing (ECCS) EC-13
Valve clearance EM-35
Valve guide EM-31
Valve seat EM-33
Valve spring EM-34
Vehicle identification number GI-37
Vehicle speed sensor (VSS) EC-287
Vent mode switch HA-13
VENT/V - Wiring diagram EC-276
Viscosity number (SAE) MA-9
VSS - Wiring diagram EC-287

W

WARN - Wiring diagram EL-87
Warning chime EL-92
Warning lamps EL-84
Washer, front EL-104
Water pump LC-8
Weatherstrip - See Exterior BT-22
Wheel alignment (front) FA-9
Wheel balance MA-19
Wheel bearing (front axle) FA-7
Wheel bearing (rear) RA-6
Wheel hub (front) FA-17
Wheel sensors (ABS) BR-32, BR-57
Wheel sensors (TCS) BR-57
Wheel size GI-39
Wheelbase (Dimensions) GI-39
Wide open & closed throttle position (CTP) switch EC-297
Width (Dimensions) GI-39
WINDOW - Wiring diagram EL-144
Window, back BT-22, BT-33
Window, door BT-10
Window, rear BT-33
Windshield BT-31
WIPER - Wiring diagram EL-106
Wiper and washer EL-104
Wiper, front EL-104
Wiring diagram (cell code) list EL-223
Wiring diagrams GI-9
Withdrawal lever (clutch) CL-10
Wrist pin - See Piston pin inspection EM-42

Simpo PDF Merge and Split Unregistered Version - http://www.simpopdf.com

SECTION LC

CONTENTS

PRECAUTIONS AND PREPARATION 2
Supplemental Restraint System (SRS) "AIR BAG" 2
Liquid Gasket Application Procedure 2
Special Service Tools 3
ENGINE LUBRICATION SYSTEM 4
Lubrication Circuit 4
Oil Pressure Check 5
Oil Pump 5
ENGINE COOLING SYSTEM 7
Cooling Circuit 7
System Check 7
Water Pump 8
Removal 8
Thermostat 9
Radiator 11
Cooling Fan (Crankshaft driven) 12
Inspection 12
Refilling engine coolant 12
Radiator (Aluminum type) 13
Inspection 13
Overheating Cause Analysis 14
SERVICE DATA AND SPECIFICATIONS (SDS) 15
Engine Lubrication System 15
Engine Cooling System 15

Simpo PDF Merge and Split Unregistered Version - http://www.simpopdf.com

Supplemental Restraint System (SRS) "AIR BAG"

The Supplemental Restraint System "AIR BAG", used along with a seat belt, helps to reduce the risk or severity of injury to the driver and front passenger in a frontal collision. The Supplemental Restraint System consists of air bag modules (located in the center of the steering wheel and in the instrument panel on the passenger side), a diagnosis sensor unit, a crash zone sensor (4WD models), warning lamp, wiring harness and spiral cable.

The vehicle is equipped with a passenger air bag deactivation switch. Because no rear seat exists where a rear-facing child restraint can be placed, the switch is designed to turn off the passenger air bag so that a rear-facing child restraint can be used in the front passenger seat. The switch is located in the center of the instrument panel, near the ashtray. When the switch is turned to the ON position, the passenger air bag is enabled and could inflate in a frontal collision. When the switch is turned to the OFF position, the passenger air bag is disabled and will not inflate in a frontal collision. A passenger air bag OFF indicator on the instrument panel lights up when the passenger air bag is switched OFF. The driver air bag always remains enabled and is not affected by the passenger air bag deactivation switch.

Information necessary to service the system safely is included in the **RS section** of this Service Manual.

WARNING:

- **To avoid rendering the SRS inoperative, which could increase the risk of personal injury or death in the event of a collision which would result in air bag inflation, all maintenance should be performed by an authorized NISSAN dealer.**
- **Improper maintenance, including incorrect removal and installation of the SRS, can lead to personal injury caused by unintentional activation of the system.**
- **Do not use electrical test equipment on any circuit related to the SRS unless instructed to in this Service Manual. SRS wiring harnesses are covered with yellow insulation either just before the harness connectors or on the complete harness, for easy identification.**
- **The vehicle is equipped with a passenger air bag deactivation switch which can be operated by the customer. When the passenger air bag is switched OFF, the passenger air bag is disabled and will not inflate in a frontal collision. When the passenger air bag is switched ON, the passenger air bag is enabled and could inflate in a frontal collision. After SRS maintenance or repair, make sure the passenger air bag deactivation switch is in the same position (ON or OFF) as when the vehicle arrived for service.**

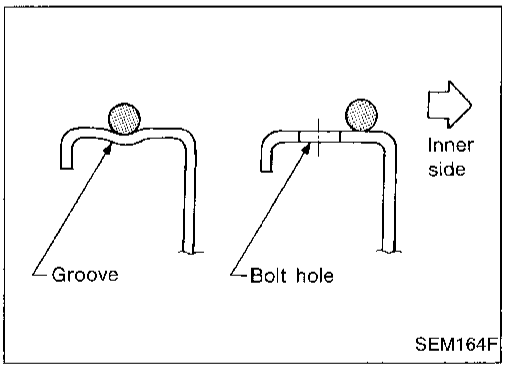

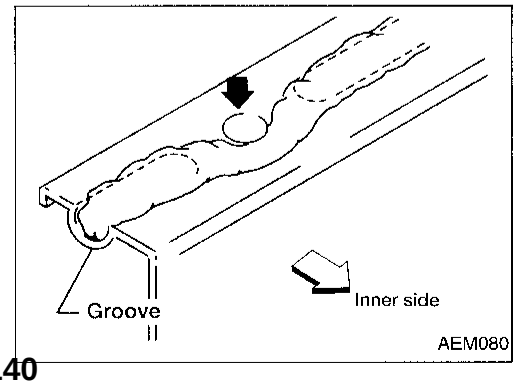

Liquid Gasket Application Procedure

a. Use a scraper to remove all traces of old liquid gasket from mating surfaces and grooves. Also, completely clean any oil from these areas.
b. Apply a continuous bead of liquid gasket to mating surfaces. (Use Genuine RTV Silicone Sealant Part No. 999 MP-A7007, Three Bond TB1207D or equivalent.)
   - For oil pan, be sure liquid gasket diameter is 3.5 to 4.5 mm (0.138 to 0.177 in).
   - For areas except oil pan, be sure liquid gasket diameter is 2.0 to 3.0 mm (0.079 to 0.118 in).
c. Apply liquid gasket around the inner side of bolt holes (unless otherwise specified).
d. Assembly should be done within 5 minutes after coating.
e. Wait at least 30 minutes before refilling engine oil and engine coolant.

Simpo PDF Merge and Split Unregistered Version - http://www.simpopdf.com

Special Service Tools

The actual shapes of Kent-Moore tools may differ from those of special service tools illustrated here.

Tool number (Kent-Moore No.) Tool name	Description	
(J34301-C) Oil pressure gauge set ① (J34301-1) Oil pressure gauge ② (J34301-2) Hoses ③ (J34298) Adapter ④ (J34282-1) Adapter ⑤ (790-301-1230-A) 60° adapter ⑥ (J34301-15) Square socket	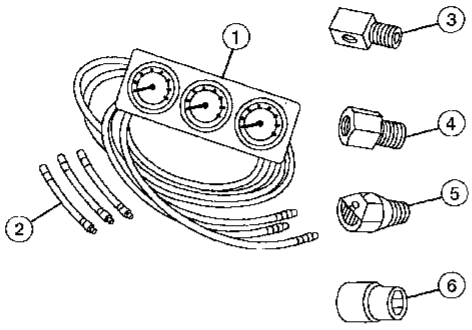 AAT896	Measuring oil pressure **Maximum measuring range:** **1,379 kPa (14 kg/cm^2, 200 psi)**
EG17650301 (J33984-A) Radiator cap tester adapter	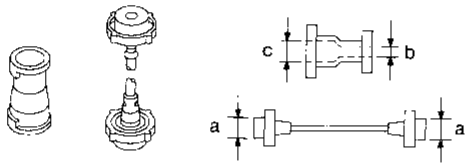 NT564	Adapting radiator cap tester to radiator filler neck **a: 28 (1.10) dia.** **b: 31.4 (1.236) dia.** **c: 41.3 (1.626) dia.** Unit: mm (in)
WS39930000 (—) Tube presser	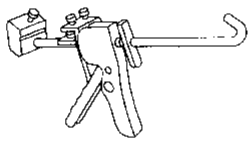 NT052	Pressing the tube of liquid gasket
KV10115801 (J38956) Oil filter wrench	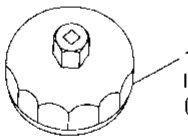 14 faces, Inner span: 64.3 mm (2.531 in) (Face to opposite face) NT362	Removing oil filter

Simpo PDF Merge and Split Unregistered Version - http://www.simpopdf.com

Lubrication Circuit

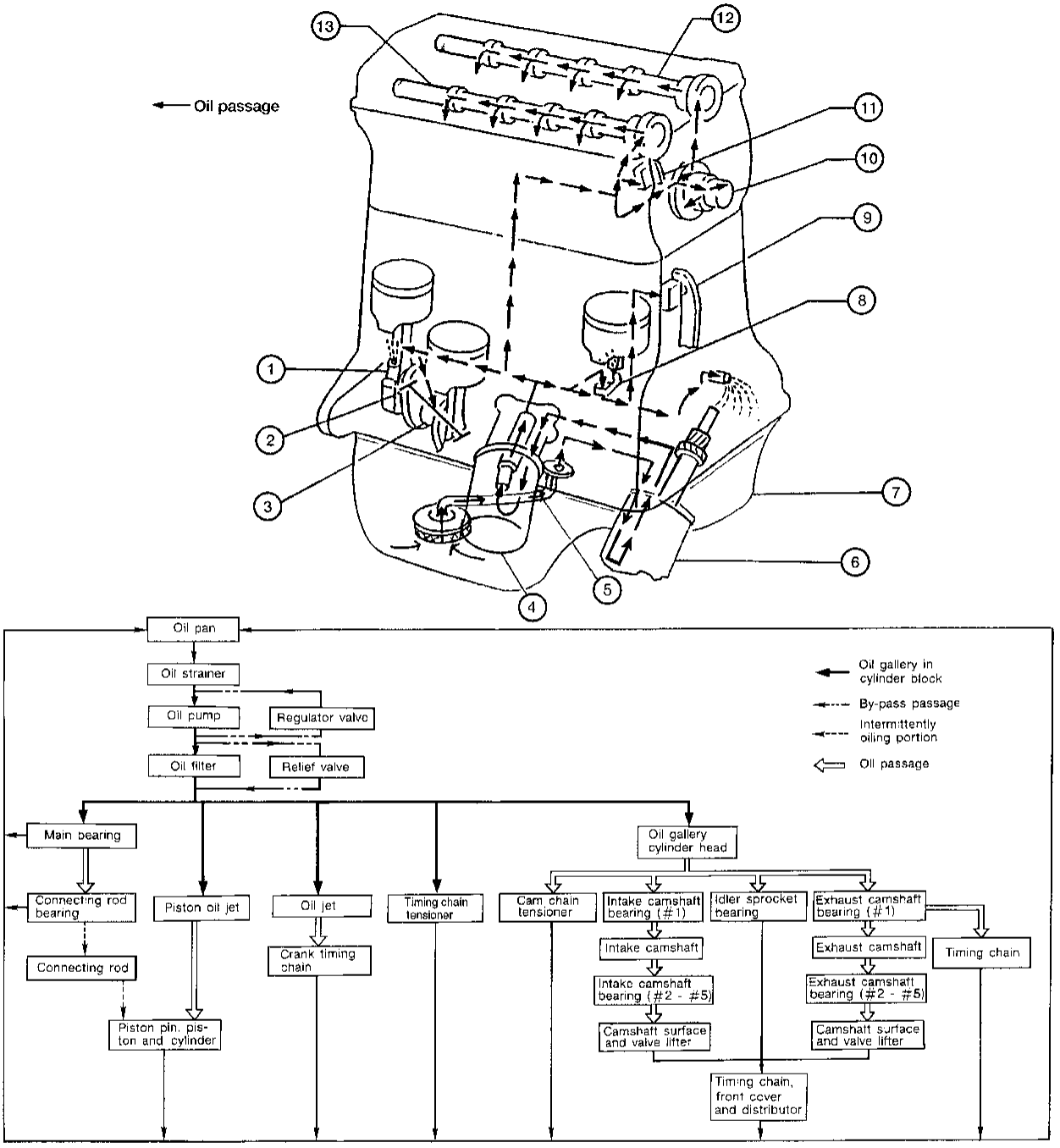

ALC086

① Connecting rod
② Connecting rod bearing
③ Main bearing
④ Oil filter
⑤ Oil strainer
⑥ Oil pump
⑦ Oil pan
⑧ Piston oil jet
⑨ Timing chain tensioner
⑩ Idler sprocket
⑪ Upper timing chain tensioner
⑫ Exhaust camshaft
⑬ Intake camshaft

Simpo PDF Merge and Split Unregistered Version - http://www.simpopdf.com

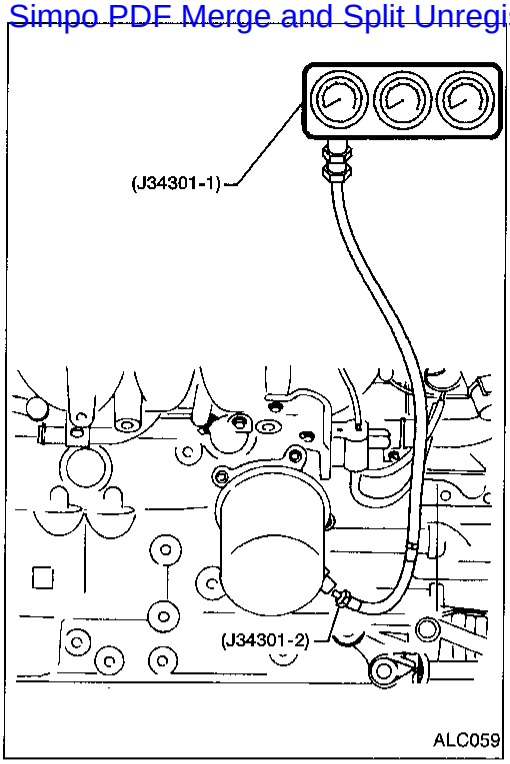

Oil Pressure Check

WARNING:

- **Be careful not to burn yourself, as the engine and oil may be hot.**
- **For M/T models, put gearshift lever in Neutral "N" position. For A/T models, put selector lever in Park "P" position.**

1. Check oil level.
2. Remove oil pressure switch.
3. Install pressure gauge.
4. Start engine and warm it up to normal operating temperature.
5. Check oil pressure with engine running under no-load.

Engine speed rpm	Approximate discharge pressure kPa (kg/cm^2, psi)
Idle speed	More than 78 (0.8, 11)
3,000	412 - 481 (4.2 - 4.9, 60 - 70)

- **If difference is extreme, check oil passage and oil pump for oil leaks.**

6. Install oil pressure switch with sealant.

Oil Pump

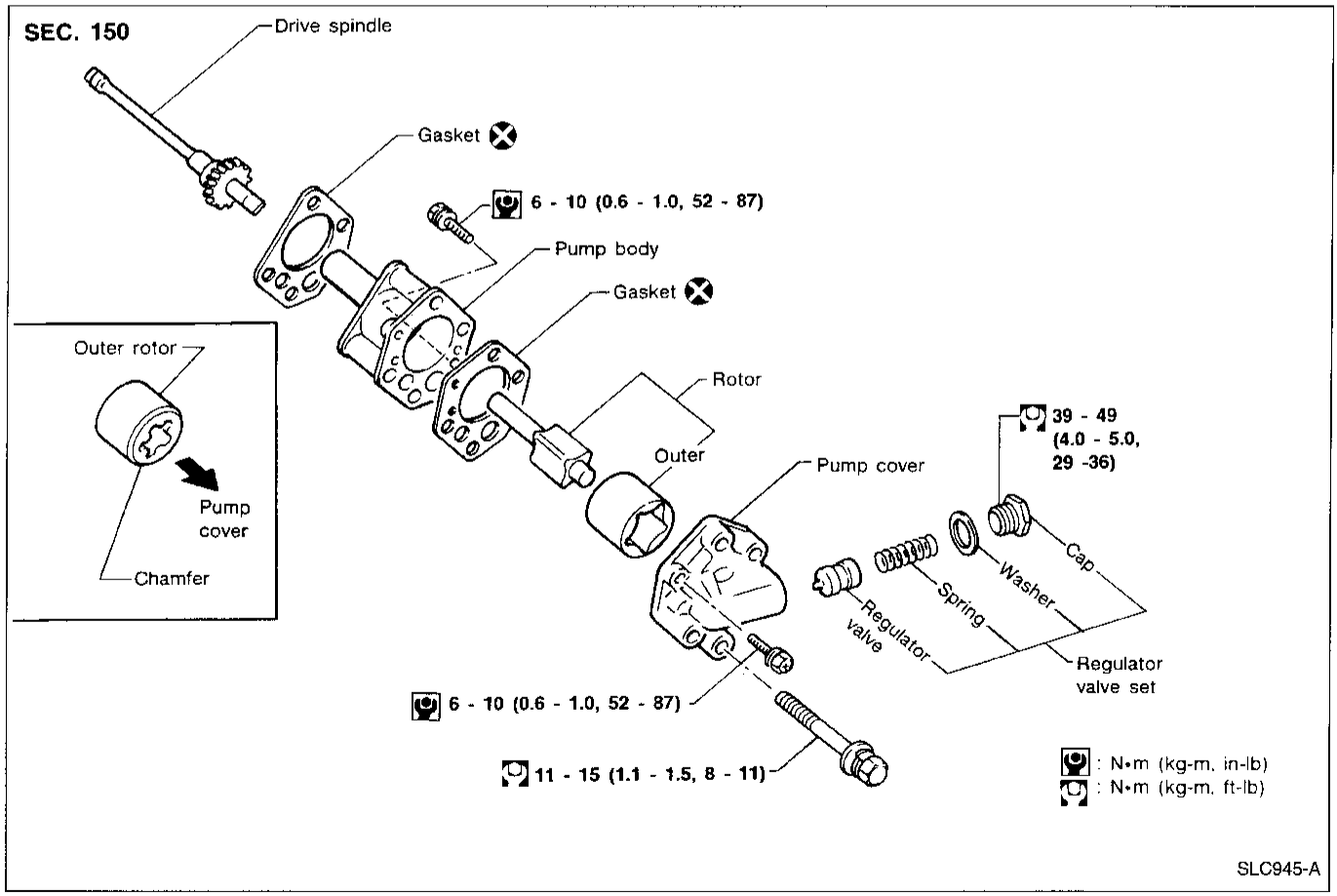

Oil Pump (Cont'd)

Simpo PDF Merge and Split Unregistered Version - http://www.simpopdf.com

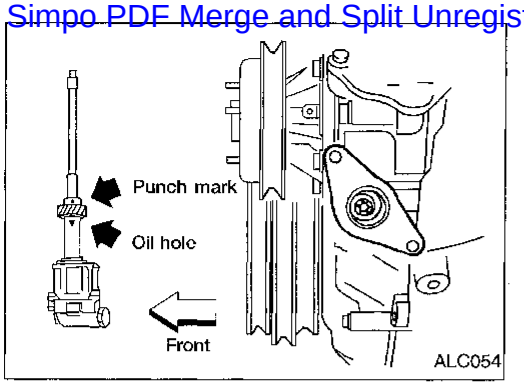

- **Always replace with new oil seal and gasket.**
- **When removing oil pump, turn crankshaft so that No. 1 piston is at TDC on its compression stroke.**
- **When installing oil pump, apply engine oil to gears, then align punchmark on drive spindle and oil hole on oil pump.**

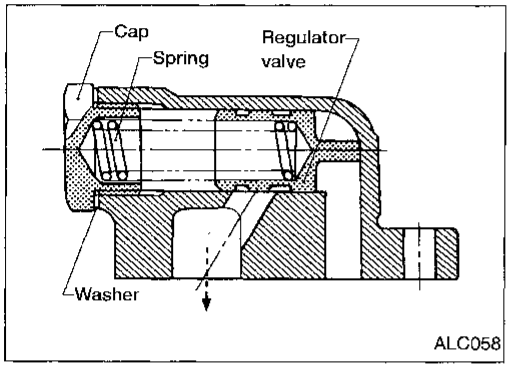

REGULATOR VALVE INSPECTION

1. Visually inspect components for wear and damage.
2. Check oil pressure regulator valve sliding surface and valve spring.
3. Coat regulator valve with engine oil. Check that it falls smoothly into the valve hole by its own weight.

- **Replace regulator valve set or oil pump assembly, if damaged.**

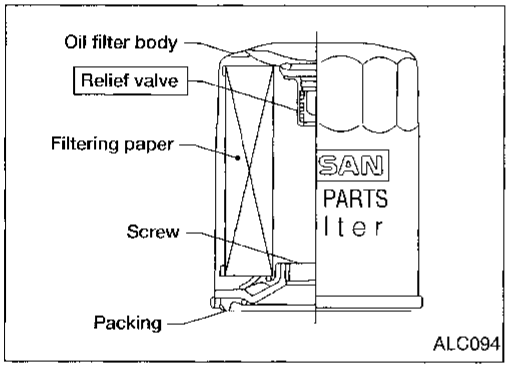

OIL FILTER

The oil filter is a small, full-flow cartridge type and is provided with a relief valve.

- **The new and previous oil filter designs differ from each other and are not interchangeable.**
- **Use Tool KV10115801 (J38956) for removing oil filter.**

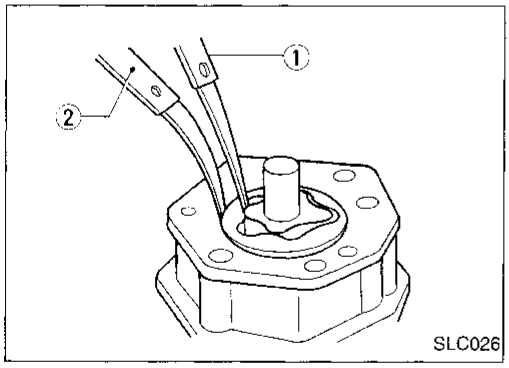

OIL PUMP INSPECTION

Using a feeler gauge, check the following clearances.

Standard clearance: Unit: mm (in)

Rotor tip clearance ①	Less than 0.12 (0.0047)
Outer rotor to body clearance ②	0.15 - 0.21 (0.0059 - 0.0083
Side clearance (with gasket) ③	0.04 - 0.100 (0.0016 - 0.0039)

- **If the tip clearance (①) exceeds the limit, replace gear set.**
- **If body to gear clearances (②, ③) exceed the limit, replace oil pump assembly.**

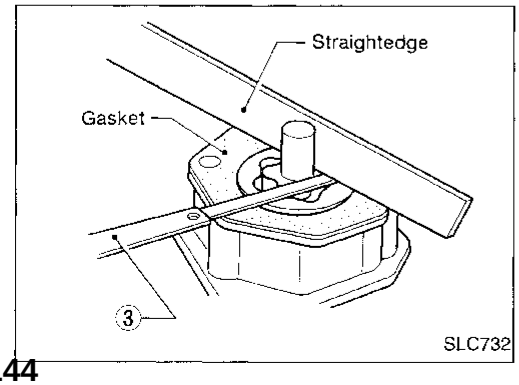

Simpo PDF Merge and Split Unregistered Version - http://www.simpopdf.com

Cooling Circuit

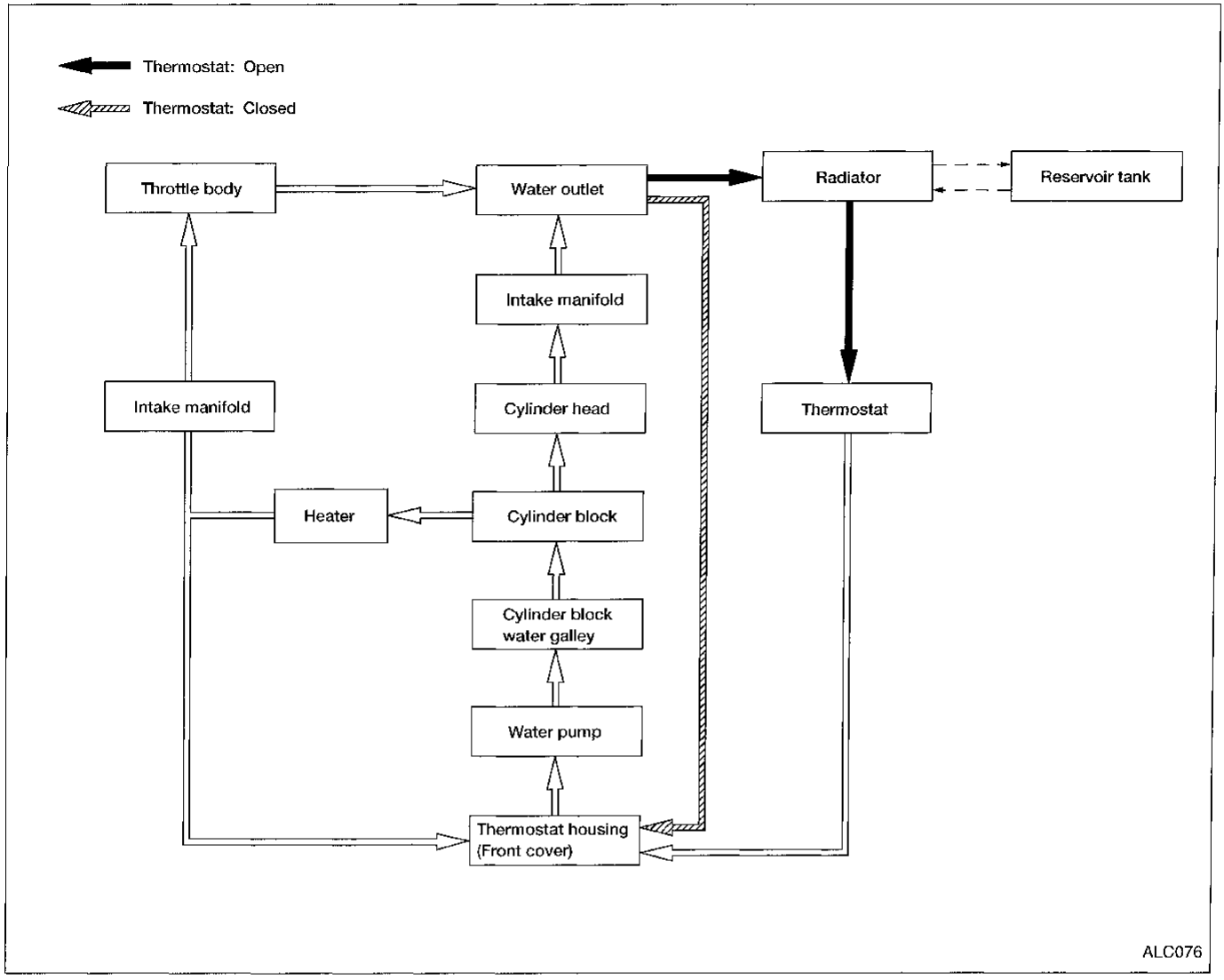

System Check

WARNING:
Never remove the radiator cap when the engine is hot. Serious burns could occur from high pressure coolant escaping from the radiator.
Wrap a thick cloth around the radiator cap. Slowly turn it a quarter turn to allow built up pressure to escape. Carefully remove the radiator cap by turning it all the way.

CHECKING COOLING SYSTEM HOSES

Check hoses for the following:

- Improper attachment
- Leaks
- Cracks
- Damage
- Chafing
- Deterioration

System Check (Cont'd)

Simpo PDF Merge and Split Unregistered Version - http://www.simpopdf.com

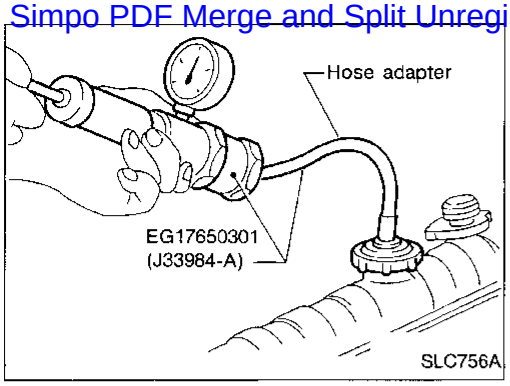

CHECKING COOLING SYSTEM FOR LEAKS

To check for leakage, apply pressure to the cooling system with a radiator cap tester.

Testing pressure:
157 kPa (1.6 kg/cm^2, 23 psi)

CAUTION:
Higher pressure than specified may cause radiator damage.

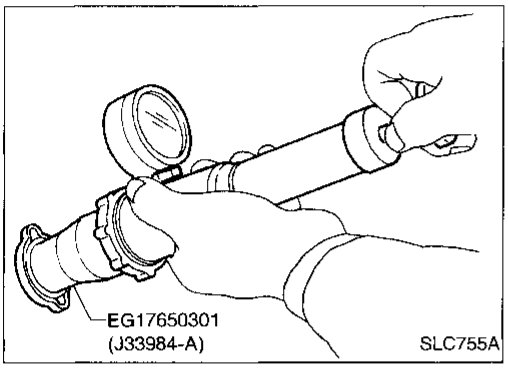

CHECKING RADIATOR CAP

To check radiator cap, apply pressure to radiator cap with a radiator cap tester.

Radiator cap relief pressure:
Standard
78 - 98 kPa (0.8 - 1.0 kg/cm^2, 11 - 14 psi)
Limit
59 - 98 kPa (0.6 - 1.0 kg/cm^2, 9 - 14 psi)

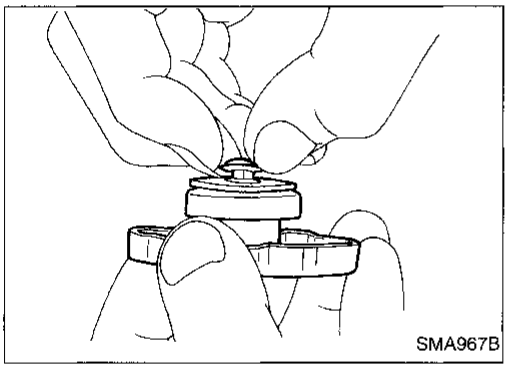

Pull the negative pressure valve to open it.
Check that it closes completely when released.

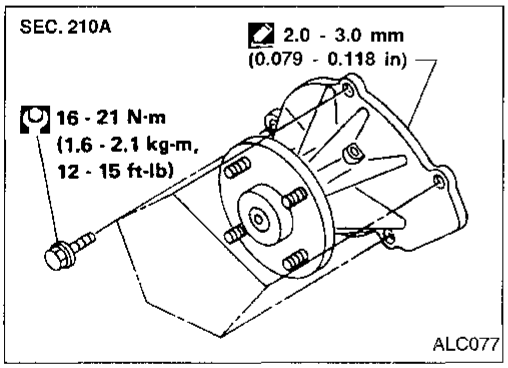

Water Pump

CAUTION:

- **When removing water pump assembly, be careful not to get coolant on drive belts.**
- **Water pump cannot be disassembled and should be replaced as a unit.**
- **After installing water pump, connect hose and clamp securely, then check for leaks using radiator cap tester.**

REMOVAL

1. Drain coolant from engine.
   Refer to MA section ("Changing Engine Coolant", "ENGINE MAINTENANCE").
2. Remove fan coupling with fan.
3. Remove power steering pump drive belt, generator drive belt and A/C compressor drive belt.
4. Remove water pump.

Simpo PDF Merge and Split Unregistered Version - http://www.simpopdf.com

Water Pump (Cont'd)

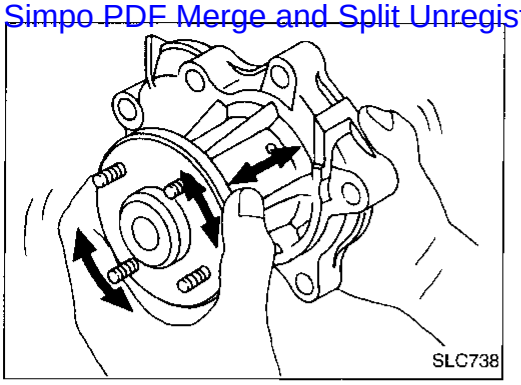
SLC738

INSPECTION

- Check body assembly for rust or corrosion.
- Check for rough operation due to excessive end play.

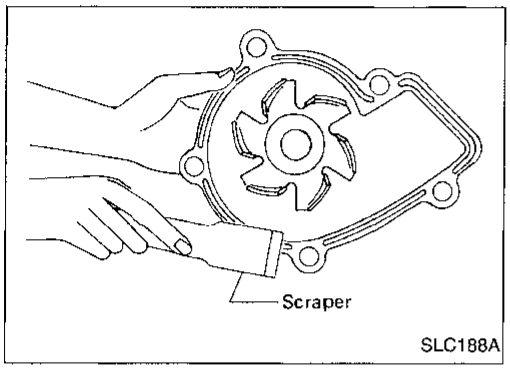

SLC188A

INSTALLATION

1. Use a scraper to remove liquid gasket from water pump.
- **Also remove traces of liquid gasket from mating surface of cylinder block.**

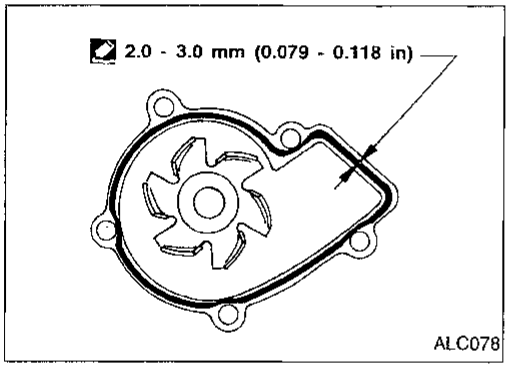

ALC078

2. Apply a continuous bead of liquid gasket to mating surface of water pump.
- **Use Genuine RTV Silicone Sealant Part No. 999 MP-A7007, Three Bond TB1207D or equivalent.**

When filling radiator with coolant, refer to MA section ("Changing Engine Coolant", "ENGINE MAINTENANCE").
When installing drive belts, refer to MA section ("Checking Drive Belts").

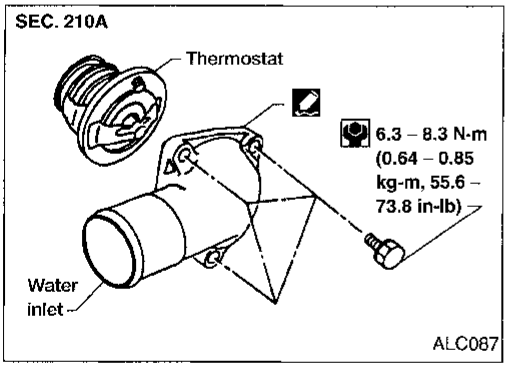

ALC087

Thermostat

- **Be careful not to spill coolant over engine compartment. Use a rag to absorb coolant.**

REMOVAL

1. Drain coolant from engine. Refer to MA section ("Changing Engine Coolant", "ENGINE MAINTENANCE").
2. Remove air cleaner and air duct assembly.
3. Remove water hose from water inlet housing.
4. Remove water inlet housing, then take out thermostat.

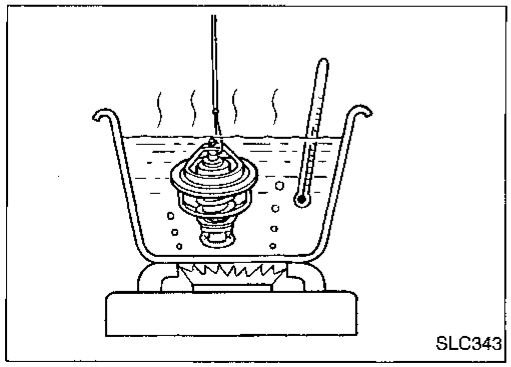
SLC343

INSPECTION

1. Check valve seating condition at normal room temperature. It should seat tightly.
2. Check valve opening temperature and valve lift.

Valve opening temperature	°C (°F)	76.5 (170)
Valve lift	mm/°C (in/°F)	More than 8/90 (0.31/194)

3. Then check if valve closes at 5°C (9°F) below valve opening temperature.

Thermostat (Cont'd)

Simpo PDF Merge and Split Unregistered Version - http://www.simpopdf.com

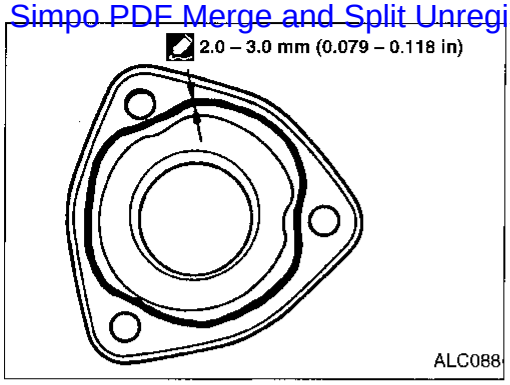

INSTALLATION

1. Use a scraper to remove old liquid gasket from water inlet.

- **Also remove traces of liquid gasket from mating surface of front cover.**

2. Apply a continuous bead of liquid gasket to mating surface of water inlet.

- **Use Genuine RTV Silicone Sealant Part No. 999 MP-A7007, Three Bond TB1207D or equivalent.**

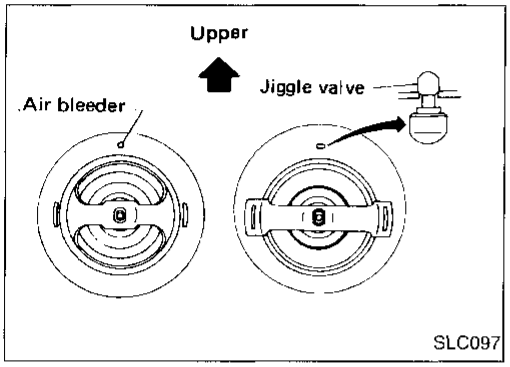

3. Install thermostat with jiggle valve or air bleeder at upper side.
4. Install water inlet housing.
5. Install water hose to water inlet housing.
6. Install air cleaner and air duct assembly.
7. Refill engine coolant. Refer to MA section ("Changing Engine Coolant", "ENGINE MAINTENANCE").

- **After installation, run engine for a few minutes, and check for leaks.**

Simpo PDF Merge and Split Unregistered Version - http://www.simpopdf.com

Radiator

REMOVAL AND INSTALLATION

1. Remove under cover.
2. Drain coolant from radiator. Refer to MA section ("Changing Engine Coolant", "ENGINE MAINTENANCE").
3. Disconnect upper and lower radiator hoses.
4. Remove air cleaner and air duct assembly.
5. Remove lower radiator shroud.
6. Remove radiator shroud.
7. Remove A/T oil cooler hoses (A/T models only).
8. Disconnect coolant reservoir hose.
9. Remove radiator.
10. After replacing radiator, install all parts in reverse order of removal.
11. Refill engine coolant. Refer to MA section ("Changing Engine Coolant", "ENGINE MAINTENANCE").

- **After installation, run engine for a few minutes, and check for leaks.**

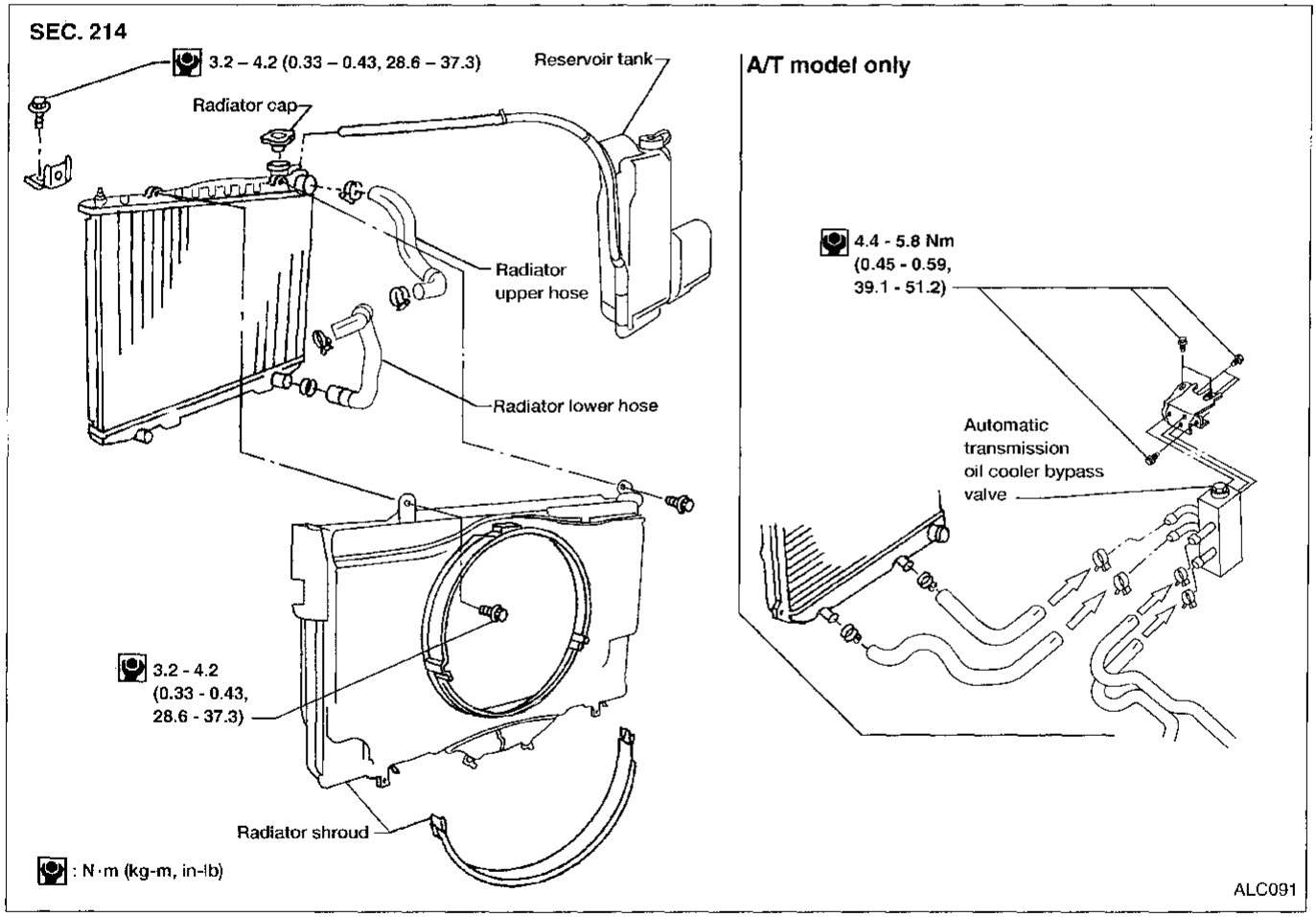

Simpo PDF Merge and Split Unregistered Version - http://www.simpopdf.com

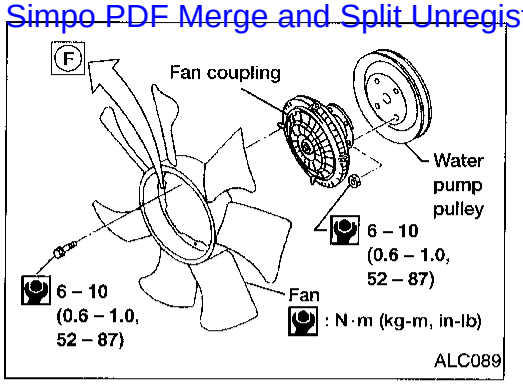

Cooling Fan (Crankshaft driven)

REMOVAL AND INSTALLATION

- Do not release the drive belt tension by removing the fan/water pump pulley.
- Fan coupling cannot be disassembled and should be replaced as a unit. If front mark Ⓕ is present, install fan so that side marked Ⓕ faces the front.
- Install the drive belt only after the fan and fan coupling to water pump flange bolts/nuts have been properly torqued.
- Proper alignment of these components is essential. Improper alignment will cause them to wobble and may eventually cause the fan to separate from the water pump causing extensive damage.

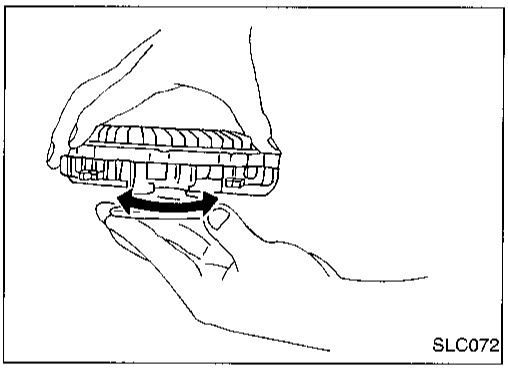

INSPECTION

Check fan coupling for rough operation, silicon oil leakage and bent bimetal.

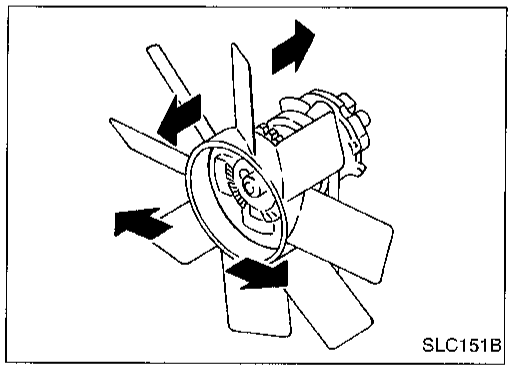

After assembly, verify the fan does not wobble or flap while the engine is running.

WARNING:

- **When the engine is running, keep hands and clothing away from moving parts such as drive belts and fan.**

Refilling engine coolant

For details on refilling engine coolant, refer to MA section ("Changing Engine Coolant", "ENGINE MAINTENANCE").

Simpo PDF Merge and Split Unregistered Version - http://www.simpopdf.com

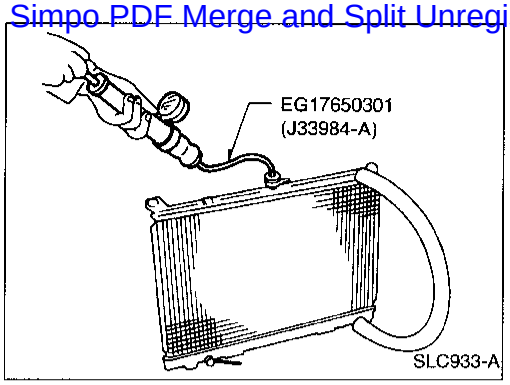

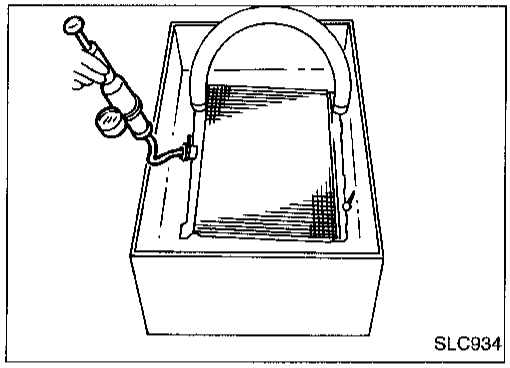

Radiator (Aluminum type)

INSPECTION

1. Apply pressure with Tool.
   Specified pressure value:
   157 kPa (1.6 kg/cm^2, 23 psi)

WARNING:
To prevent the risk of the hose coming undone while under pressure, securely fasten it down with a hose clamp.
Attach a hose to the oil cooler as well. (A/T model only)

2. Check for leakage.

Simpo PDF Merge and Split Unregistered Version - http://www.simpopdf.com

Overheating Cause Analysis

	Symptom		Check items	
Cooling system parts malfunction	Poor heat transfer	Water pump malfunction	Worn or loose drive belt	—
		Thermostat stuck closed	—	
		Damaged fins	Dust contamination or paper clogging	
			Mechanical damage	
		Clogged radiator cooling tube	Excess foreign material (rust, dirt, sand, etc.)	
	Reduced air flow	Fan coupling does not operate	—	—
		High resistance to fan rotation		
		Damaged fan blades		
	Damaged radiator shroud	—	—	—
	Improper coolant mixture ratio	—	—	—
	Poor coolant quality	—	—	—
	Insufficient coolant	Coolant leaks	Cooling hose	Loose clamp
				Cracked hose
			Water pump	Poor sealing
			Radiator cap	Loose
				Poor sealing
			Radiator	O-ring for damage, deterioration or improper fitting
				Cracked radiator tank
				Cracked radiator core
			Reservoir tank	Cracked reservoir tank
		Overflowing reservoir tank	Exhaust gas leaks into cooling system	Cylinder head deterioration
				Cylinder head gasket deterioration
Except cooling system parts malfunction	—	Overload on engine	Abusive driving	High engine rpm under no load
				Driving in low gear for extended time
				Driving at extremely high speed
			Powertrain system malfunction	—
			Installed improper size wheels and tires	
			Dragging brakes	
			Improper ignition timing	
	Blocked or restricted air flow	Blocked bumper	—	—
		Blocked radiator grille	Installed truck brassiere	
			Mud contamination or paper clogging	
		Blocked radiator	—	
		Blocked condenser	—	
		Installed large fog lamp		

Simpo PDF Merge and Split Unregistered Version - http://www.simpopdf.com

Engine Lubrication System

Oil pressure check

Engine speed rpm	Approximate discharge pressure kPa (kg/cm^2, psi)
Idle speed	More than 78 (0.8, 11)
3,000	412 - 481 (4.2 - 4.9, 60 - 70)

Oil pump

Unit: mm (in)

Rotor tip clearance	.....	Less than 0.12 (0.0047)
Outer rotor to body clearance	.....	0.15 - 0.21 (0.0059 - 0.0083)
Side clearance (with gasket)	.....	0.04 - 0.100 (0.0016 - 0.0039)

Engine Cooling System

Thermostat

Valve opening temperature	°C (°F)	76.5 (170)
Valve lift	mm/°C (in/°F)	More than 8/90 (0.31/194)

Radiator

Unit: kPa (kg/cm^2, psi)

Cap relief pressure	Standard	78 - 98 (0.8 - 1.0, 11 - 14)
	Limit	59 - 98 (0.6 - 1.0, 9 - 14)
Leakage test pressure		157 (1.6, 23)

Simpo PDF Merge and Split Unregistered Version - http://www.simpopdf.com

SECTION MA

CONTENTS

PRECAUTIONS AND PREPARATION 2
Supplemental Restraint System (SRS) "AIR BAG" 2
Special Service Tool 2
GENERAL MAINTENANCE 3
PERIODIC MAINTENANCE 5
Schedule 1 6
Schedule 2 7
RECOMMENDED FLUIDS AND LUBRICANTS 8
Fluids and Lubricants 8
SAE Viscosity Number 9
Antifreeze Coolant Mixture Ratio 9
ENGINE MAINTENANCE 10
Checking Drive Belts 10
Changing Engine Coolant 11
Checking Fuel Lines 12
Changing Fuel Filter 12
Changing Air Cleaner Filter 12
Changing Engine Oil 13
Changing Oil Filter 13
Changing Spark Plugs 14
Checking EVAP Vapor Lines 15
Changing Positive Crankcase Ventilation (PCV) Filter 15
CHASSIS AND BODY MAINTENANCE 16
Checking Exhaust System 16
Checking Clutch Fluid Level and Leaks 16
Checking M/T Oil 16
Changing M/T Oil 16
Checking Water Entry — For 4WD models 16
Checking A/T Fluid 16
Changing A/T Fluid 17
Checking Transfer Fluid 17
Changing Transfer Fluid 18
Checking Propeller Shaft 18
Checking Differential Gear Oil 18
Changing Differential Gear Oil 19
Balancing Wheels 19
Tire Rotation 19
Checking Brake Fluid Level and Leaks 20
Checking Brake System 20
Checking Disc Brake 20
Checking Drum Brake 20
Checking Steering Gear and Linkage 21
Checking Power Steering Fluid and Lines 21
Checking Steering Gear Oil Level and Leaks 21
Lubricating Hood Latches, Locks and Hinges 22
Checking Seat Belts, Buckles, Retractors, Anchors and Adjusters 23
SERVICE DATA AND SPECIFICATIONS (SDS) 24
Engine Maintenance 24
Chassis and Body Maintenance 24

Simpo PDF Merge and Split Unregistered Version - http://www.simpopdf.com

Supplemental Restraint System (SRS) "AIR BAG"

The Supplemental Restraint System "AIR BAG", used along with a seat belt, helps to reduce the risk or severity of injury to the driver and front passenger in a frontal collision. The Supplemental Restraint System consists of air bag modules (located in the center of the steering wheel and in the instrument panel on the passenger side), a diagnosis sensor unit, a crash zone sensor (4WD models), warning lamp, wiring harness and spiral cable.

The vehicle is equipped with a passenger air bag deactivation switch. Because no rear seat exists where a rear-facing child restraint can be placed, the switch is designed to turn off the passenger air bag so that a rear-facing child restraint can be used in the front passenger seat. The switch is located in the center of the instrument panel, near the ashtray. When the switch is turned to the ON position, the passenger air bag is enabled and could inflate in a frontal collision. When the switch is turned to the OFF position, the passenger air bag is disabled and will not inflate in a frontal collision. A passenger air bag OFF indicator on the instrument panel lights up when the passenger air bag is switched OFF. The driver air bag always remains enabled and is not affected by the passenger air bag deactivation switch.

Information necessary to service the system safely is included in the **RS section** of this Service Manual.

WARNING:

- **To avoid rendering the SRS inoperative, which could increase the risk of personal injury or death in the event of a collision which would result in air bag inflation, all maintenance should be performed by an authorized NISSAN dealer.**
- **Improper maintenance, including incorrect removal and installation of the SRS, can lead to personal injury caused by unintentional activation of the system.**
- **Do not use electrical test equipment on any circuit related to the SRS unless instructed to in this Service Manual. SRS wiring harnesses are covered with yellow insulation either just before the harness connectors or on the complete harness, for easy identification.**
- **The vehicle is equipped with a passenger air bag deactivation switch which can be operated by the customer. When the passenger air bag is switched OFF, the passenger air bag is disabled and will not inflate in a frontal collision. When the passenger air bag is switched ON, the passenger air bag is enabled and could inflate in a frontal collision. After SRS maintenance or repair, make sure the passenger air bag deactivation switch is in the same position (ON or OFF) as when the vehicle arrived for service.**

Special Service Tool

The actual shapes of Kent-Moore tools may differ from those of special service tools illustrated here.

Tool number (Kent-Moore No.) Tool name	Description
KV10105901 (J34274) Oil filter cap wrench	Removing oil filter 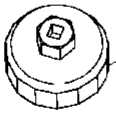 15 faces, inner span: 80 mm (3.15 in) (Face to opposite corner) NT689

Simpo PDF Merge and Split Unregistered Version - http://www.simpopdf.com

General maintenance includes those items which should be checked during the normal day-to-day operation of the vehicle. They are essential if the vehicle is to continue operating properly. The owners can perform checks and inspections themselves or they can have their NISSAN dealers do them.

Item	Reference page
OUTSIDE THE VEHICLE The maintenance items listed here should be performed from time to time, unless otherwise specified.	
Tires Check the pressure, including the spare, with a gauge periodically when at a service station, and adjust to the specified pressure if necessary. Check carefully for damage, cuts and excessive wear.	—
Wheel nuts When checking the tires, make sure no nuts are missing, and check for any loose nuts. Tighten if necessary.	—
Tire rotation Tires should be rotated every 12,000 km (7,500 miles).	MA-19
Wheel alignment and balance If the vehicle pulls to either side while driving on a straight and level road, or if you detect uneven or abnormal tire wear, there may be a need for wheel alignment. If the steering wheel or seat vibrates at normal highway speeds, wheel balancing may be needed.	MA-19, FA-8
Windshield wiper blades Check for cracks and wear if they do not wipe properly.	—
Doors and engine hood Check that all doors, engine hood and tailgate operate smoothly. Also make sure that all latches lock securely; lubricate if necessary. Make sure that the secondary latch keeps the hood from opening when the primary latch is released. When driving in areas using road salt or other corrosive materials, check lubrication frequently.	MA-22
Lamps Make sure that the headlamps, stop lamps, tail lamps, turn signal lamps, and other lamps are all operating properly and installed securely. Also check headlamp aim.	—
INSIDE THE VEHICLE The maintenance items listed here should be checked on a regular basis, such as when performing periodic maintenance, cleaning the vehicle, etc.	
Warning lamps and buzzers/chimes Make sure that all warning lamps and buzzers/chimes are operating properly.	—
Windshield wiper and washer Check that the wipers and washer operate properly and that the wipers do not streak.	—
Windshield defroster Check that the air comes out of the defroster outlets properly and in sufficient quantity when operating the heater or air conditioner.	—
Steering wheel Check that it has the specified play. Be sure to check for changes in the steering condition, such as excessive play, hard steering or strange noises. **Free play: Less than 35 mm (1.38 in)**	ST-7
Seats Check seat position controls such as seat adjusters, seatback recliner, etc. to make sure they operate smoothly and that all latches lock securely in every position. Check that the head restraints move up and down smoothly and that the locks (if equipped) hold securely in all latched positions. Check jump seats for smooth operation.	—
Seat belts Check that all parts of the seat belt system (e.g., buckles, anchors, adjusters and retractors) operate properly and smoothly and are installed securely. Check the belt webbing for cuts, fraying, wear and damage.	MA-23 RS-6
Clutch pedal Make sure the pedal operates smoothly and check that it has the proper free play.	CL-5
Brakes Check that the brakes do not pull the vehicle to one side when applied.	—
Brake pedal and booster Check the pedal for smooth operation and make sure that it has the proper distance under it when depressed fully. Check the brake booster function. Be sure to keep floor mats away from the pedal.	BR-11, 16
Parking brake Check that the lever has the proper travel and make sure that the vehicle is held securely on a fairly steep hill when only the parking brake is applied.	BR-27

Simpo PDF Merge and Split Unregistered Version - http://www.simpopdf.com

Item	Reference page
Automatic transmission "Park" mechanism Check that the lock release button on the selector lever operates properly and smoothly. On a fairly steep hill check that the vehicle is held securely with the selector lever in the "P" position without applying any brakes.	—
UNDER THE HOOD AND VEHICLE The maintenance items listed here should be checked periodically (e.g., each time you check the engine oil or refuel).	
Windshield washer fluid Check that there is adequate fluid in the tank.	—
Engine coolant level Check the coolant level when the engine is cold.	MA-11
Radiator and hoses Check the front of the radiator and clean off any dirt, insects, leaves, etc., that may have accumulated. Make sure that the hoses have no cracks, deformation, deterioration or loose connections.	—
Brake and clutch fluid levels Make sure that the brake and clutch fluid levels are between the "MAX" and "MIN" lines on the reservoirs.	MA-16, 20
Battery Check the fluid level in each cell. It should be between the "MAX" and "MIN" lines.	—
Engine drive belts Make sure that no belt is frayed, worn, cracked or oily.	MA-10
Engine oil level Check the level on the dipstick after parking the vehicle on a level spot and turning off the engine.	MA-13
Power steering fluid level and lines Check the level on the dipstick with the engine off. Check the lines for improper attachment, leaks, cracks, etc.	MA-21
Automatic transmission fluid level Check the level on the dipstick after putting the selector lever in "P" with the engine idling.	MA-16
Exhaust system Make sure that there are no loose supports, cracks or holes. If the sound of the exhaust seems unusual or there is a smell of exhaust fumes, immediately locate the trouble and correct it.	MA-16
Underbody The underbody is frequently exposed to corrosive substances such as those used on icy roads or to control dust. It is very important to remove these substances, otherwise rust will form on the floor pan, frame, fuel lines and around the exhaust system. At the end of winter, the underbody should be thoroughly flushed with plain water, being careful to clean those areas where mud and dirt can easily accumulate.	—
Fluid leaks Check under the vehicle for fuel, oil, water and other fluid leaks after the vehicle has been parked for a while. Water dripping from the air conditioner after use is normal. If any leaks or gasoline fumes are evident, check for the cause and correct it immediately.	—

Simpo PDF Merge and Split Unregistered Version - http://www.simpopdf.com

Two different maintenance schedules are provided, and should be used, depending upon the conditions under which the vehicle is mainly operated. **After 60,000 miles (96,000 km) or 48 months, continue the periodic maintenance at the same mileage/time intervals.**

SCHEDULE 1

Follow Periodic Maintenance Schedule 1 if your driving habits frequently include one or more of the following driving conditions:

- Repeated short trips of less than 5 miles (8 km).
- Repeated short trips of less than 10 miles (16 km) with outside temperatures remaining below freezing.
- Operating in hot weather in stop-and-go "rush hour" traffic.
- Extensive idling and/or low speed driving for long distances, such as police, taxi or door-to-door delivery use.
- Driving in dusty conditions.
- Driving on rough, muddy, or salt spread roads.
- Towing a trailer, using a camper or a car-top carrier.

SCHEDULE 2

Follow Periodic Maintenance Schedule 2 if none of the driving conditions shown in Schedule 1 apply to your driving habits.

Maintenance for off-road driving (4X4 only)

Whenever you drive off-road through sand, mud or water, more frequent maintenance may be required of the following items:

- ▲ Brake pads and discs
- ▲ Brake lining and drums
- ▲ Brake lines and hoses
- ▲ Wheel bearing grease and free-running hub grease
- ▲ Differential gear oil, transmission and transfer fluid
- ▲ Steering linkage
- ▲ Propeller shaft and drive shafts
- ▲ Air cleaner filter
- ▲ Clutch housing (Check water entry. Refer to MA-16.)

Abbreviations: R = Replace I = Inspect. Correct or replace if necessary. [ ]: At the mileage intervals only

MAINTENANCE OPERATION		MAINTENANCE INTERVAL																Reference page
Perform at number of miles, kilometers or months, whichever comes first.	Miles x 1,000	3.75	7.5	11.25	15	18.75	22.5	26.25	30	33.75	37.5	41.25	45	48.75	52.5	56.25	60	
	(km x 1,000)	(6)	(12)	(18)	(24)	(30)	(36)	(42)	(48)	(54)	(60)	(66)	(72)	(78)	(84)	(90)	(96)	
	Months	3	6	9	12	15	18	21	24	27	30	33	36	39	42	45	48	
Emission control system maintenance																		
Drive belts									I*								I*	MA-10
Air cleaner filter	See NOTE (1)								[R]								[R]	MA-12
Positive crankcase ventilation (PCV) filter	See NOTE (2)								[R]								[R]	MA-15
EVAP vapor lines									I*								I*	MA-15
Fuel lines									I*								I*	MA-12
Fuel filter	See NOTE (2)*																	MA-12
Engine coolant	See NOTE (3)																R*	MA-11
Engine oil		R	R	R	R	R	R	R	R	R	R	R	R	R	R	R	R	MA-13
Engine oil filter		R	R	R	R	R	R	R	R	R	R	R	R	R	R	R	R	MA-13
Spark plugs									[R]								[R]	MA-14
Chassis and body maintenance																		
Brake lines & cables					I				I				I				I	MA-20
Brake pads, rotors, drums & linings			I		I		I		I		I		I		I		I	MA-20
Automatic transmission, transfer fluid & differential gear oil					I				I				I				I	MA-16, 17, 18
Manual transmission oil																	R	MA-16
Steering gear (box) & linkage, axle & suspension parts			I		I		I		I		I		I		I		I	MA-21, FA-5, RA-4
Drive shaft boots & propeller shaft (4x4)			I		I		I		I		I		I		I		I	MA-18, FA-14, PD-9
Front wheel bearing grease (4x2)									I								I	FA-6
Front wheel bearing grease & free-running hub grease (4x4)	See NOTE (4)				I				R				I				R	FA-7, 17, 18
Exhaust system			I		I		I		I		I		I		I		I	MA-16
Air bag system	See NOTE (5)																	RS-12

NOTE: (1) If operating mainly in dusty conditions, more frequent maintenance may be required.
(2) If vehicle is operated under extremely adverse weather conditions or in areas where ambient temperatures are either extremely low or extremely high, the filters might become clogged. In such an event, replace them immediately.
(3) After 60,000 miles (96,000 km) or 48 months, replace every 30,000 miles (48,000 km) or 24 months.
(4) If operating frequently in water, replace grease every 3,750 miles (6,000 km) or 3 months.
(5) Inspect the air bag system 10 years after the date of manufacture noted on the FMVSS certification label.
★ Maintenance items and intervals with "*" are recommended by NISSAN for reliable vehicle operation. The owner need not perform such maintenance in order to maintain the emission warranty or manufacturer recall liability. Other maintenance items and intervals are required.

Simpo PDF Merge and Split Unregistered Version - http://www.simpopdf.com

Abbreviations: R = Replace I = Inspect. Correct or replace if necessary. [ ]: At the mileage intervals only

MAINTENANCE OPERATION		MAINTENANCE INTERVAL								
Perform at number of miles, kilometers or months, whichever comes first.	Miles x 1,000	7.5	15	22.5	30	37.5	45	52.5	60	Reference page
	(km x 1,000)	(12)	(24)	(36)	(48)	(60)	(72)	(84)	(96)	
	Months	6	12	18	24	30	36	42	48	
Emission control system maintenance										
Drive belts					I*				I*	MA-10
Air cleaner filter					[R]				[R]	MA-12
Positive crankcase ventilation (PCV) filter	See NOTE (1)				[R]				[R]	MA-15
EVAP vapor lines					I*				I*	MA-15
Fuel lines					I*				I*	MA-12
Fuel filter	See NOTE (1)*									MA-12
Engine coolant	See NOTE (2)								R*	MA-11
Engine oil		R	R	R	R	R	R	R	R	MA-13
Engine oil filter		R	R	R	R	R	R	R	R	MA-13
Spark plugs					[R]				[R]	MA-14
Chassis and body maintenance										
Brake lines & cables			I		I		I		I	MA-20
Brake pads, rotors, drums & linings			I		I		I		I	MA-20
Automatic transmission, transfer fluid & differential gear oil			I		I		I		I	MA-16, 17, 18
Manual transmission oil									R	MA-16
Steering gear (box) & linkage, axle & suspension parts					I				I	MA-21, FA-5, RA-4
Drive shaft boots & propeller shaft (4x4)			I		I		I		I	MA-18, FA-14, PD-9
Front wheel bearing grease (4x2)					I				I	FA-6
Front wheel bearing grease & free-running hub grease (4x4)			I		R		I		R	FA-7, 17, 18
Exhaust system					I				I	MA-16
Air bag system	See NOTE (3)									RS-12

NOTE: (1) If vehicle is operated under extremely adverse weather conditions or in areas where ambient temperatures are either extremely low or extremely high, the filters might become clogged. In such an event, replace them immediately.
(2) After 60,000 miles (96,000 km) or 48 months, replace every 30,000 miles (48,000 km) or 24 months.
(3) Inspect the air bag system 10 years after the date of manufacture noted on the FMVSS certification label.
★ Maintenance items and intervals with "*" are recommended by NISSAN for reliable vehicle operation. The owner need not perform such maintenance in order to maintain the emission warranty or manufacturer recall liability. Other maintenance items and intervals are required.

Simpo PDF Merge and Split Unregistered Version - http://www.simpopdf.com

Simpo PDF Merge and Split Unregistered Version - http://www.simpopdf.com

Fluids and Lubricants

			Capacity (Approximate)			Recommended Fluids and Lubricants
			US measure	Imp measure	Liter	
Engine oil (Refill)						
2WD	With oil filter		3-3/4 qt	3-1/8 qt	3.5	● API SG or SH and Energy Conserving II*1 ● API Certification Mark*1
	Without oil filter		3-1/2 qt	2-7/8 qt	3.3	
4WD	With oil filter		4-1/8 qt	3-3/8 qt	3.9	
	Without oil filter		3-7/8 qt	3-1/4 qt	3.7	
Cooling system (With reservoir)						
		2WD	8-5/8 qt	7-1/8 qt	8.1	50% antifreeze coolant (Ethylene glycol base) 50% soft water
		4WD	9-1/2 qt	7-7/8 qt	9.0	
Manual transmission gear oil	FS5W71C	2WD	4-1/4 pt	3-1/2 pt	2.0	API GL-4 Viscosity SAE 75W-90 only
		4WD	10-3/8 pt	8-5/8 pt	4.9	
Transfer fluid			2-3/8 qt	2 qt	2.2	Nissan Matic "D" or equivalent Automatic Transmission Fluid *2 or API GL-4*1
Manual steering fluid			1-3/8 pt	1-1/8 pt	0.62	API GL-4*1, SAE #80
Differential carrier gear oil						
Rear:	H190A		3-1/8 pt	2-5/8 pt	1.5	Standard differential gear: API GL-5*1
	C200		2-3/4 pt	2-1/4 pt	1.3	
Front (4WD):	R180A		2-3/4 pt	2-1/4 pt	1.3	
Automatic transmission fluid			8-3/8 qt	7 qt	7.9	Nissan Matic "D" (Continental U.S. and Alaska) or Genuine Nissan Automatic Transmission Fluid (Canada)*2
Power steering fluid	PB48S		30.4-33.8 fl oz	31.7-35.2 fl oz	0.9-1.0	Type DEXRON™ III or equivalent
	PB59K		33.8-37.2 fl oz	35.2-38.7 fl oz	1.0-1.1	
Brake and clutch fluid			—	—	—	Genuine Nissan Brake Fluid*3 or equivalent DOT 3 (US FMVSS No. 116)
Propeller shaft grease			—	—	—	NLGI No. 2 (Lithium soap base)
Multi-purpose grease			—	—	—	NLGI No. 2 (Lithium soap base)
Free-running hub grease (Auto-lock)			—	—	—	Genuine Nissan grease or equivalent

*1: For further details, see "SAE Viscosity Number".
*2: Dexron™ III/Mercon™ or equivalent may also be used. Outside the continental United States and Alaska contact a NISSAN dealership for more information regarding suitable fluids, including recommended brand(s) of Dexron™ III/Mercon™ Automatic Transmission Fluid.
*3: Available in mainland U.S.A. through your Nissan dealer.

Simpo PDF Merge and Split Unregistered Version - http://www.simpopdf.com

SAE Viscosity Number

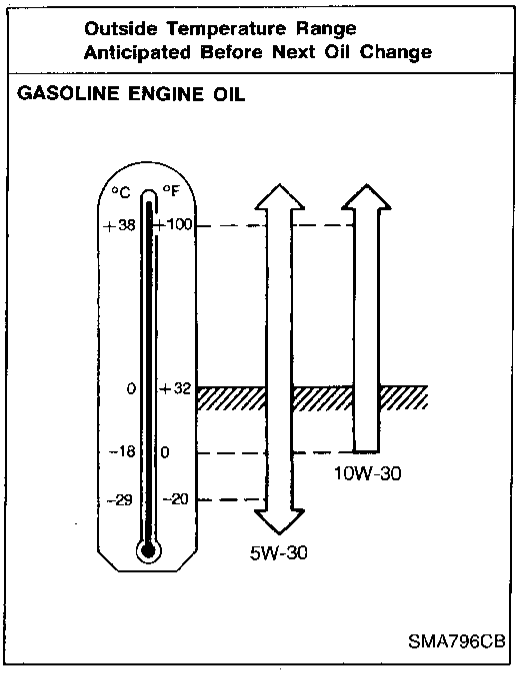

SAE 5W-30 viscosity oil is preferred for all temperatures. SAE 10W-30 viscosity oil may be used if the ambient temperature is above −18°C (0°F).

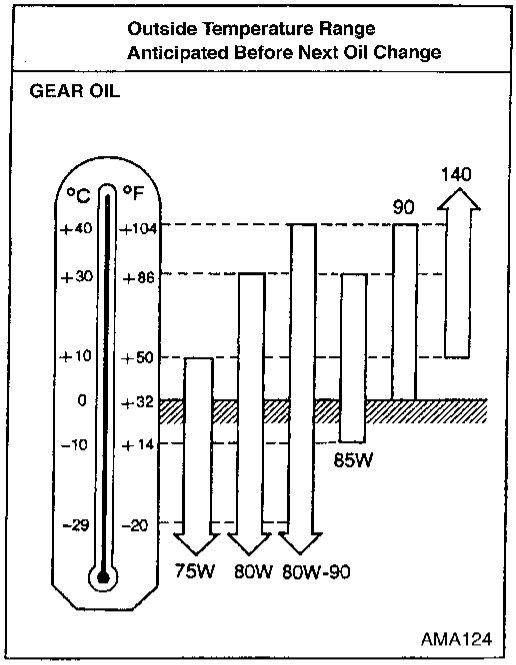

80W-90 for differential is preferable if the ambient temperature is below 40°C (104°F).

Antifreeze Coolant Mixture Ratio

The engine cooling system is filled at the factory with a high-quality, year-round, antifreeze coolant solution. The antifreeze solution contains rust and corrosion inhibitors. Additional cooling system additives are not necessary.

CAUTION:

When adding or replacing coolant, be sure to use only an ethylene glycol antifreeze with the proper mixture ratio of 50% antifreeze 50% soft water.

Outside temperature down to		Anti-freeze	Soft water
°C	°F		
−35	−30	50%	50%

Other types of coolant solutions may damage the cooling system.

Simpo PDF Merge and Split Unregistered Version - http://www.simpopdf.com

Checking Drive Belts

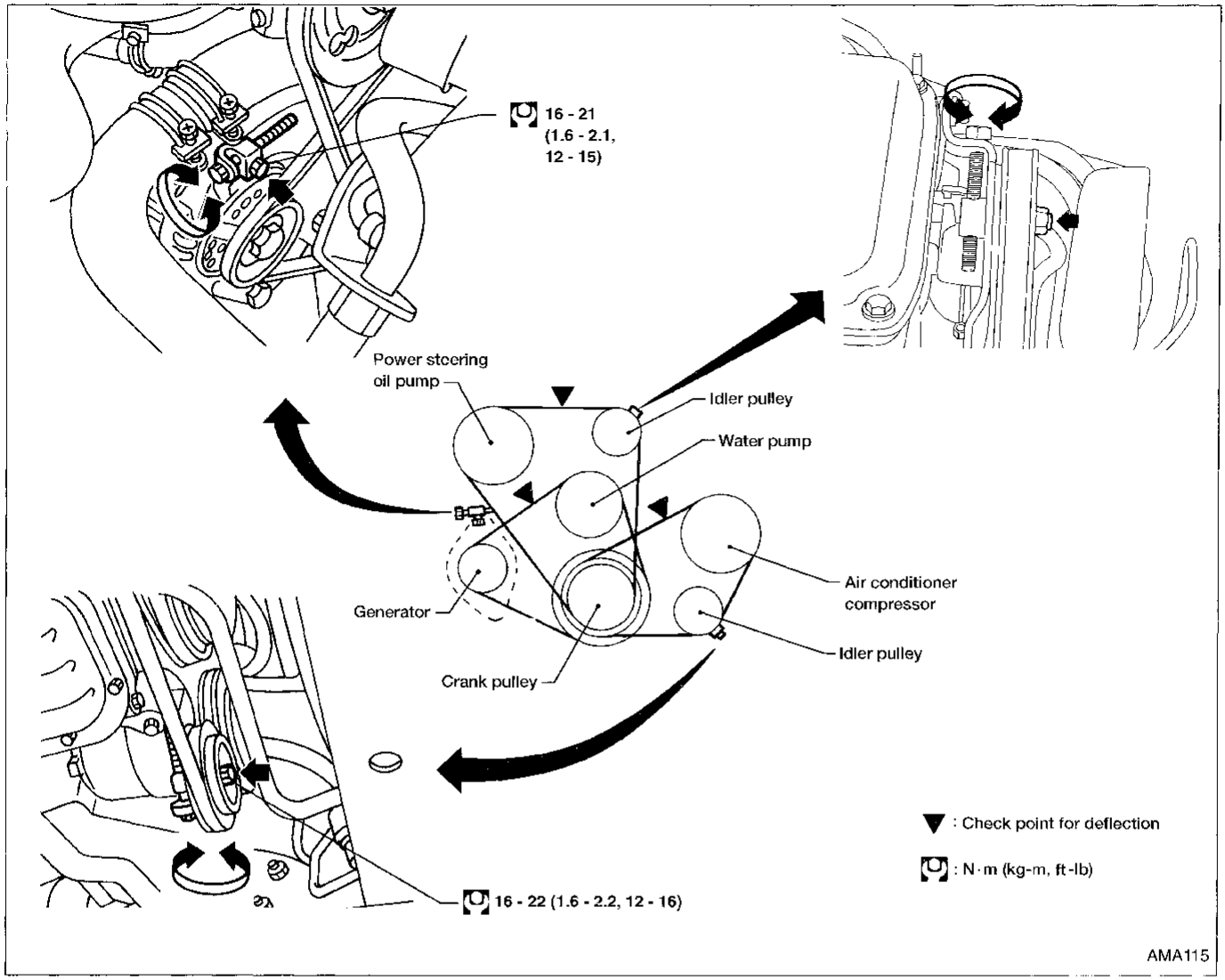

1. Inspect for cracks, fraying, wear and oil. If necessary, replace with a new one.
2. Inspect drive belt deflections by pushing midway between pulleys.

Inspect drive belt deflections when engine is cold.

Adjust if belt deflections exceed the limit.

Belt deflection:

Unit: mm (in)

	Used belt deflection		Deflection of new belt
	Limit	Deflection after adjustment	
Generator	17 (0.67)	10 - 12 (0.39 - 0.47)	8 - 10 (0.31 - 0.39)
Air conditioner compressor	16 (0.63)	10 - 12 (0.39 - 0.47)	8 - 10 (0.31 - 0.39)
Power steering oil pump	17 (0.67)	10 - 13 (0.39 - 0.51)	8 - 10 (0.31 - 0.39)
Applied pushing force	80 - 100 N (8.2 - 10.2 kg, 18 - 22.5 lb)		

Simpo PDF Merge and Split Unregistered Version - http://www.simpopdf.com

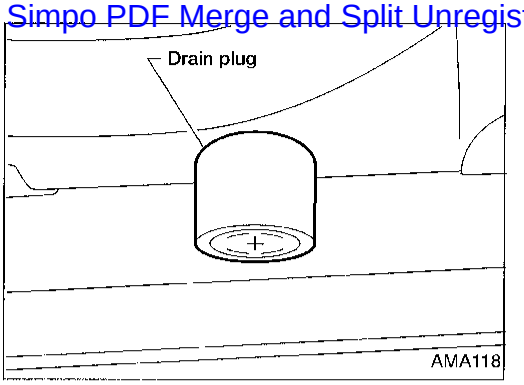

Changing Engine Coolant

WARNING:
To avoid being scalded, never change the coolant when the engine is hot.

1. Move heater temperature control lever all the way to "HOT" position or the highest temperature position.
2. Open drain plug at the bottom of radiator, and remove radiator cap.

Be careful not to allow coolant to contact drive belts.

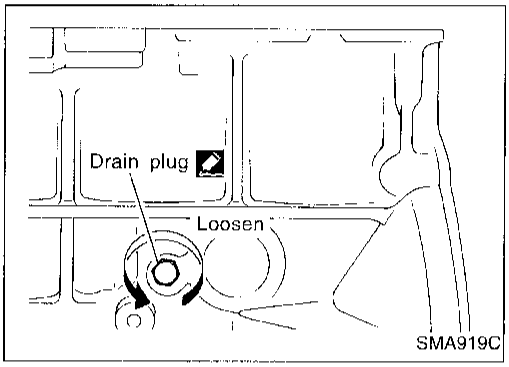

3. Remove cylinder block drain plug.
4. Close drain plug and tighten drain plug securely.

- **Apply sealant to the thread of drain plug.**
  : 34 - 44 N·m (3.5 - 4.5 kg-m, 25 - 33 ft-lb)

5. Open air relief plug.
6. Fill radiator with water and close air relief plug and radiator cap.
7. Run engine and warm it up sufficiently.
8. Rev engine 2 or 3 times under no-load.
9. Stop engine and wait until it cools down.
10. Repeat step 2 through step 9 until clear water begins to drain from radiator.
11. Drain water.

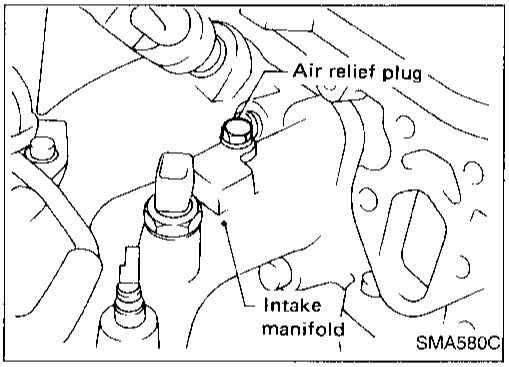

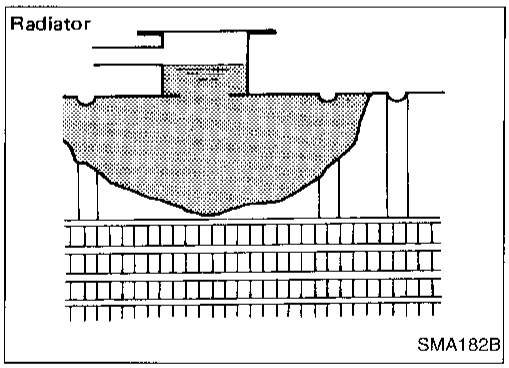

12. Open radiator cap and air relief plug.
13. Fill radiator with coolant up to specified level.

For coolant mixture ratio, refer to MA-9.

Unit: ℓ (US qt, Imp qt)

	Coolant capacity	
	2WD	4WD
Without reservoir tank	8.1 (8-5/8, 7-1/8)	9.0 (9-1/2, 7-7/8)
Reservoir tank	0.8 (7/8, 3/4)	

Pour coolant through coolant filler neck slowly to allow air in system to escape.

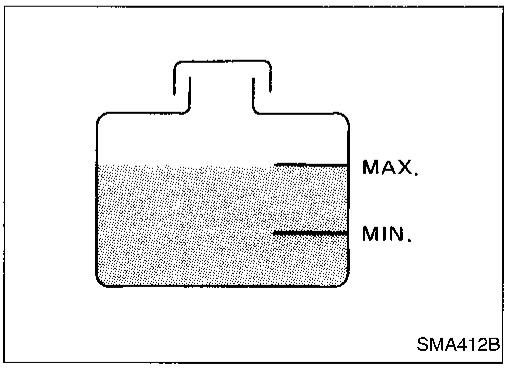

14. Close air relief plug.
15. Remove reservoir tank, drain coolant, then clean reservoir tank.
16. Install reservoir tank and fill it with coolant up to "MAX" level and then install radiator cap.
17. Run engine and warm it up sufficiently.
18. Rev engine 2 or 3 times under no-load.
19. Stop engine and cool it down, then add coolant as necessary.

- **Clean excess coolant from engine.**

Simpo PDF Merge and Split Unregistered Version - http://www.simpopdf.com

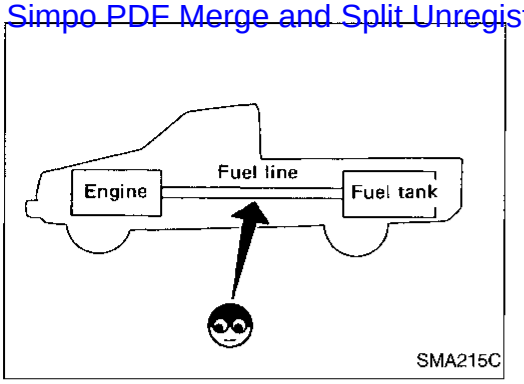

Checking Fuel Lines

Inspect fuel lines and tank for improper attachment, leaks, cracks, damage, chafing and deterioration.
If necessary, repair or replace.

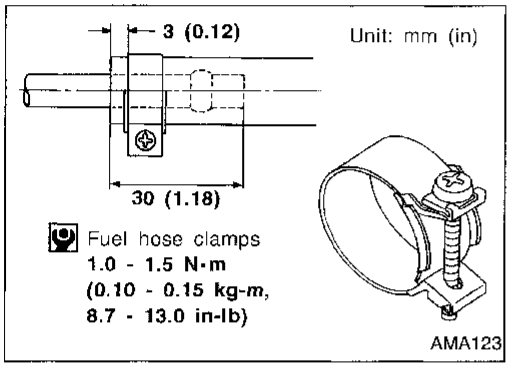

Changing Fuel Filter

CAUTION:
Tighten high-pressure rubber hose clamp so that clamp end is 3 mm (0.12 in) from hose end.
Tightening torque specifications are the same for all rubber hose clamps.
Ensure that the screw does not contact adjacent parts.

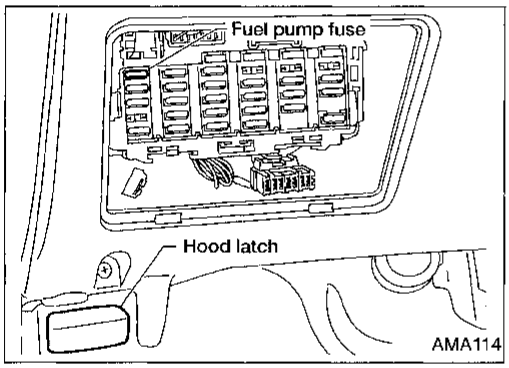

WARNING:
Before removing fuel filter, release fuel pressure from fuel line.

1. Remove fuse for fuel pump.
2. Start engine.
3. After engine stalls, crank engine two or three times to make sure that fuel pressure is released.
4. Turn ignition switch OFF and install fuse for fuel pump.

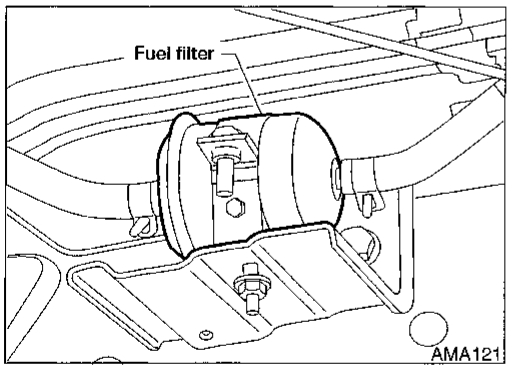

5. Loosen fuel hose clamps.
6. Replace fuel filter.

- **Be careful not to spill fuel over engine compartment. Place a shop towel to absorb fuel.**
- **Use a high-pressure fuel filter. Do not use a synthetic resinous fuel filter.**

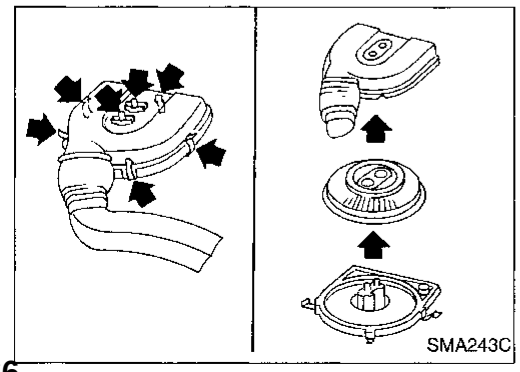

Changing Air Cleaner Filter

The viscous paper type filter does not need cleaning between renewals.

Simpo PDF Merge and Split Unregistered Version - http://www.simpopdf.com

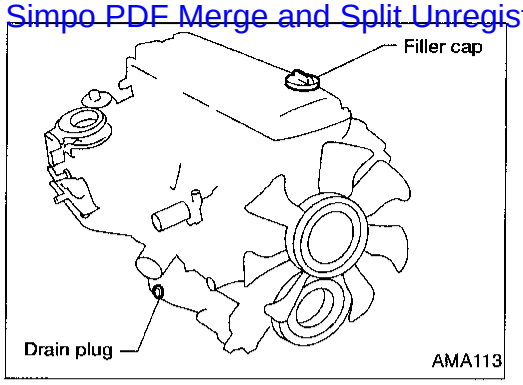

Changing Engine Oil

WARNING:

- **Be careful not to burn yourself, as the engine oil is hot.**
- **Prolonged and repeated contact with used engine oil may cause skin cancer; try to avoid direct skin contact with used oil. If skin contact is made, wash thoroughly with soap or hand cleaner as soon as possible.**

1. Warm up engine, and check for oil leakage from engine components.
2. Remove drain plug and oil filler cap.
3. Drain oil and refill with new engine oil.

Oil specification and viscosity:

- **API SG or SH and Energy Conserving II**
- **API Certification Mark**
- **Refer to "RECOMMENDED FLUIDS AND LUBRICANTS", MA-8.**

Refill oil capacity (Approximately):

Unit: ℓ (US qt, Imp qt)

	2WD	4WD
With oil filter change	3.5 (3-3/4, 3-1/8)	3.9 (4-1/8, 3-3/8)
Without oil filter change	3.3 (3-1/2, 2-7/8)	3.7 (3-7/8, 3-1/4)

CAUTION:

- **Be sure to clean drain plug and install with new washer.**
  Drain plug:
  : 29 - 39 N·m (3.0 - 4.0 kg-m, 22 - 29 ft-lb)
- **The refill capacity depends on the oil temperature and drain time. Use these values as a reference and be certain to check the dipstick when changing the oil.**

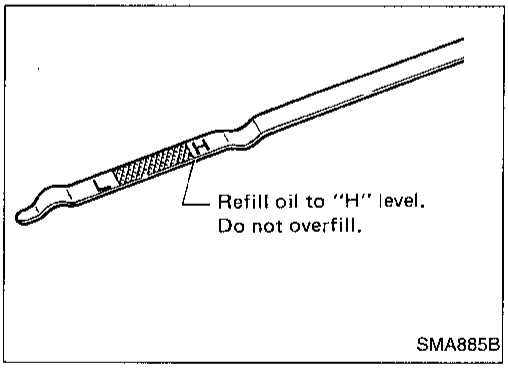

4. Check oil level.
5. Start engine and check area around drain plug and oil filter for oil leakage.
6. Run engine for a few minutes, then turn it off. After several minutes, check oil level.

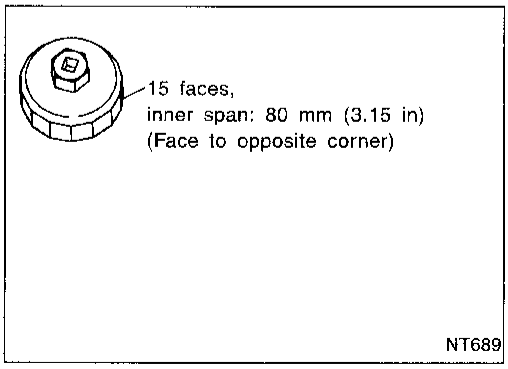

Changing Oil Filter

1. Remove oil filter with Tool.

WARNING:

Be careful not to burn yourself. Engine and engine oil are hot.

Changing Oil Filter (Cont'd)

Simpo PDF Merge and Split Unregistered Version - http://www.simpopdf.com

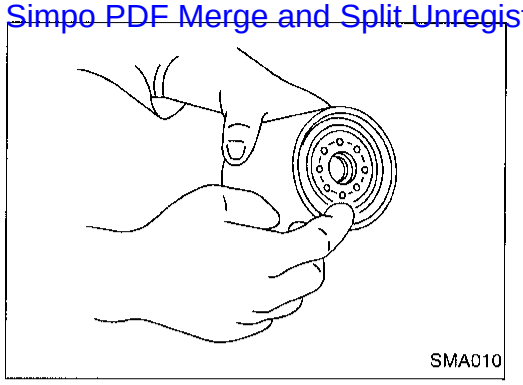

2. Clean oil filter mounting surface on cylinder block. Coat rubber seal of new oil filter with engine oil.

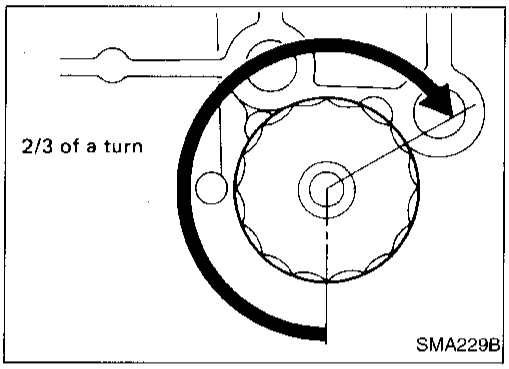

3. Screw in the oil filter until a slight resistance is felt, then tighten additionally more than 2/3 of a turn.
4. Add engine oil.

Refer to "Changing Engine Oil", MA-13.

- **Clean excess oil from engine.**

Changing Spark Plugs

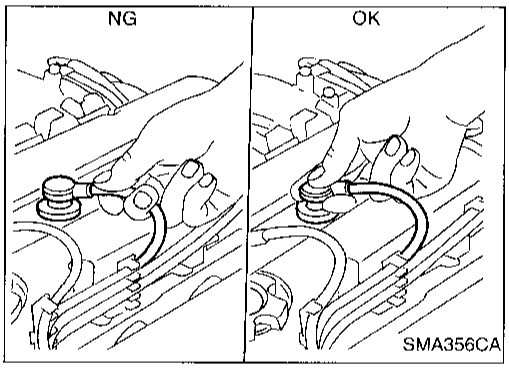

1. Disconnect ignition wires from spark plugs at boot. Do not pull on the wire.

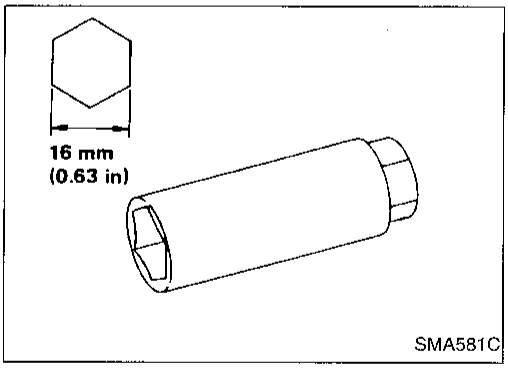

2. Remove spark plugs with spark plug wrench.

Spark plug:

Make	NGK
Standard type	BKR5E-11
Cold type	BKR6E-11 BKR7E-11

Use standard type spark plug under normal conditions. The hot type spark plug is suitable when fouling occurs with the standard spark plug under conditions such as:

- frequent engine starts
- low ambient temperature

The cold type spark plug is suitable when spark knock occurs with the standard spark plug under conditions such as:

- extended highway driving
- frequent high engine revolution

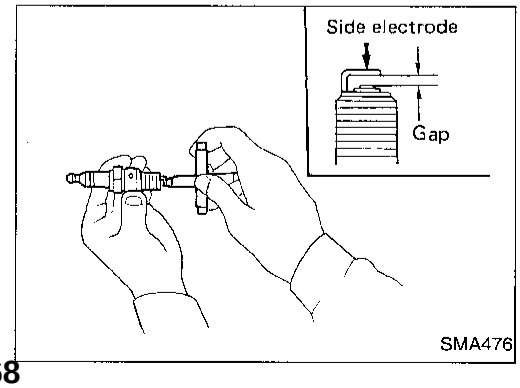

3. Check plug gap of each new spark plug.
   Gap: 1.0 - 1.1 mm (0.039 - 0.043 in)
4. Install spark plugs. Reconnect ignition wires according to numbers indicated on them.
   Spark plug:
   : 20 - 29 N·m (2.0 - 3.0 kg-m, 14 - 22 ft-lb)

Simpo PDF Merge and Split Unregistered Version - http://www.simpopdf.com

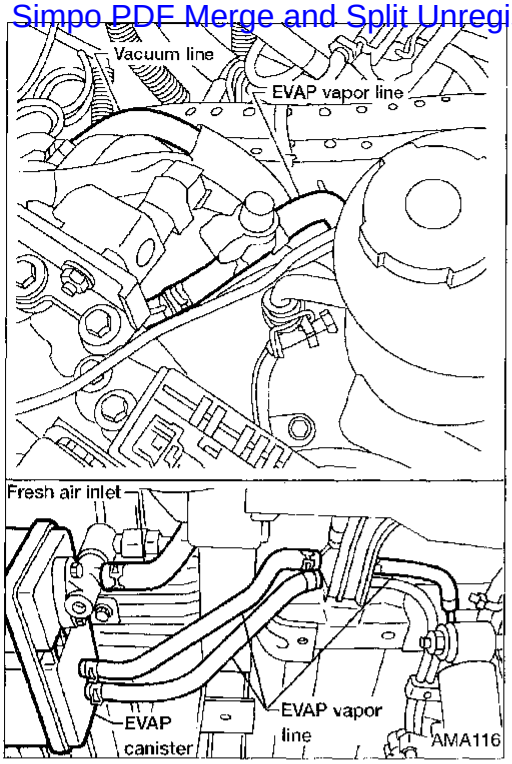

Checking EVAP Vapor Lines

1. Visually inspect EVAP vapor lines for improper attachment and for cracks, damage, loose connections, chafing and deterioration.
2. Inspect fuel tank filler cap vacuum relief valve for clogging, sticking, etc.

Refer to EC section ("EVAPORATIVE EMISSION SYSTEM").

Changing Positive Crankcase Ventilation (PCV) Filter

Remove air cleaner cover and take out PCV filter located inside air cleaner cover. Then install new PCV filter.

Simpo PDF Merge and Split Unregistered Version - http://www.simpopdf.com

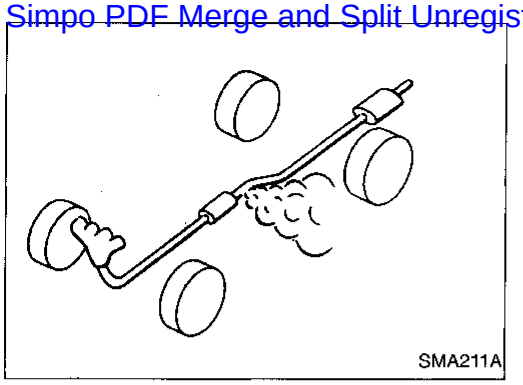
SMA211A

Checking Exhaust System

Check exhaust pipes, muffler and mounting for improper attachment, leaks, cracks, damage, loose connections, chafing and deterioration.

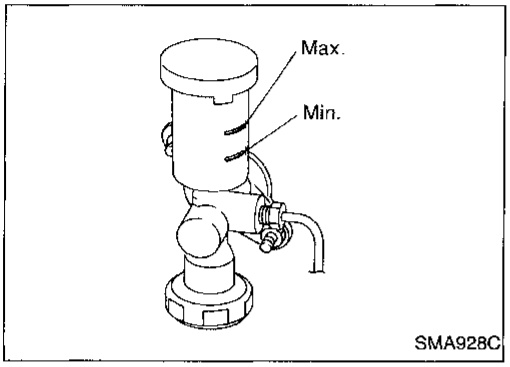

SMA928C

Checking Clutch Fluid Level and Leaks

If fluid level is extremely low, check clutch system for leaks.

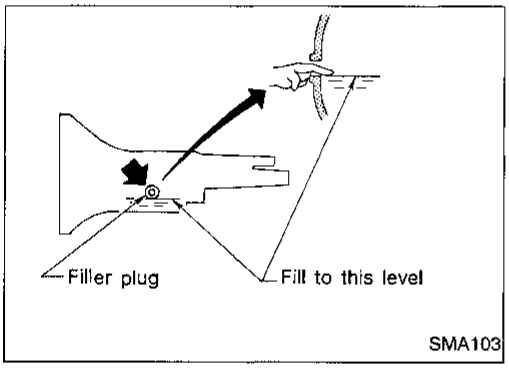

SMA103

Checking M/T Oil

Check for oil leakage and oil level.

Never start engine while checking oil level.

Filler plug:

: 25 - 34 N·m (2.5 - 3.5 kg-m, 18 - 25 ft-lb)

Changing M/T Oil

1. Drain oil from drain plug and refill with new gear oil.
2. Check oil level.

Oil grade and viscosity:

API GL-4. Refer to "RECOMMENDED FLUIDS AND LUBRICANTS", MA-8.

Oil capacity:

FS5W71C

2WD 2.0 ℓ (4-1/4 US pt, 3-1/2 Imp pt)

4WD 4.9 ℓ (10-3/8 US pt, 8 5/8 Imp pt)

Drain plug:

: 25 - 34 N·m (2.5 - 3.5 kg-m, 18 - 25 ft-lb)

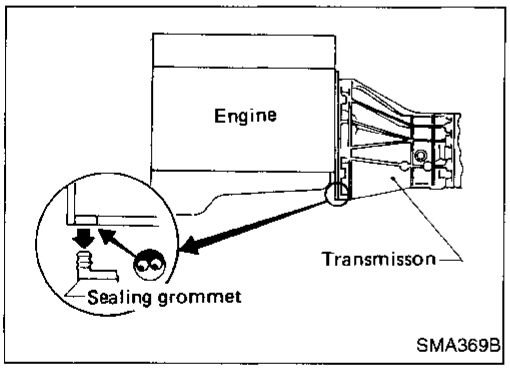

SMA369B

Checking Water Entry — For 4WD models

Check water entry in the clutch housing by removing the sealing grommet after driving in deep water or mud.

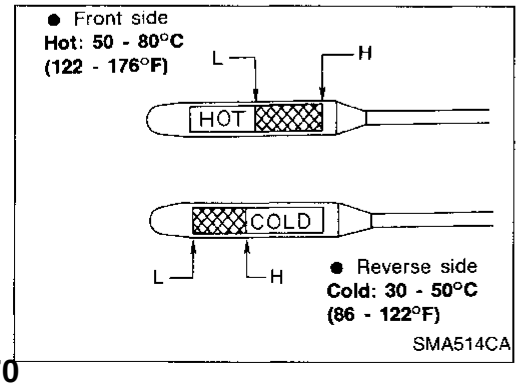

SMA514CA

Checking A/T Fluid

1. Warm up engine.
2. Check for fluid leakage.
3. Before driving, fluid level can be checked at fluid temperatures of 30 to 50°C (86 to 122°F) using "COLD" range on dipstick.

a. Park vehicle on level surface and set parking brake.
b. Start engine and move selector lever through each gear position. Leave selector lever in "P" position.
c. Check fluid level with engine idling.
d. Remove dipstick and note reading. If level is at low side of either range, add fluid to the charging pipe.

Simpo PDF Merge and Split Unregistered Version - http://www.simpopdf.com

Checking A/T Fluid (Cont'd)

e. Reinsert dipstick into charging pipe as far as it will go.
f. Remove dipstick and note reading. If reading is at low side of range, add fluid to the charging pipe.

Do not overfill.

4. Drive vehicle for approximately 5 minutes in urban areas.
5. Recheck fluid level at fluid temperatures of 50° to 80°C (122° to 176°F) using "HOT" range on dipstick.
6. Check fluid condition.

- If fluid is very dark or smells burned, refer to AT section for checking operation of A/T. Flush cooling system after repair of A/T.
- If A/T fluid contains frictional material (clutches, bands, etc.), replace radiator and flush cooler line using cleaning solvent and compressed air after repair of A/T. Refer to LC section ("Radiator", "ENGINE COOLING SYSTEM").

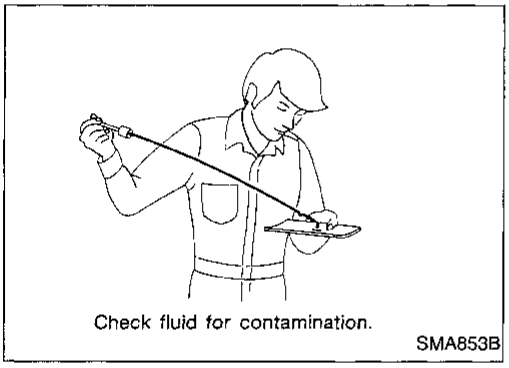

Changing A/T Fluid

1. Warm up A/T fluid.
2. Stop engine.
3. Drain A/T fluid from drain plug and refill with new A/T fluid. Measure amount of fluid drained and refill with equal amount of new fluid.

Fluid grade and viscosity:
Nissan Matic "D" (Continental U.S. and Alaska) or Genuine Nissan Automatic Transmission Fluid (Canada). Refer to "RECOMMENDED FLUIDS AND LUBRICANTS", MA-8.
Fluid capacity (With torque converter):
7.9 ℓ (8-3/8 US qt, 7 Imp qt)
Drain plug:
: 29 - 39 N·m (3.0 - 4.0 kg-m, 22 - 29 ft-lb)

4. Run engine at idle speed for five minutes.
5. Check fluid level and condition. Refer to "Checking A/T Fluid". If fluid is still dirty, repeat steps 2 through 5, MA-16.

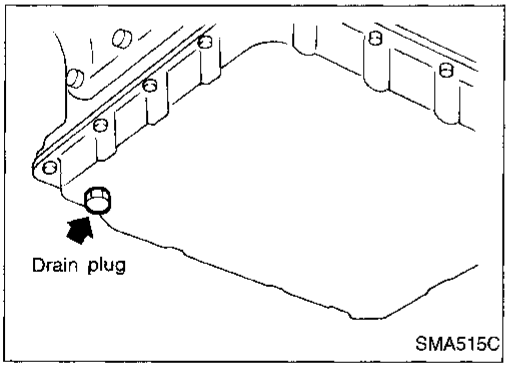

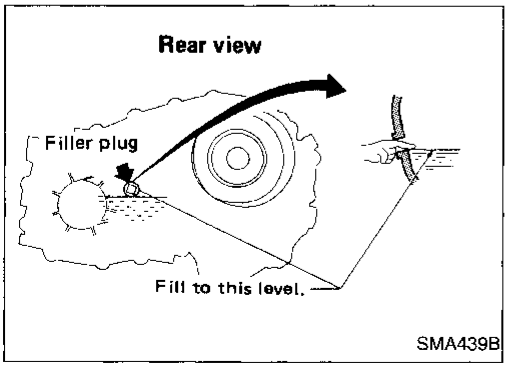

Checking Transfer Fluid

Check for fluid leakage and fluid level.

Automatic Transmission Fluid is used for the transfer in the factory.
Never start engine while checking fluid level.

Filler plug:
: 25 - 34 N·m (2.5 - 3.5 kg-m, 18 - 25 ft-lb)

Simpo PDF Merge and Split Unregistered Version - http://www.simpopdf.com

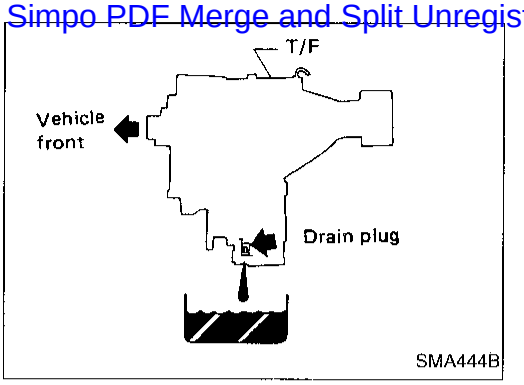

Changing Transfer Fluid

When changing transfer fluid completely, use the following fluid.

Fluid grade:
API GL-4. Refer to "RECOMMENDED FLUIDS AND LUBRICANTS", MA-8.
Fluid capacity:
2.2 ℓ (2-3/8 US qt, 2 Imp qt)
Drain plug:
: 25 - 34 N·m (2.5 - 3.5 kg-m, 18 - 25 ft-lb)

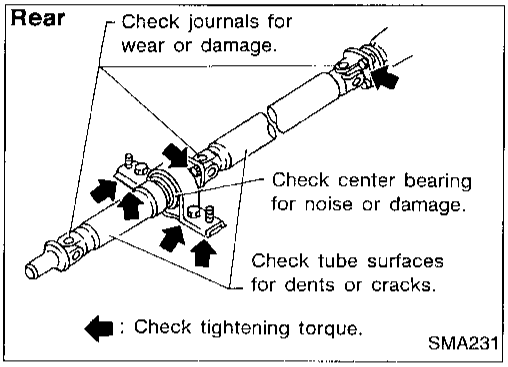

Checking Propeller Shaft

Check propeller shaft for damage, looseness and grease leakage.
Tightening torque: Refer to PD section.

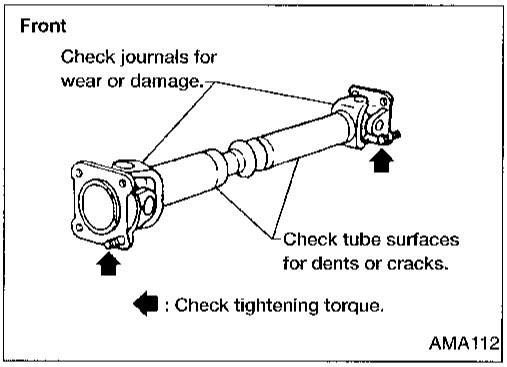

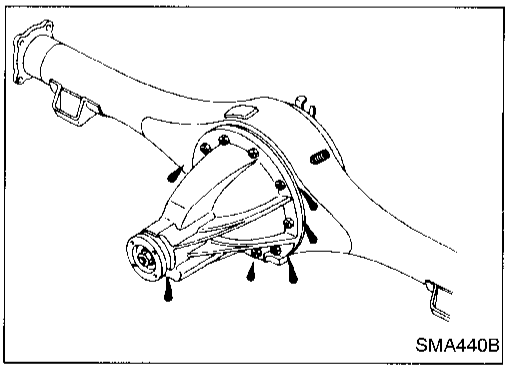

Checking Differential Gear Oil

Check for oil leakage and oil level.

Filler plug:
Front
: 39 - 59 N·m (4 - 6 kg-m, 29 - 43 ft-lb)
Rear
H190A
: 59 - 98 N·m (6 - 10 kg-m, 43 - 72 ft-lb)
C200
: 39 - 59 N·m (4 - 6 kg-m, 29 - 43 ft-lb)

Simpo PDF Merge and Split Unregistered Version - http://www.simpopdf.com

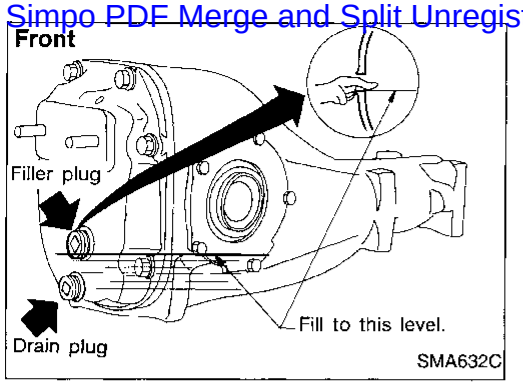

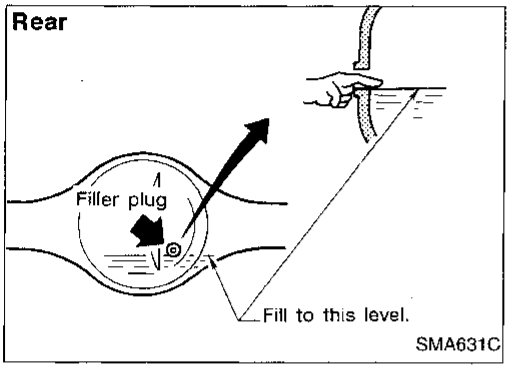

Changing Differential Gear Oil

1. Drain oil from drain plug and refill with new gear oil.
2. Check oil level.

Oil grade and viscosity:
See "RECOMMENDED FLUIDS AND LUBRICANTS", MA-8.

Oil capacity:

Front
1.3 ℓ (2-3/4 US pt, 2-1/4 Imp pt)

Rear

H190A
1.5 ℓ (3-1/8 US pt, 2-5/8 Imp pt)

C200
1.3 ℓ (2-3/4 US pt, 2-1/4 Imp pt)

Drain plug:

Front
: 39 - 59 N·m (4 - 6 kg-m, 29 - 43 ft-lb)

Rear
: 59 - 98 N·m (6 - 10 kg-m, 43 - 72 ft-lb)

Balancing Wheels

Adjust wheel balance using the road wheel center.

Wheel balance (Maximum allowable unbalance):
Refer to SDS, MA-24.

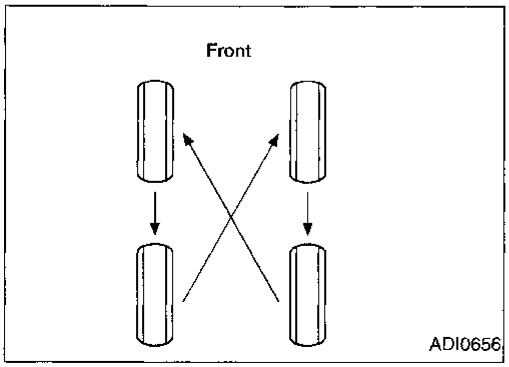

Tire Rotation

- After rotating the tires, adjust the tire pressure.
- Retighten the wheel nuts after the aluminum wheels have been run for the first 1,000 km (600 miles) or if a flat tire occurs.
- **Do not include the T-type spare tire when rotating the tires.**

Wheel nuts:
: 118 - 147 N·m (12 - 15 kg-m, 87 - 108 ft-lb)

Simpo PDF Merge and Split Unregistered Version - http://www.simpopdf.com

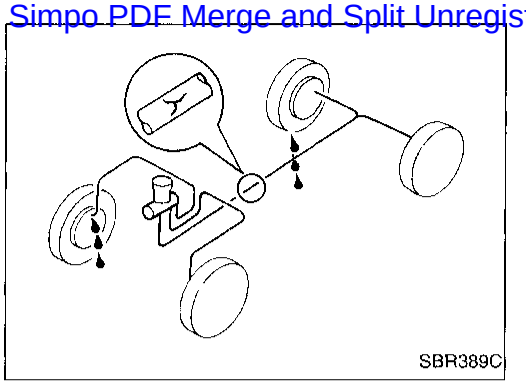
SBR389C

Checking Brake Fluid Level and Leaks

If fluid level is extremely low, check brake system for leaks.

Checking Brake System

Check brake fluid lines and parking brake cables for improper attachment, leaks, chafing, abrasion and deterioration, etc.

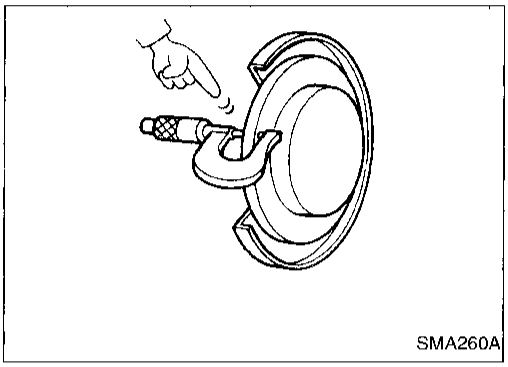
SMA260A

Checking Disc Brake

ROTOR

Check condition and thickness.

Minimum thickness: CL28VD 24 mm (0.94 in)

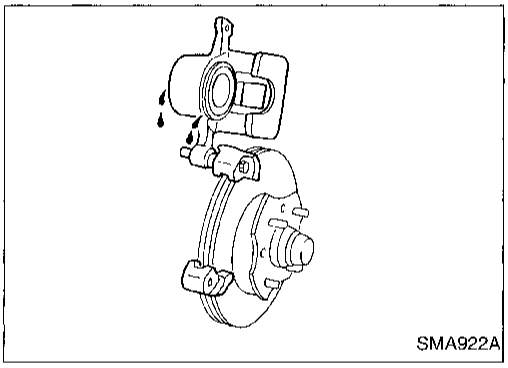
SMA922A

CALIPER

Check for leakage.

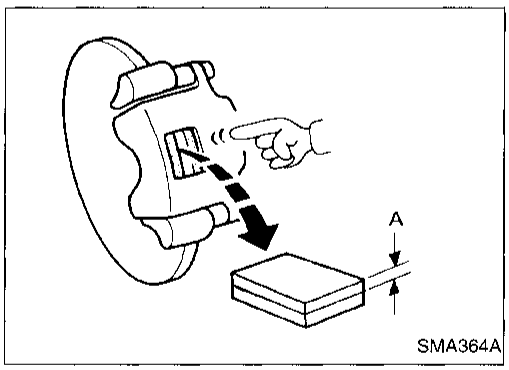

SMA364A

PAD

Measure wear and check for damage.

Minimum thickness: 2 mm (0.08 in)

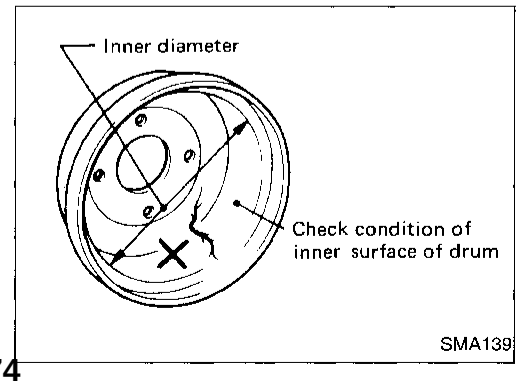

SMA139

Checking Drum Brake

WHEEL CYLINDER

Check operation and for leakage.

DRUM

Check condition of inner surface.

Drum repair limit (Maximum inner diameter):

LT26B	**261.5 mm (10.30 in)**
LT30A	**296.5 mm (11.67 in)**

Simpo PDF Merge and Split Unregistered Version - http://www.simpopdf.com

Checking Drum Brake (Cont'd)

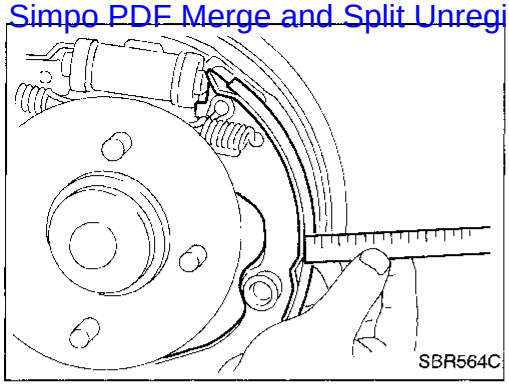
SBR564C

LINING

Measure wear and check for damage.

Lining wear limit (Minimum thickness):
1.5 mm (0.059 in)

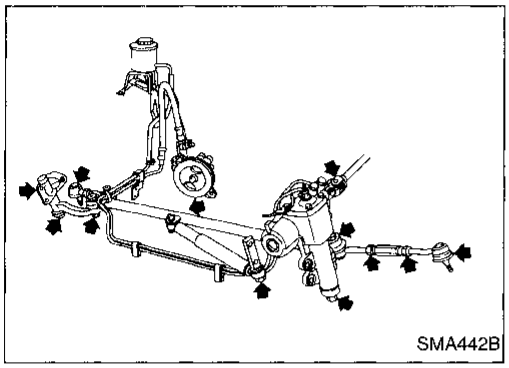
SMA442B

Checking Steering Gear and Linkage

STEERING GEAR

- Check gear housing and boots for looseness, damage and grease leakage.
- Check connection with steering column for looseness.

STEERING LINKAGE

- Check ball joint, dust cover and other component parts for looseness, wear, damage and grease leakage.

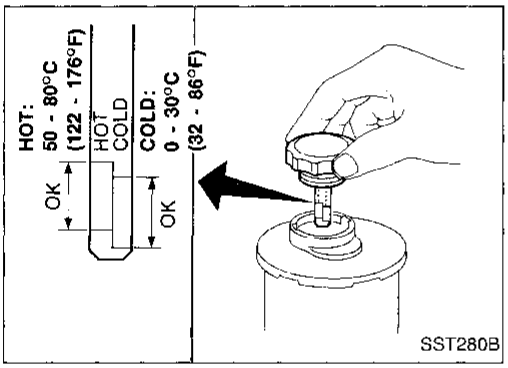

SST280B

Checking Power Steering Fluid and Lines

- Check fluid level with engine off.
- Check fluid level with dipstick on reservoir cap. Use "HOT" range at fluid temperatures of 50 to 80°C (122 to 176°F). Use "COLD" range at fluid temperatures of 0 to 30°C (32 to 86°F).

CAUTION:
- **Do not overfill.**
- **Recommended fluid is Automatic Transmission Fluid type DEXRON™ III or equivalent.**

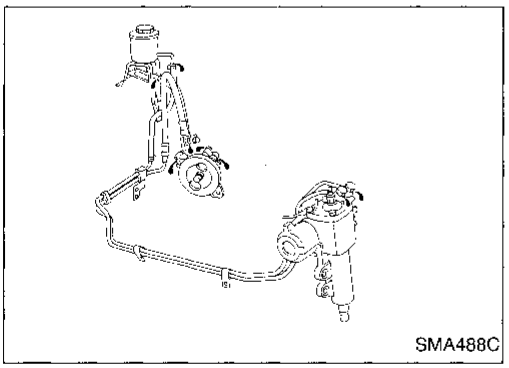
SMA488C

- Check lines for improper attachment, leaks, cracks, damage, loose connections, chafing and deterioration.

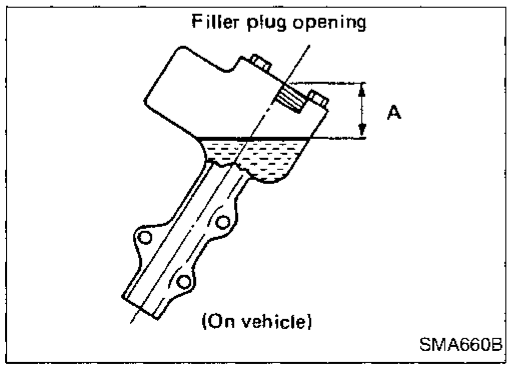

SMA660B

Checking Steering Gear Oil Level and Leaks

- Check steering gear for oil level and leakage.
- Check oil level.

Oil level:
Distance "A"
20 mm (0.79 in) or less

Be careful not to overflow gear oil when filling.

Simpo PDF Merge and Split Unregistered Version - http://www.simpopdf.com

Lubricating Hood Latches, Locks and Hinges

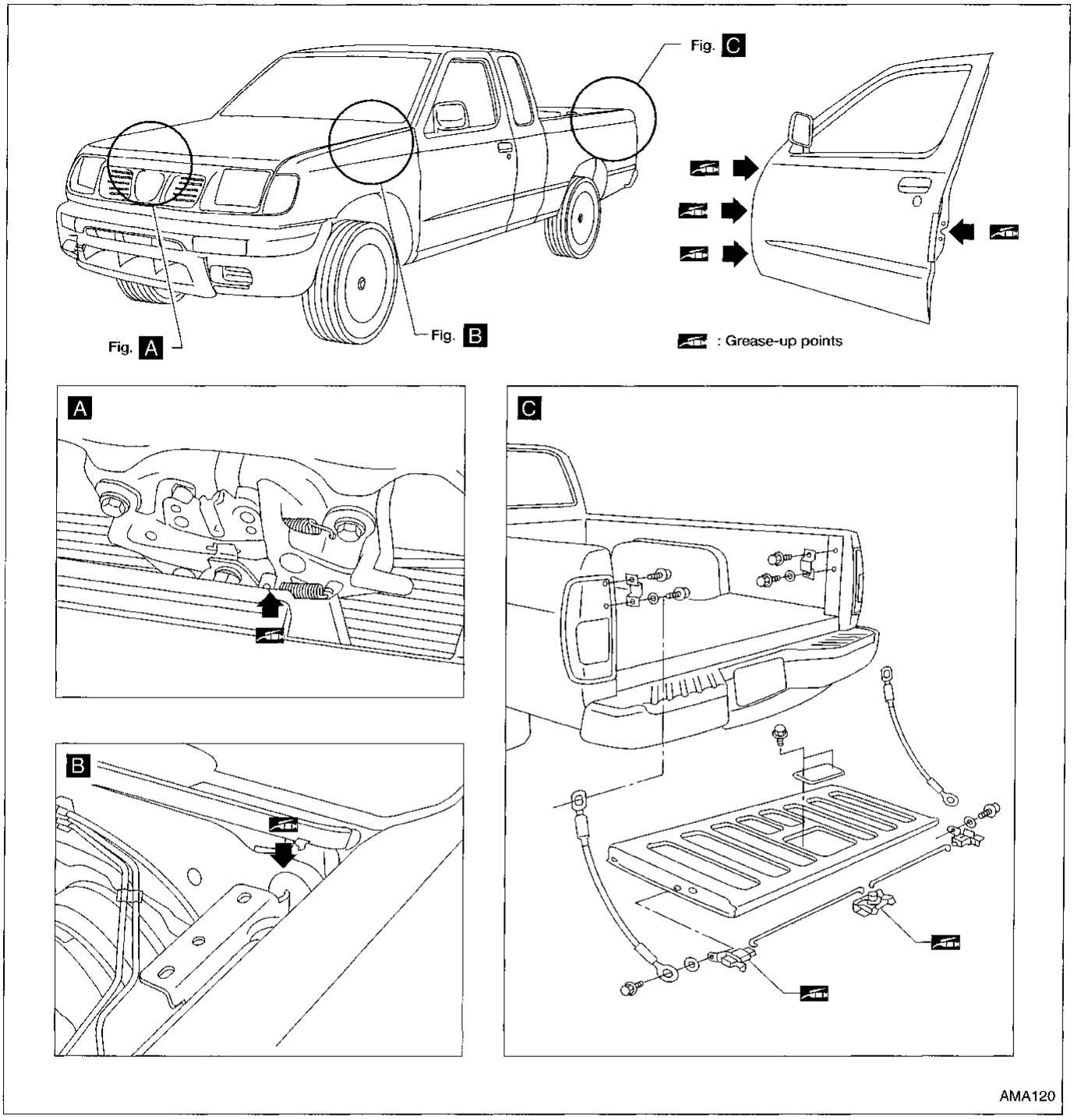

Simpo PDF Merge and Split Unregistered Version - http://www.simpopdf.com

Checking Seat Belts, Buckles, Retractors, Anchors and Adjusters

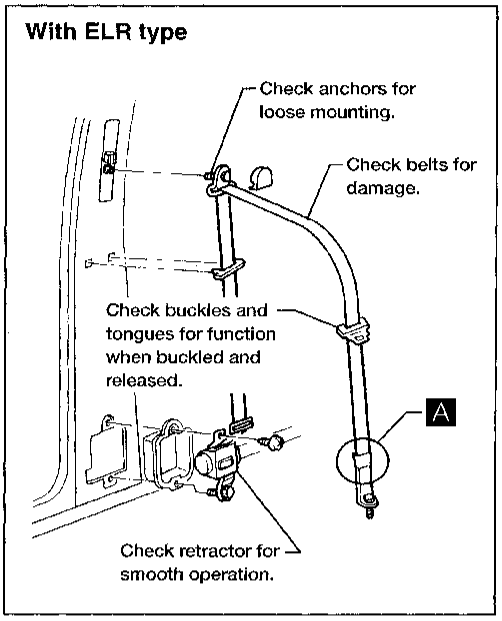

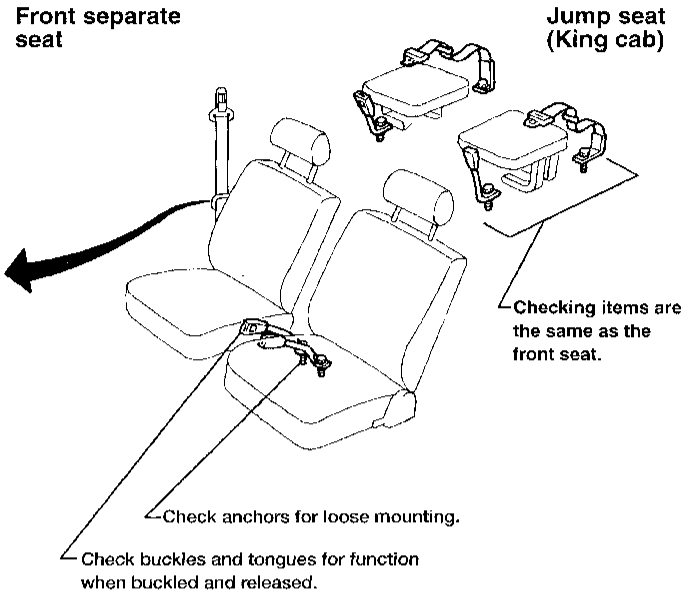

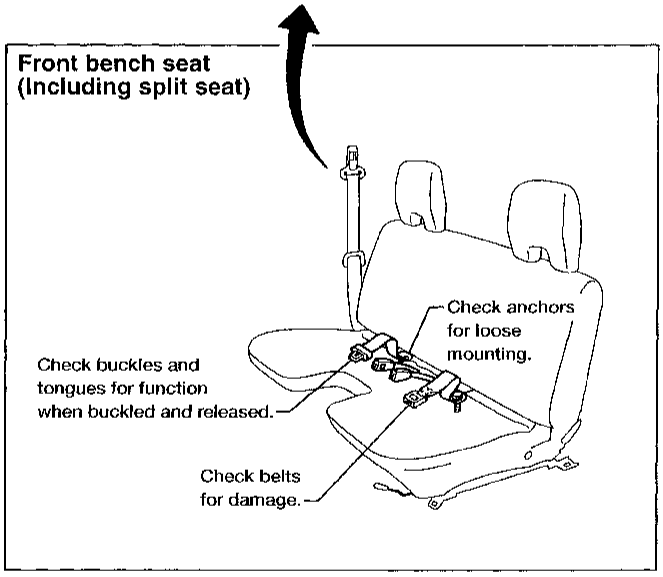

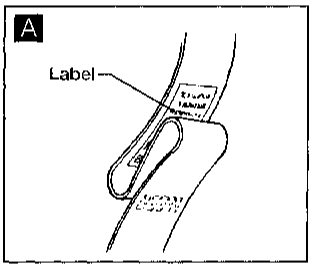

For front seat belt, shock absorber type belt has been used. Replace the belt when loop has been pulled out and "REPLACE BELT" is visible because this seat belt has a loop of webbing under the sleeve.

CAUTION:

1. If the vehicle has collided or overturned, replace the entire belt assembly, regardless of nature of accident.
2. If the condition of any component of a seat belt is questionable, do not repair seat belt, but replace it as a belt assembly.
3. If webbing is cut, frayed, or damaged, replace belt assembly.
4. Do not spill drinks, oil, etc. on inner lap belt buckle. Never oil tongue and buckle.
5. Use a NISSAN genuine seat belt assembly.

Anchor bolt:
: 24 - 31 N•m (2.4 - 3.1 kg-m, 17 - 23 ft-lb)

For details, refer to "Seat Belt Inspection", "SEAT BELTS" in RS section.

AMA119

Simpo PDF Merge and Split Unregistered Version - http://www.simpopdf.com

Engine Maintenance

INSPECTION AND ADJUSTMENT

Drive belt deflection

Unit: mm (in)

	Used belt deflection		Deflection of new belt
	Limit	Deflection after adjustment	
Generator	17 (0.67)	10 - 12 (0.39 - 0.47)	8 - 10 (0.31 - 0.39)
Air conditioner compressor	16 (0.63)	10 - 12 (0.39 - 0.47)	8 - 10 (0.31 - 0.39)
Power steering oil pump	17 (0.67)	10 - 13 (0.39 - 0.51)	8 - 10 (0.31 - 0.39)
Applied pushing force	80 - 100 N (8.2 - 10.2 kg, 18 - 22.5 lb)		

Spark plug

Standard type	BKR5E-11
Cold type	BKR6E-11, BKR7E-11
Plug gap	1.0 - 1.1 mm (0.039 - 0.043 in)

Chassis and Body Maintenance

INSPECTION AND ADJUSTMENT

Wheel balance

Maximum allowable unbalance	Dynamic (At rim flange)	g (oz)	10 (0.35) (one side)
	Static	g (oz)	20 (0.71)

Simpo PDF Merge and Split Unregistered Version - http://www.simpopdf.com

SECTION MT

CONTENTS

PREPARATION 2
- Special Service Tools 2
- Commercial Service Tools 3

NOISE, VIBRATION AND HARSHNESS (NVH) TROUBLESHOOTING 4
- NVH Troubleshooting Chart 4

DESCRIPTION 5
- Cross-sectional View — 2WD Model — 5
- Cross-sectional View — 4WD Model — 6

ON-VEHICLE SERVICE 7
- Replacing Rear Oil Seal — 2WD Model — 7
- Position Switch Check 7

REMOVAL AND INSTALLATION 8

MAJOR OVERHAUL 11
- Case Components 11
- Gear Components — 2WD Model — 12
- Gear Components — 4WD Model — 13
- Shift Control Components 14

DISASSEMBLY 15
- Case Components 15
- Shift Control Components 15
- Gear Components 16

INSPECTION 19
- Shift Control Components 19
- Gear Components 19
  - Gears And Shafts 19
  - Synchronizers 19
  - Bearings 20

ASSEMBLY 21
- Gear Components 21
- Shift Control Components 27
- Case Components 28

SERVICE DATA AND SPECIFICATIONS (SDS) 31
- General Specifications 31
- Inspection and Adjustment 32

Simpo PDF Merge and Split Unregistered Version - http://www.simpopdf.com

Special Service Tools

The actual shapes of Kent-Moore tools may differ from those of special service tools illustrated here.

Tool number (Kent-Moore No.) Tool name	Description	
ST23810001 (—) Adapter setting plate	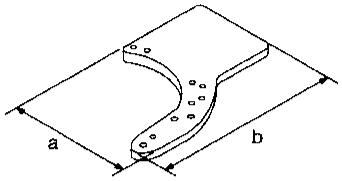 NT407	Fixing adapter plate with gear assembly **a: 166 mm (6.54 in)** **b: 270 mm (10.63 in)**
KV32101330 (See J26349-A) Puller	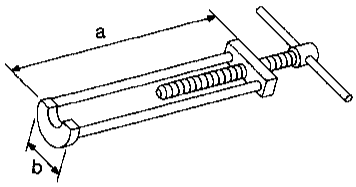 NT408	Removing overdrive mainshaft bearing **a: 447 mm (17.60 in)** **b: 100 mm (3.94 in)**
KV31100401 (—) Transmission press stand	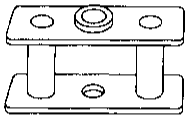 NT068	Pressing counter gear and mainshaft
ST22520000 (J26348) Wrench	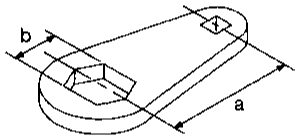 NT409	Tightening mainshaft lock nut **a: 100 mm (3.94 in)** **b: 41 mm (1.61 in)**
ST23540000 (J25689-A) Pin punch	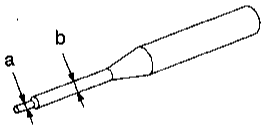 NT442	Removing and installing fork rod retaining pin **a: 2.3 mm (0.091 in) dia.** **b: 4 mm (0.16 in) dia.**
ST30031000 (J22912-01) Puller	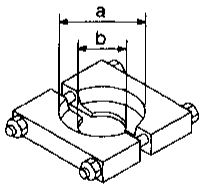 NT411	Removing and installing 1st gear bushing Removing main drive gear bearing **a: 90 mm (3.54 in) dia.** **b: 50 mm (1.97 in) dia.**
ST23860000 (—) Drift	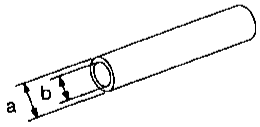 NT065	Installing counter drive gear **a: 38 mm (1.50 in) dia.** **b: 33 mm (1.30 in) dia.**
ST22360002 (J25679-01) Drift	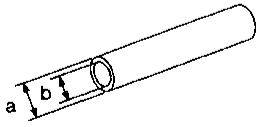 NT065	Installing counter gear front and rear end bearings **a: 29 mm (1.14 in) dia.** **b: 23 mm (0.91 in) dia.**
ST22350000 (J25678-01) Drift	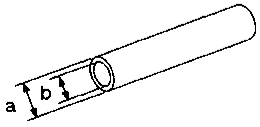 NT065	Installing OD gear bushing **a: 34 mm (1.34 in) dia.** **b: 28 mm (1.10 in) dia.**

Special Service Tools (Cont'd)

Simpo PDF Merge and Split Unregistered Version - http://www.simpopdf.com

Tool number (Kent-Moore No.) Tool name	Description	
ST23800000 (J25691-01) Drift	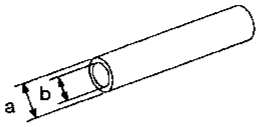 NT065	Installing front cover oil seal **a: 44 mm (1.73 in) dia.** **b: 31 mm (1.22 in) dia.**
ST33400001 (J26082) Drift	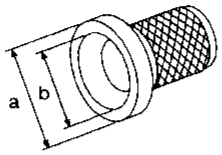 NT086	Installing rear oil seal **a: 60 mm (2.36 in) dia.** **b: 47 mm (1.85 in) dia.**
ST33290001 (J34286) Puller	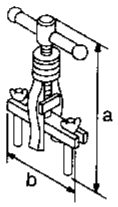 NT414	Removing rear oil seal **a: 250 mm (9.84 in)** **b: 160 mm (6.30 in)**
ST30720000 (J25405) Drift	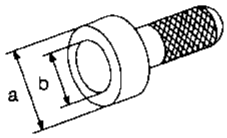 NT115	Installing mainshaft ball bearing **a: 77 mm (3.03 in) dia.** **b: 55.5 mm (2.185 in) dia.**
ST30613000 (J25742-3) Drift	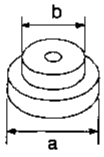 NT073	Installing main drive gear bearing **a: 71.5 mm (2.815 in) dia.** **b: 47.5 mm (1.870 in) dia.**
ST33200000 (J26082) Drift	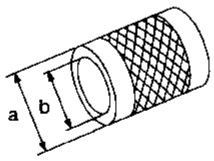 NT091	Installing counter rear bearing **a: 60 mm (2.36 in) dia.** **b: 44.5 mm (1.752 in) dia.**

Commercial Service Tools

Tool name	Description	
Puller	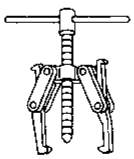 NT077	Removing counter bearings, counter drive and OD gears
Drift	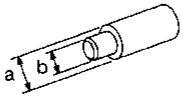 NT074	Installing countershaft rear end bearing (FS5W71C-4WD model) **a: 40 mm (1.57 in) dia.** **b: 30 mm (1.18 in) dia.**

Simpo PDF Merge and Split Unregistered Version - http://www.simpopdf.com

NVH Troubleshooting Chart

Use the chart below to help you find the cause of the symptom. The numbers indicate the order of the inspection. If necessary, repair or replace these parts.

MANUAL TRANSMISSION

Reference page		Refer to MA section ("Checking M/T Oil", CHASSIS AND BODY MAINTENANCE").			MT-11	MT-11	MT-14	MT-14	MT-12, MT-13	MT-12, MT-13	MT-12, MT-13	MT-12, MT-13
Possible cause and SUSPECTED PARTS		OIL (Oil level is low.)	OIL (Wrong oil.)	OIL (Oil level is high.)	GASKET (Damaged)	OIL SEAL (Worn or damaged)	CHECK PLUG RETURN SPRING AND CHECK BALL (Worn or damaged)	SHIFT FORK (Worn)	GEAR (Worn or damaged)	BEARING (Worn or damaged)	BAULK RING (Worn or damaged)	INSERT SPRING (Damaged)
Symptom	Noise	1	2						3	3		
	Oil leakage		3	1	2	2						
	Hard to shift or will not shift		1	1							2	2
	Jumps out of gear						1	2	2			

Simpo PDF Merge and Split Unregistered Version - http://www.simpopdf.com

Cross-sectional View — 2WD Model —

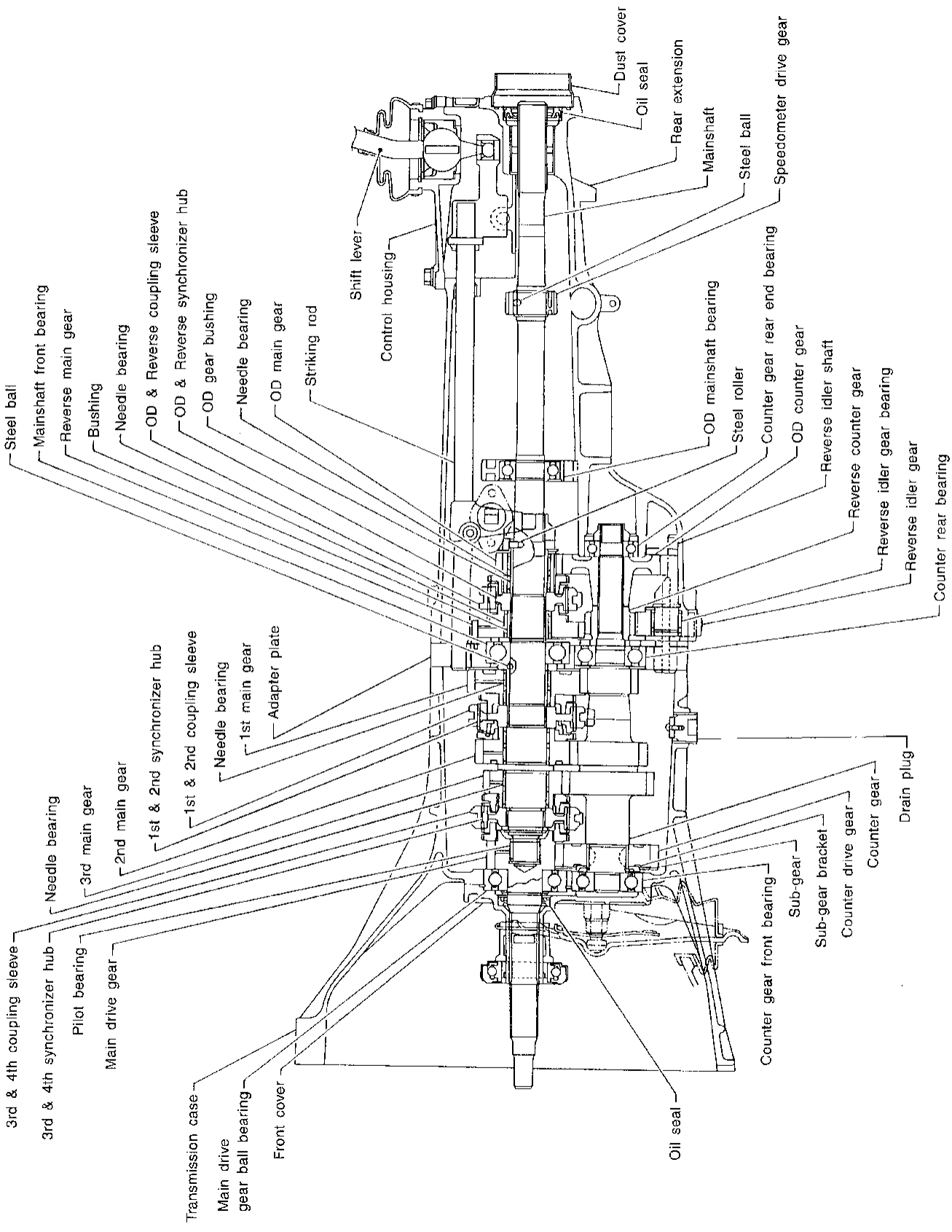

SMT153D

Simpo PDF Merge and Split Unregistered Version - http://www.simpopdf.com

Cross-sectional View — 4WD Model —

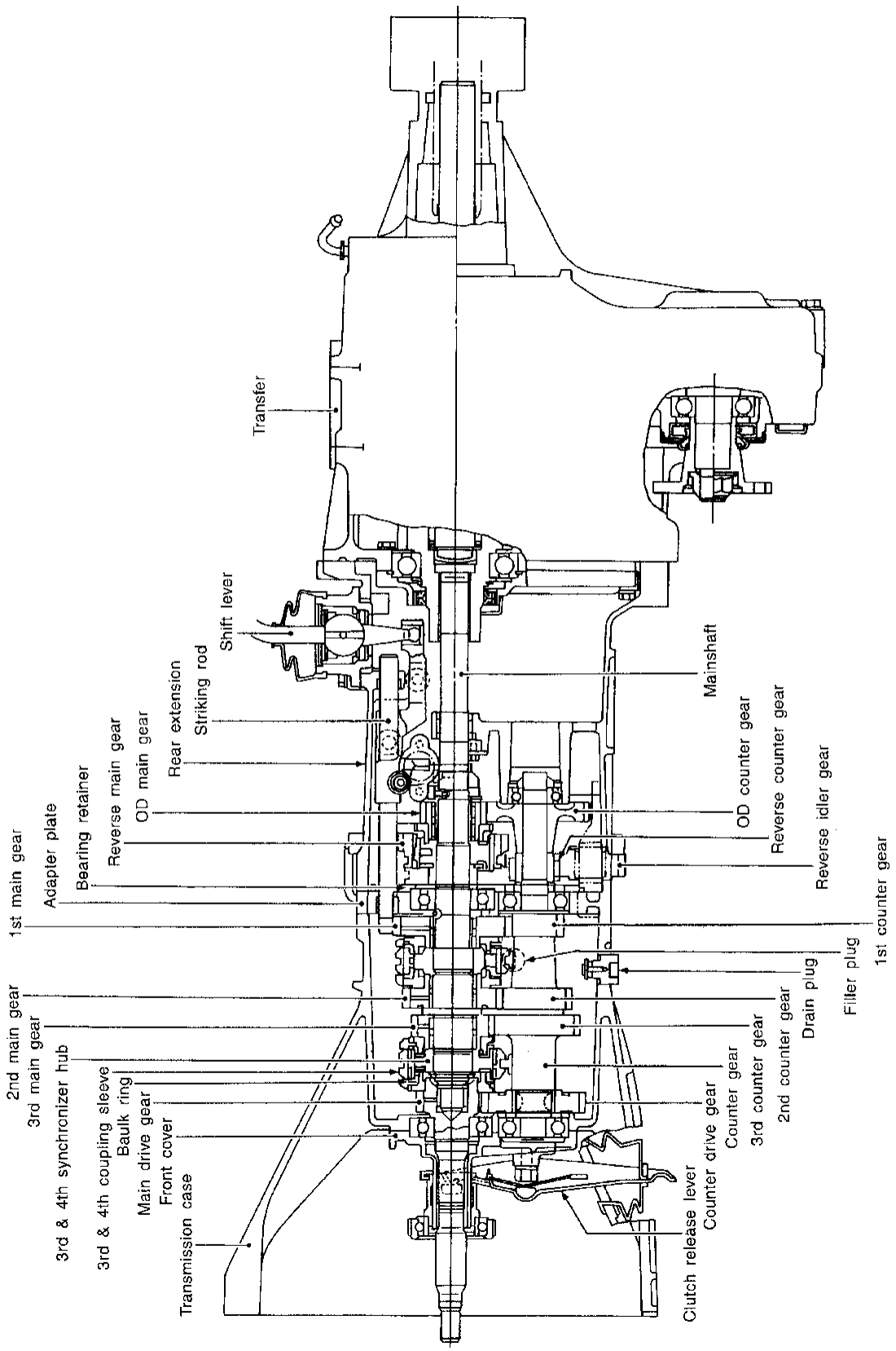

SMT154D

Simpo PDF Merge and Split Unregistered Version - http://www.simpopdf.com

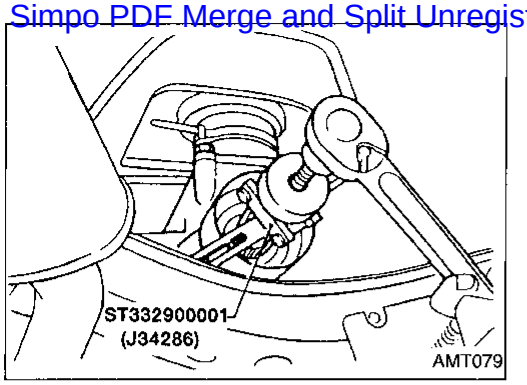

Replacing Rear Oil Seal — 2WD Model —

REMOVAL

1. Remove the propeller shaft. Refer to PD section ("Removal and Installation", "PROPELLER SHAFT").
2. Remove rear oil seal using Tool.

- **Always replace with a new seal once it has been removed.**

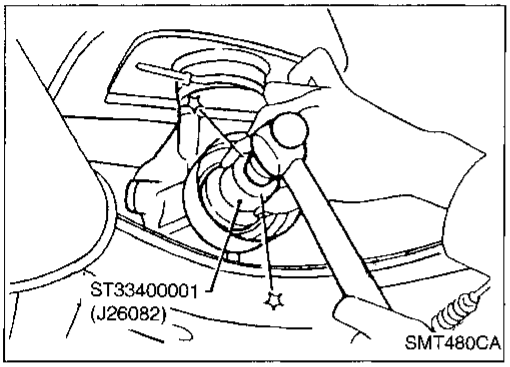

INSTALLATION

1. Install new oil seal until it stops.

- **Apply multi-purpose grease to seal lip of oil seal before installing.**

2. Install any part removed.

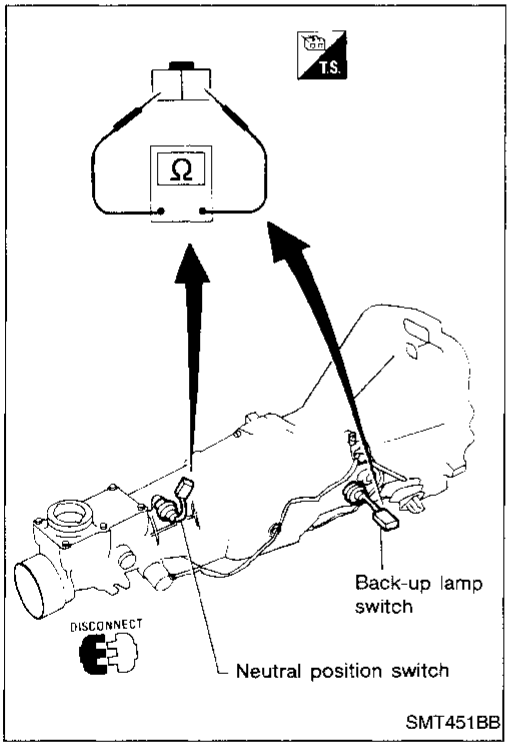

Position Switch Check

- Check continuity.

Switch	Gear position	Continuity
Back-up lamp switch	Reverse	Yes
	Except reverse	No
Neutral position switch	Neutral	Yes
	Except neutral	No

Simpo PDF Merge and Split Unregistered Version - http://www.simpopdf.com

Removal

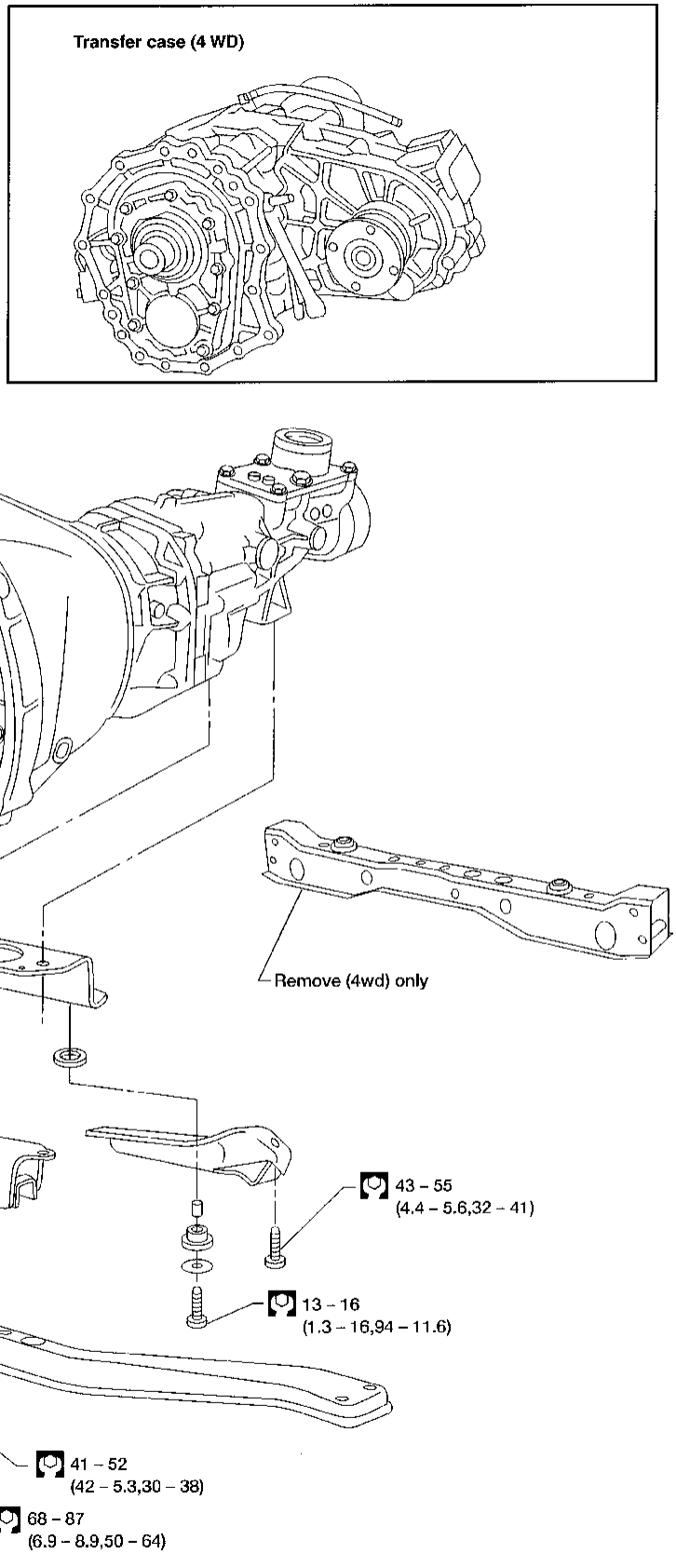

AMT144

Removal (Cont'd)

Simpo PDF Merge and Split Unregistered Version - http://www.simpopdf.com

CAUTION:
Before separating the transmission from the engine, remove the crankshaft position sensor (OBD) from the transmission. Be careful not to damage sensor edge or ring gear teeth.

2WD MODEL

NOTE: To prevent oil spills, drain transmission oil before removing transmission or insert plug into rear oil seal after removing propeller shaft.

- **Be careful not to damage spline, sleeve yoke and rear oil seal when removing propeller shaft.**

1. Remove battery negative terminal.
2. Remove crankshaft position sensor (OBD) from transmission upper side.
3. Remove clutch operating cylinder from transmission.
4. Remove back-up switch and neutral position switch harness connectors.
5. Remove starter motor from transmission.
6. Remove propeller shaft. Refer to PD section ("Removal and Installation", "PROPELLER SHAFT").

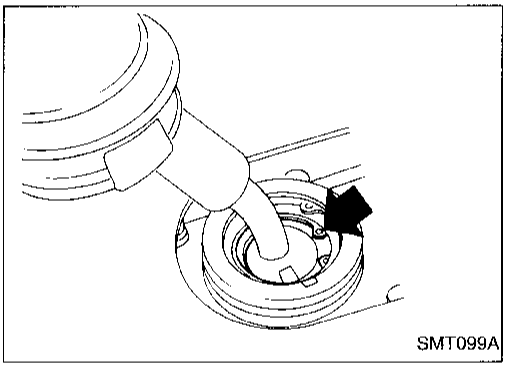
SMT099A

7. Remove shift lever.
8. Support engine by placing a jack under oil pan.
   - **Do not place jack under oil pan drain plug.**
9. Separate transmission from engine.

WARNING:
Support manual transmission while removing it.

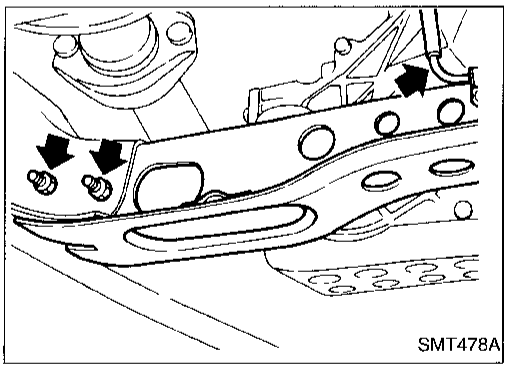
SMT478A

4WD MODEL

NOTE: To prevent oil spills, drain transmission and transfer oil before removing transmission or insert plug into rear oil seal of transfer after removing propeller shafts.

- **Always drain transmission and transfer oil whenever separating transmission and transfer.**

1. Remove battery negative terminal.
2. Remove crankshaft position sensor (OBD) from transmission upper side.
3. Remove clutch operating cylinder from transmission.
4. Remove back-up switch and neutral position switch harness connector.
5. Remove starter motor from transmission.
6. Remove front and rear propeller shafts. Refer to PD section ("Removal and Installation", "PROPELLER SHAFT").
   - **Be careful not to damage splines, sleeve yokes and front and rear oil seals of transfer when removing propeller shafts.**
7. Remove torsion bar springs. Refer to FA section ("Torsion Bar Spring", "FRONT SUSPENSION"). Then remove second crossmember.

Simpo PDF Merge and Split Unregistered Version - http://www.simpopdf.com

Removal (Cont'd)

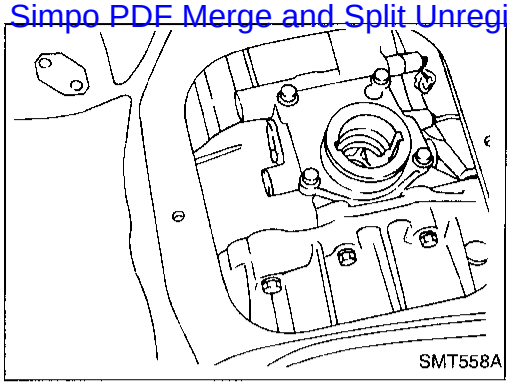

8. Remove transmission shift lever and transfer control lever.
9. Support engine by placing a jack under oil pan.
   - **Do not place jack under oil pan drain plug.**
10. Support transmission with a jack and remove engine rear member.
11. For clutch disc replacement, separate transmission with transfer from engine. For transmission overhaul, remove transfer from transmission, then separate transmission from engine.

WARNING:
Support manual transmission with transfer while removing it.

Installation

1. Apply sealant to areas shown below, — 4WD model.

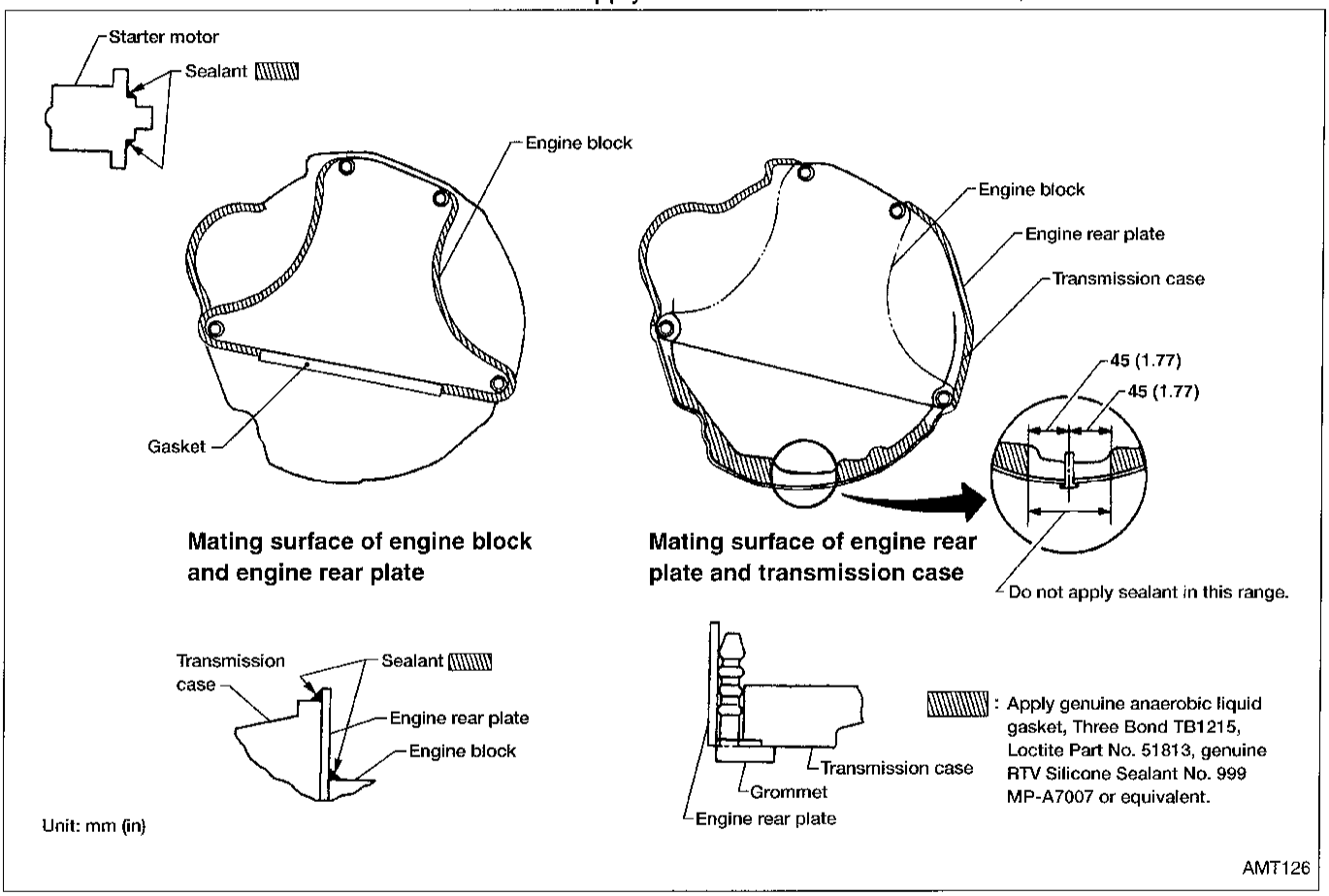

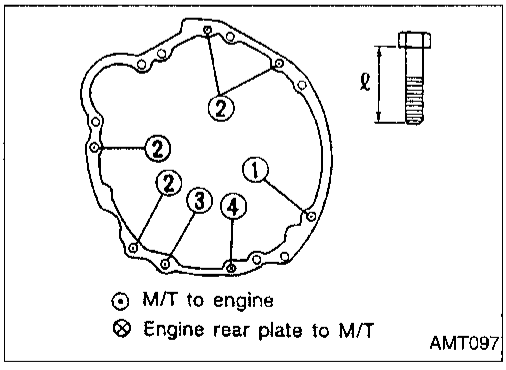

2. Tighten bolts securing transmission.

Bolt No.	Tightening torque N·m (kg-m, ft-lb)	ℓ mm (in)
①	39 - 49 (4.0 - 5.0, 29 - 36)	65 (2.56)
②	39 - 49 (4.0 - 5.0, 29 - 36)	58 (2.28)
③*	16 - 22 (1.6 - 2.2, 12 - 16)	25 (0.98)
④	16 - 22 (1.6 - 2.2, 12 - 16)	16 (0.63)

*: With nut

3. Tighten clutch operating cylinder to the specified torque. Refer to CL section ("CLUTCH SYSTEM").
4. For transfer installation, refer to TF section ("Installation", "REMOVAL AND INSTALLATION").

Simpo PDF Merge and Split Unregistered Version - http://www.simpopdf.com

Case Components

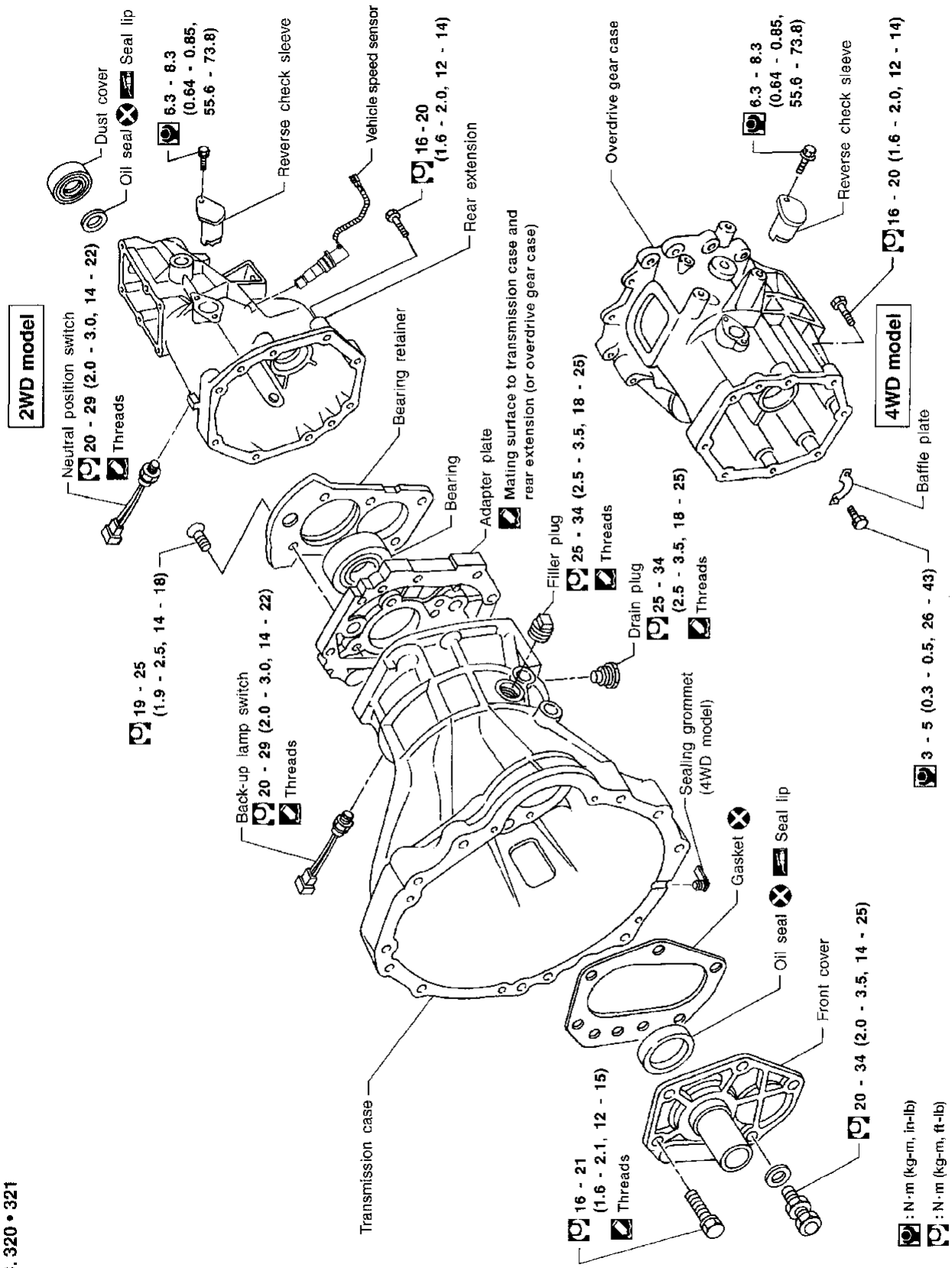

AMT142

SEC. 320 • 321

Simpo PDF Merge and Split Unregistered Version - http://www.simpopdf.com

Gear Components — 2WD Model —

SEC. 322

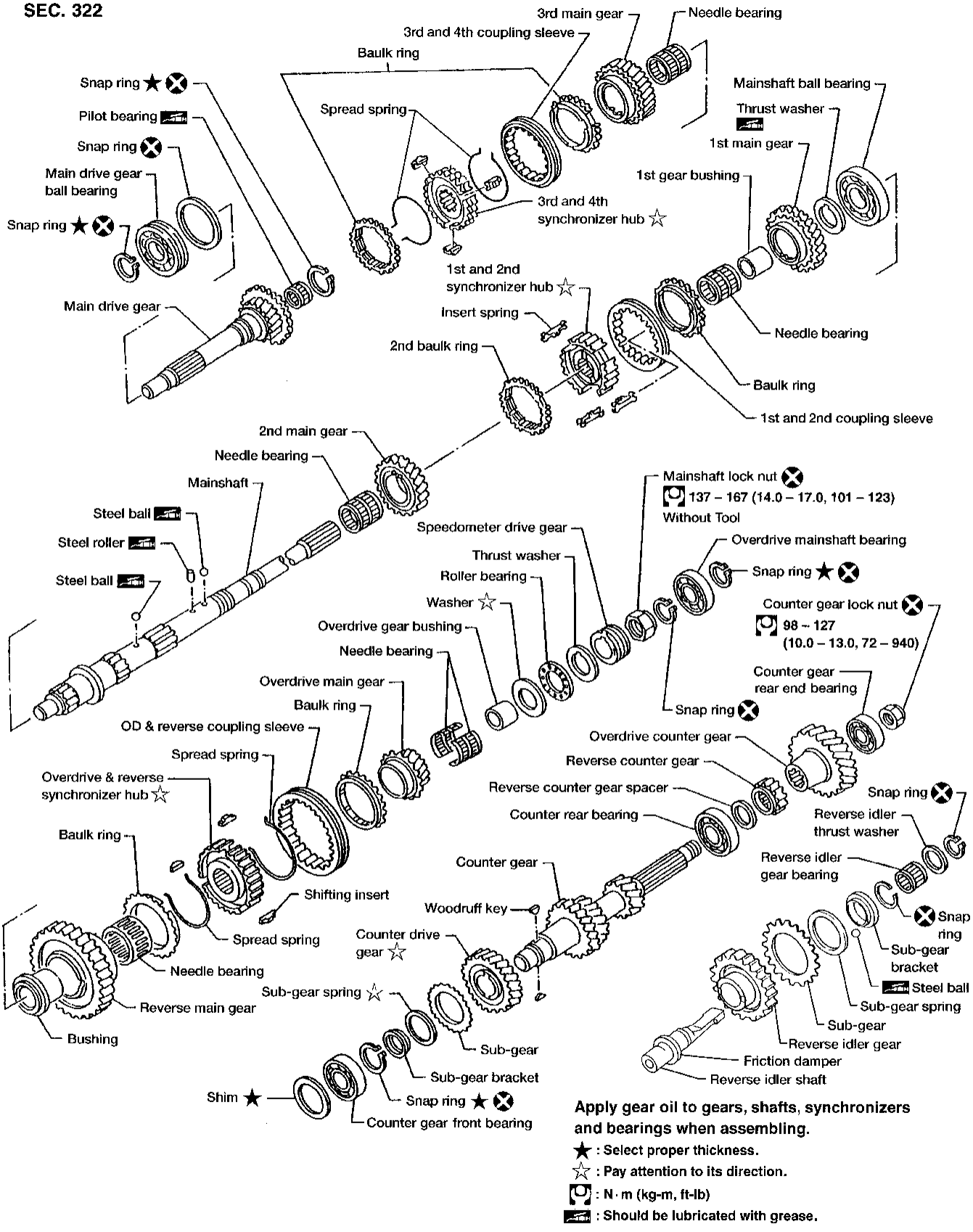

Apply gear oil to gears, shafts, synchronizers and bearings when assembling.

★ : Select proper thickness.

☆ : Pay attention to its direction.

⊡ : N·m (kg-m, ft-lb)

▰ : Should be lubricated with grease.

AMT143

Simpo PDF Merge and Split Unregistered Version - http://www.simpopdf.com

Gear Components — 4WD Model —

SEC. 322

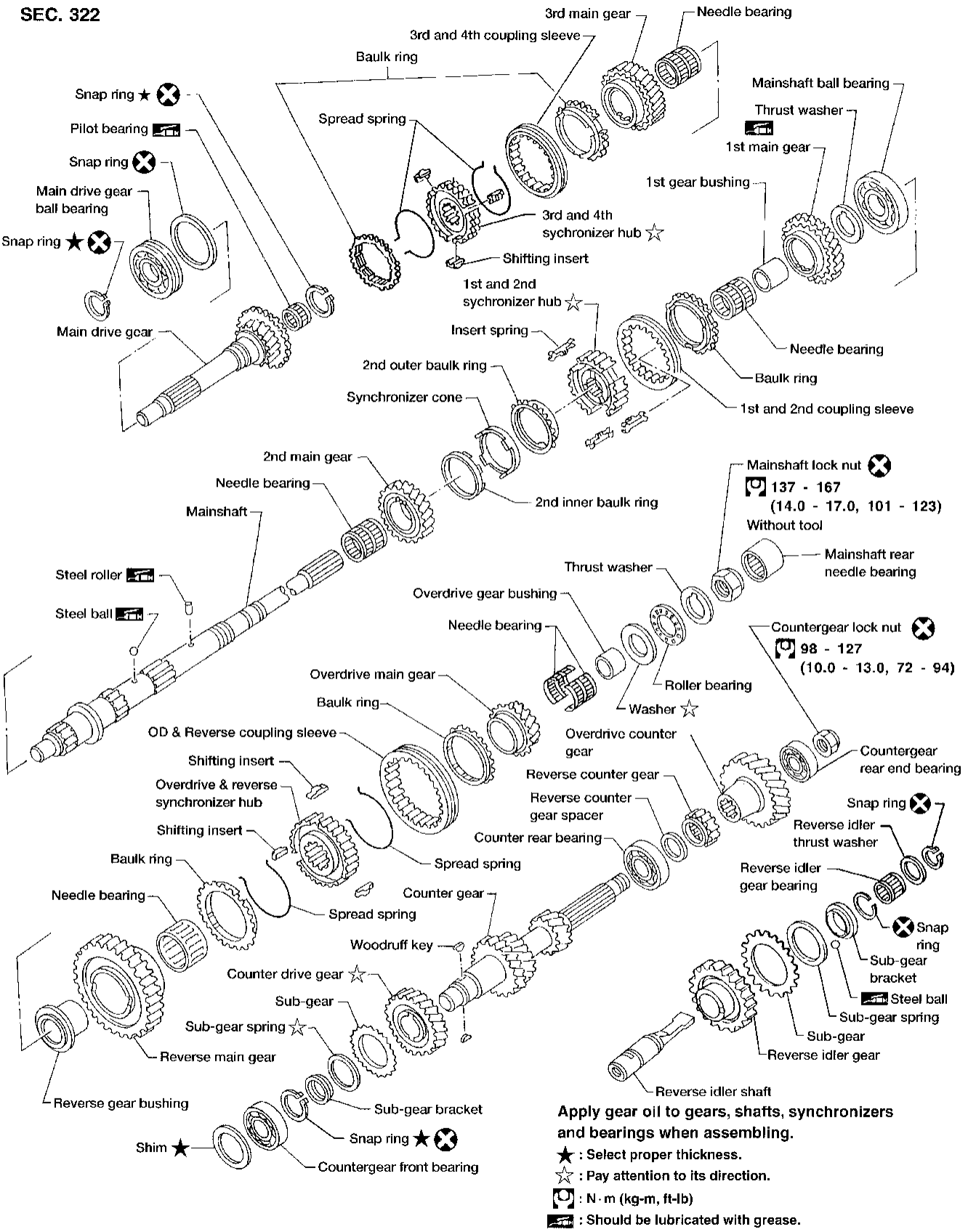

Apply gear oil to gears, shafts, synchronizers and bearings when assembling.

★ : Select proper thickness.

☆ : Pay attention to its direction.

: N·m (kg-m, ft-lb)

: Should be lubricated with grease.

AMT129

Simpo PDF Merge and Split Unregistered Version - http://www.simpopdf.com

Shift Control Components

CAUTION:
To avoid damage when replacing shift knob, remove shift lever with knob, as assembled.

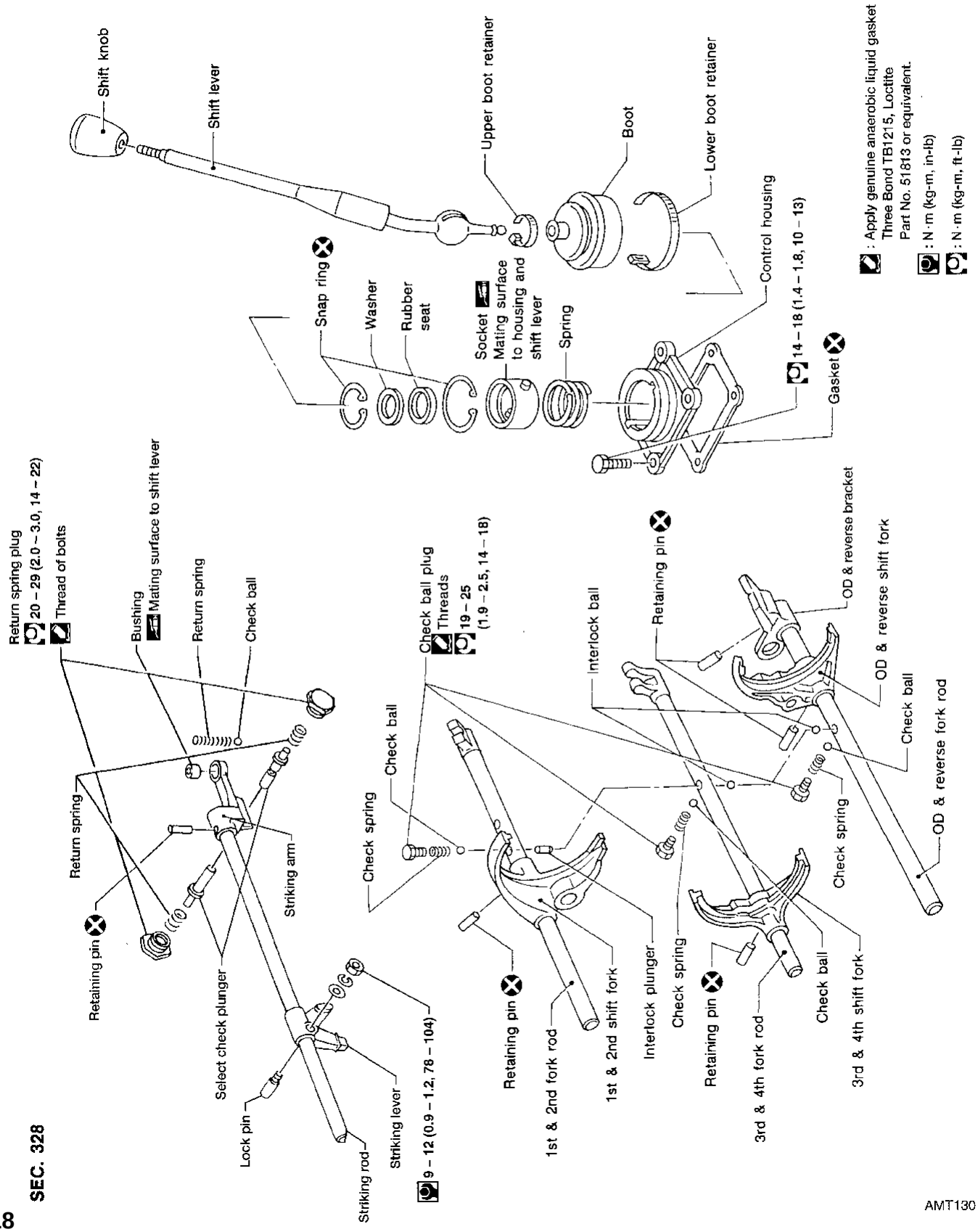

Simpo PDF Merge and Split Unregistered Version - http://www.simpopdf.com

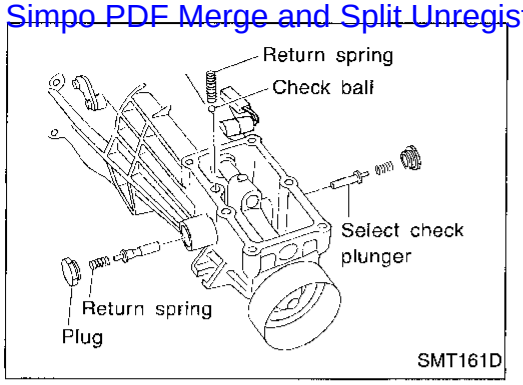

Case Components

1. Remove rear extension.

a. Remove control housing, check ball, return spring plugs, select check plungers and return springs. Also remove reverse check plug, check spring and check ball.

- **Be careful not to lose check balls.**

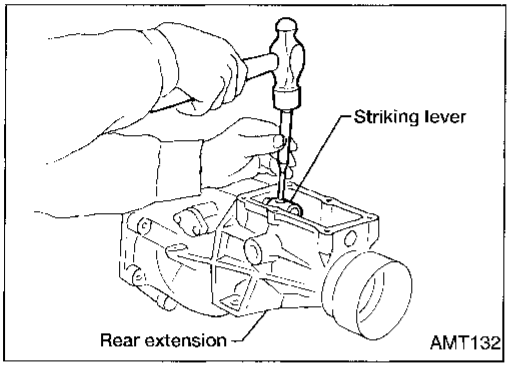

b. Drive out striking lever retaining pin.
c. Remove striking lever from striking rod.
d. Remove rear extension by lightly tapping on it.

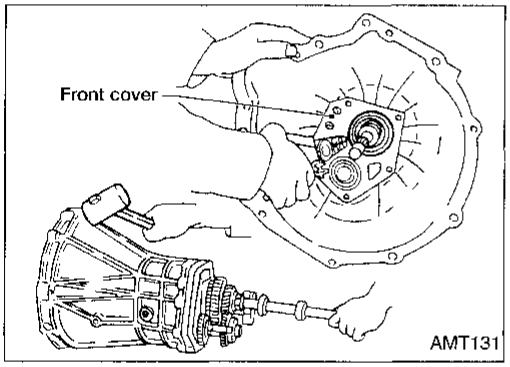

2. Remove front cover, gasket, counter gear front bearing shim and main drive gear ball bearing snap ring.
3. Separate transmission case from adapter plate by lightly tapping on it.

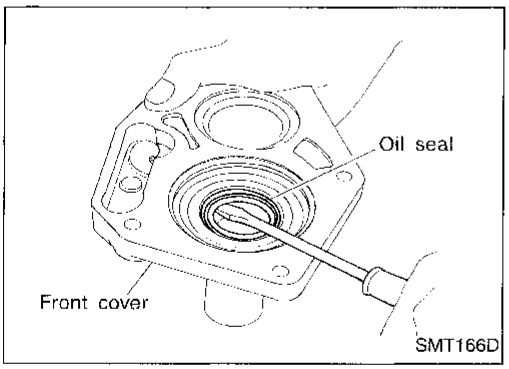

4. Remove oil seal from front cover.

- **Be careful not to damage mating surface of front cover.**

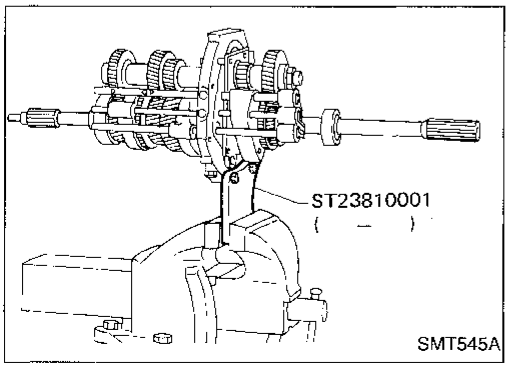

Shift Control Components

1. Set up Tool on adapter plate.
2. Remove striking rod from adapter plate.
3. Remove check ball plugs, check springs, and check balls.

Shift Control Components (Cont'd)

Simpo PDF Merge and Split Unregistered Version - http://www.simpopdf.com

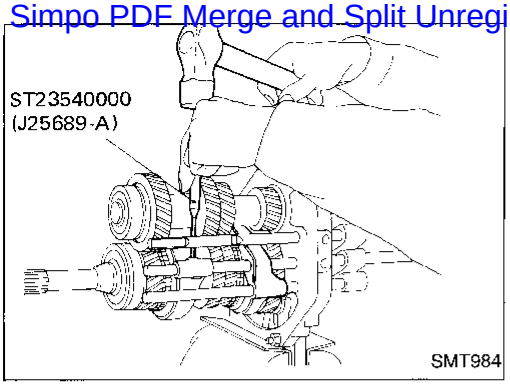

4. Drive out retaining pins. Then drive out fork rods and remove interlock balls.

Gear Components

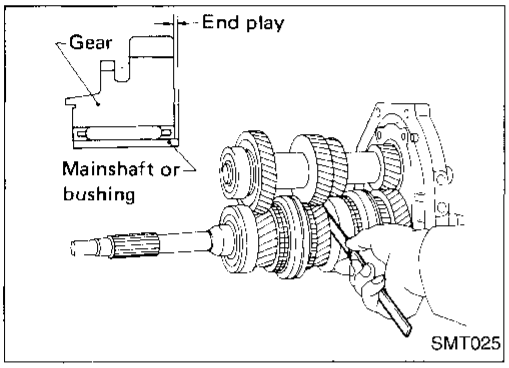

1. Before disassembly, measure the end play of each gear.
- If end play is not within the specified limit, disassemble and inspect the parts.
- Replace any part which is worn or damaged.

Gear end play:
Refer to SDS, MT-32.

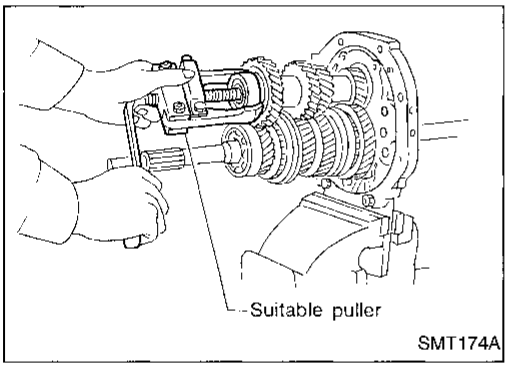

2. Mesh 2nd and reverse gear, then remove counter gear front bearing using a suitable puller.
3. Remove snap ring, then remove sub-gear bracket, sub-gear spring and sub-gear.

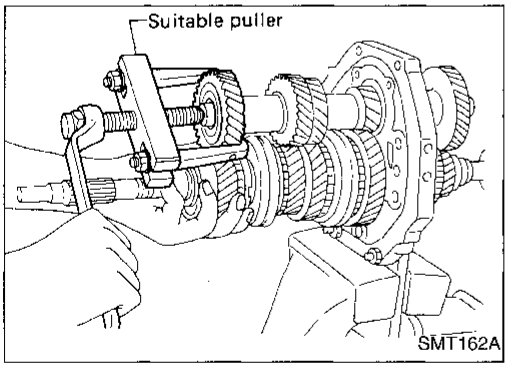

4. Remove counter drive gear together with main drive gear assembly using a suitable puller.
- **When removing main drive gear assembly, be careful not to drop pilot bearing or baulk ring.**

5. Remove snap ring, then remove 3rd & 4th synchronizer assembly and 3rd main gear.

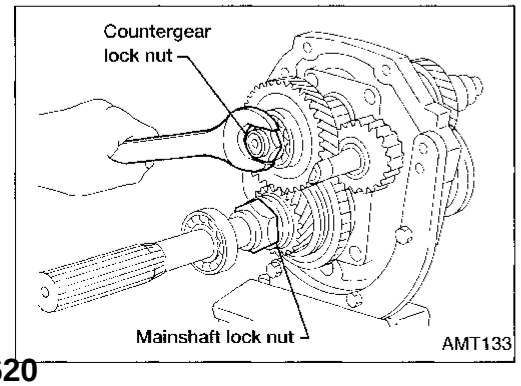

6. Disassemble parts at rear of adapter plate as follows:

a. Release staking on both countergear and mainshaft lock nuts, then loosen both nuts.

Mainshaft Lock nut: Left-hand thread

Simpo PDF Merge and Split Unregistered Version - http://www.simpopdf.com

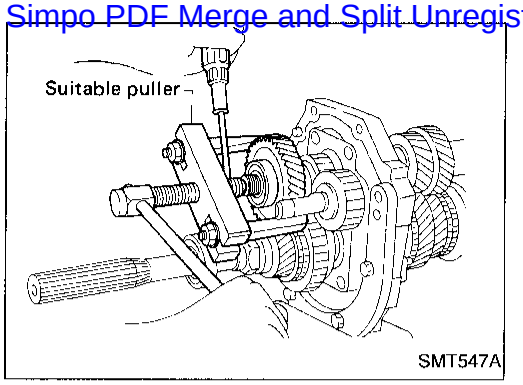

b. Remove overdrive counter gear together with counter gear rear end bearing using a suitable puller.
c. Remove reverse counter gear and spacer.
d. Remove snap rings from reverse idler shaft, then remove reverse idler gear, thrust washers and reverse idler gear bearing.

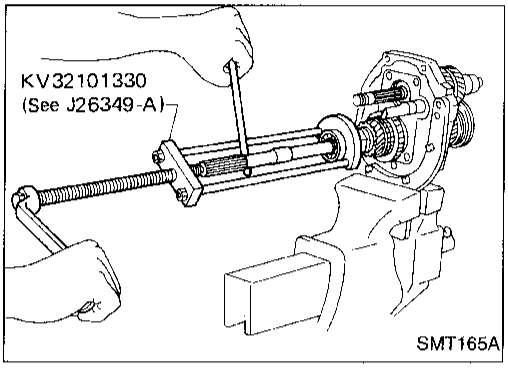

e. Remove snap ring and pull out overdrive mainshaft bearing, then remove snap ring. (2WD model)
f. Remove mainshaft lock nut.
g. Remove speedometer drive gear and steel ball. (2WD model)
h. Remove thrust washer, steel roller, roller bearing and washer.
i. Remove overdrive main gear, needle bearing and baulk ring (overdrive).
j. Remove counter gear by tapping on rear end of counter gear.
k. Press out overdrive gear bushing and overdrive & reverse synchronizer assembly.
l. Remove reverse main gear and needle bearing.

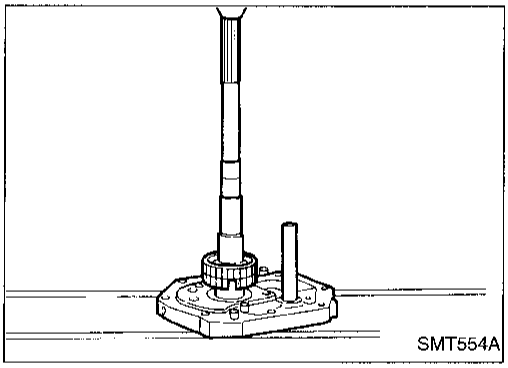

m. Press out reverse gear bushing.

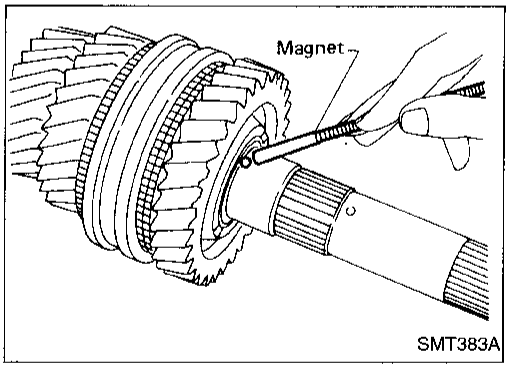

7. Remove thrust washer, steel ball, 1st main gear and needle bearing.
- **Be careful not to lose steel ball.**

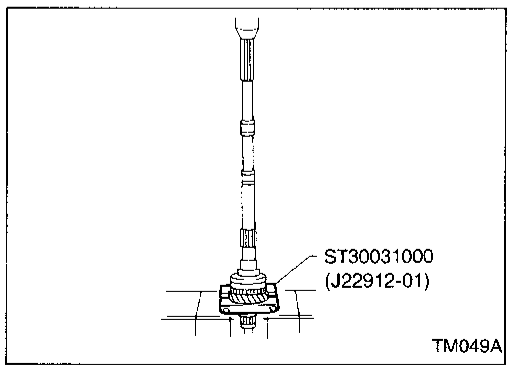

8. Press out 1st gear bushing together with 2nd main gear using Tool.
Remove 2nd gear needle bearing.

Gear Components (Cont'd)

Simpo PDF Merge and Split Unregistered Version - http://www.simpopdf.com

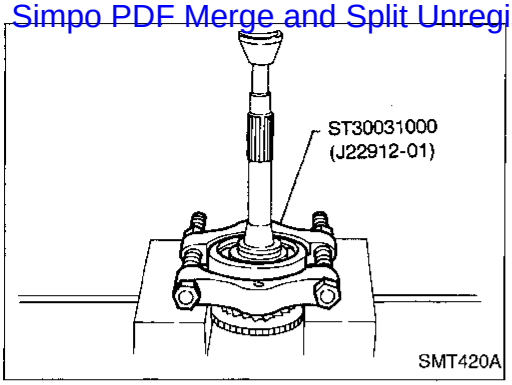

9. Remove main drive gear ball bearing.
a. Remove snap ring.
b. Remove main drive gear ball bearing.

Simpo PDF Merge and Split Unregistered Version - http://www.simpopdf.com

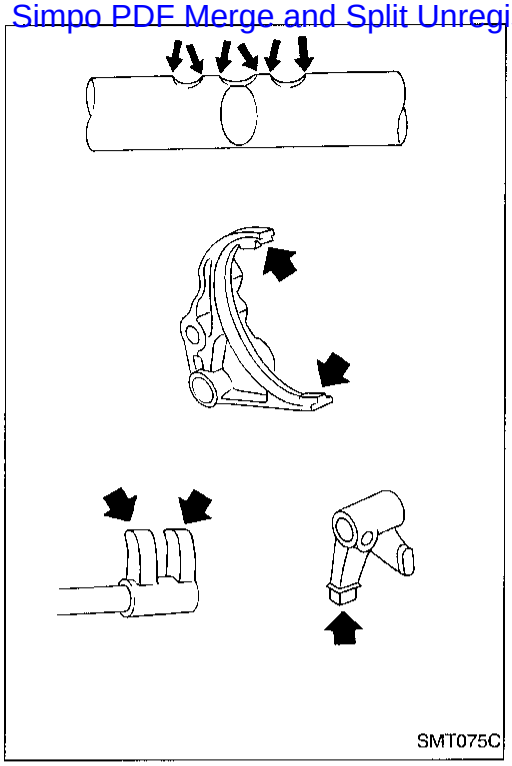
SMT075C

Shift Control Components

- Check contact and sliding surfaces of fork rods for wear, scratches, projections and other damage.

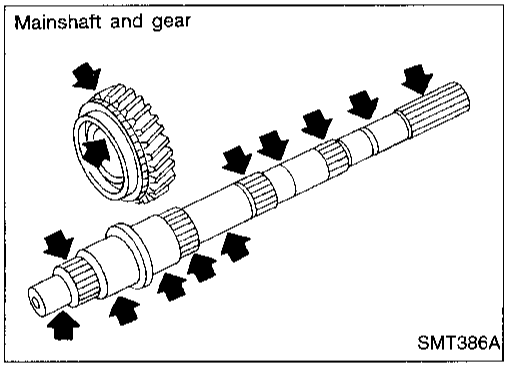

SMT386A

Gear Components

GEARS AND SHAFTS

- Check shafts for cracks, wear and bending.
- Check gears for excessive wear, chips and cracks.

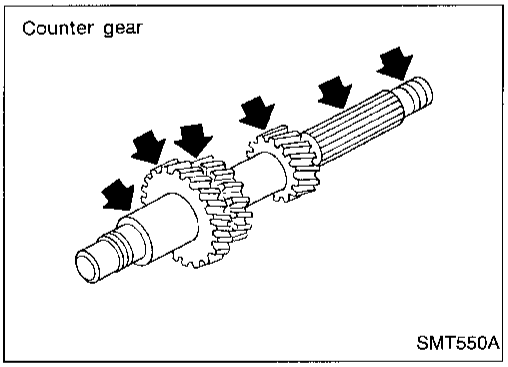

SMT550A

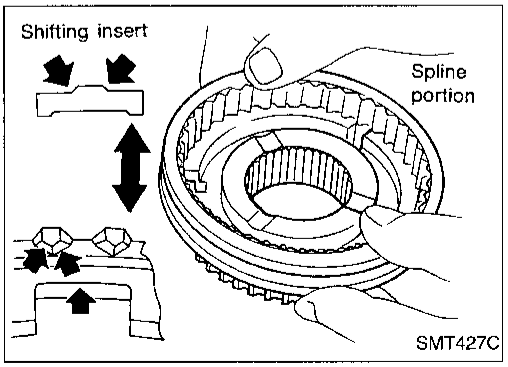

SMT427C

SYNCHRONIZERS

- Check spline portion of coupling sleeves, synchronizer hubs and gears for wear, chips and cracks.
- Check baulk rings for cracks and deformation.
- Check shifting inserts for wear and deformation.
- Check insert spread springs for deformation.

Gear Components (Cont'd)

Simpo PDF Merge and Split Unregistered Version - http://www.simpopdf.com

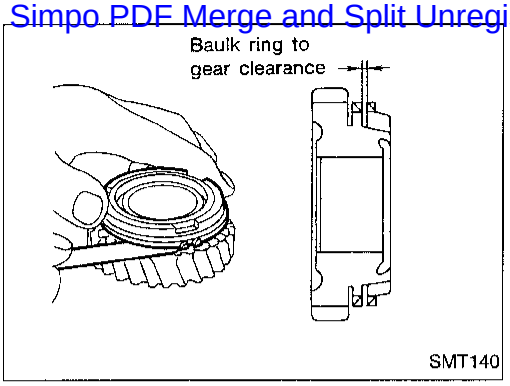

- Measure baulk ring wear.

a. Measure clearance between baulk ring and gear.

Clearance between baulk ring and gear:
Refer to SDS, MT-32.

- If the clearance is less than the wear limit, replace baulk ring.

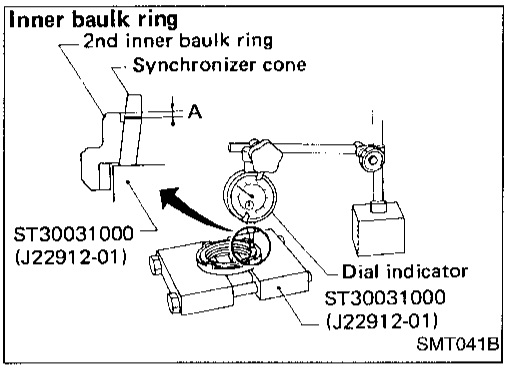

- Measure 2nd baulk ring wear—4WD model.

a. Place baulk rings in position on synchronizer cone.

b. While holding baulk rings against synchronizer cone as far as possible, measure dimensions "A" and "B".

Standard:
Inner "A": 0.7 - 0.9 mm (0.028 - 0.035 in)
Outer "B": 0.6 - 1.1 mm (0.024 - 0.043 in)
Wear limit:
0.2 mm (0.008 in)

- If dimension "A" or "B" is smaller than the wear limit, replace outer baulk ring, inner baulk ring and synchronizer cone as a set.

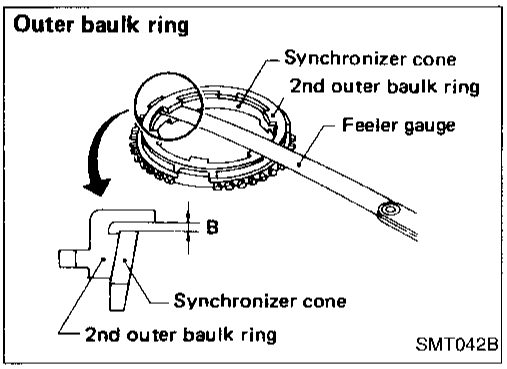

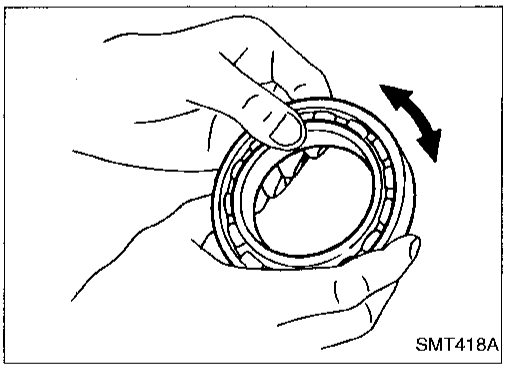

BEARINGS

- Make sure all bearings roll freely and are free from noise, cracks, pitting or wear.

Simpo PDF Merge and Split Unregistered Version - http://www.simpopdf.com

Gear Components

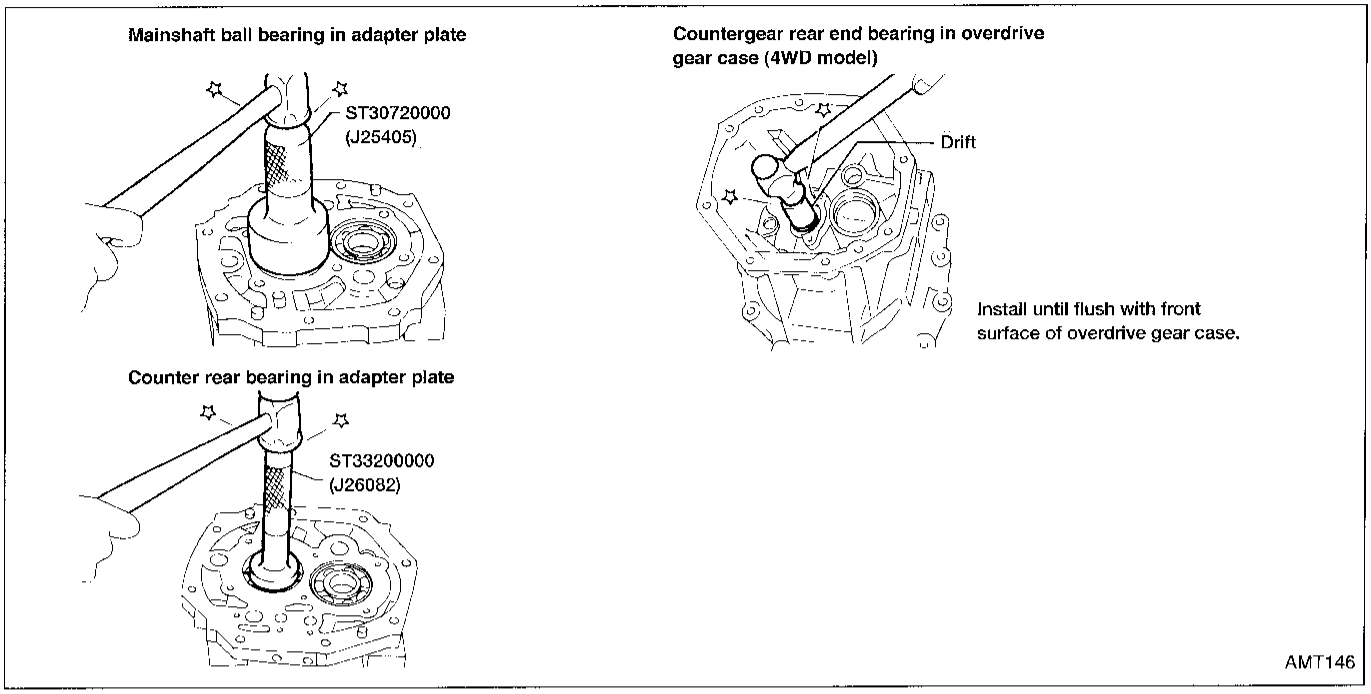

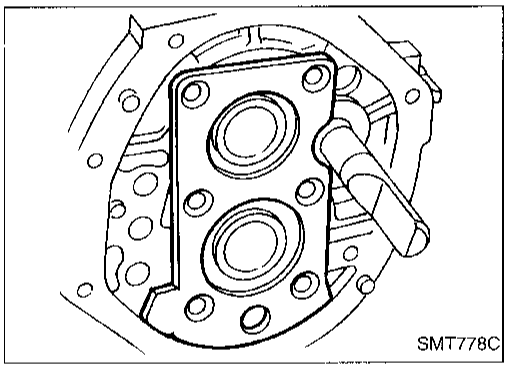

1. Install bearings into case components.
2. Assemble adapter plate parts.

- Install oil gutter on adapter plate and expand on rear side.
- Install bearing retainer.

a. Insert reverse idler shaft, then install bearing retainer.

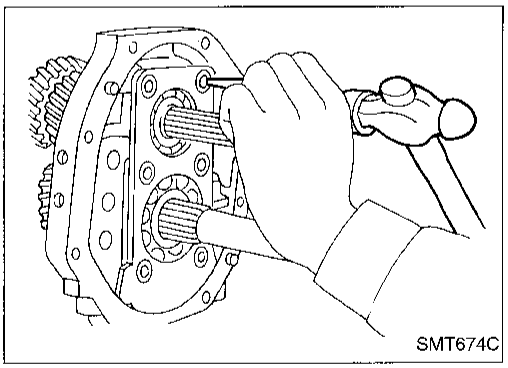

b. Tighten each screw, then stake each one at two points.

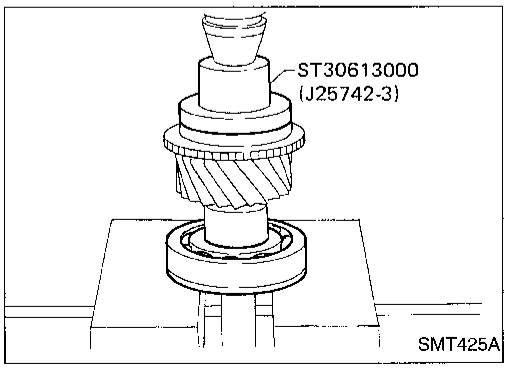

3. Install main drive gear ball bearing.

a. Press main drive gear ball bearing.

Gear Components (Cont'd)

Simpo PDF Merge and Split Unregistered Version - http://www.simpopdf.com

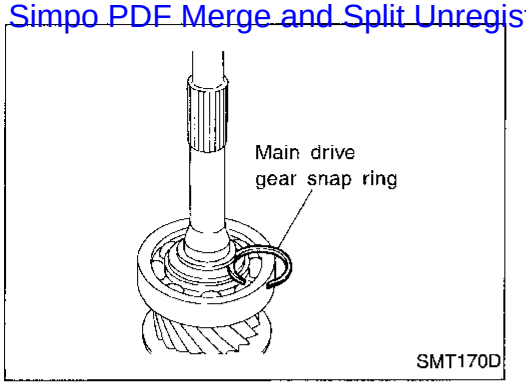

b. Select and install proper main drive gear snap ring to achieve proper clearance of groove.

Allowable clearance of groove:
0 - 0.13 mm (0 - 0.0051 in)
Main drive gear snap ring:
Refer to SDS, MT-32.

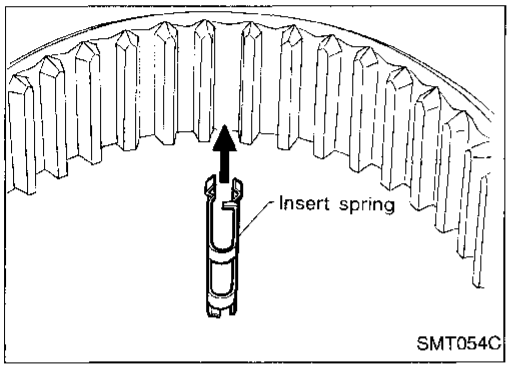

4. Assemble synchronizers.

- 1st and 2nd (2WD model) synchronizer

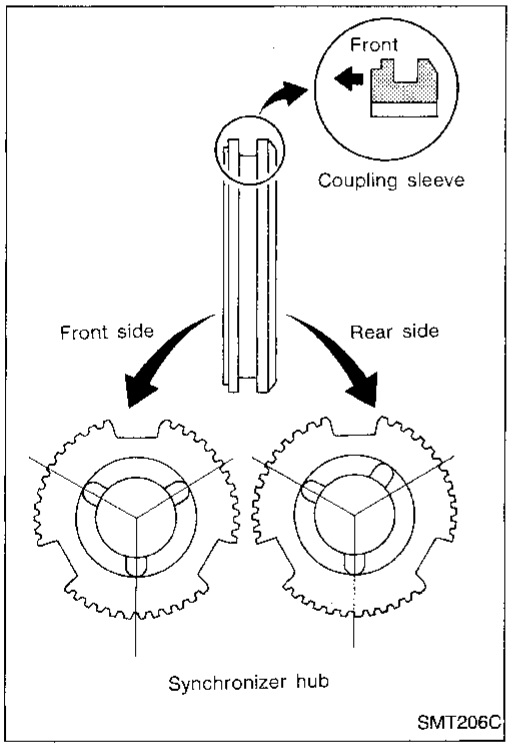

- **Check coupling sleeve and synchronizer hub orientation.**

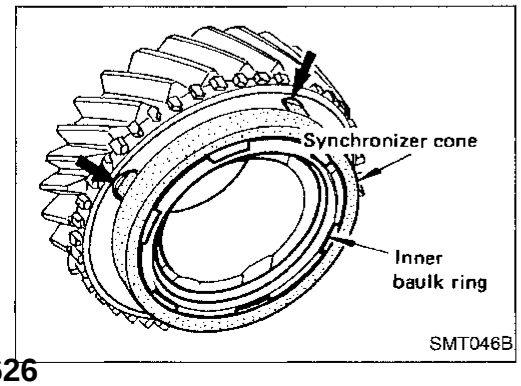

- 2nd double baulk ring type synchronizer (4WD model)

Simpo PDF Merge and Split Unregistered Version - http://www.simpopdf.com

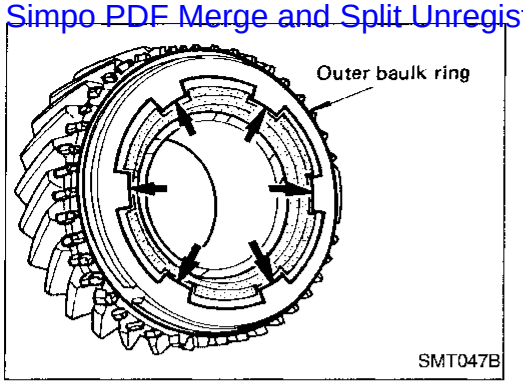

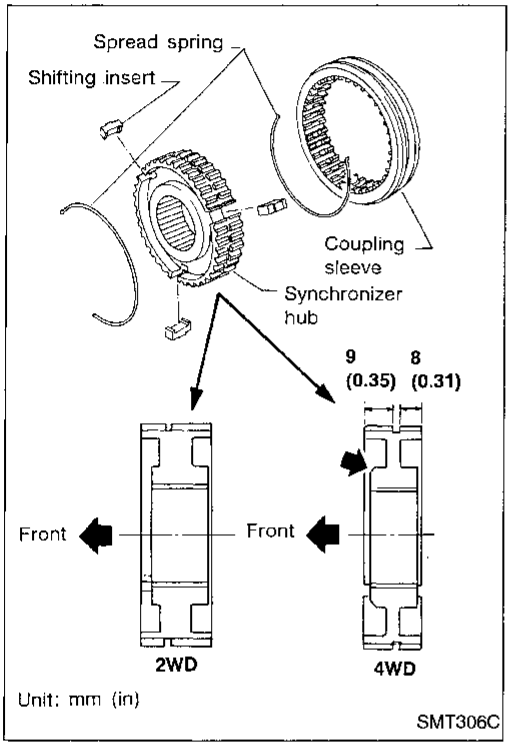

- 3rd & 4th synchronizer
- **The three synchronizer gutters should be at the rear.**

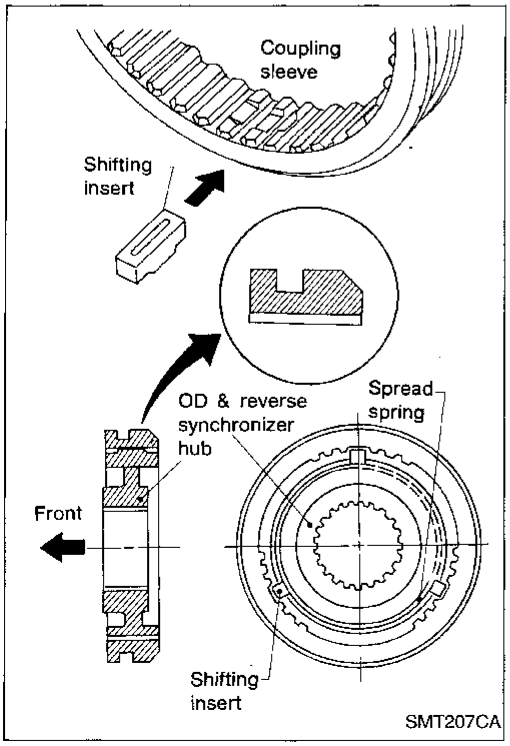

- Overdrive & reverse synchronizer

Gear Components (Cont'd)

Simpo PDF Merge and Split Unregistered Version - http://www.simpopdf.com

5. Assemble front side components to mainshaft.

a. Install 2nd main gear, needle bearing and 1st & 2nd synchronizer assembly; then press 1st gear bushing on mainshaft.

b. Install 1st main gear.

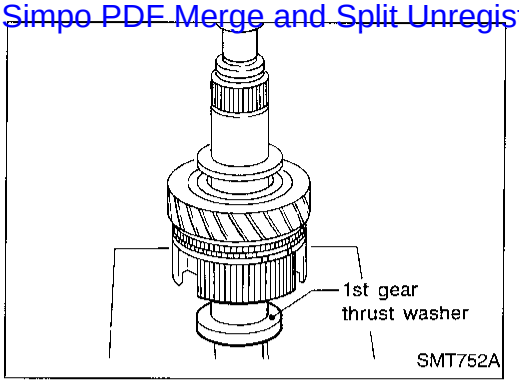

c. Install steel ball and 1st gear washer.

- **Before installation, apply multi-purpose grease to steel ball and to both sides of the 1st gear washer.**

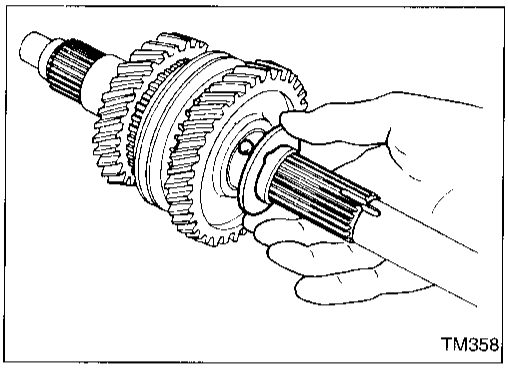

6. Install mainshaft and counter gear on adapter plate and main drive gear on mainshaft as follows:

a. Press mainshaft assembly into adapter plate using Tool.

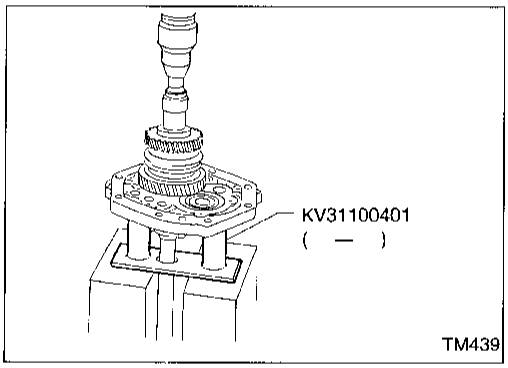

b. Press counter gear into adapter plate using Tool.

c. Install 3rd main gear and needle bearing, then press 3rd & 4th synchronizer assembly onto mainshaft.

- **Pay attention to the direction of 3rd & 4th synchronizer.**

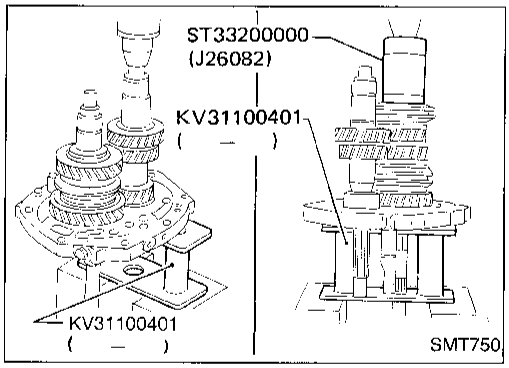

d. Install front mainshaft snap ring.
Select proper front mainshaft snap ring to achieve proper clearance of groove.

Allowable clearance of groove:
0 - 0.18 mm (0 - 0.0071 in)
Mainshaft front snap ring:
Refer to SDS, MT-32.

e. Apply gear oil to mainshaft pilot bearing and install it on mainshaft.

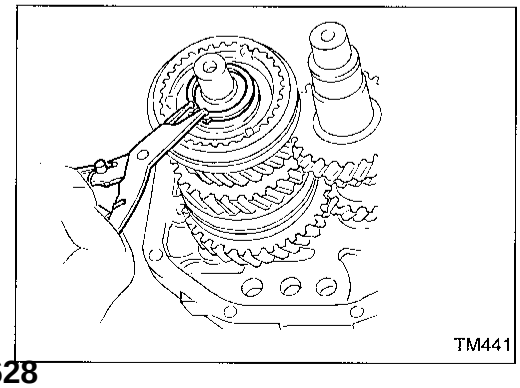

Gear Components (Cont'd)

Simpo PDF Merge and Split Unregistered Version - http://www.simpopdf.com

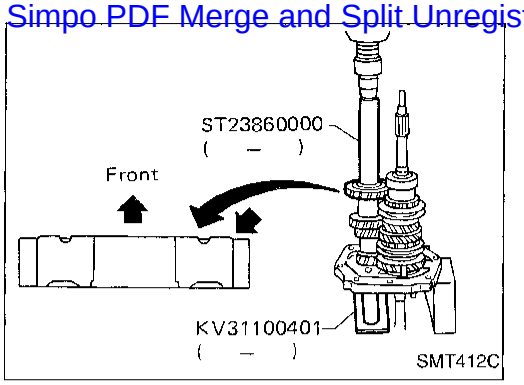

f. Press counter drive gear together with main drive gear using Tool.

- **Pay attention to the direction of counter drive gear.**

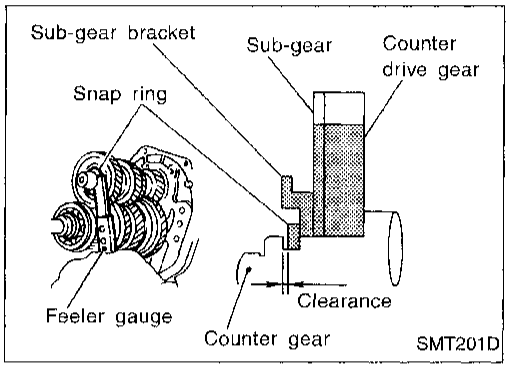

g. Install sub-gear components.

(1) Install sub-gear and sub-gear bracket on counter drive gear and then select proper snap ring that will minimize clearance of groove in counter gear.

- **Do not install sub-gear spring at this time.**

Allowable clearance of groove:
0 - 0.18 mm (0 - 0.0071 in)
Counter drive gear snap ring:
Refer to SDS, MT-32.

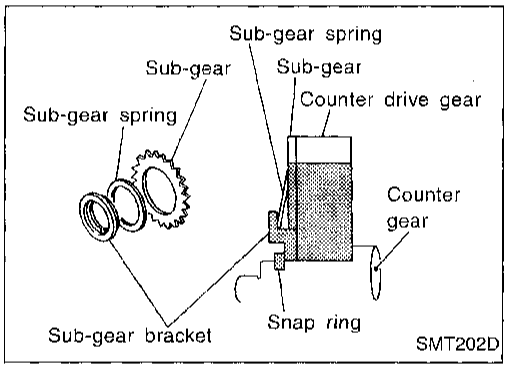

(2) Remove snap ring, sub-gear bracket and sub-gear from counter gear.

(3) Reinstall sub-gear, sub-gear spring, sub-gear bracket and snap ring.

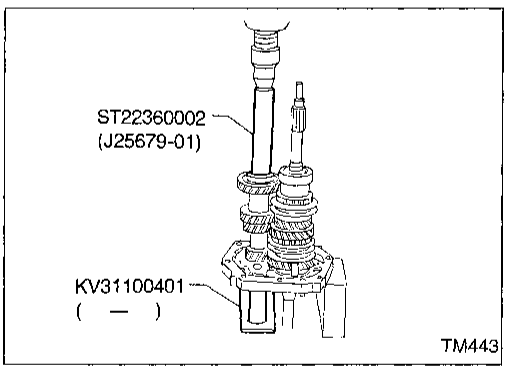

h. Press countergear front bearing onto counter gear using Tool.

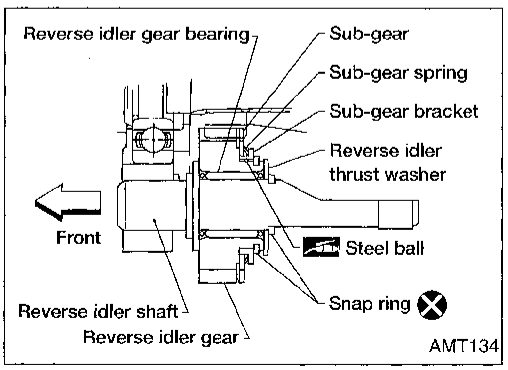

7. Install rear side components on mainshaft and counter gear as follows:

a. Install sub-gear parts (sub-gear, sub-gear spring, sub-gear bracket, steel ball and snap ring) on the reverse idler gear.

b. Install reverse idler gear to reverse idler shaft along with reverse idler thrust washer, snap rings and reverse idler gear bearing.

Gear Components (Cont'd)

Simpo PDF Merge and Split Unregistered Version - http://www.simpopdf.com

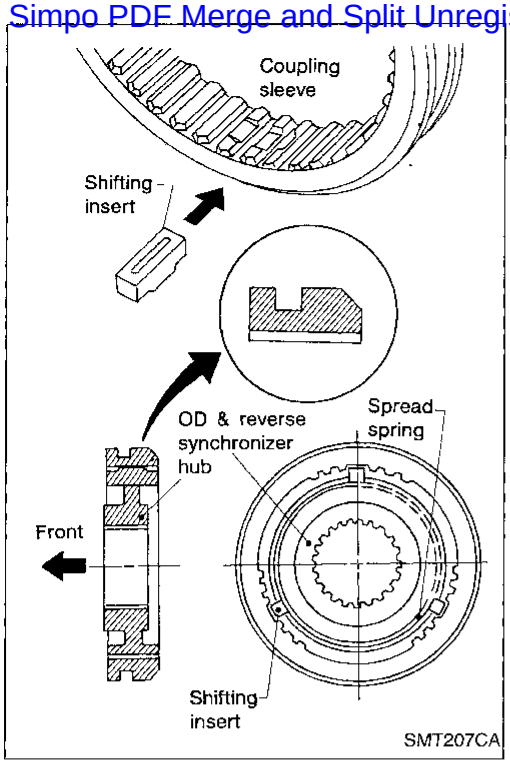

c. Install bushing, reverse main gear and overdrive & reverse synchronizer to mainshaft.

- **Pay attention to the direction of synchronizer hub.**

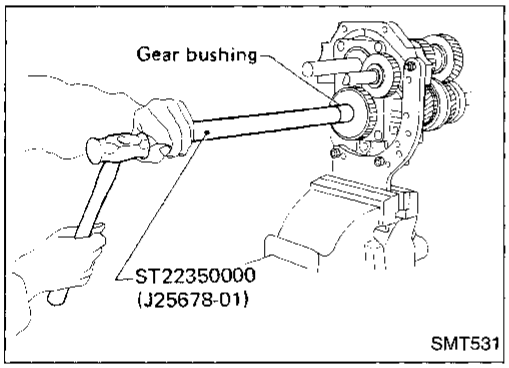

d. Install overdrive gear bushing to mainshaft using Tool.
e. Install overdrive main gear and needle bearing to mainshaft.
f. Install spacer, reverse counter gear and overdrive counter gear to countergear.

- **OD main gear and OD counter gear should be handled as a matched set.**

g. Install washer, roller bearing, steel roller and thrust washer.
h. Tighten mainshaft lock nut temporarily.

- **Always use new lock nut.**

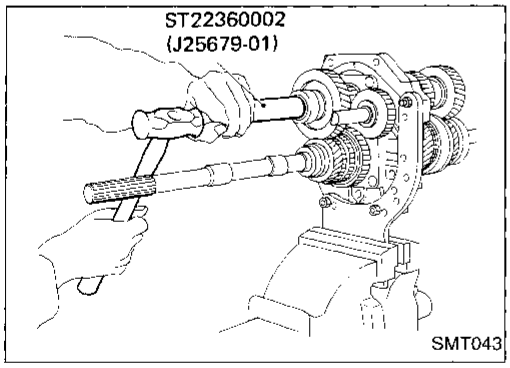

i. Install countergear rear end bearing using Tool.

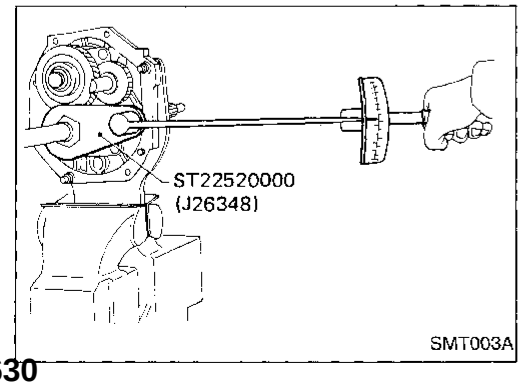

8. Mesh 2nd and reverse gears, then tighten mainshaft lock nut using Tool.

- **Always use new lock nut.**

  Mainshaft lock nut:

  : 137 - 167 N·m (14.0 - 17.0 kg-m, 101 - 123 ft-lb)

Gear Components (Cont'd)

Simpo PDF Merge and Split Unregistered Version - http://www.simpopdf.com

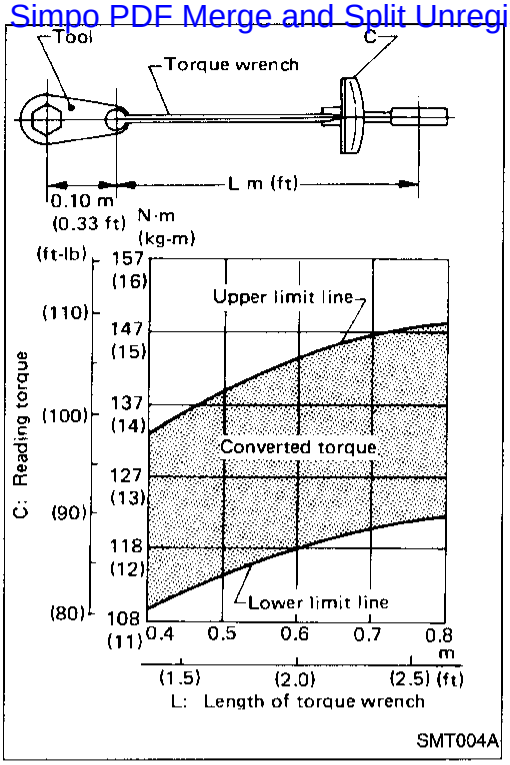

- Use the chart shown at left to determine the proper reading torque.
  (Length of torque wrench vs. setting or reading torque)
  Reference: Formula to convert torque wrench indication to the true torque value:

$$T = \frac{0.1\ \text{m}\ (0.33\ \text{ft}) + L}{L} \times C$$

If the specified torque is T kg-m (ft-lb), the torque wrench scale indication C is determined using the following formula.

$$C = \frac{T \times L}{0.1\ \text{m}\ (0.33\ \text{ft}) + L}$$

9. Tighten counter gear lock nut.
- **Always use new lock nut.**
  Counter gear lock nut:
  : 98 - 127 N·m (10.0 - 13.0 kg-m, 72 - 94 ft-lb)

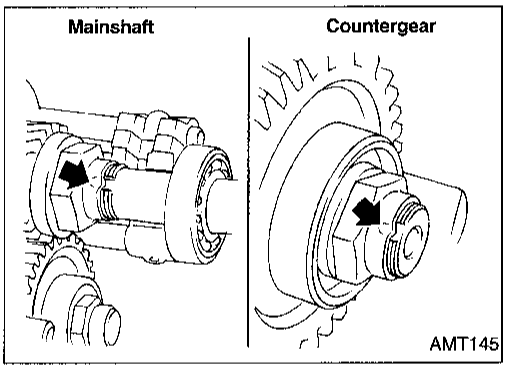

10. Stake mainshaft lock nut and counter gear lock nut using a punch.
11. Measure gear end play. Refer to "Gear Components", "DISASSEMBLY", MT-16.
12. Install snap ring and OD mainshaft bearing, then snap ring (2WD model only).
    Allowable clearance:
    0 - 0.14 mm (0 - 0.0055 in)
    OD mainshaft bearing snap ring:
    Refer to SDS, MT-32.

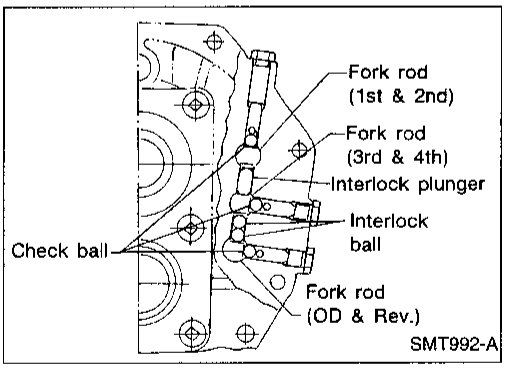

Shift Control Components

1. Install fork rods, interlock plunger, interlock balls and check balls.

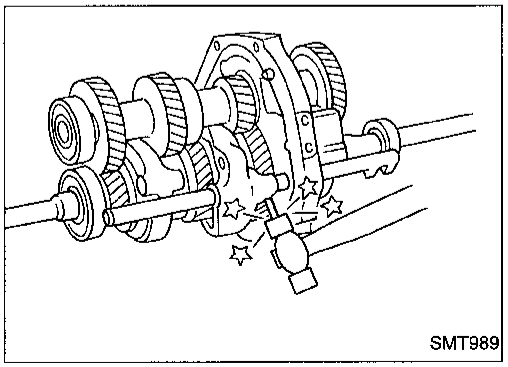

2. Install 1st & 2nd shift fork, then drive in retaining pin.

Shift Control Components (Cont'd)

Simpo PDF Merge and Split Unregistered Version - http://www.simpopdf.com

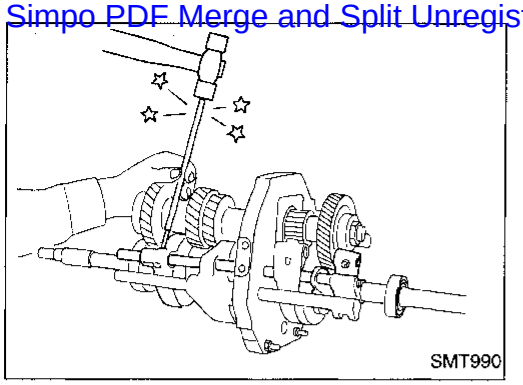

3. Install 3rd & 4th shift fork, then drive in retaining pin.

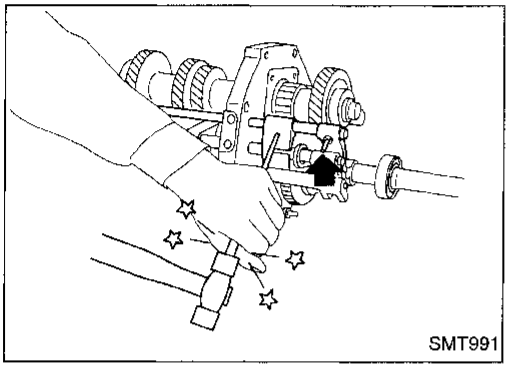

4. Install overdrive & reverse shift fork, then drive in retaining pin.

Case Components

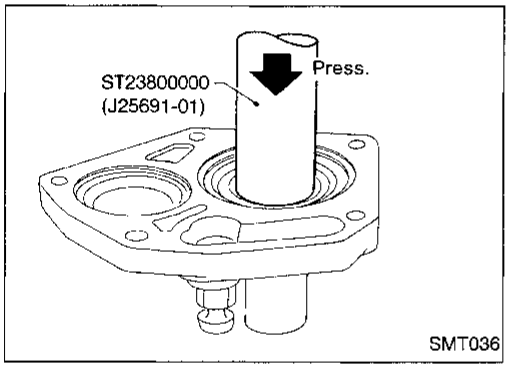

1. Install front cover oil seal using Tool.
- **Apply multi-purpose grease to seal lip.**

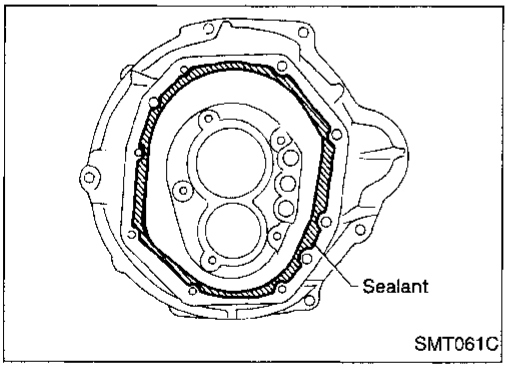

2. Apply sealant to mating surface of transmission case as shown at left.
- **Use genuine anaerobic liquid gasket, Three Bond TB1215, Loctite Part No. 51813 or equivalent.**

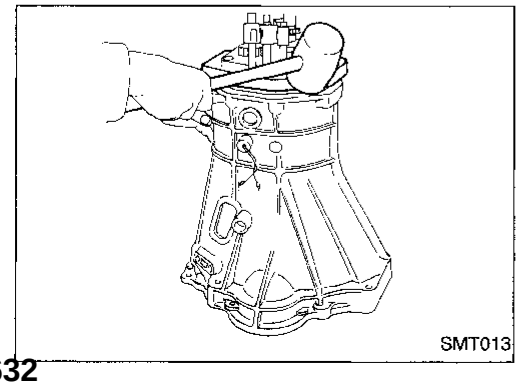

3. Slide gear assembly onto adapter plate by lightly tapping it using a soft hammer.

Case Components (Cont'd)

Simpo PDF Merge and Split Unregistered Version - http://www.simpopdf.com

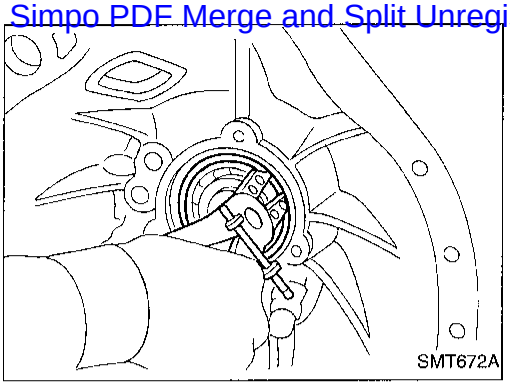

4. Install main drive gear ball bearing snap ring.

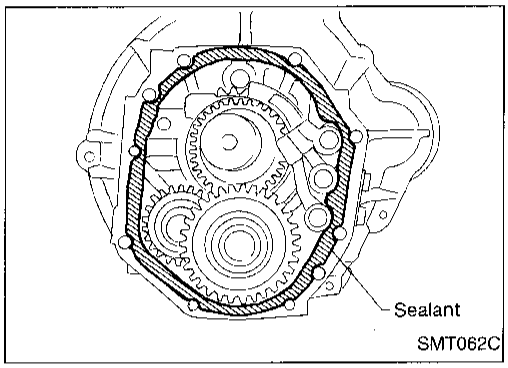

5. Apply sealant to mating surface of adapter plate as shown at left.
- **Use genuine anaerobic liquid gasket Three Bond TB1215, Loctite Part No. 51813 or equivalent.**

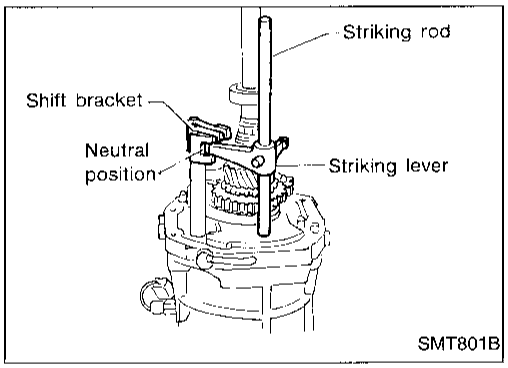

6. Place shift forks in neutral position.
7. Install striking lever and rod onto adapter plate and align striking lever with shift brackets.

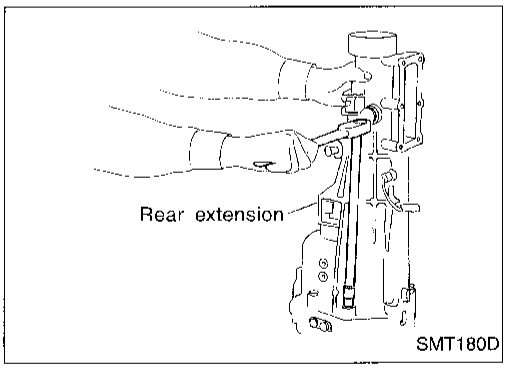

8. Install rear extension.
- Tighten mounting bolts equally in a criss-cross pattern.

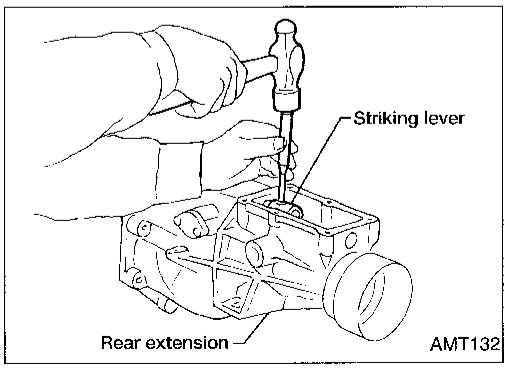

9. Install striking lever retaining pin.

Case Components (Cont'd)

Simpo PDF Merge and Split Unregistered Version - http://www.simpopdf.com

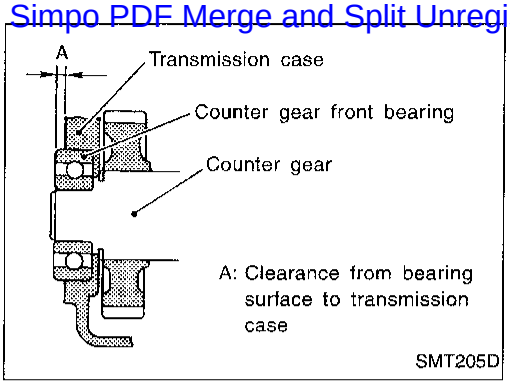

10. Select counter gear front bearing shim.
    Allowable clearance (A) from bearing surface to transmission case:
    0 - 0.16 mm (0 - 0.0063 in)
    Countershaft front bearing shim:
    Refer to SDS, MT-33.
11. Install gasket and front cover.

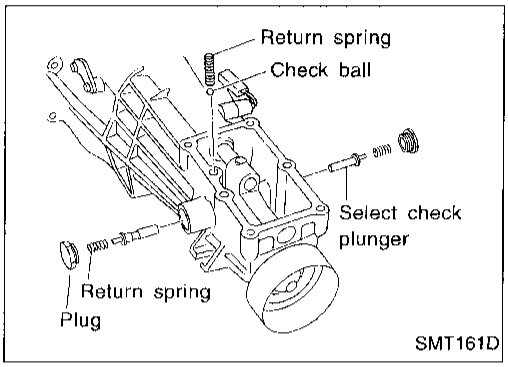

12. Install return spring plugs, check ball, return springs and select check plungers.
13. Install control housing and gasket.

Simpo PDF Merge and Split Unregistered Version - http://www.simpopdf.com

General Specifications

Applied model	2WD	4WD
Transmission	FS5W71C	
Number of speed	5	
Shift pattern	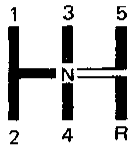	
Synchromesh type	Warner	
Gear ratio	Gear ratio	
1st	3.321	3.592
2nd	1.902	2.246
3rd	1.308	1.415
4th	1.000	1.000
OD	0.838	0.821
Reverse	3.382	3.657
Mainshaft	Number of teeth	
Drive	22	21
1st	33	33
2nd	27	28
3rd	26	26
OD	22	21
Reverse	36	36
Countershaft gear	Number of teeth	
Drive	31	32
1st	14	14
2nd	20	19
3rd	28	28
OD	37	39
Reverse	15	15
Reverse idler gear	21	21
Oil capacity ℓ (US pt, Imp pt)	2.0 (4-1/4, 3-1/2)	4.9 (10-3/8, 8-5/8)
Remarks	Reverse synchronizer	
	—	2nd double baulk ring type synchronizer
	Sub-gear	
	Sub-gear set installs countergear and reverse idler shaft.	

Simpo PDF Merge and Split Unregistered Version - http://www.simpopdf.com

Inspection and Adjustment

GEAR END PLAY

Unit: mm (in)

1st gear	0.31 - 0.41 (0.0122 - 0.0161)
2nd gear	0.11 - 0.21 (0.0043 - 0.0083)
3rd gear	0.11 - 0.21 (0.0043 - 0.0083)
Overdrive gear	0.24 - 0.41 (0.0094 - 0.0161)

CLEARANCE BETWEEN BAULK RING AND GEAR

Unit: mm (in)

Standard	
1st & 2nd (2WD)	1.20 - 1.60 (0.0472 - 0.0630)
3rd & main drive	1.20 - 1.60 (0.0472 - 0.0630)
Overdrive	1.20 - 1.60 (0.0472 - 0.0630)
Reverse	1.10 - 1.55 (0.0433 - 0.0610)
Wear limit	
1st & 2nd (2WD)	0.80 (0.0315)
3rd & main drive	0.80 (0.0315)
Overdrive	0.80 (0.0315)
Reverse	0.70 (0.0276)

2nd baulk ring (4WD model)

Unit: mm (in)

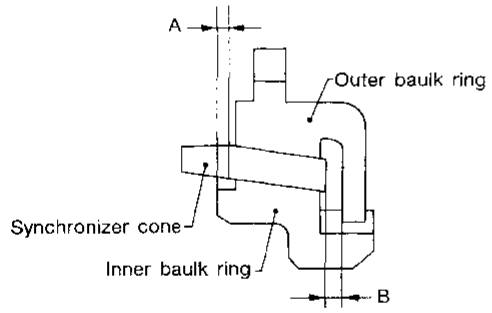

SMT733C

Dimension	Standard	Wear limit
A	0.7 - 0.9 (0.028 - 0.035)	0.2 (0.008)
B	0.6 - 1.1 (0.024 - 0.043)	

AVAILABLE SNAP RINGS

Main drive gear bearing

Allowable clearance	0 - 0.13 mm (0 - 0.0051 in)
Thickness mm (in)	Part number
1.87 (0.0736)	32204-78001
1.94 (0.0764)	32204-78002
2.01 (0.0791)	32204-78003

Mainshaft front

Allowable clearance	0 - 0.18 mm (0 - 0.0071 in)
Thickness mm (in)	Part number
2.4 (0.094)	32263-V5200
2.5 (0.098)	32263-V5201

Counter drive gear

Allowable clearance	0 - 0.18 mm (0 - 0.0071 in)
Thickness mm (in)	Part number
1.4 (0.055)	32215-E9000
1.5 (0.059)	32215-E9001
1.6 (0.063)	32215-E9002

OD mainshaft bearing (2WD model)

Allowable clearance	0 - 0.14 mm (0 - 0.0055 in)
Thickness mm (in)	Part number
1.1 (0.043)	32228-20100
1.2 (0.047)	32228-20101
1.3 (0.051)	32228-20102
1.4 (0.055)	32228-20103

Simpo PDF Merge and Split Unregistered Version - http://www.simpopdf.com

AVAILABLE SHIMS

Countershaft front bearing

Unit: mm (in)

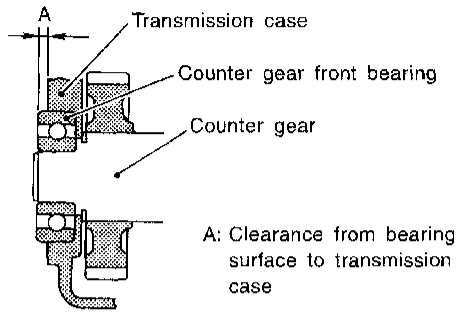

SMT205D

"A"	Thickness of shim	Part number
4.52 - 4.71 (0.1780 - 0.1854)	Not necessary	
4.42 - 4.51 (0.1740 - 0.1776)	0.1 (0.004)	32218-V5000
4.32 - 4.41 (0.1701 - 0.1736)	0.2 (0.008)	32218-V5001
4.22 - 4.31 (0.1661 - 0.1697)	0.3 (0.012)	32218-V5002
4.12 - 4.21 (0.1622 - 0.1657)	0.4 (0.016)	32218-V5003
4.02 - 4.11 (0.1583 - 0.1618)	0.5 (0.020)	32218-V5004
3.92 - 4.01 (0.1543 - 0.1579)	0.6 (0.024)	32218-V5005

Simpo PDF Merge and Split Unregistered Version - http://www.simpopdf.com

SECTION PD

CONTENTS

PREPARATION 2
Special Service Tools 2
NOISE, VIBRATION AND HARSHNESS (NVH) TROUBLESHOOTING 6
NVH Troubleshooting Chart 6

Propeller shaft

PROPELLER SHAFT 7
On-vehicle Service 9
Removal and Installation 9
Inspection 9
Disassembly 10
Assembly 11

Final drive

ON-VEHICLE SERVICE 13
Front Oil Seal Replacement (Front final drive: Model R180A) 13
Rear Cover Gasket Replacement (Rear final drive: Model C200) 13
REMOVAL AND INSTALLATION (Front final drive) 14
Removal 14
Installation 14
REMOVAL AND INSTALLATION (Rear final drive) 15
Removal 15
Installation 15

R180A

FRONT FINAL DRIVE 16
DISASSEMBLY 17
Pre-inspection 17
Final Drive Housing 17
Differential Case 19
Extension Tube and Differential Side Shaft 20
INSPECTION 22
Ring Gear and Drive Pinion 22
Differential Case Assembly 22
Bearing 22
ADJUSTMENT 23
Side Bearing Preload 23
Pinion Gear Height and Pinion Bearing Preload 24
Tooth Contact 28
ASSEMBLY 29
Extension Tube and Differential Side Shaft 29
Differential Case 29
Final Drive Housing 30

H190A

REAR FINAL DRIVE 34
DISASSEMBLY 35
Pre-inspection 35
Differential Carrier 35
Differential Case 37
INSPECTION 39
Ring Gear and Drive Pinion 39
Differential Case Assembly 39
Bearing 39
ADJUSTMENT 40
Side Bearing Preload 40
Pinion Gear Height 41
Tooth Contact 45
ASSEMBLY 46
Differential Case 46
Differential Carrier 47

C200

REAR FINAL DRIVE 51
2WD models 51
4WD models 52
DISASSEMBLY 53
Pre-inspection 53

CONTENTS (Cont'd.)

Simpo PDF Merge and Split Unregistered Version - http://www.simpopdf.com

Differential Carrier....53
Differential Case....55
INSPECTION....57
Ring Gear and Drive Pinion....57
Differential Case Assembly....57
Bearing....57
ADJUSTMENT....58
Side Bearing Preload....58
Pinion Gear Height....59
Tooth Contact....63
ASSEMBLY....64
Differential Case....64
Differential Carrier....65
SERVICE DATA AND SPECIFICATIONS (SDS)....69
Propeller Shaft....69
Final Drive....70
General Specifications....70
Inspection And Adjustment (R180A)....71
Inspection And Adjustment (H190A)....72
Inspection And Adjustment (C200)....73

Simpo PDF Merge and Split Unregistered Version - http://www.simpopdf.com

Special Service Tools

The actual shapes of Kent-Moore tools may differ from those of special service tools illustrated here.

Tool number (Kent-Moore No.) Tool name	Description		Unit application		
			R180A	H190A	C200
ST3127S000 (See J25765-A) Preload gauge ① GG91030000 (J25765) Torque wrench ② HT62940000 (—) Socket adapter ③ HT62900000 (—) Socket adapter	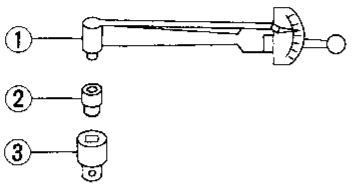 NT124	Measuring pinion bearing preload and total preload	X	X	X
KV38100800 (J25604-01), (J34310) Differential attachment	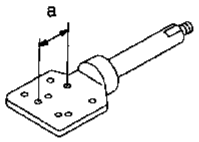 NT119	Mounting final drive (To use, make a new hole.) **a: 152 mm (5.98 in)**	X	—	—
ST06310000 (J25602-01) Differential attachment	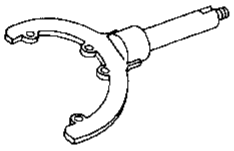 NT140	Mounting final drive	—	X	—
ST33290001 (J25810-A) Side bearing outer race puller	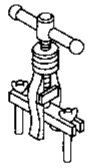 NT076	Removing side bearing outer race and side oil seal	X	—	—
ST38060002 (J34311) Drive pinion flange wrench	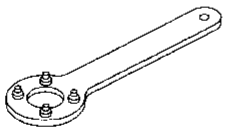 NT113	Removing and installing propeller shaft lock nut and drive pinion lock nut	X	X	X
ST3090S000 (—) Drive pinion rear inner race puller set ① ST30031000 (J22912-01) Puller ② ST30901000 (J26010-01) Base	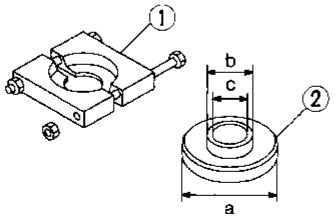 NT527	Removing and installing drive pinion rear inner cone **a: 79 mm (3.11 in) dia.** **b: 45 mm (1.77 in) dia.** **c: 35 mm (1.38 in) dia.**	X	X	X

Special Service Tools (Cont'd)

Simpo PDF Merge and Split Unregistered Version - http://www.simpopdf.com

Tool number (Kent-Moore No.) Tool name	Description	Unit application		
		R180A	H190A	C200
ST3306S001 Differential side bearing puller set ① ST33051001 (J22888-20) Body ② ST33061000 (J8107-2) Adapter	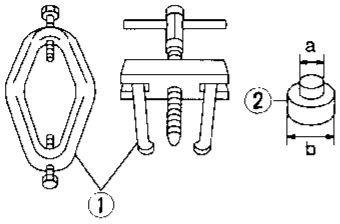 NT072	Removing and installing differential side bearing inner cone **a: 28.5 mm (1.122 in) dia.** **b: 38 mm (1.50 in) dia.**	X	X	X
ST33230000 (J25805-01) Differential side bearing drift	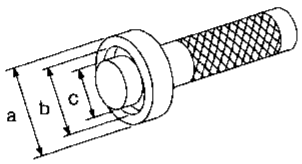 NT085	Installing side bearing inner cone **a: 51 mm (2.01 in) dia.** **b: 41 mm (1.61 in) dia.** **c: 28.5 mm (1.122 in) dia.**	X	X	X
ST33081000 (—) Side bearing puller adapter	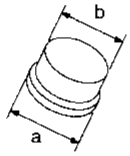 NT431	Installing side bearing inner cone **a: 43 mm (1.69 in) dia.** **b: 33.5 mm (1.319 in) dia.**	—	—	X
KV38100600 (J25267) Side bearing spacer drift	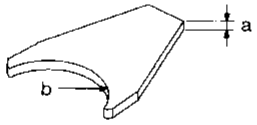 NT528	Installing side bearing spacer **a: 8 mm (0.31 in)** **b: R42.5 mm (1.673 in)**	—	—	X
ST30611000 (J25742-1) Drift	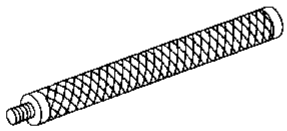 NT090	Installing pinion rear bearing outer race	X	X	X
ST30621000 (J25742-5) Drift	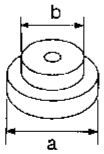 NT073	Installing pinion rear bearing outer race **a: 79 mm (3.11 in) dia.** **b: 59 mm (2.32 in) dia.**	X	X	X
ST30701000 (J25742-2) Drift	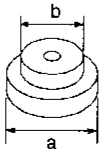 NT073	Installing pinion front bearing outer race **a: 61.5 mm (2.421 in) dia.** **b: 41 mm (1.61 in) dia.**	X	—	—

Special Service Tools (Cont'd)

Simpo PDF Merge and Split Unregistered Version - http://www.simpopdf.com

Tool number (Kent-Moore No.) Tool name	Description		Unit application		
			R180A	H190A	C200
ST30613000 (J25742-3) Drift	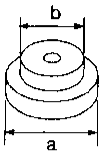 NT073	Installing pinion front bearing outer race **a: 72 mm (2.83 in) dia.** **b: 48 mm (1.89 in) dia.**	—	X	X
KV381025S0 (—) Oil seal fitting tool ① ST30720000 (J25405) Drift bar ② KV38102510 (—) Drift	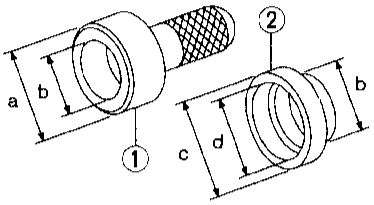 NT525	Installing front oil seal **a: 77 mm (3.03 in) dia.** **b: 55 mm (2.17 in) dia.** **c: 71 mm (2.80 in) dia.** **d: 65 mm (2.56 in) dia.**	X	X	—
KV38100500 (J25273) Gear carrier front oil seal drift	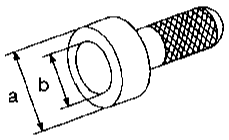 NT115	Installing front oil seal **a: 85 mm (3.35 in) dia.** **b: 60 mm (2.36 in) dia.**	—	—	X
ST33720000 (J25817) Differential side retainer guide	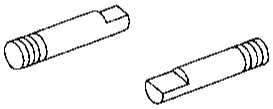 NT138	Installing side retainer	X	—	—
ST33270000 (J25809) Side oil seal drift	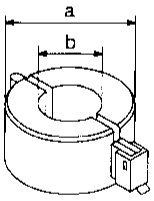 NT526	Installing side oil seal **a: 62 mm (2.44 in) dia.** **b: 28 mm (1.10 in) dia.**	X	—	—
(J34309) Differential shim selector	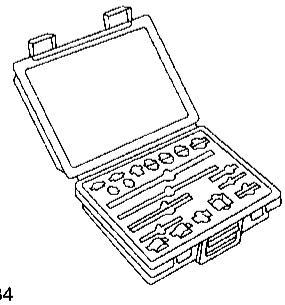 NT134	Adjusting bearing pre-load and gear height	X	X	X
(J25269-4) Side bearing discs (2 req'd)	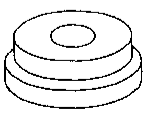 NT136	Selecting pinion height adjusting washer	X	—	X

Special Service Tools (Cont'd)

Simpo PDF Merge and Split Unregistered Version - http://www.simpopdf.com

Tool number (Kent-Moore No.) Tool name	Description		Unit application		
			R180A	H190A	C200
(J25269-18) Side bearing discs (2 req'd)	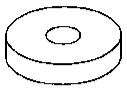 NT135	Selecting pinion height adjusting washer	—	X	—
(J8129) Spring gauge	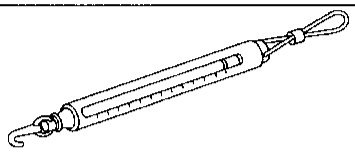 NT127	Measuring carrier turning torque	X	X	X
(J35764) Gear carrier side oil seal drift	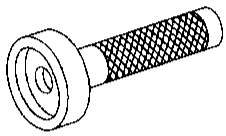 NT120	Installing side oil seal	X	—	—
KV381051S0 (—) Rear axle shaft dummy ① KV38105110 (—) Torque wrench side ② KV38105120 (—) Vice side	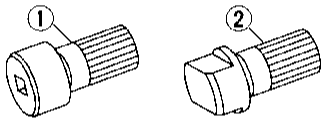 NT142	Checking differential torque on limited slip differential	—	X	X

Simpo PDF Merge and Split Unregistered Version - http://www.simpopdf.com

NVH Troubleshooting Chart

Use the chart below to help you find the cause of the symptom. If necessary, repair or replace these parts.

Reference page			—	PD-8, 11	—	—	—	PD-9	PD-9	PD-22, 39, 57	PD-28, 45, 63	PD-22, 39, 57	PD-32, 49, 67	—	Refer to MA section	Refer to PROPELLER SHAFT in this chart	Refer to DIFFERENTIAL in this chart	NVH in FA section	NVH in FA, RA section	NVH in FA section	NVH in FA section	NVH in BR section	NVH in ST section
Possible cause and SUSPECTED PARTS			Uneven rotation torque	Center bearing improper installation	Excessive center bearing axial end play	Center bearing mounting (insulator) cracks, damage or deterioration	Excessive joint angle	Rotation imbalance	Excessive runout	Rough gear tooth	Improper gear contact	Tooth surfaces worn	Incorrect backlash	Companion flange excessive runout	Improper gear oil	PROPELLER SHAFT	DIFFERENTIAL	DRIVE SHAFT	AXLE AND SUSPENSION	TIRES	ROAD WHEEL	BRAKES	STEERING
Symptom	PROPELLER SHAFT	Noise	X	X	X	X	X	X	X								X	X	X	X	X	X	X
		Shake		X			X											X	X	X	X	X	X
		Vibration	X	X	X	X	X	X	X									X	X	X			X
	DIFFERENTIAL	Noise								X	X	X	X	X	X	X		X	X	X	X	X	X

X : Applicable

Simpo PDF Merge and Split Unregistered Version - http://www.simpopdf.com

Front propeller shaft (Model 2F1310)

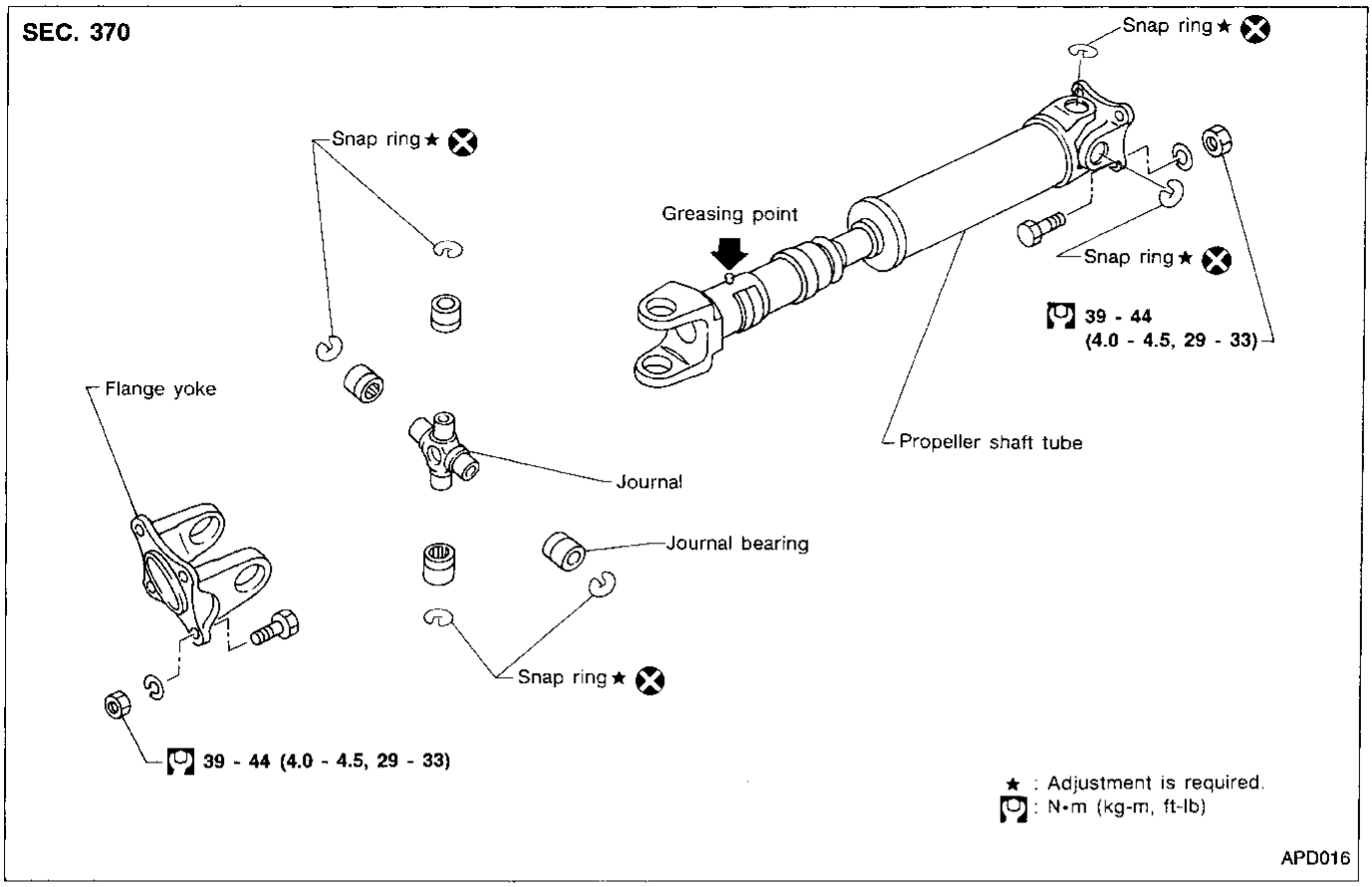

Rear propeller shaft (Model 2S1310)

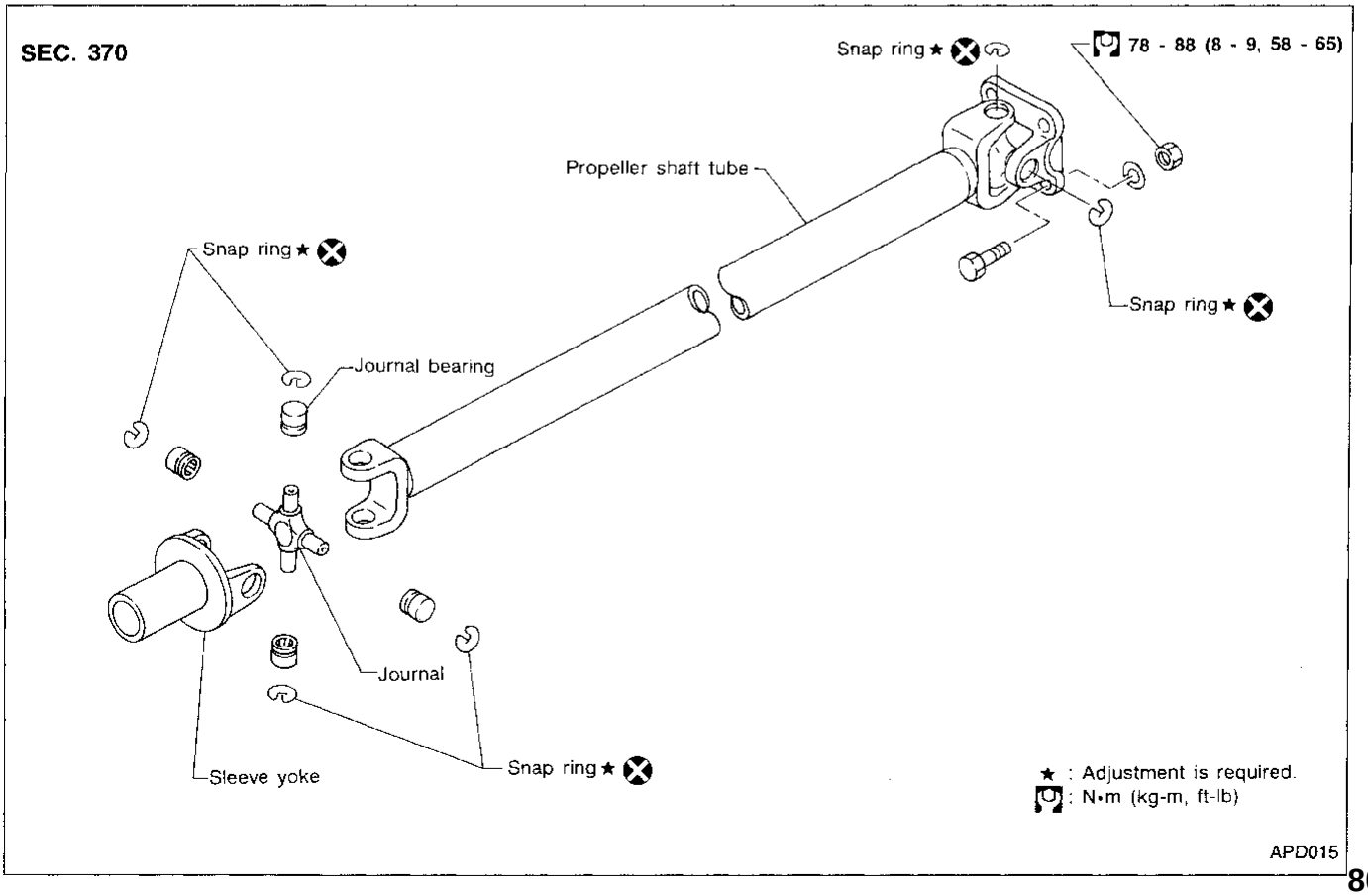

Simpo PDF Merge and Split Unregistered Version - http://www.simpopdf.com

Rear propeller shaft (Model 3S1310)

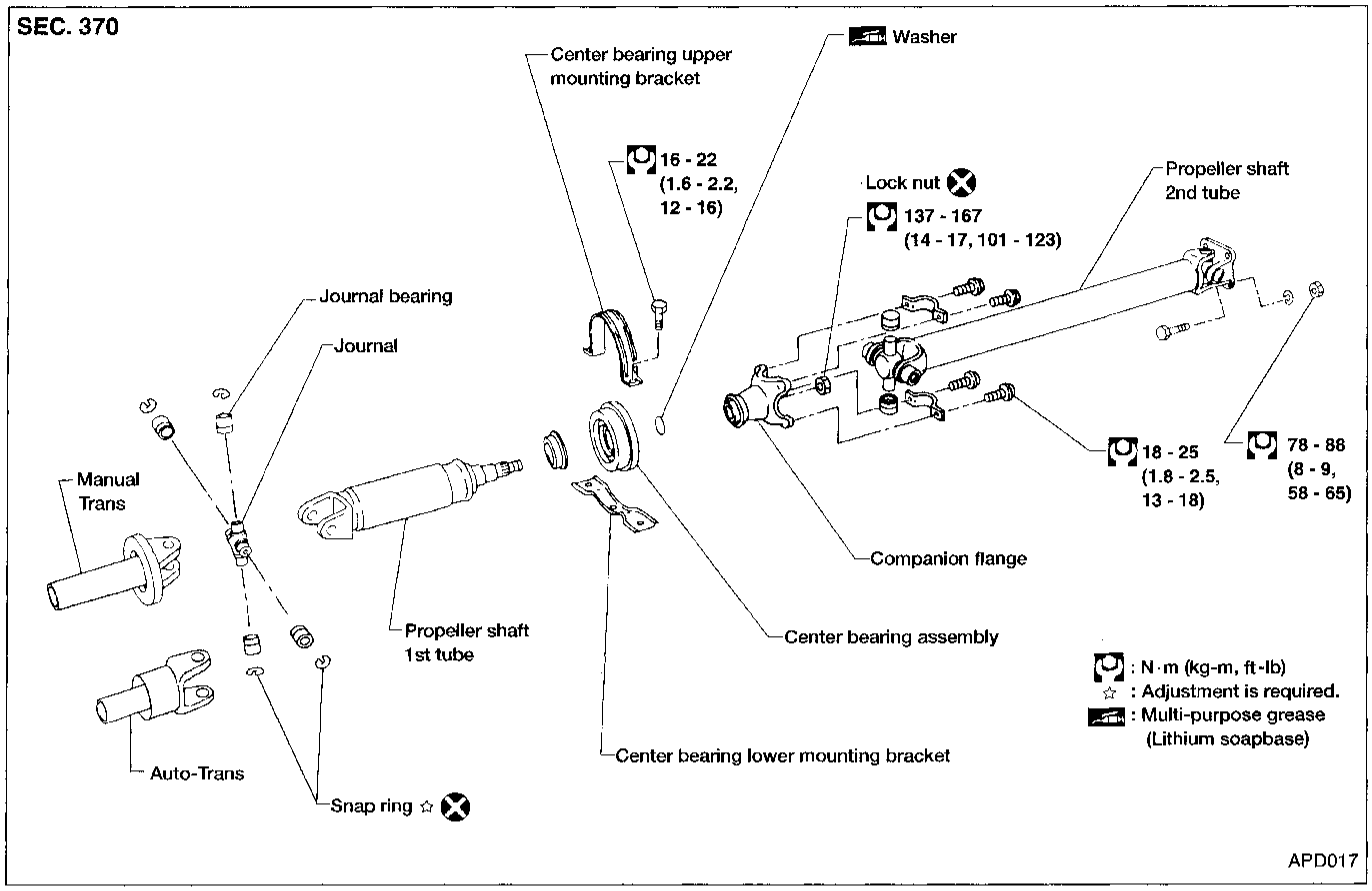

Simpo PDF Merge and Split Unregistered Version - http://www.simpopdf.com

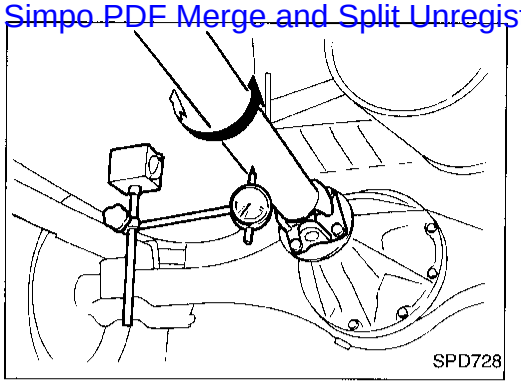
SPD728

On-vehicle Service

PROPELLER SHAFT VIBRATION

If vibration is present at high speed, inspect propeller shaft runout first.

1. Raise rear end of vehicle until wheels are clear of the ground.
2. Measure propeller shaft runout at several points along propeller shaft by rotating final drive companion flange using hands.
3. If runout exceeds specifications, disconnect propeller shaft at final drive companion flange. Rotate companion flange 180 degrees, then reconnect propeller shaft.
   Runout limit: 0.6 mm (0.024 in)
4. Check runout again. If runout still exceeds the limit, replace propeller shaft assembly.
5. Perform road test.

APPEARANCE CHECKING

- Inspect propeller shaft tube surface for dents or cracks and replace as necessary.
- Check center bearing for noise or damage and replace as necessary.

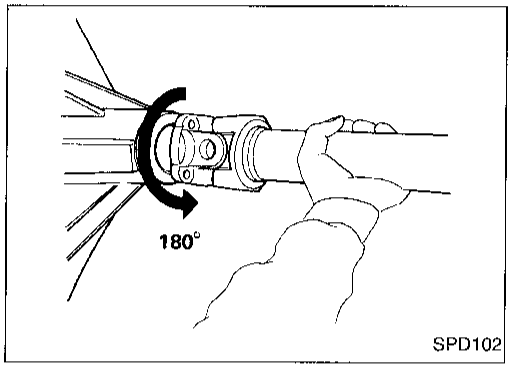

SPD102

Removal and Installation

1. Place matching marks on flanges, then separate propeller shaft from final drive.

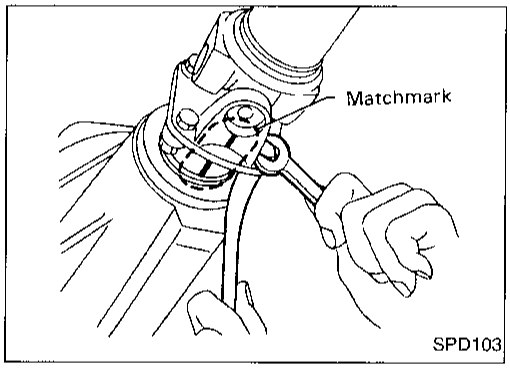

SPD103

2. Remove propeller shaft.
- **Insert plug into rear oil seal after removing rear propeller shaft.**

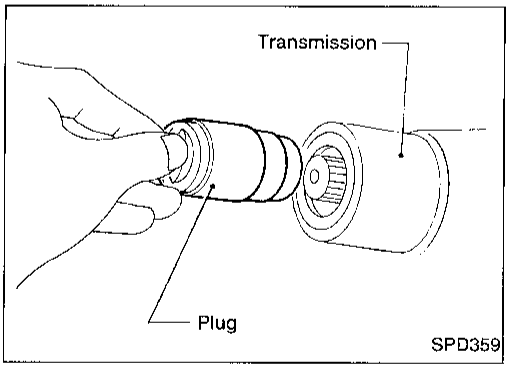

SPD359

Inspection

- Inspect propeller shaft runout. If runout exceeds the limit, replace propeller shaft assembly.
  Runout limit: 0.6 mm (0.024 in)

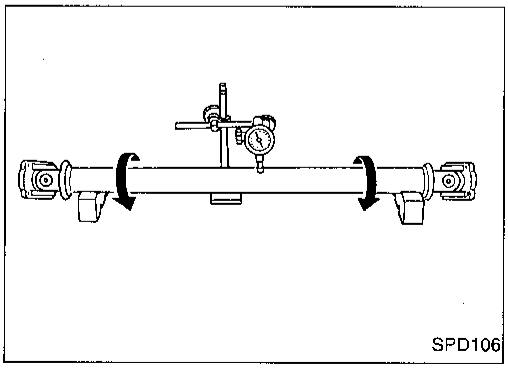
SPD106

Inspection (Cont'd)

Simpo PDF Merge and Split Unregistered Version - http://www.simpopdf.com

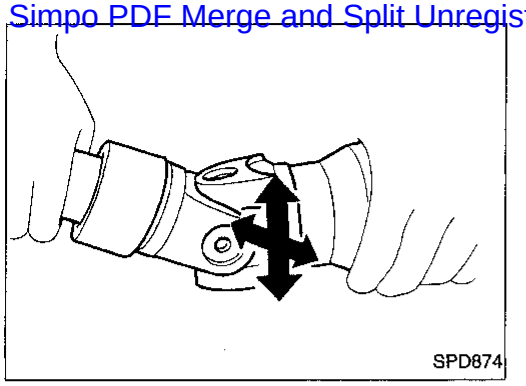
SPD874

- Inspect journal axial play.
  If play exceeds the limit, replace propeller shaft assembly.
  Journal axial play:
  0.02 mm (0.0008 in) or less

Disassembly

CENTER BEARING

1. Place matching marks on flanges, then separate 2nd tube from 1st tube.

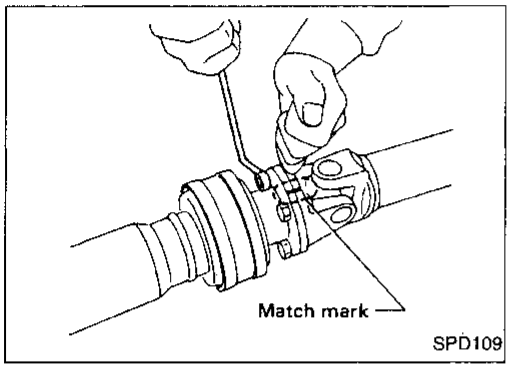

SPD109

2. Place matching marks on the flange and shaft.

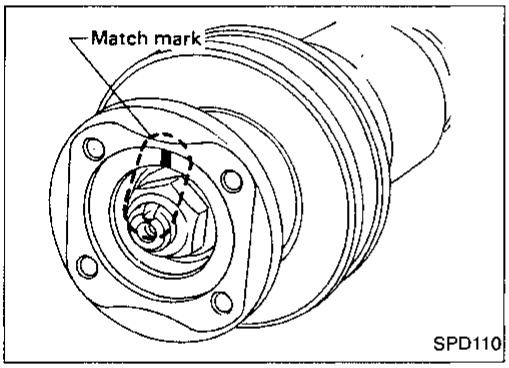

SPD110

3. Remove locking nut using Tool.
   Tool number:
   ST38060002 (J34311)
4. Remove companion flange using puller.

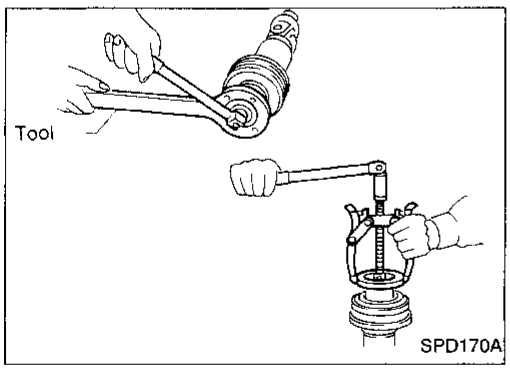

SPD170A

5. Remove center bearing using Tool and press.
   Tool number: ST30031000 (J22912-01)

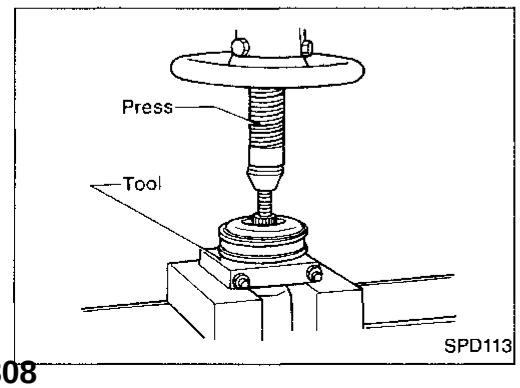

SPD113

Disassembly (Cont'd)

Simpo PDF Merge and Split Unregistered Version - http://www.simpopdf.com

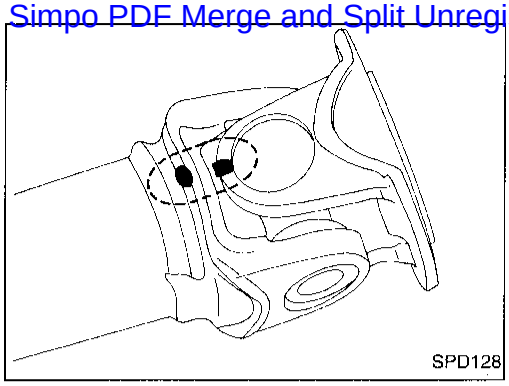
SPD128

JOURNAL

NOTE:

1. Place matching marks on propeller shaft and flange or yoke.

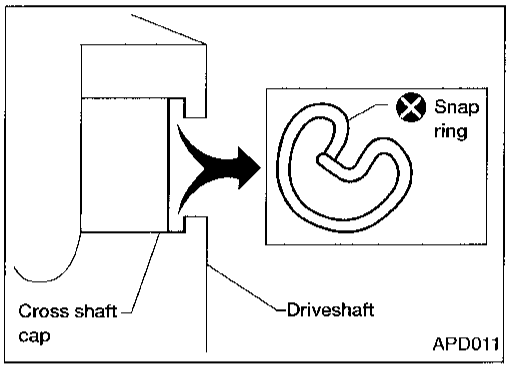

APD011

2. Remove snap ring.

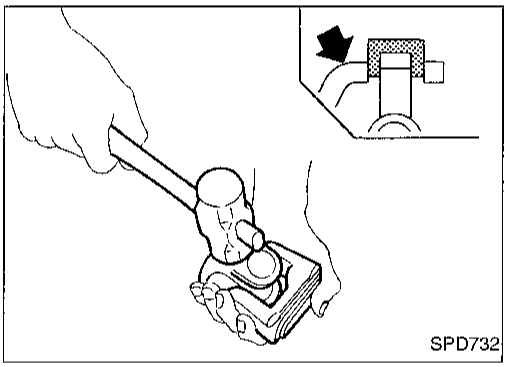
SPD732

3. Remove pushed out journal bearing by lightly tapping yoke with a hammer, taking care not to damage journal and yoke hole.

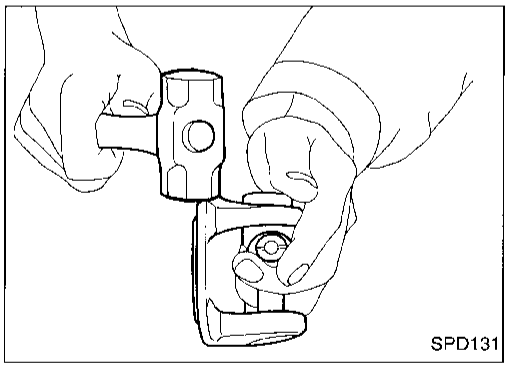
SPD131

4. Remove bearing at opposite side in above operation.

Put marks on disassembled parts so that they can be reinstalled in their original positions.

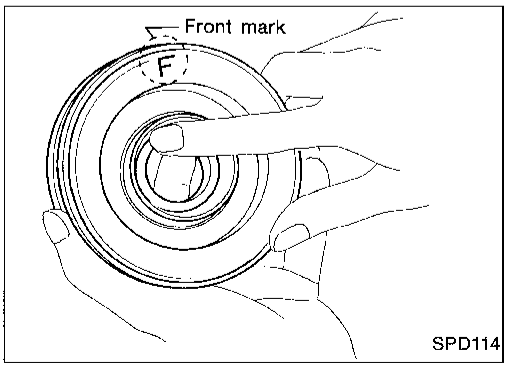

SPD114

Assembly

CENTER BEARING

- When installing center bearing, position the "F" mark on center bearing toward front of vehicle.
- **Apply a coat of multi-purpose lithium grease containing molybdenum disulfide to the end face of the center bearing and both sides of the washer.**

Assembly (Cont'd)

Simpo PDF Merge and Split Unregistered Version - http://www.simpopdf.com

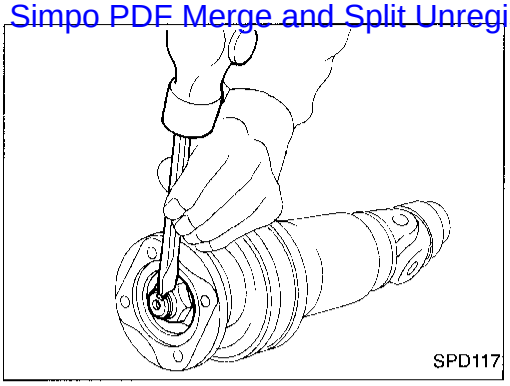

- Stake the nut. Always use new one.
- Align match marks when assembling tubes.

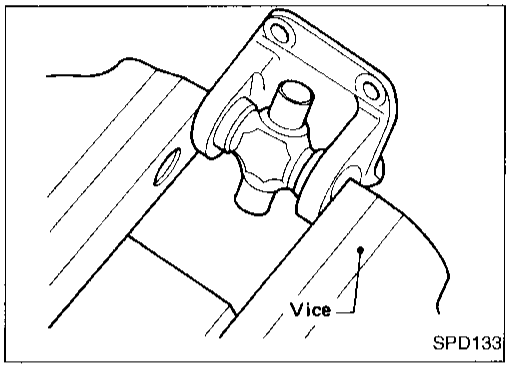

JOURNAL

1. Assemble journal bearing. Apply recommended multi-purpose grease on bearing inner surface.

When assembling, be careful that needle bearing does not fall down.

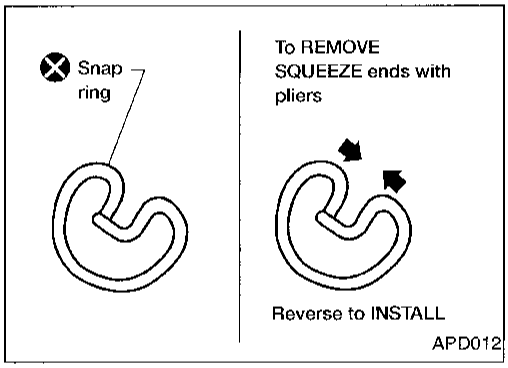

2. Select snap ring that will provide specified play in axial direction of journal, and install them.
   Refer to SDS, PD-69.

Select snap rings with a difference in thickness at both sides within 0.06 mm (0.0024 in).

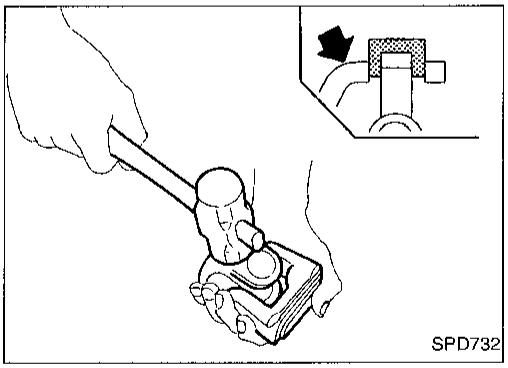

3. Adjust thrust clearance between bearing and snap ring to zero by tapping yoke.

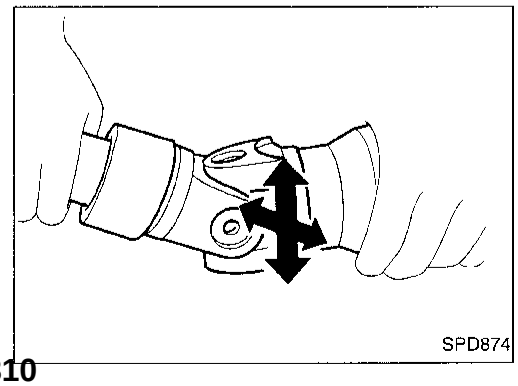

4. Check to see that journal moves smoothly and check for axial play.
   Axial play: 0.02 mm (0.0008 in) or less

Simpo PDF Merge and Split Unregistered Version - http://www.simpopdf.com

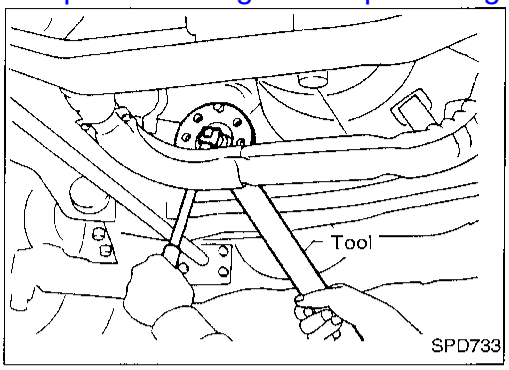

Front Oil Seal Replacement (Front final drive: Model R180A)

1. Remove front propeller shaft.
2. Loosen drive pinion nut.
   Tool number: ST38060002 (J34311)

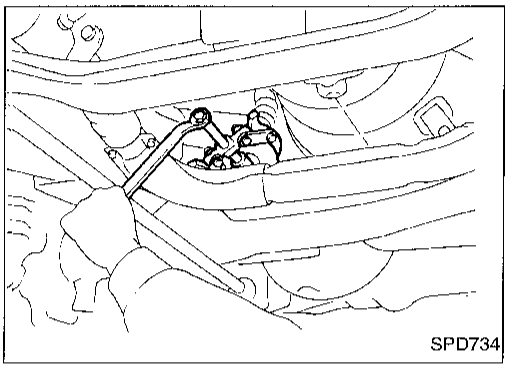

3. Remove companion flange using puller.

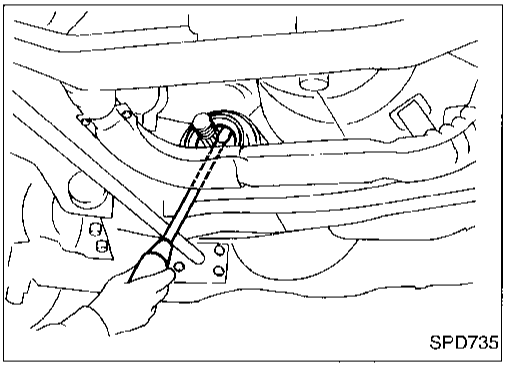

4. Remove front oil seal.

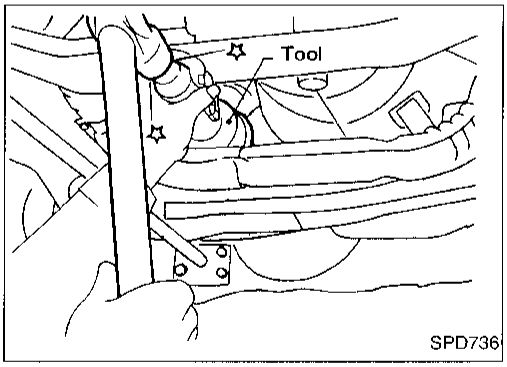

5. Apply multi-purpose grease to cavity at sealing lips of oil seal. Press front oil seal into carrier.
   Tool number:
   ST30720000 (J25405)
6. Install companion flange and drive pinion nut.
7. Install propeller shaft.

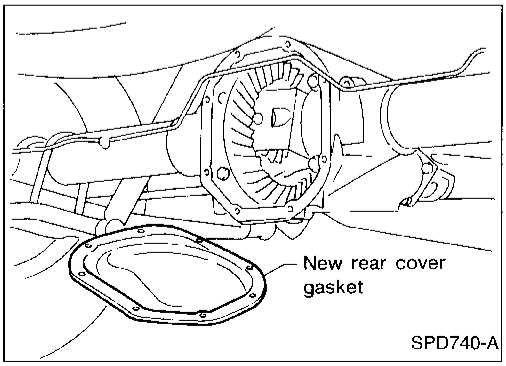

Rear Cover Gasket Replacement (Rear final drive: Model C200)

1. Drain gear oil.
2. Remove rear cover and rear cover gasket.
3. Install new rear cover gasket and rear cover.
4. Fill final drive with recommended gear oil.

Simpo PDF Merge and Split Unregistered Version - http://www.simpopdf.com

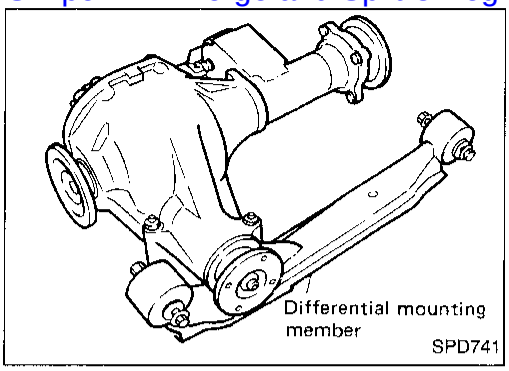

Removal

1. Remove front propeller shaft.
2. Separate drive shaft from front final drive. Refer to FA section ["Drive Shaft", "FRONT AXLE (4WD)"].
3. Remove engine mounting bolts and raise up engine.
4. Remove front final drive together with differential mounting member.

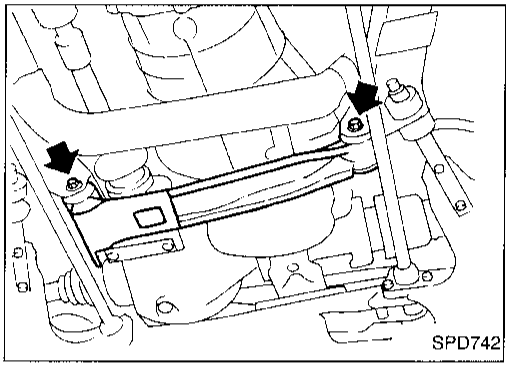

Installation

1. Install front final drive assembly together with differential mounting member.

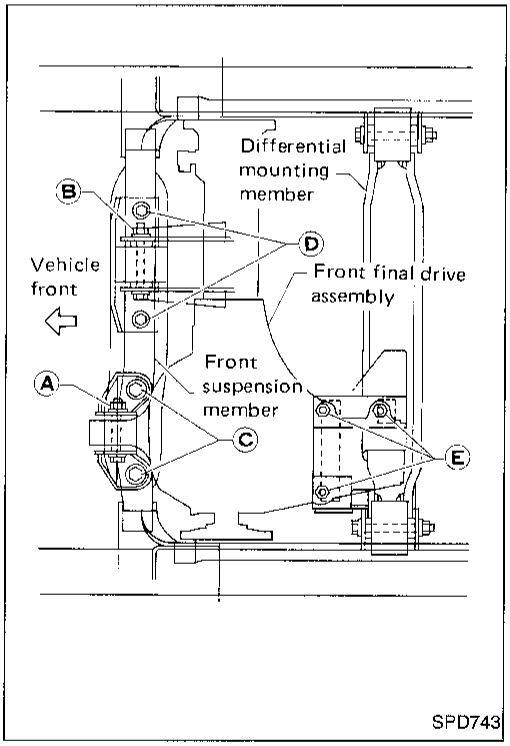

2. Tighten front final drive securing bolts and nuts by following the procedure to prevent drive train vibration.

a. Temporarily tighten nut Ⓐ.
b. Temporarily tighten nut Ⓑ.
c. Tighten bolt Ⓒ to the torque of 68 to 87 N·m (6.9 to 8.9 kg-m, 50 to 64 ft-lb).
d. Tighten bolt Ⓓ to the torque of 68 to 87 N·m (6.9 to 8.9 kg-m, 50 to 64 ft-lb).
e. Tighten nut Ⓐ to the torque of 68 to 87 N·m (6.9 to 8.9 kg-m, 50 to 64 ft-lb).
f. Tighten nut Ⓑ to the torque of 68 to 87 N·m (6.9 to 8.9 kg-m, 50 to 64 ft-lb).
g. Tighten nut Ⓔ to the torque of 68 to 87 N·m (6.9 to 8.9 kg-m, 50 to 64 ft-lb).

3. Install drive shaft. Refer to FA section ["Drive Shaft", "FRONT AXLE (4WD)"].
4. Install front propeller shaft.

Simpo PDF Merge and Split Unregistered Version - http://www.simpopdf.com

Removal

- Remove propeller shaft.

Plug front end of transfer.

- Remove axle shaft.
  Refer to RA section ("REAR AXLE").

CAUTION:

- **Be careful not to damage spline, sleeve yoke and front oil seal when removing propeller shaft.**
- **Before removing the final drive assembly or rear axle assembly, disconnect the ABS sensor harness connector from the assembly and move it away from the final drive/ rear axle assembly area. Failure to do so may result in the sensor wires being damaged and the sensor becoming inoperative.**

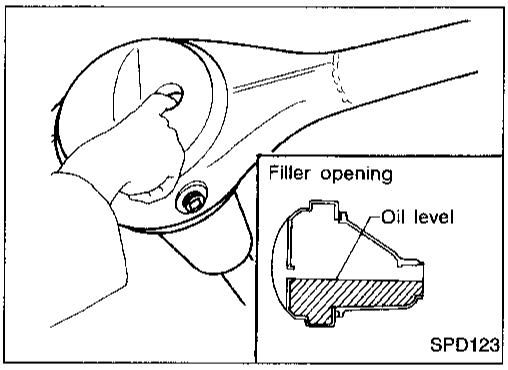

Installation

- Fill final drive with recommended gear oil.

Simpo PDF Merge and Split Unregistered Version - http://www.simpopdf.com

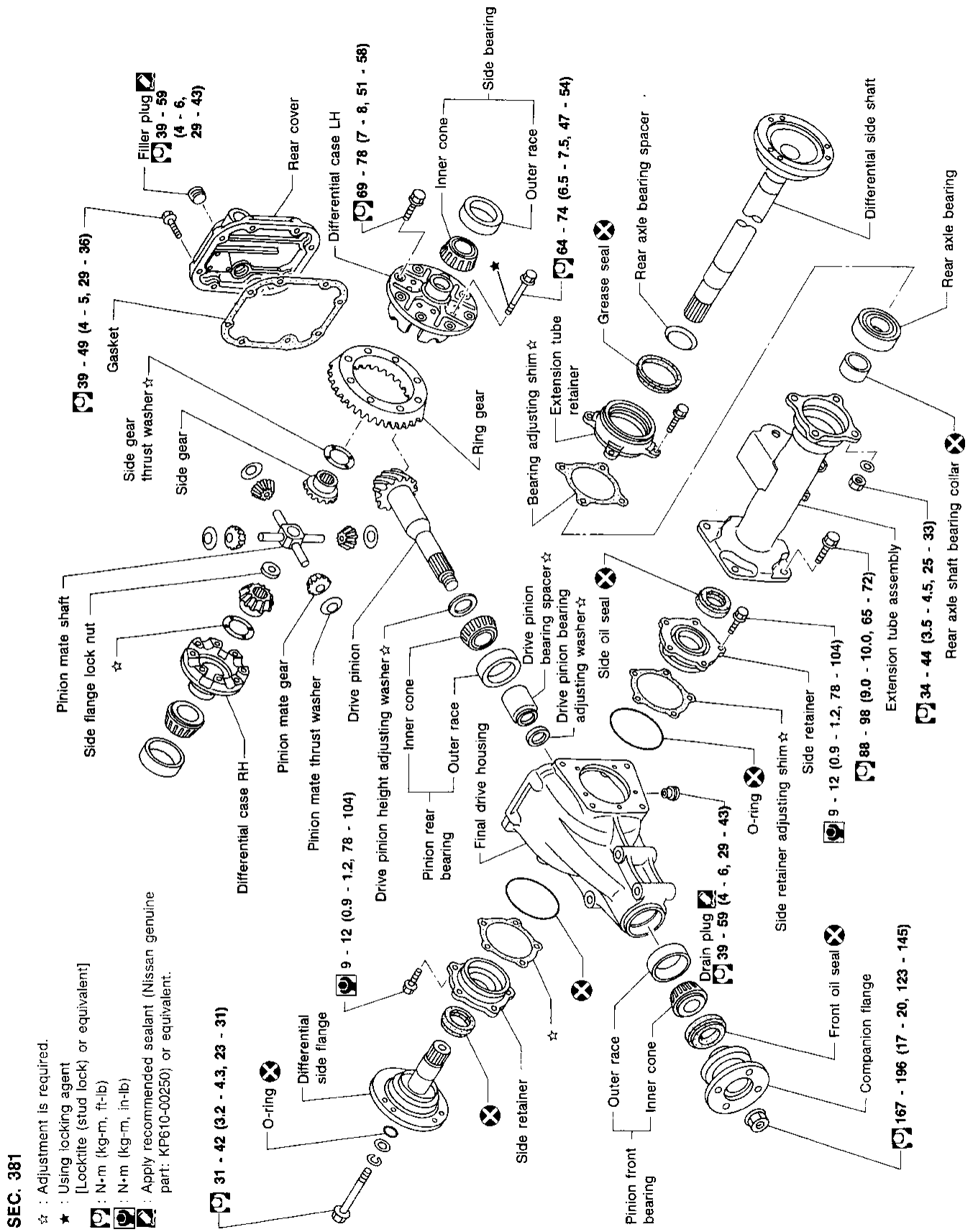

Simpo PDF Merge and Split Unregistered Version - http://www.simpopdf.com

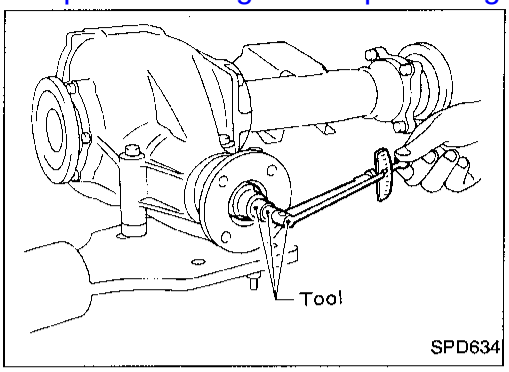

Pre-inspection

Before disassembling final drive, perform the following inspection.

- Total preload

a. Turn drive pinion in both directions several times to set bearing rollers.

b. Check total preload with Tool.

Tool number: ST3127S000 (J25765-A)

Total preload:

1.2 - 2.3 N·m

(12 - 23 kg-cm, 10 - 20 in-lb)

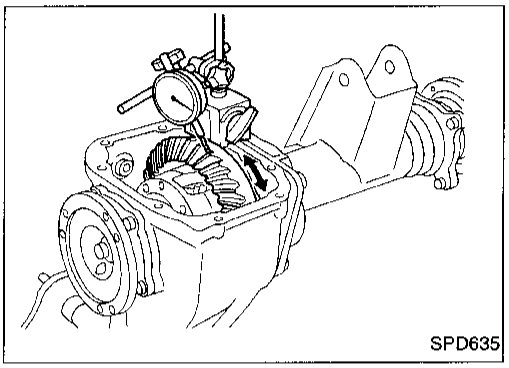

- Ring gear-to-drive pinion backlash

Check backlash of ring gear with a dial indicator at several points.

Ring gear-to-drive pinion backlash:

0.13 - 0.18 mm (0.0051 - 0.0071 in)

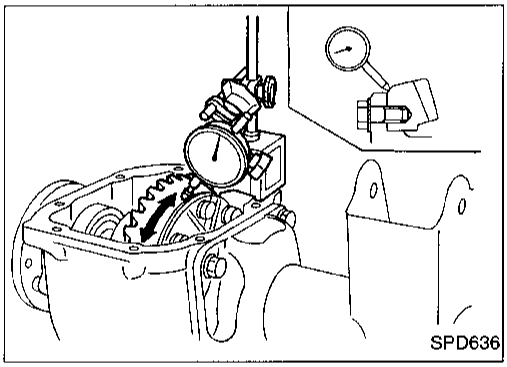

- Ring gear runout

Check runout of ring gear with a dial indicator.

Runout limit:

0.05 mm (0.0020 in)

- Tooth contact

Check tooth contact. Refer to "ADJUSTMENT", PD-28.

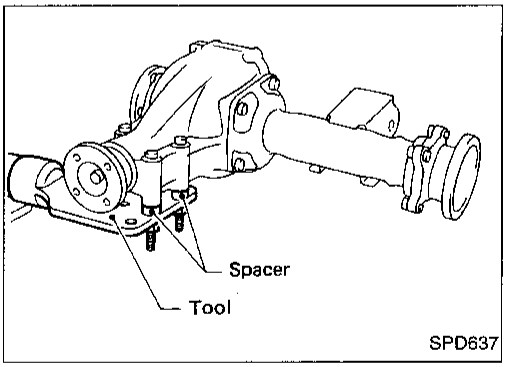

Final Drive Housing

1. Using three spacers [20 mm (0.79 in)], mount final drive assembly on Tool.

Tool number:

KV38100800 (J34310), (J25604-01)

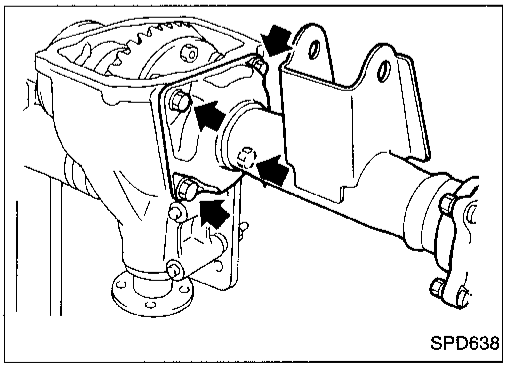

2. Remove extension tube and differential side shaft assembly.

Simpo PDF Merge and Split Unregistered Version - http://www.simpopdf.com

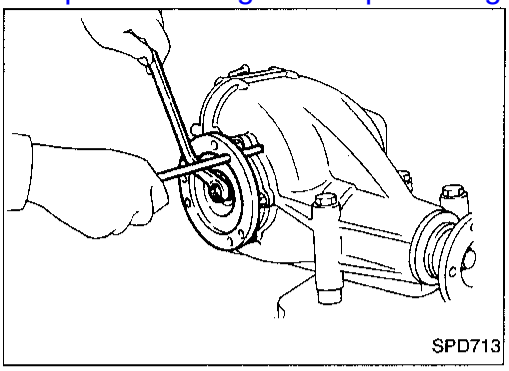
SPD713

3. Remove differential side flange.

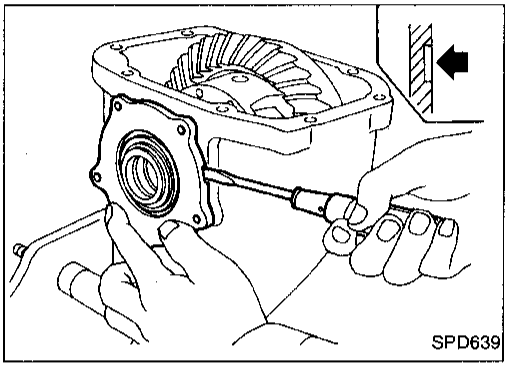
SPD639

4. Mark side retainers for identification. Remove side retainers.

Be careful not to confuse right and left side retainers and shims.

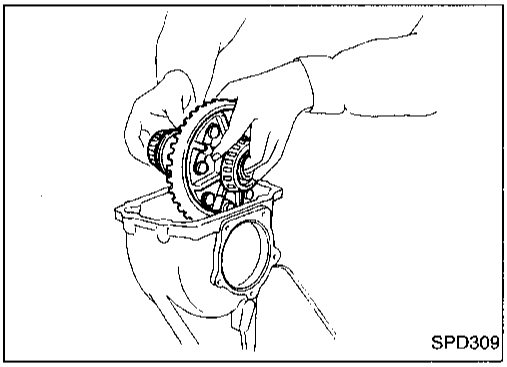
SPD309

5. Extract differential case from final drive housing.

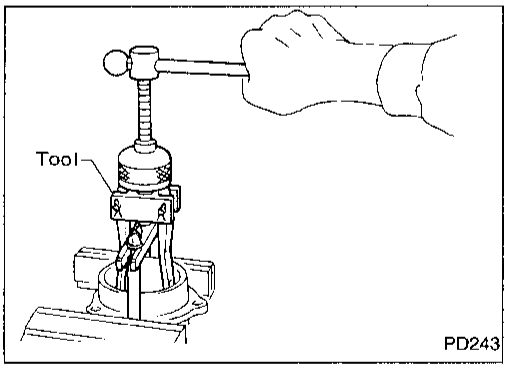

PD243

6. Remove side outer races.
   Tool number: ST33290001 (J25810-A)

Keep the side bearing outer races together with their respective inner cones — do not mix them up.

7. Remove side oil seal.

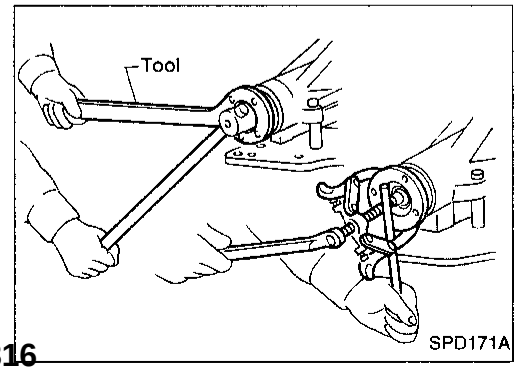

SPD171A

8. Loosen drive pinion nut.
   Tool number: ST38060002 (J34311)
9. Remove companion flange with puller.

Simpo PDF Merge and Split Unregistered Version - http://www.simpopdf.com

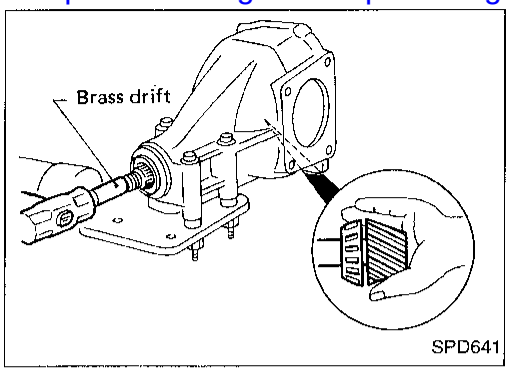

10. Take out drive pinion together with pinion rear bearing inner cone, drive pinion bearing spacer and pinion bearing adjusting washer.
11. Remove front oil seal and pinion front bearing inner cone.

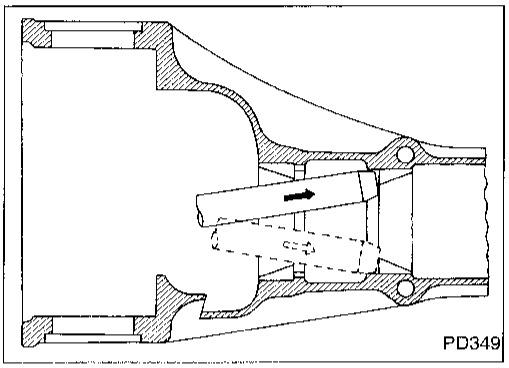

12. Remove pinion front and rear bearing outer races with brass drift.

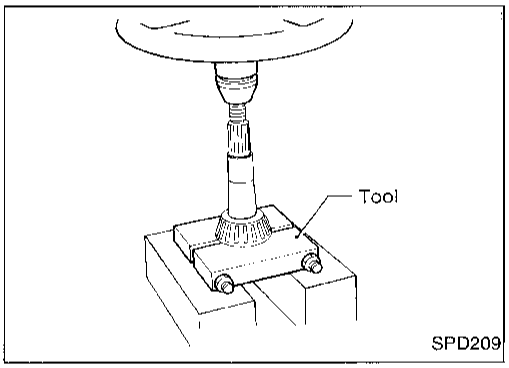

13. Remove pinion rear bearing inner cone and drive pinion adjusting washer.
    Tool number: ST30031000 (J22912-01)

Differential Case

1. Remove side bearing inner cones.

To prevent damage to bearing, engage puller jaws in grooves.

Tool numbers:
Ⓐ ST33051001 (J22888-20)
Ⓑ ST33061000 (J8107-2)

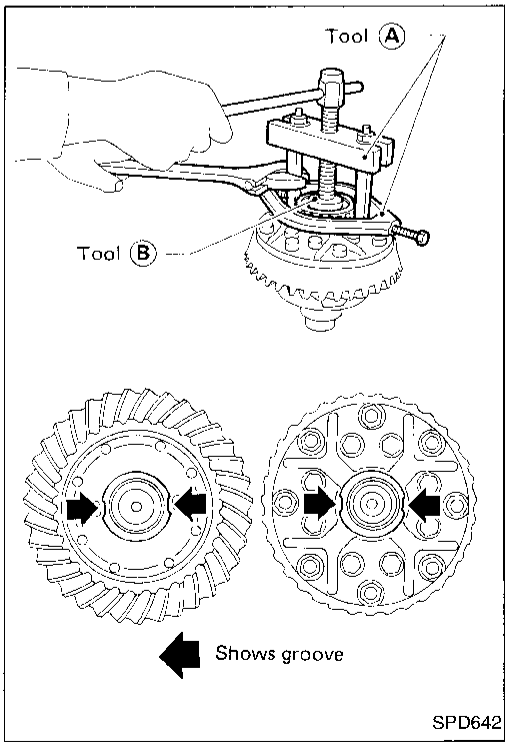

Differential Case (Cont'd)

Simpo PDF Merge and Split Unregistered Version - http://www.simpopdf.com

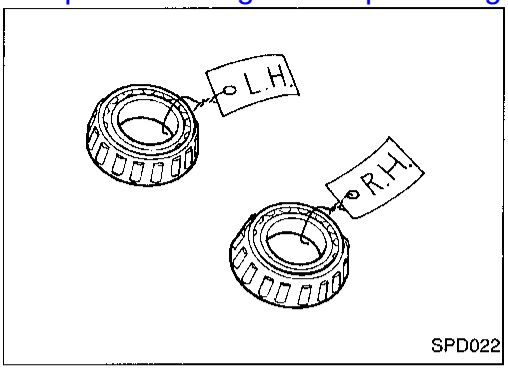

SPD022

Be careful not to confuse the right and left hand parts.

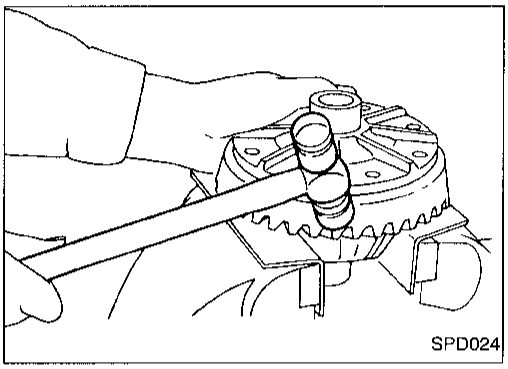
SPD024

2. Loosen ring gear bolts in a criss-cross fashion.
3. Tap ring gear off differential case with a soft hammer.

Tap evenly all around to keep ring gear from binding.

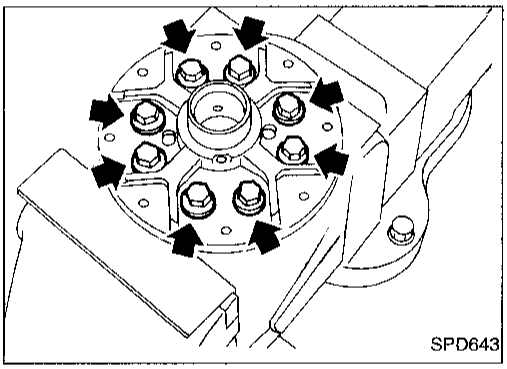
SPD643

4. Separate differential case LH and RH.

Put match marks on both differential case LH and RH sides prior to separating them.

Extension Tube and Differential Side Shaft

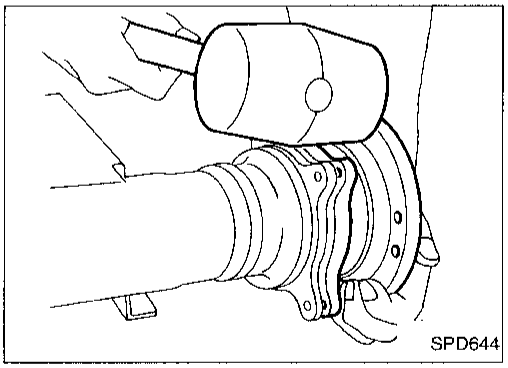
SPD644

1. Remove differential side shaft assembly from extension tube.

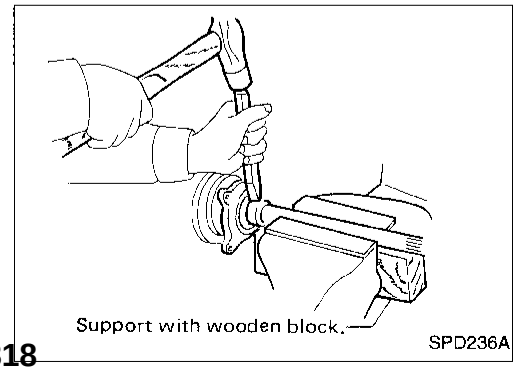

SPD236A

2. Cut rear axle bearing collar with cold chisel. Be careful not to damage differential side shaft.

Simpo PDF Merge and Split Unregistered Version - http://www.simpopdf.com

Extension Tube and Differential Side Shaft (Cont'd)

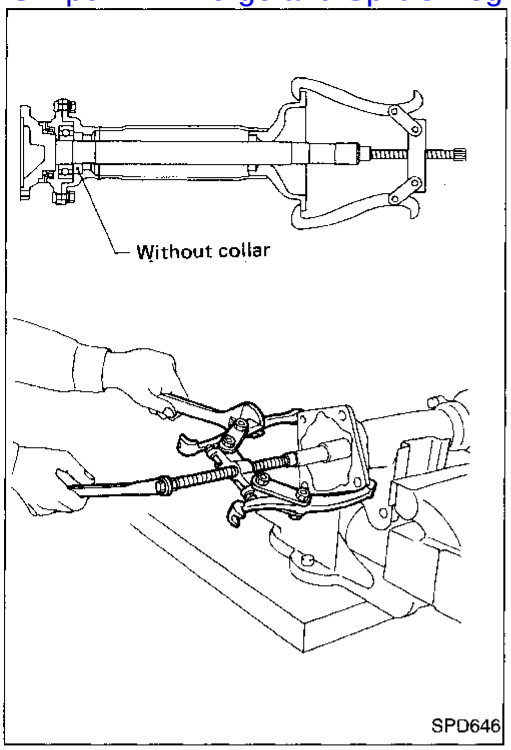

3. Reinstall differential side shaft into extension tube and secure with bolts. Remove rear axle bearing by drawing out differential side shaft from rear axle bearing with puller.

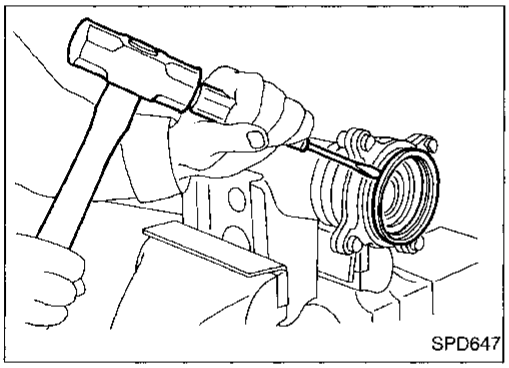

4. Remove grease seal.

Simpo PDF Merge and Split Unregistered Version - http://www.simpopdf.com

Ring Gear and Drive Pinion

Check gear teeth for scoring, cracking or chipping.
If any damaged part is evident, replace ring gear and drive pinion as a set (hypoid gear set).

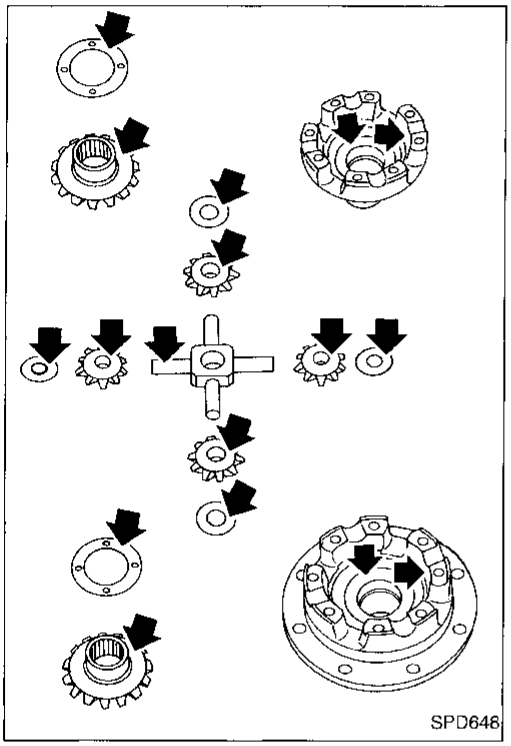
SPD648

Differential Case Assembly

Check mating surfaces of differential case, side gears, pinion mate gears, pinion mate shaft and thrust washers.

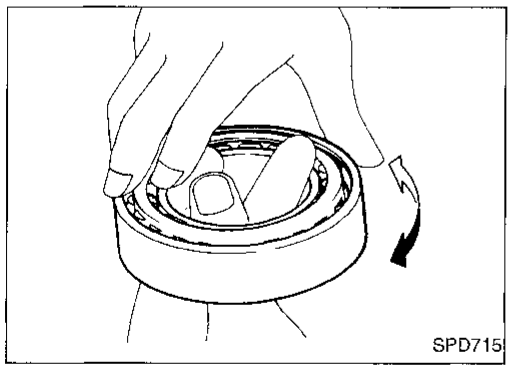
SPD715

Bearing

1. Thoroughly clean bearing.
2. Check bearing for wear, scratches, pitting or flaking.
   Check tapered roller bearing for smooth rotation. If damaged, replace outer race and inner cone as a set.

Simpo PDF Merge and Split Unregistered Version - http://www.simpopdf.com

For quiet and reliable final drive operation, the following five adjustments must be made correctly:

1. Side bearing preload
2. Pinion gear height
3. Pinion bearing preload
4. Ring gear-to-pinion backlash. Refer to "ASSEMBLY", PD-32.
5. Ring and pinion gear tooth contact pattern.

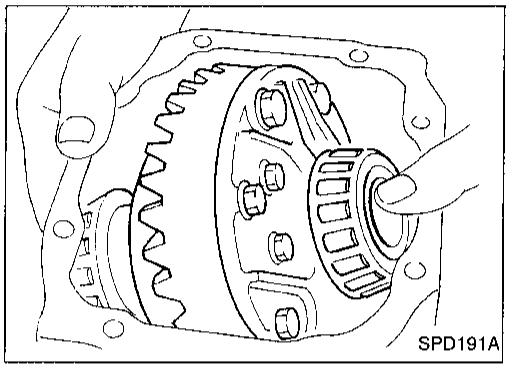
SPD191A

Side Bearing Preload

A selection of carrier side retainer adjusting shims is required for successful completion of this procedure.

1. Make sure all parts are clean. Also make sure the bearings are well lubricated with light oil or type "DEXRON™" automatic transmission fluid.
2. Install differential carrier and side bearing assembly into the final drive housing.

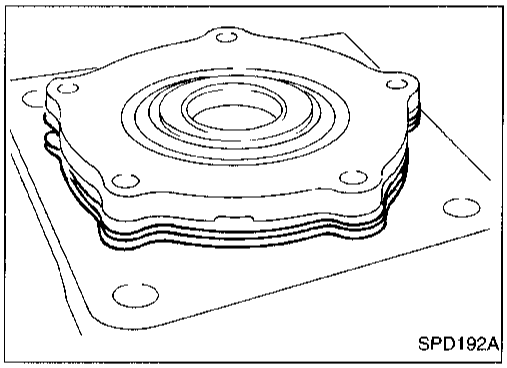
SPD192A

3. Place all of the original side retainer adjusting shims onto the side bearing retainer that goes at the ring gear end of the carrier.

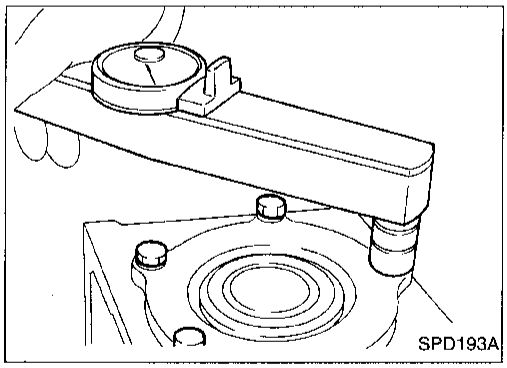
SPD193A

4. Install both bearing retainers onto the final drive housing and torque the retainer bolts.
   Bolt torque specification:
   : 9 - 12 N·m (0.9 - 1.2 kg-m, 78 - 104 in-lb)

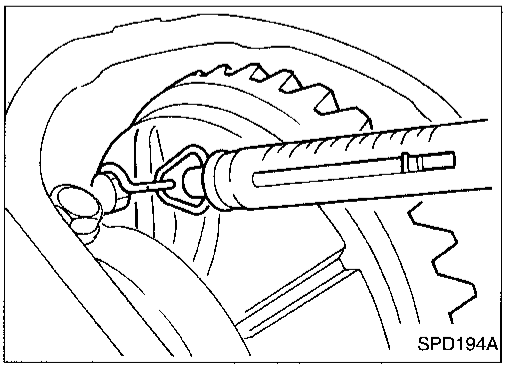
SPD194A

5. Turn the carrier several times to seat the bearings.
6. Measure the carrier turning torque with a spring gauge, J8129, at the ring gear retainer bolt.
   Turning torque specification:
   34.3 - 39.2 N (3.5 - 4.0 kg, 7.7 - 8.8 lb) of pulling force at the ring gear bolt

Simpo PDF Merge and Split Unregistered Version - http://www.simpopdf.com

Side Bearing Preload (Cont'd)

7. If the turning torque measured is incorrect, establish the correct bearing preload by adding to or subtracting from the total amount of shim thickness.
- Increase shim thickness to decrease turning torque on the carrier.
- Decrease shim thickness to increase turning torque on the carrier.

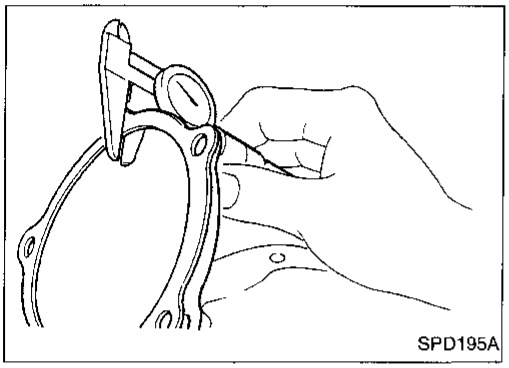
SPD195A

8. Record the correct, selected total thickness of the side retainer adjusting shims, and remove the carrier and bearings from the final drive housing. Save all shims for later re-use.

Pinion Gear Height and Pinion Bearing Preload

1. Make sure all parts are clean and that the bearings are well lubricated.
2. Assemble the pinion gear bearings into the pinion pre-load shim selector tool, J34309.

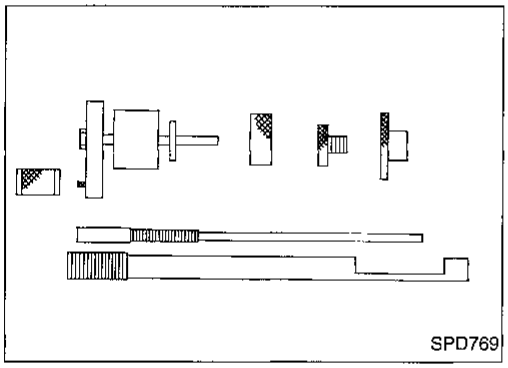
SPD769

- **Front Pinion Bearing** — make sure the J34309-3 front pinion bearing seat is secured tightly against the J34309-2 gauge anvil. Then turn the front pinion bearing pilot, J34309-7, to secure the bearing in its proper position.

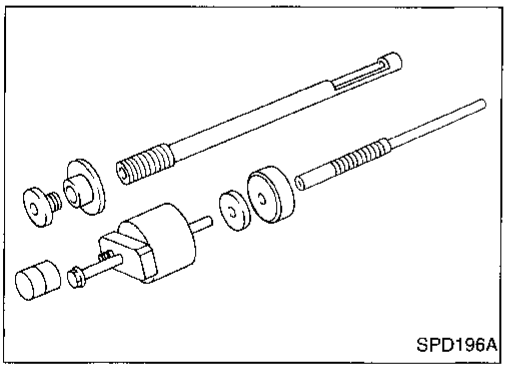
SPD196A

- **Rear Pinion Bearing** — the rear pinion bearing pilot, J34309-8, is used to center the rear pinion bearing only. The rear pinion bearing locking seat, J34309-4, is used to lock the bearing to the assembly.

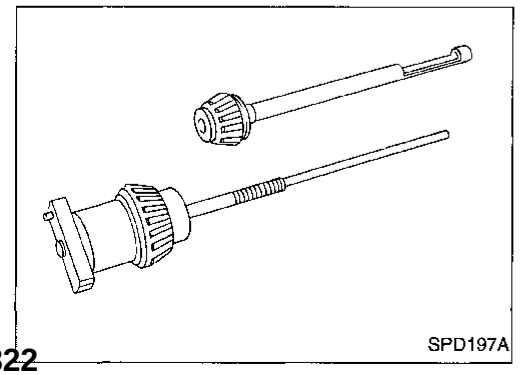
SPD197A

Simpo PDF Merge and Split Unregistered Version - http://www.simpopdf.com

Pinion Gear Height and Pinion Bearing Preload (Cont'd)

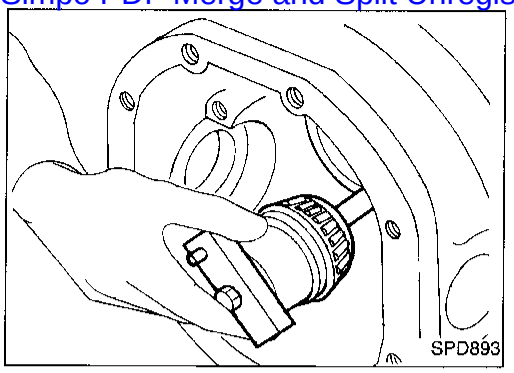

3. Place the pinion preload shim selector tool gauge screw, J34309-1, with the pinion rear bearing inner cone installed, into the final drive housing.

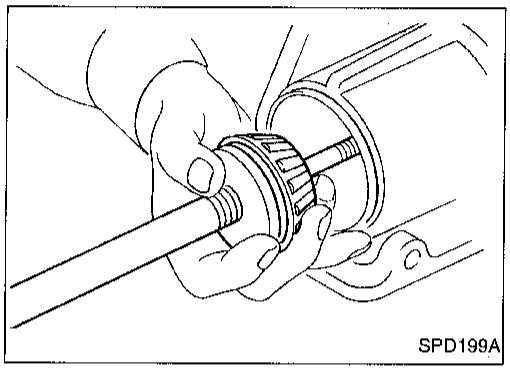

4. Install the J34309-2 gauge anvil with the front pinion bearing into the final drive housing and assemble it to the J34309-1 gauge screw. Make sure that the J34309-16 gauge plate will turn a full 360 degrees, and tighten the two sections by hand.

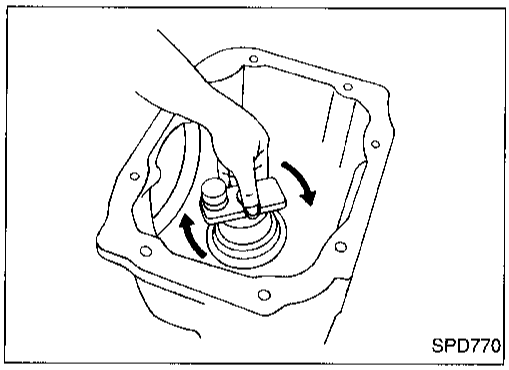

5. Turn the assembly several times to seat the bearings.

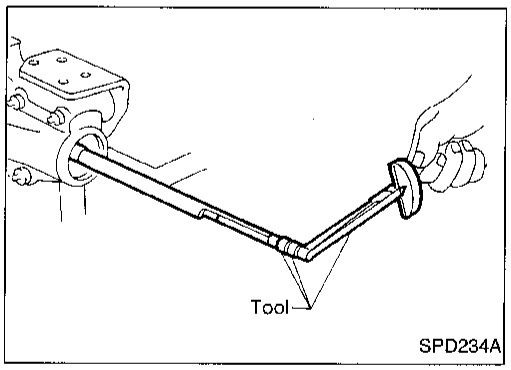

6. Measure the turning torque at the end of the J34309-2 shaft using Tool.
   Tool number: ST3127S000 (J25765-A)
   Turning torque specification:
   0.6 - 1.0 N·m (6 - 10 kg-cm, 5.2 - 8.7 in-lb)
7. Place the J34309-10 "R180A" pinion height adapter onto the gauge plate and tighten it by hand.

CAUTION:
Make sure all machined surfaces are clean.

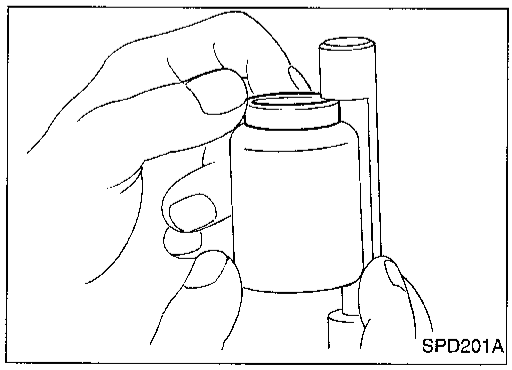

PINION BEARING PRELOAD WASHER SELECTION

8. Place the solid pinion bearing adjusting spacer squarely into the recessed portion of the J34309-2 gauge anvil.

Simpo PDF Merge and Split Unregistered Version - http://www.simpopdf.com

Pinion Gear Height and Pinion Bearing Preload (Cont'd)

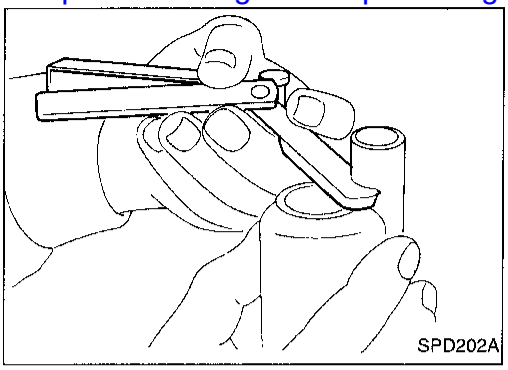
SPD202A

9. Select the correct thickness of pinion bearing preload adjusting washer using a standard gauge of 6 mm (0.24 in) and J34309-101 feeler gauge. The exact total measure you get with the gauges is the thickness of the adjusting washer required. Select the correct washer.
   Drive pinion bearing adjusting washer:
   Refer to SDS, PD-71.
10. Set the selected pinion bearing preload adjusting washer aside for use when assembling the pinion and bearings into the final drive housing.

PINION HEIGHT ADJUSTING WASHER SELECTION

11. Place the J34309-10 pinion height adapter onto the gauge plate and tighten by hand.

CAUTION:
Make sure all machined surfaces are clean.

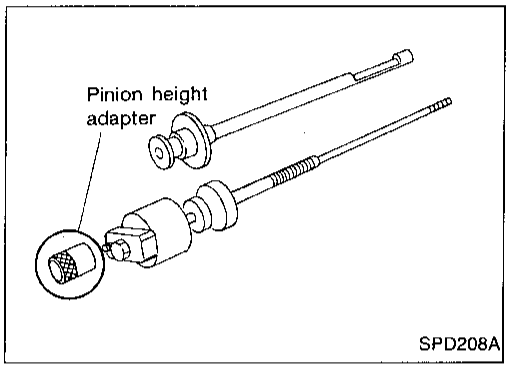

SPD208A

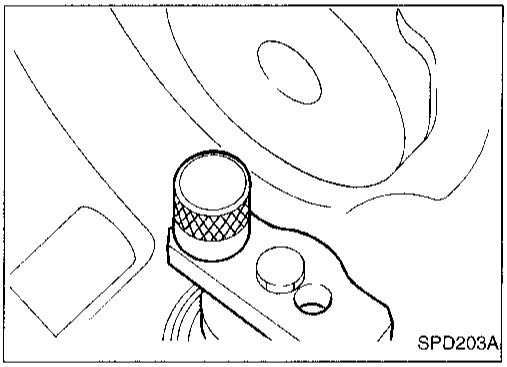
SPD203A

12. Position firmly the side bearing discs, J25269-4, and arbor into the side bearing bores.

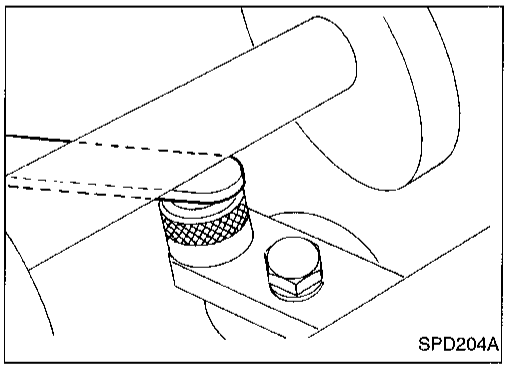
SPD204A

13. Select the correct standard pinion height adjusting washer thickness using a standard gauge of 3 mm (0.12 in) and J34309-101 feeler gauge. Measure the distance between the J34309-10 "R180A" pinion height adapter and the arbor.

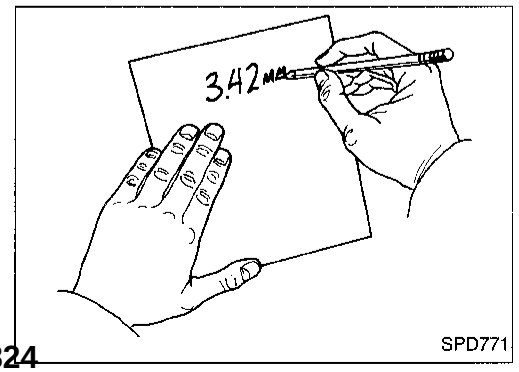

SPD771

14. Write down your exact total measurement.

Simpo PDF Merge and Split Unregistered Version - http://www.simpopdf.com

Pinion Gear Height and Pinion Bearing Preload (Cont'd)

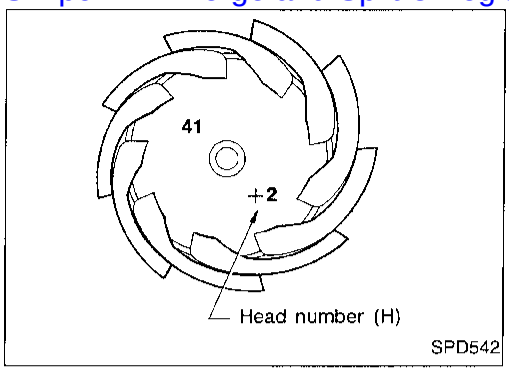

15. Correct the pinion height washer size by referring to the "pinion head number".

There are two numbers painted on the pinion gear. The first one refers to the pinion and ring gear as a matched set and should be the same as the number on the ring gear. The second number is the "pinion head height number", and it refers to the ideal pinion height from standard for quietest operation. Use the following chart to determine the correct pinion height washer.

Pinion Head Height Number	Add or Remove from the Standard Pinion Height Washer Thickness Measurement
−6	Add 0.06 mm (0.0024 in)
−5	Add 0.05 mm (0.0020 in)
−4	Add 0.04 mm (0.0016 in)
−3	Add 0.03 mm (0.0012 in)
−2	Add 0.02 mm (0.0008 in)
−1	Add 0.01 mm (0.0004 in)
0	Use the selected washer thickness
+1	Subtract 0.01 mm (0.0004 in)
+2	Subtract 0.02 mm (0.0008 in)
+3	Subtract 0.03 mm (0.0012 in)
+4	Subtract 0.04 mm (0.0016 in)
+5	Subtract 0.05 mm (0.0020 in)
+6	Subtract 0.06 mm (0.0024 in)

16. Select the correct pinion height washer.
    Drive pinion height adjusting washer:
    Refer to SDS, PD-71.

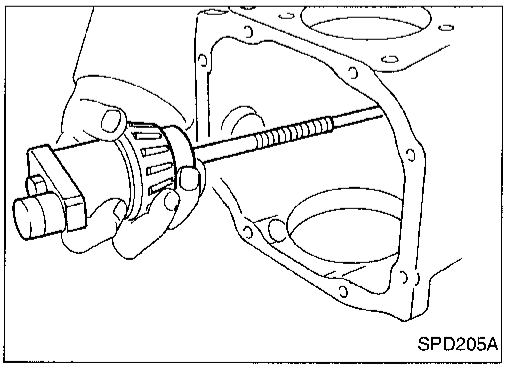

17. Remove the J34309 pinion preload shim selector tool from the final drive housing and disassemble to retrieve the pinion bearings.

Simpo PDF Merge and Split Unregistered Version - http://www.simpopdf.com

Tooth Contact

Gear tooth contact pattern check is necessary to verify correct relationship between ring gear and drive pinion.
Hypoid gear sets which are not positioned properly may be noisy, or have short life, or both. With a pattern check, the most desirable contact for low noise level and long life can be assured.

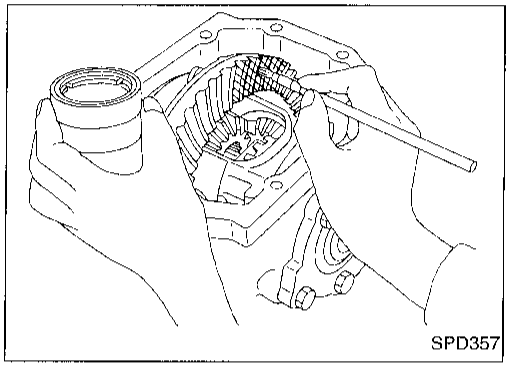
SPD357

1. Thoroughly clean ring gear and drive pinion teeth.
2. Sparingly apply a mixture of powdered ferric oxide and oil or equivalent to 3 or 4 teeth of ring gear drive side.

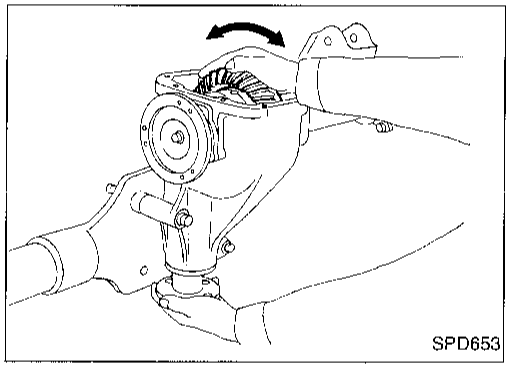
SPD653

3. Hold companion flange steady and rotate the ring gear in both directions.

Usually the pattern will be correct if shims are correctly calculated and the backlash is correct.
However, in rare cases, trial and error processes may be employed to obtain a correct pattern.
The tooth pattern is the best indication of how well a differential has been set up.

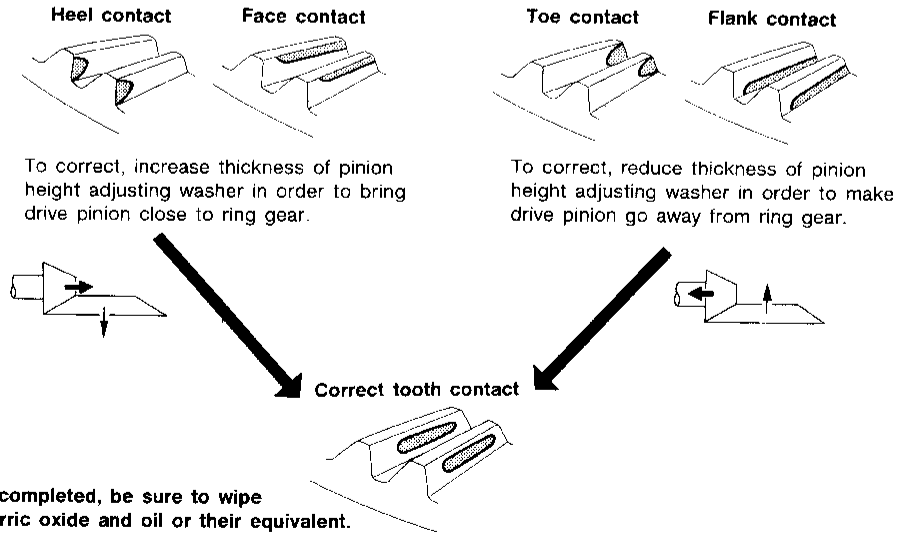

When adjustment is completed, be sure to wipe off completely the ferric oxide and oil or their equivalent.

APD018

Simpo PDF Merge and Split Unregistered Version - http://www.simpopdf.com

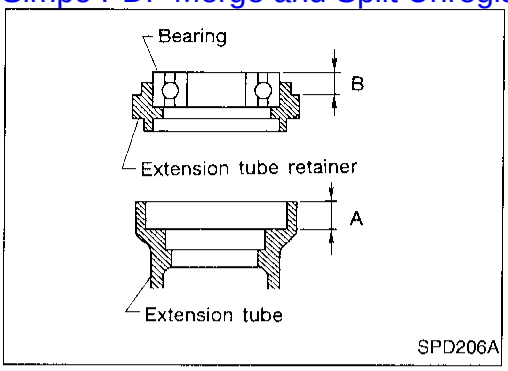

Extension Tube and Differential Side Shaft

1. Measure rear axle bearing end play.
   Rear axle bearing end play (A - B):
   0.1 mm (0.0039 in) or less
   The end play can be adjusted with bearing adjusting shim.
   Available bearing adjusting shims:
   Refer to SDS, PD-71.

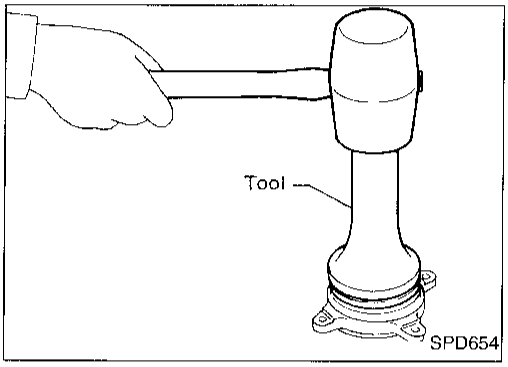

2. Install grease seal.
   Tool number: (J35764)

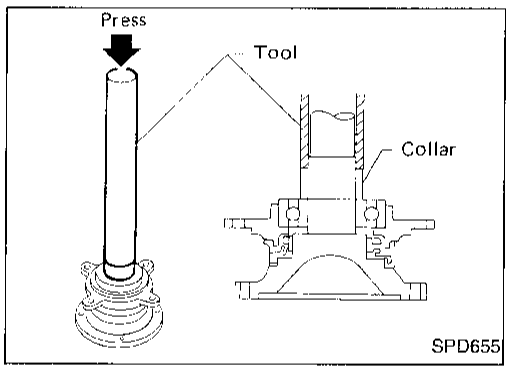

3. Install extension tube retainer, rear axle bearing and rear axle shaft bearing collar on differential side shaft.
4. Install differential side shaft assembly into extension tube.

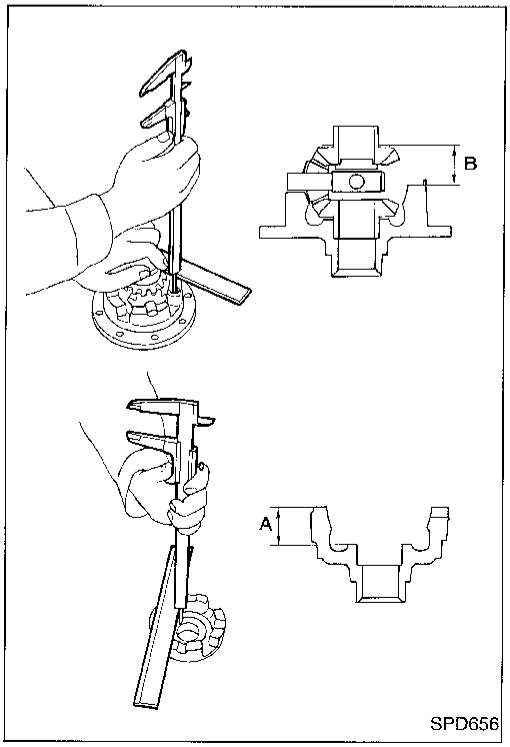

Differential Case

1. Measure clearance between side gear thrust washer and differential case.
   Clearance between side gear thrust washer and differential case (A - B):
   Less than 0.15 mm (0.0059 in)
   The clearance can be adjusted with side gear thrust washer.
   Available side gear thrust washers:
   Refer to SDS, PD-71.
2. Apply gear oil to gear tooth surfaces and thrust surfaces and check to see they turn properly.

Differential Case (Cont'd)

Simpo PDF Merge and Split Unregistered Version - http://www.simpopdf.com

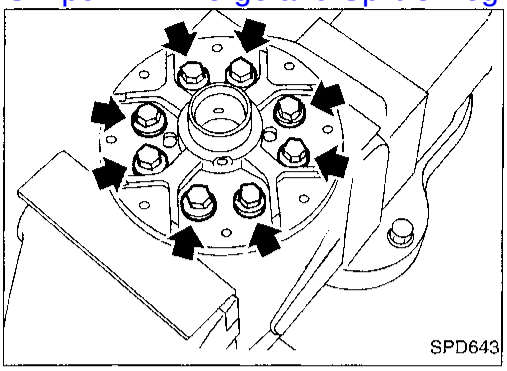
SPD643

3. Install differential case LH and RH.

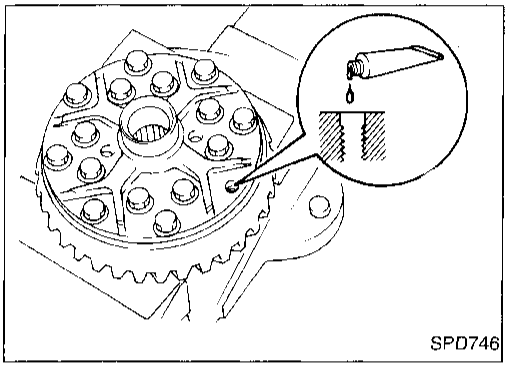
SPD746

4. Place differential case on ring gear.
5. Apply locking agent [Locktite (stud lock) or equivalent] to ring gear bolts, and install them.

Tighten bolts in a criss-cross fashion, lightly tapping bolt head with a hammer.

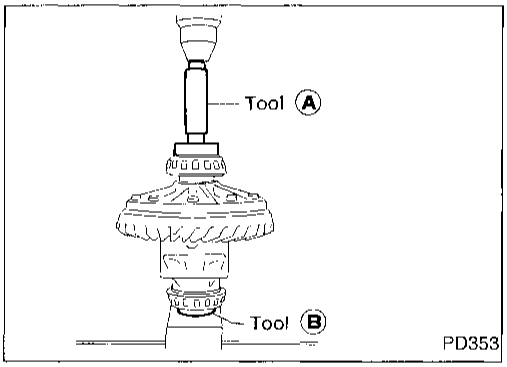

PD353

6. Press-fit side bearing inner cones on differential case with Tools.

Tool numbers:
Ⓐ ST33230000 (J25805-01)
Ⓑ ST33061000 (J8107-2)

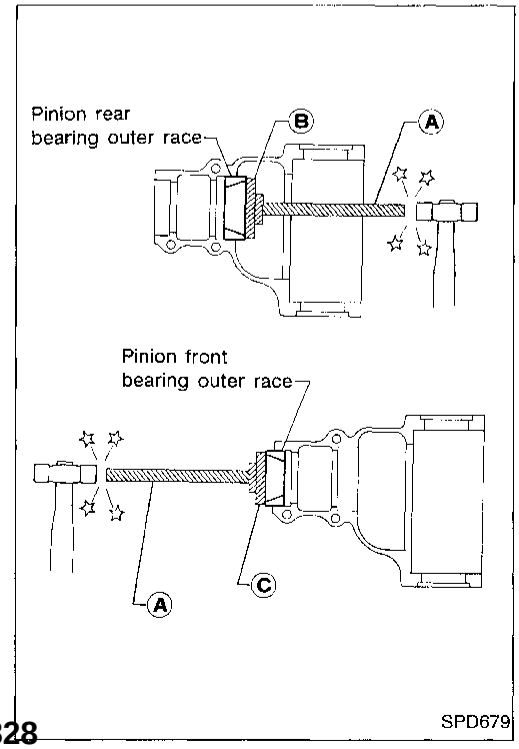

SPD679

Final Drive Housing

1. Press-fit front and rear bearing outer races with Tools.

Tool numbers:
Ⓐ ST30611000 (J25742-1)
Ⓑ ST30621000 (J25742-5)
Ⓒ ST30701000 (J25742-2)

Final Drive Housing (Cont'd)

Simpo PDF Merge and Split Unregistered Version - http://www.simpopdf.com

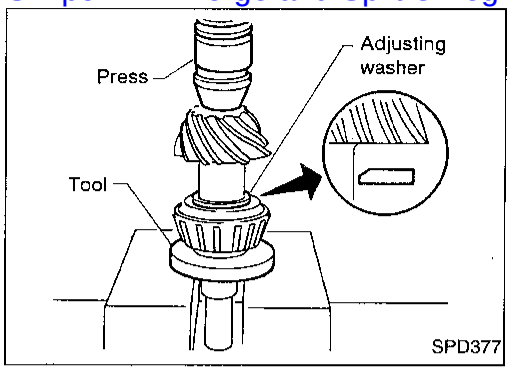

2. Select pinion bearing adjusting washer and drive pinion bearing spacer. Refer to "ADJUSTMENT", PD-24.
3. Install drive pinion height adjusting washer in drive pinion, and press-fit pinion rear bearing inner cone in it, using press and Tool.
   Tool number: ST30901000 (J26010-01)

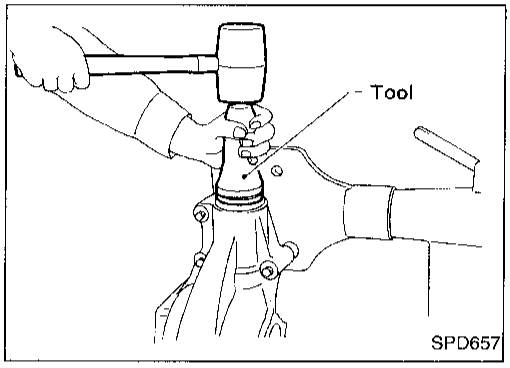

4. Place pinion front bearing inner cone in final drive housing.
5. Apply multi-purpose grease to cavity at sealing lips of oil seal. Install front oil seal.
   Tool number: ST30720000 (J25405)

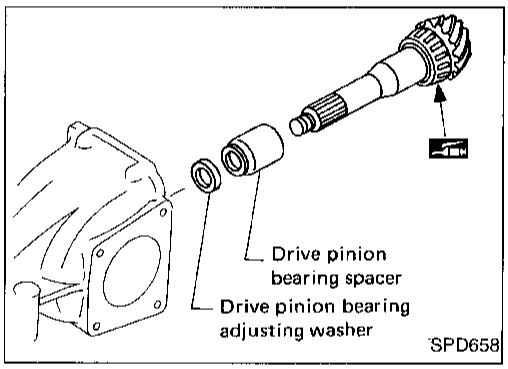

6. Place drive pinion bearing spacer, pinion bearing adjusting washer and drive pinion in final drive housing.

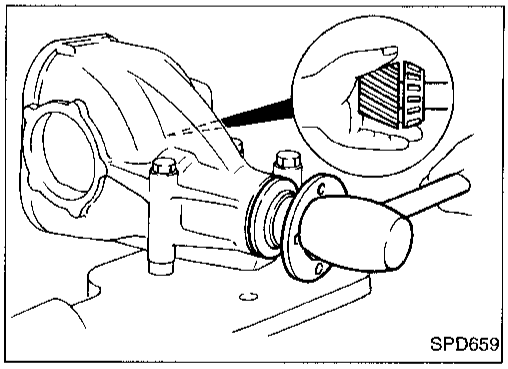

7. Insert companion flange into drive pinion by tapping the companion flange with a soft hammer.

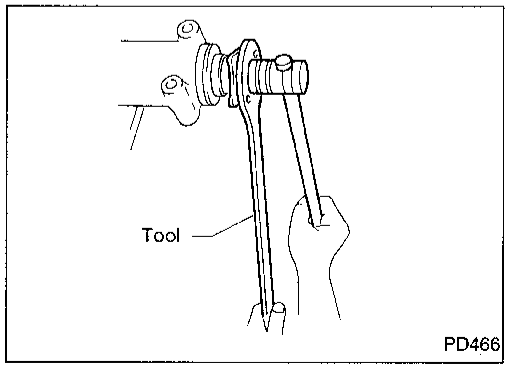

8. Tighten pinion nut to the specified torque.

The threaded portion of drive pinion and pinion nut should be free from oil or grease.

Tool number: ST38060002 (J34311)

Final Drive Housing (Cont'd)

Simpo PDF Merge and Split Unregistered Version - http://www.simpopdf.com

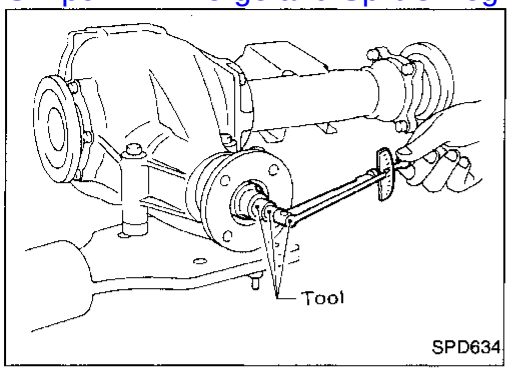

9. Turn drive pinion in both directions several revolutions and measure pinion bearing preload.
   Tool number: ST3127S000 (J25765-A)
   Pinion bearing preload:
   1.1 - 1.7 N·m (11 - 17 kg-cm, 9.5 - 14.8 in-lb)

When pinion bearing preload is outside the specifications, replace pinion bearing adjusting washer and spacer with a different thickness.

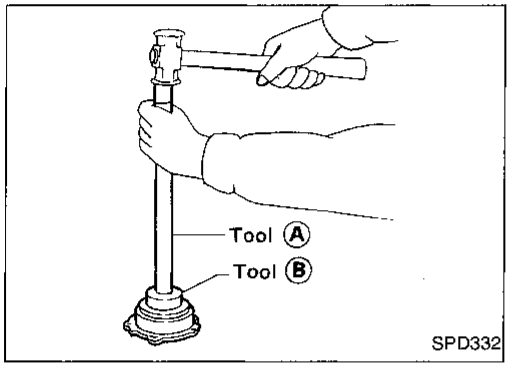

10. Select side retainer adjusting shim.
    Refer to "ADJUSTMENT", PD-23.
11. Press-fit side bearing outer race into side retainer.
    Tool numbers:
    Ⓐ ST30611000 (J25742-1)
    Ⓑ ST30621000 (J25742-5)

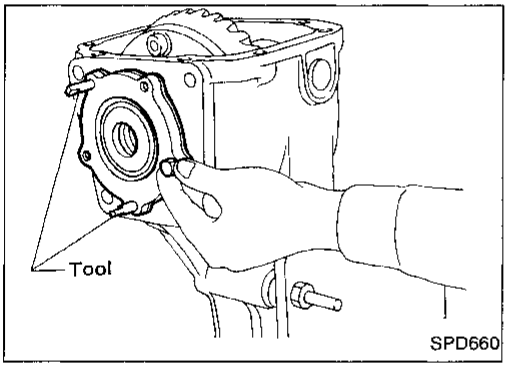

12. Install side oil seal to side retainer.
    Tool number: ST33270000 (J25809)
13. Install differential case assembly.
14. Place side retainer adjusting shims (refer to "ADJUSTMENT", PD-23), and O-ring on side retainer, and install them in final drive housing.
    Tool number: ST33720000 (J25817)

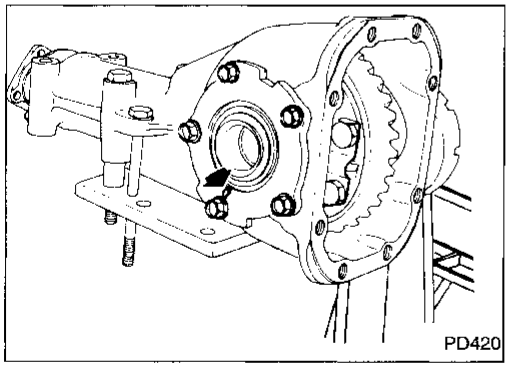

- Align arrows stamped on side retainer and final drive housing.

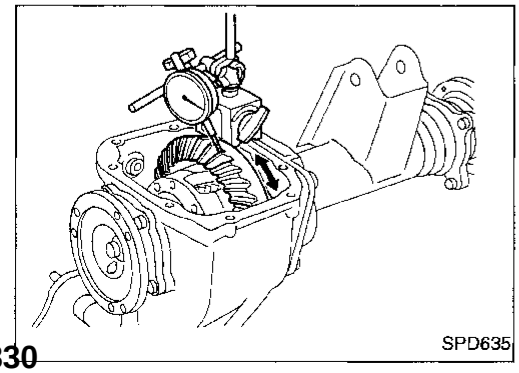

15. Measure ring gear-to-drive pinion backlash with a dial indicator.
    Ring gear-to-drive pinion backlash:
    0.13 - 0.18 mm (0.0051 - 0.0071 in)

- If backlash is too small, decrease thickness of right shim and increase thickness of left shim by the same amount.
  If backlash is too great, reverse the above procedure.

Never change the total amount of shims as it will change the bearing preload.

Final Drive Housing (Cont'd)

Simpo PDF Merge and Split Unregistered Version - http://www.simpopdf.com

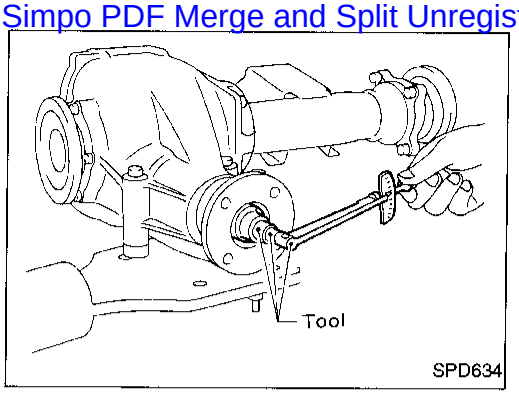

16. Check total preload with Tool.

When checking preload, turn drive pinion in both directions several times to set bearing rollers.

Tool number: ST3127S000 (J25765-A)

Total preload:

1.2 - 2.3 N·m

(12 - 23 kg-cm, 10 - 20 in-lb)

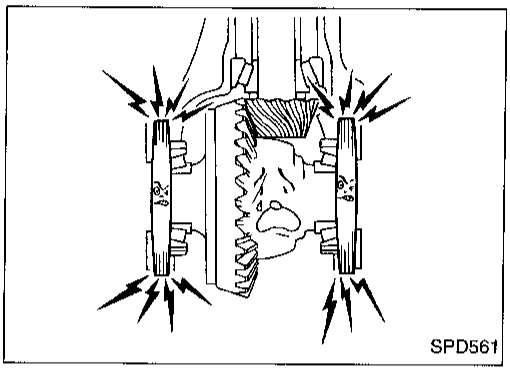

- If preload is too great, add the same amount of shim to each side.
- If preload is too small, remove the same amount of shim from each side.

Never add or remove a different number of shims for each side as it will change ring gear-to-drive pinion backlash.

17. Recheck ring gear-to-drive pinion backlash because increase or decrease in thickness of shims will cause change of ring gear to pinion backlash.

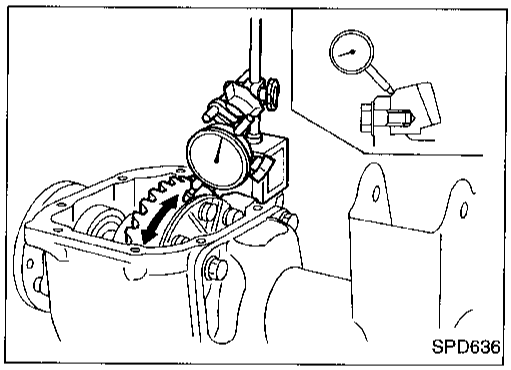

18. Check runout of ring gear with a dial indicator.

Runout limit:

0.05 mm (0.0020 in)

- If backlash varies excessively in different places, the variance may have resulted from foreign matter caught between the ring gear and the differential case.
- If the backlash varies greatly when the runout of the ring gear is within a specified range, the hypoid gear set or differential case should be replaced.

19. Check tooth contact. Refer to "ADJUSTMENT", PD-28.
20. Install rear cover and gasket.

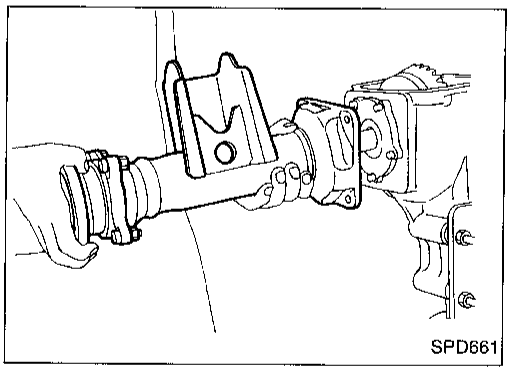

21. Install extension tube and differential side shaft assembly.

Simpo PDF Merge and Split Unregistered Version - http://www.simpopdf.com

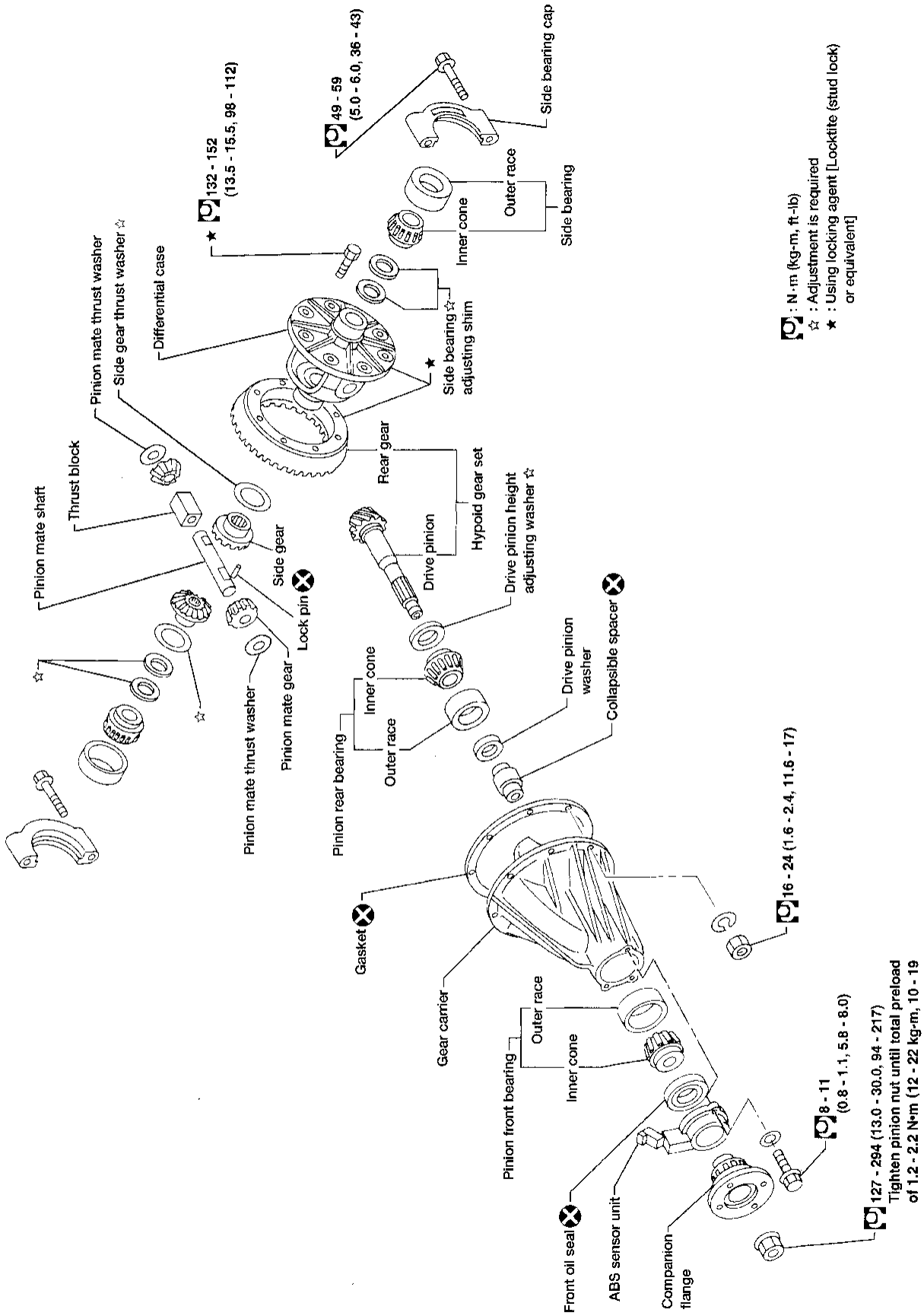

SEC.380

APD009

Simpo PDF Merge and Split Unregistered Version - http://www.simpopdf.com

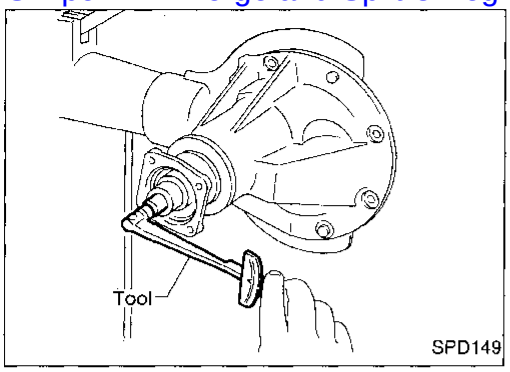

Pre-inspection

Before disassembling final drive, perform the following inspection.

- Total preload

a. Turn drive pinion in both directions several revolutions to seat bearing rollers correctly.

b. Check total preload with Tool.

Tool number: ST3127S000 (J25765-A)

Total preload:

1.2 - 2.2 N·m

(12 - 22 kg-cm, 10 - 19 in-lb)

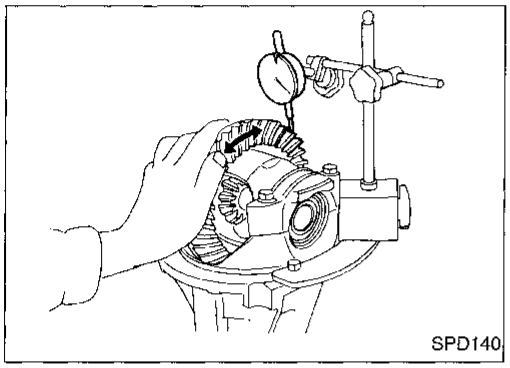

- Ring gear-to-drive pinion backlash

Check backlash of ring gear with a dial indicator at several points.

Ring gear-to-drive pinion backlash:

0.13 - 0.18 mm (0.0051 - 0.0071 in)

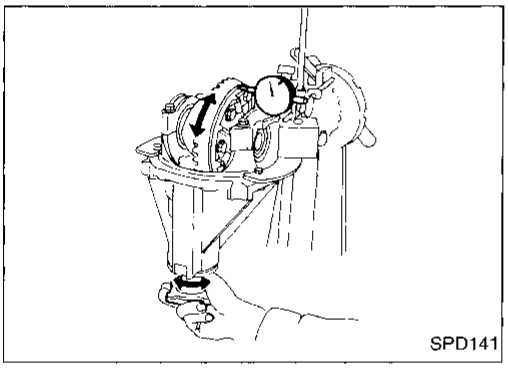

- Ring gear runout

Check runout of ring gear with a dial indicator.

Runout limit:

0.08 mm (0.0031 in)

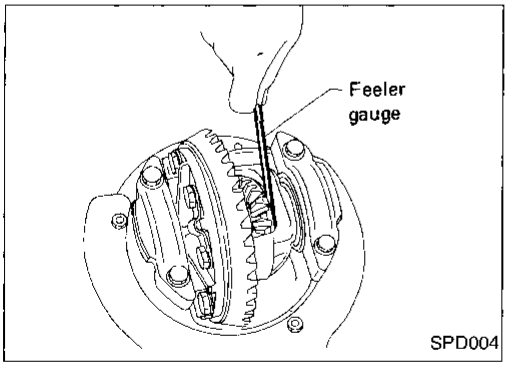

- Tooth contact

Check tooth contact. Refer to "ADJUSTMENT", PD-45.

- Side gear-to-pinion mate gear backlash

Measure clearance between side gear thrust washer and differential case with a feeler gauge.

Clearance between side gear thrust washer and differential case:

Less than 0.15 mm (0.0059 in)

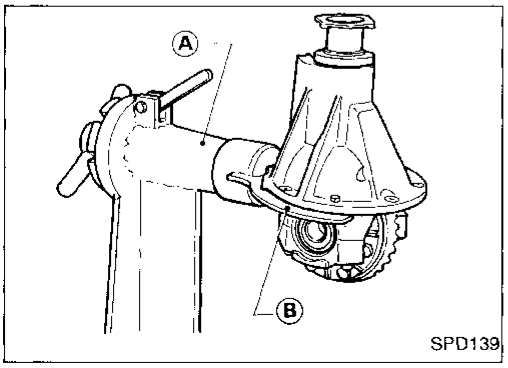

Differential Carrier

1. Mount differential carrier on Tools.

Tool numbers:

Ⓐ ST0501S000 (—)

Ⓑ ST06310000 (J25602-01)

Simpo PDF Merge and Split Unregistered Version - http://www.simpopdf.com

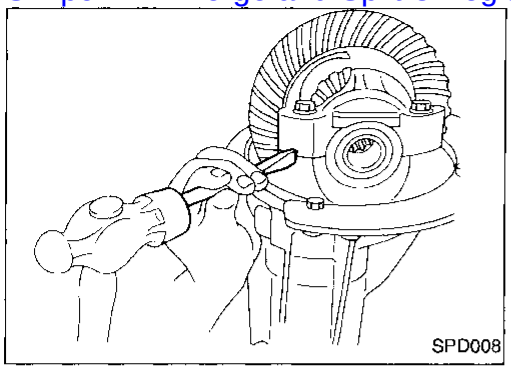
SPD008

2. Put match marks on one side of side bearing cap with paint or punch to ensure that it is replaced in proper position during reassembly.

Bearing caps are line-bored during manufacture and should be put back in their original places.

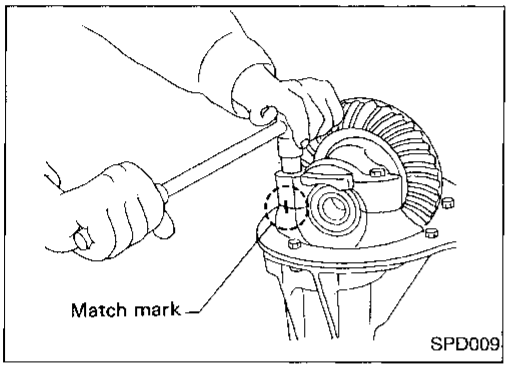

SPD009

3. Remove side bearing caps.

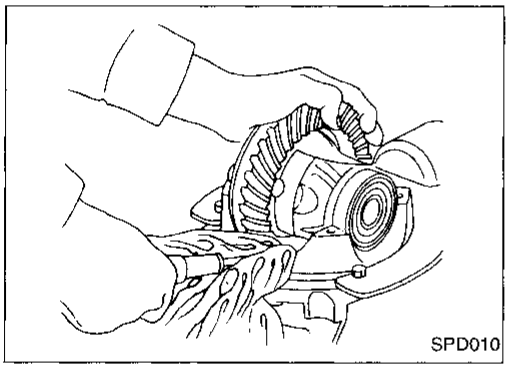
SPD010

4. Remove differential case assembly with a pry bar.

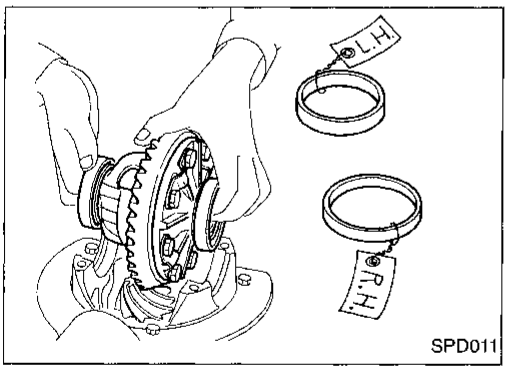

SPD011

Keep the side bearing outer races together with their respective inner cones — do not mix them up.

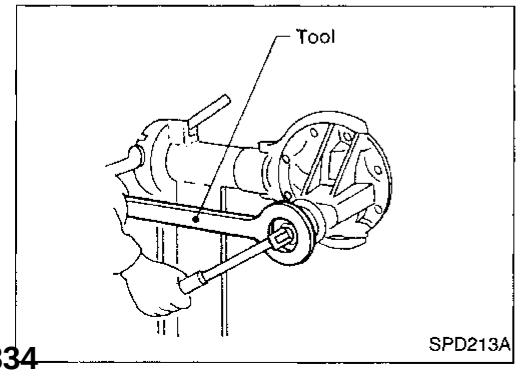

SPD213A

5. Remove drive pinion nut with Tool.
   Tool number: ST38060002 (J34311)
6. Remove companion flange with puller.

Differential Carrier (Cont'd)

Simpo PDF Merge and Split Unregistered Version - http://www.simpopdf.com

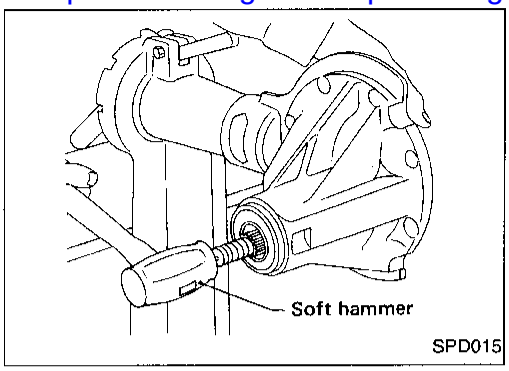

7. Remove drive pinion with soft hammer.
8. Remove oil seal.

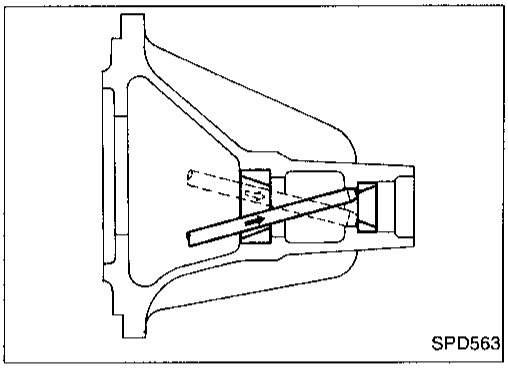

9. Remove pinion bearing outer races with a brass drift.

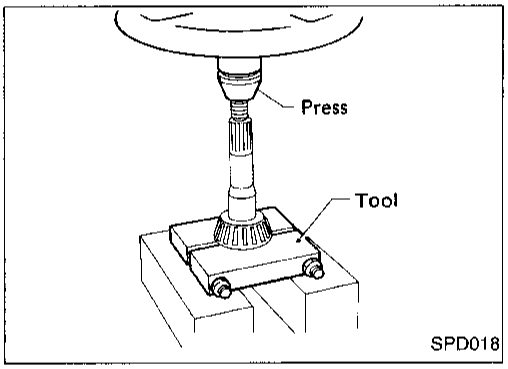

10. Pull out rear bearing inner cone with a press and Tool.
    Tool number: ST30031000 (J22912-01)

Differential Case

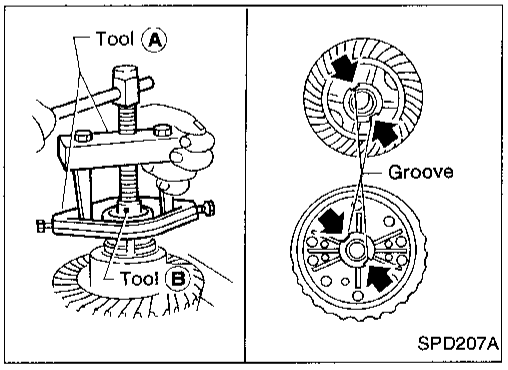

1. Remove side bearing inner cones.

To prevent damage to bearing, engage puller jaws in groove.
Tool numbers:
(A) ST33051001 (J22888-20)
(B) ST33061000 (J8107-2)

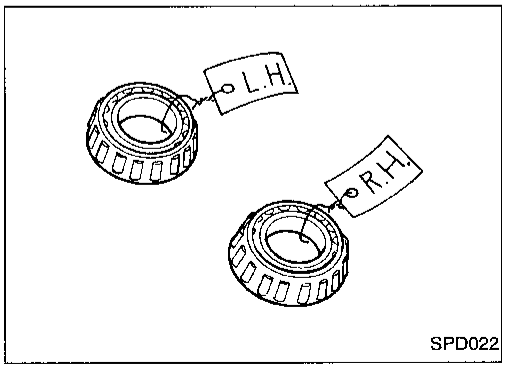

Be careful not to confuse the left and right hand parts.

Differential Case (Cont'd)

Simpo PDF Merge and Split Unregistered Version - http://www.simpopdf.com

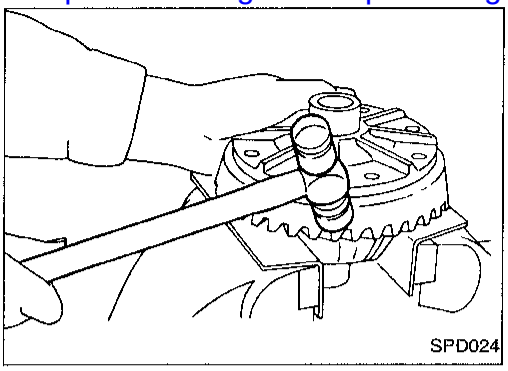
SPD024

2. Spread out lock straps and loosen ring gear bolts in a criss-cross fashion.
3. Tap ring gear off differential case with a soft hammer.

Tap evenly all around to keep ring gear from binding.

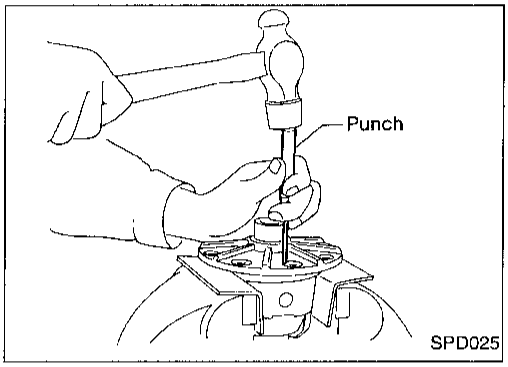

SPD025

4. Drive out pinion mate shaft lock pin, with Tool from ring gear side.

Lock pin is calked at pin hole mouth on differential case.

Simpo PDF Merge and Split Unregistered Version - http://www.simpopdf.com

Ring Gear and Drive Pinion

Check gear teeth for scoring, cracking or chipping.
If any damaged part is evident, replace ring gear and drive pinion as a set (hypoid gear set).

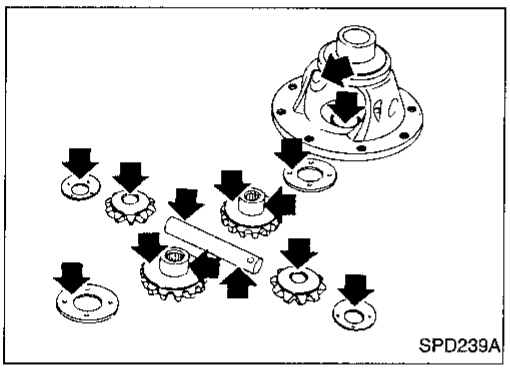
SPD239A

Differential Case Assembly

Check mating surfaces of differential case, side gears, pinion mate gears, pinion mate shaft, and thrust washers.

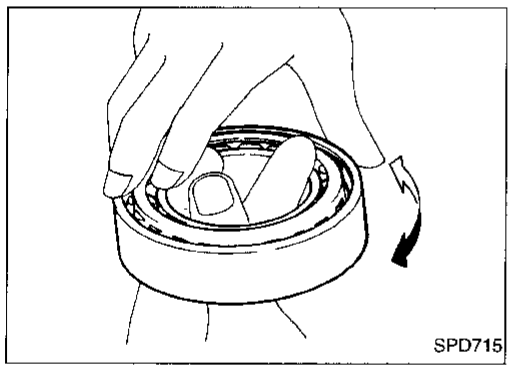
SPD715

Bearing

1. Thoroughly clean bearing.
2. Check bearings for wear, scratches, pitting or flaking.
   Check tapered roller bearing for smooth rotation. If damaged, replace outer race and inner cone as a set.

Simpo PDF Merge and Split Unregistered Version - http://www.simpopdf.com

For quiet and reliable final drive operation, the following five adjustments must be made correctly:

1. Side bearing preload
2. Pinion gear height
3. Pinion bearing preload. Refer to "ASSEMBLY", PD-49.
4. Ring gear-to-pinion backlash. Refer to "ASSEMBLY", PD-49.
5. Ring and pinion gear tooth contact pattern

Side Bearing Preload

A selection of carrier side bearing preload shims is required for successful completion of this procedure.

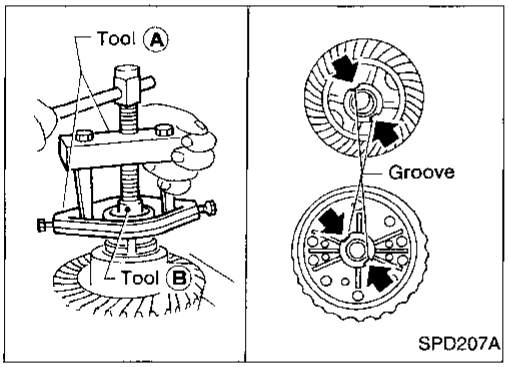

1. Make sure all parts are clean and that the bearings are well lubricated with light oil or type "DEXRON™" automatic transmission fluid.
2. Remove side bearing inner cones.

To prevent damage to bearing, engage puller jaws in grooves.

Tool numbers:

(A) ST33051001 (J22888-20)
(B) ST33061000 (J8107-2)

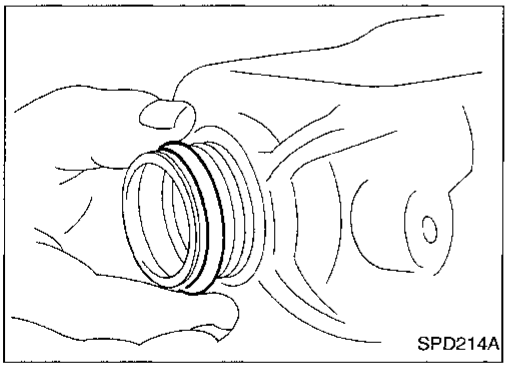

3. Reinstall all of the original side bearing adjusting shims on the carrier side, away from the ring gear.

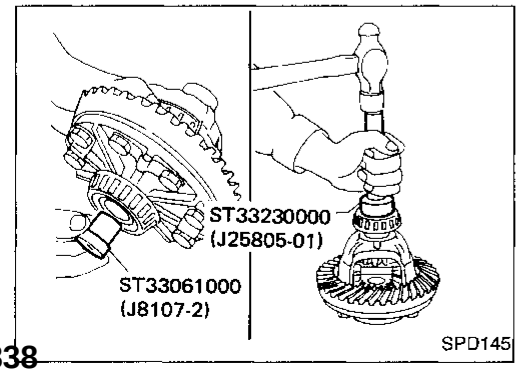

4. Reinstall the carrier side bearing using Tools J25805-01 and J8107-2. Press on the bearings.

Simpo PDF Merge and Split Unregistered Version - http://www.simpopdf.com

Side Bearing Preload (Cont'd)

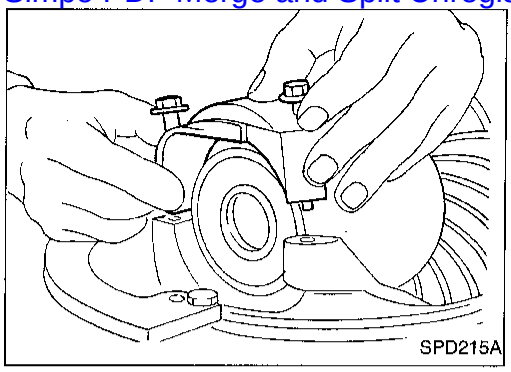
SPD215A

5. Install carrier and bearings into the final drive housing. Install side bearing caps. Torque the bolts and tap on the caps with a soft hammer to seat the bearings.
   Side bearing cap bolt torque specification:
   49 - 59 N·m (5 - 6 kg-m, 36 - 43 ft-lb)

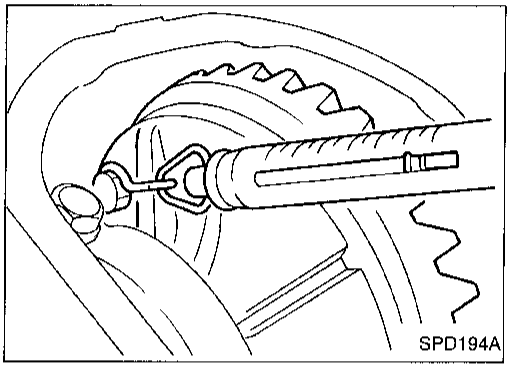
SPD194A

6. After turning the carrier several times to seat the bearings, measure carrier turning force with spring gauge J8129.
   Turning force specification:
   34.3 - 39.2 N (3.5 - 4.0 kg, 7.7 - 8.8 lb)
   of pulling force at the ring gear bolt

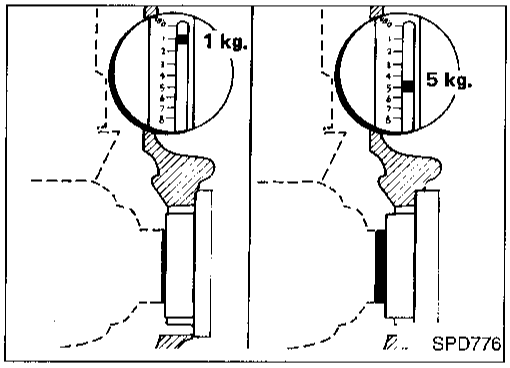

SPD776

7. If necessary, correct the carrier bearing preload by adding to or subtracting from the total amount of shim thickness.
   Add shim thickness to increase turning force on the carrier.
   Subtract shim thickness to decrease turning force on the carrier.

Pinion Gear Height

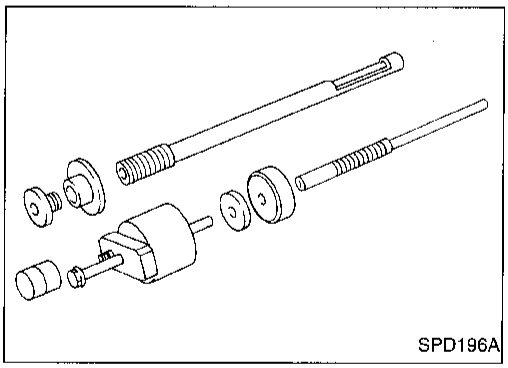
SPD196A

1. Make sure all parts are clean and that the bearings are well lubricated.
2. Assemble the pinion gear bearings into the pinion pre-load shim selector Tool, J34309.

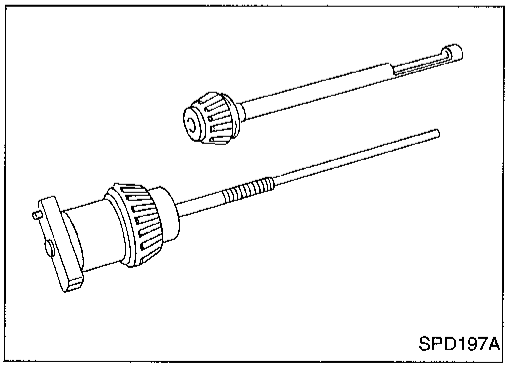
SPD197A

- **Front Pinion Bearing** — make sure the J34309-3 front pinion bearing is secured tightly against the J34309-2 gauge anvil. Then turn the front pinion bearing pilot J34309-5 to secure the bearing in its proper position.
- **Rear Pinion Bearing** — the rear pinion bearing pilot, J34309-15, is used to center the rear pinion bearing only. The rear pinion bearing locking seat, J34309-4 is used to lock the bearing to the assembly.

Pinion Gear Height (Cont'd)

Simpo PDF Merge and Split Unregistered Version - http://www.simpopdf.com

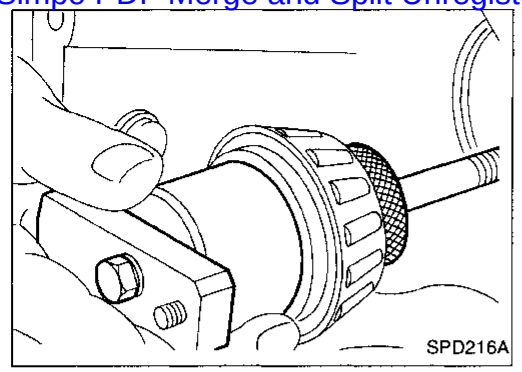
SPD216A

3. Place the pinion pre-load shim selector Tool J34309-1 gauge screw assembly with the pinion rear bearing inner cone installed into the final drive housing.

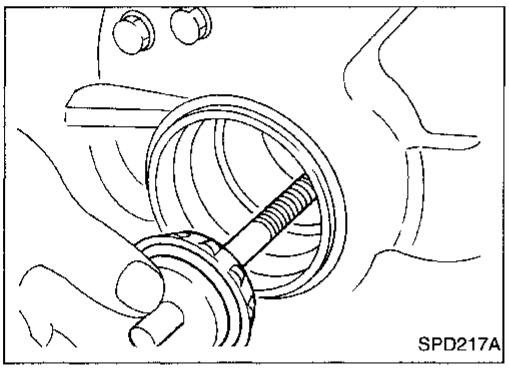
SPD217A

4. Assemble the front pinion bearing inner cone and the J34309-2 gauge anvil together with the J34309-1 gauge screw in the final drive housing. Make sure that the pinion height gauge plate, J34309-16, will turn a full 360 degrees, and tighten the two sections together by hand.

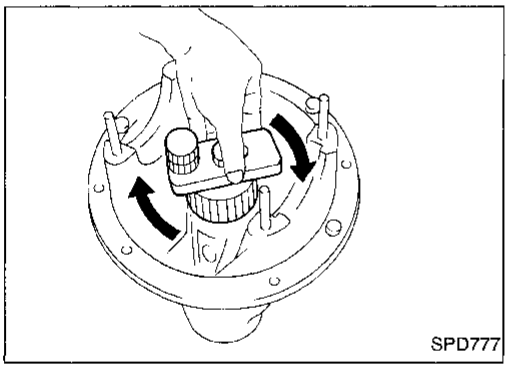
SPD777

5. Turn the assembly several times to seat the bearings.

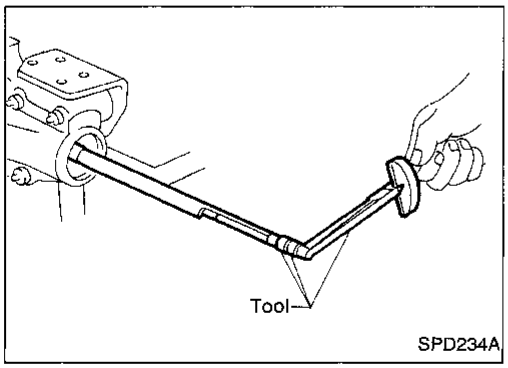

SPD234A

6. Measure the turning torque at the end of the J34309-2 gauge anvil using Tool.
   Tool number: ST3127S000 (J25765-A)
   Turning torque specification:
   1.0 - 1.3 N·m
   (10 - 13 kg-cm, 8.7 - 11.3 in-lb)

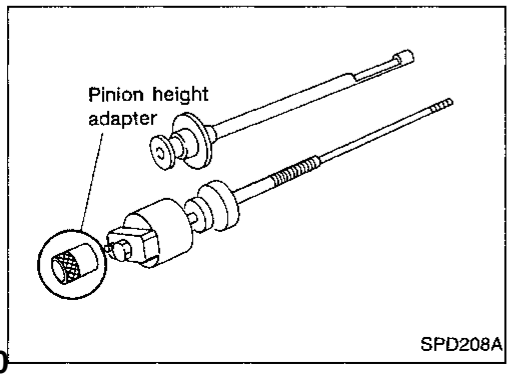

SPD208A

7. Place the J34309-14 pinion height adapter onto the gauge plate and tighten it by hand.

CAUTION:
Make sure all machined surfaces are clean.

Simpo PDF Merge and Split Unregistered Version - http://www.simpopdf.com

Pinion Gear Height (Cont'd)

PINION HEIGHT ADJUSTING WASHER SELECTION

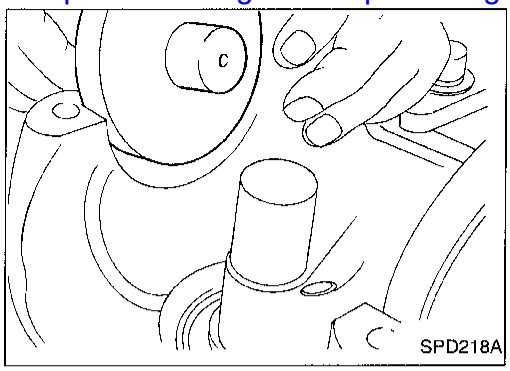

8. Now, position the side bearing discs, J25269-18, and arbor firmly into the side bearing bores.

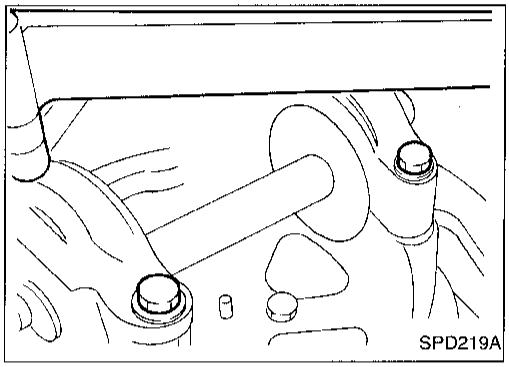

9. Install the side bearing caps and torque the cap bolts.
   Specification:
   49 - 59 N·m (5 - 6 kg-m, 36 - 43 ft-lb)

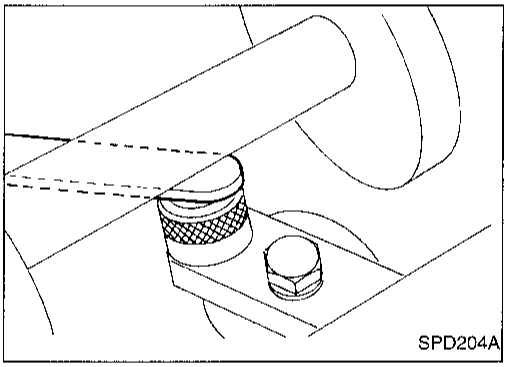

10. Select the correct standard pinion height adjusting washer thickness by using J34309-101 feeler gauge. Measure the gap between the J34309-14 pinion height adapter and the arbor.

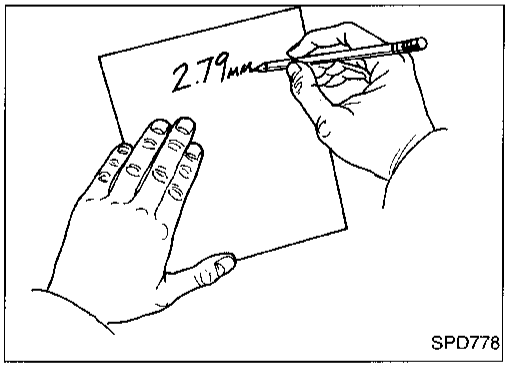

11. Write down your exact total measurement.

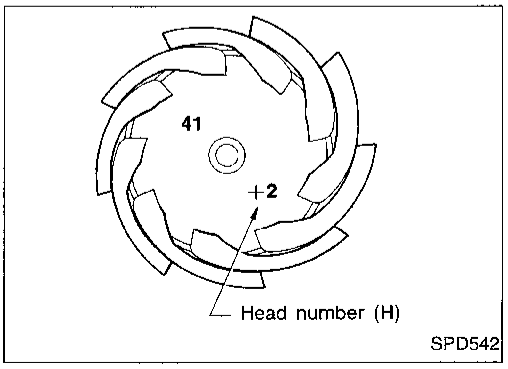

12. Correct the pinion height washer size by referring to the "pinion head number".

There are two numbers painted on the pinion gear. The first one refers to the pinion and ring gear as a matched set and should be the same as the number on the ring gear. The second number is the "pinion head height number," and it refers to the ideal pinion height from standard for quietest operation.

Pinion Gear Height (Cont'd)

Simpo PDF Merge and Split Unregistered Version - http://www.simpopdf.com

Use the following chart to determine the correct pinion height washer.

Pinion Head Height Number	Add or Remove from the Standard Pinion Height Washer Thickness Measurement
–6	Add 0.06 mm (0.0024 in)
–5	Add 0.05 mm (0.0020 in)
–4	Add 0.04 mm (0.0016 in)
–3	Add 0.03 mm (0.0012 in)
–2	Add 0.02 mm (0.0008 in)
–1	Add 0.01 mm (0.0004 in)
0	Use the selected washer thickness
+1	Subtract 0.01 mm (0.0004 in)
+2	Subtract 0.02 mm (0.0008 in)
+3	Subtract 0.03 mm (0.0012 in)
+4	Subtract 0.04 mm (0.0016 in)
+5	Subtract 0.05 mm (0.0020 in)
+6	Subtract 0.06 mm (0.0024 in)

13. Select the correct pinion height washer.
    Drive pinion height adjusting washer:
    Refer to SDS, PD-72.

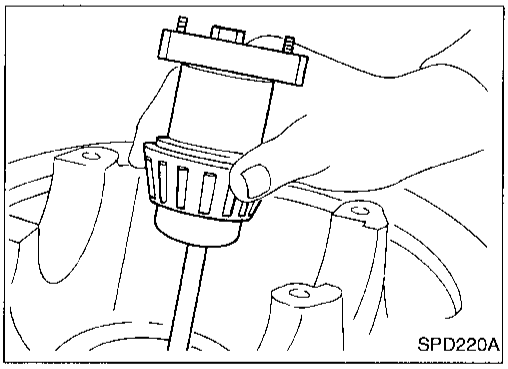

14. Remove the J34309 pinion preload shim selector Tool from the final drive housing and disassemble to retrieve the pinion bearings.

Simpo PDF Merge and Split Unregistered Version - http://www.simpopdf.com

Tooth Contact

Checking of gear tooth contact pattern is necessary to verify correct relationship between ring gear and drive pinion.
Hypoid gear sets which are not positioned properly may be noisy, or have short life, or both. With a pattern check, the most desirable contact for low noise level and long life can be assured.

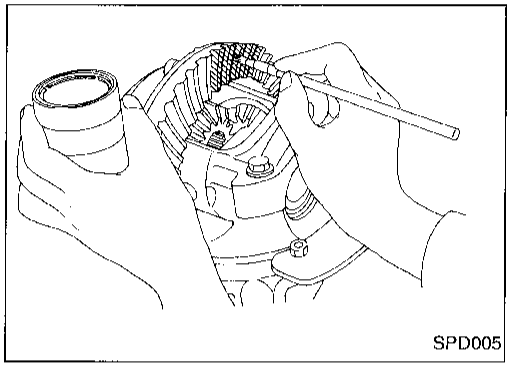
SPD005

1. Thoroughly clean ring gear and drive pinion teeth.
2. Sparingly apply a mixture of powdered ferric oxide and oil or equivalent to 3 or 4 teeth of ring gear drive side.

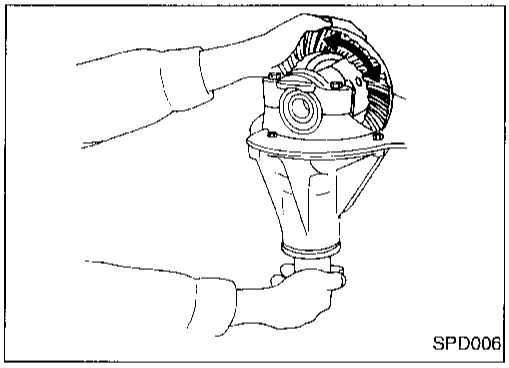
SPD006

3. Hold companion flange steady and rotate the ring gear in both directions.

Usually the pattern will be correct if shims are correctly calculated and the backlash is correct.
However, in rare cases, trial and error processes may be employed to obtain a correct pattern.
The tooth pattern is the best indication of how well a differential has been set up.

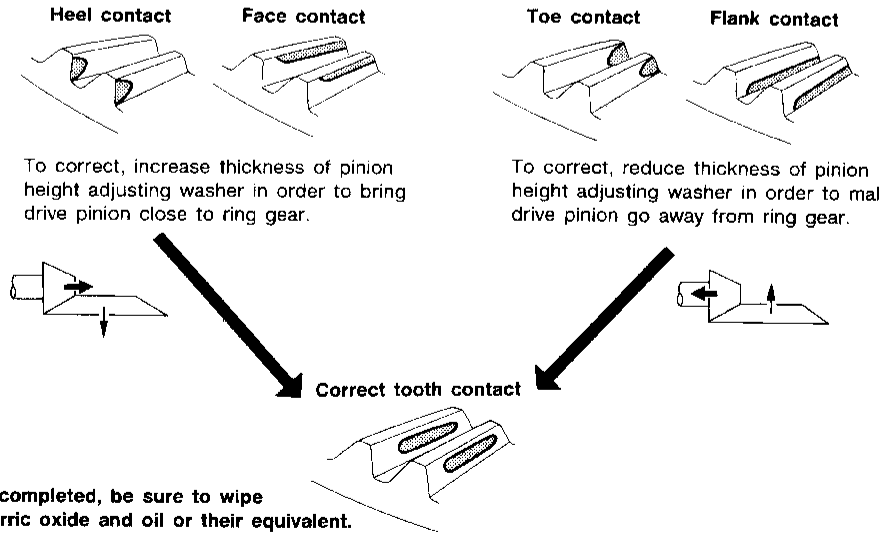

When adjustment is completed, be sure to wipe off completely the ferric oxide and oil or their equivalent.

APD018

Simpo PDF Merge and Split Unregistered Version - http://www.simpopdf.com

Differential Case

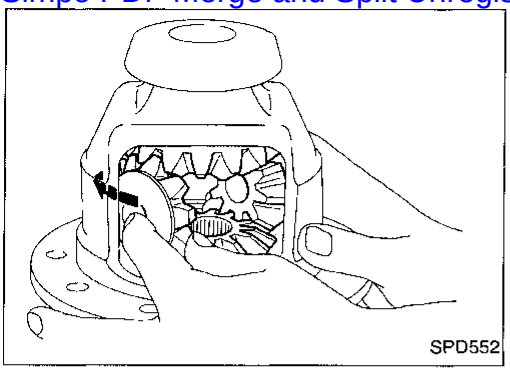

1. Install side gears, pinion mate gears and thrust washers into differential case.

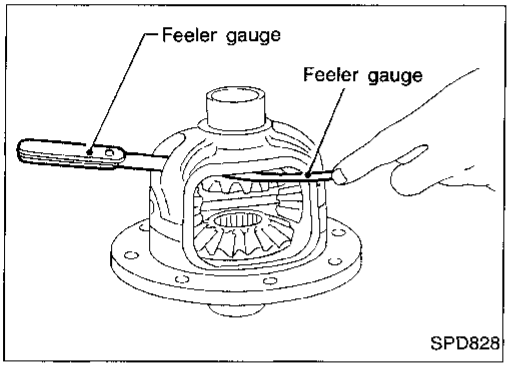

2. Fit pinion mate shaft to differential case so that it meets lock pin holes.
3. Adjust backlash between side gear and pinion mate gear by selecting side gear thrust washer. Refer to SDS, PD-72.

Backlash between side gear and pinion mate gear (Clearance between side gear thrust washer and differential case):

Less than 0.15 mm (0.0059 in)

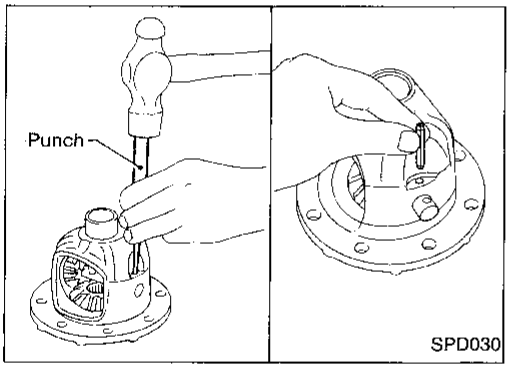

4. Install pinion mate shaft lock pin with a punch.

Make sure lock pin is flush with case.

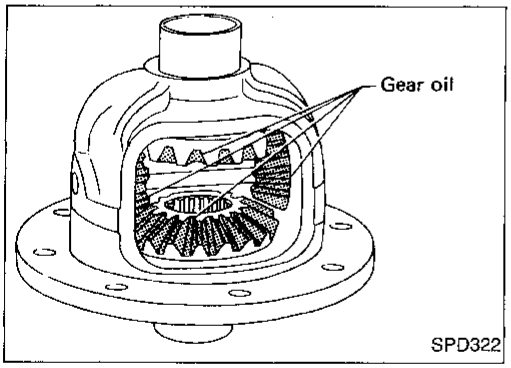

5. Apply gear oil to gear tooth surfaces and thrust surfaces and check to see they turn properly.

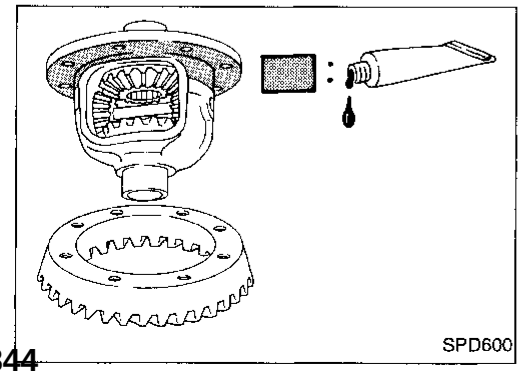

6. Apply locking agent [Locktite (stud lock) or equivalent] to contacting surfaces of ring gear and differential case, then place differential case on ring gear.

Simpo PDF Merge and Split Unregistered Version - http://www.simpopdf.com

Differential Case (Cont'd)

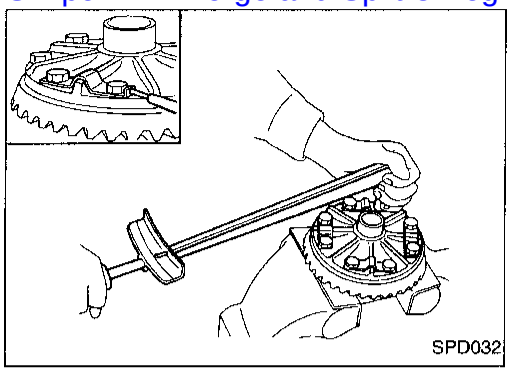

7. Apply a small amount of locking agent (described on previous page) to ring gear bolts.
8. Install new lock straps and ring gear bolts.
   - **Tighten bolts in a criss-cross fashion, lightly tapping bolt head with a hammer.**
   - **Then bend up lock straps to lock the bolts in place.**

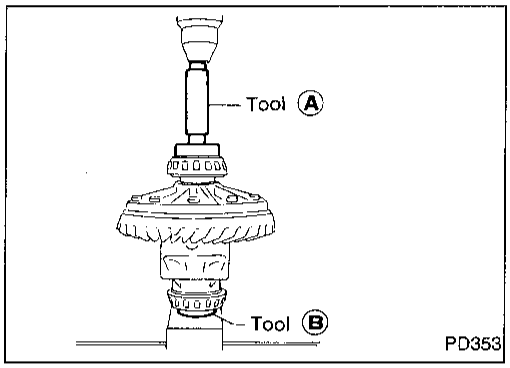

9. Select side bearing adjusting shims.
   Refer to "ADJUSTMENT", PD-40.
10. Install the shims behind each bearing and press on side bearing inner cones with Tools.
    Tool numbers:
    Ⓐ ST33230000 (J25805-01)
    Ⓑ ST33061000 (J8107-2)

Differential Carrier

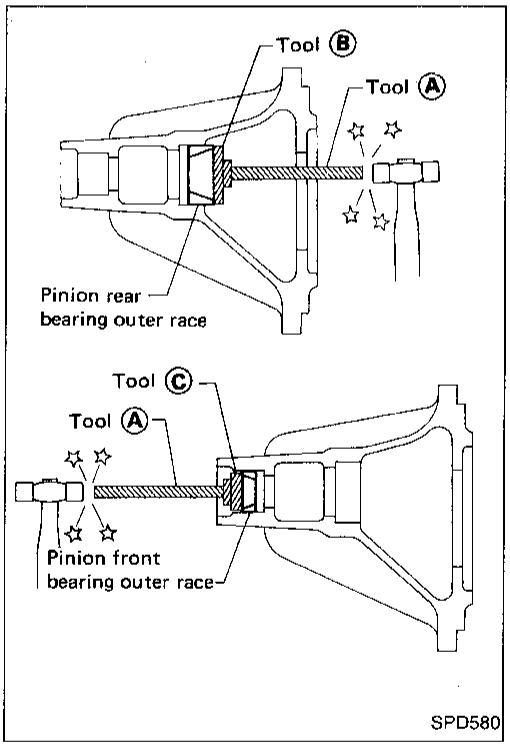

1. Press-fit front and rear bearing outer races with Tools.
   Tool numbers:
   Ⓐ ST30611000 (J25742-1)
   Ⓑ ST30621000 (J25742-5)
   Ⓒ ST30613000 (J25742-3)

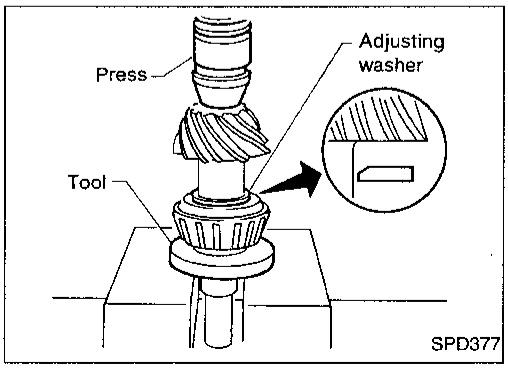

2. Select pinion height adjusting washer. Refer to "ADJUSTMENT", PD-41.
3. Install pinion height adjusting washer in drive pinion, and press-fit rear bearing inner cone with press and Tool.
   Tool number: ST30901000 (J26010-01)

Differential Carrier (Cont'd)

Simpo PDF Merge and Split Unregistered Version - http://www.simpopdf.com

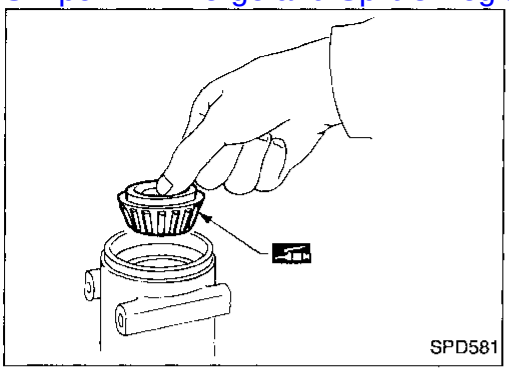
SPD581

4. Place pinion front bearing inner cone in gear carrier.

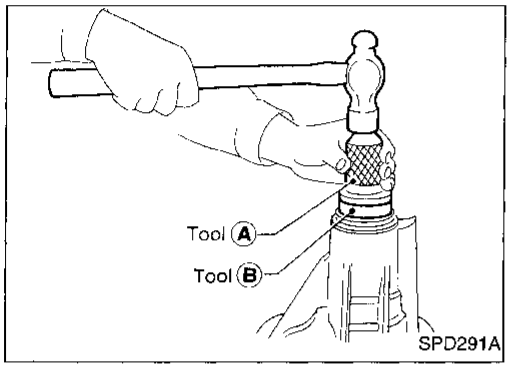

SPD291A

5. Apply multi-purpose grease to cavity at sealing lips of oil seal. Install front oil seal.
   Tool numbers:
   (A) ST30720000 (J25405)
   (B) KV38102510 (—)

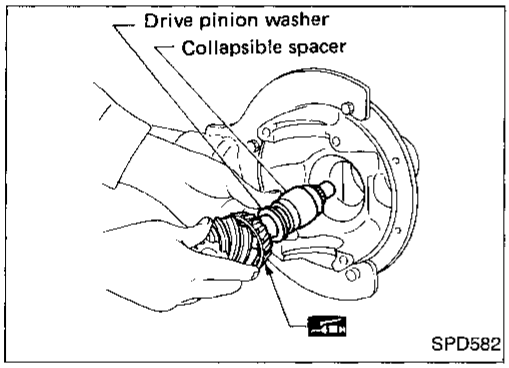

SPD582

6. Install drive pinion washer, collapsible spacer and drive pinion in gear carrier.

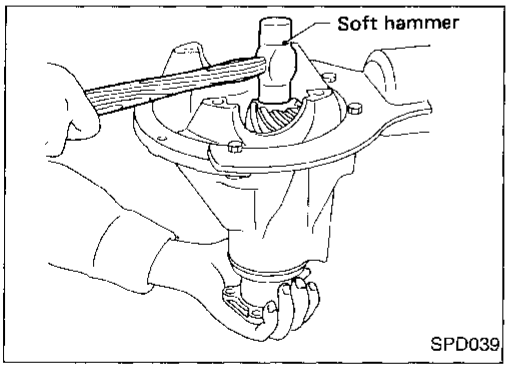

SPD039

7. Install companion flange and hold it firmly. Insert pinion into companion flange by tapping its head with a soft hammer.

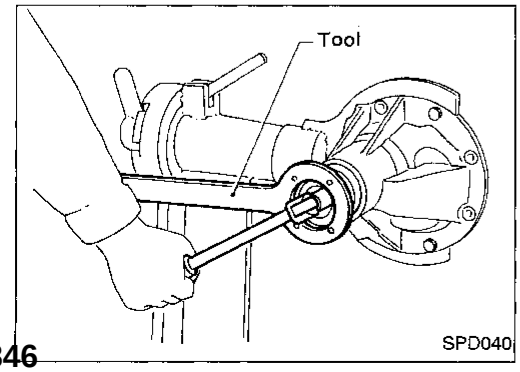

SPD040

8. Temporarily tighten pinion nut until there is no axial play.

The threaded portion of drive pinion and pinion nut should be free from oil or grease.

Tool number: ST38060002 (J34311)

Differential Carrier (Cont'd)

Simpo PDF Merge and Split Unregistered Version - http://www.simpopdf.com

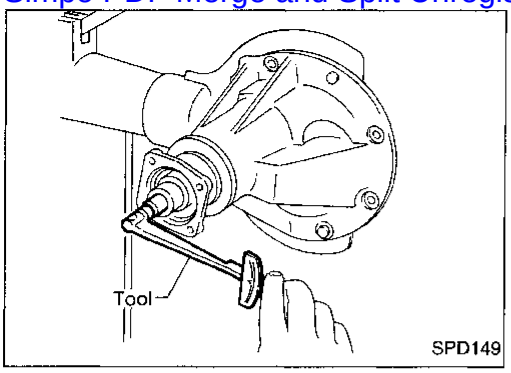

9. Tighten pinion nut by degrees to the specified preload while checking the preload with Tools.

When checking preload, turn drive pinion in both directions several times to seat bearing rollers correctly.

Pinion bearing preload:
1.1 - 1.6 N·m (11 - 16 kg-cm, 9.5 - 13.9 in-lb)
Tool number: ST3127S000 (J25765-A)

CAUTION:
The preload is achieved by the permanent setting of the collapsible spacer. So, if an overpreload results from turning of the pinion nut excessively, the spacer should be replaced by new one.

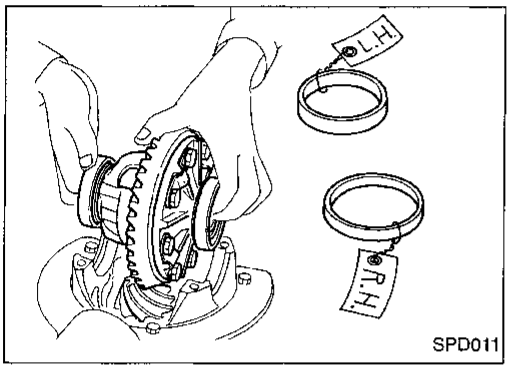

10. Install differential case assembly with side bearing outer races into gear carrier.

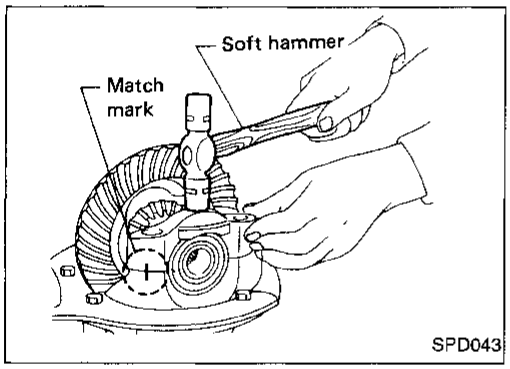

11. Align mark on bearing cap with that on gear carrier and install bearing cap on gear carrier.

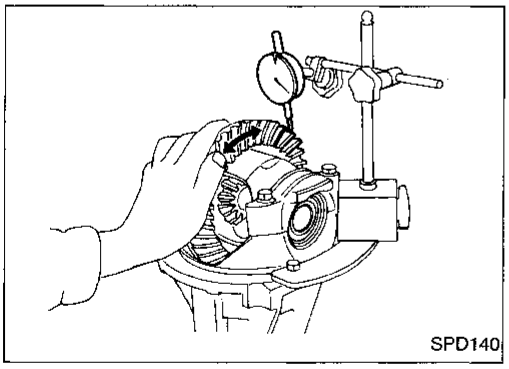

12. Measure ring gear-to-drive pinion backlash with a dial indicator.

Ring gear-to-drive pinion backlash:
0.13 - 0.18 mm (0.0051 - 0.0071 in)

- If backlash is too small, decrease thickness of left shim and increase thickness of right shim by the same amount.
- If backlash is too great, reverse the above procedure.

Never change the total amount of shims as it will change the bearing preload.

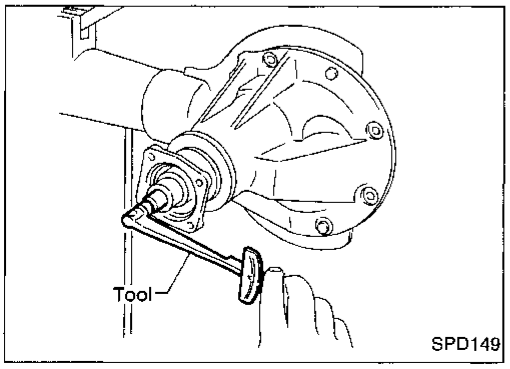

13. Check total preload with Tool.

When checking preload, turn drive pinion in both directions several times to set bearing rollers.

Tool number: ST3127S000 (J25765-A)
Total preload:
1.2 - 2.2 N·m (12 - 22 kg-cm, 10 - 19 in-lb)

Differential Carrier (Cont'd)

Simpo PDF Merge and Split Unregistered Version - http://www.simpopdf.com

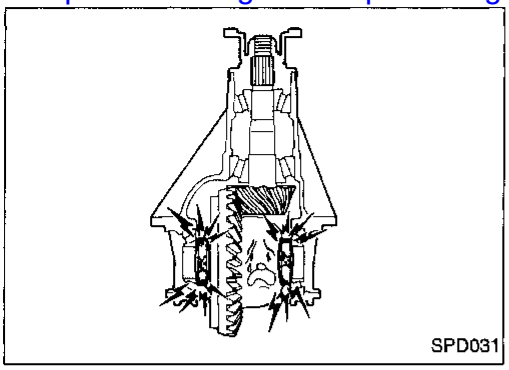
SPD031

- If preload is too great, remove the same amount of shims from each side.
- If preload is too small, add the same amount of shims to each side.

Never add or remove a different number of shims for each side as it will change ring gear-to-drive pinion backlash.

14. Recheck ring gear-to-drive pinion backlash because an increase or decrease in thickness of shims will cause change of ring gear-to-pinion backlash.

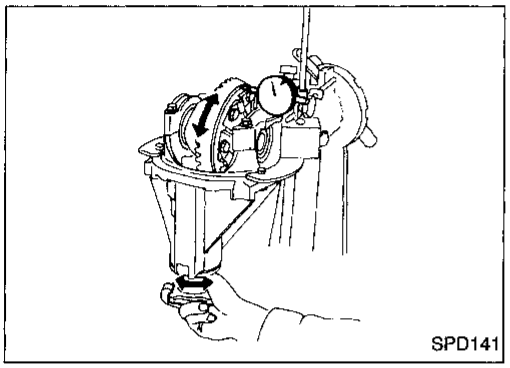
SPD141

15. Check runout of ring gear with a dial indicator.
    Runout limit: 0.08 mm (0.0031 in)

- If backlash varies excessively in different places, the variance may have resulted from foreign matter caught between the ring gear and the differential case.
- If the backlash varies greatly when the runout of the ring gear is within a specified range, the hypoid gear set or differential case should be replaced.

16. Check tooth contact.
    Refer to "ADJUSTMENT", PD-45.

Simpo PDF Merge and Split Unregistered Version - http://www.simpopdf.com

2WD models

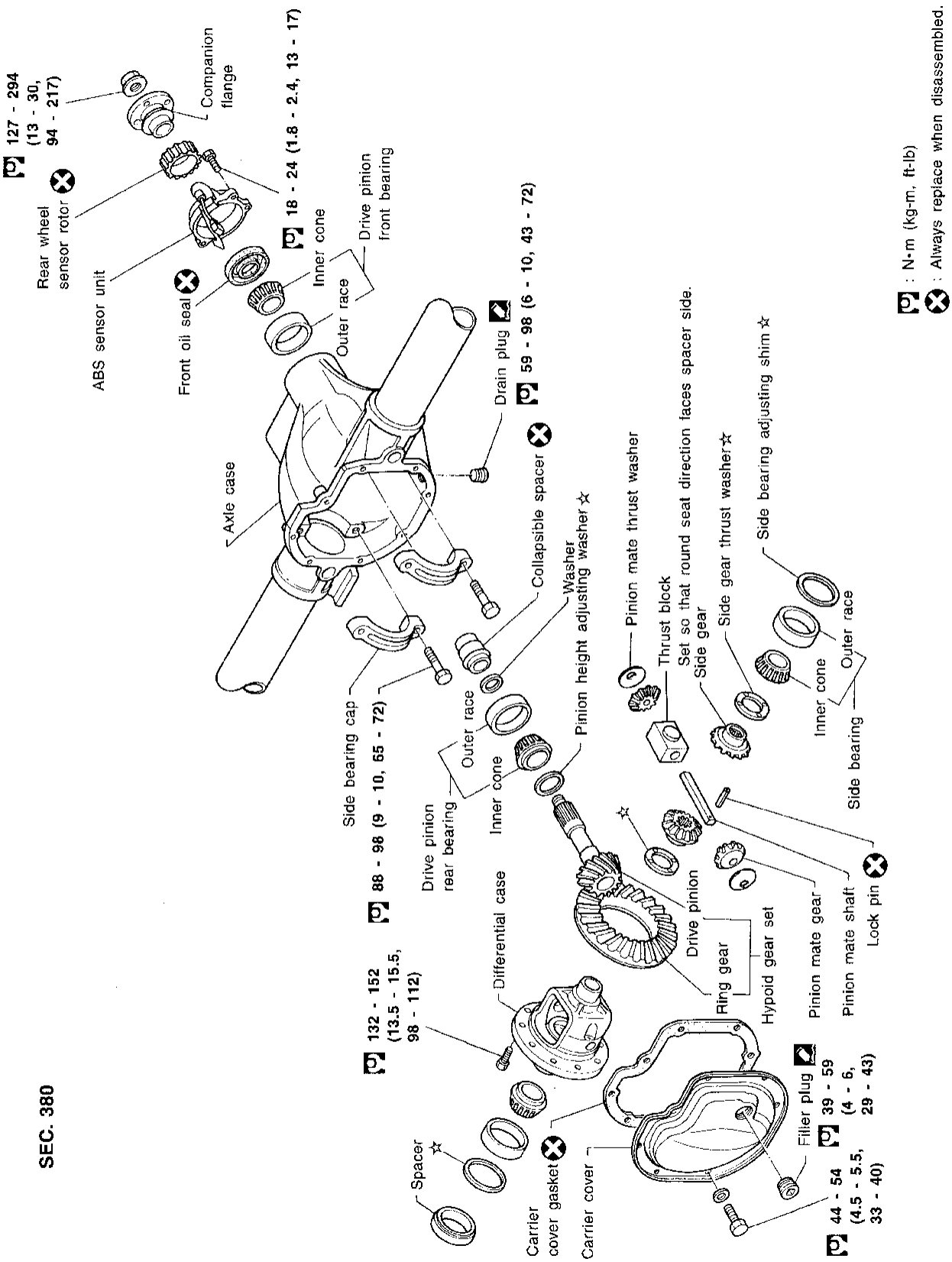

SEC. 380

Simpo PDF Merge and Split Unregistered Version - http://www.simpopdf.com

4WD models

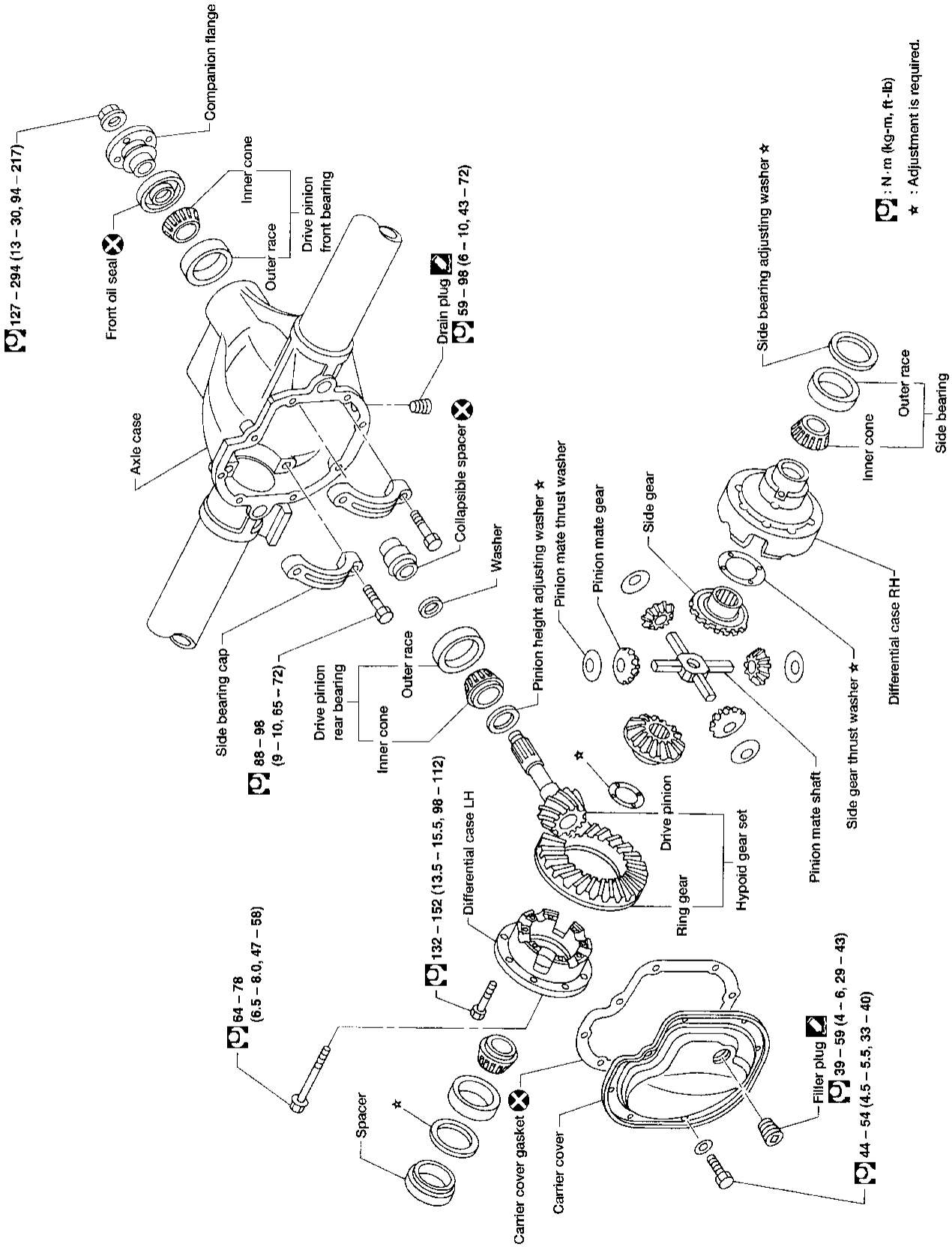

SEC.380

850

APD010

Simpo PDF Merge and Split Unregistered Version - http://www.simpopdf.com

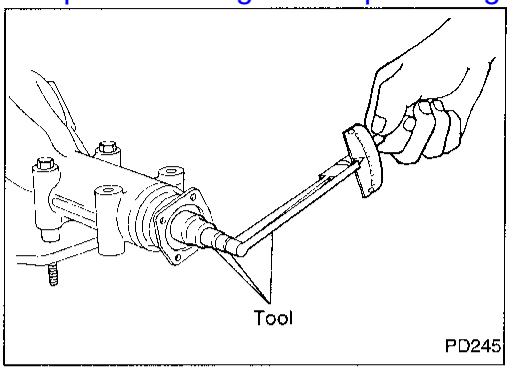

Pre-inspection

Before disassembling final drive, perform the following inspection.

- Total preload

a. Turn drive pinion in both directions several times to set bearing rollers.

b. Check total preload with Tool.

Tool number: ST3127S000 (J25765-A)

Total preload:

1.2 - 2.3 N·m

(12 - 23 kg-cm, 10 - 20 in-lb)

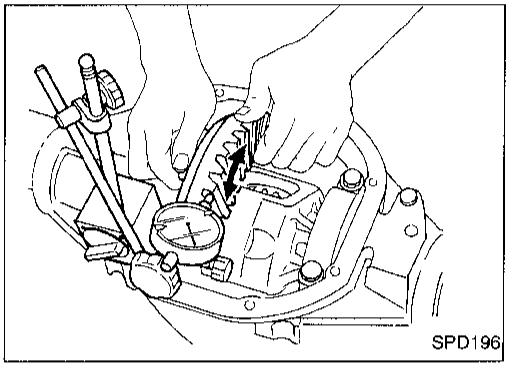

- Ring gear-to-drive pinion backlash.

Check backlash of ring gear with a dial indicator at several points.

Ring gear-to-drive pinion backlash:

0.13 - 0.18 mm (0.0051 - 0.0071 in)

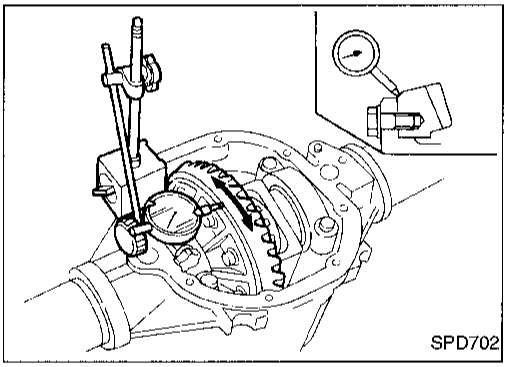

- Ring gear runout

Check runout of ring gear with a dial indicator.

Runout limit: 0.05 mm (0.0020 in)

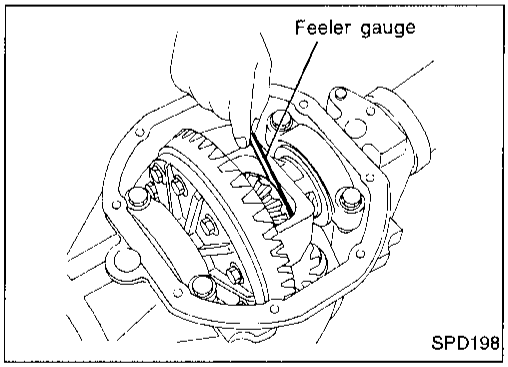

- Tooth contact

Check tooth contact. Refer to "ADJUSTMENT", PD-63.

- Side gear-to-pinion mate gear backlash

Measure clearance between side gear thrust washer and differential case with a feeler gauge.

Clearance between side gear thrust washer and differential case:

Less than 0.15 mm (0.0059 in)

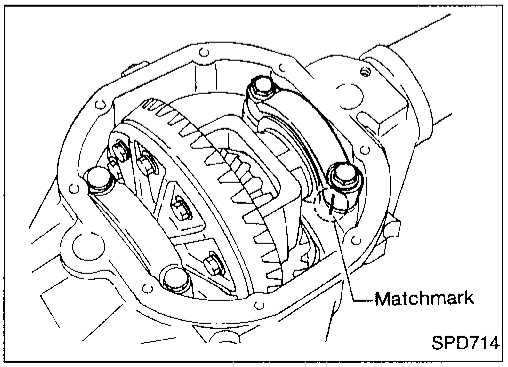

Differential Carrier

1. Remove rear cover and rear cover gasket.
2. Put match marks on one side of side bearing cap with paint or punch to ensure that it is replaced in proper position during reassembly.

Bearing caps are line-bored during manufacture and should be put back in their original places.

Differential Carrier (Cont'd)

Simpo PDF Merge and Split Unregistered Version - http://www.simpopdf.com

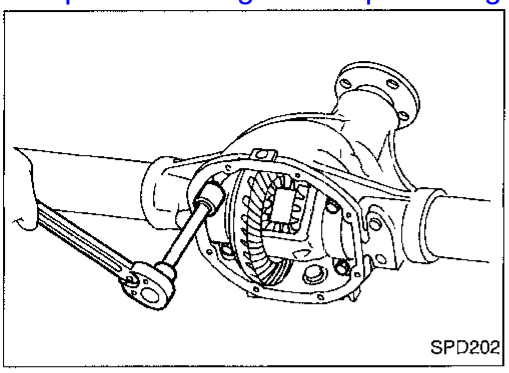
SPD202

3. Remove side bearing caps.

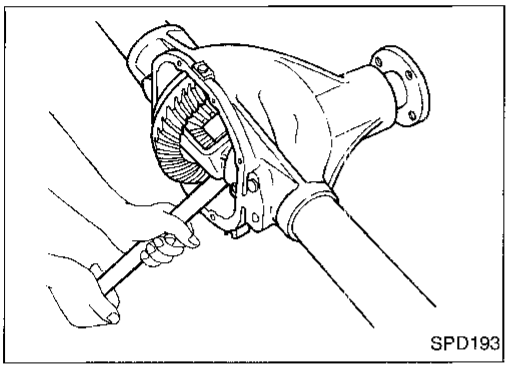
SPD193

4. Remove differential case assembly with pry bar.

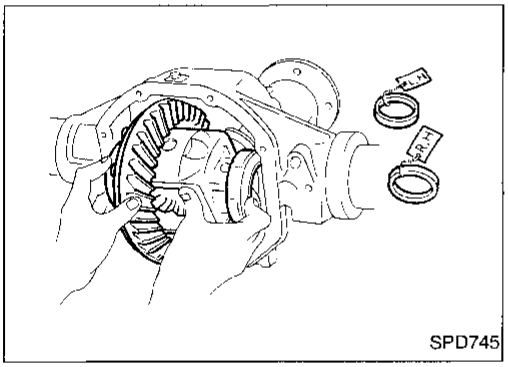

SPD745

Keep the side bearing outer races together with their respective inner cones — do not mix them up.

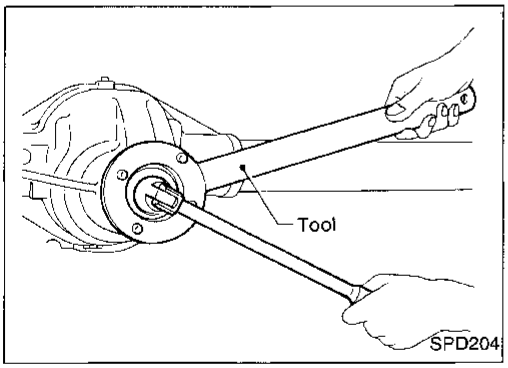

SPD204

5. Remove pinion nut with Tool.
   Tool number: ST38060002 (J34311)

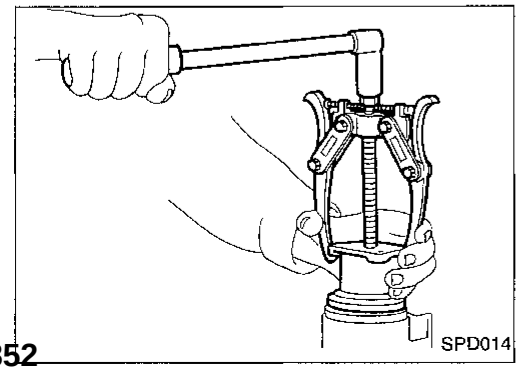
SPD014

6. Remove companion flange with puller.

Differential Carrier (Cont'd)

Simpo PDF Merge and Split Unregistered Version - http://www.simpopdf.com

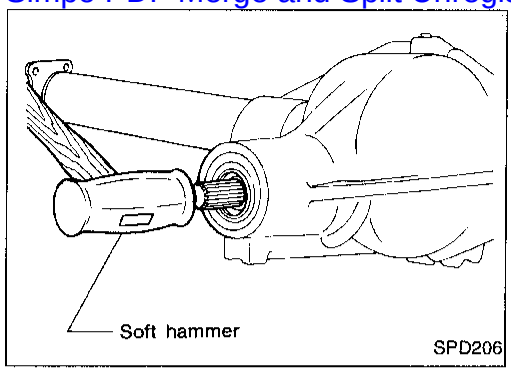

7. Remove drive pinion with soft hammer.
8. Remove front oil seal and pinion front bearing inner cone.

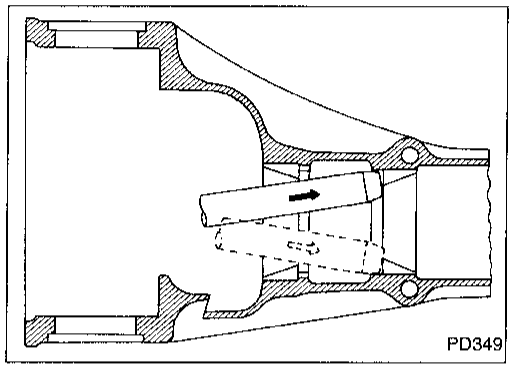

9. Remove pinion bearing outer races with a brass drift.

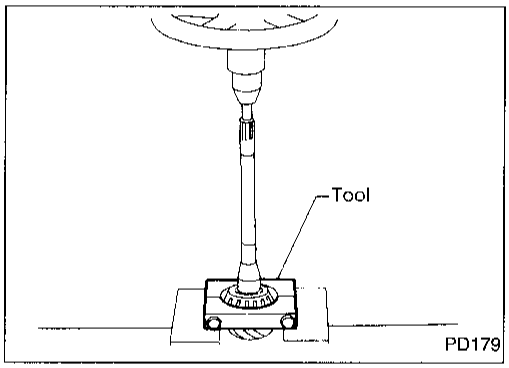

10. Remove pinion rear bearing inner cone and pinion height adjusting washer.
    Tool number: ST30031000 (J22912-01)

Differential Case

1. Remove side bearing inner cones.

To prevent damage to bearing, engage puller jaws in grooves.

Tool numbers:
Ⓐ ST33051001 (J22888-20)
Ⓑ ST33061000 (J8107-2)

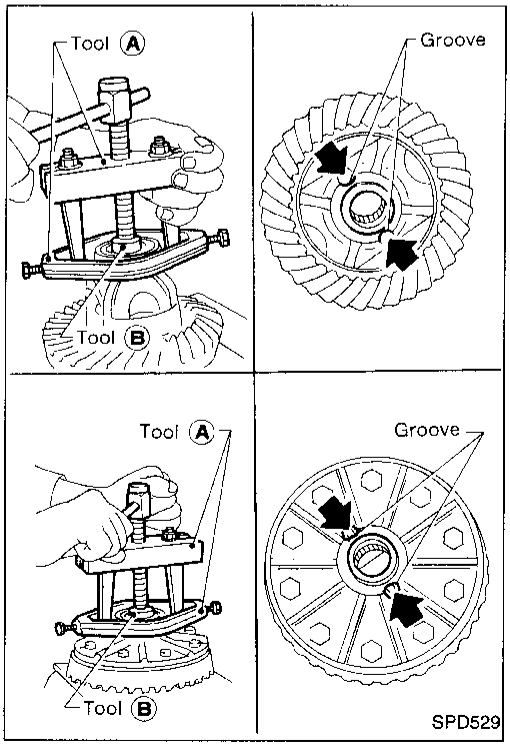

Differential Case (Cont'd)

Simpo PDF Merge and Split Unregistered Version - http://www.simpopdf.com

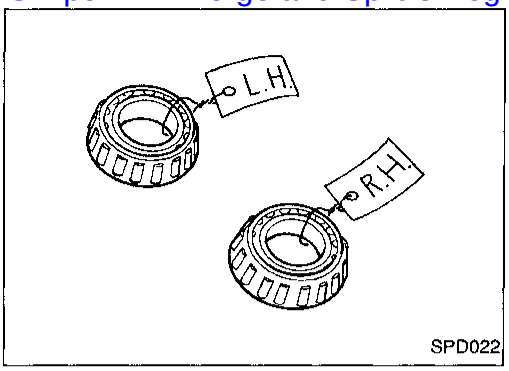

Be careful not to confuse the right and left hand parts.

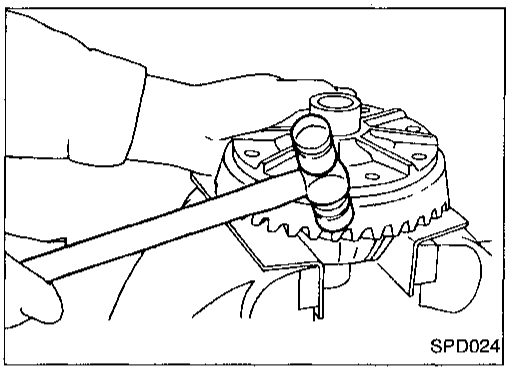

2. Loosen ring gear bolts in a criss-cross fashion.
3. Tap ring gear off the differential case with a soft hammer.

Tap evenly all around to keep ring gear from binding.

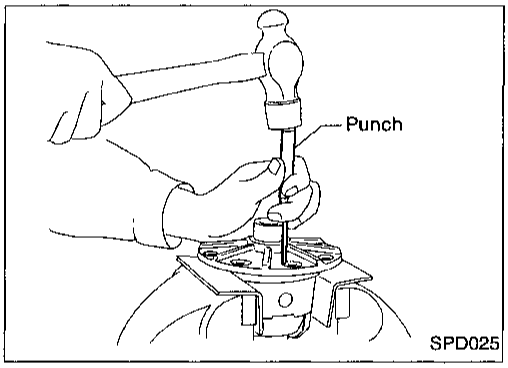

4. Punch off pinion mate shaft lock pin from ring gear side.

Lock pin is calked at pin hole mouth on differential case.

Simpo PDF Merge and Split Unregistered Version - http://www.simpopdf.com

Ring Gear and Drive Pinion

Check gear teeth for scoring, cracking or chipping. If any damaged part is evident, replace ring gear and drive pinion as a set (hypoid gear set).

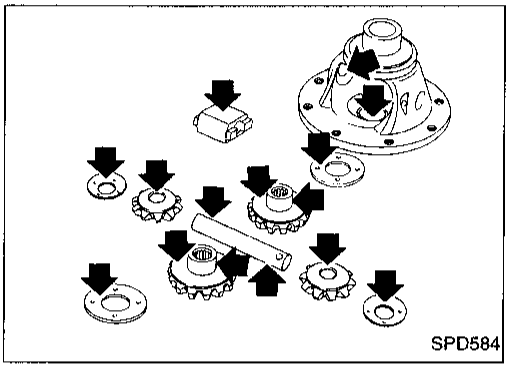
SPD584

Differential Case Assembly

Check mating surfaces of differential case, side gears, pinion mate gears, pinion mate shaft, thrust block and thrust washers.

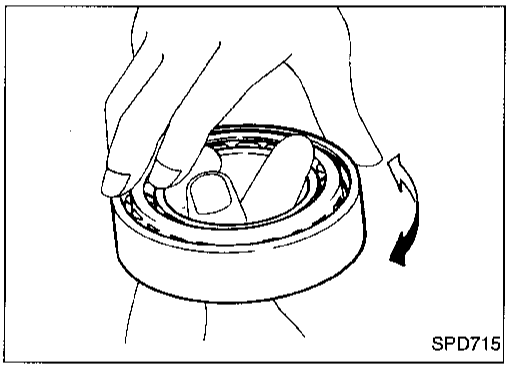
SPD715

Bearing

1. Thoroughly clean bearing.
2. Check bearings for wear, scratches, pitting or flaking. Check tapered roller bearing for smooth rotation. If damaged, replace outer race and inner cone as a set.

Simpo PDF Merge and Split Unregistered Version - http://www.simpopdf.com

For quiet and reliable final drive operation, the following five adjustments must be made correctly.

1. Side bearing preload
2. Pinion gear height
3. Pinion bearing preload. Refer to "ASSEMBLY", PD-66.
4. Ring gear-to-pinion backlash. Refer to "ASSEMBLY", PD-67.
5. Ring and pinion gear tooth contact pattern

Side Bearing Preload

A selection of carrier side bearing preload shims is required for successful completion of this procedure.

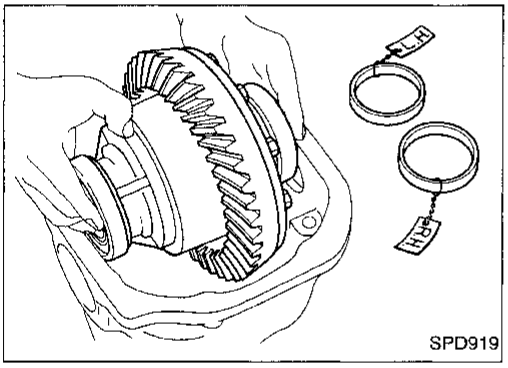

1. Make sure all parts are clean. Make sure, also, the bearings are well lubricated with light oil or type "DEXRON™" automatic transmission fluid.
2. Place the differential carrier, with side bearings and bearing races installed, into the final drive housing.

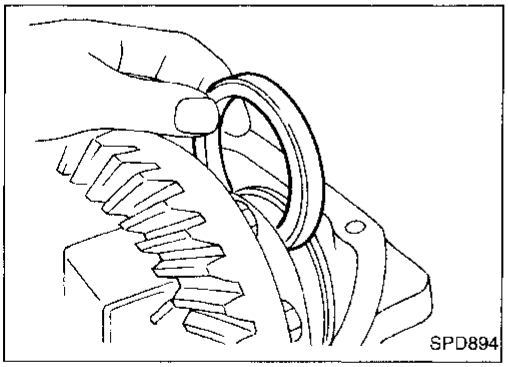

3. Put the side bearing spacer in place.

CAUTION:
Side bearing spacer is placed on either the right or left depending upon final drive gear ratio. Be sure to replace it on the correct side.

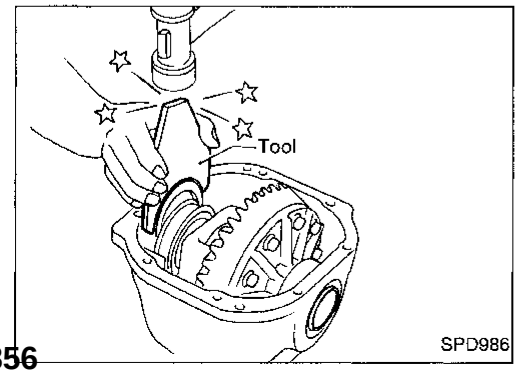

4. Use Tool to place original carrier side bearing preload shims on the carrier end, opposite the ring gear.
   Tool number: KV38100600 (J25267)

Side Bearing Preload (Cont'd)

Simpo PDF Merge and Split Unregistered Version - http://www.simpopdf.com

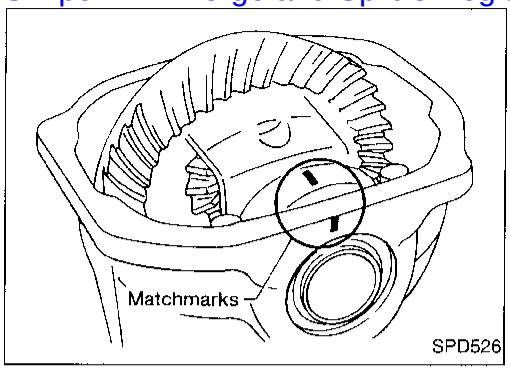

5. Install the side bearing caps in their correct locations and torque the bearing cap retaining bolts.
   Specification:
   88 - 98 N·m
   (9.0 - 10.0 kg-m, 65 - 72 ft-lb)
6. Turn the carrier several times to seat the bearings.

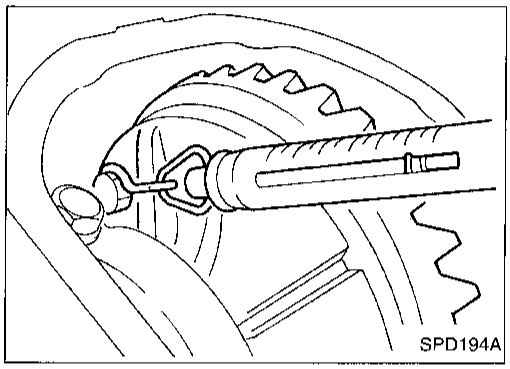

7. Measure the turning torque of the carrier at the ring gear retaining bolts with a spring gauge, J8129.
   Specification:
   34.3 - 39.2 N
   (3.5 - 4.0 kg, 7.7 - 8.8 lb)
   of pulling force at the ring gear bolt

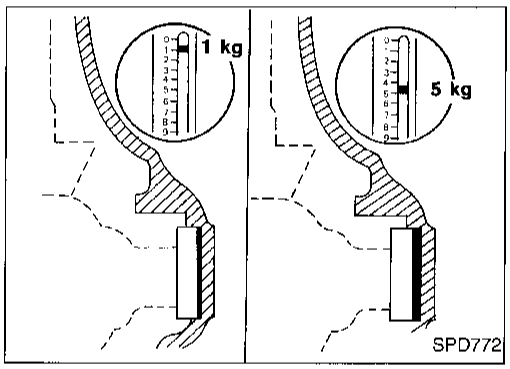

8. If the turning torque is not within the specifications, correct the torque as follows:
   - If the turning torque is less than the specified range, install washers of greater thickness.
   - If the turning torque is greater than the specification, install thinner washers.
   - See the SDS section for washer dimensions and part numbers.
9. Record the total amount of washer thickness required for the correct carrier side bearing preload.

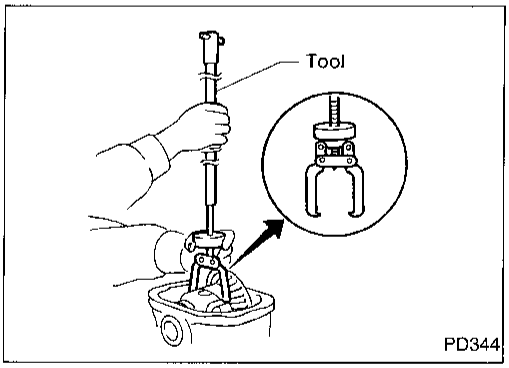

10. Remove the carrier from the final drive housing. Save the selected preload washers for later use during the assembly of the final drive unit.

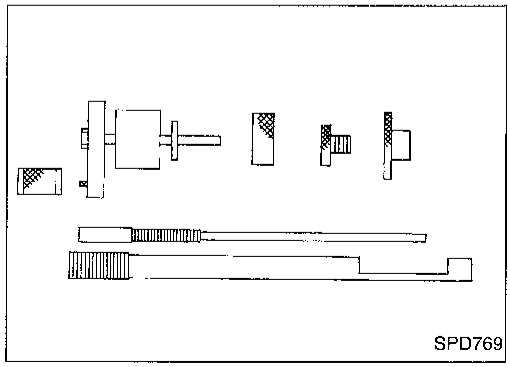

Pinion Gear Height

1. Make sure all parts are clean and that the bearings are well lubricated.
2. Assemble the pinion gear bearings into the pinion preload shim selector Tool, J34309.

Pinion Gear Height (Cont'd)

Simpo PDF Merge and Split Unregistered Version - http://www.simpopdf.com

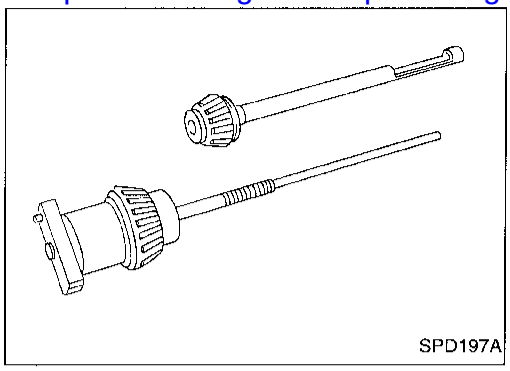
SPD197A

- **Front pinion bearing** — make sure the J34309-3 front pinion bearing seat is secured tightly against the J34309-2 gauge anvil. Then turn the front pinion bearing pilot, J34309-5, to secure the bearing in its proper position.
- **Rear pinion bearing** — the rear pinion bearing pilot, J34309-8, is used to center the rear pinion bearing only. The rear pinion bearing locking seat, J34309-4, is used to lock the bearing to the assembly.

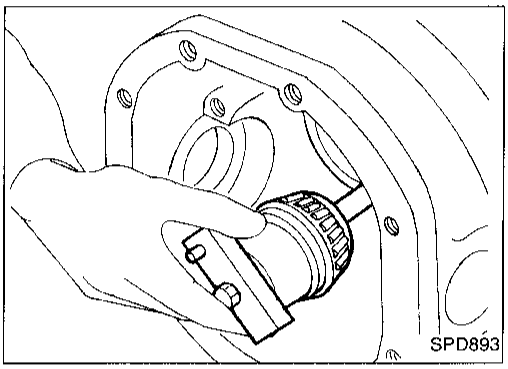
SPD893

3. Install the pinion rear bearing inner cone into the final drive housing. Then place the pinion preload shim selector Tool, J34309-1, gauge screw assembly.

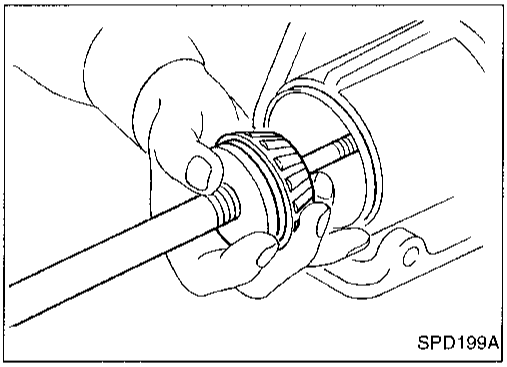
SPD199A

4. Assemble the front pinion bearing inner cone and the J34309-2 gauge anvil. Assemble them together with the J34309-1 gauge screw in the final drive housing. Make sure that the pinion height gauge plate, J34309-16, will turn a full 360 degrees. Tighten the two sections together by hand.

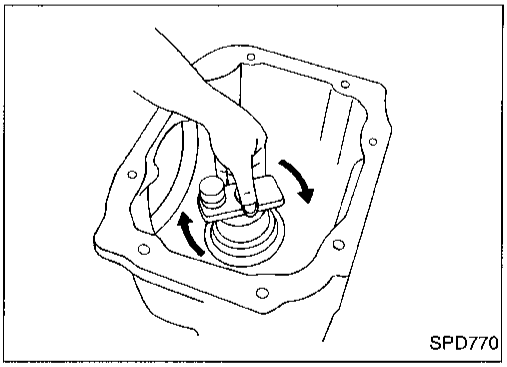
SPD770

5. Turn the assembly several times to seat the bearings.

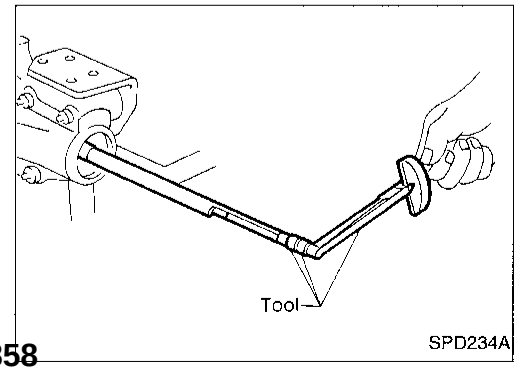

SPD234A

6. Measure the turning torque at the end of the J34309-2 gauge anvil using Tool.
   Tool number: ST3127S000 (J25765-A)
   Turning torque specification:
   1.0 - 1.3 N·m
   (10 - 13 kg-cm, 8.7 - 11.3 in-lb)

Pinion Gear Height (Cont'd)

Simpo PDF Merge and Split Unregistered Version - http://www.simpopdf.com

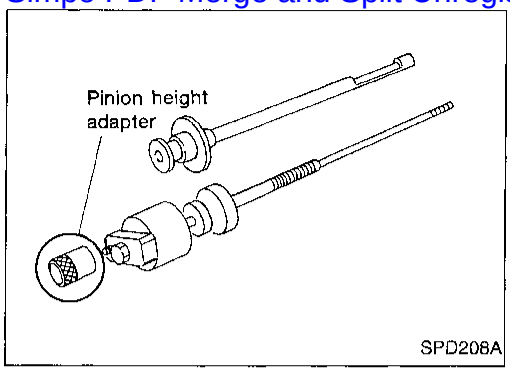

7. Place the J34309-11 pinion height adapter onto the gauge plate and tighten it by hand.

CAUTION:
Make sure all machined surfaces are clean.

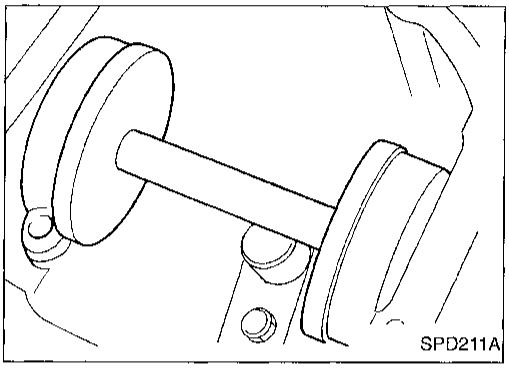

PINION HEIGHT ADJUSTING WASHER SELECTION

8. Now, position the side bearing discs, J25269-4, and arbor firmly into the side bearing bores.
   Install the side bearing caps and tighten the cap bolts to proper torque.

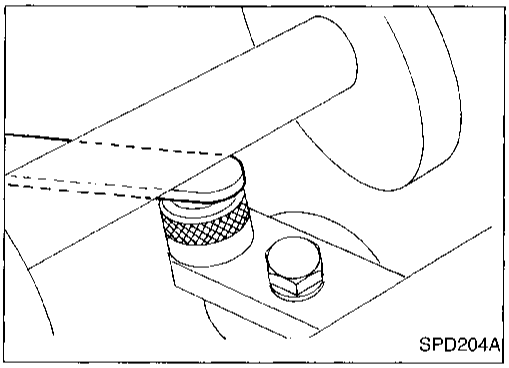

9. Select the correct standard pinion height adjusting washer thickness. Select by using a standard gauge of 3 mm (0.12 in) and J34309-101 feeler gauge. Measure the distance between the J34309-11 pinion height adapter including the standard gauge and the arbor.

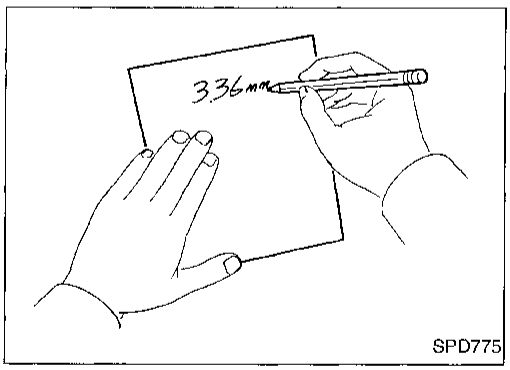

10. Write down your exact measurement (the value of feeler gauge).

Pinion Gear Height (Cont'd)

Simpo PDF Merge and Split Unregistered Version - http://www.simpopdf.com

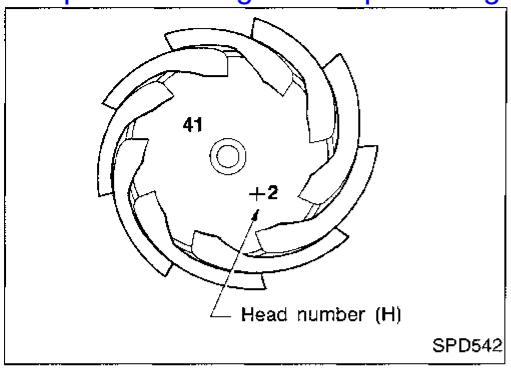

11. Correct the pinion height washer size by referring to the "pinion head number".

There are two numbers painted on the pinion gear. The first one refers to the pinion and ring gear as a matched set. This number should be the same as the number on the ring gear. The second number is the "pinion head height number". It refers to the ideal pinion height from standard for quietest operation. Use the following chart to determine the correct pinion height washer.

Use the following chart to determine the correct pinion height washer:

Pinion head height number	Add or remove from the standard pinion height washer thickness measurement
−6	Add 0.06 mm (0.0024 in)
−5	Add 0.05 mm (0.0020 in)
−4	Add 0.04 mm (0.0016 in)
−3	Add 0.03 mm (0.0012 in)
−2	Add 0.02 mm (0.0008 in)
−1	Add 0.01 mm (0.0004 in)
0	Use the selected washer thickness
+1	Subtract 0.01 mm (0.0004 in)
+2	Subtract 0.02 mm (0.0008 in)
+3	Subtract 0.03 mm (0.0012 in)
+4	Subtract 0.04 mm (0.0016 in)
+5	Subtract 0.05 mm (0.0020 in)
+6	Subtract 0.06 mm (0.0024 in)

12. Select the correct pinion height washer.
    Drive pinion height adjusting washer:
    Refer to SDS, PD-73.

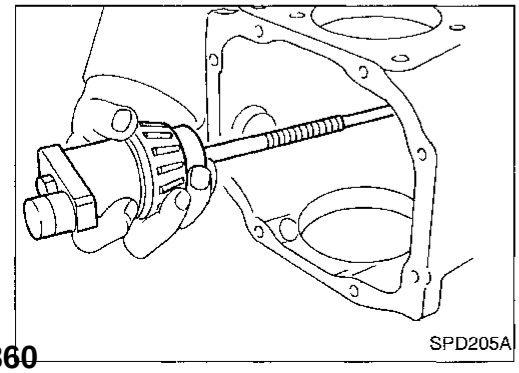

13. Remove the J34309 pinion preload shim selector Tool from the final drive housing. Then disassemble to retrieve the pinion bearings.

Simpo PDF Merge and Split Unregistered Version - http://www.simpopdf.com

Tooth Contact

Checking gear tooth contact pattern is necessary to verify correct relationship between ring gear and drive pinion.
Hypoid gear set which is not positioned properly may be noisy, or have short life or both. With the checking or gear tooth contact pattern, the most desirable contact for low noise level and long life can be assured.

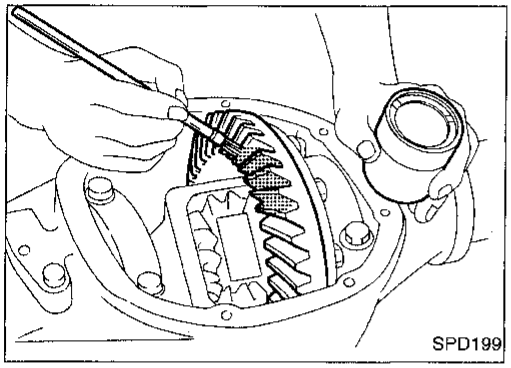
SPD199

1. Thoroughly clean ring gear and drive pinion teeth.
2. Sparingly apply a mixture of powdered ferric oxide and oil or equivalent to 3 or 4 teeth of ring gear drive side.

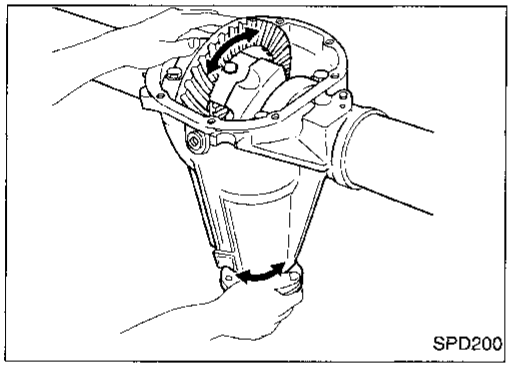
SPD200

3. Hold companion flange steady and rotate the ring gear in both directions.

Usually the pattern will be correct if shims are correctly calculated and the backlash is correct.
However, in rare cases, trial and error processes may be employed to obtain a correct pattern.
The tooth pattern is the best indication of how well a differential has been set up.

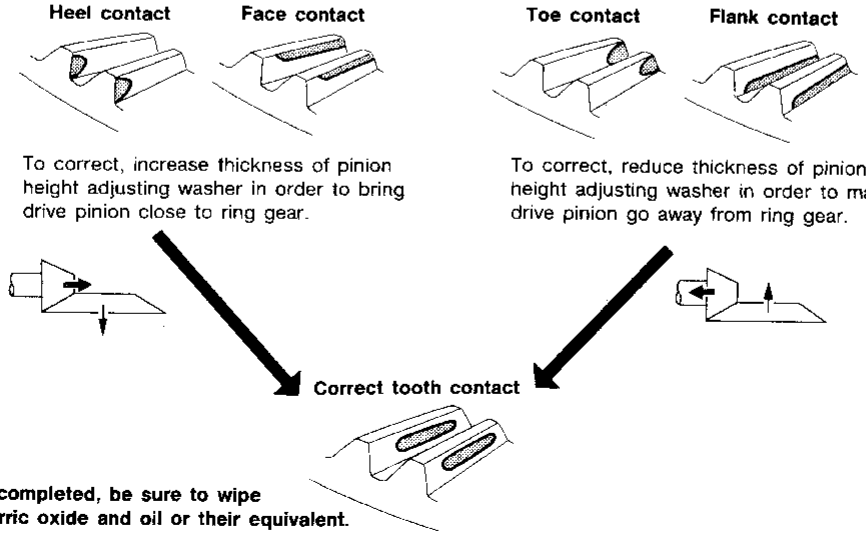

When adjustment is completed, be sure to wipe off completely the ferric oxide and oil or their equivalent.

APD018

Simpo PDF Merge and Split Unregistered Version - http://www.simpopdf.com

Differential Case

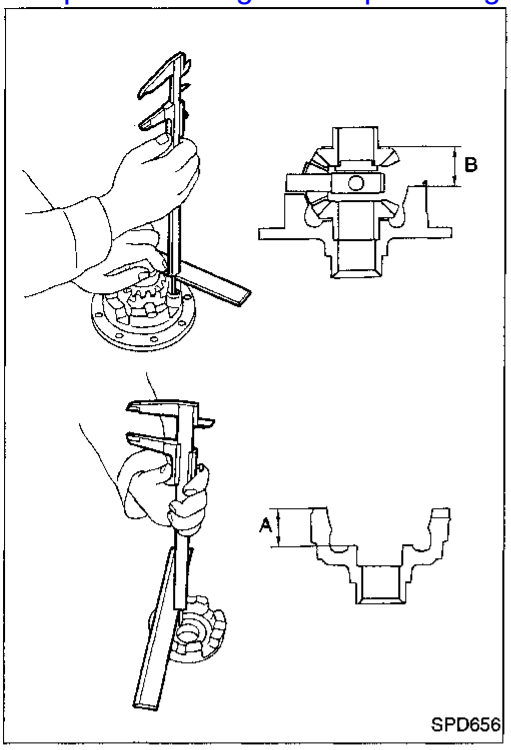

1. Measure clearance between side gear thrust washer and differential case.
   Clearance between side gear thrust washer and differential case (A – B):
   Less than 0.15 mm (0.0059 in)
   The clearance can be adjusted with side gear thrust washer. Refer to SDS, PD-73.
2. Apply gear oil to gear tooth surfaces and thrust surfaces and check to see they turn properly.

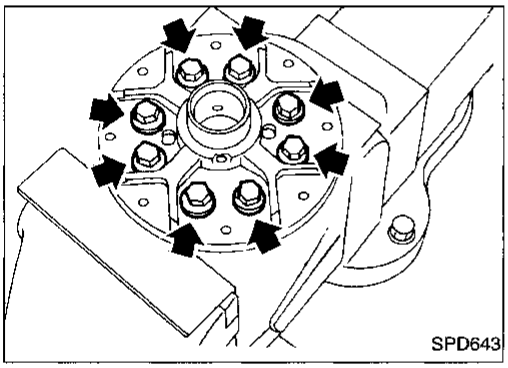

3. Install differential case LH and RH.

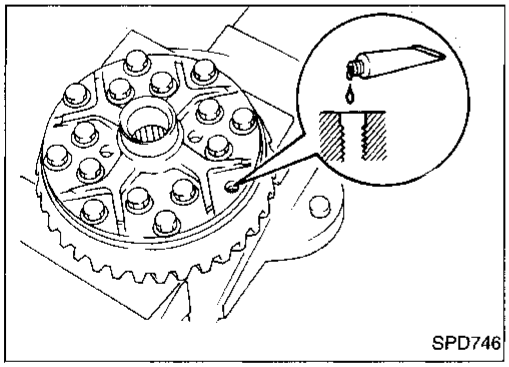

4. Place differential case on ring gear.
5. Apply locking agent [Locktite (stud lock) or equivalent] to ring gear bolts, and install them.

Tighten bolts in a criss-cross fashion, lightly tapping bolt head with a hammer.

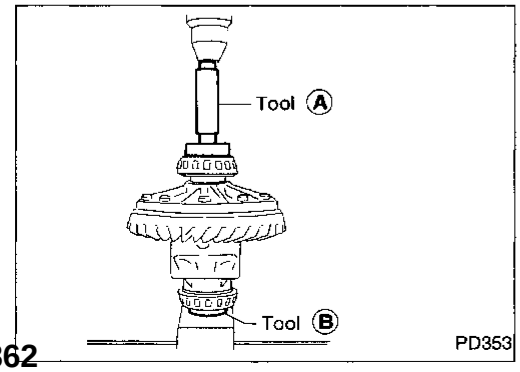

6. Press-fit side bearing inner cones on differential case with Tool.
   Tool numbers:
   Ⓐ ST33230000 (J25805-01)
   Ⓑ ST33061000 (J8107-2)

Simpo PDF Merge and Split Unregistered Version - http://www.simpopdf.com

Differential Carrier

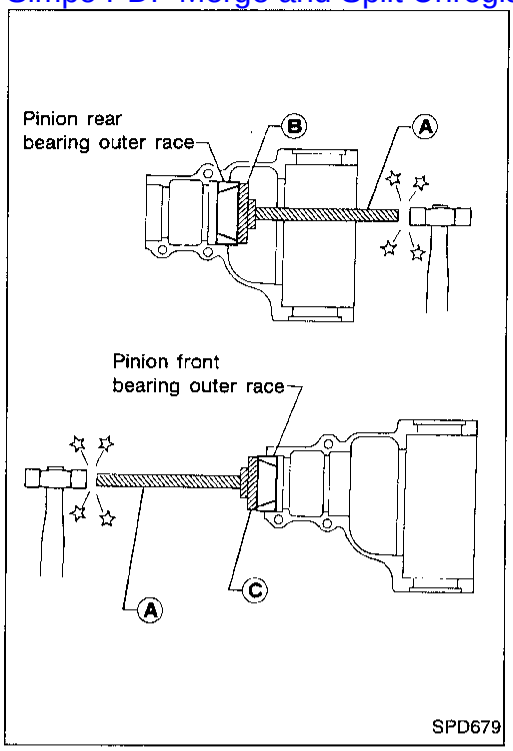

1. Press-fit front and rear bearing outer races with Tools.
   Tool numbers:
   - **Ⓐ ST30611000 (J25742-1)**
   - **Ⓑ ST30621000 (J25742-5)**
   - **Ⓒ ST30613000 (J25742-3)**

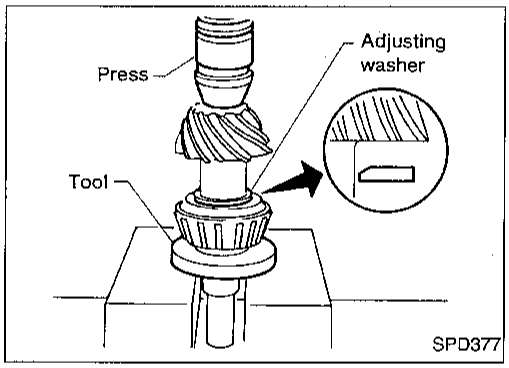

2. Select pinion height adjusting washer. Refer to "ADJUSTMENT", PD-59.
3. Install pinion height adjusting washer in drive pinion, and press-fit rear bearing inner cone in it, with press and Tool.
   Tool number: ST30901000 (J26010-01)

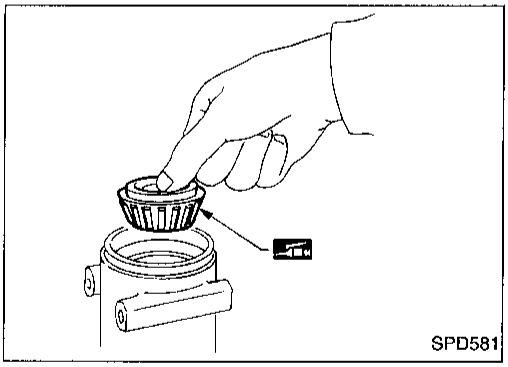

4. Place pinion front bearing inner cone in gear carrier.

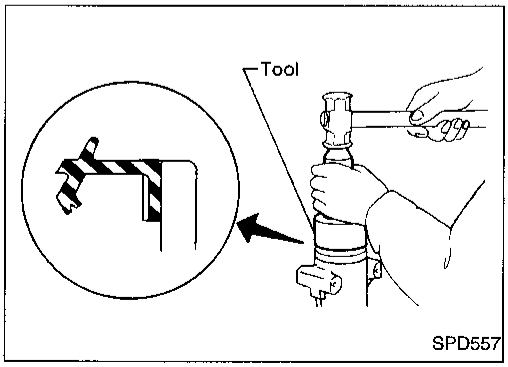

5. Apply multi-purpose grease to cavity at sealing lips of oil seal. Install front oil seal.
   Tool number: KV38100500 (J25273)

Differential Carrier (Cont'd)

Simpo PDF Merge and Split Unregistered Version - http://www.simpopdf.com

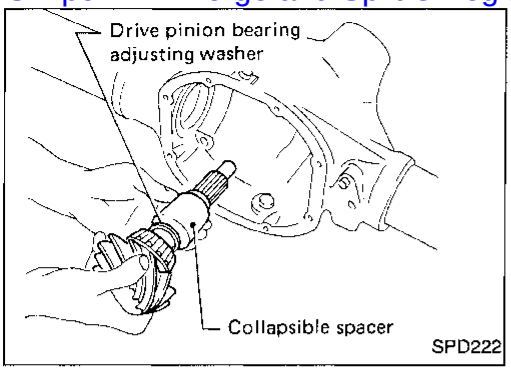

6. Place drive pinion bearing spacer, drive pinion bearing adjusting washer and drive pinion in gear carrier.

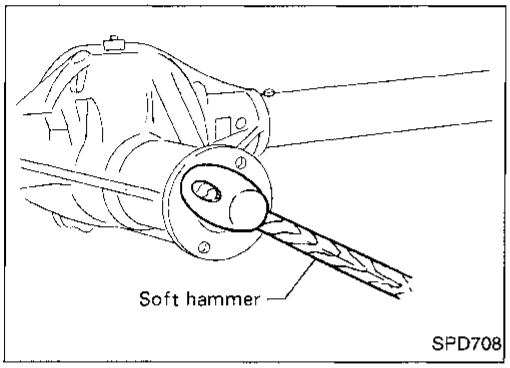

7. Insert companion flange into drive pinion by tapping the companion flange with a soft hammer.

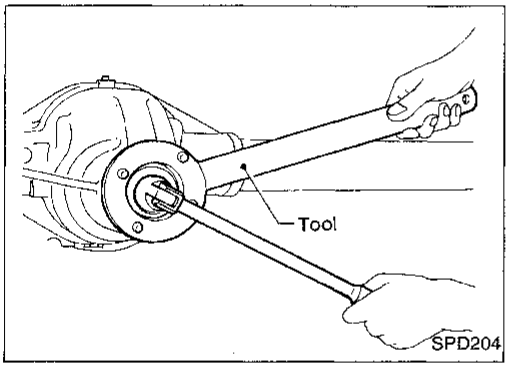

8. Tighten pinion nut to 127 N·m (13 kg-m, 94 ft-lb).

The threaded portion of drive pinion and pinion nut should be free from oil or grease.

Tool number: ST38060002 (J34311)

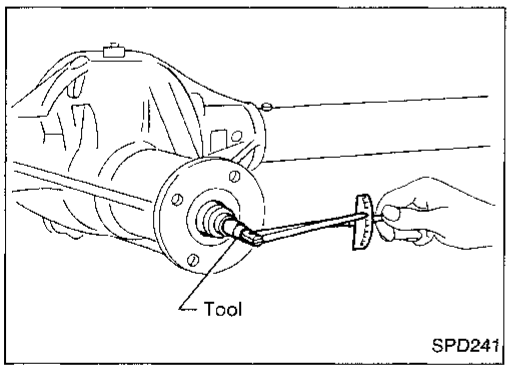

9. Tighten the pinion nut by very small degrees until the specified preload is achieved. When checking the preload, turn the drive pinion in both directions several times to set the bearing rollers.

Tool number: ST3127S000 (J25765-A)

Pinion bearing preload:

1.1 - 1.7 N·m

(11 - 17 kg-cm, 9.5 - 14.8 in-lb)

This procedure will have to be repeated if:

- **Maximum preload is achieved before the minimum pinion nut torque is reached.**
- **Minimum preload is not achieved before maximum pinion nut torque is reached.**

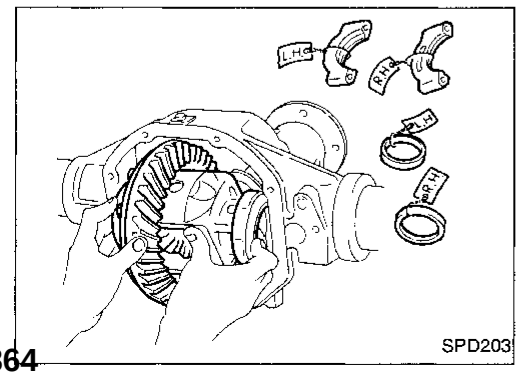

10. Select side bearing adjusting washer.
    Refer to Adjustment PD-58.
11. Install differential case assembly with side bearing outer races into gear carrier.

Differential Carrier (Cont'd)

Simpo PDF Merge and Split Unregistered Version - http://www.simpopdf.com

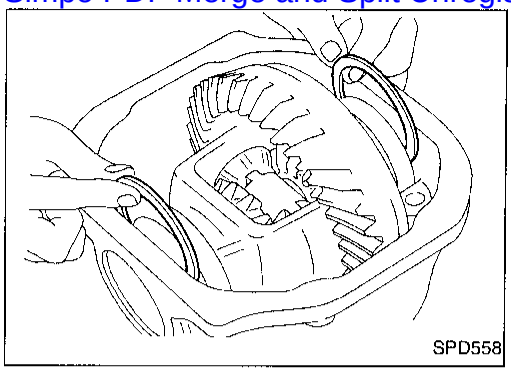

12. Insert left and right side bearing adjusting washers in place between side bearing and carrier.

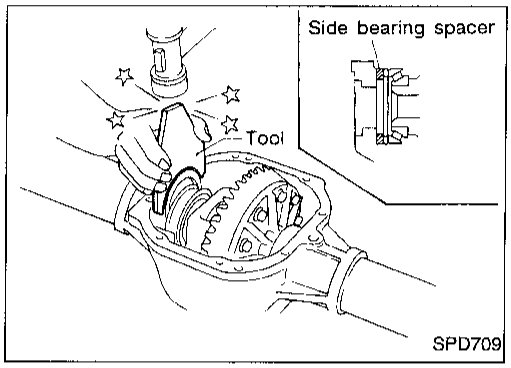

13. Drive in side bearing spacer with Tool.
Tool number: KV38100600 (J25267)

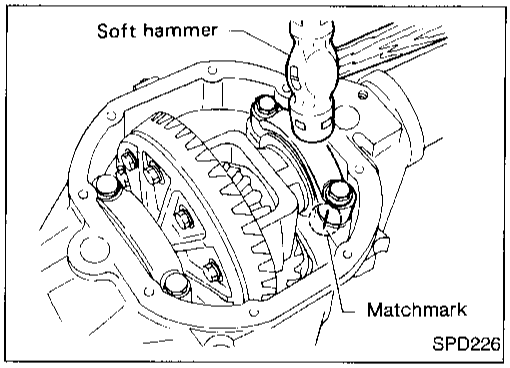

14. Align mark on bearing cap with that on gear carrier and install bearing cap on gear carrier.

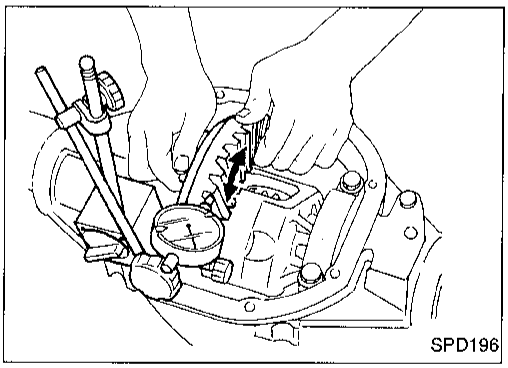

15. Measure ring gear-to-drive pinion backlash with a dial indicator.
Ring gear-to-drive pinion backlash:
0.13 - 0.18 mm
(0.0051 - 0.0071 in)

- If backlash is too small, decrease thickness of right shim and increase thickness of left shim by the same amount.
If backlash is too great, reverse the above procedure.

Never change the total amount of shims as it will change the bearing preload.

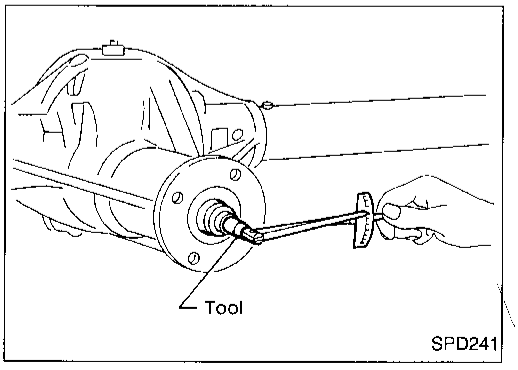

16. Check total preload with Tool.
When checking preload, turn drive pinion in both directions several times to seat bearing rollers correctly.
Total preload:
1.2 - 2.3 N·m
(12 - 23 kg-cm, 10 - 20 in-lb)
Tool number: ST3127S000 (J25765-A)

Differential Carrier (Cont'd)

Simpo PDF Merge and Split Unregistered Version - http://www.simpopdf.com

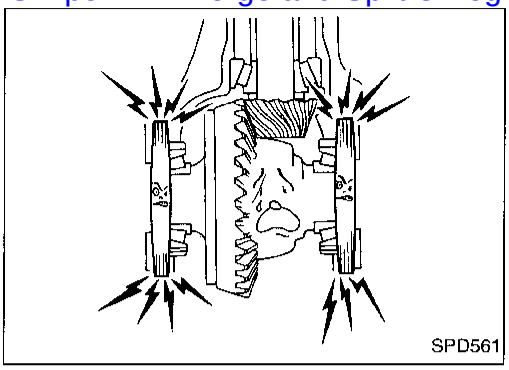
SPD561

- If preload is too great, remove the same amount of shim from each side.
- If preload is too small, add the same amount of shim to each side.

Never add or remove a different number of shims for each side as it will change ring gear-to-drive pinion backlash.

17. Recheck ring gear-to-drive pinion backlash because increase or decrease in thickness of shims will cause change of ring gear-to-pinion backlash.

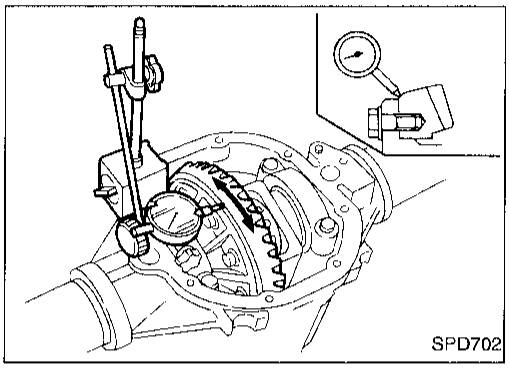
SPD702

18. Check runout of ring gear with a dial indicator.
    Runout limit:
    0.05 mm (0.0020 in)
- If backlash varies excessively in different places, the variance may have resulted from foreign matter caught between the ring gear and the differential case.
- If the backlash varies greatly when the runout of the ring gear is within a specified range, the hypoid gear set or differential case should be replaced.

19. Check tooth contact.
    Refer to "ADJUSTMENT", PD-63.
20. Install rear cover and gasket.

Simpo PDF Merge and Split Unregistered Version - http://www.simpopdf.com

Propeller Shaft

GENERAL SPECIFICATIONS

2WD models

Applied model		Standard wheelbase		Long wheelbase	
		M/T	A/T	M/T	A/T
Propeller shaft model		2S1310	3S1310		
Number of joints		2	3		
Coupling method with transmission		Sleeve type			
Type of journal bearings		Solid type (disassembly type)			
Shaft length (Spider to spider) mm (in)	1st	1323.3	549.6	644.7	549.6
	2nd	—	675.5	975.5	970.3
Shaft diameter mm (in)	1st	88.9	63.5		
	2nd	—	63.5		

4WD models

Location		Front		Rear	
Applied model		Standard wheelbase	Long wheelbase	Standard wheelbase	Long wheelbase
Propeller shaft model		2F1310		2S1310	3S1310
Number of joints		2			3
Coupling method with transmission		Flange type		Sleeve type	
Type of journal bearings		Solid type (disassembly type)			
Shaft length (Spider to spider) mm (in)	1st	522		968	392.1
	2nd	—			873.9
Shaft diameter mm (in)	1st	63.5			
	2nd	—			63.5

SERVICE DATA

Unit: mm (in)

Propeller shaft runout limit	0.6 (0.024)
Journal axial play	0.02 (0.0008) or less

Snap ring

Unit: mm (in)

Thickness	Color	Part number
1.99 (0.0783)	White	37146-C9400
2.02 (0.0795)	Yellow	37147-C9400
2.05 (0.0807)	Red	37148-C9400
2.08 (0.0819)	Green	37149-C9400
2.11 (0.0831)	Blue	37150-C9400
2.14 (0.0843)	Light brown	37151-C9400
2.17 (0.0854)	Black	37152-C9400
2.20 (0.0866)	No paint	37153-C9400

Simpo PDF Merge and Split Unregistered Version - http://www.simpopdf.com

Final Drive

GENERAL SPECIFICATIONS

2WD models

Transmission	M/T		A/T	
Body type	Regular cab	King cab	Regular cab	King cab
Final drive model	H190A	H190A	H190A	C200
	2-pinion	2-pinion	2-pinion	2-pinion
Gear ratio	3.545	3.700	3.889	4.375
Number of teeth (Ring gear/drive pinion)	39/11	37/10	35/9	35/8
Oil capacity (Approx.) ℓ (US pt, Imp pt)	1.5 (3-1/8, 2-5/8)	1.3 (2-3/4, 2-1/4)	1.5 (3-1/8, 2-5/8)	1.3 (2-3/4, 2-1/4)

4WD models

Front final drive	R180A
	4-pinion
Gear ratio	4.625
Oil capacity (Approx.) ℓ (US pt, Imp pt)	1.3 (2-3/4, 2-1/4)
Rear final drive	C200
	4-pinion
Gear ratio	4.625
Number of teeth (Ring gear/drive pinion)	37/8
Oil capacity (Approx.) ℓ (US pt, Imp pt)	1.3 (2-3/4, 2-1/4)

Final Drive (Cont'd)

Simpo PDF Merge and Split Unregistered Version - http://www.simpopdf.com

INSPECTION AND ADJUSTMENT (R180A)

Ring gear runout

Ring gear runout limit	mm (in)	0.05 (0.0020)

Axle bearing adjustment

Axle bearing end play	mm (in)	0 - 0.1 (0 - .0039 or less)

Available axle bearing adjusting shims

Thickness mm (in)	Part number
0.10 (0.0039)	38233-01G11
0.20 (0.0079)	38233-01G12
0.30 (0.0118)	38233-01G13
0.40 (0.0157)	38233-01G14

Side gear adjustment

Side gear backlash (Clearance between side gear and differential case) mm (in)	Less than 0.15 (0.0059)

Available side gear thrust washers

Thickness mm (in)	Part number
0.75 (0.0295)	38424-W2010
0.78 (0.0307)	38424-W2011
0.81 (0.0319)	38424-W2012
0.84 (0.0331)	38424-W2013
0.87 (0.0343)	38424-W2014
0.90 (0.0354)	38424-W2015
0.93 (0.0366)	38424-W2016
0.96 (0.0378)	38424-W2017

Side bearing adjustment

Differential carrier assembly turning resistance N (kg, lb)	34.3 - 39.2 (3.5 - 4.0, 7.7 - 8.8)
Side bearing adjusting method	Adjusting shim

Available side retainer shims

Thickness mm (in)	Part number
0.20 (0.0079)	38453-01G00
0.25 (0.0098)	38453-01G01
0.30 (0.0118)	38453-01G02
0.40 (0.0157)	38453-01G03
0.50 (0.0197)	38453-01G04

Total preload adjustment

Total preload	N·m (kg-cm, in-lb)	1.2 - 2.3 (12 - 23, 10 - 20)
Ring gear backlash	mm (in)	0.13 - 0.18 (0.0051 - 0.0071)

Drive pinion height adjustment

Available pinion height adjusting washers

Thickness mm (in)	Part number
3.09 (0.1217)	38154-P6017
3.12 (0.1228)	38154-P6018
3.15 (0.1240)	38154-P6019
3.18 (0.1252)	38154-P6020
3.21 (0.1264)	38154-P6021
3.24 (0.1276)	38154-P6022
3.27 (0.1287)	38154-P6023
3.30 (0.1299)	38154-P6024
3.33 (0.1311)	38154-P6025
3.36 (0.1323)	38154-P6026
3.39 (0.1335)	38154-P6027
3.42 (0.1346)	38154-P6028
3.45 (0.1358)	38154-P6029
3.48 (0.1370)	38154-P6030
3.51 (0.1382)	38154-P6031
3.54 (0.1394)	38154-P6032
3.57 (0.1406)	38154-P6033
3.60 (0.1417)	38154-P6034
3.63 (0.1429)	38154-P6035
3.66 (0.1441)	38154-P6036

Drive pinion preload adjustment

Drive pinion bearing preload adjusting method	Adjusting washer and spacer
Drive pinion preload N·m (kg-cm, in-lb)	
Without front oil seal	1.0 - 1.6 (10 - 16, 8.7 - 14)
With front oil seal	1.1 - 1.7 (11 - 17, 9.5 - 14.8)

Available drive pinion bearing preload adjusting washers

Thickness mm (in)	Part number
6.58 - 6.60 (0.2591 - 0.2598)	38127-01G00
6.56 - 6.58 (0.2583 - 0.2591)	38127-01G01
6.54 - 6.56 (0.2575 - 0.2583)	38127-01G02
6.52 - 6.54 (0.2567 - 0.2575)	38127-01G03
6.50 - 6.52 (0.2559 - 0.2567)	38127-01G04
6.48 - 6.50 (0.2551 - 0.2559)	38127-01G05
6.46 - 6.48 (0.2543 - 0.2551)	38127-01G06
6.44 - 6.46 (0.2535 - 0.2543)	38127-01G07
6.42 - 6.44 (0.2528 - 0.2535)	38127-01G08
6.40 - 6.42 (0.2520 - 0.2528)	38127-01G09
6.38 - 6.40 (0.2512 - 0.2520)	38127-01G10
6.36 - 6.38 (0.2504 - 0.2512)	38127-01G11
6.34 - 6.36 (0.2496 - 0.2504)	38127-01G12
6.32 - 6.34 (0.2488 - 0.2496)	38127-01G13
6.30 - 6.32 (0.2480 - 0.2488)	38127-01G14

Available drive pinion bearing preload adjusting spacers

Length mm (in)	Part number
52.20 (2.0551)	38130-78500
52.40 (2.0630)	38131-78500
52.60 (2.0709)	38132-78500
52.80 (2.0787)	38133-78500
53.00 (2.0866)	38134-78500
53.20 (2.0945)	38135-78500

Final Drive (Cont'd)

Simpo PDF Merge and Split Unregistered Version - http://www.simpopdf.com

INSPECTION AND ADJUSTMENT (H190A)

Ring gear runout

Ring gear runout limit mm (in)	0.08 (0.0031)

Side gear adjustment

Side gear backlash (Clearance between side gear to differential case) mm (in)	Less than 0.15 (0.0059)

Available side gear thrust washers

Thickness mm (in)	Part number
0.75 (0.0295)	38424-E3000
0.80 (0.0315)	38424-E3001
0.85 (0.0335)	38424-E3002
0.90 (0.0354)	38424-E3003

Drive pinion height adjustment

Available drive pinion height adjusting washers

Thickness mm (in)	Part number
2.58 (0.1016)	38154-P6000
2.61 (0.1028)	38154-P6001
2.64 (0.1039)	38154-P6002
2.67 (0.1051)	38154-P6003
2.70 (0.1063)	38154-P6004
2.73 (0.1075)	38154-P6005
2.76 (0.1087)	38154-P6006
2.79 (0.1098)	38154-P6007
2.82 (0.1110)	38154-P6008
2.85 (0.1122)	38154-P6009
2.88 (0.1134)	38154-P6010
2.91 (0.1146)	38154-P6011
2.94 (0.1157)	38154-P6012
2.97 (0.1169)	38154-P6013
3.00 (0.1181)	38154-P6014
3.03 (0.1193)	38154-P6015
3.06 (0.1205)	38154-P6016
3.09 (0.1217)	38154-P6017
3.12 (0.1228)	38154-P6018
3.15 (0.1240)	38154-P6019
3.18 (0.1252)	38154-P6020

Drive pinion preload adjustment

Drive pinion bearing preload adjusting method	Collapsible spacer
Drive pinion preload N·m (kg-cm, in-lb)	
With front oil seal	1.1 - 1.6 (11 - 16, 9.5 - 13.9)

Side bearing adjustment

Differential carrier assembly turning resistance N (kg, lb)	34.3 - 39.2 (3.5 - 4.0, 7.7 - 8.8)
Side bearing adjusting method	Adjusting shim

Available side bearing adjusting shims

Thickness mm (in)	Part number
0.10 (0.0039)	38455-61200
0.12 (0.0047)	38453-61201
0.15 (0.0059)	38453-61202
0.17 (0.0067)	38453-61203
0.20 (0.0079)	38456-61200
0.25 (0.0098)	38453-61204
0.30 (0.0118)	38453-61205
0.40 (0.0157)	38453-61206
0.50 (0.0197)	38457-61200

Total preload adjustment

Total preload N·m (kg-cm, in-lb)	1.2 - 2.2 (12 - 22, 10 - 19)
Ring gear backlash mm (in)	0.13 - 0.18 (0.0051 - 0.0071)

Final Drive (Cont'd)

Simpo PDF Merge and Split Unregistered Version - http://www.simpopdf.com

INSPECTION AND ADJUSTMENT (C200)

Ring gear runout

Ring gear runout limit mm (in)	0.05 (0.0020)

Side gear adjustment

Side gear backlash (Clearance between side gear and differential case) mm (in)	Less than 0.15 (0.0059)

Available side gear thrust washers (2WD)

Thickness mm (in)	Part number
0.75 (0.0295)	38424-N3110
0.78 (0.0307)	38424-N3111
0.81 (0.0319)	38424-N3112
0.84 (0.0331)	38424-N3113
0.87 (0.0343)	38424-N3114
0.90 (0.0354)	38424-N3115
0.93 (0.0366)	38424-N3116

Available side gear thrust washers (4WD)

Thickness mm (in)	Part number
0.75 (0.0295)	38424-E3000
0.80 (0.0315)	38424-E3001
0.85 (0.0335)	38424-E3002
0.90 (0.0354)	38424-E3003

Side bearing adjustment

Differential carrier assembly turning resistance N (kg, lb)	34.3 - 39.2 (3.5 - 4.0, 7.7 - 8.8)

Available side bearing adjusting washers

Thickness mm (in)	Part number
2.00 (0.0787)	38453-N3100
2.05 (0.0807)	38453-N3101
2.10 (0.0827)	38453-N3102
2.15 (0.0846)	38453-N3103
2.20 (0.0866)	38453-N3104
2.25 (0.0886)	38453-N3105
2.30 (0.0906)	38453-N3106
2.35 (0.0925)	38453-N3107
2.40 (0.0945)	38453-N3108
2.45 (0.0965)	38453-N3109
2.50 (0.0984)	38453-N3110
2.55 (0.1004)	38453-N3111
2.60 (0.1024)	38453-N3112

Drive pinion height adjustment

Available pinion height adjusting washers

Thickness mm (in)	Part number
3.09 (0.1217)	38154-P6017
3.12 (0.1228)	38154-P6018
3.15 (0.1240)	38154-P6019
3.18 (0.1252)	38154-P6020
3.21 (0.1264)	38154-P6021
3.24 (0.1276)	38154-P6022
3.27 (0.1287)	38154-P6023
3.30 (0.1299)	38154-P6024
3.33 (0.1311)	38154-P6025
3.36 (0.1323)	38154-P6026
3.39 (0.1335)	38154-P6027
3.42 (0.1346)	38154-P6028
3.45 (0.1358)	38154-P6029
3.48 (0.1370)	38154-P6030
3.51 (0.1382)	38154-P6031
3.54 (0.1394)	38154-P6032
3.57 (0.1406)	38154-P6033
3.60 (0.1417)	38154-P6034
3.63 (0.1429)	38154-P6035
3.66 (0.1441)	38154-P6036

Drive pinion preload adjustment

Drive pinion bearing preload adjusting method	Collapsible spacer
Drive pinion preload N·m (kg-cm, in-lb)	
Without front oil seal	1.0 - 1.6 (10 - 16, 8.7 - 14)
With front oil seal	1.1 - 1.7 (11 - 17, 9.5 - 15)

Total preload adjustment

Total preload N·m (kg-cm, in-lb)	1.2 - 2.3 (12 - 23, 10 - 20)
Ring gear backlash mm (in)	0.13 - 0.18 (0.0051 - 0.0071)

Simpo PDF Merge and Split Unregistered Version - http://www.simpopdf.com

SECTION RA

CONTENTS

PRECAUTIONS AND PREPARATION 2
Precautions 2
Special Service Tools 2
Commercial Service Tools 3
NOISE, VIBRATION AND HARSHNESS (NVH) TROUBLESHOOTING 4
NVH Troubleshooting Chart 4
REAR AXLE AND REAR SUSPENSION 5
2WD models 5
4WD models 5
ON-VEHICLE SERVICE 6
Rear Axle and Rear Suspension Parts 6
Rear Wheel Bearing 6
REAR AXLE 7
Components 7
Removal 8
Inspection 10
Axle Shaft 10
Wheel Bearing 10
Axle Case 10
Installation — 2WD models — 10
Installation — 4WD models — 12
REAR SUSPENSION 14
2WD models 14
4WD models 14
Shock Absorber 15
Removal And Installation 15
Inspection 15
Leaf Spring 15
Removal And Installation 15
Inspection 16
Installation 16
SERVICE DATA AND SPECIFICATIONS (SDS) 17
General Specifications 17
Inspection and Adjustment 17

Simpo PDF Merge and Split Unregistered Version - http://www.simpopdf.com

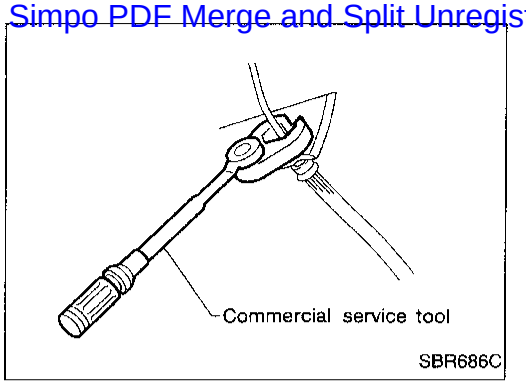

Precautions

- **When installing rubber parts, final tightening must be carried out under unladen condition* with tires on ground.**
  ***: Fuel, radiator coolant and engine oil full. Spare tire, jack, hand tools and mats in designated positions.**
- **Use flare nut wrench when removing and installing brake tubes.**
- **After installing removed suspension parts, check wheel alignment and adjust if necessary.**
- **Always torque brake lines when installing.**

Special Service Tools

The actual shapes of Kent-Moore tools may differ from those of special service tools illustrated here.

Tool number Kent-Moore No. Tool name	Description	
KV40101000 (J25604-01) Axle stand	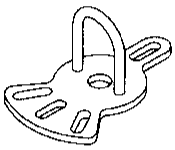 NT159	Removing rear axle shaft
ST36230000 (J25840-A) Sliding hammer	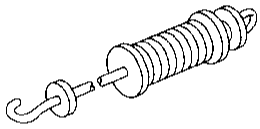 NT126	Removing rear axle shaft
ST38020000 (—) Bearing lock nut wrench	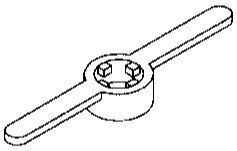 NT160	Removing wheel bearing lock nut
KV40106500 (J25852-B) Rear axle shaft bearing puller	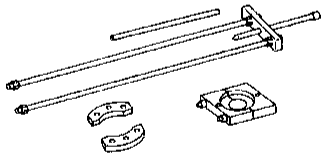 NT683	Removing wheel bearing and ABS sensor rotor
ST37840000 (—) Rear axle shaft guide	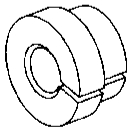 NT162	Installing rear axle shaft

Simpo PDF Merge and Split Unregistered Version - http://www.simpopdf.com

Commercial Service Tools

Tool name	Description	
①Flare nut crowfoot ②Torque wrench	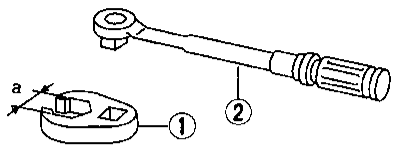 NT360	Removing and installing each brake piping **a: 10 mm (0.39 in)**
Bearing cage oil seal drift	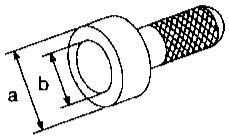 NT115	Installing oil seal **a: 74 mm (2.91 in) dia.** **b: 68 mm (2.68 in) dia.**
Rear axle oil seal drift	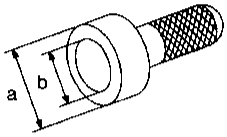 NT115	Installing oil seal **a: 54.5 mm (2.15 in.)** **b: 34.5 mm (1.36 in.)**

Simpo PDF Merge and Split Unregistered Version - http://www.simpopdf.com

NVH Troubleshooting Chart

Use the chart below to help you find the cause of the symptom. If necessary, repair or replace these parts.

Reference page			RA-5	RA-15	—	—	—	RA-14	RA-6	NVH in PD section	NVH in PD section	NVH in FA section	NVH in FA section	NVH in FA section	NVH in FA section	NVH in BR section	NVH in ST section
Possible cause and SUSPECTED PARTS			Improper installation, Looseness	Shock absorber deformation, damage or deflection	Bushing or mounting deterioration	Parts interference	Spring fatigue	Suspension looseness	Wheel bearing damage	PROPELLER SHAFT	DIFFERENTIAL	DRIVESHAFT	FRONT AXLE AND FRONT SUSPENSION	TIRES	ROAD WHEEL	BRAKES	STEERING
Symptom	REAR AXLE AND REAR SUSPEN-SION	Noise	X	X	X	X	X	X		X	X	X	X	X	X	X	X
		Shake	X	X	X	X		X		X		X	X	X	X	X	X
		Vibration	X	X	X	X	X			X		X	X	X			X
		Shimmy	X	X	X	X							X	X	X	X	X
		Judder	X	X	X								X	X	X	X	X
		Poor quality ride or handling	X	X	X	X	X		X				X	X	X		

X : Applicable

Simpo PDF Merge and Split Unregistered Version - http://www.simpopdf.com

2WD models

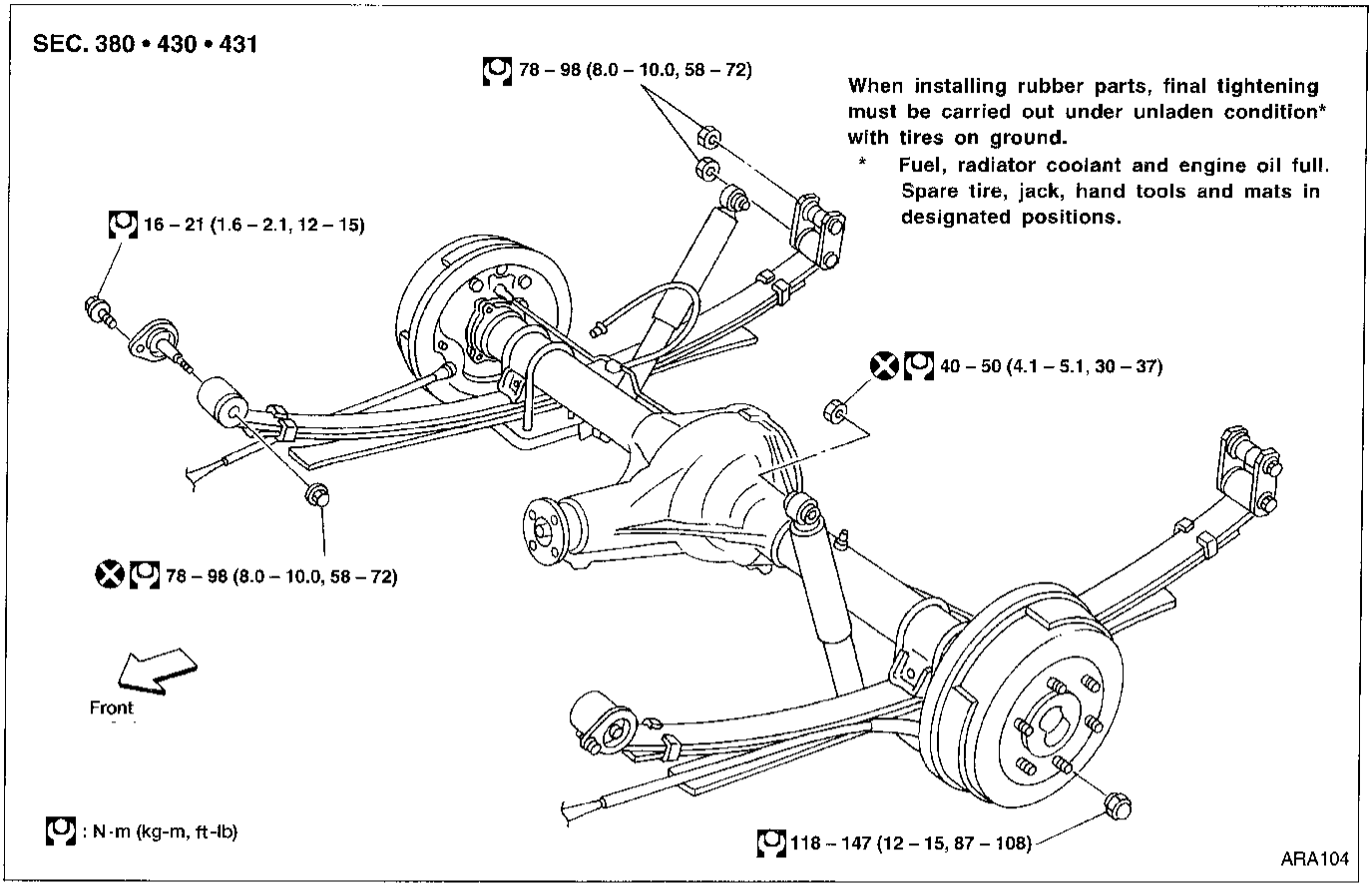

4WD models

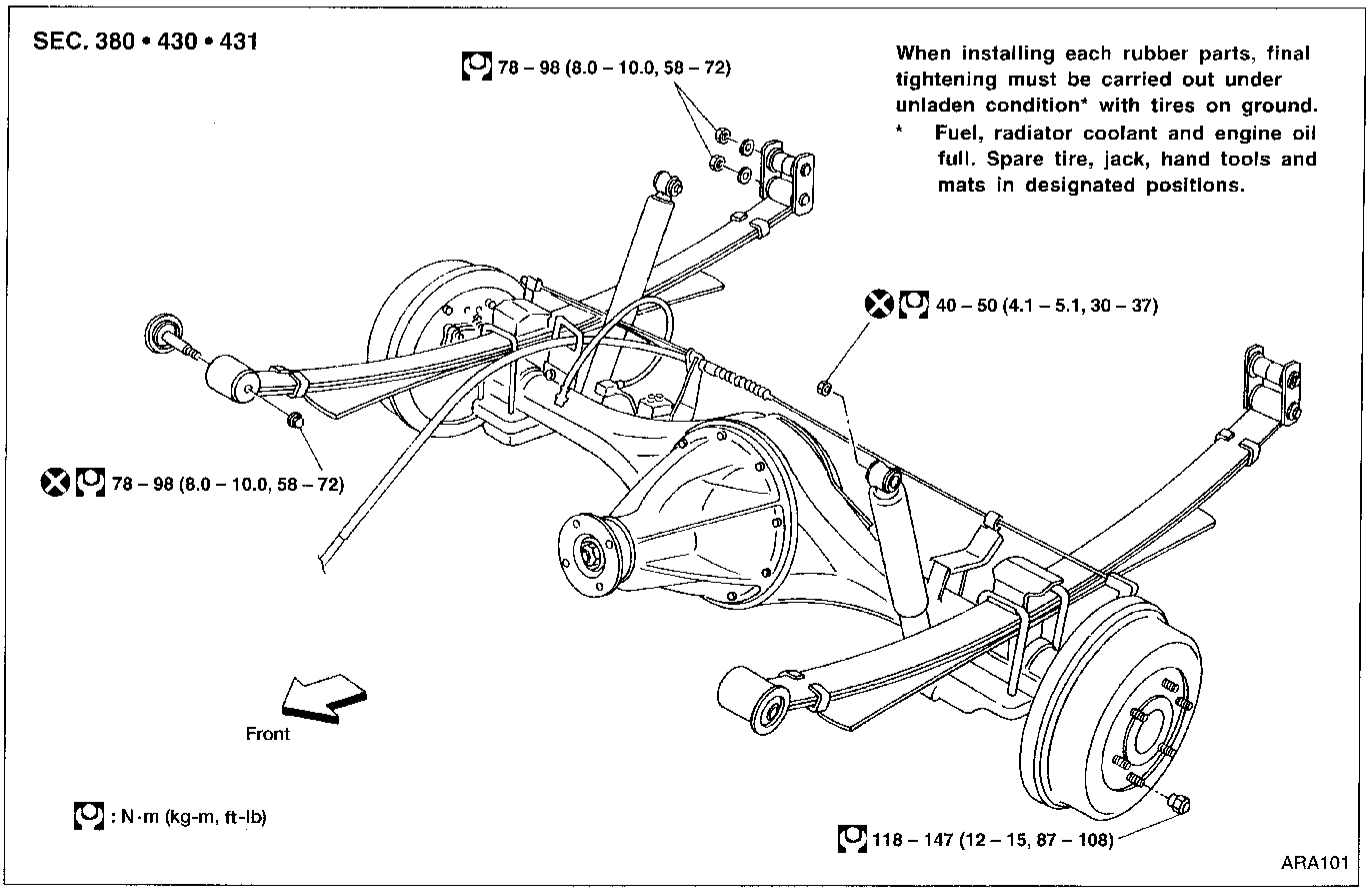

Simpo PDF Merge and Split Unregistered Version - http://www.simpopdf.com

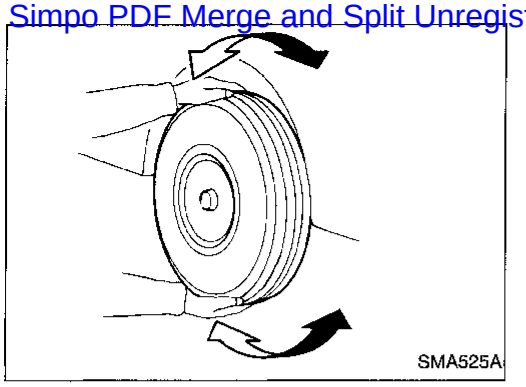
SMA525A

Rear Axle and Rear Suspension Parts

Check rear axle and rear suspension parts for excessive play, wear and damage.

- Shake each rear wheel to check for excessive play.

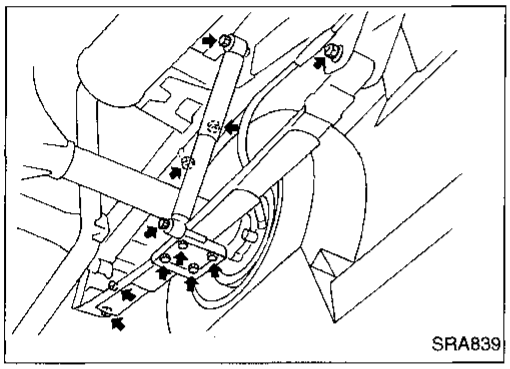
SRA839

- Retighten all nuts and bolts to the specified torque.
  : Refer to REAR SUSPENSION, RA-14.

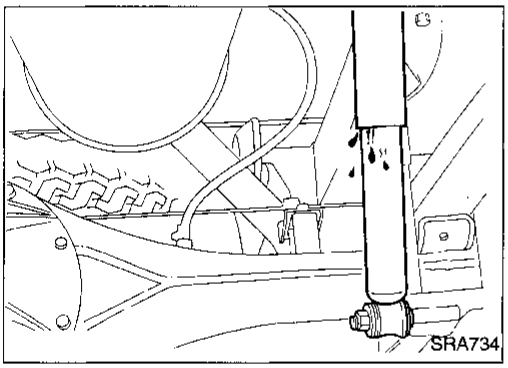
SRA734

- Check shock absorber for oil leakage and other damage.
- Check shock absorber bushing for excessive wear and other damage.

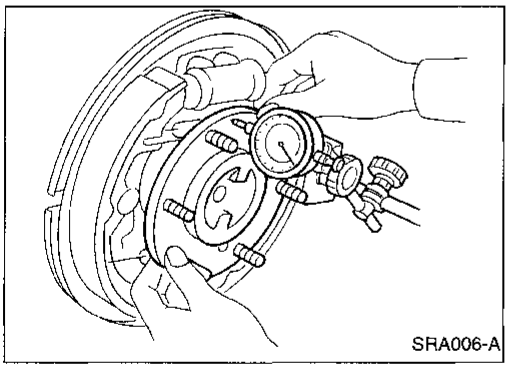
SRA006-A

Rear Wheel Bearing

- Check that wheel bearings operate smoothly.
- Check axial end play.
  Axial end play:
  Refer to SDS, RA-17.

Simpo PDF Merge and Split Unregistered Version - http://www.simpopdf.com

Components

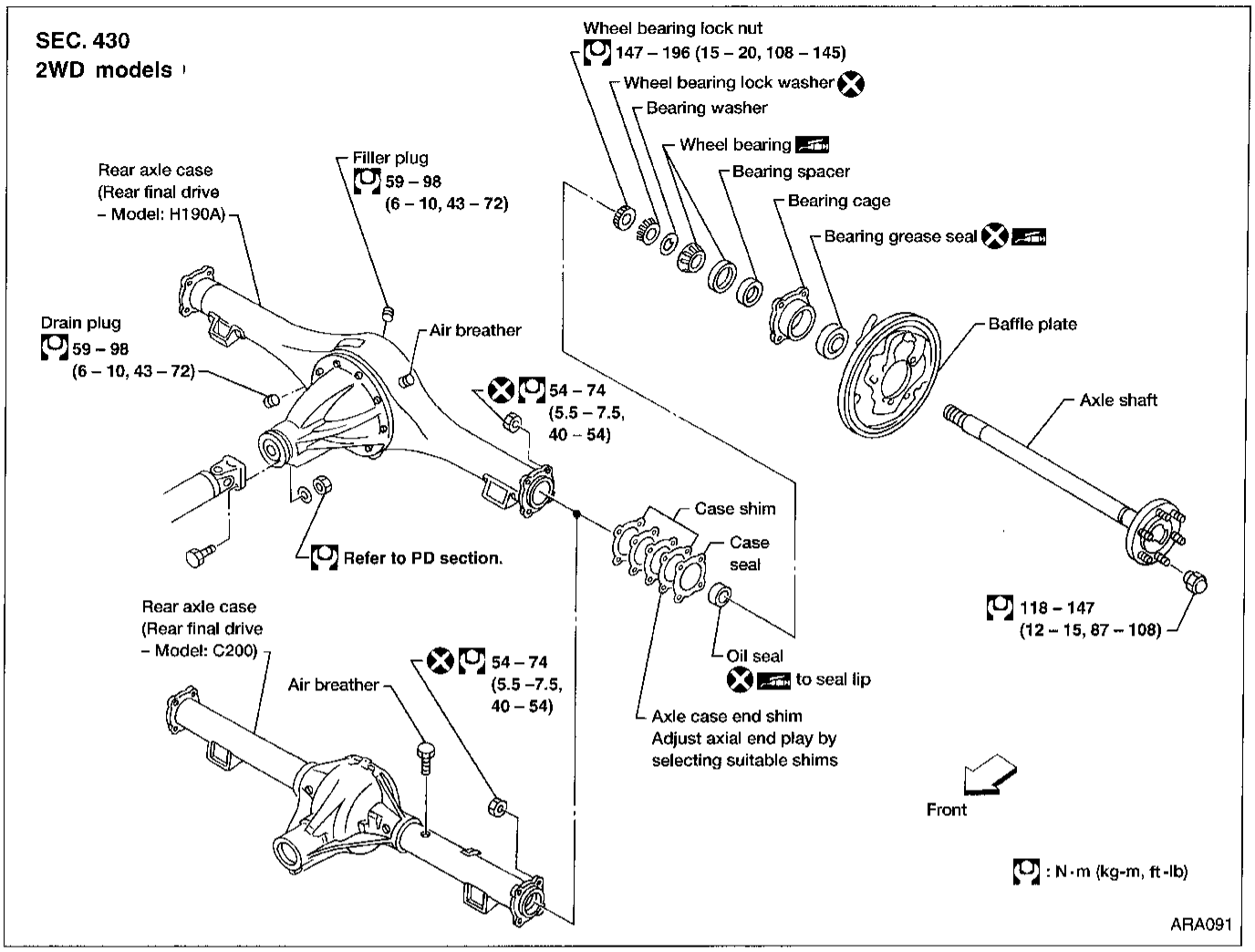

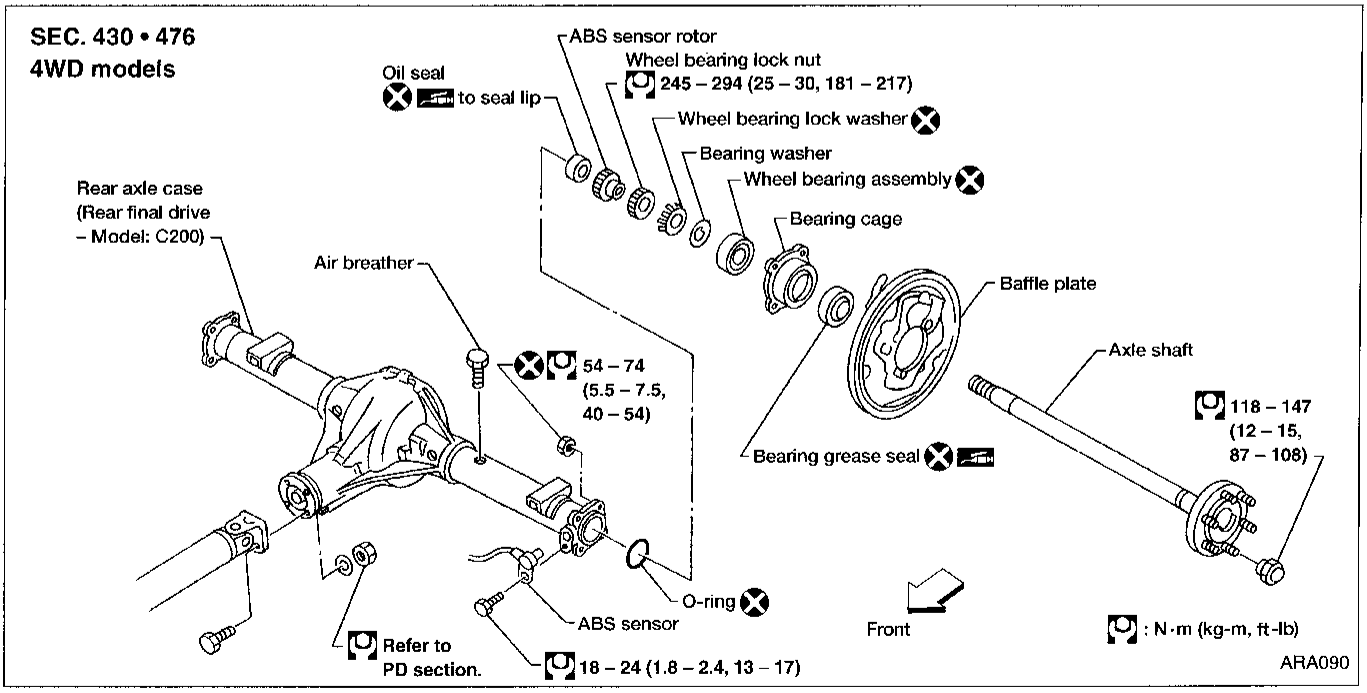

Simpo PDF Merge and Split Unregistered Version - http://www.simpopdf.com

Removal

- **Before removing the rear axle, disconnect the ABS wheel sensor from the assembly. Then move it away from the axle. Failure to do so may result in damage to the sensor wires and the sensor becoming inoperative.**
- **Wheel bearing does not require maintenance. — 4WD models —**
- If growling noise is emitted from wheel bearing during operation, replace wheel bearing assembly.
- If the wheel bearing assembly is removed, it must be replaced. The old assembly must not be re-used.

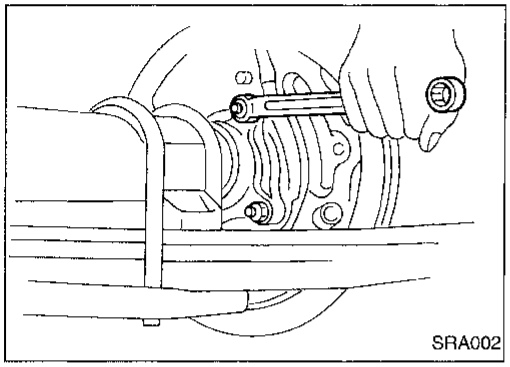

1. Disconnect parking brake cable and brake tube.
2. Remove nuts securing wheel bearing cage with baffle plate.

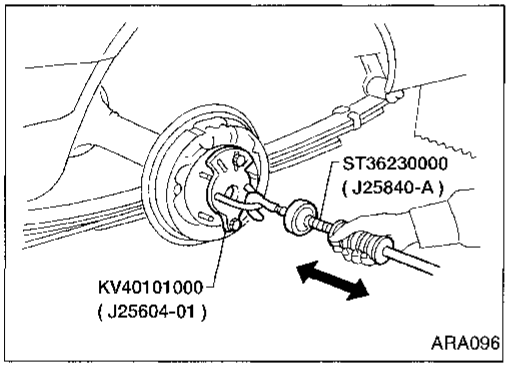

3. Draw out axle shaft with Tool.

When drawing out axle shaft, be careful not to damage oil seal.

4. Remove case shim and case seal.
   — 2WD —
5. Remove O-ring. — 4WD models —
6. Remove oil seal.

Do not reuse oil seal once it is removed.
Always install new one.

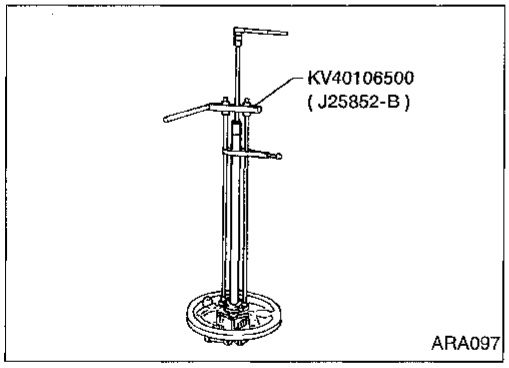

7. Remove ABS sensor rotor. — 4WD models —

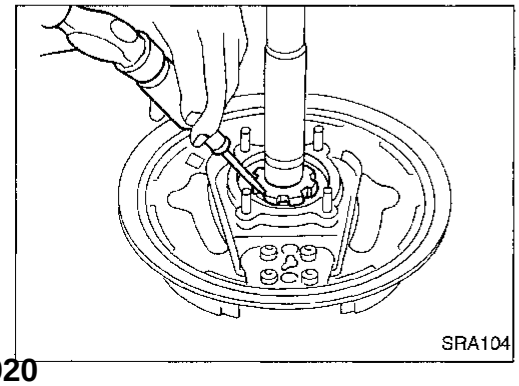

8. Unbend lock washer with a screwdriver.

Removal (Cont'd)

Simpo PDF Merge and Split Unregistered Version - http://www.simpopdf.com

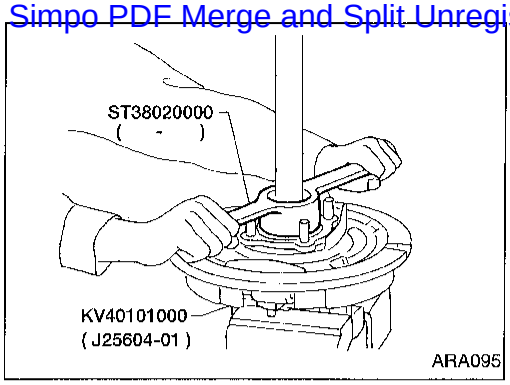

9. Remove bearing lock nut with tool.

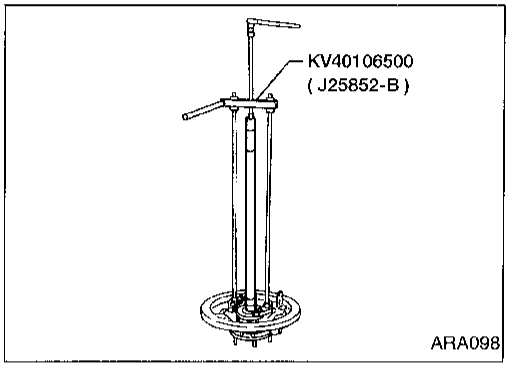

10. Remove wheel bearing together with bearing cage and baffle plate from axle shaft.

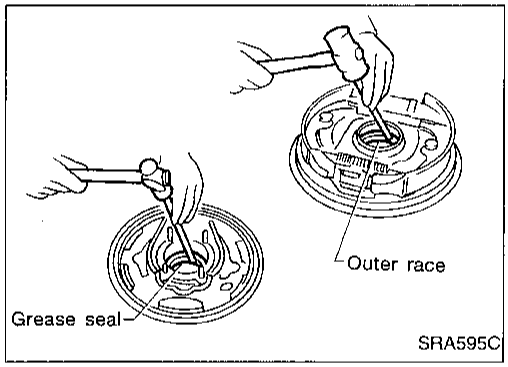

11. Remove grease seal in bearing cage with suitable bar.
12. Remove wheel bearing outer race with a brass drift.
— 2WD models —

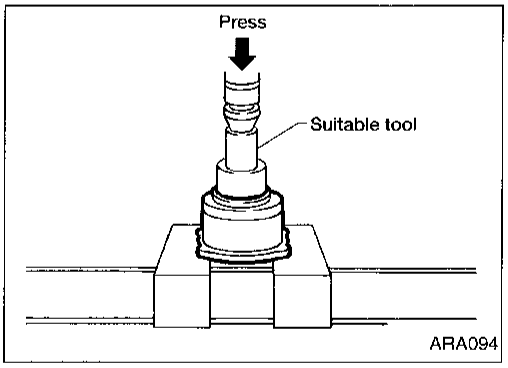

13. Remove wheel bearing assembly. — 4WD models —

Simpo PDF Merge and Split Unregistered Version - http://www.simpopdf.com

Inspection

AXLE SHAFT

- Check axle shaft for straightness, cracks, damage, wear and distortion. Replace if necessary.

WHEEL BEARING

- Make sure wheel bearing rolls freely and is free from noise, cracks, pitting and wear.

AXLE CASE

- Check axle case for yield, deformation and cracks. Replace if necessary.

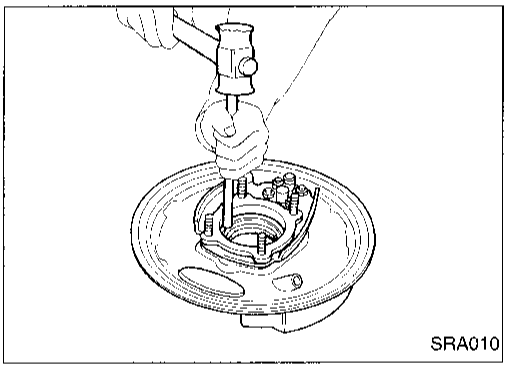
SRA010

Installation — 2WD models —

1. Install wheel bearing outer race with a brass drift.
2. Install a new grease seal in bearing cage.

After installing new grease seal, coat sealing lip with multi-purpose grease.

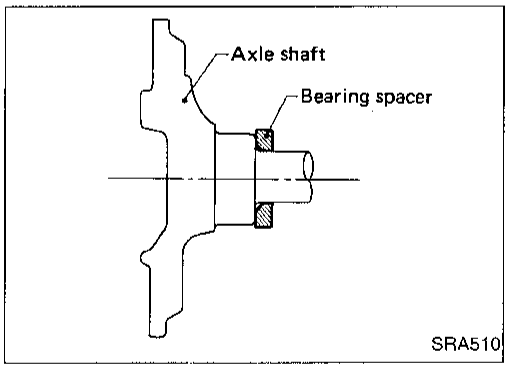

SRA510

3. Install bearing spacer with chamfer side facing axle shaft flange.

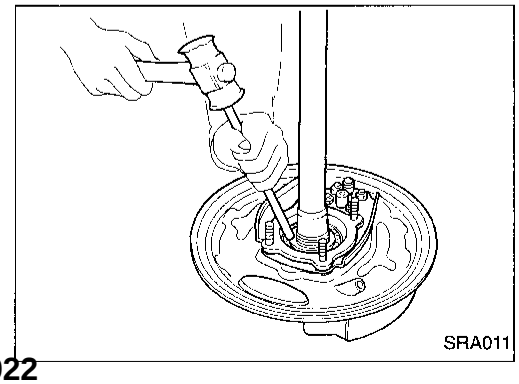
SRA011

4. Install wheel bearing inner race with a brass drift.
5. Coat each bearing cone with multi-purpose grease.
   Specified amount of grease:
   8 - 12 g (0.28 - 0.42 oz)

Installation — 2WD models — (Cont'd)

Simpo PDF Merge and Split Unregistered Version - http://www.simpopdf.com

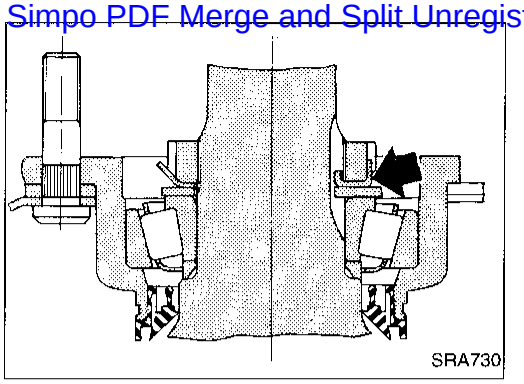
SRA730

6. Install plain washer and a new wheel bearing lock washer.
7. Tighten wheel bearing lock nut.

Fit wheel bearing lock washer lip in wheel bearing lock nut groove correctly by tightening lock nut. Be sure to bend it up.

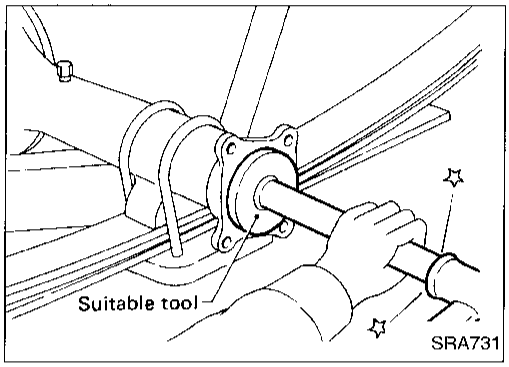

SRA731

8. Install a new oil seal with suitable tool.

After installing new oil seal, coat sealing lip with multi-purpose grease.

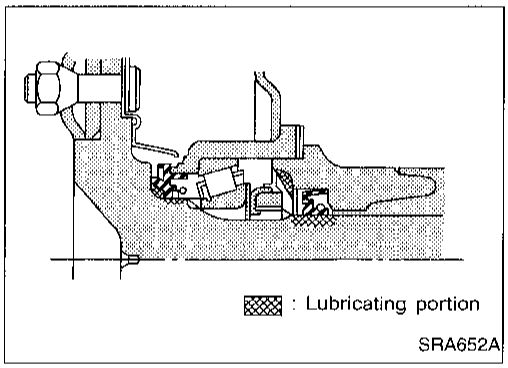

SRA652A

9. Apply recess of axle case end with multi-purpose grease.
10. Apply gear oil to the spline of axle shaft. Coat seal surface of axle shaft with multi-purpose grease (as shown left).

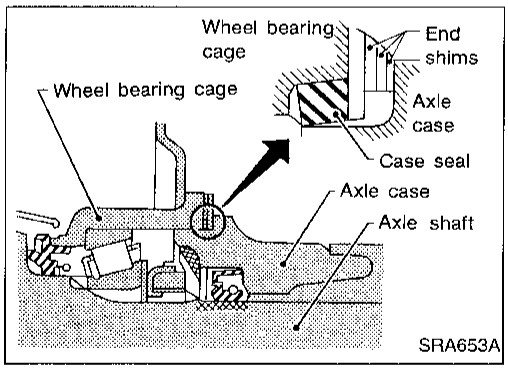

SRA653A

11. Adjust axial end play.

a. Select end shims.

Standard thickness including seal: 1.5 mm (0.059 in)
Axle case end shim: Refer to SDS, RA-17.

Do not insert end shims between case seal and bearing cage.

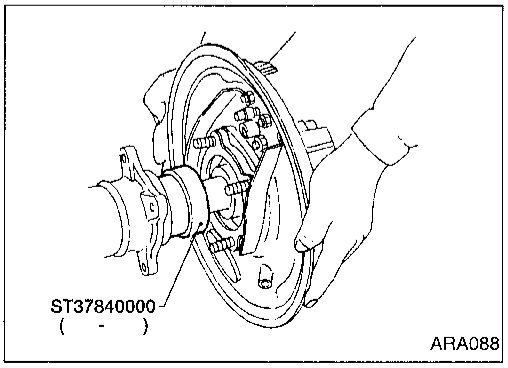

ARA088

b. Insert axle shaft with Tool as a guide.

When inserting axle shaft, be careful not to damage oil seal.

c. Measure end play of axle shaft.

Axial end play:
Servicing only one side of axle shaft
0.02 - 0.15 mm (0.0008 - 0.0059 in)
Servicing both side axle shafts
On first axle shaft (right or left) adjust axial end play
0.30 - 0.90 mm (0.0118 - 0.0354 in)
After servicing second axle shaft, total end play
0.02 - 0.15 mm (0.0008 - 0.0059 in)

Simpo PDF Merge and Split Unregistered Version - http://www.simpopdf.com

Installation — 2WD models — (Cont'd)

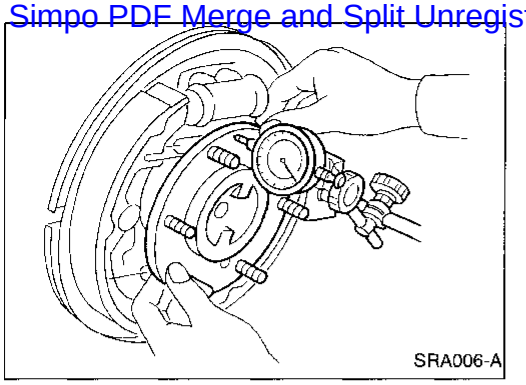

d. If axial end play is not within the specified limit, reselect axle case end shims.

While adjusting axial end play, be careful not to damage oil seal.

Installation — 4WD models —

1. Press new wheel bearing until it bottoms end face of bearing cage.

Maximum load P:
78 kN (8 ton, 8.8 US ton, 7.9 Imp ton)

Always press outer race of wheel bearing during installation.

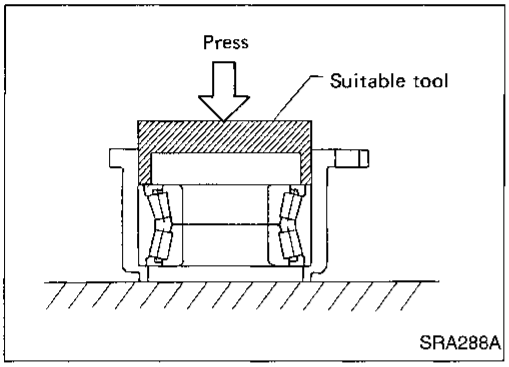

2. Press new grease seal until it bottoms end face of bearing cage.

After installing new grease seal, coat sealing lip with multi-purpose grease.

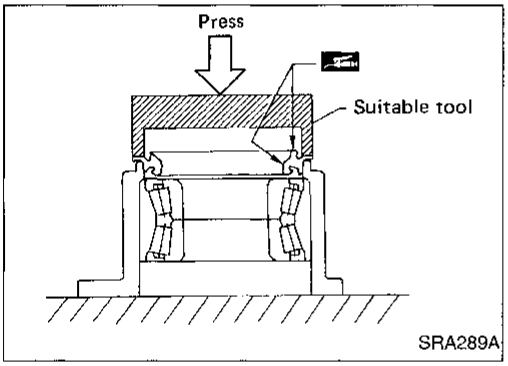

3. Press axle shaft into inner race of wheel bearing.

Maximum load P:
47.1 kN (4.8 ton, 5.3 US ton, 4.72 Imp ton)

Be careful not to damage or deform grease seal.

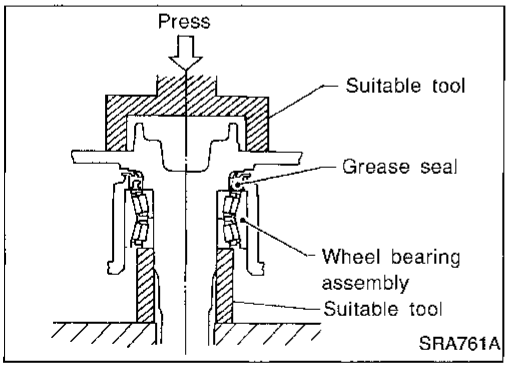

4. Install plain washer and a new wheel bearing lock washer.
5. Tighten wheel bearing lock nut to specified torque.

: 245 - 294 N·m (25 - 30 kg-m, 181 - 217 ft-lb)

Fit wheel bearing lock washer lip in wheel bearing lock nut groove correctly by tightening lock nut. Be sure to bend it up.

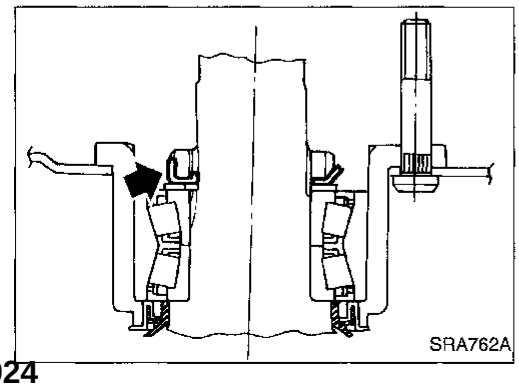

Installation — 4WD models — (Cont'd)

Simpo PDF Merge and Split Unregistered Version - http://www.simpopdf.com

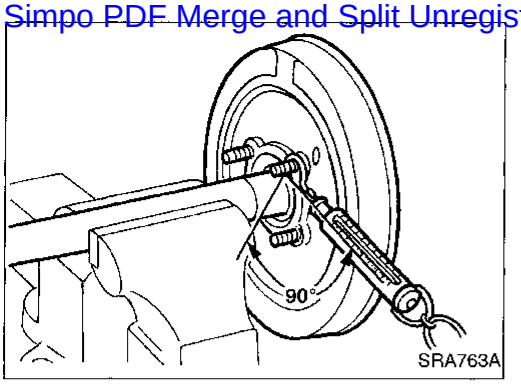

6. Check wheel bearing preload.
a. Turn bearing cage (with respect to axle shaft) two or three times. It must turn smoothly.
b. Attach spring gauge to bearing cage bolt (as shown at left) and pull it at a speed of 10 rpm to measure preload.
Spring gauge indication:
6.9 - 48.1 N (0.7 - 4.9 kg, 1.5 - 10.8 lb)

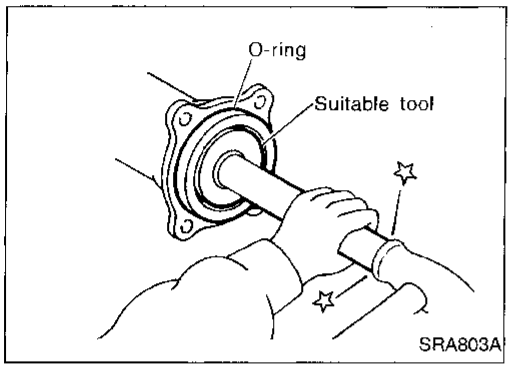

7. Install new oil seal to rear axle housing using a suitable tool.
After installing new oil seal, coat sealing lip with multi-purpose grease.
8. Install new O-ring to rear axle housing.

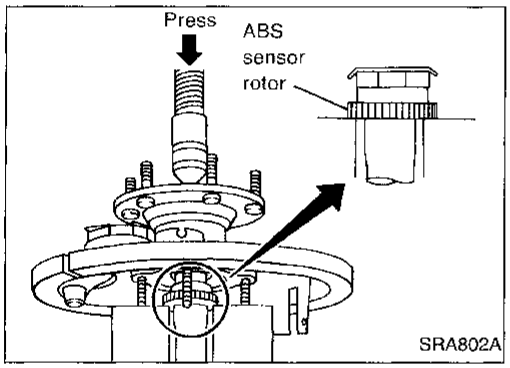

9. Press ABS sensor rotor onto axle shaft until it contacts wheel bearing lock nut.

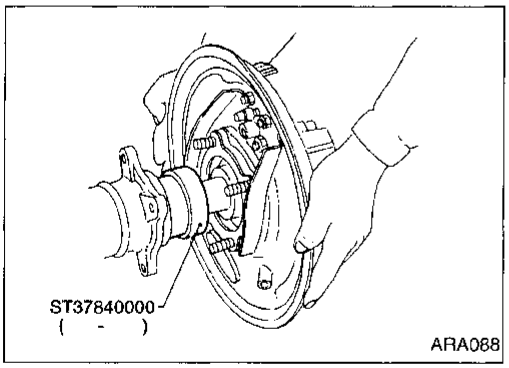

10. Position axle shafts in rear axle housing with Tool as a guide.
Be careful not to damage oil seal.

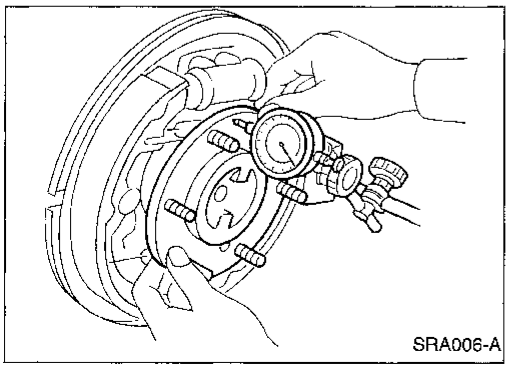

11. Check axial end play.
a. Check that wheel bearings operate smoothly.
b. Check axial end play.
Axial end play:
0 mm (0 in)

Simpo PDF Merge and Split Unregistered Version - http://www.simpopdf.com

2WD models

SEC. 431

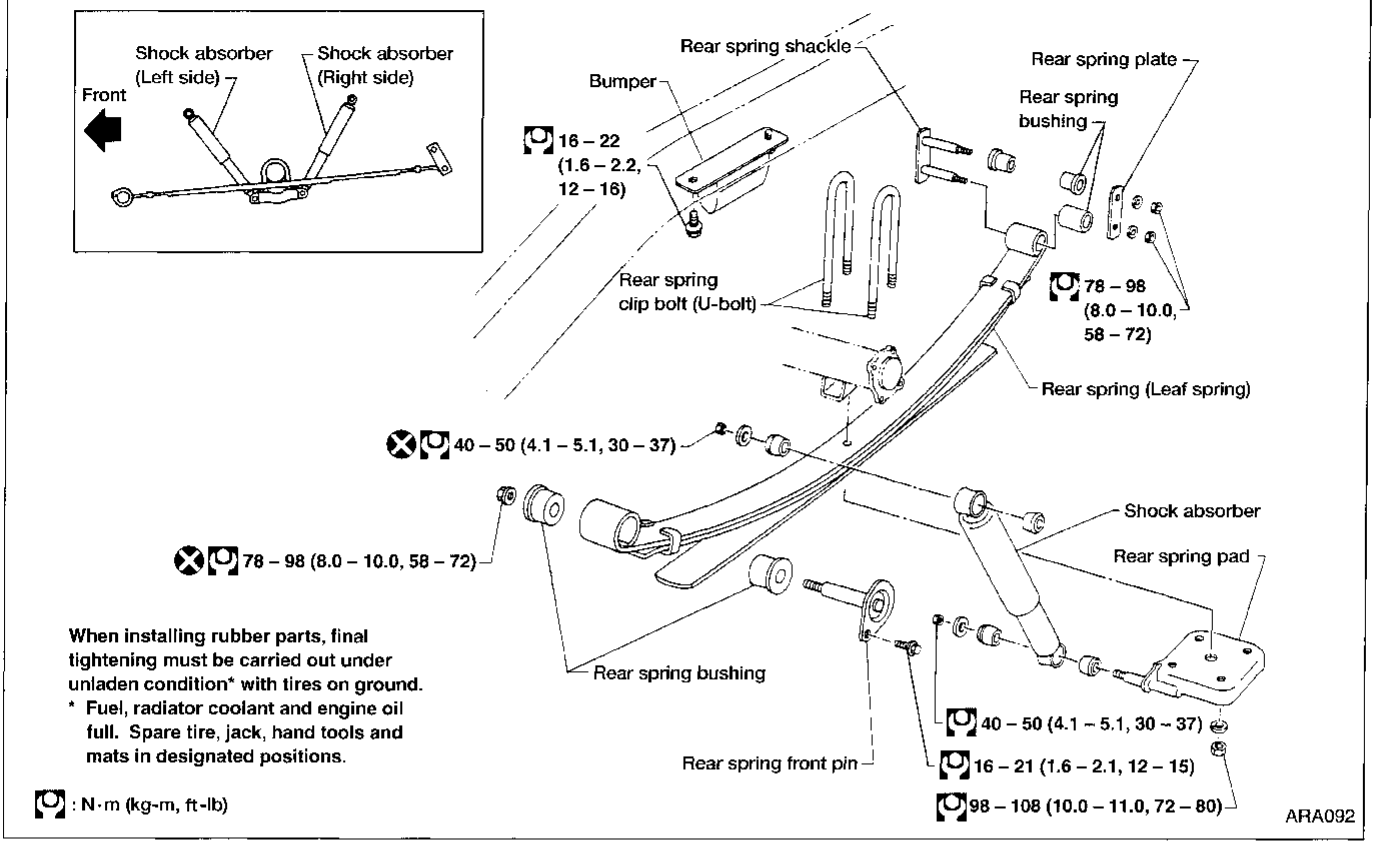

4WD models

SEC. 431

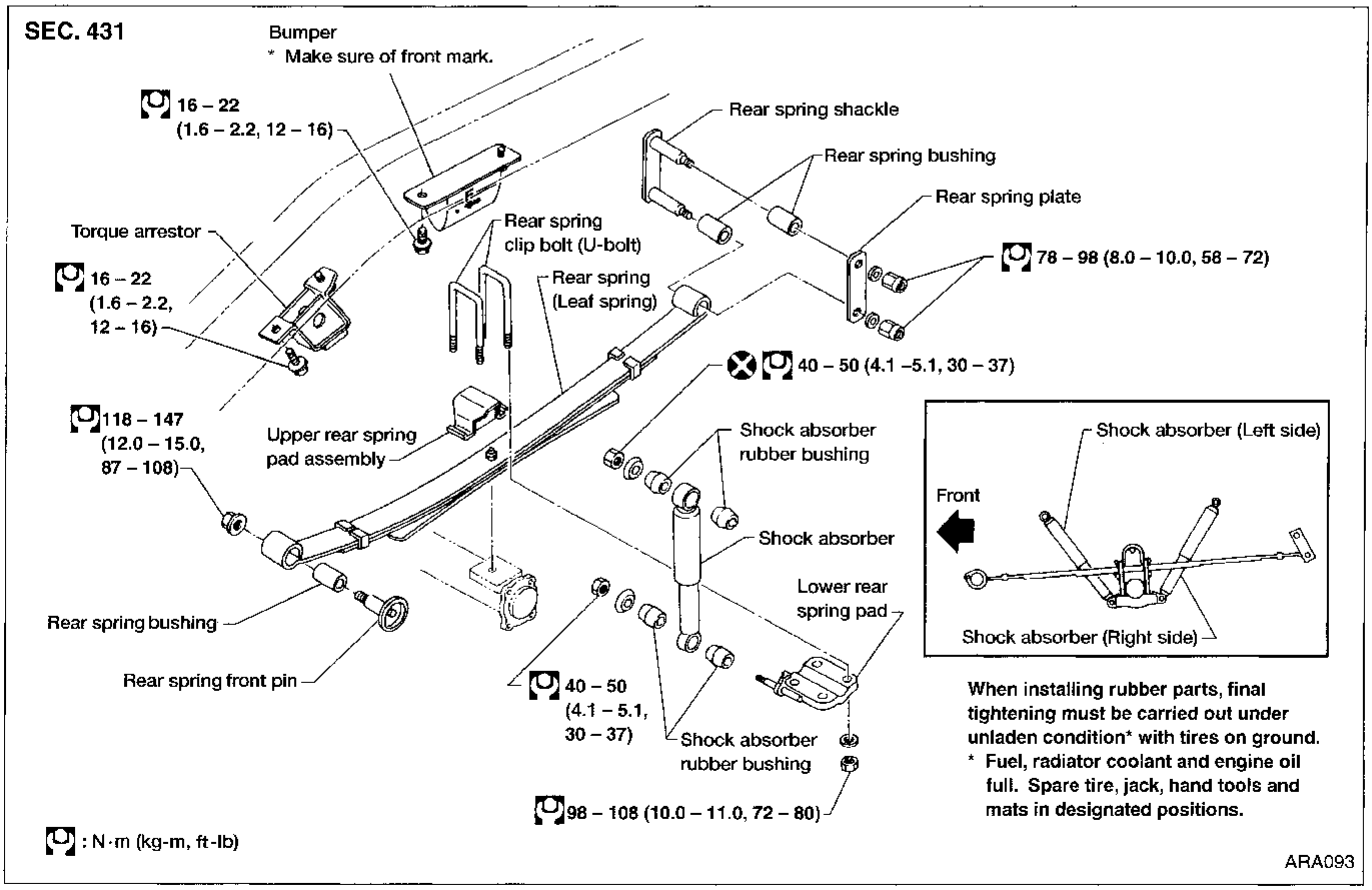

Simpo PDF Merge and Split Unregistered Version - http://www.simpopdf.com

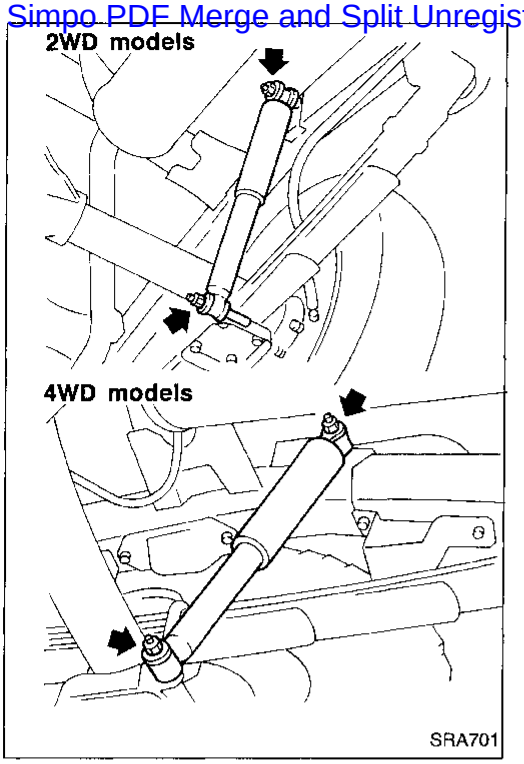

Shock Absorber

REMOVAL AND INSTALLATION

- Remove shock absorber by disconnecting upper and lower end.

INSPECTION

- If oil leakage, cracks and deformation occurs, replace shock absorber assembly.
- If rubber bushings are cracked and deformed, replace rubber bushings.

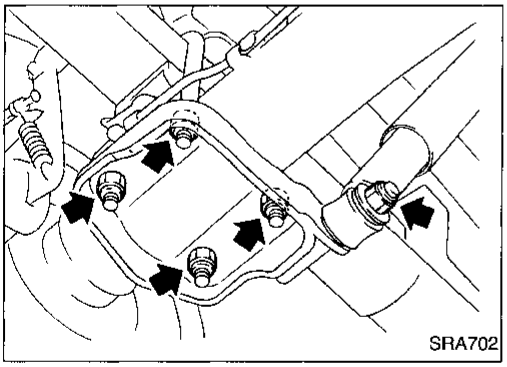

Leaf Spring

REMOVAL AND INSTALLATION

1. Disconnect shock absorber lower end, and remove U-bolts.

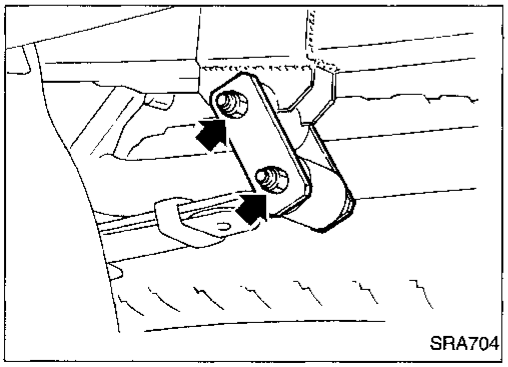

2. Disconnect spring shackle.

Leaf Spring (Cont'd)

Simpo PDF Merge and Split Unregistered Version - http://www.simpopdf.com

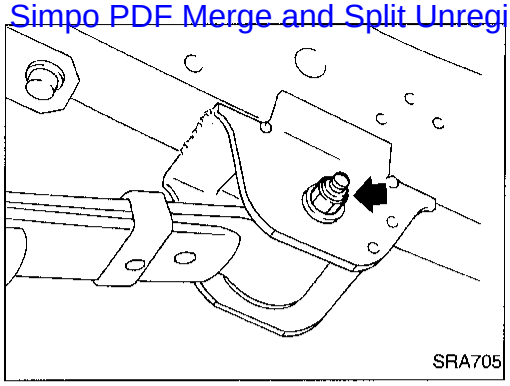

3. Disconnect front pin.

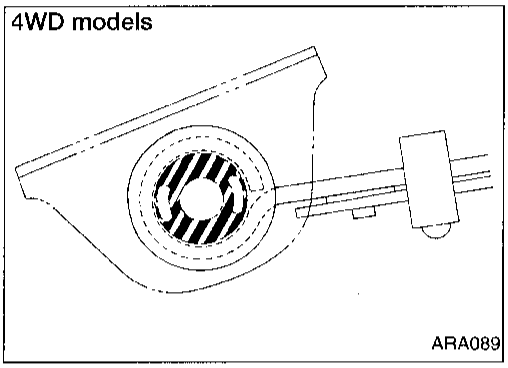

INSPECTION

- Check leaf spring for cracks. Replace if necessary.
- Check front bracket and pin, shackle, U-bolts and spring pad for wear, cracks, straightness and damaged threads. Replace if necessary.
- Check all bushings for deformation and cracks. Replace if necessary.
  (4WD models: Rear spring front bushing)
  Make sure that front bushing is properly installed.

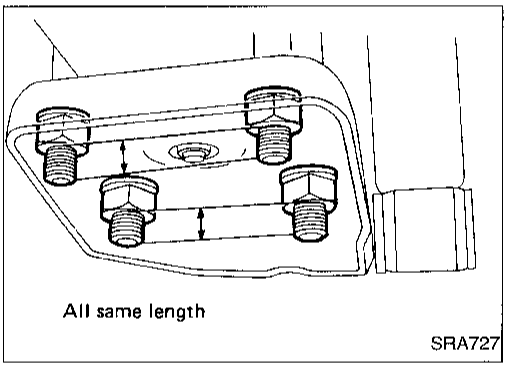

INSTALLATION

1. Apply soapsuds to rubber bushing.
2. Install spring shackle and front pin, and finger tighten the nuts.
3. Install spring pad and nuts under leaf spring or axle case.
4. Tighten U-bolt mounting nuts diagonally.

Tighten U-bolts so that the lengths of all U-bolts under spring pad are the same.

5. Install shock absorber, and finger tighten the nuts.

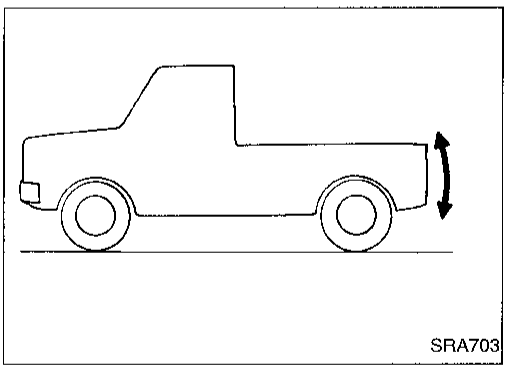

6. Remove stands and bounce the vehicle to stabilize suspension. (Unladen)

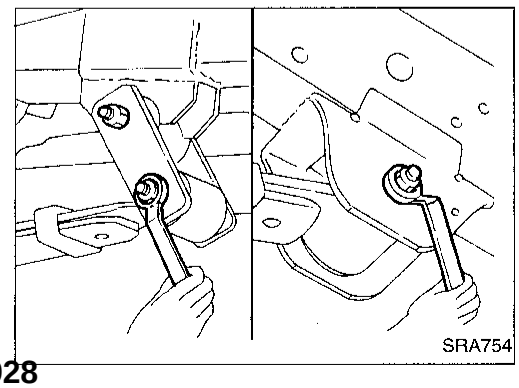

7. Tighten spring shackle nuts, front pin nuts and shock absorber nuts.

When installing rubber parts, final tightening must be carried out under unladen condition* with tires on the ground.

*** Fuel, radiator coolant and engine oil full. Spare tire, jack, hand tools and mats in designated positions.**

Simpo PDF Merge and Split Unregistered Version - http://www.simpopdf.com

General Specifications

Suspension type	Rigid axle with semi-elliptic leaf spring
Shock absorber type	Double-acting hydraulic

Inspection and Adjustment

WHEEL BEARING — 2WD models —

Total end play mm (in)	0.02 - 0.15 (0.0008 - 0.0059)	
	Thickness mm (in)	Part number
Available rear axle case end shims	0.05 (0.0020)	43086-P0110
	0.07 (0.0028)	43087-P0110
	0.10 (0.0039)	43088-P0110
	0.15 (0.0059)	43086-B9500
	0.20 (0.0079)	43089-P0110
	0.50 (0.0197)	43090-P0110
	1.00 (0.0394)	43036-01G00

WHEEL BEARING — 4WD models —

Total end play mm (in)	0 (0)
Wheel bearing preload at bearing cage bolt N (kg, lb)	6.9 - 48.1 (0.7 - 4.9, 1.5 - 10.8)

Simpo PDF Merge and Split Unregistered Version - http://www.simpopdf.com

SECTION RS

CONTENTS

PRECAUTIONS AND PREPARATION 2
Supplemental Restraint System (SRS) "AIR BAG" 2
SEAT BELTS 3
Front Seat Belt 4
Rear Seat Belt 5
Seat Belt Inspection 6
SUPPLEMENTAL RESTRAINT SYSTEM (SRS) 9
Precautions for SRS "AIR BAG" Service 9
Special Service Tools 10
Description 11
Passenger air bag deactivation switch 11
SRS Component Parts Location 12
Maintenance Items 13
Diagnosis Sensor Unit and Crash Zone Sensor 14
Removal And Installation 14
Diagnosis sensor unit 14
Crash zone sensor (4WD models) 14
Driver Air Bag Module and Spiral Cable 15
Passenger Air Bag Module 19
Passenger Air Bag Deactivation Switch 21
Passenger Air Bag Deactivation Switch Lock Cylinder 21
Passenger Air Bag Deactivation Switch Indicator 22
Disposal of Air Bag Module 23
TROUBLE DIAGNOSES — Supplemental Restraint System (SRS) 27
Trouble Diagnosis Introduction 27
How to Perform Trouble Diagnoses for Quick and Accurate Repair 30
Schematic 31
Wiring Diagram –SRS– 32
SRS Operation Check 34
Trouble Diagnoses with CONSULT 35
Trouble Diagnoses without CONSULT 44
Trouble Diagnoses: "AIR BAG" Warning Lamp Does Not Turn Off 48
Trouble Diagnoses: "AIR BAG" Warning Lamp Does Not Turn On 49
Trouble Diagnoses: SRS Does Not Enter Diagnosis Mode Using Door Switch 50
COLLISION DIAGNOSIS 51

When you read wiring diagrams:
- **Read GI section, "HOW TO READ WIRING DIAGRAMS".**
- **See EL section, "POWER SUPPLY ROUTING" for power distribution circuit.**

When you perform trouble diagnoses, read GI section, "HOW TO FOLLOW FLOW CHART IN TROUBLE DIAGNOSES" and "HOW TO PERFORM EFFICIENT DIAGNOSIS FOR AN ELECTRICAL INCIDENT".

Simpo PDF Merge and Split Unregistered Version - http://www.simpopdf.com

Supplemental Restraint System (SRS) "AIR BAG"

The Supplemental Restraint System "AIR BAG", used along with a seat belt, helps to reduce the risk or severity of injury to the driver and front passenger in a frontal collision. The Supplemental Restraint System consists of air bag modules (located in the center of the steering wheel and in the instrument panel on the passenger side), a diagnosis sensor unit, a crash zone sensor (4WD models), warning lamp, wiring harness and spiral cable.

The vehicle is equipped with a passenger air bag deactivation switch. Because no rear seat exists where a rear-facing child restraint can be placed, the switch is designed to turn off the passenger air bag so that a rear-facing child restraint can be used in the front passenger seat. The switch is located in the center of the instrument panel, near the ashtray. When the switch is turned to the ON position, the passenger air bag is enabled and could inflate in a frontal collision. When the switch is turned to the OFF position, the passenger air bag is disabled and will not inflate in a frontal collision. A passenger air bag OFF indicator on the instrument panel lights up when the passenger air bag is switched OFF. The driver air bag always remains enabled and is not affected by the passenger air bag deactivation switch.

WARNING:

- **To avoid rendering the SRS inoperative, which could increase the risk of personal injury or death in the event of a collision which would result in air bag inflation, all maintenance should be performed by an authorized NISSAN dealer.**
- **Improper maintenance, including incorrect removal and installation of the SRS, can lead to personal injury caused by unintentional activation of the system.**
- **Do not use electrical test equipment on any circuit related to the SRS unless instructed to in this Service Manual. SRS wiring harnesses are covered with yellow insulation either just before the harness connectors or on the complete harness, for easy identification.**
- **The vehicle is equipped with a passenger air bag deactivation switch which can be operated by the customer. When the passenger air bag is switched OFF, the passenger air bag is disabled and will not inflate in a frontal collision. When the passenger air bag is switched ON, the passenger air bag is enabled and could inflate in a frontal collision. After SRS maintenance or repair, make sure the passenger air bag deactivation switch is in the same position (ON or OFF) as when the vehicle arrived for service.**

Simpo PDF Merge and Split Unregistered Version - http://www.simpopdf.com

CAUTION:

- **Do not disassemble buckle or seat belt assembly.**
- **Replace anchor bolts if they are deformed or worn out.**
- **Never oil tongue and buckle.**
- **If any component of seat belt assembly is questionable, do not repair. Replace the seat belt assembly.**
- **If webbing is cut, frayed, or damaged, replace seat belt assembly.**
- **When replacing seat belt assembly, use a genuine NISSAN seat belt assembly.**
- **After any collision, inspect all seat belt assemblies, including retractors and other attached hardware.**

Simpo PDF Merge and Split Unregistered Version - http://www.simpopdf.com

Front Seat Belt

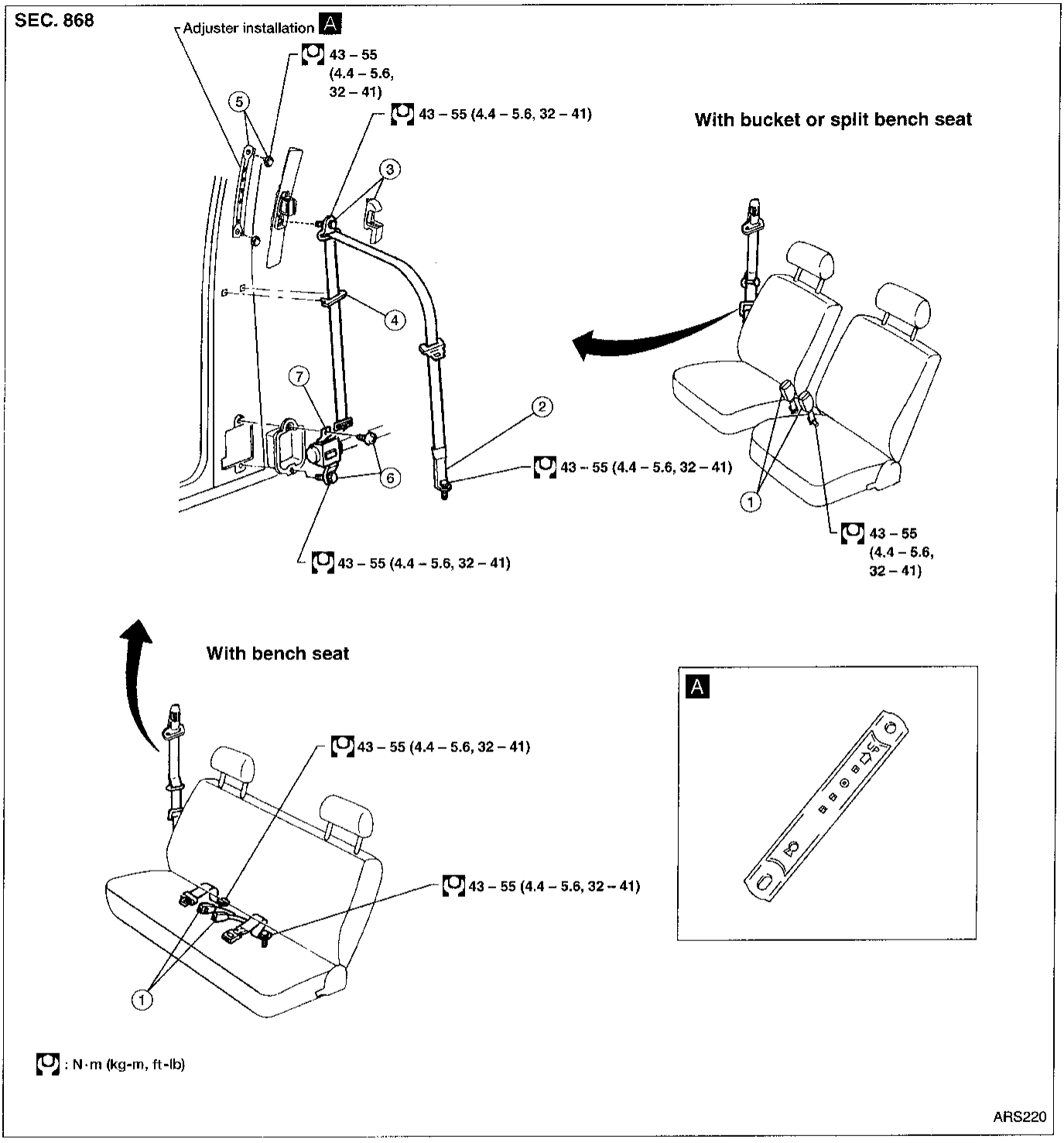

REMOVAL

Remove front seat. Refer to BT section (“Front Seat”, “SEAT”).

① Remove buckle.
② Remove floor anchor bolt.
③ Remove adjuster cover and upper guide loop anchor bolt.
For King Cab models, remove jump seat. Refer to BT section, (“Rear Seat”, “SEAT”).
Remove rear pillar lower and upper garnishes.
④ Remove guide plate.
⑤ Remove two adjuster bolts and adjuster assembly. A
⑥ Remove retractor bolt and screw.
⑦ Remove retractor.

Simpo PDF Merge and Split Unregistered Version - http://www.simpopdf.com

Rear Seat Belt

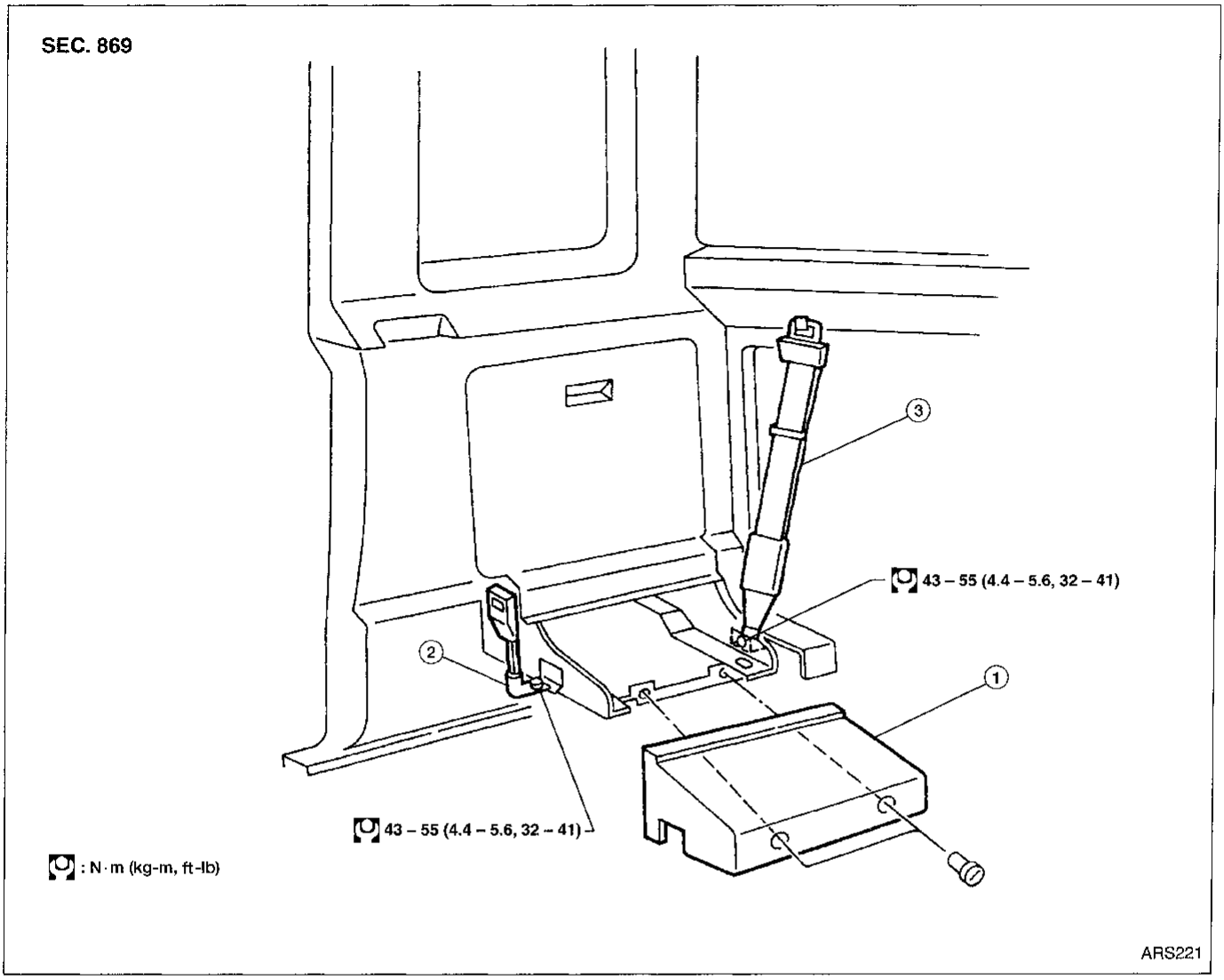

REMOVAL

① Remove underseat storage.
② Remove buckle.
③ Remove seat belt anchor bolt.

Simpo PDF Merge and Split Unregistered Version - http://www.simpopdf.com

Seat Belt Inspection

AFTER A COLLISION

WARNING:

Inspect all seat belt assemblies including retractors and attaching hardware after any collision. NISSAN recommends that all seat belt assemblies in use during a collision be replaced unless the collision was minor and the belts show no damage and continue to operate properly. Failure to do so could result in serious personal injury in an accident. Seat belt assemblies not in use during a collision should also be replaced if either damage or improper operation is noted.

Replace any seat belt assembly if:

- The seat belt was in use at the time of a collision (except for minor collisions when the belts, retractors and buckles show no damage and continue to operate properly).
- The seat belt was damaged in an accident (i.e. torn webbing, bent retractor or guide, etc.).
- The seat belt attaching point was damaged in an accident. Inspect the seat belt attaching area for damage or distortion and repair as necessary before installing a new seat belt assembly.

PRELIMINARY CHECKS

1. Check the seat belt warning lamp/chime for proper operation as follows:

a. Switch ignition ON. The seat belt warning lamp should illuminate. Also, the seat belt warning chime should sound for about 7 seconds.

b. Fasten driver's seat belt. The seat belt warning lamp should go out and the chime (if sounding) should stop.

2. Check that the seat belt retractor, seat belt anchor and buckle bolts are securely attached.
3. Check the shoulder seat belt guide and shoulder belt height adjuster for front seats. Ensure guide swivels freely and that belt lays flat and does not bind in guide. Ensure height adjuster operates properly and holds securely.

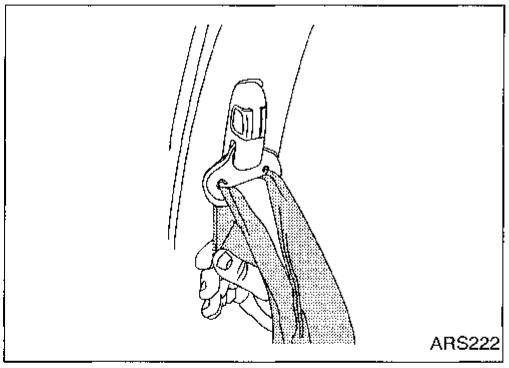

4. Check retractor operation including:

a. Fully extend the seat belt webbing and check for twists, tears or other damage.

b. Allow the seat belt to retract. Ensure that belt returns smoothly and completely into the retractor. If the seat belt does not return smoothly, wipe the inside of the loops with a clean paper cloth, etc. because dirt built up in the loops of the upper anchors can cause the seat belts to retract slowly.

c. Fasten the seat belt. Pull firmly on belt and buckle to ensure belt remains latched. Unfasten seat belt. Ensure belt releases freely and buckle button returns to original position.

5. For non-retractable seat belts, check that the seat belts are accessible. Check seat belt webbing for twists, tears or other damage. Fasten the seat belt. Pull firmly on belt and buckle to ensure belt remains latched. Unfasten seat belts. Ensure belt releases freely and buckle button returns to original position.
6. Repeat steps above as necessary to check the other seat belts.

Seat Belt Inspection (Cont'd)

Simpo PDF Merge and Split Unregistered Version - http://www.simpopdf.com

SEAT BELT RETRACTOR ON-VEHICLE CHECK

Emergency locking retractors (ELR) and Automatic locking retractors (ALR)

NOTE:

All seat belt retractors are of the Emergency Locking (ELR) type. In an emergency (sudden stop) the retractor will lock and prevent the belt from extending any further. All outboard 3-point type seat belt retractors except the driver's seat belt also have an Automatic Locking (ALR) mode. The ALR mode (also called child restraint mode) is used when installing child seats in outboard seating positions. The ALR mode is activated when the seat belt is fully extended. When the belt is then retracted partially, the ALR mode automatically locks the seat belt in a specific position so the belt cannot be extended any further. To cancel the ALR mode, allow the seat belt to fully wind back into the retractor.

Check the seat belt retractors using the following test(s) to determine if a retractor assembly is operating properly.

ELR function stationary check

Grasp the shoulder belt and pull forward quickly. The retractor should lock and prevent the belt from extending further.

ALR function stationary check

1. Pull out entire length of seat belt from retractor until a click is heard.
2. Retract the belt partially; a clicking noise should be heard as the belt retracts indicating retractor is in the automatic locking (ALR) mode.
3. Grasp the seat belt and try to pull out of retractor. Belt must lock and not extend further. If NG, replace the retractor assembly.
4. Allow the entire length of belt to retract to cancel the automatic locking mode.

ELR function moving check (all outboard seating positions)

WARNING:

Perform the following test in a safe, open area clear of other vehicles and obstructions (for example, a large, empty parking lot). Road surface must be paved and dry. DO NOT perform the following test on wet or gravel roads or on public streets and highways. This could result in an accident and serious personal injury. The driver and passenger must be prepared to brace themselves in the event the retractor does not lock.

1. Fasten driver's seat belt. Buckle a passenger into the seat for the belt that is to be tested.
2. Proceed to the designated safe area.
3. Drive the vehicle at approximately 16 km/h (10 MPH). Notify any passengers of a pending sudden stop. The driver and passenger must be prepared to brace themselves in the event the retractor does not lock. Apply brakes firmly and make a very hard stop.

During stop, seat belts should lock and not extend. If the seat belt retractor assembly does not lock, perform the retractor off-vehicle check.

Seat Belt Inspection (Cont'd)

Simpo PDF Merge and Split Unregistered Version - http://www.simpopdf.com

SEAT BELT RETRACTOR OFF-VEHICLE CHECK

1. Remove the seat belt retractor assembly.
2. Slowly pull out belt while tilting the retractor assembly forward from the mounted position as shown in the illustration.

15 degrees or less tilt: Belt can be pulled out.
35 degrees or more tilt: Belt locks and cannot be pulled out.

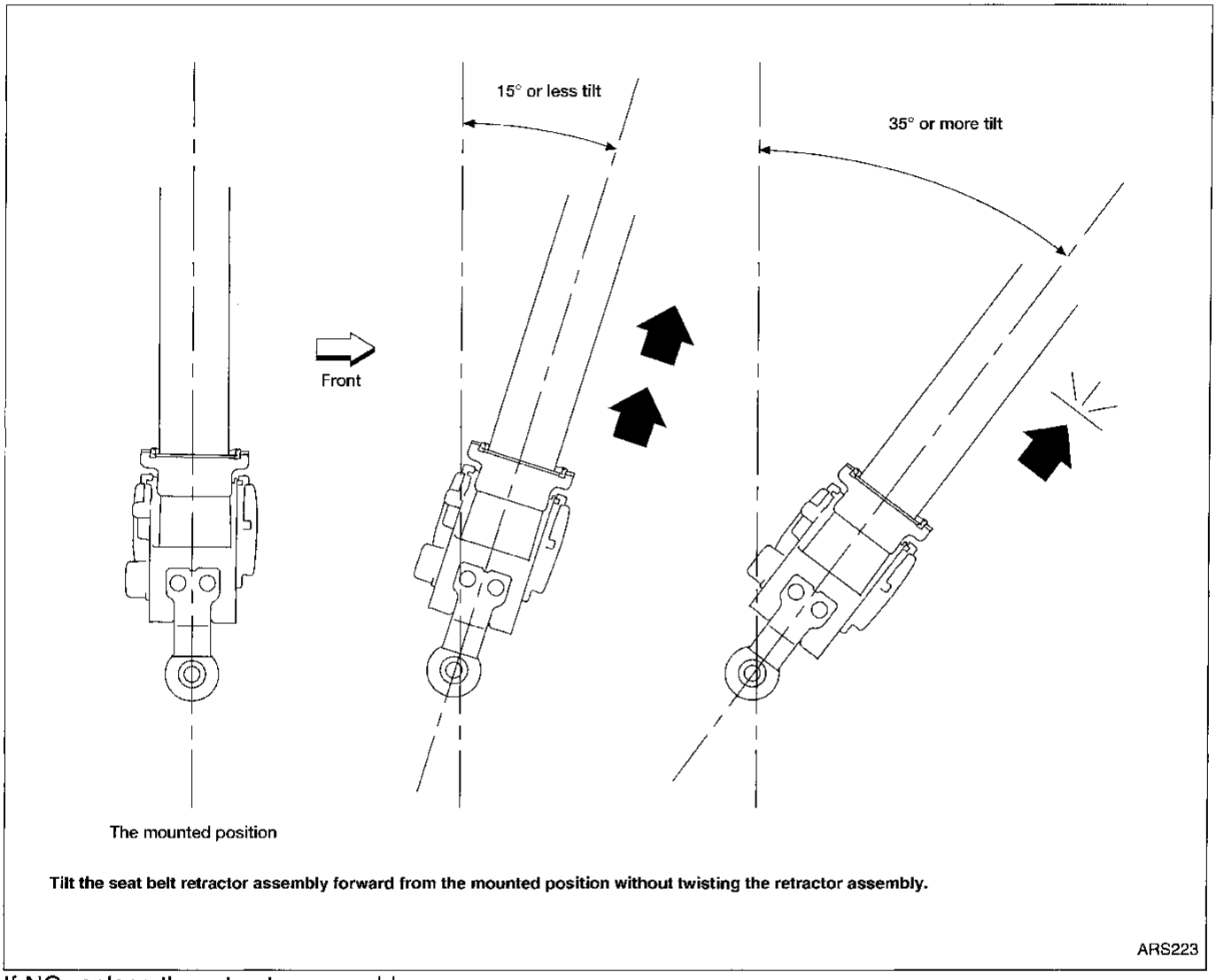

If NG replace the retractor assembly.

Simpo PDF Merge and Split Unregistered Version - http://www.simpopdf.com

Precautions for SRS "AIR BAG" Service

- Do not use electrical test equipment on any circuit related to the SRS unless instructed to in this Service Manual. SRS wiring harnesses are covered with yellow insulation either just before the harness connectors or on the complete harness, for easy identification.
- Before servicing the SRS, turn ignition switch OFF, disconnect both battery cables and wait at least 3 minutes.
  For approximately 3 minutes after the cables are removed, it is still possible for the air bag to deploy. Therefore, do not work on any air bag system connectors or wires until at least 3 minutes have passed.
- Diagnosis sensor unit and crash zone sensor (4WD models) must always be installed with forward mark "⇦" pointing toward the front of the vehicle for proper operation. Also check diagnosis sensor unit for cracks, deformities and rust before installation and replace if necessary.
- The rotation of the spiral cable is limited. The spiral cable must be aligned in the neutral position. If the steering gear must be removed, set the front wheels in the straight-ahead direction. Do not rotate the steering column while the steering gear is removed to avoid damaging the spiral cable.
- Handle air bag modules carefully. Always place them with the pad side facing upward.
- Do not use old special bolts after removing any SRS parts; replace with new special bolts. Conduct self-diagnosis to check entire SRS for proper operation.
- If front of vehicle is damaged in a collision, always check the crash zone sensor (4WD models) and the wiring harness.
- After air bag inflates, the instrument panel assembly should be replaced if damaged.
- After SRS maintenance or repair, make sure the passenger air bag deactivation switch is in the same position (ON or OFF) as when the vehicle arrived for service.

Simpo PDF Merge and Split Unregistered Version - http://www.simpopdf.com

Special Service Tools

The actual shapes of Kent-Moore tools may differ from those of special service tools illustrated here.

Tool number (Kent-Moore No.) Tool name	Description	
KV991072S0 (J38381-KIT) Air bag deployment kit KV99106400 (J38381) Deployment tool	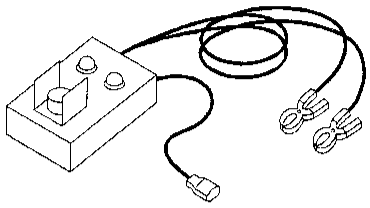 NT357	Disposing of air bag module
KV991065S0 (J38381-30) Deployment tool adapters	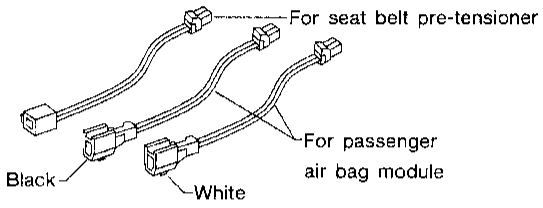 NT353	
KV99105300 (J41246) Air bag module bracket	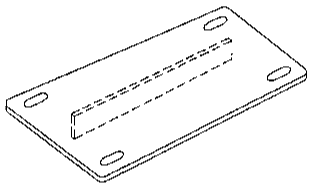 NT354	Anchoring the air bag module
HT61961000 and HT62152000 combined (J38219) *Special torx bit	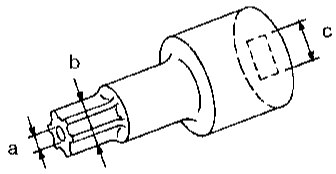 NT361	Use for special bolts [TAMPER RESISTANT TORX (Size T50)] **a: 3.5 (0.138) dia.** **b: 8.5 - 8.6 (0.335 - 0.339) dia.** **c: approx. 10 (0.39) sq.** Unit: mm (in)

*: Special tool or commercial equivalent

Simpo PDF Merge and Split Unregistered Version - http://www.simpopdf.com

Description

2WD models

The diagnosis sensor unit will deploy the air bags if the G-sensor activates simultaneously with the safing sensor while the ignition switch is ON. The passenger air bag does not deploy when the passenger air bag deactivation switch is turned to the OFF position.

4WD models

The diagnosis sensor unit will deploy the air bags if the G-sensor and/or the crash zone sensor activates simultaneously with the safing sensor while the ignition switch is ON. The passenger air bag does not deploy when the passenger air bag deactivation switch is turned to the OFF position.

Ignition	Crash zone sensor (4WD models only)	Diagnosis sensor unit		Passenger air bag deactivation switch position	Driver air bag	Passenger air bag
		G-sensor	Safing sensor			
ON	—	ON	ON	ON	Deploy	Deploy
				OFF	Deploy	Not deploy
ON	ON	—	ON	ON	Deploy	Deploy
				OFF	Deploy	Not deploy
ON	ON	ON	ON	ON	Deploy	Deploy
				OFF	Deploy	Not deploy

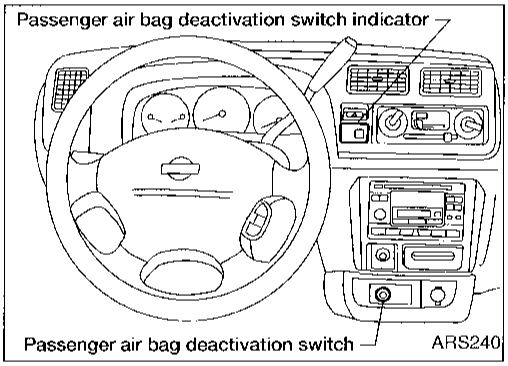

Passenger air bag deactivation switch

The vehicle is equipped with a passenger air bag deactivation switch which can be operated by the customer. When the switch is turned to the ON position, the passenger air bag is enabled and could inflate in a frontal collision. When the switch is turned to the OFF position, the passenger air bag is disabled and will not inflate in a frontal collision.

After turning the ignition switch ON, a passenger air bag deactivation switch indicator illuminates on the instrument panel for bulb check. The indicator will stay lit if the passenger air bag deactivation switch is in the OFF position. If the passenger air bag deactivation switch is in the ON position, the indicator will turn off after about 7 seconds.

After SRS maintenance or repair, make sure the passenger air bag deactivation switch is in the same position (ON or OFF) as when the vehicle arrived for service.

IGN OFF → ON

Passenger air bag deactivation switch position	Passenger air bag deactivation switch indicator	Passenger air bag deployment
ON	Turns off within 7 seconds	Enabled
OFF	Stays lit	Disabled

If the passenger air bag deactivation switch indicator operation does not correspond to ON/OFF operation of the passenger air bag deactivation switch, perform self-diagnoses for SRS and repair according to the self-diagnostic failure. Refer to "TROUBLE DIAGNOSES — Supplemental Restraint System (SRS)", "SRS Operation Check", RS-34.
If no self-diagnostic failure is detected, replace the passenger air bag deactivation switch including the key cylinder.

Description (Cont'd)

Simpo PDF Merge and Split Unregistered Version - http://www.simpopdf.com

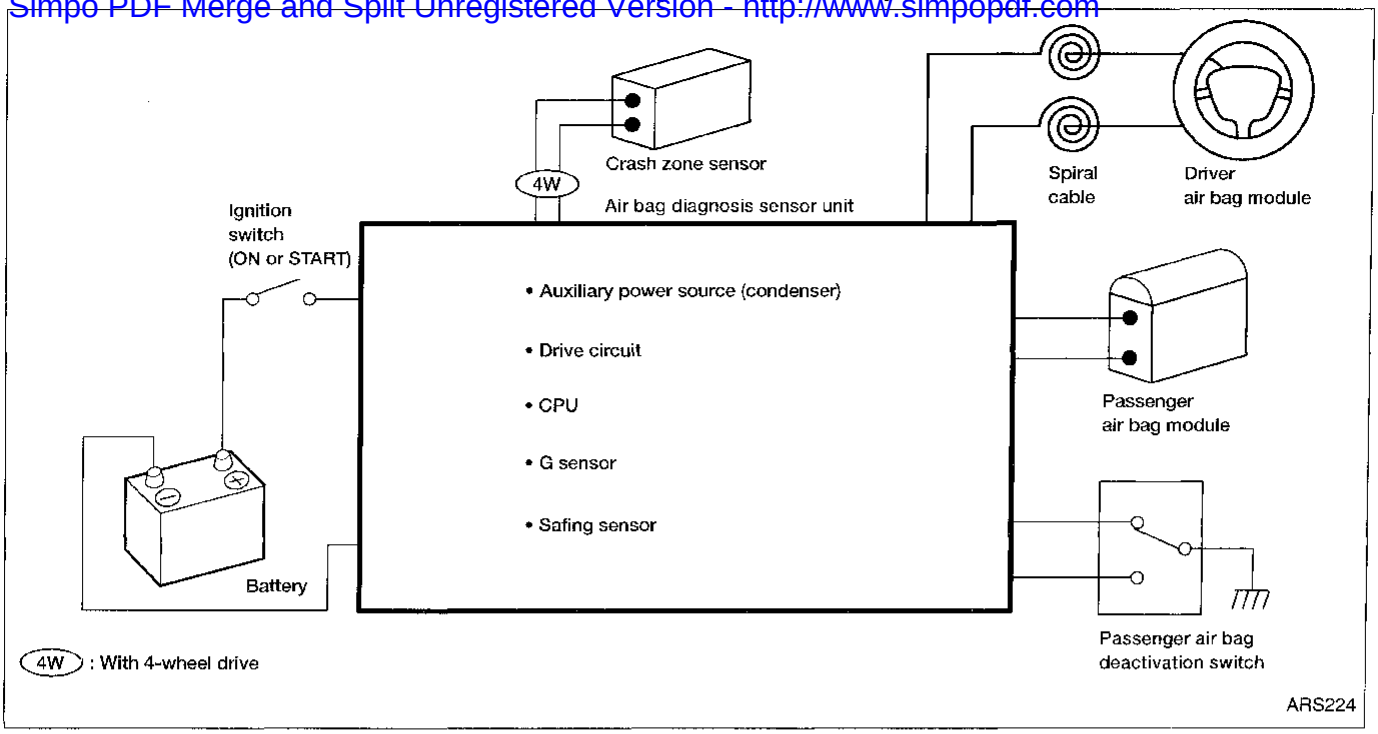

SRS Component Parts Location

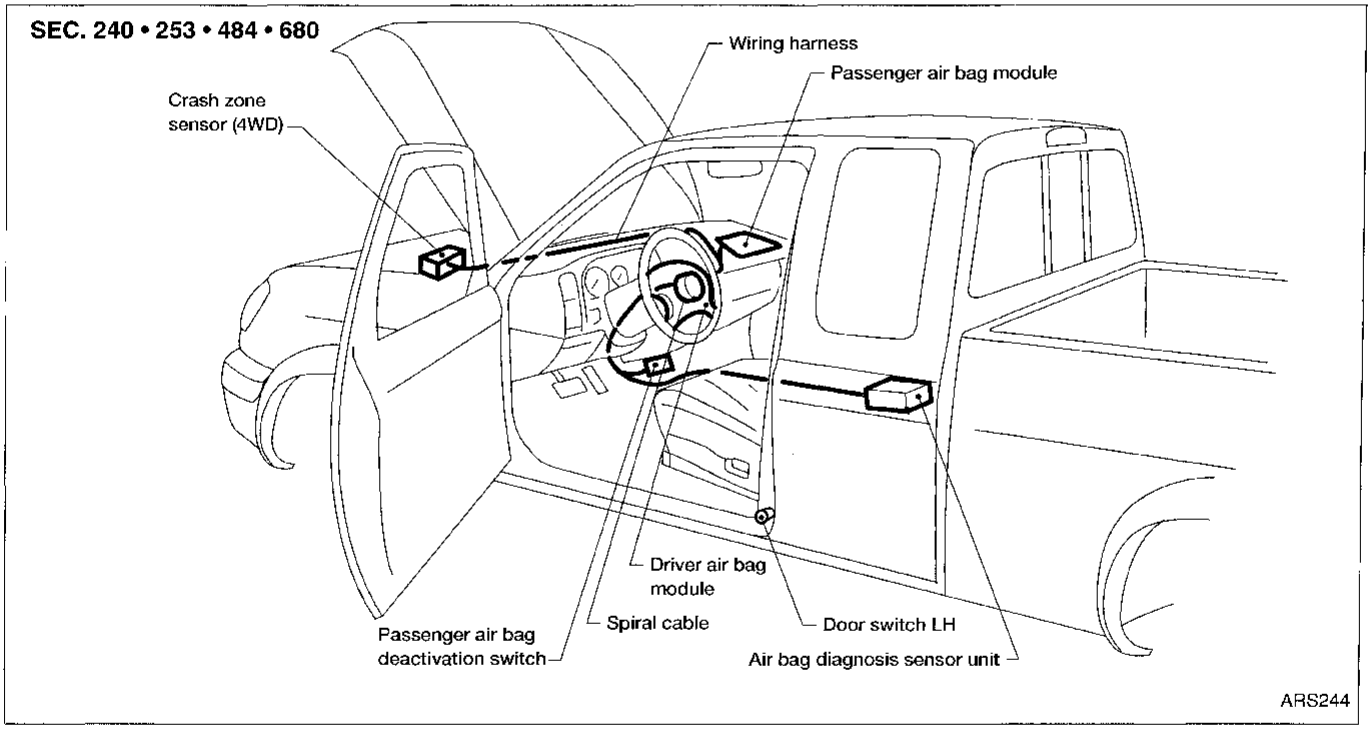

Simpo PDF Merge and Split Unregistered Version - http://www.simpopdf.com

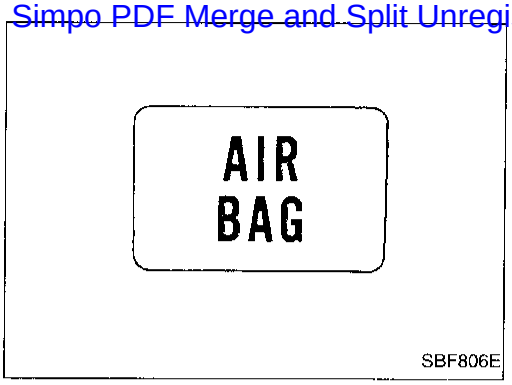

Maintenance Items

1. Check "AIR BAG" warning lamp operation
   After turning the ignition key ON, "AIR BAG" warning lamp illuminates. The "AIR BAG" warning lamp will turn off after about 7 seconds if no malfunction is detected.
   If any of the following "AIR BAG" warning lamp conditions occur, immediately check the air bag system. Refer to RS-34.
   - The warning lamp does not illuminate when the ignition switch is turned ON.
   - The warning lamp does not turn off about 7 seconds after the ignition switch is turned ON.
   - The warning lamp turns off about 7 seconds after the ignition switch is turned ON, but it turns on again or blinks.

2. Visually check SRS components

a. Crash zone sensor (4WD models)
- Check crash zone sensor to ensure the arrow marks face the front of the vehicle.
- Check body and sensor bracket for deformities and rust.
- Check sensor case for dents, cracks, deformities and rust.
- Check sensor harness for binding, connector for damage and terminals for deformities.

b. Air bag diagnosis sensor unit
- Check air bag diagnosis sensor unit and bracket for dents, cracks and deformities.
- Check connectors for damage and terminals for deformities.

c. Air bag modules, steering wheel and instrument panel
- Remove driver air bag module from steering wheel. Check harness cover and connectors for damage, terminals for deformities, and harness for binding.
- Install driver air bag module in steering wheel to check fit or alignment with the wheel.
- Check steering wheel for excessive free play.
- Remove passenger air bag module. Check harness cover and connectors for damage, terminals for deformities, and harness for binding. Check the bracket for deformities and rust.
- Install passenger air bag module in instrument panel to check fit or alignment with the instrument panel.

d. Spiral cable
- Check spiral cable for dents, cracks, and deformities.
- Check connectors and protective tape for damage.
- Check steering wheel for noise, binding and heavy operation.

e. Passenger air bag deactivation switch
- Check passenger air bag deactivation switch for damage.
- Check harness for binding, connector for damage and terminals for deformities.

f. Main harness and air bag harness
- Check connectors for poor connections, damage, and terminals for deformities.
- Check harnesses for binding, chafing and cuts.

CAUTION:
Replace previously used special bolts with new ones.

Simpo PDF Merge and Split Unregistered Version - http://www.simpopdf.com

Diagnosis Sensor Unit and Crash Zone Sensor

CAUTION:

- **Before servicing SRS, turn the ignition switch OFF, disconnect both battery cables and wait at least 3 minutes.**
- **The special bolts are coated with bonding agent while the other bolt is for ground. Do not use old bolts after removal; replace with new coated bolts.**
- **Check air bag diagnosis sensor unit for proper installation. Make sure that there are no deformities, dents, cracks or rust. If there are any visible signs of damage, replace with a new one.**
- **Check air bag diagnosis sensor unit brackets to ensure they are free of deformities and rust.**
- **Replace air bag diagnosis sensor unit if it has been dropped or sustained an impact.**
- **Check crash zone sensor (4WD models) for proper installation. Make sure that there are no deformities, dents, cracks or rust. If there are any visible signs of damage, replace the crash zone sensor.**
- **Check crash zone sensor bracket (4WD models) to ensure that it is free of deformities and rust.**

REMOVAL AND INSTALLATION

Diagnosis sensor unit

1. Disconnect driver and passenger air bag module connectors.
2. Remove console box. Refer to BT section ("INSTRUMENT PANEL").
3. Disconnect air bag diagnosis sensor unit connector.
4. Remove bolts from air bag diagnosis sensor unit. Use TAMPER RESISTANT TORX (Size T50) to remove special bolts.
5. Remove the air bag diagnosis sensor unit.

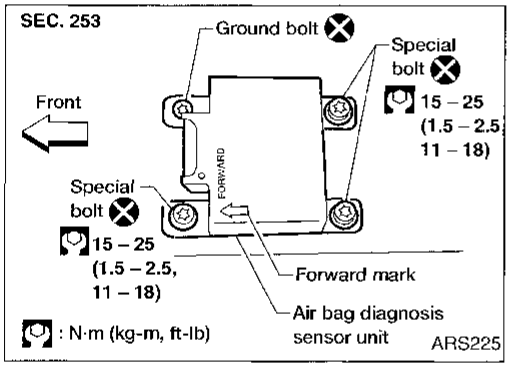

NOTE:

- **To install, reverse the removal procedure.**
- **After replacement, perform self-diagnosis for SRS. Refer to "TROUBLE DIAGNOSES — Supplemental Restraint System (SRS)", "SRS Operation Check", RS-34.**

CAUTION:

Air bag diagnosis sensor unit must always be installed with forward mark "⇦" pointing towards the front of the vehicle for proper operation. Also check air bag diagnosis sensor unit for cracks, deformities and rust before installation and replace as required.

Crash zone sensor (4WD models)

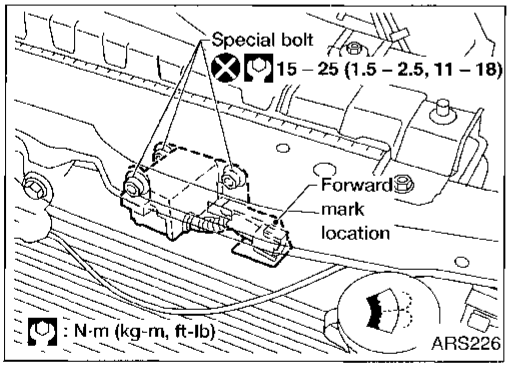

1. Disconnect driver and passenger air bag module connectors.
2. Remove front grille. Refer to BT section ("BODY FRONT END").
3. Disconnect crash zone sensor connector.
4. Using the TAMPER RESISTANT TORX (Size T50), remove the three special bolts. The crash zone sensor can then be removed.

NOTE:

- **To install, reverse removal procedure.**
- **After replacement, perform Self-diagnosis for SRS. Refer to "TROUBLE DIAGNOSES — Supplemental Restraint System (SRS)", "SRS Operation Check", RS-34.**

Simpo PDF Merge and Split Unregistered Version - http://www.simpopdf.com

Driver Air Bag Module and Spiral Cable

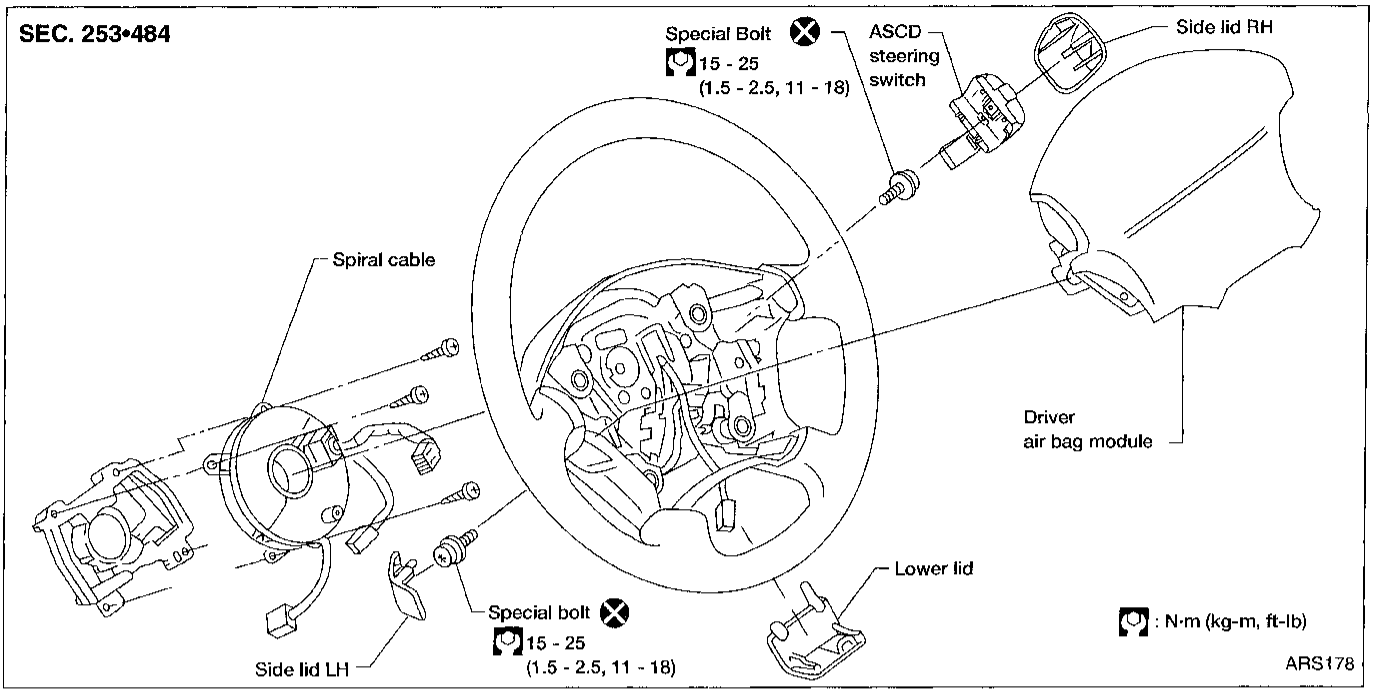

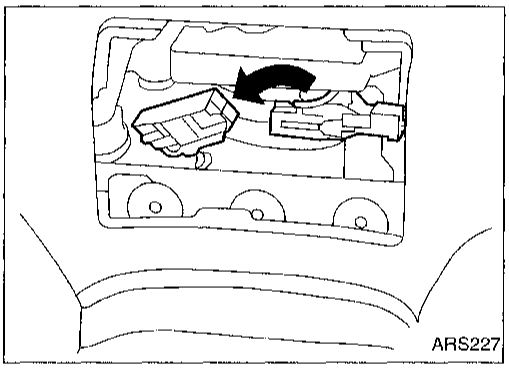

REMOVAL

CAUTION:

- **Before servicing SRS, turn the ignition switch OFF, disconnect both battery cables and wait at least 3 minutes.**
- **Always work from the side of an air bag module.**

1. Remove lower lid from steering wheel, and disconnect driver air bag module connector.

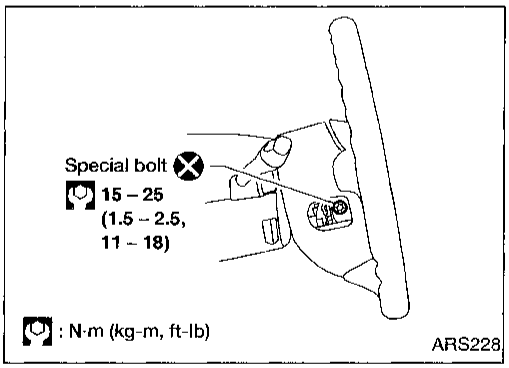

2. Remove side lids. Using the TAMPER RESISTANT TORX (Size T50), remove left and right special bolts. Driver air bag module can then be removed.

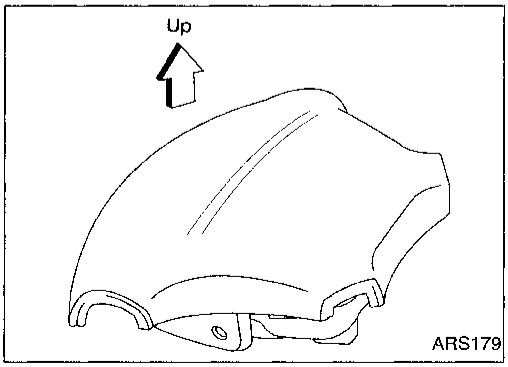

CAUTION:

- **Always place air bag module with pad side facing upward.**
- **Do not attempt to disassemble air bag module.**
- **The special bolts are coated with bonding agent. Do not use old bolts after removal; replace with new coated bolts.**

Simpo PDF Merge and Split Unregistered Version - http://www.simpopdf.com

Driver Air Bag Module and Spiral Cable (Cont'd)



- **Do not drop or impact air bag module. If any portion is deformed or cracked, replace the module.**
- **Do not expose the air bag module to temperatures exceeding 90°C (194°F).**
- **Do not allow oil, grease or water to come in contact with the air bag module.**

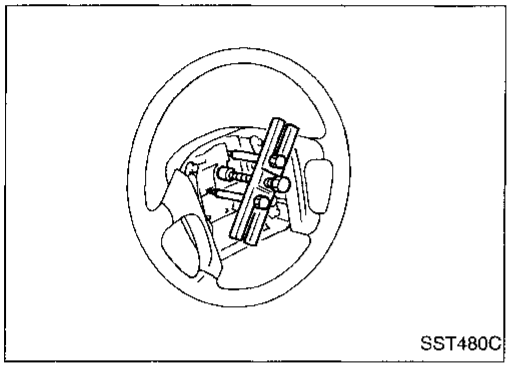

3. Set steering wheel in the neutral position.
4. Disconnect horn connector and remove steering wheel nut.
5. Using steering wheel puller, remove steering wheel. Be careful not to over-tighten puller bolt on steering wheel.

CAUTION:
Do not tap or bump the steering wheel.

6. Remove steering column covers.
7. Disconnect spiral cable from air bag harness.

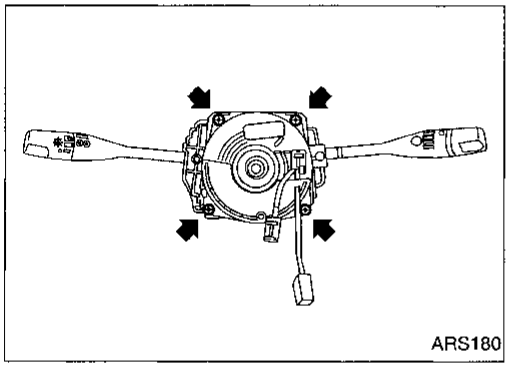

8. Remove the four spiral cable retaining screws. The spiral cable can then be removed.

CAUTION:
- **Do not attempt to disassemble spiral cable.**
- **Do not apply lubricant to the spiral cable.**

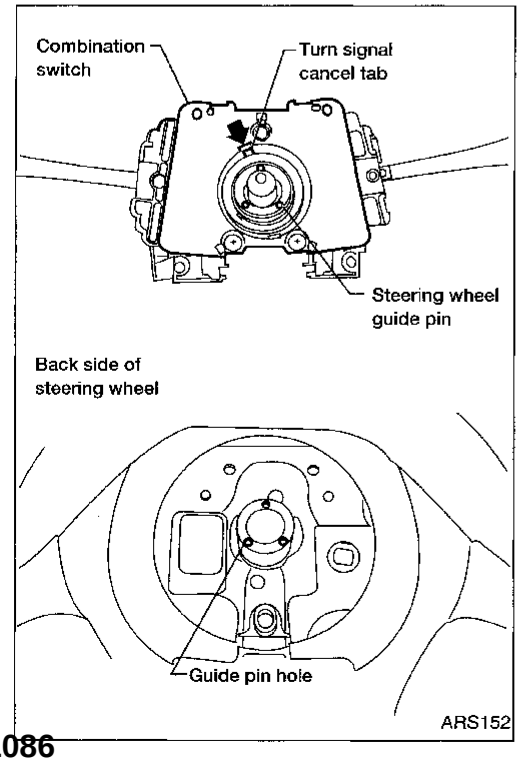

INSTALLATION

1. Set the front wheels in the straight-ahead position.
2. Align the turn signal cancel tab with the notch of the combination switch as shown.

Simpo PDF Merge and Split Unregistered Version - http://www.simpopdf.com

Driver Air Bag Module and Spiral Cable (Cont'd)

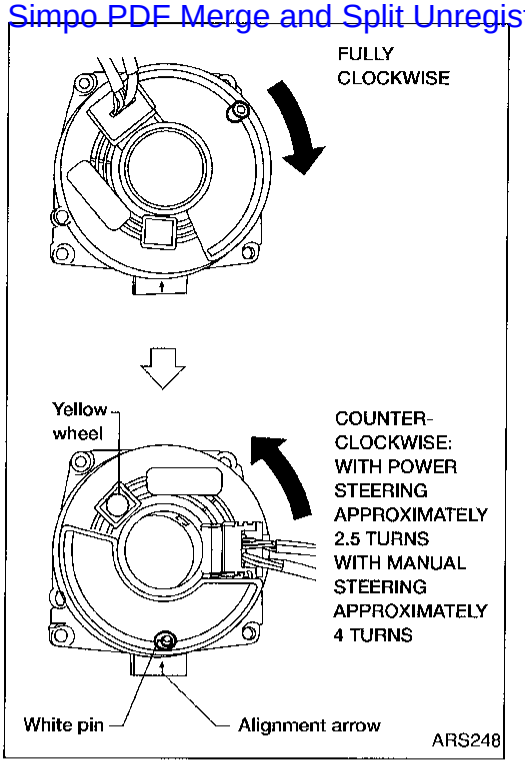

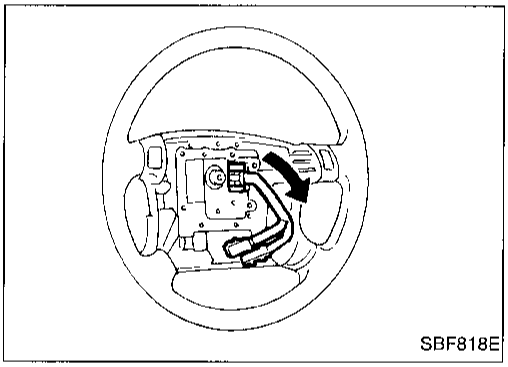

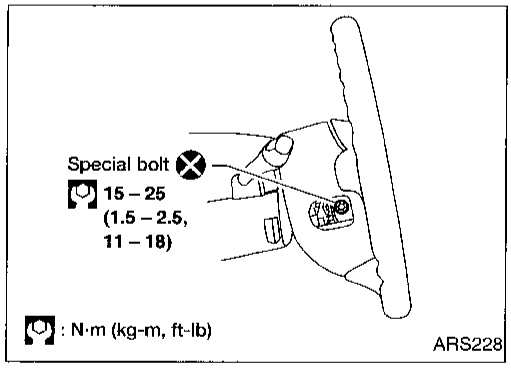

3. Set the front wheels in the straight-ahead position.
4. Rotate the spiral cable fully clockwise until tight.
5. Rotate the spiral cable counterclockwise as specified below and align white pin with arrow on housing.

Specified turns for spiral cable:

Applied model	Specified turns from neutral position
With power steering	Approx. 2.5
Without power steering	Approx. 4

- **When spiral cable is centered, white pin is aligned with arrow on housing and yellow wheel shows in window.**

CAUTION:
The spiral cable may snap during steering operation if the spiral cable is installed improperly. Also, with the steering linkage disconnected, the spiral cable may snap by turning the steering wheel beyond the specified number of turns. Always perform SRS Self-diagnosis after installing the air bag module.

6. Connect spiral cable to air bag harness and tighten screws. Install steering column covers.
7. Install steering wheel, setting spiral cable pin guide, and pull spiral cable connectors through.
8. Connect horn connector and engage spiral cable with pawls in steering wheel.
9. Tighten steering wheel nut.
   : 29 - 39 N·m (3.0 - 4.0 kg-m, 22 - 29 ft-lb)
10. Position driver air bag module and tighten with new special bolts.
11. Connect driver air bag module connector.
12. Install all lids.
13. Connect both battery cables.
14. Conduct Self-diagnosis to ensure entire SRS operates properly (Use CONSULT or warning lamp check.). Turn the steering wheel fully to the right and left to check that the spiral cable is set in the neutral position.
15. If air bag warning lamp blinks (at the User mode), it shows the spiral cable may be snapped due to its improper position. Perform Self-diagnosis again. (Use CONSULT or warning lamp check.) If a malfunction is detected, replace the spiral cable with a new one.

NOTE:

- **After replacement, perform Self-diagnosis for SRS. Refer to "TROUBLE DIAGNOSES — Supplemental Restraint System (SRS)", "SRS Operation Check", RS-34.**

Simpo PDF Merge and Split Unregistered Version - http://www.simpopdf.com

NOTES

Simpo PDF Merge and Split Unregistered Version - http://www.simpopdf.com

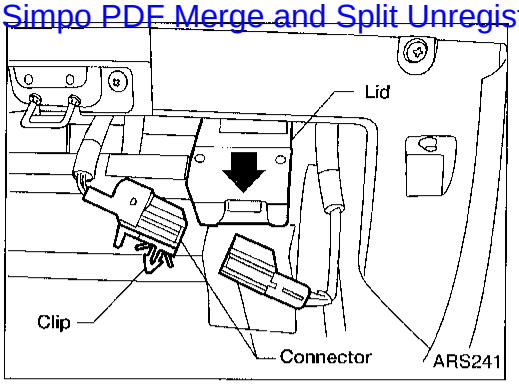

Passenger Air Bag Module

REMOVAL

CAUTION:

- **Before servicing SRS, turn the ignition switch OFF, disconnect both battery cables and wait for at least 3 minutes.**
- **Always work from the side of an air bag module.**

1. Open glove box assembly.
2. Open lid of instrument panel lower passenger side, inside glove box.
3. Remove passenger air bag module connector clip from lid.
4. Disconnect passenger air bag module connector.
5. Remove glove box and instrument panel lower passenger side. Refer to BT section ("INSTRUMENT PANEL").

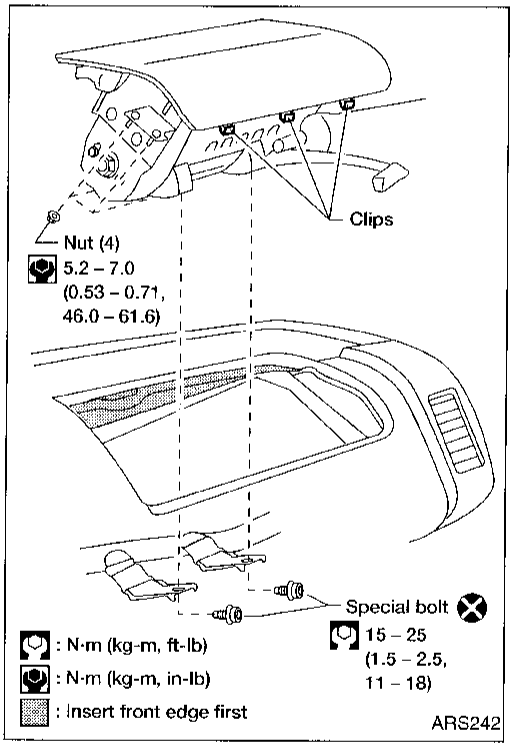

6. Using TAMPER RESISTANT TORX (Size T50), remove the two special bolts.
7. Remove four mounting nuts.
8. Remove passenger air bag module by releasing the clips from the top of the instrument panel.

- **Air bag module is heavy and should be supported using both hands during removal.**

CAUTION:

- **Always place air bag module with pad side facing upward.**
- **Do not attempt to disassemble air bag module.**
- **The special bolts are coated with a bonding agent. Do not use old bolts after removal; replace with new coated bolts.**
- **Do not insert any foreign objects (screwdriver, etc.) into air bag module connector.**

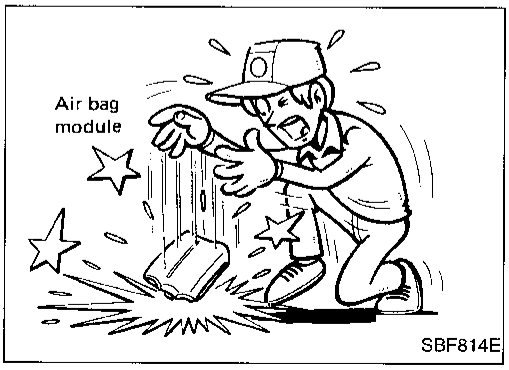

- **Do not drop or impact air bag module. If any portion is deformed or cracked, replace the module.**
- **Do not expose the air bag module to temperatures exceeding 90°C (194°F).**
- **Do not allow oil, grease or water to come in contact with the air bag module.**

Simpo PDF Merge and Split Unregistered Version - http://www.simpopdf.com

Passenger Air Bag Module (Cont'd)

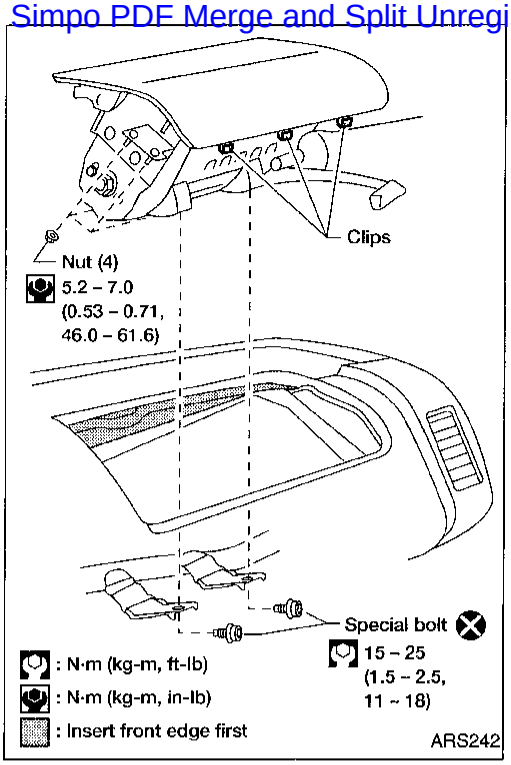

INSTALLATION

1. Install passenger air bag module in instrument panel.

a) Insert front edge of passenger air bag module first to ease installation.

- Ensure harness is not caught between passenger air bag module and support bracket.

b) Install four mounting nuts.

c) Install two new special bolts using TAMPER RESISTANT TORX (Size T50).

2. Install instrument panel lower passenger side and glove box.

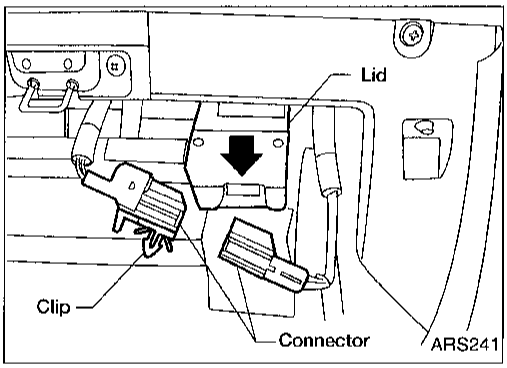

3. Connect passenger air bag module connector.
4. Attach passenger air bag module connector clip to lid.
5. Close lid and glove box.
6. Conduct Self-diagnosis to ensure SRS operates properly (Use CONSULT or warning lamp check.).

NOTE:

- **After replacement, perform Self-diagnosis for SRS. Refer to "TROUBLE DIAGNOSES — Supplemental Restraint System (SRS)", "SRS Operation Check", RS-34.**

Simpo PDF Merge and Split Unregistered Version - http://www.simpopdf.com

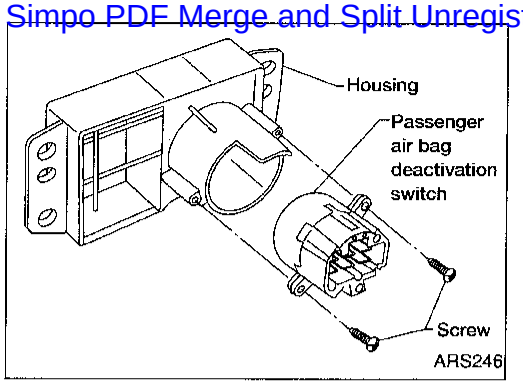

Passenger Air Bag Deactivation Switch

REMOVAL

- **Before servicing SRS, turn the ignition switch OFF, disconnect both battery cables and wait for at least 3 minutes.**

1. Detach instrument stay cover lower center from instrument panel. Refer to BT section ("INSTRUMENT PANEL").
2. Disconnect passenger air bag deactivation switch harness connector and cigarette lighter harness connector.
3. Remove instrument stay cover lower center.
4. Remove two screws and remove passenger air bag deactivation switch.

INSTALLATION

CAUTION:
Passenger air bag deactivation switch is keyed for proper installation. Improper positioning of the switch will result in damage to the switch.

NOTE:

- **Be sure that passenger air bag deactivation switch and lock cylinder are in the same position as during removal for proper engagement.**
- **To install, reverse removal procedure.**
- **After replacement, perform Self-diagnosis for SRS. Refer to "TROUBLE DIAGNOSES — Supplemental Restraint System (SRS)", "SRS Operation Check", RS-34.**

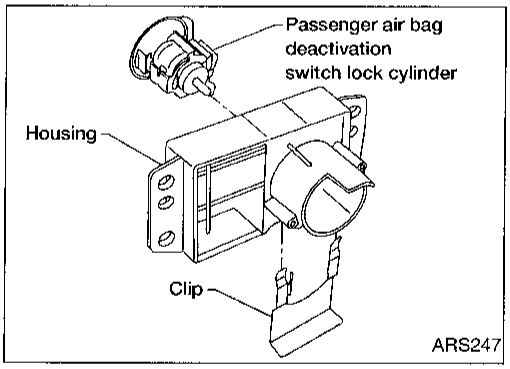

Passenger Air Bag Deactivation Switch Lock Cylinder

REMOVAL

- **Before servicing SRS, turn the ignition switch OFF, disconnect both battery cables and wait for at least 3 minutes.**

1. Detach instrument stay cover lower center from instrument panel. Refer to BT section ("INSTRUMENT PANEL").
2. Disconnect passenger air bag deactivation switch harness connector and cigarette lighter harness connector.
3. Remove instrument stay cover lower center.
4. Remove four screws and housing from instrument stay cover lower center.
5. Remove clip from bottom of housing.
6. Remove passenger air bag deactivation switch lock cylinder from front of housing.

INSTALLATION

NOTE:

- **Be sure that passenger air bag deactivation switch and lock cylinder are in the same position as during removal for proper engagement.**
- **To install, reverse removal procedure.**
- **After replacement, perform Self-diagnosis for SRS. Refer to "TROUBLE DIAGNOSES — Supplemental Restraint System (SRS)", "SRS Operation Check", RS-34.**

Simpo PDF Merge and Split Unregistered Version - http://www.simpopdf.com

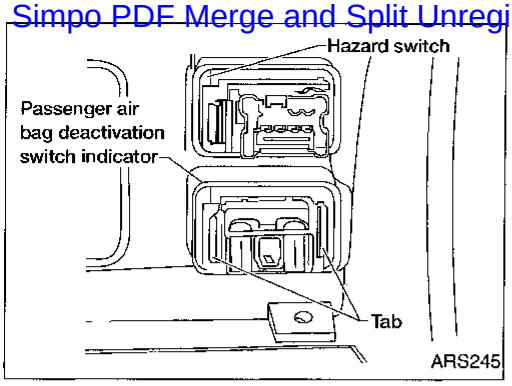

Passenger Air Bag Deactivation Switch Indicator

REMOVAL

- **Before servicing SRS, turn the ignition switch OFF, disconnect both battery cables and wait for at least 3 minutes.**

1. Remove meter cover. Refer to BT section ("INSTRUMENT PANEL").
2. Release passenger air bag deactivation switch indicator tabs from back side of meter cover.
3. Remove passenger air bag deactivation switch indicator from front side of meter cover.

INSTALLATION

NOTE:

- **To install, reverse removal procedure.**
- **After replacement, perform Self-diagnosis for SRS. Refer to "TROUBLE DIAGNOSES — Supplemental Restraint System (SRS)", "SRS Operation Check", RS-34.**

Simpo PDF Merge and Split Unregistered Version - http://www.simpopdf.com

Disposal of Air Bag Module

- Before disposing of air bag module, or vehicles equipped with such a system, deploy the system. If such a system has already been deployed due to an accident, dispose of as indicated in "DISPOSING OF AIR BAG MODULE" (RS-26).
- When deploying the air bag module, always use the Special Service Tool; Deployment tool KV99106400 (Kent-Moore No. J38381).
- When deploying the air bag module, stand at least 5 m (16 ft) away from the deployment component.
- When deploying air bag module, a fairly loud noise is made, followed by smoke being released. The smoke is not poisonous, however, be careful not to inhale smoke since it irritates the throat and can cause choking.
- Always activate one air bag module at a time.
- Due to heat, leave air bag module unattended for more than 30 minutes after deployment.
- Be sure to wear gloves when handling a deployed air bag module.
- Never apply water to a deployed air bag module.
- Wash your hands clean after finishing work.
- Place the vehicle outdoors with an open space of at least 6 m (20 ft) on all sides when deploying air bag module while mounted in vehicle.
- Use a voltmeter to make sure the vehicle battery is fully charged.
- Do not dispose of the air bag module un-deployed.

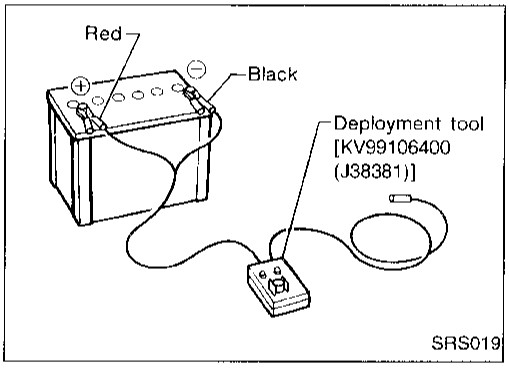

CHECKING DEPLOYMENT TOOL

Connecting to battery

- Place vehicle outdoors with at least 6 m (20 ft) of open space on all sides.
- Use a voltmeter to make sure the vehicle battery is fully charged.

CAUTION:
The battery must show voltage of 9.6V or more.

Remove the battery from the vehicle and place it on dry wood blocks approximately 5 m (16 ft) away from the vehicle.

- Wait 3 minutes after the vehicle battery is disconnected before proceeding.
- Connect red clip of deployment tool to battery positive terminal and black clip to negative terminal.

CAUTION:
Make sure the polarity is correct. The right side lamp in the tool, marked "deployment tool power", should glow with a green light. If the right side lamp glows red, reverse the connections to the battery.

Simpo PDF Merge and Split Unregistered Version - http://www.simpopdf.com

Disposal of Air Bag Module (Cont'd)

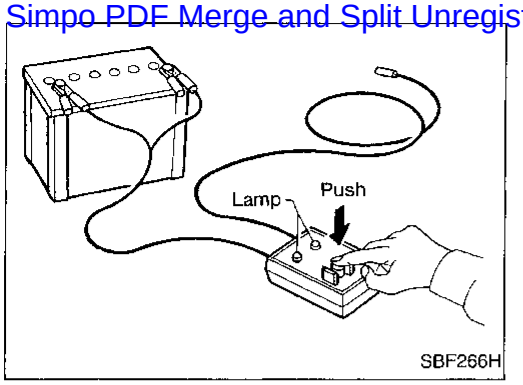

Deployment tool check

Press the deployment tool switch to the ON position. The left side lamp in the tool, marked "air bag connector voltage" should illuminate. If it does not illuminate, replace the tool.

Air bag deployment tool lamp illumination chart (Battery connected)

Switch operation	Left side lamp, green* "AIR BAG CONNECTOR VOLTAGE"	Right side lamp, green* "DEPLOYMENT TOOL POWER"
OFF	OFF	ON
ON	ON	ON

*: If this lamp glows red, the tool is connected to the battery incorrectly. Reverse the connections and make sure the lamp glows green.

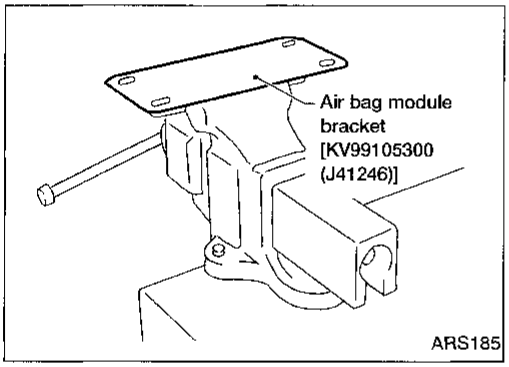

DEPLOYMENT PROCEDURES FOR AIR BAG MODULE (OUTSIDE OF VEHICLE)

Unless the vehicle is being scrapped, deploying the air bag in the vehicle is not recommended. This may cause damage to the vehicle interior.

Anchor air bag module bracket [KV99105300 (J41246)] in a vise secured to a firm foundation during deployment.

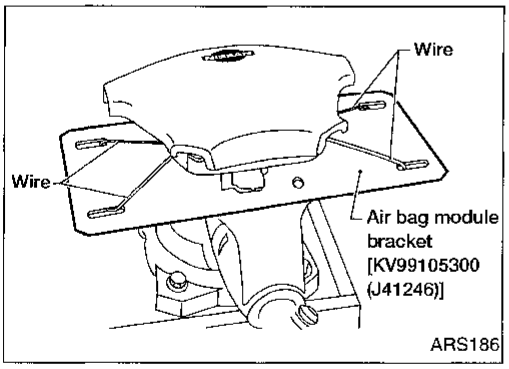

Deployment of driver air bag module (outside of vehicle)

1. Using wire, firmly secure driver air bag module to air bag module bracket [SST: KV99105300 (J41246)] at two places.

CAUTION:
Use wire of at least 1 mm (0.04 in) diameter.

2. Firmly secure air bag module bracket [SST: KV99105300 (J41246)] with driver air bag module attached, in a vise.

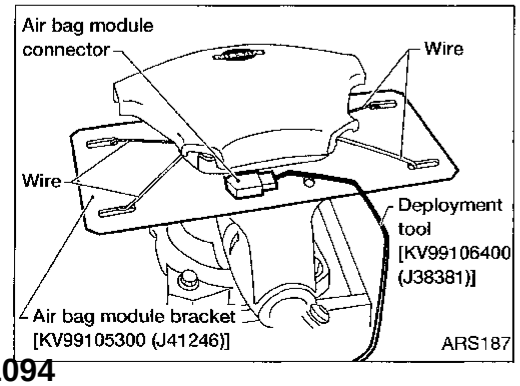

3. Connect deployment tool [SST: KV99106400 (J38381)] to driver air bag module connector.

Disposal of Air Bag Module (Cont'd)

Simpo PDF Merge and Split Unregistered Version - http://www.simpopdf.com

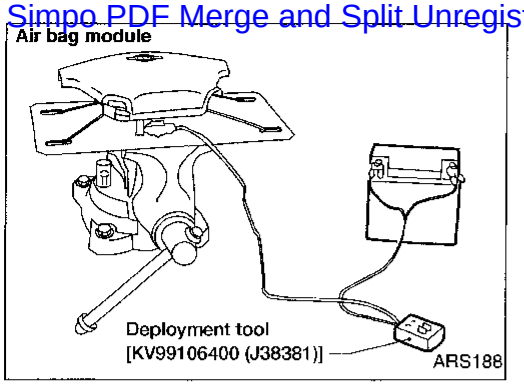

4. Connect red clip of deployment tool to battery positive terminal and black clip to negative terminal.
5. The lamp on the right side of the tool, marked "deployment tool power", should glow green, not red.
6. Press the button on the deployment tool. The left side lamp on the tool, marked "air bag connector voltage", will illuminate and the air bag module will deploy.

CAUTION:
When deploying the air bag module, stand at least 5 m (16 ft) away from the air bag module.

Deployment of passenger air bag module (outside of vehicle)

1. Make an 8.5 mm (0.335 in) diameter hole in air bag module bracket [SST: KV99105300 (J41246)] at the position shown in figure at left.

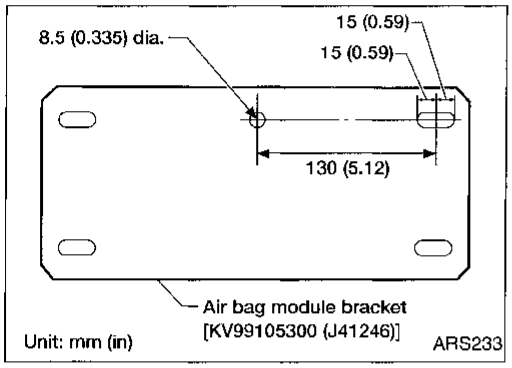

2. Firmly secure air bag module bracket [SST: KV99105300 (J41246)] in a vise.
3. Match the two holes in air bag module bracket (held in vise) and passenger air bag module and fix them with two bolts [M8 x 25 - 30 mm (0.98 - 1.18 in)].

CAUTION:
If a gap exists between passenger air bag module and air bag module bracket, use a piece of wood inserted in the gap to stabilize the air bag module.

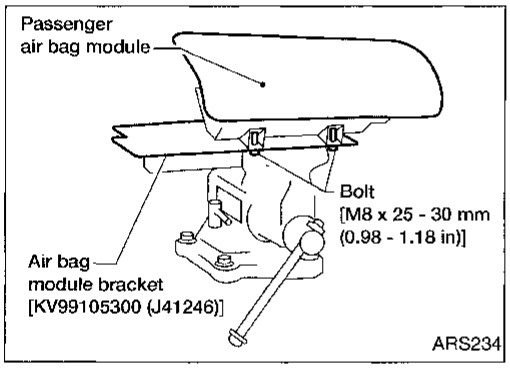

4. Connect deployment tool adapter [SST: KV991065S0 (J38381-30)] to deployment tool [SST: KV99106400 (J38381)] connector and air bag module connector.

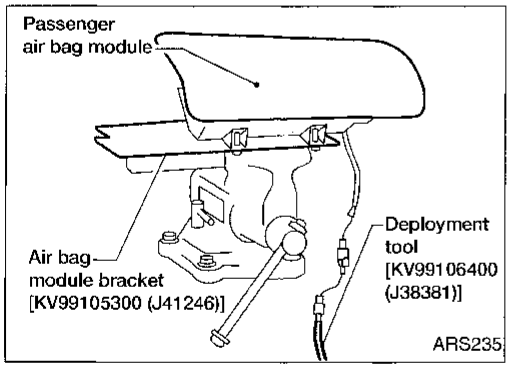

5. Connect red clip of deployment tool to battery positive terminal and black clip to negative terminal.
6. The lamp on the right side of the tool, marked "deployment tool power", should glow green, not red.
7. Press the button on the deployment tool. The left side lamp on the tool, marked "air bag connector voltage", will illuminate and the air bag module will deploy.

CAUTION:
When deploying the air bag module, stand at least 5 m (16 ft) away from the air bag module.

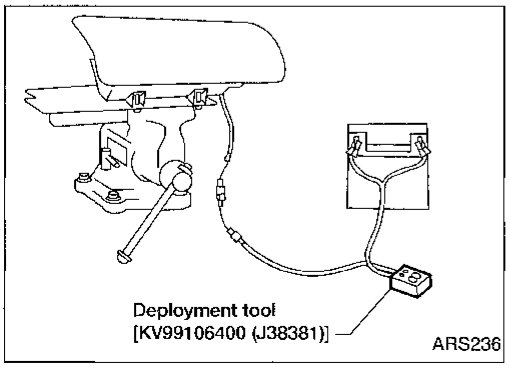

Simpo PDF Merge and Split Unregistered Version - http://www.simpopdf.com

Disposal of Air Bag Module (Cont'd)

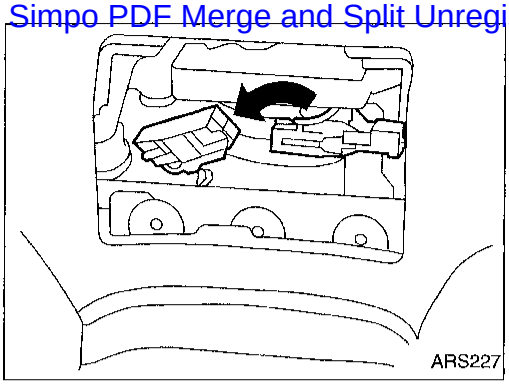

DEPLOYMENT OF AIR BAG MODULE WHILE MOUNTED IN VEHICLE

When disposing of vehicles, deploy air bag module while it is mounted in vehicle.

CAUTION:

When deploying air bag module, ensure vehicle is empty.

1. Turn ignition switch OFF, disconnect both battery cables and wait at least 3 minutes.
2. Disconnect air bag module connector.
3. Connect deployment tool [SST:KV99106400 (J38381)] connector to air bag module.
   For passenger air bag module, use adapter [SST:KV99106400 (J38381-30)] to attach module to deployment tool connector.
4. Connect red clip of deployment tool to battery positive terminal and black clip to negative terminal.
5. The lamp on the right side of the tool, marked "deployment tool power", should glow green, not red.
6. Press the button on the deployment tool. The left side lamp on the tool, marked "air bag connector voltage", will illuminate. Then the air bag module will deploy.

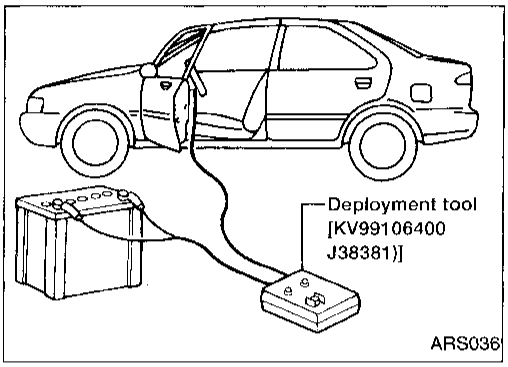

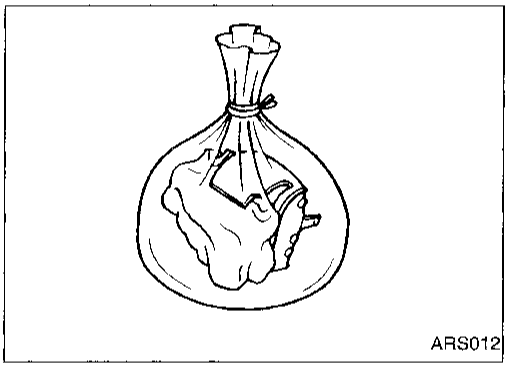

DISPOSING OF AIR BAG MODULE

Deployed air bag module is very hot. Before disposing of air bag module, wait at least 30 minutes. Seal them in a plastic bag before disposal.

CAUTION:

- **Never apply water to a deployed air bag module.**
- **Be sure to wear gloves when handling a deployed air bag module.**
- **No poisonous gas is produced upon air bag module deployment. However, be careful not to inhale gas since it irritates throat and can cause choking.**
- **Do not attempt to disassemble air bag module.**
- **Air bag module cannot be reused.**
- **Wash your hands clean after finishing work.**

Simpo PDF Merge and Split Unregistered Version - http://www.simpopdf.com

Trouble Diagnosis Introduction

CAUTION:

- **Do not use electrical test equipment on any circuit related to the SRS unless instructed to in this Service Manual. SRS wiring harnesses are covered with yellow insulation either just before the harness connectors or on the complete harness, for easy identification.**
- **Do not attempt to repair, splice or modify the SRS wiring harness. If the harness is damaged, replace it with a new one.**
- **Keep ground portion clean.**

DIAGNOSIS FUNCTION

The SRS Self-diagnosis results can be read by using the "AIR BAG" warning lamp and/or CONSULT. The reading of these results is accomplished using one of two modes — "User mode" and "Diagnosis mode".
The User mode is exclusively prepared for the customer (driver). This mode warns the driver of a system malfunction through the operation of the "AIR BAG" warning lamp.
The Diagnosis mode allows the technician to locate and inspect the malfunctioning part.
The mode applications for the "AIR BAG" warning lamp and CONSULT are as follows:

	User mode	Diagnosis mode	Display type
"AIR BAG" warning lamp	X	X	ON-OFF operation
CONSULT	—	X	Monitoring

DIAGNOSIS MODE FOR CONSULT

- "SELF-DIAG [CURRENT]"
  A current Self-diagnosis result (also indicated by the number of warning lamp flashes in the Diagnosis mode) is displayed on the CONSULT screen in real time. This refers to a malfunctioning part requiring repairs.
- "SELF-DIAG [PAST]"
  Diagnosis results previously stored in the memory are displayed on the CONSULT screen. The stored results are not cleared until memory erasing is executed.
- "TROUBLE DIAG RECORD"
  With "TROUBLE DIAG RECORD", diagnosis results previously erased by a reset operation can be displayed on the CONSULT screen.

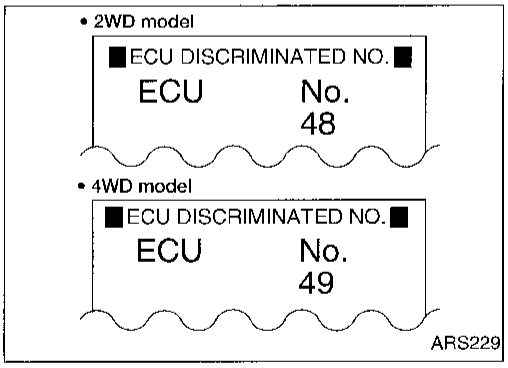

- ECU DISCRIMINATED NO.
  The air bag diagnosis sensor unit for each vehicle model is assigned with its own, individual classification number. This number will be displayed on the CONSULT screen, as shown at left. When replacing the diagnosis sensor unit, refer to the part number for the compatibility. After installation, replacement with a correct unit can be checked by confirming this classification number on the CONSULT screen.
  For NISSAN model D22, the air bag diagnosis sensor unit classification numbers assigned are 48 (for 2WD models) and 49 (for 4WD models).

Simpo PDF Merge and Split Unregistered Version - http://www.simpopdf.com

HOW TO CHANGE SELF DIAGNOSIS MODE

With CONSULT

From User mode to Diagnosis mode

Touch "AIRBAG" on the "SELECT SYSTEM" screen. User mode automatically changes to Diagnosis mode.

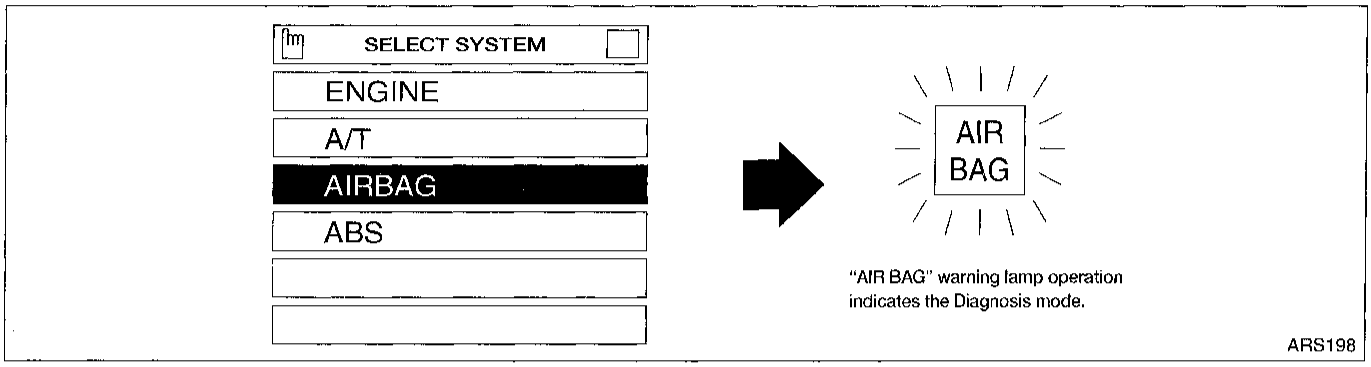

From Diagnosis mode to User mode

Touch "BACK" key of CONSULT until "SELECT SYSTEM" appears, Diagnosis mode automatically changes to User mode.

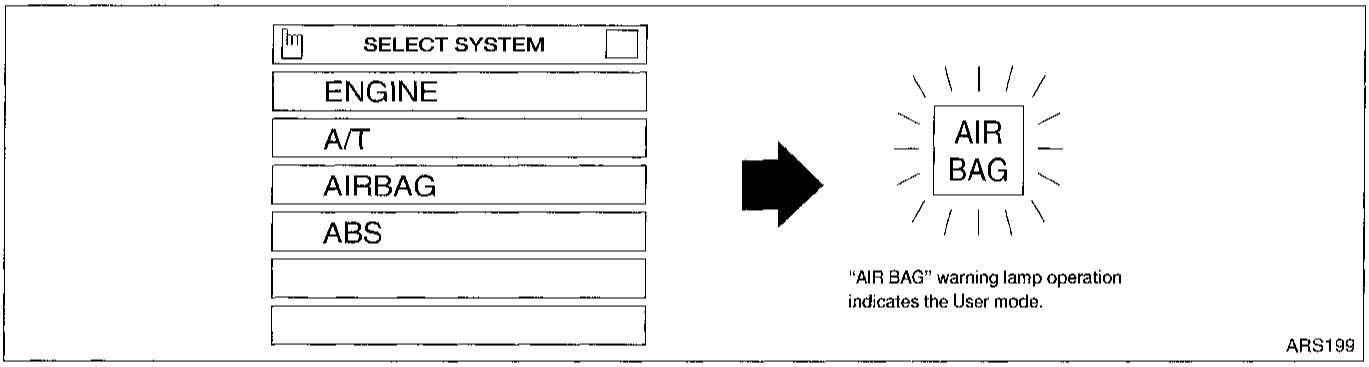

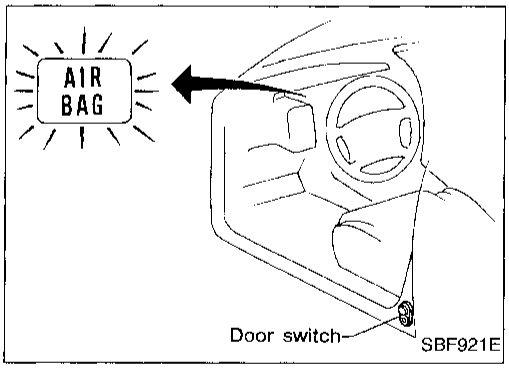

Without CONSULT

From User mode to Diagnosis mode

Diagnosis mode can be activated only when a malfunction is detected, by pressing the door switch LH at least 5 times within 7 seconds after turning the ignition switch ON. SRS will not enter Diagnosis mode if no malfunction is detected.

From Diagnosis mode to User mode

- To return to User mode while a malfunction is being detected, turn ignition switch OFF, then back ON and press the door switch LH at least 5 times within 7 seconds.
- After a malfunction is repaired, turn ignition switch OFF for at least one second, then back ON. Diagnosis mode returns to User mode.

Simpo PDF Merge and Split Unregistered Version - http://www.simpopdf.com

HOW TO ERASE SELF DIAGNOSIS RESULTS

With CONSULT

SELF-DIAG [CURRENT]

A current Self-diagnosis result is displayed on the CONSULT screen in real time. After the malfunction is repaired completely, no malfunction is detected on "SELF-DIAG [CURRENT]".

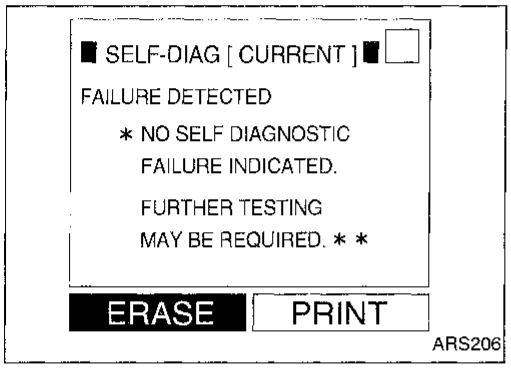

SELF-DIAG [PAST]

Return to the "SELF-DIAG [CURRENT]" CONSULT screen by pushing "BACK" key of CONSULT and select "SELF-DIAG [CURRENT]" in "SELECT DIAG MODE". Touch "ERASE" in "SELF-DIAG [CURRENT]" mode.

NOTE:
If the memory of the malfunction in "SELF-DIAG [PAST]" is not erased, the User mode shows the system malfunction by the operation of the warning lamp even if the malfunction is repaired completely.

TROUBLE DIAG RECORD

The memory of "TROUBLE DIAG RECORD" cannot be erased.

Without CONSULT

After a malfunction is repaired, turn ignition switch OFF for at least one second, then back ON. Diagnosis mode returns to User mode. At that time, the problem code is cleared.

Simpo PDF Merge and Split Unregistered Version - http://www.simpopdf.com

How to Perform Trouble Diagnoses for Quick and Accurate Repair

A good understanding of the malfunction conditions can make troubleshooting faster and more accurate. In general, each customer feels differently about a problem. It is important to fully understand the symptoms or conditions of a customer complaint.

INFORMATION FROM CUSTOMER

WHAT ..... Vehicle model
WHEN ..... Date, Frequencies
WHERE ..... Road conditions
HOW ..... Operating conditions, Symptoms

PRELIMINARY CHECK

Check that the following parts are in good order.

- Battery [Refer to EL section ("BATTERY").]
- Fuse [Refer to EL section ("Fuse", "POWER SUPPLY ROUTING").]
- System component-to-harness connections

WORK FLOW

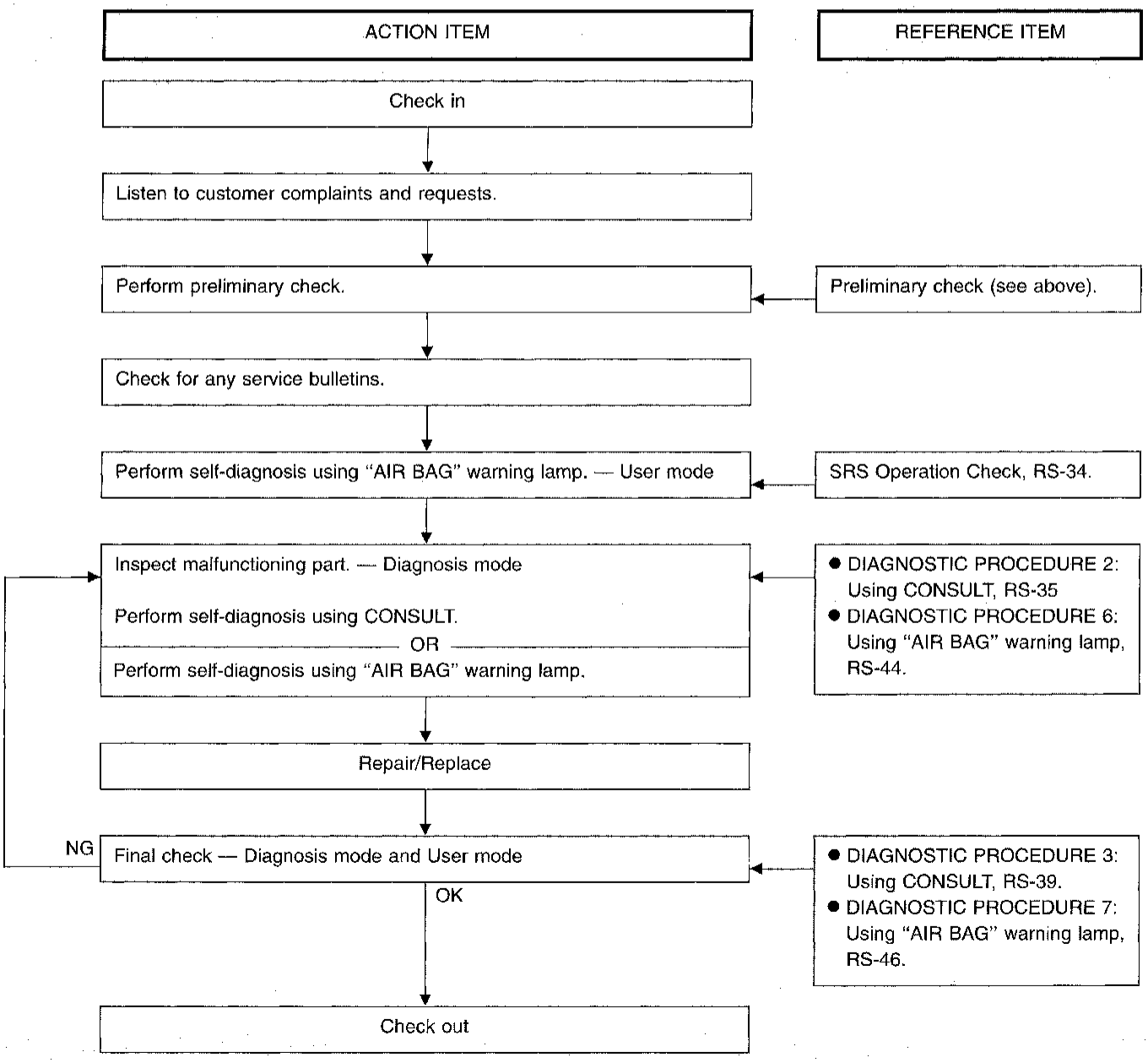

Simpo PDF Merge and Split Unregistered Version - http://www.simpopdf.com

Schematic

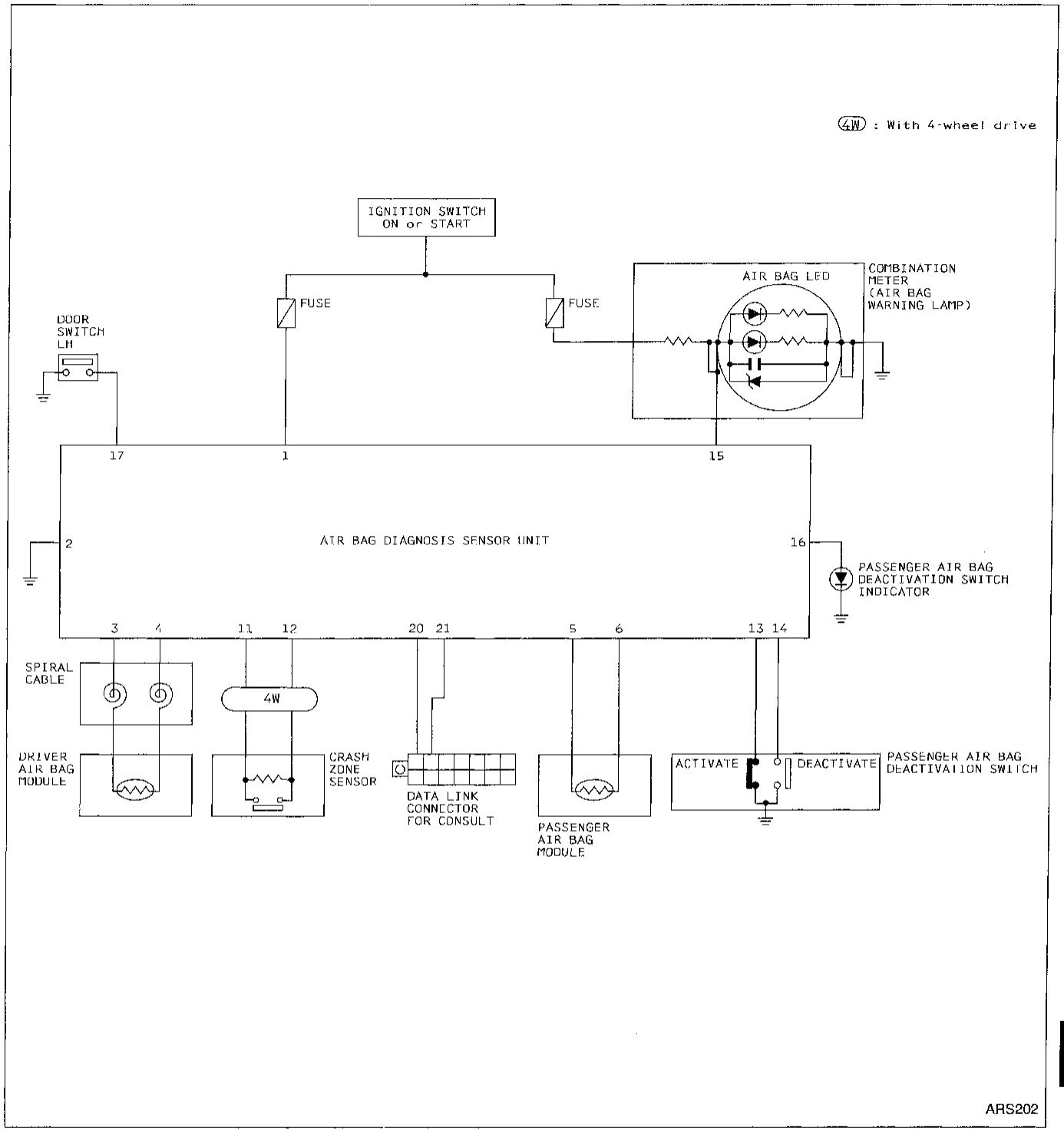

Simpo PDF Merge and Split Unregistered Version - http://www.simpopdf.com

Wiring Diagram –SRS–

RS-SRS-01

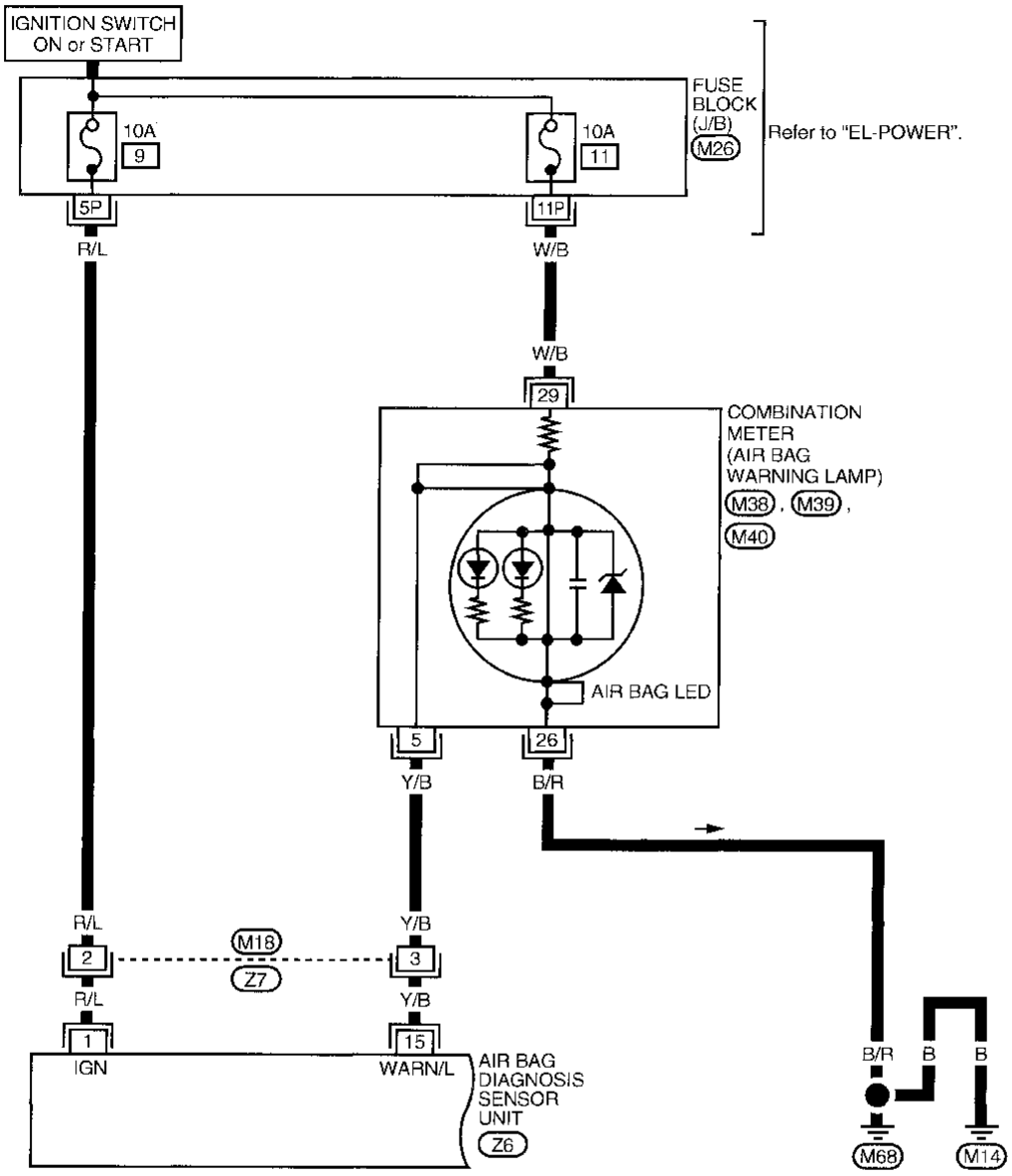

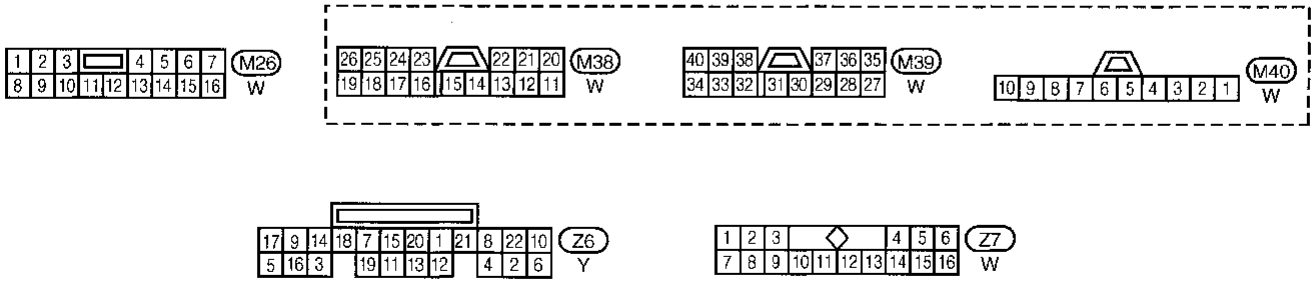

ARS203

Wiring Diagram –SRS– (Cont'd)

Simpo PDF Merge and Split Unregistered Version - http://www.simpopdf.com

RS-SRS-02

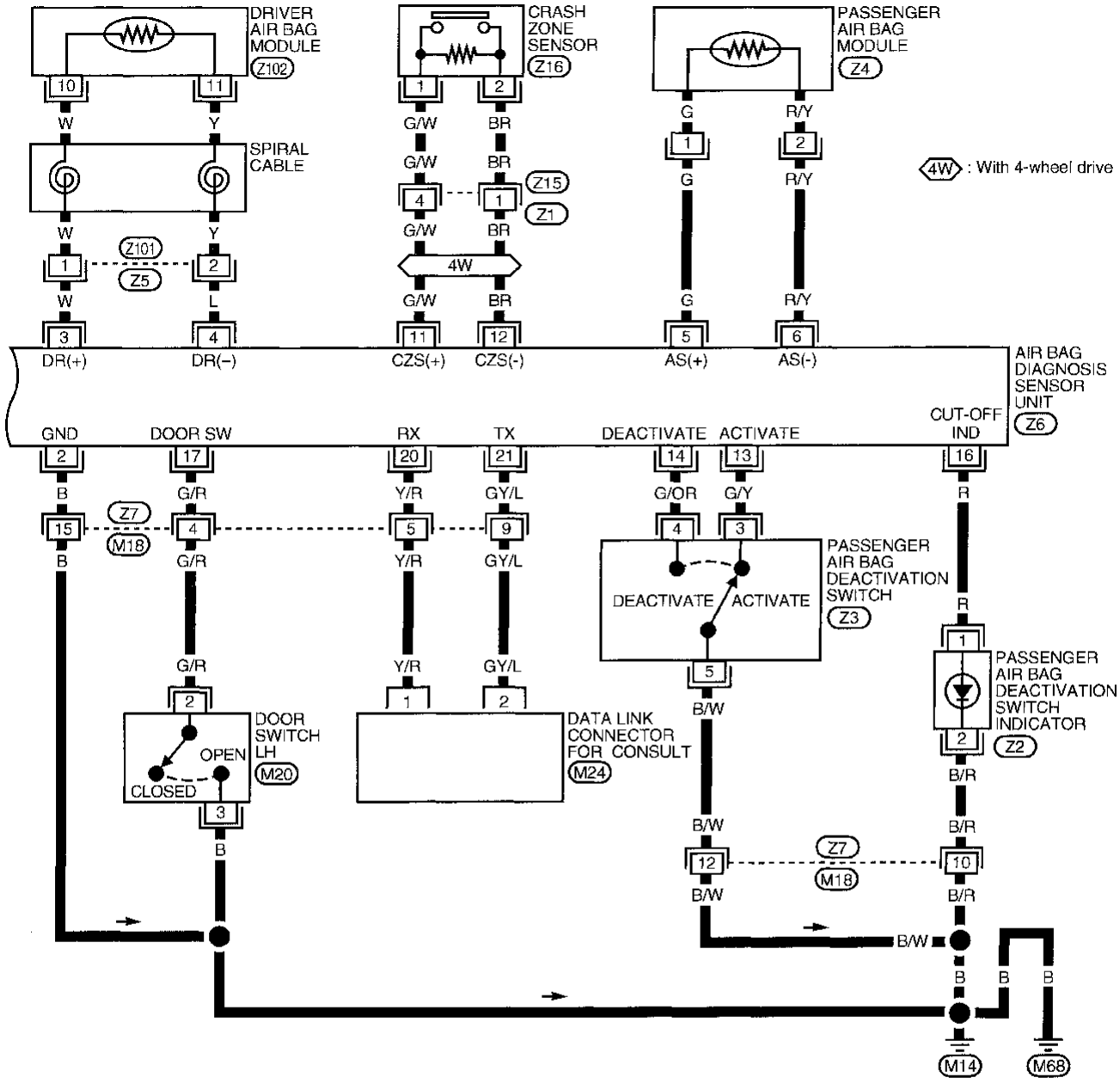

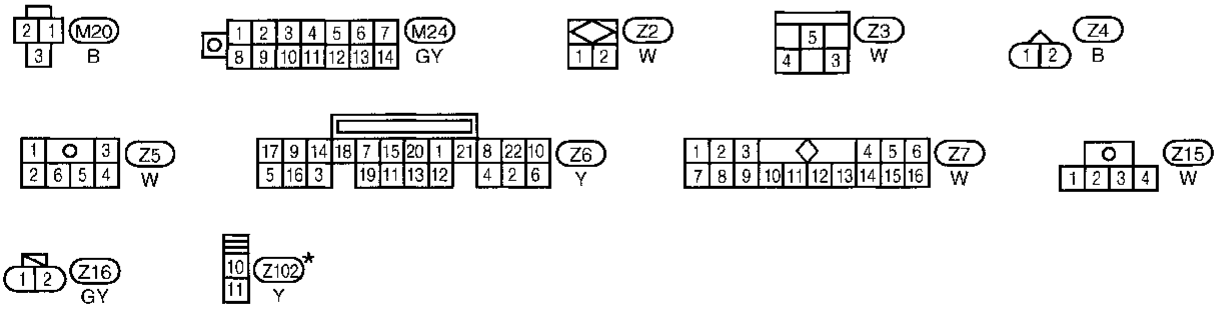

★: This connector is not shown in "HARNESS LAYOUT" of EL section.

Simpo PDF Merge and Split Unregistered Version - http://www.simpopdf.com

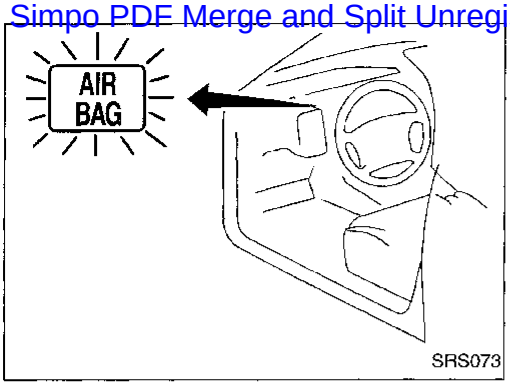

SRS Operation Check

DIAGNOSTIC PROCEDURE 1

Checking SRS operation by using "AIR BAG" warning lamp — User mode

1. After turning ignition switch from OFF to ON, "AIR BAG" warning lamp operates.
2. Compare "AIR BAG" warning lamp operation to the chart below.

"AIR BAG" warning lamp operation — User mode —	SRS condition	Reference item
 MRS095A	No malfunction is detected. No further action is necessary.	—
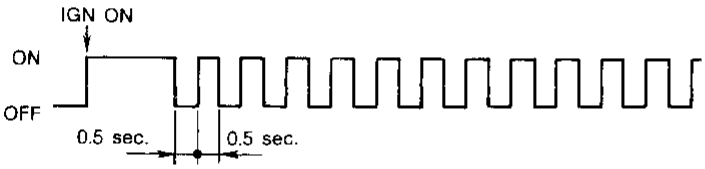 MRS096A	The system has problem and needs to be repaired as indicated.	Go to DIAGNOSTIC PROCEDURE 2, or 6, RS-35 or 44.
 MRS097A	Air bag is deployed.	Go to COLLISION DIAGNOSIS, RS-51.
	Air bag fuse for air bag diagnosis sensor unit or circuit is malfunctioning and needs to be repaired.	Go to DIAGNOSTIC PROCEDURE 9, RS-48.
 MRS098A	One of the following has occured and needs to be repaired. ● Meter fuse is open. ● "AIR BAG" warning lamp circuit is shorted or open. ● Air bag diagnosis sensor unit is malfunctioning.	Go to DIAGNOSTIC PROCEDURE 10, RS-49.

NOTE:
If "AIR BAG" warning lamp operates differently from the operations shown above, refer to "AIR BAG" warning lamp operation — Diagnosis mode —, DIAGNOSTIC PROCEDURE 6, step 4, RS-44. Then repair as necessary.

Simpo PDF Merge and Split Unregistered Version - http://www.simpopdf.com

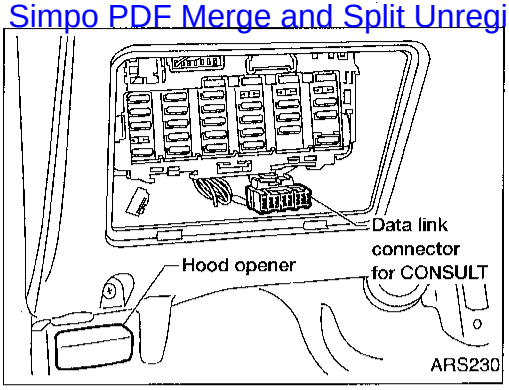

Trouble Diagnoses with CONSULT

DIAGNOSTIC PROCEDURE 2

Inspecting SRS malfunctioning parts by using CONSULT — Diagnosis mode

1. Turn ignition switch OFF.
2. Connect CONSULT to Data link connector.

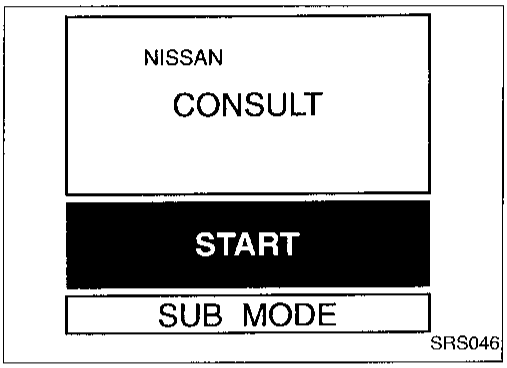

3. Turn ignition switch ON.
4. Touch “START”.

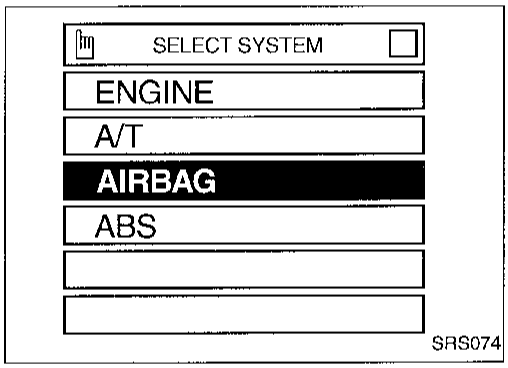

5. Touch “AIRBAG”.

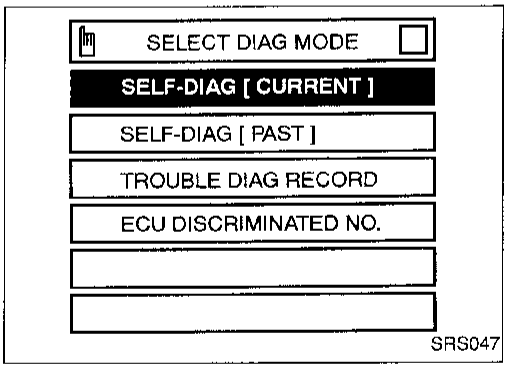

6. Touch “SELF-DIAG [CURRENT]”.

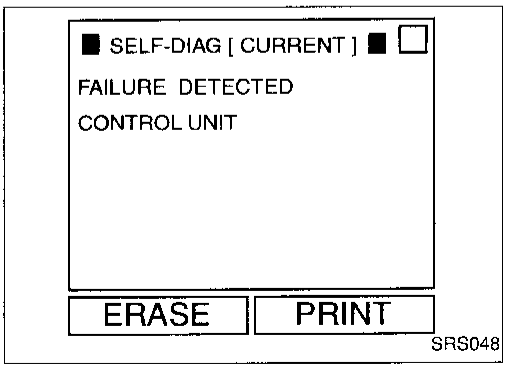

7. Diagnostic codes are displayed on “SELF-DIAG [CURRENT]”.

Simpo PDF Merge and Split Unregistered Version - http://www.simpopdf.com

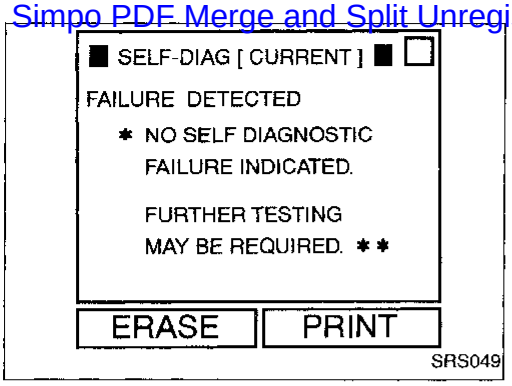

Trouble Diagnoses with CONSULT (Cont'd)

- **If no self-diagnostic failure is detected on "SELF-DIAG [CURRENT]" but malfunction is indicated by the "AIR BAG" warning lamp in User mode, go to DIAGNOSTIC PROCEDURE 4, RS-40 for diagnosing the following cases:**
- **Self-diagnostic failure (previously stored in the memory) might not be erased after repair.**
- **The SRS system is malfunctioning intermittently.**

8. Touch "PRINT".
9. Compare diagnostic codes to the CONSULT DIAGNOSTIC CODE CHART, RS-37.
10. Touch "BACK" key of CONSULT until "SELECT SYSTEM" appears in order to return to User mode from Diagnosis mode, then turn off CONSULT.
11. Turn ignition switch OFF, then disconnect CONSULT and both battery cables.
12. Repair the system as outlined by the Repair order in CONSULT DIAGNOSTIC CODE CHART, that corresponds to the problem code. For replacement procedure of component parts, refer to RS-14.
13. After repairing the system, connect battery cables and go to DIAGNOSTIC PROCEDURE 3, RS-39 for final checking.

Trouble Diagnoses with CONSULT (Cont'd)

Simpo PDF Merge and Split Unregistered Version - http://www.simpopdf.com

CONSULT DIAGNOSTIC CODE CHART ("SELF-DIAG [CURRENT]")

Diagnostic item	Explanation/Possible causes		Repair order ***Recheck SRS using CONSULT at each replacement**
NO SELF DIAGNOSTIC FAILURE INDICATED	When malfunction is indicated by the "AIR BAG" warning lamp in User mode.	● Self-diagnostic failure "SELF-DIAG [PAST]" (previously stored in the memory) might not be erased after repair. ● Intermittent problem has been detected in the past.	● Go to DIAGNOSTIC PROCEDURE 4, RS-40.
	● No malfunction is detected.		● Go to DIAGNOSTIC PROCEDURE 3, RS-39.
AIRBAG MODULE [OPEN]	● Air bag module circuit is open (including the spiral cable).		1. Visually check wiring harness connections. 2. Replace air bag harness if it has visible damage. 3. Replace spiral cable. 4. Replace air bag module. (Before disposing of it, it must be deployed.) 5. Replace air bag diagnosis sensor unit. 6. Replace air bag harness.
AIRBAG MODULE [VB-SHORT]	● Air bag module circuit is shorted to some power supply circuit (including the spiral cable).		
AIRBAG MODULE [GND-SHORT]	● Air bag module circuit is shorted to ground (including the spiral cable).		
AIRBAG MODULE [SHORT]	● Air bag module circuits are shorted to each other.		
ASSIST A/B MODULE [VB-SHORT]	● Passenger air bag module circuit is shorted to some power supply circuit.		1. Visually check wiring harness connection. 2. Replace air bag harness if it has visible damage. 3. Replace passenger air bag module. (Before disposal of it, it must be deployed.) 4. Replace air bag diagnosis sensor unit. 5. Replace air bag harness.
ASSIST A/B MODULE [OPEN]	● Passenger air bag module circuit is open.		
ASSIST A/B MODULE [GND-SHORT]	● Passenger air bag module circuit is shorted to ground.		
ASSIST A/B MODULE [SHORT]	● Passenger air bag module circuits are shorted to each other.		
CRASH ZONE SEN-CTR [OPEN/UPR-VB-SHORT] (4WD models)	● Crash zone sensor circuit is open, or ● Crash zone sensor circuit is shorted to some power supply circuit.		1. Visually check wiring harness connections. 2. Replace air bag harness if it has visible damage. 3. Replace crash zone sensor. 4. Replace air bag diagnosis sensor unit. 5. Replace air bag harness for crash zone sensor.
CRASH ZONE SEN-CTR [SHORT/UPR-GND-SHORT] (4WD models)	● Both crash zone sensor circuits are shorted, or ● Crash zone sensor circuit is shorted to ground.		
CONTROL UNIT	● Low battery voltage (Less than 9V).		● Go to DIAGNOSTIC PROCEDURE 3 (RS-39) after charging battery.
	● Air bag diagnosis sensor unit is malfunctioning.		1. Visually check wiring harness connections. 2. Replace air bag harness if it has visible damage. 3. Replace air bag diagnosis sensor unit. 4. Replace air bag harness.

Trouble Diagnoses with CONSULT (Cont'd)

Simpo PDF Merge and Split Unregistered Version - http://www.simpopdf.com

Diagnostic item	Explanation/Possible causes	Repair order ***Recheck SRS using CONSULT at each replacement**
PASS A/B DEACT SW	● Activate terminal is open. ● Activate terminal is shorted to ground. ● Deactivate terminal is open. ● Deactivate terminal is shorted to ground. ● Activate terminal and deactivate terminal are shorted to each other.	1. Visually check wiring harness connections. 2. Replace air bag harness if it has visible damage. 3. Replace passenger air bag deactivation switch. (The key cylinder of passenger air bag deactivation switch does not have to be replaced.) 4. Replace air bag diagnosis sensor unit. 5. Replace air bag harness.
PASS A/B DEACT SW INDICATOR	● Passenger air bag deactivation switch indicator circuit is open. ● Passenger air bag deactivation switch indicator circuit is shorted to some power supply circuit. ● Passenger air bag deactivation switch indicator circuit is shorted to ground.	1. Visually check wiring harness connections. 2. Replace air bag harness if it has visible damage. 3. Replace passenger air bag deactivation switch indicator. 4. Replace air bag diagnosis sensor unit. 5. Replace air bag harness.
INDEFINITE FAILURES [AIR BAGS]	● Passenger air bag deactivation switch status is not identified.	1. Visually check wiring harness connections. 2. Replace air bag harness if it has visible damage. 3. Replace passenger air bag deactivation switch. 4. Replace air bag diagnosis sensor unit. 5. Replace air bag harness.

*Follow the procedures in numerical order when repairing malfunctioning parts. Confirm whether malfunction is eliminated using the "AIR BAG" warning lamp (in User mode) or CONSULT each time repair is finished. If malfunction is still observed, proceed to the next step. When malfunction is eliminated, further repair work is not required.

Simpo PDF Merge and Split Unregistered Version - http://www.simpopdf.com

Trouble Diagnoses with CONSULT (Cont'd)

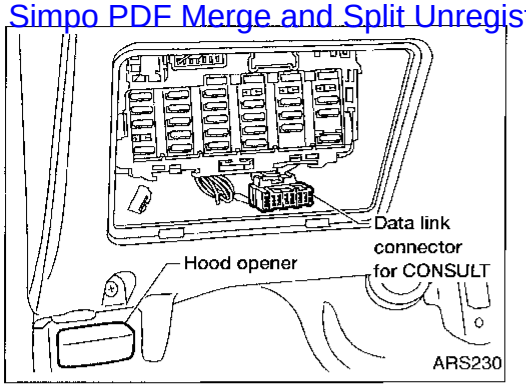

DIAGNOSTIC PROCEDURE 3

Final checking after repairing SRS by using CONSULT — Diagnosis mode

1. Check that both battery cables are connected.
2. Connect CONSULT to Data link connector.
3. Turn ignition switch from OFF to ON.

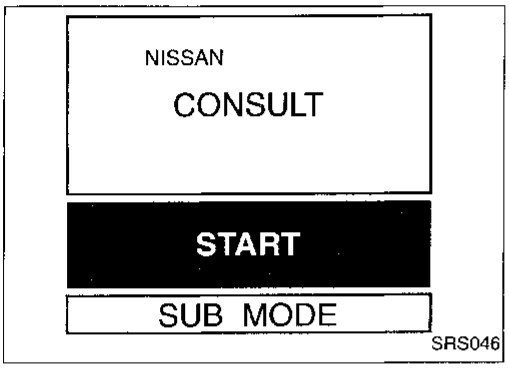

4. Touch "START".

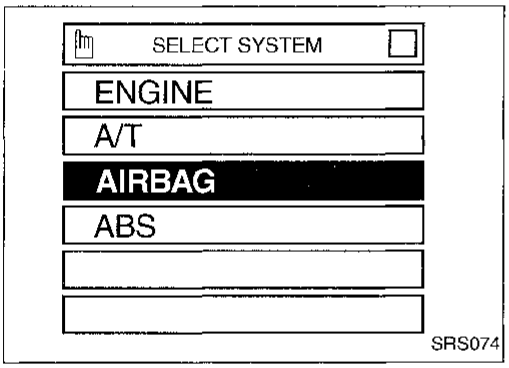

5. Touch "AIRBAG".

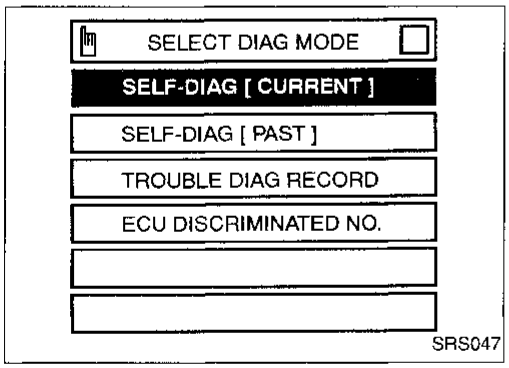

6. Touch "SELF-DIAG [CURRENT]".

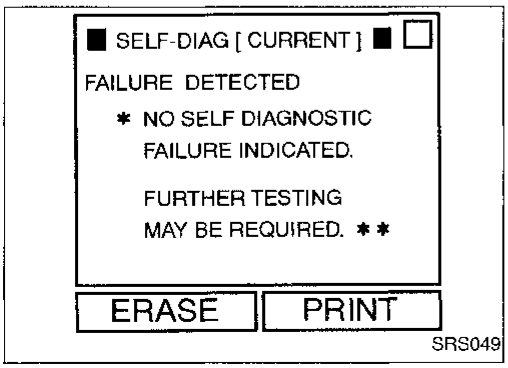

7. If no malfunction is detected on "SELF-DIAG [CURRENT]", repair of SRS is completed.

- If any problem code was displayed on "SELF-DIAG [CURRENT]", the malfunctioning part is not repaired completely or another malfunctioning part is detected. Go to DIAGNOSTIC PROCEDURE 2, RS-35 and repair malfunctioning part completely.

Simpo PDF Merge and Split Unregistered Version - http://www.simpopdf.com

Trouble Diagnoses with CONSULT (Cont'd)

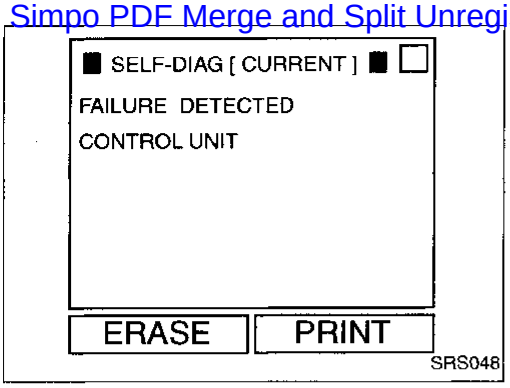

8. Touch "ERASE".
   NOTE:
   Touch "ERASE" to clear the memory of the malfunction ("SELF-DIAG [PAST]").

If the memory of the malfunction in "SELF-DIAG [PAST]" is not erased, the User mode shows the system malfunction by the operation of the warning lamp even if the malfunction is repaired completely.

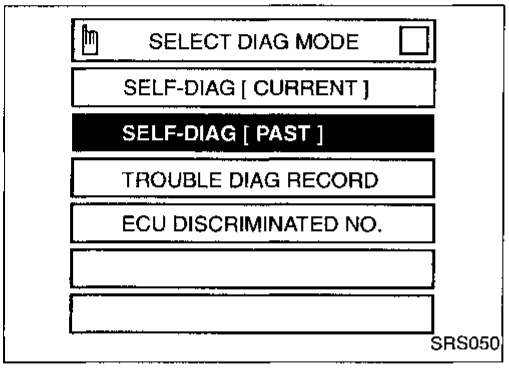

9. Touch "BACK" key of CONSULT to "SELECT DIAG MODE" screen.
   Touch "SELF-DIAG [PAST]".

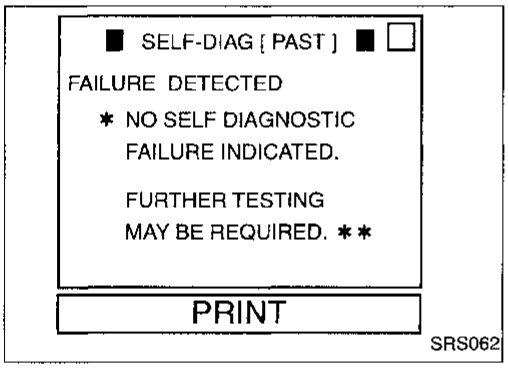

10. Check that no self-diagnostic failure is detected on "SELF-DIAG [PAST]".

11. Touch "BACK" key of CONSULT until "SELECT SYSTEM" appears in order to return to User mode from Diagnosis mode, turn off CONSULT, then disconnect CONSULT.
12. Turn ignition switch OFF.
13. Go to SRS Operation Check, RS-34 to check SRS operation by using "AIR BAG" warning lamp with User mode.

DIAGNOSTIC PROCEDURE 4 (Continued from DIAGNOSTIC PROCEDURE 2)

Inspecting SRS malfunctioning record

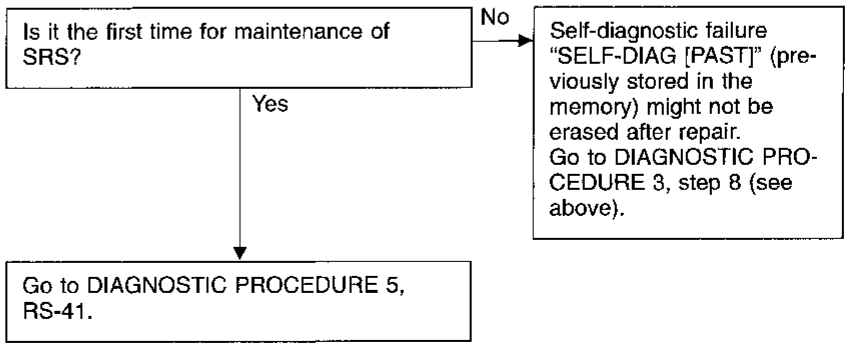

Simpo PDF Merge and Split Unregistered Version - http://www.simpopdf.com

Trouble Diagnoses with CONSULT (Cont'd)

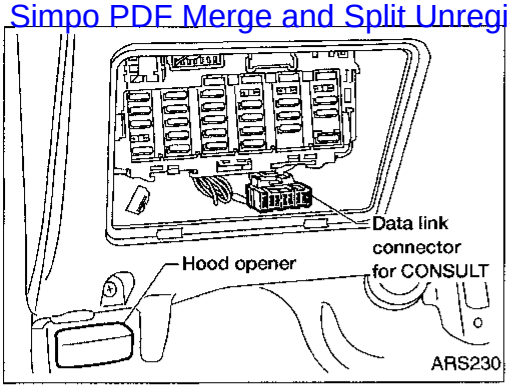

DIAGNOSTIC PROCEDURE 5

Inspecting SRS intermittent problem by using CONSULT — Diagnosis mode

1. Turn ignition switch OFF.
2. Connect CONSULT to Data link connector.

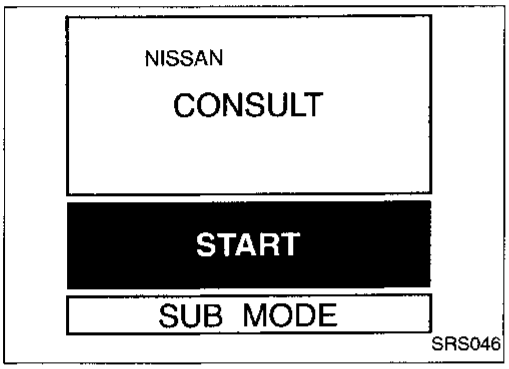

3. Turn ignition switch ON.
4. Touch "START".

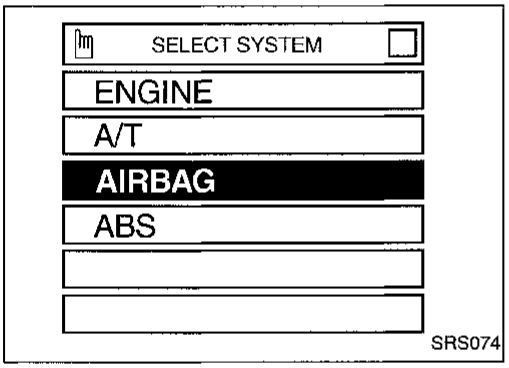

5. Touch "AIRBAG".

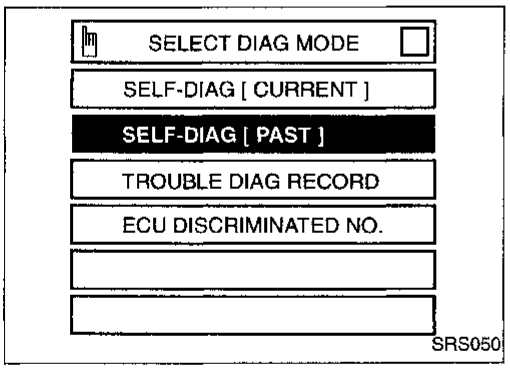

6. Touch "SELF-DIAG [PAST]".

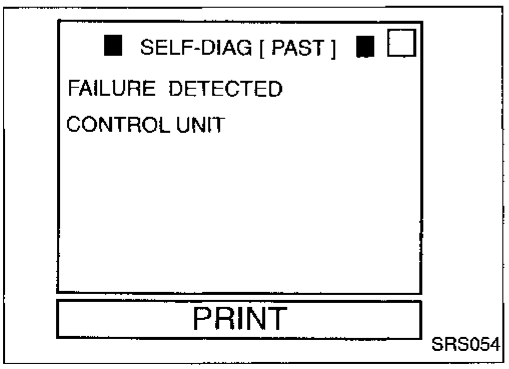

7. If diagnostic codes are displayed on "SELF-DIAG [PAST]", go to step 10.

Simpo PDF Merge and Split Unregistered Version - http://www.simpopdf.com

Trouble Diagnoses with CONSULT (Cont'd)

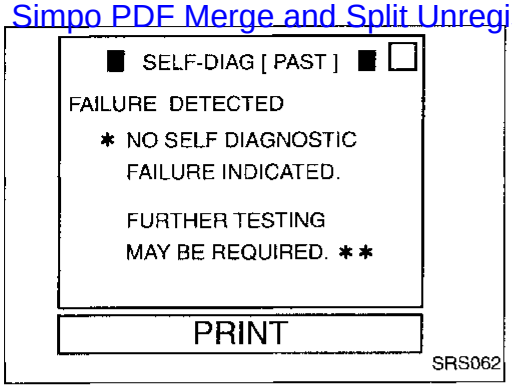

If no self-diagnostic failure is detected on "SELF-DIAG [PAST]", touch "BACK" and go back to "SELECT DIAG MODE".

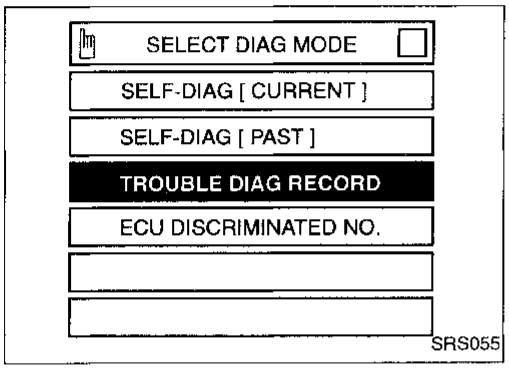

8. Touch "TROUBLE DIAG RECORD".
   NOTE:
   With "TROUBLE DIAG RECORD", diagnosis results previously erased by a reset operation can be displayed.

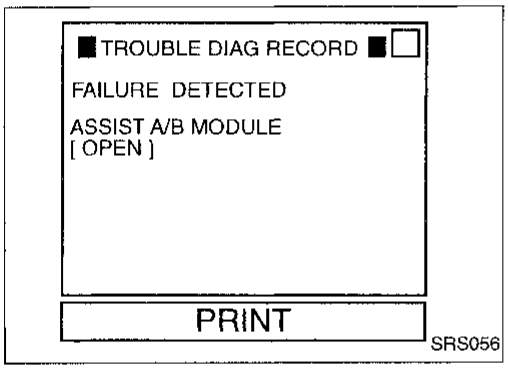

9. Diagnostic code is displayed on "TROUBLE DIAG RECORD".
10. Touch "PRINT".
11. Compare diagnostic codes to the INTERMITTENT PROBLEM DIAGNOSTIC CODE CHART, RS-43.
12. Touch "BACK" key of CONSULT until "SELECT SYSTEM" appears, then turn off CONSULT.
13. Turn ignition switch OFF, then disconnect CONSULT and both battery cables.
14. Repair the system as outlined by the Repair order that corresponds to the problem code in INTERMITTENT PROBLEM DIAGNOSTIC CODE CHART, RS-43. For replacement procedure of component parts, refer to RS-14.
15. Go to DIAGNOSTIC PROCEDURE 3, RS-39.

Trouble Diagnoses with CONSULT (Cont'd)

Simpo PDF Merge and Split Unregistered Version - http://www.simpopdf.com

INTERMITTENT PROBLEM DIAGNOSTIC CODE CHART ("SELF-DIAG [PAST]" or "TROUBLE DIAG RECORD")

Diagnostic item	Explanation	Repair order
NO SELF DIAGNOSTIC FAILURE INDICATED.	● No malfunction is detected.	● Go to DIAGNOSTIC PROCEDURE 3, RS-39.
AIRBAG MODULE [OPEN]	● Driver air bag module circuit is open (including the spiral cable).	1. Visually check wiring harness connections. 2. Replace air bag harness if it has visible damage. 3. If the harness check result is OK, replace driver air bag module (Before disposal of it, it must be deployed.), air bag diagnosis sensor unit and spiral cable.
AIRBAG MODULE [VB-SHORT]	● Driver air bag module circuit is shorted to some power supply circuit (including the spiral cable).	
AIRBAG MODULE [GND-SHORT]	● Driver air bag module circuit is shorted to ground (including the spiral cable).	
AIRBAG MODULE [SHORT]	● Driver air bag module circuits are shorted to each other.	
ASSIST A/B MODULE [VB-SHORT]	● Passenger air bag module circuit is shorted to some power supply circuit.	1. Visually check wiring harness connections. 2. Replace air bag harness if it has visible damage. 3. If the harness check result is OK, replace air bag diagnosis sensor unit and air bag harness.
ASSIST A/B MODULE [OPEN]	● Passenger air bag module circuit is open.	1. Visually check wiring harness connections. 2. Replace air bag harness if it has visible damage. 3. If the harness check result is OK, replace passenger air bag module (Before disposal of it, it must be deployed.) and air bag diagnosis sensor unit.
ASSIST A/B MODULE [GND-SHORT]	● Passenger air bag module circuit is shorted to ground.	
ASSIST A/B MODULE [SHORT]	● Passenger air bag module circuits are shorted to each other.	
CRASH ZONE SEN-CTR [OPEN/UPR-VB-SHORT] (4WD models)	● Crash zone sensor circuit is open, or ● Crash zone sensor circuit is shorted to some power supply circuit.	1. Visually check wiring harness connections. 2. Replace air bag harness if it has visible damage.
CRASH ZONE SEN-CTR [SHORT/UPR-GND-SHORT] (4WD models)	● Both crash zone sensor circuits are shorted, or ● Crash zone sensor circuit is shorted to ground.	1. Visually check wiring harness connections. 2. Replace harness if it has visible damage. 3. If the harness check result is OK, replace crash zone sensor.
CONTROL UNIT	● Low battery voltage (Less than 9V).	● Go to DIAGNOSTIC PROCEDURE 3 (RS-39).
	● Air bag diagnosis sensor unit is malfunctioning.	● Replace air bag diagnosis sensor unit.
PASS A/B DEACT SW	● Activate terminal is open.	1. Visually check wiring harness connections. 2. Replace harness if it has visible damage. 3. If the harness check result is OK, replace passenger air bag deactivation switch (The key cylinder of passenger air bag deactivation switch does not have to be replaced.).
	● Activate terminal is shorted to ground.	
	● Deactivate terminal is open.	
	● Deactivate terminal is shorted to ground.	
	● Activate terminal and deactivate terminal are shorted to each other.	
PASS A/B DEACT SW INDICATOR	● Passenger air bag deactivation switch indicator circuit is open.	1. Visually check wiring harness connections. 2. Replace harness if it has visible damage. 3. If the harness check result is OK, replace passenger air bag deactivation switch indicator.
	● Passenger air bag deactivation switch indicator circuit is shorted to some power supply circuit.	
	● Passenger air bag deactivation switch indicator circuit is shorted to ground.	
INDEFINITE FAILURES [AIR BAGS]	● Passenger air bag deactivation switch status is not identified.	1. Visually check wiring harness connections. 2. Replace harness if it has visible damage. 3. If the harness check result is OK, replace passenger air bag deactivation switch and air bag diagnosis sensor unit.

*Follow the procedures in numerical order when repairing malfunctioning parts. Confirm whether malfunction is eliminated using the "AIR BAG" warning lamp (in User mode) or CONSULT each time repair is finished. If malfunction is still observed, proceed to the next step. When malfunction is eliminated, further repair work is not required.

Simpo PDF Merge and Split Unregistered Version - http://www.simpopdf.com

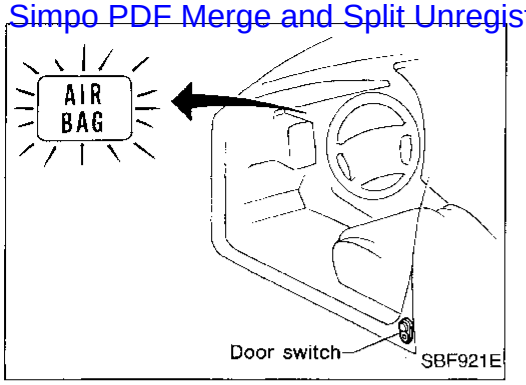

Trouble Diagnoses without CONSULT

DIAGNOSTIC PROCEDURE 6

Inspecting SRS malfunctioning parts by using "AIR BAG" warning lamp — Diagnosis mode

NOTE:
SRS will not enter Diagnosis mode if no malfunction is detected in User mode.

1. Open driver's door.
2. Turn ignition switch from OFF to ON.
3. Press door switch LH at least 5 times within 7 seconds after turning ignition switch ON.
   SRS is now in Diagnosis mode.
4. "AIR BAG" warning lamp operates in Diagnosis mode as follows:

NOTE:
If SRS does not enter Diagnosis mode even though malfunction is detected in User mode, go to DIAGNOSTIC PROCEDURE 11, RS-50.

No.	"AIR BAG" warning lamp operation — Diagnosis mode —	SRS condition
1	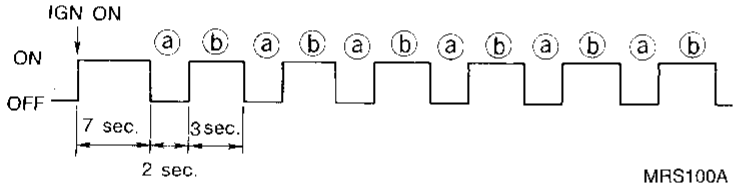 ⓐ through ⓑ are repeated.	● Self-diagnostic failure (previously stored in the memory) might not be erased after repair. ● Intermittent problem has been detected in the past. Go to DIAGNOSTIC PROCEDURE 8, RS-48.
2	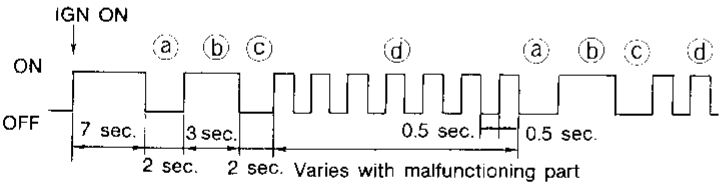 ⓐ through ⓓ are repeated. NOTE: ⓐ — Interval I ⓑ — Start signal (Start signal identifies display modes) ⓒ — Interval II ⓓ — Indicates malfunctioning part (0.5 sec. ON and 0.5 sec. OFF is counted as one flash.)	The system has a problem and needs to be repaired.

5. Malfunctioning part is indicated by the number of flashes (part ⓓ). Compare the number of flashes to WARNING LAMP FLASH CODE CHART and locate malfunctioning part.
6. Turn ignition switch OFF, and disconnect both battery cables.
7. Repair the system as outlined by the Repair order in WARNING LAMP FLASH CODE CHART that corresponds to the flash code. For replacement procedure of component parts, refer to RS-14.
8. After repairing the system, go to DIAGNOSTIC PROCEDURE 7, RS-46.

Simpo PDF Merge and Split Unregistered Version - http://www.simpopdf.com

Trouble Diagnoses without CONSULT (Cont'd)

WARNING LAMP FLASH CODE CHART

Warning lamp	Flash code ⓓ (# of flashes)	Explanation	Repair order *Recheck SRS at each replacement
"AIR BAG" warning lamp	0	● Self-diagnostic failure might not be erased after repair. ● Intermittent problem has been detected in the past.	● Go to DIAGNOSTIC PROCEDURE 8 (RS-48).
	2	● Driver air bag module circuit is malfunctioning.	1. Visually check wiring harness connections. 2. Replace air bag harness if it has visible damage. 3. Replace spiral cable. 4. Replace driver air bag module. (Before disposing of it, it must be deployed.) 5. Replace air bag diagnosis sensor unit. 6. Replace air bag harness.
	6	● Crash zone sensor (4WD models) is malfunctioning.	1. Visually check wiring harness connections. 2. Replace air bag harness if it has visible damage. 3. Replace crash zone sensor. 4. Replace air bag diagnosis sensor unit. 5. Replace air bag harness for crash zone sensor.
	7	● Low battery voltage (Less than 9V).	● Go to DIAGNOSTIC PROCEDURE 7 (RS-46).
		● Air bag diagnosis sensor unit is malfunctioning.	1. Visually check wiring harness connections. 2. Replace air bag diagnosis sensor unit. 3. Replace air bag harness.
	8	● Passenger air bag module circuit is malfunctioning.	1. Visually check wiring harness connections. 2. Replace air bag harness if it has visible damage. 3. Replace passenger air bag module. (Before disposal of it, it must be deployed.) 4. Replace air bag diagnosis sensor unit. 5. Replace air bag harness.
	9	● Passenger air bag deactivation switch status is not identified.	1. Visually check wiring harness connections. 2. Replace air bag harness if it has visible damage. 3. Replace passenger air bag deactivation switch. (The key cylinder of passenger air bag deactivation switch does not have to be replaced.) 4. Replace air bag diagnosis sensor unit. 5. Replace air bag harness.
	10	● Passenger air bag deactivation switch is malfunctioning.	1. Visually check wiring harness connections. 2. Replace air bag harness if it has visible damage. 3. Replace passenger air bag deactivation switch. (The key cylinder of passenger air bag deactivation switch does not have to be replaced.) 4. Replace air bag diagnosis sensor unit. 5. Replace air bag harness.
	11	● Passenger air bag deactivation switch indicator is malfunctioning.	1. Visually check wiring harness connections. 2. Replace air bag harness if it has visible damage. 3. Replace passenger air bag deactivation switch indicator. 4. Replace air bag diagnosis sensor unit. 5. Replace air bag harness.

*Follow the procedures in numerical order when repairing malfunctioning parts. Confirm whether malfunction is eliminated using the "AIR BAG" warning lamp (in User mode) or CONSULT each time repair is finished. If malfunction is still observed, proceed to the next step. When malfunction is eliminated, further repair work is not required.

Simpo PDF Merge and Split Unregistered Version - http://www.simpopdf.com

Trouble Diagnoses without CONSULT (Cont'd)

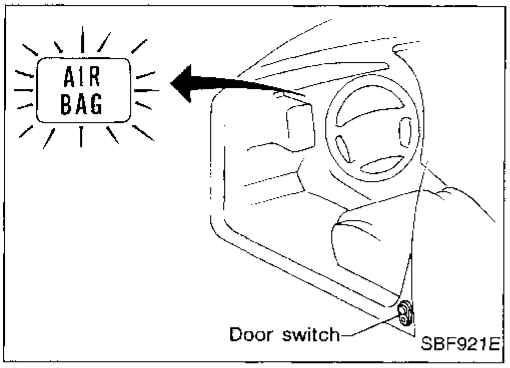

DIAGNOSTIC PROCEDURE 7

Final checking after repairing SRS by using "AIR BAG" warning lamp — Diagnosis mode and User mode

1. After repairing SRS, connect both battery cables.
2. Open driver's door.
3. Turn ignition switch from OFF to ON.
4. "AIR BAG" warning lamp operates in Diagnosis mode as follows:

No.	"AIR BAG" warning lamp operation — Diagnosis mode —	SRS condition
1	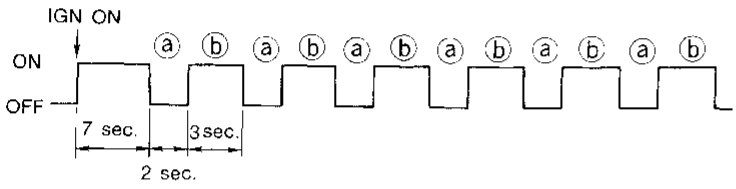 MRS100A ⓐ through ⓑ are repeated.	No malfunction is detected or repair is completed. No further action is necessary.
2	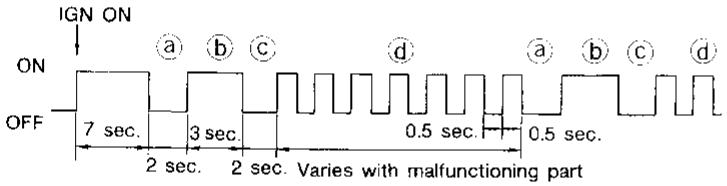 MRS099A ⓐ through ⓓ are repeated. NOTE: ⓐ — Interval I ⓑ — Start signal (Start signal identifies display modes) ⓒ — Interval II ⓓ — Indicates malfunctioning part (0.5 sec. ON and 0.5 sec. OFF is counted as one flash.)	The system has a problem and needs to be repaired.

NOTE:
When diagnosis sensor unit is replaced with a new one; the "AIR BAG" warning lamp will operate in User mode. Checking the "AIR BAG" warning lamp operation in Diagnosis mode is not required. Go to step 6.

5. If "AIR BAG" warning lamp operates as shown in No. 1 in the chart above, turn ignition switch OFF to reset from Diagnosis mode to User mode and to erase the memory of the malfunction.

   If "AIR BAG" warning lamp operates as in No. 2 in the chart above, the malfunctioning part is not repaired completely, or another malfunctioning part is detected. Go to DIAGNOSTIC PROCEDURE 6, RS-44 and repair malfunctioning part completely.

Simpo PDF Merge and Split Unregistered Version - http://www.simpopdf.com

Trouble Diagnoses without CONSULT (Cont'd)

6. Turn ignition switch ON. "AIR BAG" warning lamp operates in User mode. Compare "AIR BAG" warning lamp operation to the chart below.

NOTE:
If switching Diagnosis mode to User mode is required while malfunction is being detected, turn ignition switch from OFF to ON. Then press door switch LH at least 5 times within 7 seconds after turning ignition switch ON.
SRS is now in User mode.

"AIR BAG" warning lamp operation — User mode —	SRS condition	Reference item
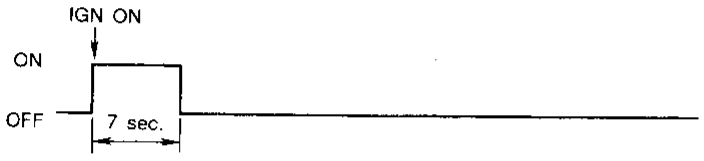 MRS095A	No malfunction is detected. No further action is necessary.	—
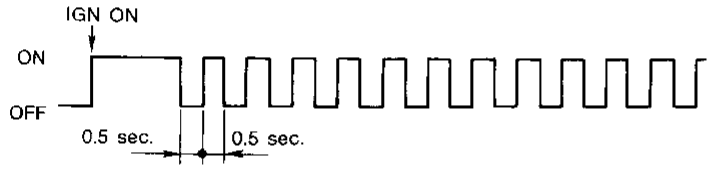 MRS096A	The system has problem and needs to be repaired as indicated.	Go to DIAGNOSTIC PROCEDURE 2 or 6, RS-34 or 44.
 MRS097A	Air bag is deployed.	Go to COLLISION DIAGNOSIS, RS-51.
	Air bag fuse for air bag diagnosis sensor unit or circuit is malfunctioning and needs to be repaired.	Go to DIAGNOSTIC PROCEDURE 9, RS-48.
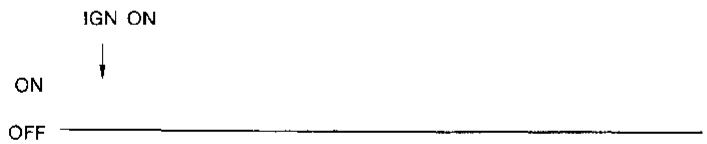 MRS098A	One of the following has occured and needs to be repaired. ● Meter fuse is open. ● "AIR BAG" warning lamp circuit is shorted or open. ● Air bag diagnosis sensor unit is malfunctioning.	Go to DIAGNOSTIC PROCEDURE 10, RS-49.

Simpo PDF Merge and Split Unregistered Version - http://www.simpopdf.com

Trouble Diagnoses without CONSULT (Cont'd)

DIAGNOSTIC PROCEDURE 8 (Continued from DIAGNOSTIC PROCEDURE 6)

Inspection SRS malfunctioning record

Is it the first time for maintenance of SRS? — No → Diagnosis result (previously stored in the memory) might not be erased after repair. Go to DIAGNOSTIC PROCEDURE 7, step 5 (RS-46).

Yes ↓

Go to DIAGNOSTIC PROCEDURE 5, RS-41. Further inspection cannot be performed without CONSULT.

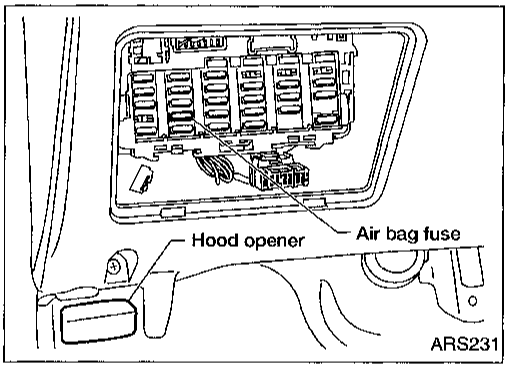

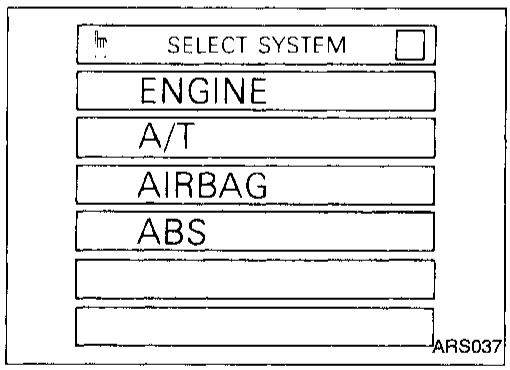

Trouble Diagnoses: "AIR BAG" Warning Lamp Does Not Turn Off

DIAGNOSTIC PROCEDURE 9

Is air bag module deployed? — Yes → Refer to COLLISION DIAGNOSIS, RS-51.

No ↓

Is SRS Air Bag fuse OK? — No → Replace fuse.

Yes ↓

Connect CONSULT and touch "START".
- Is AIRBAG displayed on CONSULT? — No → Visually check the wiring harness connection of air bag diagnosis sensor unit. If the harness connection check is OK, replace air bag diagnosis sensor unit.

Yes ↓

Is harness connection between warning lamp and air bag diagnosis sensor unit OK? — No → Connect warning lamp and air bag diagnosis sensor unit properly. If warning lamp still does not go off, replace harness.

Yes ↓

Replace air bag diagnosis sensor unit.

Simpo PDF Merge and Split Unregistered Version - http://www.simpopdf.com

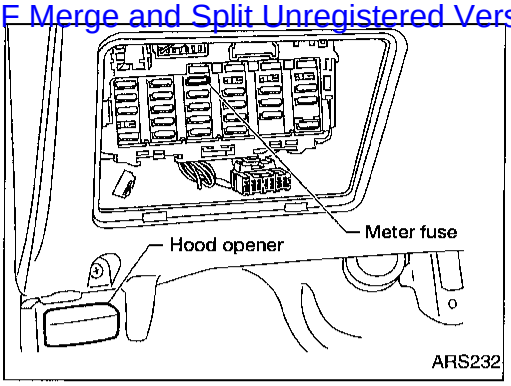

Trouble Diagnoses: "AIR BAG" Warning Lamp Does Not Turn On

DIAGNOSTIC PROCEDURE 10

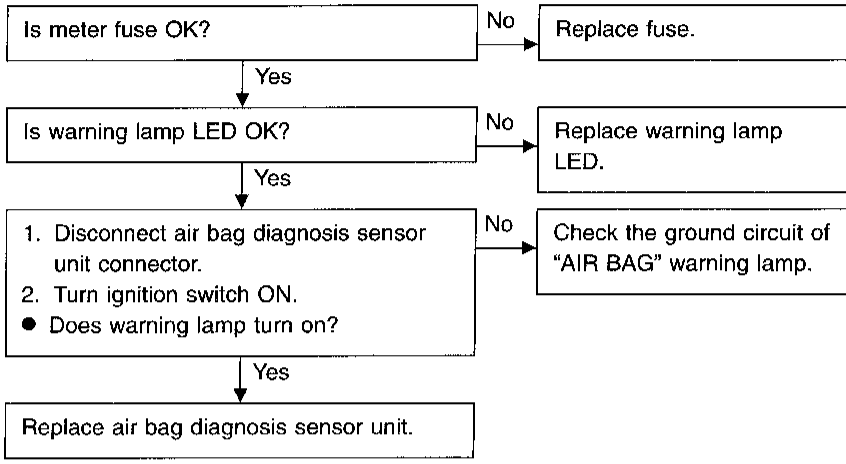

Simpo PDF Merge and Split Unregistered Version - http://www.simpopdf.com

Trouble Diagnoses: SRS Does Not Enter Diagnosis Mode Using Door Switch

DIAGNOSTIC PROCEDURE 11

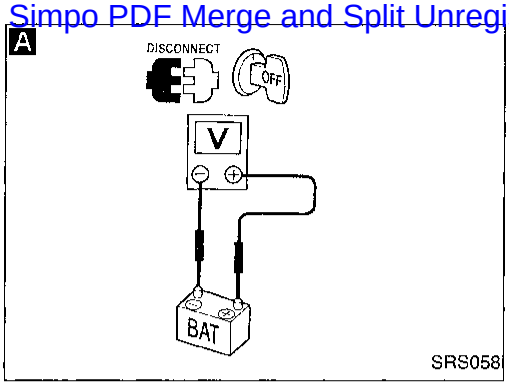

A

Disconnect both battery cables and check battery voltage using circuit tester.
- Is battery voltage more than 9V?

No → Charge battery.

Yes ↓

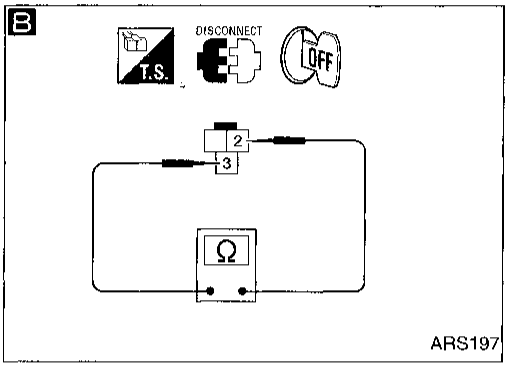

B

Remove door switch LH and check continuity between door switch LH connector terminals ② and ③ under the following conditions.

Condition	Continuity
Door switch is depressed (Door is closed).	NO
Door switch is released (Door is open).	YES

NG → Replace door switch LH.

OK ↓

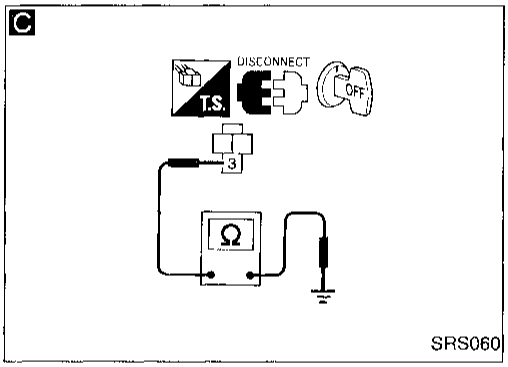

C

Check harness continuity between door switch LH harness connector terminal ③ and body ground.
- Does continuity exist?

No → Replace or repair harness.

Yes ↓

Replace air bag diagnosis sensor unit.

↓

Go to SRS Operation Check, RS-34.

Simpo PDF Merge and Split Unregistered Version - http://www.simpopdf.com

To repair the SRS, perform the following steps.

When SRS is activated in a collision:

① Replace the air bag diagnosis sensor unit.
② Remove the air bag modules.
③ Check the SRS components using the table shown on the next page.
- Replace any SRS components showing visible signs of damage (dents, cracks and deformation).

④ Install new air bag modules.
⑤ Conduct Self-diagnosis. Refer to "SRS Operation Check", RS-34. Ensure the remainder of the SRS operates properly.

When SRS is not activated in a collision:

① Check the SRS components using the table shown on the next page.
- Replace any SRS components showing visible signs of damage (dents, cracks and deformation).

② Conduct Self-diagnosis using CONSULT and "AIR BAG" warning lamp. Refer to "SRS Operation Check", RS-34. Ensure entire SRS operates properly.

Simpo PDF Merge and Split Unregistered Version - http://www.simpopdf.com

SRS inspection

Part	SRS is activated	SRS is NOT activated
Air bag module (driver and passenger side)	REPLACE Install with new bolts.	1. Remove air bag module. Check harness cover and connectors for damage, terminals for deformities, and harness for binding. 2-1. Install driver air bag module into the steering wheel to check fit and alignment with the wheel. 2-2. Install passenger air bag module into the instrument panel to check fit with the instrument panel. 3. No damage found, reinstall with new bolts. 4. If damaged—REPLACE. Air bag must be deployed before discarding.
Crash zone sensor (4WD models)	1. Check body and sensor bracket for deformities and rust. 2. Check sensor case for dents, cracks, scratches, deformities and rust. 3. Check sensor harness, connector, and terminals for binding, damage, and deformities. 4. If no damage is found, reinstall with new bolts. 5. If damaged—REPLACE.	
Instrument panel	1. When passenger air bag inflates, check the following points for bending, deformities and cracks: ● Opening portion for passenger air bag 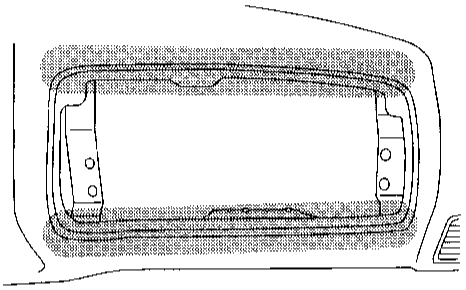 : Check points ● Passenger air bag module brackets 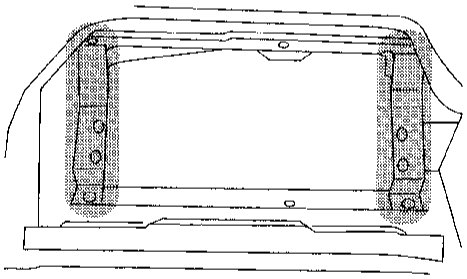 : Check points ● The portions securing the instrument panel 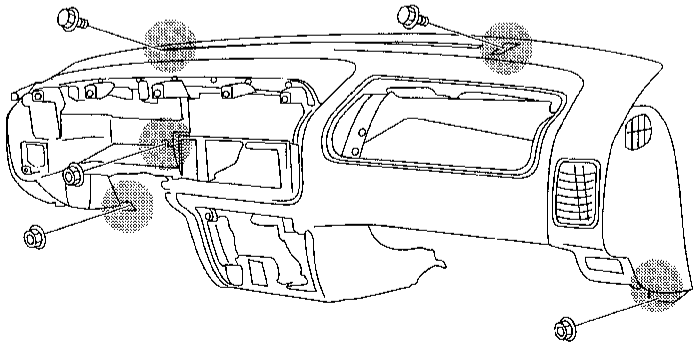 : Check points 2. If no damage is found, reinstall the instrument panel. 3. If damaged - REPLACE the instrument panel with new bolts.	

Simpo PDF Merge and Split Unregistered Version - http://www.simpopdf.com

Part	SRS is activated	SRS is NOT activated
Air bag diagnosis sensor unit	REPLACE Install with new bolts.	1. Check case and bracket for dents, cracks or deformities. 2. Check connectors for damage, and terminals for deformities. 3. If no damage is found, reinstall with new bolts. 4. If damaged—REPLACE.
Steering wheel	1. Visually check steering wheel for deformities. 2. Check harness (built into steering wheel) and connectors for damage, and terminals for deformities. 3. Install air bag module to check fit or alignment with steering wheel. 4. Check steering wheel for excessive free play. 5. If no damage is found, reinstall the steering wheel. 6. If damaged—REPLACE.	
Spiral cable	1. Visually check spiral cable and combination switch for damage. 2. Check connectors, flat cable and protective tape for damage. 3. Check steering wheel for noise, binding or heavy operation. 4. If no damage is found, reinstall the spiral cable. 5. If damaged—REPLACE.	
Passenger air bag deactivation switch and indicator	1. Visually check passenger air bag deactivation switch and indicator for dents, cracks and deformities. 2. Check the harness and connectors for damage, and terminals for deformities. 3. If damaged—REPLACE. **WARNING:** **After SRS maintenance or repair, make sure the passenger air bag deactivation switch is in the same position (ON or OFF) as when the vehicle arrived for service.**	
Harness and Connectors	1. Check connectors for poor connection, damage, and terminals for deformities. 2. Check harness for binding, chafing, cuts and deformities. 3. If no damage is found, reinstall. 4. Damaged—REPLACE damaged section of harness. Do not attempt to repair, splice or modify any SRS harness.	

Simpo PDF Merge and Split Unregistered Version - http://www.simpopdf.com

SECTION ST

CONTENTS

PRECAUTIONS AND PREPARATION 2
Supplemental Restraint System (SRS) "AIR BAG" 2
Precautions for Steering System 2
Special Service Tools 3
NOISE, VIBRATION AND HARSHNESS (NVH) TROUBLESHOOTING 5
NVH Troubleshooting Chart 5
ON-VEHICLE SERVICE 6
Steering System 6
Checking and Adjusting Drive Belts (For power steering) 6
Checking Fluid Level (For power steering) 6
Checking Fluid Leakage (For power steering) 7
Bleeding Hydraulic System (For power steering) 7
Checking Steering Wheel Turning Force (For power steering) 8
Checking Steering Wheel Play 8
Checking Neutral Position on Steering Wheel 9
Checking 9
Checking Front Wheel Turning Angle 9
Checking Hydraulic System (For power steering) 10
STEERING WHEEL AND STEERING COLUMN 11
Steering Wheel 11
Removal And Installation 11
Steering Column 12
Removal 12
Installation 12
Disassembly and Assembly 13
Tilt mechanism 14
Inspection 14
MANUAL STEERING GEAR (Model: VB66K) 15
Removal and Installation 15
Disassembly 16
Assembly and Adjustment 16
Worm Gear Bearing Preload 16
Sector Shaft End Play 18
Steering Gear Preload And Backlash 18
Inspection 19
Sector Shaft 19
Steering Worm Assembly 20
Bearing 20
Oil Seals 20
POWER STEERING SYSTEM (Model: PB48S) 21
Description 21
POWER STEERING GEAR (Model: PB48S) 22
Removal and Installation 22
Steering Gear 22
Power Steering Gear Component 22
Pre-disassembly Inspection and Adjustment 23
Turning Torque Measurement 23
Disassembly 24
Adjusting Screw Lock Nut O-Ring 24
Sector Shaft Oil Seal 24
Rear Housing O-Ring 25
Rear Cover O-Ring And Oil Seal 25
Assembly 26
Adjusting Screw Lock Nut O-Ring 26
Sector Shaft Oil Seal 26
Sector Shaft End Play 27
Rear Cover O-Ring And Oil Seal 27
Rear Housing O-Ring 27
Sector Shaft 28
POWER STEERING SYSTEM (Model: PB59K) 29
Description 29
POWER STEERING GEAR (Model: PB59K) 30
Removal and Installation 30
Steering Gear 30
Power Steering Gear Component 30
Pre-disassembly Inspection and Adjustment 31
Turning Torque Measurement 31
Disassembly 32
Assembly 33
POWER STEERING OIL PUMP 36
Disassembly and Assembly 36
Pre-disassembly Inspection 36
Inspection 37
Pulley And Pulley Shaft 37
Disassembly 37
Assembly 38

CONTENTS (Cont'd.)

Simpo PDF Merge and Split Unregistered Version - http://www.simpopdf.com

STEERING LINKAGE 39
Removal and Installation 39
Disassembly 40
Idler Arm Assembly 40
Cross Rod And Tie-Rod 40
Inspection 41
Ball Joint And Swivel Joint 41
Idler Arm Assembly 41
Cross Rod And Tie-Rod 41
Fixing Location 41

SERVICE DATA AND SPECIFICATIONS (SDS) 42
General Specifications 42
Inspection and Adjustment 42
Steering Column Length 42
Manual Steering Gear
(Model: VB66K) 43
Steering Linkage 43
Power Steering System
(Model: PB48S) 43
Power Steering System
(Model: PB59K) 44

Simpo PDF Merge and Split Unregistered Version - http://www.simpopdf.com

Supplemental Restraint System (SRS) "AIR BAG"

The Supplemental Restraint System "AIR BAG", used along with a seat belt, helps to reduce the risk or severity of injury to the driver and front passenger in a frontal collision. The Supplemental Restraint System consists of air bag modules (located in the center of the steering wheel and on the instrument panel on the passenger side), a diagnosis sensor unit, a crash zone sensor (4WD models), warning lamp, wiring harness and spiral cable.

The vehicle is equipped with an passenger air bag deactivation switch. Because no rear seat exists where a rear-facing child restraint can be placed, the switch is designed to turn off the passenger air bag so that a rear-facing child restraint can be used in the front passenger seat. The switch is located in the center of the instrument panel, near the ashtray. When the switch is turned to the ON position, the passenger air bag is enabled and could inflate in a frontal collision. When the switch is turned to the OFF position, the passenger air bag is disabled and will not inflate in a frontal collision. A passenger air bag OFF indicator on the instrument panel lights up when the passenger air bag is switched OFF. The driver air bag always remains enabled and is not affected by the passenger air bag deactivation switch.

Information necessary to service the system safely is included in the **RS section** of this Service Manual.

WARNING:

- **To avoid rendering the SRS inoperative, which could increase the risk of personal injury or death in the event of a collision which would result in air bag inflation, all maintenance should be performed by an authorized NISSAN dealer.**
- **Improper maintenance, including incorrect removal and installation of the SRS, can lead to personal injury caused by unintentional activation of the system.**
- **Do not use electrical test equipment on any circuit related to the SRS unless instructed to in this Service Manual. SRS wiring harnesses are covered with yellow insulation either just before the harness connectors or on the complete harness, for easy identification.**
- **The vehicle is equipped with a passenger air bag deactivation switch which can be operated by the customer. When the front passenger air bag is switched OFF, the front passenger air bag is disabled and will not inflate in a frontal collision. When the front passenger air bag is switched ON, the front passenger air bag is enabled and could inflate in a frontal collision. After SRS maintenance or repair, make sure the front passenger air bag switch is in the same position (ON or OFF) as when the vehicle arrived for service.**

Precautions for Steering System

- **Before disassembly, thoroughly clean the outside of the unit.**
- **Disassembly should be done in a clean work area. It is important to prevent the internal parts from becoming contaminated by dirt or other foreign matter.**
- **For easier and proper assembly, place disassembled parts in order on a parts rack.**
- **Use nylon cloths or paper towels to clean the parts; common shop rags can leave lint that might interfere with their operation.**
- **Before inspection or reassembly, carefully clean all parts with a general purpose, non-flammable solvent.**
- **Before assembly, apply a coat of recommended ATF* to hydraulic parts. Petroleum jelly may be applied to O-rings and seals. Do not use any grease.**
- **Replace all gaskets, seals and O-rings. Avoid damaging O-rings, seals and gaskets during installation. Perform functional tests whenever designated.**

***: Automatic Transmission Fluid type DEXRON™ III or equivalent.**

Simpo PDF Merge and Split Unregistered Version - http://www.simpopdf.com

Special Service Tools

The actual shape of Kent-Moore tools may differ from those of special service tools illustrated here.

Tool number (Kent-Moore No.) Tool name	Description		Unit application	
			Manual steering	Power steering
ST27180001 (J25726-A) Steering wheel puller	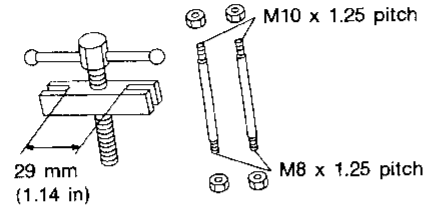 NT544	Removing steering wheel	X	X
HT72520000 (J25730-B) Ball joint remover	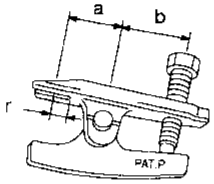 NT546	Removing ball joint and swivel joint **a: 33 mm (1.30 in)** **b: 50 mm (1.97 in)** **r: R11.5 mm (0.453 in)**	X	X
ST29020001 (J24319-01) Steering gear arm puller	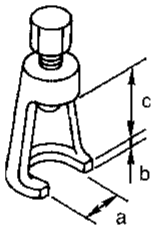 NT694	Removing pitman arm **a: 34 mm (1.34 in)** **b: 6.5 mm (0.256 in)** **c: 61.5 mm (2.421 in)**	X	X
KV48101500 (J28802) Lock nut wrench	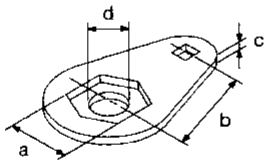 NT534	Removing and installing lock nut **a: 73.1 mm (2.878 in)** **b: 100 mm (3.94 in)** **c: 12 mm (0.47 in)** **d: 60 mm (2.36 in) dia.**	X	—
KV48101400 (J28803) Adjusting plug wrench	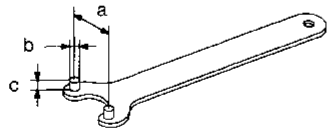 NT539	Adjusting and tightening lock nut **a: 46.7 mm (1.839 in)** **b: 8.5 mm (0.335 in) dia.** **c: 7 mm (0.28 in)**	X	—
ST3127S000 (see J25765-A) ①GG91030000 (J25765-A) Torque wrench ②HT62940000 (—) Socket adapter ③HT62900000 (—) Socket adapter	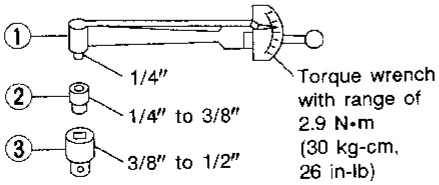 NT541	Measuring turning torque	X	X

Special Service Tools (Cont'd)

Simpo PDF Merge and Split Unregistered Version - http://www.simpopdf.com

Tool number (Kent-Moore No.) Tool name	Description		Unit application	
			Manual steering	Power steering
KV48100301 (—) Strut & steering gearbox attachment	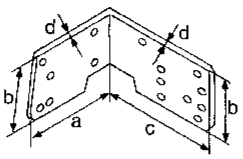 NT688	Steering gear is installed. **a: 162 mm (6.38 in)** **b: 110 mm (4.33 in)** **c: 190 mm (7.48 in)** **d: 9 mm (0.35 in)**	X	X
KV48103500 (J26357 or J26357-10) Pressure gauge	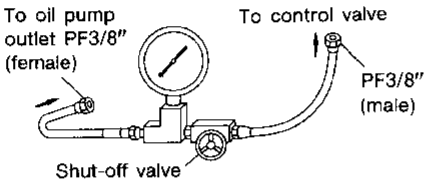 NT547	Measuring oil pressure	—	X
KV48102500 (—) Pressure gauge adapter	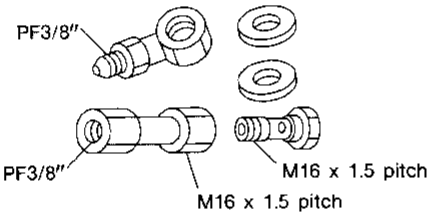 NT542	Measuring oil pressure (Use with KV48103500)	—	X
KV481009S0 (—) Oil seal drift set ①KV48100910 (—) Drift ②KV48100920 (J26367) Adapter ③KV48100930 (J26367) Adapter	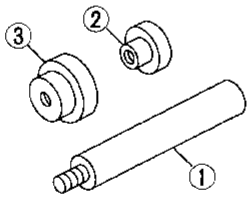 NT174	Installing oil seal	—	X
KV48100700 (J26364) Torque adapter	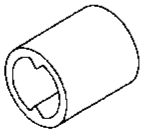 NT169	Adjusting worm bearing pre-load	X	X

Simpo PDF Merge and Split Unregistered Version - http://www.simpopdf.com

NVH Troubleshooting Chart

Use the chart below to help you find the cause of the symptom. If necessary, repair or replace these parts.

			Reference page	ST-6	ST-7	ST-41	ST-41	ST-41	ST-7	ST-8	ST-8	Refer to MA section	—	ST-14	ST-14	ST-11	ST-39	NVH in PD section	NVH in PD section	NVH in RA section	NVH in FA, RA section	NVH in RA section	NVH in FA section	NVH in FA section	NVH in BR section
			Possible cause and SUSPECTED PARTS	Fluid level	Air in hydraulic system	Tie rod ball joint swinging force	Tie rod ball joint rotating torque	Tie rod ball joint end play	Steering gear fluid leakage	Steering wheel play	Steering gear turning force	Drive belt looseness	Improper steering wheel	Improper installation or looseness of tilt lock lever	Steering column deformation or damage	Improper installation or looseness of steering column	Steering linkage looseness	PROPELLER SHAFT	DIFFERENTIAL	DRIVE SHAFT	FRONT AXLE AND FRONT SUSPENSION	REAR AXLE AND REAR SUSPENSION	TIRES	ROAD WHEEL	BRAKES
Symptom	STEERING	Noise		X	X	X	X	X	X	X	X	X						X	X	X	X	X	X	X	X
		Shake											X	X				X		X	X	X	X	X	X
		Vibration											X	X	X	X		X		X	X	X	X		
		Shimmy											X	X			X				X	X	X	X	X
		Judder															X				X	X	X	X	X

X : Applicable

Simpo PDF Merge and Split Unregistered Version - http://www.simpopdf.com

Steering System

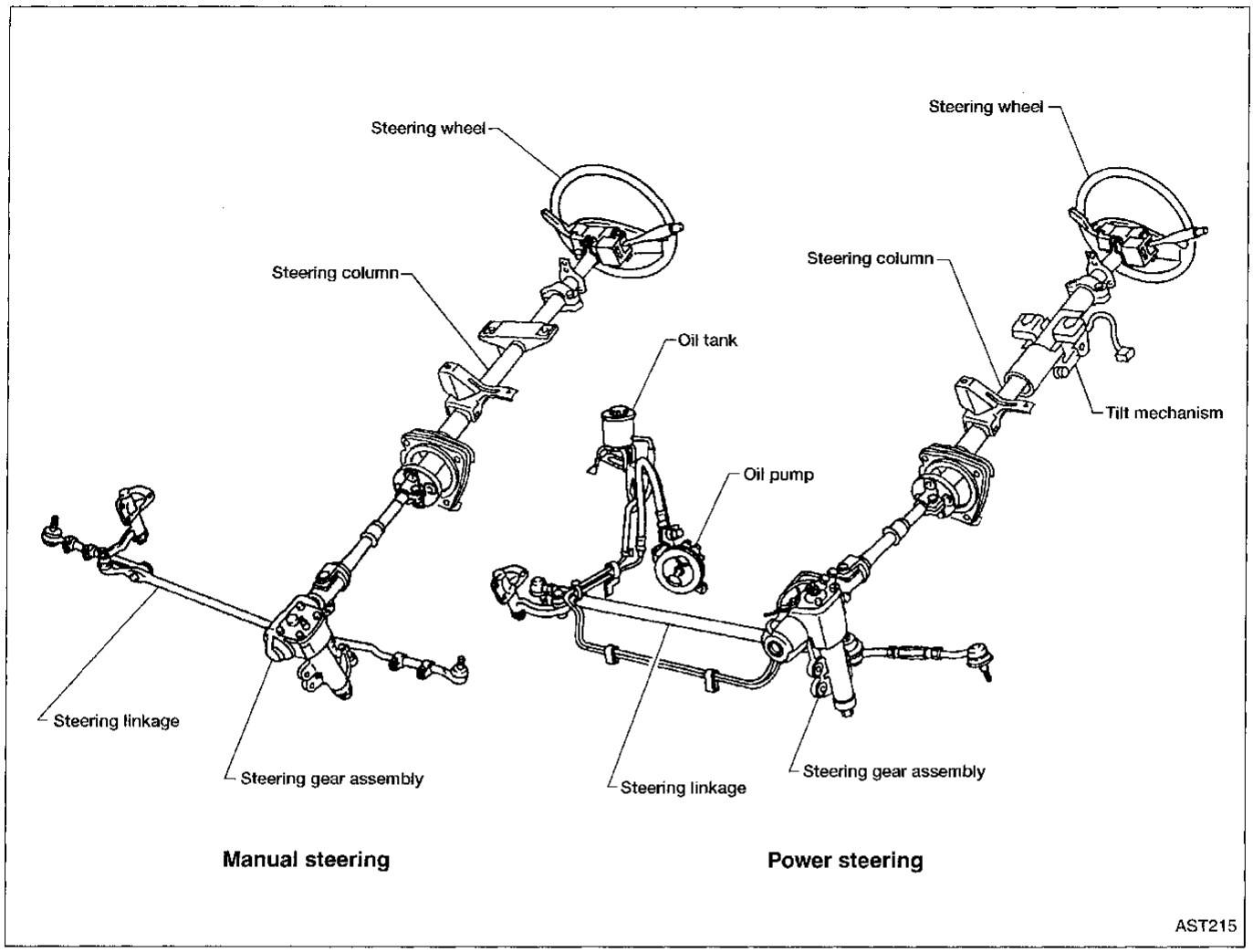

Checking and Adjusting Drive Belts (For power steering)

Refer to MA section ("Checking Drive Belts", "ENGINE MAINTENANCE").

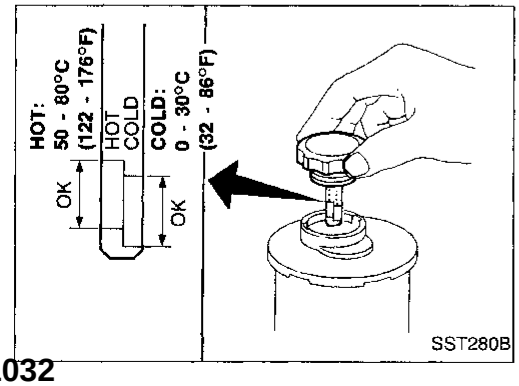

Checking Fluid Level (For power steering)

Check fluid level with engine off.
Check fluid level with dipstick on reservoir cap.
Use "HOT" range for fluid temperatures of 50 to 80°C (122 to 176°F). Use "COLD" range for fluid temperatures of 0 to 30°C (32 to 86°F).

CAUTION:

- **Do not overfill.**
- **Recommended fluid is Automatic Transmission Fluid type DEXRON™ III or equivalent.**

Simpo PDF Merge and Split Unregistered Version - http://www.simpopdf.com

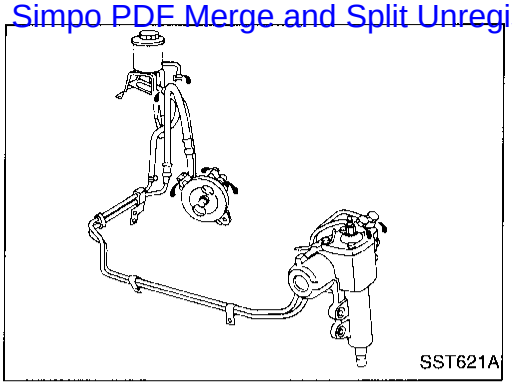

Checking Fluid Leakage (For power steering)

Check lines for improper attachment, leaks, cracks, damage, chafing and deterioration.

1. Run engine between idle speed and 1,000 rpm.
- **Make sure temperature of fluid in reservoir tank rises to 60 to 80°C (140 to 176°F).**
2. Turn steering wheel right-to-left several times.
3. Hold steering wheel at each "lock" position for 5 seconds and carefully check for fluid leakage.

CAUTION:
Do not hold steering wheel at lock position for more than 15 seconds.

4. If fluid leakage from any line is noticed, loosen flare nut and then retighten.

Do not overtighten connector as this can damage O-ring, washer and connector.

5. If fluid leakage from power steering pump is noticed, check power steering pump. Refer to ST-36.
6. If fluid leakage from power steering gear is noticed, check power steering gear. Refer to ST-21 (PB48S), or ST-29 (PB59K).

Bleeding Hydraulic System (For power steering)

1. Raise front end of vehicle until wheels are clear of the ground.
2. Add fluid to reservoir tank to specified level. Then quickly turn steering wheel fully to right and left and lightly touch steering stoppers.
   Repeat steering wheel operation until fluid level no longer decreases.
3. Start engine.
   Repeat step 2 above.

- Incomplete air bleeding will cause the following to occur:

a. Air bubbles in reservoir tank
b. Clicking noise in power steering pump
c. Excessive buzzing in power steering pump
   When this happens, bleed air again.

Fluid noise may occur in the valve or power steering pump. This is common when the vehicle is stationary or while turning the steering wheel slowly. This does not affect the performance or durability of the system.

Simpo PDF Merge and Split Unregistered Version - http://www.simpopdf.com

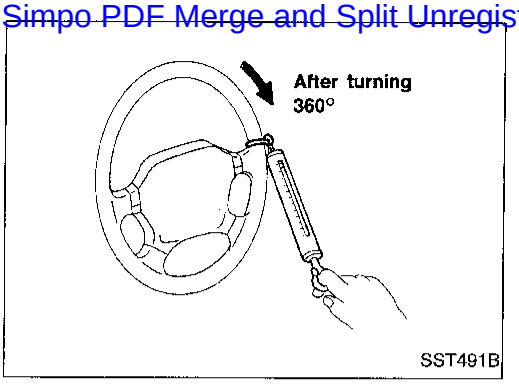

Checking Steering Wheel Turning Force (For power steering)

1. Park vehicle on a level, dry surface and set parking brake.
2. Start engine and run at idle speed or 1,000 rpm.
3. Bring power steering fluid up to adequate operating temperature. [Make sure temperature of fluid is approximately 60 to 80°C (140 to 176°F).]

Tires need to be inflated to normal pressure.

4. Check steering wheel turning force when steering wheel has been turned 360° from neutral position.

Steering wheel turning force:
PB48S-type
24.5 - 29.4 N (2.5 - 3.0 kg, 5.5 - 6.6 lb)
PB59K-type
39 N (4 kg, 9 lb) or less

5. If steering wheel turning force is out of specification, check the following:

a. Hydraulic system. Refer to "Checking Hydraulic System", ST-10.
b. Steering Column. Refer to ST-12.
c. Front suspension and axle. Refer to FA section ("Front Axle and Front Suspension Parts", "ON-VEHICLE SERVICE").
d. Steering gear turning torque. Refer to "TURNING TORQUE MEASUREMENT", ST-23 (PB48S), or ST-31 (PB59K).

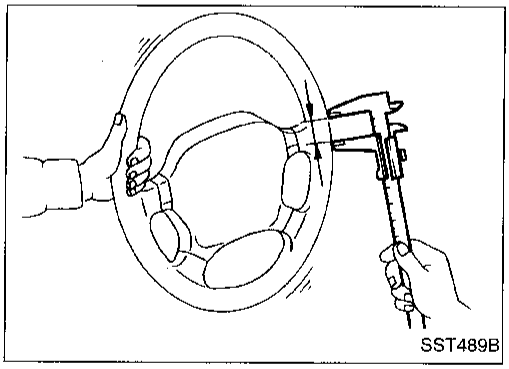

Checking Steering Wheel Play

- Place wheels in straight ahead position and check steering wheel play.

Steering wheel play:
35 mm (1.38 in) or less

- If it is not within specification, check the following for loose or worn components.

a. Steering column. Refer to ST-12.
b. Front suspension and axle. Refer to FA section ("Front Axle and Front Suspension Parts", "ON-VEHICLE SERVICE").
c. Steering gear. [Refer to ST-15 (manual steering), ST-21 (power steering PB48S), or ST-29 (power steering PB59K).]

Simpo PDF Merge and Split Unregistered Version - http://www.simpopdf.com

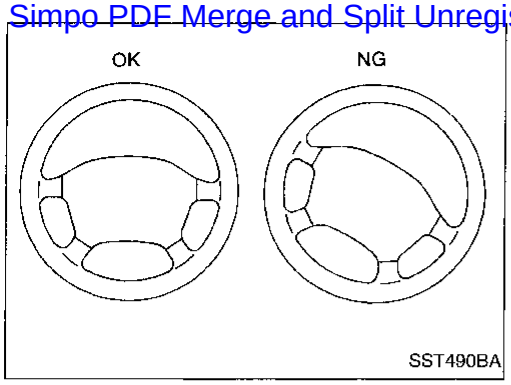

Checking Neutral Position on Steering Wheel

- Make sure that wheel alignment is correct.
  Wheel alignment:
  Refer to FA section ("Inspection and Adjustment", "SERVICE DATA AND SPECIFICATIONS").
- Verify that the steering gear is centered before removing the steering wheel.

Checking

1. Check that the steering wheel is in the neutral position when driving straight ahead.
2. If it is not in the neutral position, remove the steering wheel and reinstall it correctly.
3. If the neutral position is still not correct:

a. Loosen tie-rod lock nuts.
b. Move tie-rods, in opposite direction, the same amount on both left and right sides.
This will compensate for error in the neutral position.

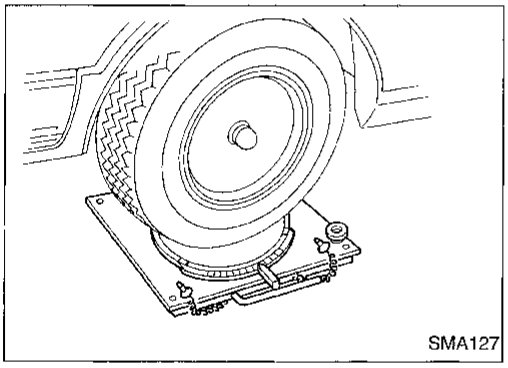

Checking Front Wheel Turning Angle

1. Rotate steering wheel fully right, then left; measure turning angle.
   Turning angle of full turns:
   Refer to FA section ("Inspection and Adjustment", "SERVICE DATA AND SPECIFICATIONS".)
2. If it is not within specification, check stopper bolt adjustment. Refer to FA section ("FRONT WHEEL TURNING ANGLE", "Front Wheel Alignment").

Simpo PDF Merge and Split Unregistered Version - http://www.simpopdf.com

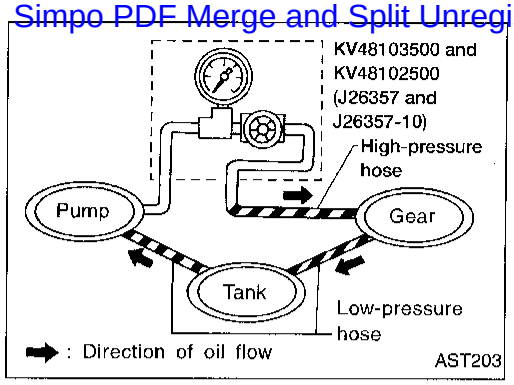

Checking Hydraulic System (For power steering)

Before starting, check belt tension, driving pulley and tire pressure.

1. Set Tool. Open shut-off valve. Then bleed air. Refer to "Bleeding Hydraulic System", ST-7.
2. Run engine at idle speed or 1,000 rpm.

- **Make sure fluid temperature in reservoir tank rises to 60 to 80°C (140 to 176°F).**

WARNING:

Warm up engine with shut-off valve fully opened. If engine is started with shut-off valve closed, fluid pressure in the power steering pump increases to maximum. This will raise fluid temperature abnormally.

3. Check pressure with steering wheel fully turned to left and right positions while idling at 1,000 rpm.

CAUTION:

Do not hold the steering wheel at full lock position for more than 15 seconds.

Power steering pump maximum operating pressure:
7,649 - 8,238 kPa (76.5 - 82.4 bar, 78 - 84 kg/cm^2, 1,109 - 1,194 psi) at idling

- If pressure reaches maximum operating pressure, system is OK.
- If pressure increases above maximum operating pressure, check power steering pump flow control valve. Refer to ST-36.

4. If power steering pressure is below the maximum operating pressure, slowly close shut-off valve and check pressure again.

CAUTION:

Do not close shut-off valve for more than 15 seconds.

- If pressure increases to maximum operating pressure, gear is damaged. Refer to "Removal and Installation", ST-22, 30.
- If pressure remains below maximum operating pressure, pump is damaged. Refer to "Disassembly and Assembly", ST-36.

5. After checking hydraulic system, remove Tool and add fluid as necessary. Then completely bleed air out of system. Refer to ST-7.

Simpo PDF Merge and Split Unregistered Version - http://www.simpopdf.com

SEC. 253 • 484 • 487 • 488 • 680

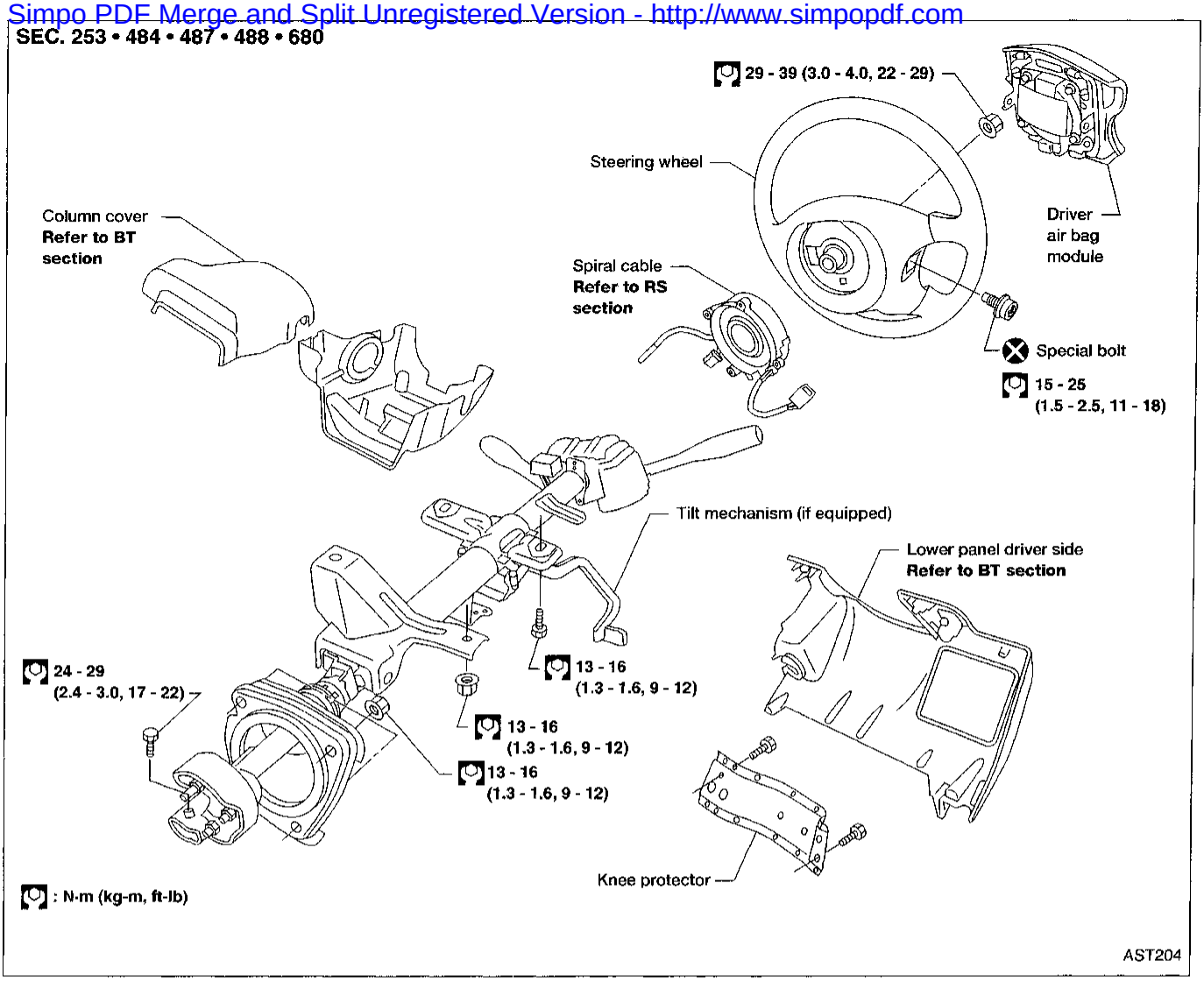

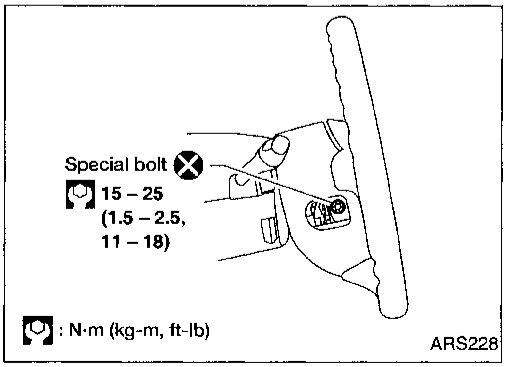

Steering Wheel

REMOVAL AND INSTALLATION

1. Remove air bag module and spiral cable. Refer to RS section ["Air Bag Module and Spiral Cable", "SUPPLEMENTAL RESTRAINT SYSTEM (SRS)"].
2. Disconnect horn connector and remove steering wheel nut.

Steering Wheel (Cont'd)

Simpo PDF Merge and Split Unregistered Version - http://www.simpopdf.com

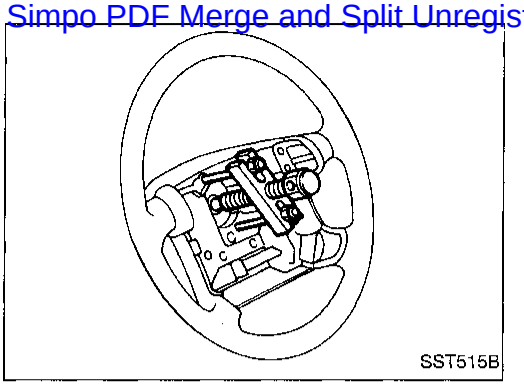
SST515B

3. Remove steering wheel using tool.

- For installation, refer to RS section ["Air Bag Module and Spiral Cable", "SUPPLEMENTAL RESTRAINT SYSTEM (SRS)"].

Steering Column

REMOVAL

CAUTION:

- **The rotation of the spiral cable (SRS "Air bag" component part) is limited. If the steering gear must be removed, set the front wheels in the straight-ahead direction.**
  Do not rotate the steering column while the steering gear is removed.
- **Remove the steering wheel before removing the steering lower joint to avoid damaging the SRS spiral cable. Refer to ST-11.**

1. Remove steering wheel, refer to ST-11.
2. Remove steering column covers.
3. Remove instrument lower panel. Disconnect security lamp indicator.
4. Disconnect combination switch electrical connectors and air bag harness connector.
5. Remove knee protector.
6. Disconnect ignition switch and shift lock solenoid connectors.
7. Disconnect shift cable.
8. Remove bolt from lower joint.
9. Remove two steering column bolts and remove steering column.

INSTALLATION

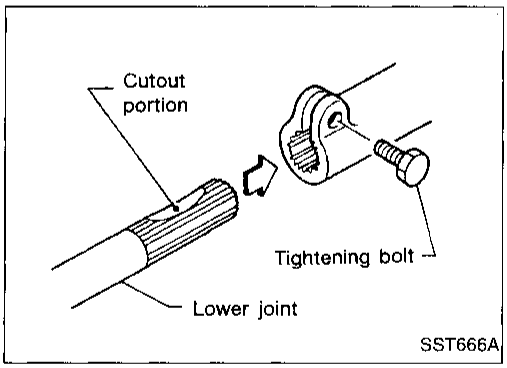

SST666A

- When installing steering column, finger-tighten all lower bracket and clamp retaining bolts; then tighten them securely. Make sure that undue stress is not applied to steering column.
- When fitting steering lower joint, be sure tightening bolt faces cutout portion.
- Align spiral cable correctly when installing steering wheel. Refer to RS section ["Air Bag Module and Spiral Cable", "SUPPLEMENTAL RESTRAINT SYSTEM (SRS)"].

CAUTION:

After installation, turn steering wheel to make sure it moves smoothly. Ensure the number of turns from the straight forward position to left and right locks are the same. Be sure that the steering wheel is in a neutral position when driving straight ahead.

Simpo PDF Merge and Split Unregistered Version - http://www.simpopdf.com

Disassembly and Assembly

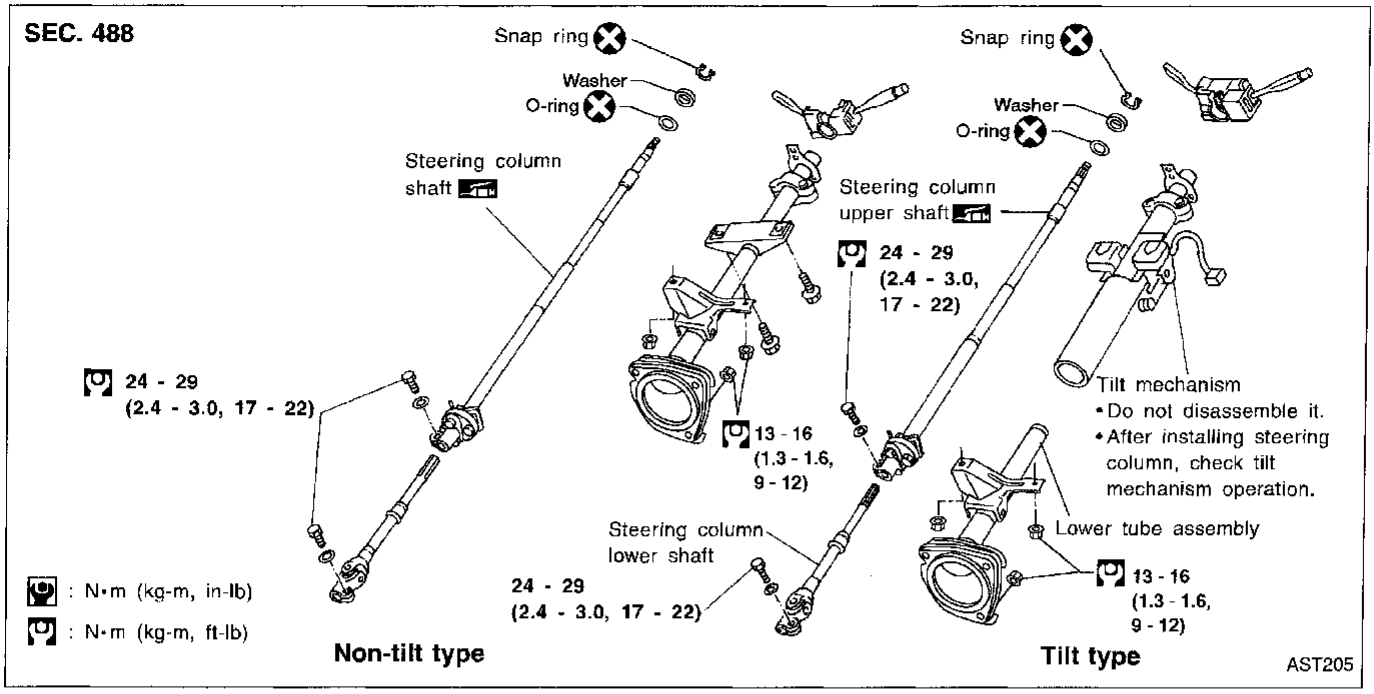

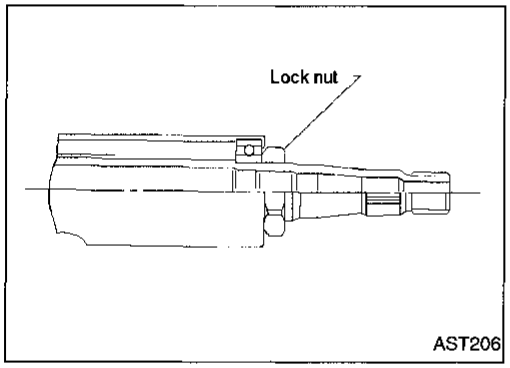

- When disassembling and assembling, unlock steering lock with key.
- Install lock nut on steering column shaft and tighten the nut to specification.
  : 25 - 34 N·m (2.5 - 3.5 kg-m, 18 - 25 ft. lb)

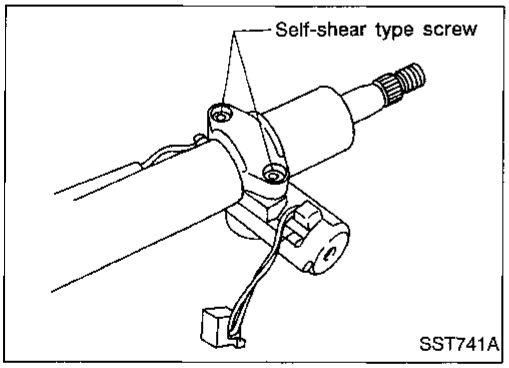

- Steering lock

a. Break self-shear type screws using a drill or other appropriate tool.

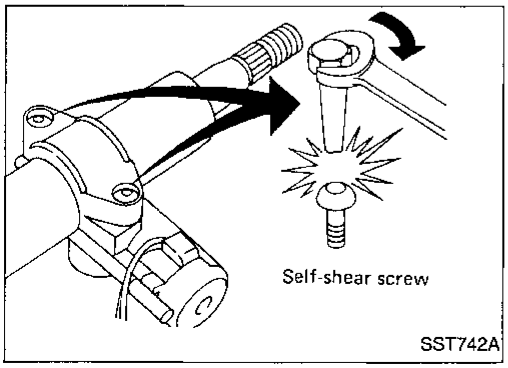

b. Install self-shear type screws, then tighten until heads break off.

Disassembly and Assembly (Cont'd)

Simpo PDF Merge and Split Unregistered Version - http://www.simpopdf.com

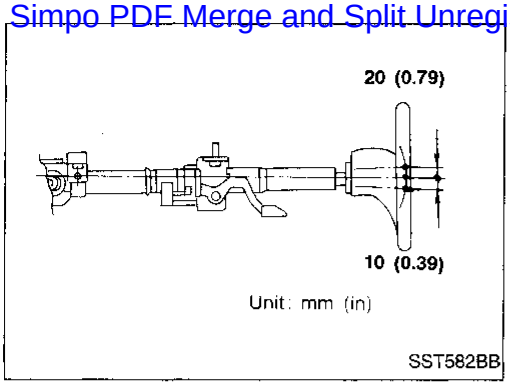

Tilt mechanism

After installing steering column, check tilt mechanism operation.

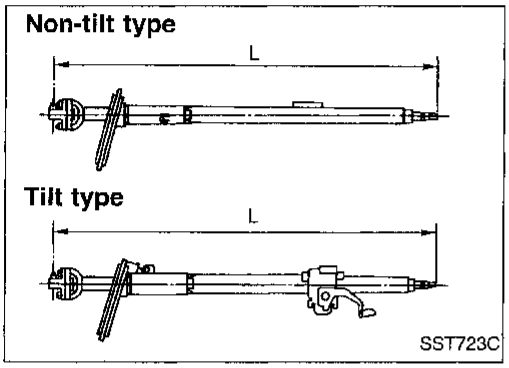

Inspection

- When steering wheel does not turn smoothly, check the steering column as follows and replace damaged parts.

a. Check column bearings for damage and unevenness. Lubricate with recommended multi-purpose grease or replace steering column as an assembly, if necessary.

b. Check jacket tube for deformation and breakage. Replace if necessary.

- When the vehicle is involved in a light collision, check dimension "L". If it is not within specifications, replace steering column as an assembly.

Column length "L":

863.1 - 866.7 mm (33.98 - 34.12 in)

Simpo PDF Merge and Split Unregistered Version - http://www.simpopdf.com

Removal and Installation

SEC. 480

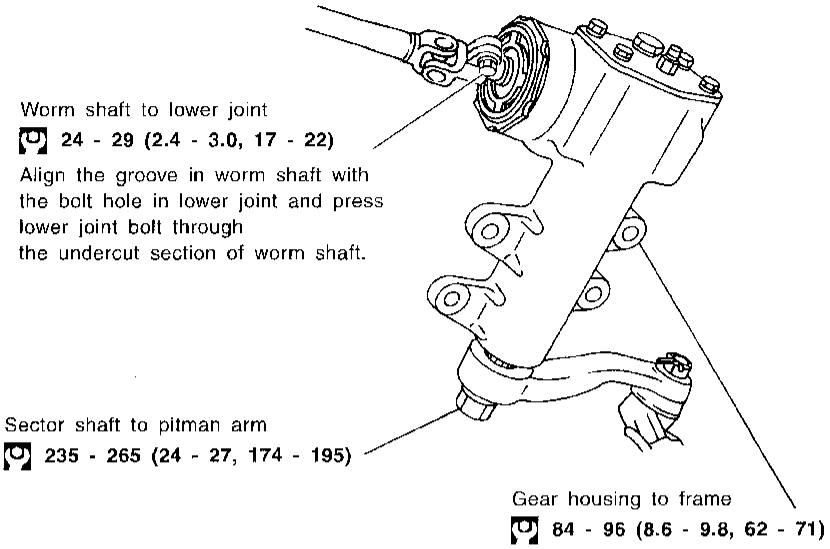

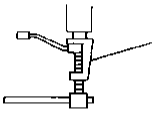

• Install pitman arm.
Align four grooves of gear arm serrations with four projections of sector shaft serrations, and install and tighten lock washer and nut.

: N•m (kg-m, ft-lb)

SST724C

SEC. 480

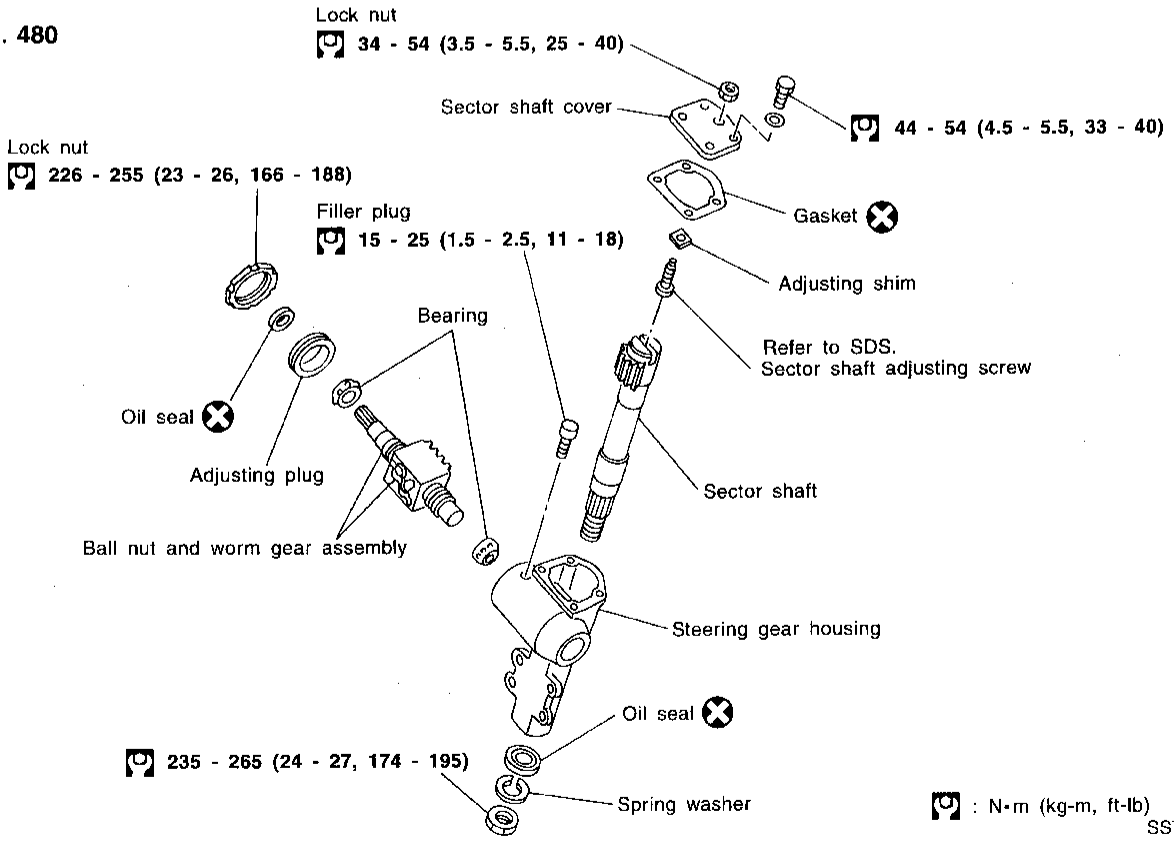

: N•m (kg-m, ft-lb)

SST744C

Simpo PDF Merge and Split Unregistered Version - http://www.simpopdf.com

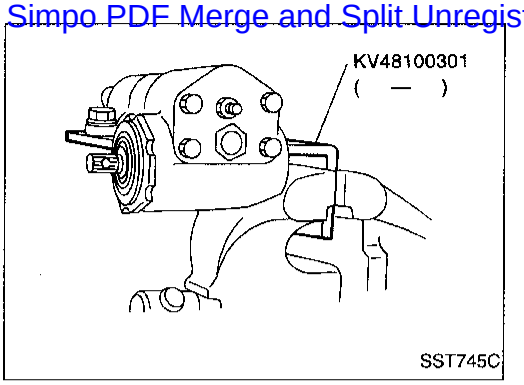

Disassembly

1. Place steering gear in a vise using Tool.

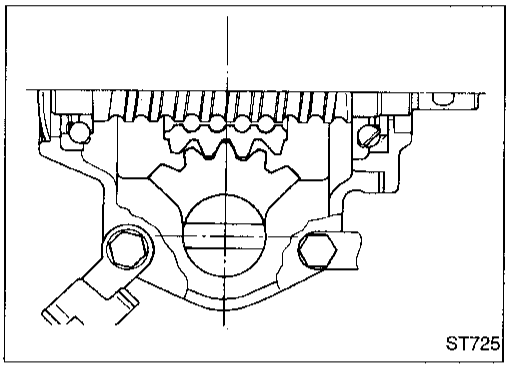

2. Set worm gear in straight-ahead position.
3. Remove sector shaft together with sector shaft cover.

CAUTION:

- **When pulling sector shaft out, be careful not to damage oil seal or associated parts.**
- **Do not remove sector shaft needle bearings from steering gear housing. If necessary, replace gear housing as an assembly.**

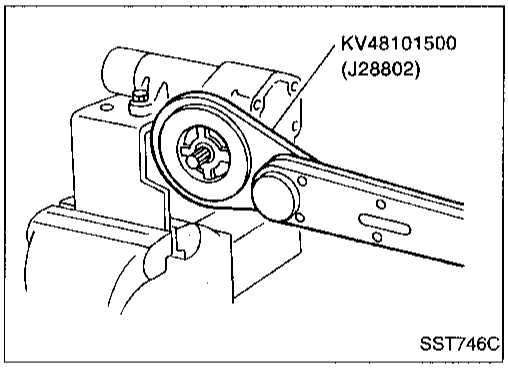

4. Loosen adjusting plug lock nut using Tool.

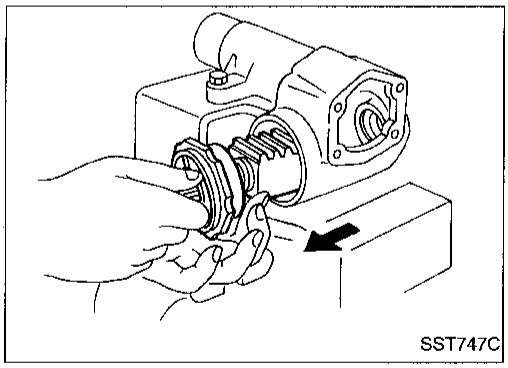

5. Remove worm gear together with worm bearing.

CAUTION:

- **Be careful not to rotate ball nut fully to either end of worm gear.**
  Ends of ball guides will be damaged if nut is rotated until it stops at end of worm gear.
- **Do not separate ball nut from worm gear assembly.**
  If necessary, replace entire unit as an assembly.
- **Do not remove sector shaft needle bearings from steering gear housing.**
  If necessary, replace entire gear housing as an assembly.

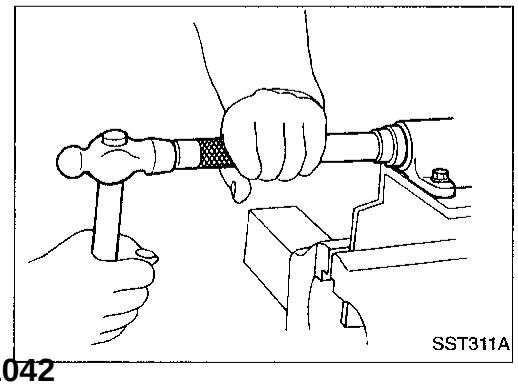

Assembly and Adjustment

Apply multi-purpose grease to sealing area of new oil seals for sector shaft and worm gear.

WORM GEAR BEARING PRELOAD

1. Drive oil seal into place.

Before installing oil seal, coat oil seal contacting face with gear fluid.

Assembly and Adjustment (Cont'd)

Simpo PDF Merge and Split Unregistered Version - http://www.simpopdf.com

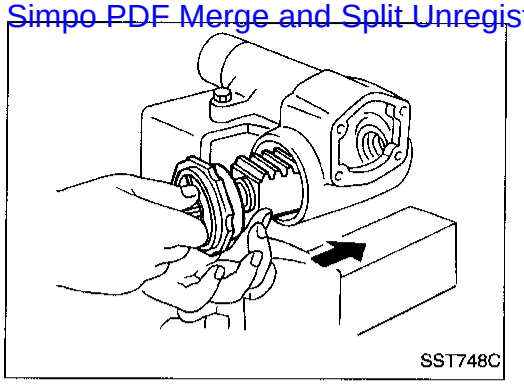

2. Place worm gear assembly together with worm gear bearing into gear housing.

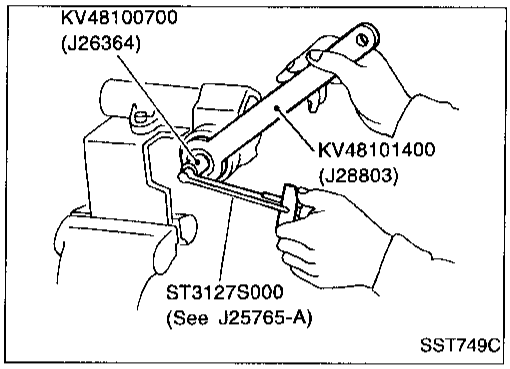

3. Adjust worm gear bearing preload using Tools.

CAUTION:

- **Always adjust worm gear bearing preload by turning adjusting plug in clockwise direction.**
- **Before measuring preload, rotate worm gear a few turns in both directions to seat worm gear bearing.**

Worm gear bearing preload:
0.69 - 0.88 N·m (7.0 - 9.0 kg-cm, 6.1 - 7.8 in-lb)

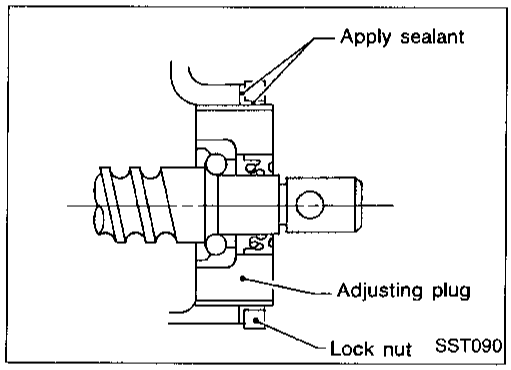

4. Apply suitable sealant to inner surface of lock nut.

Assembly and Adjustment (Cont'd)

Simpo PDF Merge and Split Unregistered Version - http://www.simpopdf.com

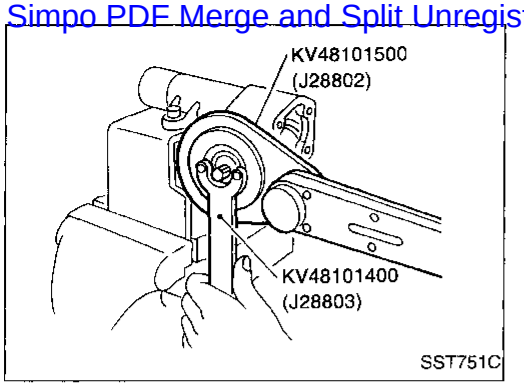

5. Tighten lock nut using Tools.
   Lock nut:
   [O]: 226 - 255 N·m (23 - 26 kg-m, 166 - 188 ft-lb)

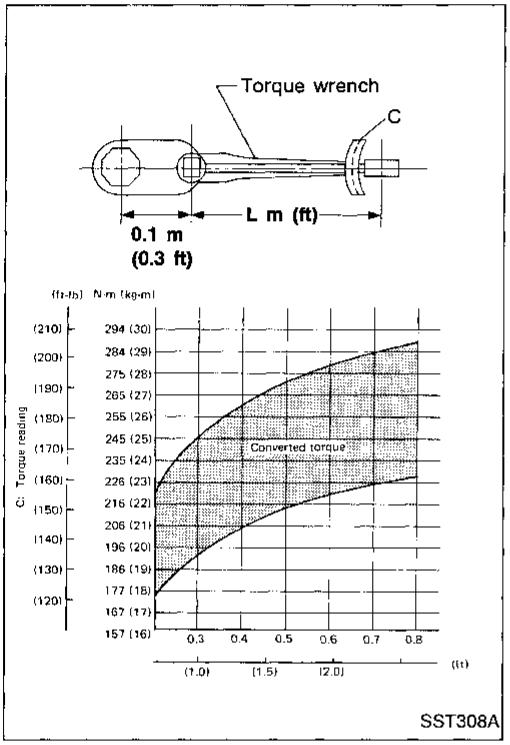

- When tightening lock nut, use the chart shown at left to determine the proper reading of torque.
  (Length of torque wrench vs. setting or reading of torque)
6. After tightening lock nut, check worm gear bearing preload to make sure it is within specification.

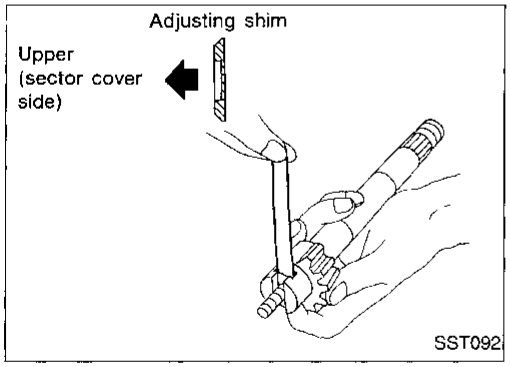

SECTOR SHAFT END PLAY

Select and install proper adjusting shim to achieve proper end play between sector shaft and adjusting screw.

Sector shaft end play:
0.1 mm (0.004 in) or less
Sector shaft adjusting screw shims:
Refer to SDS, ST-43.

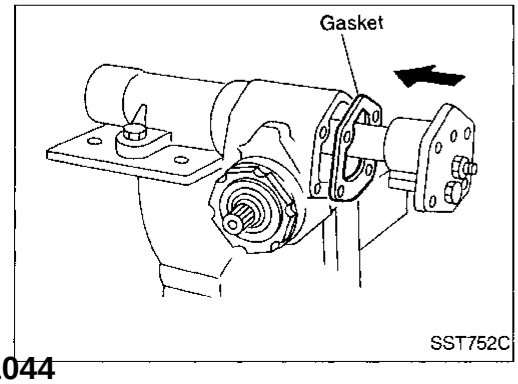

STEERING GEAR PRELOAD AND BACKLASH

1. Set worm gear in straight-ahead position.

Carefully insert sector shaft in gear housing, being careful not to scratch oil seal.

2. Turn adjusting screw until sector shaft just contacts ball nut. Temporarily tighten lock nut.
3. Lubricate contacting portion of sector shaft and ball nut with gear oil or bearing grease.

Assembly and Adjustment (Cont'd)

Simpo PDF Merge and Split Unregistered Version - http://www.simpopdf.com

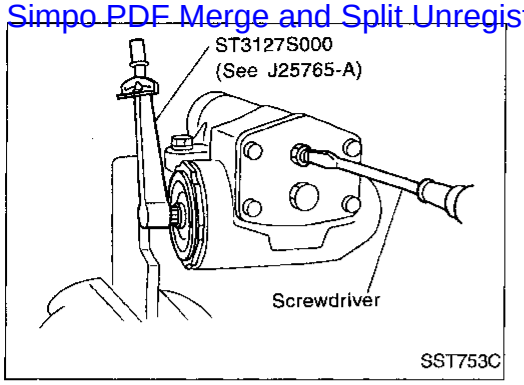

4. Adjust steering gear turning torque in a straight-ahead position using Tool, then lock with lock nut.

CAUTION:

- **Always adjust steering gear preload by turning adjusting screw in clockwise direction.**
- **Rotate worm gear a few turns in both directions to seat steering gear assembly.**

a. Measure turning torque at 360° position from straight-ahead position using Tools.

Turning torque at 360°:
0.69 - 0.88 N·m (7.0 - 9.0 kg-cm, 6.1 - 7.8 in-lb)

b. Measure turning torque at straight-ahead position.

Straight-ahead position is a position where stub shaft is turned 2.14 turns (two full turns and 50°) from lock position.

Turning torque at straight-ahead position:
0.20 - 0.39 N·m (2.0 - 4.0 kg-cm, 1.7 - 3.5 in-lb) higher than turning torque at 360°

Maximum turning torque:
1.08 N·m (11.0 kg-cm, 9.5 in-lb)

If turning torque is not within specifications, adjust by turning sector shaft adjusting screw.

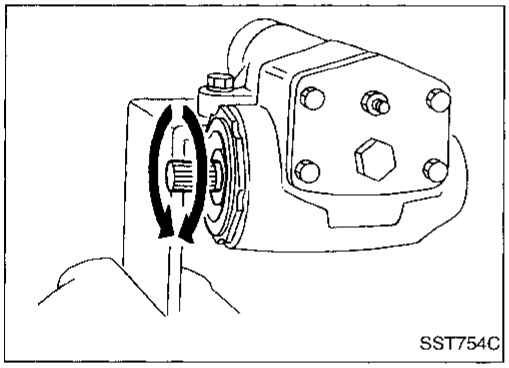

5. Turn worm gear several times by hand to properly break in worm bearing.
6. Check steering gear preload. Readjust as necessary.

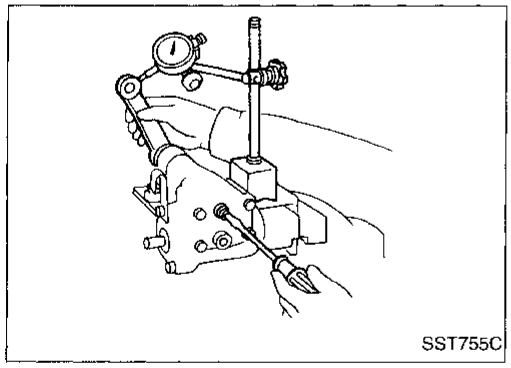

7. Measure total preload.
8. Check backlash.
   Measure backlash at top end of pitman arm in straight-ahead position.

Backlash (in straight-ahead position):
0.1 mm (0.004 in) or less

Inspection

Clean all the disassembled parts in solvent, then check condition.

SECTOR SHAFT

1. Check gear teeth surface for pitting, burrs, cracks and any other damage, and replace as necessary.
2. Check sector shaft serration for distortion and replace as necessary. Also check gear housing for deformation.

Simpo PDF Merge and Split Unregistered Version - http://www.simpopdf.com

Inspection (Cont'd)

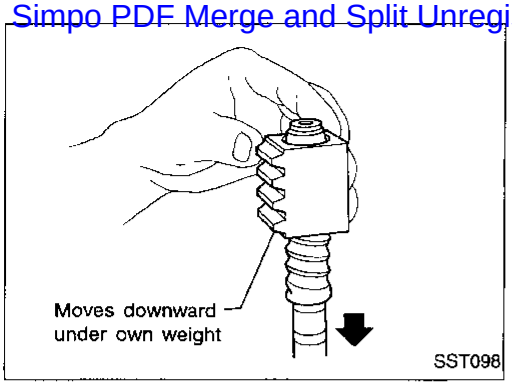

STEERING WORM ASSEMBLY

1. Inspect ball nut gear teeth surface. Replace if pitting, burrs, wear or any other damage is found.
2. Ball nut must rotate smoothly on worm gear. If found to be too tight, assembly should be replaced. Check rotation of ball nut as follows:

CAUTION:
Be careful not to allow ball nut to rotate fully to either end of worm gear.

a. Move ball nut to either end of worm gear. Gradually stand worm shaft and ball nut assembly on end until ball nut moves downward on worm gear under its own weight.
b. If ball nut does not move freely over entire stroke, replace assembly.

Be careful not to damage ball nut guide tube while check is being made.

BEARING

1. Inspect worm gear bearing for wear, pitting and any other damage. Replace as necessary.

When replacing worm gear bearing, replace bearing and outer race as a set.

2. If sector shaft needle bearings are worn or damaged, replace gear housing as an assembly.

OIL SEALS

- Discard any oil seal which has been removed.
- Replace oil seal if sealing surface is deformed or cracked.
- Discard oil seal if spring is fatigued or dislocated.

Simpo PDF Merge and Split Unregistered Version - http://www.simpopdf.com

Description

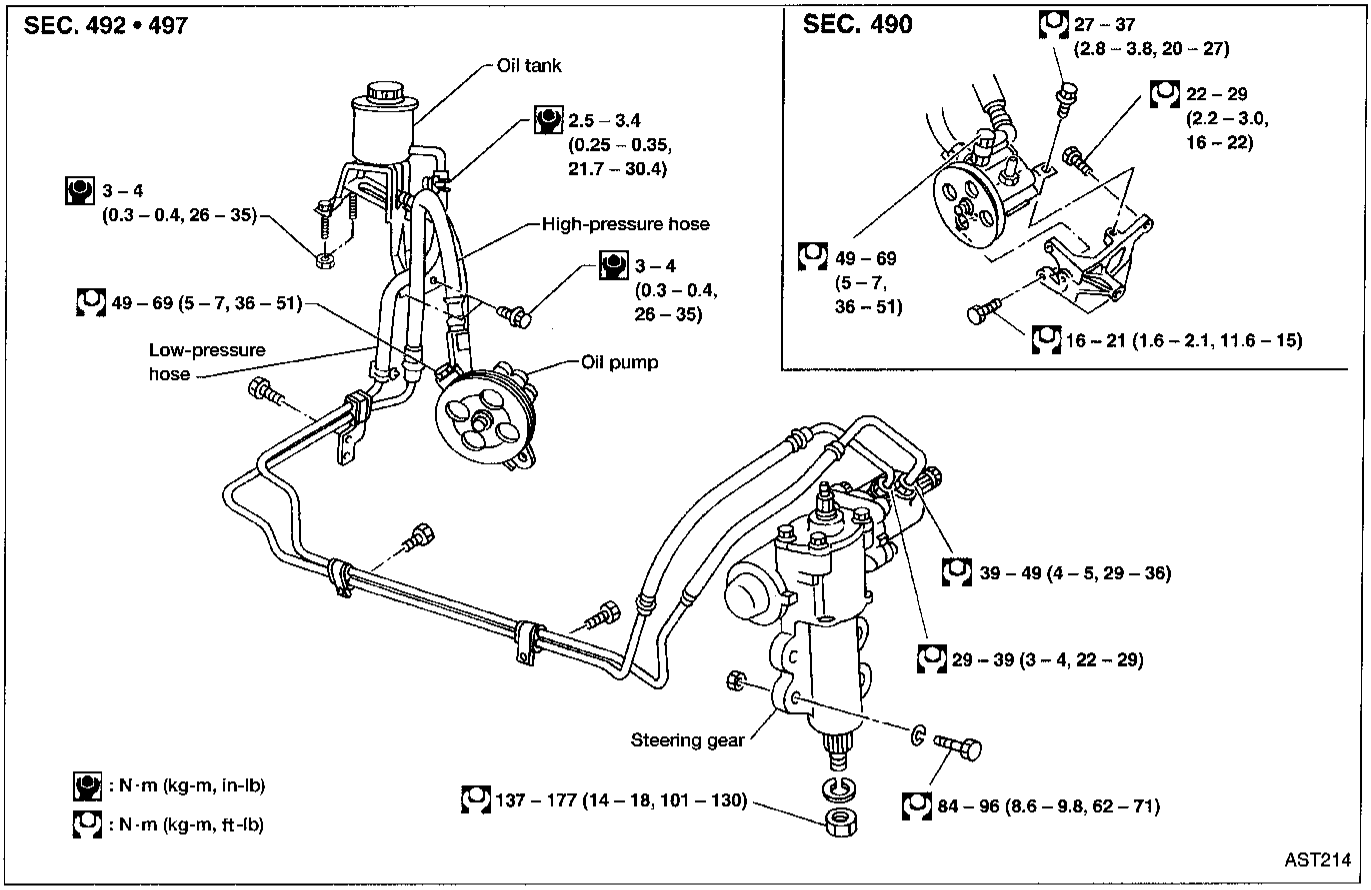

CAUTION:

- **Parts which can be disassembled are strictly limited. Never disassemble parts other than those specified.**
- **Disassemble in as clean a place as possible.**
- **Clean your hands before disassembly.**
- **Do not use rags; use nylon cloths or paper towels.**
- **Follow the procedures and cautions indicated in the Service Manual.**

Simpo PDF Merge and Split Unregistered Version - http://www.simpopdf.com

Removal and Installation

Before removal, clean gear housing and oil pump exteriors using a steam cleaner. Then dry with compressed air.

STEERING GEAR

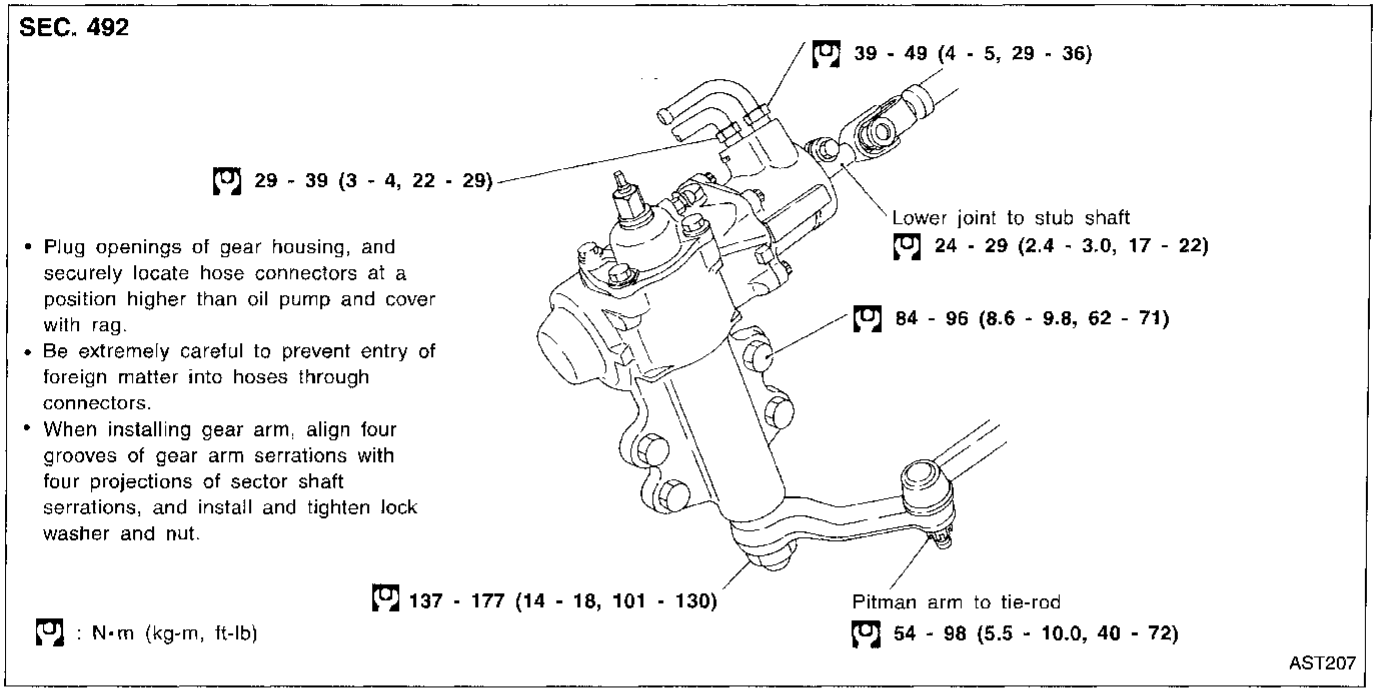

Power Steering Gear Component

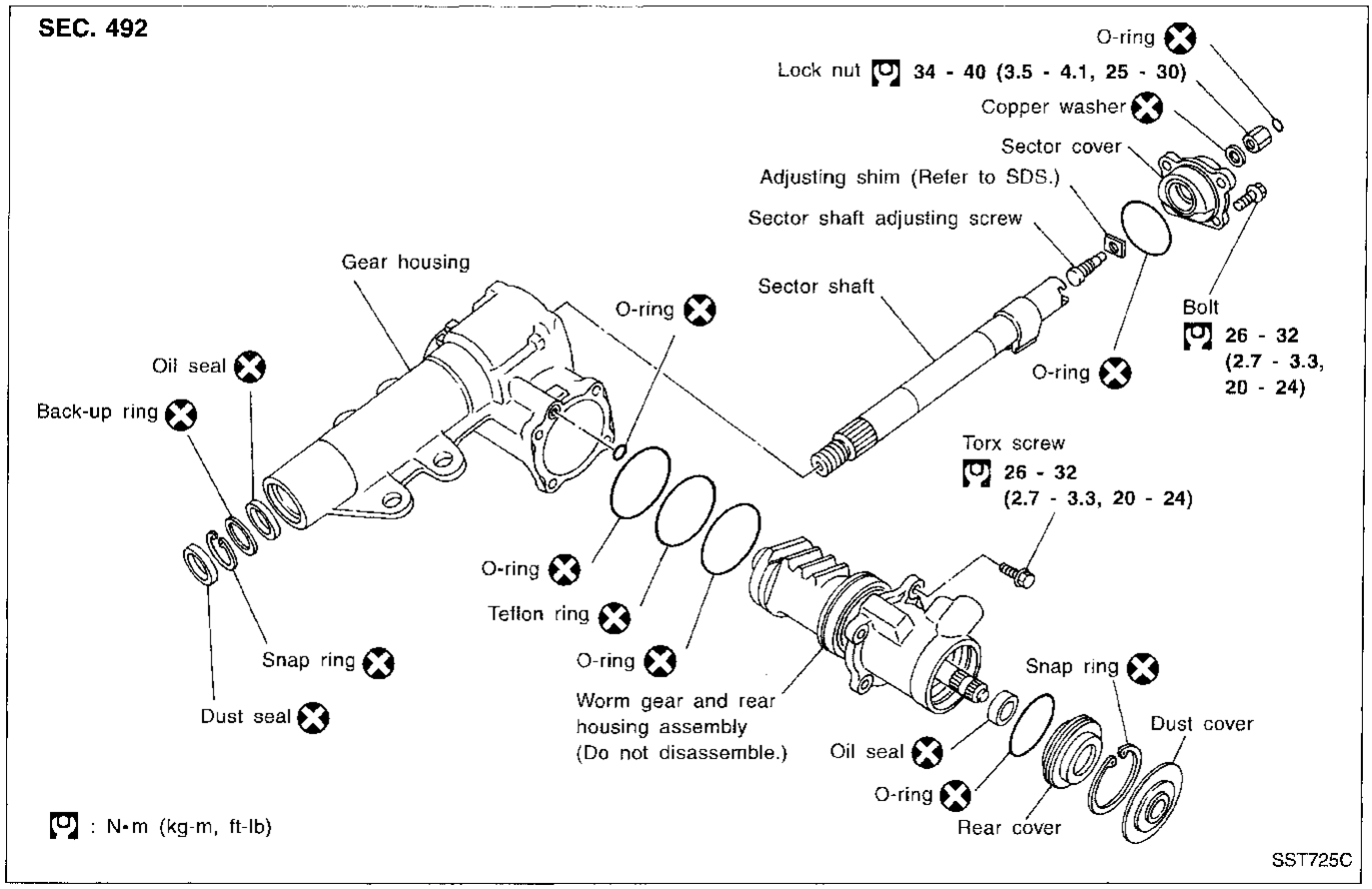

Simpo PDF Merge and Split Unregistered Version - http://www.simpopdf.com

Pre-disassembly Inspection and Adjustment

Before disassembling power steering gear component parts, make sure there is no oil leakage around sealing portion and check steering turning torque as follows:

Check sealing portion.

- Adjusting screw nut O-ring
- Sector shaft cover O-ring
- Sector shaft oil seal
- Rear cover oil seal and O-ring
- Rear housing O-ring
- Gear housing O-ring

Discard any oil seal and O-ring which have been removed. Replace oil seal and O-ring if sealing surface is deformed or cracked.

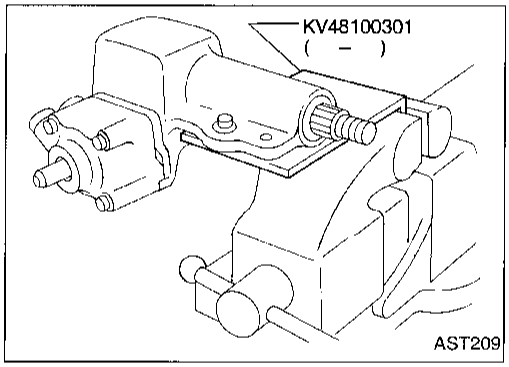

TURNING TORQUE MEASUREMENT

1. Measure turning torque at 360° position.

a. Install steering gear on Tool.

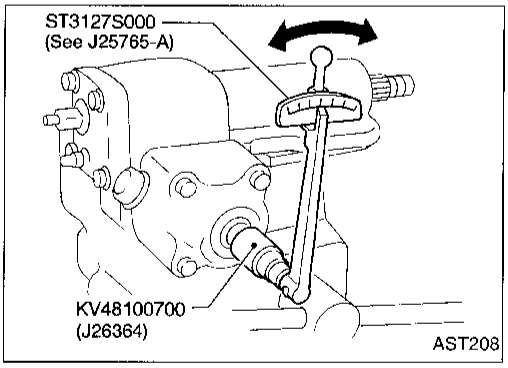

b. Turn stub shaft all the way to right and left several times.

c. Measure turning torque at 360° position from straight-ahead position with Tools.

Turning torque at 360°:
0.7 - 1.2 N·m (7 - 12 kg-cm, 6.1 - 10.4 in-lb)

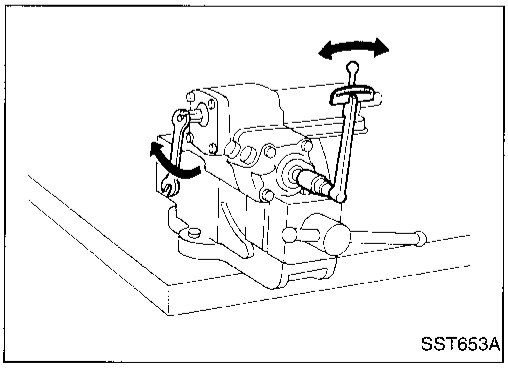

d. Measure turning torque at straight-ahead position.

Straight-ahead position is a position where stub shaft is turned 2.14 turns (two full turns and 50°) from lock position.

Turning torque at straight-ahead position:
0.1 - 0.4 N·m (1 - 4 kg-cm, 0.9 - 3.5 in-lb)
higher than turning torque at 360°

Maximum turning torque:
1.1 - 1.6 N·m (11 - 16 kg-cm, 9.5 - 13.9 in-lb)

If turning torque is not within specifications, adjust by turning sector shaft adjusting screw.

Simpo PDF Merge and Split Unregistered Version - http://www.simpopdf.com

Pre-disassembly Inspection and Adjustment (Cont'd)

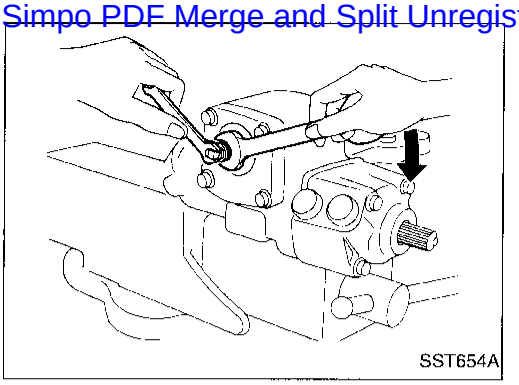

2. Tighten adjusting screw lock nut with tools.

Disassembly

Before disassembly, measure turning torque.

If not within specifications, replace steering gear assembly.

CAUTION:

Oil sealing parts, copper washer and snap ring must not be used again after removal.

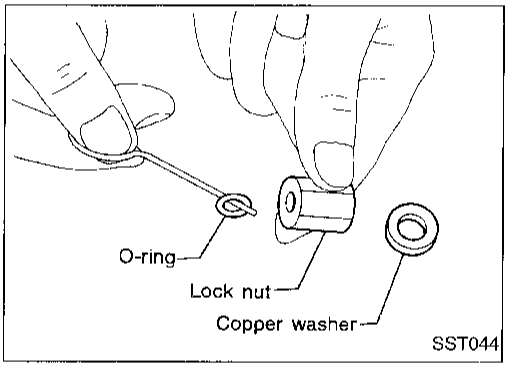

ADJUSTING SCREW LOCK NUT O-RING

Remove adjusting screw lock nut, and replace O-ring.

SECTOR SHAFT OIL SEAL

1. Set stub shaft in straight-ahead position.

Straight-ahead position is a position where stub shaft is turned 2.14 turns (two full turns and 50°) from lock position.

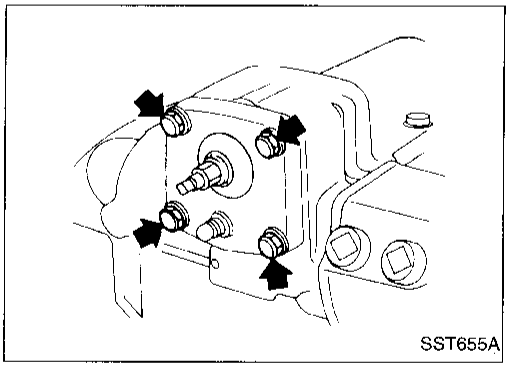

2. Disconnect sector shaft cover bolt.

Do not turn lock nut unless necessary; otherwise it will damage O-ring, resulting in an oil leak.

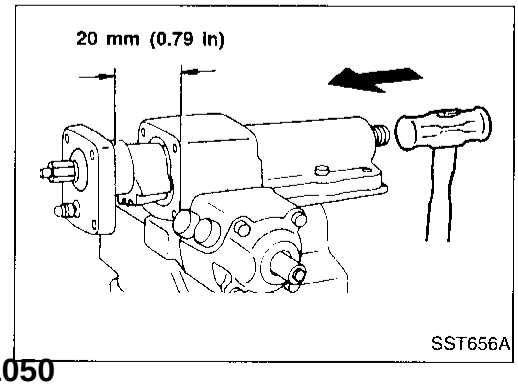

3. Draw out sector shaft.

Knock out end of sector shaft approximately 20 mm (0.79 in).

Disassembly (Cont'd)

Simpo PDF Merge and Split Unregistered Version - http://www.simpopdf.com

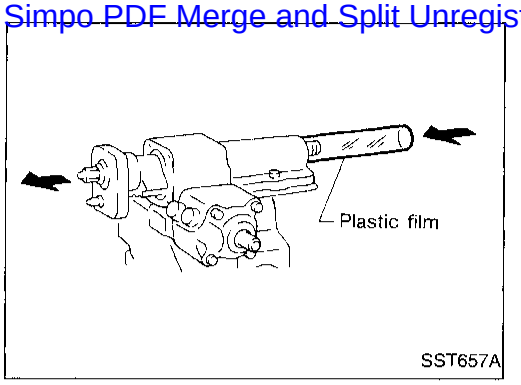

SST657A

4. Connect a roll of plastic film to sector shaft.
   Plastic film:
   Thickness 0.1 mm (0.004 in)
   Length x width
   200 x 200 mm (7.87 x 7.87 in)
5. Pull out sector shaft by hand.

Attach plastic film to needle bearings located at two places inside gear housing while simultaneously pulling out sector shaft so that bearings will not drop into housing.

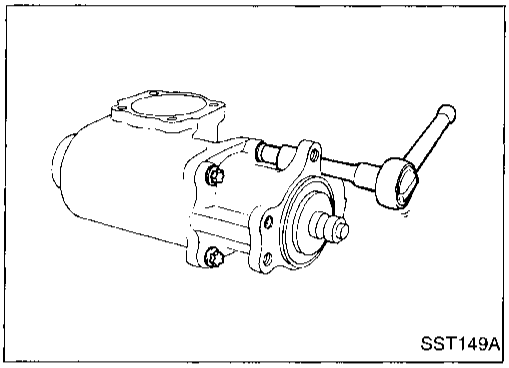
SST149A

REAR HOUSING O-RING

1. Remove torx screw.

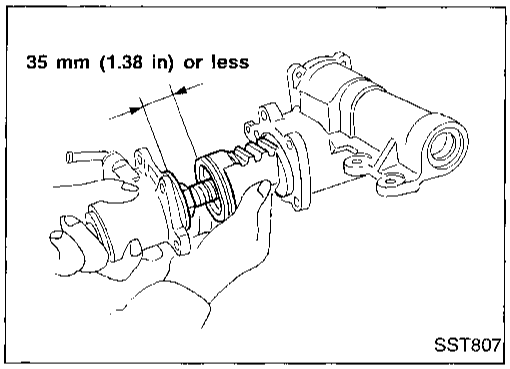

SST807

2. Remove rear housing together with worm gear assembly.

CAUTION:

- **When worm gear assembly is removed, piston may turn and come off under its own weight. Hold piston to prevent it from turning.**
- **If piston-to-rear housing clearance exceeds 35 mm (1.38 in) recirculating ball will be out of groove of worm gear; do not reinstall piston but replace the entire assembly.**
- **Be careful not to damage teflon ring at piston end when removing.**

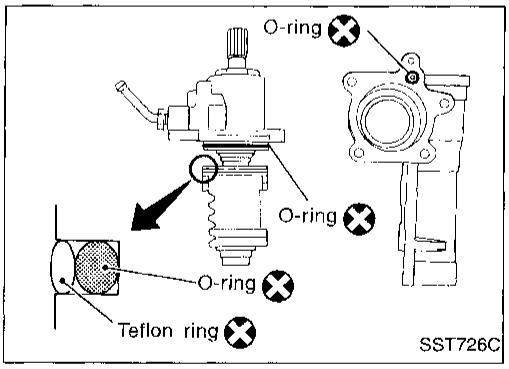

SST726C

3. Remove O-rings and teflon ring.

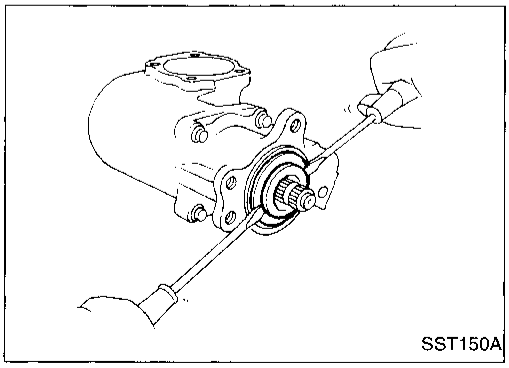
SST150A

REAR COVER O-RING AND OIL SEAL

1. Remove snap ring, then rear cover.
2. Remove O-ring and oil seal.

Simpo PDF Merge and Split Unregistered Version - http://www.simpopdf.com

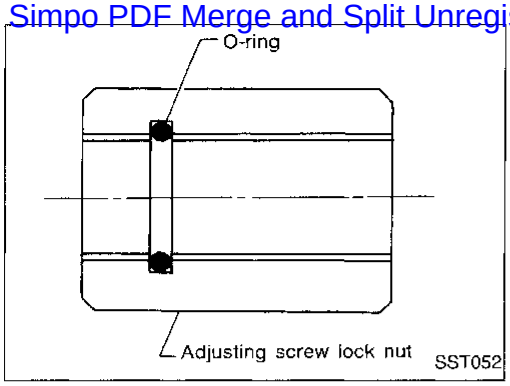

Assembly

ADJUSTING SCREW LOCK NUT O-RING

Insert new O-ring into adjusting screw lock nut.

- **Before inserting, apply a thin coat of petroleum jelly to O-ring.**
- **Insert O-ring to make sure it fits into groove.**

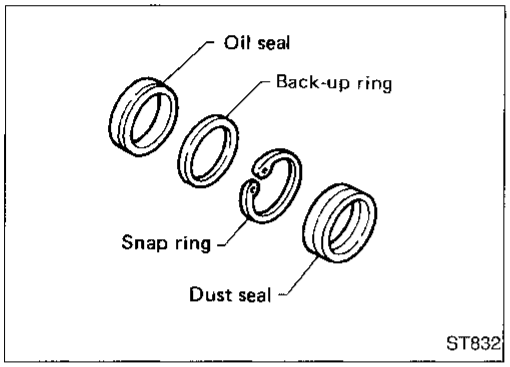

SECTOR SHAFT OIL SEAL

- **When installing, be sure to use new oil seal, dust seal, back-up ring and snap ring.**
- **Before installing, apply a thin coat of petroleum jelly to new oil seal and dust seal.**

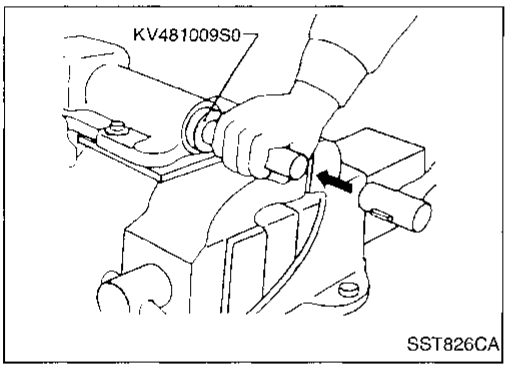

1. Press new oil seal and then install back-up ring with Tool.

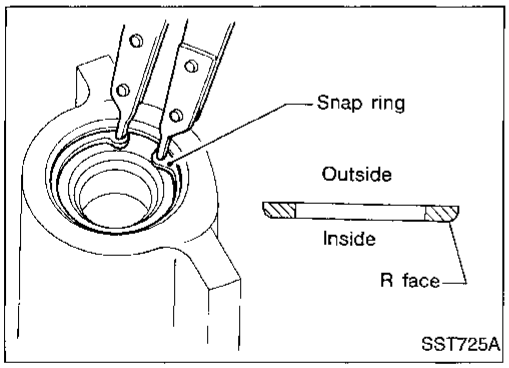

2. Install a new snap ring into gear housing.

CAUTION:

- **Turn snap ring to make sure it fits into groove.**
- **Always install snap ring with R face facing inward.**

3. Press a new dust seal.

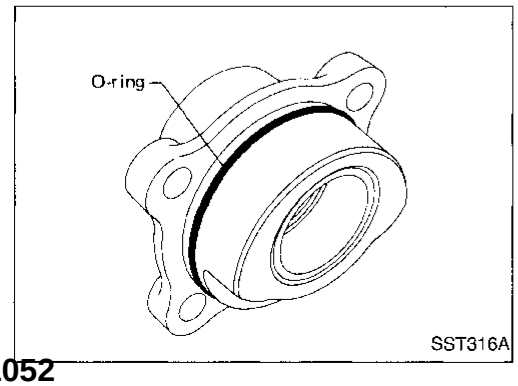

4. Fit new O-ring into sector shaft cover.

- **Before installing, apply a thin coat of petroleum jelly to O-ring.**
- **Make sure that O-ring is installed properly and is not damaged by sector shaft.**

Assembly (Cont'd)

Simpo PDF Merge and Split Unregistered Version - http://www.simpopdf.com

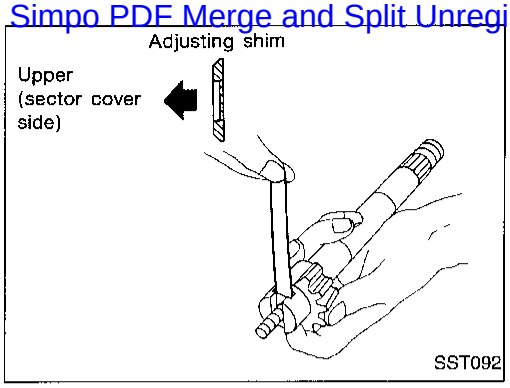

SECTOR SHAFT END PLAY

Select suitable adjusting shim and adjust end play between sector shaft and adjusting screw.

Sector shaft end play:
0.01 - 0.03 mm (0.0004 - 0.0012 in)
Sector shaft adjusting screw shims:
Refer to SDS, ST-43.

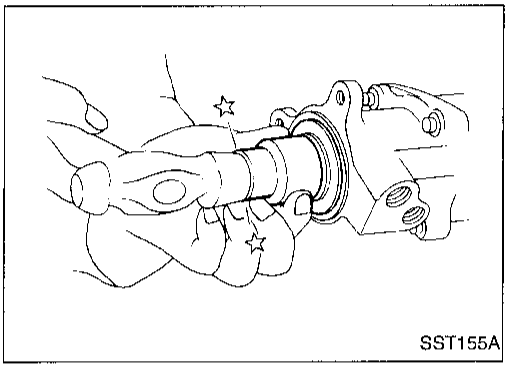

REAR COVER O-RING AND OIL SEAL

1. Install new O-ring and oil seal.
2. Install rear cover, then install new snap ring.

CAUTION:

- **Turn snap ring to make sure it fits into grooves.**
- **Always install snap ring with its rounded edge facing rear cover.**

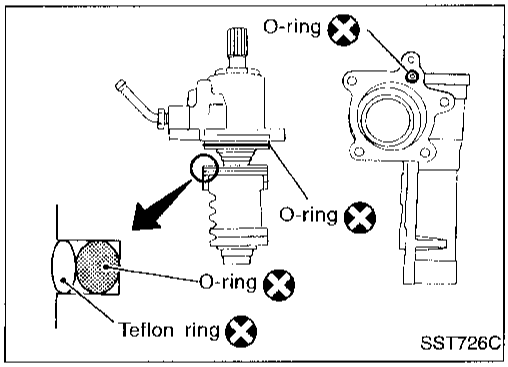

REAR HOUSING O-RING

1. Install new O-rings and teflon ring.

a. Before installing, apply a thin coat of petroleum jelly to rings.
b. Make sure rings are installed correctly and are not damaged by worm gear.

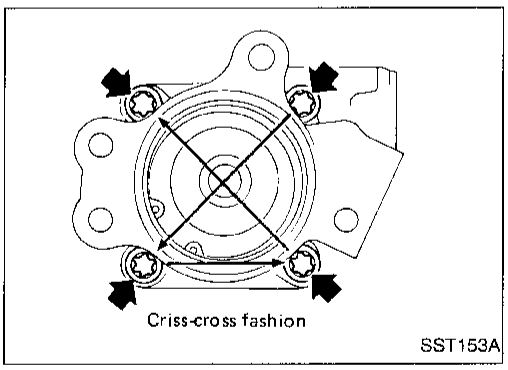

2. Gradually insert worm gear and rear housing assembly into gear housing, being careful not to damage oil seal and O-rings.
3. Install torx screws.

Simpo PDF Merge and Split Unregistered Version - http://www.simpopdf.com

Assembly (Cont'd)

SECTOR SHAFT

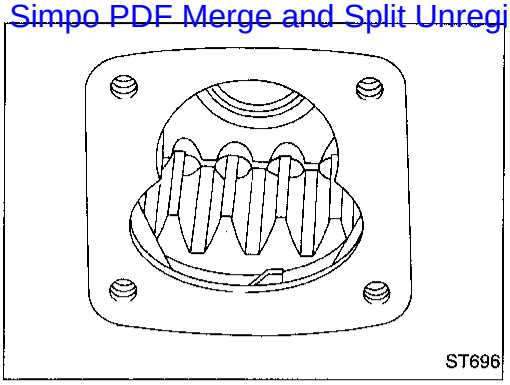

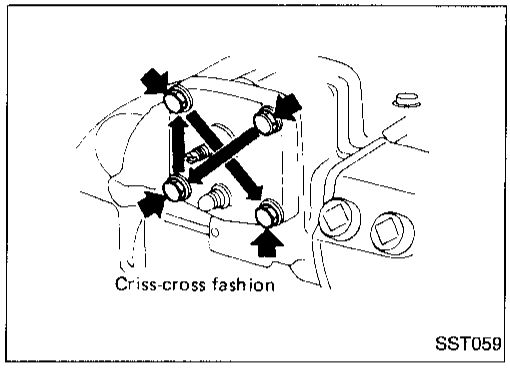

1. Set piston rack at straight-ahead position.

Turn piston rack about 10° to 15° toward yourself with your finger. This permits smooth insertion of sector gear.

2. Wrap vinyl tape around serration area of sector shaft.

Vinyl tape prevents oil seal lip from being damaged during insertion.

3. Gradually insert sector shaft into gear housing, being careful not to damage oil seal.

When inserting sector shaft into gear housing, remove plastic film. Be careful not to drop bearings into gear housing.

4. Tighten sector shaft cover bolts.
5. Check turning torque and steering gear preload.

Refer to "TURNING TORQUE MEASUREMENT", "Pre-disassembly Inspection and Adjustment", ST-23.

- **If turning torque is considerably different from the value before disassembly, replace the entire assembly.**

Simpo PDF Merge and Split Unregistered Version - http://www.simpopdf.com

Description

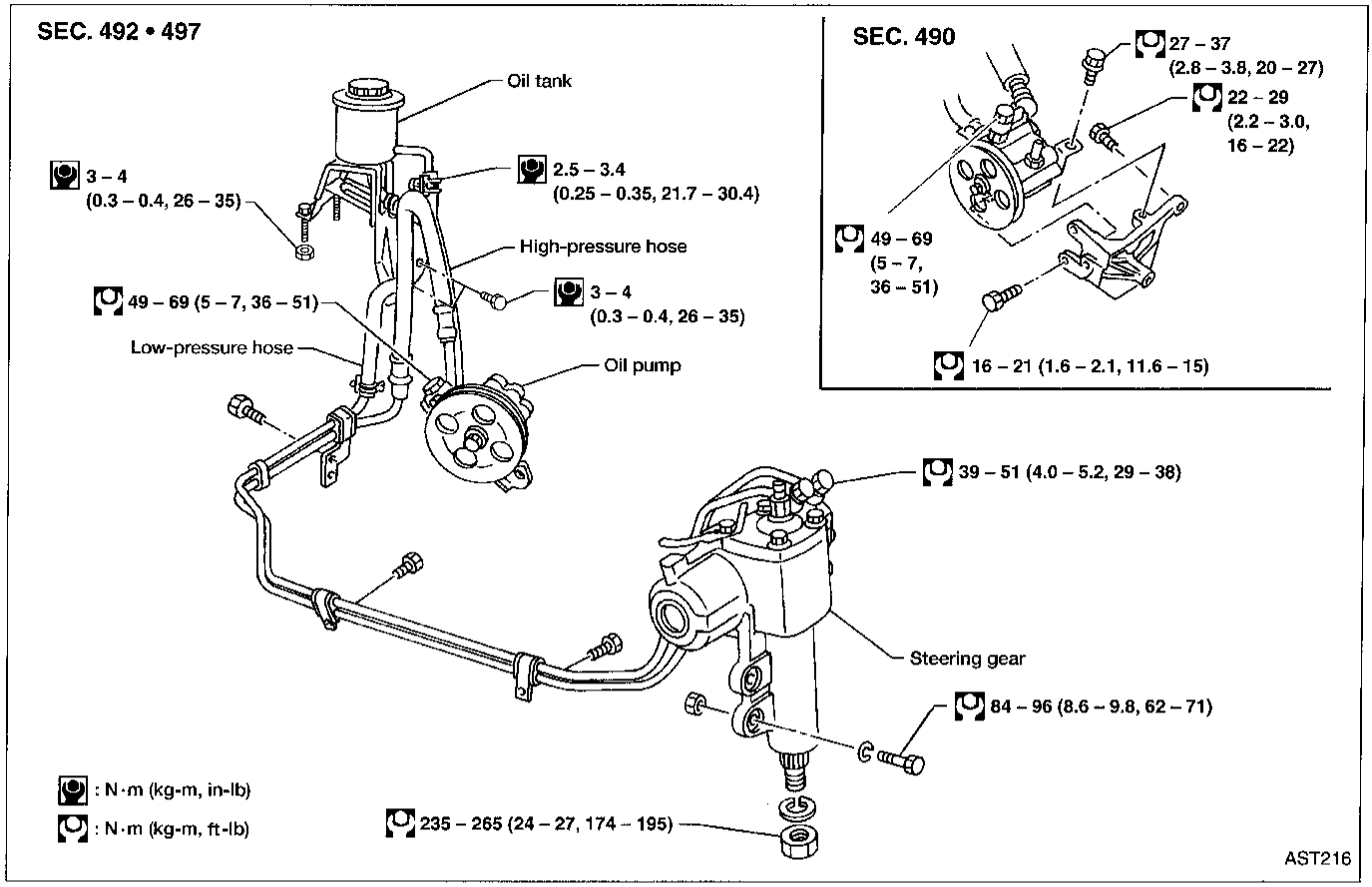

CAUTION:

- **Parts which can be disassembled are strictly limited. Never disassemble parts other than those specified.**
- **Disassemble in as clean a place as possible.**
- **Clean your hands before disassembly.**
- **Do not use rags; use nylon cloths or paper towels.**
- **Follow the procedures and cautions indicated in the Service Manual.**

Simpo PDF Merge and Split Unregistered Version - http://www.simpopdf.com

Removal and Installation

Before removal, clean gear housing and oil pump exteriors using a steam cleaner. Then dry with compressed air.

STEERING GEAR

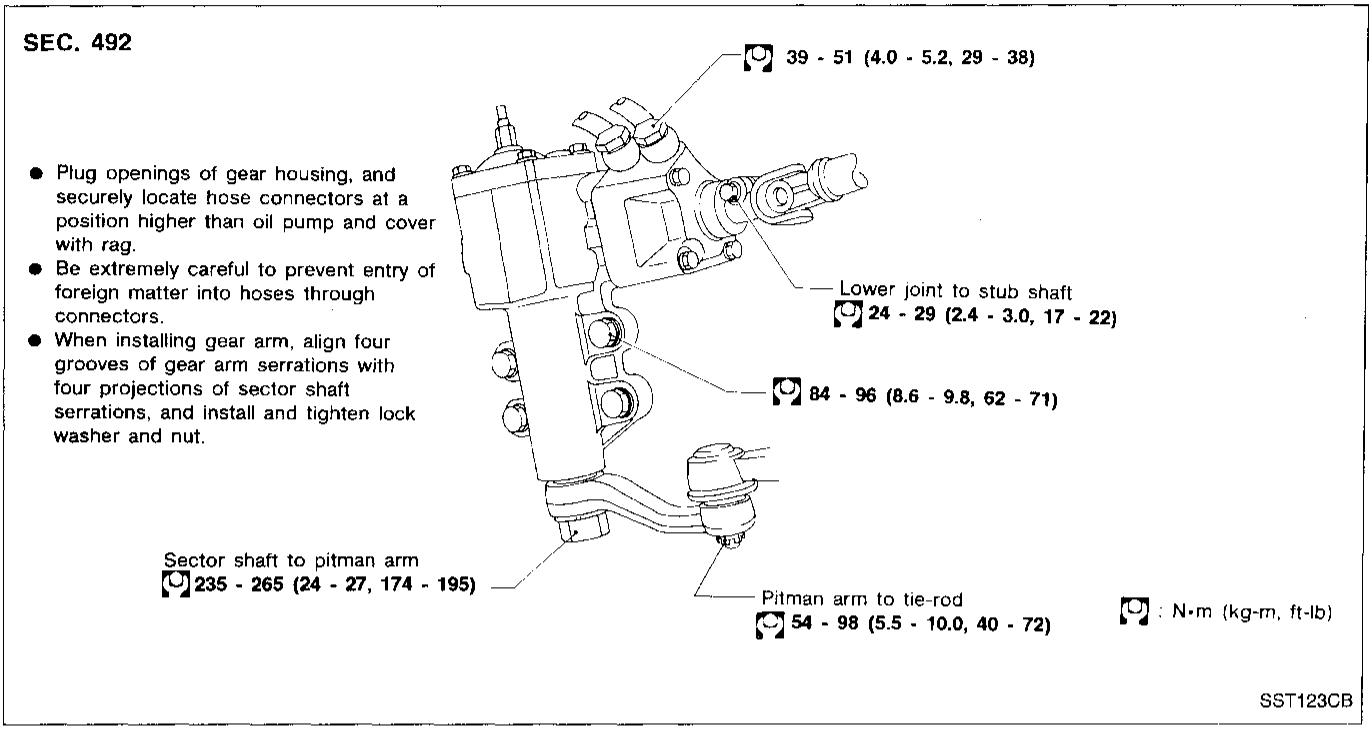

Power Steering Gear Component

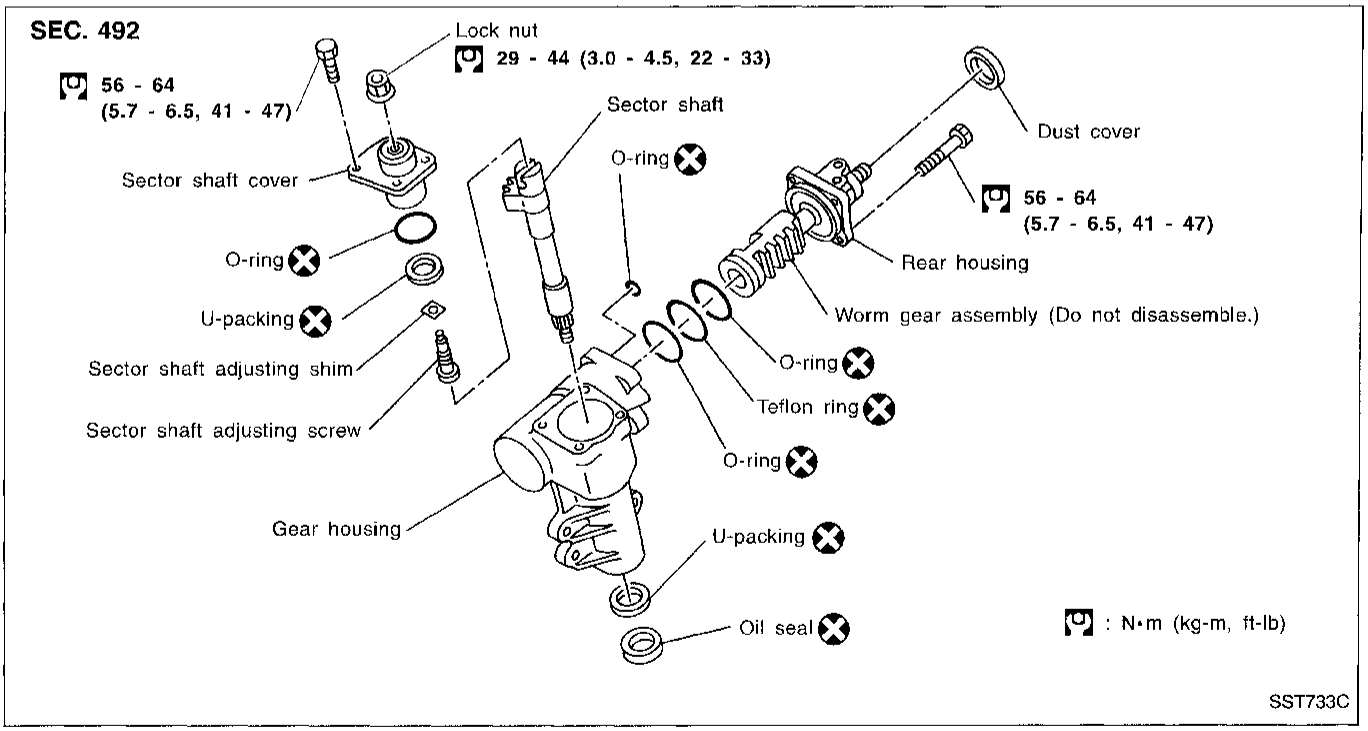

Simpo PDF Merge and Split Unregistered Version - http://www.simpopdf.com

Pre-disassembly Inspection and Adjustment

Before disassembling power steering gear component parts, make sure there is no oil leakage around sealing portion and check steering turning torque as follows:

Check sealing portion.

- Sector shaft cover O-ring
- Sector shaft U-packing
- Sector shaft oil seal
- Rear housing O-ring
- Gear housing O-ring

Discard any oil seal and O-ring which have been removed.

Replace oil seal and O-ring if sealing surface is deformed or cracked.

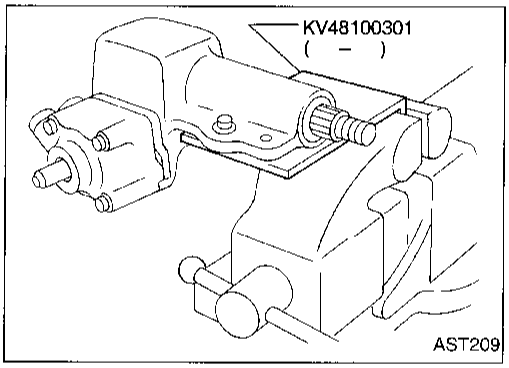

TURNING TORQUE MEASUREMENT

1. Measure turning torque at 360° position.

a. Install steering gear on Tool.

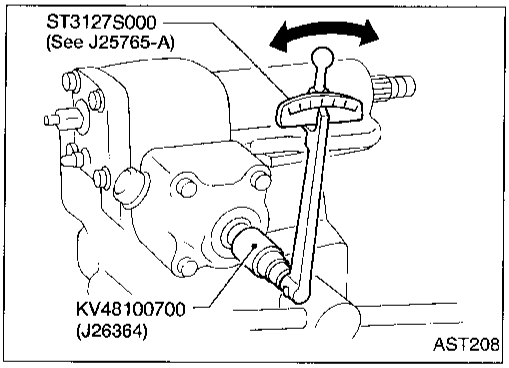

b. Turn stub shaft all the way to right and left several times.

c. Measure turning torque at 360° position from straight-ahead position with Tools.

Turning torque at 360°:
0.15 - 0.78 N·m (1.5 - 8.0 kg-cm, 1.3 - 6.9 in-lb)

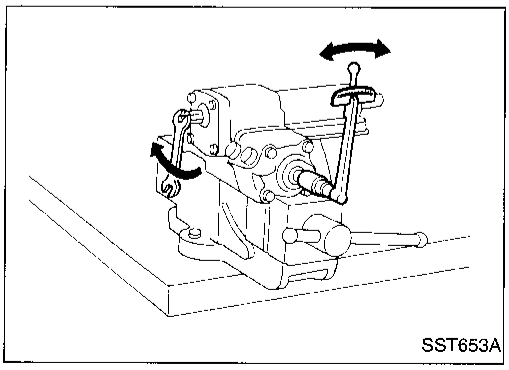

d. Measure turning torque at straight-ahead position.

Straight-ahead position is a position where stub shaft is turned 2.14 turns (two full turns and 50°) from lock position.

Turning torque at straight-ahead position:
.25 - 1.32 N·m (2.5 - 13.5 kg-cm, 2.3 - 11.6 in-lb) higher than turning torque at 360°

Maximum turning torque:
1.03 - 1.47 N·m (10.5 - 15 kg-cm, 9.2 - 13.0 in-lb)

If turning torque is not within specifications, adjust by turning sector shaft adjusting screw.

Simpo PDF Merge and Split Unregistered Version - http://www.simpopdf.com

Pre-disassembly Inspection and Adjustment (Cont'd)

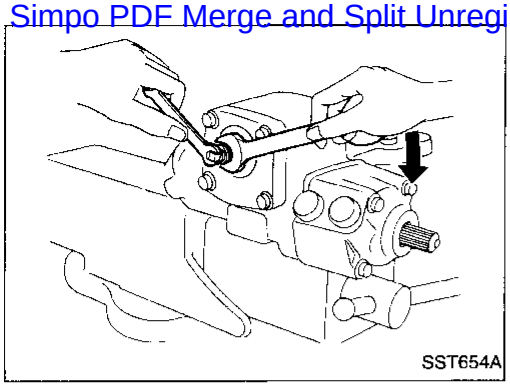

2. Tighten adjusting screw lock nut with tools.

Disassembly

Before disassembly, measure turning torque.

If not within specifications, replace steering gear assembly.

CAUTION:

Oil sealing parts and snap ring must not be used again after removal.

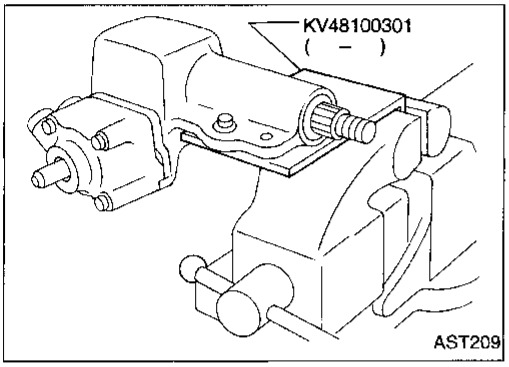

1. Place steering gear in a vise with Tool.
2. Set worm gear in straight-ahead position.

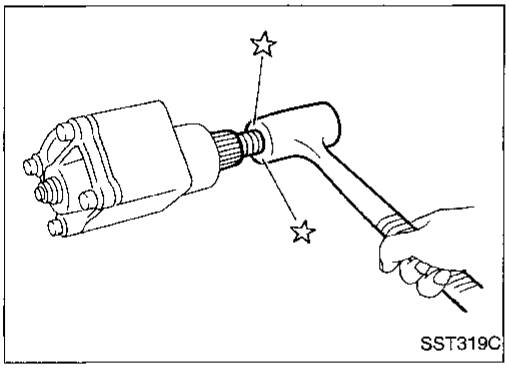

3. Loosen (do not remove) sector shaft cover bolt.
4. Knock out end of sector shaft with a plastic hammer.
5. Remove sector shaft by hand.

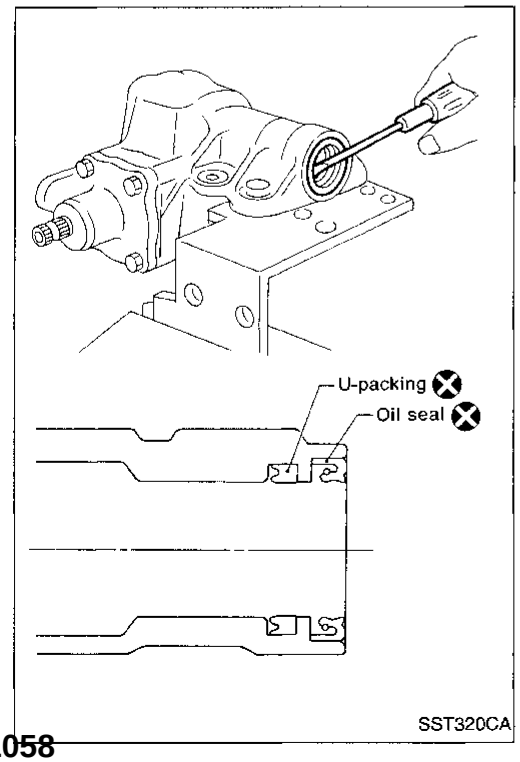

6. Remove oil seal.
7. Remove U-packing.

CAUTION:

When removing oil seal and U-packing, be careful not to scratch gear housing.

Disassembly (Cont'd)

Simpo PDF Merge and Split Unregistered Version - http://www.simpopdf.com

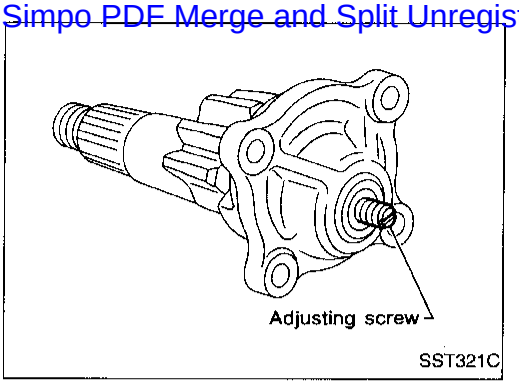

8. Remove lock nut, then loosen adjusting screw using a screwdriver. Separate sector cover and sector shaft.

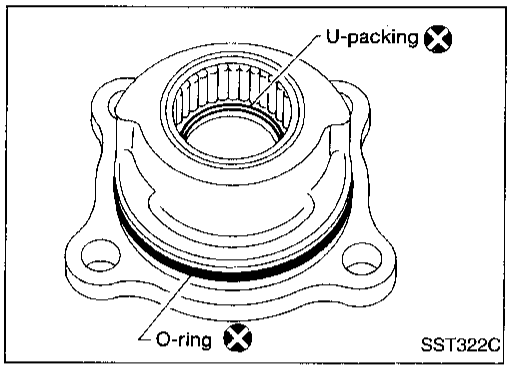

9. Remove O-ring.
10. Remove U-packing.

CAUTION:

- **When removing U-packing, be careful not to scratch sector cover, needle bearing, etc.**
- **Needle bearing cannot be disassembled. If it is damaged, remove sector cover assembly.**

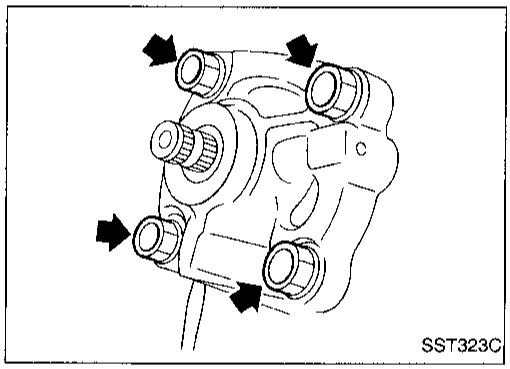

11. Remove dust seal.
12. Remove rear housing bolts.
13. Remove rear housing together with worm gear assembly.

CAUTION:

Worm gear assembly cannot be disassembled. When it is removed, be careful not to disengage worm gear from shaft or allow it to drop.

14. Remove teflon ring and O-ring of worm gear assembly.

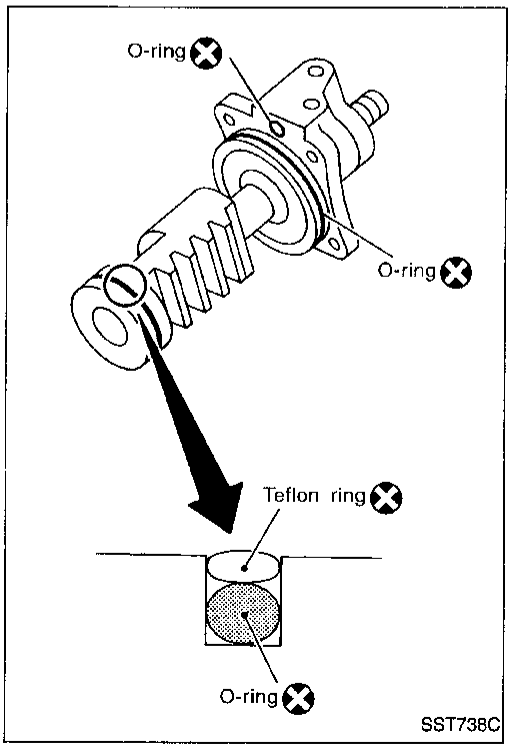

Assembly

1. Install new O-ring on worm gear assembly.
- **Apply a thin coat of ATF to new O-ring.**
2. Install new teflon ring on worm gear assembly.
- **Make sure that teflon ring is seated in correct position.**
3. Install new O-rings into rear housing.

Assembly (Cont'd)

Simpo PDF Merge and Split Unregistered Version - http://www.simpopdf.com

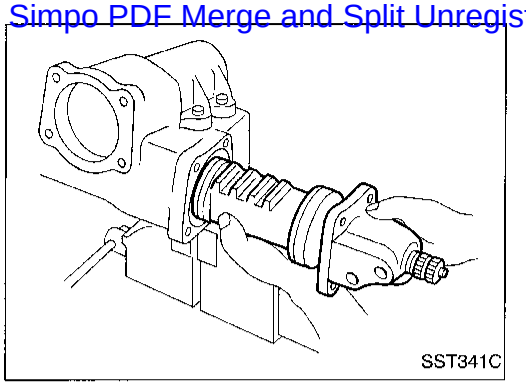
SST341C

4. Install worm gear assembly with rear housing into the gear housing.

CAUTION:

- **Apply a thin coat of ATF inside gear housing and piston before insertion.**
- **Be careful not to damage teflon ring at piston end when inserting worm gear assembly into gear housing.**

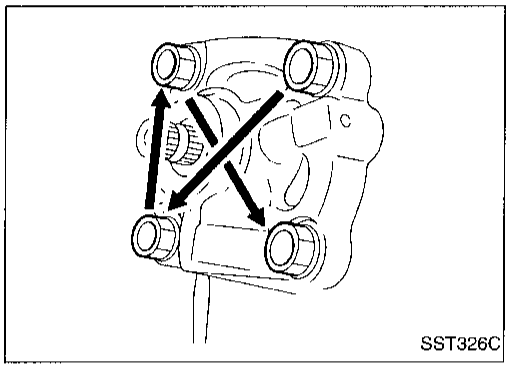
SST326C

5. Gradually tighten rear housing bolts in a criss-cross fashion.

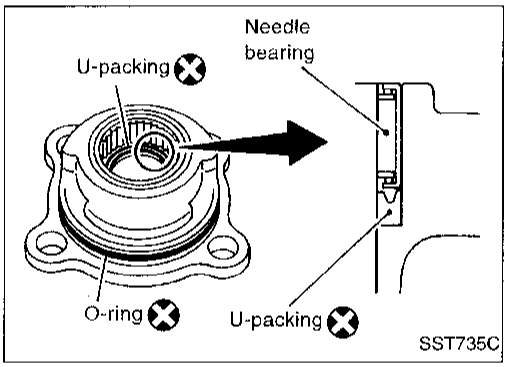

SST735C

6. Install new O-ring into sector shaft cover.
- **Before installing, apply a thin coat of ATF to O-ring.**

7. Install new U-packing into sector shaft cover.
- **Before installing, apply a thin coat of ATF to U-packing.**
- **Direct grooved side of U-packing to needle bearing.**

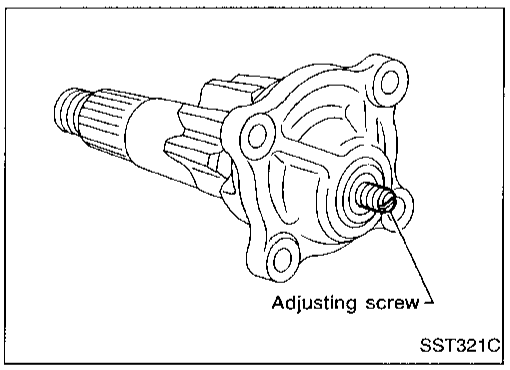

SST321C

8. Install sector shaft into sector shaft cover.
   Set adjusting screw to its outermost position.
- **Before installing sector shaft, apply multi-purpose grease to adjusting screw and adjusting screw shim.**

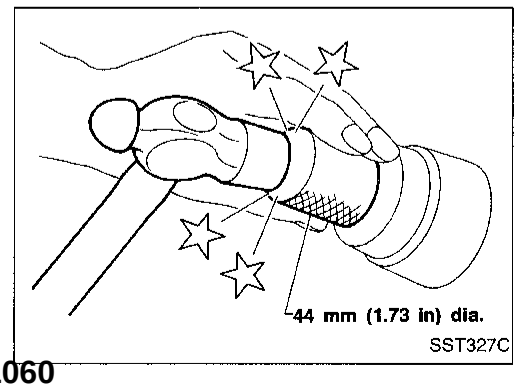

SST327C

9. Install new oil seal into gear housing with suitable tool.
- **Before installing oil seal, apply multi-purpose grease to oil seal lips.**

Assembly (Cont'd)

Simpo PDF Merge and Split Unregistered Version - http://www.simpopdf.com

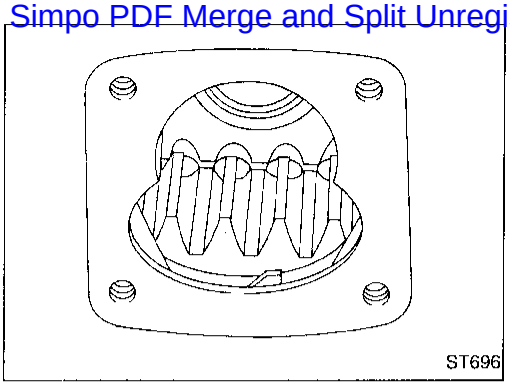

10. Set piston rack at straight-ahead position.

Turn piston rack about 10° to 15° toward yourself with your finger.
This enables smooth insertion of sector gear.

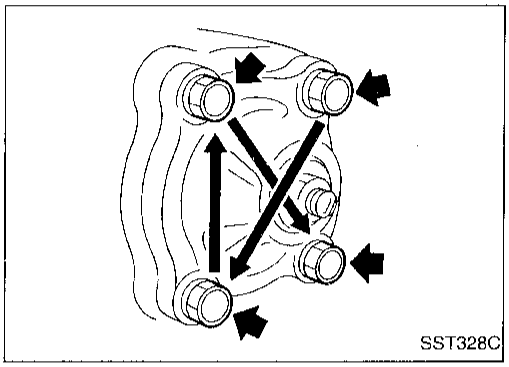

11. Gradually insert sector shaft into gear housing.
12. Tighten sector shaft cover bolts.
13. Set worm gear turning torque by turning sector shaft adjusting screw and locking with lock nut.

Refer to "TURNING TORQUE MEASUREMENT", "Pre-disassembly and Adjustment", ST-31.

- **If set and adjusting turning torque is considerably different from the value before disassembly, replace the entire assembly.**

14. Check sector shaft end play in neutral position.
    End play:
    Less than 0.1 mm (0.004 in)
    If not within specification, adjust it with adjusting screw.
15. Check worm gear preload. If not within specification, readjust it.

Simpo PDF Merge and Split Unregistered Version - http://www.simpopdf.com

Disassembly and Assembly

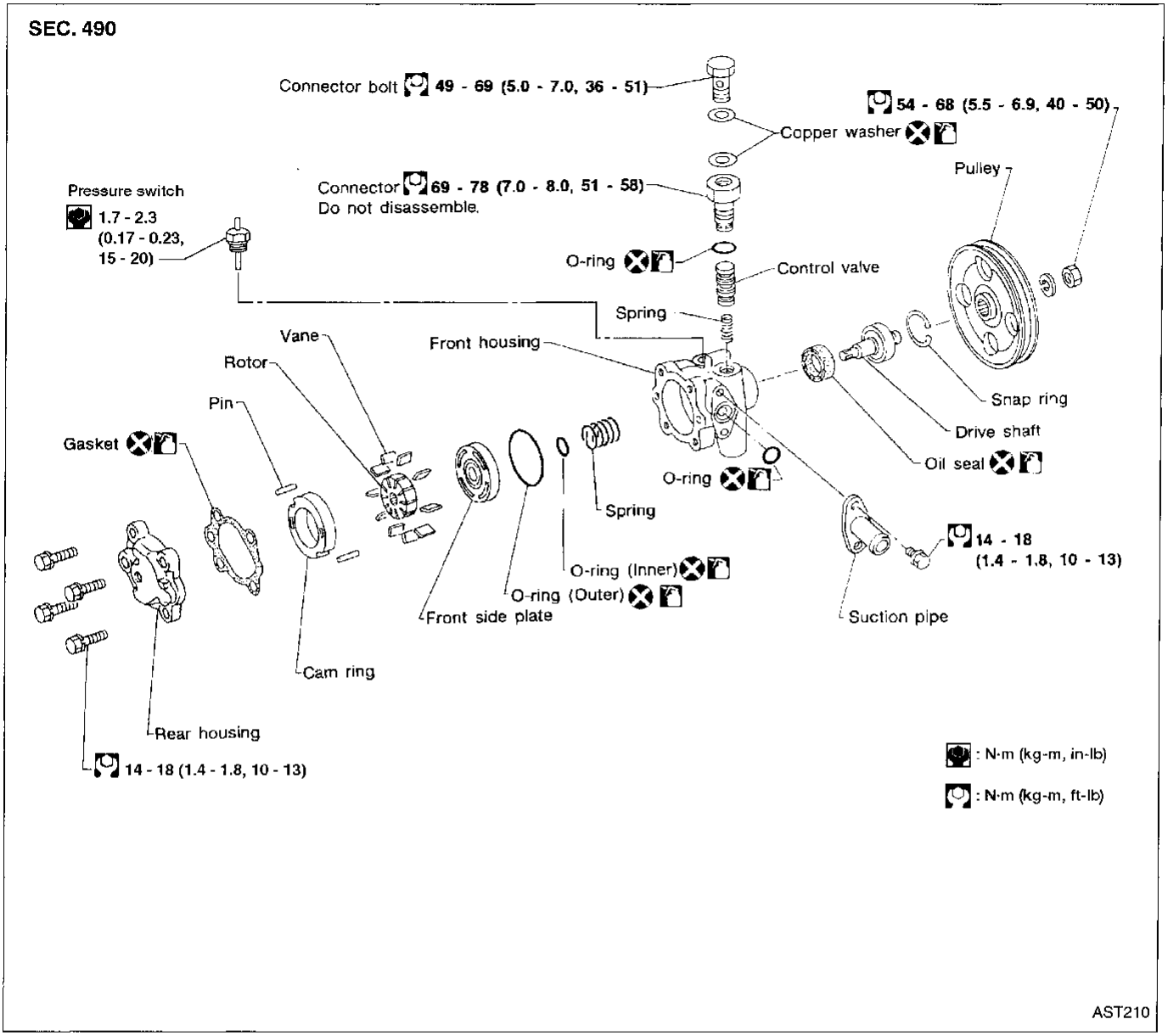

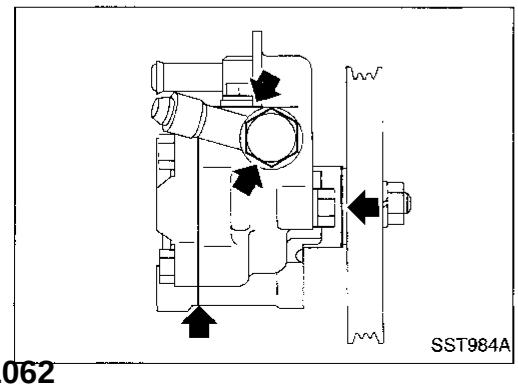

Pre-disassembly Inspection

Disassemble the power steering oil pump only if the following items are found.

- Oil leak from any point shown in the figure.
- Deformed or damaged pulley.
- Poor performance.

Simpo PDF Merge and Split Unregistered Version - http://www.simpopdf.com

Inspection

PULLEY AND PULLEY SHAFT

- If pulley is cracked or deformed, replace it.
- If fluid leak is found around the pulley shaft, replace the oil seal.

Disassembly

CAUTION:

- **Parts which can be disassembled are strictly limited. Never disassemble parts other than those specified.**
- **Disassemble in as clean a place as possible.**
- **Clean your hands before disassembly.**
- **Do not use rags; use nylon cloths or paper towels.**
- **When disassembling and reassembling, do not let foreign matter enter or contact the parts.**

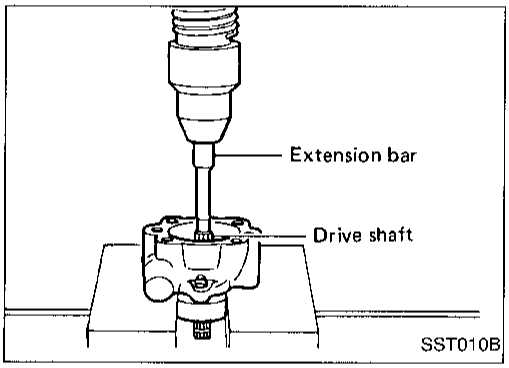

- Remove snap ring, then draw drive shaft out.
- **Be careful not to drop drive shaft.**

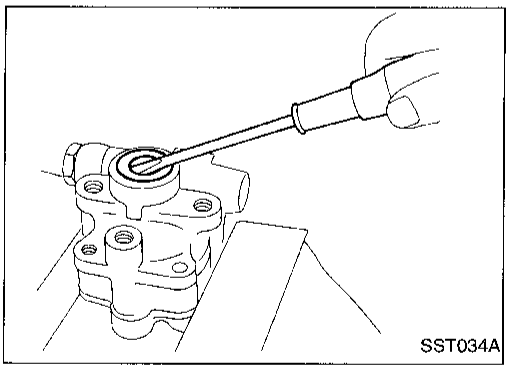

- Remove oil seal.
- **Be careful not to damage front housing.**

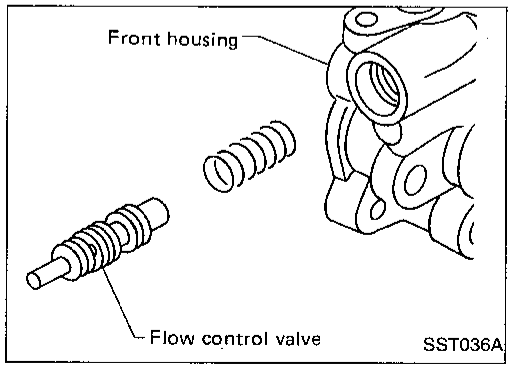

- Remove connector.
- **Be careful not to drop control valve.**

Simpo PDF Merge and Split Unregistered Version - http://www.simpopdf.com

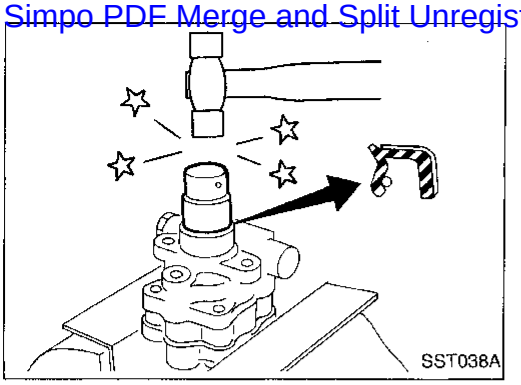

Assembly

Assemble oil pump, noting the following instructions.

- Make sure O-rings and oil seal are properly installed.
- Always install new O-rings and oil seal.
- Be careful of oil seal direction.
- Cam ring, rotor and vanes must be replaced as a set if necessary.
- When assembling, coat each part with ATF.

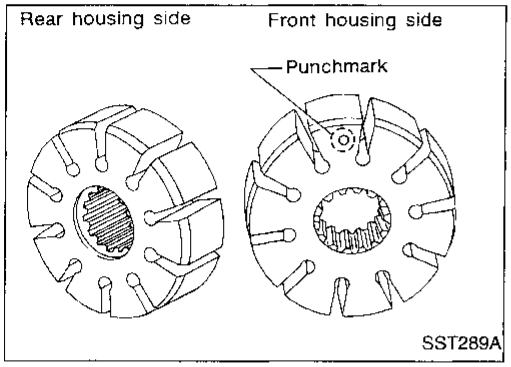

- Pay attention to the direction of rotor.

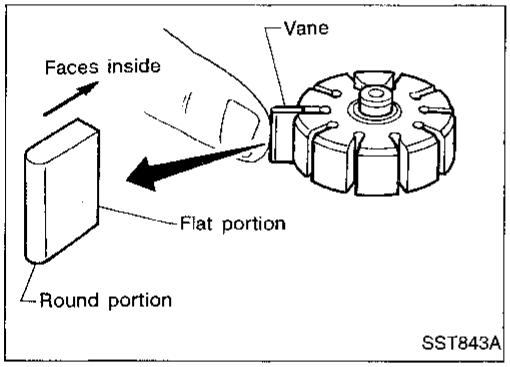

- When assembling vanes to rotor, rounded surfaces of vanes must face cam ring side.

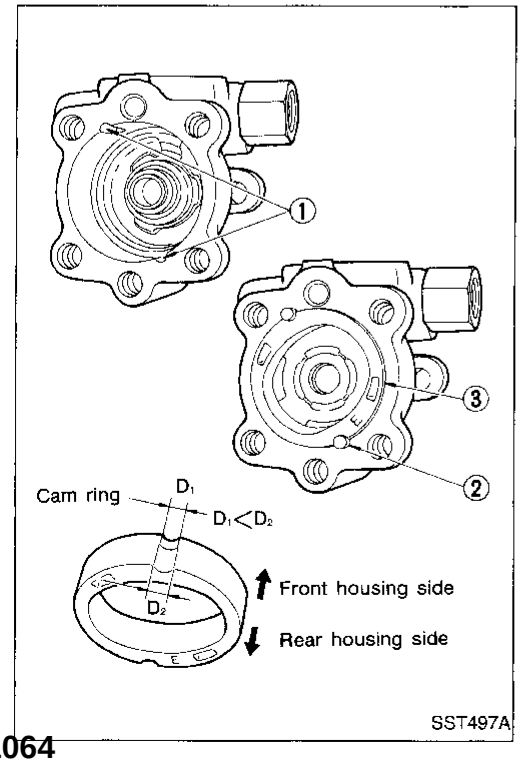

- Insert pin ② into pin groove ① of front housing and front side plate. Then install cam ring ③ as shown at left.

  Cam ring:

  D_1 is less than D_2

Simpo PDF Merge and Split Unregistered Version - http://www.simpopdf.com

Removal and Installation

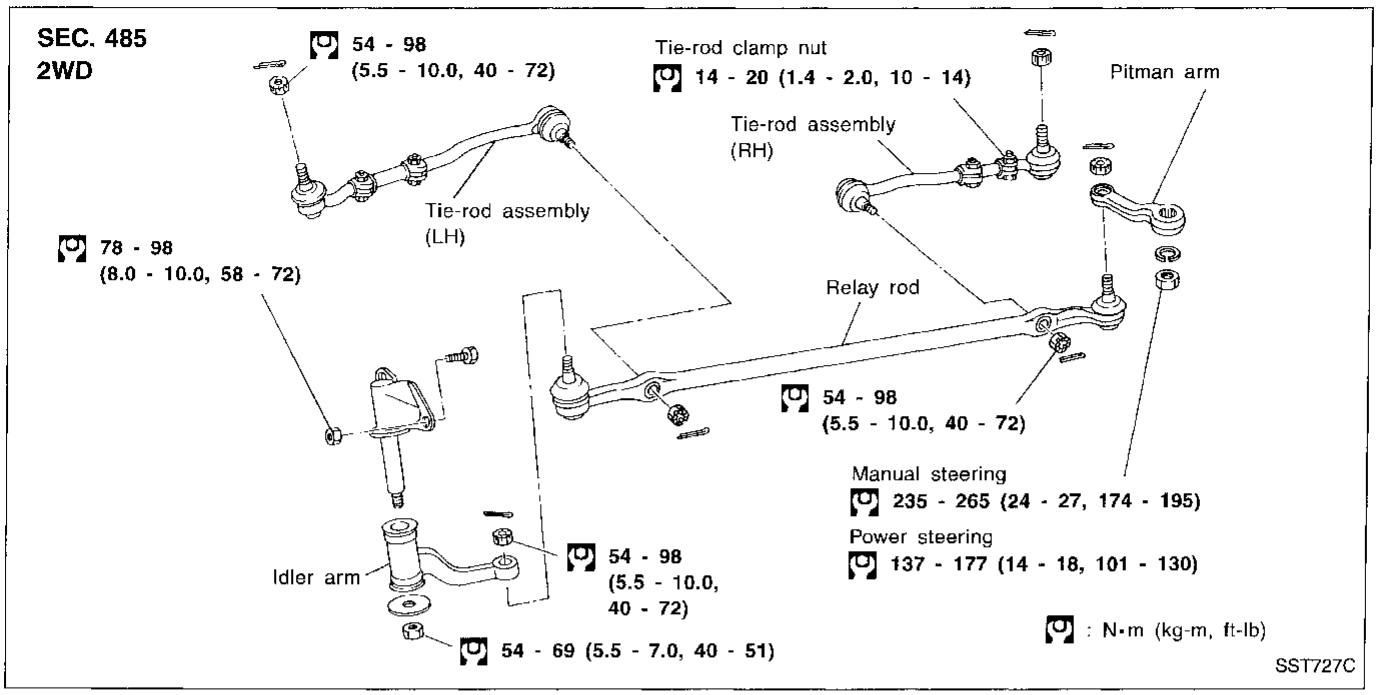

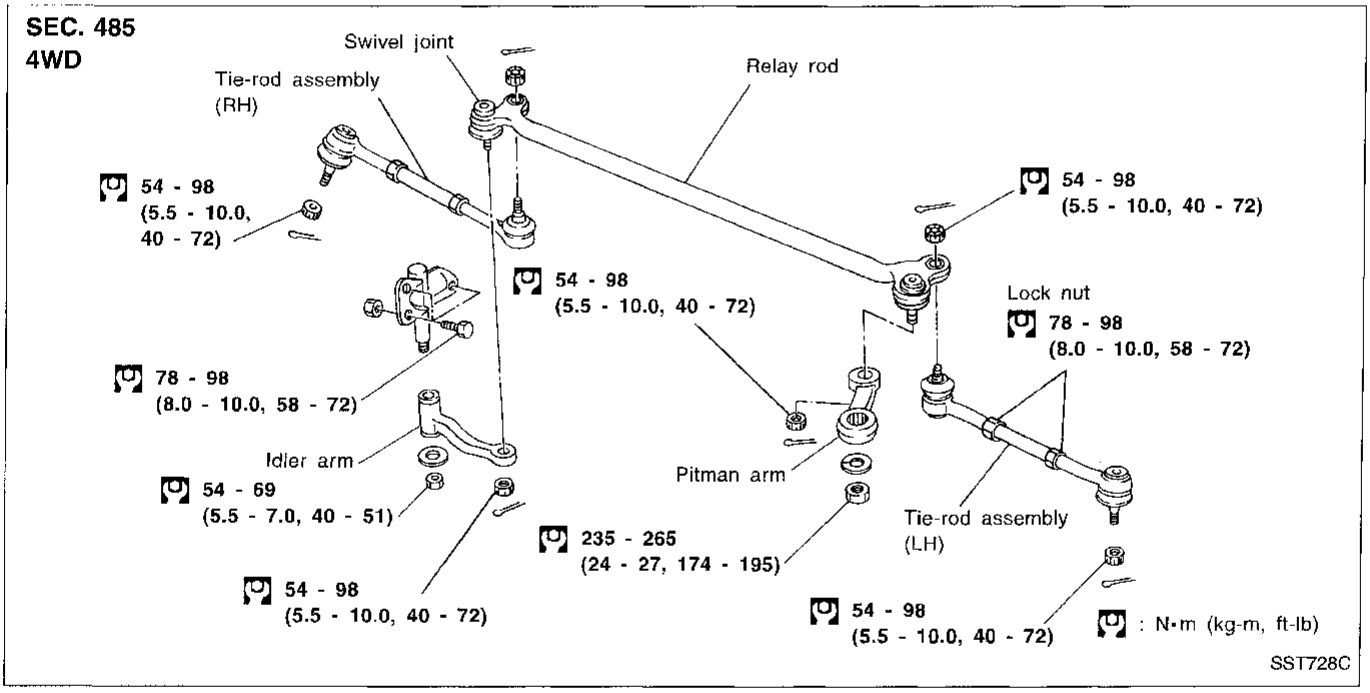

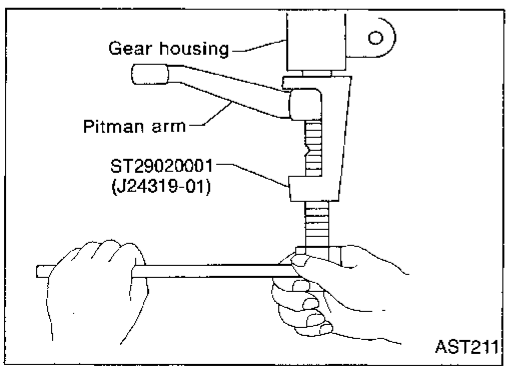

Remove pitman arm with Tool.

Removal and Installation (Cont'd)

Simpo PDF Merge and Split Unregistered Version - http://www.simpopdf.com

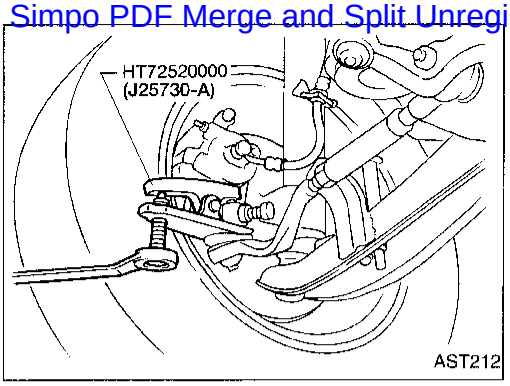

Remove tie-rod from knuckle arm with Tool.

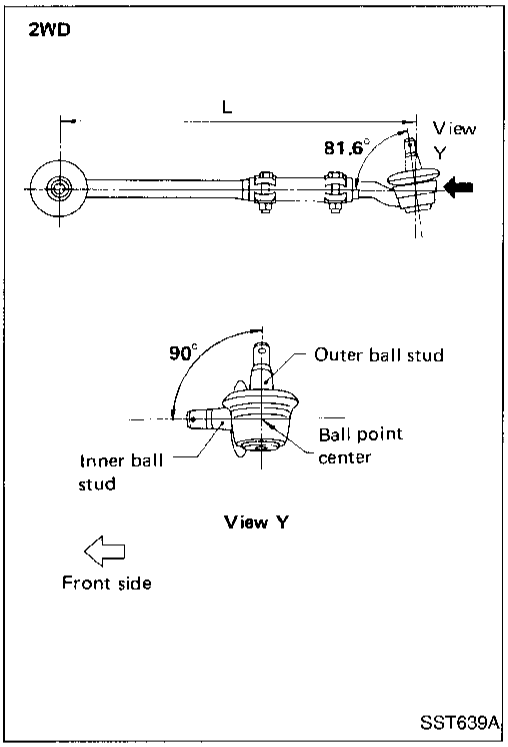

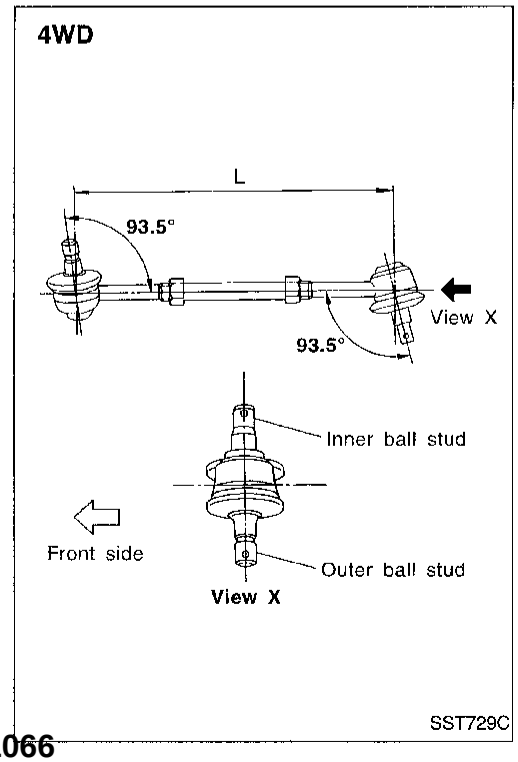

Disassembly

IDLER ARM ASSEMBLY

- Apply coat of multi-purpose grease to bushing.
- Press bushing into idler body, and insert shaft of idler bracket carefully until bushing protrudes.

CROSS ROD AND TIE-ROD

1. When tie-rod ball joints and tie-rod bar are separated, adjust tie-rod length correctly.
   Adjustment should be done between ball stud centers.
2. Lock tie-rod clamp nut so that ball joint on outer ball stud is as follows with respect to that on inner ball stud.
   L: Standard
   343.9 mm (13.54 in) ... 2WD
   297.6 mm (11.72 in) ... 4WD

CAUTION:
Make sure that tie-rod bars are screwed into tie-rod tube more than 29 mm (1.14 in)...2WD, 22 mm (.87 in)...4WD.

Simpo PDF Merge and Split Unregistered Version - http://www.simpopdf.com

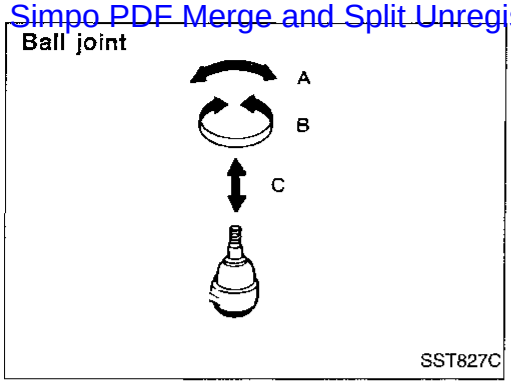

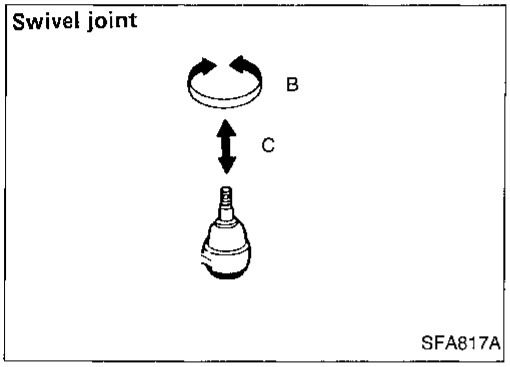

Inspection

BALL JOINT AND SWIVEL JOINT

1. Check joints for play. If ball or swivel stud is worn and play in axial direction is excessive or joint is hard to swing, replace as a complete unit.
   Swinging force (Measure point: Cotter pin hole) "A":
   Ball joint
   15.7 - 147.1 N (1.6 - 15.0 kg, 3.5 - 33.1 lb)
   Rotating torque "B":
   Ball joint
   0.5 - 4.9 N·m (5 - 50 kg-cm, 4.3 - 43.4 in-lb)
   Swivel joint
   1.0 - 5.9 N·m (10 - 60 kg-cm, 8.7 - 52.1 in-lb)
   Axial end play "C":
   Ball joint and swivel joint
   0 mm (0 in)
2. Check condition of dust cover. If it is cracked excessively, replace as a complete unit.

CAUTION:
Be careful not to apply grease or oil to taper of joint.

IDLER ARM ASSEMBLY

- Check rubber bushing of idler arm for breakage, wear or play, and if necessary replace.
- Lubricate idler arm assembly with multi-purpose grease, if necessary.

CROSS ROD AND TIE-ROD

Check tie-rod and cross rod for breakage, bends and cracks, and replace with a new one if necessary.

FIXING LOCATION

- Check fixing location (nuts and cotter pins) for looseness, play or breakage.
- When looseness or play is found, check for wear on tapered portion of joints, gear arm of idler arm.
- When reassembling each joint, use new cotter pins.

Simpo PDF Merge and Split Unregistered Version - http://www.simpopdf.com

General Specifications

Steering column type (Collapsible)	Manual steering	Power steering	
	2WD	2WD	4WD
Steering gear type	VB66K	PB48S	PB59K
Turns of steering wheel on the vehicle (Lock-to-lock)	5.8	3.6	3.4
Steering gear ratio	24.4 - 26.8	16.5	15

Steering wheel axial play mm (in)	0 (0)
Steering wheel play mm (in)	35 (1.38) or less

Inspection and Adjustment

STEERING COLUMN LENGTH

Unit: mm (in)

Dimension "L"	863.1 - 866.7 (33.98 - 34.12)

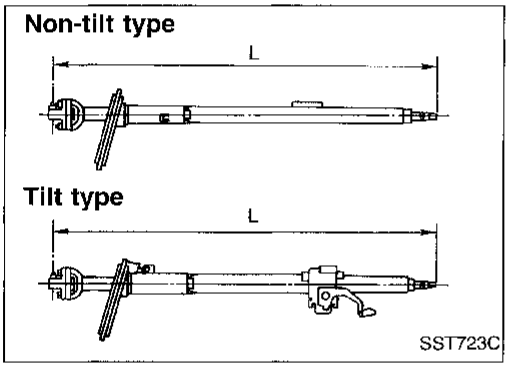

Simpo PDF Merge and Split Unregistered Version - http://www.simpopdf.com

MANUAL STEERING GEAR (Model: VB66K)

Worm bearing preload N·m (kg-cm, in-lb)	0.69 - 0.88 (7.0 - 9.0, 6.1 - 7.8)	
Steering gear turning torque N·m (kg-cm, in-lb)		
360° position from straight-ahead position	0.69 - 0.88 (7.0 - 9.0, 6.1 - 7.8)	
Straight-ahead position (As compared with steering wheel turned 360°)	0.20 - 0.39 (2.0 - 4.0, 1.7 - 3.5) higher	
Maximum turning torque	1.08 (11.0, 9.5)	
Backlash at pitman arm top end (in a straight-ahead position) mm (in)	0 - 0.1 (0 - 0.004)	
End play (Between sector shaft and adjusting screw) mm (in)	0.1 (0.004) or less	
Adjusting shim thickness	Thickness mm (in)	Part number
	1.95 (0.0768)	48129-84500
	2.00 (0.0787)	48130-84500
	2.05 (0.0807)	48131-84500
Oil capacity ℓ (Imp pt)	Approx. 0.62 (1-1/8)	

STEERING LINKAGE

Applied model	2WD	4WD
Relay-rod swivel joint		
Rotating torque N·m (kg-cm, in-lb)	—	1.0 - 5.9 (10 - 60, 8.7 - 52.1)
Axial end play mm (in)	—	0 (0)
Tie-rod & relay-rod ball joint		
Swinging force at cotter pin hole N (kg, lb)	15.7 - 147.1 (1.6 - 15.0, 3.5 - 33.1)	
Rotating torque N·m (kg-cm, in-lb)	0.5 - 4.9 (5 - 50, 4.3 - 43.4)	
Axial end play mm (in)	0 (0)	
Tie-rod standard length (L) mm (in)	343.9 (13.54)	297.6 (11.72)

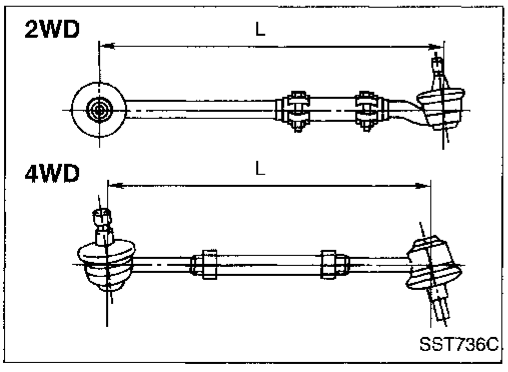

POWER STEERING SYSTEM (Model: PB48S)

Steering wheel turning force (at 360° from neutral position and circumference of steering wheel) N (kg, lb)	24.5 - 29.4 (2.5 - 3.0, 5.5 - 6.6)	
Oil pump pressure kPa (bar, kg/cm², psi)	7,649 - 8,238 (76.5 - 82.4, 78 - 84, 1,109 - 1,194) at idling	
Fluid capacity mℓ (Imp fl oz)	Approximately 900 - 1,000 (31.7 - 35.2)	
Normal operating temperature °C (°F)	60 - 80 (140 - 176)	
Steering gear turning torque N·m (kg-cm, in-lb)		
360° position from straight-ahead position	0.7 - 1.2 (7 - 12, 6.1 - 10.4)	
Straight-ahead position (As compared with steering wheel turned 360°)	0.1 - 0.4 (1 - 4, 0.9 - 3.5) higher	
Maximum turning torque	1.1 - 1.6 (11 - 16, 9.5 - 13.9)	
Backlash at pitman arm top end (in a straight-ahead position) mm (in)	0 - 0.1 (0 - 0.004)	
End play (Between sector shaft and adjusting screw) mm (in)	0.01 - 0.03 (0.0004 - 0.0012)	
Adjusting shim thickness	Thickness mm (in)	Part number
	1.575 - 1.600 (0.0620 - 0.0630)	48213-B0100
	1.550 - 1.575 (0.0610 - 0.0620)	48214-B0100
	1.525 - 1.550 (0.0600 - 0.0610)	48215-B0100
	1.500 - 1.525 (0.0591 - 0.0600)	48216-B0100
	1.475 - 1.500 (0.0581 - 0.0591)	48217-B0100
	1.450 - 1.475 (0.0571 - 0.0581)	48218-B0100

Simpo PDF Merge and Split Unregistered Version - http://www.simpopdf.com

POWER STEERING SYSTEM (Model: PB59K)

Steering wheel turning force (at 360° from neutral position and circumference of steering wheel) N (kg, lb)	39 (4, 9) or less
Oil pump pressure kPa (bar, kg/cm^2, psi)	7,649 - 8,238 (76.5 - 82.4, 78 - 84, 1,109 - 1,194) at idling
Fluid capacity mℓ (Imp fl oz)	Approximately 1,000 - 1,100 (35.2 - 38.7)
Normal operating temperature °C (°F)	60 - 80 (140 - 176)
Steering gear turning torque N-m (kg-cm, in-lb)	
360° position from straight-ahead position	0.15 - 0.78 (1.5 - 8.0, 1.3 - 6.9)
Straight-ahead position (As compared with steering wheel turned 360°)	0.25 - 1.32 (2.5 - 13.5, 2.2 - 11.7) higher
Maximum turning torque	1.03 - 1.47 (10.5 - 15, 9.1 - 13.0)
Backlash at pitman arm top end (in straight-ahead position) mm (in)	0 - 0.1 (0 - 0.004)
End play (at sector shaft end in neutral position) mm (in)	0.1 (0.004) or less

Simpo PDF Merge and Split Unregistered Version - http://www.simpopdf.com

SECTION TF

CONTENTS

PREPARATION 2
Special Service Tools 2
Commercial Service Tools 3
DESCRIPTION 4
Cross-sectional View 4
ON-VEHICLE SERVICE 5
Replacing Oil Seal 5
Center Case Oil Seal 5
Shift Shaft Oil Seal 5
Rear Oil Seal 6
REMOVAL AND INSTALLATION 7
TRANSFER GEAR CONTROL 8
MAJOR OVERHAUL 9
Case Components 9
Gear Components 10
Shift Control Components 11
DISASSEMBLY 12
REPAIR FOR COMPONENT PARTS 17
Mainshaft 17
Front Drive Shaft 19
Counter Gear 20
Main Gear 20
Front Case 22
Shift Shaft Oil Seal 22
Front Case Cover 22
Cover Oil Seal 22
Bearing Retainer 23
Oil Catcher 23
Rear Case 23
Rear Oil Seal 23
Air Breather 23
Shift Control Components 24
ASSEMBLY 25
SERVICE DATA AND SPECIFICATIONS (SDS) 32
General Specifications 32
Inspection and Adjustment 32

Simpo PDF Merge and Split Unregistered Version - http://www.simpopdf.com

Special Service Tools

The actual shapes of Kent-Moore tools may differ from those of special service tools illustrated here.

Tool number (Kent-Moore No.) Tool name	Description	
ST38060002 (J34311) Flange wrench	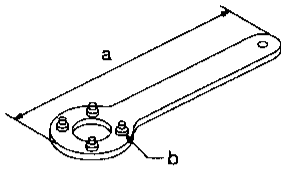 NT428	Removing companion flange nut Installing companion flange nut **a: 480 mm (18.90 In)** **b: Pitch dia.: 75 mm (2.95 in)** **Pin dia.: 10 mm (0.39 in)**
ST30021000 (J22912-01) Puller	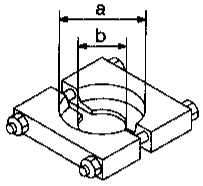 NT411	Removing counter gear front bearing (Use with ST36710010) Removing L & H hub **a: 110 mm (4.33 in) dia.** **b: 68 mm (2.68 in) dia.**
ST30031000 (J22912-01) Puller	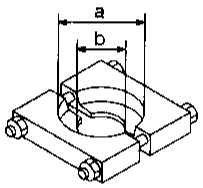 NT411	Removing counter gear rear bearing (Use with ST36710010) **a: 90 mm (3.54 in) dia.** **b: 50 mm (1.97 in) dia.**
ST33290001 (J34286) Puller	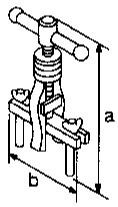 NT414	Removing center case oil seal Removing rear oil seal **a: 250 mm (9.84 in)** **b: 160 mm (6.30 in)**
ST33051001 (J22888) Puller	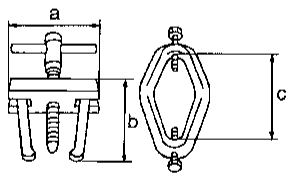 NT657	Removing companion flange **a: 135 mm (5.31 in)** **b: 100 mm (3.94 in)** **c: 130 mm (5.12 in)**
ST30720000 ① (J25273) ② (J25405) Drift	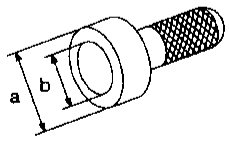 NT115	① Installing center case oil seal ② Installing rear oil seal **a: 77 mm (3.03 in) dia.** **b: 55.5 mm (2.185 in) dia.**
ST36710010 (—) Drift	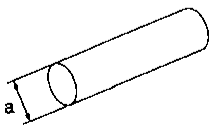 NT063	Removing counter gear front bearing (Use with ST30021000) Removing counter gear rear bearing (Use with ST30031000) **a: 34.5 mm (1.358 in) dia.**

Special Service Tools (Cont'd)

Simpo PDF Merge and Split Unregistered Version - http://www.simpopdf.com

Tool number (Kent-Moore No.) Tool name	Description	
ST33061000 (J8107-2) Drift	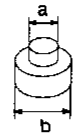 NT116	Removing main gear bearing **a: 28.5 mm (1.122 in) dia.** **b: 38 mm (1.50 in) dia.**
ST30613000 ① (J25742-3) ② (J34339) Drift	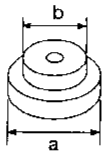 NT073	① Installing main gear bearing (Use with ST30611000) ② Installing cover oil seal (Use with ST30611000) **a: 72 mm (2.83 in) dia.** **b: 48 mm (1.89 in) dia.**
(J35864) Drift	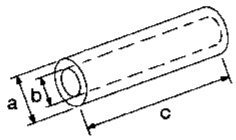 NT117	Installing shift shaft oil seal **a: 26 mm (1.02 in) dia.** **b: 20 mm (0.79 in) dia.** **c: 150 mm (5.91 in)**
(J26092) Drift	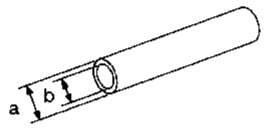 NT065	Seating counter gear assembly **a: 44.5 mm (1.752 in) dia.** **b: 38.5 mm (1.516 in) dia.**
(J34291) Shim setting gauge set	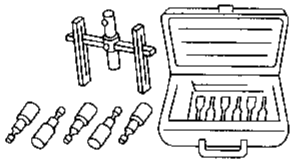 NT101	Selecting counter gear rear bearing shim
(J34291-20) Plunger-shim setting gauge	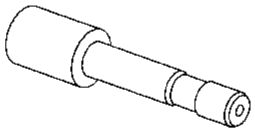 NT118	Selecting counter gear rear bearing shim

Commercial Service Tools

Tool name	Description	
Puller	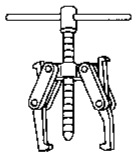 NT077	Removing front drive shaft front bearing Removing front drive shaft rear bearing Removing main gear bearing Removing companion flange
Drift	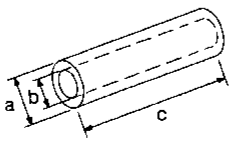 NT117	① Installing mainshaft rear bearing ② Installing L & H hub ① **a: 50 mm (1.97 in) dia.** **b: 42 mm (1.65 in) dia.** **c: 180 mm (7.09 in)** ② **a: 60 mm (2.36 in) dia.** **b: 50 mm (1.97 in) dia.** **c: 60 mm (2.36 in)**

Simpo PDF Merge and Split Unregistered Version - http://www.simpopdf.com

Cross-sectional View

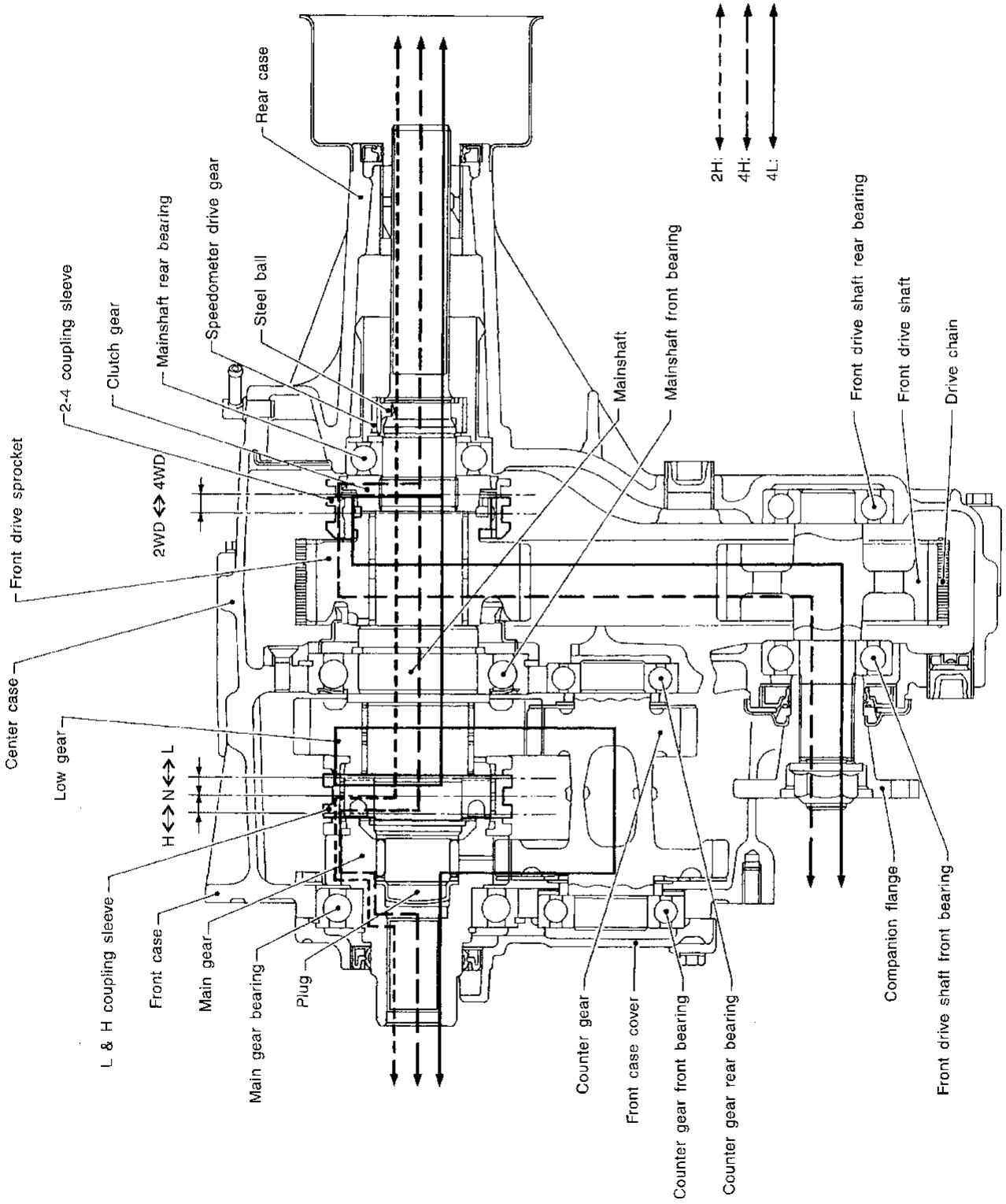

SMT013D

Simpo PDF Merge and Split Unregistered Version - http://www.simpopdf.com

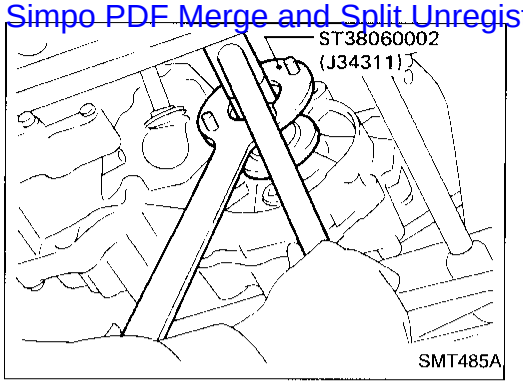

Replacing Oil Seal

CENTER CASE OIL SEAL

1. Remove front propeller shaft. Refer to PD section ("Removal and Installation", "PROPELLER SHAFT").
2. Remove companion flange nut.

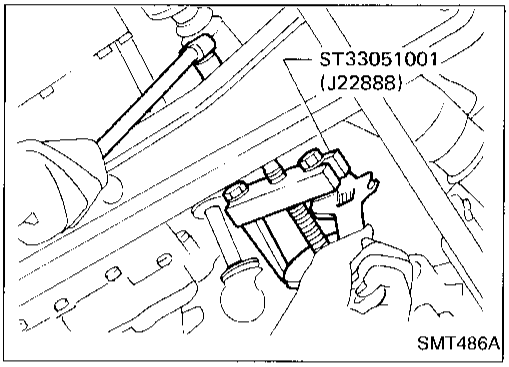

3. Remove companion flange.

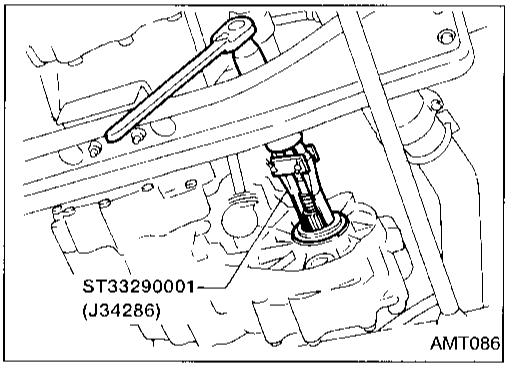

4. Remove center case oil seal.
5. Install center case oil seal.
- **Before installing, apply multi-purpose grease to seal lip.**
6. Install companion flange.

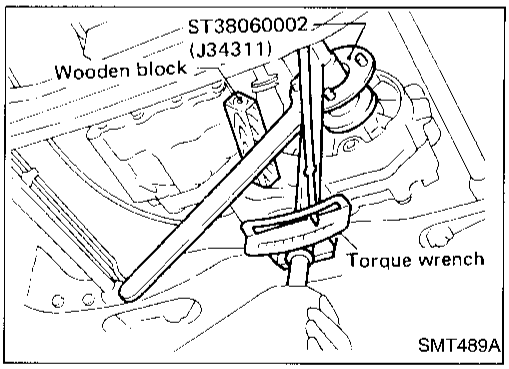

7. Tighten companion flange nut.
   : 226 - 324 N·m (23 - 33 kg-m, 166 - 239 ft-lb)
8. Install front propeller shaft. Refer to PD section ("Removal and Installation", "PROPELLER SHAFT").

SHIFT SHAFT OIL SEAL

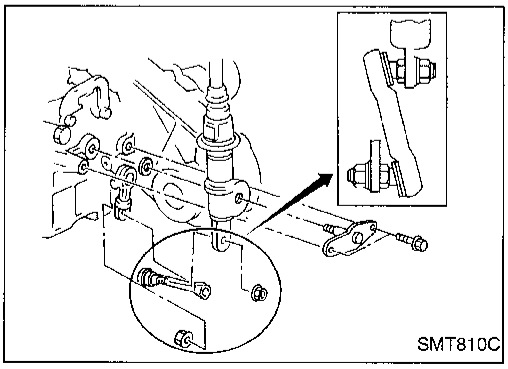

1. Remove front propeller shaft. Refer to PD section ("Removal and Installation", "PROPELLER SHAFT").
2. Remove companion flange. Refer to "CENTER CASE OIL SEAL", above.
3. Remove transfer control lever from transfer outer shift lever. Then remove outer shift lever.

Replacing Oil Seal (Cont'd)

Simpo PDF Merge and Split Unregistered Version - http://www.simpopdf.com

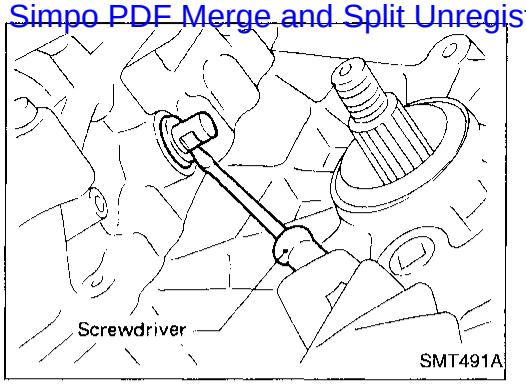

4. Remove shift shaft oil seal.

- **Be careful not to damage cross shaft.**

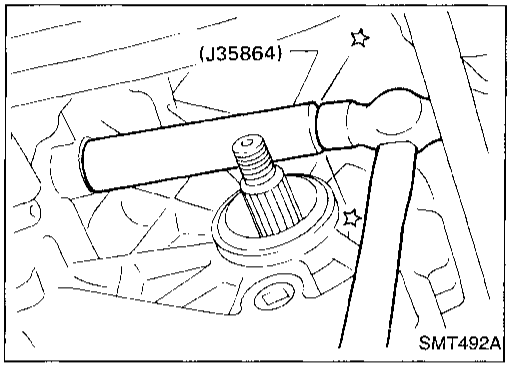

5. Install shift shaft oil seal.

- **Before installing, apply multi-purpose grease to seal lip.**

6. Install transfer control linkage.
7. Install companion flange. Refer to "CENTER CASE OIL SEAL", TF-5.
8. Install front propeller shaft. Refer to PD section ("Removal and Installation", "PROPELLER SHAFT").

REAR OIL SEAL

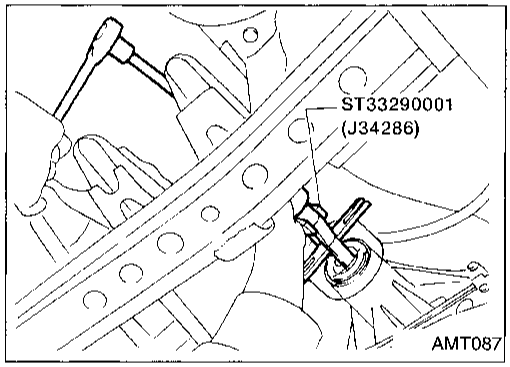

1. Remove rear propeller shaft. Refer to PD section ("Removal and Installation", "PROPELLER SHAFT").
2. Remove rear oil seal.

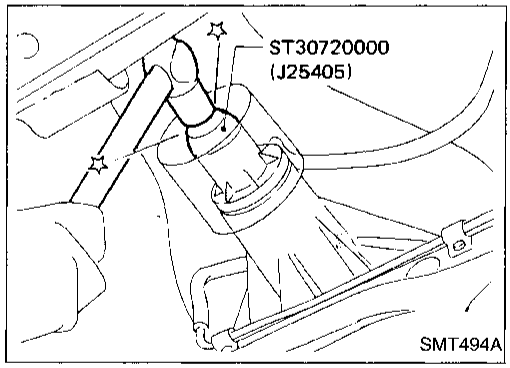

3. Install rear oil seal.

- **Before installing apply multi-purpose grease to seal lip.**

4. Install rear propeller shaft. Refer to PD section ("Removal and Installation", "PROPELLER SHAFT").

Simpo PDF Merge and Split Unregistered Version - http://www.simpopdf.com

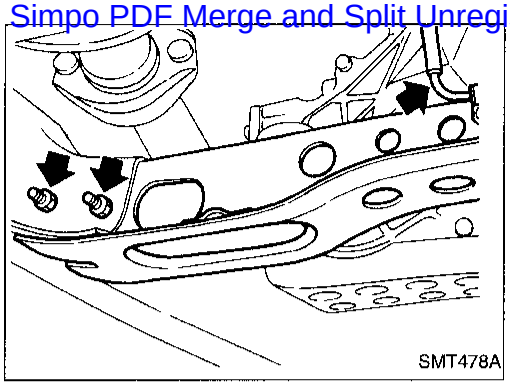
SMT478A

Removal

1. Drain oil from transfer and transmission.
2. Remove front and rear propeller shaft. Refer to PD section ("Removal and Installation", "PROPELLER SHAFT").
   Insert plug into rear oil seal after removing propeller shaft.
   - **Be careful not to damage spline, sleeve yoke and rear oil seal, when removing propeller shaft.**
3. Remove torsion bar spring. Refer to FA section ("Torsion Bar Spring", "FRONT SUSPENSION"). Then remove second crossmember.
4. Remove transfer control lever from transfer outer shift lever.
5. Separate transfer from transmission.

WARNING:
Support transfer while removing it.

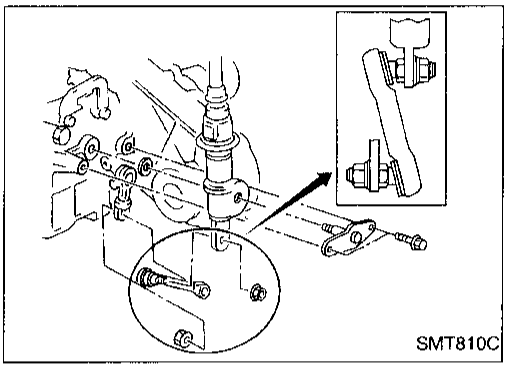
SMT810C

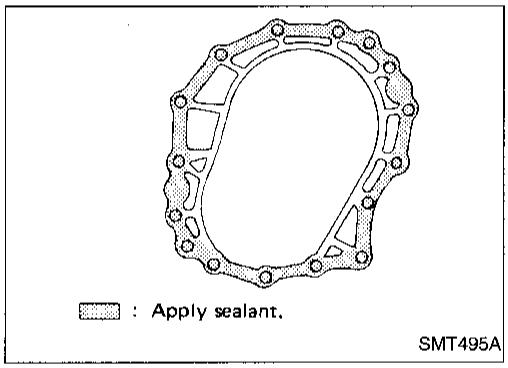

SMT495A

Installation

- Apply sealant to mating surface of transfer case to transmission.
- **Use genuine anaerobic liquid gasket, Three Bond TB1215, Loctite Part No. 51813 or equivalent.**

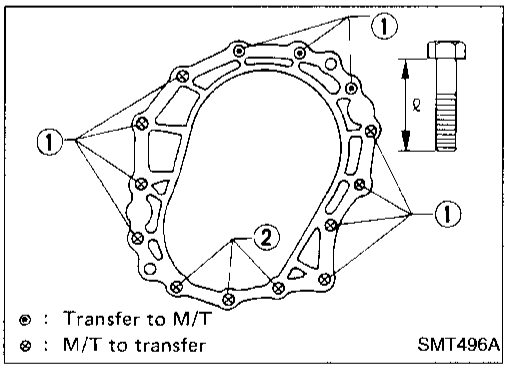

SMT496A

- Tighten bolts securing transfer.

Bolt No.	Tightening torque N·m (kg-m, ft-lb)	ℓ mm (in)
①	31 - 41 (3.2 - 4.2, 23 - 30)	45 (1.77)
②	31 - 41 (3.2 - 4.2, 23 - 30)	60 (2.36)

Simpo PDF Merge and Split Unregistered Version - http://www.simpopdf.com

SEC. 333

: N•m (kg-m, in-lb)
: N•m (kg-m, ft-lb)
1 : Fill multi-purpose grease up.
2 : Apply multi-purpose grease.
*1 : Securely bend pawls during assembly. Be careful not to damage boot.
*2 : Do not touch boot with a sharp-pointed or a hard tool as it breaks easily.

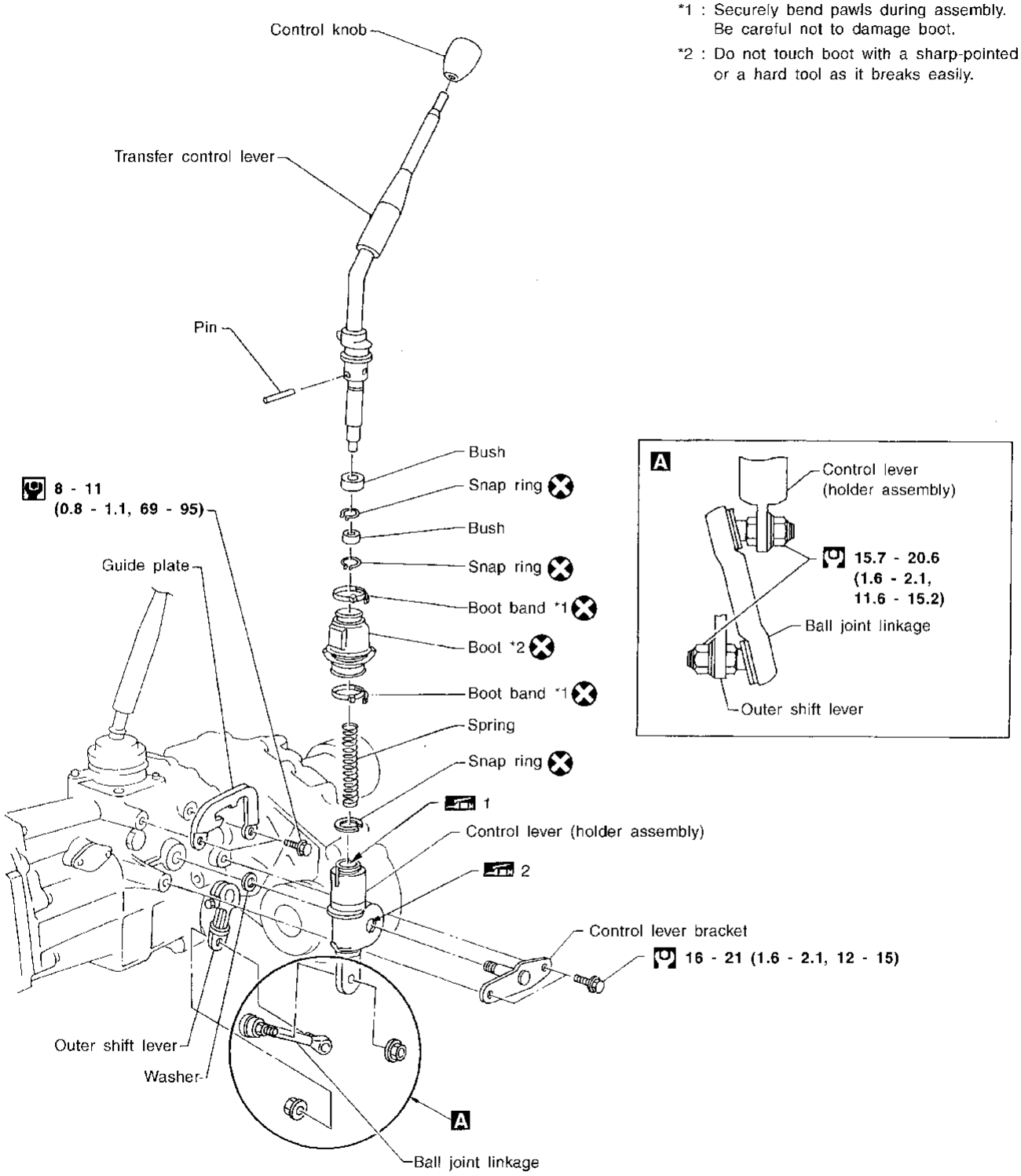

SMT809C

Simpo PDF Merge and Split Unregistered Version - http://www.simpopdf.com

Case Components

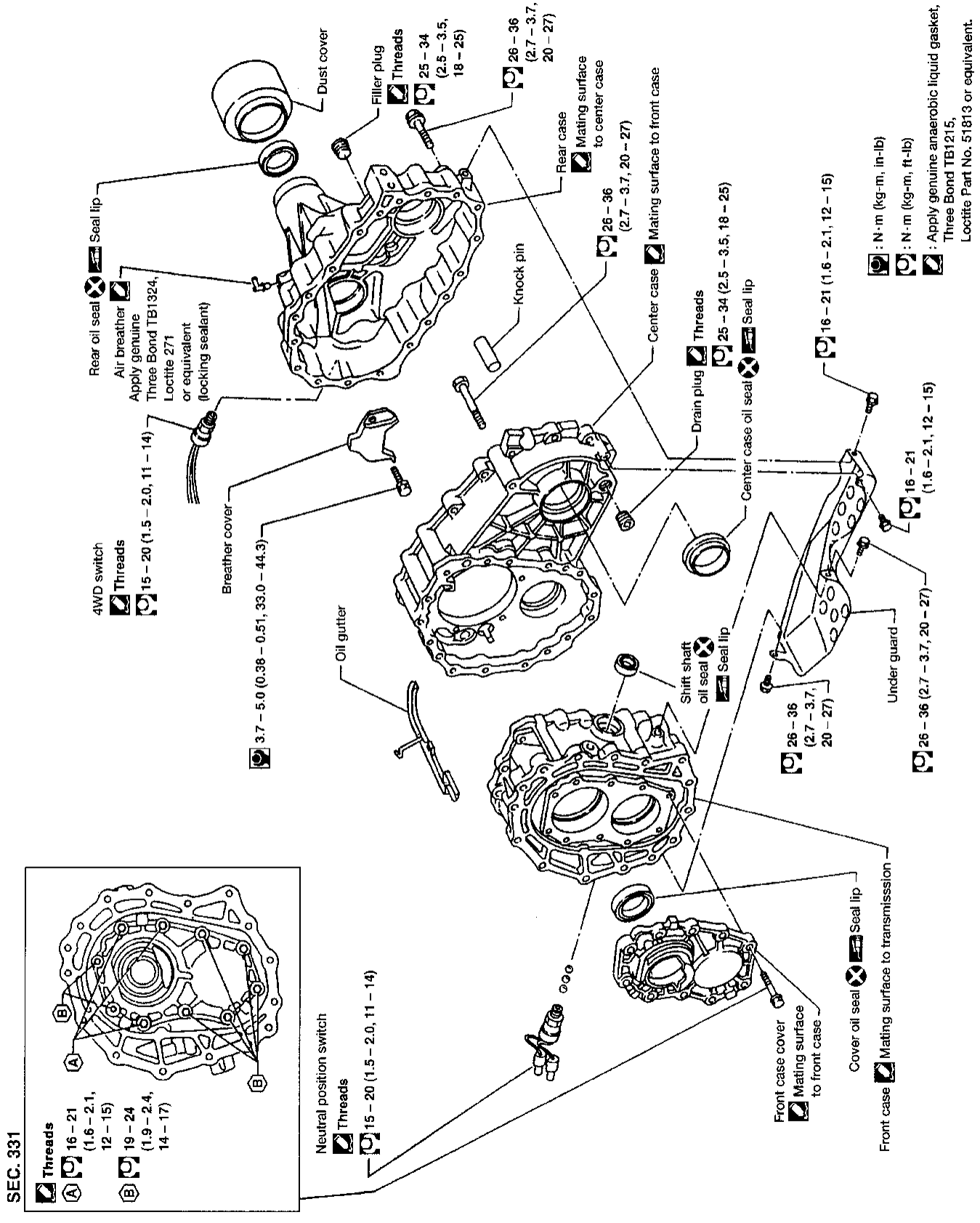

ATF001

Simpo PDF Merge and Split Unregistered Version - http://www.simpopdf.com

Gear Components

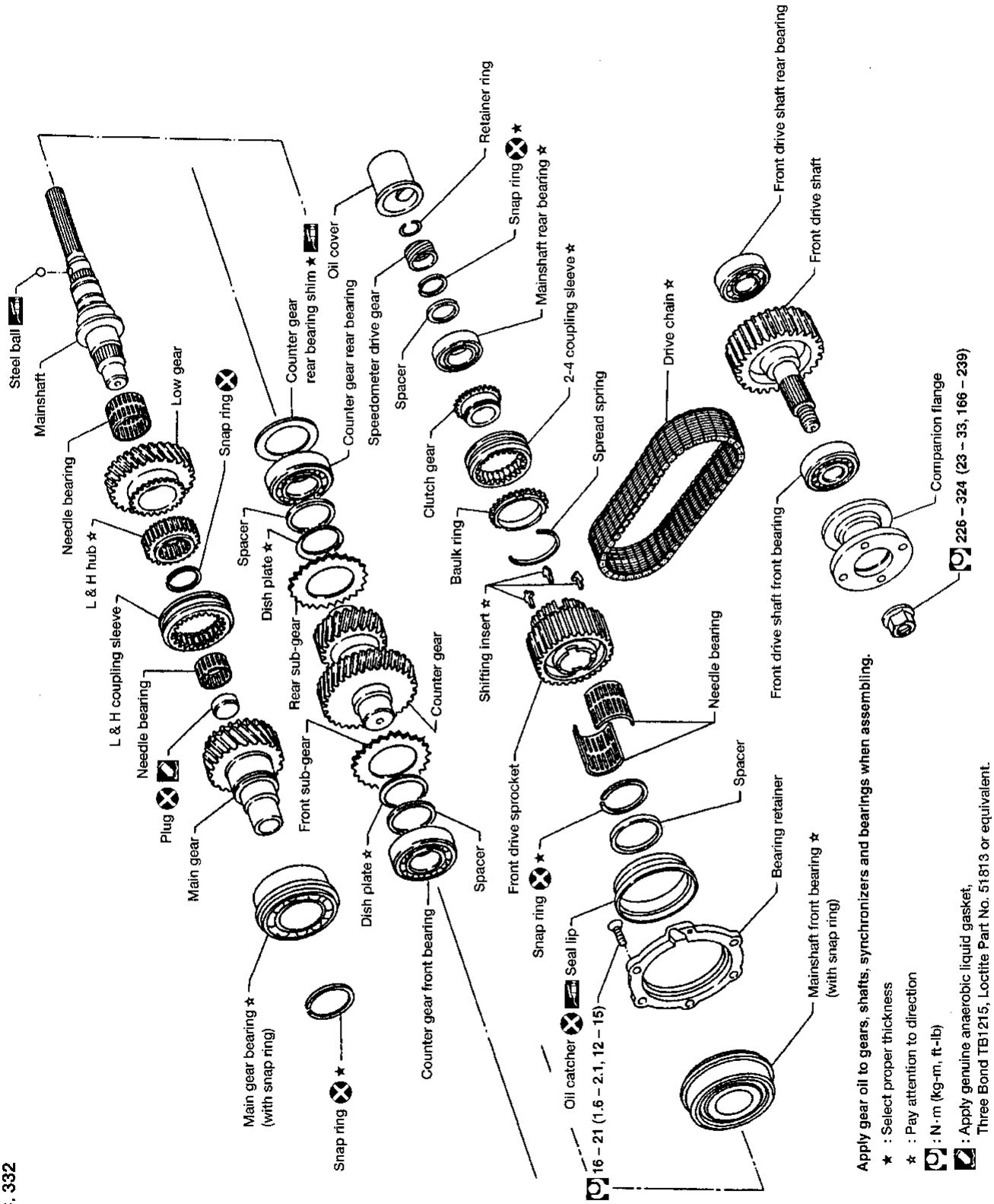

SEC. 332

ATF002

Simpo PDF Merge and Split Unregistered Version - http://www.simpopdf.com

Shift Control Components

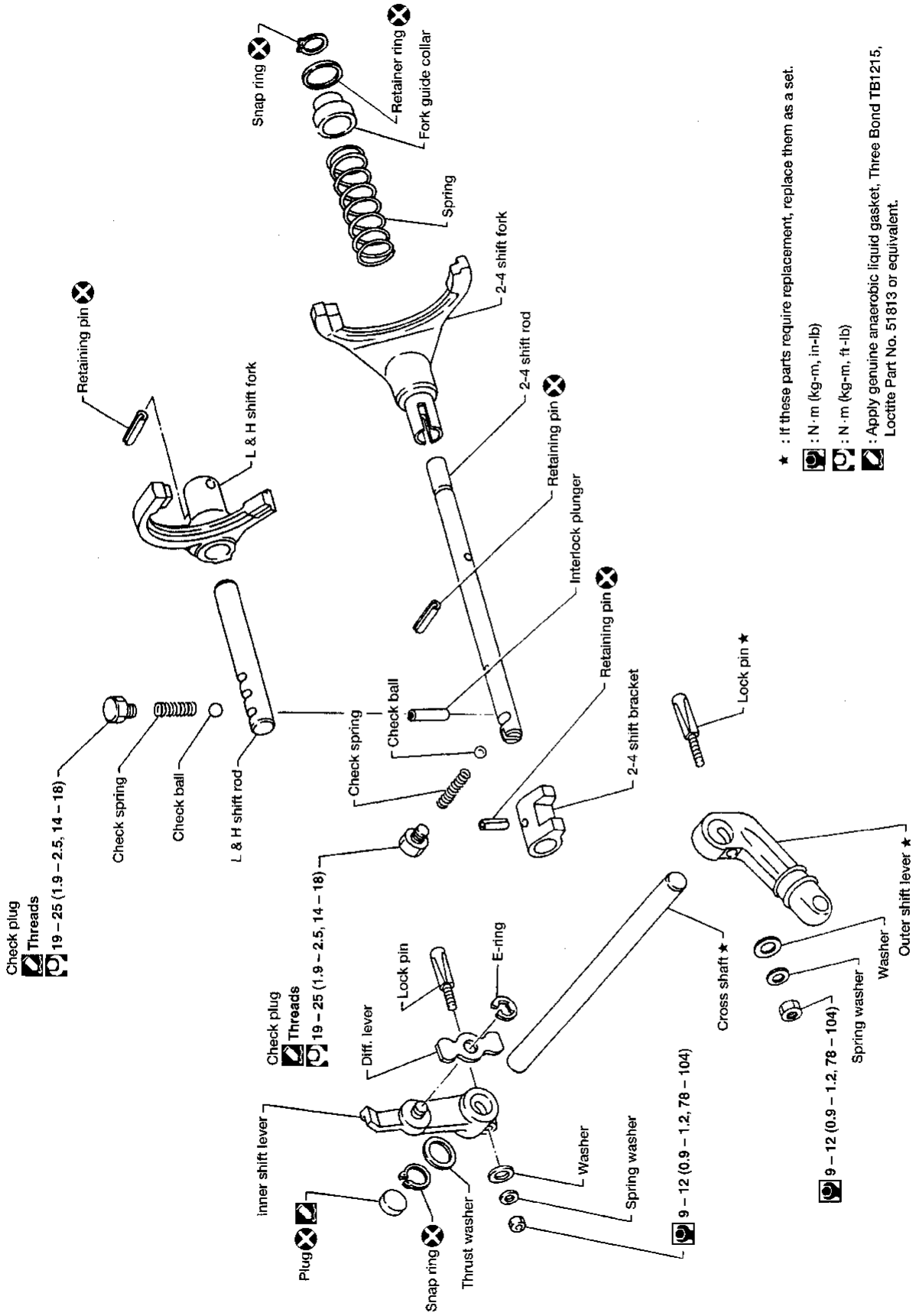

SEC. 333

ATF003

Simpo PDF Merge and Split Unregistered Version - http://www.simpopdf.com

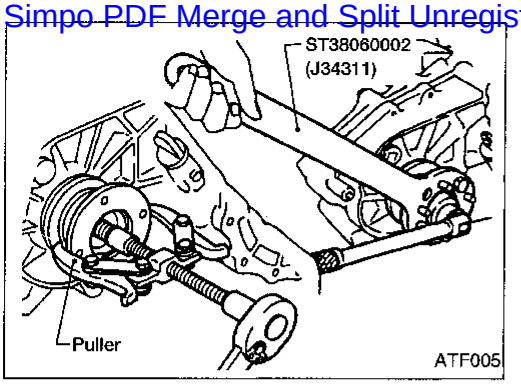

1. Remove companion flange nut.
2. Remove companion flange.

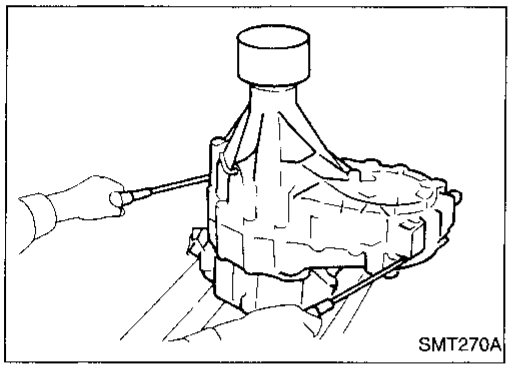

3. Remove 4WD switch.
4. Remove rear case.

- **Be careful not to damage the mating surface.**

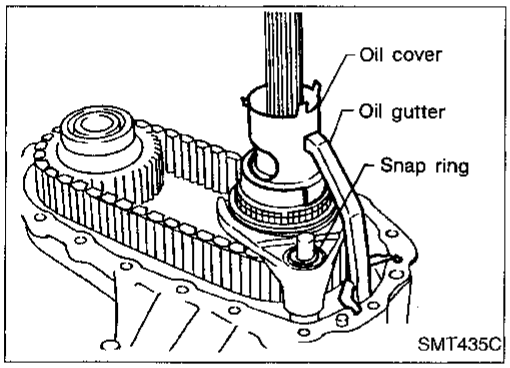

5. Remove oil cover and oil gutter.
6. Remove snap ring from 2-4 shift rod.

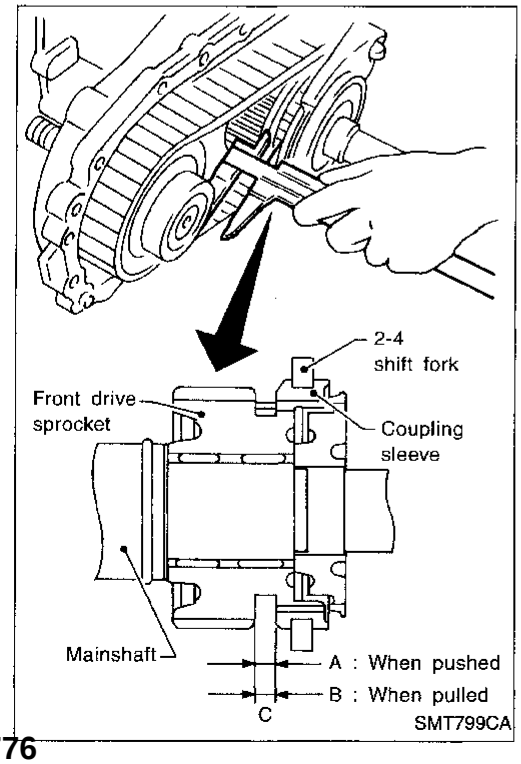

7. Using calipers, measure the difference between front drive sprocket and 2-4 coupling sleeve as outlined under Measuring method below. If it is outside specifications, check front drive sprocket, 2-4 coupling sleeve, clutch gear, 2-4 shift fork and 2-4 fork rod for abnormalities. Replace faulty part(s) as required.

Measuring method

a. Move coupling sleeve until it is in contact with sprocket, then measure dimension A. Move coupling sleeve until it is in contact with clutch gear, then measure dimension B. Obtain dimensional difference C between two measurements A and B.

C = A – B

b. To determine dimension A, measure at 3 or 4 different points by rotating sprocket and obtain average value of 3 or 4 measurements.

Specification C:

Refer to TF-32.

Simpo PDF Merge and Split Unregistered Version - http://www.simpopdf.com

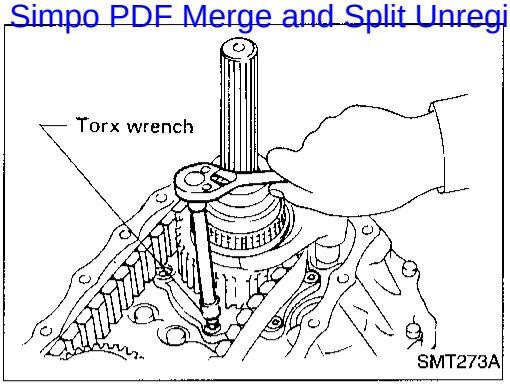

8. Remove bolts securing bearing retainer.
- **This step is necessary to remove mainshaft from center case.**

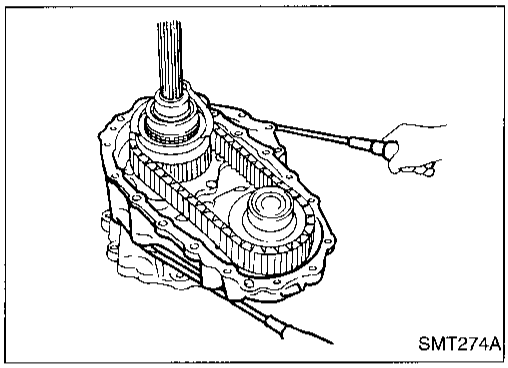

9. Remove bolts securing center case to front case, then separate center case from front case.

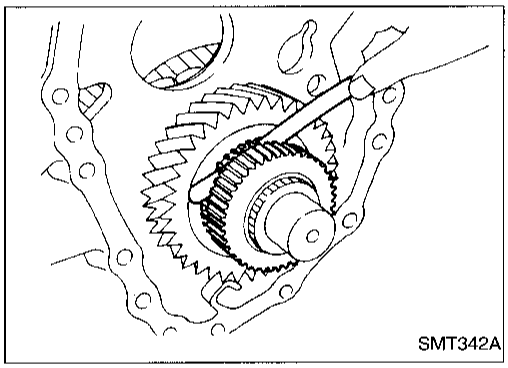

10. Measure low gear end play.
Standard:
0.2 - 0.35 mm (0.0079 - 0.0138 in)
- **If end play is not within specification, check low gear and L & H hub for wear.**

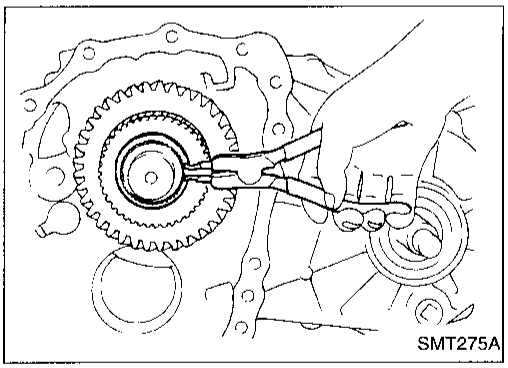

11. Disassemble center case assembly.
a. Remove snap ring from mainshaft.

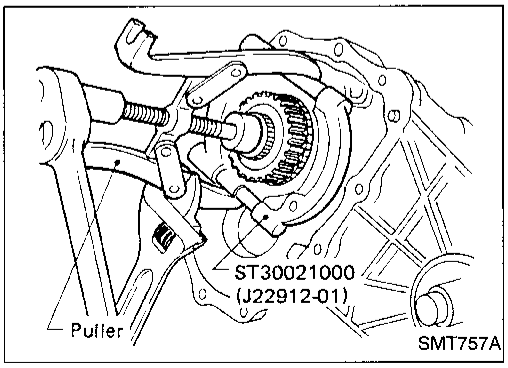

b. Remove low gear with L & H hub.

Simpo PDF Merge and Split Unregistered Version - http://www.simpopdf.com

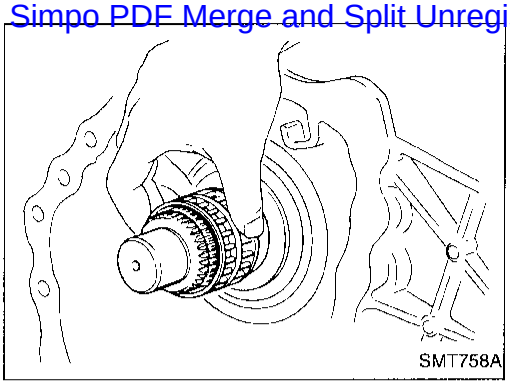

c. Remove needle bearing from main shaft.

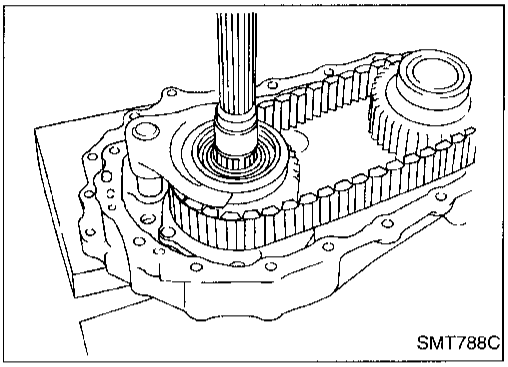

d. Make sure of the direction of the drive chain before removing it. (It must be reinstalled in the same direction.)

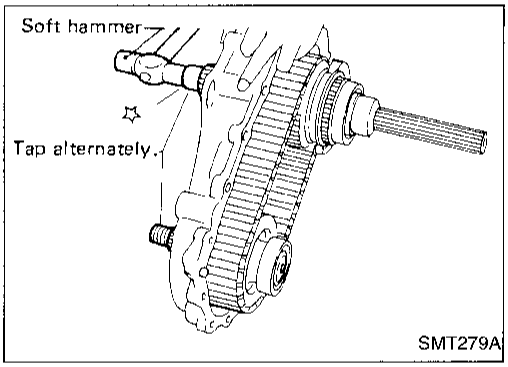

e. Remove mainshaft, front drive and drive chain as a set by tapping front end of mainshaft and front drive shaft alternately.

- **Be careful not to bend drive chain.**

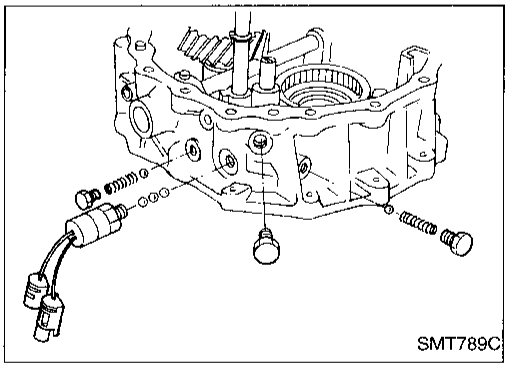

12. Disassemble front case assembly.

a. Remove switch, plugs, check springs and balls.

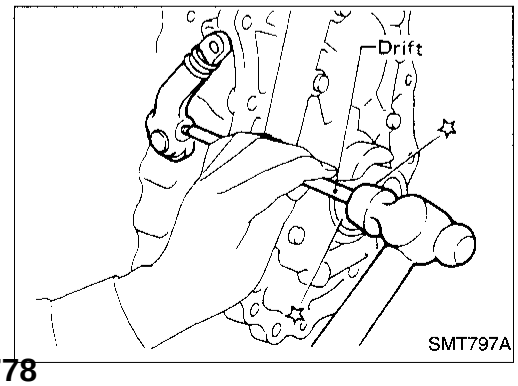

b. Remove lock pin from outer shift lever, then remove outer shift lever.

Simpo PDF Merge and Split Unregistered Version - http://www.simpopdf.com

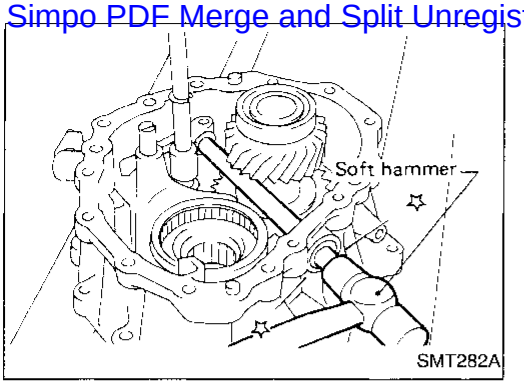

c. Remove lock pin from inner shift lever, then drive out cross shaft and plug together.

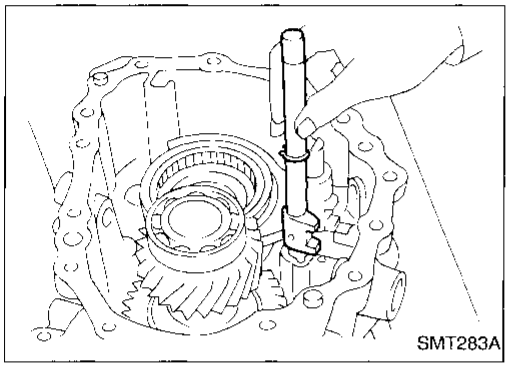

d. Remove 2-4 shift rod.

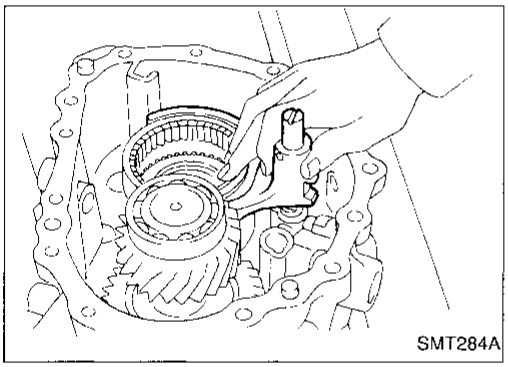

e. Remove L & H shift rod and fork assembly with coupling sleeve.

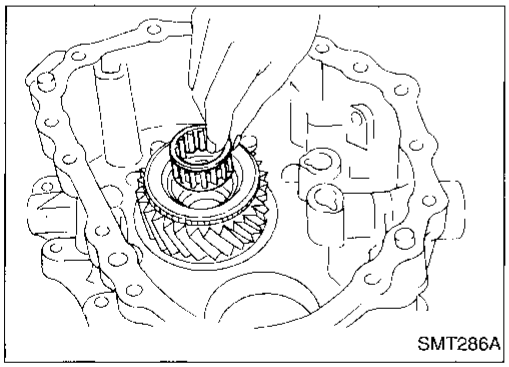

f. Remove needle bearing from main gear.

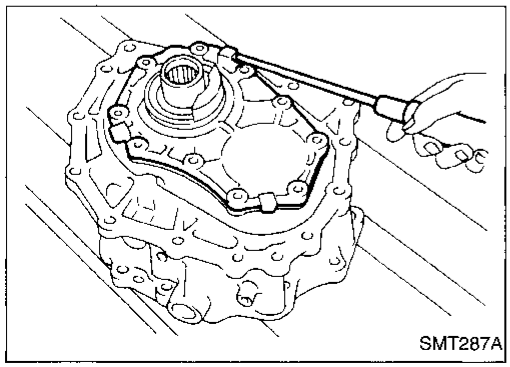

g. Remove bolts securing front case cover, then remove case cover.

Simpo PDF Merge and Split Unregistered Version - http://www.simpopdf.com

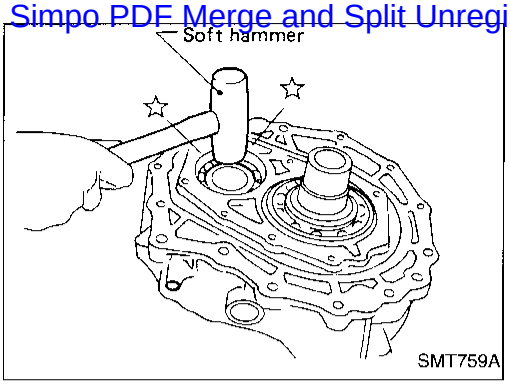

h. Remove counter gear by tapping lightly.

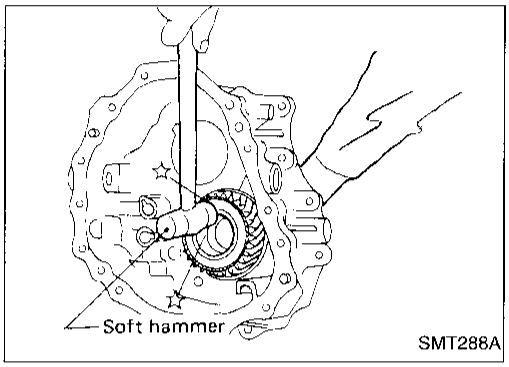

i. Remove main gear by tapping lightly.

Simpo PDF Merge and Split Unregistered Version - http://www.simpopdf.com

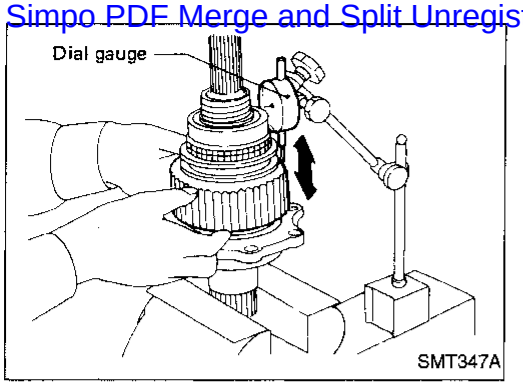

Mainshaft

DISASSEMBLY

1. Check front drive sprocket end play.
   Standard:
   0.2 - 0.35 mm (0.0079 - 0.0138 in)
- **If end play is not within specification, check front drive sprocket and clutch gear for wear.**

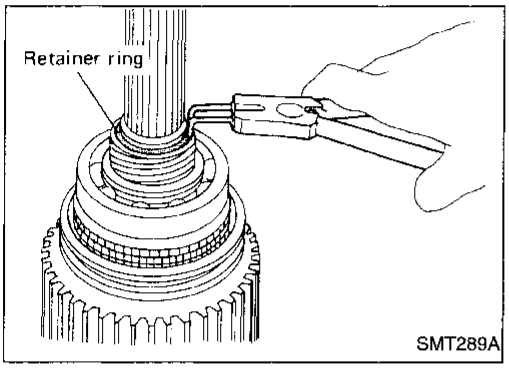

2. Remove retainer ring, speedometer drive gear and steel ball.
- **Be careful not to lose the steel ball.**

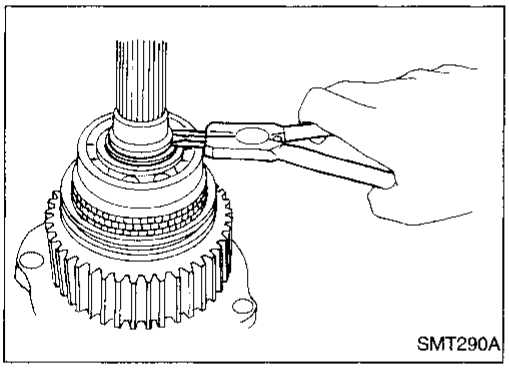

3. Remove snap ring and spacer.

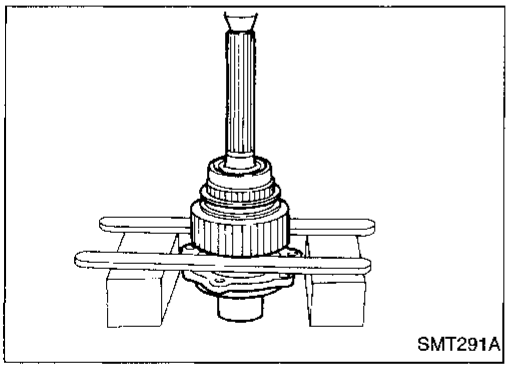

4. Use a press to remove front drive sprocket with mainshaft rear bearing and clutch gear together.
5. Remove needle bearing.

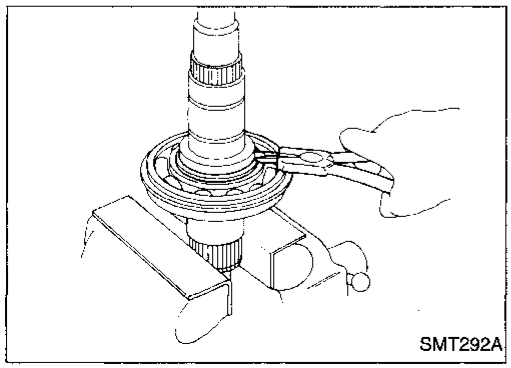

6. Remove bearing retainer, then remove snap ring and spacer.

Mainshaft (Cont'd)

Simpo PDF Merge and Split Unregistered Version - http://www.simpopdf.com

7. Use a press to remove mainshaft front bearing from mainshaft.

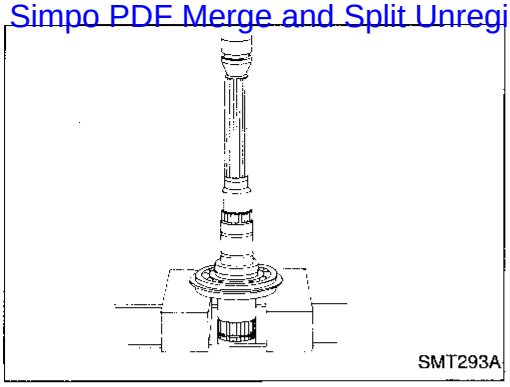
SMT293A

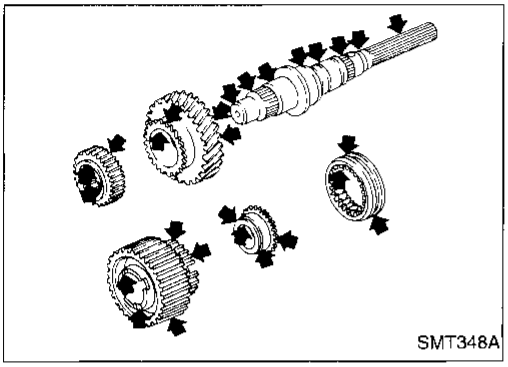
SMT348A

INSPECTION

Gear and shaft

- Check gears for excessive wear, chips or cracks.
- Check shaft for cracks, wear or bending.
- Check coupling sleeve for wear or damage.

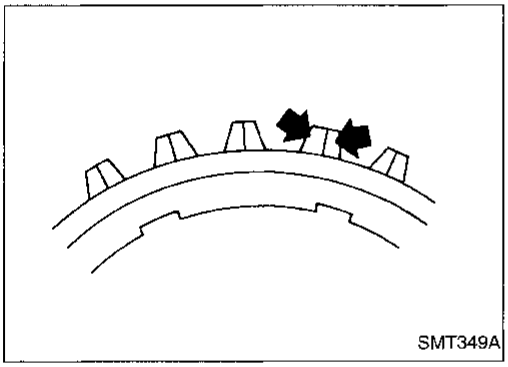
SMT349A

Baulk ring

- Check baulk ring for cracks or deformation.

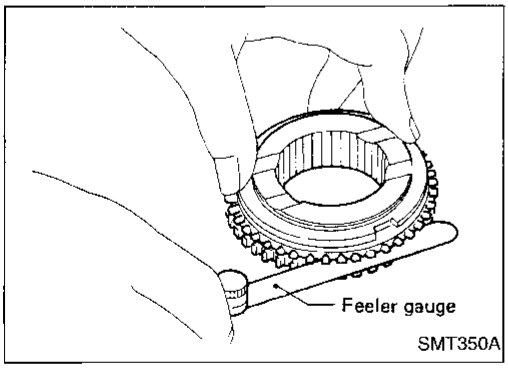

SMT350A

- Measure clearance between baulk ring and clutch gear.
  Baulk ring to clutch gear clearance:
  Refer to SDS, TF-32.

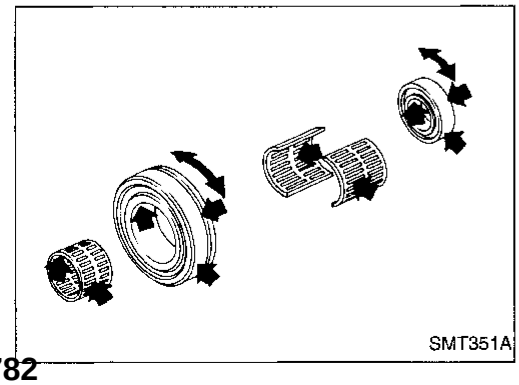
SMT351A

Bearing

- Make sure bearings roll freely and are free from noise, cracks, pitting or wear.

Mainshaft (Cont'd)

Simpo PDF Merge and Split Unregistered Version - http://www.simpopdf.com

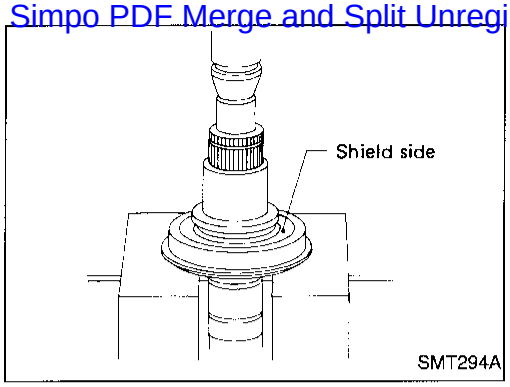

ASSEMBLY

1. Press mainshaft front bearing onto mainshaft.
   - **Pay attention to its direction.**

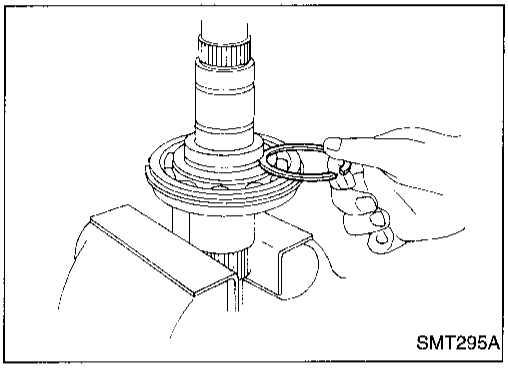

2. Install spacer.
3. Select and install snap ring with proper thickness.
   Allowable clearance between snap ring and groove:
   0 - 0.15 mm (0 - 0.0059 in)
   Available snap ring for mainshaft front bearing:
   Refer to SDS, TF-32.
4. For further procedures, refer to "ASSEMBLY", TF-25.

Front Drive Shaft

DISASSEMBLY

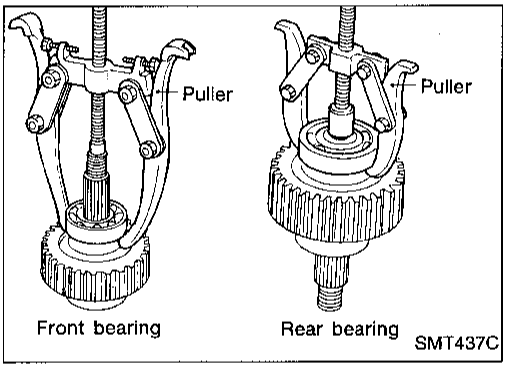

- Using a gear puller, remove front drive shaft front and rear bearings.

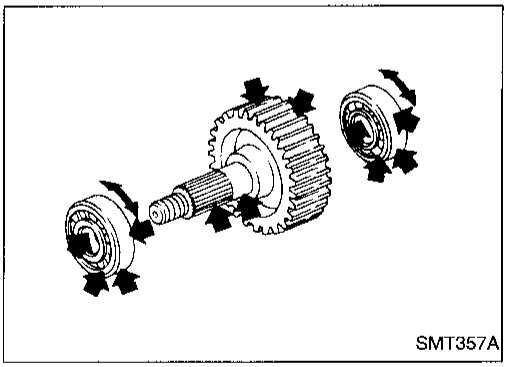

INSPECTION

Sprocket and shaft

- Check sprocket for excessive wear, chips or cracks.
- Check shaft for cracks or wear.

Bearing

- Make sure bearings roll freely and are free from noise, cracks, pitting or wear.

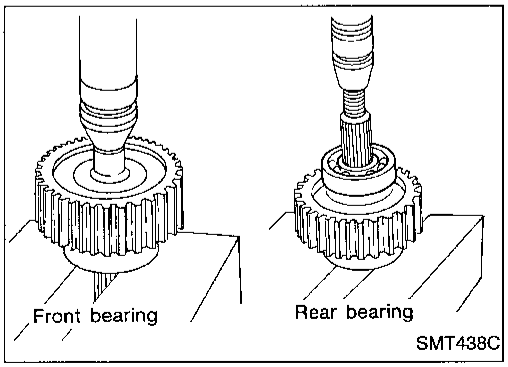

ASSEMBLY

- Press front drive shaft front and rear bearings onto front drive shaft.

Simpo PDF Merge and Split Unregistered Version - http://www.simpopdf.com

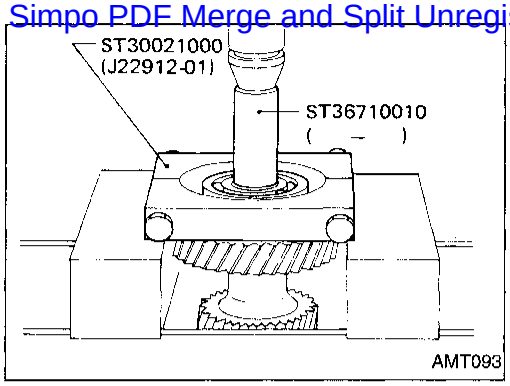

Counter Gear

DISASSEMBLY

1. Press out counter gear front bearing.
- Remove front sub-gear, spacer and dish plate.

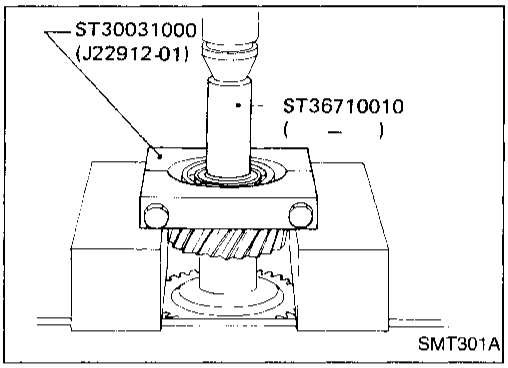

2. Press out counter gear rear bearing and then remove rear sub-gear, spacer and dish plate.

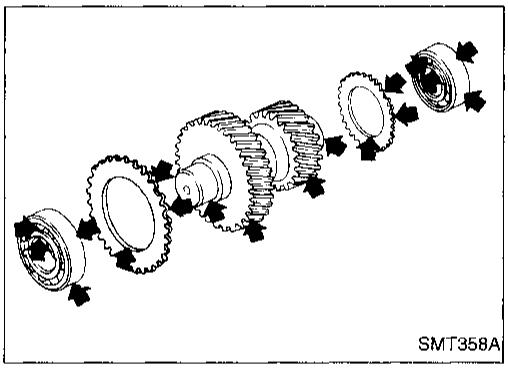

INSPECTION

Gear and shaft

- Check gears for excessive wear, chips or cracks.
- Check shaft for cracks or wear.

Bearing

- Make sure bearings roll freely and are free from noise, cracks, pitting or wear.

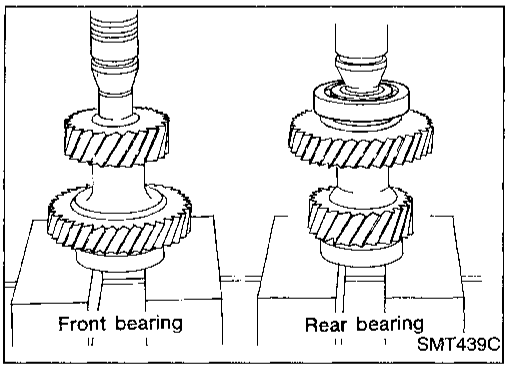

ASSEMBLY

1. Install front sub-gear, dish plate and spacer, then press on counter gear front bearing.
2. Install rear sub-gear, dish plate and spacer, then press on counter gear rear bearing.

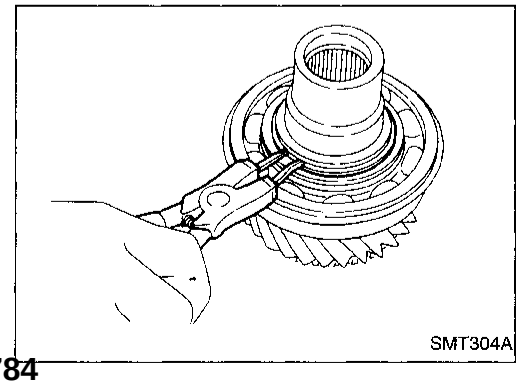

Main Gear

DISASSEMBLY

Main gear bearing

1. Remove snap ring.

Main Gear (Cont'd)

Simpo PDF Merge and Split Unregistered Version - http://www.simpopdf.com

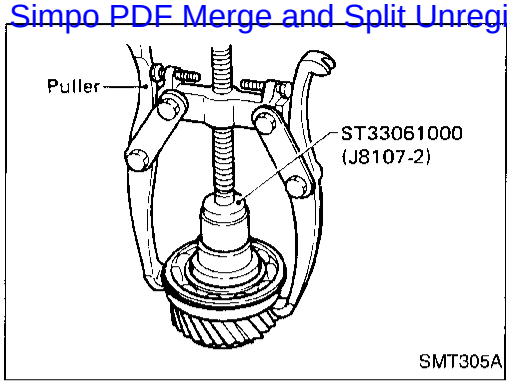

2. Pull out main gear bearing.

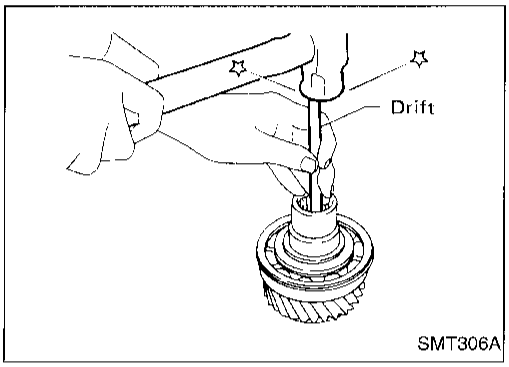

Plug

- **Always replace with a new one whenever it has been removed.**

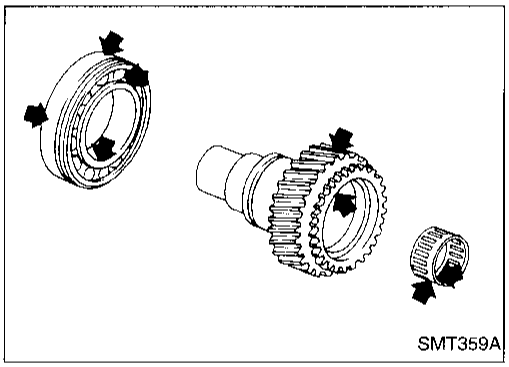

INSPECTION

Gear and shaft

- Check gears for excessive wear, chips or cracks.
- Check shaft for cracks or wear.

Bearing

- Make sure bearings roll freely and are free from noise, cracks, pitting or wear.

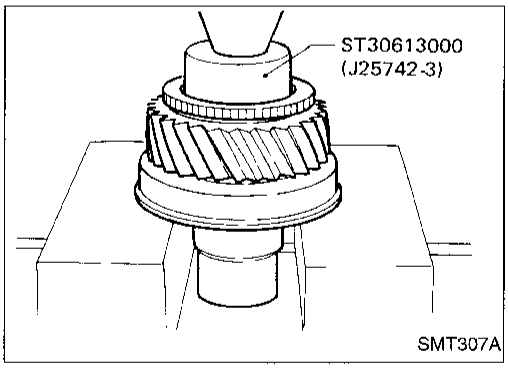

ASSEMBLY

Main gear bearing

1. Press on main gear bearing.

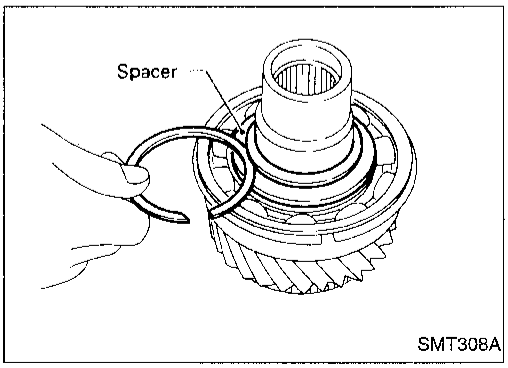

2. Select and install snap ring with proper thickness.
   Allowable clearance between snap ring and groove:
   0 - 0.15 mm (0 - 0.0059 in)
   Available snap ring for main gear bearing:
   Refer to SDS, TF-32.

Simpo PDF Merge and Split Unregistered Version - http://www.simpopdf.com

Main Gear (Cont'd)

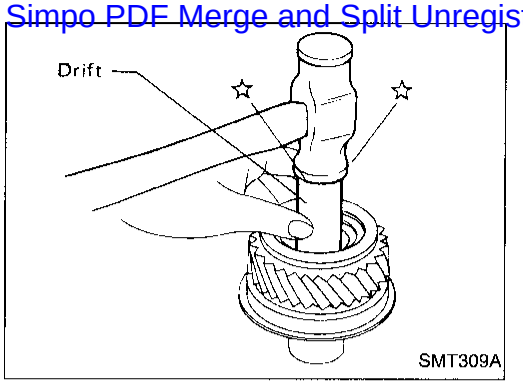

Plug

Apply sealant to plug, then install.

- **Use genuine anaerobic liquid gasket, Three Bond TB1215, Loctite Part No. 51813 or equivalent.**

Front Case

SHIFT SHAFT OIL SEAL

Removal

- Use a screwdriver to pry out old seal.
- Be careful not to damage case.
- Always replace with a new one whenever it has been removed.

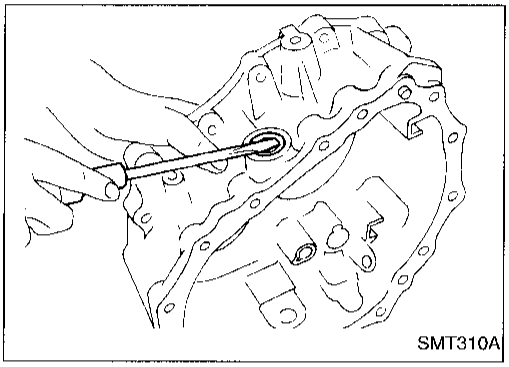

Installation

- Install new shift shaft oil seal until flush with case.
- Before installing, apply multi-purpose grease to seal lip.

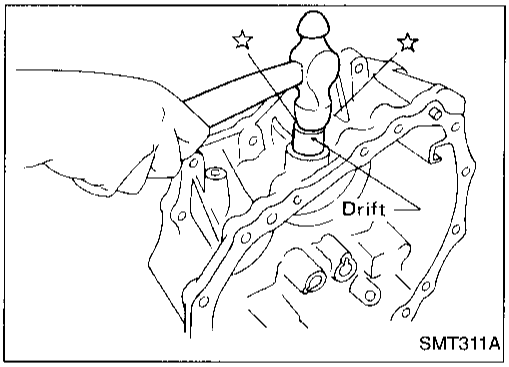

Front Case Cover

COVER OIL SEAL

Removal

- Drive out old seal from inside of front case cover.
- Be careful not to damage front case cover.

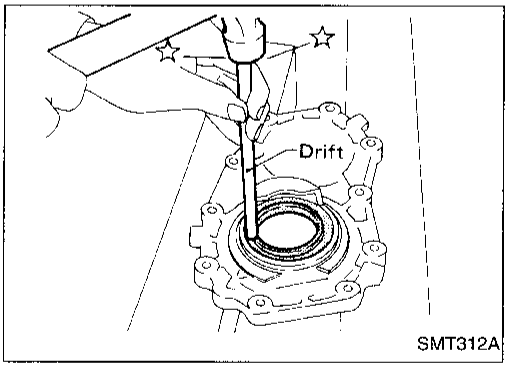

Installation

- Install new front case cover oil seal until it stops.
- Before installing, apply multi-purpose grease to seal lip.

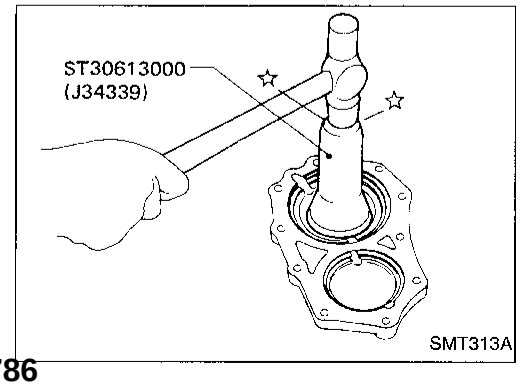

Simpo PDF Merge and Split Unregistered Version - http://www.simpopdf.com

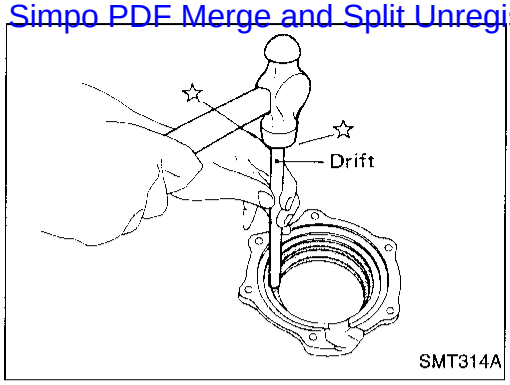

Bearing Retainer

OIL CATCHER

Removal

- Drive out oil catcher from inside of bearing retainer.
- Be careful not to damage bearing retainer.

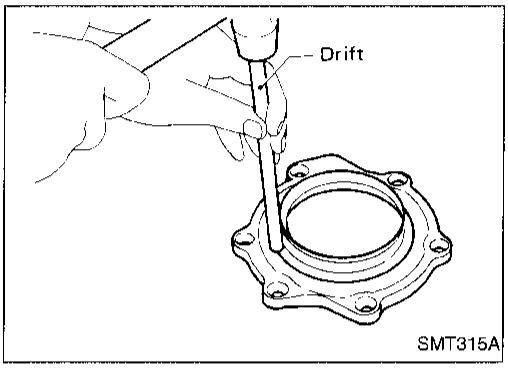

Installation

- Install oil catcher until it stops.
- Be careful not to damage or distort oil catcher or bearing retainer.
- Before installing, apply multi-purpose grease to seal lip.

Rear Case

REAR OIL SEAL

Removal

- Pull out rear oil seal.

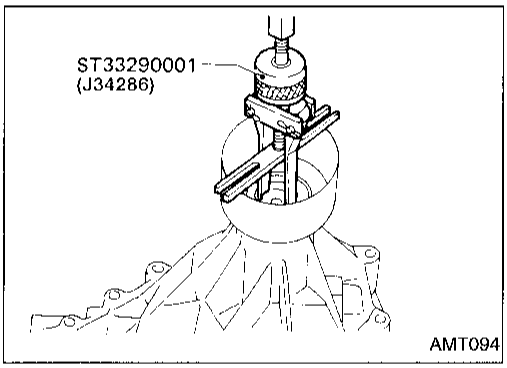

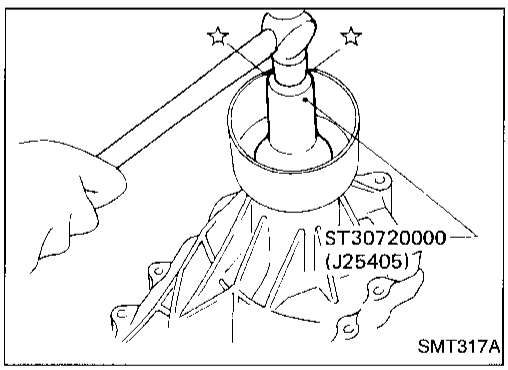

Installation

- Install new rear oil seal until it stops.
- Before installing, apply multi-purpose grease to seal lip.

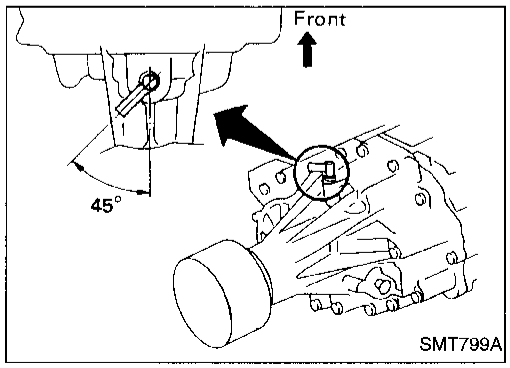

AIR BREATHER

Install as shown in illustration.

- **Use genuine thread locker, Three Bond TB1324, Loctite 271 or equivalent.**

Simpo PDF Merge and Split Unregistered Version - http://www.simpopdf.com

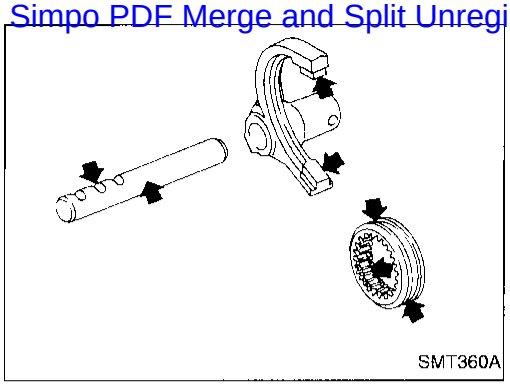
SMT360A

Shift Control Components

INSPECTION

- Check contact surface and sliding surface for wear, scratches, projections or other faulty conditions.

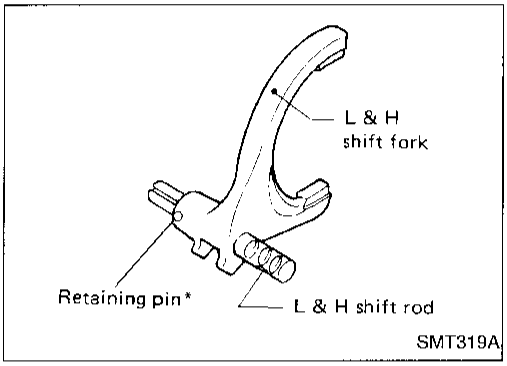

SMT319A

L & H SHIFT ROD & FORK

- Assemble as shown in illustration.

* Retaining pin is the same size as the one for 2-4 shift rod.

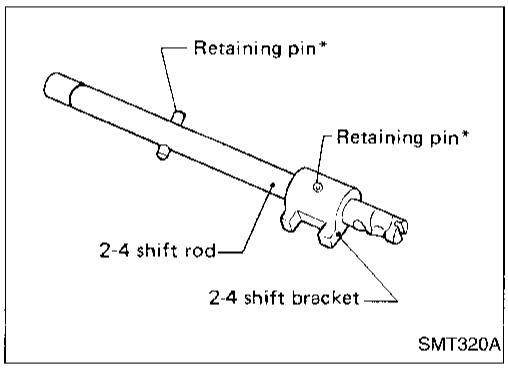

SMT320A

2-4 SHIFT ROD & FORK

- Assemble as shown in illustration.

* Retaining pins are the same size.

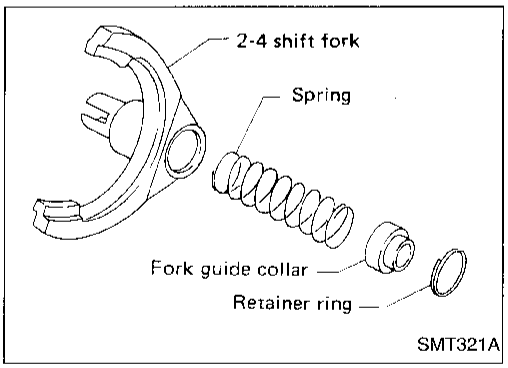

SMT321A

- **Pay special attention to the direction of fork guide collar.**

Simpo PDF Merge and Split Unregistered Version - http://www.simpopdf.com

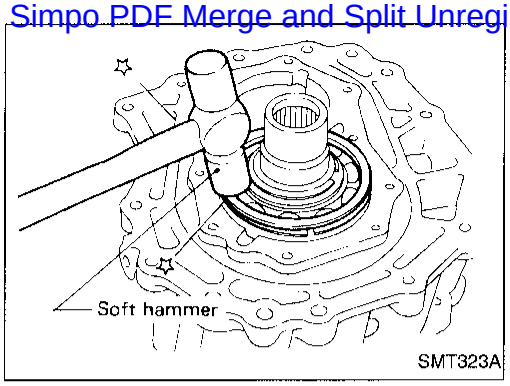

1. Assemble front case.
a. Install main gear assembly by tapping lightly.

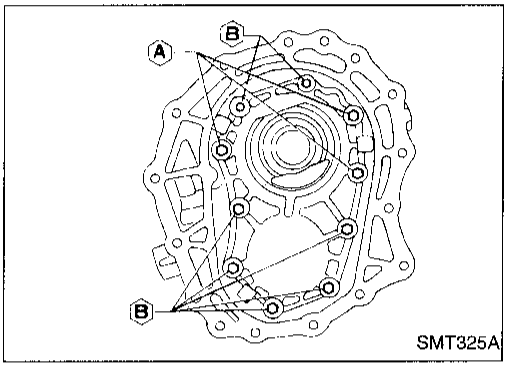

b. Apply sealant to the mating surface and bolts of front case cover, then attach it to the front case.

- **Use genuine anaerobic liquid gasket, Three Bond TB1215, Loctite Part No. 51813 or equivalent.**
- **These ten bolts should be coated with sealant.**

Bolts A:

: 16 - 21 N·m (1.6 - 2.1 kg-m, 12 - 15 ft-lb)

Bolts B:

: 19 - 24 N·m (1.9 - 2.4 kg-m, 14 - 17 ft-lb)

- **Use genuine thread locker, Three Bond TB1324, Loctite 271 or equivalent.**

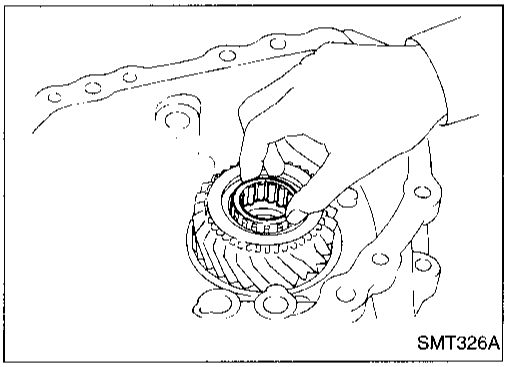

c. Apply gear oil to needle bearing and install it into main gear.

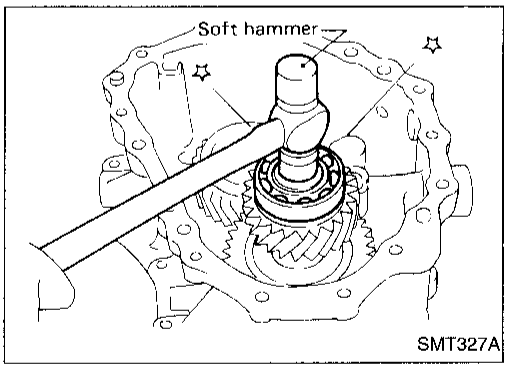

d. Install counter gear assembly by tapping lightly.

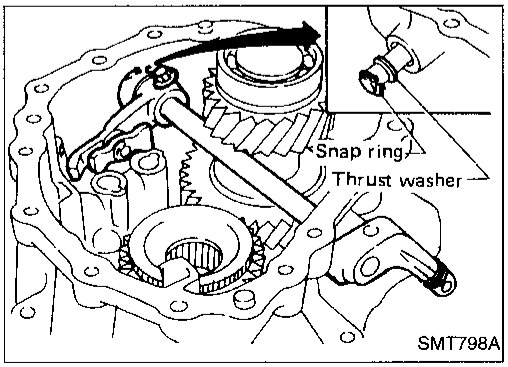

e. Install cross shaft and inner shift lever.

- **When replacing cross shaft, outer shift lever or outer shift lever lock pin, replace them as a set.**

Simpo PDF Merge and Split Unregistered Version - http://www.simpopdf.com

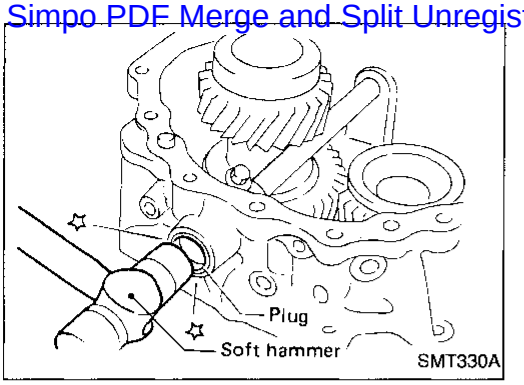

f. Apply sealant to plug, then install it into front case.
- **Use genuine anaerobic liquid gasket, Three Bond TB1215, Loctite Part No. 51813 or equivalent.**

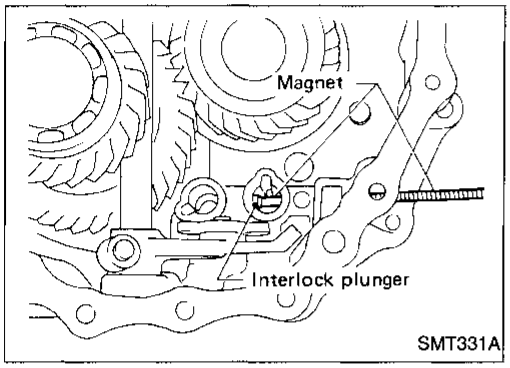

g. Insert interlock plunger into front case.

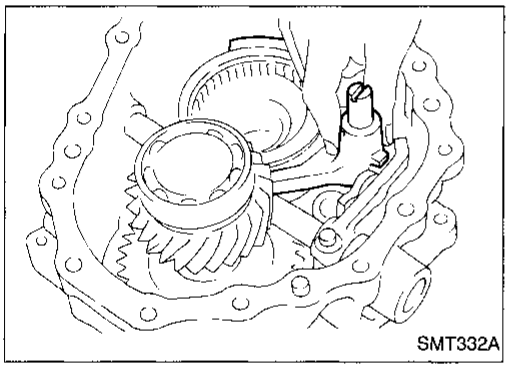

h. Install L & H shift rod and fork assembly with coupling sleeve.

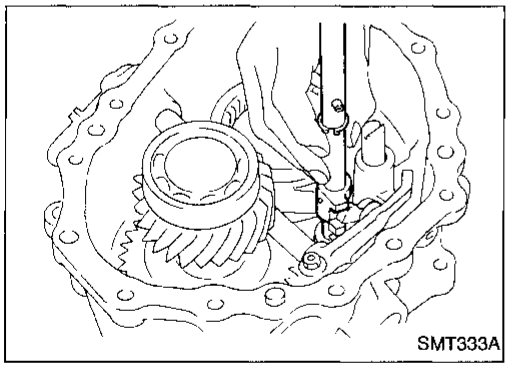

i. Install 2-4 shift rod.

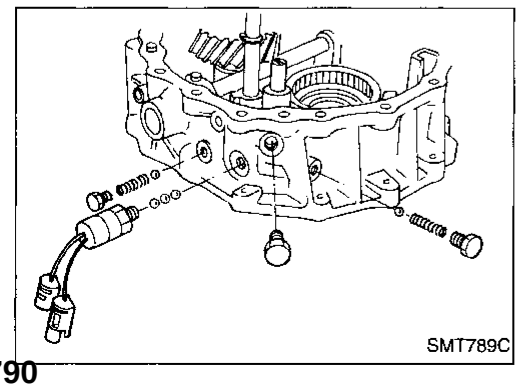

j. Install switches, check balls, check springs and plugs.
- **Apply sealant to switches and plugs.**
- **Use genuine thread locker, Three Bond TB1324, Loctite 271 or equivalent.**

Simpo PDF Merge and Split Unregistered Version - http://www.simpopdf.com

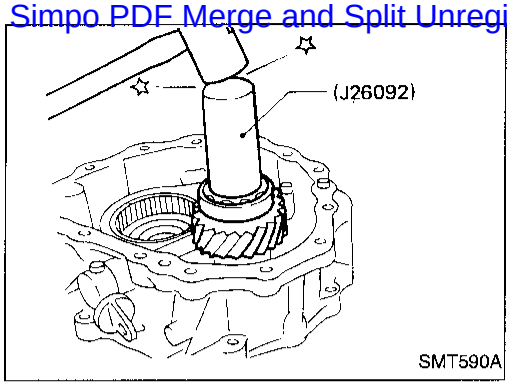

2. Select counter gear rear bearing shim.
a. Seat counter gear assembly.

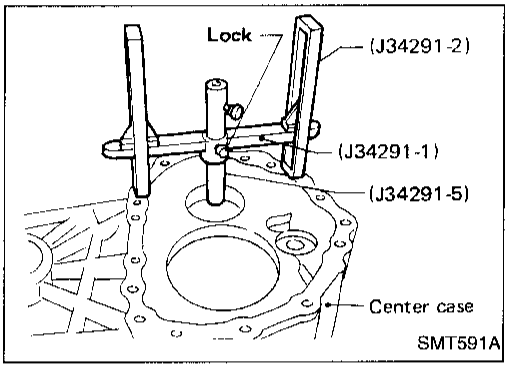

b. Place J34291-1 (bridge), J34291-2 (legs) and J34291-5 (gauging cylinder) on machined surface of center case, allowing gauging cylinder to rest on top outer portion of counter gear rear bearing. Lock gauging cylinder in place.

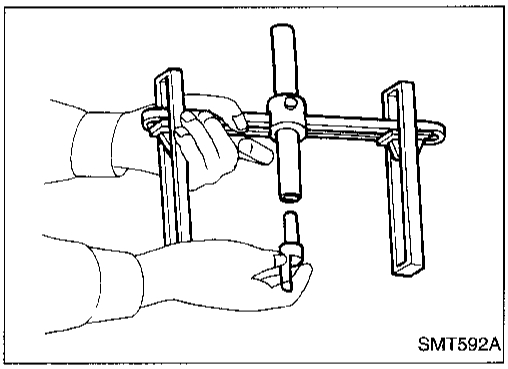

c. Insert J34291-20 (gauging plunger) into J34291-5 (gauging cylinder).

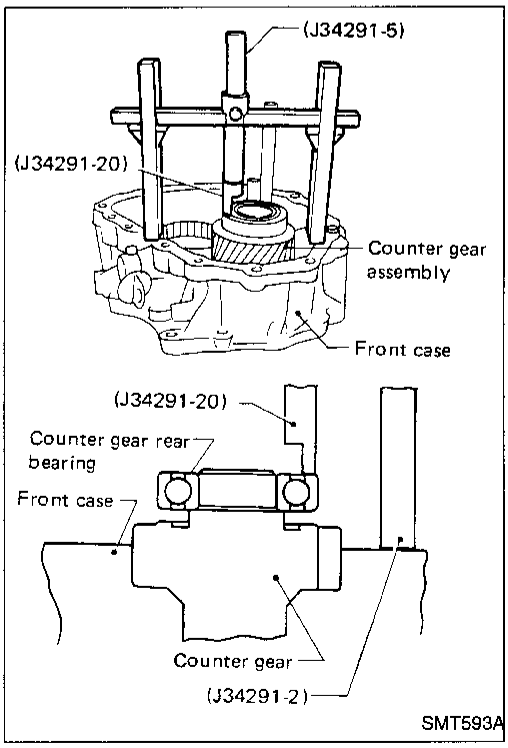

d. Place bridge, legs, gauging cylinder and gauging plunger onto machined surface of front case assembly, allowing gauging plunger to drop until it contacts counter gear rear bearing mating surface.

Simpo PDF Merge and Split Unregistered Version - http://www.simpopdf.com

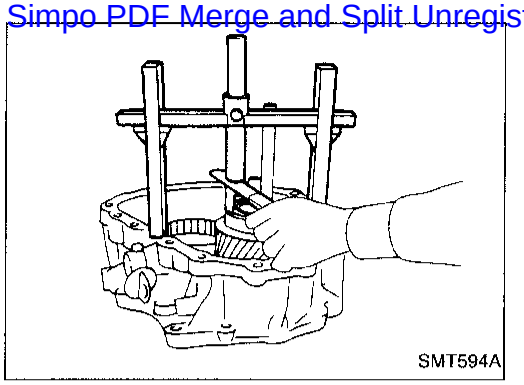
SMT594A

e. Lock gauging plunger in place and use feeler gauge to measure end play between gauging cylinder and gauging plunger.
f. Use measured distance to select correct counter gear rear bearing shim.

Allowable counter gear end play:
0 - 0.2 mm (0 - 0.008 in)
Available counter gear rear bearing shim:
Refer to SDS, TF-32.

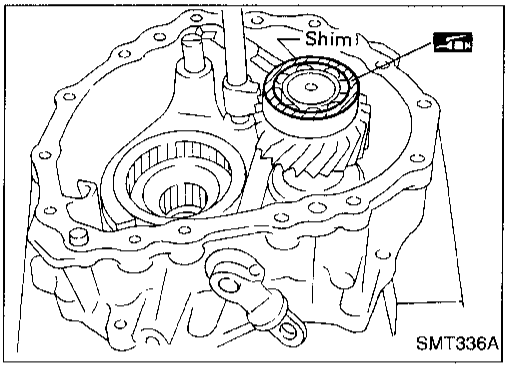

SMT336A

3. Place suitable shim with grease on counter gear rear bearing.
4. Apply gear oil to each part in front case.

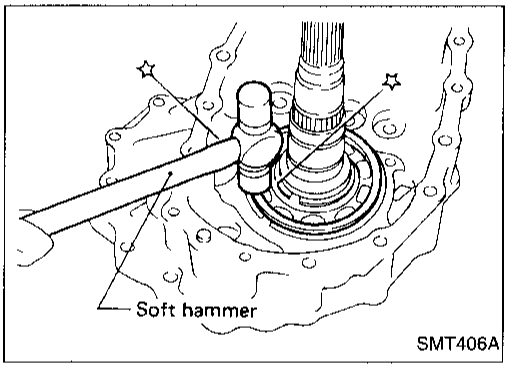

SMT406A

5. Assemble center case assembly.
a. Install mainshaft on center case by tapping lightly.

- **Apply gear oil to mainshaft front bearing.**

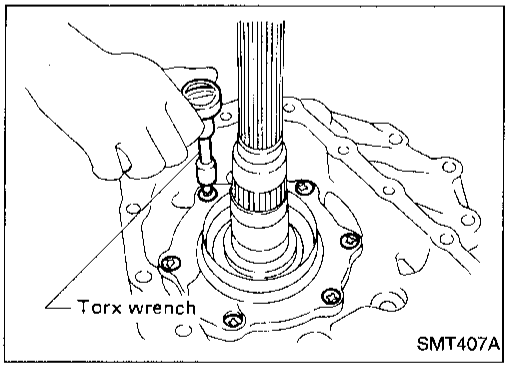

SMT407A

b. Install bearing retainer.
: 16 - 21 N·m (1.6 - 21 kg-m, 12 - 15 ft-lb)

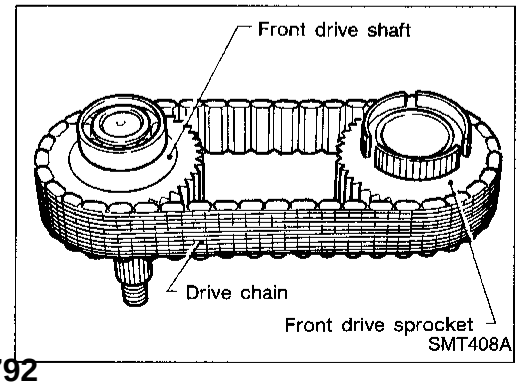

SMT408A

c. Put drive chain onto the front drive sprocket and front drive shaft, and then put them in center case.

- **Be sure to install drive chain in same direction as removed.**

Simpo PDF Merge and Split Unregistered Version - http://www.simpopdf.com

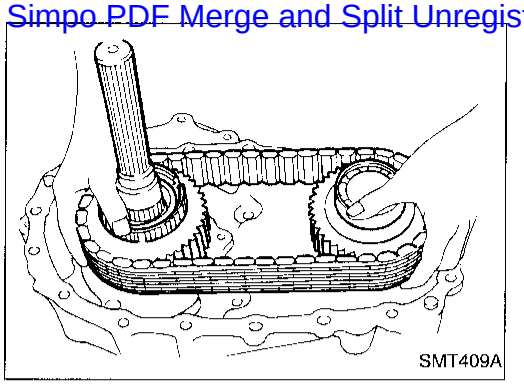
SMT409A

d. Install front drive shaft by tapping lightly.
- **Make sure shafts are aligned in the case.**

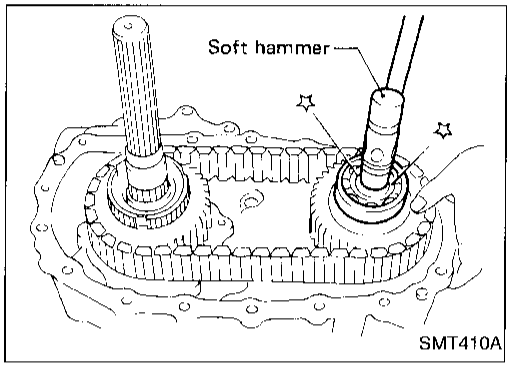

SMT410A

e. Apply gear oil to needle bearings and install them into front drive sprocket.
- **These needle bearings will be installed more easily if front drive sprocket is rotated while installing them.**

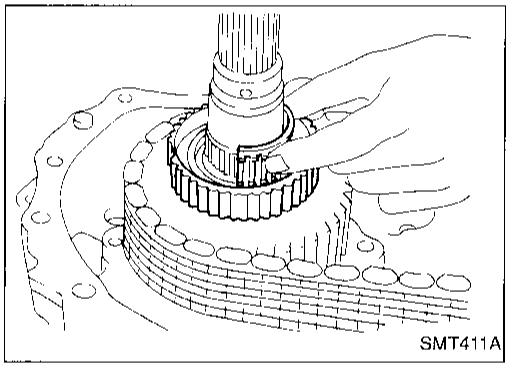
SMT411A

f. Install 2-4 coupling sleeve with 2-4 shift fork.
- **Pay attention to the direction of the coupling sleeve.**

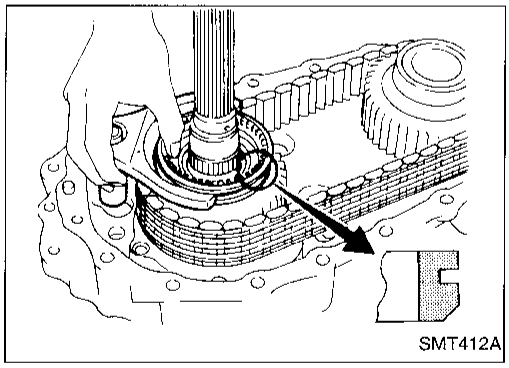
SMT412A

g. Install shifting inserts and spread spring.
- **Pay attention to the direction of shifting inserts.**

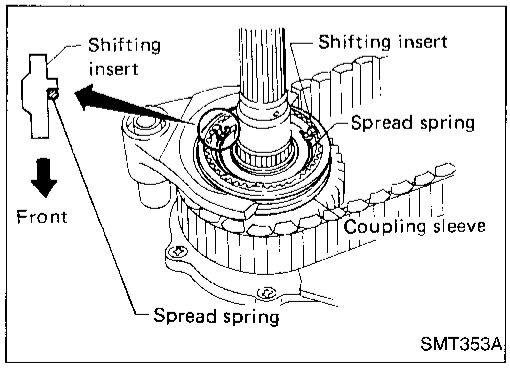

SMT353A

Simpo PDF Merge and Split Unregistered Version - http://www.simpopdf.com

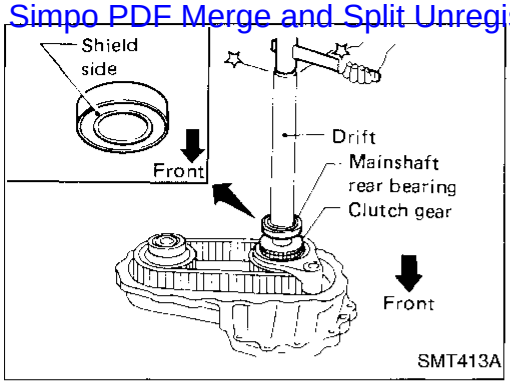

h. Install baulk ring, then install clutch gear and mainshaft rear bearing.

- **Place wooden block under mainshaft in order to protect mainshaft front bearing.**

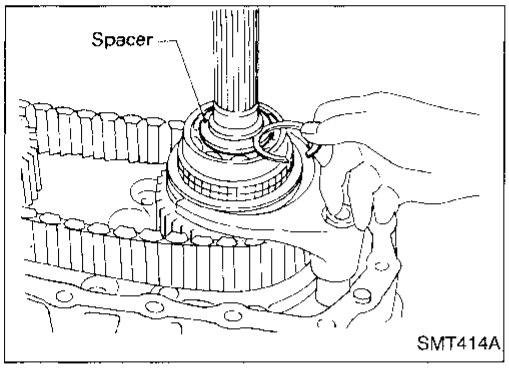

i. Install spacer.

j. Select and install snap ring with proper thickness.

Allowable clearance between snap ring and groove:
0 - 0.15 mm (0 - 0.0059 in)
Available snap ring for mainshaft rear bearing:
Refer to SDS, TF-32.

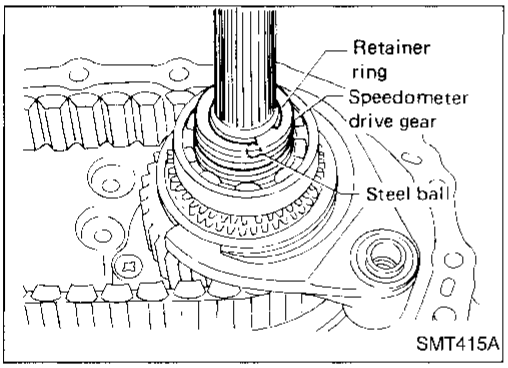

k. Install steel ball, speedometer drive gear and retainer ring.

- **Steel ball is the smallest check ball for this unit.**

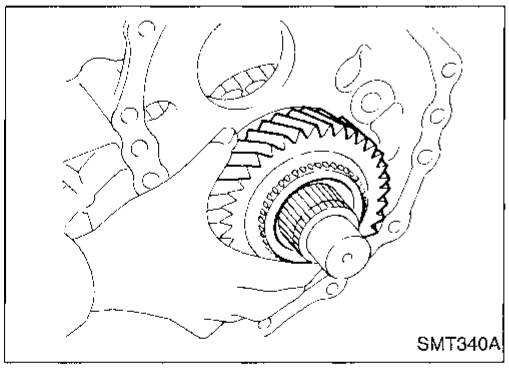

l. Install low gear and bearing onto mainshaft.

- **Apply gear oil to needle bearing.**

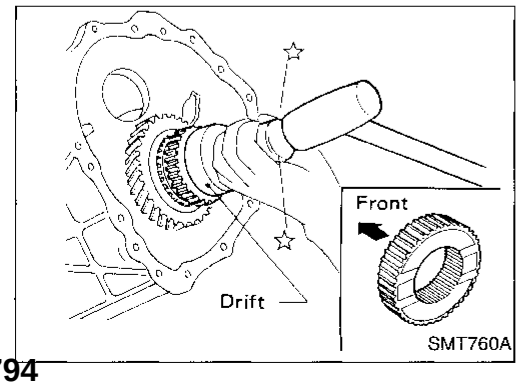

m. Install L & H hub and snap ring onto mainshaft.

- **Pay attention to the direction of L & H hub.**

Simpo PDF Merge and Split Unregistered Version - http://www.simpopdf.com

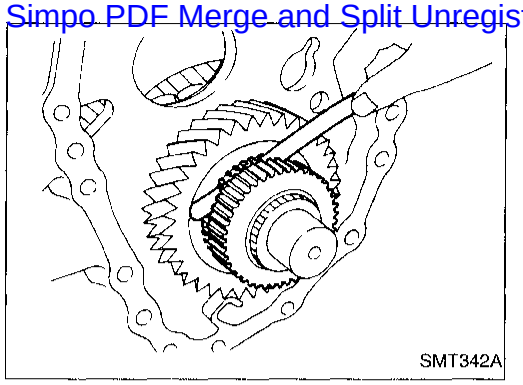
SMT342A

n. Measure low gear end play.
- **Standard: 0.2 - 0.35 mm (0.0079 - 0.0138 in)**

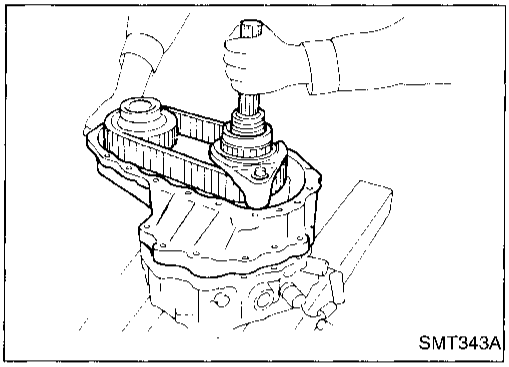
SMT343A

6. Apply sealant to mating surface of center case, then attach to front case and tighten bolts.
- **Use genuine anaerobic liquid gasket, Three Bond TB1215, Loctite Part No. 51813 or equivalent.**

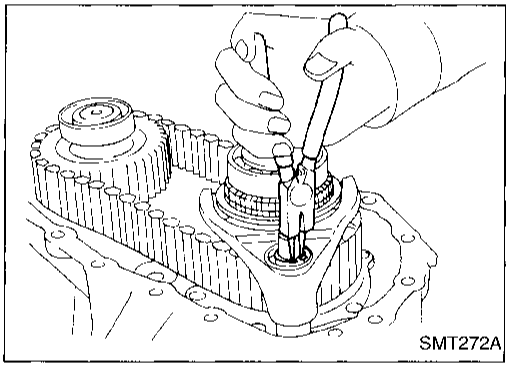
SMT272A

7. Install snap ring to 2-4 shift rod.

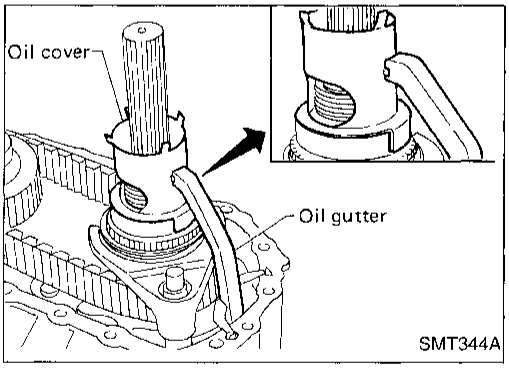

SMT344A

8. Install oil gutter and oil cover.
9. Apply gear oil to each part in center case.

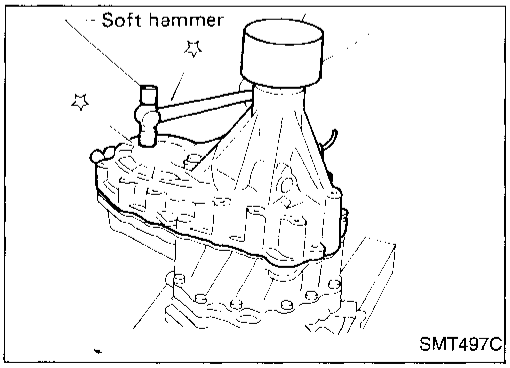

SMT497C

10. Apply sealant to mating surface of rear case, then attach it to center case and tighten bolts.
- **Use genuine anaerobic liquid gasket, Three Bond TB1215, Loctite Part No. 51813 or equivalent.**
11. Install 4WD switch.
- **Apply sealant to switch threads.**
- **Use genuine thread locker, Three Bond TB1324, Loctite 271 or equivalent.**

Simpo PDF Merge and Split Unregistered Version - http://www.simpopdf.com

General Specifications

Transfer model			TX10A
Gear ratio	High		1.000
	Low		2.020
Number of teeth	Main gear		29
	Low gear		37
	Counter gear	High	38
		Low	24
	Front drive sprocket		41
	Front drive shaft		41
Fluid capacity		ℓ (US qt, Imp qt)	2.2 (2-3/8, 2)

Inspection and Adjustment

CLEARANCE BETWEEN FRONT DRIVE SPROCKET AND 2-4 COUPLING SLEEVE

Unit: mm (in)

Allowable clearance "C"	0.2 - 0.54 (0.008 - 0.0213)

GEAR END PLAY

Unit: mm (in)

Front drive sprocket	0.2 - 0.35 (0.0079 - 0.0138)
Low gear	0.2 - 0.35 (0.0079 - 0.0138)
Counter gear	0 - 0.2 (0 - 0.008)

CLEARANCE BETWEEN BAULK RING AND CLUTCH GEAR

Unit: mm (in)

Standard	Wear limit
1.0 - 1.5 (0.039 - 0.059)	0.5 (0.020)

AVAILABLE SHIM

Counter gear rear bearing

Unit: mm (in)

Allowable clearance	0 - 0.2 (0 - 0.008)
Thickness	Part number
0.1 (0.004)	33112-C6900
0.2 (0.008)	33112-C6901
0.3 (0.012)	33112-C6902
0.4 (0.016)	33112-C6903
0.5 (0.020)	33112-33G00
0.6 (0.024)	33112-33G01

AVAILABLE SNAP RING

Mainshaft front bearing

Unit: mm (in)

Allowable clearance	0 - 0.15 (0 - 0.0059)
Thickness	Part number
3.1 (0.122)	33138-73P10
3.19 (0.126)	33138-73P11
3.28 (0.129)	33138-73P12

Main gear bearing

Unit: mm (in)

Allowable clearance	0 - 0.15 (0 - 0.0059)
Thickness	Part number
2.60 (0.102)	33114-73P00
2.69 (0.106)	33114-73P01
2.78 (0.109)	33114-73P02

Mainshaft rear bearing

Unit: mm (in)

Allowable clearance	0 - 0.15 (0 - 0.0059)
Thickness	Part number
1.8 (0.071)	33138-73P20
1.89 (0.074)	33138-73P21
1.98 (0.078)	33138-73P22
2.07 (0.081)	33138-73P23
2.16 (0.085)	33138-73P24

Simpo PDF Merge and Split Unregistered Version - http://www.simpopdf.com

SYSTEME DE FREINAGE

SECTION BR

TABLE DES MATIERES

PRECAUTIONS ET PREPARATION 1
Système de retenue supplémentaire (SRS) ''COUSSIN GONFLABLE'' (4 roues motrices) 1
Système de retenue supplementaire (SRS) ''COUSSIN GONFLABLE'' (2 roues motrices) 1
Précautions à prendre avec le système de freinage 2
Outillage spécial 2
Outillage en vente dans le commerce 2
CONTROLES ET REGLAGES 3
Contrôle du niveau de liquide de frein 3
Contrôle des canalisations de frein 3
Vidange du liquide de frein 3
Purge du circuit de freinage 4
CANALISATION HYDRAULIQUE DE FREIN 5
VANNE DE COMMANDE 7
Compensateur asservi 7
PEDALE DE FREIN ET SUPPORT 10
Dépose et repose 10
Inspection 11
Réglage 11
MAITRE-CYLINDRE 12
Dépose 12
Démontage 13
Inspection 13
Remontage 13
Repose 14
ASSISTANCE DE FREIN 15
Entretien sur le véhicule 15
Dépose 15
Inspection 15
Repose 16
FLEXIBLE A DEPRESSION 17
Dépose et repose 17
Inspection 17
POMPE A DEPRESSION 19
Dépose et repose 19
Inspection 19
FREIN AVANT A DISQUE 21
Remplacement des plaquettes 21
Dépose 22
Démontage 23
Inspection – Etrier 23
Inspection – Rotor 24
Remontage 24
Repose 25
Procédure de rodage des freins 25
FREIN ARRIERE A TAMBOUR 26
Dépose 27
Inspection – Cylindre de roue 28
Révision du cylindre de roue 28
Inspection – Tambour 28
Inspection – Garniture 28
Repose 28
COMMANDE DE FREIN DE STATIONNEMENT 30
Dépose et repose 31
Inspection 31
Réglage 31
SYSTEME ANTI-ENRAYEUR DE FREINS 32
Objet 32
Fonctionnement 32
Circuit hydraulique ABS 32
Composants du système 33
Description du système 33
Fonctionnement de l'actionneur d'ABS 34

Simpo PDF Merge and Split Unregistered Version - http://www.simpopdf.com

Dépose et repose 35
DIAGNOSTICS DES DEFAUTS 38
Comment effectuer les diagnostics des défauts permettant une réparation rapide et correcte .....
Vérification préliminaire.....
Emplacement des composants et du connecteur de faisceaux 40
Schéma de circuit/Modèles avec 2 roues motrices 41
Schéma de câblage – ABS –/2 roues motrices, conduite à gauche 42
Schéma de câblage – ABS –/2 roues motrices, conduite à droite 45
Schéma de circuit/Modèles avec 4 roues motrices 48
Schéma de câblage – ABS –/Modèles avec 4 roues motrices 49
Autodiagnostic 53
CONSULT 56
Procédure d'inspection CONSULT .....
Vérification du circuit de mise à la masse.....
DIAGNOSTICS DES DEFAUTS DES ELEMENTS D'AUTODIAGNOSTIC 63
Procédure de diagnostic 1 (Capteur de roue ou rotor).....
Procédure de diagnostic 2 (Electrovanne d'actionneur de l'ABS et relais d'électrovanne)... 65
Procédure de diagnostic 3 (Relais de moteur ou moteur) 67
Procédure de diagnostic 4 (Basse tension) 69
Procédure de diagnostic 5 (Capteur G) 70
Procédure de diagnostic 6 (Boîtier de contrôle).. 71
DIAGNOSTICS DES DEFAUTS POUR LES SYMPTOMES 72
Procédure de diagnostic 7 (L'ABS fonctionne fréquemment) 72
Procédure de diagnostic 8 (Fonctionnement anormal de la pédale) 73
Procédure de diagnostic 9 (Distance de freinage prolongée) 74
Procédure de diagnostic 10 (L'ABS ne fonctionne pas) 74
Procédure de diagnostic 11 (Vibration et bruit de la pédale) 75
Procédure de diagnostic 12 (Le témoin ne s'allume pas quand le contact d'allumage est mis sur ON) 76
Procédure de diagnostic 13 (Le témoin reste allumé quand le contact d'allumage est mis sur ON). 78
CARACTERISTIQUES ET VALEURS DE REGLAGE (SDS) 79
Caractéristiques générales 79
Inspection et réglage 81

Lecture des schémas de câblage :
- **Lire la section GI, ''COMMENT LIRE LES SCHEMAS DE CABLAGE''.**
- **Voir la section EL, ''DISPOSITION DE L'ALIMENTATION ELECTRIQUE'' pour le circuit de distribution électrique.**

Pour effectuer les diagnostics des défauts, lire la section GI ''COMMENT LIRE LES ORGANIGRAMMES DANS LES DIAGNOSTICS DES DEFAUTS'' et ''COMMENT EFFECTUER UN DIAGNOSTIC EFFICACE EN CAS D'INCIDENT ELECTRIQUE''.

Simpo PDF Merge and Split Unregistered Version - http://www.simpopdf.com

Système de retenue supplémentaire (SRS) ‘‘COUSSIN GONFLABLE’’ (4 roues motrices)

Utilisé avec une ceinture de sécurité, le coussin gonflable du système de retenue supplémentaire contribue à réduire les risques et la gravité des blessures subies par le conducteur en cas de collision frontale. Le système de retenue supplémentaire se compose d’un module de coussin gonflable (air bag) (situé dans le moyeu du volant), d’un boîtier de capteurs de diagnostic, d’un témoin avertisseur, d’un faisceau de câblage et d’un câble spiralé. Les informations nécessaires à l’entretien sans danger du système se trouvent à la **section RS** de ce manuel de réparation.

AVERTISSEMENT :

- **Pour ne pas affecter le fonctionnement du SRS, ce qui augmenterait les risques de blessures graves ou mortelles en cas de collision entraînant le déploiement du coussin gonflable (air bag), toutes les opérations d’entretien doivent être effectuées par un concessionnaire NISSAN agréé.**
- **Un entretien incorrect, y compris une mauvaise dépose ou repose du SRS, pourra entraîner des risques de blessures dues au déploiement accidentel du système.**
- **Ne pas utiliser d’équipement d’essai électrique sur les circuits connexes du SRS sauf sur indication de ce manuel de réparation. Les faisceaux de câblage électrique du SRS sont équipés d’une gaine d’isolation jaune soit juste devant les connecteurs de faisceau, soit sur le faisceau tout entier pour une identification plus rapide.**

Système de retenue supplementaire (SRS) ‘‘COUSSIN GONFLABLE’’ (2 roues motrices)

Utilisé avec une ceinture de sécurité, le coussin gonflable du système de retenue supplémentaire contribue à réduire les risques et la gravité des blessures subies par le conducteur en cas de collision frontale. Le système de retenue supplémentaire se compose d’un module de coussin gonflable (air bag) (situé dans le moyeu du volant), d’un boîtier de capteurs de diagnostic, d’un témoin avertisseur, d’un faisceau de câblage et d’un câble spiralé. Les informations nécessaires à l’entretien sans danger du système se trouvent à la **section RS** de ce manuel de réparation.

AVERTISSEMENT :

- **Pour ne pas affecter le fonctionnement du SRS, ce qui augmenterait les risques de blessures graves ou mortelles en cas de collision entraînant le déploiement du coussin gonflable (air bag), toutes les opérations d’entretien doivent être effectuées par un concessionnaire NISSAN agréé.**
- **Un entretien incorrect, y compris une mauvaise dépose ou repose du SRS, pourra entraîner des risques de blessures dues au déploiement accidentel du système.**
- **Ne pas utiliser d’équipement d’essai électrique sur les circuits connexes du SRS.**

Simpo PDF Merge and Split Unregistered Version - http://www.simpopdf.com

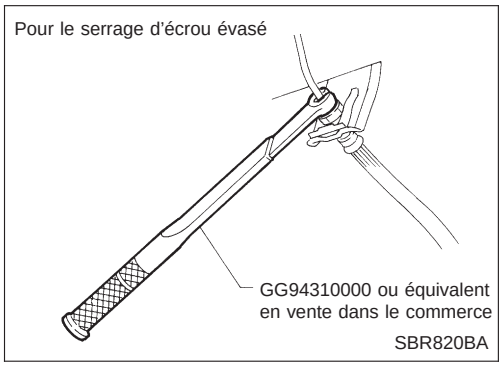

Précautions à prendre avec le système de freinage

- **Utiliser du liquide de frein DOT 3 ou DOT 4 *1.**
- **Ne jamais réutiliser du liquide de frein que l'on a vidangé.**
- **Veiller à ne pas éclabousser de liquide de frein les parties peintes ; cela pourrait endommager la peinture. Si du liquide de frein éclabousse des parties peintes, laver immédiatement avec de l'eau.**
- **Pour nettoyer les pièces du maître-cylindre, de l'étrier de frein à disque ou du cylindre de roue, toujours utiliser du liquide de frein propre.**
- **Ne jamais utiliser d'huiles minérales telles que l'essence ou le kérosène. Cela détruirait les pièces en caoutchouc du circuit hydraulique.**
- **Utiliser une clé à écrou évasé pour déposer et reposer les tuyaux de frein.**
- **Toujours serrer les conduites de frein au couple spécifié lors du remontage.**

AVERTISSEMENT :

- **Nettoyer les freins avec un aspirateur à poussières pour réduire les risques de présence de poussières dans l'air.**

*1 Se reporter à la section MA ''Liquides et Lubrifiants'', ''LIQUIDES ET LUBRIFIANTS CONSEILLES''.

Outillage spécial

Numéro de l'outil Nom de l'outil	Description	
GG94310000 Clé dynamométrique pour écrou évasé	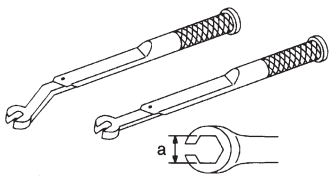 NT406	Dépose et repose de chaque tuyau de frein **a : 10 mm** **: 16,2 N·m (1,65 kg-m)**

Outillage en vente dans le commerce

Nom de l'outil	Description	
① Adaptateur pour écrou évasé ② Clé dynamométrique	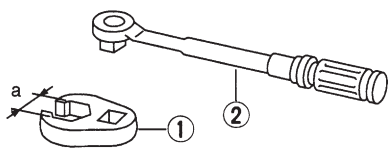 NT360	Dépose et repose de chaque tuyau de frein **a : 10 mm**
Manomètre du liquide de frein	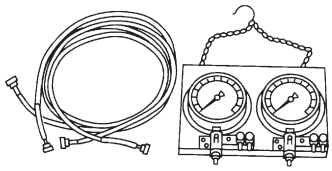 NT151	Mesure de la pression du liquide de frein

Simpo PDF Merge and Split Unregistered Version - http://www.simpopdf.com

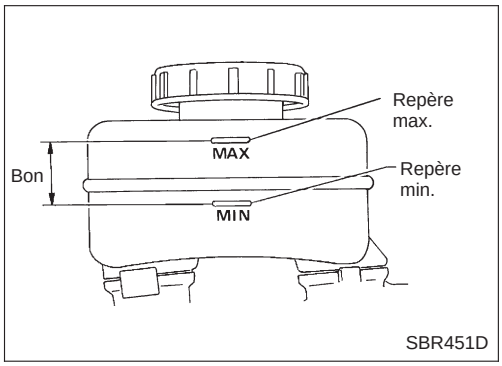

SBR451D

Contrôle du niveau de liquide de frein

- Contrôler le niveau du liquide dans le réservoir. Il faut qu'il se situe entre les repères maxi. et mini. sur le réservoir.
- Si le niveau du liquide est trop bas, vérifier l'étanchéité du circuit de freinage.
- Si la lampe témoin de frein s'allume, vérifier le contact de niveau de liquide de frein et le contact de frein de stationnement.

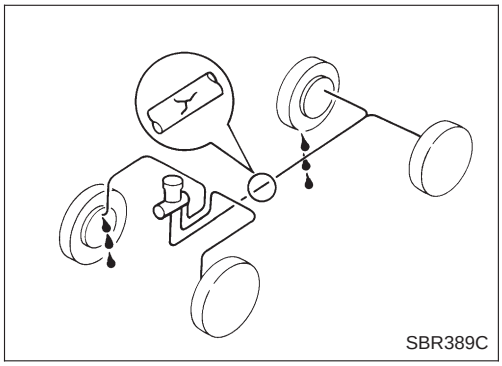
SBR389C

Contrôle des canalisations de frein

ATTENTION :
S'il y a une fuite aux raccords, les resserrer ou, en cas de besoin, remplacer les pièces endommagées.

1. Vérifier que les canalisations de frein (tuyaux et flexibles) ne sont pas fendues, détériorées ou endommagées de quelque façon que ce soit. Remplacer toutes les pièces endommagées.
2. Rechercher les fuites d'huile en enfonçant la pédale de frein à fond, moteur en marche.

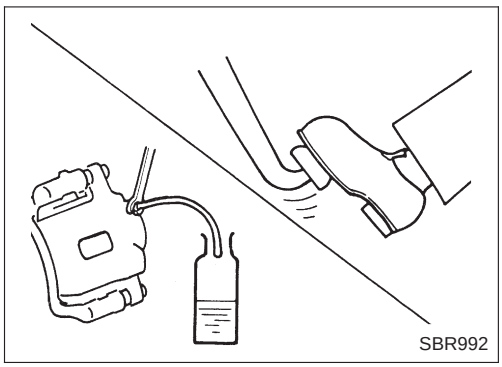
SBR992

Vidange du liquide de frein

ATTENTION :

- **Faire le plein de liquide de frein neuf DOT 3 ou DOT 4*1.**
- **Toujours veiller à ce que le niveau du liquide de frein soit au-dessus de la ligne de repère minimum du réservoir.**
- **Ne jamais réutiliser du liquide de frein que l'on a vidangé.**
- **Veiller à ne pas éclabousser de liquide de frein les parties peintes ; cela pourrait endommager la peinture. Si du liquide de frein éclabousse des parties peintes, laver immédiatement avec de l'eau.**

1. Nettoyer l'intérieur du réservoir, et faire le plein de liquide de frein neuf.
2. Connecter un tuyau en vinyle à chaque vanne de purge d'air.
3. Vidanger le liquide de frein par chaque vanne de purge d'air en enfonçant à fond la pédale de frein.
4. Remplir jusqu'à ce que du liquide de frein s'échappe de chaque vanne de purge d'air.
   Pour remplir le circuit de liquide neuf, suivre la même procédure que celle employée pour la purge du circuit hydraulique.
   Se reporter à ''Purge du circuit de freinage'', à la page BR-4.

1* Se reporter à la section MA ''Liquides et Lubrifiants'', ''LIQUIDES ET LUBRIFIANTS CONSEILLES''.

Simpo PDF Merge and Split Unregistered Version - http://www.simpopdf.com

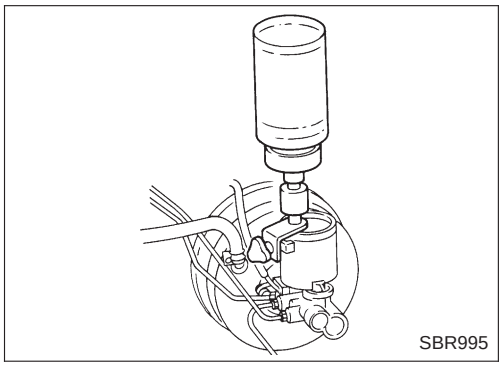
SBR995

Purge du circuit de freinage

ATTENTION :

- **Pendant la purge, surveiller avec soin le niveau du liquide de frein dans le maître-cylindre.**
- **Si l'on suspecte la présence d'air dans le maître-cylindre, commencer par purger l'air du maître-cylindre. Se reporter à ''Repose'' au chapitre ''MAITRE-CYLINDRE'', à la page BR-14.**
- **Remplir le réservoir de liquide de frein neuf DOT 3 ou DOT 4*1. S'assurer qu'il reste toujours plein pendant que l'on purge l'air du circuit.**
- **Placer un récipient sous le maître-cylindre pour éviter de répandre du liquide de frein.**
- **Pour les modèles avec ABS, couper le contact d'allumage et débrancher le connecteur de l'actionneur ABS ou le câble de batterie.**
- Purger l'air dans l'ordre suivant.
  a. Epurateur d'air de compensateur asservi
  b. Frein arrière gauche
  c. Frein arrière droit
  d. Frein avant gauche
  e. Frein avant droit

1* Se reporter à la section MA ''Liquides et Lubrifiants'', ''LIQUIDES ET LUBRIFIANTS CONSEILLES''.

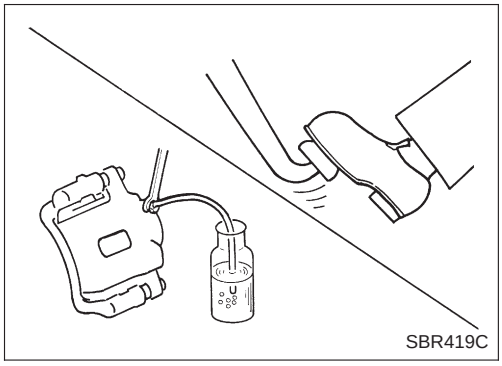
SBR419C

1. Raccorder un tuyau transparent en vinyle à la vanne de purge d'air.
2. Appuyer à fond sur la pédale de frein plusieurs fois de suite.
3. Lorsque la pédale de frein est enfoncée, ouvrir la vanne de purge d'air pour relâcher l'air.
4. Fermer la vanne de purge d'air.
5. Relâcher lentement la pédale de frein.
6. Répéter les étapes 2 à 5 jusqu'a ce que du liquide de frein limpide s'échappe de la vanne de purge d'air.
7. Serrer la vanne de purge d'air au couple spécifié.
   : 7 - 9 N·m (0,7 - 0,9 kg-m)

Simpo PDF Merge and Split Unregistered Version - http://www.simpopdf.com

Sans ABS

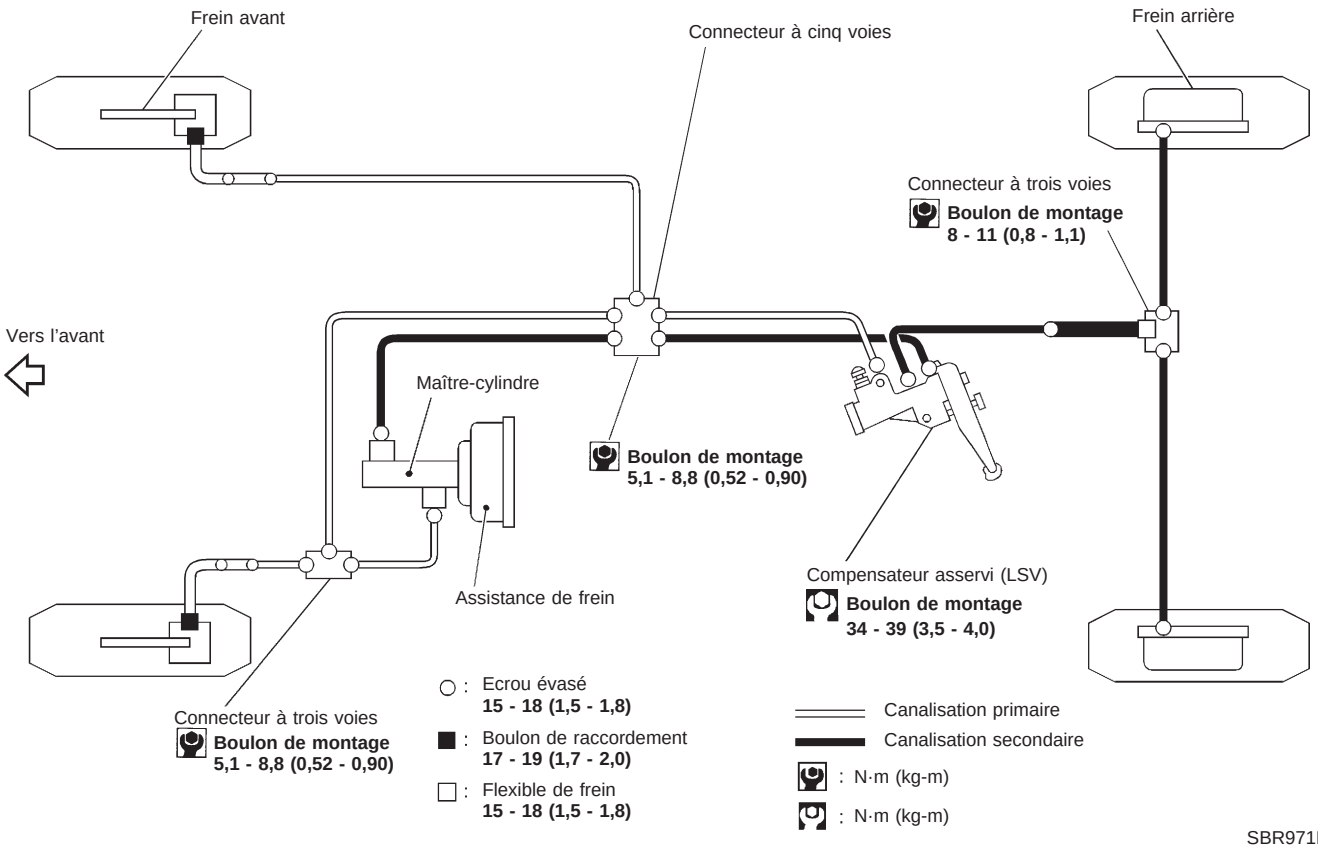

SBR971D

Avec ABS

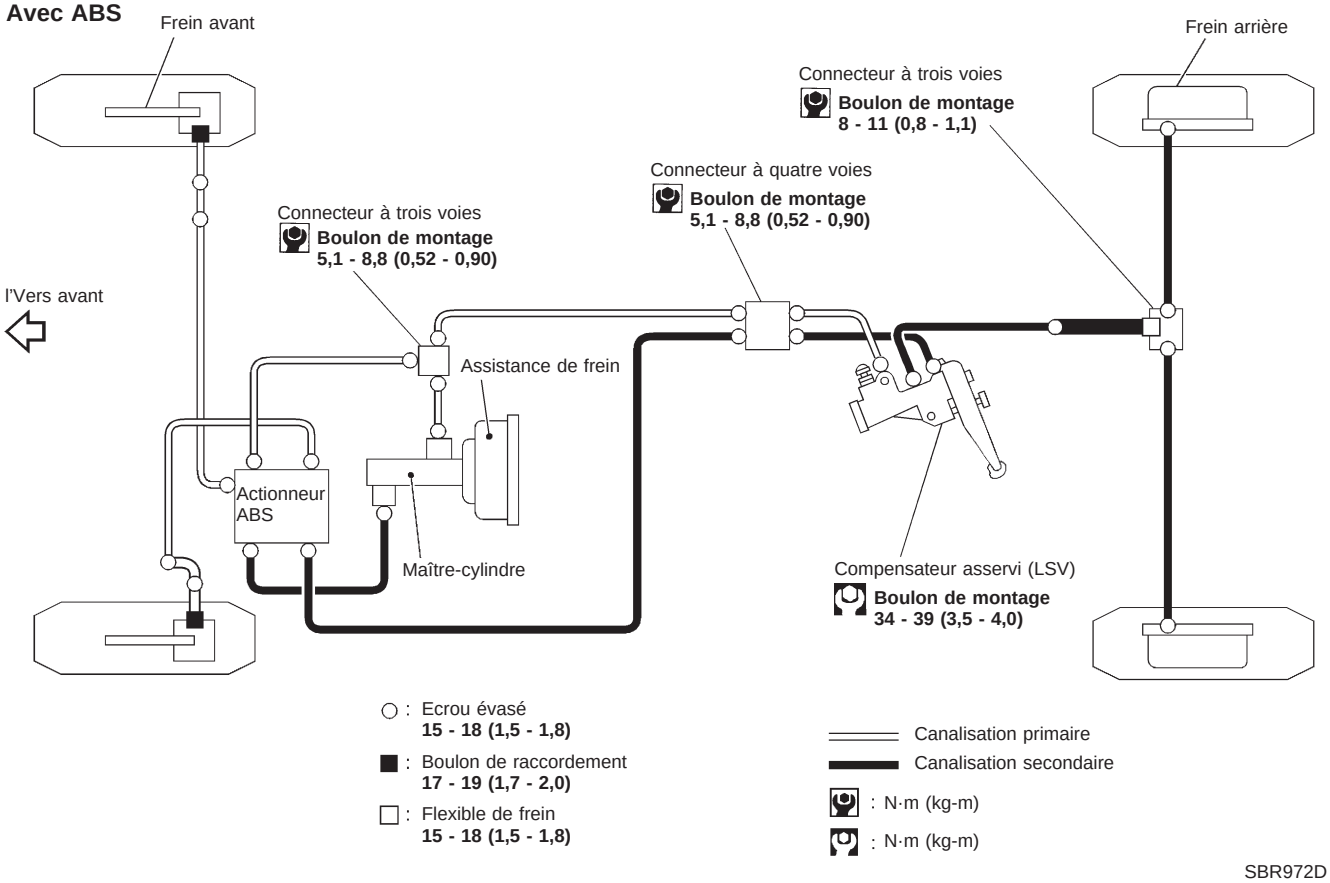

SBR972D

Simpo PDF Merge and Split Unregistered Version - http://www.simpopdf.com

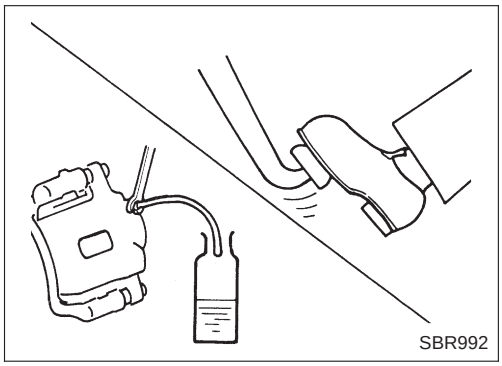
SBR992

DEPOSE

ATTENTION :

- **Veiller à ne pas éclabousser de liquide de frein les parties peintes ; cela pourrait endommager la peinture. Si du liquide de frein éclabousse des parties peintes, laver immédiatement avec de l'eau.**
- **Pour tous les flexibles, il ne doit pas y avoir de courbure excessive, de torsion ni de traction.**

1. Raccorder un tuyau en vinyle à la vanne de purge d'air.
2. Vidanger le liquide de frein par chaque vanne de purge d'air en enfonçant à fond la pédale de frein.
3. Déposer l'écrou évasé connectant le tuyau de frein au flexible, puis retirer le ressort de blocage.
4. Chaque fois que l'on déconnecte une canalisation de frein, il faut recouvrir les ouvertures pour empêcher la pénétration de poussières.

INSPECTION

Vérifier que les canalisations de frein (tuyaux et flexibles) ne sont pas fendues, détériorées ou endommagées de quelque façon que ce soit. Remplacer toutes les pièces endommagées.

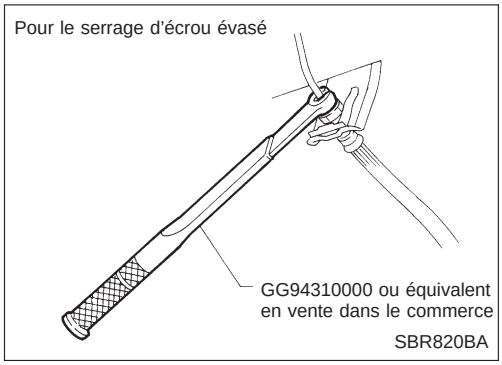

REPOSE

ATTENTION :

- **Faire le plein de liquide de frein neuf DOT 3 ou DOT 4*1.**
- **Ne jamais réutiliser du liquide de frein que l'on a vidangé.**

1. Serrer tous les écrous évasés et les boulons de raccord.
   Ecrou évasé :
   : 15 - 18 N·m (1,5 - 1,8 kg-m)
   Boulon de raccord :
   : 17 - 19 N·m (1,7 - 2,0 kg-m)
2. Remplir jusqu'à ce que du liquide de frein neuf s'échappe de chaque vanne de purge d'air.
3. Purger l'air. Se reporter à ''Purge du circuit de freinage'', à la page BR-4.

1* Se reporter à la section MA ''Liquides et Lubrifiants'', ''LIQUIDES ET LUBRIFIANTS CONSEILLES''.

Simpo PDF Merge and Split Unregistered Version - http://www.simpopdf.com

Compensateur asservi

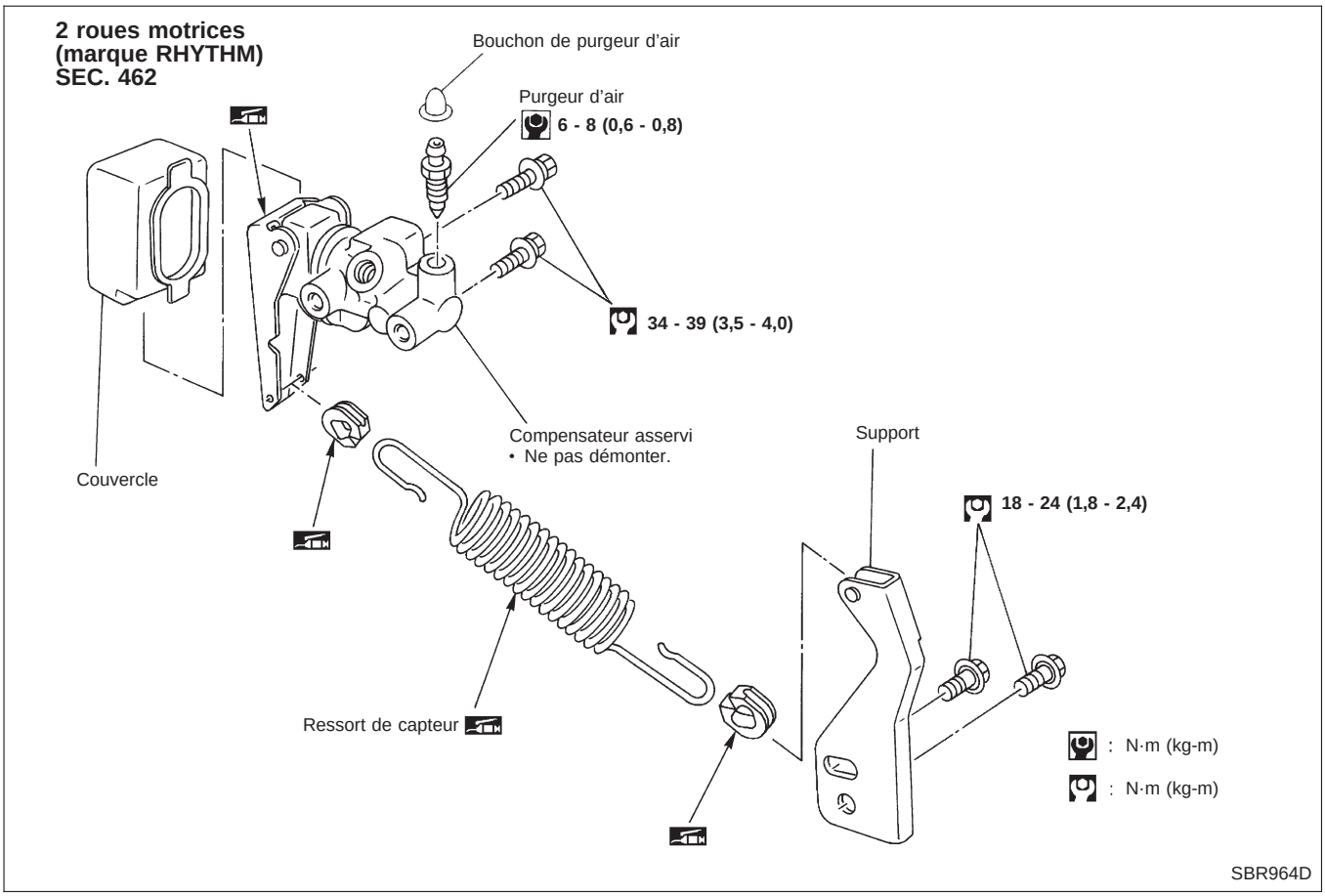

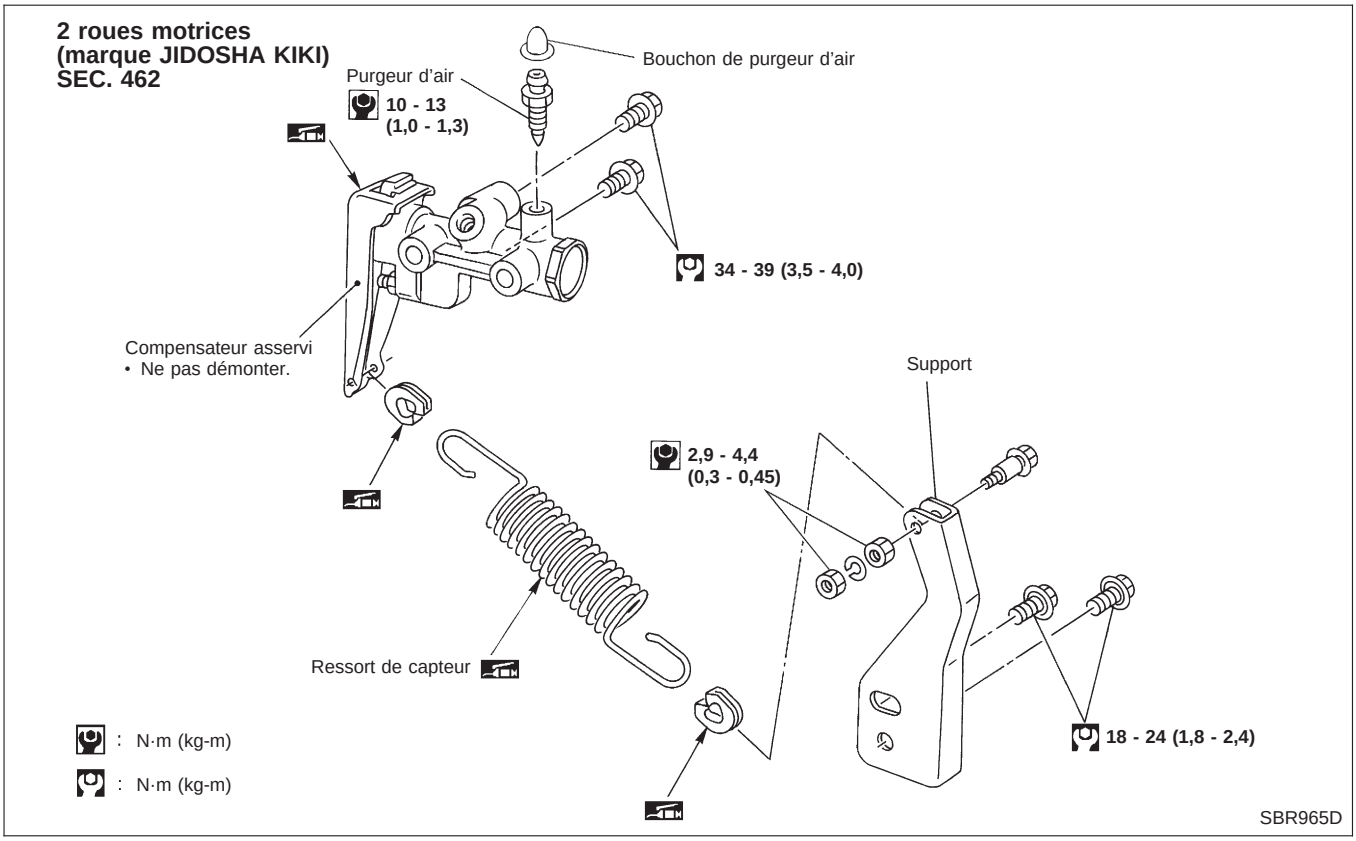

Simpo PDF Merge and Split Unregistered Version - http://www.simpopdf.com

Compensateur asservi (Suite)

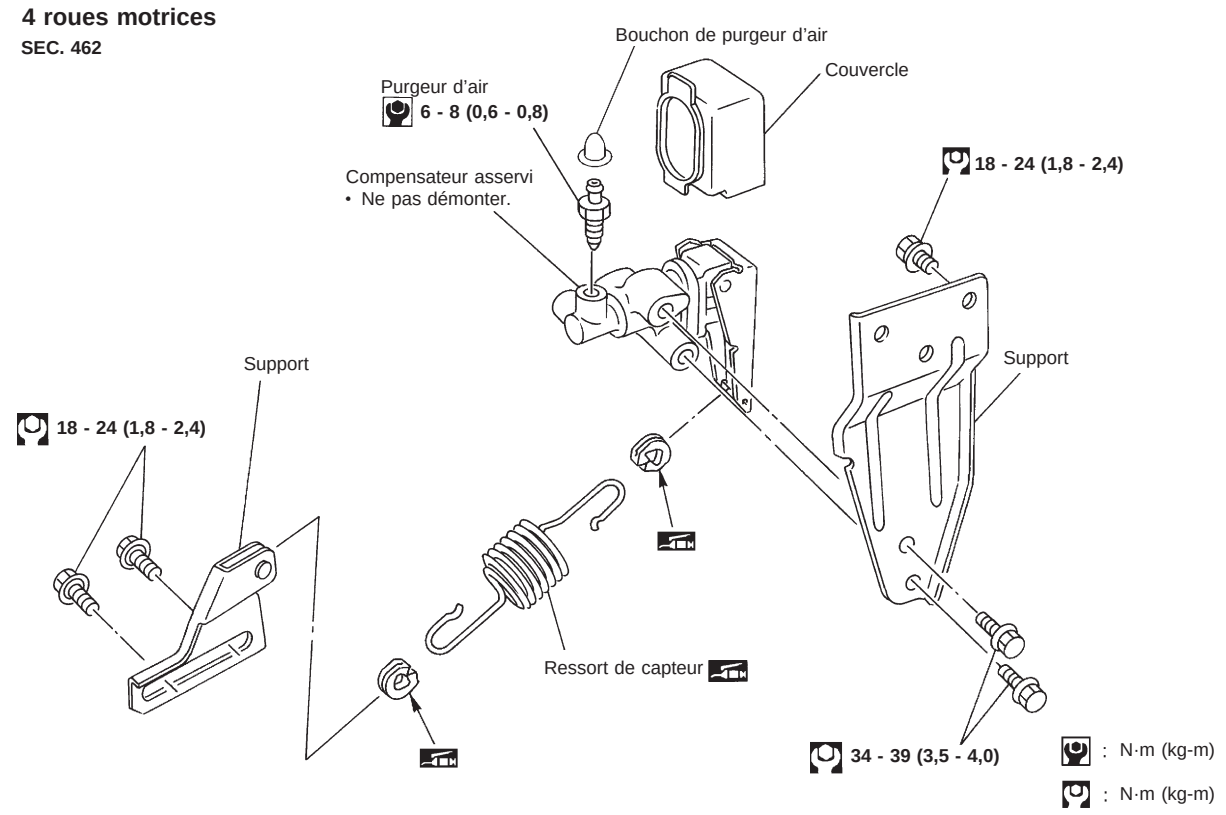

DEPOSE ET REPOSE

ATTENTION :

- **Faire le plein de liquide de frein neuf DOT 3 ou DOT 4*1.**
- **Veiller à ne pas éclabousser de liquide de frein les parties peintes ; cela pourrait endommager la peinture. Si du liquide de frein éclabousse des parties peintes, laver immédiatement avec de l'eau.**

1. Remplacer la timonerie endommagée du compensateur asservi comme un ensemble.
2. Lors du démontage, enduire la timonerie de graisse à usages multiples.
3. Serrer tous les écrous évasés et les boulons.
   : 15 - 18 N·m (1,5 - 1,8 kg-m)
4. Purger l'air. Se reporter à ''Purge du circuit de freinage'', à la page BR-4.

1* Se reporter à la section MA ''Liquides et Lubrifiants'', ''LIQUIDES ET LUBRIFIANTS CONSEILLES''.

Simpo PDF Merge and Split Unregistered Version - http://www.simpopdf.com

Compensateur asservi (Suite)

INSPECTION

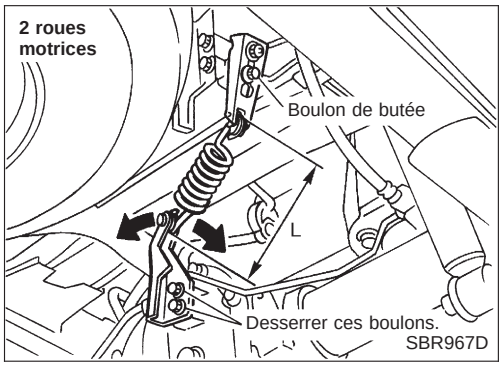

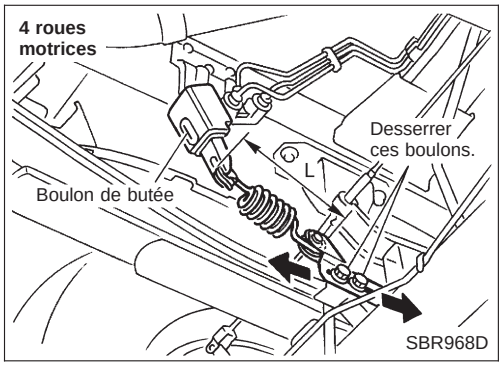

1. S'assurer que le véhicule est à vide*.
   * Avec pleins de carburant, de liquide de refroidissement et d'huile moteur. Mettre les pneus de secours, le cric, les outillages et les tapis à leur place.
2. Le conducteur doit être assis à sa place, et une personne doit être assise à l'arrière du véhicule. Puis demander à la personne assise à l'arrière de descendre lentement du véhicule. Ceci est nécessaire pour stabiliser la déflection de la suspension.
3. Régler la longueur ''L'' de la façon suivante :

a. Desserrer le contre-écrou du boulon de butée (2 roues motrices, marque JIDOSHA KIKI).
b. Tirer le levier vers le boulon de butée et le régler en tournant le boulon de butée.
c. Serrer le contre-écrou du boulon de butée (2 roues motrices, marque JIDOSHA KIKI).

Longueur ''L'' :
Modèles à 2 roues motrices
Environ 187,3 mm
Modèles à 4 roues motrices
Environ 158,1 mm

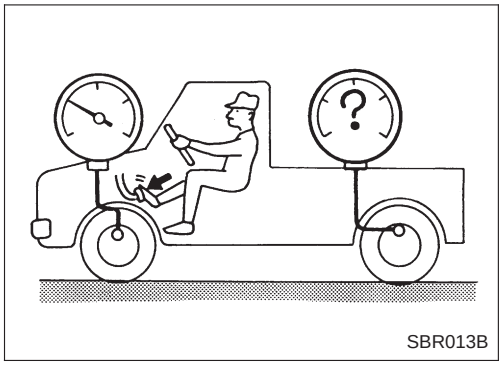

4. Installer le manomètre à l'avant et à l'arrière du purgeur d'air de frein.
5. Purger de l'air de l'outil spécial.
6. Faire monter la pression sur le frein avant à 4 904 kPa (49,0 bar, 50 kg/cm^2) et 9 807 kPa (98,1 bar, 100 kg/cm^2), puis vérifier la pression sur le frein arrière.

Pression au frein arrière :
Se reporter au tableau ci-dessous.

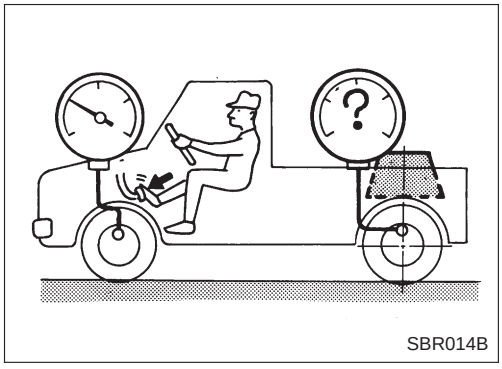

7. Déplacer lentement un poids vers le centre de l'essieu arrière de manière à ce que la longueur du ressort de régulation soit la même que dans des conditions de charge (voir le tableau ci-dessous). Contrôler la pression aux freins arrière de la façon décrite à l'étape 6.

Unité : kPa (bar, kg/cm^2)

Pression au frein avant	Pression au frein arrière			
	2 roues motrices		4 roues motrices	
	A vide L = 187,3 mm	En charge L = 204,0 mm	A vide L = 158,1 mm	En charge L = 184,0 mm
4 904 (49,0, 50)	1 667 - 2 648 (16,7 - 26,5, 17 - 27)	3 334 - 4 315 (33,3 - 43,2, 34 - 44)	1 863 - 2 844 (18,6 - 28,4, 19 - 29)	3 334 - 4 315 (33,3 - 43,2, 34 - 44)
9 807 (98,1, 100)	2 844 - 3 825 (28,4 - 38,2, 29 - 39)	3 629 - 5 590 (36,3 - 55,9, 37 - 57)	2 059 - 4 021 (20,6 - 40,2, 21 - 41)	3 629 - 5 590 (36,3 - 55,9, 37 - 57)

Simpo PDF Merge and Split Unregistered Version - http://www.simpopdf.com

Dépose et repose

Conduite à gauche

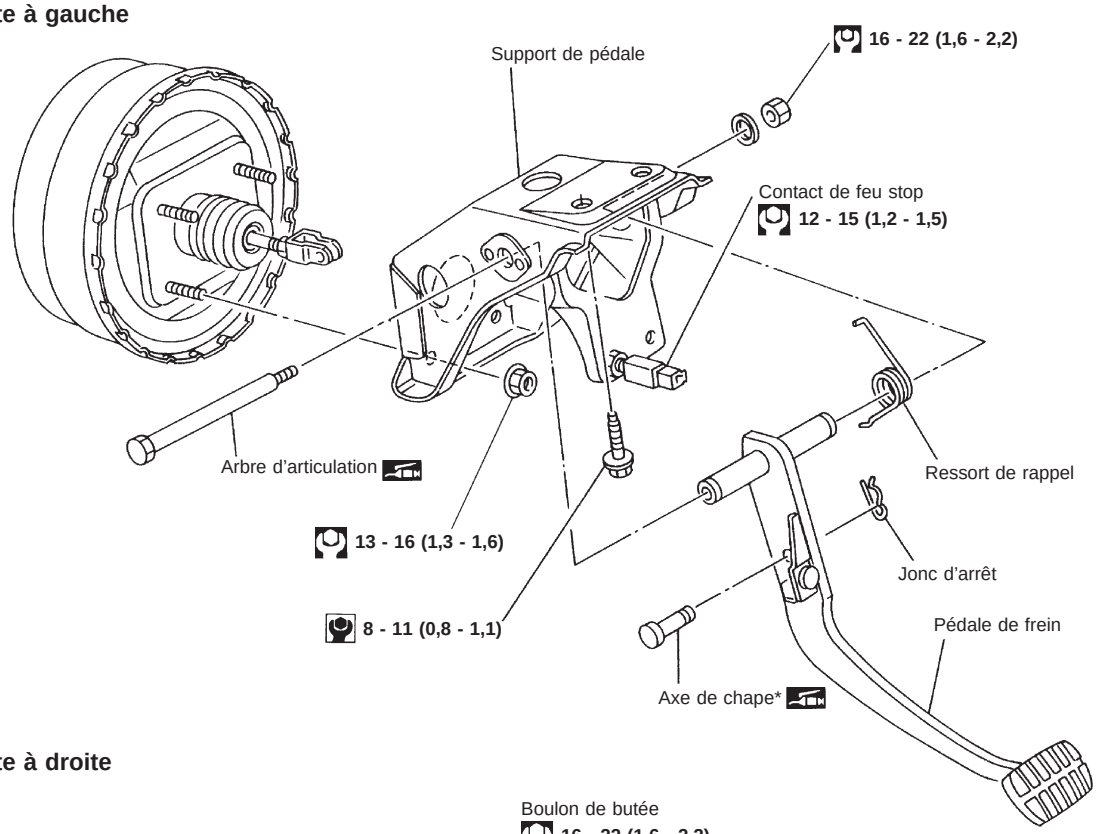

Conduite à droite

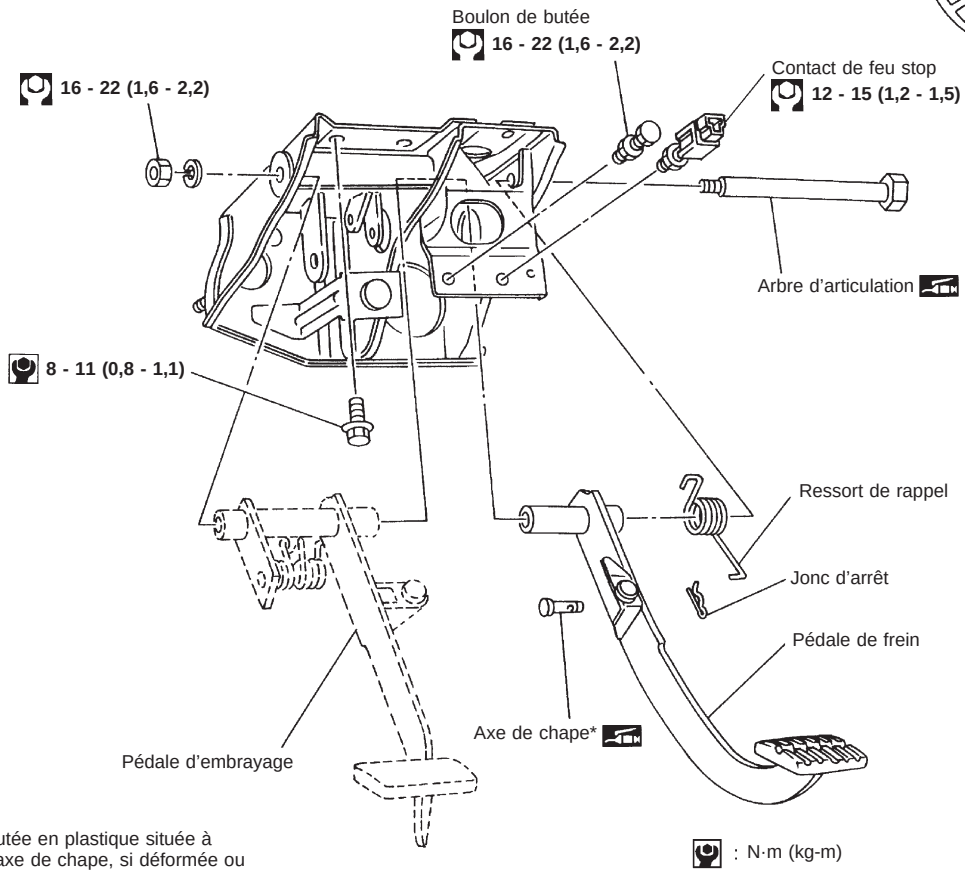

* Remplacer la butée en plastique située à l'extrémité de l'axe de chape, si déformée ou endommagée.

: N·m (kg-m)

: N·m (kg-m)

SBR969DA

Simpo PDF Merge and Split Unregistered Version - http://www.simpopdf.com

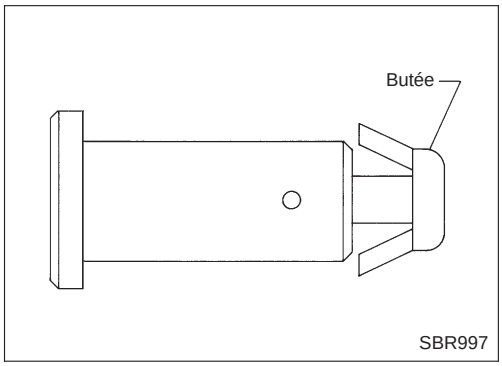

Inspection

Vérifier la pédale de frein par rapport aux éléments suivants :

- Coude de la pédale de frein
- Déformation de l'axe de chape
- Fissure sur toute partie soudée
- Fissure ou déformation de la butée d'axe de chape

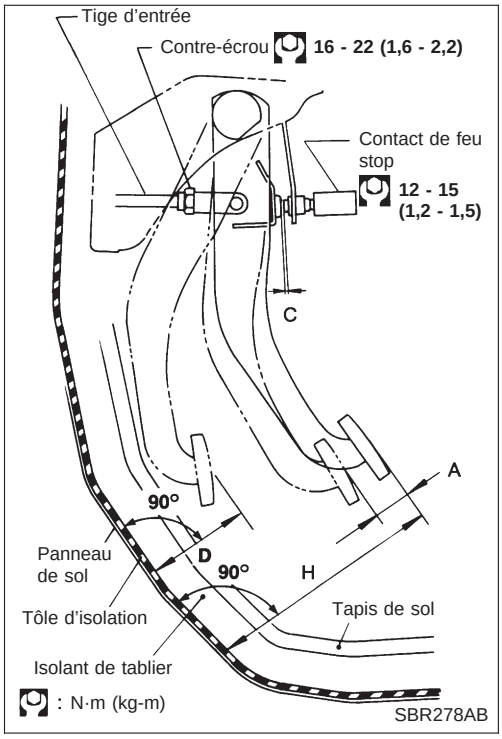

Réglage

Vérifier la hauteur libre de la pédale de frein à partir du panneau de renfort de tablier.

H : Hauteur libre
Consulter les SDS, page BR-81.

D : Course complète
Consulter les SDS, page BR-81.
Sous une force de 490 N (50 kg), alors que le moteur tourne

C : Jeu entre butée de pédale et extrémité filetée du contact de feu stop
0,3 - 1,0 mm

A : Jeu libre de pédale à la chape
1 - 3 mm

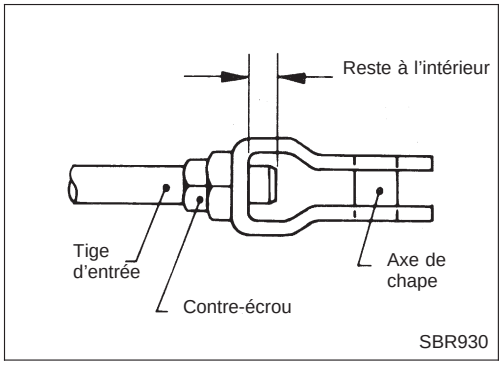

Si nécessaire, régler la hauteur libre de pédale de frein.

1. Desserrer le contre-écrou et régler la hauteur libre de la pédale en tournant la tige d'entrée d'assistance de freinage. Puis resserrer le contre-écrou.

- **S'assurer que la pointe de la tige d'entrée reste à l'intérieur.**

2. Desserrer le contre-écrou et régler le jeu ''C'' avec le contact de feu stop. Puis serrer les contre-écrous.
3. Vérifier le jeu libre de la pédale.

- **S'assurer que les feux de stop s'éteignent quand la pédale est relâchée.**

4. Vérifier la hauteur de la pédale de frein une fois enfoncée, moteur en marche. Si elle est inférieure aux limites spécifiées, vérifier que le circuit de freinage ne présente pas de fuites, d'accumulation d'air et que ses composants ne sont pas endommagés (maître-cylindre, cylindre de roue, etc.). Puis procéder aux réparations nécessaires.

Simpo PDF Merge and Split Unregistered Version - http://www.simpopdf.com

SEC. 460

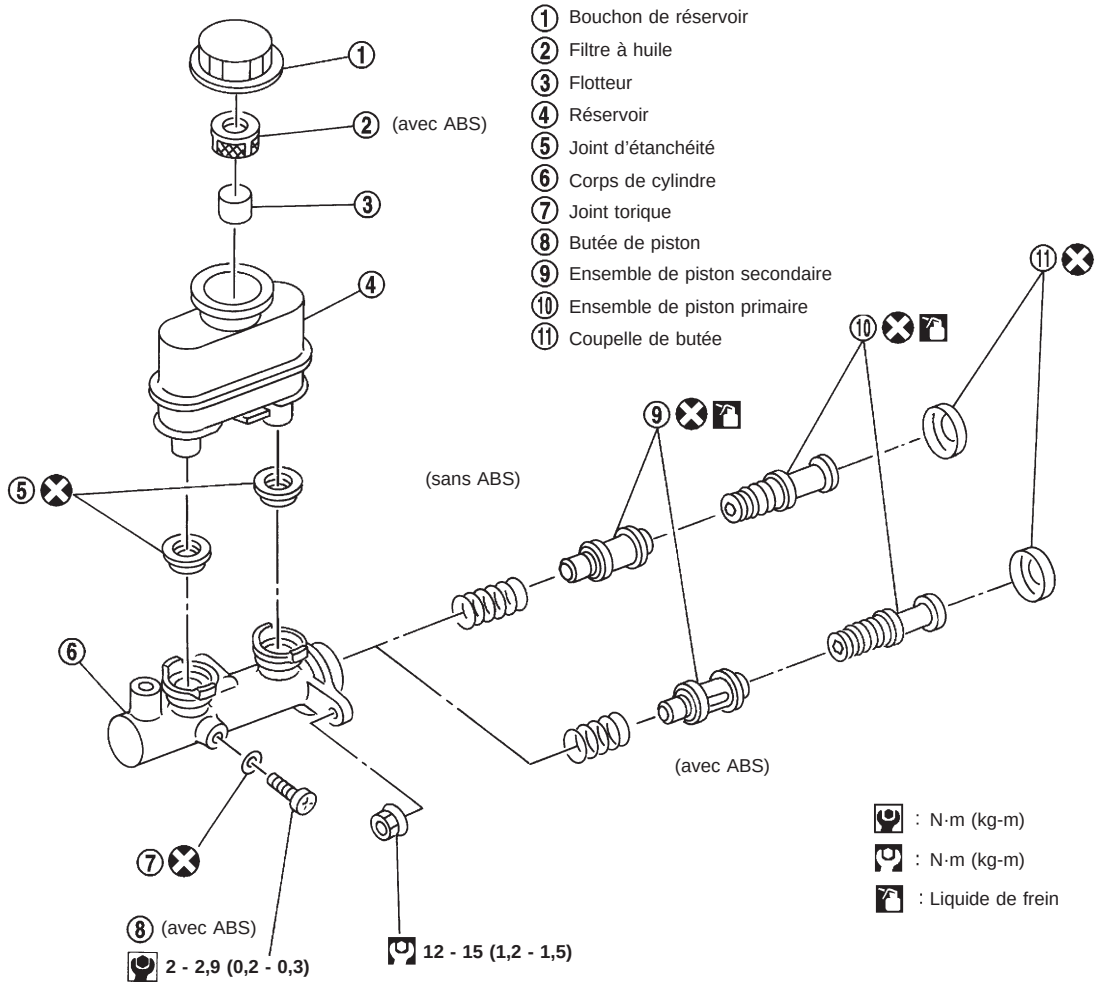

SBR970D

Dépose

ATTENTION :

- **Veiller à ne pas éclabousser de liquide de frein les parties peintes ; cela pourrait endommager la peinture. Si du liquide de frein éclabousse des parties peintes, laver immédiatement avec de l'eau.**
- **En cas de fuite de liquide de frein au niveau du maître-cylindre, démonter le cylindre. Puis vérifier si les coupelles de piston ne sont pas déformées ou rayées, et remplacer les parties endommagées.**

1. Raccorder un tuyau en vinyle à la vanne de purge d'air.
2. Vidanger le liquide de frein par chaque vanne de purge d'air en enfonçant à fond la pédale de frein pour vider le maître-cylindre.
3. Déposer les écrous évasés de tuyau de frein.
4. Déposer les écrous de fixation du maître-cylindre.

Simpo PDF Merge and Split Unregistered Version - http://www.simpopdf.com

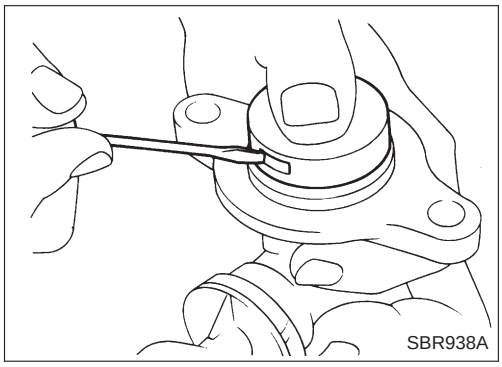
SBR938A

Démontage

1. Replier les griffes du chapeau de butée vers l'extérieur.

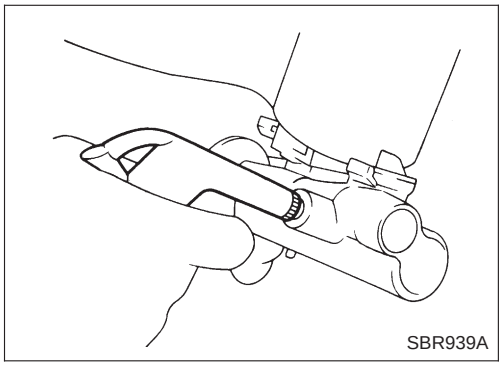
SBR939A

2. Déposer les ensembles de pistons.
- **S'il est difficile de déposer l'ensemble de piston secondaire, insuffler progressivement de l'air comprimé par la sortie de liquide de frein.**
3. Sortir le réservoir.

Inspection

Vérifier sur la paroi interne du maître-cylindre si les goupilles sont percées ou éraflées. Les remplacer si elles sont endommagées.

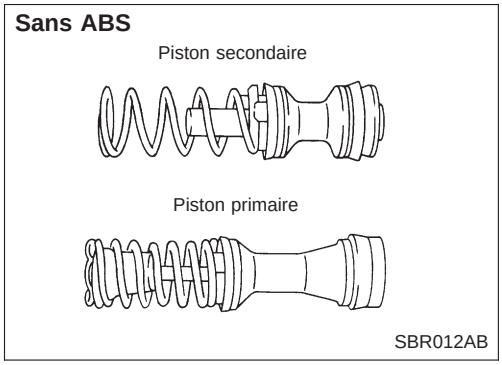

SBR012AB

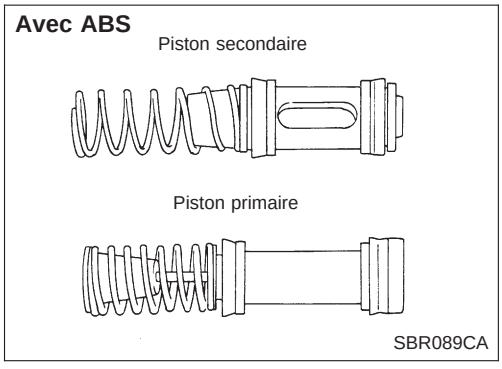

SBR089CA

Remontage

1. Introduire l'ensemble de piston secondaire. Introduire ensuite l'ensemble de piston primaire.
- **Faire attention au sens des coupelles de piston comme indiqué sur la figure de gauche. Introduire les pistons de façon égale pour éviter de rayer l'alésage du cylindre.**

Simpo PDF Merge and Split Unregistered Version - http://www.simpopdf.com

Remontage (Suite)

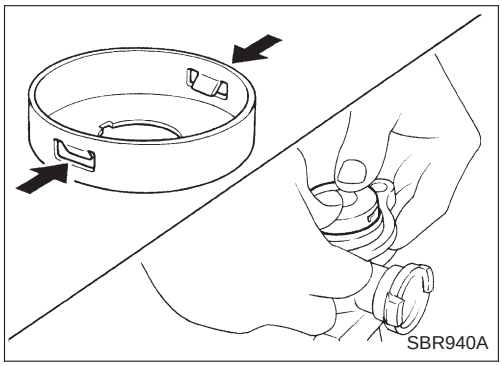
SBR940A

2. Reposer le chapeau de butée.
- **Avant de reposer le chapeau de butée, s'assurer que les griffes sont repliées vers l'intérieur.**
3. Pousser les joints de réservoir dans le corps de cylindre.
4. Pousser le réservoir dans le corps de cylindre.

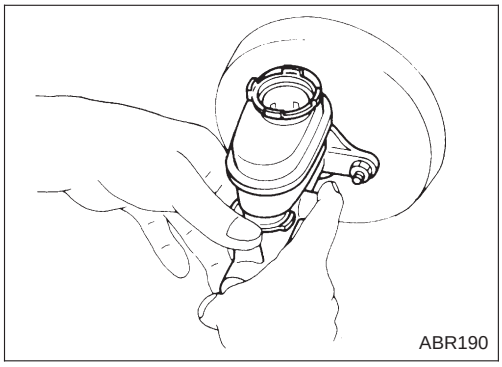
ABR190

Repose

ATTENTION :
- **Faire le plein de liquide de frein neuf DOT 3 ou DOT 4*1.**
- **Ne jamais réutiliser du liquide de frein que l'on a vidangé.**

1. Placer le maître-cylindre sur l'assistance de frein et serrer légèrement les écrous de fixation.
2. Serrer les écrous de fixation.
   : 12 - 15 N·m (1,2 - 1,5 kg-m)
3. Remplir le réservoir de liquide de frein neuf.
4. Boucher tous les orifices du maître-cylindre avec les doigts pour empêcher l'aspiration d'air lorsqu'on relâche la pédale de frein.
5. Demander au conducteur d'enfoncer lentement et à plusieurs reprises la pédale de frein jusqu'à ce que l'air ne sorte plus du maître-cylindre.
6. Adapter les canalisations de frein sur le maître-cylindre.
7. Serrer les écrous évasés.
   : 15 - 18 N·m (1,5 - 1,8 kg-m)
8. Purger de l'air du circuit de freinage. Se reporter à ''Purge du circuit de freinage'', à la page BR-4.

1* Se reporter à la section MA ''Liquides et Lubrifiants'', ''LIQUIDES ET LUBRIFIANTS CONSEILLES''.

Simpo PDF Merge and Split Unregistered Version - http://www.simpopdf.com

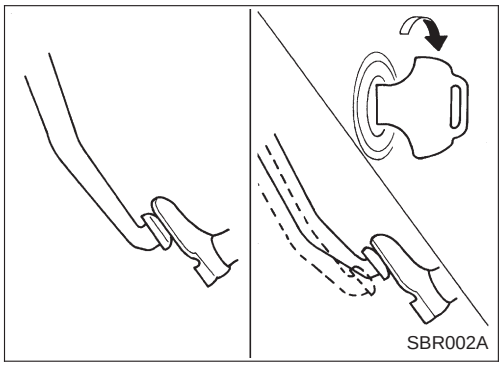

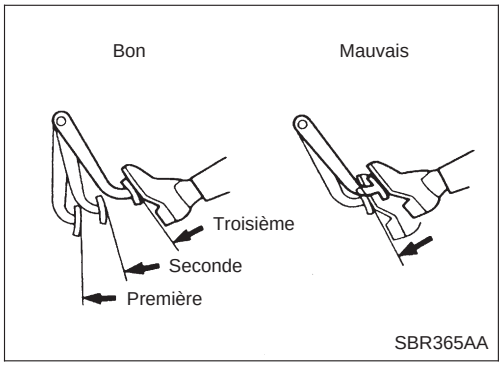

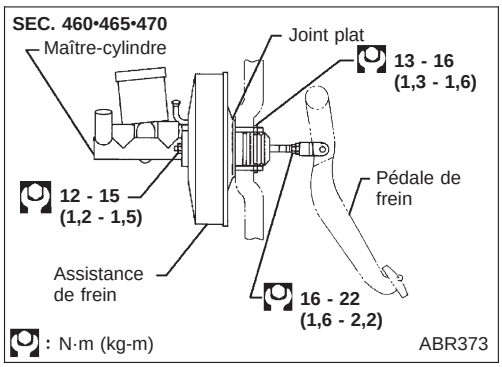

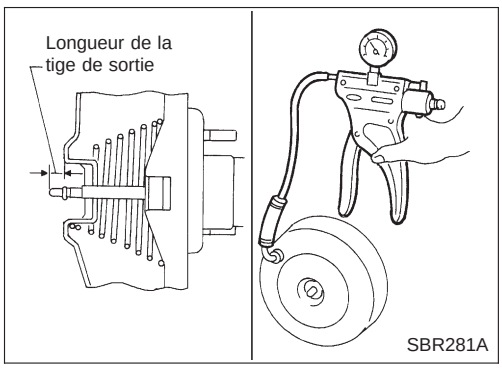

Entretien sur le véhicule

VERIFICATION DU FONCTIONNEMENT

- Enfoncer la pédale de frein plusieurs fois alors que le moteur est arrêté. Après avoir évacué les gaz, vérifier que la course de la pédale ne change pas.
- Appuyer sur la pédale de frein, puis mettre le moteur en marche. Si la pédale s'enfonce légèrement, les freins fonctionnent bien.

VERIFICATION DE L'ETANCHEITE A L'AIR

- Mettre le moteur en marche, et l'arrêter au bout d'une ou deux minutes. Appuyer lentement plusieurs fois sur la pédale de frein. L'assistance de frein est étanche à l'air si la course de la pédale de frein diminue chaque fois.
- Appuyer sur la pédale de frein alors que le moteur tourne, puis arrêter le moteur alors que la pédale est enfoncée. La course de la pédale ne doit pas changer lorsqu'on enfonce la pédale pendant **30 secondes**.

Dépose

ATTENTION :

- **Veiller à ne pas éclabousser de liquide de frein les parties peintes ; cela pourrait endommager la peinture. Si du liquide de frein éclabousse des parties peintes, laver immédiatement avec de l'eau.**
- **Veiller à ne pas déformer ou plier les conduites de freins pendant la dépose de l'assistance de frein.**

Inspection

CONTROLE DE LA LONGUEUR DE LA TIGE DE SORTIE

1. Appliquer à l'assistance de frein une dépression de −66,7 kPa (−667 mbar, −500 mmHg) à l'aide d'une pompe à dépression à main.
2. Vérifier la longueur de la tige de sortie.
   Longueur spécifiée :
   10, 275 - 10, 525 mm

Simpo PDF Merge and Split Unregistered Version - http://www.simpopdf.com

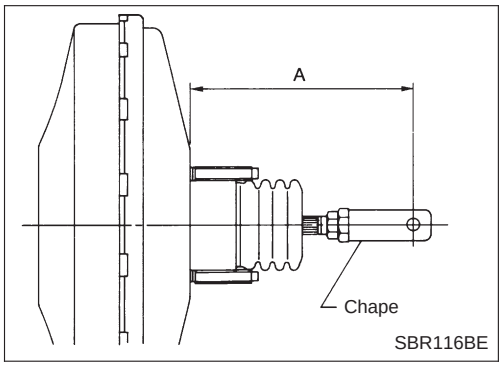

Repose

ATTENTION :

- **Veiller à ne pas déformer ou plier les conduites de freins pendant la repose de l'assistance de frein.**
- **Changer l'axe de chape s'il est abîmé.**
- **Faire le plein de liquide de frein neuf DOT 3 ou DOT 4*1.**
- **Ne jamais réutiliser du liquide de frein que l'on a vidangé.**
- **Veiller à ne pas endommager le filetage du boulon de fixation de l'assistance de frein pendant la repose. Les filets peuvent être endommagés par le tableau de bord du fait de l'angle étroit de montage.**

A : S230, M215T
C. à G. 165 mm
C. à D. 185 mm
M195T
C. à G. 160 mm
C. à D. 180 mm

1. Avant de monter l'assistance de frein, régler temporairement la chape à la cote indiquée.
2. Monter l'assistance de frein, puis serrer légèrement les écrous de fixation (du support de pédale de frein sur l'assistance de frein).
3. Connecter la pédale de frein et la tige d'entrée de l'assistance de frein avec l'axe de chape.
4. Serrer les écrous de fixation.
   : 13 - 16 N·m (1,3 - 1,6 kg-m)
5. Monter le maître-cylindre. Se reporter à ''Repose'' au chapitre ''MAITRE-CYLINDRE'', à la page BR-14.
6. Régler la hauteur et le jeu libre de la pédale de frein. Consulter la page BR-11.
7. Fixer le contre-écrou de la chape.
   : 16 - 22 N·m (1,6 - 2,2 kg-m)
8. Purger l'air. Se reporter à ''Purge du circuit de freinage'', à la page BR-4.

1* Se reporter à la section MA ''Liquides et Lubrifiants'', ''LIQUIDES ET LUBRIFIANTS CONSEILLES''.

Simpo PDF Merge and Split Unregistered Version - http://www.simpopdf.com

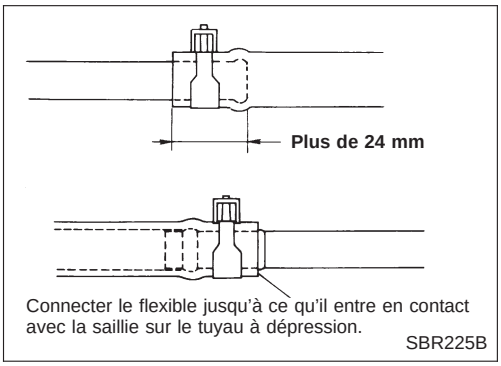

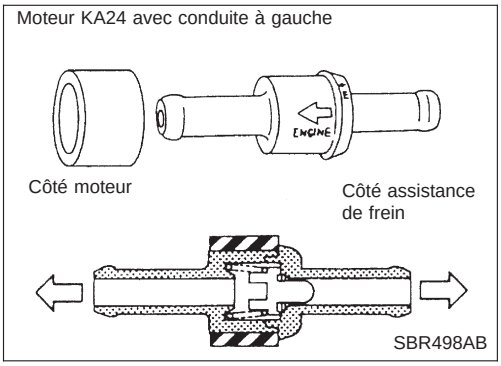

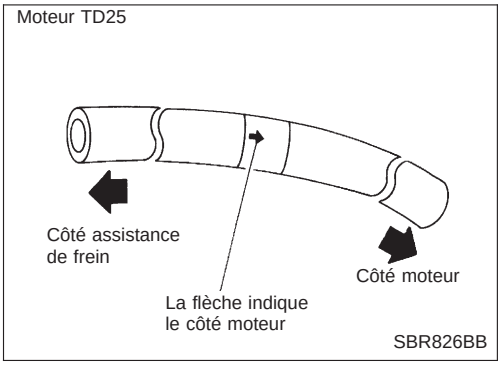

Dépose et repose

ATTENTION :

Faire attention aux points suivants lors de la repose des flexibles à dépression.

- **Ne pas appliquer d'huile ou de lubrifiant d'aucune sorte sur le flexible à dépression et sur le clapet sens unique.**
- **Introduire le tuyau à dépression dans le flexible à dépression comme indiqué ci-contre.**
- **Reposer le clapet sens unique, en s'assurant qu'il est monté dans le bon sens.**

Inspection

FLEXIBLES ET RACCORDS

Contrôler l'étanchéité à l'air des conduites à dépression, des raccords et du clapet sens unique ainsi que leurs fixations, et rechercher toute trace d'usure et de détérioration.

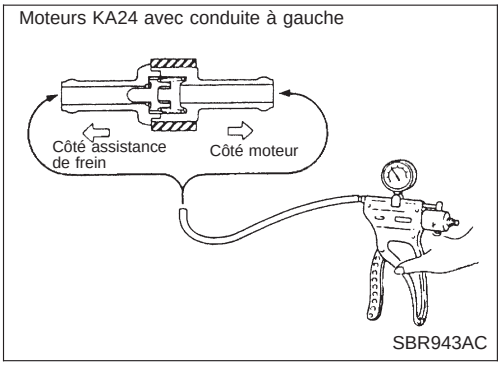

CLAPET SENS UNIQUE

Vérifier la dépression à l'aide d'une pompe à dépression.

Brancher du côté de l'assistance de frein	Une dépression doit se faire sentir.
Brancher du côté moteur	Il doit y avoir absence de dépression.

Simpo PDF Merge and Split Unregistered Version - http://www.simpopdf.com

Inspection (Suite)

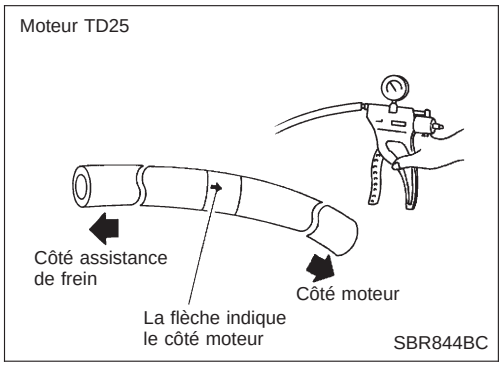

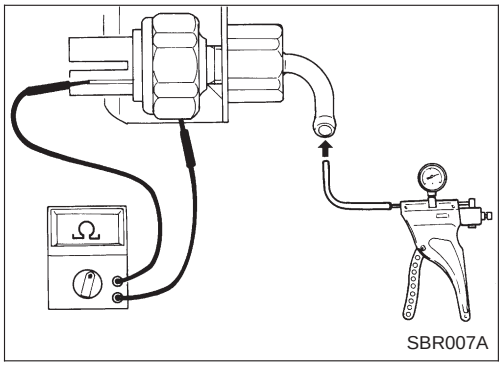

CONTACT D'AVERTISSEUR DE DEPRESSION*

Vérifier la continuité à travers le contact d'avertisseur de dépression à l'aide d'un ohmmètre et d'une pompe à dépression.

Dépression	Moins de 26,7 kPa (267 mbar, 200 mmHg)	0Ω
	33,3 kPa (333 mbar, 250 mmHg) ou plus	∞ Ω

* Moteurs diesel

Simpo PDF Merge and Split Unregistered Version - http://www.simpopdf.com

Dépose et repose

Moteurs diesel

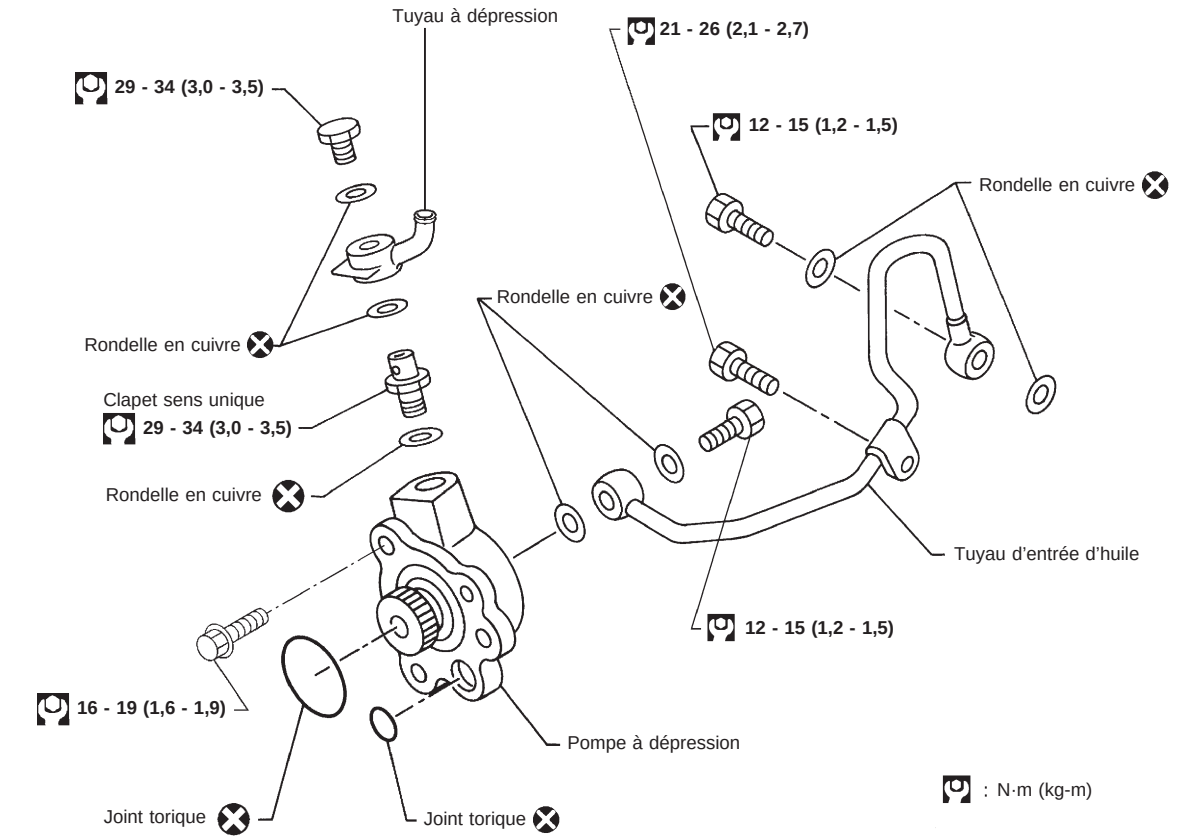

SBR974D

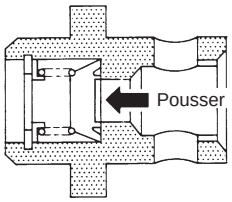

Vérification du fonctionnement du clapet

SBR194

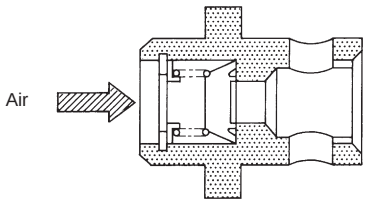

Recherche des fuites d'air du clapet

SBR195

Inspection

CLAPET SENS UNIQUE

1. Vérifier le fonctionnement du clapet. Vérifier que le clapet fonctionne régulièrement en le poussant légèrement. Le remplacer si nécessaire.

2. Rechercher les fuites d'air en appliquant une pression d'air comprise entre 98 et 490 kPa (1 à 4,9 bar, 1 à 5 kg/cm^2). Remplacer si nécessaire.

Simpo PDF Merge and Split Unregistered Version - http://www.simpopdf.com

Inspection (Suite)

DEPRESSION

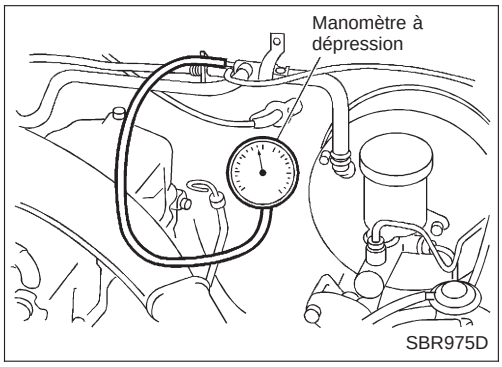

1. Monter un manomètre à dépression.
2. Faire tourner le moteur à 1 000 tr/mn ou plus.
3. Vérifier la dépression.

Dépression spécifiée :

86,6 kPa (866 mbar, 650 mmHg) ou plus

Simpo PDF Merge and Split Unregistered Version - http://www.simpopdf.com

Remplacement des plaquettes

AVERTISSEMENT :

Nettoyer les plaquettes de freins avec un aspirateur de poussière pour réduire les risques de présence de poussières dans l'air.

ATTENTION :

- **Lorsque le corps de cylindre est ouvert, éviter d'enfoncer la pédale de frein sous peine d'éjecter le piston d'étrier.**
- **Veiller à ne pas abîmer les soufflets de piston et à ne pas mettre d'huile sur le disque. Toujours remplacer les cales d'épaisseur en même temps que les plaquettes.**
- **Si les cales d'épaisseur sont rouillées, ou si leur revêtement en caoutchouc semble se décoller, les remplacer par des cales neuves.**
- **Il n'est pas nécessaire de retirer les boulons de raccord, sauf si l'étrier doit être démonté ou remplacé. Dans ce cas, maintenir le corps du cylindre suspendu avec un fil pour éviter que le flexible de frein ne s'étire.**

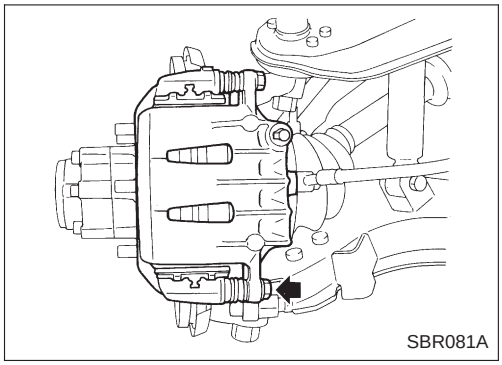
SBR081A

1. Déposer le bouchon de réservoir du maître-cylindre.
2. Déposer le boulon d'axe inférieur.

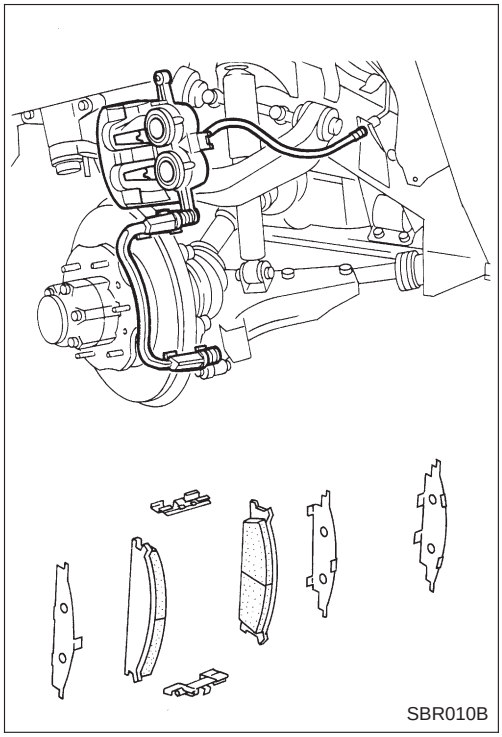
SBR010B

3. Ouvrir le corps du cylindre par le haut. Puis retirer les pièces de retenue des plaquettes, le ressort de rappel ainsi que les cales d'épaisseur interne et externe.

Epaisseur standard des plaquettes :

Modèle CL28VD

10 mm

Limite d'usure des plaquettes :

2,0 mm

- **Surveiller avec soin le niveau du liquide de frein car il refluera vers le réservoir quand les pistons seront repoussés.**

Simpo PDF Merge and Split Unregistered Version - http://www.simpopdf.com

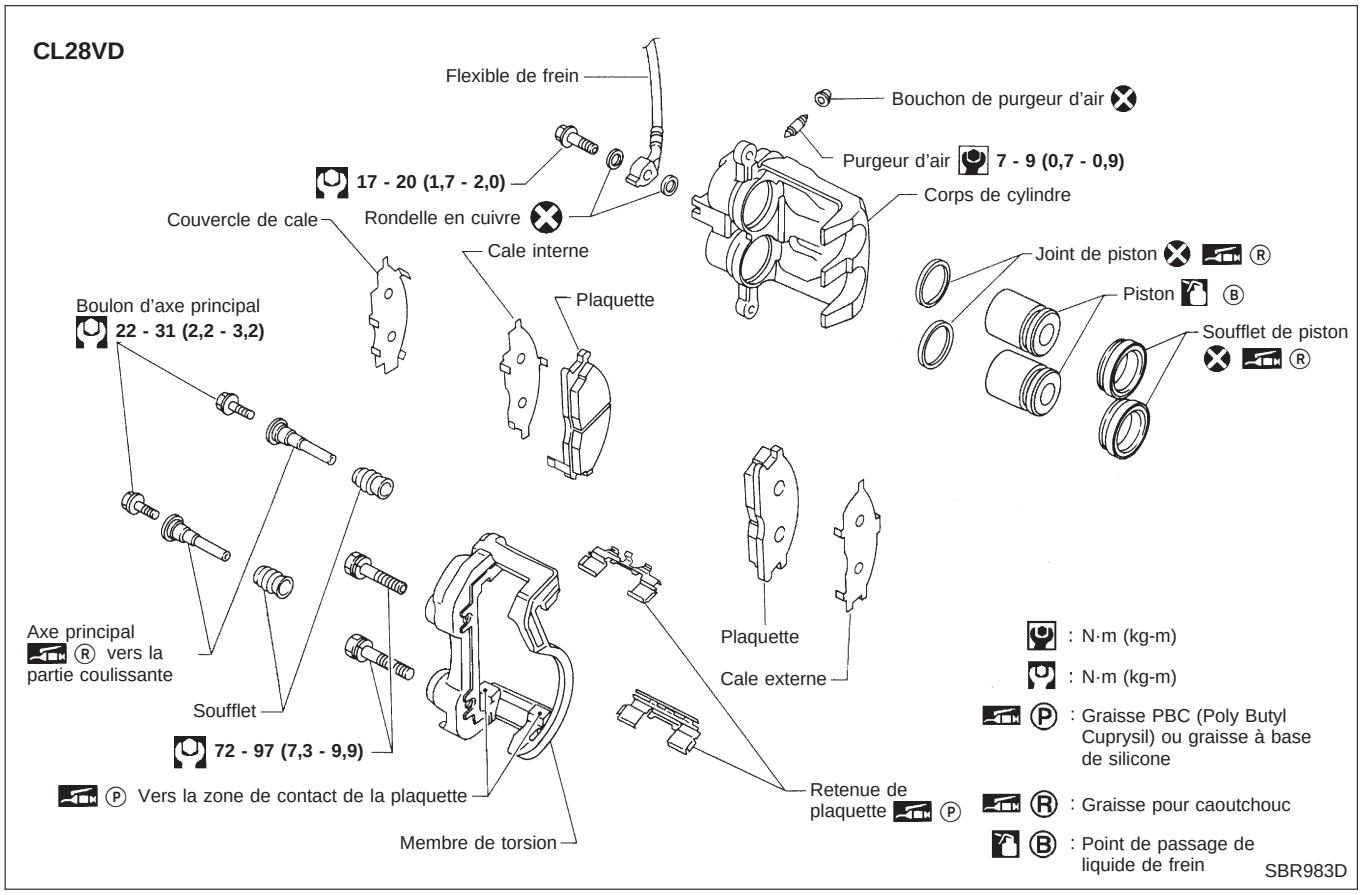

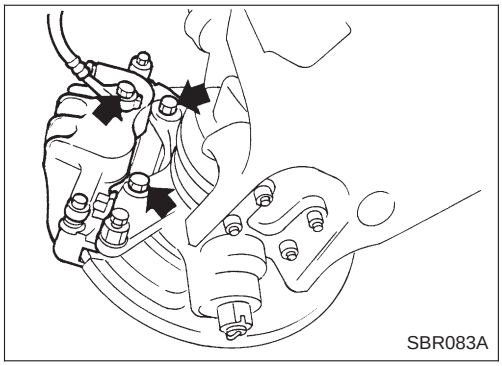

Dépose

AVERTISSEMENT :
Nettoyer les plaquettes de freins avec un aspirateur de poussière pour réduire les risques de présence de poussières dans l'air.
ATTENTION :
Suspendre l'ensemble de l'étrier avec un fil pour éviter d'étirer le flexible de frein.
Déposer les boulons de fixation du membre de torsion et le boulon de raccord.

- **Il n'est pas nécessaire de retirer les boulons de raccord, sauf si l'ensemble de l'étrier doit être démonté ou remplacé. Dans ce cas, suspendre l'ensemble de l'étrier avec un fil pour éviter d'étirer le flexible de frein.**

Simpo PDF Merge and Split Unregistered Version - http://www.simpopdf.com

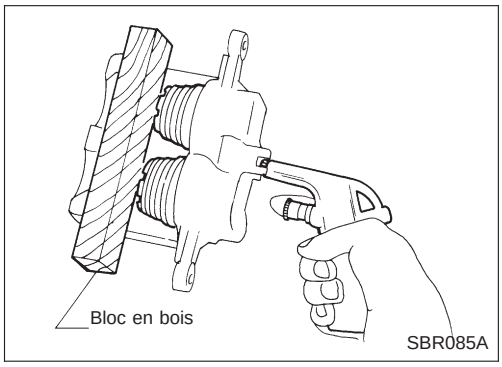

Démontage

AVERTISSEMENT :
Ne pas mettre ses doigts devant le piston.
ATTENTION :

- **Ne pas griffer ou rayer les parois du cylindre.**
- **Le frein avant à disque CL28VD contient des pistons en plastique, et doit être manipulé avec précaution.**

1. Chasser le piston et le cache-poussières à l'air comprimé. Pour le modèle CL28VD (type à 2 pistons), utiliser un bloc de bois pour que les deux pistons ressortent de façon égale.
2. Déposer le joint de piston à l'aide d'un outil adéquat.

Inspection – Etrier

CORPS DE CYLINDRE

- Rechercher sur la surface interne du cylindre toute trace de rayures, de rouille, d'usure, de dommages ou encore la présence de particules étrangères. Si l'on remarque l'une de ces conditions, changer le corps de cylindre.
- On peut éliminer les petites irrégularités causées par la rouille ou des corps étrangers en polissant la surface avec une toile émeri à grain fin. Changer le corps de cylindre si nécessaire.

ATTENTION :
Nettoyer les pièces avec du liquide de frein. Ne jamais utiliser d'huile minérale.

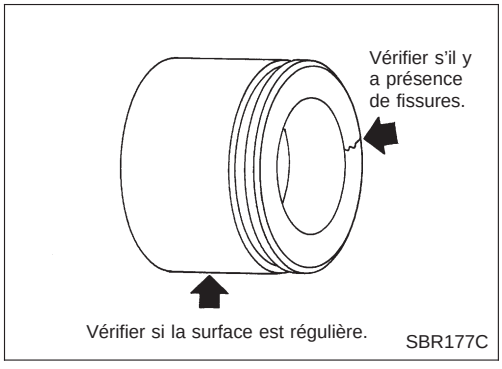

PISTON

– pour piston en plastique (CL28VD) –
Vérifier si les pistons ont une surface irrégulière, s'ils sont fissurés ou écaillés. Si l'on remarque une de ces conditions, changer le piston.

AXE, BOULON D'AXE ET SOUFFLET D'AXE

Vérifier si ces pièces ne sont pas usées, fissurées, ou endommagées de quelque façon que ce soit. Les remplacer si l'une de ces conditions se manifeste.

Simpo PDF Merge and Split Unregistered Version - http://www.simpopdf.com

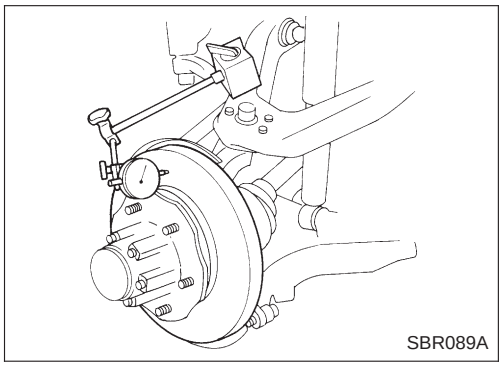
SBR089A

Inspection – Rotor

VOILE

1. Vérifier le voile avec un comparateur à cadran.

- **S'assurer que le jeu axial du roulement de roue est compris dans les limites spécifiées avant de prendre la mesure. Consulter la section FA (''Roulement des roues avant'', ''ENTRETIEN DU VEHICULE'').**

Voile maximum :

0,07 mm

2. Si le voile est toujours hors des limites spécifiées, rectifier le rotor avec un tour utilisable sur le véhicule (''MAD, DL-8700'', ''AMMCO 700 et 705'' ou équivalent).

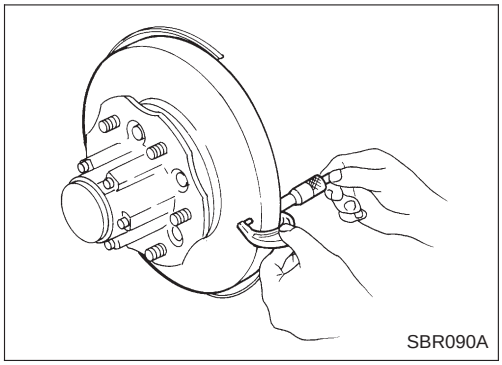
SBR090A

EPAISSEUR

Variation d'épaisseur (mesurée en 8 positions, au moins) :

Maximum 0,02 mm

Si la variation d'épaisseur est supérieure aux spécifications, rectifier le rotor avec un tour utilisable sur le véhicule.

Limite de réparation du rotor :

CL28VD 24,0 mm

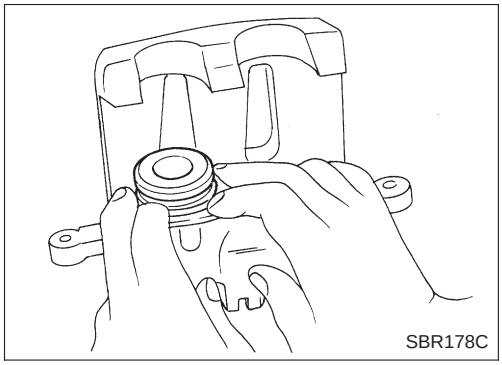
SBR178C

Remontage

1. Insérer le joint de piston dans la rainure du corps de cylindre.
2. Le soufflet de piston étant monté sur le piston, introduire le soufflet dans la rainure du corps de cylindre puis monter le piston.
3. Bien fixer le soufflet de piston.

ATTENTION :

- **Fixer correctement le joint cache-poussière.**
- **Lubrifier avec du liquide de frein neuf avant de monter les pistons en plastique (CL28VD) sur le corps de cylindre.**

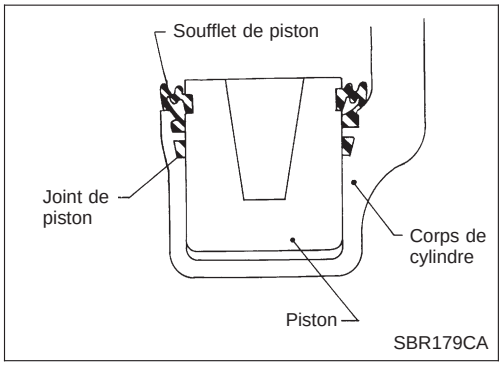

SBR179CA

Simpo PDF Merge and Split Unregistered Version - http://www.simpopdf.com

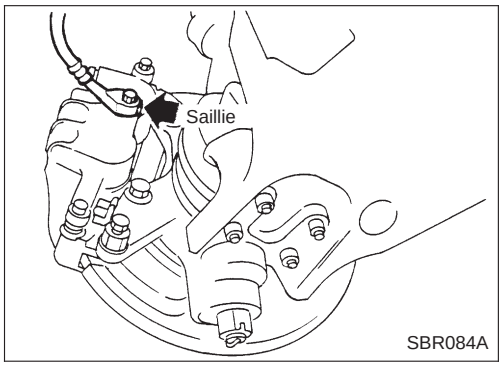

Repose

ATTENTION :

- **Faire le plein de liquide de frein neuf DOT 3 ou DOT 4.*1**
- **Ne jamais réutiliser du liquide de frein que l'on a vidangé.**

1. Reposer l'ensemble de l'étrier.
2. Monter correctement le flexible de frein sur l'étrier.
3. Monter toutes les pièces et serrer tous les boulons.
4. Purger l'air. Se reporter à ''Purge du circuit de freinage'', à la page BR-4.

1* Se reporter à la section MA ''Liquides et Lubrifiants'', ''LIQUIDES ET LUBRIFIANTS CONSEILLES''.

Procédure de rodage des freins

Lorsque la pédale de frein semble molle après un petit kilométrage, ou après le remplacement du disque, roder les surfaces de contact des plaquettes de freins selon la procédure suivante.

ATTENTION :

N'effectuer cette procédure qu'en cas de bon état de la route et de fluidité de la circulation. Redoubler de vigilance.

1. Rouler en ligne droite sur une surface plane à 50 km/h.
2. Freiner en appuyant à mi-course sur la pédale lorsque les 50 km/h sont atteints pour arrêter le véhicule. Ajuster la pression de freinage de telle sorte que le véhicule s'arrête dans un espace de 3 à 5 secondes.
3. Pour refroidir le système de freinage, rouler à 50 km/h pendant une minute sans s'arrêter.
4. Effectuer les étapes 1 à 3 dix fois ou plus pour terminer la procédure de rodage.

Simpo PDF Merge and Split Unregistered Version - http://www.simpopdf.com

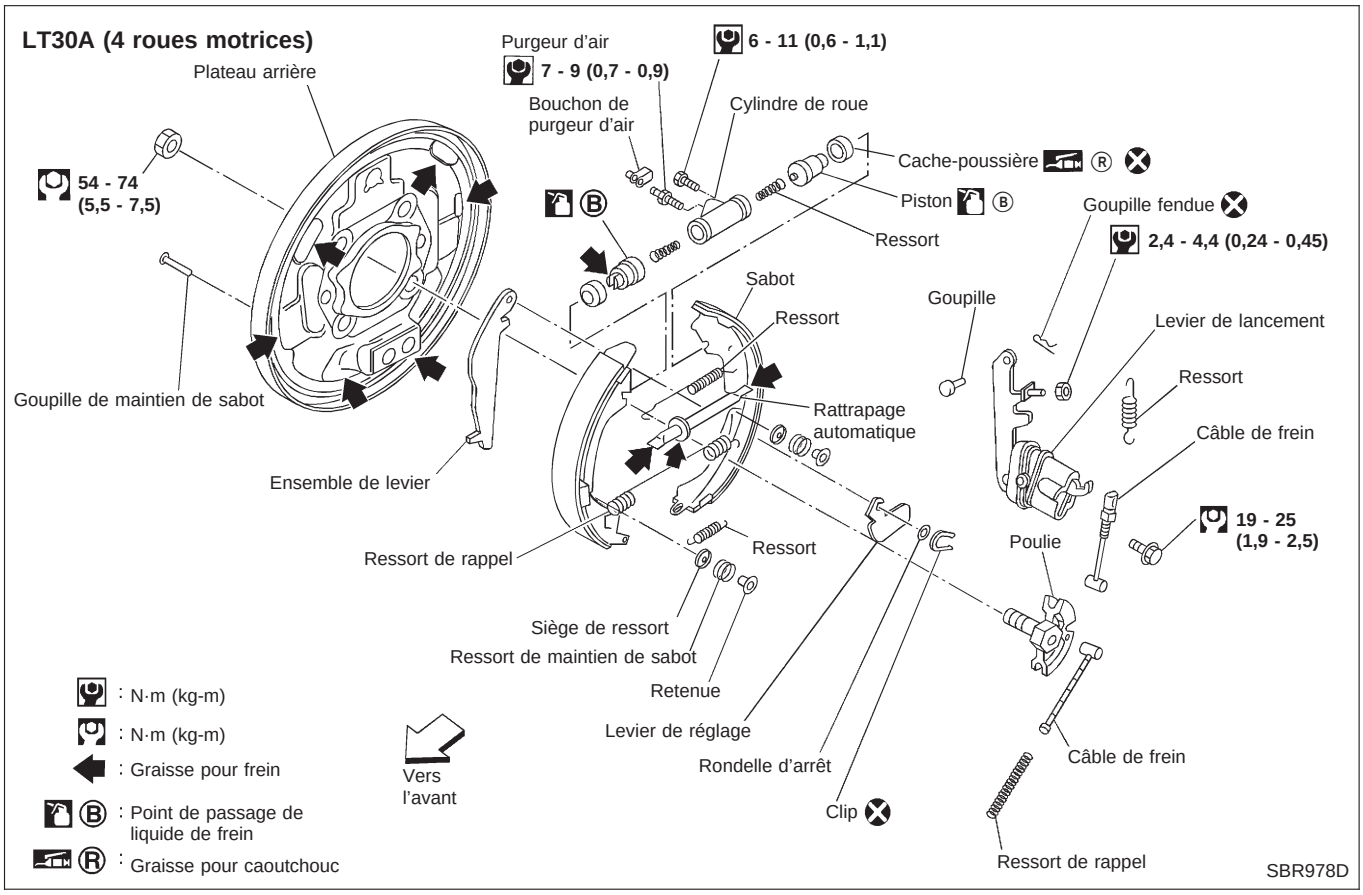

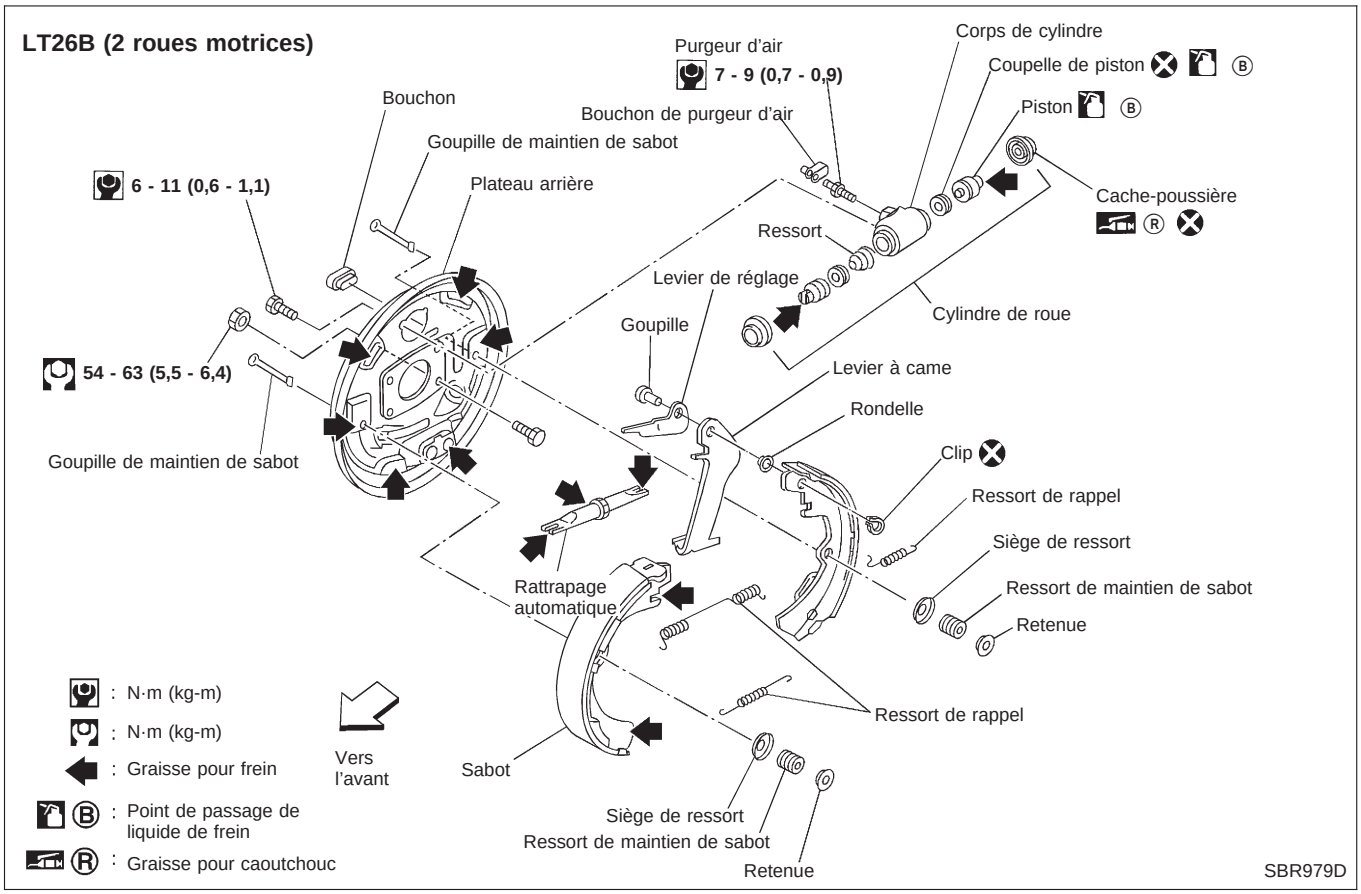

Simpo PDF Merge and Split Unregistered Version - http://www.simpopdf.com

Dépose

AVERTISSEMENT :
Nettoyer les garnitures de freins avec un aspirateur de poussière pour réduire les risques de présence de poussières dans l'air.
ATTENTION :
S'assurer que le levier de frein de stationnement est complètement desserré.

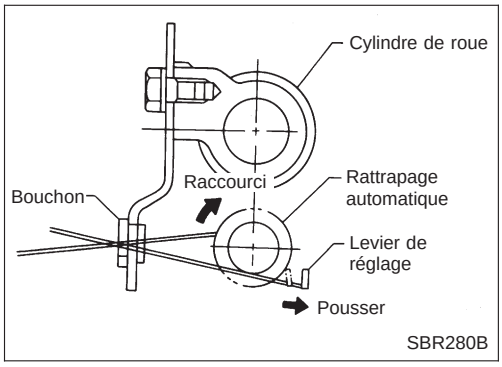

1. Desserrer complètement le levier de frein de stationnement, puis déposer le tambour.
- **S'il est difficile de déposer le tambour, il convient d'appliquer les procédures suivantes.**

a. Déposer le bouchon. Puis raccourcir le rattrapage automatique pour créer un jeu entre le sabot de frein et le tambour.

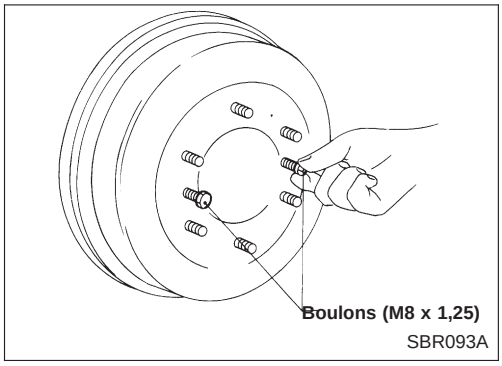

b. Monter deux boulons comme indiqué. Serrer progressivement les deux boulons.

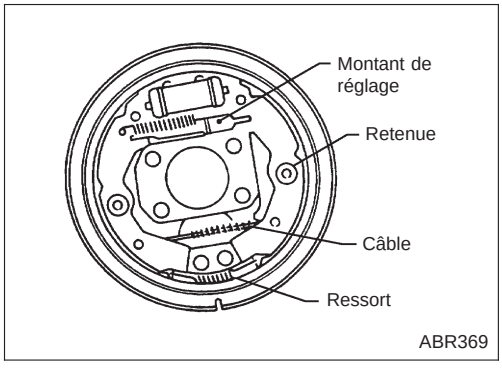

2. Après avoir déposé la pièce de retenue, déposer le ressort en faisant tourner les sabots.
- **Faire attention à ne pas endommager les soufflets de piston du cylindre de roue.**
- **Faire attention à ne pas endommager le câble de frein de stationnement lors de la séparation.**

3. Déposer le rattrapage automatique.
4. Débrancher le câble de frein de stationnement du levier à came.

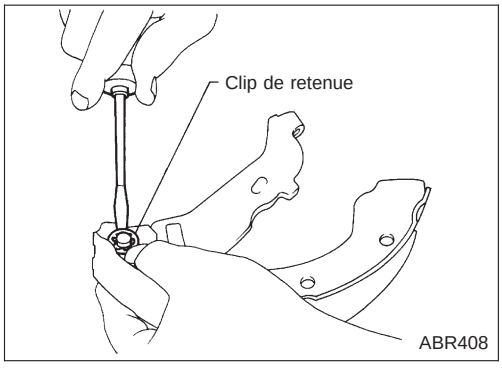

5. Déposer le clip de retenue à l'aide d'un outil adéquat. Puis séparer le levier à came du sabot de frein.

Simpo PDF Merge and Split Unregistered Version - http://www.simpopdf.com

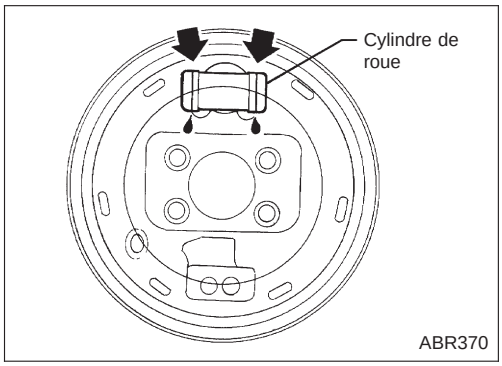

ABR370

Inspection – Cylindre de roue

- Vérifier si le cylindre de roue ne fuit pas.
- Rechercher toute trace d'usure, de dommage ou de mauvais serrage.
  Remplacer le cylindre si l'une de ces conditions se manifeste.

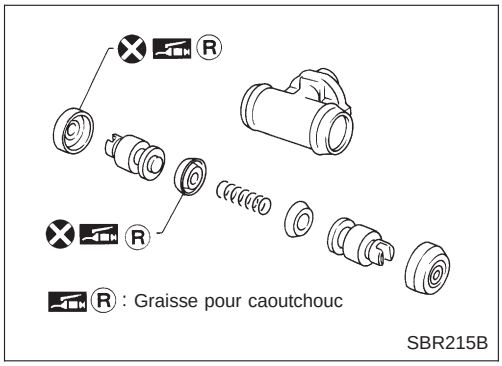

SBR215B

Révision du cylindre de roue

- Vérifier si les pièces internes ne sont pas usées, rouillées ou endommagées. Les remplacer si nécessaire.
- Veiller à ne pas griffer les cylindres en reposant les pistons.

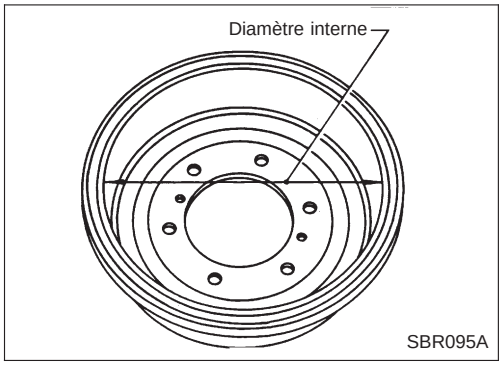

SBR095A

Inspection – Tambour

Diamètre interne maximum (limite de réparation) :
LT26B 261,5 mm
LT30A 296,5 mm

- La surface de contact doit finalement être polie avec du papier émeri n° 120 à 150.
- Avec un tour pour frein, rectifier le tambour s'il est marqué, usé partiellement ou inégalement.
- Après avoir remis en état ou remplacé le tambour de frein, vérifier que le tambour et les sabots sont bien en place l'un par rapport à l'autre.

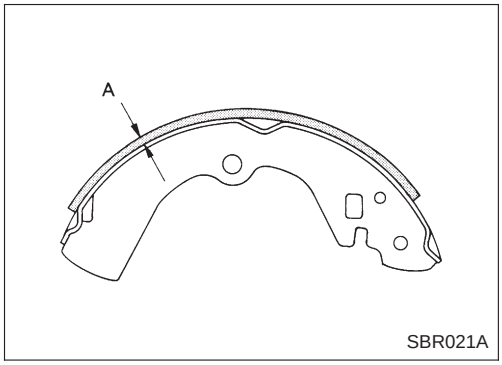

SBR021A

Inspection – Garniture

Vérifier l'épaisseur de la garniture.

Epaisseur de garniture standard :
LT26B 5,5 mm
LT30A 6,1 mm
Limite d'usure de la garniture (A) :
LT26B 1,5 mm
LT30A 1,5 mm

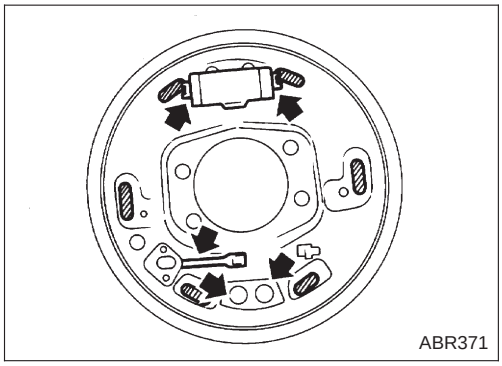
ABR371

Repose

- **Toujours régler le jeu du sabot. Consulter la page BR-31.**

1. Monter le levier à came sur le sabot de frein avec un clip de retenue.
2. Enduire de graisse pour freins les surfaces de contact indiquées ci-à gauche.

Simpo PDF Merge and Split Unregistered Version - http://www.simpopdf.com

Repose (Suite)

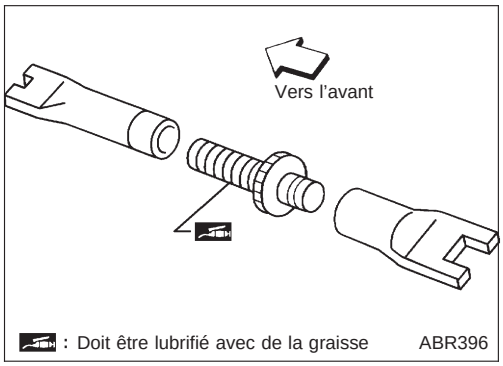

3. Raccourcir le rattrapage automatique en le faisant tourner.
- **Faire attention au sens du rattrapage automatique.**

Roue	Vis
Gauche	Filetage gauche
Droite	Filetage droit

4. Brancher le câble de frein de stationnement sur le levier à came.
5. Reposer toutes les pièces.
- **Veiller à ne pas endommager les soufflets de piston du cylindre de roue.**
6. Vérifier si les pièces sont correctement reposées.
- **Une fois la repose achevée, régler le jeu entre le sabot et le tambour.**
7. Reposer le tambour de frein.
8. Si un nouveau cylindre de roue est monté ou si le cylindre de roue est révisé, purger l'air du circuit. Se reporter à ''Purge du circuit de freinage'', à la page BR-4.
9. Régler le frein de stationnement. Consulter la page BR-31.
- Reposer toutes les pièces conformément à la figure ci-dessous.

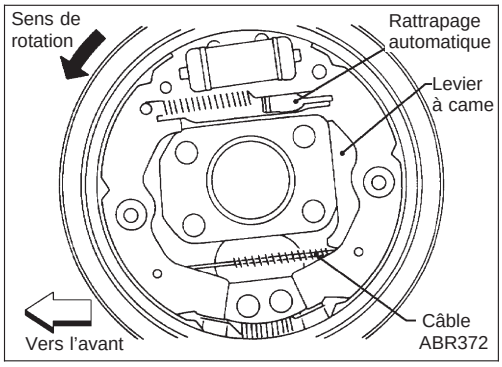

Modèle LT30A

- Après avoir reposé le levier coudé sur le plateau arrière, s'assurer qu'il n'y a pas de jeu entre ces pièces. S'il y a du jeu, ajuster le boulon Ⓐ et le contre-écrou Ⓑ.

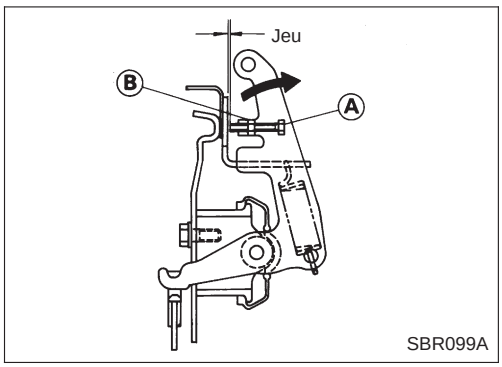

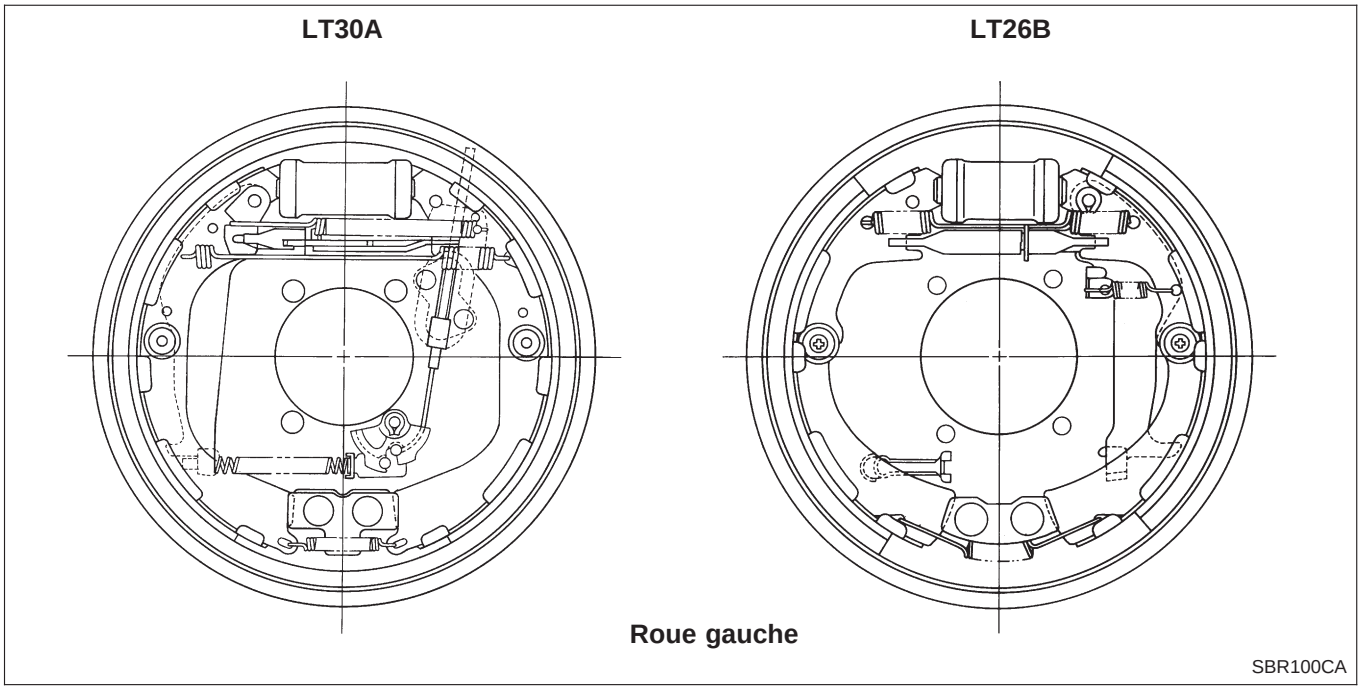

Simpo PDF Merge and Split Unregistered Version - http://www.simpopdf.com

2 roues motrices

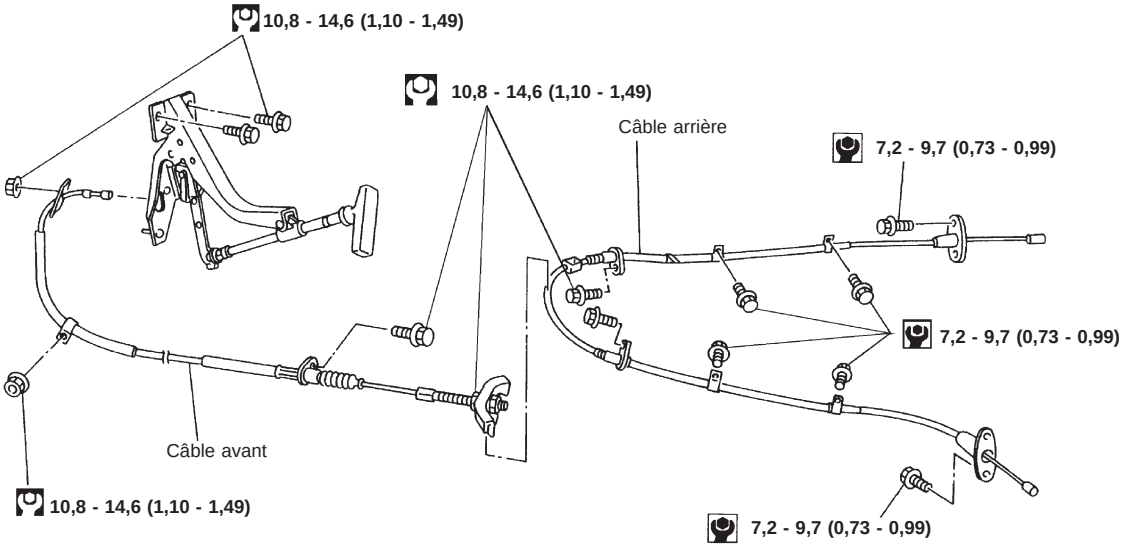

4 roues motrices

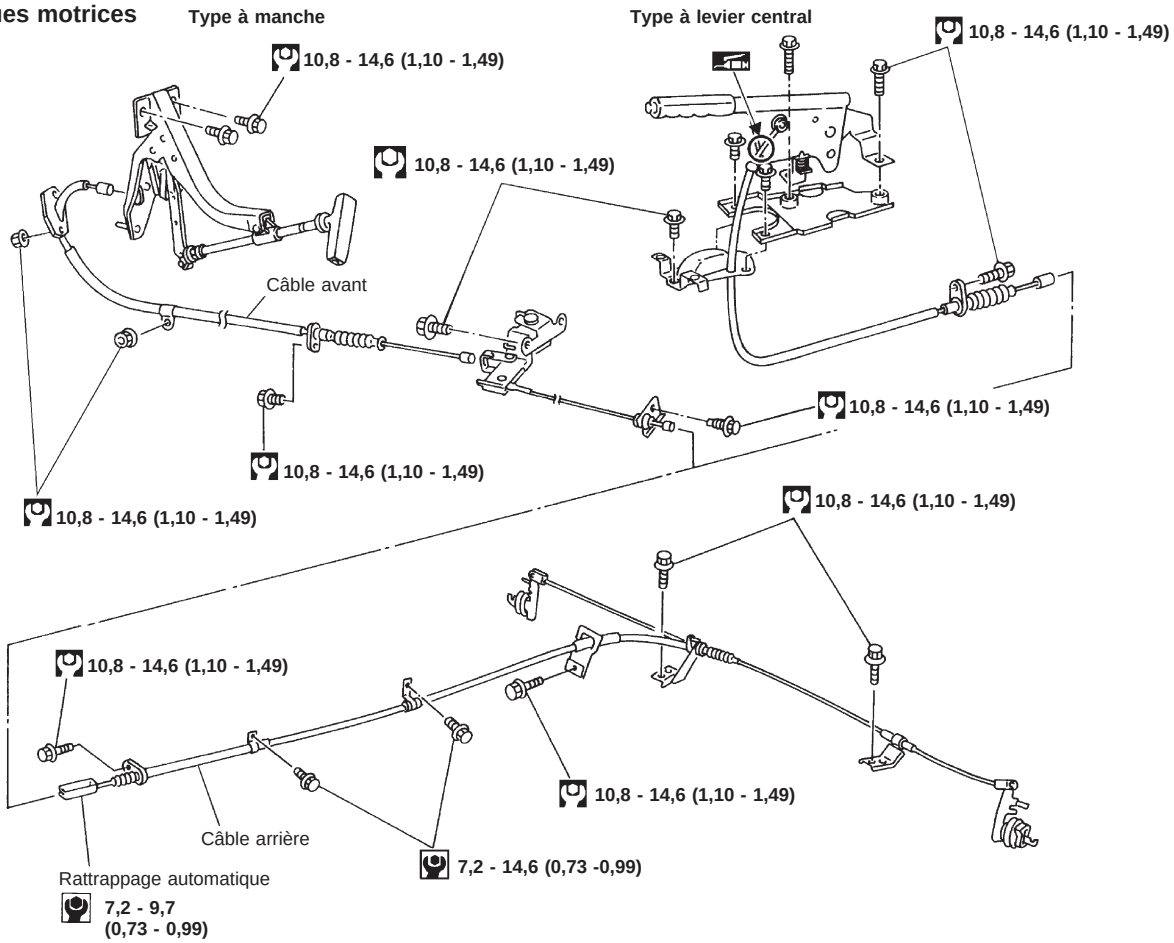

: N·m (kg-m)

: N·m (kg-m)

SBR312E

Simpo PDF Merge and Split Unregistered Version - http://www.simpopdf.com

Dépose et repose

- Veiller à ne pas endommager le câble.
- S'assurer qu'il n'y a pas de jeu libre après la repose.

Inspection

1. Vérifier que le levier de commande n'est pas usé ou abîmé. Le remplacer si nécessaire.
2. Vérifier que les câbles ne sont pas sectionnés ou abîmés. Les remplacer si nécessaire.
3. Vérifier le témoin et le contact. Corriger si nécessaire.
4. Vérifier les pièces à chaque raccord et les remplacer en cas de déformation ou de détérioration.

Réglage

Régler le frein de stationnement de la façon suivante :

1. Relâcher complètement le levier du frein de stationnement.
2. Faire tourner Ⓐ et faire pivoter Ⓑ jusqu'à ce que le câble du frein de stationnement se desserre.
3. Enfoncer plusieurs fois la pédale de frein jusqu'à ce que les freins arrière ne cliquettent plus.
4. Régler le jeu entre le sabot et le tambour de frein arrière.
5. Régler la course du levier de frein de stationnement en tournant Ⓑ.
6. Tirer le levier de frein de stationnement en appliquant la force spécifiée. Vérifier la course du levier et s'assurer que son mouvement est régulier.
7. Réajuster le jeu entre le sabot et le tambour de frein arrière.

2 roues motrices

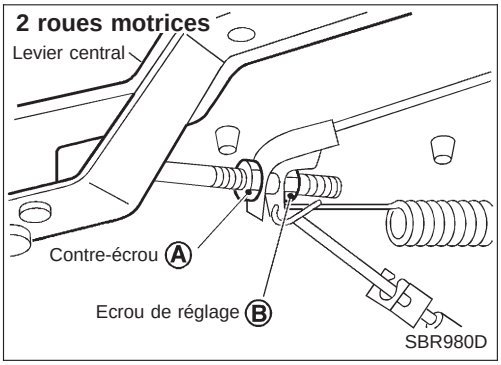

SBR980D

4 roues motrices

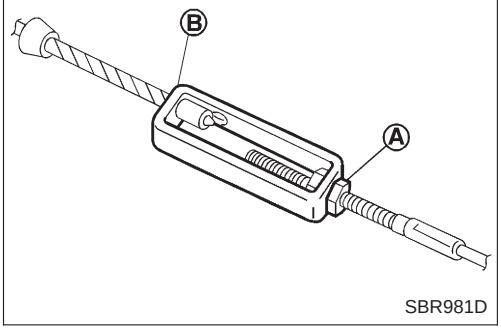

SBR981D

Type à manche

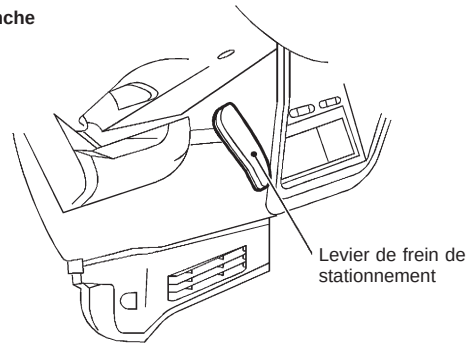

Type à levier central

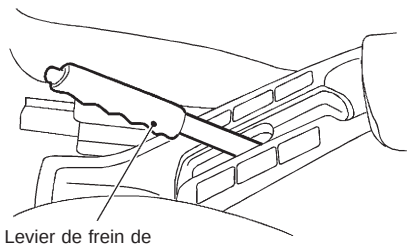

SBR977D

Simpo PDF Merge and Split Unregistered Version - http://www.simpopdf.com

Objet

Le système anti-enrayeur des freins (ABS) se compose de composants électriques et hydrauliques. Il permet de contrôler la force de freinage de manière à éviter le blocage des roues.
L'ABS :
1) Améliore le contrôle permanent du véhicule par la direction assistée.
2) Facilite l'appréhension d'obstacles par la manœuvre du volant de direction.
3) Améliore la stabilité du véhicule.

Fonctionnement

- Ce système n'est pas opérationnel lorsque la vitesse du véhicule est inférieure à 10 km/h.
- Le système anti-enrayeur des freins (ABS) comporte une fonction d'autodiagnostic. Le système allume le témoin ABS pendant une seconde chaque fois que le contact d'allumage est mis sur ''ON''. Après que le moteur est démarré, le témoin ABS s'éteint. Le système effectue un diagnostic lorsque le véhicule atteint 6 km/h pour la première fois. Un bruit mécanique peut être entendu lorsque l'ABS effectue un autodiagnostic. C'est une étape normale de la fonction d'autodiagnostic. Si un défaut est détecté pendant cette vérification, le témoin ABS s'allumera.
- Pendant la conduite, un bruit mécanique peut se manifester pendant le fonctionnement de l'ABS. C'est une condition normale.

Circuit hydraulique ABS

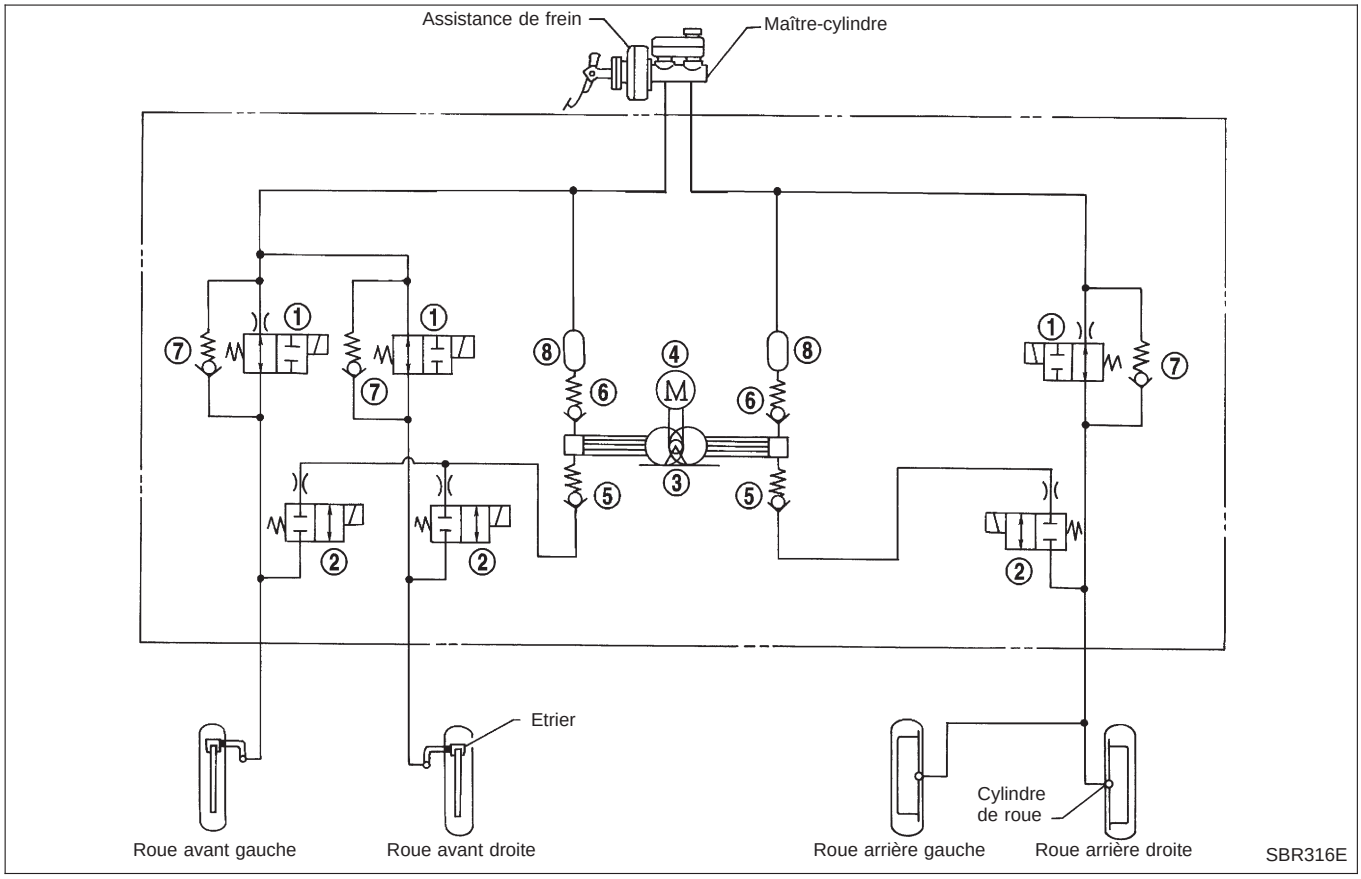

① Electrovanne d'entrée
② Electrovanne de sortie
③ Pompe
④ Moteur
⑤ Soupape d'admission
⑥ Soupape d'évacutaion
⑦ Clapet anti-retour de passage
⑧ Amortisseur

Simpo PDF Merge and Split Unregistered Version - http://www.simpopdf.com

Composants du système

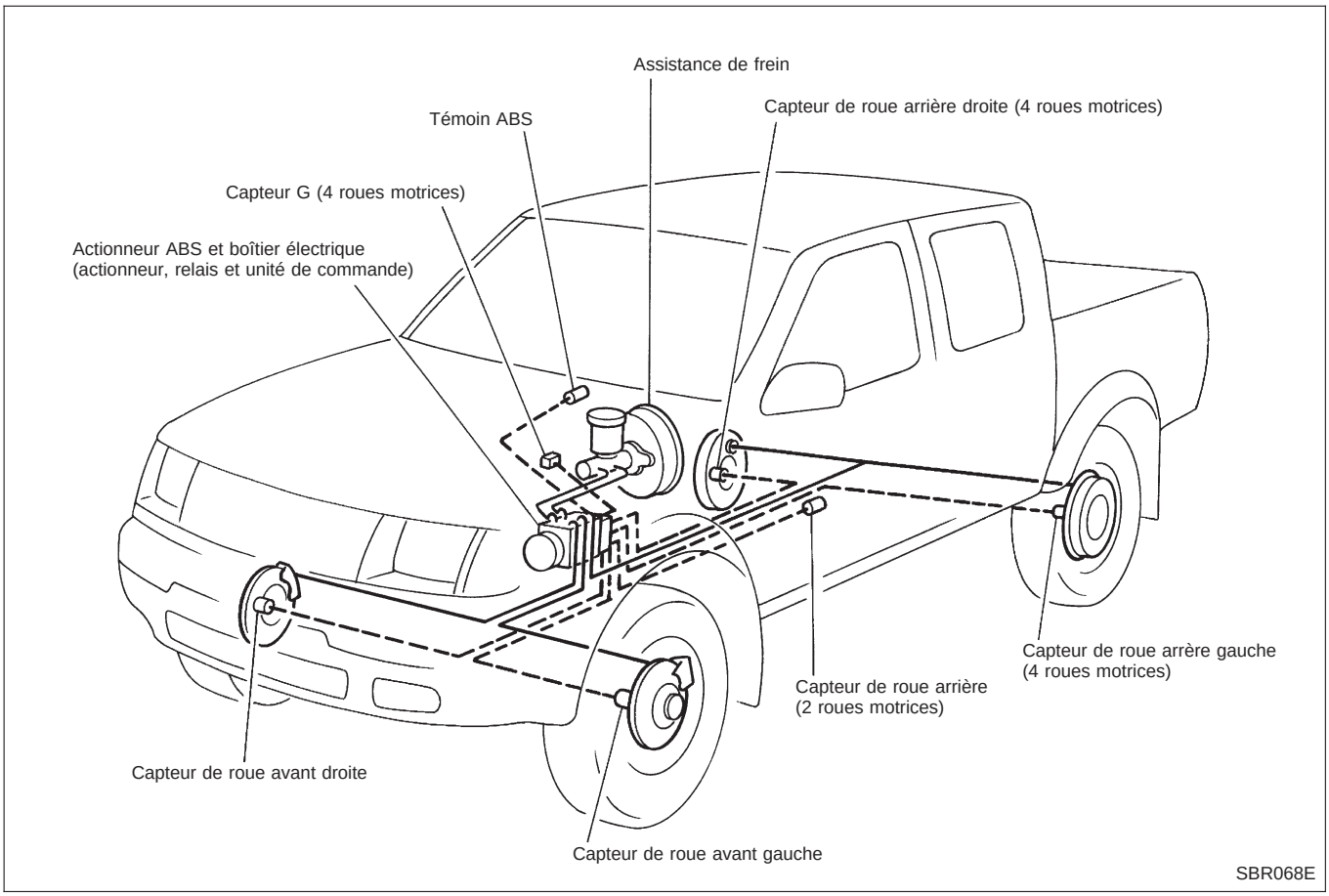

Description du système

CAPTEUR DE ROUE

L'ensemble de capteur se compose d'un rotor de capteur denté et d'un élément du capteur. L'élément contient une barre magnétique entourée d'un enroulement électrique. Le capteur est placé à l'arrière du rotor de frein et à l'avant du différentiel (2 roues motrices), ou à l'arrière du tambour de frein arrière à disque (4 roues motrices). Quand la roue tourne, le capteur produit un courant à ondes sinusoïdales. La fréquence et la tension de ce courant augmentent proportionnellement à la vitesse de rotation de la roue.

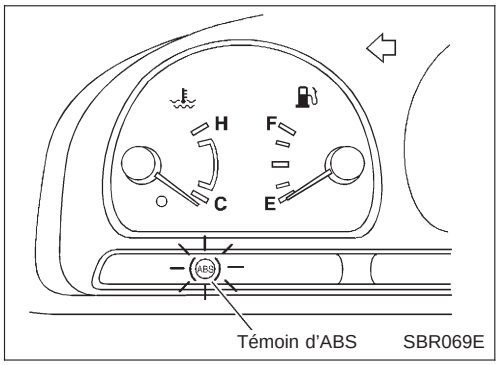

BOITIER DE CONTROLLE (actionneur ABS et boîtier électrique intégrés)

Le boîtier de contrôle calcule la vitesse de rotation de la roue en analysant le courant émis par le capteur. Puis il applique un courant continu à l'électrovanne d'actionneur. Il commande également le fonctionnement MARCHE/ARRET du relais de soupape et du relais de moteur. Si un défaut détectable électriquement se produit dans le système, le boîtier de contrôle allume un témoin. En pareil cas, l'ABS sera mis hors fonction par le boîtier de contrôle et le système de freinage du véhicule reviendra au mode de fonctionnement normal (pour la disposition du boîtier de contrôle, se reporter à ACTIONNEUR D'ABS ET BOITIER ELECTRIQUE, BR-34.)

Simpo PDF Merge and Split Unregistered Version - http://www.simpopdf.com

Description du système (Suite)

CAPTEUR DE G (4 roues motrices seulement)

Le capteur de G détecte la décélération durant le freinage pour déterminer si le véhicule roule sur une route à haut µ (route asphaltée, etc.) ou à bas µ (route enneigée, etc.). Il adresse alors un signal au boîtier de contrôle d'ABS.

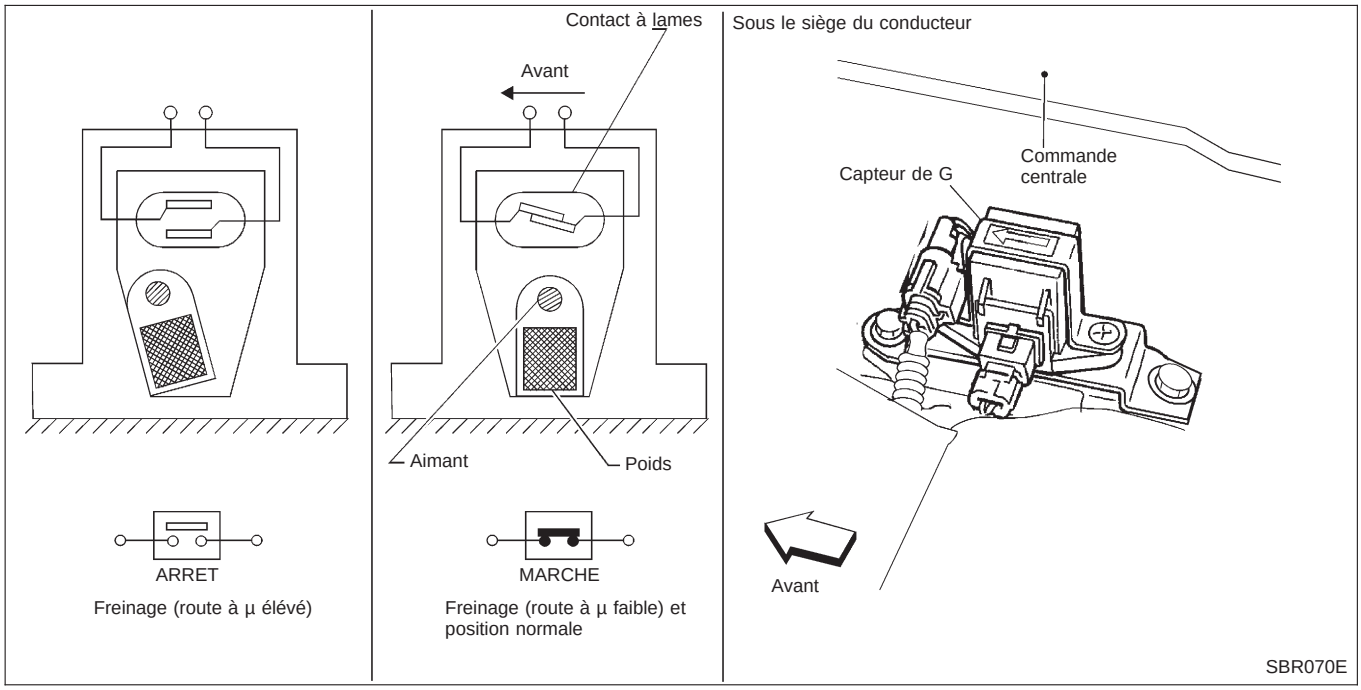

Le contact à lames est activé quand il est affecté par un champ magnétique. Lors d'une décélération soudaine (freinage sur une route à haut µ), le poids se déplace et l'aimant dans le poids s'écarte du contact à lames. Le champ magnétique se réduit et le contact à lames est désactivé.

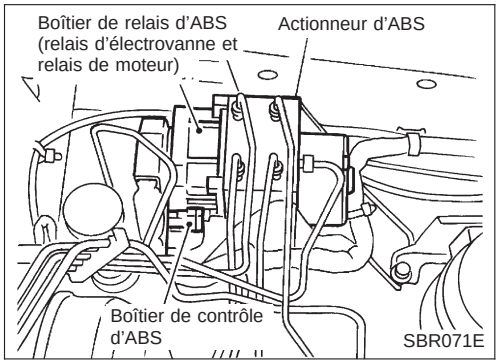

ACTIONNEUR D'ABS ET BOÎTIER ELECTRIQUE

L'actionneur d'ABS et le boîtier électrique comprennent :

- Un moteur électrique et une pompe
- Deux relais
- Six électrovannes avec chacune une entrée et une sortie pour
  - — avant gauche
  - — avant droite
  - — arrière
- Boîtier de contrôle d'ABS

Ce composant commande le circuit hydraulique et augmente, maintient ou réduit la pression hydraulique appliquée à toutes les roues ou à une roue individuelle. L'actionneur et le boîtier électrique ABS ne sont pas démontables.

Fonctionnement de l'actionneur d'ABS

		Electro-vanne d'entrée	Electro-vanne de sortie	
Fonctionnement normal des freins		ARRET (Ouverte)	ARRET (Fermée)	La pression du liquide de frein du maître-cylindre est transmise directement au cylindre de roue par l'électrovanne d'entrée.
Fonctionnement de l'ABS	Maintien de la pression	MARCHE (Fermée)	ARRET (Fermée)	Le circuit hydraulique est coupé pour maintenir la pression du liquide de frein dans le cylindre de roue.
	Baisse de la pression	MARCHE (Fermée)	MARCHE (Ouverte)	Du liquide de frein est envoyé du cylindre de roue au réservoir par l'intermédiaire de l'électrovanne de sortie. Il est ensuite renvoyé au maître-cylindre par la pompe.
	Augmentation de la pression	ARRET (Ouverte)	ARRET (Fermée)	La pression du liquide de frein du maître-cylindre est transmise au cylindre de roue.

Simpo PDF Merge and Split Unregistered Version - http://www.simpopdf.com

Dépose et repose

ATTENTION :
Faire attention de ne pas abîmer la bordure du capteur et les dents du rotor du capteur.
Lors de la dépose du moyeu de roue avant ou de l'ensemble d'arbre de l'axe arrière, débrancher le capteur de roue du système ABS de l'ensemble et le pousser à l'écart.

CAPTEUR DE ROUE AVANT

SEC. 476
2 roues motrices

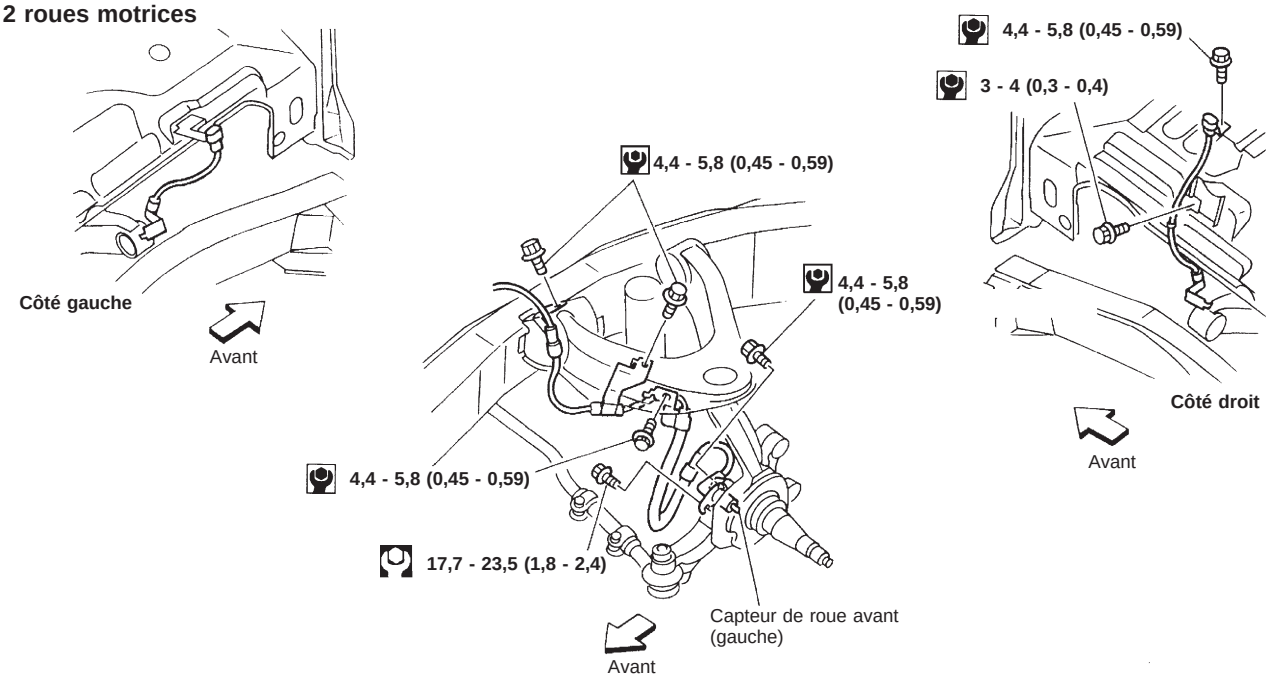

4 roues motrices

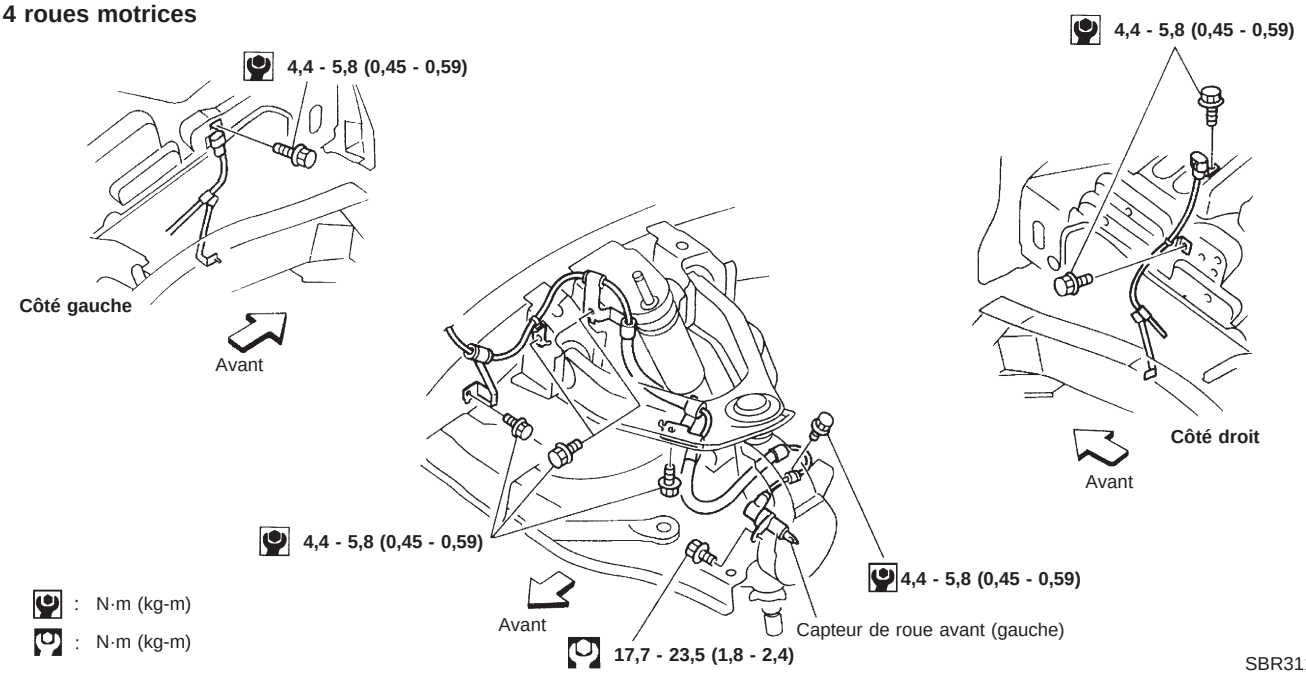

SBR311E

Simpo PDF Merge and Split Unregistered Version - http://www.simpopdf.com

Dépose et repose (Suite)

CAPTEUR DE ROUE ARRIERE

SEC. 476

2 roues motrices

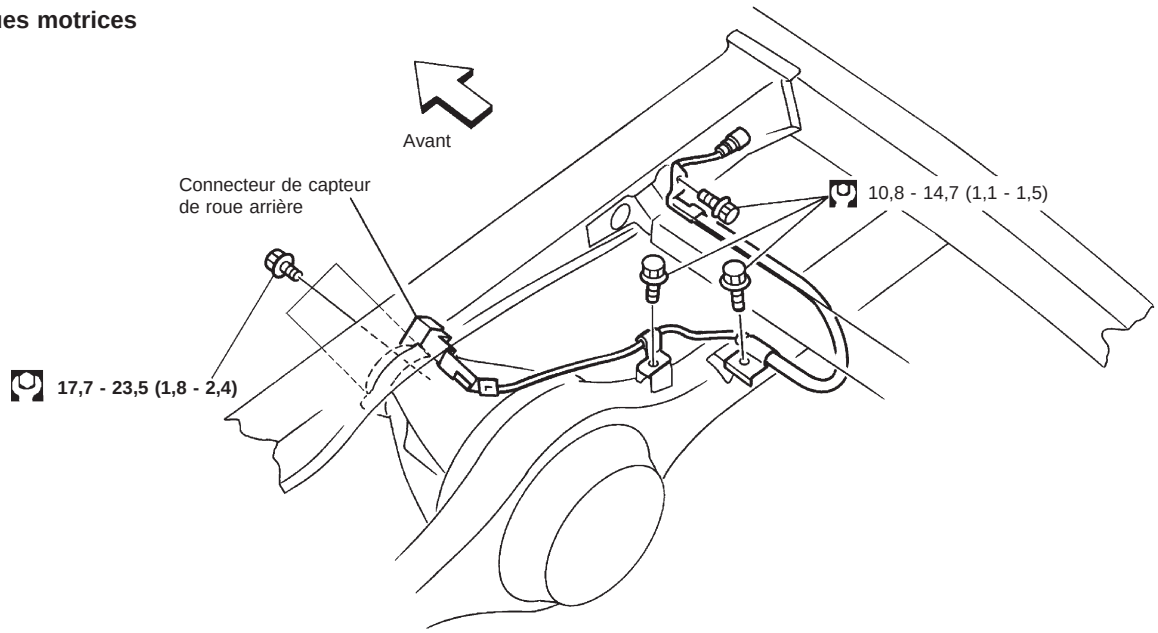

4 roues motrices

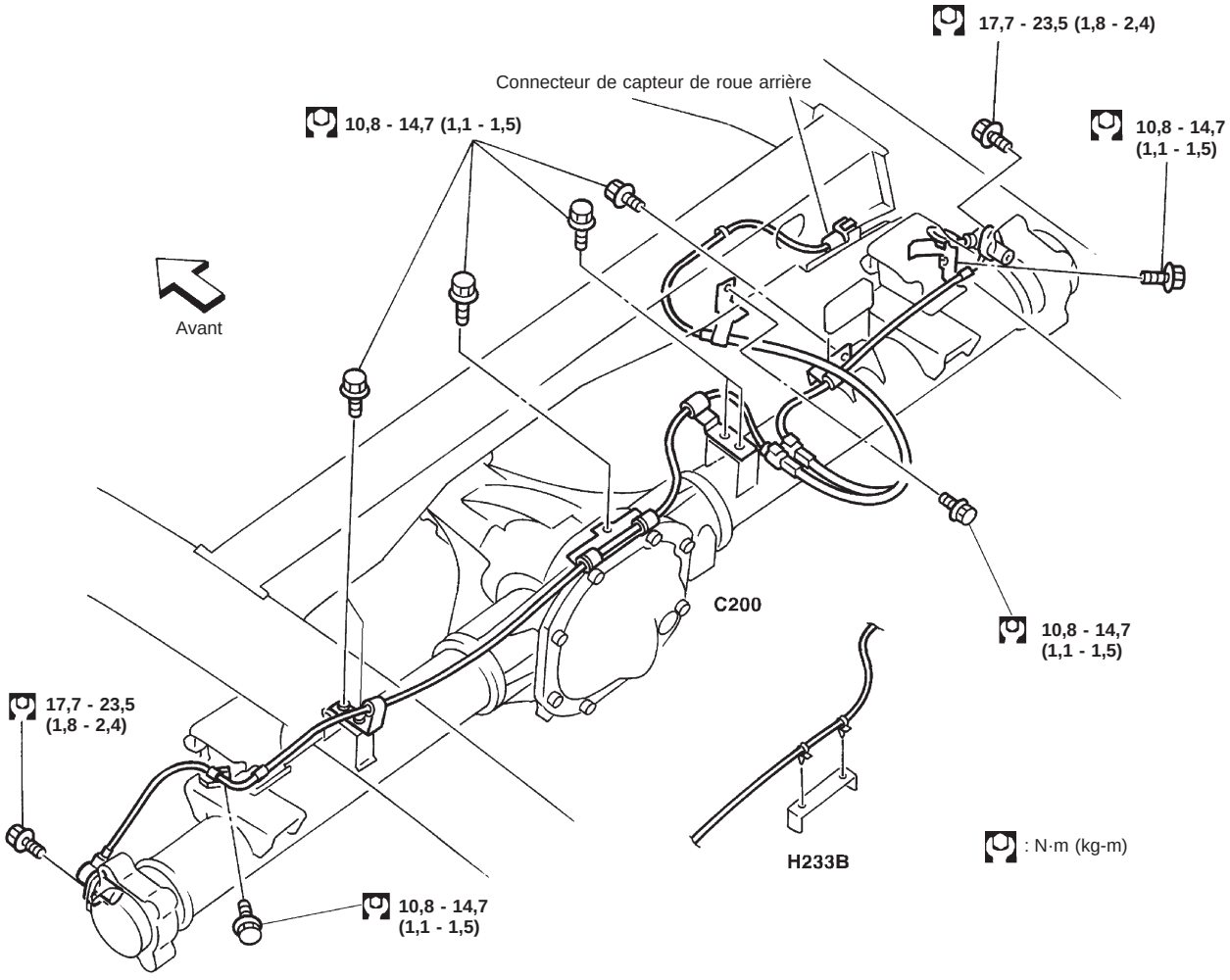

SBR073E

Simpo PDF Merge and Split Unregistered Version - http://www.simpopdf.com

Dépose et repose (Suite)

CAPTEUR DE G

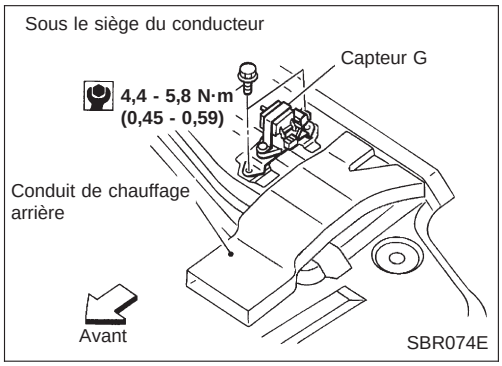

Toujours remplacer le capteur G en cas de choc brutal ou de chute. Sinon, les caractéristiques de performance du capteur G changeront, ce qui, par conséquent, changera les caractéristiques de performances du boîtier de contrôle de l'ABS.

ACTIONNEUR ABS ET BOITIER ELECTRIQUE

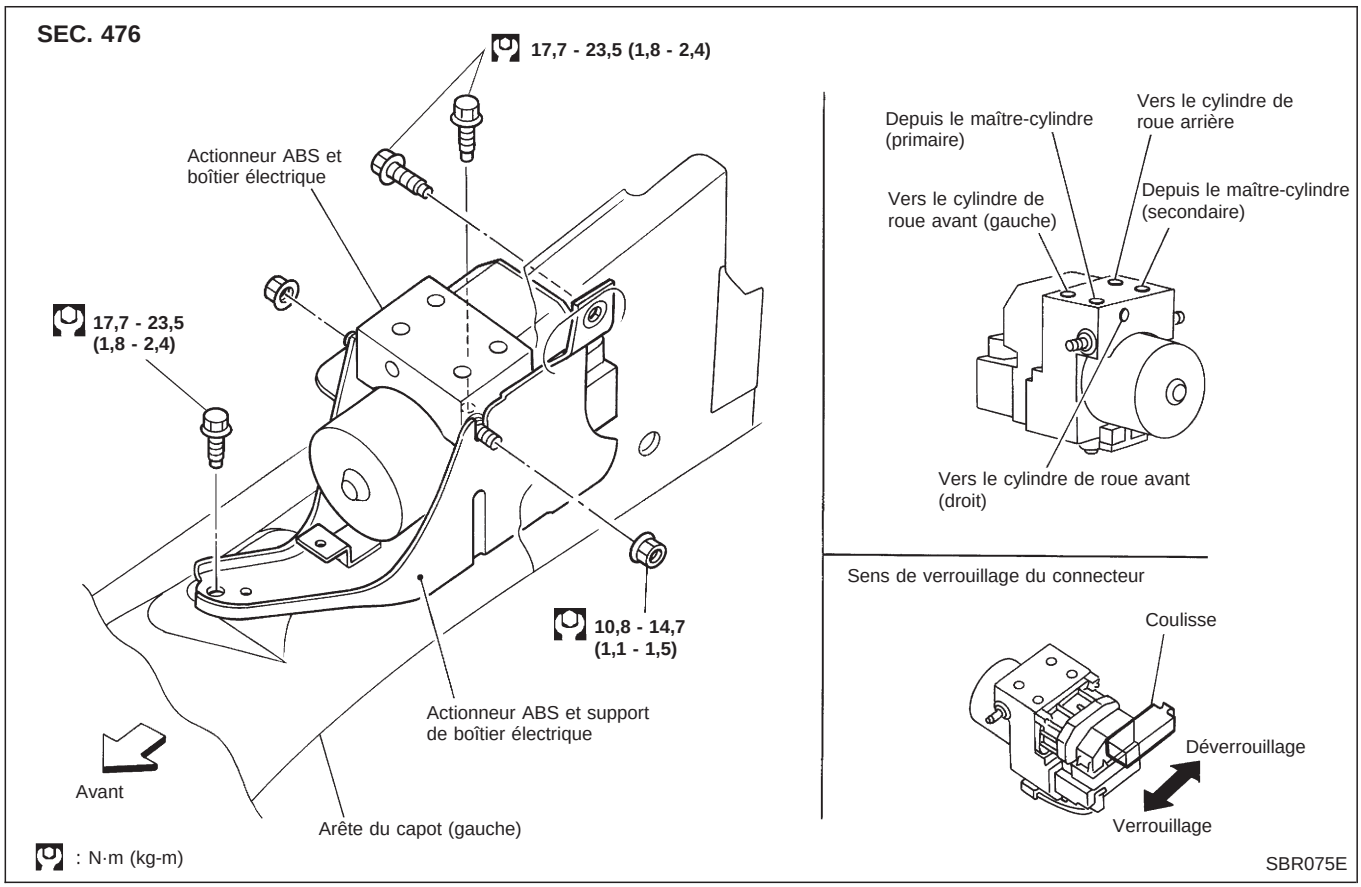

Dépose

1. Débrancher le câble de batterie.
2. Vidanger le liquide de frein. Se reporter à ''Vidange du liquide de frein'', BR-3.
3. Déposer les boulons et écrous de fixation du support de montage.
4. Débrancher le connecteur, les conduites de frein et déposer les écrous de fixation.

Repose

ATTENTION :

Après repose, refaire le plein de liquide de frein. Puis purger l'air. Se reporter à ''Purge du circuit de freinage'', BR-4.

1. Brancher les conduites de frein provisoirement.
2. Serrer les boulons et les écrous de fixation.
3. Serrer les conduites de frein.
4. Brancher le connecteur et le câble de batterie.

Simpo PDF Merge and Split Unregistered Version - http://www.simpopdf.com

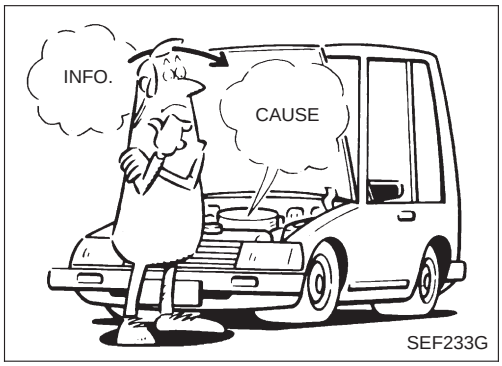

SEF233G

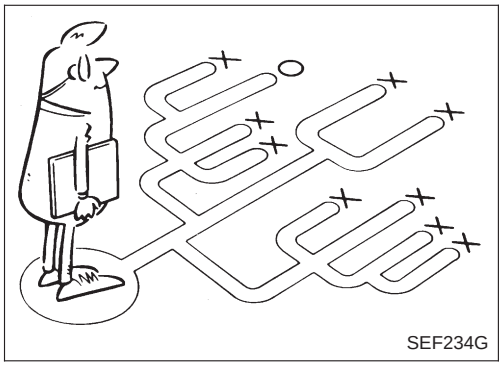
SEF234G

Comment effectuer les diagnostics des défauts permettant une réparation rapide et correcte

INTRODUCTION

Les principales commandes du système anti-enrayeur des freins (ABS) fonctionnent à partir d'un boîtier de contrôle éléctronique. Le boîtier de contrôle reçoit des signaux d'entrée envoyés par les capteurs, et envoie des signaux à son tour aux actionneurs. Il est essentiel que les deux catégories de signaux soient correctes et stables. Il est également important de rechercher des causes de problèmes plus conventionelles telles que des fuites d'air dans les canalisations de l'assistance de frein, un niveau de liquide de frein insuffisant ou autres problèmes pouvant affecter le circuit de freinage.

Il est beaucoup plus difficile de diagnostiquer un problème qui apparaît par intermittence qu'un problème qui apparaît d'une façon continue. La plupart des pannes intermittentes sont causées par des mauvais raccords électriques ou un mauvais câblage. Il faut donc vérifier correctement tous les circuits électriques qui pourraient être mal branchés, afin d'éviter le remplacement de pièces encore bonnes.

Il est assez difficile de trouver la cause des pannes avec simplement une vérification à l'œil nu, aussi nous vous conseillons d'effectuer des essais sur route.

Avant d'entreprendre les vérifications, prendre quelques minutes pour parler au client qui se plaint de l'ABS. Le client est une très bonne source de renseignements sur ces problèmes, particulièrement sur les pannes intermittentes. A partir de ce que le client vous dira, vous pourrez plus facilement localiser les symptômes et essayer d'en trouver la cause.

Lors du diagnostic, commencer par vérifier les pannes dites ''conventionelles''. Ceci est un des meilleurs moyens pour dépister les pannes de frein sur les véhicules avec ABS.

Simpo PDF Merge and Split Unregistered Version - http://www.simpopdf.com

A

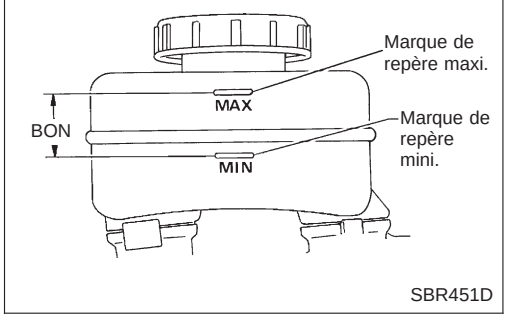

SBR451D

B

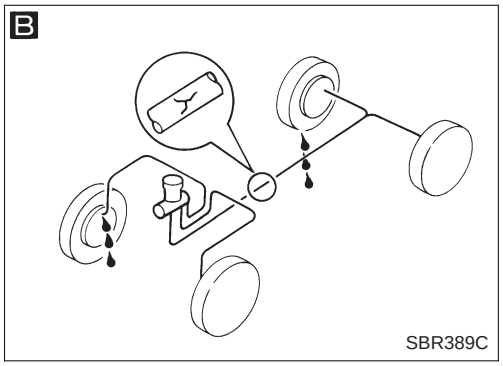

SBR389C

C

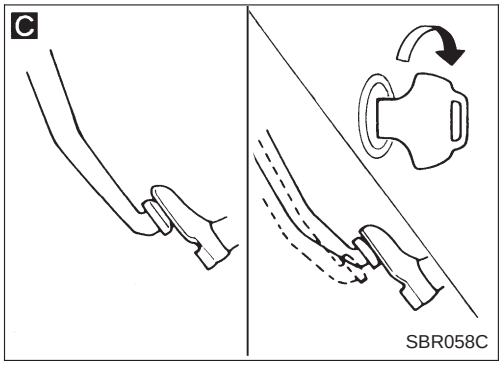

SBR058C

D

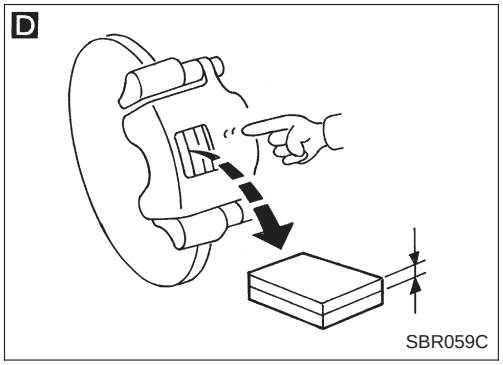

SBR059C

E

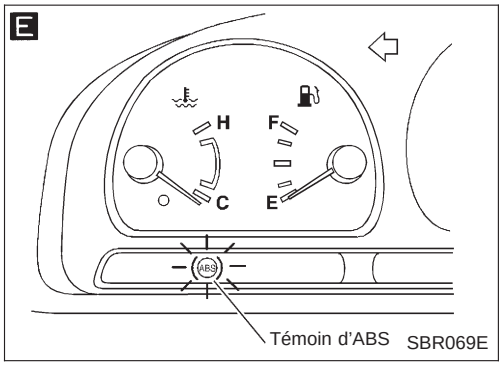

SBR069E

Vérification préliminaire

A

Vérifier le niveau du liquide de frein dans le réservoir.

Un niveau de liquide bas peut indiquer une usure des plaquettes de frein ou une fuite des canalisations de frein.

B

Vérifier s'il n'y a pas de fuite de liquide, dans les canalisations de frein.
- Mauvais → Réparer.
- Bon

C

Vérifier le fonctionnement de l'assistance de frein et l'étanchéité à l'air. Se reporter à BR-15.
- Mauvais → Remplacer.
- Bon

D

Vérifier les plaquettes, le rotor, les garnitures et le tambour de frein. Se reporter à BR-21,23, 28.
- Mauvais → Remplacer.
- Bon

A

Vérifier de nouveau le niveau du liquide de frein dans le réservoir.
- Mauvais → Faire le plein du liquide de frein.
- Bon

E

Vérifier le fonctionnement du témoin. Lorsque le contact d'allumage est mis sur ON, le témoin s'allume.
- Mauvais → Vérifier le fusible, l'ampoule du témoin et le circuit du témoin.
- Bon

Vérifier l'extinction du témoin après le démarrage du moteur.
- Mauvais → Se reporter à Auto diagnostic, BR-53, 57.
- Bon

Conduire le véhicule à plus de 30 km/h pendant au moins 1 minute.

S'assurer que le témoin reste allumé pendant la conduite.
- Mauvais → Se reporter à auto diagnostic, BR-53, 57.
- Bon

FIN

Simpo PDF Merge and Split Unregistered Version - http://www.simpopdf.com

Emplacement des composants et du connecteur de faisceaux

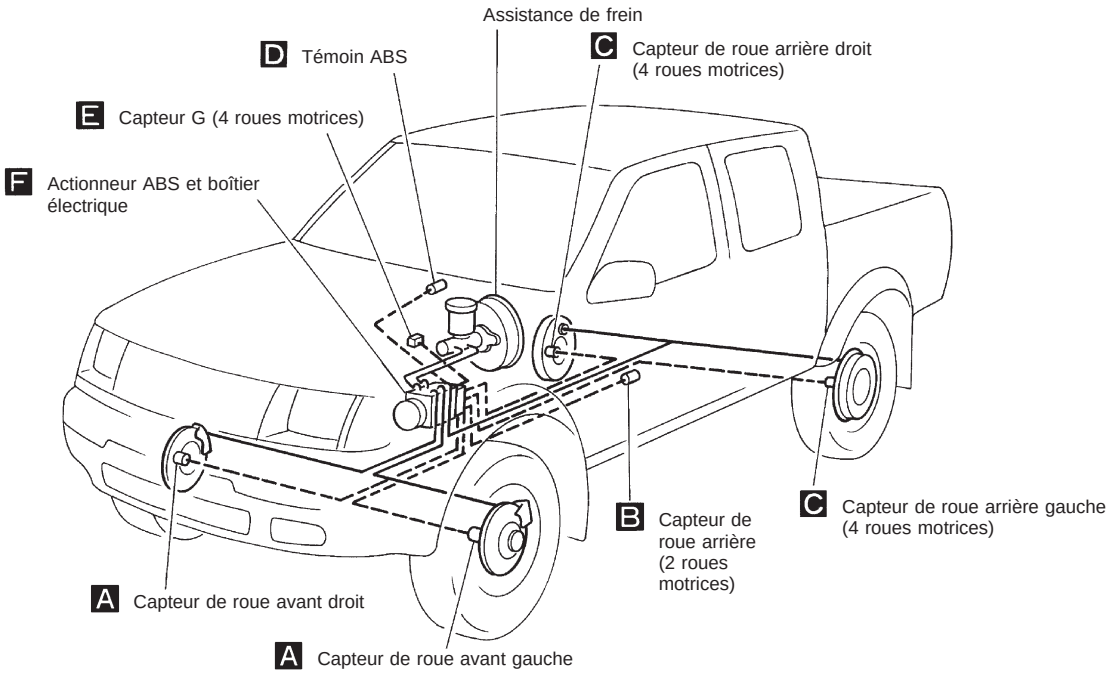

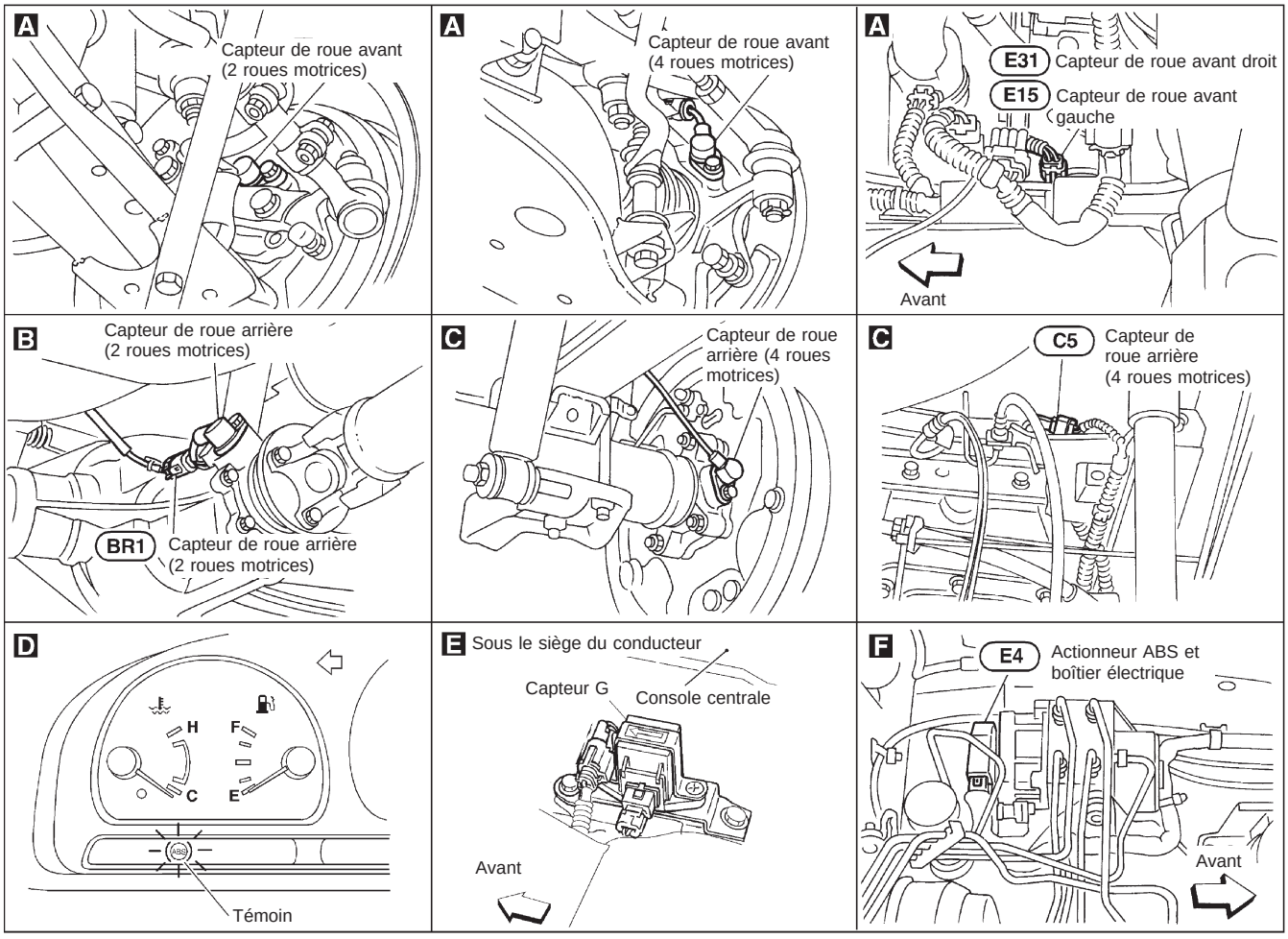

SBR076E

Simpo PDF Merge and Split Unregistered Version - http://www.simpopdf.com

Schéma de circuit/Modèles avec 2 roues motrices

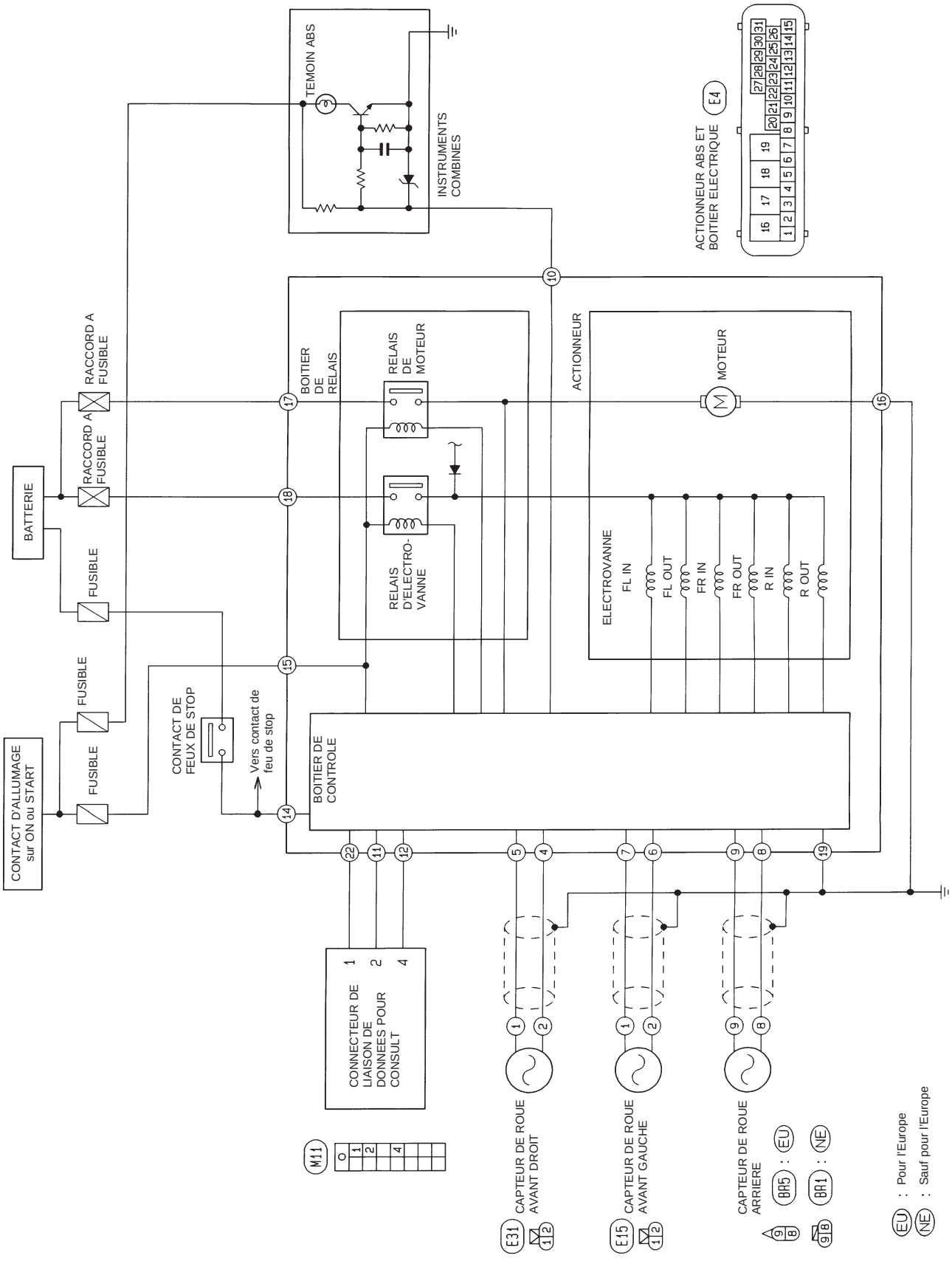

HBR067

Simpo PDF Merge and Split Unregistered Version - http://www.simpopdf.com

Schéma de câblage – ABS –/2 roues motrices, conduite à gauche

BR–ABS–01

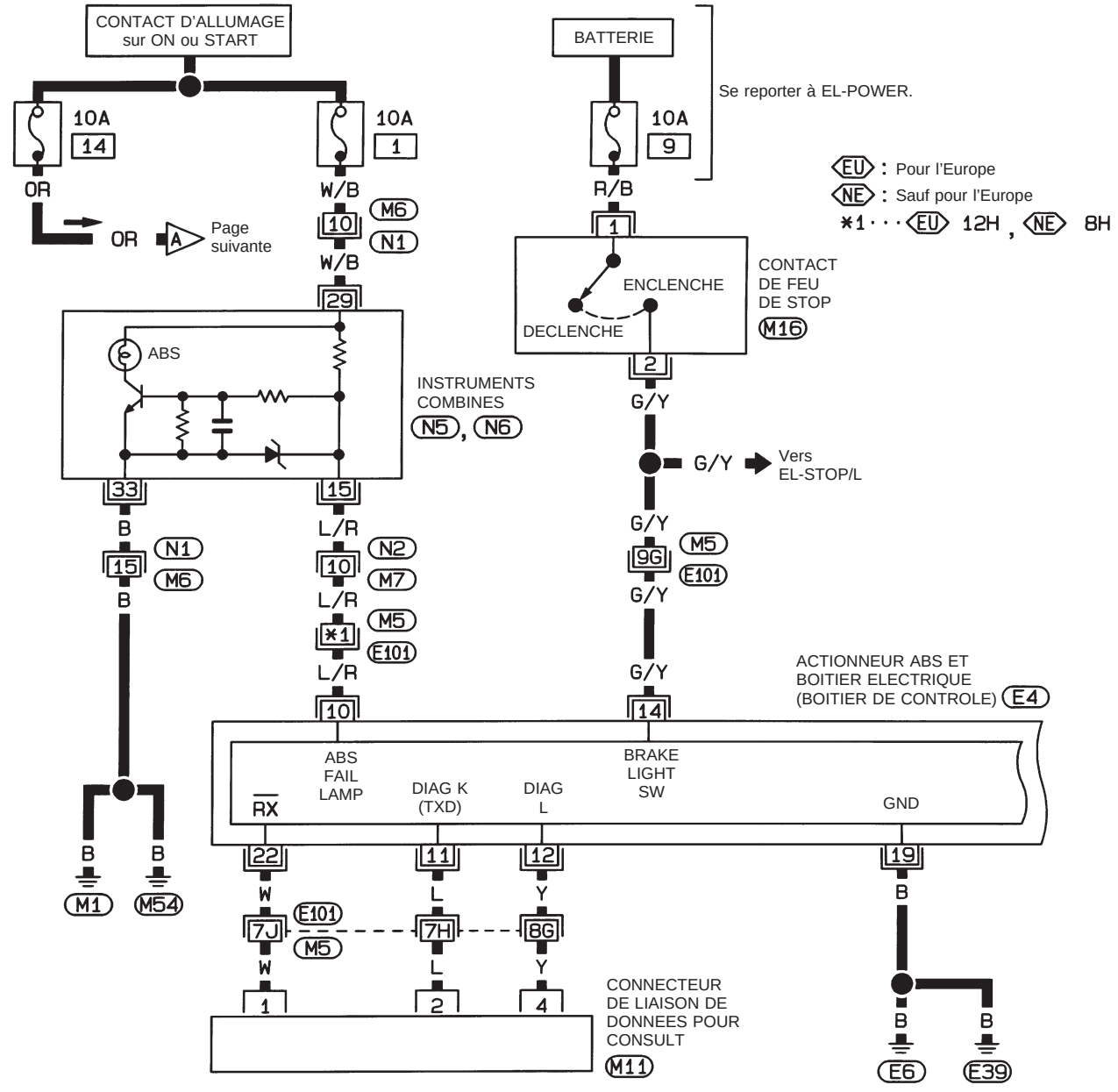

Se reporter à la dernière page dépliante.

HBR068

Simpo PDF Merge and Split Unregistered Version - http://www.simpopdf.com

Schéma de câblage – ABS –/2 roues motrices, conduite à gauche (Suite)

BR-ABS-02

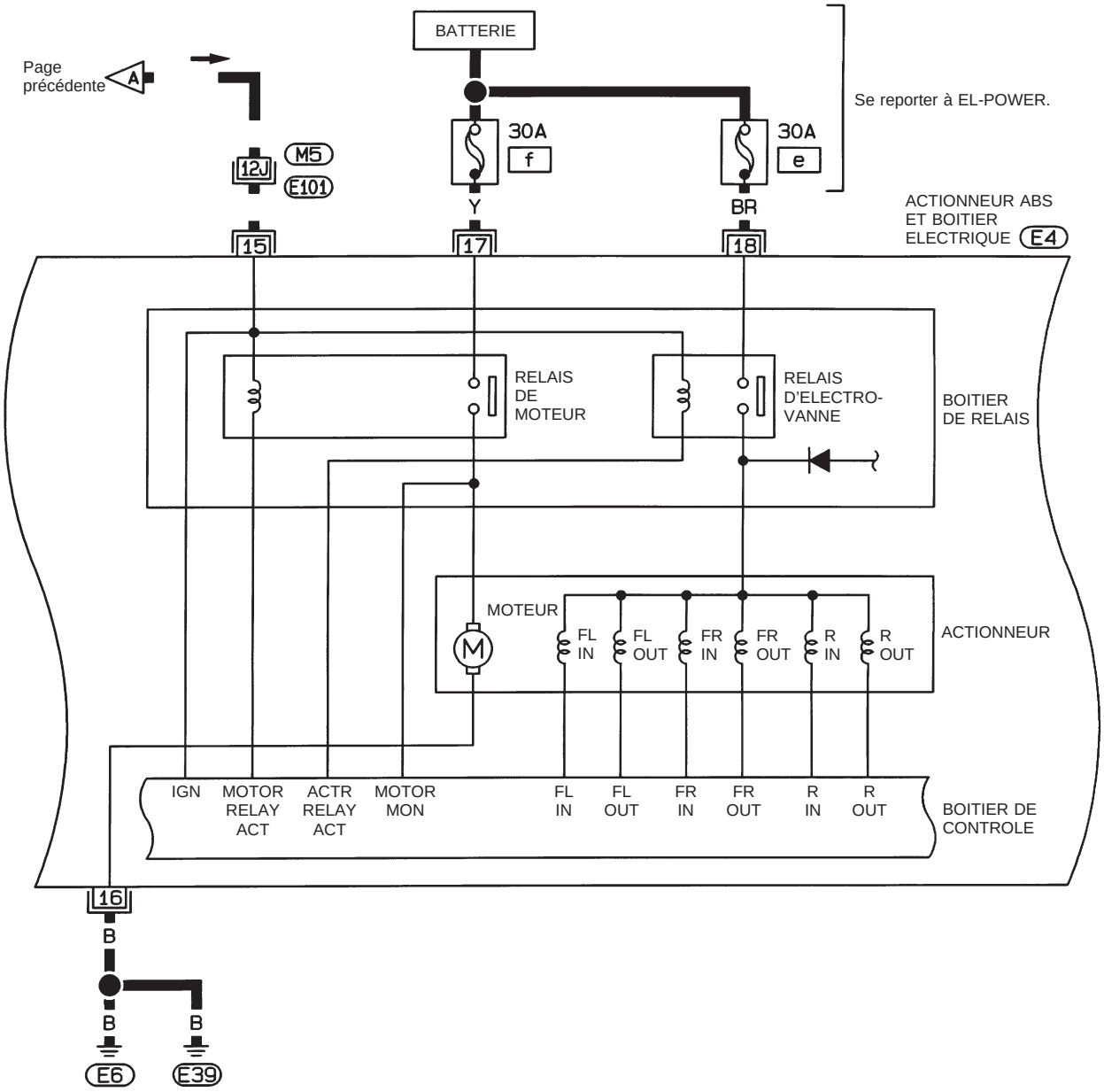

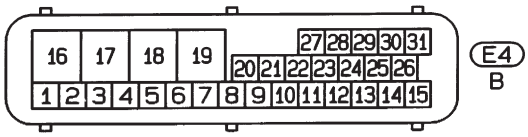

Se reporter à la dernière page dépliante.

M5 , E101

HBR069

Simpo PDF Merge and Split Unregistered Version - http://www.simpopdf.com

Schéma de câblage – ABS –/2 roues motrices, conduite à gauche (Suite)

BR-ABS-03

EU : Pour l'Europe
NE : Sauf pour l'Europe

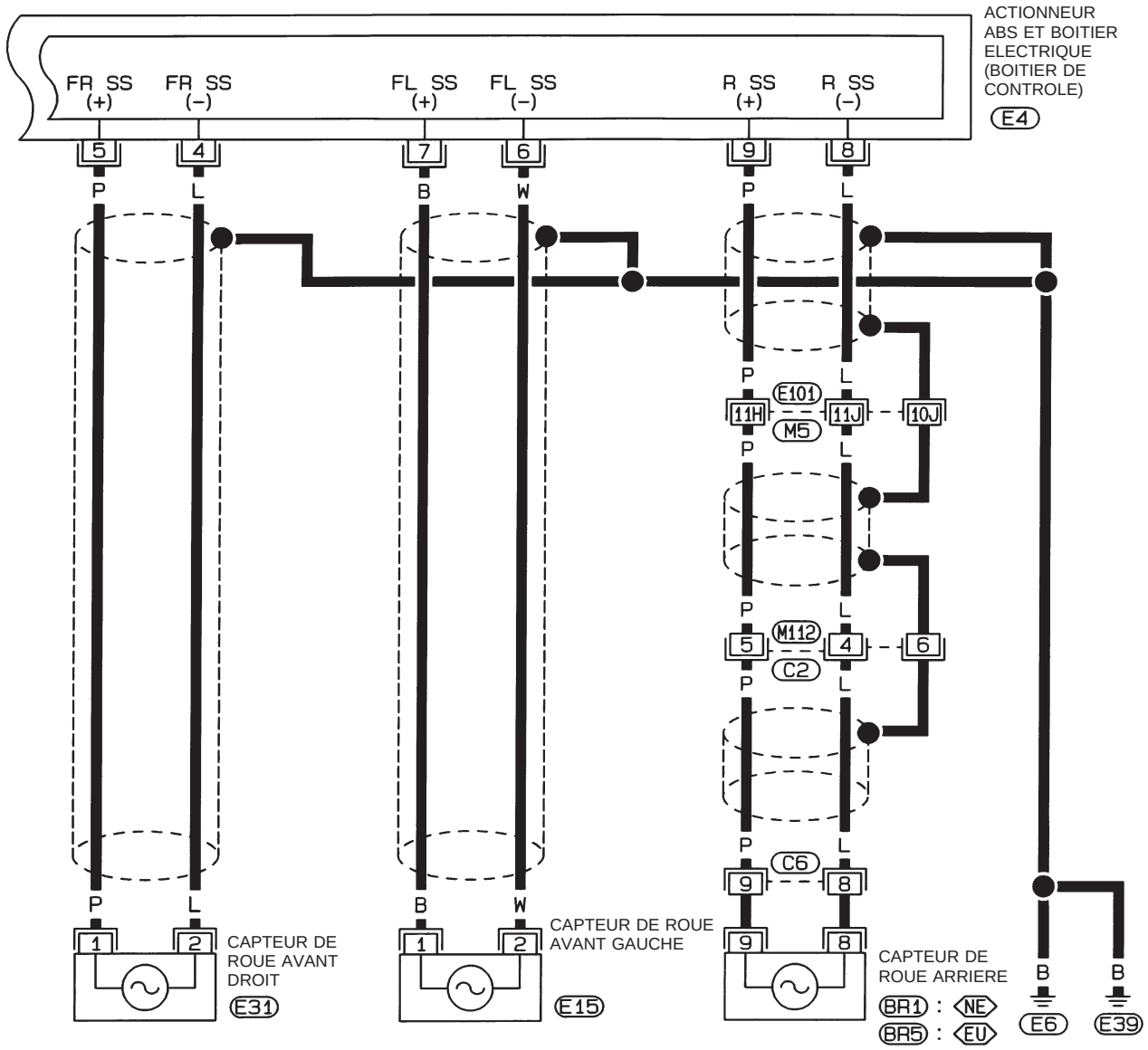

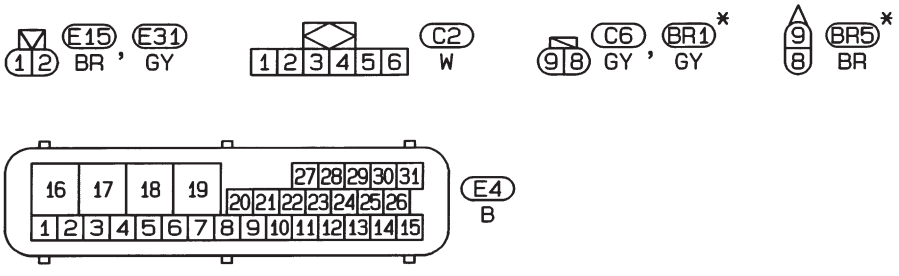

∗ : Ce connecteur n'est pas indiqué à "DISPOSITION DES FAISCEAUX" dans la section EL.

Se reporter à la dernière page dépliante.

M5, E101

HBR070

Simpo PDF Merge and Split Unregistered Version - http://www.simpopdf.com

Schéma de câblage – ABS –/2 roues motrices, conduite à droite

BR-ABS-04

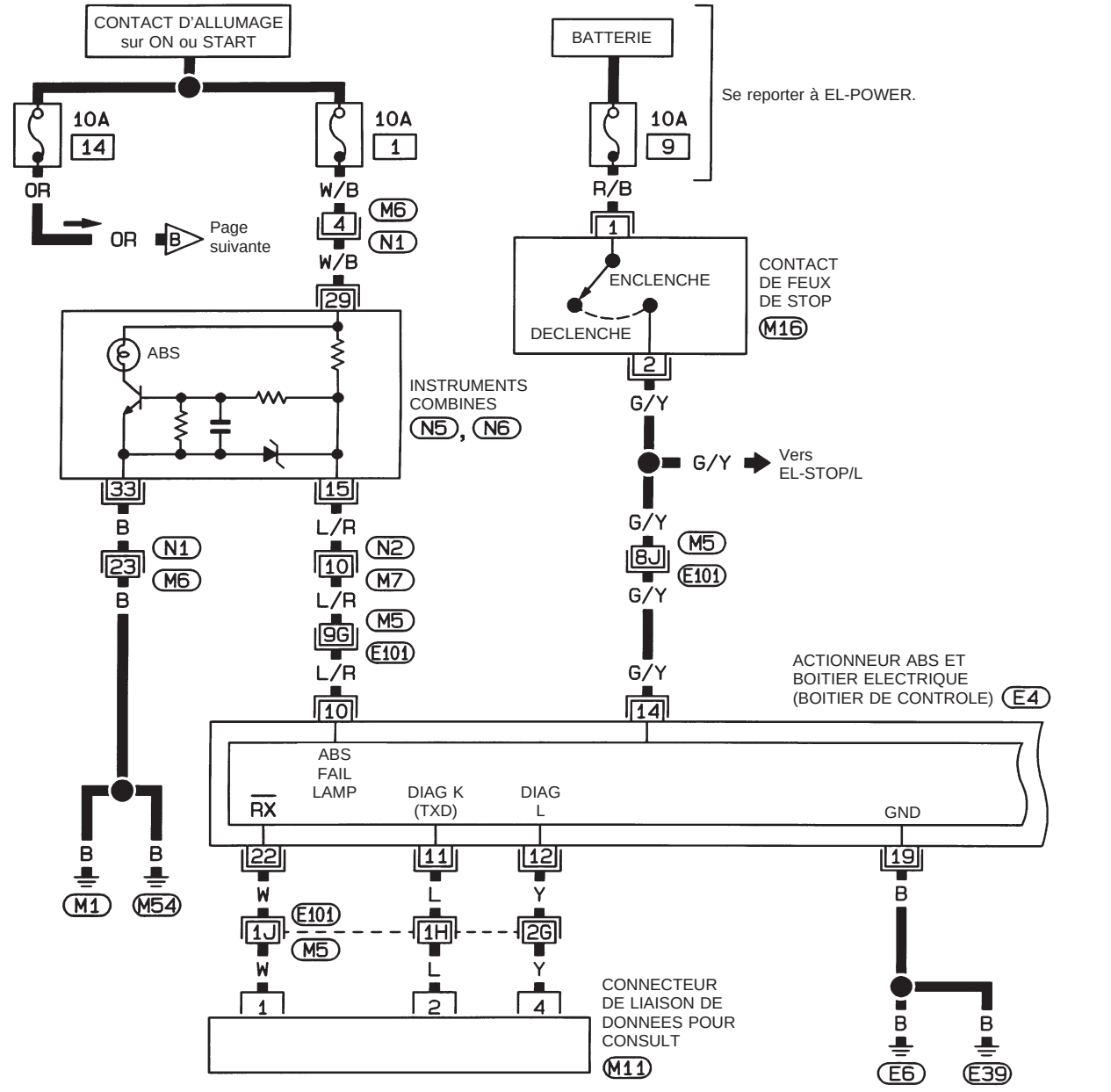

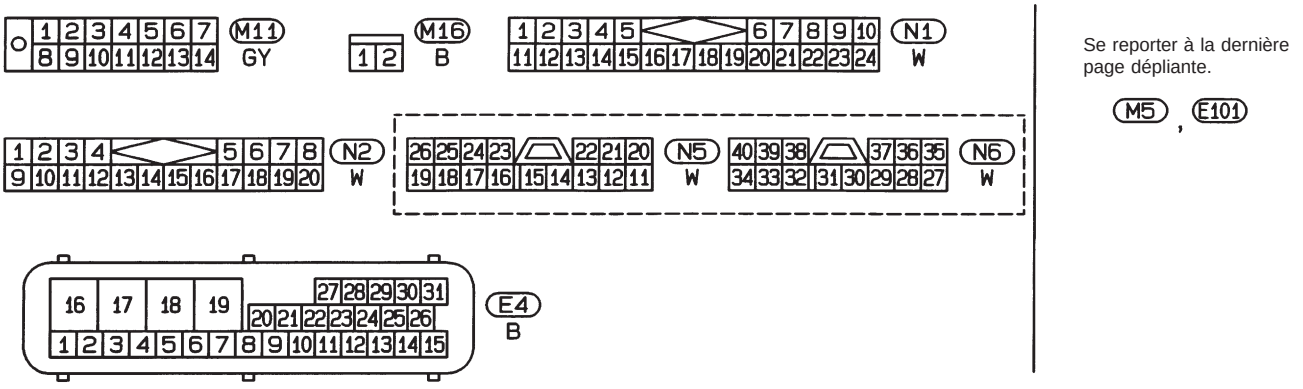

Se reporter à la dernière page dépliante.
M5, E101

HBR071

Simpo PDF Merge and Split Unregistered Version - http://www.simpopdf.com

Schéma de câblage – ABS –/2 roues motrices, conduite à droite (Suite)

BR-ABS-05

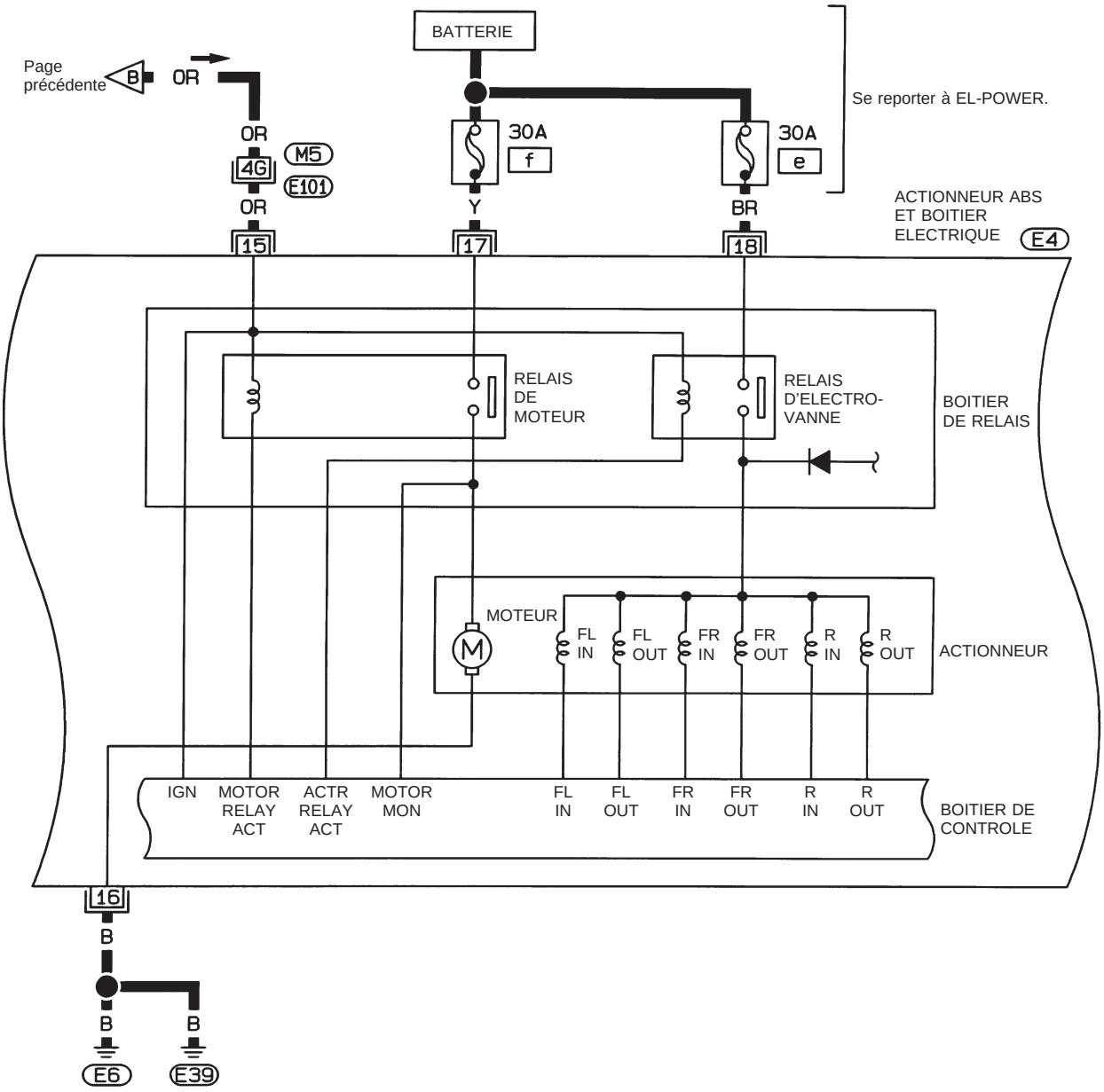

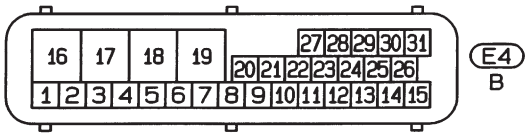

Se reporter à la dernière page dépliante.

M5 , E101

HBR072

Simpo PDF Merge and Split Unregistered Version - http://www.simpopdf.com

Schéma de câblage – ABS –/2 roues motrices, conduite à droite (Suite)

BR-ABS-06

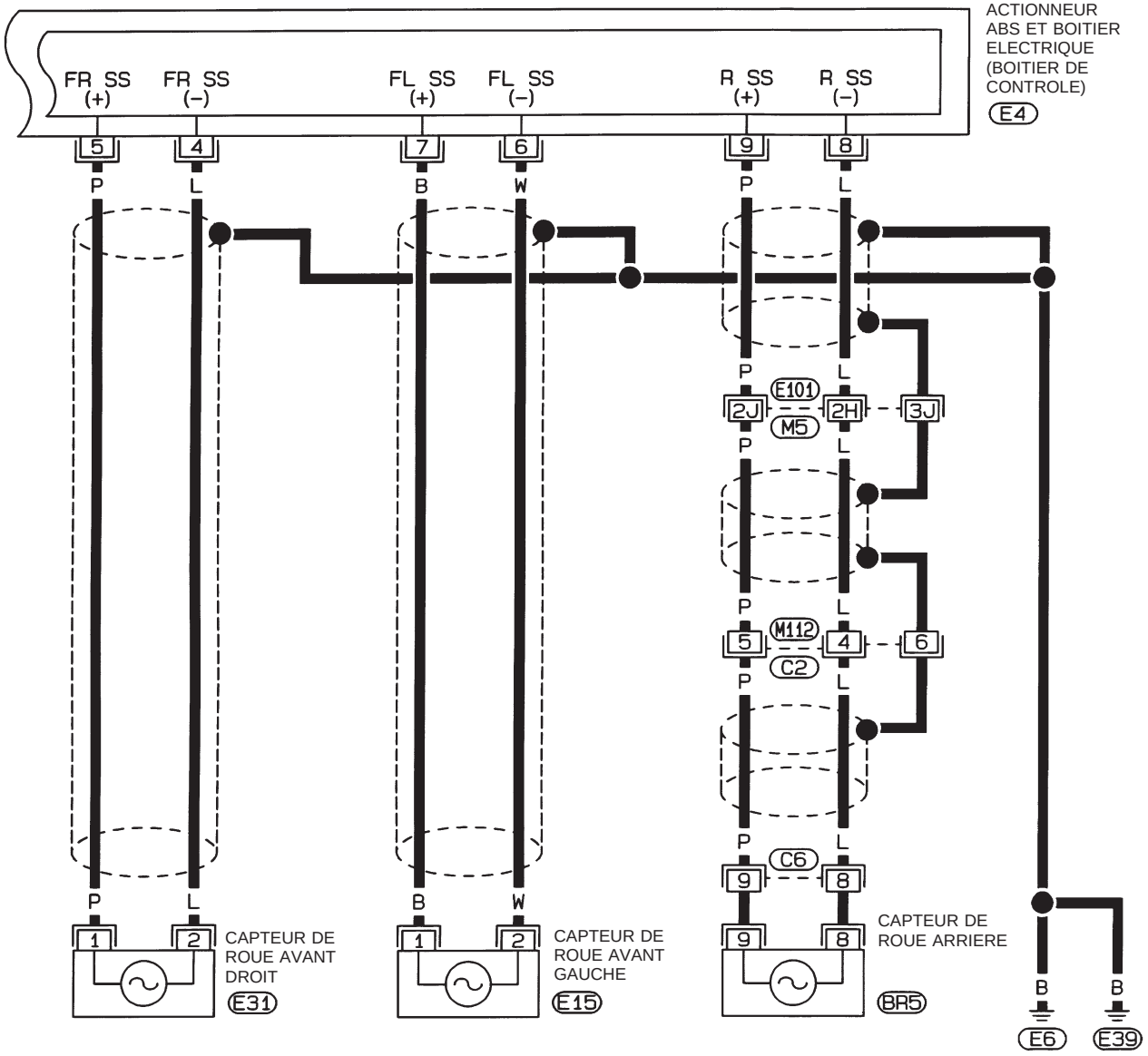

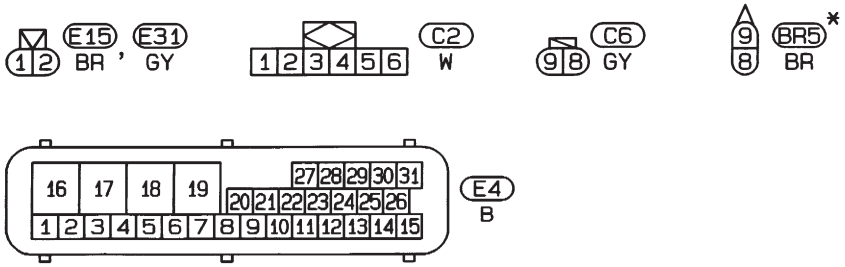

Se reporter à la dernière page dépliante.

M5 , E101

∗ : Ce connecteur n'est pas indiqué à "DISPOSITION DES FAISCEAUX" dans la section EL.

HBR073

Simpo PDF Merge and Split Unregistered Version - http://www.simpopdf.com

Schéma de circuit/Modèles avec 4 roues motrices

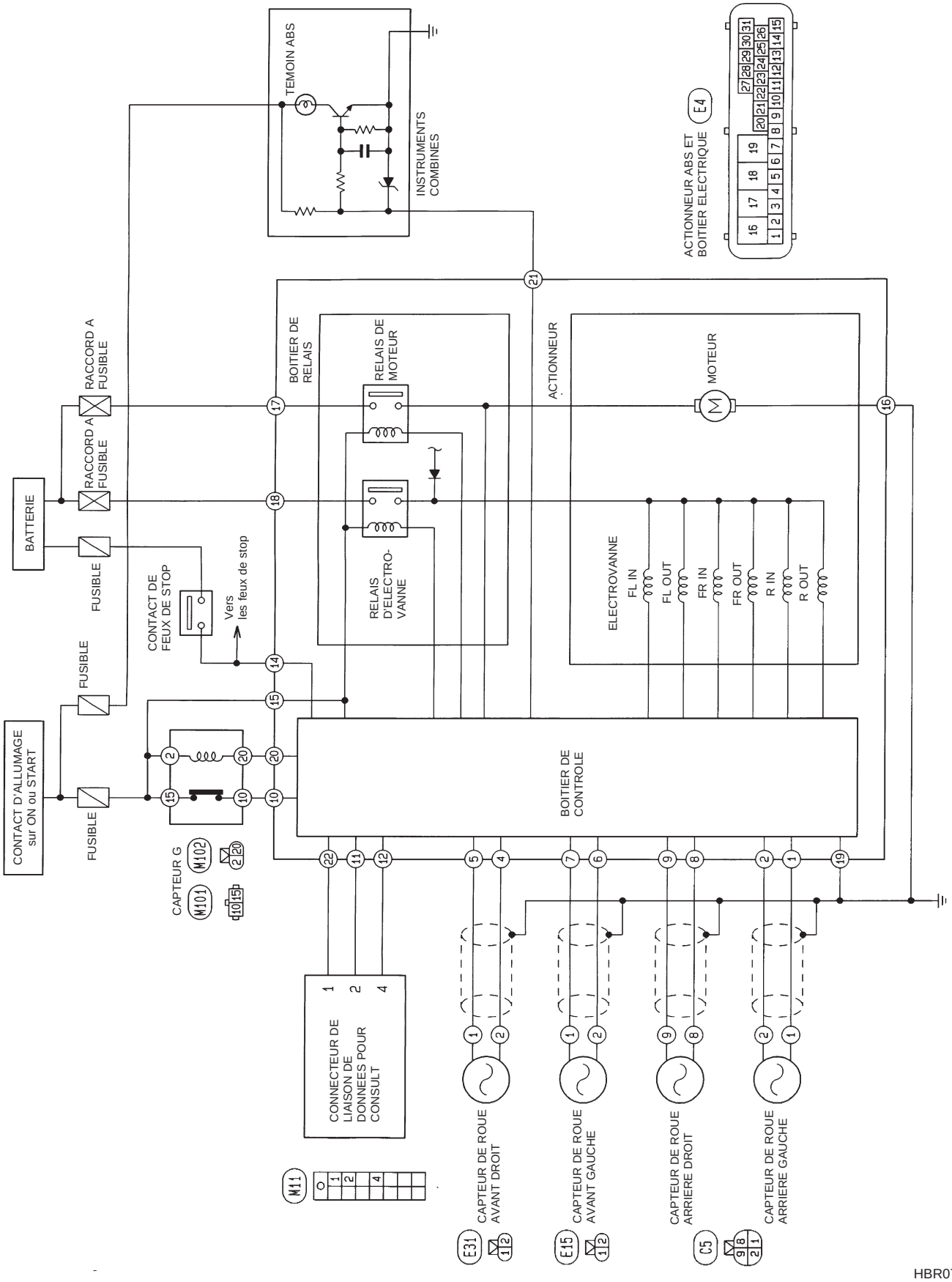

HBR078

Simpo PDF Merge and Split Unregistered Version - http://www.simpopdf.com

Schéma de câblage – ABS –/Modèles avec 4 roues motrices

BR-ABS-07

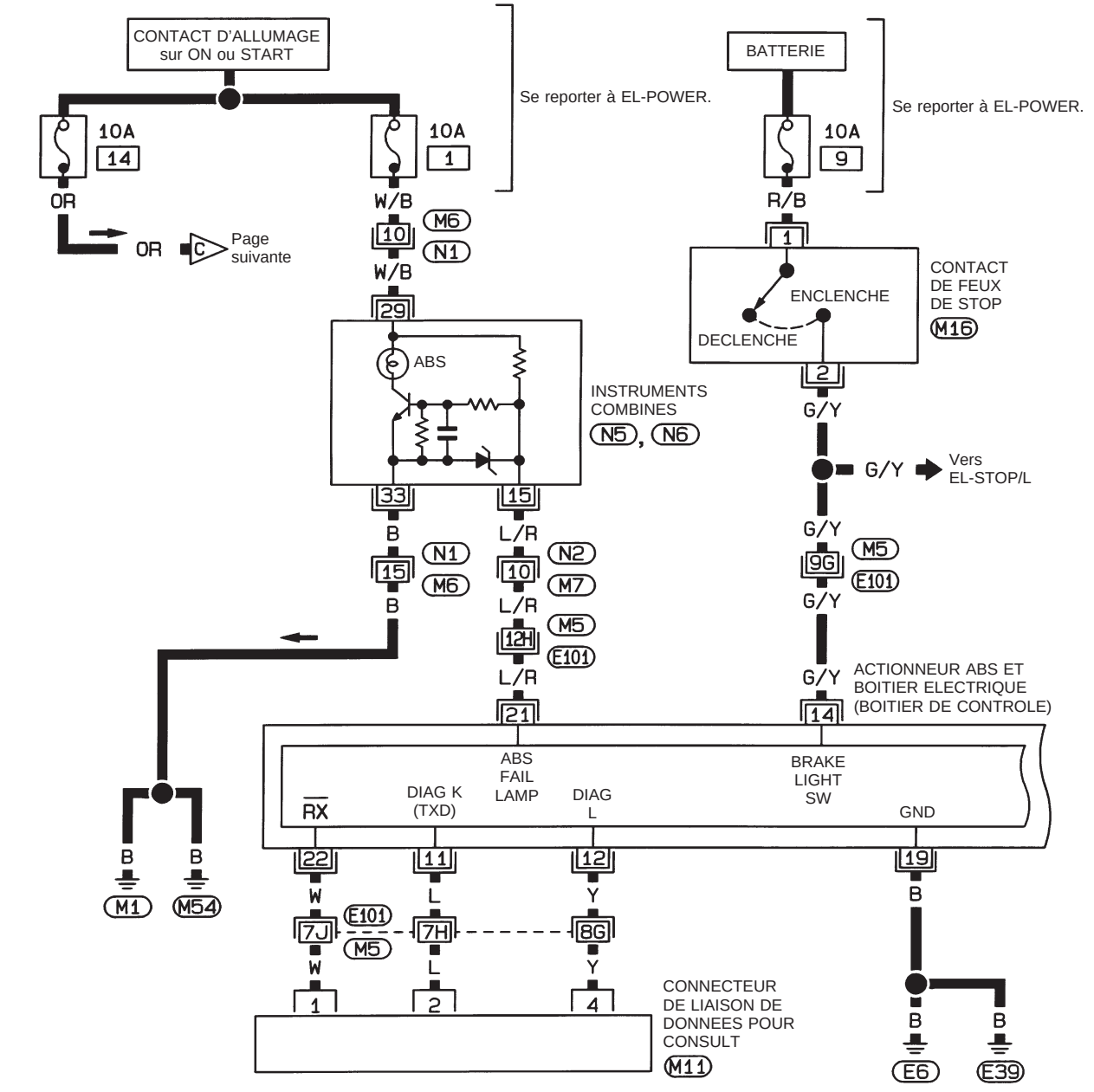

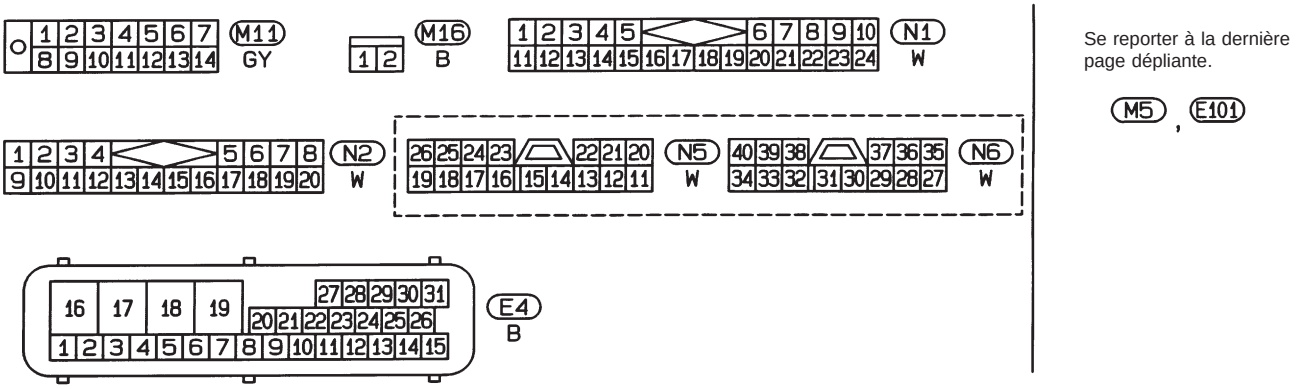

HBR074

Simpo PDF Merge and Split Unregistered Version - http://www.simpopdf.com

Schéma de câblage – ABS –/Modèles avec 4 roues motrices (Suite)

BR-ABS-08

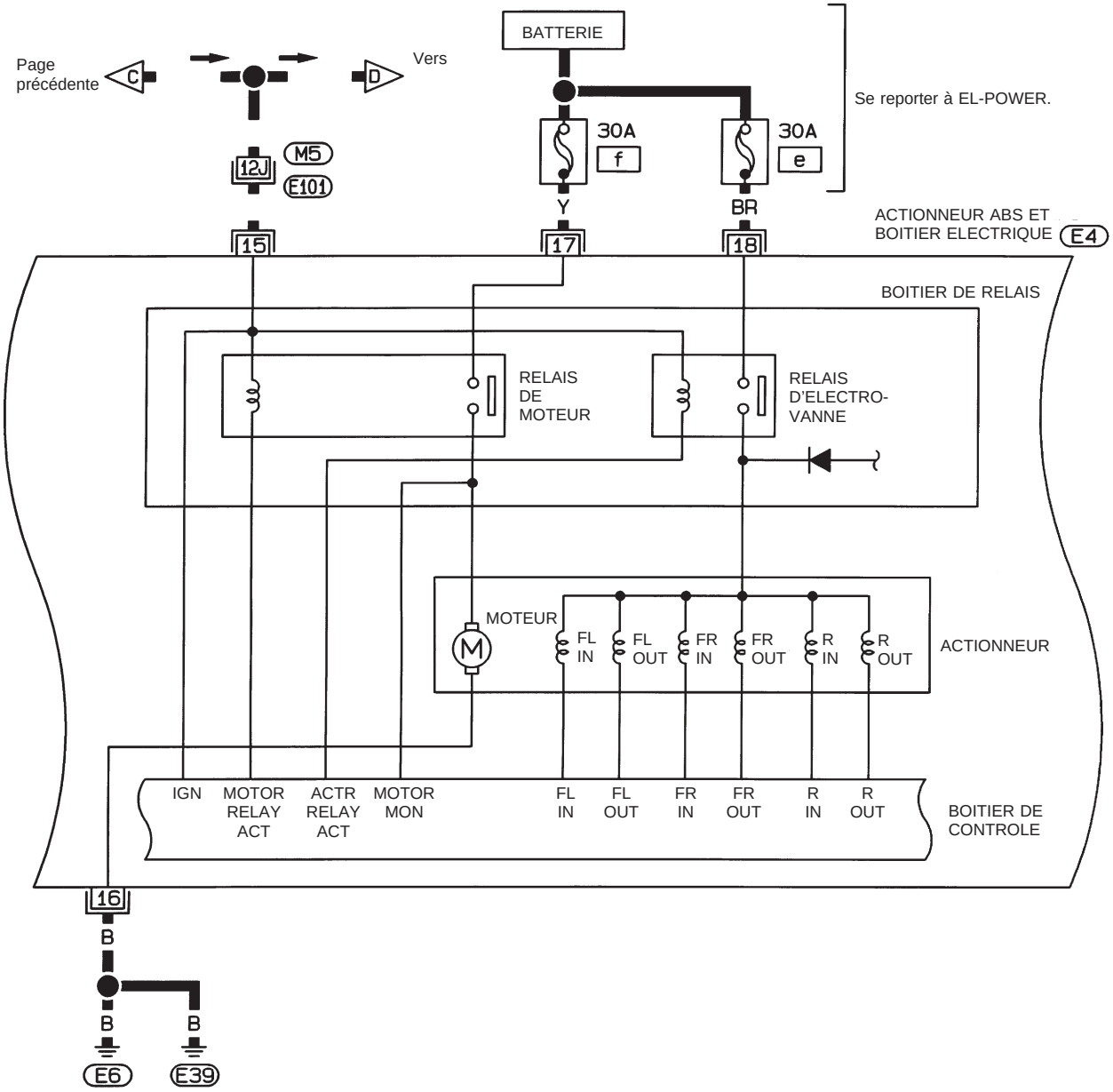

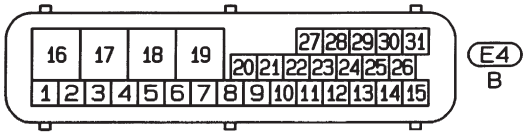

Se reporter à la dernière page dépliante.

M5 , E101

HBR075

Simpo PDF Merge and Split Unregistered Version - http://www.simpopdf.com

Schéma de câblage – ABS –/Modèles avec 4 roues motrices (Suite)

BR-ABS-09

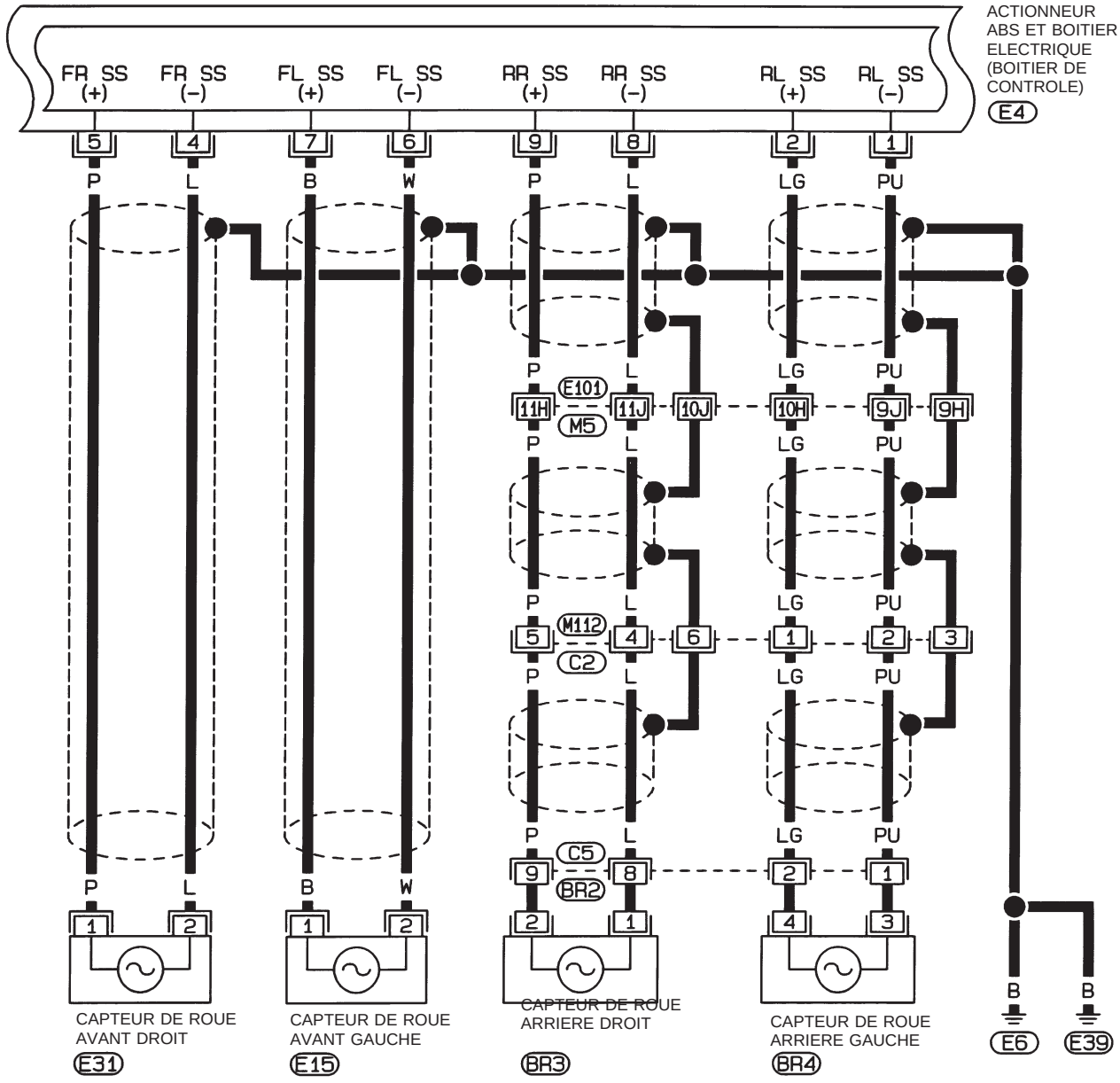







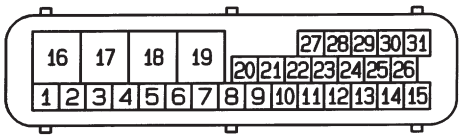





Se reporter à la dernière page dépliante.



* : Ce connecteur n'est pas indiqué à "DISPOSITION DES FAISCEAUX" dans la section EL.

HBR076

Simpo PDF Merge and Split Unregistered Version - http://www.simpopdf.com

Schéma de câblage – ABS –/Modèles avec 4 roues motrices (Suite)

BR-ABS-10

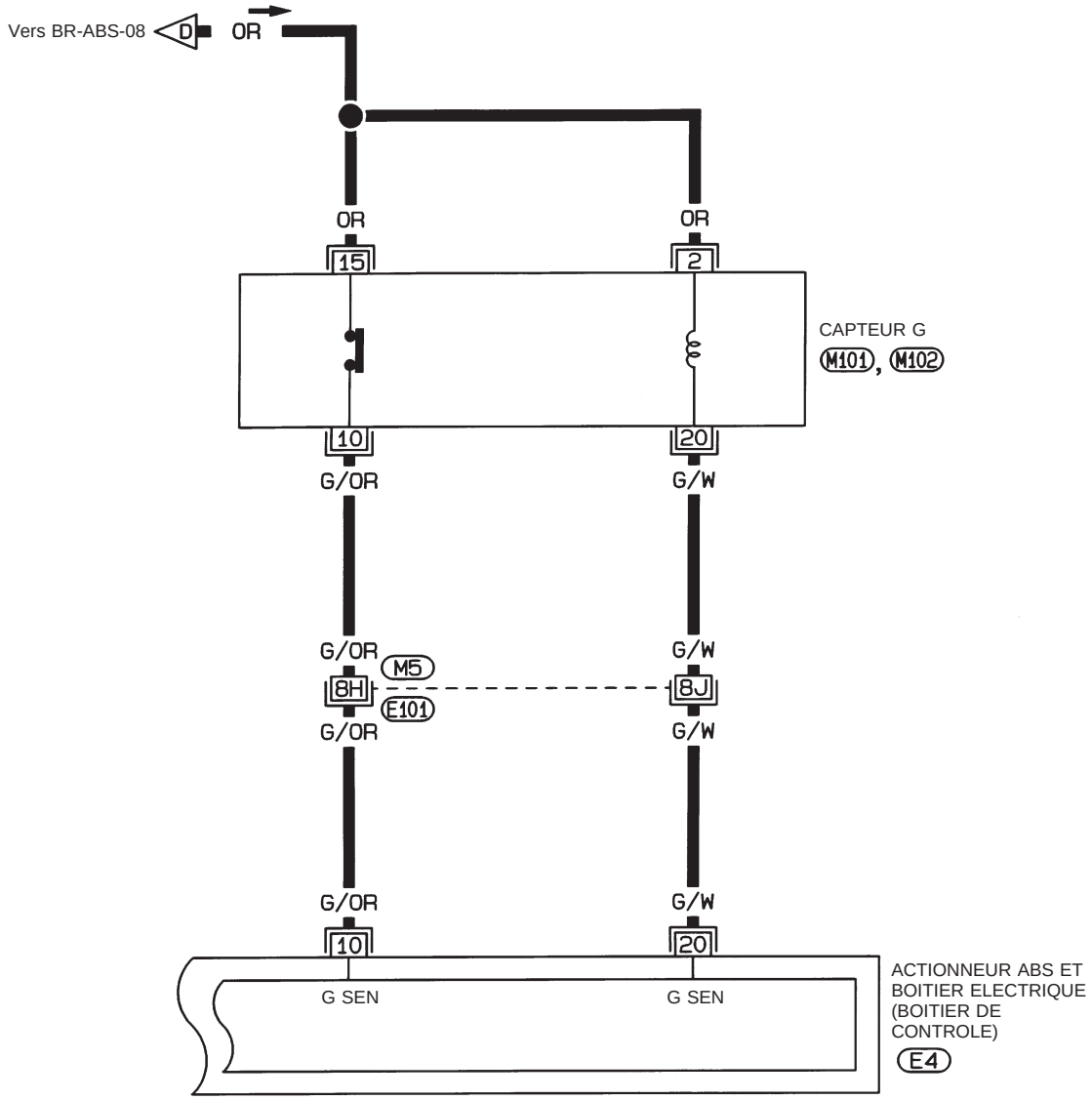

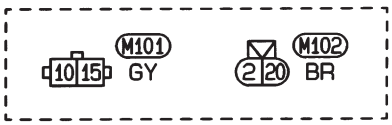

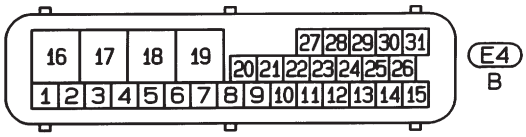

Se reporter à la dernière page dépliante.
M5, E101

HBR077

Simpo PDF Merge and Split Unregistered Version - http://www.simpopdf.com

Autodiagnostic

Fonction

- Lorsqu'il y a un problème sur le systgeme d'ABS, le témoin du tableau de bord s'allume. Pour mettre en marche le mode de résultats d'autodiagnostic, mettre à la masse la borne de l'autodiagnostic (contrôle) située sur le ''Connecteur de liaison de données pour CONSULT''. L'emplacement du défaut est indiqué par le clignotement du témoin avertisseur.

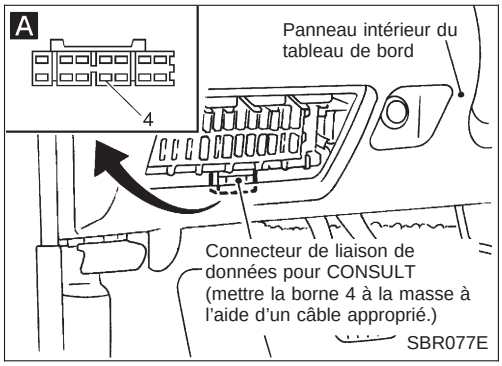

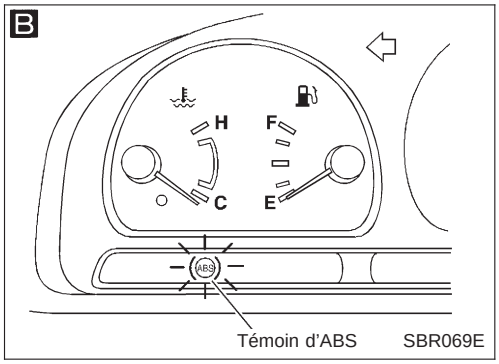

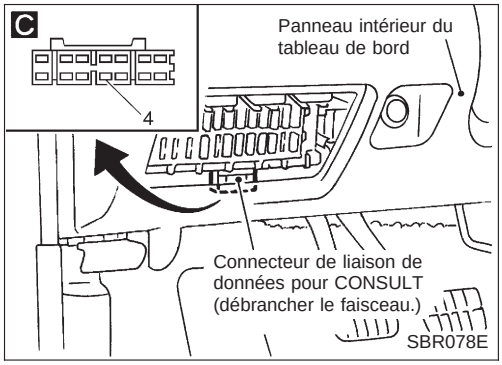

PROCEDURE D'AUTODIAGNOSTIC

Conduire le véhicule à plus de 30 km/h pendant au moins une minute.

↓

Mettre le contact d'allumage sur ''OFF''.

↓

A

Mettre à la masse la borne ''4'' du ''Connecteur de liaison de données pour CONSULT'' avec un faisceau approprié.

↓

Mettre le contact d'allumage sur ''ON'' lorsque la borne ''4'' est mise à la masse.
Ne pas enfoncer la pédale de frein.

↓

B

Après 3,0 secondes, le témoin avertisseur commence à clignoter pour indiquer le numéro du code de défaut (voir NOTE).

↓

Déterminer l'emplacement des défauts à l'aide du tableau des codes de défaut. Se reporter à BR-55. Puis faire les réparations requises en observant les procédures de diagnostic.

↓

Une fois les défauts réparés, effacer les codes de défaut mémorisés dans le boîtier de contrôle. Se reporter à BR-54.

↓

Passer à nouveau en mode de résultats d'autodiagnostic pour vérifier si les codes de défaut ont été effacés.

↓

C

Débrancher la borne de contrôle de la masse. Le mode de résultats d'autodiagnostic est maintenant terminé.

↓

Ⓐ

REMARQUE:
L'indication est terminée après cinq minutes. Le témoin se remet cependant à clignoter lorsqu'on passe le contact d'allumage de la position ''OFF'' à ''ON''.

Simpo PDF Merge and Split Unregistered Version - http://www.simpopdf.com

Autodiagnostic (Suite)

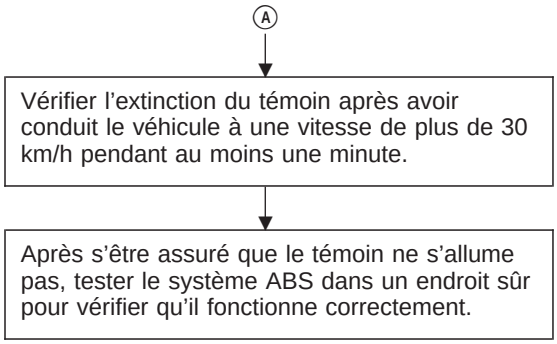

COMMENT LIRE LES RESULTATS DE L'AUTODIAGNOSTIC (codes de défaut)

- Déterminer le n° de code en comptant le nombre de clignotements du témoin.
- Lorsque plusieurs défauts se produisent en même temps, le système pourra mémoriser jusqu'à trois codes. Le dernier défaut sera indiqué en premier.
- Le témoin commence avec le code 12. Par la suite, un maximum de trois numéros de code sera donné en commençant par le dernier. Le témoin revient ensuite au code de départ 12 pour répéter l'indication (l'indication sera donnée pendant un maximum de cinq minutes).
- Le tableau de code de défaut est mentionné à la page suivante.

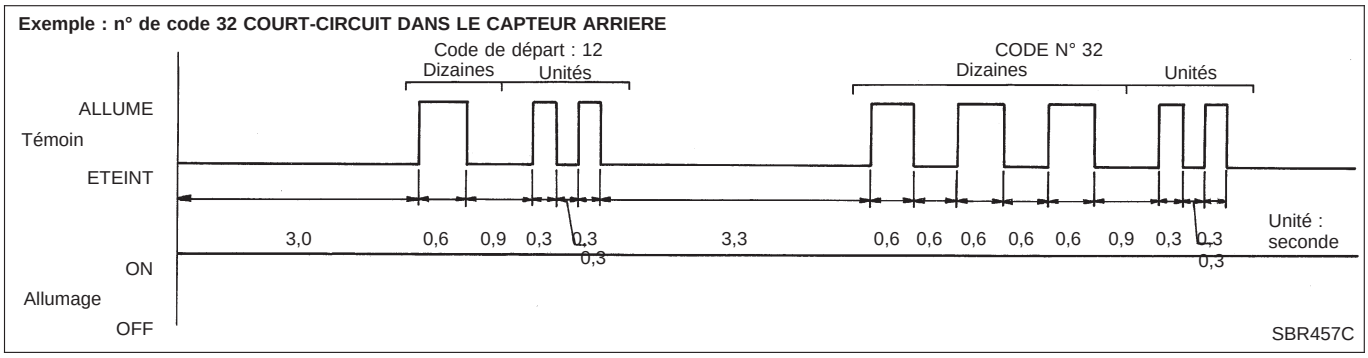

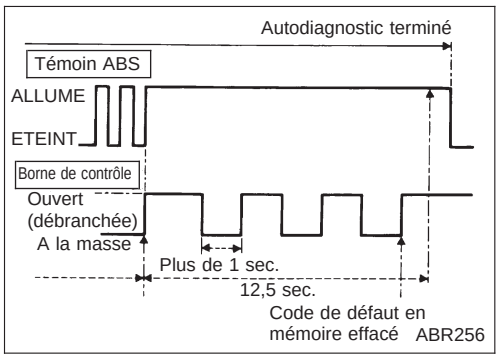

COMMENT EFFACER LES RESULTATS DE L'AUTODIAGNOSTIC (codes de défaut)

1. Débrancher la borne de vérification de la masse (le témoin ABS reste allumé).
2. Dans les 12,5 secondes, mettre en mise à la masse la borne de vérification trois fois. Chaque mise à la masse de borne doit durer plus d'une seconde. Le témoin ABS s'éteint une fois l'effacement terminé.
3. Effectuer de nouveau l'autodiagnostic. Se reporter à BR-53. Seul le code de départ doit apparaître, aucun code de défaut de fonctionnement ne doit apparaître.

Simpo PDF Merge and Split Unregistered Version - http://www.simpopdf.com

Autodiagnostic (Suite)

TABLEAU DES CODES DE DEFAUT/SYMPTOMES

N° de code (Nombre de clignotements du témoin)		Pièces défectueuses	Procédure de diagnostic
45		Electrovanne de sortie d'actionneur avant gauche	2
46		Electrovanne d'entrée d'actionneur avant gauche	2
41		Electrovanne de sortie d'actionneur avant droit	2
42		Electrovanne d'entrée d'actionneur avant droit	2
55		Electrovanne de sortie d'actionneur arrière	2
56		Electrovanne d'entrée d'actionneur arrière	2
25	★3	Capteur avant gauche (circuit ouvert)	1
26	★3	Capteur avant gauche (court-circuit)	1
21	★3	Capteur avant droit (circuit ouvert)	1
22	★3	Capteur avant droit (court-circuit)	1
35	★1, ★3	Capteur arrière (circuit ouvert)	1
36	★1, ★3	Capteur arrière (court-circuit)	1
31	★2, ★3	Capteur arrière droit (circuit ouvert)	1
32	★2, ★3	Capteur arrière droit (court-circuit)	1
35	★2, ★3	Capteur arrière gauche (circuit ouvert)	1
36	★2, ★3	Capteur arrière gauche (court-circuit)	1
18	★3	Rotor de capteur	1
17	★2	Capteur G et circuit	5
61	★5	Moteur d'actionneur ou relais de moteur	3
63		Relais d'électrovanne	2
57	★4	Source d'alimentation électrique (basse tension)	4
71		Boîtier de contrôle	6
Le témoin reste allumé lorsque le contact d'allumage est enclenché.		Circuit d'alimentation électrique du boîtier de contrôle Circuit d'ampoule de témoin Boîtier de contrôle ou connecteurs du boîtier de contrôle Relais d'électrovanne coincé Alimentation électrique de bobine de relais d'électro-vanne	13
Le témoin ne s'allume pas lorsque le contact d'allumage est enclenché.		Fusible, ampoule du témoin ou circuit du témoin Boîtier de contrôle	12
Vibrations et bruit de la pédale		—	11
Distance de freinage prolongée		—	9
Fonctionnement anormal de la pédale		—	8
L'ABS n'est pas opérationnel		—	10
L'ABS fonctionne fréquemment		—	7

★1 : Modèles à 2 roues motrices seulement

★2 : Modèles à 4 roues motrices seulement

★3 : Si une ou plusieurs roues patinent sur une route cahoteuse ou glissante pendant 40 secondes ou plus, le témoin ABS s'allume. Cela n'indique pas un défaut de fonctionnement. Uniquement en cas de court-circuit. (n° de code 26, 22, 32 et 36), après réparation, le témoin ABS s'allume également quand le contact d'allumage est mis sur ''ON''. En pareil cas, conduire le véhicule à plus de 30 km/h pendant environ 1 minute comme spécifié dans ''PROCEDURE D'AUTODIAGNOSTIC'', BR-53. Vérifier que le témoin ABS est bien éteint pendant la conduite du véhicule.

★4 : Le code de défaut ''57'', qui renvoie à une basse tension d'alimentation, n'indique pas un défaut de fonctionnement du boîtier de contrôle d'ABS. Ne pas remplacer le boîtier de contrôle d'ABS par un neuf.

★5 : Le code de défaut ''61'' peut parfois apparaître quand le moteur d'ABS est mal mis à la masse, S'il apparaît, prendre soin de vérifier l'état de la connexion du circuit de masse du moteur d'ABS.

Simpo PDF Merge and Split Unregistered Version - http://www.simpopdf.com

CONSULT

APPLICATION DE CONSULT SUR L'ABS

La carte programme EF960 n'est pas applicable à l'ABS. Utiliser le système d'autodiagnostic avec le témoin ABS en attendant l'introduction de la prochaine carte de programme. (Se reporter à ''Autodiagnostic'', BR-53.)

ARTICLE	RESULTATS D'AUTODIAGNOSTIC	CONTROLE DES DONNEES	TEST ACTIF
Capteur de roue avant droite	X	X	—
Capteur de roue avant gauche	X	X	—
Capteur de roues arrière ★1	X	X	—
Capteur de roue arrière droite ★2	X	X	—
Capteur de roue arrière gauche ★2	X	X	—
Contact G (Capteur G) ★2	X	X	X
Contact de feux de stop	—	X	—
Electrovanne d'entrée avant droite	X	X	X
Electrovanne de sortie avant droite	X	X	X
Electrovanne d'entrée avant gauche	X	X	X
Electrovanne de sortie avant gauche	X	X	X
Electrovanne d'entrée arrière	X	X	X
Electrovanne de sortie arrière	X	X	X
Relais de l'électrovanne d'actionneur	X	X	—
Relais du moteur d'actionneur (le MOTEUR d'ABS est indiqué sur l'écran de contrôle des données.)	X	X	X
Témoin ABS	—	X	—
Tension de la batterie	X	X	—

X : Applicable
— : Non applicable
★1 : Modèles à 2 roues motrices seulement
★2 : Modèles à 4 roues motrices seulement

Mode de numéro de pièce du boîtier de contrôle électronique (ECU) (boîtier de contrôle de l'ABS)

Ne pas tenir compte du numéro de référence de l'ECU affiché dans le mode ''No. PIECE BOIT CONTR''. Consulter le catalogue des composants pour commander le boîtier de contrôle électronique (ECU).

Simpo PDF Merge and Split Unregistered Version - http://www.simpopdf.com

A

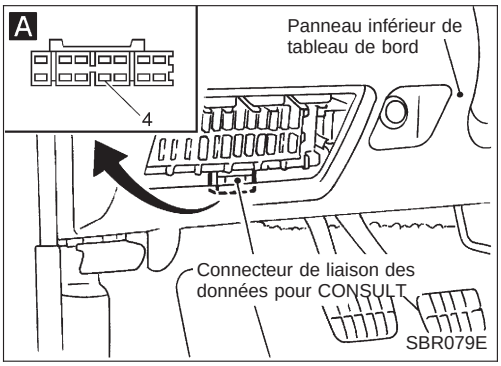

B

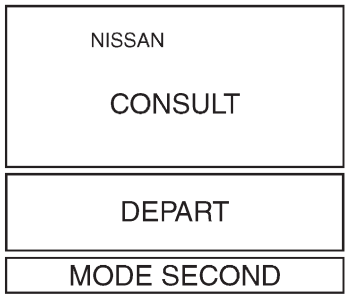

C

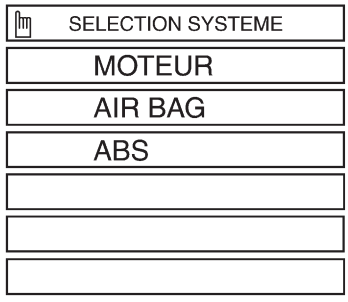

D

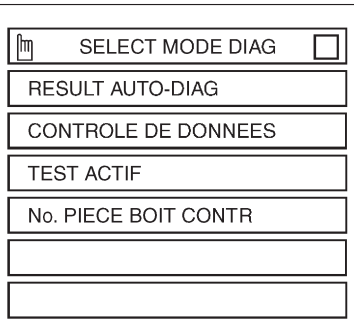

E

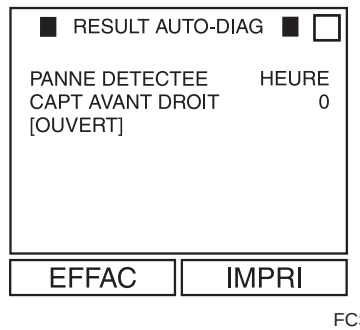

Procédure d’inspection CONSULT

PROCEDURE D’AUTODIAGNOSTIC

A

1) Mettre le contact d’allumage sur ‘‘OFF’’.
2) Brancher CONSULT au connecteur de liaison de données pour CONSULT.

↓

1) Démarrer le moteur.
2) Conduire le véhicule à plus de 30 km/h pendant au moins une minute.

↓

B 1) Arrêter le véhicule avec le moteur en marche et toucher ‘‘DEPART’’ sur l’écran de CONSULT.
C 2) Appuyer sur ‘‘ABS’’.
D 3) Appuyer sur ‘‘RESULT AUTO-DIAG’’.
● L’écran montre le défaut de fonctionnement détecté et combien de fois le contact d’allumage a été tourné depuis le dernier défaut de fonctionnement.

↓

Faire les réparations nécessaires en suivant les procédures de diagnostic.

↓

E

Une fois les défauts réparés, effacer les résultats de l’autodiagnostic mémorisés dans le boîtier de contrôle en appuyant ‘‘EFFAC’’.

↓

Vérifier l’extinction du témoin après avoir conduit le véhicule à plus de 30 km/h pendant au moins une minute.

↓

Essayer le système d’ABS dans un endroit sûr pour vérifier s’il fonctionne correctement.

Remarque : l’écran ‘‘RESULT AUTO-DIAG’’ montre le défaut de fonctionnement détecté et combien de fois le contact d’allumage a été tourné depuis le défaut de fonctionnement.

Simpo PDF Merge and Split Unregistered Version - http://www.simpopdf.com

Procédure d'inspection CONSULT (Suite)

MODE DE RESULTATS DE L'AUTODIAGNOSTIC

Elément de diagnostic	L'élément de diagnostic est détecté quand...	Procédure de diagnostic
CAPTEUR AV DR [OUVERT] ★1	● Le circuit du capteur de roue avant droite est ouvert. (Une tension d'entrée anormalement élevée est entrée.)	1
CAPTEUR AV GA [OUVERT] ★1	● Le circuit du capteur de roue avant gauche est ouvert. (Une tension d'entrée anormalement élevée est entrée.)	1
CAPTEUR ARRIERE [OUVERT] ★1, ★2	● Le circuit du capteur arrière est ouvert. (Une tension d'entrée anormalement élevée est entrée.)	1
CAPTEUR AR DR [OUVERT] ★1, ★3	● Le circuit du capteur arrière gauche est ouvert. (Une tension d'entrée anormalement élevée est entrée.)	1
CAPTEUR AR GA [OUVERT] ★1, ★3	● Le circuit du capteur arrière gauche est ouvert. (Une tension d'entrée anormalement élevée est entrée.)	1
CAPTEUR AV DR [COURT] ★1	● Le circuit du capteur de roue avant droite est court-circuité. (Une tension d'entrée anormalement basse est entrée.)	1
CAPTEUR AV GA [COURT] ★1	● Le circuit du capteur de roue avant gauche est court-circuité. (Une tension d'entrée anormalement basse est entrée.)	1
CAPTEUR ARRIERE [COURT] ★1, ★2	● Le circuit du capteur arrière est court-circuité. (Une tension d'entrée anormalement basse est entrée.)	1
CAPTEUR AR DR [COURT] ★1, ★3	● Le circuit du capteur arrière droit est court-circuité. (Une tension d'entrée anormalement basse est entrée.)	1
CAPTEUR AR GA [COURT] ★1, ★3	● Le circuit du capteur arrière gauche est court-circuité. (Une tension d'entrée anormalement basse est entrée.)	1
CAPTEUR ABS [SIGNAL ANORMAL] ★1	● Les dents du rotor de capteur sont endommagées ou la repose du capteur de roue est mauvaise. (Un signal de capteur de roue anormal est entré.)	1
SOL ABS INT AV D [OUVERT]	● Le circuit de l'électrovanne d'entrée avant droit est ouvert. (Une tension de sortie anormalement basse est entrée.)	2
SOL ABS INT AV G [OUVERT]	● Le circuit de l'électrovanne d'entrée avant gauche est ouvert. (Une tension de sortie anormalement basse est entrée.)	2
SOL ABS INT ARR [OUVERT]	● Le circuit de l'électrovanne d'entrée arrière est ouvert. (Une tension de sortie anormalement basse est entrée.)	2
SOL ABS INT AV D [COURT]	● Le circuit de l'électrovanne d'entrée avant droit est court-circuité. (Une tension de sortie anormalement élevée est entrée.)	2
SOL ABS INT AV G [COURT]	● Le circuit de l'électrovanne d'entrée avant gauche est court-circuité. (Une tension de sortie anormalement élevée est entrée.)	2
SOL ABS INT ARR [COURT]	● Le circuit de l'électrovanne d'entrée arrière est court-circuité. (Une tension de sortie anormalement élevée est entrée.)	2
SOL ABS EXT AV/D [OUVERT]	● Le circuit de l'électrovanne de sortie avant droit est ouvert. (Une tension de sortie anormalement basse est entrée.)	2
SOL ABS EXT AV/G [OUVERT]	● Le circuit de l'électrovanne de sortie avant gauche est ouvert. (Une tension de sortie anormalement basse est entrée.)	2
SOL ABS EXT ARR [OUVERT]	● Le circuit de l'électrovanne de sortie arrière est ouvert. (Une tension de sortie anormalement basse est entrée.)	2
SOL ABS EXT AV/D [COURT]	● Le circuit de l'électrovanne de sortie avant droit est crout-circuité. (Une tension de sortie anormalement élevée est entrée.)	2
SOL ABS EXT AV/G [COURT]	● Le circuit de l'électrovanne de sortie avant gauche est crout-circuité. (Une tension de sortie anormalement élevée est entrée.)	2
SOL ABS EXT ARR [COURT]	● Le circuit de l'électrovanne de sortie arrière est court-circuité. (Une tension de sortie anormalement élevée est entrée.)	2
RELAIS CEN HYD ABS [DEFAUT]	● Le relais de l'électrovanne d'actionneur est sur ON, même si le boîtier de contrôle transmet un sifnal OFF. ● Le relais de l'électrovanne d'actionneur est sur OFF, même si le boîtier de contrôle émet un signal ON.	2
RELAIS MOTEUR ABS [DEFAUT]	● Le circuit du relais de moteur d'ABS est ouvert ou court-circuité. ● Le circuit du moteur d'actionneur est ouvert ou court-circuité. ● Le relais de moteur d'actionneur est coincé.	3
TENTION BATTERIE [TENS BATT BASSE]	● La tension d'alimentation au boîtier de contrôle d'ABS est anormalement basse.	4
BOITIER CONTROLE	● La fonction de calcul du boîtier de contrôle de l'ABS a échoué.	6
CAPTEUR-G [DEFAUT] ★3	● Le circuit du capteur de G est ouvert ou court-circuité.	5

★1 : Si une ou plusieurs roues patinent sur une route cahoteuse ou glissante pendant 40 secondes ou plus, le témoin ABS s'allume. Cela n'indique pas un défaut de fonctionnement. Uniquement en cas de court circuit (n° de code 26, 22, 32 et 36), après réparation, le témoin ABS s'allume également quand le contact d'allumage est mis sur ''ON''. En pareil cas, conduire le véhicule à plus de 30 km/h pendant environ 1 minute comme spécifié dans ''PROCEDURE D'AUTODIAGNOSTIC'', BR-53. Vérifier que le témoin ABS est bien éteint pendant la conduite du véhicule.
★2 : Modèles à 2 roues motrices seulement
★3 : Modèles à 4 roues motrices seulement

Simpo PDF Merge and Split Unregistered Version - http://www.simpopdf.com

Procédure d'inspection CONSULT (Suite)

PROCEDURE DE CONTROLE DES DONNEES

1) Mettre le contact d'allumage sur ''OFF''.
2) Brancher CONSULT au connecteur de liaison de données pour CONSULT.
3) Mettre le contact d'allumage sur ''ON''.

↓

A 1) Appuyer sur ''DEPART'' sur l'écran de CONSULT.
B 2) Appuyer sur ''ABS''.
C 3) Appuyer sur ''CONTROLE DE DONNEES''.

↓

D 1) Appuyer sur ''INSTAUR'' sur l'écran de ''SELECT ELEM CONTROLE''.
E 2) Appuyer sur ''MODE LENT'' sur l'écran ''INSTAUR COND ENREGIST''.
D 3) Appuyer sur ''DEPART'' sur ''SELECT ELEM CONTROLE''.

A

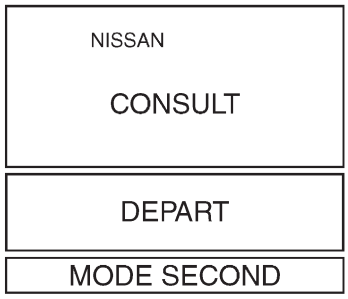

FCNCS01

B

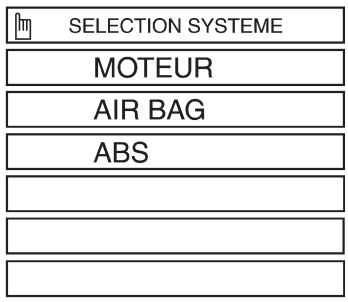

FCSSE07

C

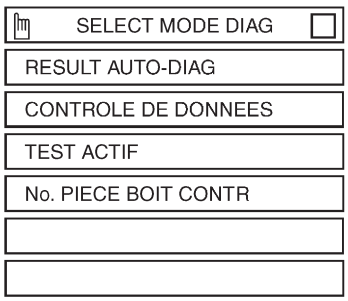

FCSDM04

D

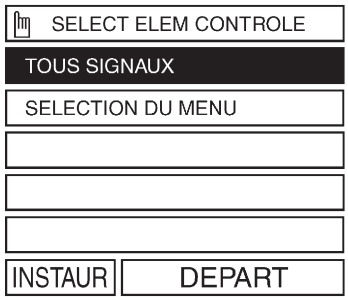

FCSMI01

E

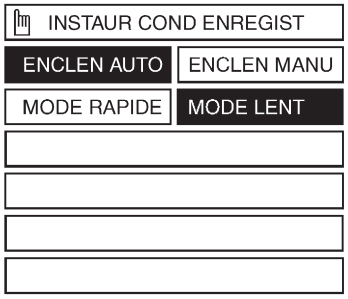

FCSRC01

Simpo PDF Merge and Split Unregistered Version - http://www.simpopdf.com

Procédure d'inspection CONSULT (Suite)

PROCEDURE DE TEST ACTIF

- Le véhicule doit être à l'arrêt pendant le test actif.
- Lorsque le témoin ABS reste allumé, ne jamais effectuer le test actif.

1) Mettre le contact d'allumage sur ''OFF''.
2) Brancher CONSULT au connecteur de liaison de données pour CONSULT.
3) Démarrer le moteur.

↓

A 1) Appuyer sur ''DEPART'' sur l'écran de CONSULT.
B 2) Appuyer sur ''ABS''.
C 3) Appuyer sur ''TEST ACTIF''.

↓

D 1) Choisir l'élément de test actif en appuyant sur l'écran.
E 2) Appuyer sur ''DEPART''.

↓

Effectuer le test actif en touchant le clavier de l'écran.

A

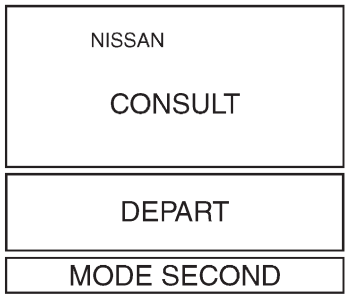

FCNCS01

B

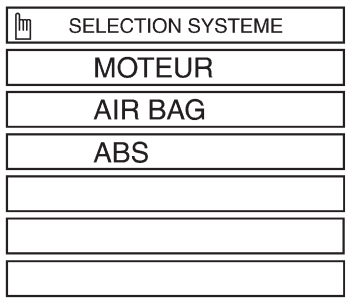

FCSSE07

C

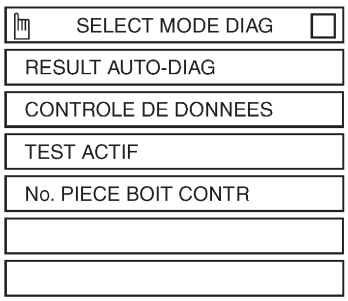

FCSDM04

D

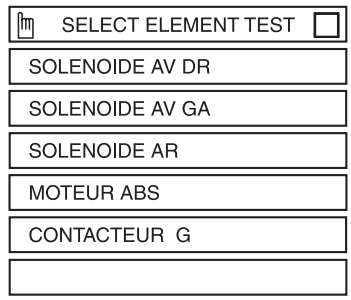

FCSTI04

E

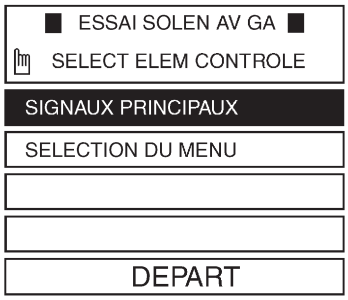

FCFRS01

Simpo PDF Merge and Split Unregistered Version - http://www.simpopdf.com

Procédure d'inspection CONSULT (Suite)

MODE DE CONTROLE DES DONNEES

ELEMENT DE CONTROLE	CONDITION	SPECIFICATION
CAPTEUR AV DR CAPTEUR AV GA CAPTEUR AR★1 CAPTEUR AR DR★2 CAPTEUR AR GA★2	Conduire le véhicule (chaque roue tourne).	Signal de vitesse de roue (pratiquement la même vitesse que le compteur).
CONT FEU STOP	La pédale de frein est enfoncée.	Enfoncer la pédale de frein : MAR Relâcher la pédale : ARR
CONTACT G★	Véhicule en cours de conduite. Véhicule à l'arrêt. Freins serrés.	Pendant le freinage soudain durant la conduite sur route à haut µ (route asphaltées, etc.) : ARR Pendant que le véhicule est à l'arrêt ou pendant la conduite à vitesse constante : MAR
SOL AV/DR INT SOL AV/DR EXT SOL AV/G INT SOL AV/G EXT SOLEN INT AR SOLEN EXT AR	1. Conduire le véhicule à plus de 30 km/h pendant au moins une minute. 2. Moteur en marche.	Les conditions de fonctionnement de chaque électrovanne sont indiquées. ABS hors fonction : ARR
RELAIS MOTEUR		ABS hors fontcion : ARR ABS en marche : MAR
RELAIS CENT HYD	Le contact d'allumage est mis sur ON ou le moteur tourne.	Contact d'allumage sur ''ON'' (le moteur s'arrête) : ARR Moteur en marche : MAR
TEMOIN		Le témoin est allumé : MAR Le témoin est éteint : ARR
TENS BATTERIE		Tension de l'alimentation électrique du boîtier de contrôle

★1 : Modèles à 2 roues motrices seulement
★2 : Modèles à 4 roues motrices seulement

MODE DE TEST ACTIF

ELEMENT DE TEST	CONDITION	JUGEMENT
SOLENOIDE AV DR SOLENOIDE AV GA SOLENOIDE ARRIERE	Moteur en marche.	Fonctionnement de commande de la pression hydraulique de liquide de frein SOL INT / SOL EXT HAUT (augmenter) : ARRET / ARRET GARDER (maintenir) : MARCHE / ARRET BAS (diminuer) : MARCHE / MARCHE
MOTEUR ABS		Moteur d'actionneur ABS MARCHE : Le moteur fonctionne (relais de moteur d'ABS en MARCHE) ARRET : Le moteur s'arrêt (relais de moteur d'ABS à l'ARRET)
CONTACT G★	Le contact d'allumage est sur ON.	CONTACT G (CAPTEUR G), MARCHE : Régler le MONTEUR DE CONTACT G sur ''ON'' (le circuit du contact G est fermé). ARRET : Régler le moniteur du contact G sur ''OFF'' (le circuit du contact G est ouvert).

★ : Modèles à 4 roues motrices seulement

Remarque : le test actif s'arrêtera automatiquement 10 secondes après le début du test (la surveillance du ''SIGNAL LIMIT'' indique MAR).

Simpo PDF Merge and Split Unregistered Version - http://www.simpopdf.com

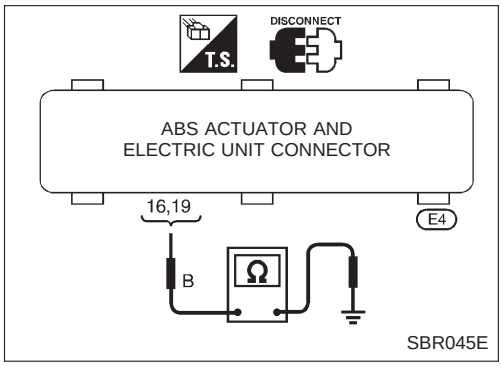

Vérification du circuit de mise à la masse

MASSE DE L'ACTIONNEUR D'ABS ET DU BOITIER ELECTRIQUE

- Vérifier la résistance entre les bornes du connecteur de l'actionneur d'ABS et du boîtier électrique et la masse.
  Résistance : environ 0Ω

Simpo PDF Merge and Split Unregistered Version - http://www.simpopdf.com

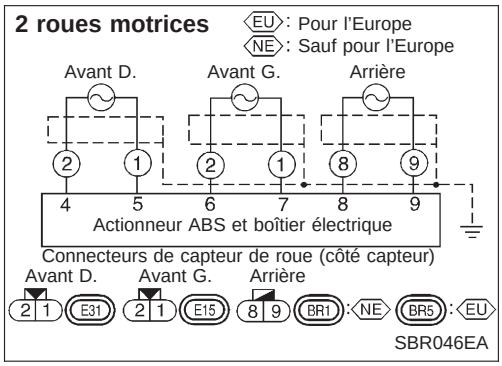

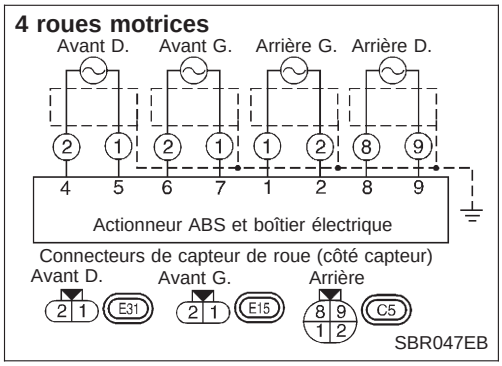

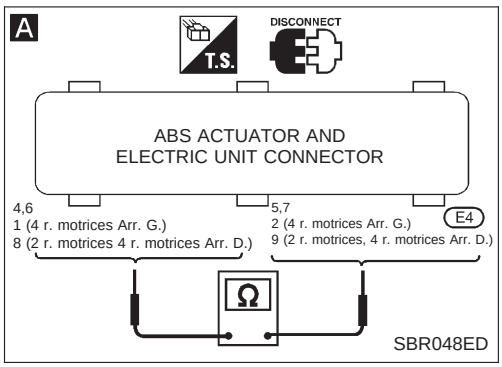

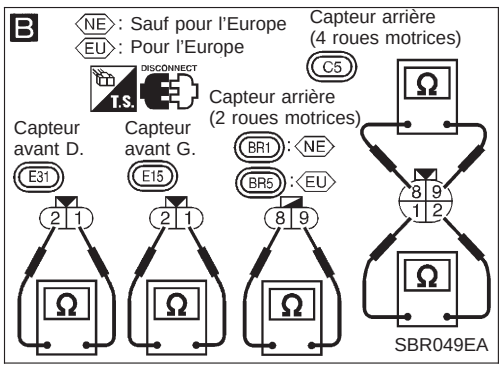

Procédure de diagnostic 1 (Capteur de roue ou rotor)

Codes de défaut n° 21, 22, 25, 26, 31, 32, 35, 36 ou 18

DEBUT DE L'INSPECTION

1. Débrancher les connecteurs de l'actionneur de l'ABS, le boîtier électrique et le capteur de roue selon le numéro de code de défaut. Contrôler si les bornes ne sont pas endommagées ou les connexions débranchées. Puis rebrancher les connecteurs.
2. Effectuer de nouveau l'autodiagnostic.
   Est-ce que la lampe témoin fonctionne encore ?

Non → Fin de l'inspection

Oui ↓

A

VERIFICATION ELECTRIQUE DU CAPTEUR DE ROUE.

1. Débrancher l'actionneur de l'ABS et le connecteur du boîtier électrique.
2. Vérifier la résistance entre l'actionneur de l'ABS et les bornes du connecteur (côté carrosserie) (E4) du boîtier électrique.
   Code n° 21 ou 22 (roue avant droite)
   Bornes (4) et (5)
   Code n° 25 ou 26 (roue avant gauche)
   Bornes (6) et (7)
   Code n° 31 ou 32 (roue arrière droite 4 roues motrices)
   Bornes (8) et (9)
   Code n° 35 ou 36 (roues arrière pour les 2 roues motrices, roue arrière gauche pour les 4 roues motrices)
   Bornes (8) et (9) (roues arrière pour les 2 roues motrices)
   Bornes (1) et (2) (roue arrière gauche pour les 4 roues motrices)
   Résistance :
   Avant 1,44 - 1,76 kΩ
   Arrière (2 roues motrices) 1,22 - 1,48 kΩ
   Arrière (4 roues motrices) 1,44 - 1,76 kΩ

Bon → (A) (Aller à la page suivante).

Mauvais ↓

B

VERIFICATION DU CAPTEUR DE ROUE

Vérifier la résistance de chaque capteur.
Résistance : Avant 1,44 - 1,76 kΩ
Arrière (2 roues motrices) 1,22 - 1,48 kΩ
Arrière (4 roues motrices) 1,44 - 1,76 kΩ

Bon → Vérifier les points suivants.
- Connecteurs de faisceau (E4), (E31), (E15) (BR1) (BR5), (C5)
- Faisceau ouvert ou court-circuité entre les connecteurs de capteur de roue, l'actionneur de l'ABS et le boîtier électrique

Si le résultat n'est pas satisfaisant, réparer le faisceau ou les connecteurs.

Mauvais ↓

REMPLACER.

Remplacer le capteur de roue.

Simpo PDF Merge and Split Unregistered Version - http://www.simpopdf.com

Procédure de diagnostic 1 (Capteur de roue ou rotor) (Suite)

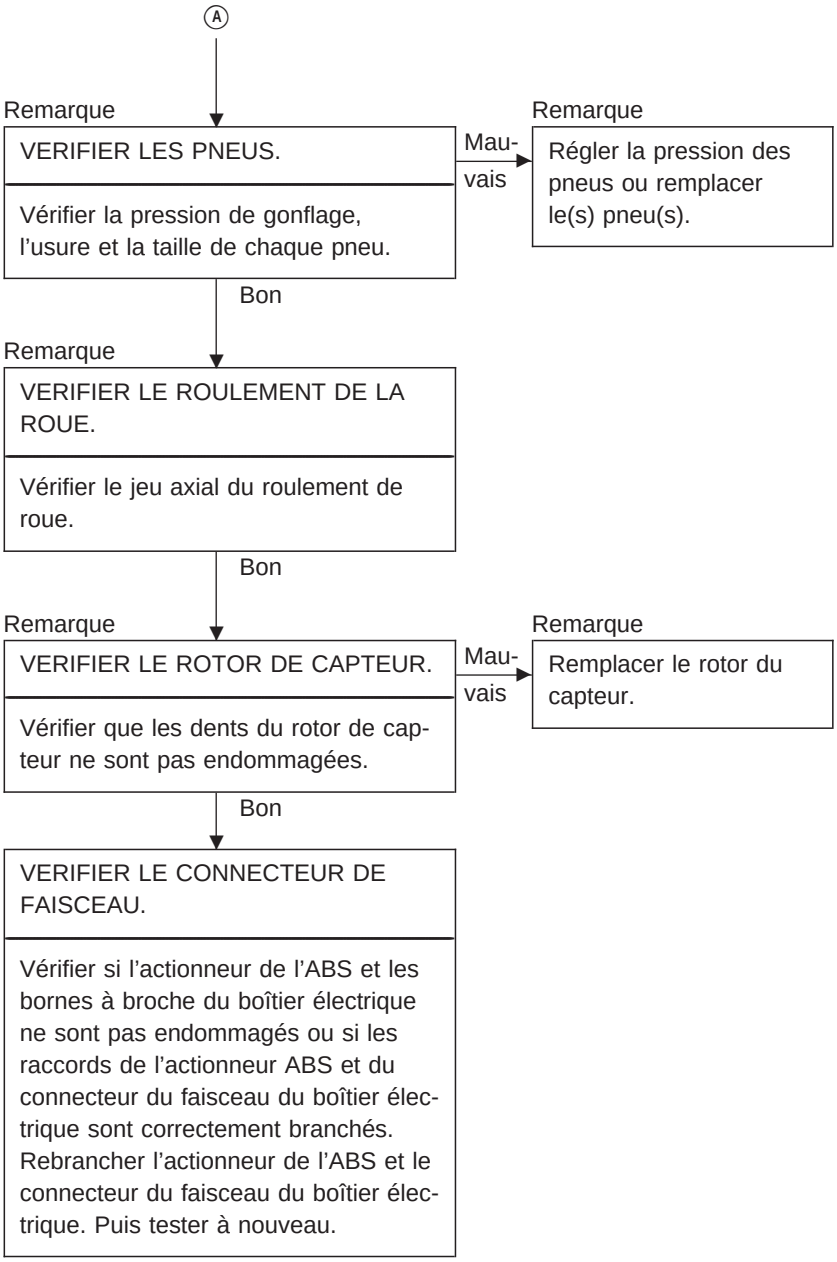

Remarque : la position de la roue doit être signalée par les numéros de code à l'exception du code n° 18 (rotor du capteur).

SimpoPDF Merge and Split Unregistered Version - http://www.simpopdf.com

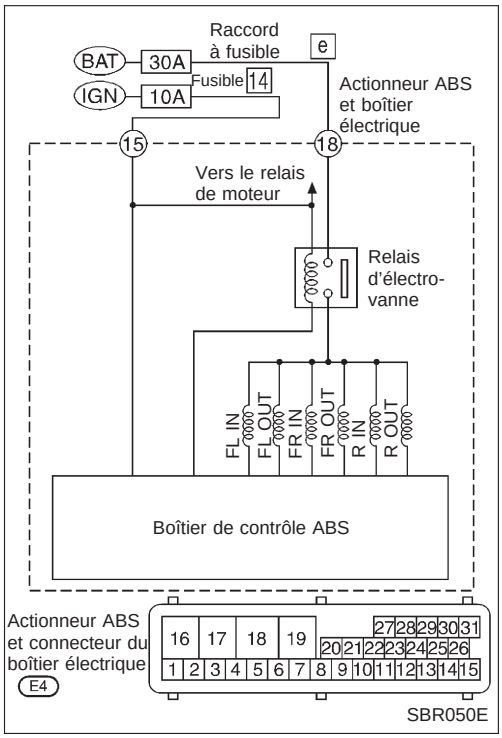

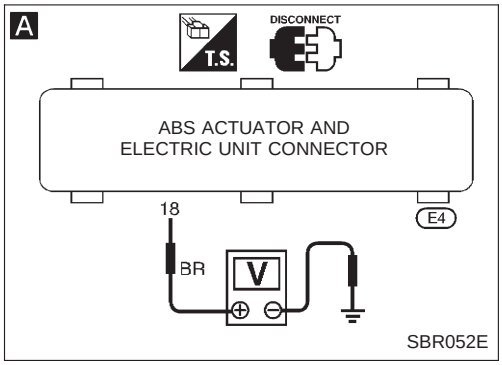

Procédure de diagnostic 2 (Electrovanne d'actionneur de l'ABS et relais d'électro-vanne)

Code de défaut n° 41, 45, 55, 42, 46, 56, 63

VERIFIER LE RACCORD A FUSIBLE.

Vérifier le raccord à fusible de 30 A [e]. Pour la disposition des raccords à fusibles, se reporter au chapitre ''DISPOSITION DE L'ALIMENTATION ELECTRIQUE'' dans la section EL.

Mauvais → Ⓐ (Aller à la page suivante).

Bon ↓

VERIFIER LE FUSIBLE.

Vérifier le fusible de 10A [14]. Pour la disposition du fusible, se reporter au chapitre ''DISPOSITION DE L'ALIMENTATION ELECTRIQUE'' dans la section EL.

Mauvais → Ⓑ (Aller à la page suivante).

Bon ↓

VERIFIER LE CONNECTEUR.

1. Débrancher l'actionneur de l'ABS et le connecteur du boîtier électrique. Vérifier les bornes pour voir s'il n'y a pas de dommages ou de connexions desserrées. Puis rebrancher le connecteur.
2. Effectuer de nouveau l'autodiagnostic.
   Est-ce que la lampe témoin fonctionne encore ?

Non → Fin de l'inspection

Oui ↓

VERIFIER LE CIRCUIT DE MISE A LA MASSE DE L'ACTIONNEUR ABS ET DU BOITIER ELECTRIQUE.

Se reporter à ''MASSE DE L'ACTIONNEUR ABS ET DU BOITIER ELECTRIQUE'' dans le chapitre ''Vérification du circuit de mise à la masse'', BR-62.

Mauvais → Réparer le faisceau et le connecteur.

Bon ↓

A

VERIFIER LE CIRCUIT DE L'ALIMENTATION ELECTRIQUE DU RELAIS DE L'ELECTROVANNE.

1. Débrancher l'actionneur de l'ABS et le connecteur du boîtier électrique.
2. Vérifier la tension entre l'actionneur de l'ABS et la borne ⑱ du connecteur (côté carrosserie) [E4] du boîtier électrique et la masse.
   Il doit y avoir tension de la batterie.

Mauvais → Vérifier les points suivants.
- Connecteur de faisceau [E4]
- Faisceau ouvert ou court-circuité entre l'actionneur de l'ABS, le boîtier électrique et le raccord à fusible

Si le résultat n'est pas satisfaisant, réparer le faisceau ou le connecteur.

Bon ↓

REMPLACER.

Remplacer l'actionneur de l'ABS et le boîtier électrique.

Simpo PDF Merge and Split Unregistered Version - http://www.simpopdf.com

Procédure de diagnostic 2 (Electrovanne d'actionneur de l'ABS et relais d'électrovanne) (Suite)

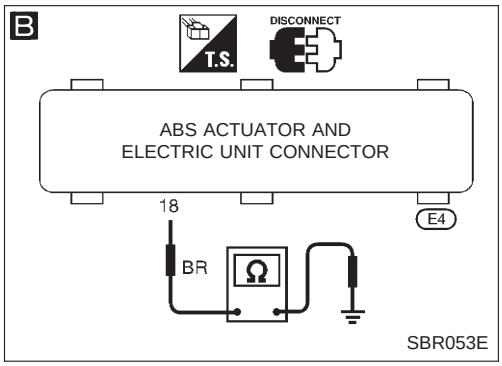

Ⓐ

REMPLACER.

Remplacer le raccord à fusible.
Le raccord à fusible saute-t-il lorsque le contact d'allumage est mis sur "ON" ?

Non → Fin de l'inspection

Oui

B

VERIFIER LE CIRCUIT DE L'ALIMENTATION ELECTRIQUE DU RELAIS DE L'ELECTROVANNE.

1. Débrancher l'actionneur de l'ABS et le connecteur du boîtier électrique.
2. Vérifier la continuité entre l'actionneur de l'ABS et la borne ⑱ du connecteur (côté carrosserie) E4 du boîtier électrique et la masse.
   Il doit y avoir continuité.

Mauvais → Vérifier les points suivants.
- Connecteur de faisceau E4
- Faisceau ouvert ou court-circuité entre l'actionneur de l'ABS, le boîtier électrique et le raccord à fusible

Si le résultat n'est pas satisfaisant, réparer le faisceau ou le connecteur.

Bon

REMPLACER.

Remplacer l'actionneur de l'ABS et le boîtier électrique.

Ⓑ

REMPLACER.

Remplacer le fusible.
Le fusible saute-t-il lorsque le contact d'allumage est mis sur "ON" ?

Oui → Vérifier les points suivants.
- Connecteur de faisceau E4
- Faisceau ouvert ou court-circuité entre l'actionneur de l'ABS, le boîtier électrique et le fusible

Si le résultat n'est pas satisfaisant, réparer le faisceau ou le connecteur.

Non

FIN

FIN DE L'INSPECTION

Simpo PDF Merge and Split Unregistered Version - http://www.simpopdf.com

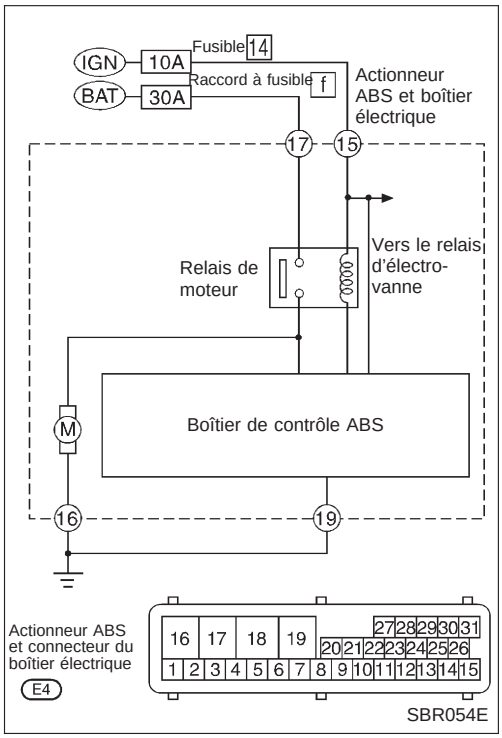

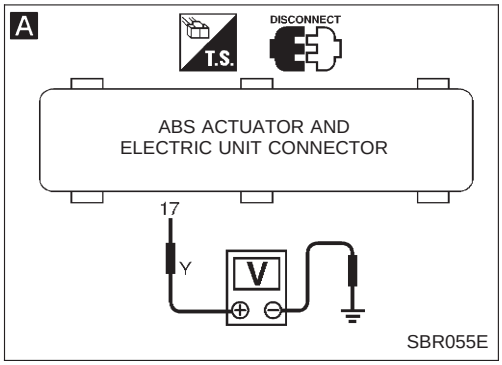

Procédure de diagnostic 3 (Relais de moteur ou moteur)

Code de défaut n° 61

VERIFIER LE RACCORD A FUSIBLE.

Vérifier le raccord à fusible de 30A f. Pour la disposition des raccords à fusibles, se reporter au chapitre "DISPOSITION DE L'ALIMENTATION ELECTRIQUE" dans la section EL.

Mauvais → Ⓐ (Aller à la page suivante).

Bon ↓

VERIFIER LE CONNECTEUR.

1. Débrancher l'actionneur de l'ABS et le connecteur du boîtier électrique. Vérifier les bornes pour voir s'il n'y a pas de dommages ou de connexions desserrées. Puis rebrancher le connecteur.
2. Effectuer de nouveau l'autodiagnostic.
   Est-ce que la lampe témoin fonctionne encore ?

Non → Fin de l'inspection

Oui ↓

A

VERIFIER LE CIRCUIT D'ALIMENTATION ELECTRIQUE DU RELAIS DE MOTEUR.

1. Débrancher l'actionneur de l'ABS et le connecteur du boîtier électrique.
2. Vérifier la résistance entre l'actionneur de l'ABS et la borne ⑰ du connecteur (côté carrosserie) E4 du boîtier électrique et la masse.
   Il doit y avoir tension de la batterie.

Mauvais → Vérifier les points suivants.
- Connecteur de faisceau E4
- Faisceau ouvert ou court-circuité entre l'actionneur de l'ABS, le boîtier électrique et le raccord à fusible

Si le résultat n'est pas satisfaisant, réparer le faisceau ou le connecteur.

Bon ↓

VERIFIER LA MISE A LA MASSE DE L'ACTIONNEUR DE L'ABS ET DU BOITIER ELECTRIQUE.

Se reporter à "MASSE DE L'ACTIONNEUR DE L'ABS ET DU BOITIER ELECTRIQUE" dans le chapitre "Vérification du circuit de mise à la masse", BR-62.

Mauvais → Réparer le faisceau et les bornes.

Bon ↓

REMPLACER.

Remplacer l'actionneur de l'ABS et le boîtier électrique.

Simpo PDF Merge and Split Unregistered Version - http://www.simpopdf.com

Procédure de diagnostic 3 (Relais de moteur ou moteur) (Suite)

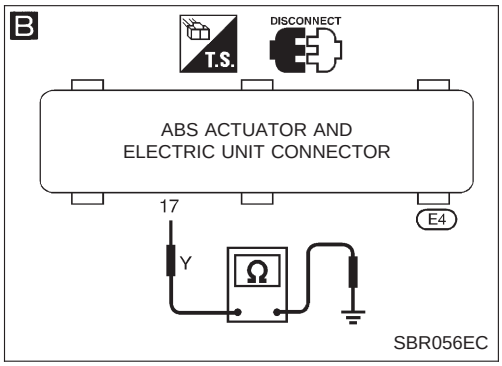

Ⓐ

REMPLACER.

Remplacer le raccord à fusible.
Le raccord à fusible saute-t-il lorsque le contact d'allumage est mis sur "ON" ?

Non → Fin de l'inspection

Oui

B

VERIFIER LE CIRCUIT DE L'ALIMENTATION ELECTRIQUE DU MOTEUR DE L'ACTIONNEUR ABS .

1. Débrancher le câble de la batterie, l'actionneur de l'ABS et le connecteur (E4) du boîtier électrique.
2. Vérifier la continuité entre l'actionneur de l'ABS et la borne (17) du connecteur (côté carrosserie) (E4) du boîtier électrique et la masse.
   Il ne doit pas y avoir de continuité.

Mauvais →
Vérifier les points suivants.
- Connecteur de faisceau (E4)
- Faisceau ouvert ou court-circuité entre l'actionneur de l'ABS, le boîtier électrique et le raccord à fusible

Si le résultat n'est pas satisfaisant, réparer le faisceau ou le connecteur.

Bon

VERIFIER LE CONNECTEUR DE FAISCEAU.

Vérifier si l'actionneur de l'ABS et les bornes à broche du boîtier électrique ne sont pas endommagés ou si les raccords de l'actionneur ABS et du connecteur du faisceau du boîtier électrique sont correctement branchés.
Rebrancher l'actionneur de l'ABS et le connecteur du faisceau du boîtier électrique. Puis tester à nouveau.

Simpo PDF Merge and Split Unregistered Version - http://www.simpopdf.com

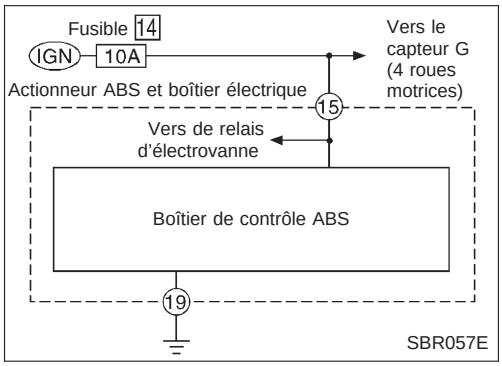

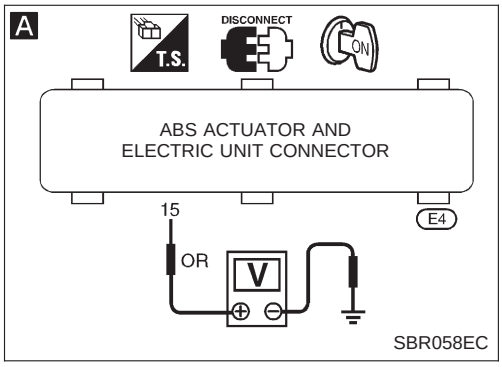

Procédure de diagnostic 4 (Basse tension)

Code de défaut n° 57

VERIFIER LE CONNECTEUR.

1. Débrancher l'actionneur de l'ABS et le connecteur du boîtier électrique. Vérifier les bornes pour voir s'il n'y a pas de dommages ou de connexions desserrées. Puis rebrancher le connecteur.
2. Effectuer de nouveau l'autodiagnostic.
   Est-ce que la lampe témoin fonctionne encore ?

Non → Fin de l'inspection

Oui ↓

A

VERIFIER LE CIRCUIT DE L'ALIMENTATION ELECTRIQUE DU BOITIER DE CONTROLE ABS.

1. Débrancher l'actionneur de l'ABS et le connecteur du boîtier électrique.
2. Vérifier la résistance entre l'actionneur de l'ABS et la borne (15) du connecteur (côté carrosserie) (E4) du boîtier électrique et la masse.
   La tension de la batterie doit exister quand le contact d'allumage est mis sur ''ON''.

Mauvais → (A) (Voir ci-dessous).

Bon ↓

VERIFIER LA MISE A LA MASSE DU BOITIER DE CONTROLE ABS.

Se reporter à ''MASSE DE L'ACTIONNEUR DE L'ABS ET DU BOITIER ELECTRIQUE'' dans le chapitre ''Vérification du circuit de mise à la masse'', BR-62.

Mauvais → Réparer le faisceau et le connecteur.

Bon ↓

VERIFIER LE CONNECTEUR DE FAISCEAU.

Vérifier si l'actionneur de l'ABS et les bornes à broche du boîtier électrique ne sont pas endommagés ou si les raccords de l'actionneur ABS et du connecteur du faisceau du boîtier électrique sont correctement branchés. Rebrancher l'actionneur de l'ABS et le connecteur du faisceau du boîtier électrique. Puis tester à nouveau.

(A) ↓

VERIFIER LE FUSIBLE.

Vérifier le fusible de 10A 14. Pour la disposition du fusible, se reporter au chapitre ''DISPOSITION DE L'ALIMENTATION ELECTRIQUE'' dans la section EL.

Mauvais → Remplacer le fusible.

Bon ↓

VERIFIER L'ALIMENTATION ELECTRIQUE DU BOITIER DE CONTROLE ABS.

Vérifier la continuité entre la batterie et l'actionneur de l'ABS et la borne (15) du connecteur (E4) (côté carrosserie).

Mauvais → Vérifier les points suivants.
- Connecteur de faisceau (E4)
- Faisceau ouvert ou court-circuité entre l'actionneur de l'ABS, le boîtier électrique et le fusible

Si le résultat n'est pas satisfaisant, réparer le faisceau ou le connecteur.

Bon ↓

VERIFIER LA BATTERIE.

Vérifier la batterie. Se reporter à ''BATTERIE'' dans la section EL.

Simpo PDF Merge and Split Unregistered Version - http://www.simpopdf.com

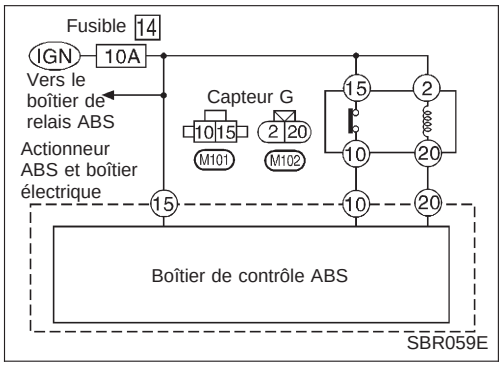

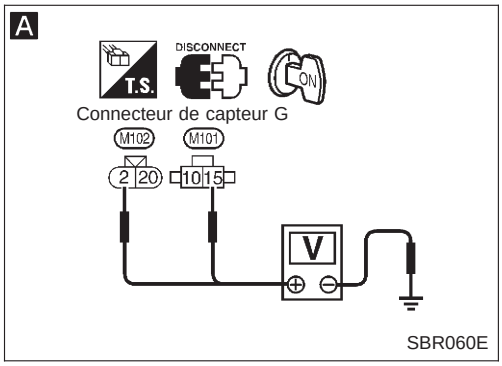

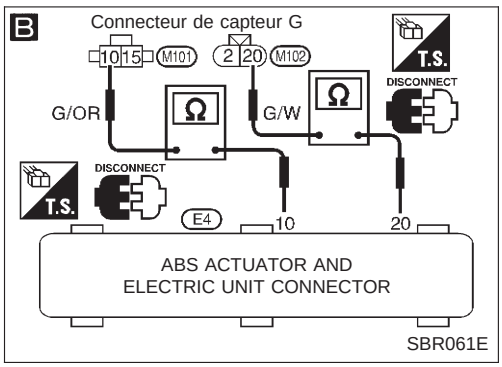

Procédure de diagnostic 5 (Capteur G)

Code de défaut n° 17

VERIFIER LE CIRCUIT DE L'ALIMENTATION ELECTRIQUE DU CAPTEUR G.

Vérifier le fusible de 10A 14 . Pour la disposition du fusible, se reporter au chapitre "DISPOSITION DE L'ALIMENTATION ELECTRIQUE" dans la section EL.

Mauvais → Remplacer le fusible.

Bon ↓

VERIFIER LE CONNECTEUR.

1. Débrancher l'actionneur de l'ABS et le connecteur du boîtier électrique. Vérifier les bornes pour voir s'il n'y a pas de dommages ou de connexions desserrées. Puis rebrancher le connecteur.
2. Effectuer de nouveau l'autodiagnostic.
   Est-ce que la lampe témoin fonctionne encore ?

Non → Fin de l'inspection

Oui ↓

VERIFIER LE CAPTEUR G.

Se reporter à "CAPTEUR G" dans le chapitre "Inspection des composants électriques", BR-71.

Mauvais → Remplacer le capteur G.

Bon ↓

A

VERIFIER LE CIRCUIT DE L'ALIMENTATION ELECTRIQUE DU CAPTEUR G.

1. Débrancher le connecteur du capteur G.
2. Vérifier la tension entre les bornes 2 , 15 du connecteur (côté carrosserie) M101 , M102 de capteur G et la masse.
   Il doit y avoir tension de la batterie.

Mauvais → Vérifier les points suivants.
- Connecteurs de faisceau M101 , M102 et E4
- Faisceau ouvert ou court-circuité entre le capteur G, l'actionneur de l'ABS et le boîtier électrique

Si le résultat n'est pas satisfaisant, réparer le faisceau ou les connecteurs.

Bon ↓

B

VERIFIER LA MASSE DU CAPTEUR G.

1. Débrancher l'actionneur de l'ABS, le connecteur du boîtier électrique et les connecteurs du capteur G.
2. Vérifier la continuité entre l'actionneur de l'ABS et les bornes 10 , 20 du connecteur (côté carrosserie) E4 du boîtier electrique et les bornes 10 , 20 des connecteurs M101 , M102 (côté carrosserie) du capteur G.
   Il doit y avoir continuité

Mauvais → Vérifier les points suivants.
- Connecteurs de faisceau M101 , M102 et E4
- Faisceau ouvert ou court-circuité entre le capteur G, l'actionneur de l'ABS et le boîtier électrique

Si le résultat n'est pas satisfaisant, réparer le faisceau ou les connecteurs.

Bon ↓

VERIFIER LE CONNECTEUR DE FAISCEAU.

Vérifier si l'actionneur de l'ABS et les bornes à broche du boîtier électrique ne sont pas endommagés ou si les raccords de l'actionneur ABS et du connecteur du faisceau du boîtier électrique sont correctement branchés.
Rebrancher l'actionneur de l'ABS et le connecteur du faisceau du boîtier électrique. Puis tester à nouveau.

Simpo PDF Merge and Split Unregistered Version - http://www.simpopdf.com

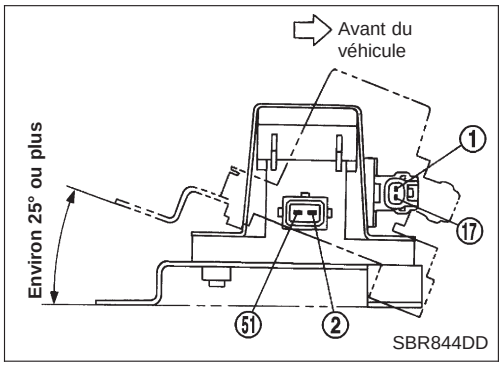

Procédure de diagnostic 5 (Capteur G) (Suite)

INSPECTION DES COMPOSANTS ELECTRIQUES

Capteur G

ATTENTION :

Le capteur G est facilement abîmé s'il subit un impact. Veiller à ne pas le faire tomber ou le cogner.

1. Calculer la résistance entre les bornes ⑩ et ⑮ du connecteur du boîtier de capteur G

Position du capteur G	Résistance entre les bornes ⑩ et ⑮	Position du contact de capteur G
Reposé dans le véhicule	1,4 - 1,6 kΩ	"MARCHE"
Incliné comme indiqué ci-contre	4,7 - 5,5 kΩ	"ARRET"

2. Calculer la résistance entre les bornes ② et ⑳ du connecteur du boîtier de capteur G.

Résistance :	70 - 124 Ω

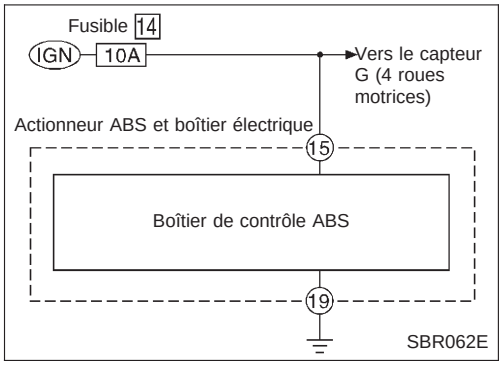

Procédure de diagnostic 6 (Boîtier de contrôle)

Code de défaut n° 71

VERIFIER LE CONNECTEUR.

1. Débrancher l'actionneur de l'ABS et le connecteur du boîtier électrique. Contrôler si les bornes ne sont pas endommagées ou les connexions débranchées. Puis rebrancher le connecteur.
2. Effectuer de nouveau l'autodiagnostic. **Est-ce que la lampe témoin fonctionne encore ?**

Non → Fin de l'inspection

Oui ↓

CONTROLE DE L'ALIMENTATION ELECTRIQUE DU BOITIER DE CONTROLE ABS

Vérifier la tension. Se reporter à A dans la procédure de diagnostic 4, BR-69.

↓

VERIFIER LES RESULTATS DE L'AUTODIAGNOSTIC

Est-ce que le témoin indique à nouveau le code n° 71 ?

Oui → Remplacer l'actionneur de l'ABS et le boîtier électrique.

Non ↓

INSPECTION

Inspecter le système selon le n° de code.

Simpo PDF Merge and Split Unregistered Version - http://www.simpopdf.com

Procédure de diagnostic 7 (L'ABS fonctionne fréquemment).

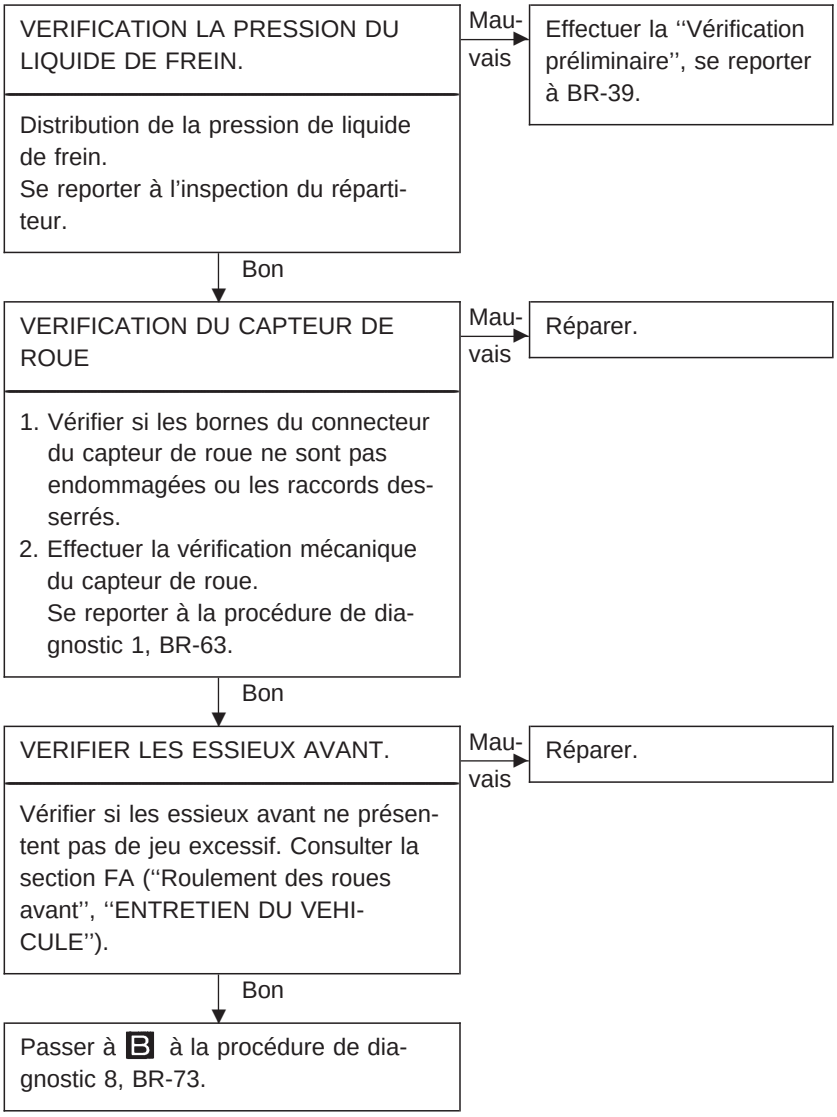

Simpo PDF Merge and Split Unregistered Version - http://www.simpopdf.com

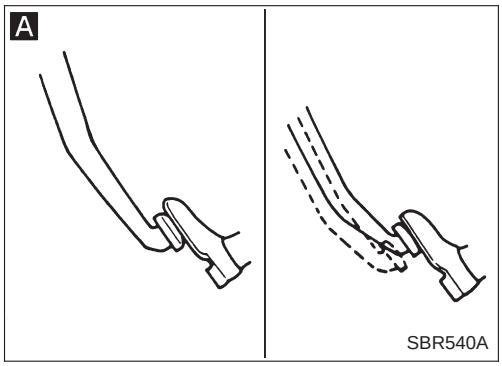

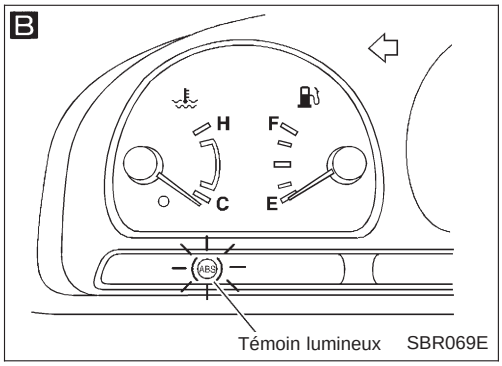

Procédure de diagnostic 8 (Fonctionnement anormal de la pédale)

A

VERIFIER LA COURSE DE LA PEDALE DE FREIN.

Vérifier la course de la pédale de frein. La course de la pédale de frein est-elle anormalement importante ?

Oui → Effectuer la ‘‘Vérification préliminaire’’, se reporter à BR-39.

Non ↓

VERIFIER LE FONCTIONNEMENT DES FRIENS.

Débrancher l’actionneur de l’ABS, le connecteur du boîtier électrique et vérifier si le frein fonctionne.

Non → Effectuer la Vérification préliminaire, se reporter à BR-35.

Oui ↓

B

VERIFIER SI LE TEMOIN LUMINEUX FONCTIONNE.

S’assurer que la lampe témoin reste éteinte lors de la conduite.

Mauvais → Effectuer ‘‘l’Autodiagnostic’’. Consulter BR-53, 57.

Bon ↓

VERIFICATION DU CAPTEUR DE ROUE

1. Vérifier le connecteur du capteur de roue pour voir s’il n’y a pas de borne endommagée ou de connexion desserrée.
2. Effectuer la vérification mécanique du capteur de roue.
   Se reporter à la procédure de diagnostic 1, BR-63.

Mauvais → Réparer.

Bon ↓

VERIFIER LE CONNECTEUR DE FAISCEAU.

Vérifier si l’actionneur de l’ABS et les bornes à broche du boîtier électrique ne sont pas endommagés ou si les raccords de l’actionneur ABS et du connecteur du faisceau du boîtier électrique sont correctement branchés. Rebrancher l’actionneur de l’ABS et le connecteur du faisceau du boîtier électrique. Puis tester à nouveau.

Simpo PDF Merge and Split Unregistered Version - http://www.simpopdf.com

Procédure de diagnostic 9 (Distance de freinage prolongée)

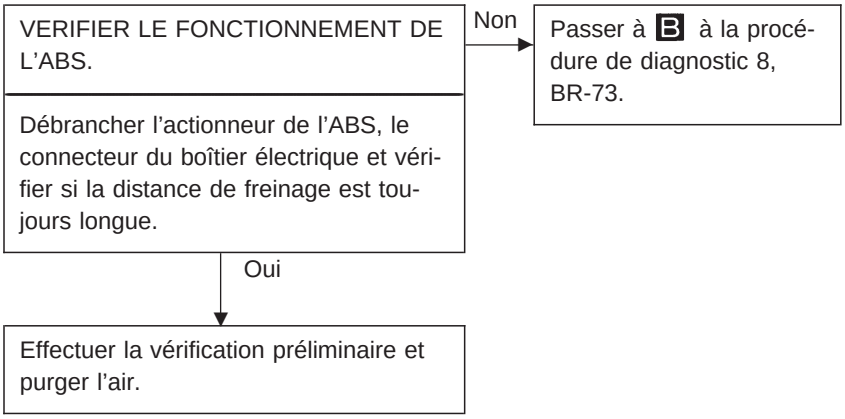

Remarque : lorsque la route est glissante, la distance de freinage peut être plus longue que pour les véhicules qui ne sont pas équipés d'ABS.

Procédure de diagnostic 10 (L'ABS ne fonctionne pas)

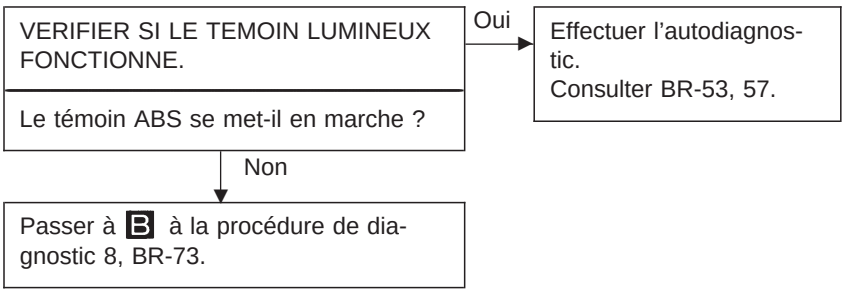

Remarque : l'ABS ne fonctionne pas lorsque le véhicule roule à moins de 10 km/h.

Simpo PDF Merge and Split Unregistered Version - http://www.simpopdf.com

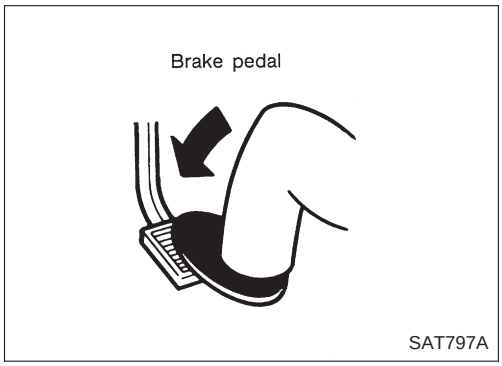

Procédure de diagnostic 11 (Vibration et bruit de la pédale)

DEBUT DE L'INSPECTION

1. Serrer le frein.
2. Démarrer le moteur.
3. Le symptôme apparaît-il seulement lorsque le moteur est démarré ?

Oui → Effectuer l'autodiagnostic. Consulter BR-53, 57.

Non ↓

VERIFIER SI LE SYMPTOME APPARAIT.

Le symptôme apparaît-il lorsque les commandes de l'équipement électrique (tels que les phares) sont actionnées ?

Non → Passer à B à la procédure de diagnostic 8, BR-73.

Oui ↓

VERIFICATION DU CAPTEUR DE ROUE

Vérifier la masse de protection du capteur de roue. Pour la disposition de la protection de la masse, se référer au schéma de câblage et ''DISPOSITION DES FAISCEAUX'' dans la section EL.

Mauvais → Réparer le capteur de roue.

Bon ↓

VERIFIER LE CONNECTEUR DE FAISCEAU.

Vérifier si l'actionneur de l'ABS et les bornes à broche du boîtier électrique ne sont pas endommagés ou si les raccords de l'actionneur ABS et du connecteur du faisceau du boîtier électrique sont correctement branchés. Rebrancher l'actionneur de l'ABS et le connecteur du faisceau du boîtier électrique. Puis tester à nouveau.

Remarque : l'ABS peut fonctionner et provoquer des vibrations dans les circonstances suivantes.

- **Application graduelle de frein en même temps que le passage de vitesse ou le fonctionnement de l'embrayage.**
- **Faible friction de route (glissante).**
- **Virage à grande vitesse.**
- **Conduite sur une route accidentée ou défoncée.**
- **Le moteur tourne à plus de 5 000 tr/mn lorsque le véhicule est arrêté.**

Simpo PDF Merge and Split Unregistered Version - http://www.simpopdf.com

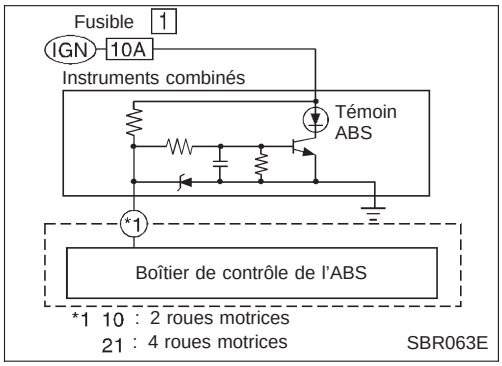

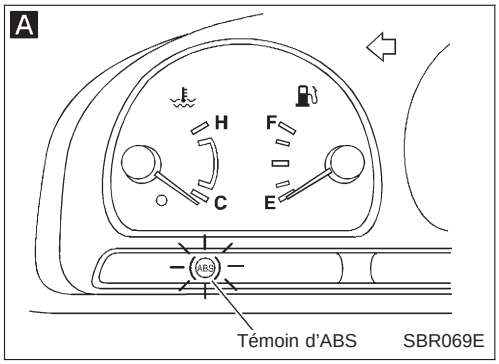

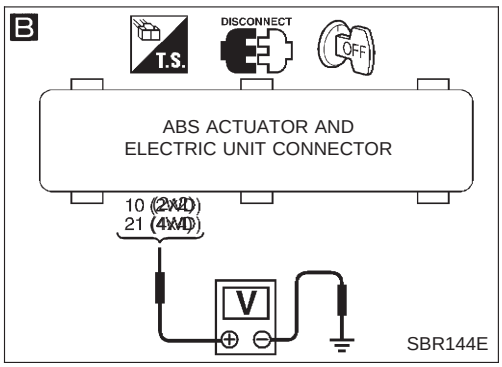

Procédure de diagnostic 12 (Le témoin ne s'allume pas quand le contact d'allumage est mis sur ON) .

VERIFIER LE FUSIBLE.

Vérifier le fusible de 10A . Pour la disposition du fusible, se reporter au chapitre ''DISPOSITION DE L'ALIMENTATION ELECTRIQUE'' dans la section EL.

Mauvais → Remplacer le fusible.

Bon ↓

A

VERIFIER SI LE TEMOIN LUMINEUX FONCTIONNE.

Débrancher l'actionneur de l'ABS et le connecteur du boîtier électrique.
Le témoin fonctionne-t-il ?

Oui → Ⓐ (Aller à la page suivante).

Non ↓

B

VERIFIER SI LE FAISCEAU N'EST PAS EN COURT-CIRCUIT.

1. Débrancher l'actionneur de l'ABS et le connecteur du boîtier électrique.
2. Vérifier la tension entre l'actionneur de l'ABS et la borne ⑩ (2 roues motrices) ou ㉑ (4 roues motrices) du connecteur (côté carrosserie) E4 du boîtier électrique et la masse.
   Il ne doit pas y avoir tension de la batterie.

Mauvais → Réparer le faisceau ou le connecteur.

Bon ↓

VERIFIER LES INSTRUMENTS COMBINES.

Vérifier les instruments combinés. Se reporter à ''TEMOINS LUMINEUX'' dans la section EL.

Simpo PDF Merge and Split Unregistered Version - http://www.simpopdf.com

Procédure de diagnostic 12 (Le témoin ne s'allume pas quand le contact d'allumage est mis sur ON) . (Suite)

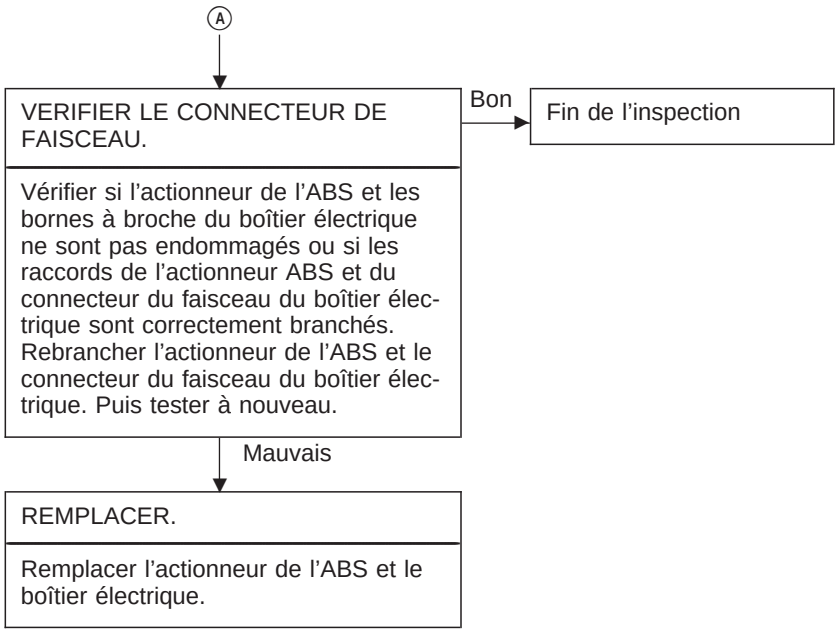

Simpo PDF Merge and Split Unregistered Version - http://www.simpopdf.com

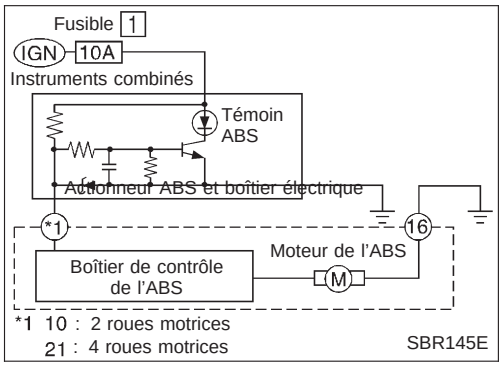

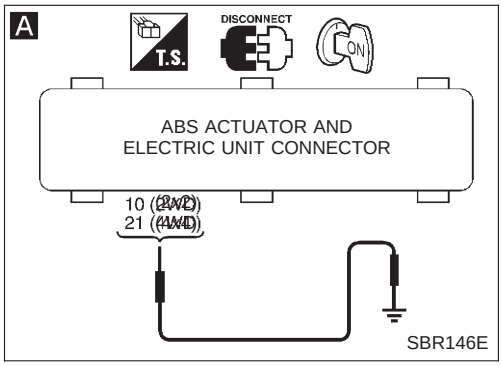

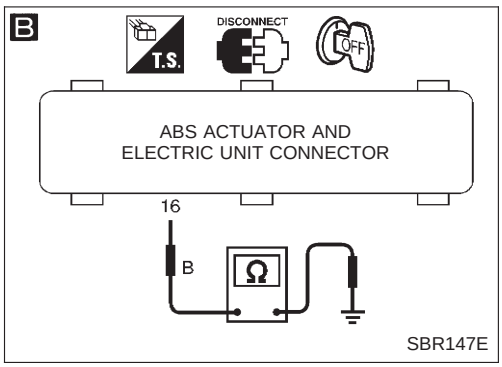

Procédure de diagnostic 13 (Le témoin reste allumé quand le contact d'allumage est mis sur ON).

A

CONTROLER LE TEMOIN LUMINEUX.

1. Débrancher l'actionneur de l'ABS et le connecteur du boîtier électrique.
2. Brancher le câble adéquat entre l'actionneur de l'ABS et la borne (10) (2 roues motrices) ou (21) (4 roues motrices) du connecteur (E4) (côté carrosserie) du boîtier électrique et la masse.
   Le témoin lumineux ne devrait pas fonctionner.

Mauvais → Réparer les instruments combinés. Vérifier les points suivants.
- Connecteur de faisceau (E4)
- Faisceau ouvert ou court-circuité entre l'actionneur de l'ABS, le boîtier électrique et le fusible

Si le résultat n'est pas satisfaisant, réparer le faisceau ou le connecteur.

Bon ↓

VERIFIER LE CONNECTEUR DE FAISCEAU.

Vérifier si l'actionneur de l'ABS et les bornes à broche du boîtier électrique ne sont pas endommagés ou si les raccords de l'actionneur ABS et du connecteur du faisceau du boîtier électrique sont correctement branchés. Rebrancher l'actionneur de l'ABS et le connecteur du faisceau du boîtier électrique. Puis tester à nouveau.

Bon → Fin de l'inspection

Mauvais ↓

B

VERIFIER LA MISE A LA MASSE DE L'ABS.

1. Mettre le contact d'allumage sur "OFF".
2. Débrancher l'actionneur de l'ABS et le connecteur du boîtier électrique.
3. Vérifier la continuité entre l'actionneur de l'ABS et la borne (16) du connecteur (côté carrosserie) (E4) du boîtier électrique et la masse.
   Il doit y avoir continuité

Mauvais → Vérifier les points suivants.
- Connecteur de faisceau (E4)
- Faisceau ouvert ou court-circuité entre l'actionneur de l'ABS, le boîtier électrique et la masse

Si le résultat n'est pas satisfaisant, réparer le faisceau ou le connecteur.

Bon ↓

REMPLACER.

Remplacer l'actionneur de l'ABS et le boîtier électrique.

Simpo PDF Merge and Split Unregistered Version - http://www.simpopdf.com

Caractéristiques générales

MODELES A 2 ROUES MOTRICES

Modèle concerné	Sans ABS	Avec ABS
Frein avant Type	Frein à disque CL28VD	
Diamètre d'alésage du cylindre mm	42,8 x 2	
Dimension des plaquettes mm Longueur x largeur x épaisseur	146,6 x 48,5 x 10,0	
Diamètre extérieur du rotor x épaisseur mm	260 x 26	
Frein arrière Type	Frein à tambour LT26B	
Diamètre d'alésage du cylindre de roue mm	23,81	
Dimension de la garniture mm Longueur x largeur x épaisseur	249,6 x 50 x 5,5	
Diamètre intérieur du tambour mm	260	
Diamètre d'alésage du maître-cylindre mm	23,81	25,4
Soupape de commande Type	LSV	
Point de rupture x rapport de réduction kPa (bar, kg/cm^2)	(Variable) x 0,15	
Assistance de frein Modèle	M195T	
Diamètre de diaphragme mm	Primaire : 205 Secondaire : 180	
Liquide de frein recommandé	DOT 3 ou DOT 4*1	

*1 : Consulter la section MA (''Liquides et lubrifiants'', ''LIQUIDES ET LUBRIFIANTS RECOMMANDES'').

Simpo PDF Merge and Split Unregistered Version - http://www.simpopdf.com

Caractéristiques générales (Suite)

MODELES A 4 ROUES MOTRICES

Modèle concerné	Tous
Frein avant	
Type	Frein à disque CL28VD
Diamètre d'alésage du cylindre mm	42,8 x 2
Dimension des plaquettes mm Longueur x largeur x épaisseur	146,6 x 48,5 x 10
Diamètre extérieur du rotor x épaisseur mm	277 x 26
Frein arrière	
Type	Frein à tambour LT30A
Diamètre d'alésage du cylindre de roue mm	22,22
Dimension de la garniture mm Longueur x largeur x épaisseur	296,0 x 50,0 x 6,1
Diamètre intérieur du tambour mm	295
Diamètre d'alésage du maître-cylindre mm	23,81
Soupape de commande	
Type	LSV
Point de rupture x rapport de réduction kPa (bar, kg/cm^2)	(Variable) x 0,15
Assistance de frein	
Modèle	M215T
Diamètre de diaphragme mm	Primaire : 230 Secondaire : 205
Liquide de frein recommandé	DOT 3 ou DOT 4*1

*1 : Consulter la section MA (''Liquides et lubrifiants'', ''LIQUIDES ET LUBRIFIANTS RECOMMANDES'').

Simpo PDF Merge and Split Unregistered Version - http://www.simpopdf.com

Inspection et réglage

FREIN A DISQUE

Unité : mm

Modèle de frein	CL28VD
Limite d'usure des plaquettes	
Epaisseur minimum	2,0
Limite de réparation du rotor	
Epaisseur minimum	24,0

FREIN A TAMBOUR

Unité : mm

Modèle de frein	LT26B	LT30A
Limite d'usure de la garniture		
Epaisseur minimum	1,5	
Limite de réparation du tambour		
Diamètre interne maximum	261,5	296,5
Limite de faux-rond	0,15	

PEDALE DE FREIN

Unité : mm

Hauteur libre 'H''*	
C. à G.	209 - 219
C. à D.	203 - 213
Course complète ''D'' d'enclenchement [en appliquant une force de 490 N (50kg), alors que le moteur tourne].	120,0
Jeu ''C'' entre la butée de pédale et l'extrémité filetée du contact de feux de stop	0,3 - 1,0
Jeu libre de la pédale	
A la chape	1,0 - 3,0
Au patin de pédale	4 - 12

* : Mesuré de la surface du panneau de renfort de tablier au patin de pédale.

COMMANDE DE FREIN DE STATIONNEMENT

Type de commande		Levier à poignée	Levier central
Course du levier [en appliquant une force de 196 N] (20 kg)]	2 roues motrices	8 - 10	–
	4 roues motrices	10 - 12	8 - 10
Course du levier lorsque le témoin s'allume		1	

Simpo PDF Merge and Split Unregistered Version - http://www.simpopdf.com

CARROSSERIE ET GARNITURE

SECTION BT

TABLE DES MATIERES

PRECAUTIONS 1
Notice d'entretien 1
Système de retenue supplémentaire (SRS) ''COUSSIN GONFLABLE'' (modèles à 4 roues motrices) 1
Système de retenue supplémentaire (SRS) ''COUSSIN GONFLABLE'' (modèles à 2 roues motrices) 1
ENTRETIEN GENERAL 2
Clips et agrafes 2
EXTREMITES DE LA CARROSSERIE 4
Extrémité avant 4
Extrémité arrière 7
PORTES 9
Porte avant 9
Porte arrière 10
TABLEAU DE BORD 11
GARNITURE INTERIEURE 14
Garniture latérale et garniture de plancher 14
Garniture de porte 17
Garniture de toit 20
EXTERIEUR 23
SIEGES 29
Siège avant 29
Siège chauffant 31
Siège arrière 32
Strapontin 33
TOIT OUVRANT 34
PARE-BRISE ET FENETRES 35
Pare-brise 36
Vitre latérale 37
RETROVISEUR 38
Rétroviseur de porte 38
CABINE ET CARROSSERIE ARRIERE 39
Dépose 39
Fixation de la carrosserie 40
ALIGNEMENT DE LA CARROSSERIE 42
Compartiment moteur 43
Dessous de la carrosserie 45

★ **Pour la ceinture de sécurité, se reporter aux sections MA et RS.**
★ **Pour les schémas de câblage des systèmes électriques de carrosserie, se reporter à la section EL.**

Simpo PDF Merge and Split Unregistered Version - http://www.simpopdf.com

Notice d'entretien

- Lors de la dépose ou de la repose des diverses pièces, mettre un chiffon ou une protection sur la carrosserie du véhicule pour éviter les éraflures.
- Manipuler avec soin la garniture, les moulures, les instruments, la grille, etc. durant la dépose ou la repose. Faire attention de ne pas les tâcher ou les abîmer.
- Mettre du produit d'étanchéité lorsque c'est nécessaire, pour monter les pièces.
- Veiller à ce que le produit d'étanchéité ne déborde pas des espaces entre les pièces lors de son application.
- Lors du remplacement de pièces métalliques (par exemple, panneau extérieur de carrosserie, membres, etc.), veiller à prendre les mesures nécessaires de protection contre la rouille.

Système de retenue supplémentaire (SRS) ''COUSSIN GONFLABLE'' (modèles à 4 roues motrices)

Utilisé avec une ceinture de sécurité, le coussin gonflable du système de retenue supplémentaire contribue à réduire les risques et la gravité des blessures subies par le conducteur en cas de collision frontale. Le système de retenue supplémentaire se compose d'un module de coussin gonflable (situé dans le moyeu du volant), d'un boîtier de capteurs de diagnostic, d'un témoin avertisseur, d'un faisceau de câblage et d'un câble spiralé. Les informations nécessaires à l'entretien sans danger du système se trouvent à la **section RS** de ce manuel de réparation.

AVERTISSEMENT :

- **Pour ne pas affecter le fonctionnement du SRS, ce qui augmenterait les risques de blessures graves ou mortelles en cas de collision entraînant le déploiement du coussin gonflable (air bag), toutes les opérations d'entretien doivent être effectuées par un concessionnaire NISSAN agréé.**
- **Un entretien incorrect, y compris une mauvaise dépose ou repose du SRS, pourra entraîner des risques de blessures dues au déploiement accidentel du système.**
- **Ne pas utiliser d'équipement d'essai électrique sur les circuits connexes du SRS sauf sur indication de ce manuel de réparation. Les faisceaux de câblage électrique du SRS sont équipés d'une gaine d'isolation jaune soit juste devant les connecteurs de faisceau, soit sur le faisceau tout entier pour une identification plus rapide.**

Système de retenue supplémentaire (SRS) ''COUSSIN GONFLABLE'' (modèles à 2 roues motrices)

Utilisé avec une ceinture de sécurité, le coussin gonflable (air bag) du système de retenue supplémentaire contribue à réduire les risques ou la gravité des blessures subies par le conducteur en cas de collision frontale. Le système de retenue supplémentaire se compose d'un module de coussin gonflable (situé dans le moyeu du volant), d'un boîtier de capteurs de diagnostic, d'un témoin avertisseur et d'un câble spiralé. Les informations nécessaires à l'entretien sans danger du système se trouvent à la **section RS** de ce manuel de réparation.

AVERTISSEMENT :

- **Pour ne pas affecter le fonctionnement du SRS, ce qui augmenterait les risques de blessures graves ou mortelles en cas de collision entraînant le déploiement du coussin gonflable (air bag), toutes les opérations d'entretien doivent être effectuées par un concessionnaire NISSAN agréé.**
- **Un entretien incorrect, y compris une mauvaise dépose ou repose du SRS, pourra entraîner des risques de blessures dues au déploiement accidentel du système.**
- **Ne pas utiliser d'équipement d'essai électrique sur les circuits connexes du SRS sauf si indiqué dans ce Manuel de Réparation.**

Simpo PDF Merge and Split Unregistered Version - http://www.simpopdf.com

Clips et agrafes

- Les clips et agrafes de la section BT correspondent aux numéros et aux symboles suivants.
- Remplacer tous les clips et/ou agrafes qui ont pu être endommagés pendant la dépose ou la repose.

N° de symbole	Formes	Dépose et repose
C101 C101	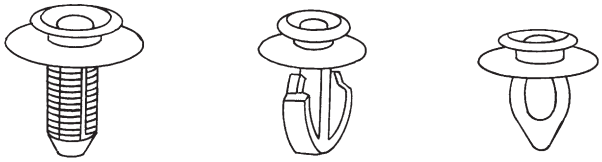 SBF302H	**Dépose :** Enlever en faisant levier avec un tournevis à lame plate ou un extracteur de clip.  SBF367BA
C103	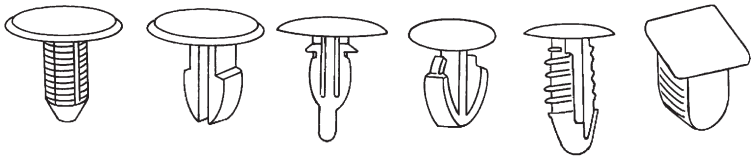 SBT095	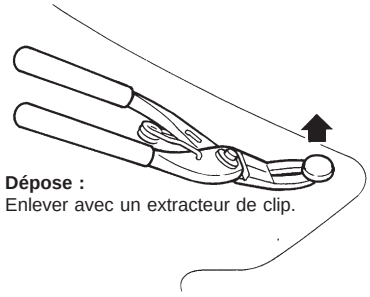 **Dépose :** Enlever avec un extracteur de clip. SBF423H
C203 C203	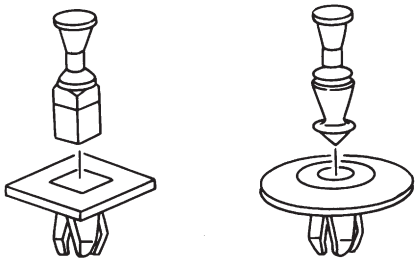 SBF258G	Pousser l'axe central sur la position d'arrêt (ne pas déposer l'axe central en le frappant). Pousser Pousser **Repose :** **Dépose :** 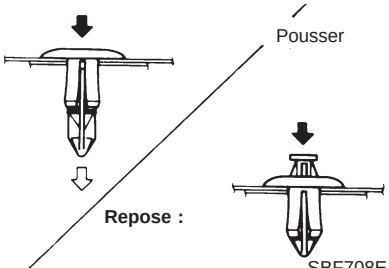 SBF708E
C205	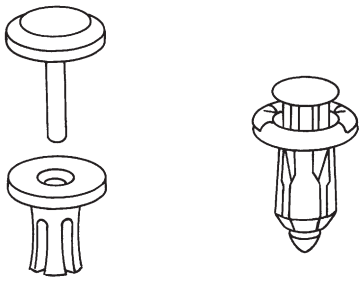 MBF518B	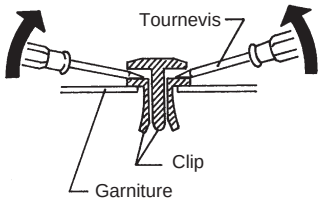 Tournevis Clip Garniture SBF638C
CE103	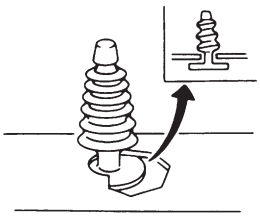 SBF104B	**Dépose :** 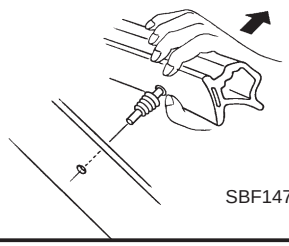 SBF147B

Simpo PDF Merge and Split Unregistered Version - http://www.simpopdf.com

Clips et agrafes (Suite)

N° de symbole	Formes	Dépose et repose
CG104	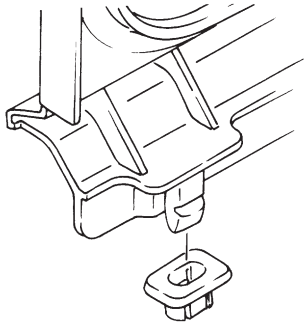 SBF351C	**Dépose :** **Enlever en faisant levier avec des tournevis à lames plates.** 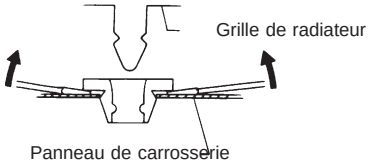 SBF352C
CE114	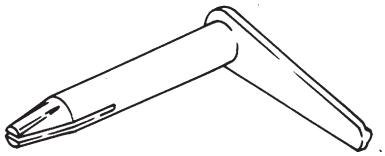 SBF353C	– **Dépose :** **Repose :**
CG101 	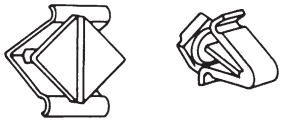 SBF145B	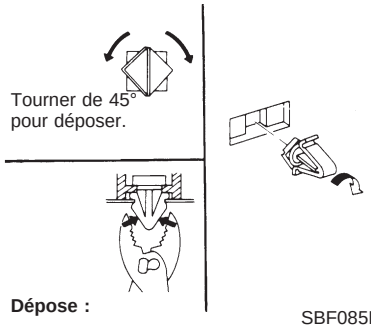 **Dépose :** SBF085B
CR103	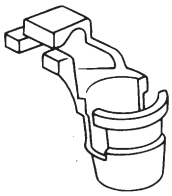 SBF768B	**Dépose :** La portion de retenue du clip doit être écartée afin de déposer la tige. 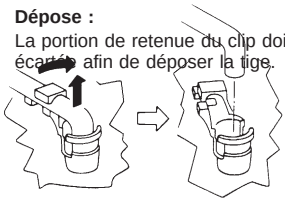 SBF770B
CS101 	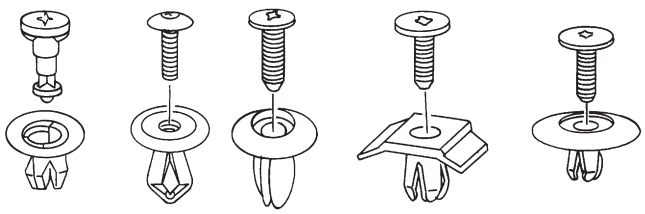 SBF078B	**Dépose :** 1. Dévisser avec un tournevis Phillips. 2. Retirer la partie femelle avec un tournevis à lame plate. 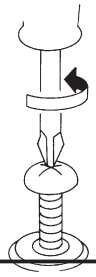 SBF992G

Simpo PDF Merge and Split Unregistered Version - http://www.simpopdf.com

Extrémité avant

- Couvrir le capot avec un chiffon ou tout autre matériel de protection lors de sa dépose ou de sa repose. La carrosserie sera ainsi protégée contre les rayures.
- La garniture de pare-chocs est en plastique. Ne pas appliquer de force excessive et veiller à éviter tout contact avec de l'huile.
- Réglage du capot : régler à hauteur des charnières.
- Réglage du verrouillage de capot : après réglage, vérifier le fonctionnement de la commande de verrouillage de capot. Appliquer une couche de graisse sur le mécanisme d'enclenchement des verrous de capot.
- Commande d'ouverture de capot : ne pas tenter de plier le câble en le forçant. Cela augmenterait l'effort nécessaire pour ouvrir le capot.

DEPOSE – Ensemble de pare-chocs avant

① Déposer les vis qui fixent les feux combinés gauche et droit, et déposer les feux. A
② Déposer les clips qui fixent la grille avant, et la déposer. B
③ Déposer les boulons qui fixent les montants à gauche et à droite du pare-chocs. C
④ Déposer les boulons qui fixent les supports latéraux à gauche et à droite du pare-chocs. D
⑤ Déposer les boulons qui fixent les montants latéraux à gauche et à droite du pare-chocs. E
⑥ Déposer l'ensemble pare-chocs.

Simpo PDF Merge and Split Unregistered Version - http://www.simpopdf.com

Extrémité avant (Suite)

Réglage du verrou de capot

- Régler le capot de façon à ce que le verrou primaire s'enclenche 1 à 1,5 mm plus bas que l'aile.
- Après avoir réglé le verrou de capot, régler le caoutchouc de butée.
- Lors du montage du verrou de capot, veiller à ce qu'il ne soit pas penché. La gâche doit être positionnée au centre du verrou primaire de capot.
- Après le réglage, s'assurer que le verrou primaire et le verrou secondaire fonctionnent correctement.

Longueur d'accrochage du crochet secondaire de verrou de capot

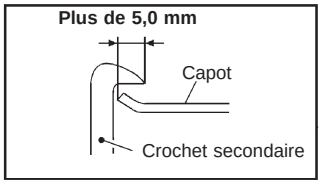

Réglage du caoutchouc de butée

- Régler de façon à ce que le capot soit aligné sur l'aile. La déflexion est alors d'environ 2 mm.

(La hauteur libre du **caoutchouc de butée** est d'env. 13 mm)

: N·m (kg-m)

SBT427-A

Simpo PDF Merge and Split Unregistered Version - http://www.simpopdf.com

Extrémité avant (Suite)

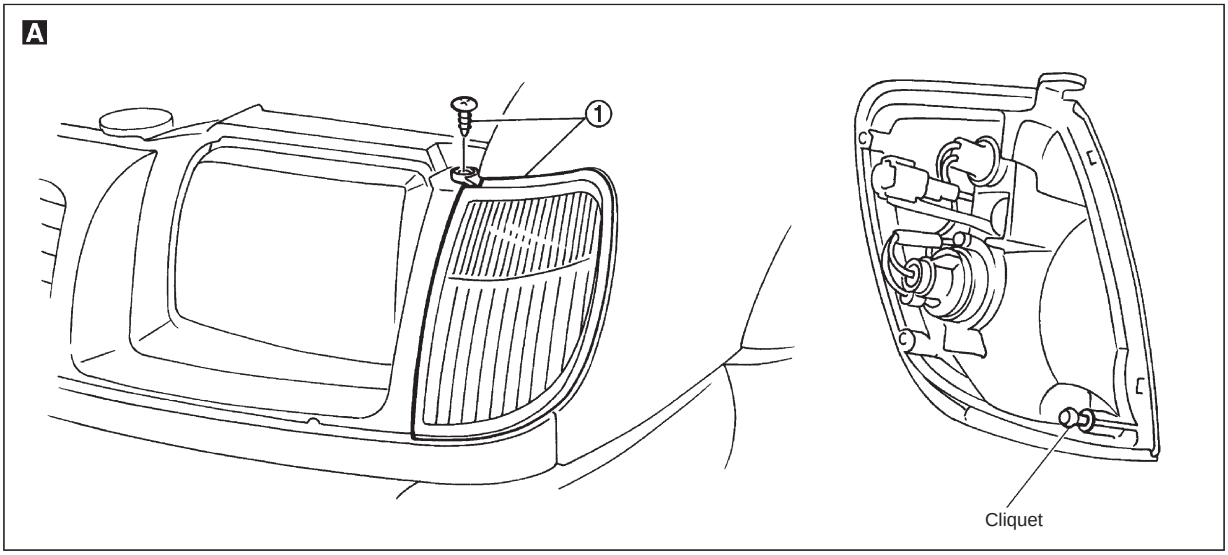

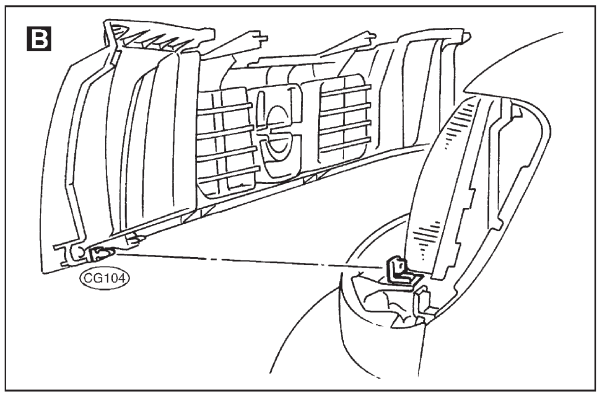

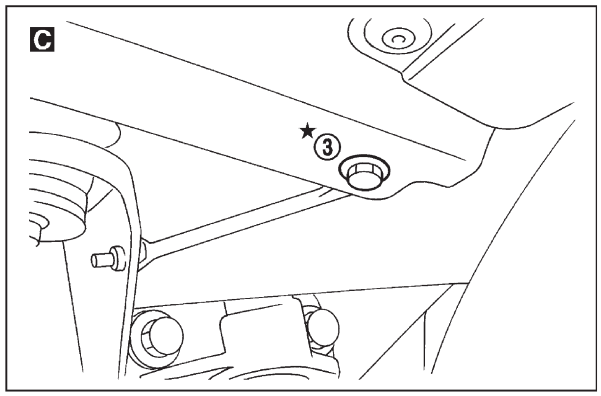

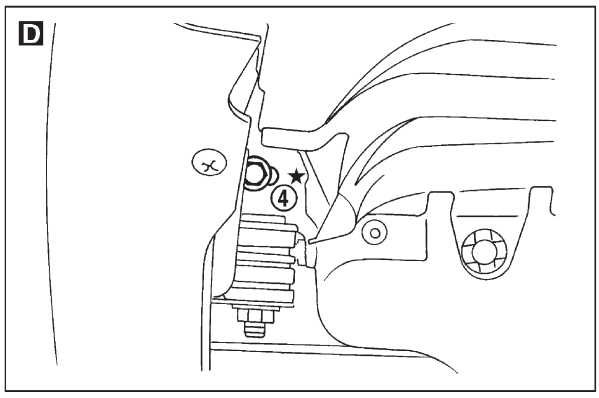

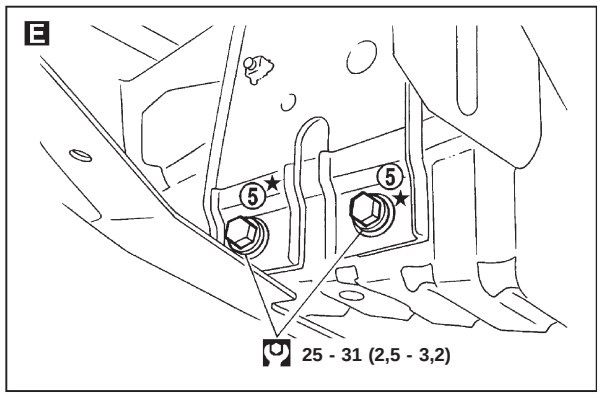

: N·m (kg-m)
★ : Boulons de montage du pare-chocs

SBT428

Simpo PDF Merge and Split Unregistered Version - http://www.simpopdf.com

Extrémité arrière

- Réglage : régler à hauteur des charnières pour un montage correct.
- Réglage du système de verrouillage : régler la gâche de façon à ce qu'elle soit au centre de la serrure. Vérifier le fonctionnement de la serrure du panneau de coffre après le réglage.
- Après la repose, s'assurer que la trappe arrière s'ouvre facilement.

Dépose – Ensemble pare-chocs arrière

① Déposer les connecteurs qui fixent les éclairages de plaque minéralogique.
② Déposer les écrous qui fixent le montant latéral de pare-chocs. A
③ Déposer l'ensemble pare-chocs.

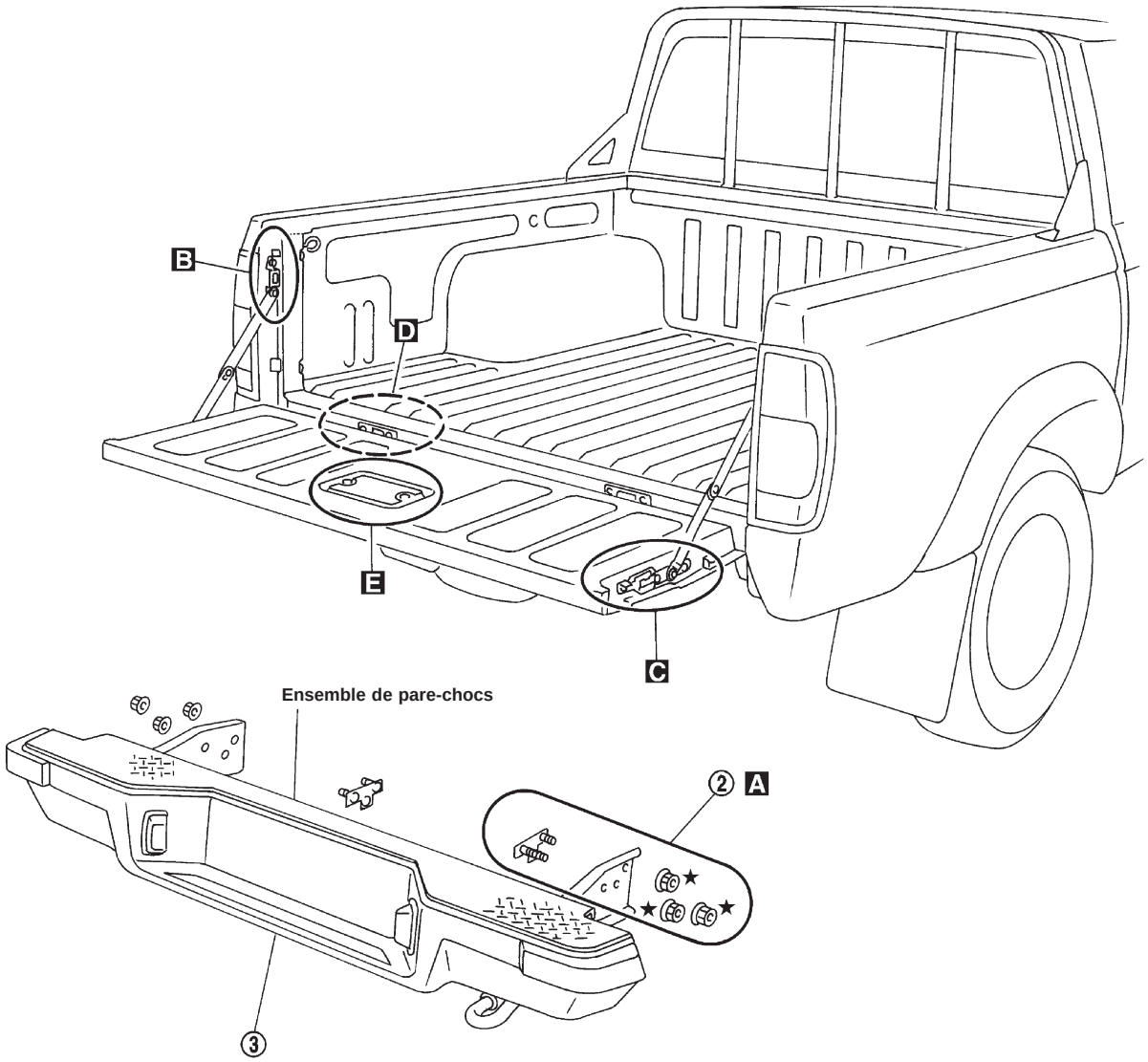

★ : Ecrous de montage du pare-chocs

SBT429

Simpo PDF Merge and Split Unregistered Version - http://www.simpopdf.com

Extrémité arrière (Suite)

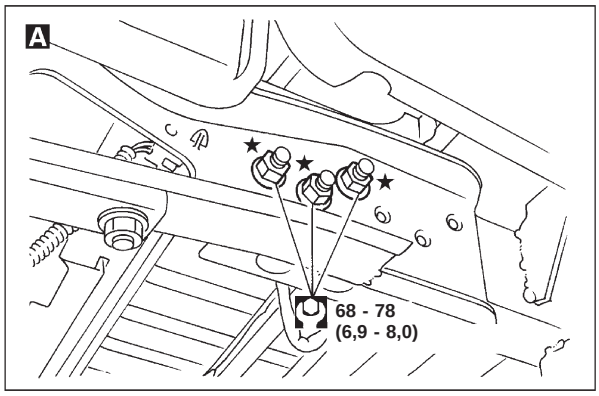

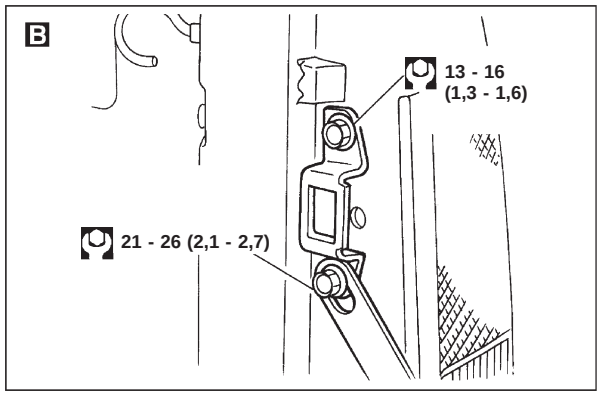

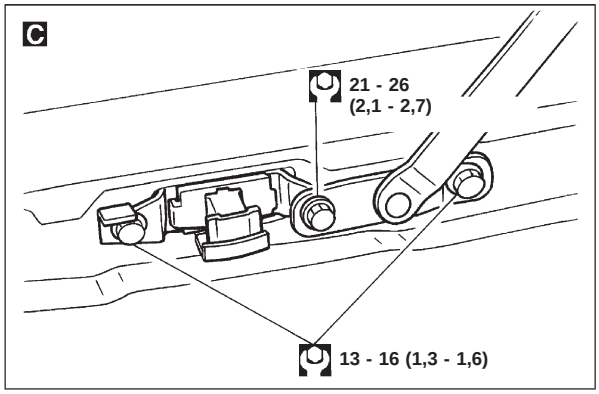

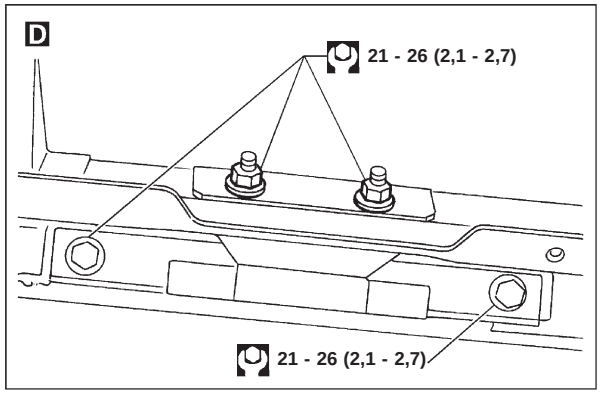

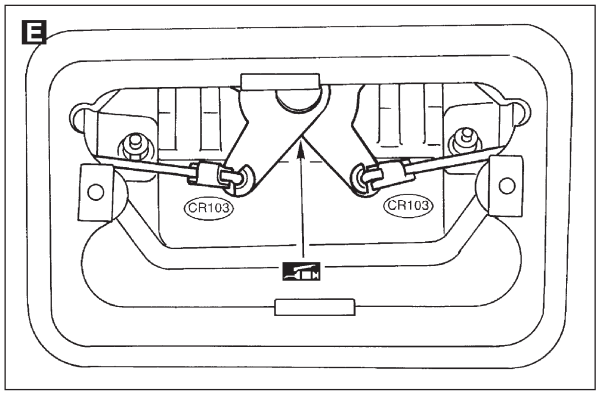

: N·m (kg-m)
★ : Boulons et écrous de montage du pare-chocs

SBT430

Simpo PDF Merge and Split Unregistered Version - http://www.simpopdf.com

Porte avant

- Pour la dépose de la garniture de porte, se reporter à ‘‘Garniture de porte’’ dans le chapitre ‘‘GARNITURE INTERIEURE’’ pour plus de détails, BT-17.
- Après avoir réglé une porte ou une serrure de porte, vérifier le fonctionnement du verrouillage de porte.

SEC. 800•803•806

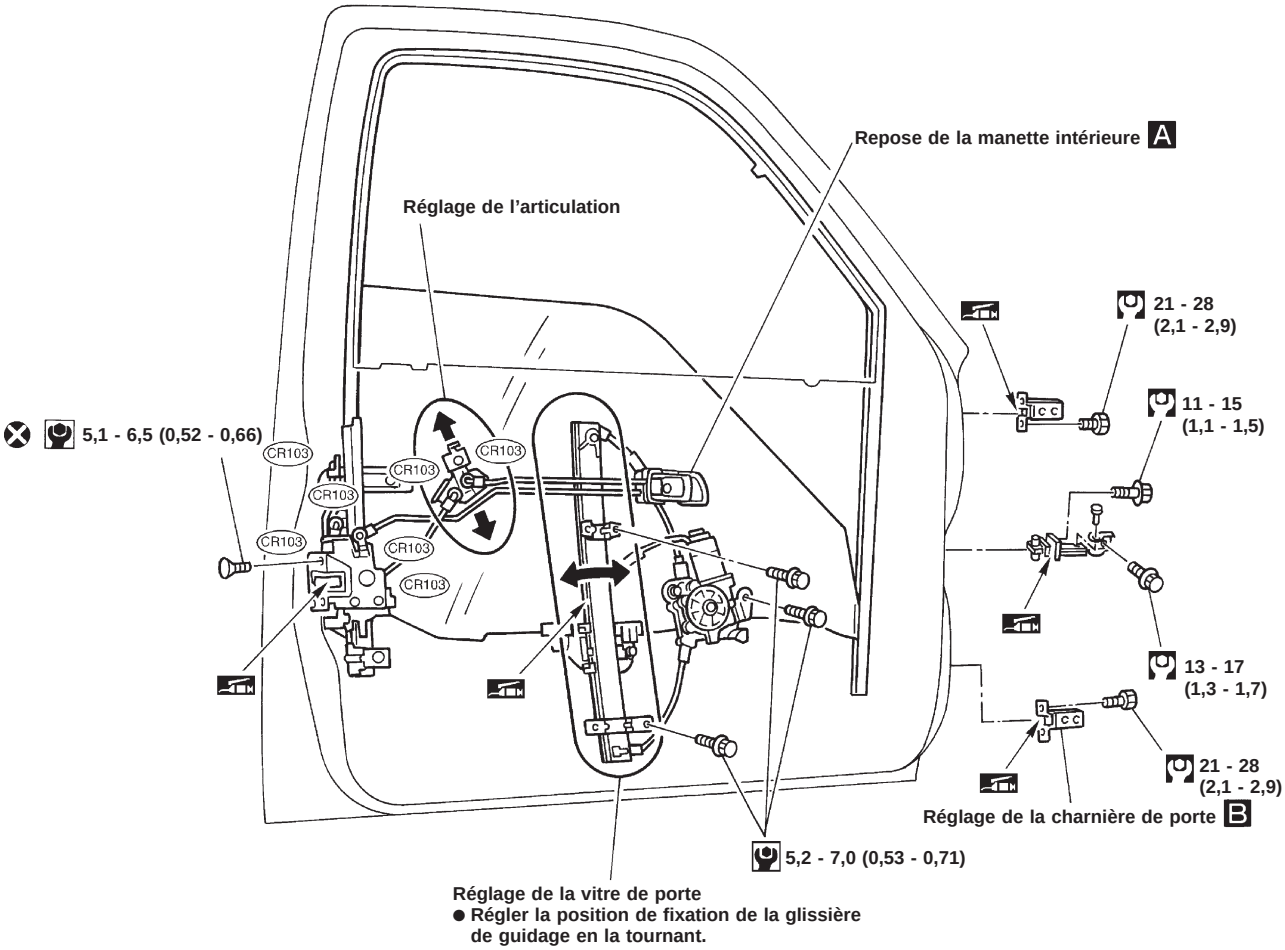

A Réglage de l’articulation

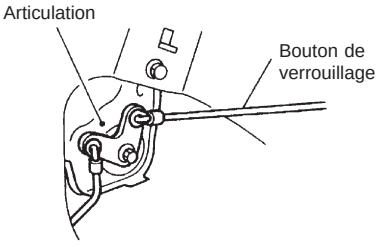

Verrouiller la porte après avoir mis en place l’ensemble de serrure de porte et la manette intérieure. Déplacer l’articulation dans le sens de la flèche (voir figure ci-à gauche) pour déterminer le jeu libre du bouton, et fixer avec des boulons.

B Réglage de la charnière de porte

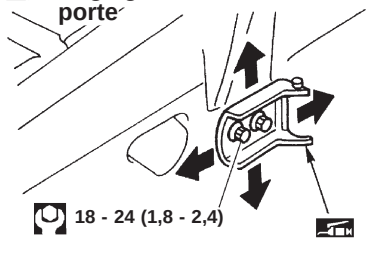

Réglage de la gâche

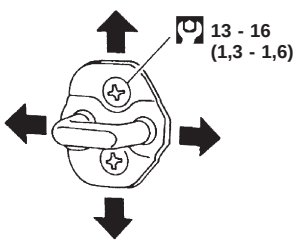

: N·m (kg-m)
: N·m (kg-m)

SBT431-A

Simpo PDF Merge and Split Unregistered Version - http://www.simpopdf.com

Porte arrière

SEC. 820•823•825

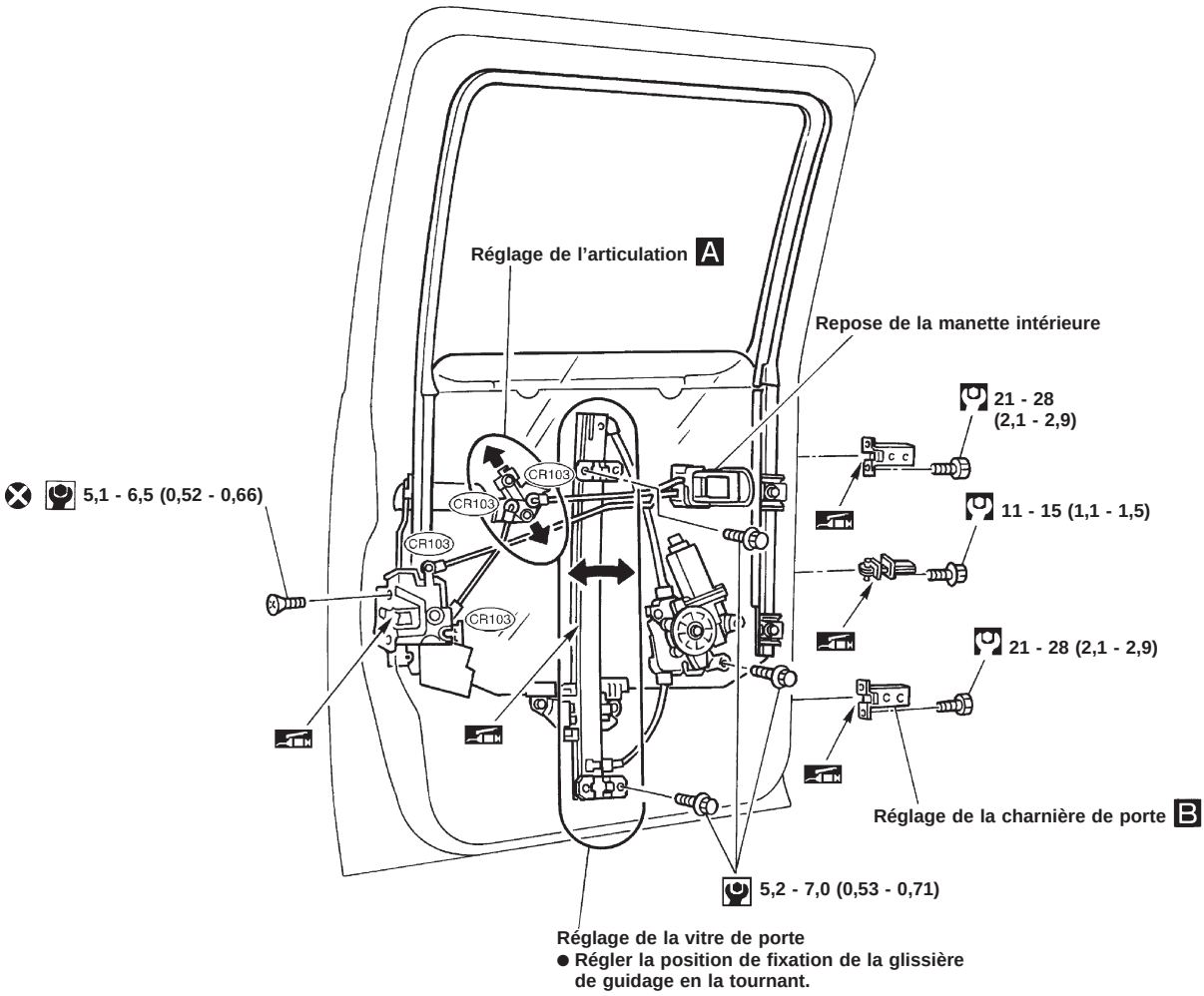

A Réglage de l'articulation

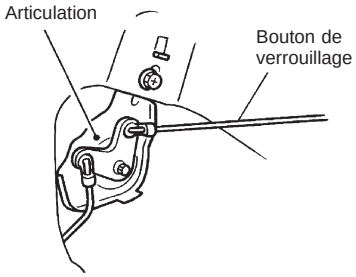

Verrouiller la porte après avoir mis en place l'ensemble de serrure de porte et la manette intérieure.
Déplacer l'articulation dans le sens de la flèche (voir figure ci-à gauche) pour déterminer le jeu libre du bouton, et fixer avec des boulons.

B Réglage de la charnière de porte

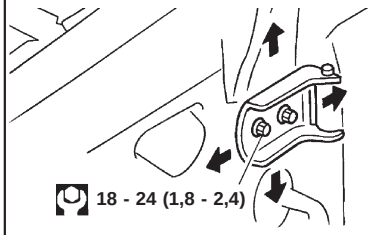

Réglage de la gâche

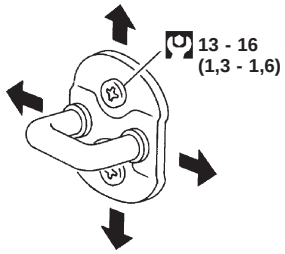

: N·m (kg-m)
: N·m (kg-m)

SBT432-A

Simpo PDF Merge and Split Unregistered Version - http://www.simpopdf.com

ATTENTION :

- **Débrancher les deux bornes de la batterie à l'avance.**
- **Débrancher à l'avance le connecteur du module de coussin gonflable.**
- **Veiller à ne pas érafler les garnitures et autres pièces.**
- **Ne jamais manipuler ou forcer l'ouverture du couvercle de coussin gonflable afin de ne pas affecter les performances du coussin gonflable.**

DEPOSE – Tableau de bord

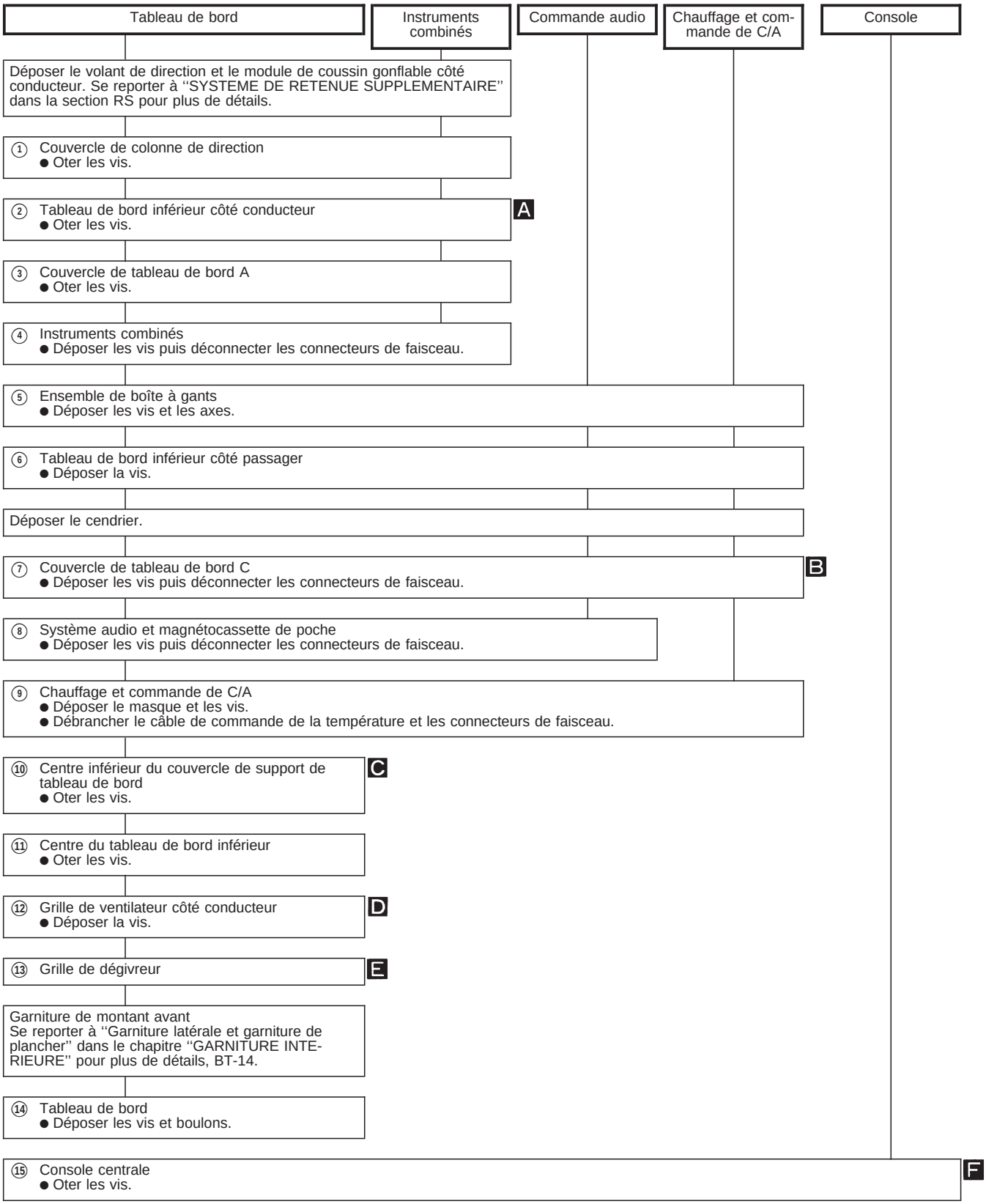

Simpo PDF Merge and Split Unregistered Version - http://www.simpopdf.com

SEC. 272•280•680•685•969

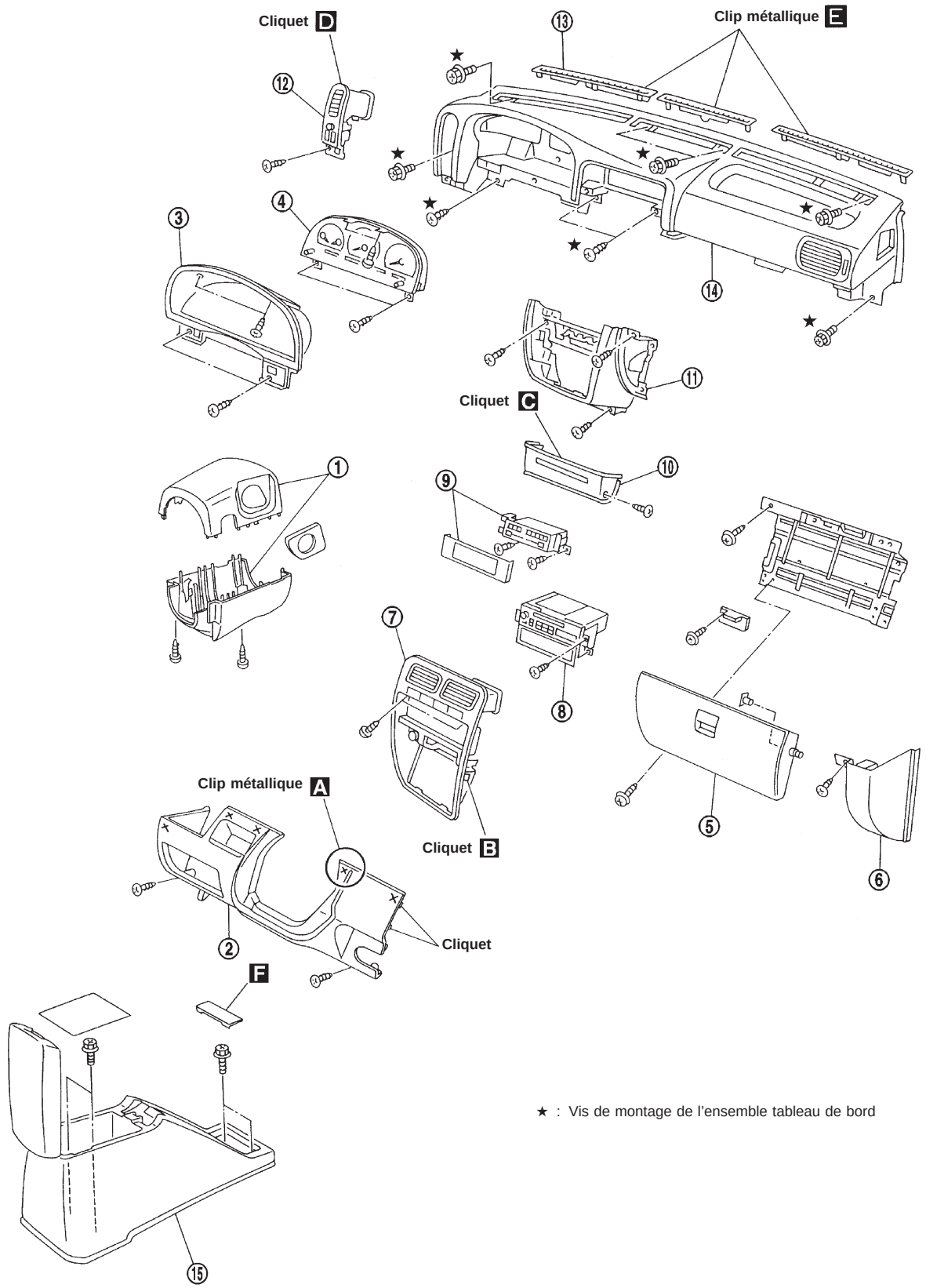

SBT627

Simpo PDF Merge and Split Unregistered Version - http://www.simpopdf.com

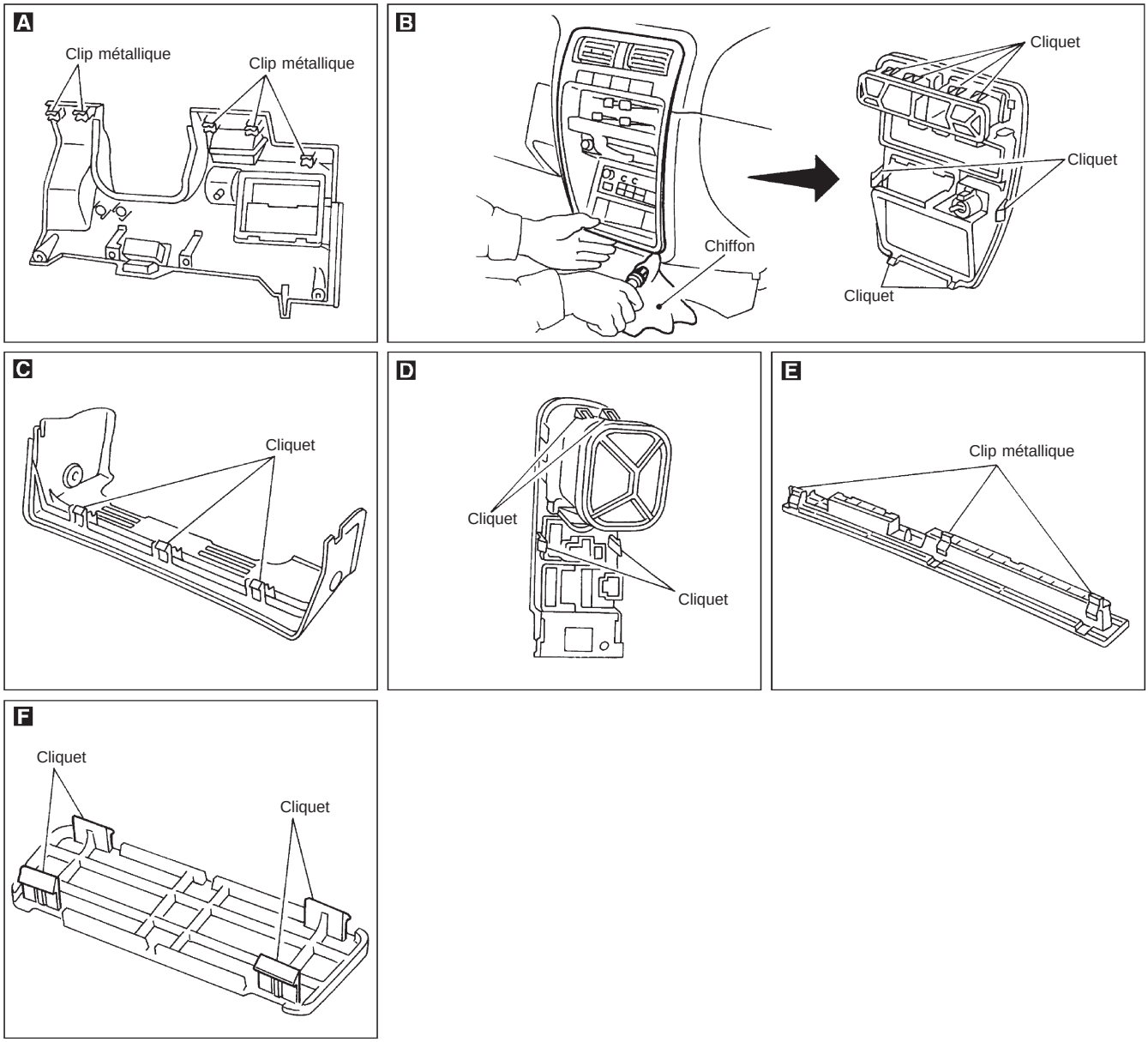

SBT507

Simpo PDF Merge and Split Unregistered Version - http://www.simpopdf.com

Garniture latérale et garniture de plancher

ATTENTION :
Envelopper le bout du tournevis à lame plate avec un chiffon lors de la dépose des clips en métal des garnitures.

DEPOSE – Garniture latérale de carrosserie

Modèle à cabine double

① Déposer les sièges avant et arrière. Se reporter à ‘‘SIEGES’’ pour plus de détails, BT-29, 32.
② Déposer les bordures de marchepied avant et arrière.
③ Déposer les garnitures inférieures latérales du tableau de bord. A
④ Déposer les plis latéraux de carrosserie avant et arrière.
⑤ Déposer les garnitures du montant avant. B
⑥ Déposer les garnitures du montant central. C
⑦ Déposer les garnitures du montant à serrure. D

Modèle à cabine simple

① Déposer les sièges avant. Se reporter à ‘‘SIEGES’’ pour plus de détails, BT-29.
② Déposer les bordures de marchepied.
③ Déposer les garnitures inférieures latérales du tableau de bord. A
④ Déposer les plis latéraux de carrosserie.
⑤ Déposer les garnitures du montant avant. B

Modèle à grande cabine

① Déposer les garnitures arrière latérales de carrosserie.
② Déposer les sièges avant et les strapontins. Se reporter au chapitre ‘‘SIEGES’’ pour plus de détails, BT-29, 33.
③ Déposer les bordures de marchepied.
④ Déposer les garnitures inférieures latérales du tableau de bord. A
⑤ Déposer les garnitures du montant avant. B
⑥ Déposer les garnitures latérales de carrosserie. E
⑦ Déposer le montant de garniture de panneau arrière.
⑧ Déposer les garnitures de montant arrière. F
⑨ Déposer la garniture de panneau arrière.
⑩ Déposer les plis latéraux de carrosserie.
⑪ Déposer le centre inférieur du couvercle de tableau de bord et la console centrale. Se reporter au chapitre ‘‘TABLEAU DE BORD’’ pour plus de détails, BT-11.
⑫ Déposer la butée d’accélérateur.
⑬ Déposer la garniture arrière de plancher.
⑭ Déposer les clips et la butée d’accélérateur, puis déposer la garniture du plancher avant.

Simpo PDF Merge and Split Unregistered Version - http://www.simpopdf.com

Garniture latérale et garniture de plancher (Suite)

Modèles à cabine double et à cabine simple

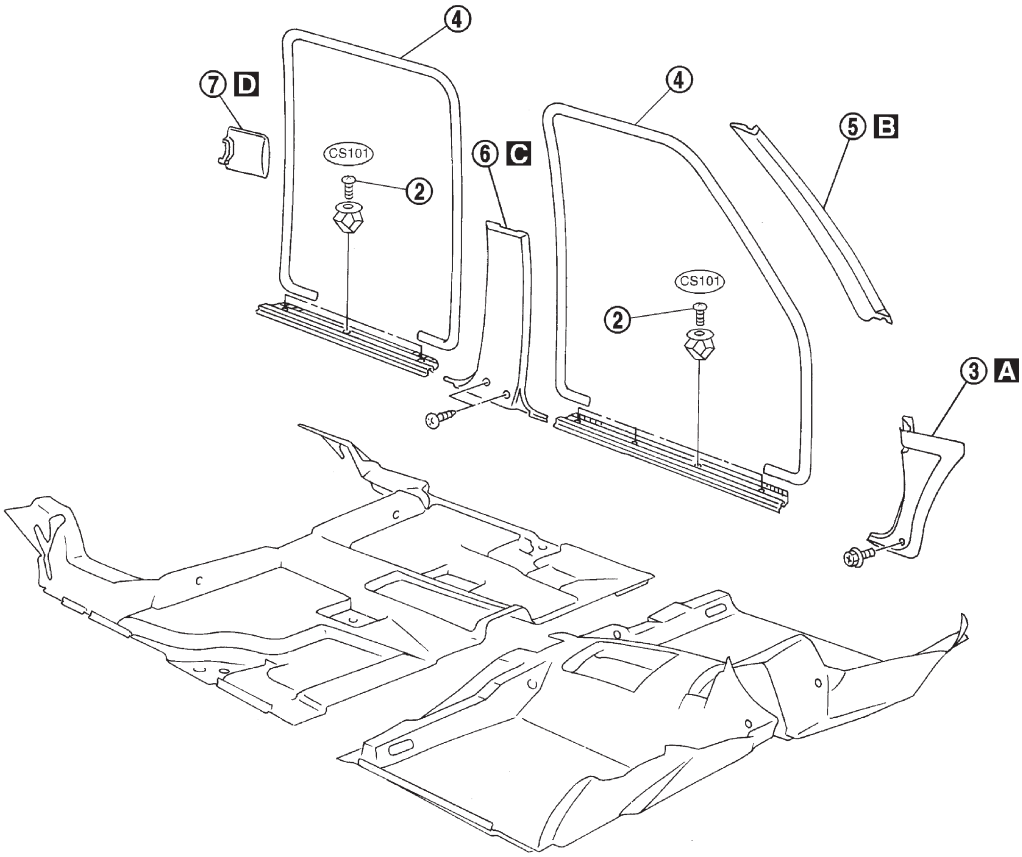

Modèles à grande cabine

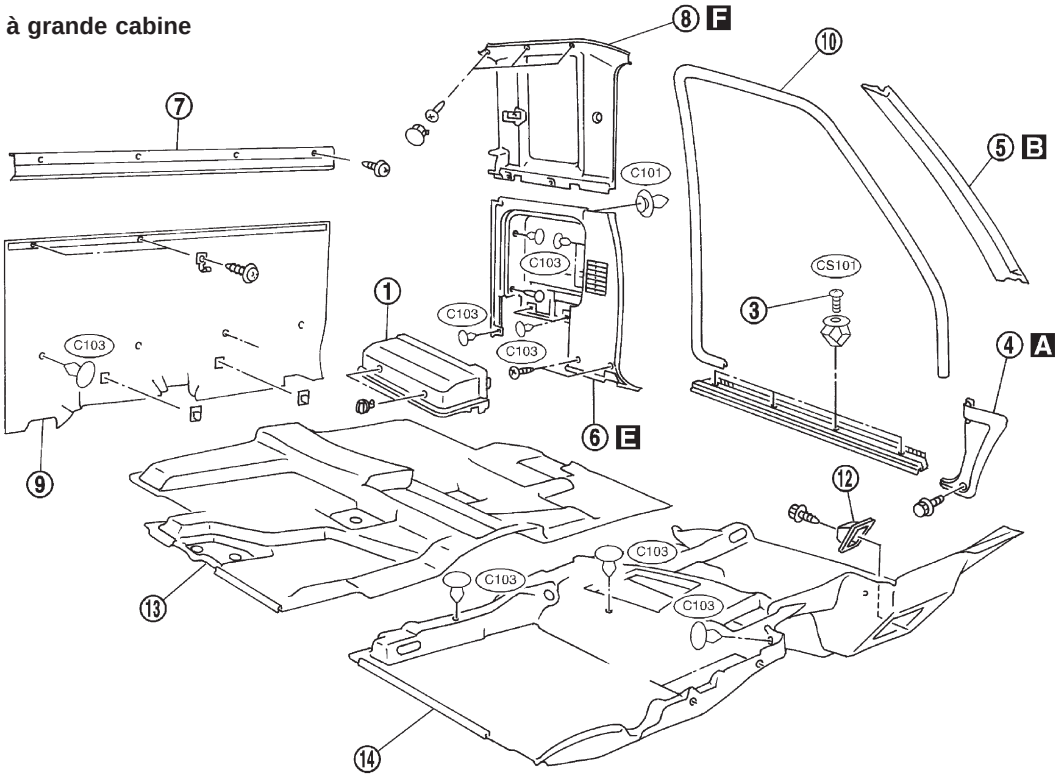

SBT628

Simpo PDF Merge and Split Unregistered Version - http://www.simpopdf.com

Garniture latérale et garniture de plancher (Suite)

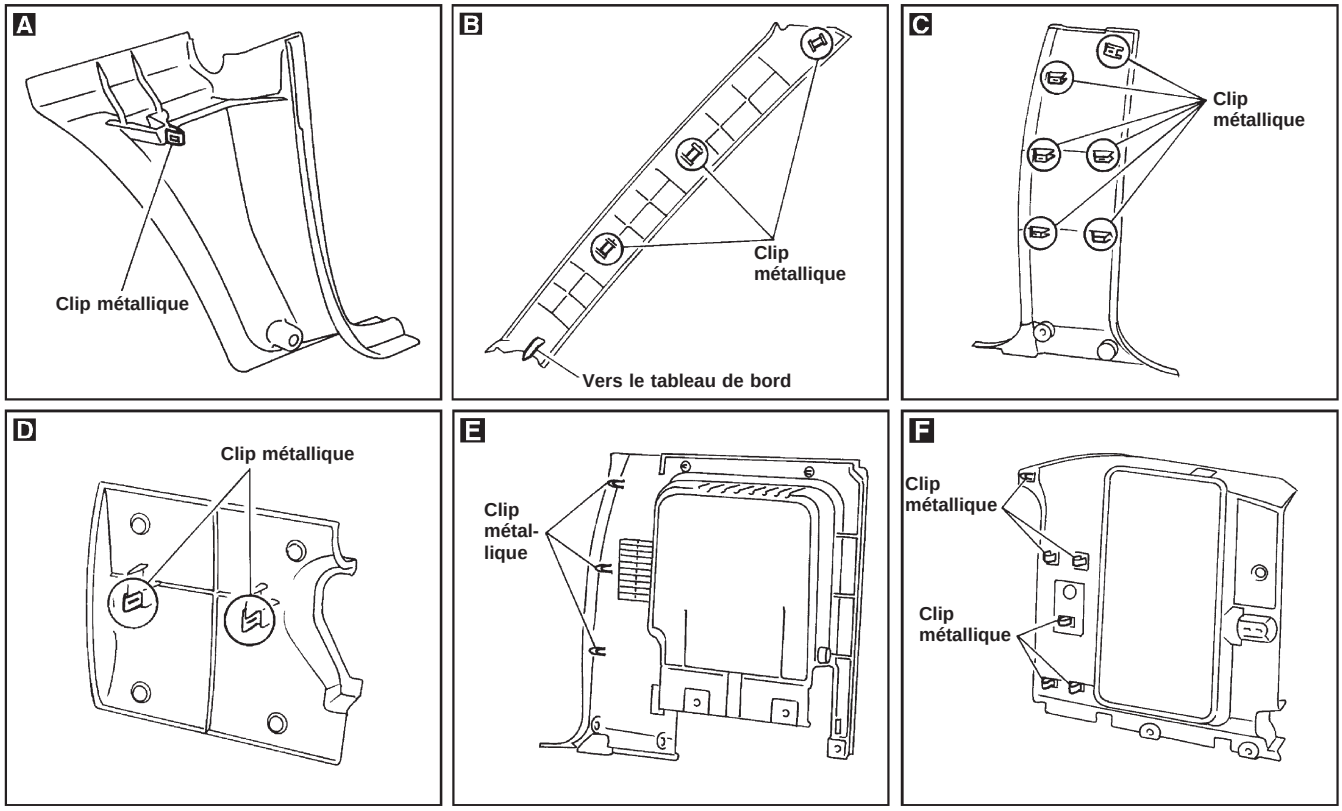

SBT629

Simpo PDF Merge and Split Unregistered Version - http://www.simpopdf.com

Garniture de porte

DEPOSE – Garniture de porte

Garniture de porte avant

① Déposer l'enjoliveur de poignée intérieure. A
② Déposer l'interrupteur de lève-glace électrique, puis débrancher le connecteur. B
③ Déposer la manette de réglage de la vitre.
④ Déposer l'accoudoir de porte. C
⑤ Déposer la vis de fixation de la poignée de traction et déposer la poignée.
⑥ Déposer le boulon, la vis et le clip qui fixent la garniture de porte.
⑦ Tout en la soulevant, retirer la garniture de porte.

Garniture de porte arrière

⑧ Déposer l'enjoliveur de poignée intérieure. A
⑨ Déposer les vis qui fixent la poignée de porte, et la déposer.
⑩ Tout en la soulevant, retirer la garniture de porte, puis débrancher le connecteur de l'interrupteur de lève-glace électrique.

Simpo PDF Merge and Split Unregistered Version - http://www.simpopdf.com

Garniture de porte (Suite)

Modèles avec lève-glace électrique

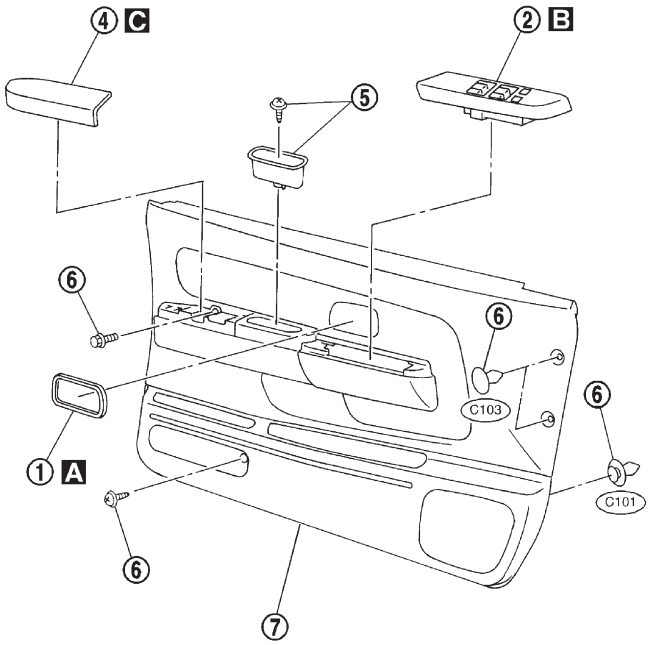

Modèles avec lève-glace manuel

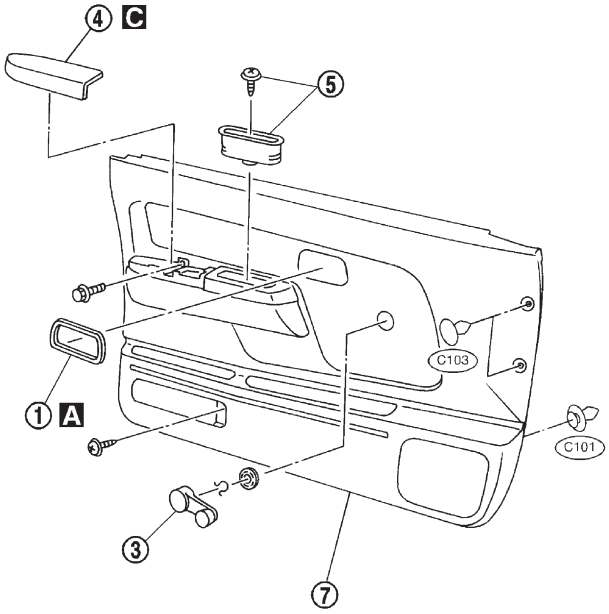

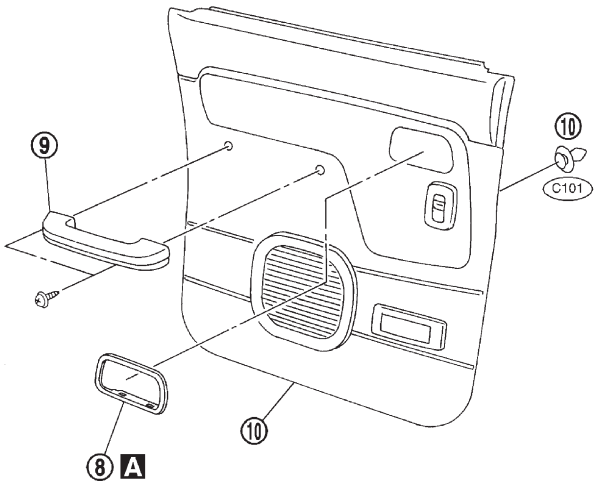

SBT630

Simpo PDF Merge and Split Unregistered Version - http://www.simpopdf.com

Garniture de porte (Suite)

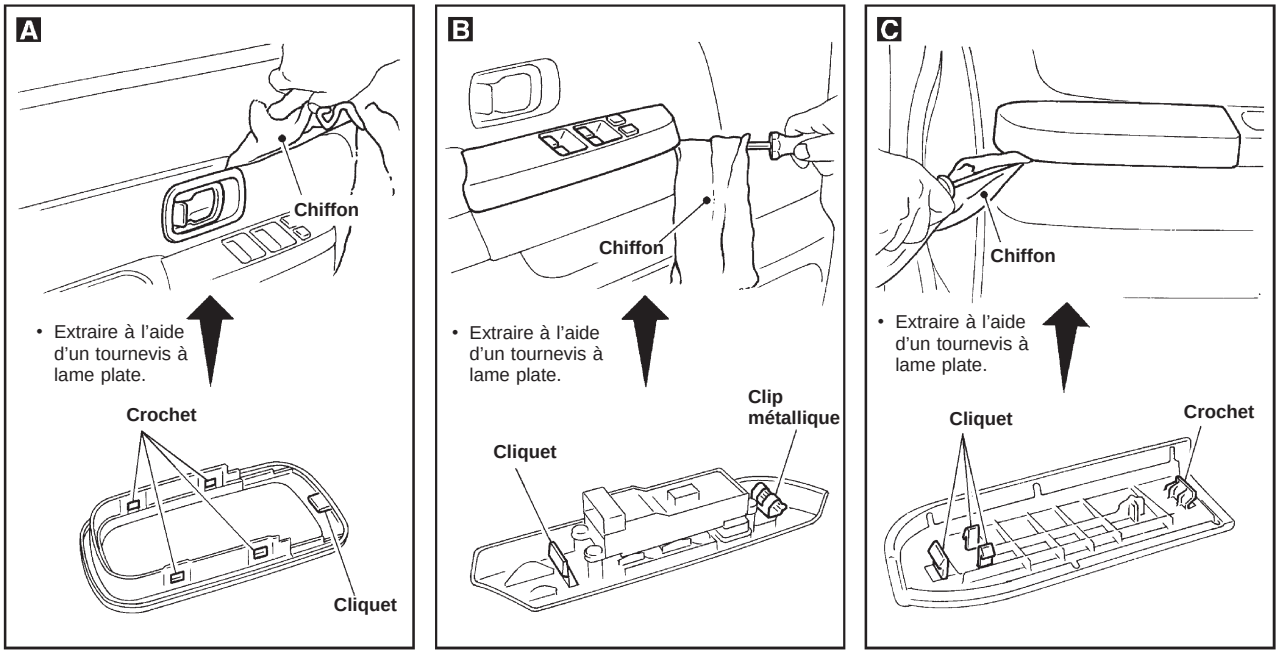

Manette de réglage de lève-glace manuel

Dépose

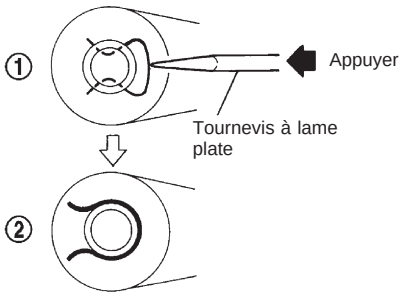

Pincer le clip de la manette de réglage présent avec un tournevis et déposer la manette de réglage de l'axe de réglage.
Placer le clip de la manette de réglage comme indiqué dans la figure ① .

Installation

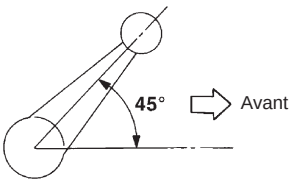

Pousser la manette de réglage pour la placer sur l'axe de réglage.
Placer la manette de réglage de façon appropriée, comme illustré, avec la vitre complètement fermée.

SBT631

Simpo PDF Merge and Split Unregistered Version - http://www.simpopdf.com

Garniture de toit

DEPOSE – Revêtement du plafond (Modèle à cabine double ou cabine simple)

① Déposer les sièges avant et arrière. Se reporter à ‘‘SIEGES’’ pour plus de détails, BT-29, 32.
② Déposer la ceinture de sécurité avant. Se reporter à ‘‘CEINTURES DE SECURITE’’ à la section RS pour plus de détails.
③ Déposer la garniture latérale de carrosserie. Se reporter à ‘‘Garniture latérale et garniture de plancher’’ pour plus de détails, BT-14.
④ Déposer les pare-soleil.
⑤ Déposer l’ensemble de rétroviseur intérieur.
⑥ Déposer l’ensemble de l’éclairage de plafonnier. A
⑦ Déposer les poignées de maintien.
⑧ Déposer le bourrelet de lunette arrière, et déposer la vitre de lunette arrière. B
⑨ Déposer le pli de toit ouvrant.
⑩ Déposer le pli. C
⑪ Déposer le revêtement du plafond.

SEC. 738•963•964•970

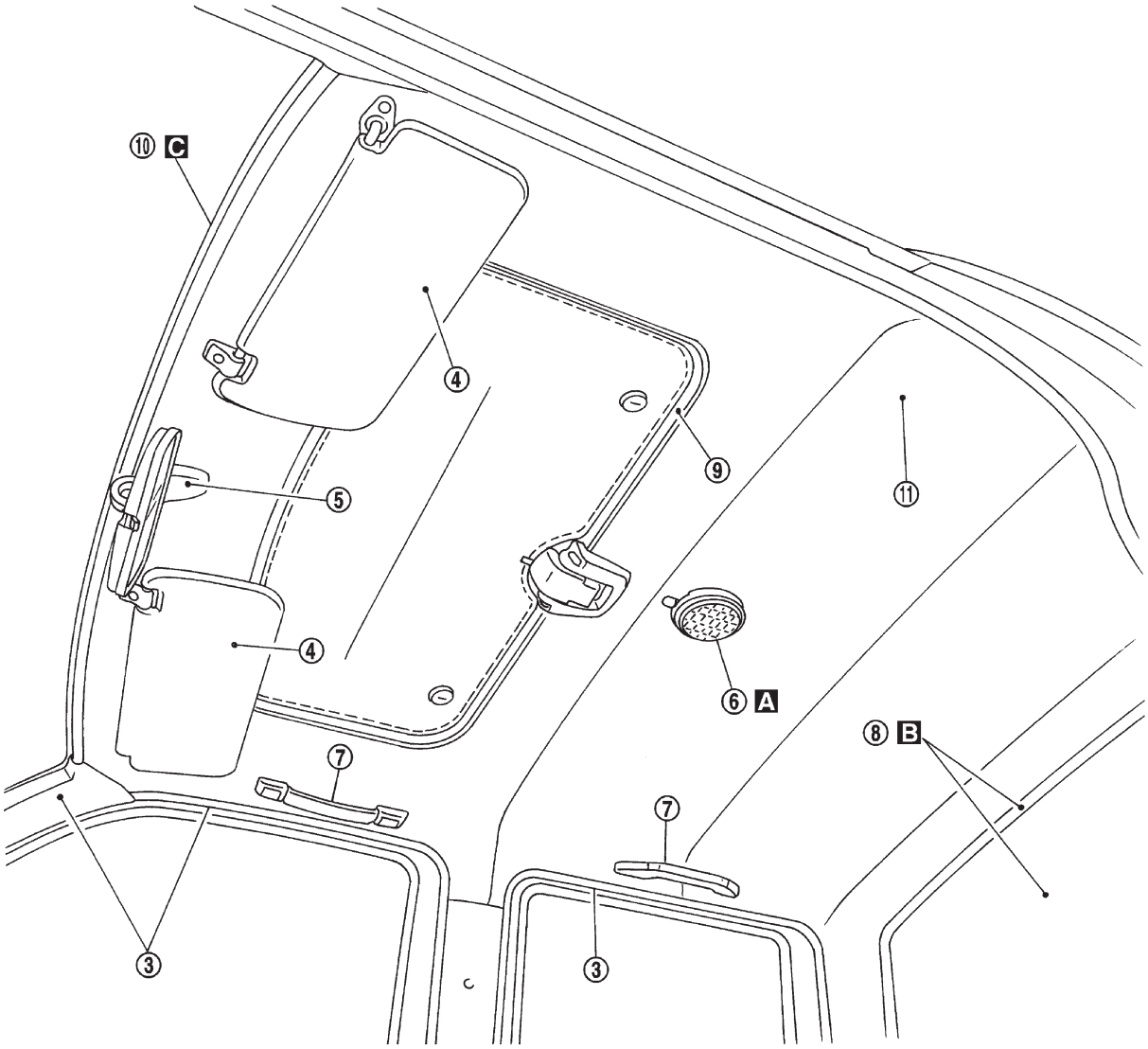

SBT439

Simpo PDF Merge and Split Unregistered Version - http://www.simpopdf.com

Garniture de toit (Suite)

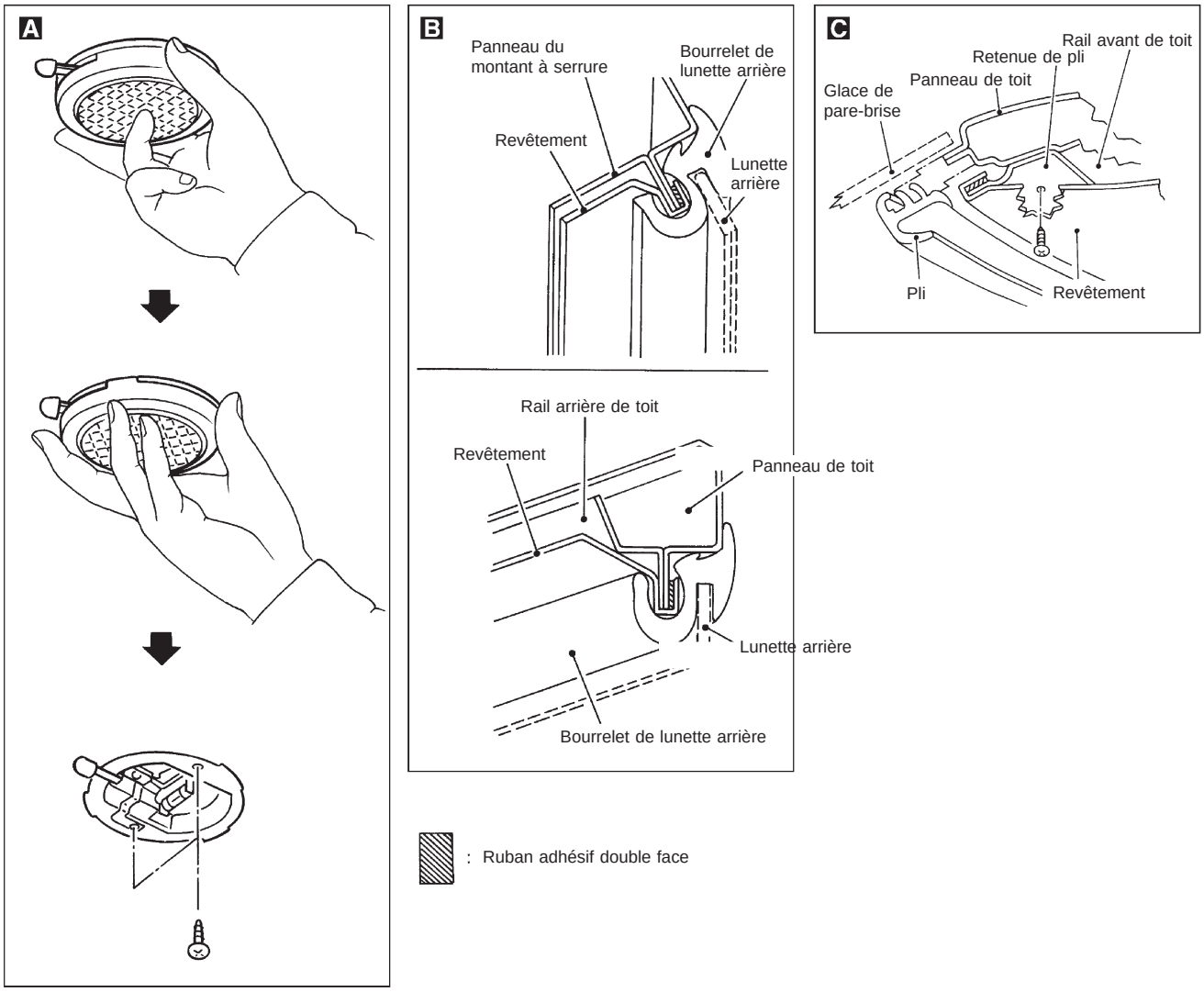

SBT440

Simpo PDF Merge and Split Unregistered Version - http://www.simpopdf.com

Garniture de toit (Suite)

DEPOSE – Revêtement du plafond (modèle à grande cabine)

① Déposer les sièges avant et les strapontins. Se reporter à ‘‘SIEGES’’ pour plus de détails, BT-29, 33.
② Déposer la garniture latérale de carrosserie. Se reporter à ‘‘Garniture de plancher et garniture latérale’’ (modèle à grande cabine) pour plus de détails, BT-15.
③ Déposer la poignée de maintien. A
④ Déposer les garnitures latérales de toit. B
⑤ Déposer l’ensemble de l’éclairage de plafonnier.
⑥ Déposer la garniture supérieure de lunette arrière. C
⑦ Déposer l’ensemble de rétroviseur intérieur.
⑧ Déposer les pare-soleil.
⑨ Déposer le pli supérieur de pare-brise.
⑩ Déposer les clips de fixation de l’habillage.

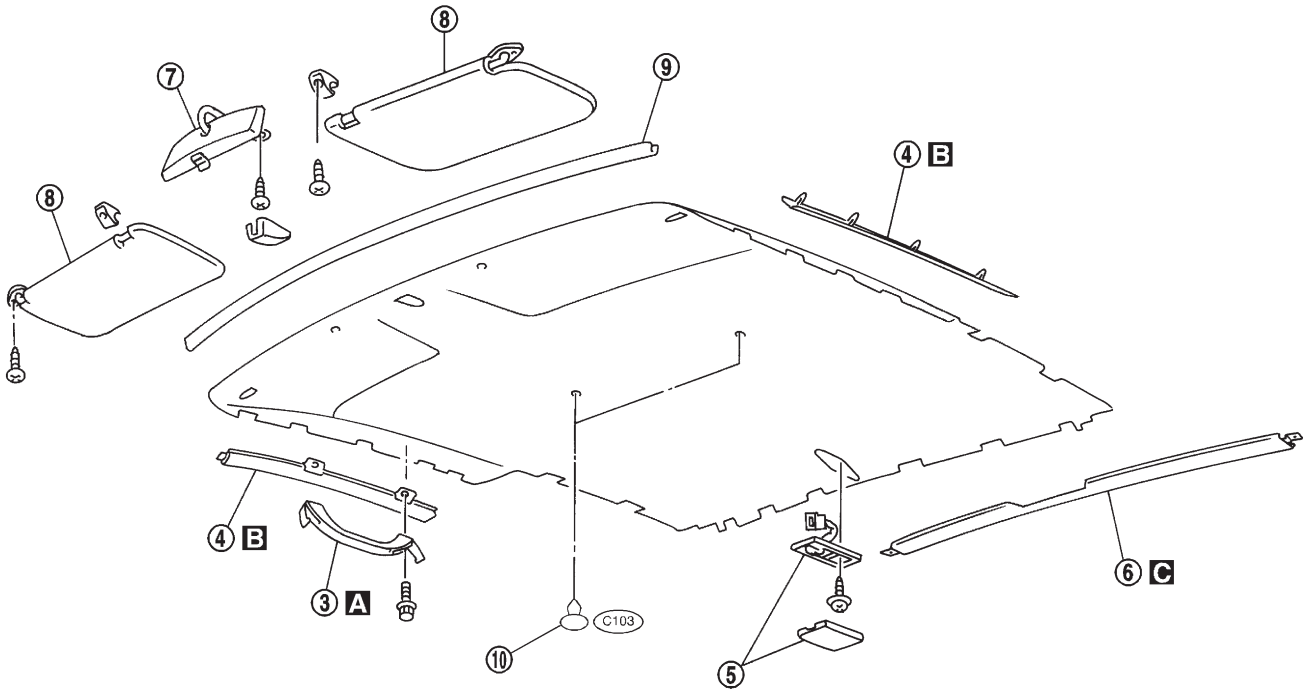

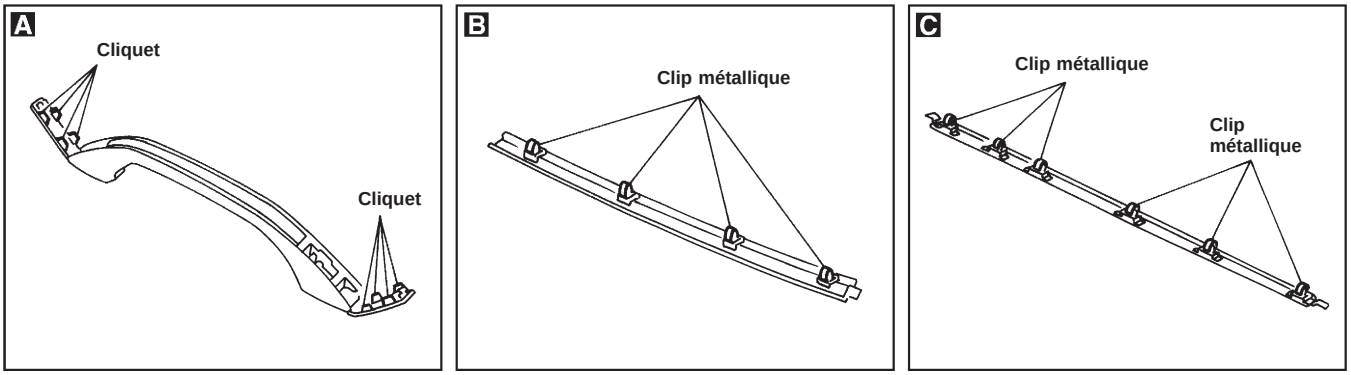

SBT632

Simpo PDF Merge and Split Unregistered Version - http://www.simpopdf.com

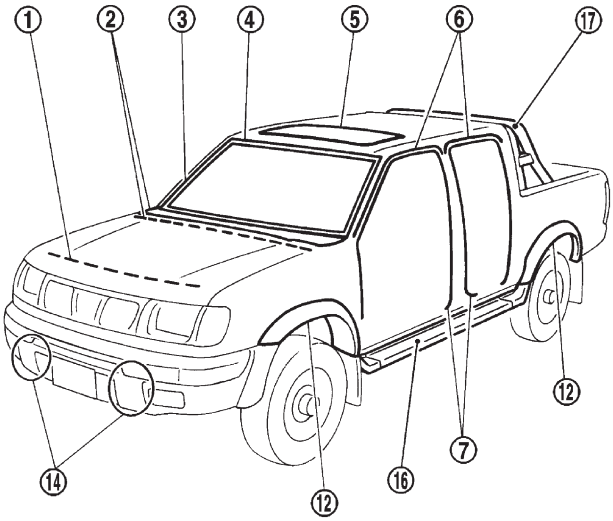

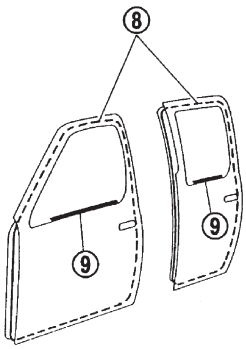

Modèles à cabine double et à cabine simple

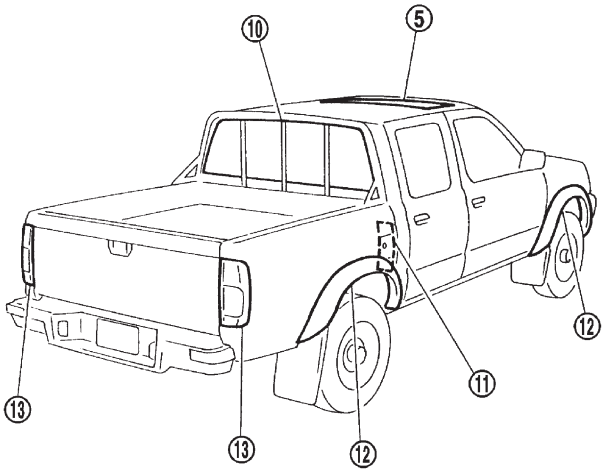

Modèles à grande cabine

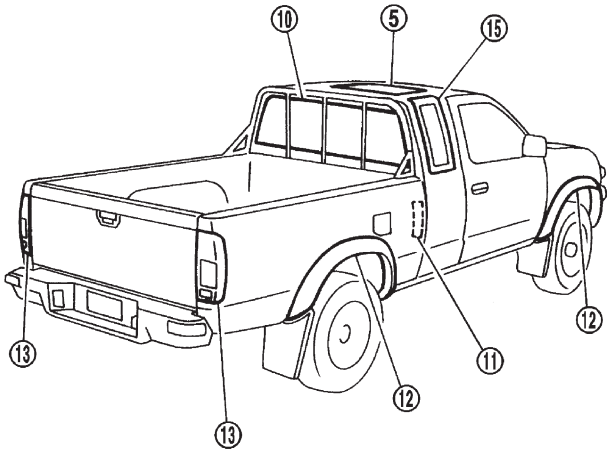

SBT635

Simpo PDF Merge and Split Unregistered Version - http://www.simpopdf.com

① Caoutchouc d'étanchéité avant de capot

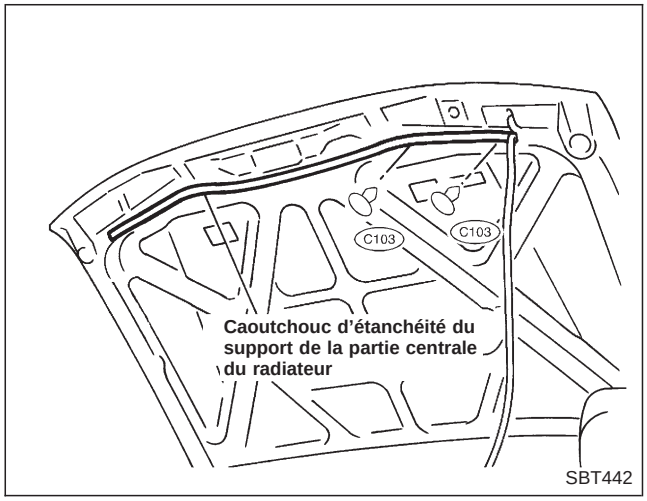

② Joint d'étanchéité et grille de dessus d'auvent

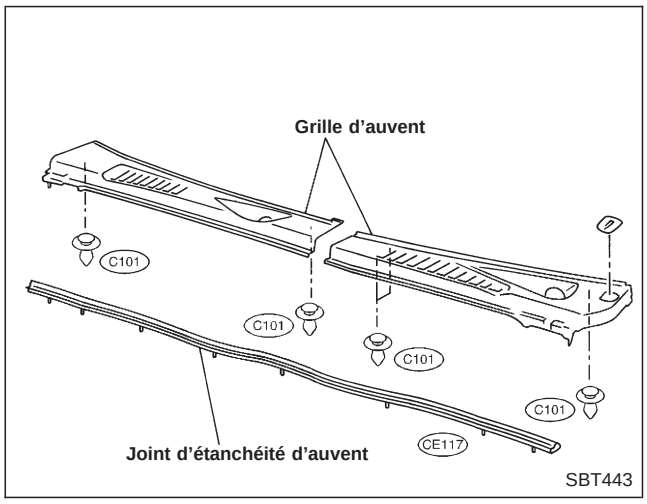

③ Moulure latérale de pare-brise

Montée avec des vis.

④ Moulure supérieure de pare-brise

SEC. 720

1. Couper l'adhésif d'uréthane à l'extrémité du pare-brise.
2. Retirer l'ancien adhésif d'uréthane de la surface du panneau.
3. Monter la fixation de la moulure et appliquer de l'enduit sur le panneau de carrosserie, puis enduire la carrosserie d'adhésif d'uréthane.

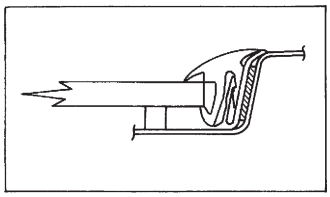

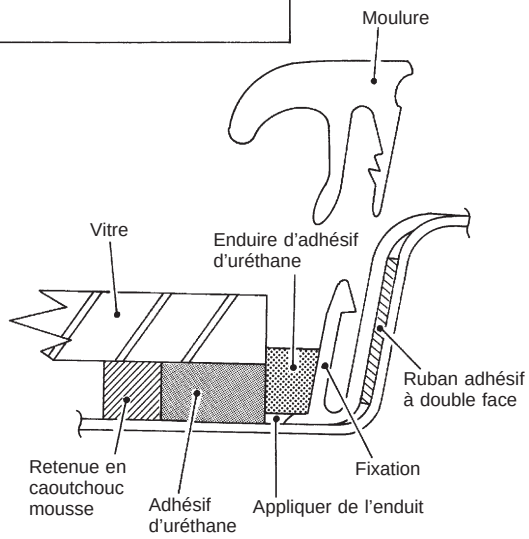

4. Monter la moulure en alignant la marque faite au centre avec le centre du véhicule.
   Veiller à bien serrer le tout de manière à ce qu'il n'y ait pas d'espace à hauteur des coins.

SBT444-A

⑤ Bourrelet de toit ouvrant et protecteur de panneau

SEC. 736

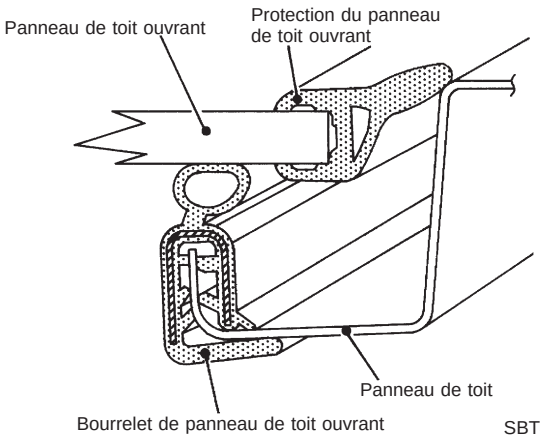

Simpo PDF Merge and Split Unregistered Version - http://www.simpopdf.com

⑥ Bourrelet de gouttière

SEC. 767

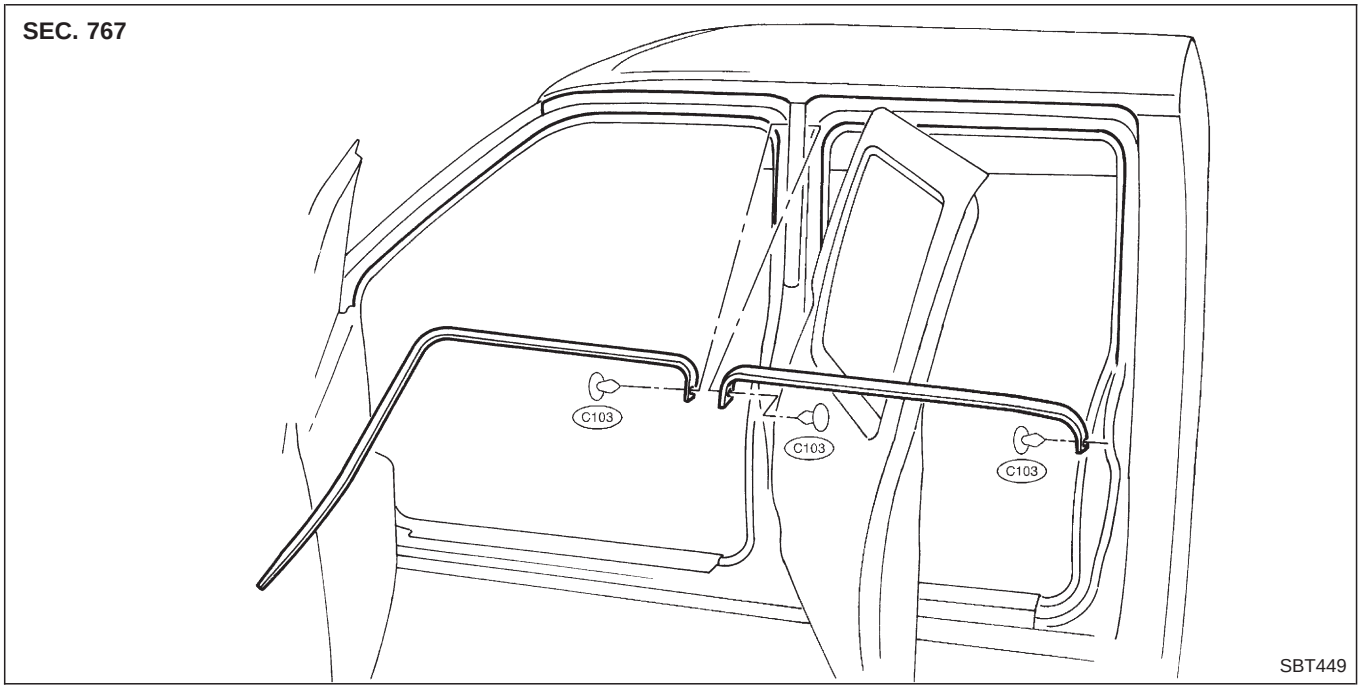

SBT449

⑦ Pli de carrosserie

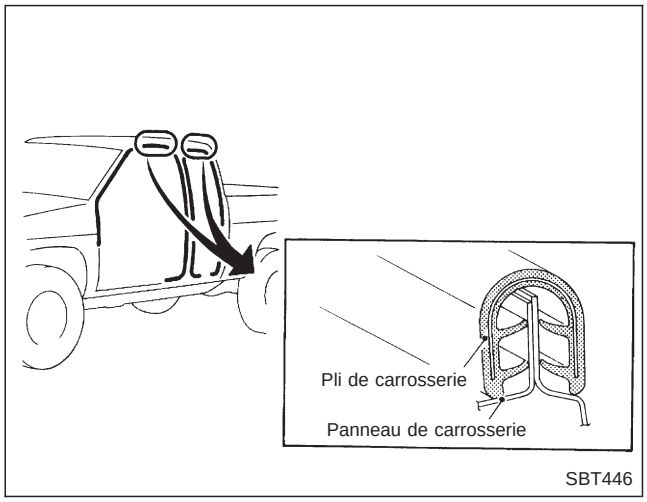

SBT446

⑧ Bourrelet de porte

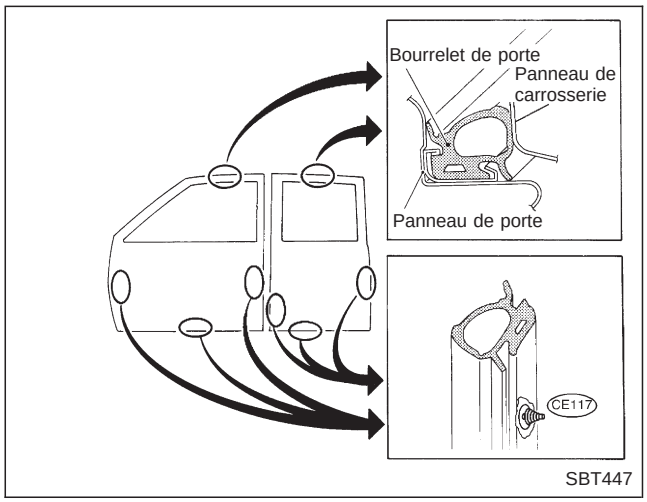

SBT447

⑨ Moulure extérieure de porte

Porte avant
SEC. 800

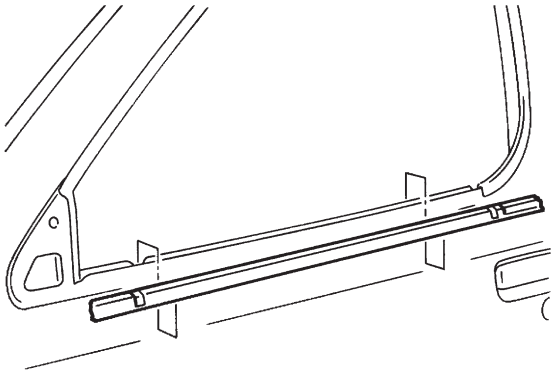

Porte arrière
SEC. 820

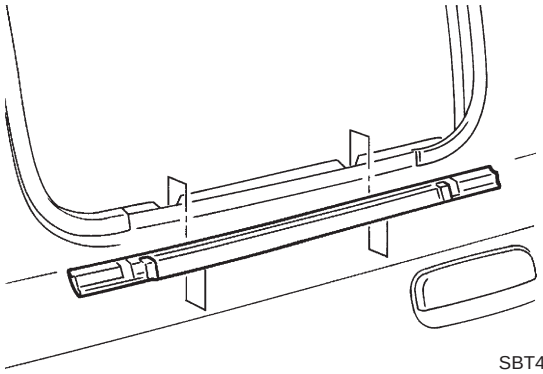

SBT448

Simpo PDF Merge and Split Unregistered Version - http://www.simpopdf.com

⑩ Lunette arrière

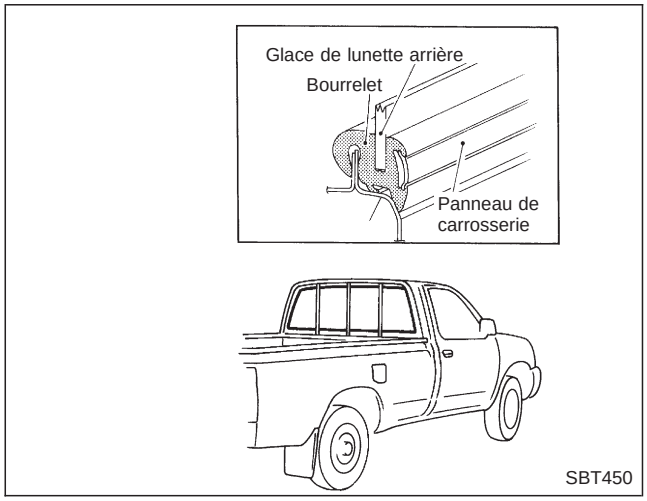

⑪ Conduit d'aération

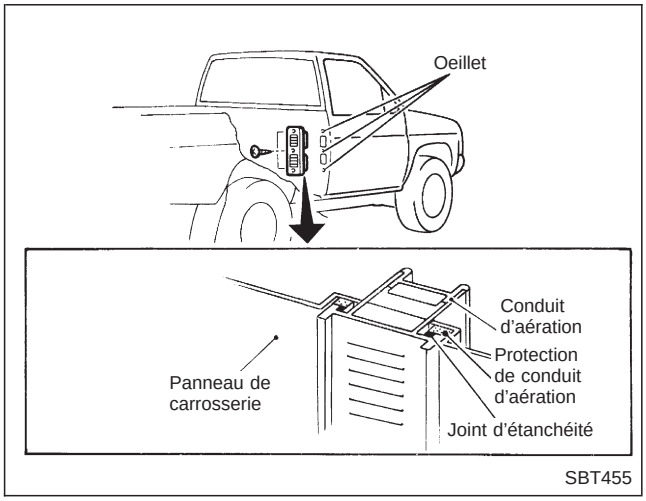

⑫ Garde-boue

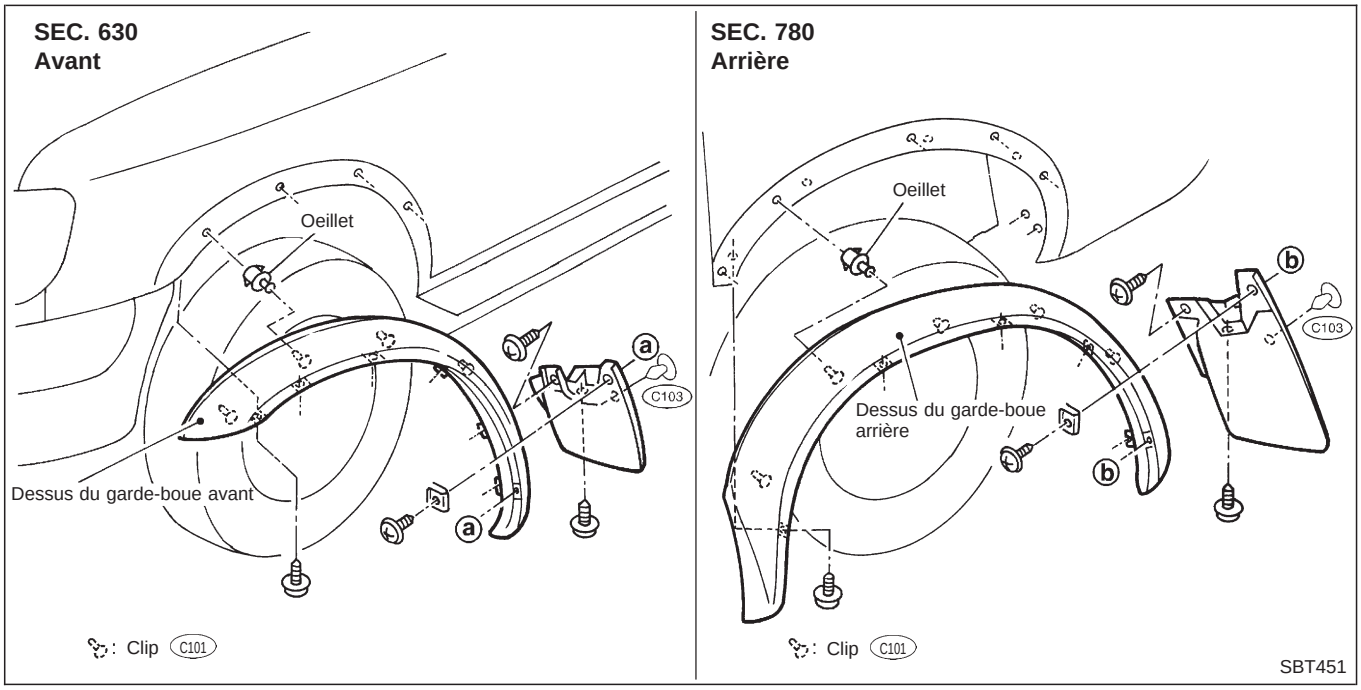

⑬ Feu combiné arrière

Monté avec des boulons.

Simpo PDF Merge and Split Unregistered Version - http://www.simpopdf.com

⑭ Butoir de pare-chocs

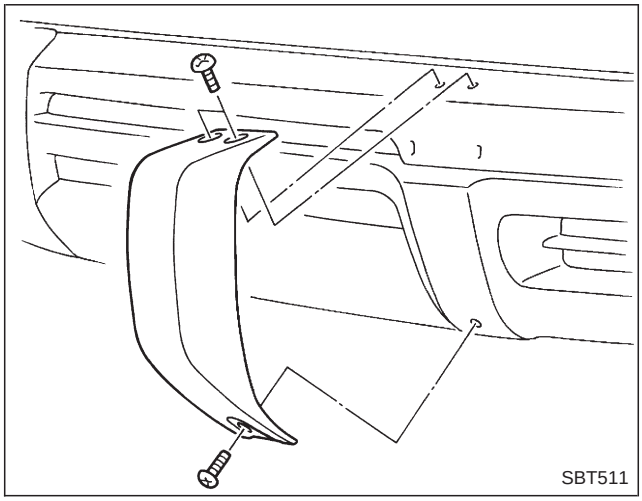

⑮ Bourrelet de vitre latérale

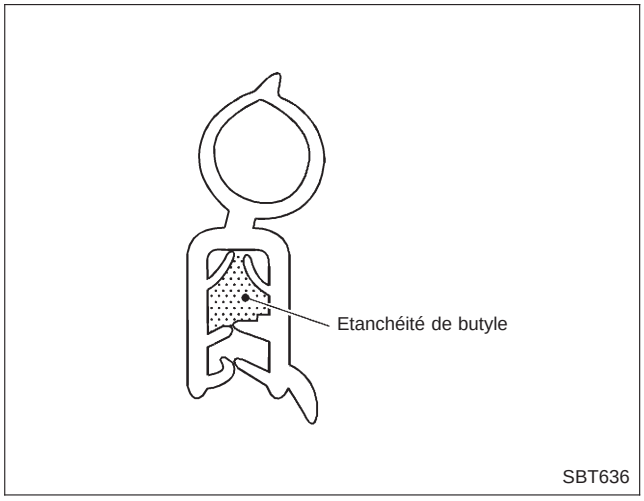

⑯ Marchepied latéral

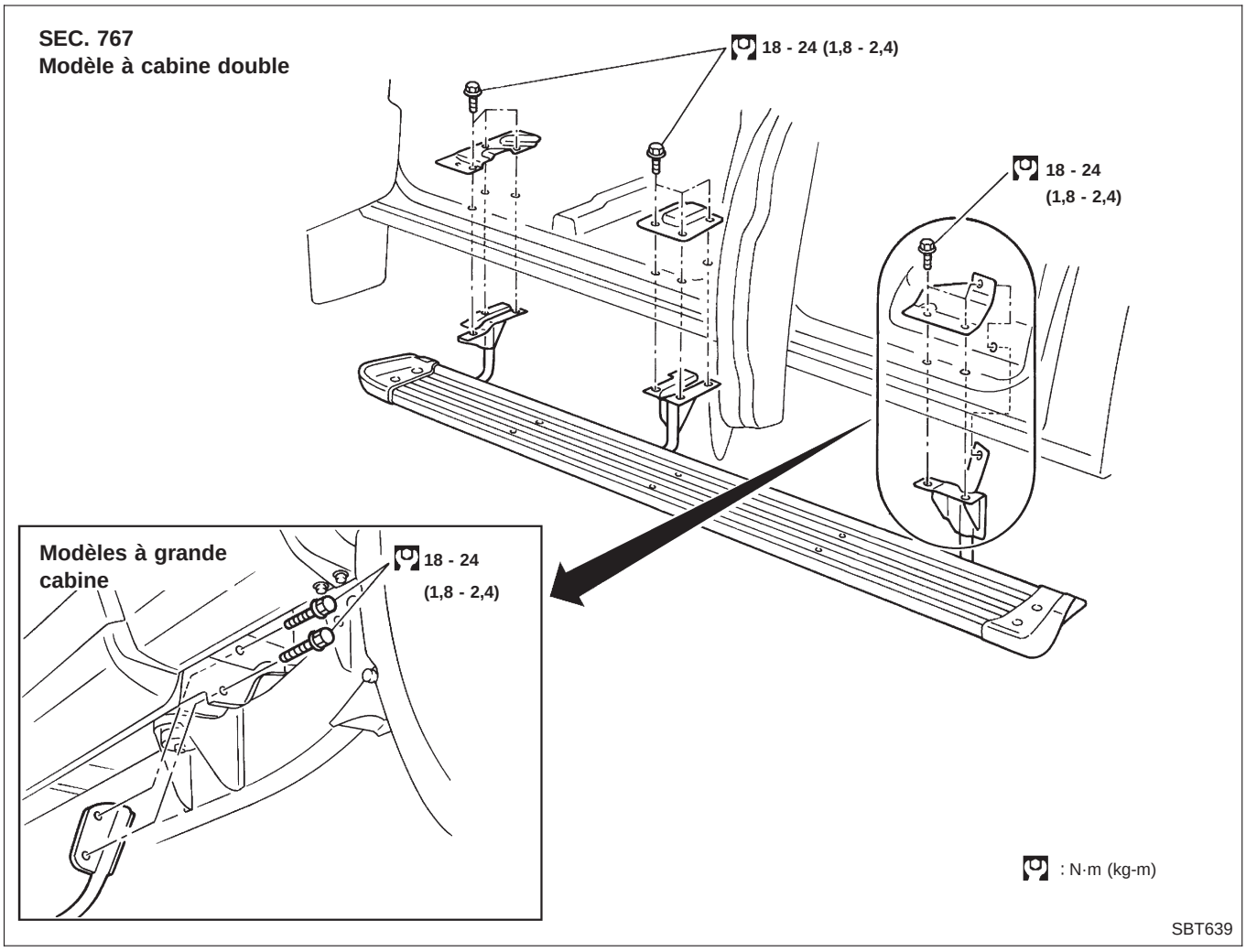

Simpo PDF Merge and Split Unregistered Version - http://www.simpopdf.com

⑰ Barre de sécurité allurée

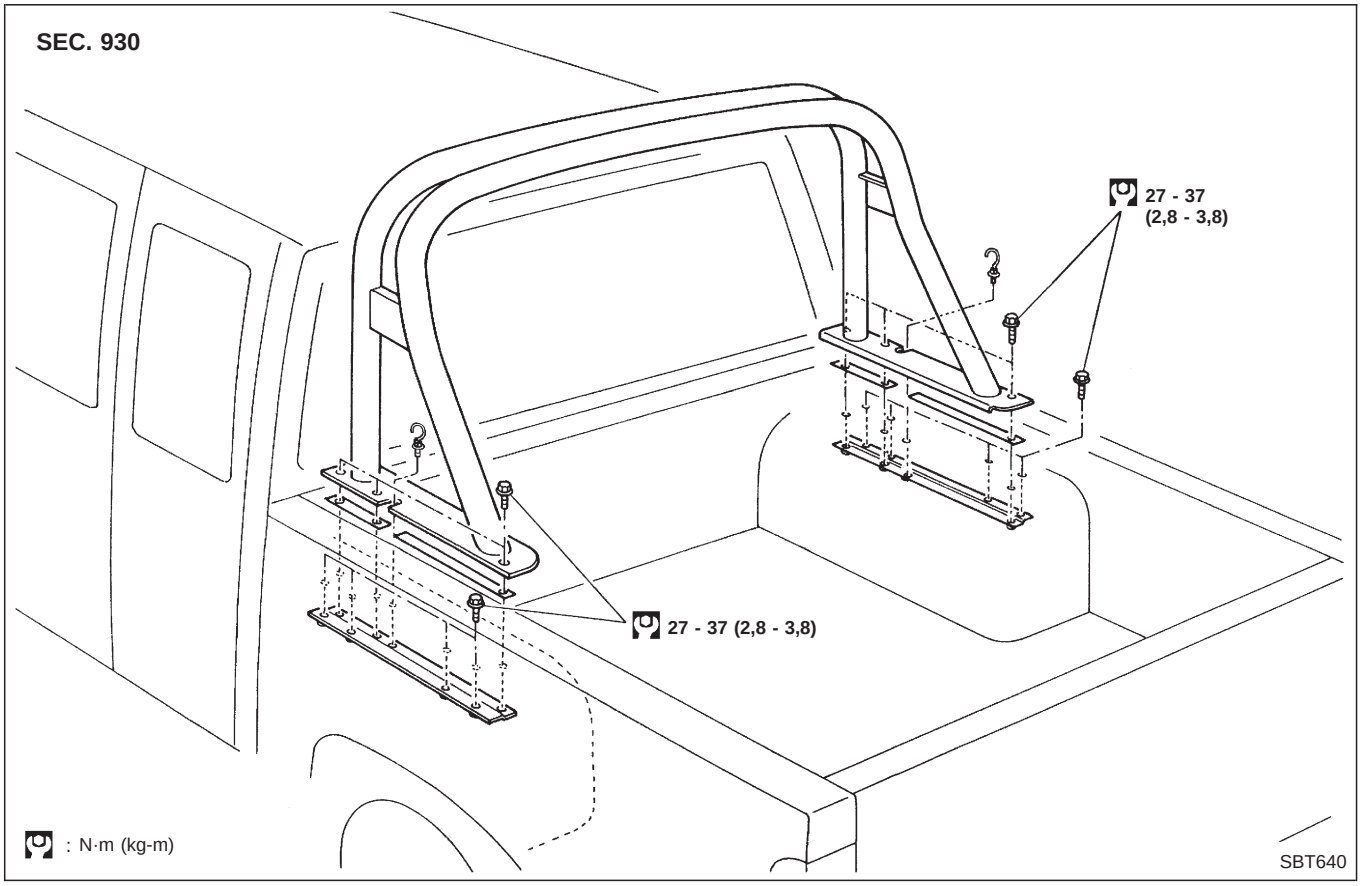

Simpo PDF Merge and Split Unregistered Version - http://www.simpopdf.com

- Manipuler avec soin la garniture de siège lors de sa dépose/repose afin de ne pas la salir et de ne pas l'endommager.

Siège avant

SEC. 868•870

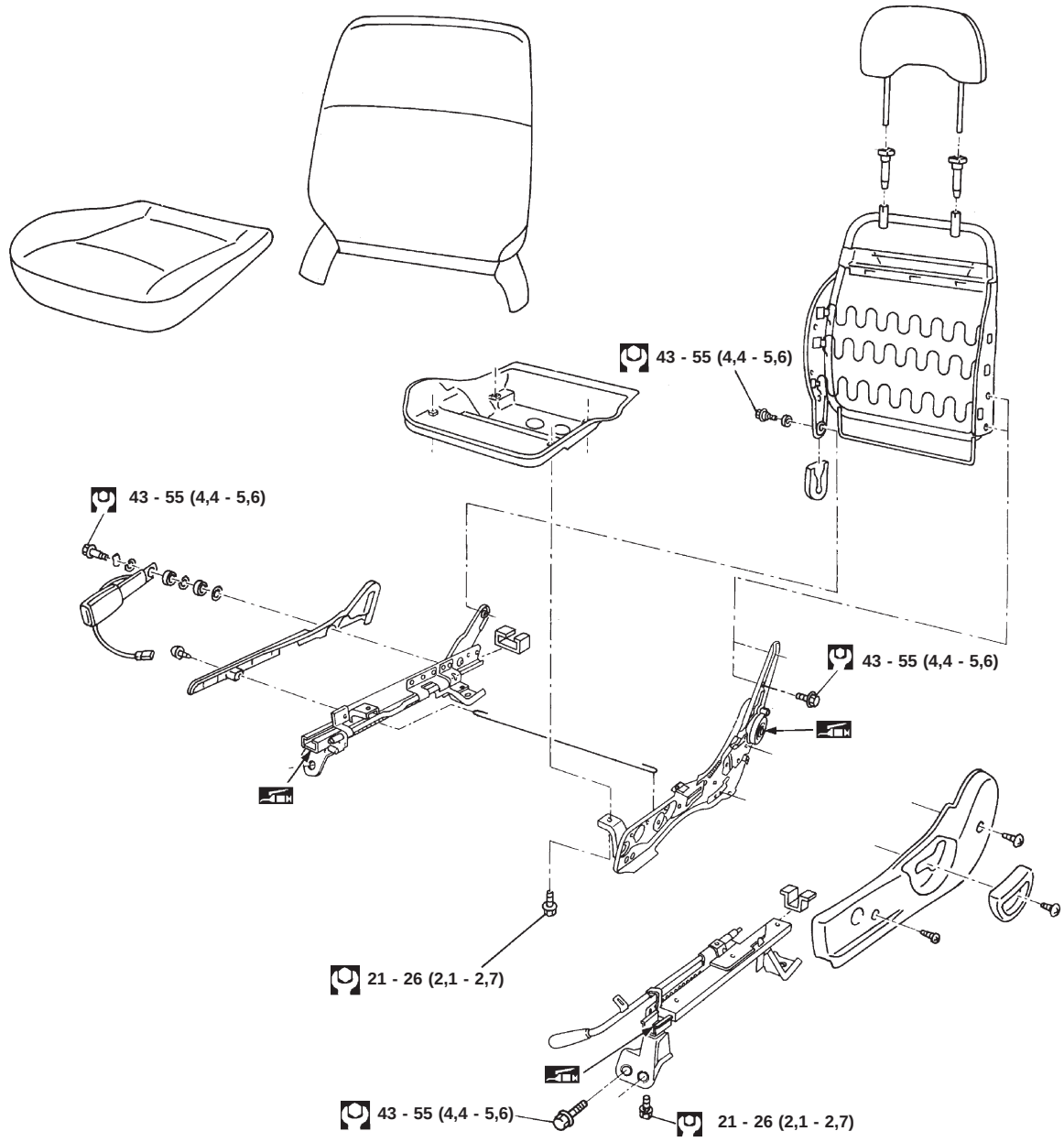

: N·m (kg-m)

SBT452

Simpo PDF Merge and Split Unregistered Version - http://www.simpopdf.com

Siège avant (Suite)

SEC. 870

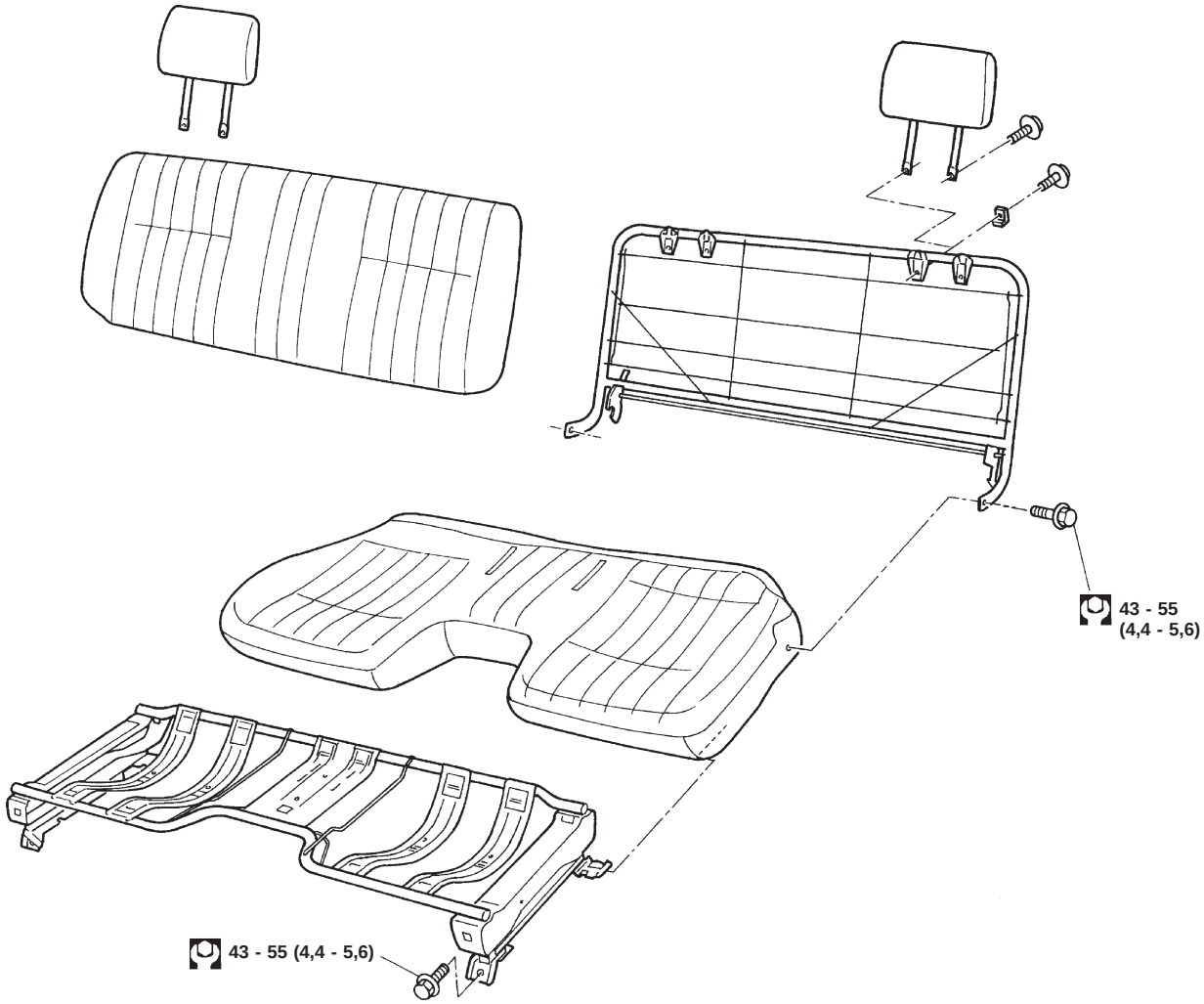

SBT453

Simpo PDF Merge and Split Unregistered Version - http://www.simpopdf.com

Siège chauffant

- Lors de la manipulation du siège, veiller à ne pas érafler l'unité de chauffage.
- Séparer la garniture du rembourrage du siège avant de remplacer l'unité de chauffage.
- Ne pas nettoyer les garnitures à l'aide de solvants organiques de type diluant, benzène, alcool, essence, etc.

Dépose et repose de l'unité de chauffage de dossier du siège

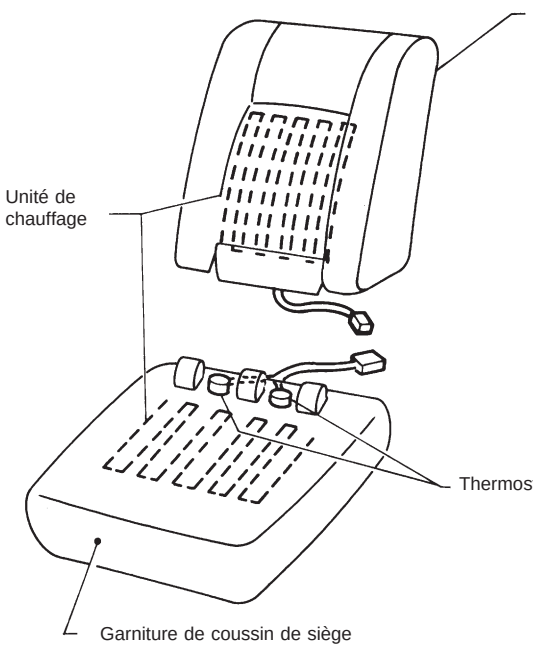

Température de la garniture °C	Augmente jusqu'à 35 - 45	Diminue jusqu'à 15 - 25
Fonctionnement du thermostat	ARRET	MARCHE

SBF424H

★ **Pour le schéma de câblage, se reporter au chapitre ''SIEGE CHAUFFANT'' à la section EL.**

Simpo PDF Merge and Split Unregistered Version - http://www.simpopdf.com

Siège arrière

SEC. 880

Blocage du dossier de siège

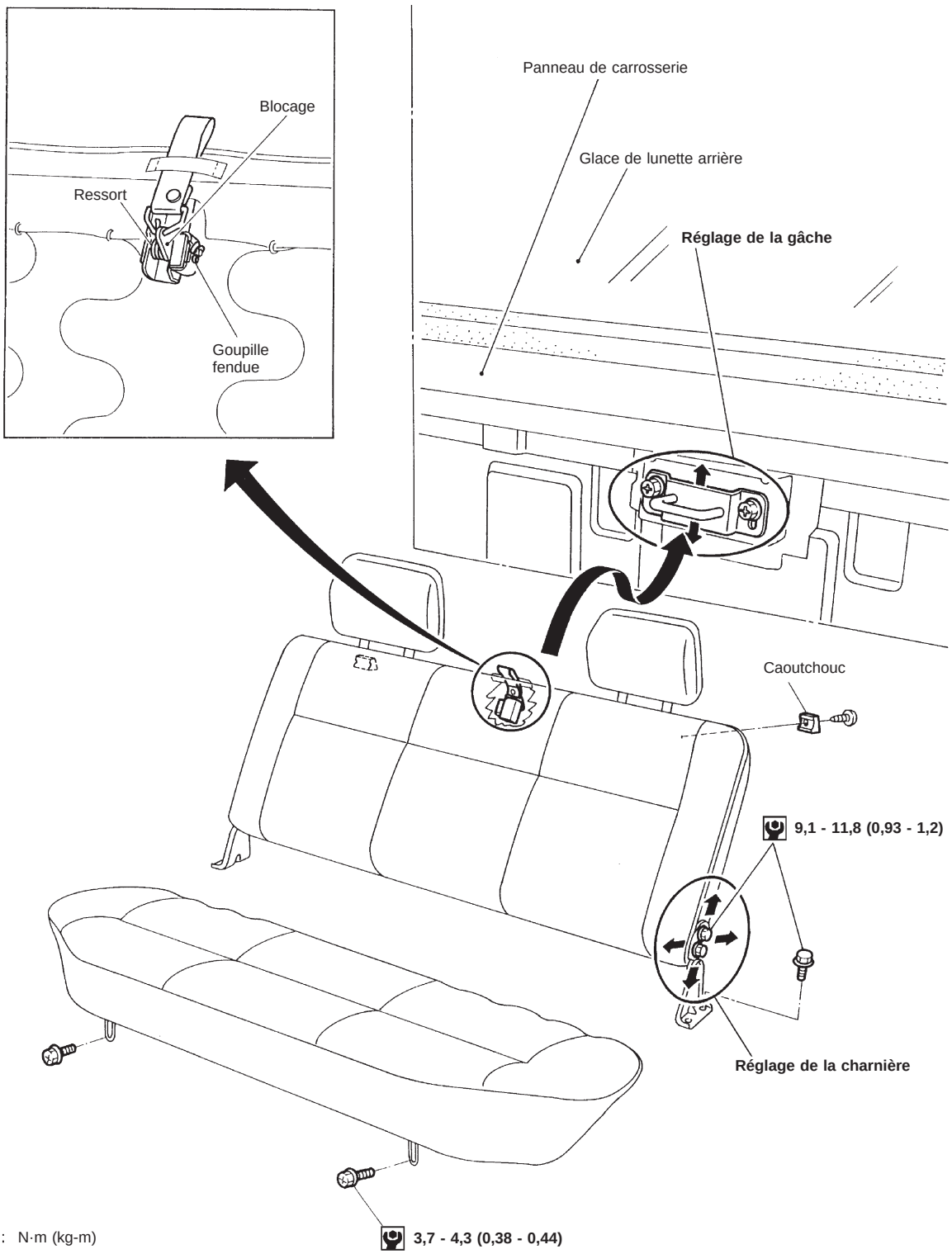

SBT454

Simpo PDF Merge and Split Unregistered Version - http://www.simpopdf.com

Strapontin

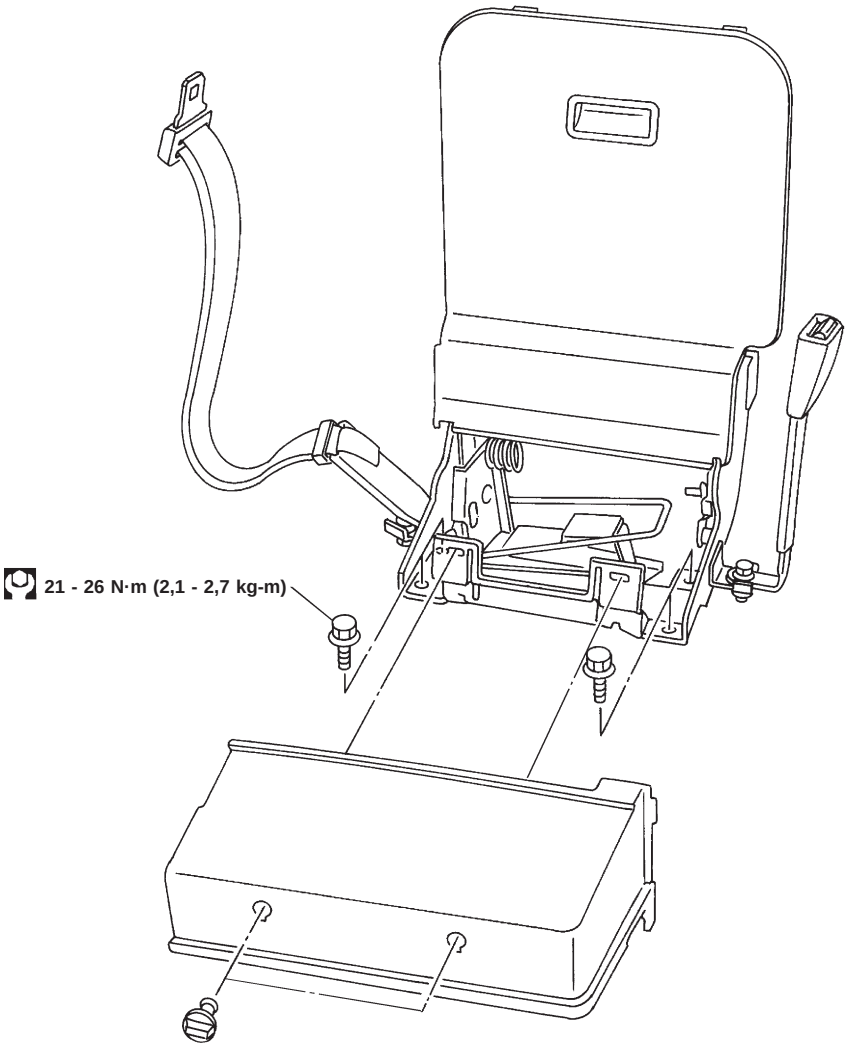

SBT637

Simpo PDF Merge and Split Unregistered Version - http://www.simpopdf.com

SEC. 736

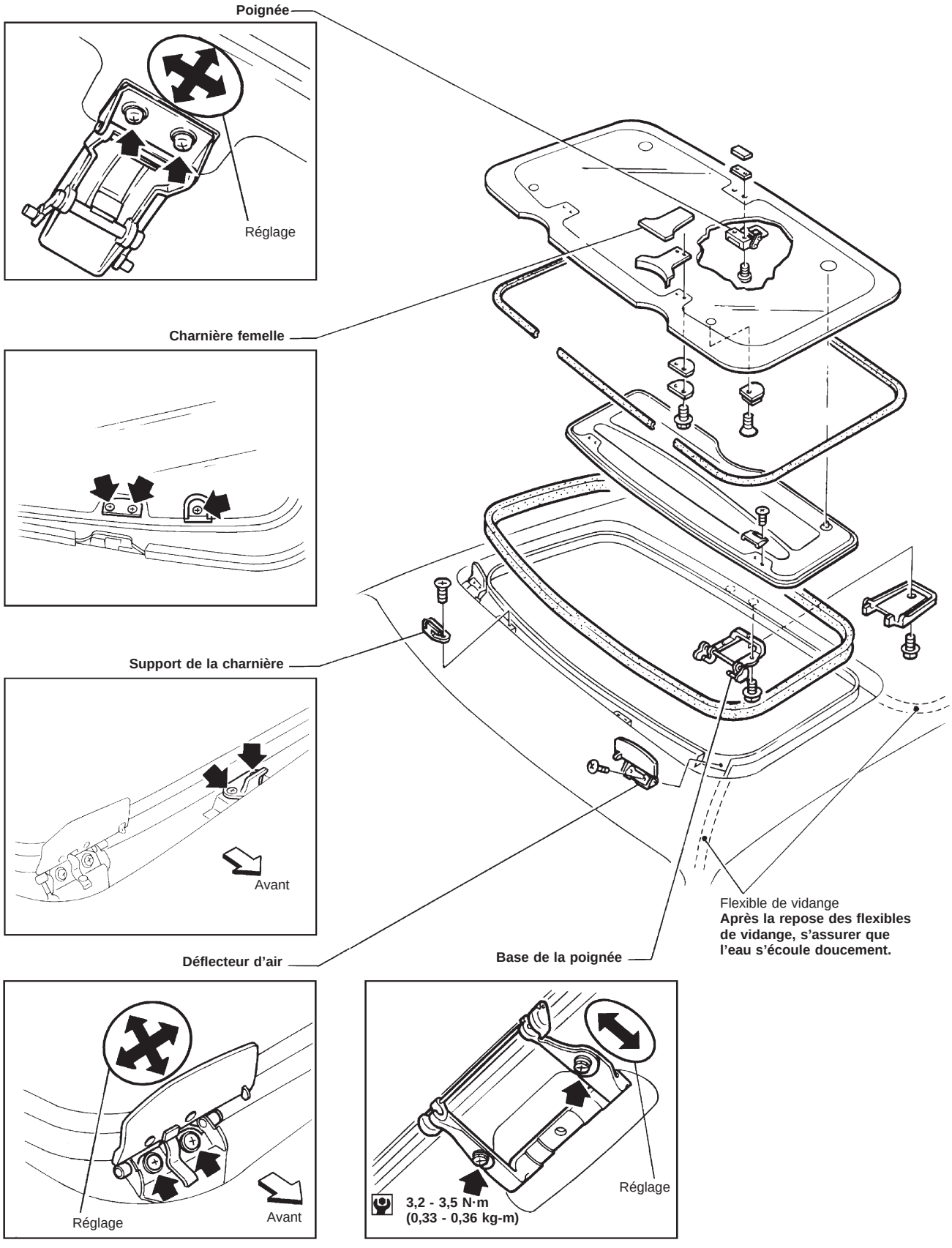

SBT456

Simpo PDF Merge and Split Unregistered Version - http://www.simpopdf.com

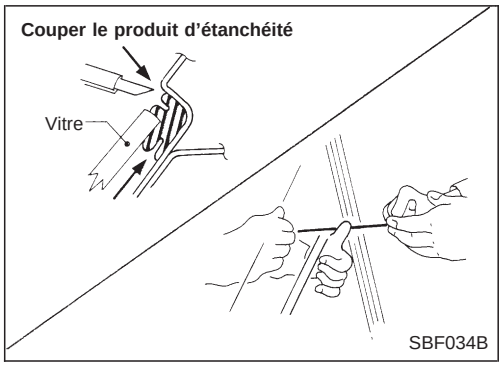

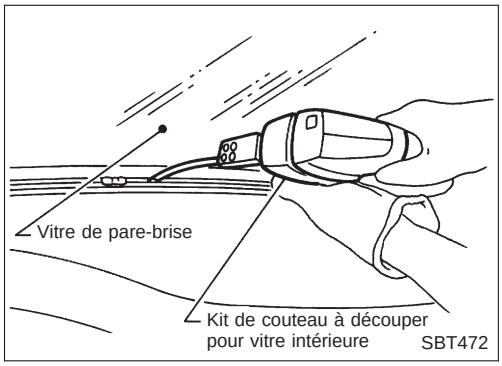

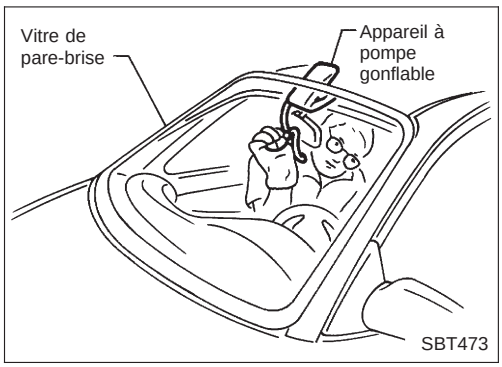

DEPOSE

Après avoir enlevé les moulures, enlever la vitre à l'aide d'un câble métallique ou d'un outil à découper et d'un appareil à pompe gonflable.

AVERTISSEMENT :

Lors de la découpe des vitres du véhicule, toujours porter des lunettes de sécurité et des gants épais pour éviter de recevoir des éclats de verre dans les yeux et de se couper les mains.

ATTENTION :

- **Veiller à ne pas rayer les vitres lors de la dépose.**
- **Ne pas laisser la vitre à plat sur le sol ou debout sur la tranche. De petits éclats pourraient devenir des fêlures.**

REPOSE

- **Utiliser un kit d'adhésif en uréthane d'origine Nissan ou un équivalent, et suivre les instructions fournies avec le kit.**
- **Pendant que l'adhésif en uréthane sèche, ouvrir une des fenêtres. De cette façon, la vitre ne sera pas par l'effet d'une pression dans le compartiment passager lorsque l'on ferme une porte.**
- **La moulure doit être montée correctement de manière à ce qu'elle soit parfaitement en position, sans laisser aucun espace.**
- **Avertir le conducteur que le véhicule doit rester immobile jusqu'à ce que l'adhésif en uréthane ait complètement durci (24 heures de préférence). Le temps de séchage varie en fonction de la température et du degré d'humidité.**

AVERTISSEMENT :

- **Les enduits primaires et les adhésifs étant inflammables, les maintenir à l'écart des sources de chaleur et des flammes nues.**
- **Les matériaux contenus dans le kit sont nocifs si on les avale, et peuvent irriter la peau et les yeux. Eviter donc tout contact avec la peau et les yeux.**
- **Les utiliser dans un endroit ouvert et ventilé. Eviter d'en respirer les vapeurs car elles peuvent être dangereuses en cas d'inhalation. Si cela se produit, sortir immédiatement à l'air frais.**
- **Il se peut que les performances du pare-brise soient affectées en cas d'accident de la route avant séchage complet de l'adhésif en uréthane.**

ATTENTION :

- **Ne pas utiliser un adhésif dont la date d'utilisation serait dépassée. Le produit doit être utilisé dans les six mois suivant sa date de fabrication. Se conformer strictement à la date d'expiration ou la date de fabrication indiquée sur la boîte.**
- **Conserver les enduits primaires dans un endroit sec et frais. La solution idéale consiste à les conserver dans un réfrigérateur.**
- **Ne pas laisser d'enduit primaire ou de cartouche d'adhésif avec le bouchon ouvert ou déposer sans surveillance.**
- **Le véhicule ne doit pas être conduit pendant 24 heures au moins ou jusqu'à ce que l'adhésif en uréthane ait complètement durci. Le temps de séchage varie en fonc-**

Simpo PDF Merge and Split Unregistered Version - http://www.simpopdf.com

tion de la température et du degré d'humidité. Il augmentera dans des conditions de température haute ou d'humidité basse.

Pare-brise

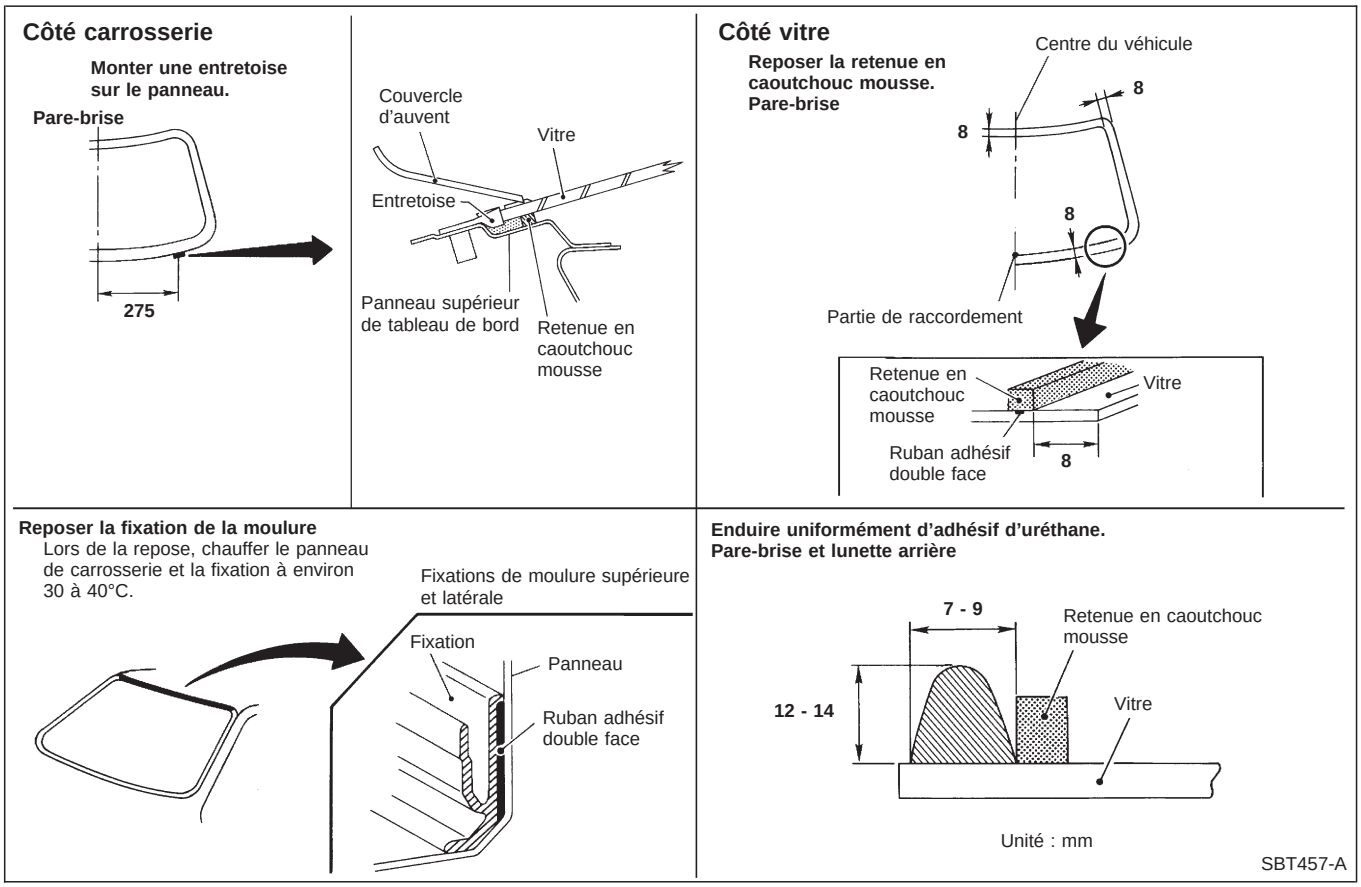

REPARATION DES FUITES D'EAU DU PARE-BRISE

On peut réparer les fuites sans déposer et reposer la vitre.

S'il y a une fuite d'eau entre l'adhésif d'uréthane et la carrosserie ou la vitre, déterminer l'importance de la fuite. Pour ce faire, projeter de l'eau sur le pare-brise tout en repoussant la vitre vers l'extérieur.

Pour arrêter la fuite, enduire l'endroit de la fuite d'enduit primaire (si nécessaire), puis d'adhésif d'uréthane.

Simpo PDF Merge and Split Unregistered Version - http://www.simpopdf.com

Vitre latérale

DEPOSE – Vitre latérale

① Déposer les vis.
② Déposer la garniture de montant arrière. Pour plus de détails, se reporter au chapitre ‘‘Garniture latérale et garniture de plancher’’ (modèle à grande cabine) à la section BT-15.
③ Déposer les écrous fixant la vitre latérale , puis déposer l’ensemble de vitre latérale.

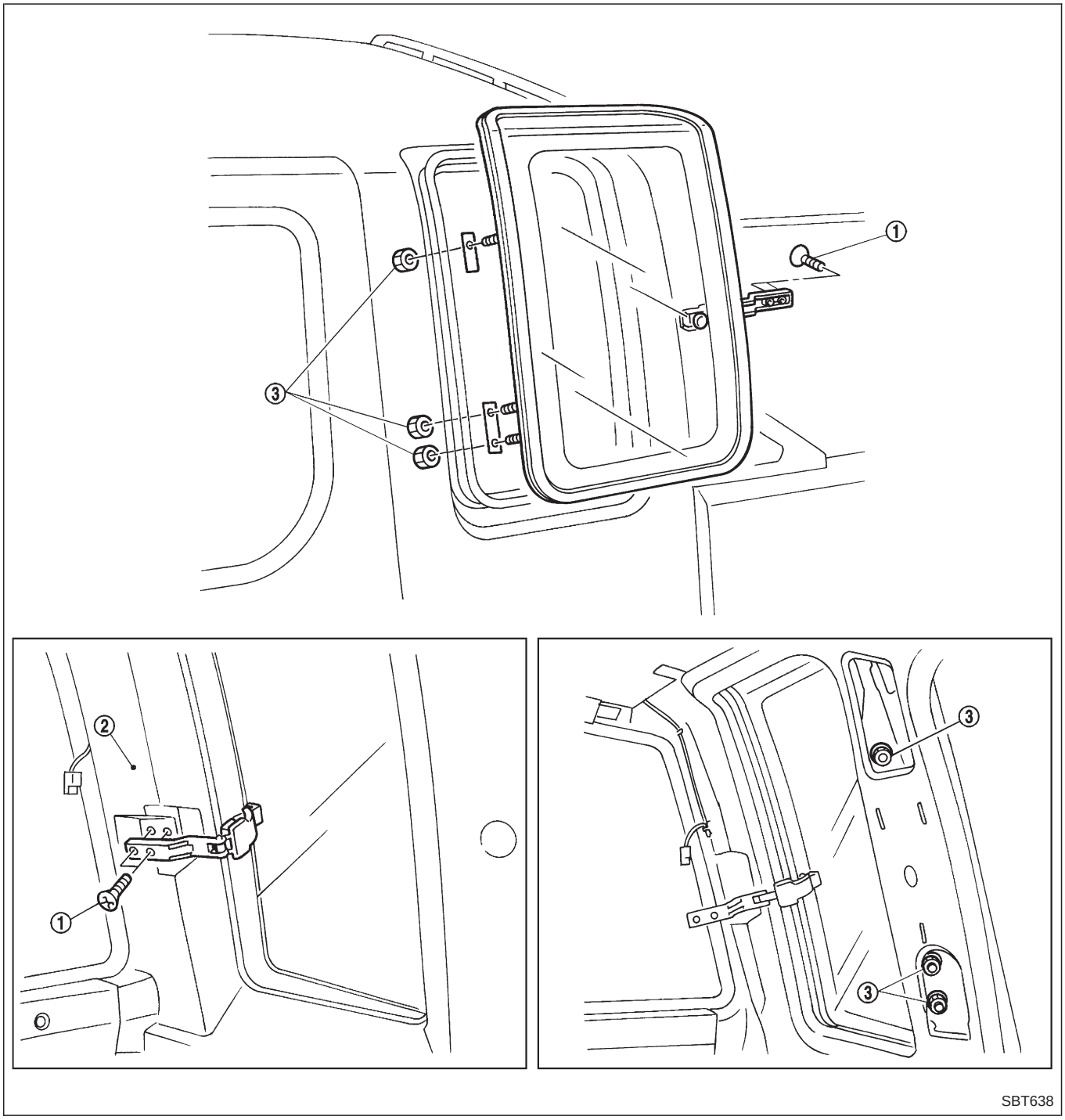

SBT638

Simpo PDF Merge and Split Unregistered Version - http://www.simpopdf.com

Rétroviseur de porte

ATTENTION :
Prendre soin de ne pas rayer le boîtier du rétroviseur extérieur.

★ **Pour le schéma de câblage, se reporter au chapitre ''RETROVISEUR EXTERIEUR ELECTRIQUE DE PORTE'' à la section EL.**

DEPOSE – Rétroviseur de porte

① Déposer la garniture de porte. Se reporter à ''Garniture de porte'' pour plus de détails, BT-17.
② Déposer le revêtement intérieur du coin avant de la porte.
③ Débrancher le connecteur de faisceau du rétroviseur de porte.
④ Déposer les boulons qui fixent le rétroviseur de porte, puis déposer l'ensemble de rétroviseur de porte.

SEC. 963

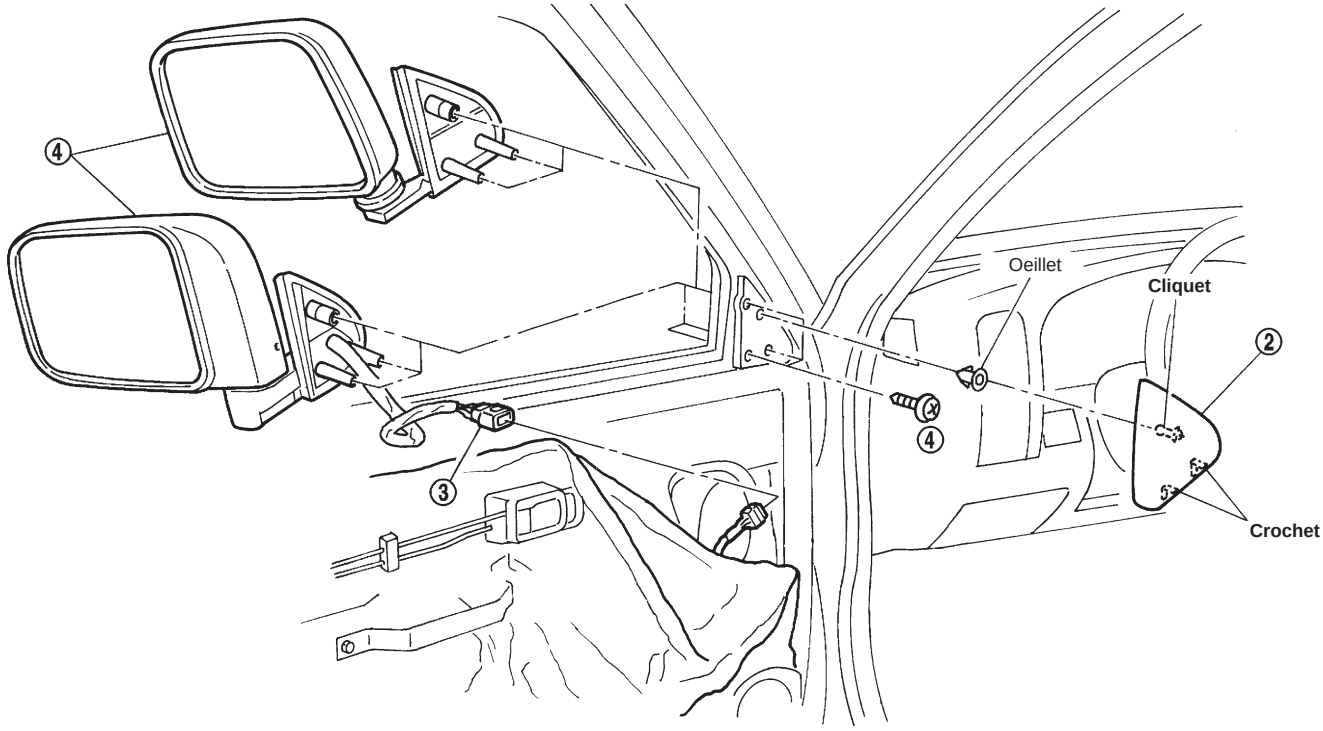

SBT458

Simpo PDF Merge and Split Unregistered Version - http://www.simpopdf.com

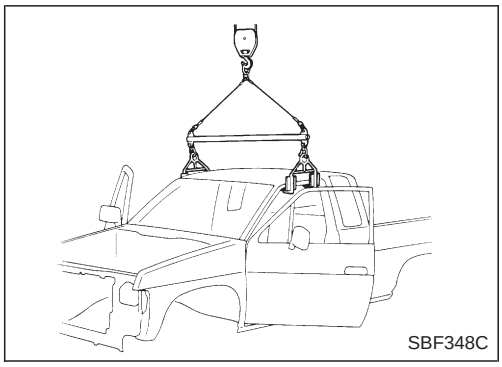
SBF348C

Dépose

CARROSSERIE DE LA CABINE

- Déposer au moins les pièces suivantes du compartiment moteur.

(1) Faisceau principal et autres faisceaux de câblage

- Débrancher les conduites de frein et d'embrayage dans le compartiment moteur.
- Déposer au moins les pièces suivantes du dessous de carrosserie.

(1) Leviers de commande des boîtes de vitesses et de transfert
(2) Câbles et levier de commande de frein de stationnement
(3) Faisceau principal et autres faisceaux de câblage

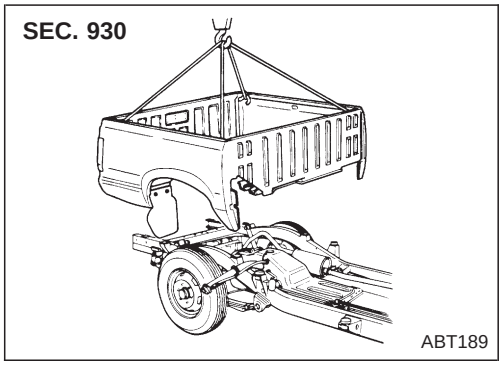

ABT189

CARROSSERIE ARRIERE

- Déposer au moins les pièces suivantes.

(1) Feu combiné arrière et faisceau de l'éclairage de la plaque minéralogique
(2) Vis de fixation du tuyau de remplissage de carburant

Simpo PDF Merge and Split Unregistered Version - http://www.simpopdf.com

Fixation de la carrosserie

Lors de la dépose, s'assurer de remplacer les boulons et écrous (les boulons enduits de produit d'étanchéité ou les écrous autobloquants doivent être utilisés pour tout remontage).

Modèle à cabine simple

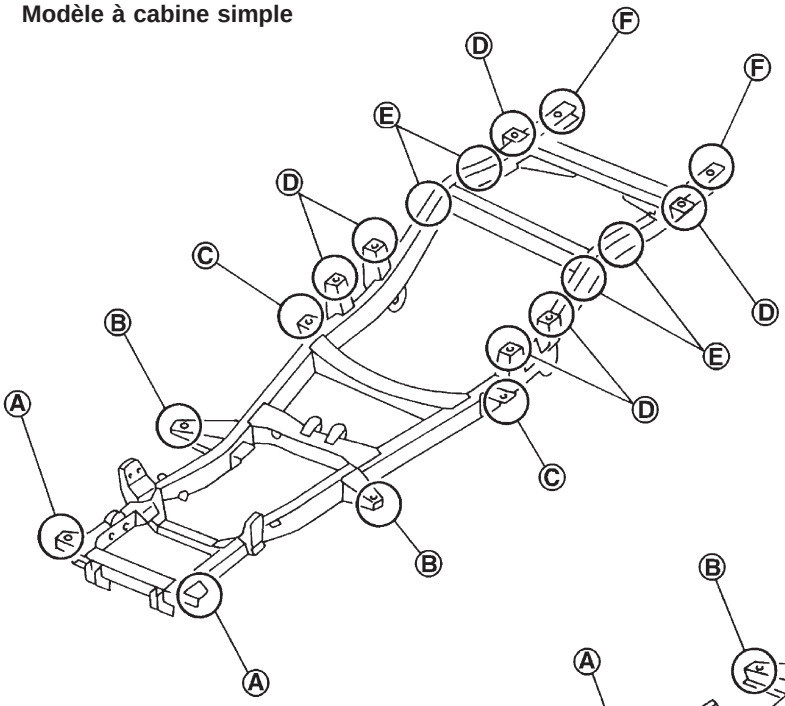

Modèle à cabine double

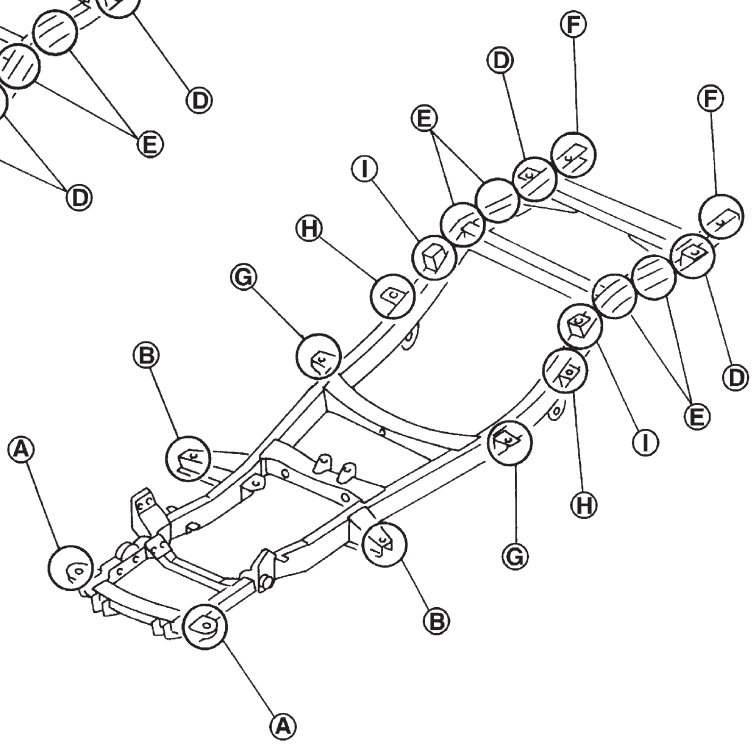

Modèle à grande cabine

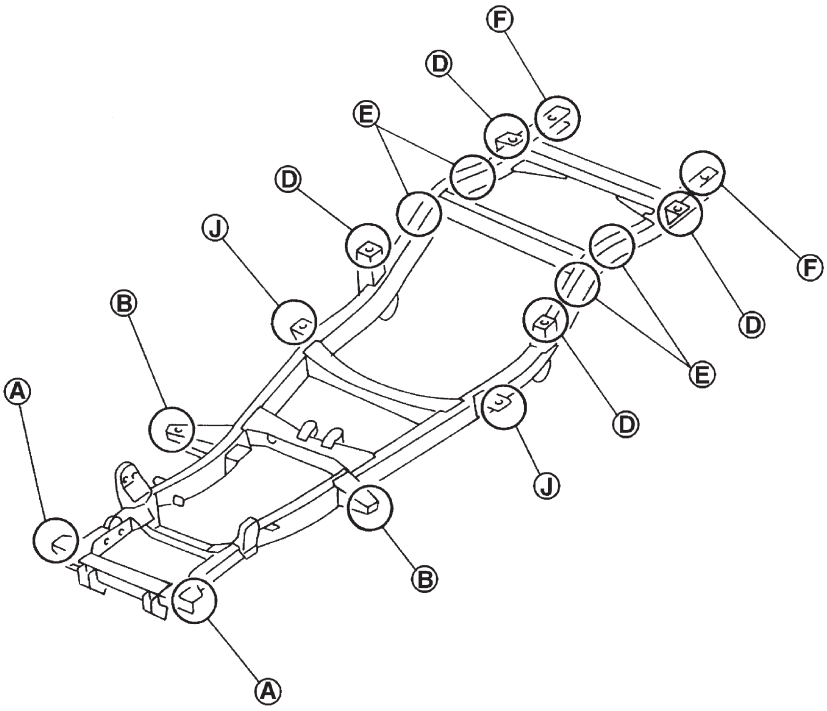

SBT633

Simpo PDF Merge and Split Unregistered Version - http://www.simpopdf.com

Fixation de la carrosserie (Suite)

A

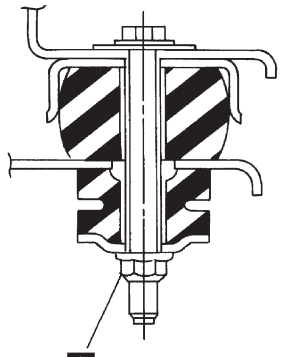

26 - 36 (2,7 - 3,7)

B

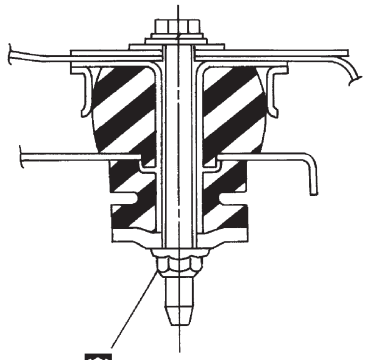

26 - 36 (2,7 - 3,7)

C

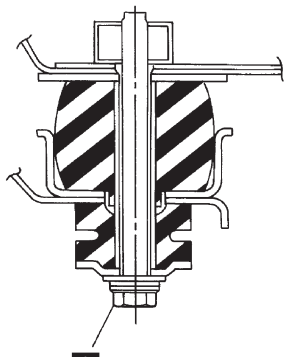

26 - 36 (2,7 - 3,7)

D

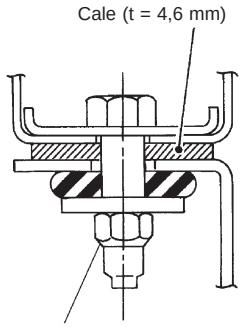

20 - 24 (2,0 - 2,4)

E

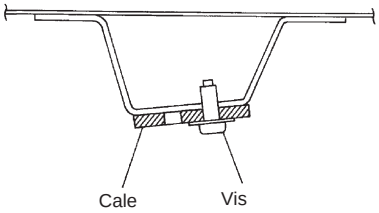

F

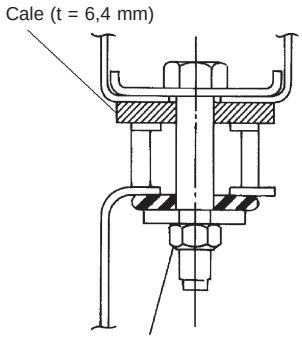

20 - 24 (2,0 - 2,4)

G

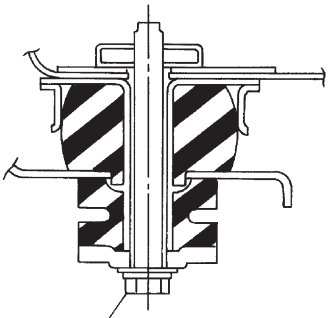

26 - 36 (2,7 - 3,7)

H

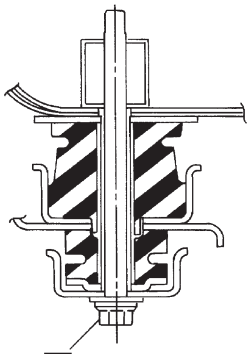

26 - 36 (2,7 - 3,7)

I

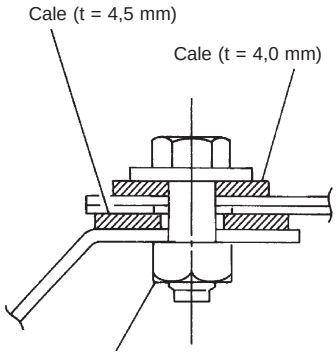

33 - 37 (3,4 - 3,8)

J

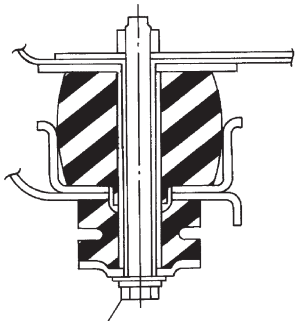

26 - 36 (2,7 - 3,7)

: N·m (kg-m)

SBT634

Simpo PDF Merge and Split Unregistered Version - http://www.simpopdf.com

- Toutes les dimensions indiquées sur les figures sont des dimensions exactes.
- Si l'on utilise une jauge d'alignement, régler les deux aiguilles de compteur sur la même longueur. S'assurer qu'il n'y a pas de jeu.
- Si l'on utilise un mètre souple, s'assurer qu'il n'y a pas d'élongation, de torsion ni de coude.
- On doit prendre les mesures au centre des orifices de montage.
- Toutes les mesures et diamètres des orifices de montage sont en millimètres (mm).
- Un astérisque (*) suivant la valeur indiquée au point de mesure signifie que le point de mesure de l'autre côté a symétriquement la même valeur.
- Les coordonnées des points de mesure sont les distances mesurées à partir des lignes respectives dans les directions ''x'', ''y'' et ''z''.
  Lignes de dimensions : ligne ''x'' — ligne centrale du véhicule
  ligne ''y'' — ligne centrale de l'essieu avant (tout point de mesure à l'avant de la ligne de dimension fait référence à une valeur négative ''—'')
  ligne ''z'' — ligne de donnée (tout point de mesure sous la ligne de dimension fait référence à une valeur négative ''—'').

2W. SB : Empattement court (2 X 2)

2W. LB : Empattement long (2 X 2)

4W. LB : Empattement long (4 X 4)

Simpo PDF Merge and Split Unregistered Version - http://www.simpopdf.com

Compartiment moteur

MESURES

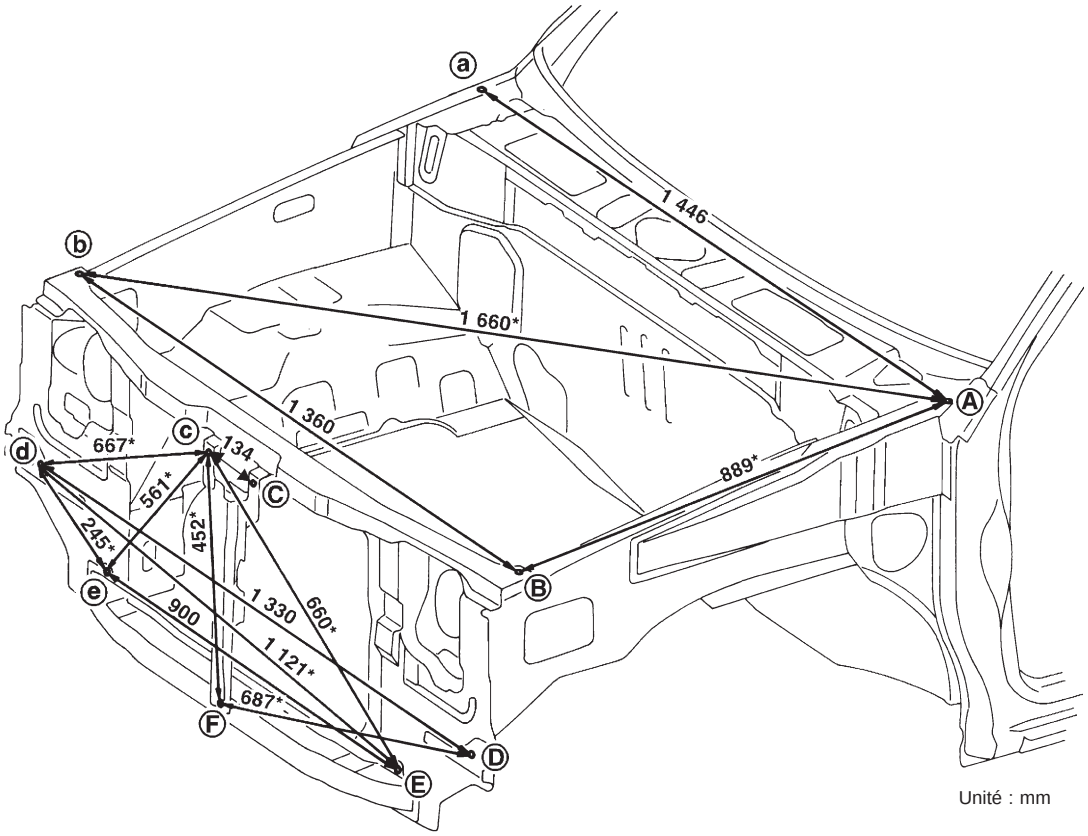

Simpo PDF Merge and Split Unregistered Version - http://www.simpopdf.com

Compartiment moteur (Suite)

POINTS DE MESURE

Aile avant : Ⓐ

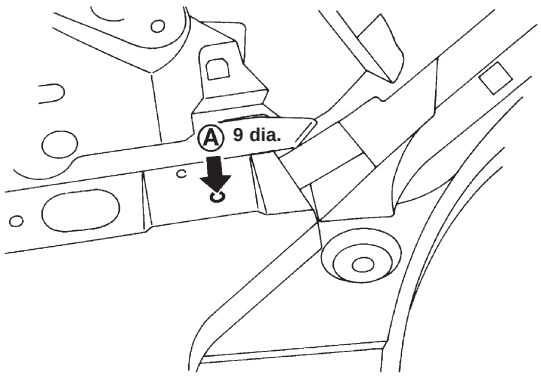

Aile avant : Ⓑ

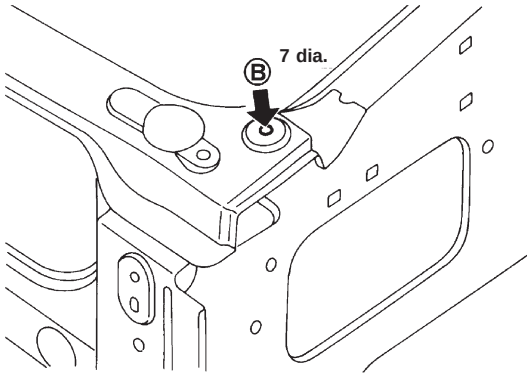

Verrou de capot : Ⓒ Ⓒ

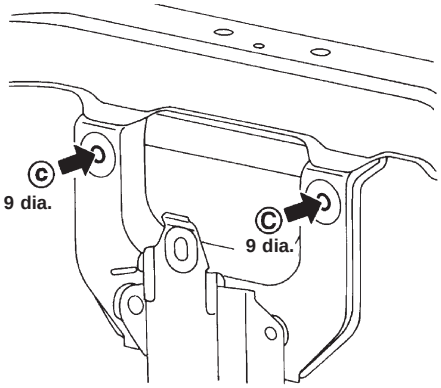

Support latéral de la partie centrale du radiateur : Ⓓ

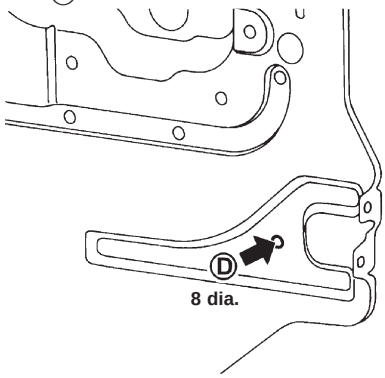

Support inférieur de la partie centrale du radiateur : Ⓔ

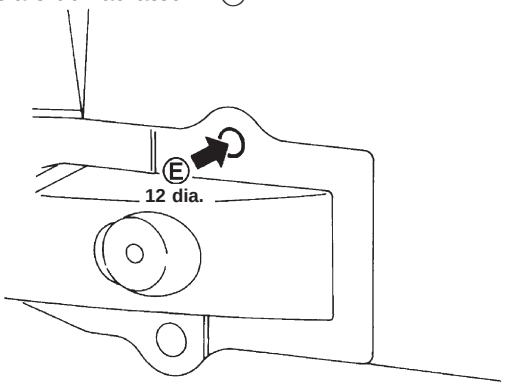

Montant de verrouillage de capot : Ⓕ

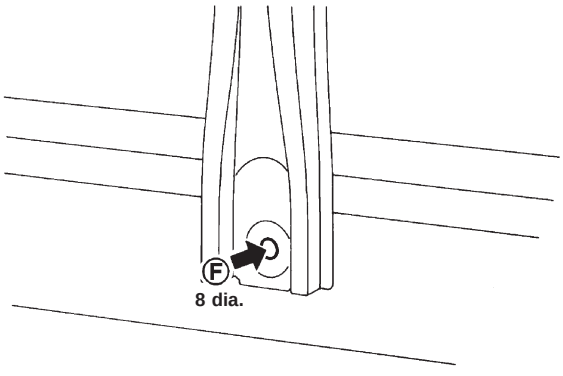

Unité : mm

SBT460

Simpo PDF Merge and Split Unregistered Version - http://www.simpopdf.com

Dessous de la carrosserie

MESURES

Modèles à 2 roues motrices (empattement court)

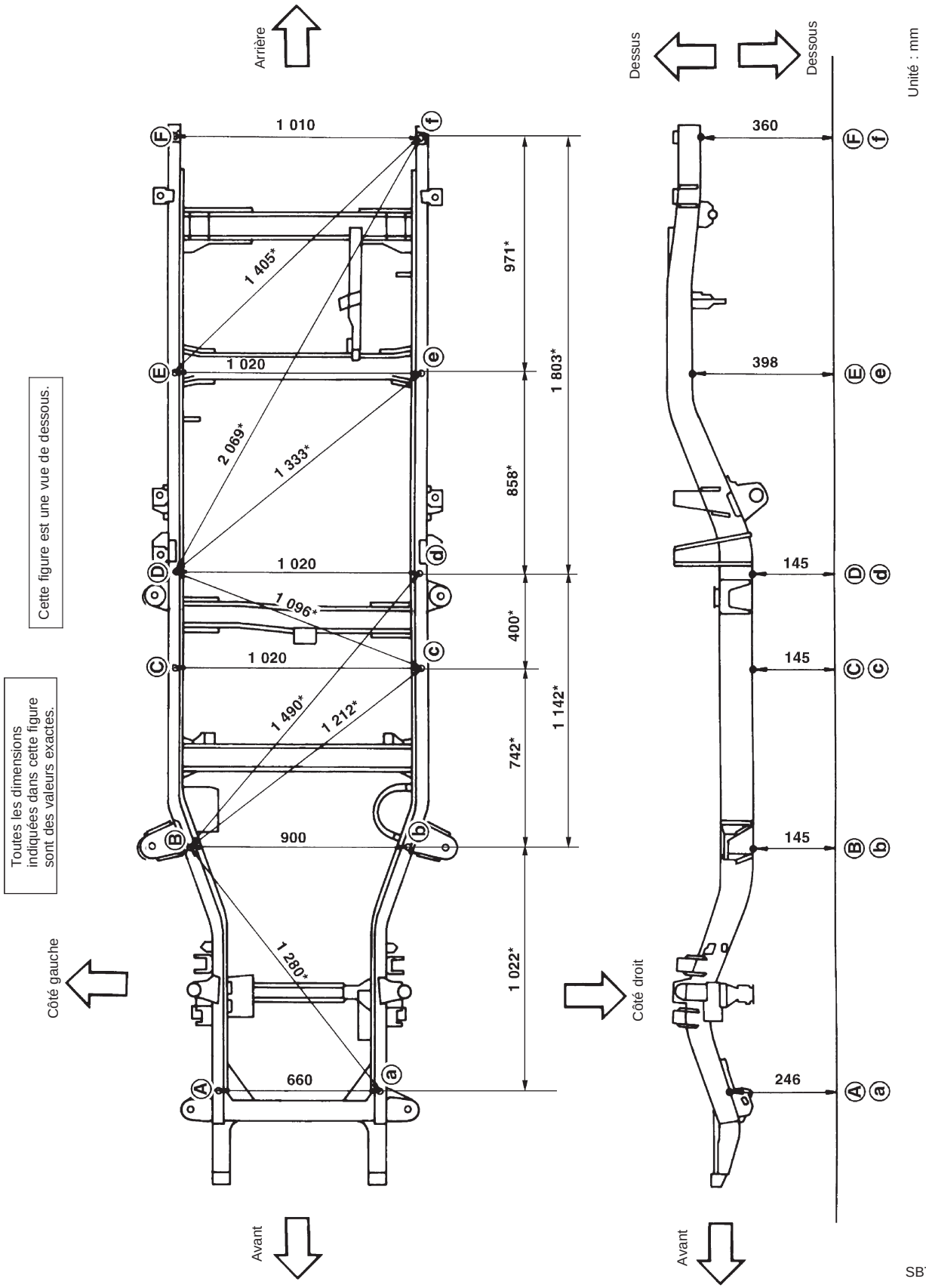

SBT461

Simpo PDF Merge and Split Unregistered Version - http://www.simpopdf.com

Dessous de la carrosserie (Suite)

POINTS DE MESURE

Modèles à 2 roues motrices (empattement court)

Crochet de remorquage : Ⓐ

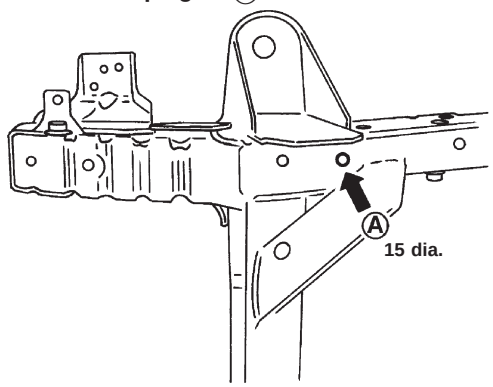

Châssis : Ⓑ

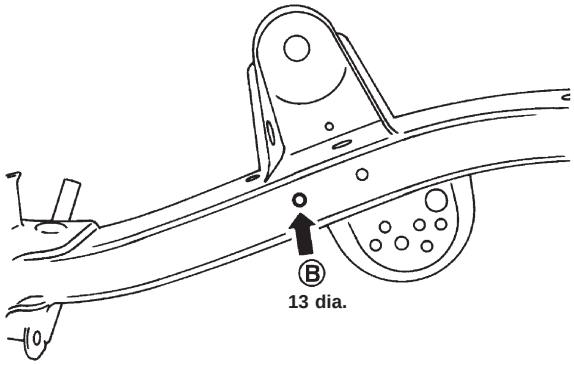

Châssis : Ⓒ Ⓓ

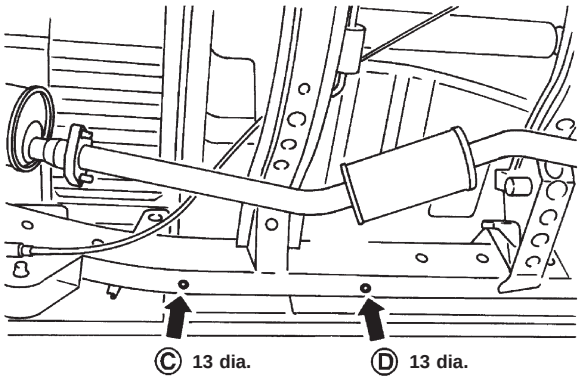

Fixation en caoutchouc de pare-chocs : Ⓔ

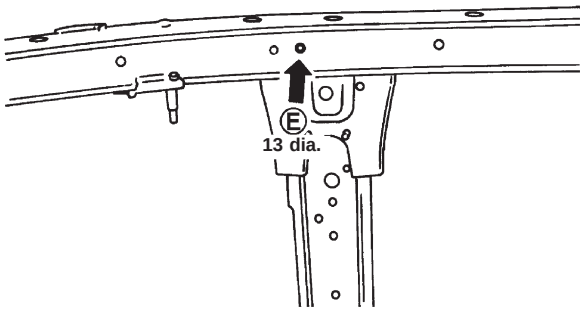

Châssis : Ⓕ

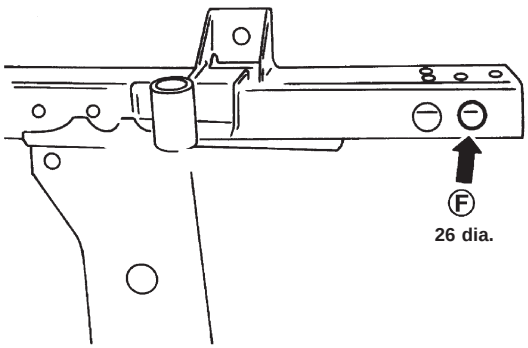

Coordonnées :

Ⓐ , ⓐ	Ⓓ , ⓓ
X : 330	X : 510
Y : - 409,7	Y : 1 740
Z : 246,2	Z : 145,1
Ⓑ , ⓑ	Ⓔ , ⓔ
X : 450	X : 510
Y : 600	Y : 2 560
Z : 145	Z : 398
Ⓒ , ⓒ	Ⓕ , ⓕ
X : 510	X : 505
Y : 1 340	Y : 3 530
Z : 145	Z : 360

Unité : mm

SBT462

Simpo PDF Merge and Split Unregistered Version - http://www.simpopdf.com

Dessous de la carrosserie (Suite)

MESURES

Modèles à 2 et 4 roues motrices (empattement long)

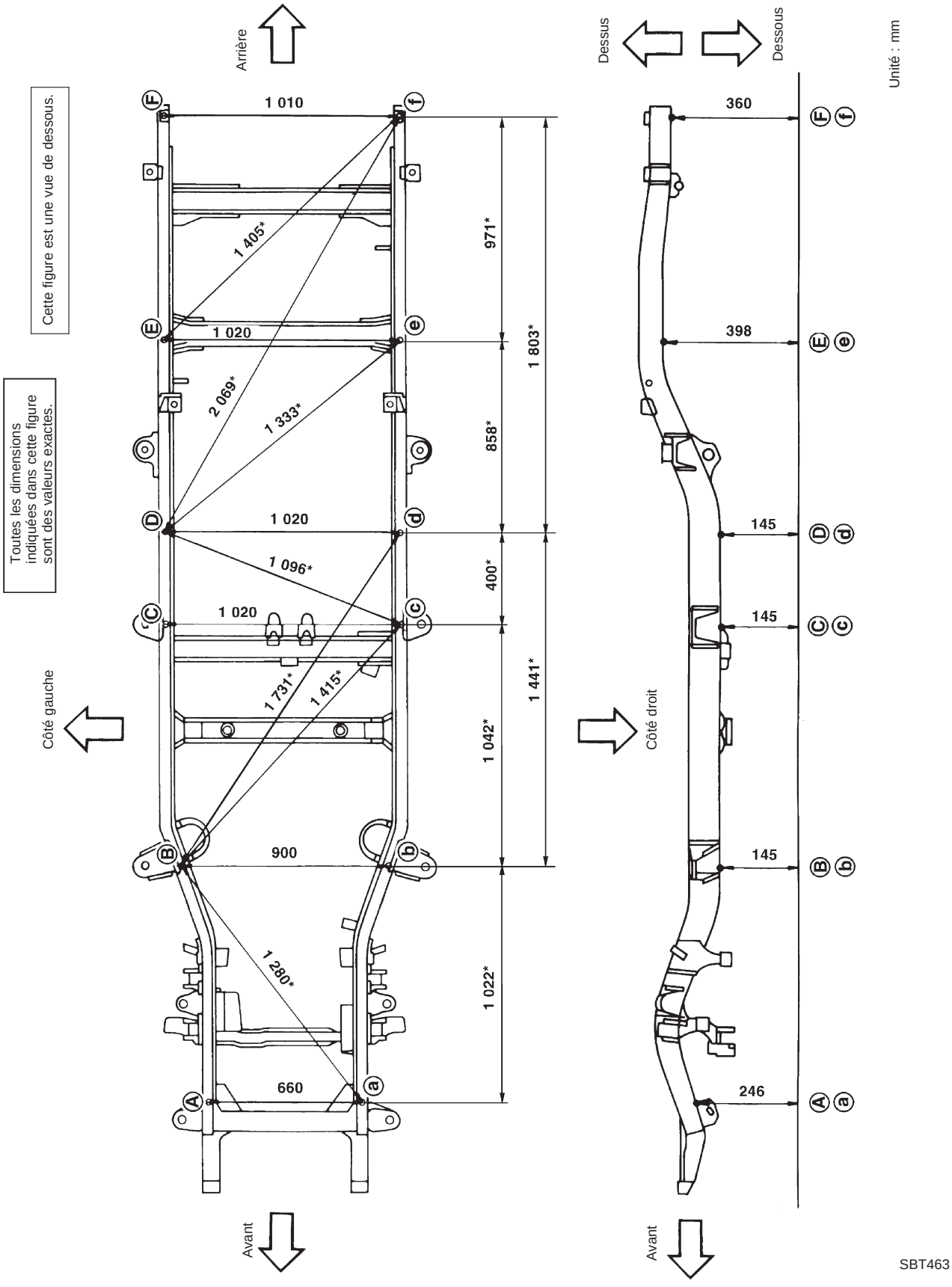

Simpo PDF Merge and Split Unregistered Version - http://www.simpopdf.com

Dessous de la carrosserie (Suite)

POINTS DE MESURE

Modèles à 2 et 4 roues motrices (empattement long)

Crochet de remorquage : Ⓐ

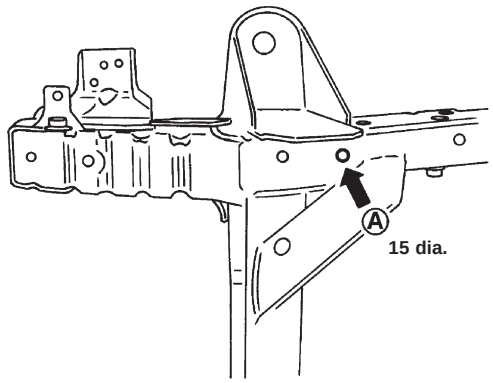

Châssis : Ⓑ

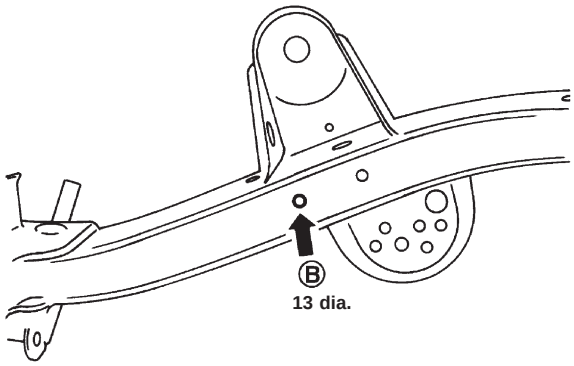

Châssis : Ⓒ

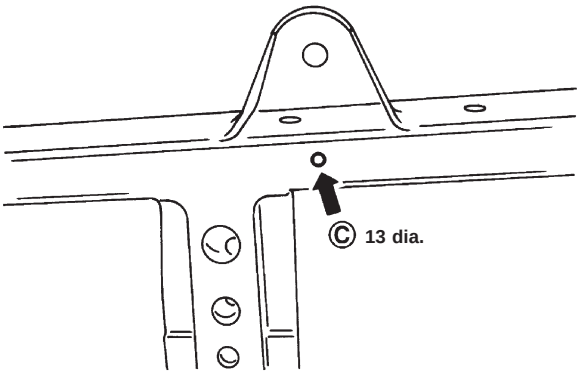

Châssis : Ⓓ

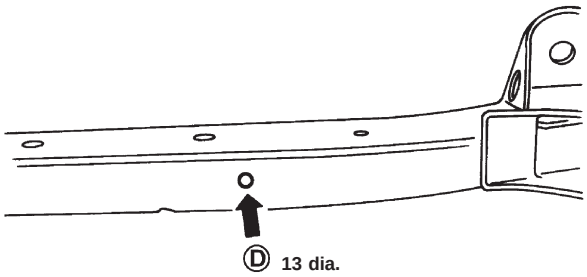

Fixation en caoutchouc de pare-chocs : Ⓔ

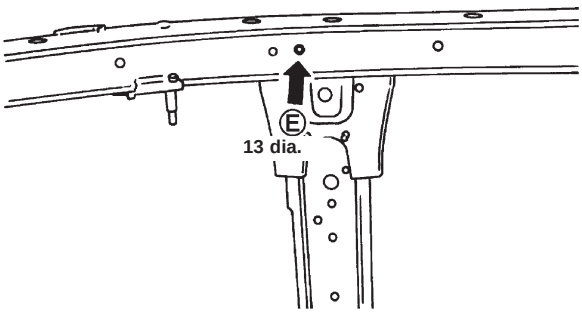

Châssis : Ⓕ

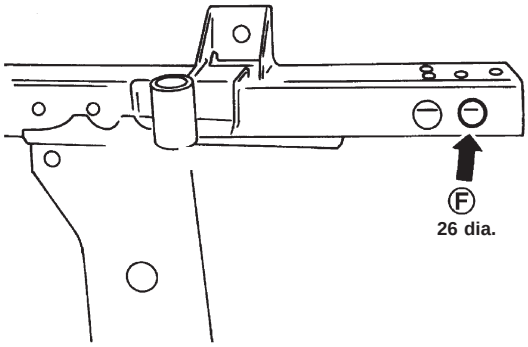

Unité : mm

Coordonnées :

Ⓐ , ⓐ	Ⓑ , ⓑ	Ⓒ , ⓒ	Ⓓ , ⓓ	Ⓔ , ⓔ	Ⓕ , ⓕ
X : 330	X : 450	X : 510	X : 510	X : 510	X : 505
Y : - 409,7	Y : 600	Y : 1 640	Y : 2 040	Y : 2 860	Y : 3 830
Z : 246,2	Z : 145	Z : 145	Z : 145,1	Z : 398	Z : 360

SBT464

Simpo PDF Merge and Split Unregistered Version - http://www.simpopdf.com

EMBRAYAGE

SECTION **CL**

TABLE DES MATIERES

PRECAUTIONS ET PREPARATION 1
Précautions 1
Outillage spécial 1
Outillage en vente dans le commerce 2
SYSTEME D'EMBRAYAGE 3
Pédale d'embrayage 4
INSPECTION ET REGLAGE 5
Réglage de la pédale d'embrayage 5
Procédure de purge 5
COMMANDE D'EMBRAYAGE HYDRAULIQUE 6
Maître-cylindre d'embrayage 6
Cylindre récepteur 8
MECANISME DE DEBRAYAGE 9
DISQUE D'EMBRAYAGE ET COUVERCLE D'EMBRAYAGE 12
Disque d'embrayage et volant-moteur 12
Couvercle d'embrayage 13
CARACTERISTIQUES ET VALEURS DE REGLAGE (SDS) 15
Caractéristiques générales 15
Inspection et réglage 15

Simpo PDF Merge and Split Unregistered Version - http://www.simpopdf.com

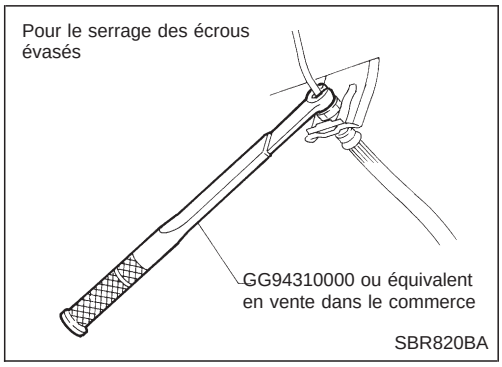

Précautions

- **Le liquide conseillé est le liquide de frein ‘‘DOT 3’’ ou ‘‘DOT 4’’. Se reporter à la section MA (‘‘Liquides et lubrifiants’’, ‘‘LIQUIDES ET LUBRIFIANTS CONSEILLES’’).**
- **Ne pas réutiliser du liquide de frein vidangé.**
- **Faire attention de ne pas éclabousser les surfaces peintes avec du liquide de frein.**
- **Pour déposer et reposer le tube d’embrayage, utiliser l’outil spécial.**
- **Utiliser du liquide de frein neuf pour nettoyer ou laver toutes les pièces du maître-cylindre, du cylindre récepteur et de l’amortisseur d’embrayage.**
- **Ne jamais utiliser d’huiles minérales telles qu’essence ou kérosène. Ceci endommagerait les pièces en caoutchouc du système hydraulique.**

AVERTISSEMENT :
Après avoir nettoyé le disque d’embrayage, l’essuyer avec un chiffon à poussière. Ne pas utiliser d’air comprimé.

Outillage spécial

Numéro de l’outil Nom de l’outil	Description	
ST20050010 Plaque de base	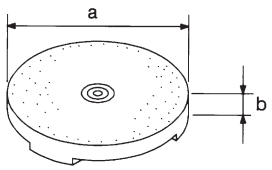 NT403	Inspection du ressort de diaphragme du couvercle d’embrayage **a : 357 mm** ϕ **b : 43 mm**
ST20050100 Entretoise	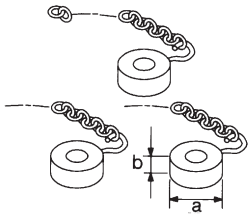 NT402	Inspection du ressort de diaphragme du couvercle d’embrayage **a : 25 mm** ϕ **b : 7,8 mm**
GG94310000 Clef pour écrou évasé	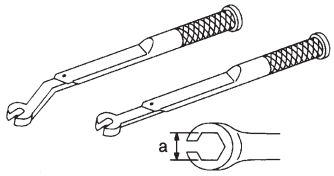 NT406	Dépose et repose de chaque tube d’embrayage **a : 10 mm** **: 16,2 N·m (1,65 kg-m)**
ST20600000 Barre d’alignement d’embrayage	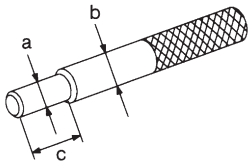 NT405	Repose du couvercle et du disque d’embrayage **a : 16,0 mm** ϕ **b : 22,8 mm** ϕ **c : 55 mm**

Simpo PDF Merge and Split Unregistered Version - http://www.simpopdf.com

Outillage en vente dans le commerce

Nom de l'outil	Description	
ST20050240 Clé de réglage de ressort de diaphragme	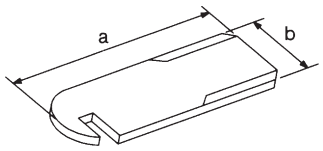 NT404	Réglage de la différence de hauteur entre les ressorts de diaphragme du couvercle d'embrayage **a : 150 mm** **b : 25 mm**
① Base de clé à écrou évasé ② Clé dynamométrique	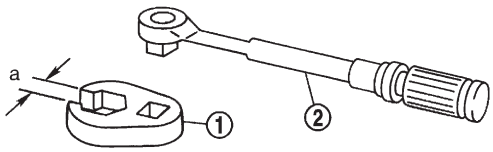 NT684	Dépose et repose des tuyauteries d'embrayage **a : 10 mm**
Extracteur de palier	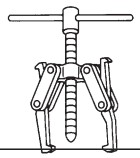 NT077	Dépose du palier de débrayage
Chassoir de palier	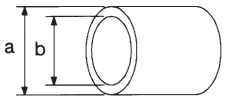 NT474	Repose du palier de débrayage **a : 52 mm** ϕ **b : 45 mm** ϕ

Simpo PDF Merge and Split Unregistered Version - http://www.simpopdf.com

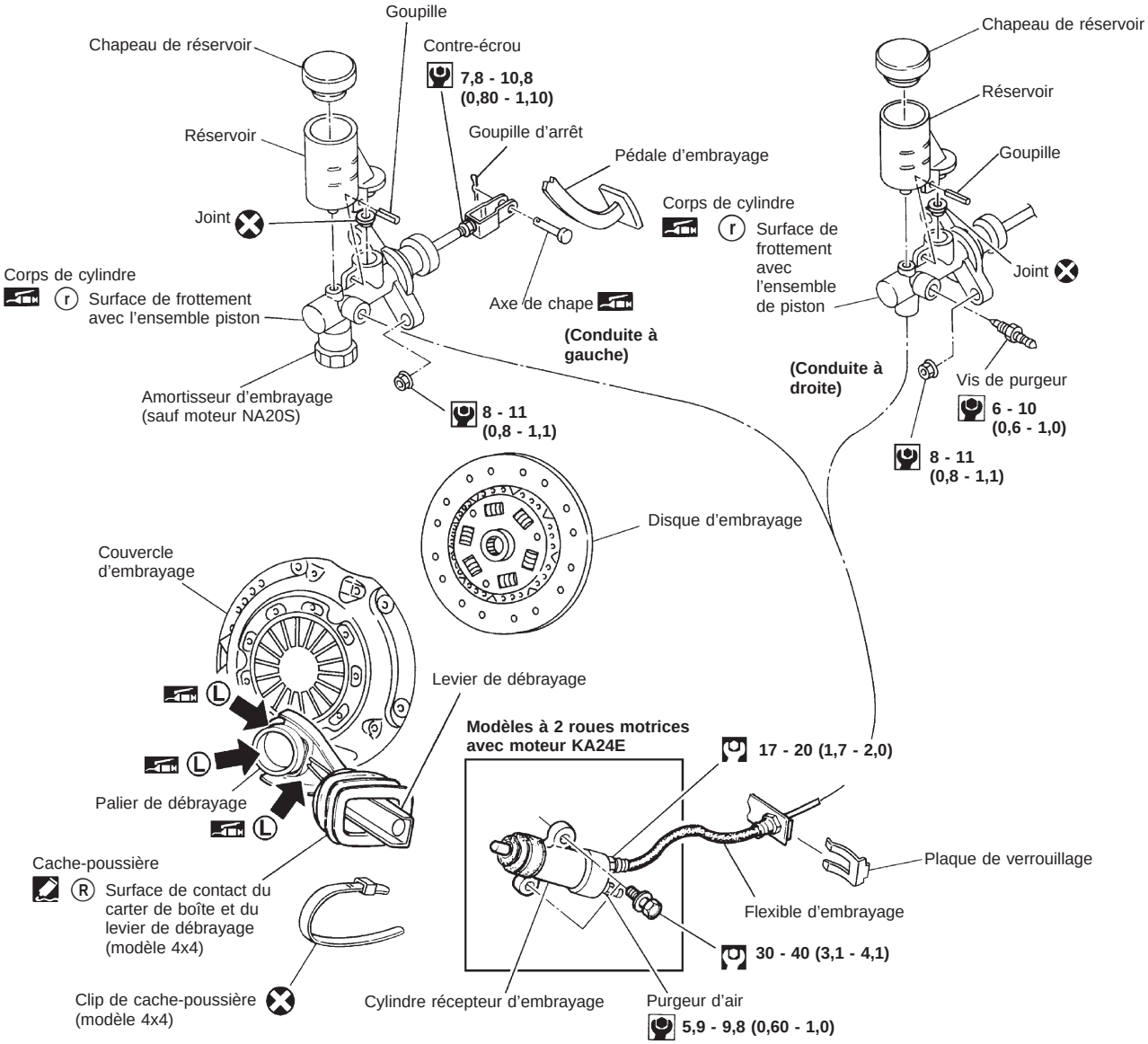

Modèles à 2 roues motrices avec moteur TD25

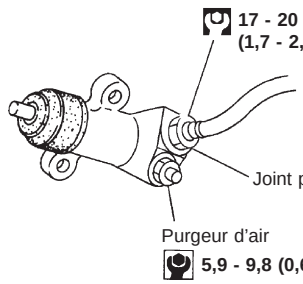

Modèles à 4 roues motrices avec moteur KA24E

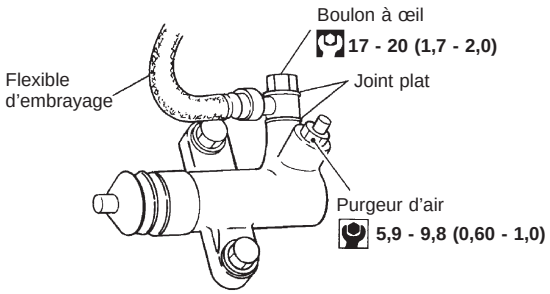

: N·m (kg-m)

: N·m (kg-m)

Ⓡ : Appliquer le produit d'étanchéité recommandé (pièce d'origine Nissan : KP115-00100), Three Bond TB1212 ou équivalent.

Ⓛ : Appliquer de la graisse à base de lithium comprenant du bisulphure de molybdène.

ⓡ : Appliquer du lubrifiant pour caoutchouc.

SCL795

Simpo PDF Merge and Split Unregistered Version - http://www.simpopdf.com

Pédale d'embrayage

Conduite à gauche

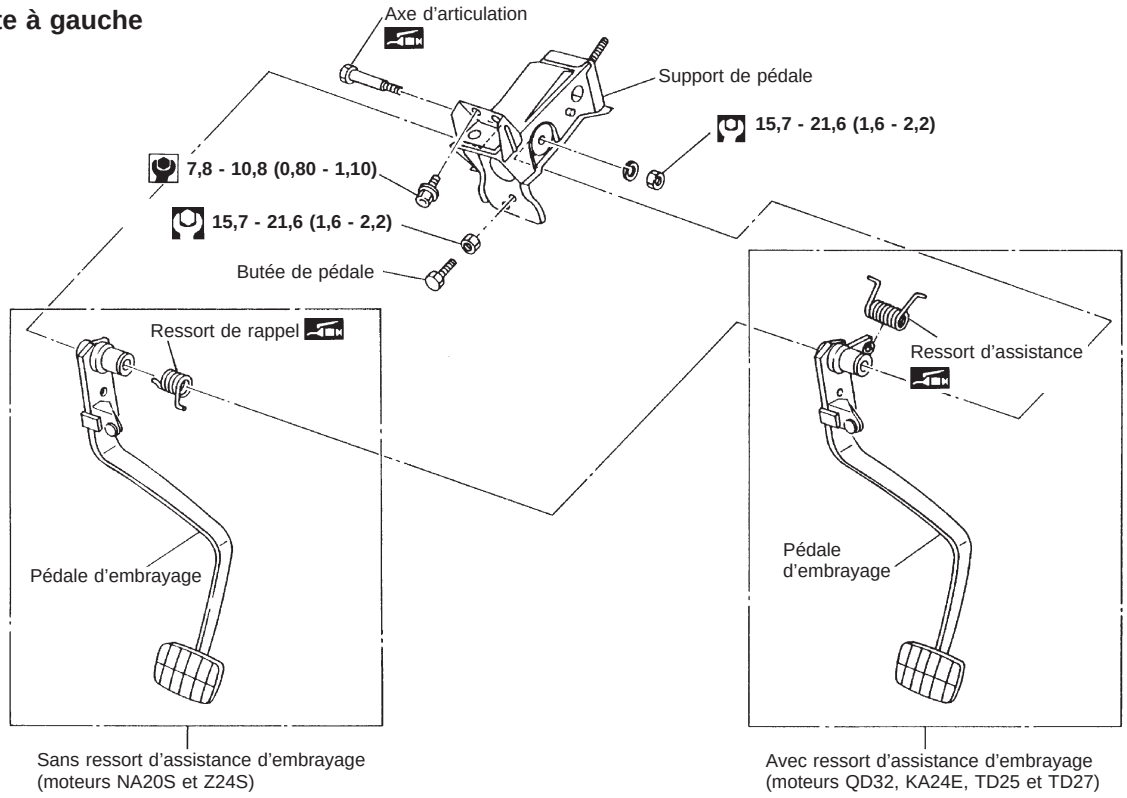

Conduite à droite

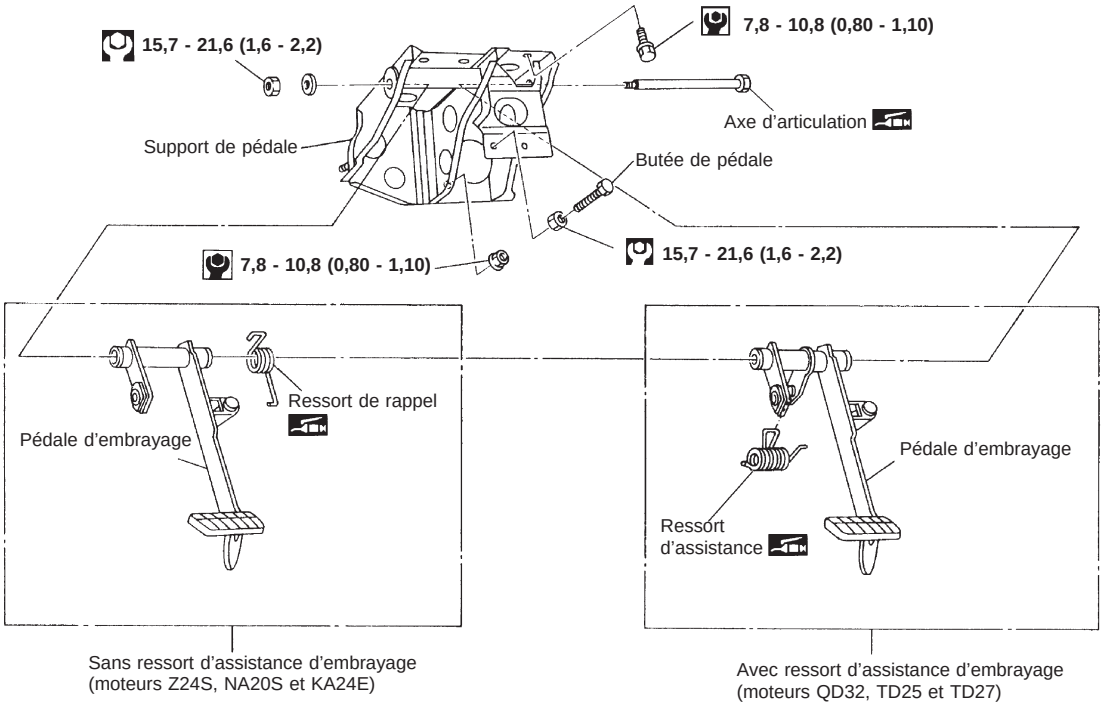

: N·m (kg-m)

: N·m (kg-m)

SCL741-A

Simpo PDF Merge and Split Unregistered Version - http://www.simpopdf.com

Réglage de la pédale d'embrayage

1. Régler la hauteur de pédale avec la butée de pédale.
2. Régler le jeu libre de la pédale avec la tige de poussoir.

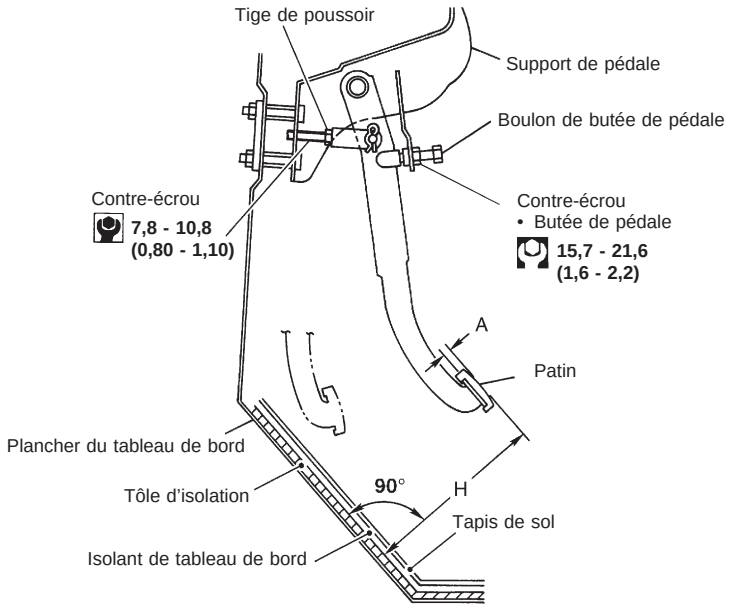

Hauteur de pédale "H"
(mesurée de la surface de la tôle d'isolation au patin de pédale) :
Conduite à gauche
221 - 231 mm
Conduite à droite
195 - 205 mm
Jeu libre de la pédale "A" :
1 - 1,5 mm

: N·m (kg-m)

: N·m (kg-m)

SCL742-A

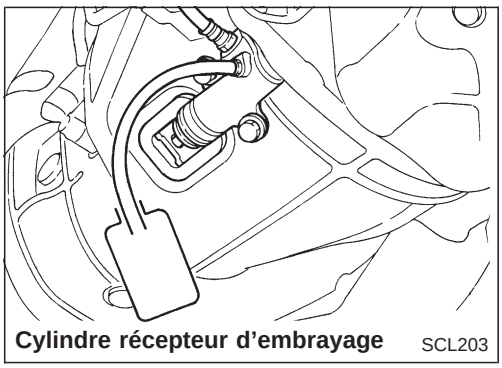

Cylindre récepteur d'embrayage SCL203

Procédure de purge

Purger l'air en suivant la méthode suivante.
Purger l'air du maître-cylindre (modèles avec conduite à droite uniquement) puis du cylindre récepteur.

1. Remplir le réservoir du maître-cylindre avec du liquide de frein neuf.
2. Connecter un flexible transparent en vinyle au purgeur d'air.
3. Enfoncer lentement la pédale d'embrayage sur toute sa course puis la relâcher complètement. Répéter cette opération plusieurs fois à 2 ou 3 secondes d'intervalle.
4. Ouvrir le purgeur d'air en enfonçant la pédale d'embrayage à fond.
5. Fermer le purgeur d'air.
6. Relâcher la pédale d'embrayage et attendre au moins 5 secondes.
7. Répéter les étapes 3 à 6 ci-dessus jusqu'à ce que le liquide de frein apparaisse, sans bulles d'air.

Simpo PDF Merge and Split Unregistered Version - http://www.simpopdf.com

Maître-cylindre d'embrayage

SEC. 305
Conduite à gauche

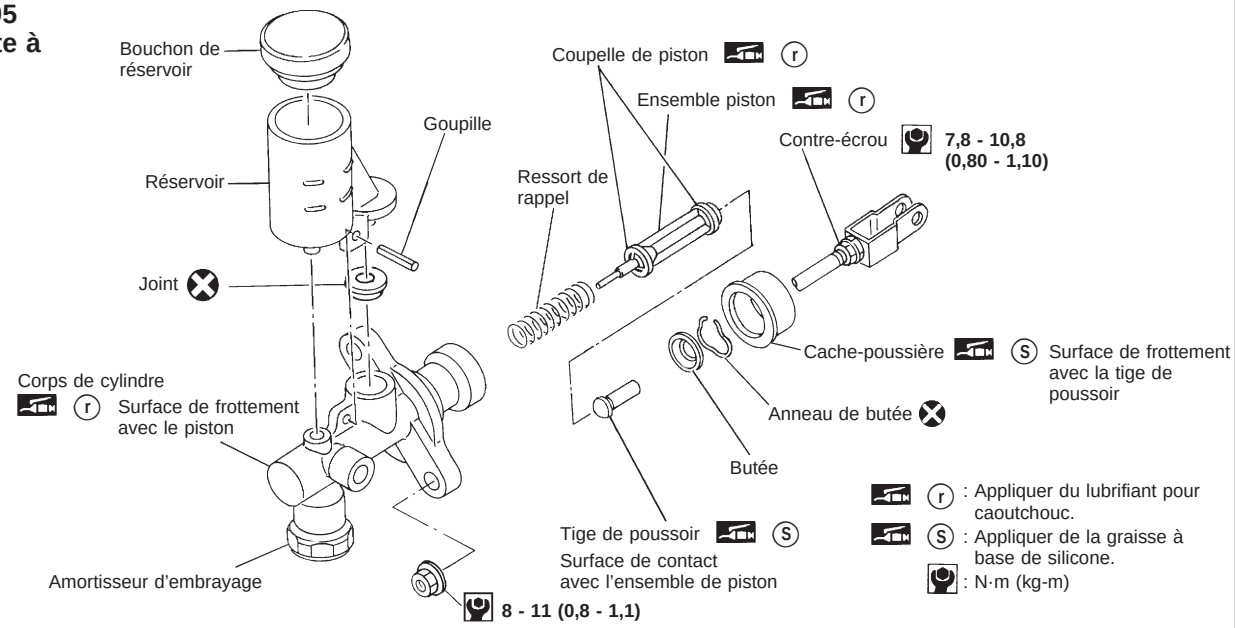

SCL743-A

SEC. 305
Conduite à droite

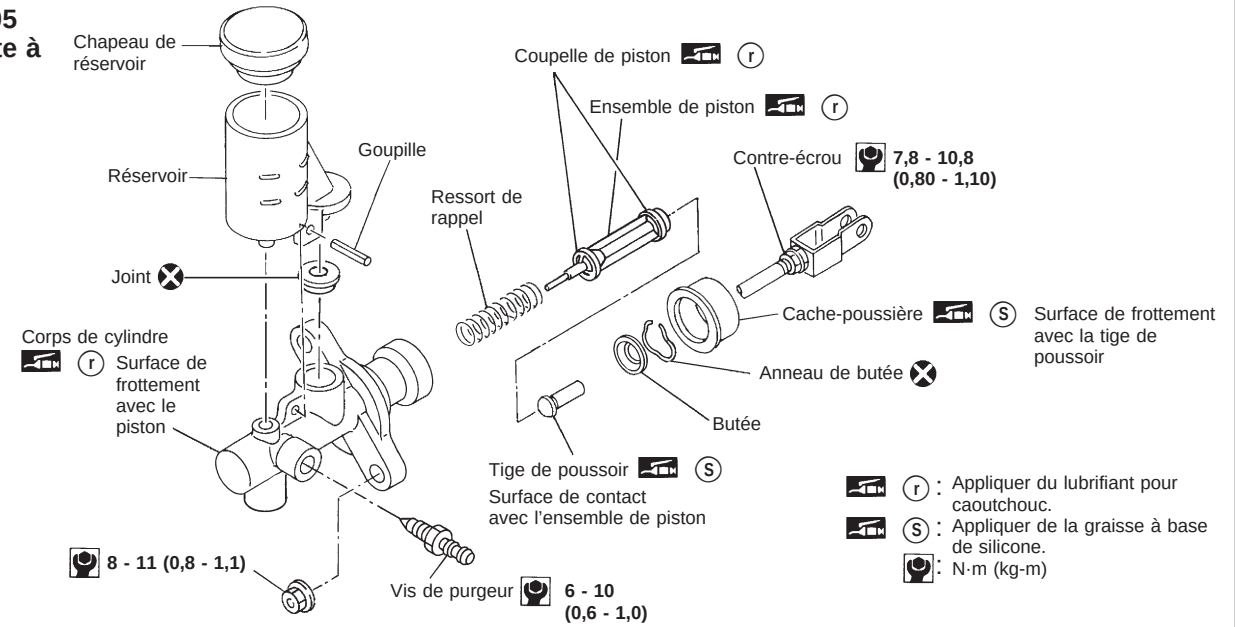

SCL744

DEMONTAGE ET REMONTAGE

- Retirer la bague de butée à l'aide d'un tournevis tout en poussant la tige de poussoir dans le cylindre.
- Pour reposer la bague de butée, l'introduire doucement tout en poussant la tige de poussoir dans le cylindre.

Simpo PDF Merge and Split Unregistered Version - http://www.simpopdf.com

Maître-cylindre d'embrayage (Suite)

INSPECTION

Vérifier les pièces suivantes, et les remplacer si nécessaire.

- La surface de frottement entre le cylindre et le piston pour voir s'il n'y a pas d'usure inégale, de rouille ou de détérioration.
- Le piston et les coupelles pour voir s'ils ne présentent pas de signes d'usure ou de détérioration.
- Le ressort de rappel pour voir s'il n'est pas usé ou endommagé.
- Le cache-poussière pour voir s'il n'est pas fêlé, déformé ou endommagé.
- Le réservoir pour voir s'il n'est pas déformé ou endommagé.

Simpo PDF Merge and Split Unregistered Version - http://www.simpopdf.com

Cylindre récepteur

SEC. 306
Modèles à 2 roues motrices

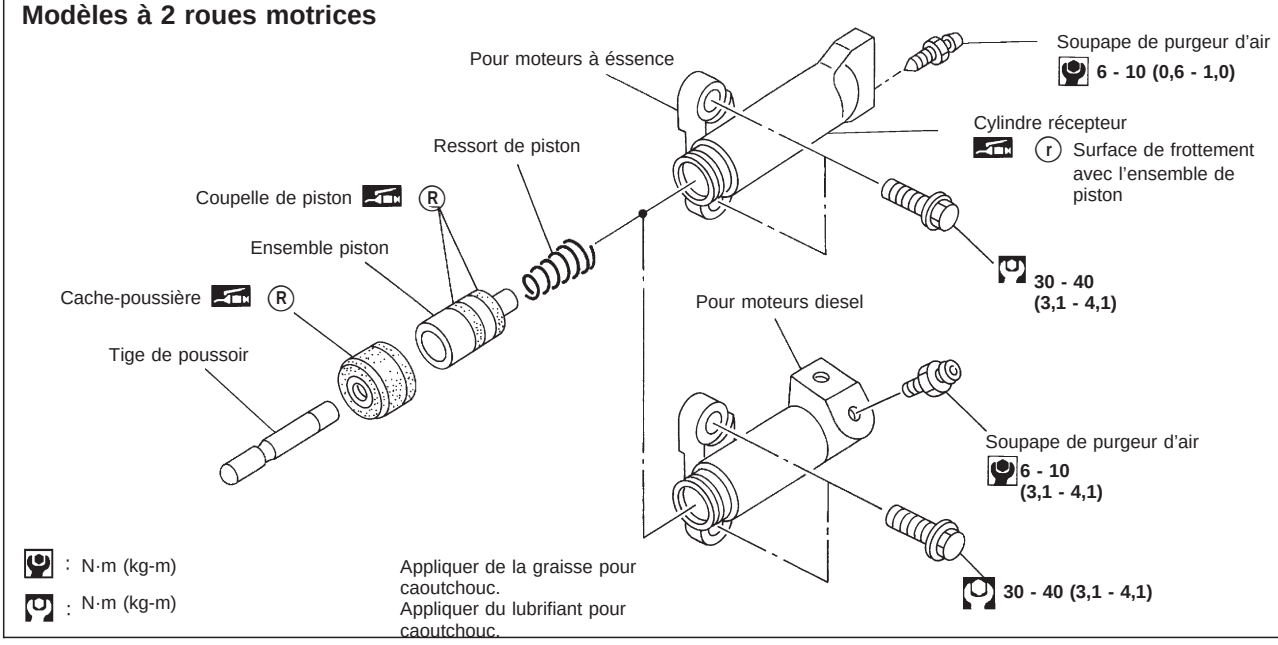

SCL796

SEC. 306
Modèles à 4 roues motrices

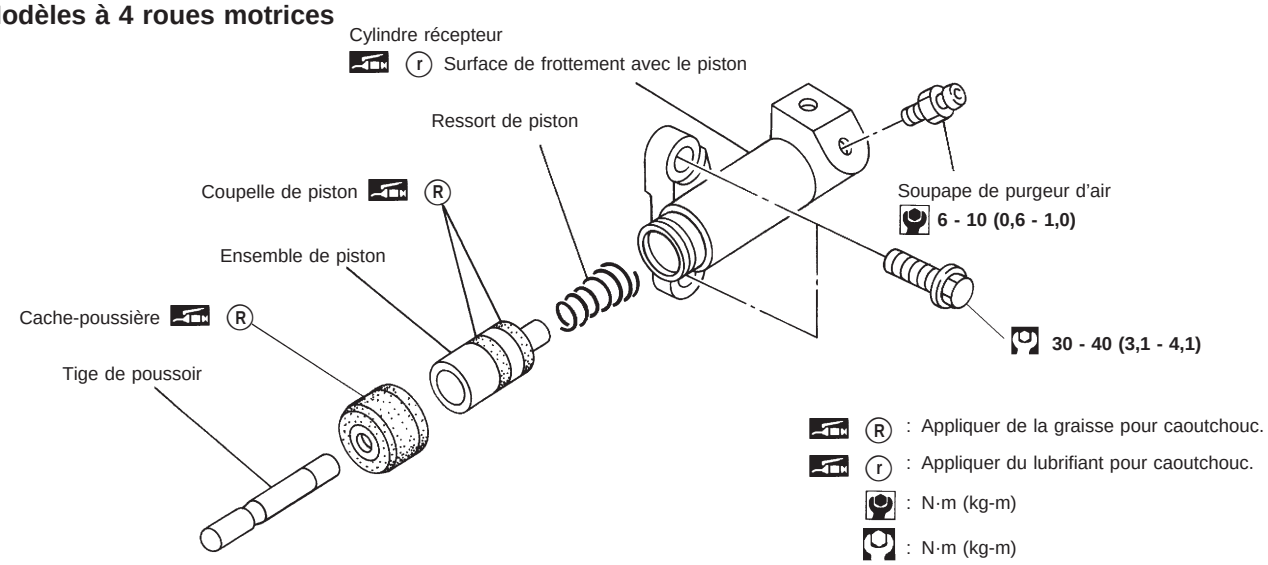

SCL746-A

INSPECTION

- Vérifier si la surface de frottement du cylindre présente des traces d'usure, de rouille ou de détérioration. Remplacer si nécessaire.
- Vérifier si le piston et la coupelle présentent des signes d'usure ou de détérioration. Remplacer si nécessaire.
- Vérifier si le ressort de piston n'est pas endommagé ou usé. Remplacer si nécessaire.
- Vérifier si le cache-poussière n'est pas fissuré, déformé ou endommagé. Remplacer si nécessaire.

Simpo PDF Merge and Split Unregistered Version - http://www.simpopdf.com

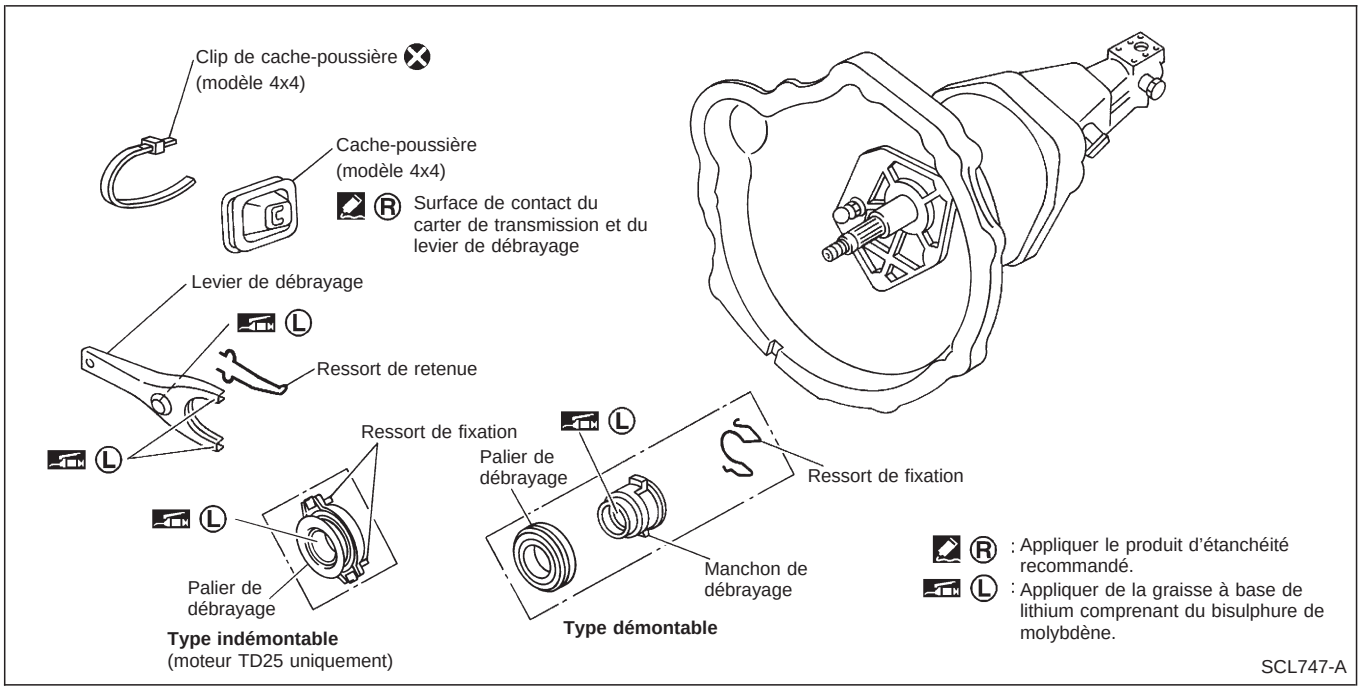

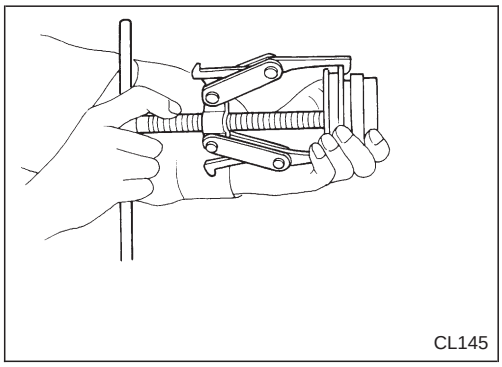
CL145

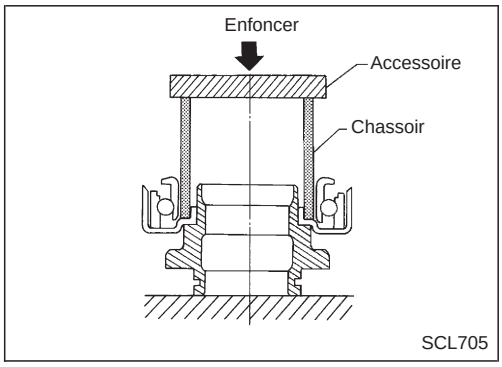

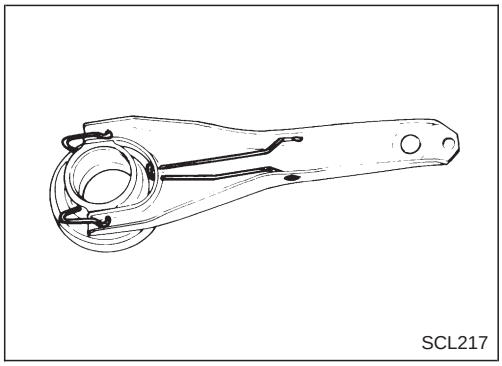
SCL217

DEPOSE ET REPOSE

Type démontable

- Déposer le palier de débrayage.
- Reposer le palier de débrayage avec le chassoir approprié.
- Installer le ressort de retenue et le ressort de fixation.

Simpo PDF Merge and Split Unregistered Version - http://www.simpopdf.com

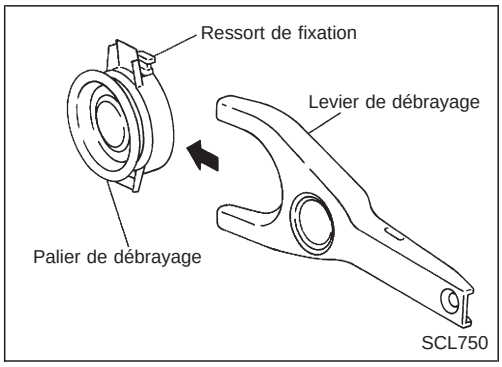

Type indémontable

- Reposer le ressort de support sur le palier de débrayage comme indiqué sur la figure de gauche et insérer le levier de débrayage en respectant le sens indiqué par la flèche.

INSPECTION

Vérifier les pièces suivantes, et les remplacer si nécessaire.

- Le palier de débrayage pour voir s'il tourne librement et s'il n'émet pas de bruits anormaux et ne présente pas de fêlures, de piqûres ou d'usure.
- Le manchon de débrayage et la surface de frottement du levier de débrayage pour voir si ces pièces ne présentent pas de traces d'usure, de rouille ou de détérioration.

LUBRIFICATION

- Enduire de graisse recommandée les surfaces de contact et les surfaces de frottement.
- **Il ne faut pas mettre trop de lubrifiant, car ceci risque d'endommager les garnitures du disque d'embrayage.**

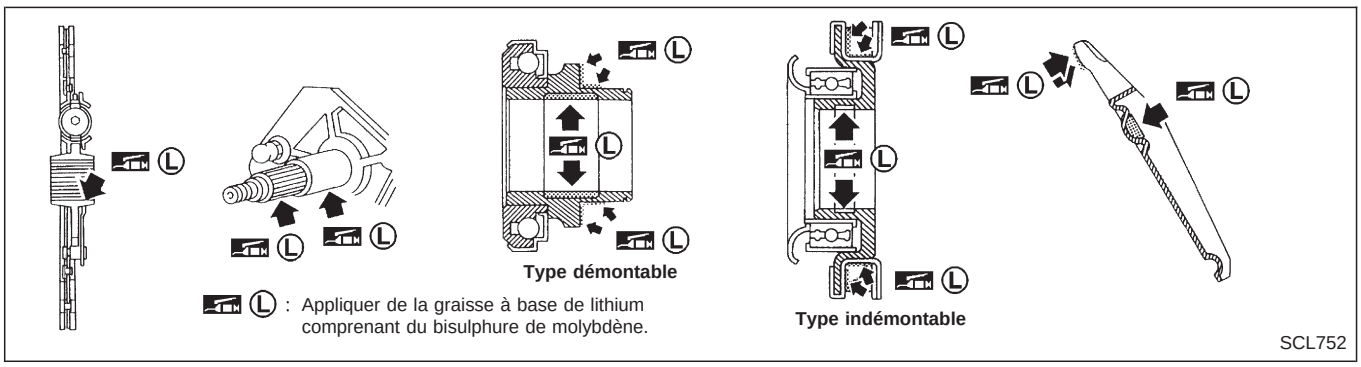

Simpo PDF Merge and Split Unregistered Version - http://www.simpopdf.com

Moteurs diesel

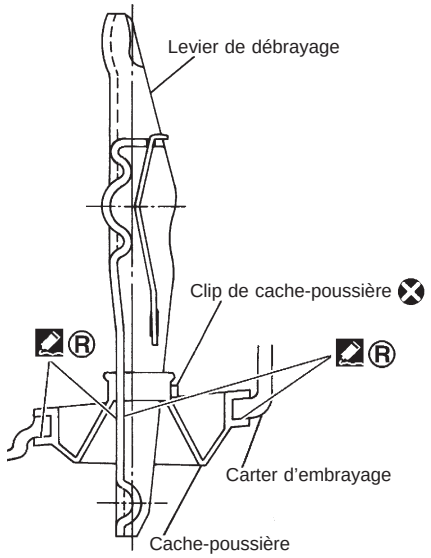

Ⓡ : Appliquer le produit d'étanchéité recommandé.

SCL760

Moteurs à essence

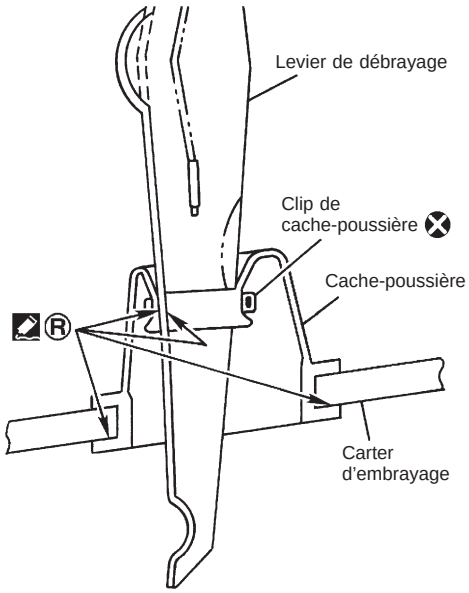

Ⓡ : Appliquer le produit d'étanchéité recommandé.

SCL761

RESISTANT A L'EAU – pour modèle à 4 roues motrices

- Enduire la surface de contact du cache-poussière de carter de transmission et du levier de débrayage de produit d'étanchéité recommandé, puis monter le clip de cache-poussière.

  Produit d'étanchéité recommandé :

  Pièce d'origine Nissan (KP115-00100), Three Bond TB1212 ou équivalent.

Simpo PDF Merge and Split Unregistered Version - http://www.simpopdf.com

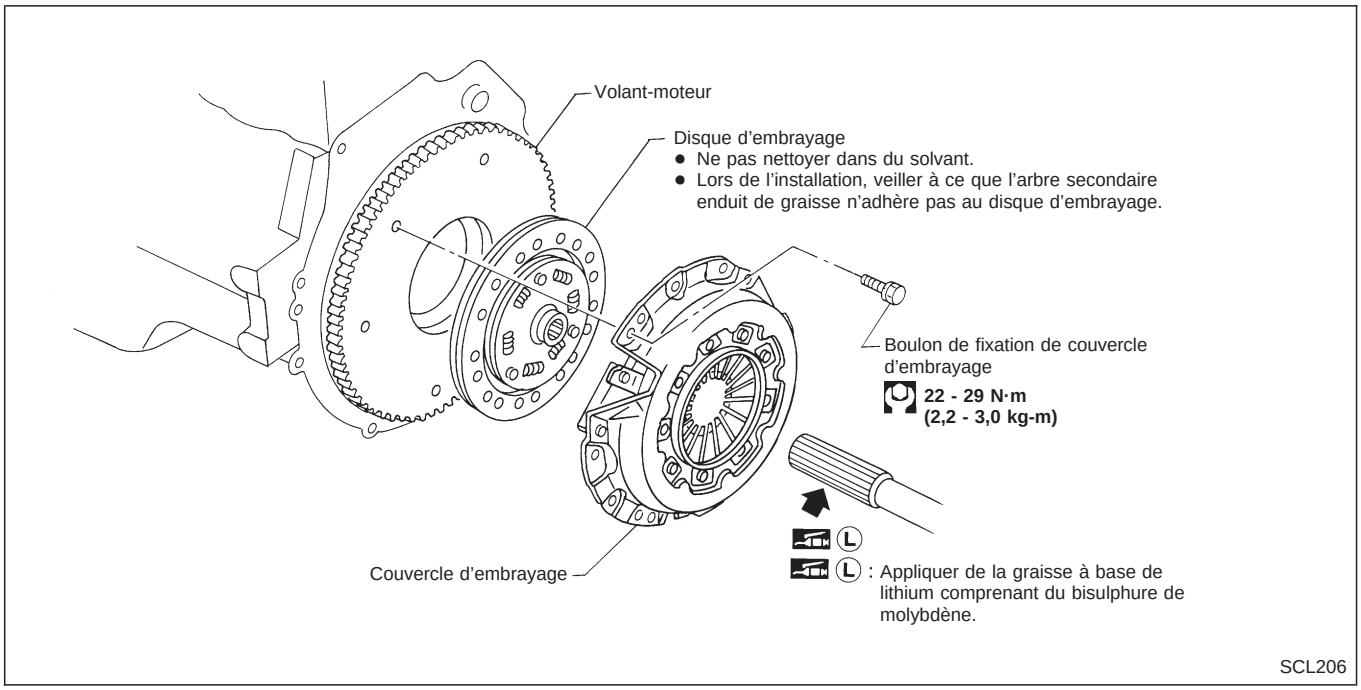

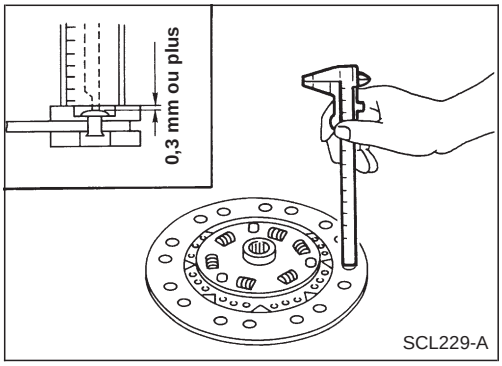

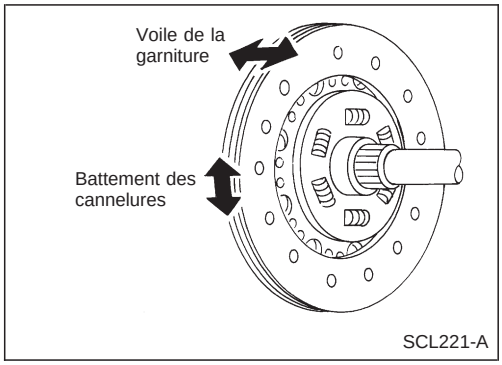

Disque d'embrayage et volant-moteur

INSPECTION

- Contrôler le disque d'embrayage pour voir s'il n'y a pas de trace de brûlures, de décolorations ou de fuites d'huile ou de graisse. Remplacer si nécessaire.
- Contrôler le disque d'embrayage pour voir si les garnitures ne sont pas usées.
  Limite d'usure de la surface de garniture jusqu'aux têtes des rivets :
  0,3 mm
- Vérifier le battement des cannelures et le voile des garnitures du disque d'embrayage.
  Battement maximum des cannelures (à la bordure extérieure du disque) :
  240 1,0 mm
  250 1,0 mm
  Limite de voile :
  0,7 mm moteur TD25
  1,0 mm sauf moteur TD25
  Distance du point de contrôle du voile (depuis le centre du moyeu) :
  240 115 mm
  250 120 mm

Simpo PDF Merge and Split Unregistered Version - http://www.simpopdf.com

Disque d'embrayage et volant-moteur (Suite)

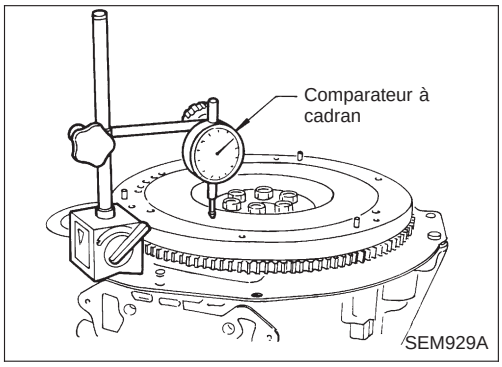

- Contrôler la surface de contact du volant-moteur pour voir s'il n'y a pas de légères brûlures ou de décolorations. Rectifier le volant-moteur avec du papier émeri.
- Contrôler le voile du volant-moteur.

Voile acceptable maximum :

Se reporter à la section EM (''Inspection'', ''BLOC-CYLINDRES'').

REPOSE

- Enduire de graisse recommandée la surface de contact de la partie cannelée.

Il ne faut pas mettre trop de lubrifiant, car ceci risque d'endommager les garnitures du disque d'embrayage.

Couvercle d'embrayage

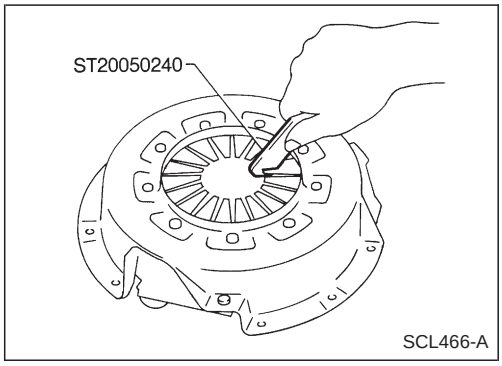

INSPECTION

- Corriger la différence de hauteur des ressorts de diaphragme à l'aide de l'outil spécial.

Limite de différence de hauteur :

250 0,5 mm
240 0,5 mm sauf moteur TD25
0,7 mm moteur TD25

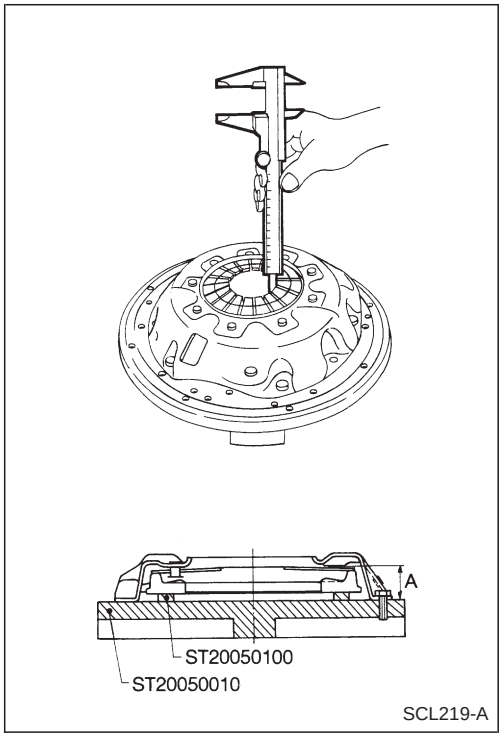

- Mettre l'outil spécial en place et contrôler la hauteur et la régularité des ressorts de diaphragme.

Placer des calibres d'épaisseur de 0,2 mm sur les entretoises (ST20050100) lors de la vérification des modèles 240 ou 250.

Hauteur du ressort de diaphragme ''A'' :

240 37,5 - 39,5 mm
250 37,0 - 39,0 mm

- Contrôler les bagues de butée pour voir si elles ne sont pas usées ou endommagées en secouant l'ensemble de couvercle de haut en bas pour voir si des pièces ne se sont pas déssolidarisées, ou en frappant légèrement sur les rivets et en écoutant le son émis. Remplacer l'ensemble de couvercle d'embrayage si nécessaire.
- Contrôler la surface de contact entre le plateau de pression et le disque d'embrayage pour voir s'il n'y a pas de légères brûlures ou de décolorations. Rectifier le plateau de pression avec du papier émeri.
- Contrôler la surface de contact entre le plateau de pression et le disque d'embrayage pour voir s'il n'y a pas de déformation ou autre dommage. Remplacer si nécessaire.

Simpo PDF Merge and Split Unregistered Version - http://www.simpopdf.com

Couvercle d'embrayage (Suite)

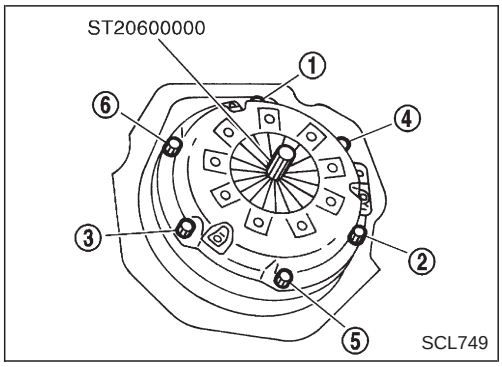

REPOSE

- Introduire l'outil spécial dans le moyeu du disque d'embrayage pour la mise en place du couvercle et du disque d'embrayage.
- Veiller à ce qu'il n'y ait pas de graisse sur la garniture d'embrayage.
- Serrer les boulons en ordre numérique, en deux étapes.

  Première étape :

  : 10 - 20 N·m (1,0 - 2,0 kg-m)

  Etape finale :

  : 22 - 29 N·m (2,2 - 3,0 kg-m)

Simpo PDF Merge and Split Unregistered Version - http://www.simpopdf.com

Caractéristiques générales

SYSTEME DE COMMANDE D'EMBRAYAGE

Type de commande d'embrayage	Hydraulique

MAITRE-CYLINDRE D'EMBRAYAGE (tous modèles)

Diamètre intérieur	mm	15,87

CYLINDRE RECEPTEUR D'EMBRAYAGE

Unité : mm

Diamètre intérieur	Conduite à gauche	17,46
	Conduite à droite	19,05

DISQUE D'EMBRAYAGE

Destination	Europe	
Modèle	240	
Moteur	KA24E	TD25
Dimensions de la garniture mm (diam. ext. × diam. int. × épaisseur)	240 x 150 x 3,5	240 x 160 x 3,5
Epaisseur de l'ensemble de disque Avec charge mm	7,8 - 8,2 Avec 4 904 N (500 kg)	7,5 - 7,9 Avec 3 923 N (400 kg)

COUVERCLE D'EMBRAYAGE

Modèle	240	
Moteur	TD25	KA24E, Z24S
Pleine charge N (kg)	3 923	4 413

Inspection et réglage

PEDALE D'EMBRAYAGE

Unité : mm

Hauteur de la pédale "H*"	
Conduite à gauche	
Moteurs TD25 et KA24E	221 - 231
Conduite à droite	
Moteurs TD25 et KA24E	195 - 205
Jeu libre de la pédale (à l'axe de chape)	1 - 1,5

* : Mesuré de la surface de la tôle d'isolation au patin de pédale

DISQUE D'EMBRAYAGE

Unité : mm

Modèle	240	
Moteur	KA24E	TD25
Limite d'usure de la surface de garniture jusqu'aux têtes des rivets	0,3 ou plus	
Limite de voile de la garniture	1,0	0,7
Modèle	240	
Distance du point de contrôle du voile (depuis le centre du moyeu)	115	
Battement maximum de cannelures (à la bordure extérieure du disque)	1,0	

COUVERCLE D'EMBRAYAGE

Unité : mm

Modèle	240	
Moteur	KA24E	TD25
Hauteur du ressort de diaphragme	37,5 - 39,5	
Limite de différence de hauteur d'extrémité de ressort de diaphragme	0,5	0,7

Simpo PDF Merge and Split Unregistered Version - http://www.simpopdf.com

SYSTEME DE GESTION MOTEUR

SECTION EC

TABLE DES MATIERES

INDEX DE CODES DE DEFAUTS DE DIAGNOSTIC 1
Index alphabétique et numérique pour DTC (Moteur KA) 1
PRECAUTIONS ET PREPARATION 2
Outillage spécial 2
Outils en vente dans le commerce 4
Système de retenue supplémentaire (SRS) ‘‘COUSSIN GONFLABLE’’ (modèles à 4 roues motrices) 4
Système de retenue supplémentaire (SRS) ‘‘COUSSIN GONFLABLE’’ (modèles à 2 roues motrices) 4

KA

PRECAUTIONS ET PREPARATION 5
Circuit de carburation et système antipollution 5
Précautions 6
SYSTEME ENTIER DE COMMANDE DU MOTEUR ET DE CONTROLE ANTIPOLLUTION 8
Schéma de circuit 8
Schéma du système 9
Emplacement des composants de l’ECCS 10
Schéma des flexibles à dépression 12
Tableau du système 13
DESCRIPTION DU SYSTEME DE COMMANDE DE BASE DE GAZ D’ECHAPPEMENT ET DU MOTEUR 14
Système d’injection multipoint de carburant (MFI) 14
Système d’allumage à distributeur (DI) 17
Commande de coupure de climatisation 18
Commande de coupure d’alimentation (à vide et à régime du moteur élevé) 18
SYSTEME DE CONTROLE DES EMISSIONS EVAPORATIVES 19
Description 19
Inspection 19
VENTILATION POSITIVE DE CARTER 21
Description 21
Inspection 21
PROCEDURE D’ENTRETIEN DE BASE 22
Détente de la pression d’alimentation 22
Vérification de la pression d’alimentation 22
Dépose et repose de l’injecteur 24
Inspection et réglage de la came de ralenti accéléré (FIC) 25
Réglage du régime de ralenti/calage d’allumage/richesse de mélange de ralenti 26
DESCRIPTION DU SYSTEME DE DIAGNOSTIC DE BORD 37
Introduction 37
Code de défaut de diagnostic (DTC) 37
Témoin de défaut (MIL) 39
CONSULT 46
DIAGNOCTIC DES DEFAUTS – Introduction 56
Introduction 56
Fiche de contrôle de diagnostic 56
DIAGNOSTIC DES DEFAUTS – Procédure de travail 58
Procédure de travail 58
Description de la procédure 59
DIAGNOSTIC DES DEFAUTS – Inspection de base 60

Simpo PDF Merge and Split Unregistered Version - http://www.simpopdf.com

Inspection de base.....
DIAGNOSTIC DES DEFAUTS – Description générale.....63
Tableau de sécurité.....63
Tableau des caractéristiques des symptômes....64
Valeur de référence de CONSULT en mode de contrôle de données.....67
Graphique de référence du capteur principal en mode de contrôle de données.....69
Bornes de l'ECM et valeurs de référence.....71
DIAGNOSTIC DES DEFAUTS POUR L'ALIMENTATION ELECTRIQUE.....78
Alimentation électrique principale et circuit de mise à la masse.....78
DIAGNOSTIC DES DEFAUTS DU ''CAP POS ARB CAM'' (DTC 11).....86
Capteur d'angle d'arbre à cames (CMPS).....86
DIAGNOSTIC DES DEFAUTS DU ''DEBITMETRE D'AIR'' (DTC 12).....93
Débitmètre d'air (MAFS).....93
DIAGNOSTIC DES DEFAUTS DU ''CAP TEMP MOTEUR'' (DTC 13).....99
Capteur de température du réfrigérant moteur (ECTS).....99
DIAGNOSTIC DES DEFAUTS DU ''SIG PRI ALLU'' (DTC 21).....103
Signal d'allumage.....103
DIAGNOSTIC DES DEFAUTS DE ''SURCHAUFFE'' (DTC 28).....111
Surchauffe.....111
DIAGNOSTIC DES DEFAUTS DU ''CAP TEMP AIR ADMI'' (DTC 41).....115
Capteur de température d'air d'admission.....115
DIAGNOSTIC DES DEFAUTS DU ''CAP PAPILLON'' (DTC 43).....119
Capteur de position de papillon.....119
DIAGNOSTIC DES DEFAUTS POUR ELEMENTS NON DETECTABLES.....124
Capteur de vitesse du véhicule (VSS).....124
Sonde à oxygène chauffée (HO2S) – Conduite à gauche –.....129
Dispositif de chauffage de la sonde à oxygène chauffée – Conduite à gauche –.....133
Vanne de commande d'air de ralenti (IACV) – Vanne de commande d'air auxiliaire (AAC).....137
Contact de point mort.....142
Electrovanne de commande de purge de cartouche EVAP.....146
Injecteur.....150
Signal de démarrage.....155
Pompe d'alimentation.....157
Manocontact d'huile de direction assistée.....163
Electrovanne de contrôle de vanne de commande de tourbillon.....167
Electrovanne FICD.....174
Connecteurs du témoin (MIL) et de liaison des données.....179

TD

SYSTEME D'INJECTION.....182
Circuit d'alimentation.....182
POMPE A INJECTION.....184
Inspection.....184
Dépose.....184
Repose et réglage.....186
Démontage.....189
Réglage du minuteur de charge.....189
Levier de réglage de démarrage Q (Quantité)..190
ENSEMBLE INJECTEUR.....192
Dépose et repose.....192
Démontage.....192
Inspection.....193
Nettoyage.....193
Remontage.....195
Essai et réglage.....195
VERIFICATION DU CIRCUIT D'ALIMENTATION197
Système de purge de carburant.....197
Purge du filtre à carburant.....198
Contrôle de la pompe d'amorçage.....198
Contrôle du contact de filtre à carburant.....198
VENTILATION POSITIVE DE CARTER.....199
Description.....199
Inspection.....199
SYSTEME DE PRECHAUFFAGE RAPIDE.....200
Emplacement des composants.....200
Schéma de circuit.....201
Description.....202
Schéma de câblage.....203
Inspection du circuit de l'unité de commande de préchauffage (Pour les pays froids).....209
Inspection du circuit de l'unité de commande de préchauffage (Sauf pour les pays froids).....212
Inspection des composants.....214
SYSTEME EGR.....216
Emplacement des composants.....216
Description.....217
Fonctionnement.....218
Schéma de câblage.....219
Inspection du système.....223
Inspection des composants.....224
MINUTEUR DE SOLENOIDE.....226
Description.....226
Fonctionnement.....226
Schéma de câblage.....228

Simpo PDF Merge and Split Unregistered Version - http://www.simpopdf.com

Inspection 230
SYSTEME DE COUPURE DE CARBURANT 231
Schéma de câblage 231
SYSTEME DE CHAUFFAGE DE CARBURANT .. 232
Description 232
Schéma de câblage 233
Inspection du système 234
Inspection des composants 234
CIRCUIT DE COMMANDE DU RALENTI ACCELERE 236
Schéma de câblage 236
Inspection des composants électriques 237

KA

CARACTERISTIQUES ET VALEURS DE REGLAGE (SDS) 238
Caractéristiques générales 238
Inspection et réglage 238

TD

CARACTERISTIQUES ET VALEURS DE REGLAGE (SDS) 239
Pompe à injection de type VE 239
Injecteur 239
Calibrage standard de la pompe à injection 240

Lecture des schémas de câblage :
- **Lire la section GI : '' COMMENT LIRE LES SCHEMAS DE CABLAGE''**
- **Voir la section EL : ''DISPOSITION DE L'ALIMENTATION ELECTRIQUE'' pour connaître les circuits de distribution de l'alimentation électrique.**

Pour le diagnostic des pannes, lire la section GI ''COMMENT LIRE LES ORGANIGRAMMES PROCEDURE DE TRAVAIL DANS LES DIAGNOSTICS DES DEFAUTS'' et ''COMMENT ACCOMPLIR UN DIAGNOSTIC EFFICACE EN CAS D'INCIDENT ELECTRIQUE''.

Simpo PDF Merge and Split Unregistered Version - http://www.simpopdf.com

Index alphabétique et numérique pour DTC (Moteur KA)

INDEX ALPHABETIQUE POUR DTC

X : Applicable
– : Non applicable

Eléments (Termes affichés sur l'écran CONSULT)	DTC	Eclairage du MIL	Page de référence
CAP POS ARB CAM	11	–	EC-86
CAP TEMP MOTEUR	13	X	EC-99
SIG PRI ALLU	21	–	EC-103
CAP TEMP AIR ADMI	41	–	EC-115
DEBITMETRE D'AIR	12	–	EC-93
DEFAILLANCE DU NATS	141 - 148	X	Section EL*
AUCUN DEFAUT AUTO-DIAG INDIQUE	**55**	**–**	**–**
SURCHAUFFE	28	X	EC-111
CAP PAPILLON	43	–	EC-119

INDEX NUMERIQUE POUR DTC

X : Applicable
– : Non applicable

DTC	Eclairage du MIL	Eléments (Termes affichés sur l'écran CONSULT)	Page de référence
11	–	CAP POS ARB CAM	EC-86
12	–	DEBITMETRE D'AIR	EC-93
13	X	CAP TEMP MOTEUR	EC-99
21	–	SIG PRI ALLU	EC-103
28	X	SURCHAUFFE	EC-111
41	–	CAP TEMP AIR ADMI	EC-115
43	–	CAP PAPILLON	EC-119
55	**–**	**AUCUN DEFAUT AUTO-DIAG INDIQUE**	–
141 - 148	X	DEFAILLANCE DU NATS	Section EL*

*Se reporter à ''NATS (Système antivol Nissan)'' dans la section EL.

Simpo PDF Merge and Split Unregistered Version - http://www.simpopdf.com

Outillage spécial

POUR POMPE A INJECTION DE MOTEUR DIESEL

Numéro de l'outil Nom de l'outil	Description		Moteur concerné
			TD
KV11229352 Dispositif de mesure ① KV11229350 Support ② KV11229360 Ecrou ③ KV11229370 Axe ④ KV11254410 Comparateur à cadran	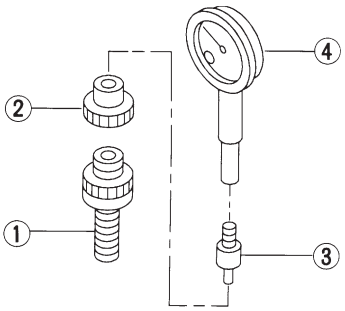 NT570	Mesurer la levée du plongeur	X
KV11103000 Extracteur de poulie	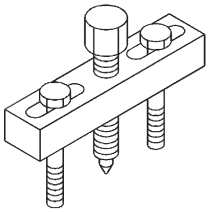 NT676	Dépose du pignon d'entraînement de la pompe à injection	X
KV10111100 Couteau à joint	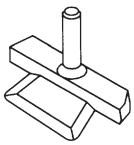 NT046	Dépose du couvercle du pignon d'entraînement de la pompe à injection	X
WS39930000 Presse-tube	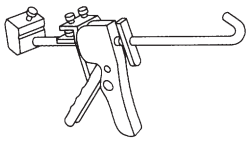 NT052	Pression du tube de joint liquide	X

X : Applicable

Simpo PDF Merge and Split Unregistered Version - http://www.simpopdf.com

Outillage spécial (Suite)

POUR INJECTEUR DE MOTEUR DIESEL

Numéro de l'outil Nom de l'outil	Description	Moteur concerné TD
KV11289004 Jeu de nettoyage d'injecteur ① KV11290012 Coffret ② KV11290110 Brosse ③ KV11290122 Grattoir de carter d'huile d'injecteur ④ KV11290140 Pointeau d'injecteur ⑤ KV11290150 Grattoir de siège d'injecteur ⑥ KV11290210 Porte-injecteur ⑦ KV11290220 Aiguille de nettoyage d'orifice d'injection	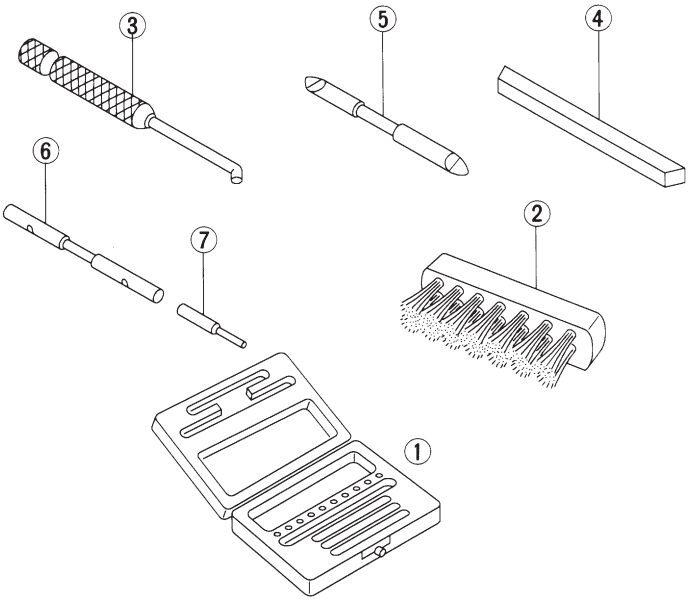 NT296	X
KV11292210 Dispositif de nettoyage de l'injecteur	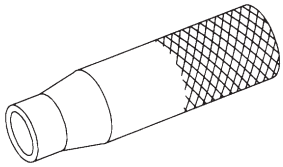 NT293	X
KV11290632 Grattoir de carter d'huile d'injecteur	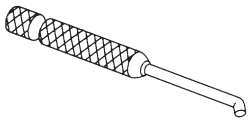 NT294	X
KV11290620 Grattoir de siège d'injecteur	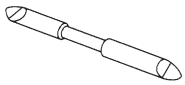 NT295	X

X : Applicable

Simpo PDF Merge and Split Unregistered Version - http://www.simpopdf.com

Outils en vente dans le commerce

POUR MOTEURS KA

Nom de l'outil	Description	
Adaptateur de bouchon de remplissage de carburant	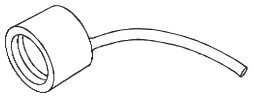 NT653	Contrôle de la pression d'ouverture de la soupape de dépression du réservoir de carburant

Système de retenue supplémentaire (SRS) ''COUSSIN GONFLABLE'' (modèles à 4 roues motrices)

Utilisé avec une ceinture de sécurité, le coussin gonflable du système de retenue supplémentaire contribue à réduire les risques et la gravité des blessures subies par le conducteur en cas de collision frontale. Le système de retenue supplémentaire se compose d'un module de coussin gonflable (situé dans le moyeu du volant), d'un boîtier de capteurs de diagnostic, d'un témoin lumineux, de faisceaux de câblage et d'un câble spiralé. Les informations nécessaires à un entretien du système sans danger se trouvent à la **section RS** de ce Manuel de Réparation.

AVERTISSEMENT :

- **Pour ne pas affecter le fonctionnement du SRS, ce qui augmenterait les risques de blessures graves ou mortelles en cas de collision entraînant le déploiement du coussin gonflable, toutes les opérations d'entretien doivent être effectuées par un concessionnaire NISSAN agréé.**
- **Un entretien inadapté, y compris la dépose et la repose incorrecte du SRS, peut être à l'origine de blessures causées par le déclenchement accidentel du système.**
- **Ne pas utiliser d'équipement d'essai électrique sur les circuits connexes au SRS, sauf instructions contraires données dans ce Manuel de Réparation. Les faisceaux de câblage électrique du SRS sont équipés d'une gaine d'isolation jaune soit juste devant les connecteurs de faisceau, soit sur le faisceau tout entier pour une identification plus rapide.**

Système de retenue supplémentaire (SRS) ''COUSSIN GONFLABLE'' (modèles à 2 roues motrices)

Utilisé avec une ceinture de sécurité, le coussin gonflable du système de retenue supplémentaire contribue à réduire les risques et la gravité des blessures subies par le conducteur en cas de collision frontale. Le système de retenue supplémentaire se compose d'un module de coussin gonflable (situé dans le moyeu du volant), d'un boîtier de capteurs de diagnostic, d'un témoin lumineux, de faisceaux de câblage et d'un câble spiralé. Les informations nécessaires à un entretien du système sans danger se trouvent à la **section RS** de ce Manuel de Réparation.

AVERTISSEMENT :

- **Pour ne pas affecter le fonctionnement du SRS, ce qui augmenterait les risques de blessures graves ou mortelles en cas de collision entraînant le déploiement du coussin gonflable, toutes les opérations d'entretien doivent être effectuées par un concessionnaire NISSAN agréé.**
- **Un entretien inadapté, y compris la dépose et la repose incorrecte du SRS, peut être à l'origine de blessures causées par le déclenchement accidentel du système.**
- **Ne pas utiliser d'équipement d'essai électrique sur les circuits connexes au SRS.**

Simpo PDF Merge and Split Unregistered Version - http://www.simpopdf.com

Circuit de carburation et système antipollution

POMPE D'ALIMENTATION
- Ne pas actionner la pompe d'alimentation alors que les canalisations sont vides.
- Serrer les colliers de fixation des canalisations au couple spécifié (se reporter à la section MA).

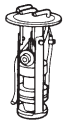

BATTERIE
- Toujours utiliser une batterie de 12 volts comme source d'alimentation.
- Ne pas essayer de déconnecter les câbles de batterie lorsque le moteur tourne.

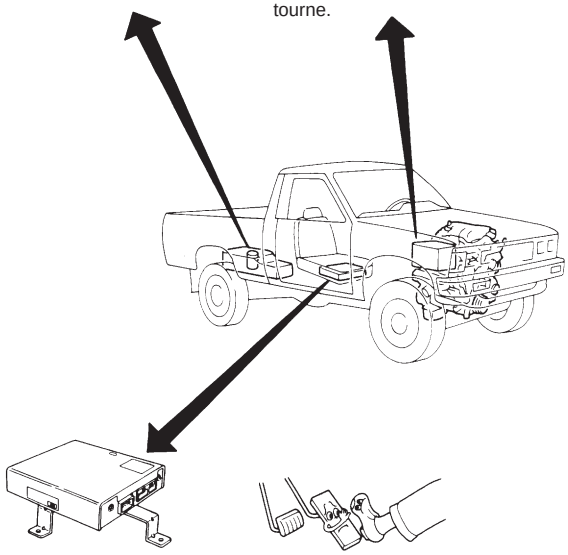

RADIO C.B. OU TELEPHONE
- Au montage d'un poste de CB ou d'un téléphone mobile, s'assurer d' observer les points suivants ; faute de quoi le système de commande électronique pourrait être endommagé, en fonction de l'emplacement.

1) Maintenir l'antenne aussi loin que possible des appareils de commande électronique.
2) Maintenir la ligne d'alimentation de l'antenne à plus de 20 cm du faisceau du système électronique.
   Veiller à ce que cette ligne ne soit jamais parallèle au faisceau sur une grande longueur.
3) Régler l'antenne et la ligne d'alimentation de manière à pouvoir maintenir au plus petit niveau le taux d'onde stationnaire.
4) Veiller à brancher la radio à la masse de carrosserie du véhicule.



ECM
- Ne pas démonter le module de contrôle de l'ECCS (ECM).
- Ne pas actionner de façon trop brutale le sélecteur de mode de diagnostic.
- Lorsque une borne de batterie est débranchée, la mémoire retourne à la valeur de l'ECM.
  Le boîtier de contrôle va maintenant s'autocontrôler à sa valeur initiale. Le fonctionnement du moteur peut varier légèrement lorsque la borne est déconnectée. Ceci ne signifie toutefois pas qu'il y ait un problème. Ne pas remplacer les pièces à cause de variations mineures.

AU DEMARRAGE
- Ne pas enfoncer la pédale d'accélérateur lors du démarrage.
- Immédiatement après le démarrage, ne pas emballer le moteur de façon inutile.
- Ne pas emballer le moteur avant de couper le contact.

MANIPULATION DES PIECES DE L'ECCS
- Manipuler soigneusement le débitmètre d'air pour éviter tout dommage.
- Ne pas démonter le débitmètre d'air.
- Ne pas nettoyer le débitmètre d'air avec un détergent.
- Ne pas démonter layvanne IACV-AAC.
- Une fuite, même légère, dans le système d'admission d'air peut causer de sérieux problèmes.
- Ne pas heurter ou soumettre à des chocs le capteur d'angle d'arbre à cames.

MANIPULATION DU FAISCEAU DE L'ECCS
- Brancher fermement les connecteurs du faisceau de l'ECCS.
  Une mauvaise connexion peut engendrer de très hautes tensions (afflux) sur la bobine et sur le condensateur, susceptibles par conséquent d'endommager les CI (circuits intégrés).
- Maintenir le faisceau de l'ECCS à 10 cm au moins des faisceaux voisins, afin d'éviter toute défaillance du système par suite de réception de bruits extérieurs.
- Maintenir les pièces et faisceaux de l'ECM parfaitement secs.
- Avant la dépose de toute pièce, couper le contact et déconnecter le câble de masse de la batterie.

SEF903MD

Simpo PDF Merge and Split Unregistered Version - http://www.simpopdf.com

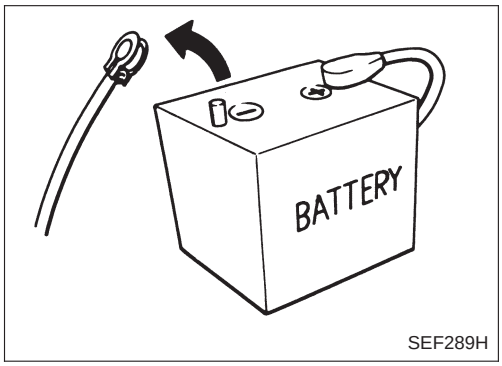

SEF289H

Précautions

- **Avant de brancher ou débrancher le connecteur du faisceau d'ECM, couper le contact et débrancher la borne négative de la batterie. Le non respect de cette instruction peut entraîner la détérioration de l'ECM. En effet, la tension de batterie est appliquée à l'ECM même lorsque le contact est coupé.**

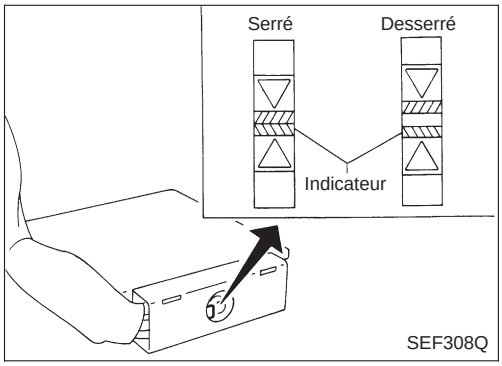

SEF308Q

- **Lors du branchement du connecteur de faisceau de l'ECM, serrer le boulon de fixation jusqu'à ce que l'espace entre les indicateurs oranges disparaisse.**
  : 3,0 - 5,0 N·m (0,3 - 0,5 kg-m)

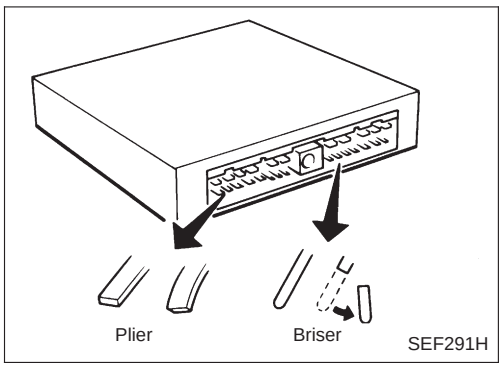

SEF291H

- **Lors du branchement ou du débranchement des connecteurs à broches de l'ECM, veiller à ne pas endommager (tordre ou casser) les bornes à broches.**
  Veiller à ce qu'aucune des bornes à broches de l'ECM ne soit pliée ou cassée au moment où l'on rebranche les connecteurs à broches.

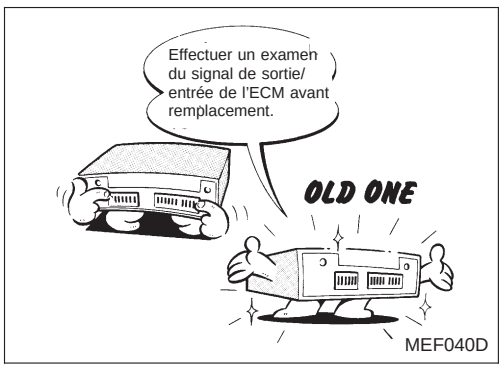

MEF040D

- **Avant de remplacer l'ECM, effectuer une inspection du signal d'entrée/sortie de l'ECM afin de déterminer en toute certitude s'il fonctionne correctement ou non (voir page EC-71).**

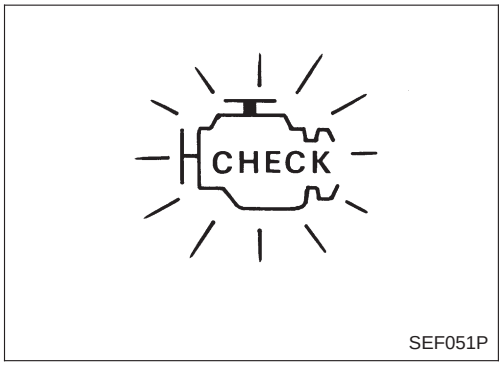

SEF051P

- **Après avoir effectué chaque DIAGNOSTIC DES DEFAUTS, effectuer une ''VERIFICATION DU FONCTIONNEMENT GENERAL'' ou ''PROCEDURE DE CONFIRMATION DTC (code de défaut de diagnostic)''.**
  Le DTC ne doit pas être affiché dans la ''PROCEDURE DE CONFIRMATION DTC'' si la réparation a été effectuée. La ''VERIFICATION DU FONCTIONNEMENT GENERAL'' devrait produire un bon résultat si la réparation a été effectuée.

Simpo PDF Merge and Split Unregistered Version - http://www.simpopdf.com

Précautions (Suite)

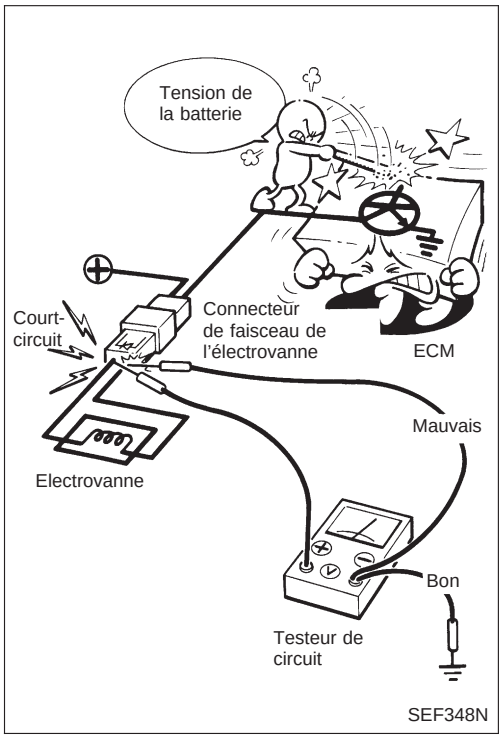

- **Lors de la mesure des signaux d'ECM avec un testeur de circuit, ne jamais mettre en contact les deux sondes de l'appareil.**
  La mise en contact accidentelle des deux sondes entraînera un court-circuit et endommagera le transistor d'alimentation de l'ECM.

Simpo PDF Merge and Split Unregistered Version - http://www.simpopdf.com

Schéma de circuit

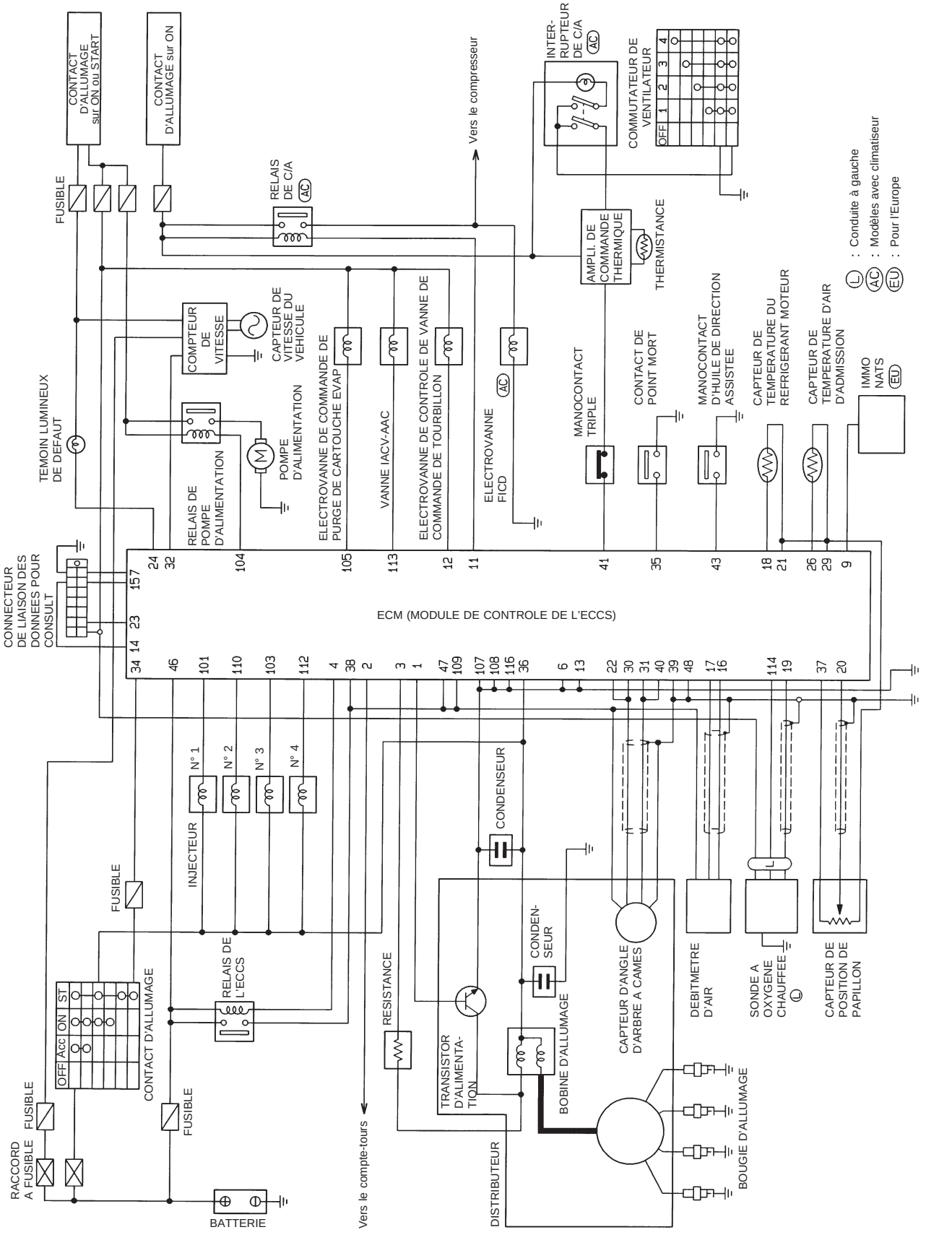

HEC557

Simpo PDF Merge and Split Unregistered Version - http://www.simpopdf.com

Schéma du système

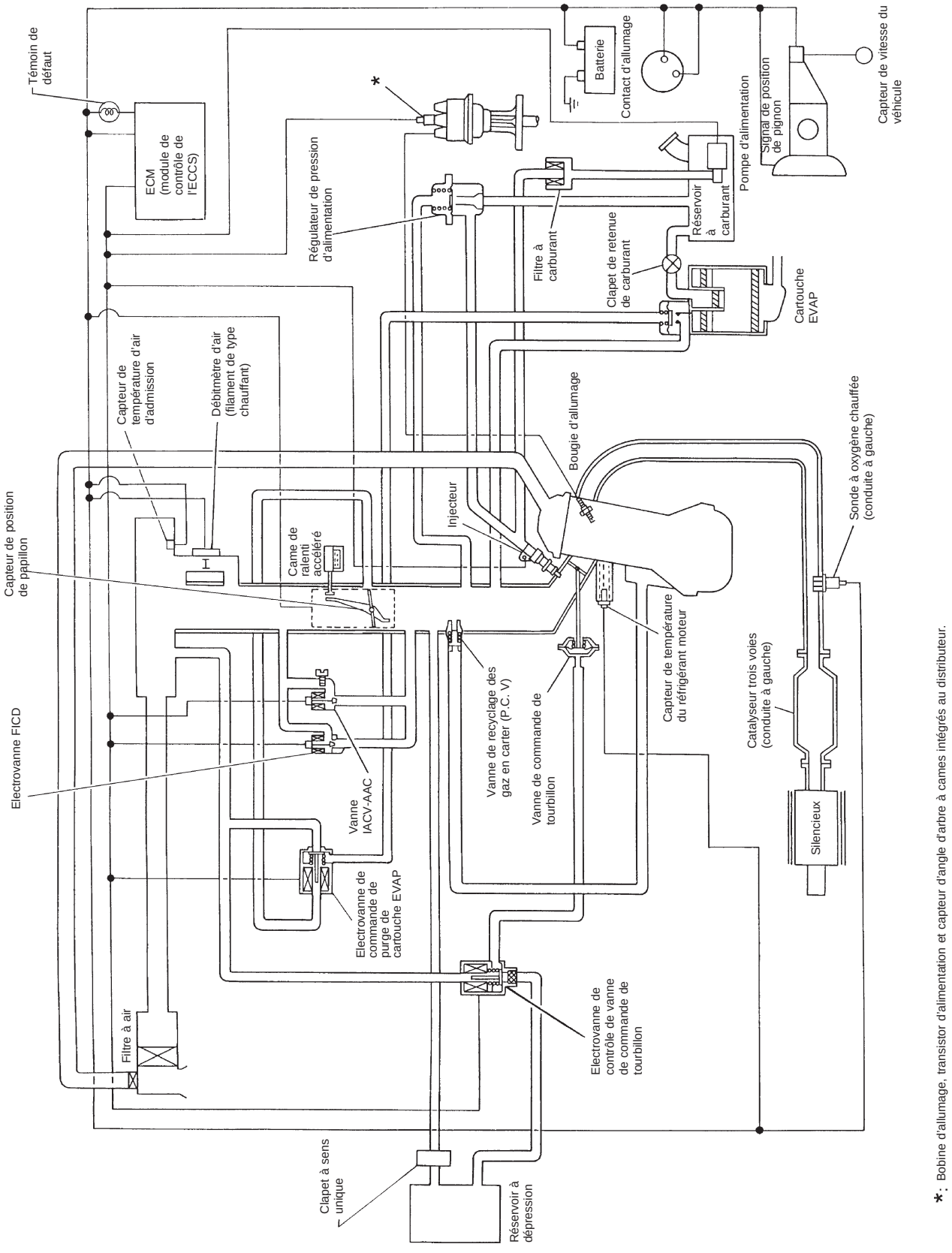

*: Bobine d'allumage, transistor d'alimentation et capteur d'angle d'arbre à cames intégrés au distributeur.

SEF038U

Simpo PDF Merge and Split Unregistered Version - http://www.simpopdf.com

Emplacement des composants de l'ECCS

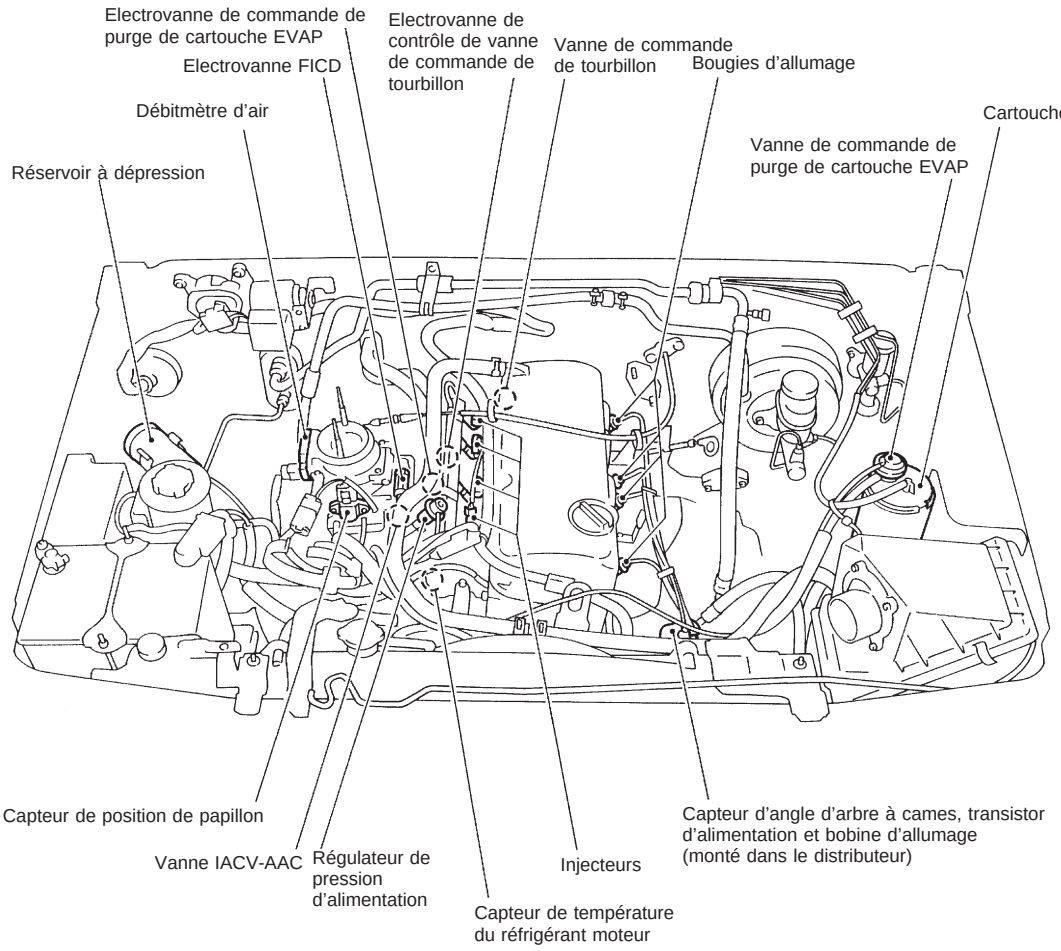

Simpo PDF Merge and Split Unregistered Version - http://www.simpopdf.com

Emplacement des composants de l'ECCS (Suite)

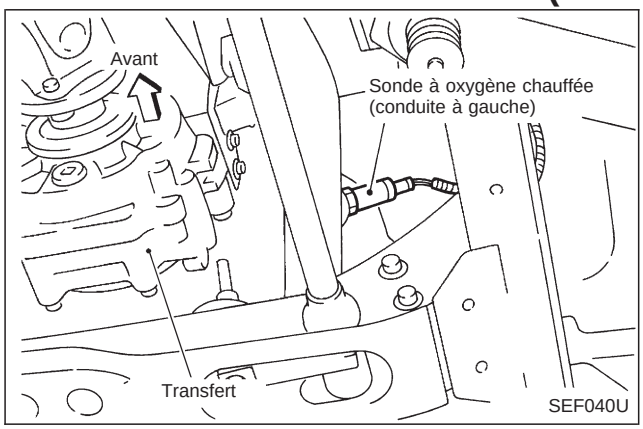

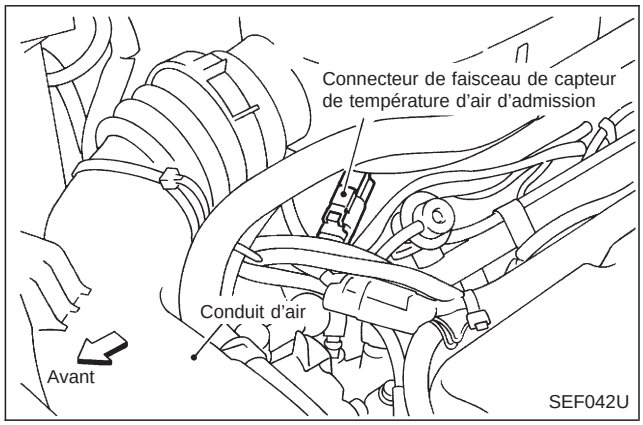

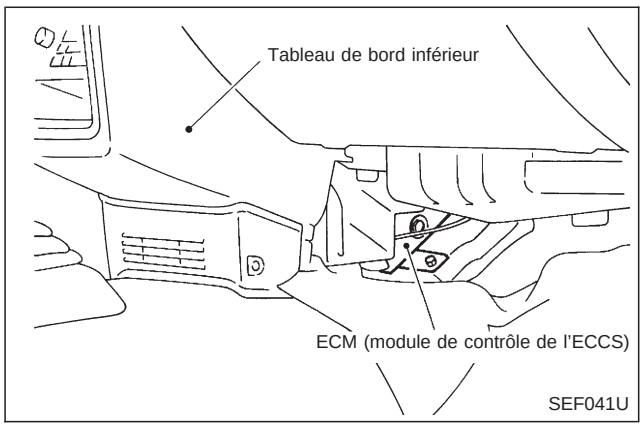

Simpo PDF Merge and Split Unregistered Version - http://www.simpopdf.com

Schéma des flexibles à dépression

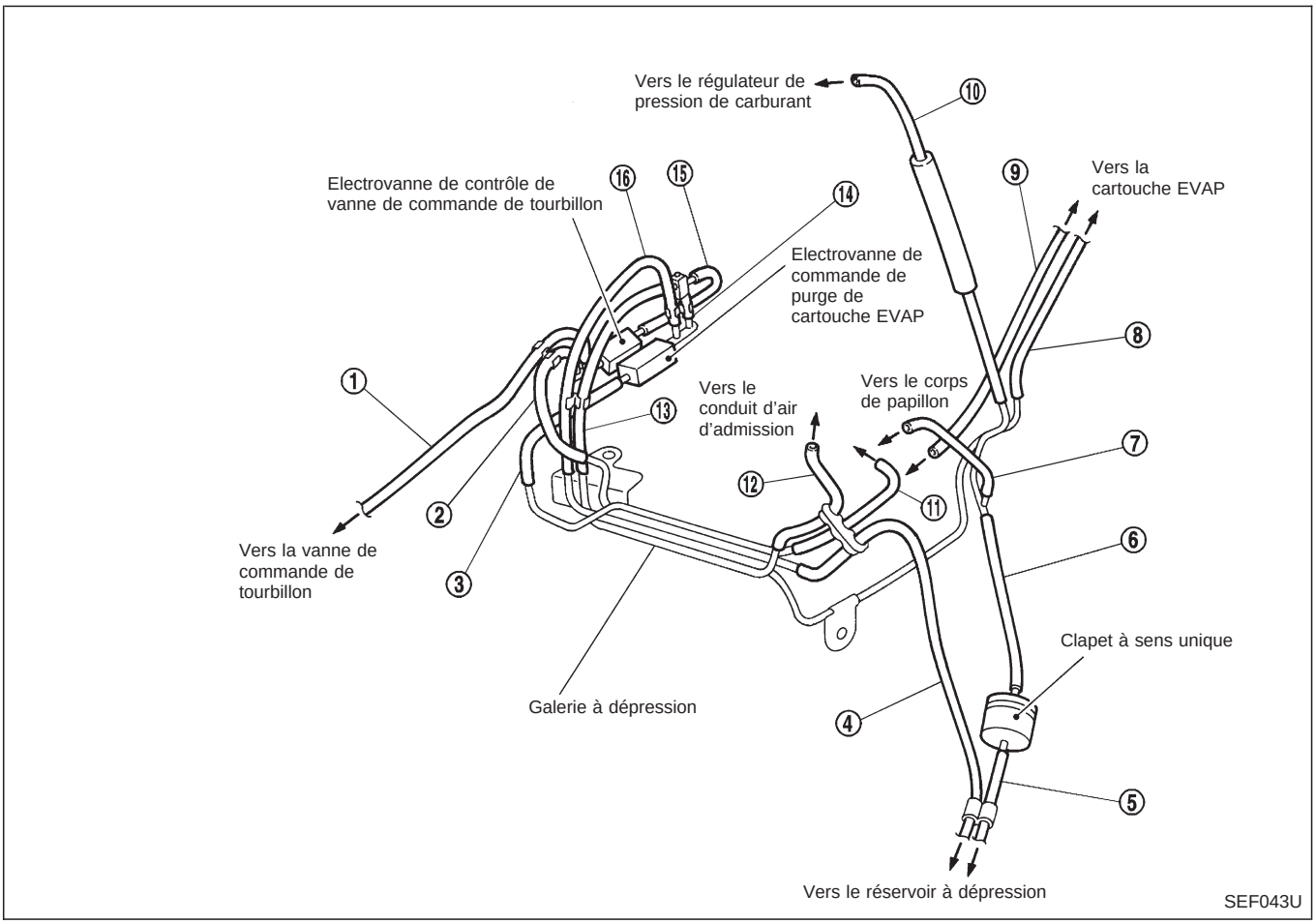

① Electrovanne de contrôle de vanne de commande de tourbillon vers vanne de commande de tourbillon
② Electrovanne de contrôle de vanne de commande de tourbillon vers galerie à dépression
③ Electrovanne de commande de purge de cartouche EVAP vers galerie à dépression
④ Réservoir à dépression vers galerie à dépression
⑤ Réservoir à dépression vers clapet à sens unique
⑥ Clapet à sens unique vers galerie à dépression
⑦ Corps de papillon vers galerie à dépression
⑧ Cartouche EVAP vers galerie à dépression
⑨ Cartouche EVAP vers corps de papillon
⑩ Régulateur de pression de carburant vers galerie à dépression
⑪ Corps de papillon vers galerie à dépression
⑫ Conduite d'air d'admission vers galerie à dépression
⑬ Galerie à dépression vers connecteur à 3 voies
⑭ Electrovanne de commande de purge de cartouche EVAP vers connecteur à 3 voies
⑮ Electrovanne de contrôle de vanne de commande de tourbillon vers connecteur à 3 voies
⑯ Electrovanne de commande de purge de cartouche EVAP vers galerie à dépression

Consulter ''Schéma du système'', EC-9, pour le système de commande à dépression.

Simpo PDF Merge and Split Unregistered Version - http://www.simpopdf.com

Tableau du système

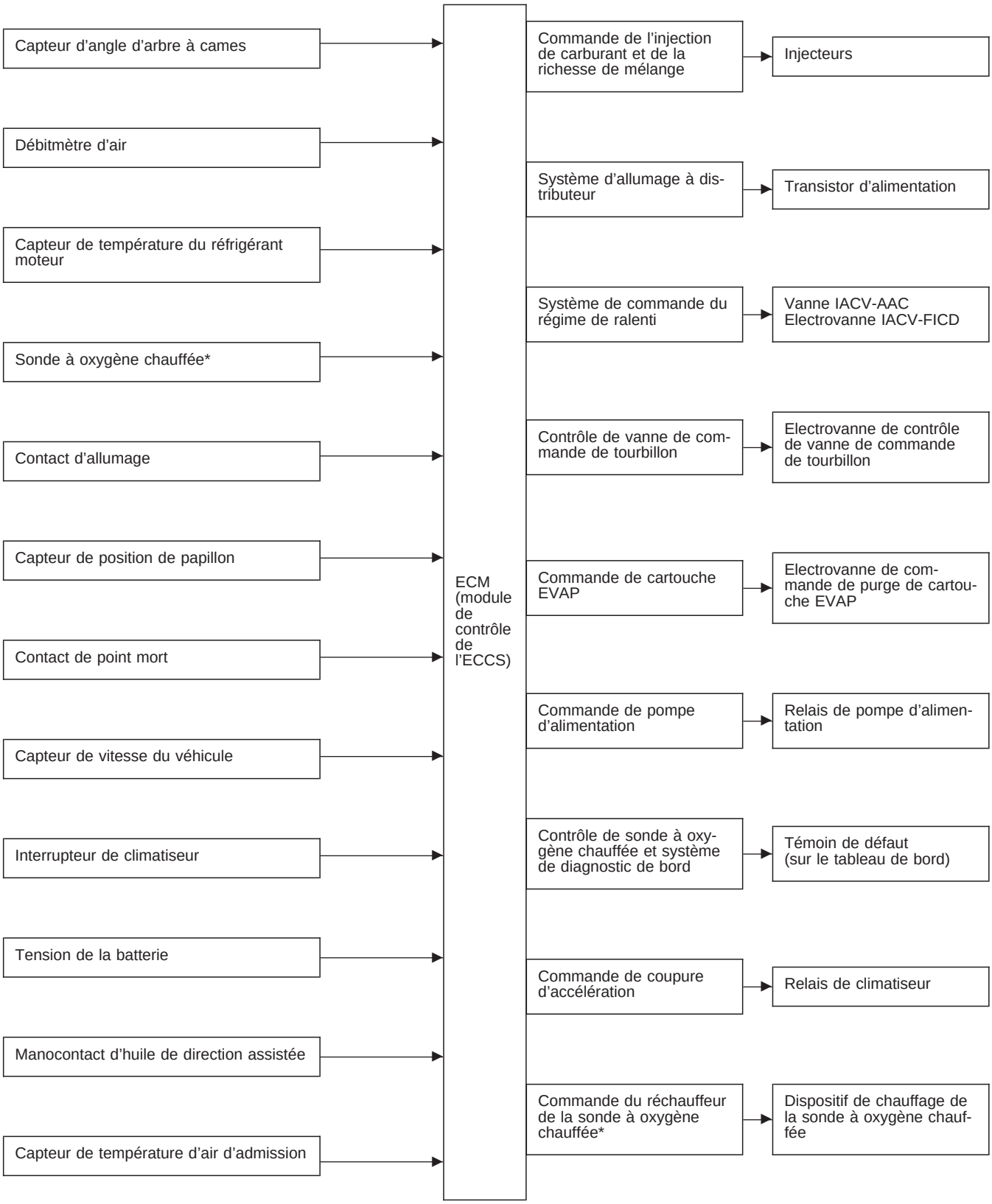

* : Conduite à gauche

Simpo PDF Merge and Split Unregistered Version - http://www.simpopdf.com

Système d'injection multipoint de carburant (MFI)

LIGNE DE SIGNAL D'ENTREE/SORTIE

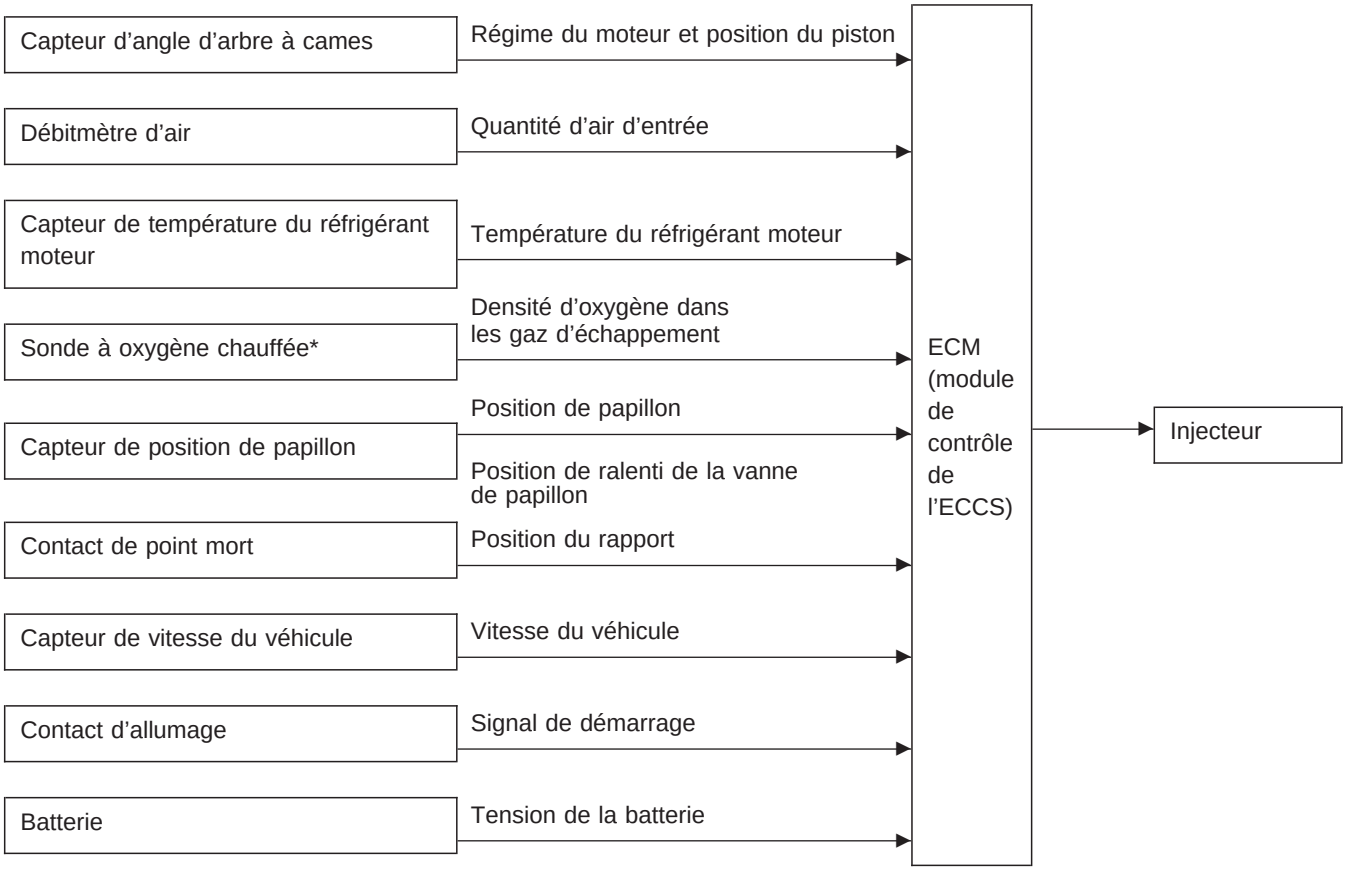

* : Conduite à gauche

PRINCIPE DE BASE DU SYSTEME D'INJECTION MULTIPOINT DE CARBURANT

La quantité de carburant injectée depuis l'injecteur de carburant est déterminée par l'ECM. L'ECM commande la durée d'ouverture du clapet (durée d'impulsion d'injection). La quantité de carburant injectée est une valeur de programme contenue dans la mémoire de l'ECM. La valeur de programme est prédéterminée par les conditions de marche du moteur. Ces conditions sont déterminées par des signaux d'entrée (régime du moteur et air d'admission) en provenance du capteur d'angle d'arbre à cames et du débitmètre d'air.

COMPENSATION DES VARIATIONS DES DIFFERENTES VALEURS D'INJECTION DE CARBURANT

La quantité de carburant injecté est compensée pour améliorer les performances du moteur. Cette compensation sera effective dans les diverses conditions de fonctionnement énumérées ci-après :

<Augmentation de la quantité de carburant>

- Pendant la période d'échauffement
- Au démarrage
- Pendant l'accélération
- Lorsque le moteur est chaud
- Fonctionnement à forte charge, à grande vitesse
- Lorsque la vanne de commande de tourbillon fonctionne

<Diminution de la quantité de carburant>

- Pendant la décélération
- Durant le fonctionnement à régime moteur élevé
- Température du réfrigérant moteur extrêmement élevée

Simpo PDF Merge and Split Unregistered Version - http://www.simpopdf.com

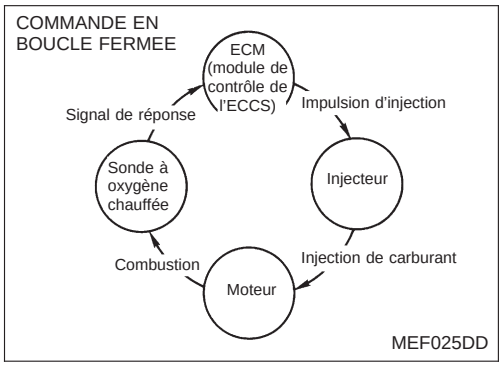

Système d'injection multipoint de carburant (MFI) (Suite)

REGULATION AUTOMATIQUE DE LA RICHESSE DE MELANGE

Le système de signal de réponse de richesse de mélange fournit le mélange optimal d'air et de carburant pour améliorer la conduite et le contrôle antipollution. Le catalyseur à trois voies peut mieux réduire les émissions de CO, HC et NOx. Ce système utilise une sonde à oxygène chauffée dans le collecteur d'échappement pour vérifier si le mélange du moteur est riche ou pauvre. L'ECM règle la largeur d'impulsion d'injection en fonction du signal de tension de la sonde. Pour plus d'informations sur la sonde à oxygène chauffée, consulter la page EC-129. Ceci maintient la richesse de mélange dans la gamme stoechiométrique (mélange idéal air/carburant).
Ce stade est désigné comme étant la condition de commande en boucle fermée.

COMMANDE EN BOUCLE OUVERTE

La condition de commande en boucle ouverte se rapporte à la détection de l'une des conditions suivantes par l'ECM. La commande de signal s'interrompt afin de maintenir une combustion de carburant stabilisée.

- Décélération et accélération
- Fonctionnement à forte charge, à grande vitesse
- Ralenti
- Défaut de la sonde à oxygène chauffée ou de son circuit
- Activation insuffisante de la sonde à oxygène chauffée à basse température du réfrigérant moteur
- Température de liquide de refroidissement élevée
- Pendant la période d'échauffement
- Au démarrage

COMMANDE D'AUTO-INSTRUCTION DE RICHESSE DU MELANGE

Le système de commande de régulation automatique de la richesse du mélange surveille le signal de la richesse du mélange transmis par la sonde à oxygène chauffée. Ce signal de réponse est ensuite envoyé à l'ECM. L'ECM contrôle la richesse du mélange de base le plus près possible de la richesse de mélange théorique. Toutefois, la richesse de base du mélange n'est pas nécessairement réglée comme cela est conçu à l'origine. Tant les tolérances de fabrication (à savoir le fil chaud du débitmètre d'air) que les modifications des caractéristiques pendant le fonctionnement (par exemple l'engorgement des injecteurs) affectent directement la richesse.
Par conséquent, la différence entre le mélange de base et le mélange théorique est contrôlée par ce système. Ceci est alors calculé en termes de ''durée d'impulsion d'injection'' pour compenser automatiquement la différence entre les deux richesses.

Simpo PDF Merge and Split Unregistered Version - http://www.simpopdf.com

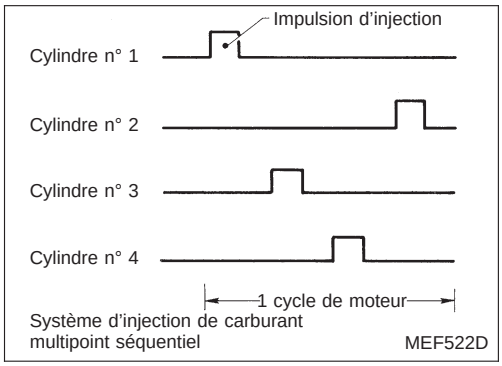

Système d'injection de carburant multipoint séquentiel
MEF522D

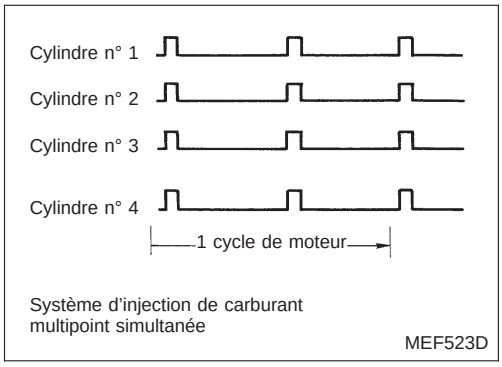

Système d'injection de carburant multipoint simultanée
MEF523D

Système d'injection multipoint de carburant (MFI) (Suite)

SYSTEME D'INJECTION DE CARBURANT

Deux types de systèmes sont utilisés.

Système d'injection multipoint séquentielle

Le carburant est injecté dans chaque cylindre à chaque cycle moteur, en fonction de l'ordre d'allumage. Ce système est utilisé lorsque le moteur tourne.

Système d'injection multipoint simultanée

Le carburant est injecté simultanément dans les quatre cylindres deux fois par cycle moteur. En d'autres termes, des signaux d'impulsion de même amplitude sont transmis simultanément de l'ECM.
Les quatre injecteurs reçoivent ainsi des signaux deux fois par cycle moteur.
Ce système est utilisé au démarrage du moteur et/ou lorsque le système de sécurité (CPU) est actif.

COUPURE DE L'ALIMENTATION DE CARBURANT

L'alimentation de carburant à chaque cylindre est coupée lors de la décélération ou du surrégime.

Simpo PDF Merge and Split Unregistered Version - http://www.simpopdf.com

Système d'allumage à distributeur (DI)

LIGNE DE SIGNAL D'ENTREE/SORTIE

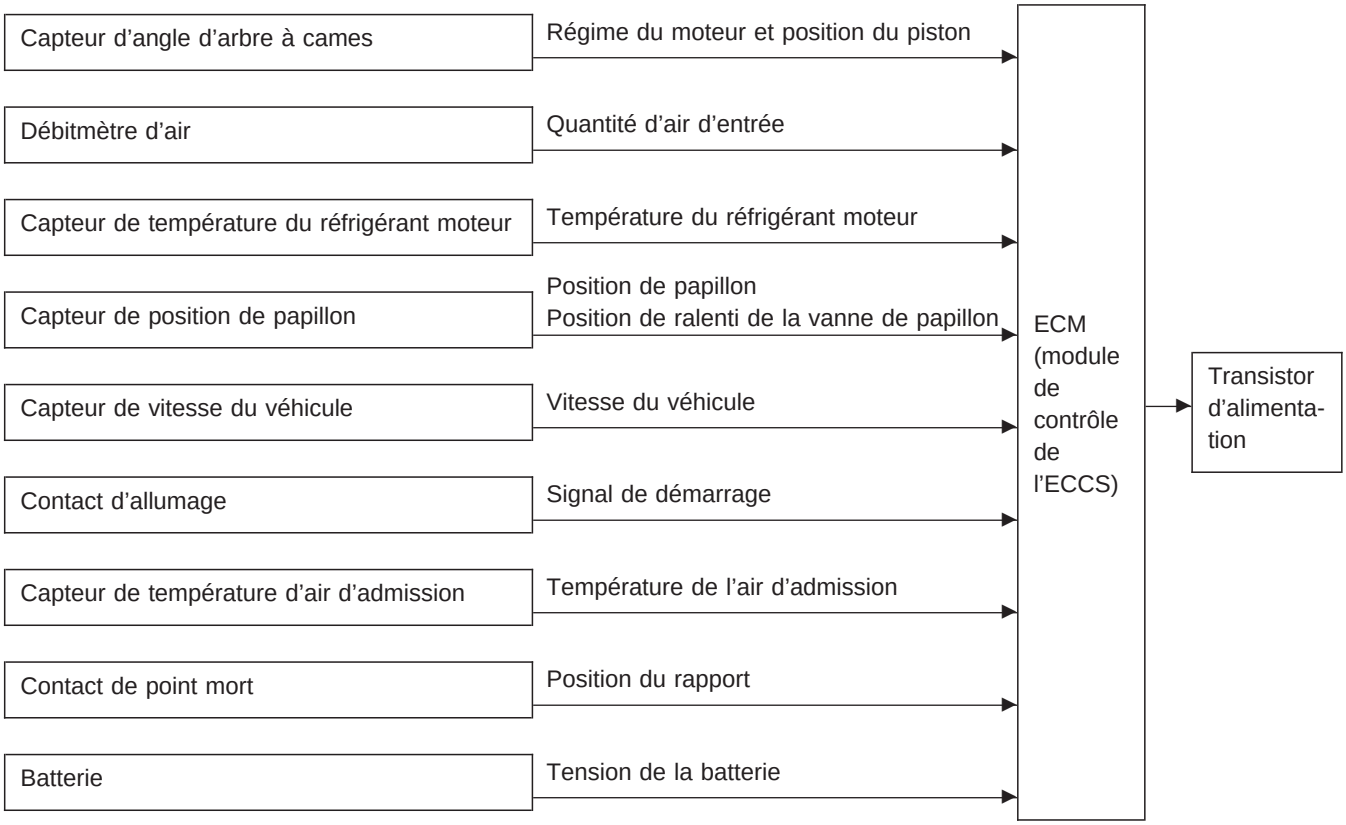

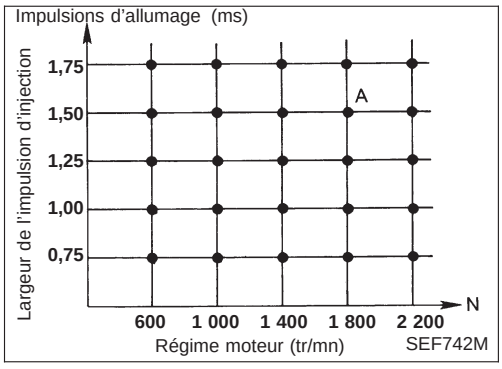

DESCRIPTION DU SYSTEME

Le calage d'allumage est contrôlé par l'ECM de manière à maintenir le meilleur mélange air/carburant dans toutes les conditions de marche du moteur.

Les données de calage d'allumage sont mémorisées dans l'ECM. Ces données sont représentées sur le diagramme ci-contre.

L'ECM détecte des informations telles que la largeur des impulsions d'injection et le signal du capteur d'angle d'arbre à cames. En réponse à cette information, des signaux d'allumage sont transmis au transistor d'alimentation.

Ex. N : 1 800 tr/mn, Impulsions d'allumage : 1,50 ms
A° avant P.M.H.

Dans les conditions suivantes, le calage de l'allumage est révisé par l'ECM en fonction des autres données mémorisées dans l'ECM.

1 Au démarrage
2 Pendant la période d'échauffement
3 Au ralenti
4 Lorsque la vanne de commande de tourbillon fonctionne
5 Lorsque le moteur est chaud
6 Pendant l'accélération

Simpo PDF Merge and Split Unregistered Version - http://www.simpopdf.com

Commande de coupure de climatisation

LIGNE DE SIGNAL D'ENTREE/SORTIE

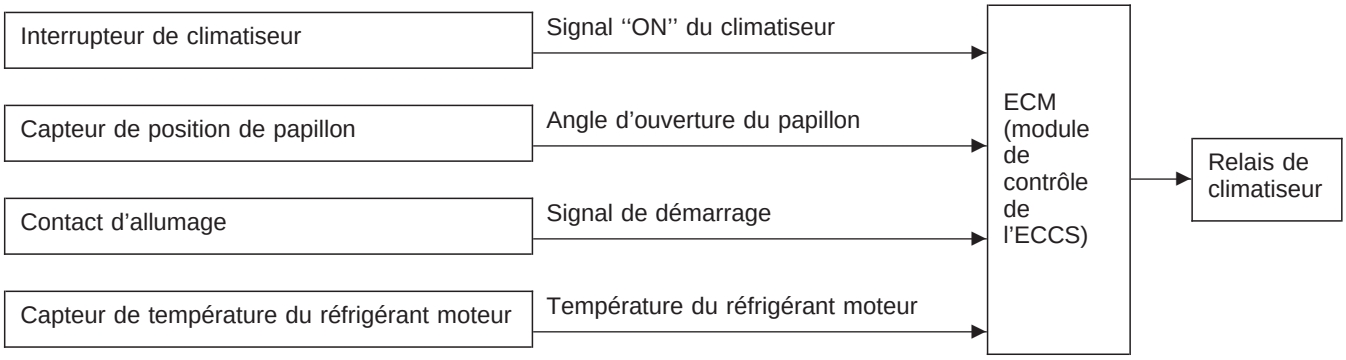

DESCRIPTION DU SYSTEME

Ce système permet d'améliorer le fonctionnement du moteur pendant le fonctionnement du climatiseur.
Le climatiseur s'éteint dans les conditions suivantes.

- Lorsque la pédale d'accélérateur est enfoncée à fond
- Lors du lancement du moteur
- Lorsque la température du réfrigérant devient excessivement élevée

Commande de coupure d'alimentation (à vide et à régime du moteur élevé)

LIGNE DE SIGNAL D'ENTREE/SORTIE

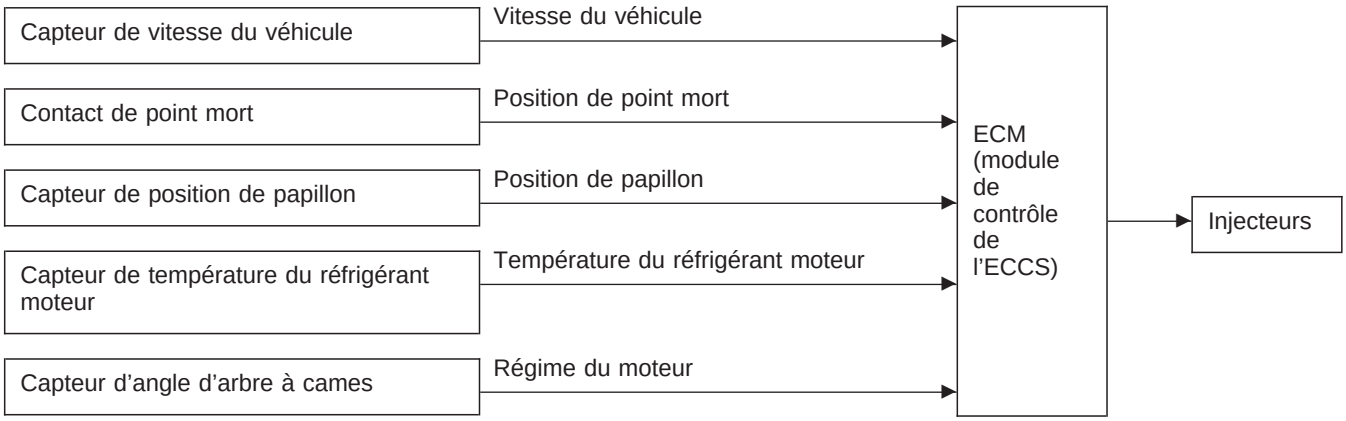

Si le régime du moteur est supérieur à 3 500 tr/mn sans charge (par exemple au point mort et à un régime de moteur supérieur à 3 500 tr/mn), l'alimentation de carburant sera coupée au bout d'un certain temps. Le moment exact de la coupure d'alimentation varie selon le régime du moteur.
La coupure d'alimentation est maintenue jusqu'à ce que le régime du moteur atteigne 1 500 tr/mn, point auquel la coupure d'alimentation est annulée.
NOTE :
Cette fonction diffère de la commande de décélération décrite au chapitre "Système d'injection multipoint (MFI)" à la page EC-14.

Simpo PDF Merge and Split Unregistered Version - http://www.simpopdf.com

Description

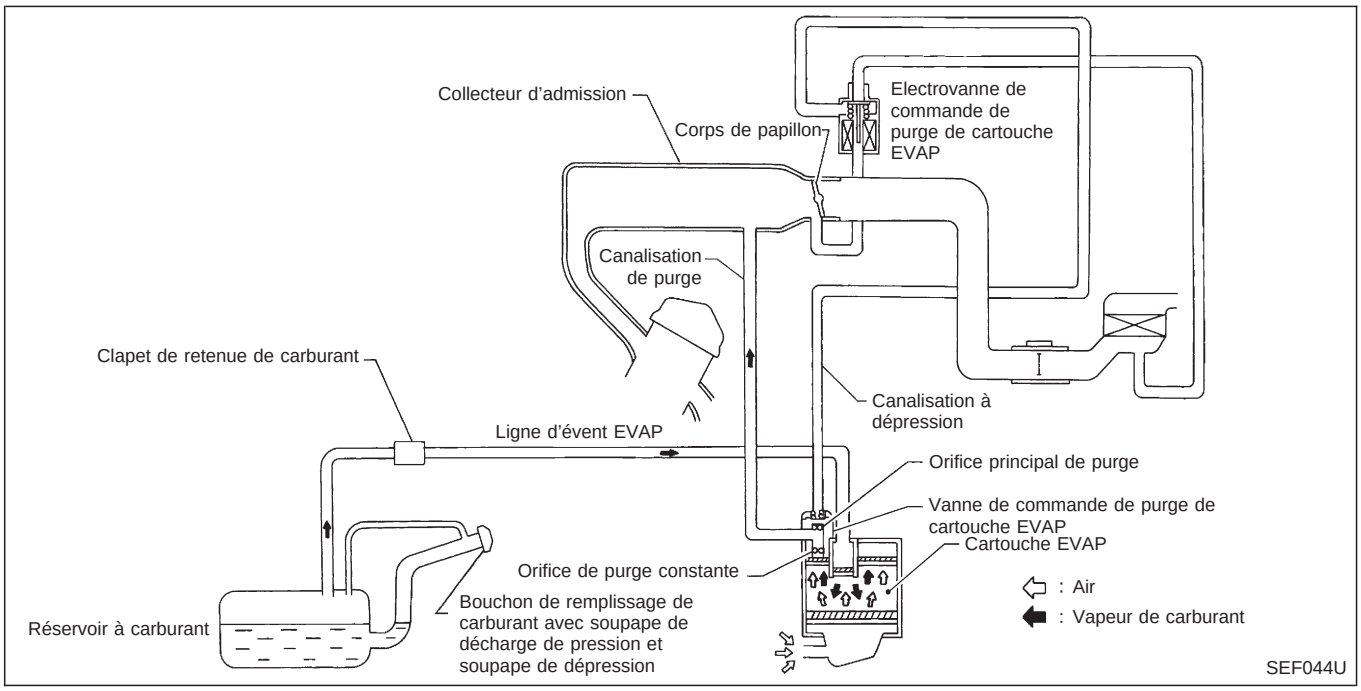

Le système de contrôle des émissions évaporatives est utilisé pour réduire les vapeurs d'hydrocarbure émises dans l'atmosphère par le système d'alimentation. Cette réduction des vapeurs d'hydrocarbures est accomplie par les charbons activés contenus dans la cartouche.
Les vapeurs de carburant provenant du réservoir hermétique sont orientées vers la cartouche EVAP quand le moteur est à l'arrêt. Ces vapeurs sont ensuite conservées dans la cartouche EVAP. Les vapeurs de carburant restent dans la cartouche EVAP jusqu'à ce que celle-ci soit purgée par l'air.
Lorsque le moteur est en marche, l'air est aspiré à travers le fond de la cartouche EVAP. Ainsi, les vapeurs de carburant sont amenées au collecteur d'admission.
Quand le moteur tourne au ralenti, la soupape de commande de purge de la cartouche EVAP est fermée. Seule une petite quantité de vapeur passe dans le collecteur d'admission par l'intermédiaire de l'orifice de purge permanente.
Quand le régime du moteur augmente et que la dépression au papillon s'accroît, la soupape de commande de purge de la cartouche EVAP s'ouvre. Les vapeurs sont alors aspirées à la fois par la purge principale et par les orifices de purge permanente.

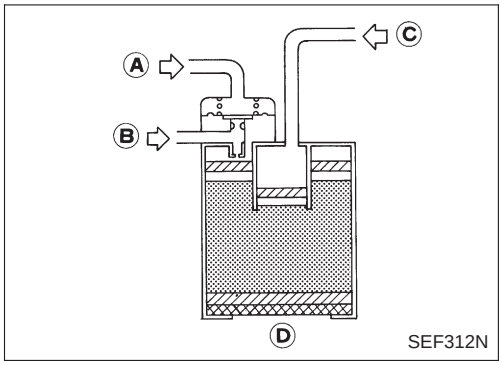

Inspection

CARTOUCHE EVAP

Vérifier la cartouche EVAP comme suit :
1. Souffler de l'air par l'orifice Ⓐ et vérifier qu'il n'y a pas de fuite.
2. Appliquer une dépression à l'orifice Ⓐ. [Environ −13,3 à −20,0 kPa (−133 à −200 mbar, −100 à −150 mmHg)]
3. Couvrir l'orifice Ⓓ avec la main.
4. Souffler de l'air dans l'orifice Ⓒ et vérifier qu'il s'écoule librement par l'orifice Ⓑ.

Simpo PDF Merge and Split Unregistered Version - http://www.simpopdf.com

Inspection (Suite)

CLAPET ANTI-RETOUR DE CARBURANT

1. Souffler de l'air par le raccord, côté réservoir de carburant. Une résistance considérable doit être ressentie et une partie de l'air doit s'écouler en direction de la cartouche EVAP.
2. Souffler de l'air par le raccord sur le côté de la cartouche EVAP.
   L'air ainsi soufflé doit être dirigé sans résistance vers le réservoir de carburant.
3. Si le fonctionnement du clapet de retenue de carburant est suspect durant les étapes 1 et 2 ci-dessus, remplacer le clapet.

Fonctionnement de la soupape de renversement (modèles avec conduite à droite uniquement)

S'assurer qu'il n'y a pas continuité du passage d'air lorsqu'on incline la soupape de renversement de 90° ou 180°.

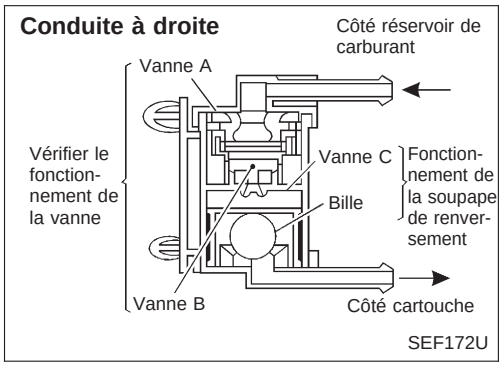

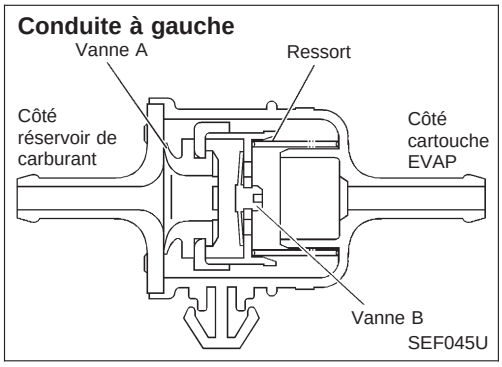

SOUPAPE DE DETENTE DE DEPRESSION DU RESERVOIR DE CARBURANT

1. Nettoyer soigneusement le logement de la soupape.
2. Vérifier la pression d'ouverture et la dépression de la soupape.
   Pression :
   15,3 - 20,0 kPa (0,1530 - 0,2001 bar, 0,156 - 0,204 kg/cm^2)
   Dépression :
   −6,0 à −3,3 kPa (−0,0598 à −0,0333 bar, −0,061 à −0,034 kg/cm^2)
3. Si hors spécification, remplacer le bouchon de remplissage de carburant comme un ensemble.

ATTENTION :
Utiliser uniquement un bouchon de réservoir d'origine comme pièce de rechange.

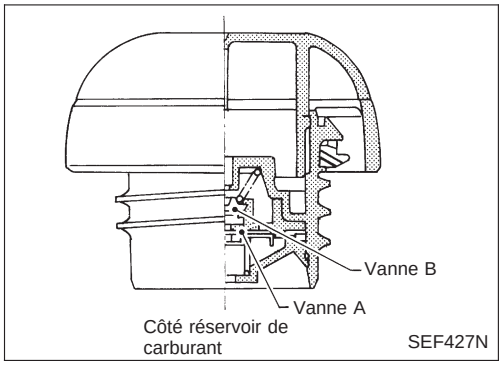

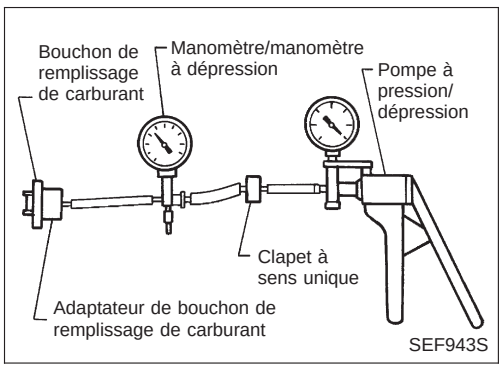

ELECTROVANNE DE COMMANDE DE PURGE DE CARTOUCHE EVAP

Consulter la page EC-146.

Simpo PDF Merge and Split Unregistered Version - http://www.simpopdf.com

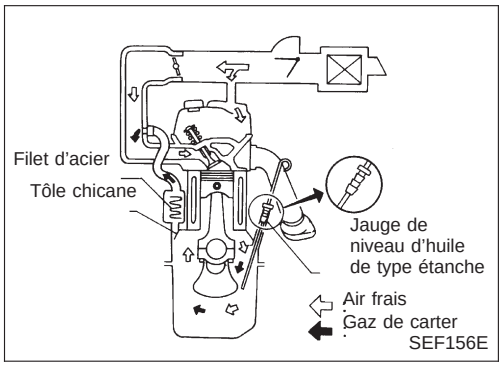

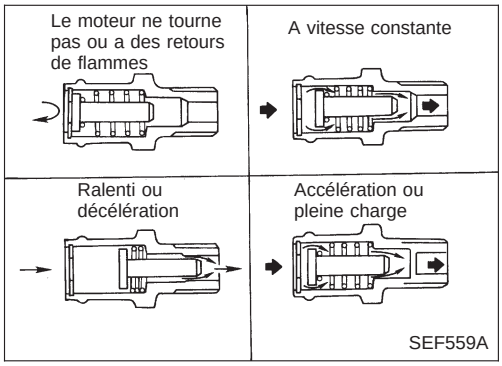

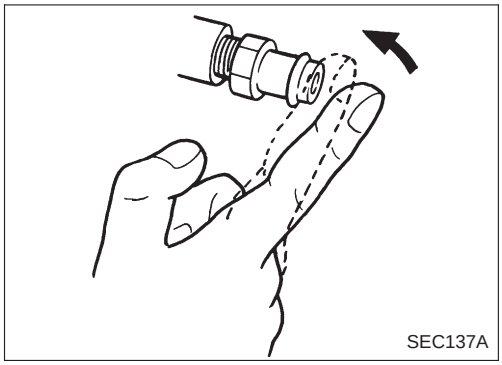

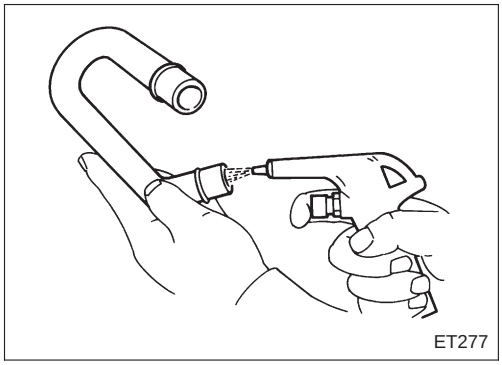

Description

Ce système renvoie les gaz de carter au collecteur d'admission. La vanne de recyclage des gaz en carter (P.C. V.) est montée pour conduire les gaz de carter au collecteur d'admission.
Durant le fonctionnement du moteur, alors que le papillon est partiellement ouvert, le collecteur d'admission aspire les gaz de carter par la vanne de recyclage des gaz en carter.
En condition normale, la vanne a une capacité suffisante pour aspirer tous les gaz de carter et une petite quantité d'air de ventilation.
L'air de ventilation est alors aspiré de la canalisation d'air dans le carter. Durant cette opération, l'air passe à travers le flexible qui raccorde les conduites d'admission au cache-culbuteur.
Quand le papillon est grand ouvert, la dépression régnant dans le collecteur est insuffisante pour aspirer les gaz de carter par la vanne. Les gaz traversent donc le raccord de flexible dans le sens opposé.
Sur les véhicules présentant une quantité excessive de gaz de carter, la vanne ne suffit pas aux besoins. Cela est dû au fait qu'une partie des gaz traverse le raccord de flexible et va au collecteur d'admission dans toutes les conditions de fonctionnement.

Inspection

VANNE PCV (ventilation positive du carter)

Le moteur tournant au ralenti, déposer la vanne PCV du séparateur de reniflard. Une soupape en bon état émet un sifflement lors du passage de l'air. On doit sentir immédiatement une forte succion lorsqu'on place un doigt à l'entrée de la vanne.

FLEXIBLE PCV

1. Vérifier les flexibles et les raccords de flexible pour déceler toute présence de fuite.
2. Débrancher tous les flexibles et les nettoyer à l'air comprimé. Remplacer tous les flexibles qui ne peuvent pas être débouchés de façon satisfaisante.

Simpo PDF Merge and Split Unregistered Version - http://www.simpopdf.com

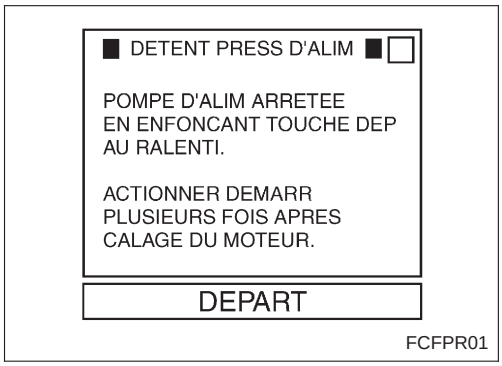

Détente de la pression d'alimentation

Avant de débrancher les canalisations d'alimentation, détendre la pression de carburant par mesure de sécurité.

1. Démarrer le moteur.
2. Effectuer une ''DETENT PRESS D'ALIM'' en mode ''SUPPORT TRAVAIL'' à l'aide du CONSULT.
   (Appuyer sur ''DEPART'' et, après le calage du moteur, lancer le moteur deux ou trois fois pour détendre complètement la pression d'alimentation).
3. Mettre le contact d'allumage sur ''ARRET''.

OU

1. Déposer le fusible de la pompe d'alimentation.
2. Démarrer le moteur.
3. Après que le moteur a calé, le relancer deux ou trois fois afin de dépressuriser le carburant.
4. Mettre le contact d'allumage sur ''OFF'' et brancher le fusible de pompe d'alimentation.

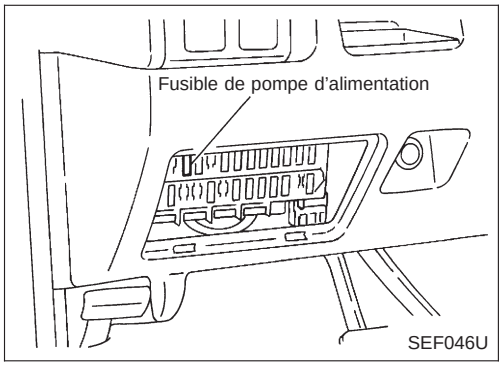

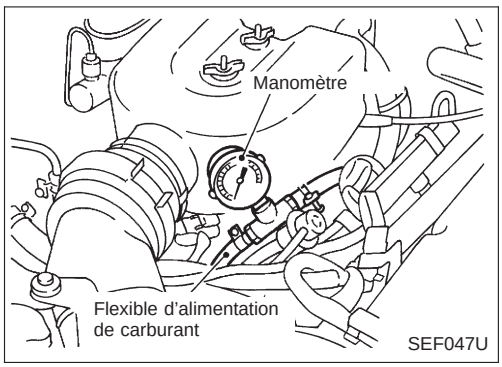

Vérification de la pression d'alimentation

- **Pour rebrancher une canalisation d'alimentation, toujours utiliser des colliers neufs.**
- **Veiller à ce que la vis de collier n'entre pas en contact avec une pièce voisine.**
- **Utiliser un tournevis dynamométrique pour serrer les colliers.**
- **Utiliser un manomètre pour vérifier la pression du carburant.**

1. Détendre totalement la pression de carburant (zéro bar), conformément au chapitre ci-dessus.
2. Déconnecter le flexible d'alimentation entre le filtre et le tuyau d'alimentation (côté moteur).
3. Monter le manomètre entre le filtre et le tube d'alimentation.
4. Démarrer le moteur et rechercher la présence de fuites de carburant.

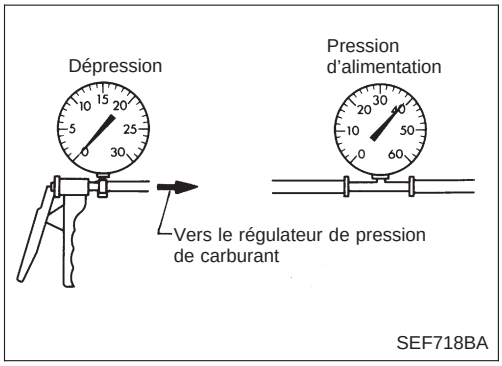

5. Lire la valeur indiquée par le manomètre d'alimentation.
   Au ralenti :
   Approximativement 235 kPa (2,35 bar, 2,4 kg/cm^2)
   Quelques secondes après que le contact d'allumage est passé de ''OFF'' à ''ON'' :
   Approximativement 294 kPa (2,94 bar, 3,0 kg/cm^2)
6. Arrêter le moteur et déconnecter le flexible à dépression du régulateur de pression d'alimentation du collecteur d'admission.
7. Boucher le collecteur d'admission avec un capuchon en caoutchouc.

Simpo PDF Merge and Split Unregistered Version - http://www.simpopdf.com

Vérification de la pression d'alimentation (Suite)

8. Connecter une source de dépression variable au régulateur de pression d'alimentation.
9. Démarrer le moteur et observer le cadran du manomètre au moment où la dépression change.

La pression du carburant doit diminuer parallèlement à l'augmentation de la dépression. Si les résultats ne sont pas satisfaisants, remplacer le régulateur de pression d'alimentation.

Simpo PDF Merge and Split Unregistered Version - http://www.simpopdf.com

Dépose et repose de l'injecteur

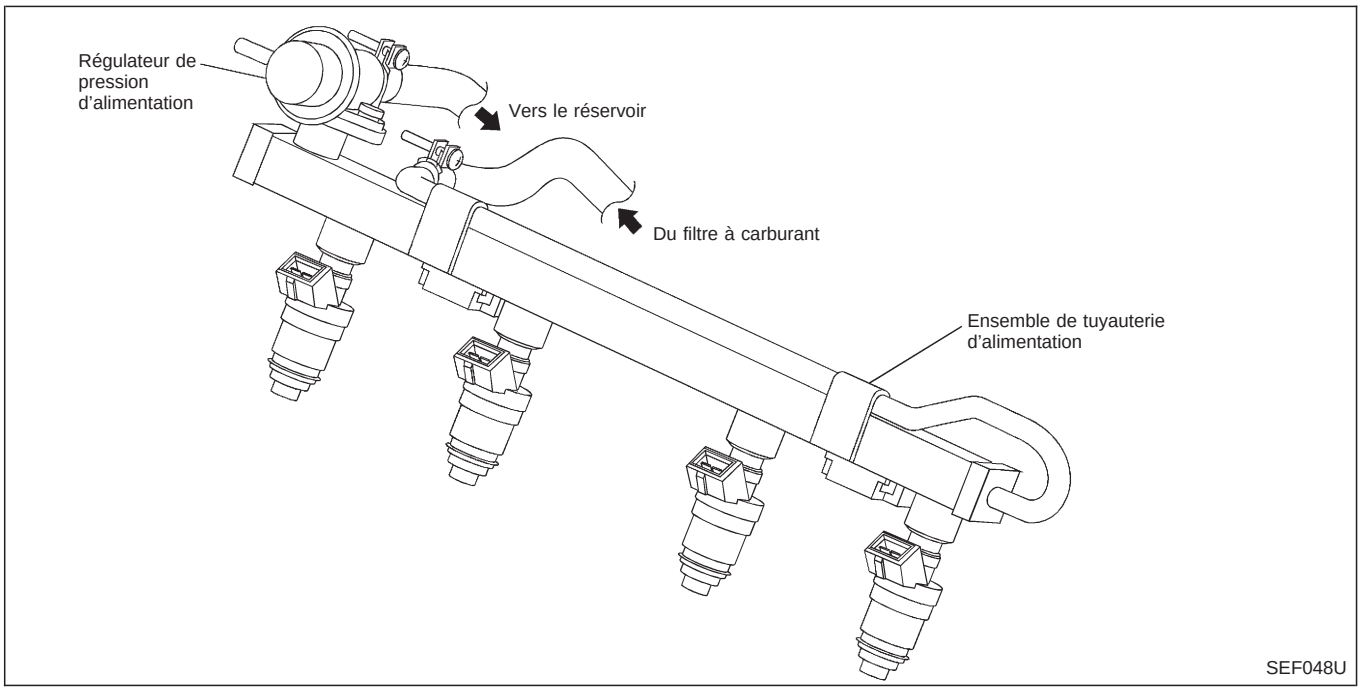

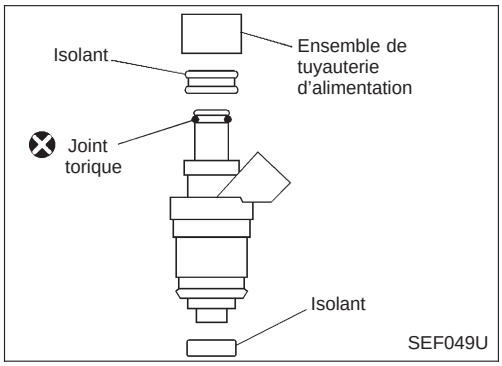

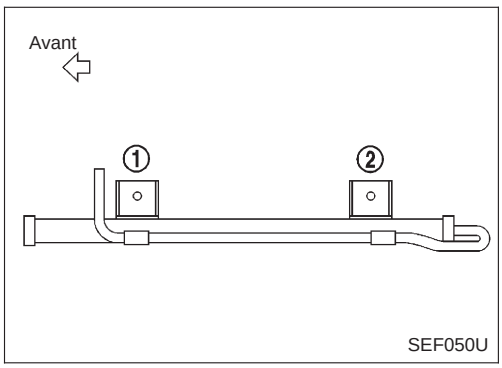

1. Détendre totalement la pression de carburant (zéro bar).
2. Déposer l'ensemble de tube à injection ainsi que les injecteurs du collecteur d'admission.
3. Déposer les injecteurs de l'ensemble de tube à injection

● Ne pas tirer sur le connecteur.

4. Monter l'injecteur sur l'ensemble du tuyau de carburant.

a. Nettoyer l'extérieur de la queue d'injecteur.
b. Utiliser des joints toriques neufs.

Toujours remplacer les joints toriques par des neufs.
Graisser les joints toriques avec une petite quantité d'huile moteur.

5. Reposer les injecteurs avec l'ensemble du tuyau de carburant sur le collecteur d'admission.

Serrer en ordre numérique comme indiqué sur la figure.

a. Premièrement, serrer tous les boulons de 7,8 à 10,8 N·m (0,8 à 1,1 kg-m).
b. Puis, serrer tous les boulons de 16 à 21 N·m (1,6 à 2,1 kg-m).

6. Monter les flexibles de carburant avec l'ensemble du tuyau de carburant.
7. Reposer toutes les pièces qui ont été déposées en procédant dans l'ordre inverse de la dépose.

ATTENTION :
Après avoir raccordé correctement les injecteurs à l'ensemble du tube d'alimentation, vérifier que les raccords ne fuient pas.

Simpo PDF Merge and Split Unregistered Version - http://www.simpopdf.com

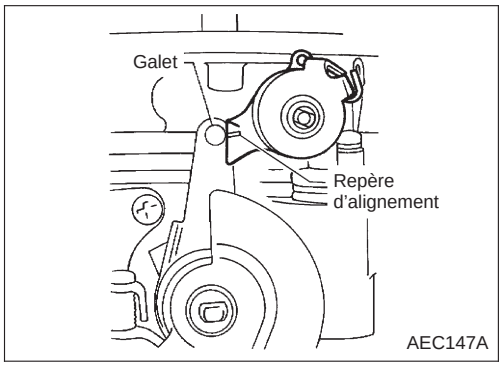

Inspection et réglage de la came de ralenti accéléré (FIC)

1. Déposer l'ensemble du filtre à air.
2. S'assurer que la marque de repère FIC est alignée sur le galet de levier comme indiqué sur la figure.

- Un repère d'alignement est marqué sur la came de ralenti accéléré pour que le sommet de came puisse être orienté dans le bon sens.

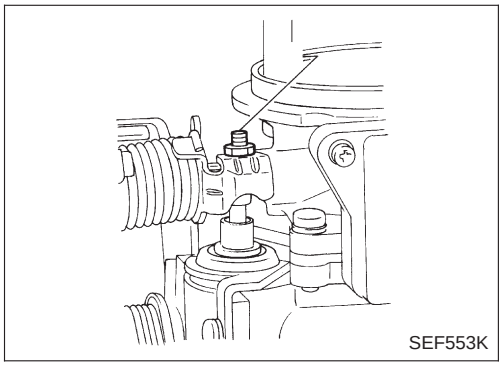

- Si nécessaire, régler la vis FIC Ⓐ jusqu'à ce que le repère d'alignement soit centré sur le galet de levier.

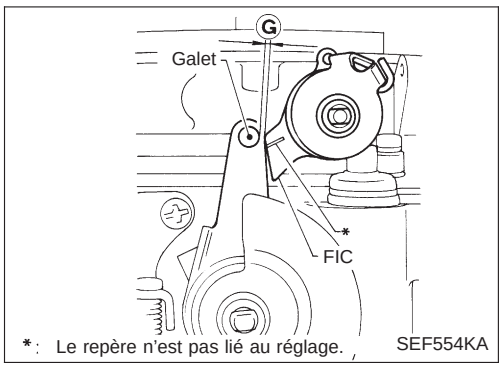

3. Démarrer le moteur et le laisser chauffer jusqu'à sa température de fonctionnement.
4. Mesurer le jeu Ⓖ entre le galet de levier et le haut du FIC avec une jauge d'épaisseur comme indiqué sur la figure.

Jeu Ⓖ :
2,0 - 2,6 mm

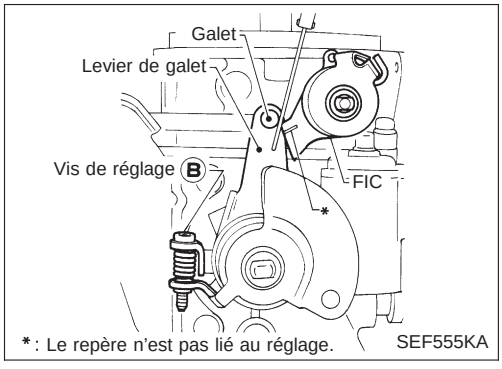

- Si le jeu Ⓖ n'a pas la valeur spécifiée, agir sur la vis de réglage Ⓖ de 2,3 mm pour régler le jeu Ⓑ.

Simpo PDF Merge and Split Unregistered Version - http://www.simpopdf.com

Réglage du régime de ralenti/calage d'allumage/richesse de mélange de ralenti

PREPARATION

- **S'assurer que les pièces suivantes sont en bon état.**

(1) Batterie
(2) Système d'allumage
(3) Niveaux d'huile moteur et de liquide de refroidissement
(4) Fusibles
(5) Connecteur du faisceau de l'ECM
(6) Flexibles à dépression
(7) Système d'admission d'air (Bouchon de remplissage d'huile, jauge de niveau d'huile, etc).
(8) Pression d'alimentation
(9) Taux de compression moteur
(10) Papillon d'accélérateur

- **Sur les modèles équipés d'un climatisateur, ces contrôles doivent être effectués lorsque le climatiseur est à l'arrêt.**
- **Lors de la mesure du pourcentage de ''CO'', introduire la sonde de plus de 40 cm dans le tuyau d'échappement.**
- **Eteindre les phares et arrêter la soufflerie de chauffage et le désembuage de lunette arrière.**
- **Aligner les roues avant en position de marche en ligne droite.**

CONDUITE A GAUCHE

Ordre d'inspection générale

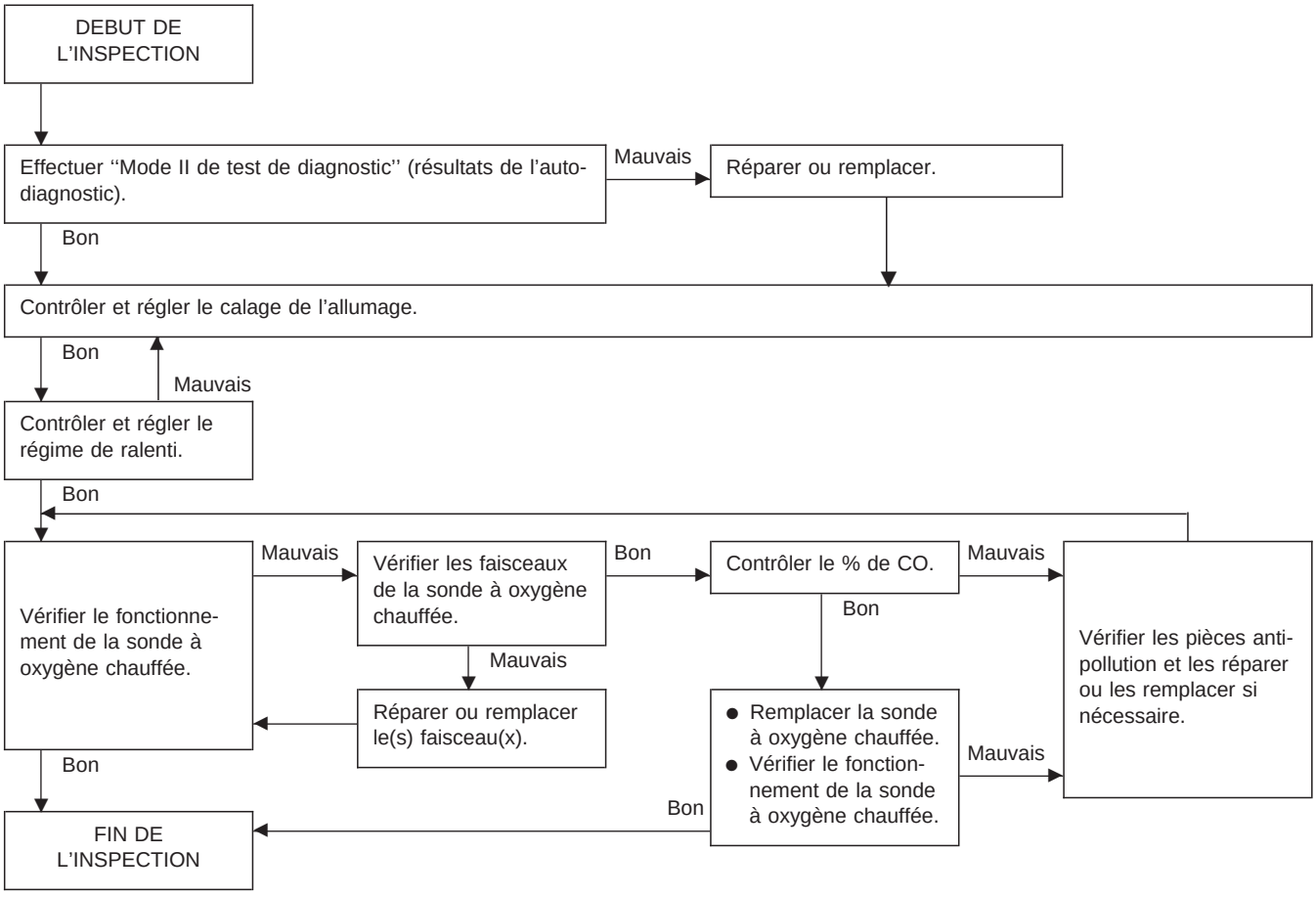

Simpo PDF Merge and Split Unregistered Version - http://www.simpopdf.com

Réglage du régime de ralenti/calage d'allumage/richesse de mélange de ralenti (Suite)

A

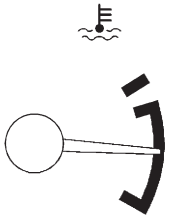

SEF146U

B

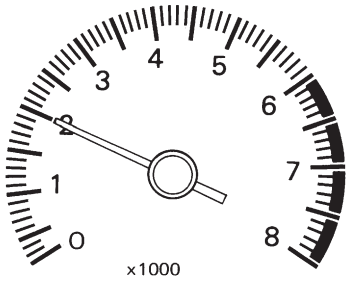

SEF247F

C

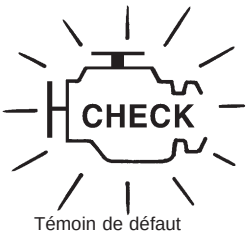

Témoin de défaut

SEF051PA

D

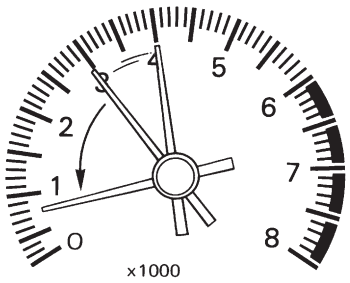

SEF248F

E

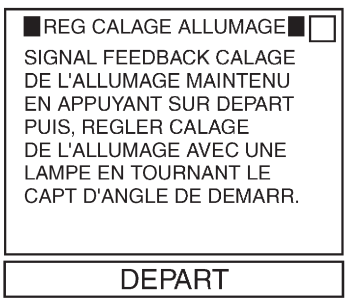

FCITA02

DEPART

Vérifier visuellement les points suivants :
- Filtre à air colmaté
- Fuites des flexibles et conduits
- Connecteurs électriques
- Joint plat
- Fonctionnements de la vanne de papillon et du capteur de position de papillon

A

Démarrer le moteur et le laisser chauffer jusqu'à ce que l'indicateur de température du réfrigérant moteur soit au milieu du cadran, et s'assurer que le régime moteur est inférieur à 1 000 tr/mn.

B

Ouvrir le capot et faire tourner le moteur à environ 2 000 tr/mn pendant environ 2 minutes à vide.

C

Effectuer le ''Mode II de test de diagnostic'' (résultats de l'autodiagnostic).

Bon / Mauvais

Mauvais → Réparer ou remplacer les composants si nécessaire.

D

Faire tourner le moteur à environ 2 000 tr/mn, à vide, pendant environ 2 minutes.
Emballer le moteur deux ou trois fois à vide puis faire tourner le moteur au ralenti pendant 1 minute.

E

1. Sélectionner ''REG CALAGE ALLUMAGE'' en mode ''SUPPORT TRAVAIL''.
2. Appuyer sur ''DEPART''.

OU

1. Arrêter le moteur et débrancher le connecteur de faisceau du capteur de position de papillon.
2. Démarrer le moteur.

Emballer le moteur (2 000 - 3 000 tr/mn) 2 ou 3 fois à vide puis laisser tourner le moteur au ralenti.

F

Contrôler le calage de l'allumage à l'aide d'une lampe stroboscopique.

10°±2°avant P.M.H.

Bon → Ⓐ / Mauvais → Ⓑ

Simpo PDF Merge and Split Unregistered Version - http://www.simpopdf.com

Réglage du régime de ralenti/calage d'allumage/richesse de mélange de ralenti (Suite)

F

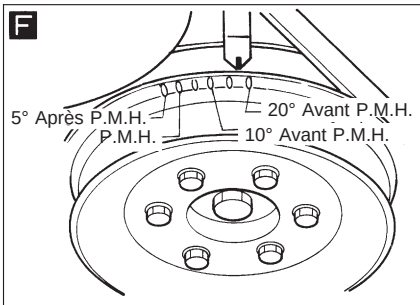

SMA189AA

G

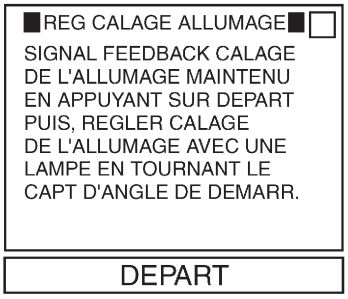

FCITA02

H

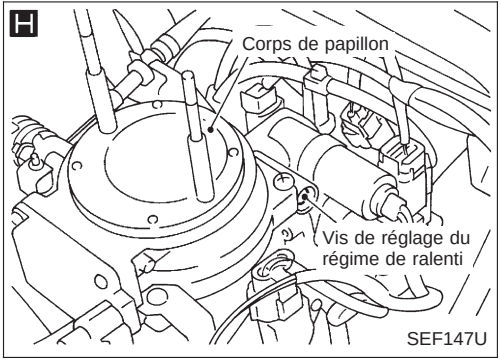

SEF147U

I

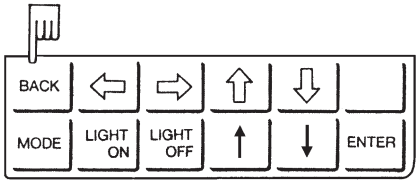

SEF913J

J

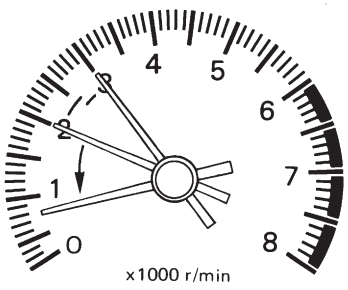

SEF602K

Ⓐ

Ⓑ

Régler le calage de l'allumage à la valeur spécifiée en faisant tourner le distributeur après avoir desserré les boulons de fixation du distributeur.

10°±2°avant P.M.H.

Ⓕ

1. Sélectionner "REG CALAGE ALLUMAGE" en mode "SUPPORT TRAVAIL".
2. Appuyer sur "DEPART".

OU

1. Arrêter le moteur et débrancher le connecteur de faisceau du capteur de position de papillon.
2. Démarrer le moteur.

G

Vérifier le régime de ralenti de base.

Lire le signal de ralenti en mode "REG CALAGE ALLUMAGE" avec le CONSULT.

OU

Vérifier le régime de ralenti.

750±25tr/mn

Bon / Mauvais

Emballer le moteur (2 000 - 3 000 tr/mn) 2 ou 3 fois à vide puis laisser tourner le moteur au ralenti.

H

Régler le régime de ralenti de base en tournant la vis de réglage du régime de ralenti.

750±25 tr/mn

I

Appuyer sur la touche de retour "BACK".

OU

1. Couper le moteur et brancher le connecteur de faisceau du capteur de position de papillon.
2. Démarrer le moteur.

J

Emballer le moteur (2 000 - 3 000 tr/mn) 2 ou 3 fois à vide puis laisser tourner le moteur au ralenti.

Ⓒ

Simpo PDF Merge and Split Unregistered Version - http://www.simpopdf.com

Réglage du régime de ralenti/calage d'allumage/richesse de mélange de ralenti (Suite)

K

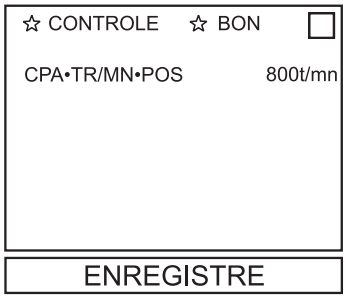

FCMNC05

L

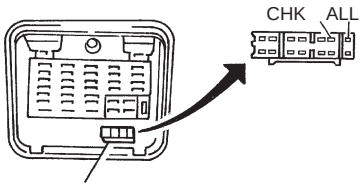

Connecteur de liaison des données pour CONSULT (Brancher les bornes CHK et IGN à un faisceau approprié).

SEF909P

M

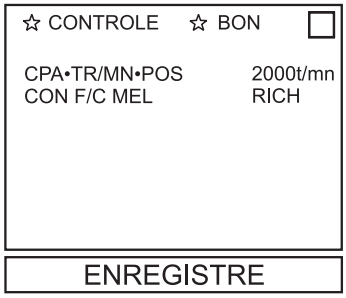

FCMNC07

N

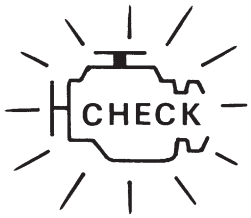

SEF051P

Ⓒ

K

Vérifier le régime de ralenti à cible.

Lire le régime de ralenti en mode "CONTROLE DE DONNEES" avec CONSULT.

OU

Vérifier le régime de ralenti.

800±50 tr/mn

Bon

Mauvais

Vérifier la vanne IACV-AAC et la remplacer si nécessaire.

Vérifier le faisceau de vanne IACV-AAC et le réparer si nécessaire.

Contrôler le fonctionnement de l'ECM* en le remplaçant par un autre module que l'on sait bon.

* L'ECM peut être à l'origine d'un problème, bien qu'il s'agisse d'une éventualité rare.

L

Passer en mode II de test de diagnostic (contrôle de la sonde à oxygène chauffée).

Faire tourner le moteur à environ 2 000 tr/mn, à vide, pendant environ 2 minutes.

M N

Vérifier le signal de la sonde à oxygène chauffée.

1. Voir "CON F/C MEL" en mode "CONTROLE DE DONNEES".
2. En maintenant le régime moteur à 2 000 tr/mn à vide (moteur suffisamment chaud), vérifier que le contrôleur oscille entre "PAUVRE" et "RICHE" plus de 5 fois en 10 secondes.
   1 cycle : RICHE → PAUVRE → RICHE
   2 cycles : RICHE → PAUVRE → RICHE → PAUVRE → RICHE

Mauvais → Ⓓ

OU

S'assurer que le témoin de défaut clignote plus de 5 fois en 10 secondes à 2 000 tr/mn.

Bon

FIN DE L'INSPECTION

Simpo PDF Merge and Split Unregistered Version - http://www.simpopdf.com

Réglage du régime de ralenti/calage d'allumage/richesse de mélange de ralenti (Suite)

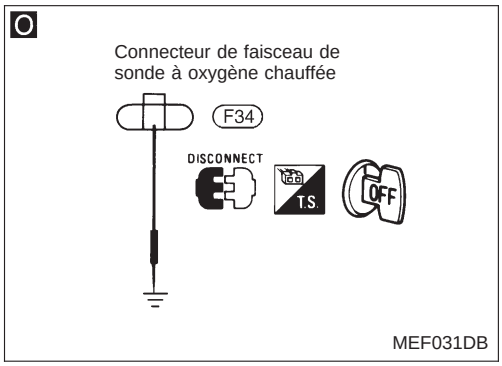

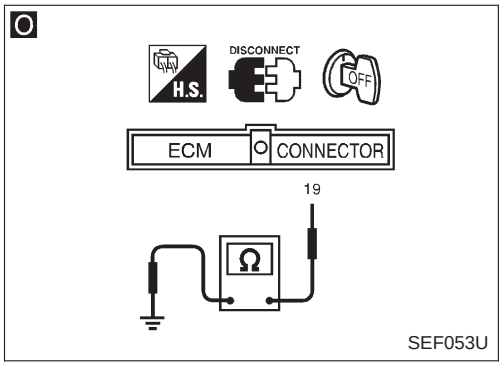

Ⓓ

Vérifier le faisceau de la sonde à oxygène chauffée :
1. Arrêter le moteur et déconnecter le câble de masse de la batterie.
2. Débrancher le connecteur de faisceau de l'ECM du côté de l'ECM.
3. Débrancher le connecteur de faisceau de la sonde à oxygène chauffée et brancher la borne de la sonde à la masse à l'aide d'un câble volant.
4. Vérifier la continuité entre la borne ⑲ du connecteur de faisceau et la masse en métal sur la carrosserie.

Il y a continuité ... Bon
Il n'y a pas continuité ... Mauvais

Bon

Mauvais

Réparer le faisceau. → Ⓕ

Brancher le connecteur de faisceau de l'ECM sur l'ECM.

1. Sélectionner ''TEMP MOTEUR'' en mode ''TEST ACTIF''.
2. Régler la ''TEMP MOTEUR'' sur 20°C.

OU

- Débrancher le connecteur de faisceau du capteur de température du réfrigérant moteur.
- Brancher une résistance (2,5 kΩ) entre les bornes du connecteur de faisceau du capteur de température du réfrigérant moteur.

Démarrer le moteur et le laisser chauffer jusqu'à ce que l'indicateur de température du liquide de refroidissement du moteur soit au milieu du cadran.
(S'assurer que l'on démarre le moteur après avoir sélectionné ''TEMP MOTEUR'' ou avoir installé une résistance de 2,5 kΩ).

Emballer le moteur deux ou trois fois à vide, puis laisser tourner le moteur au ralenti.

Ⓔ

Simpo PDF Merge and Split Unregistered Version - http://www.simpopdf.com

Réglage du régime de ralenti/calage d'allumage/richesse de mélange de ralenti (Suite)

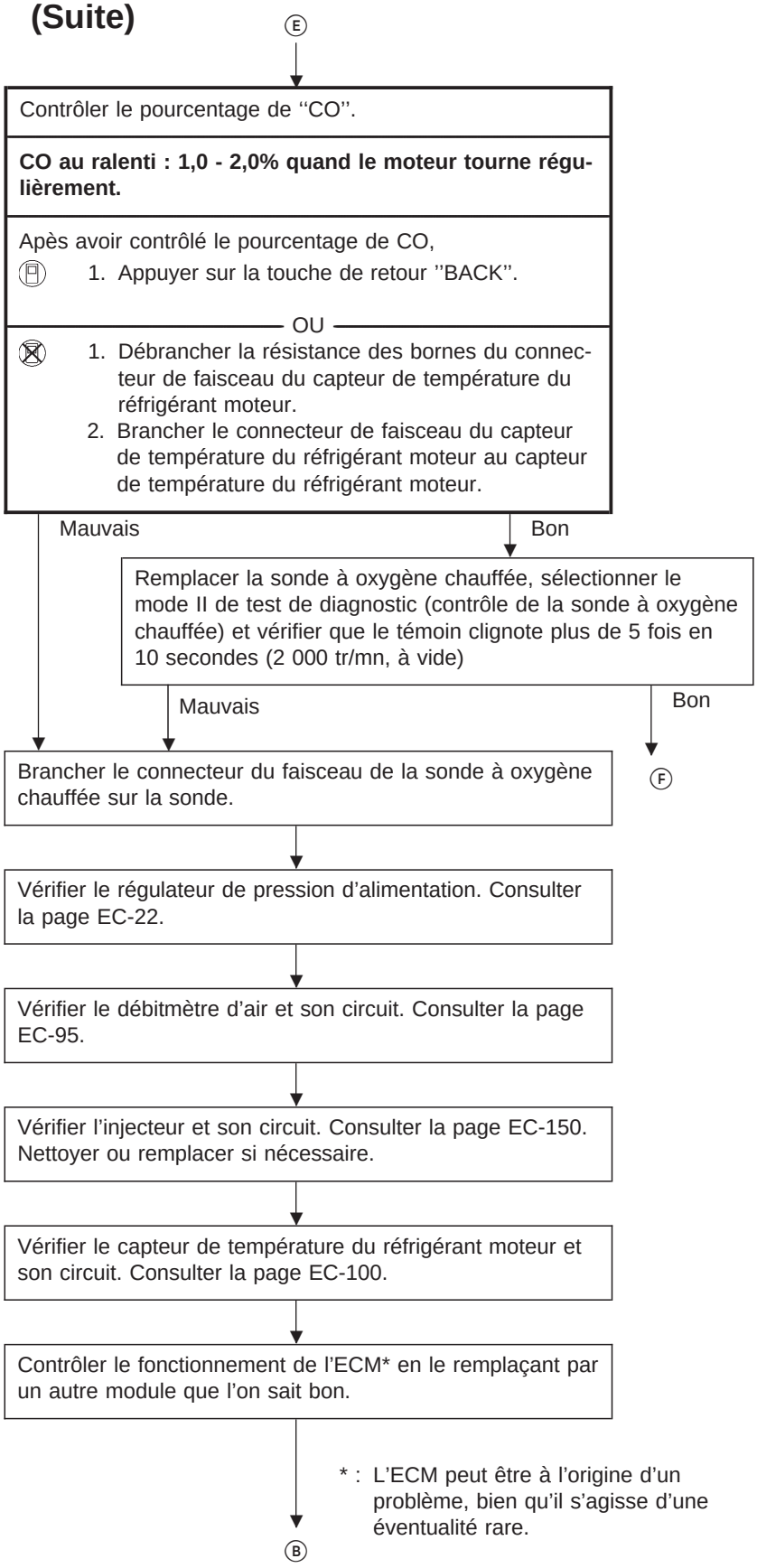

Simpo PDF Merge and Split Unregistered Version - http://www.simpopdf.com

Réglage du régime de ralenti/calage d'allumage/richesse de mélange de ralenti (Suite)

CONDUITE A DROITE

Ordre d'inspection générale

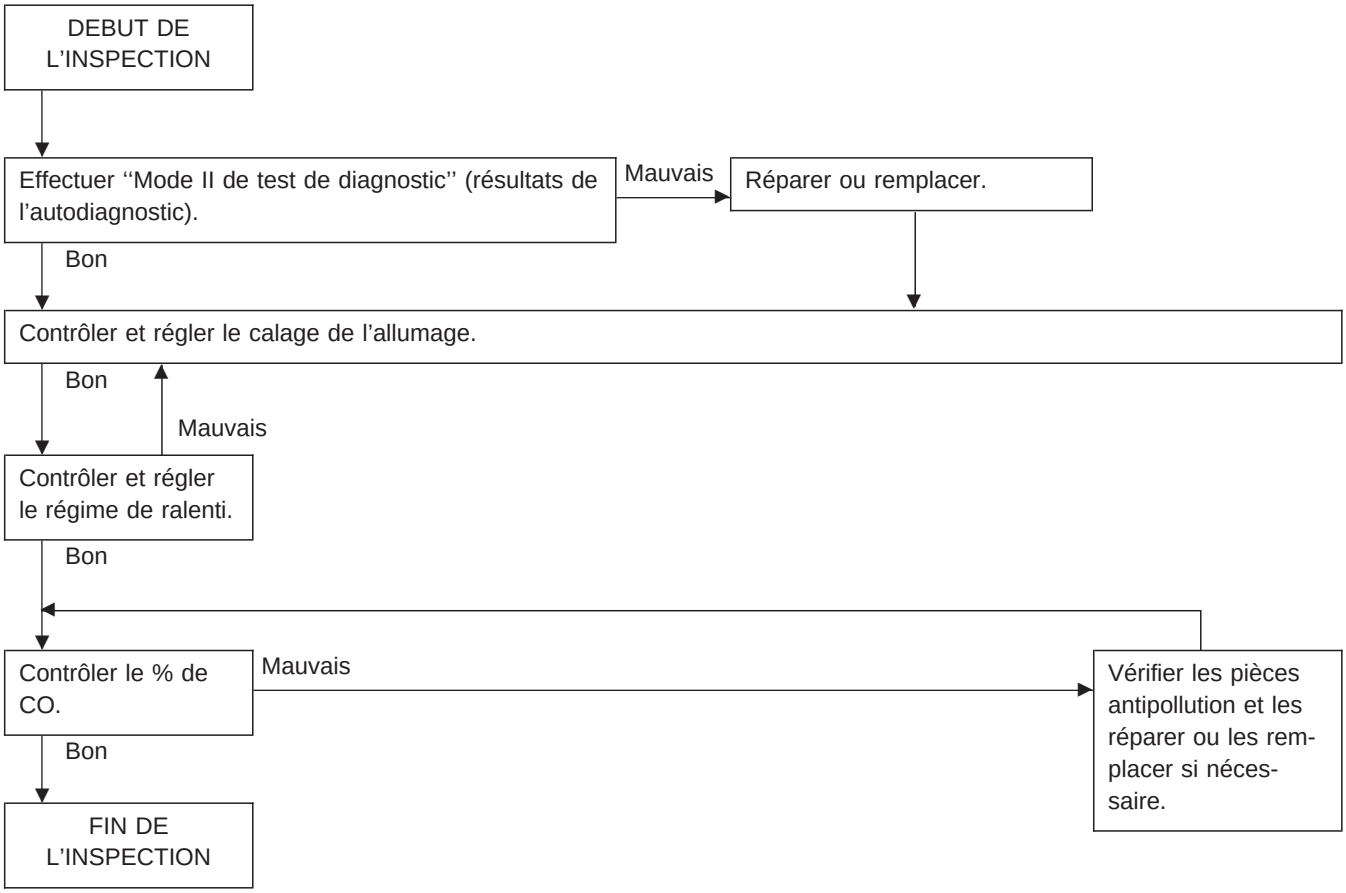

Simpo PDF Merge and Split Unregistered Version - http://www.simpopdf.com

Réglage du régime de ralenti/calage d'allumage/richesse de mélange de ralenti (Suite)

Vérification et réglage du régime de ralenti, du calage d'allumage

A

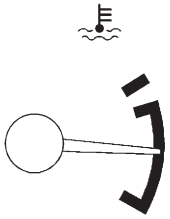

SEF146U

B

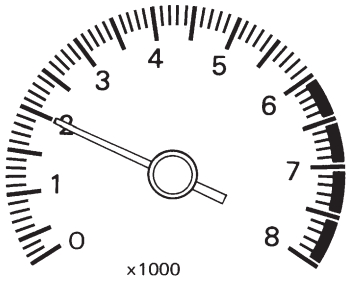

SEF247F

C

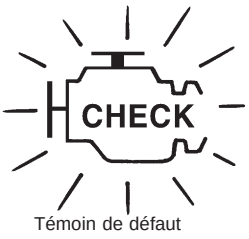

Témoin de défaut

SEF051PA

D

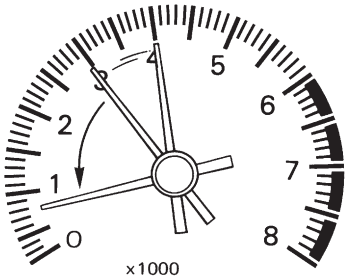

SEF248F

E

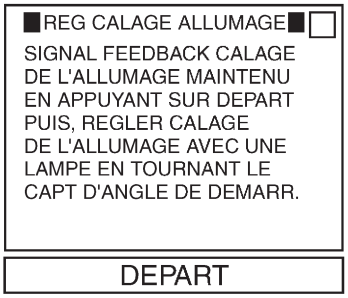

FCITA02

DEPART

Vérifier visuellement les points suivants :
- Filtre à air colmaté
- Fuites des flexibles et conduits
- Connecteurs électriques
- Joint plat
- Fonctionnements de la vanne de papillon et du capteur de position de papillon

A

Démarrer le moteur et le laisser chauffer jusqu'à ce que l'indicateur de température du réfrigérant moteur soit au milieu du cadran, et s'assurer que le régime moteur est inférieur à 1 000 tr/mn.

B

Ouvrir le capot et faire tourner le moteur à environ 2 000 tr/mn pendant environ 2 minutes à vide.

C

Effectuer le ''Mode II de test de diagnostic'' (résultats de l'autodiagnostic).

Bon

Mauvais

Réparer ou remplacer les composants si nécessaire.

D

Faire tourner le moteur à environ 2 000 tr/mn, à vide, pendant environ 2 minutes.
Emballer le moteur deux ou trois fois à vide puis faire tourner le moteur au ralenti pendant 1 minute.

← (D)

E

1. Sélectionner ''REG CALAGE ALLUMAGE'' en mode ''SUPPORT TRAVAIL''.
2. Appuyer sur ''DEPART''.

OU

1. Arrêter le moteur et débrancher le connecteur de faisceau du capteur de position de papillon.
2. Démarrer le moteur.

Emballer le moteur (2 000 - 3 000 tr/mn) 2 ou 3 fois à vide puis laisser tourner le moteur au ralenti.

F

Contrôler le calage de l'allumage à l'aide d'une lampe stroboscopique.

10°±2° avant P.M.H.

Bon → (A)

Mauvais → (B)

Simpo PDF Merge and Split Unregistered Version - http://www.simpopdf.com

Réglage du régime de ralenti/calage d'allumage/richesse de mélange de ralenti (Suite)

F

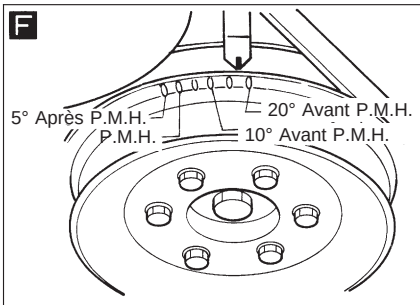

SMA189AA

G

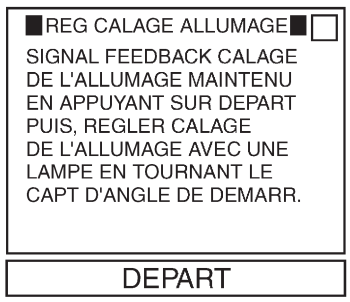

FCITA02

H

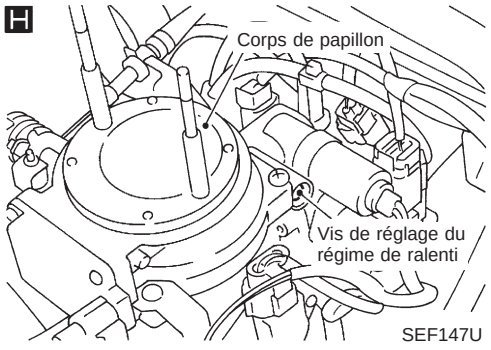

SEF147U

I

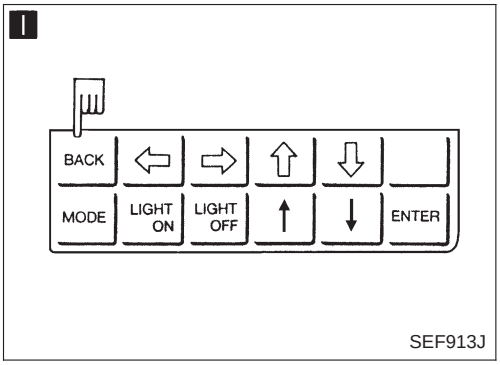

SEF913J

J

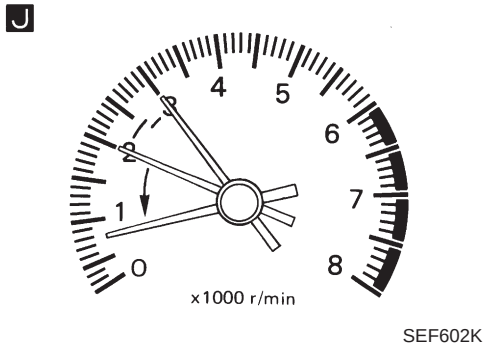

SEF602K

Ⓐ

Ⓑ

Régler le calage de l'allumage à la valeur spécifiée en faisant tourner le distributeur après avoir desserré les boulons de fixation du distributeur.

10°±2° avant P.M.H.

G

Vérifier le régime de ralenti de base.

Lire le signal de ralenti en mode "REG CALAGE ALLUMAGE" avec le CONSULT.

OU

Vérifier le régime de ralenti.

750±25 tr/mn

Bon

Mauvais

Emballer le moteur (2 000 - 3 000 tr/mn) 2 ou 3 fois à vide puis laisser tourner le moteur au ralenti.

H

Régler le régime de ralenti de base en tournant la vis de réglage du régime de ralenti.

750±25 tr/mn

I

Appuyer sur la touche de retour "BACK".

OU

1. Couper le moteur et brancher le connecteur de faisceau du capteur de position de papillon.
2. Démarrer le moteur.

J

Emballer le moteur (2 000 - 3 000 tr/mn) 2 ou 3 fois à vide puis laisser tourner le moteur au ralenti.

Ⓒ

Simpo PDF Merge and Split Unregistered Version - http://www.simpopdf.com

Réglage du régime de ralenti/calage d'allumage/richesse de mélange de ralenti (Suite)

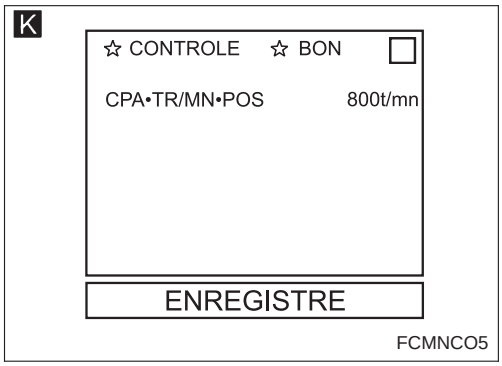

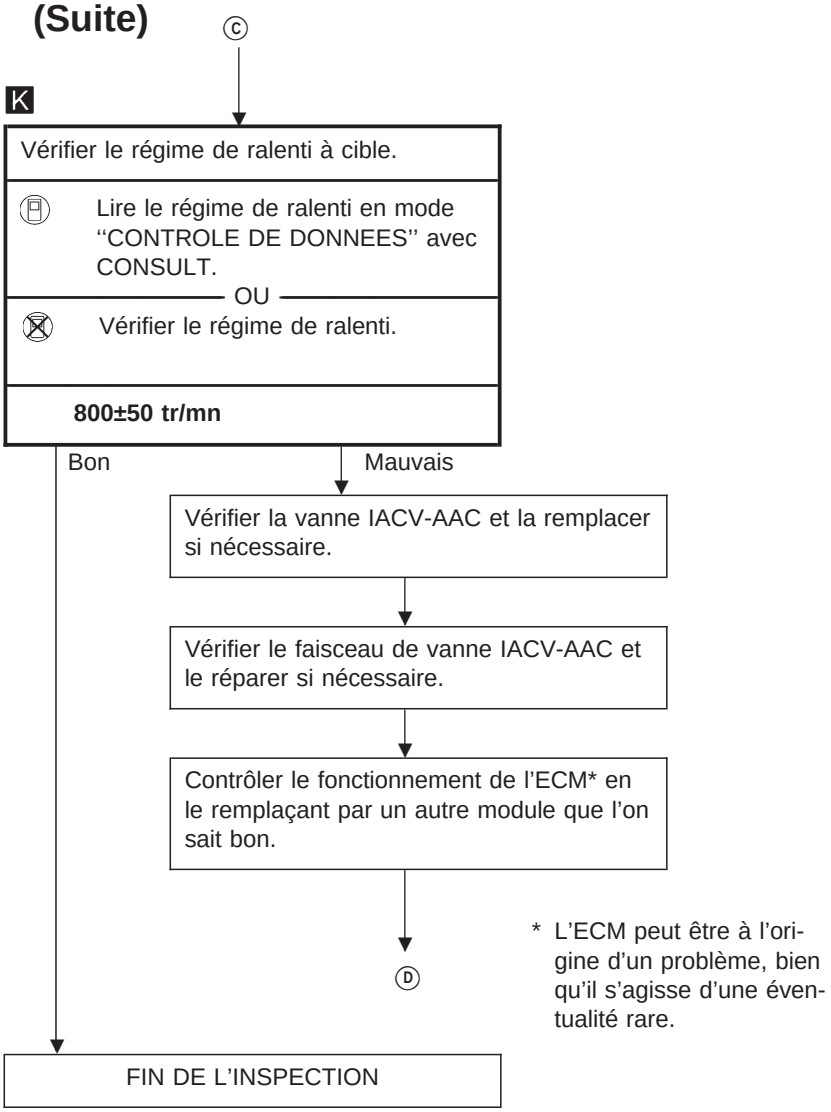

* L'ECM peut être à l'origine d'un problème, bien qu'il s'agisse d'une éventualité rare.

Simpo PDF Merge and Split Unregistered Version - http://www.simpopdf.com

Réglage du régime de ralenti/calage d'allumage/richesse de mélange de ralenti (Suite)

Vérification et réglage de la richesse de mélange

A

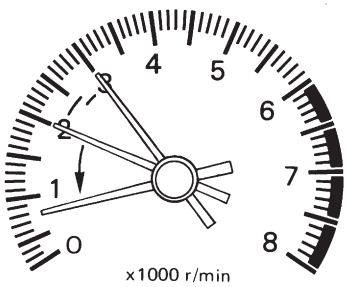

SEF602K

B

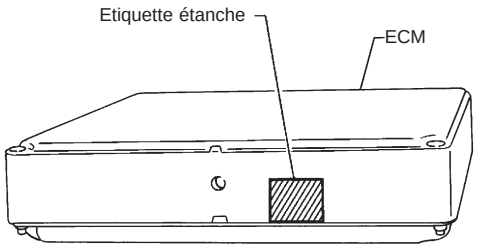

SEF494S

C

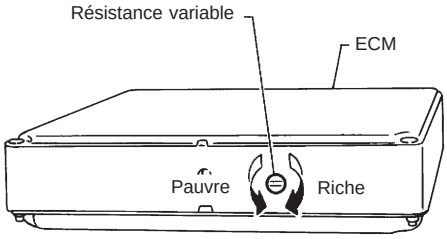

SEF495S

DEBUT DE L'INSPECTION

↓

Contrôler et régler le régime de ralenti et le calage de l'allumage.
(Voir page EC-33).

Régime de ralenti : 800±50 tr/mn
Calage de l'allumage : 10°±2° avant P.M.H.

↓

A

Emballer le moteur (2 000 - 3 000 tr/mn) 2 ou 3 fois à vide, puis laisser tourner le moteur au ralenti.

↓

Contrôler le % de "CO" à l'aide d'une jauge "CO".

Pourcentage de "CO" au ralenti
Inférieur à 2,0

Bon →

Mauvais ↓

B

Retirer l'étiquette étanche qui scelle la résistance variable de l'ECM.

↓

C

Régler le % de "CO" en faisant tourner la résistance variable sur l'ECM.

Pourcentage de "CO" au ralenti
1,5±0,5

↓

Installer une nouvelle étiquette étanche sur la résistance variable de l'ECM.

↓

Emballer le moteur (2 000 - 3 000 tr/mn) 2 ou 3 fois à vide, puis laisser tourner le moteur au ralenti.

↓

Vérifier le régime de ralenti.

Régime de ralenti : 800±50 tr/mn

Mauvais → Régler le régime de ralenti. (Voir page EC-33).

Bon ↓

Arrêter le moteur.

↓

FIN DE L'INSPECTION

Simpo PDF Merge and Split Unregistered Version - http://www.simpopdf.com

Introduction

L'ECM (module de contrôle de l'ECCS) comporte un système de diagnostic de bord qui détecte tout défaut relatif aux capteurs ou actionneurs du moteur. Les éléments d'autodiagnostic sont listés dans l'"INDEX DES CODES DE DEFAUT DE DIAGNOSTIC'', EC-1.

Le témoin de défaut (MIL) situé sur le tableau de bord s'allume quand un défaut est détecté, ou quand l'ECM passe en mode de sécurité (consulter EC-63).

Code de défaut de diagnostic (DTC)

COMMENT CONFIRMER LES ELEMENTS DE DEFAUT

Il est possible de confirmer Les éléments de défaut avec les méthodes suivantes.

1. Le DTC est indiqué par le nombre de clignotements du témoin de défaut en mode II d'essai de diagnostic (résultats d'autodiagnostic). Exemples : 11, 21 etc.
2. Le CONSULT affiche le composant défectueux ou le système en mode ''RESULT AUTO-DIAG''.

- **L'affichage d'un DTC indique un défaut. En mode II, cependant, il n'indique pas si le défaut de fonctionnement est toujours présent ou s'il s'est produit auparavant et que tout est redevenu normal.**
  Le CONSULT peut identifier la position de la panne comme indiqué ci-dessous. Il est donc recommandé d'utiliser le CONSULT (si disponible).

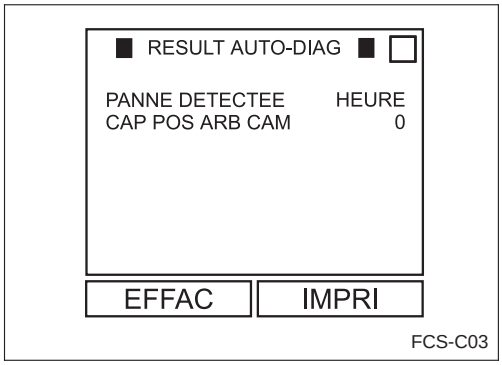

Un exemple d'affichage CONSULT est présenté à gauche. Le défaut s'affiche en mode ''RESULT AUTO-DIAG'' du CONSULT. Les indications relatives à l'"HEURE'' indiquent le nombre de fois où le véhicule a été conduit après la dernière détection d'un défaut.
Si le défaut vient d'être détecté, l'"HEURE'' indiquera ''0''.

COMMENT EFFACER LE DTC

Le DTC peut être effacé de la mémoire de sauvegarde de l'ECM selon les méthodes suivantes.

Sélectionner ''EFFAC'' en mode ''RESULT AUTO-DIAG'' avec CONSULT.

Passer du mode II au mode I de test de diagnostic en tournant le sélecteur de mode de l'ECM (modèle avec conduite à droite uniquement) ou en branchant le connecteur de liaison des données des bornes CONSULT. (consulter les pages EC-40, 42).

- **Si la borne de la batterie est débranchée, le DTC disparaîtra après 24 heures.**
- **Lorsque l'on efface le DTC, il est plus facile et rapide d'utiliser CONSULT que d'actionner le sélecteur mode de l'ECM (modèle avec conduite à droite uniquement) ou de brancher le connecteur de liaison des données des bornes CONSULT.**

Simpo PDF Merge and Split Unregistered Version - http://www.simpopdf.com

Code de défaut de diagnostic (DTC) (Suite)

Comment effacer le DTC (avec CONSULT)

1. Si le contact d'allumage reste sur ''ON'' après la réparation, veiller à tourner le contact d'allumage une fois sur ''OFF''. Attendre pendant au moins 5 secondes, puis le tourner à nouveau sur ''ON'' (moteur coupé).
2. Allumer le CONSULT et appuyer sur ''MOTEUR''.
3. Sélectionner ''RESULT AUTO-DIAG''.
4. Appuyer sur ''EFFAC'' (Le DTC sera effacé dans l'ECM).

Comment effacer le DTC (avec CONSULT)

1. Si le contact d'allumage reste sur ''ON'' après la réparation, veiller à tourner le contact d'allumage une fois sur ''OFF''. Attendre pendant au moins 5 secondes, puis le tourner à nouveau sur ''ON'' (moteur coupé).

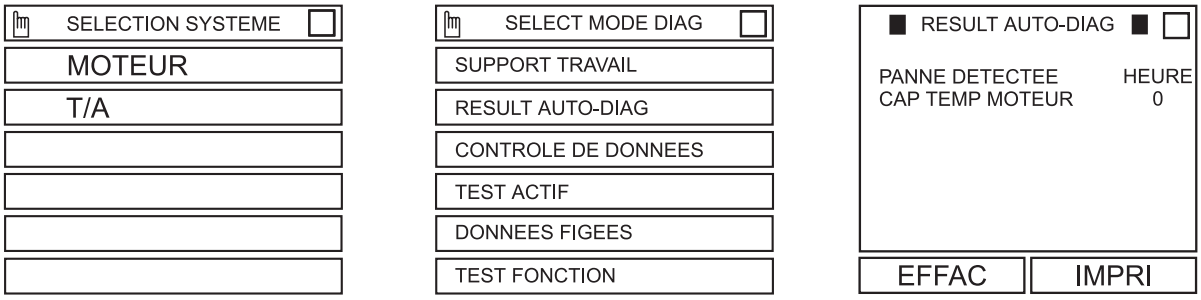

2. Allumer le CONSULT et appuyer sur ''MOTEUR''.
3. Sélectionner ''RESULT AUTO-DIAG''.
4. Appuyer sur ''EFFAC'' (le DTC sera effacé dans l'ECM).

FCXSS02

Comment effacer le DTC (sans CONSULT)

1. Si le contact d'allumage reste sur ''ON'' après la réparation, veiller à tourner le contact d'allumage une fois sur ''OFF''. Attendre au moins 5 secondes et le tourner à nouveau sur ''ON''.
2. Passer du mode II au mode I de test de diagnostic en tournant le sélecteur de mode de l'ECM (modèle avec conduite à droite uniquement) ou en branchant le connecteur de liaison des données des bornes CONSULT (Voir EC-40, 42).

Simpo PDF Merge and Split Unregistered Version - http://www.simpopdf.com

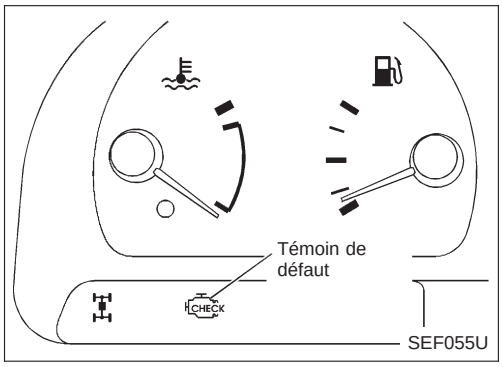

Témoin de défaut (MIL)

Le témoin de défaut de fonctionnement est située sur le tableau de bord.

1. Le témoin s'allumera lorsque le contact d'allumage est mis sur ''ON'' avec le moteur arrêté. Ceci sert à vérifier si l'ampoule est grillée.
- Si le témoin de défaut MIL ne s'allume pas, se reporter à ''TEMOINS LUMINEUX ET TEMOINS SONORES'' à la section EL.
  (Ou voir EC-179, 180.)
2. Lorsque le moteur commence à tourner, le témoin doit s'éteindre.
   Si le témoin demeure allumé, le système de diagnostic de bord a détecté un défaut de fonctionnement dans le système motopropulseur.

FONCTION DU SYSTEME D'AUTODIAGNOSTIC

Le système de diagnostic de bord comprend les quatre fonctions suivantes.

Mode I de test de diagnostic

1. VERIFICATION DE L'AMPOULE : Cette fonction vérifie si l'ampoule du témoin de défaut de fonctionnement est endommagée (grillée, circuit ouvert, etc.).
   Si le MIL ne s'allume pas, vérifier son circuit et le sélecteur de mode de test de l'ECM (voir page suivante).
2. AVERTISSEMENT DE DEFAUT DE FONCTIONNEMENT : Ceci est une condition de conduite habituelle. Lorsqu'un défaut est détecté, le MIL s'allume pour informer le conducteur de la présence du défaut.

Mode II de test de diagnostic

3. RESULTATS DE L'AUTODIAGNOSTIC : Cette fonction permet de lire les DTC.
4. CONTROLE DE LA SONDE A OXYGENE CHAUFFEE : Cette fonction permet de lire la richesse du mélange de carburant (pauvre ou riche), contrôlée par la sonde à oxygène chauffée.

Le MIL clignote sans DTC

Si l'ECM est en mode de test de diagnostic II, il se peut que le MIL clignote quand le moteur tourne. Dans ce cas, se reporter à ''COMMENT CHANGER LE MODE DE DIAGNOSTIC'' à la page suivante.
La méthode d'activation du mode de test de diagnostic (fonction) et tous détails concernant les fonctions ci-dessus sont décrits plus loin.(Voir pages EC-40, 42).

Condition		Mode I de test de diagnostic	Mode II de test de diagnostic
Contact d'allumage sur ''ON'' 	Moteur arrêté 	VERIFICATION DE L'AMPOULE	RESULTATS DE L'AUTODIAGNOSTIC
	Moteur en marche 	AVERTISSEMENT DE DEFAUT DE FONCTIONNEMENT	CONTROLE DE LA SONDE A OXYGENE CHAUFFEE

Simpo PDF Merge and Split Unregistered Version - http://www.simpopdf.com

Témoin de défaut (MIL) (Suite)

COMMENT CHANGER DE MODE DE TEST DE DIAGNOSTIC (conduite à gauche)

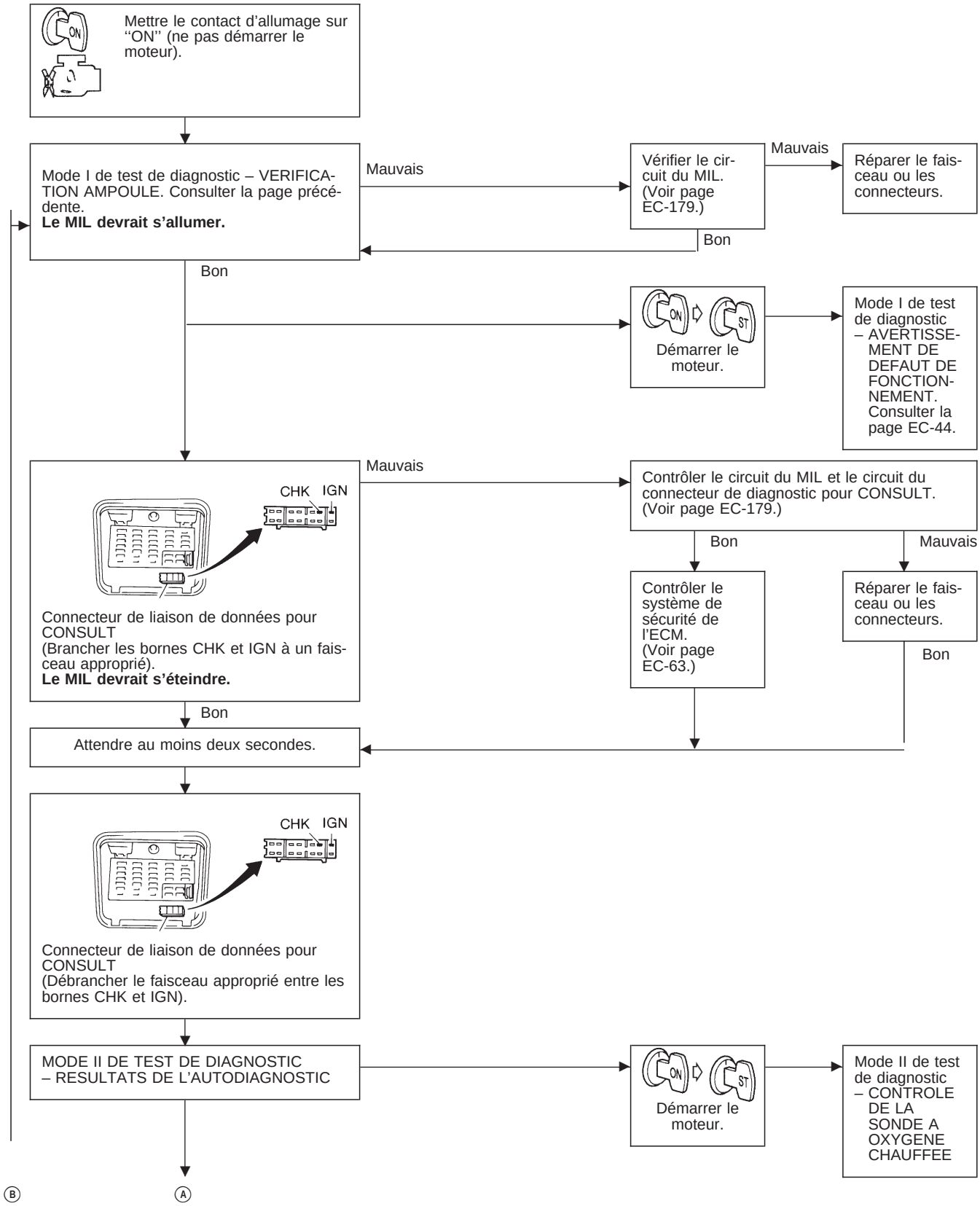

Simpo PDF Merge and Split Unregistered Version - http://www.simpopdf.com

Témoin de défaut (MIL) (Suite)

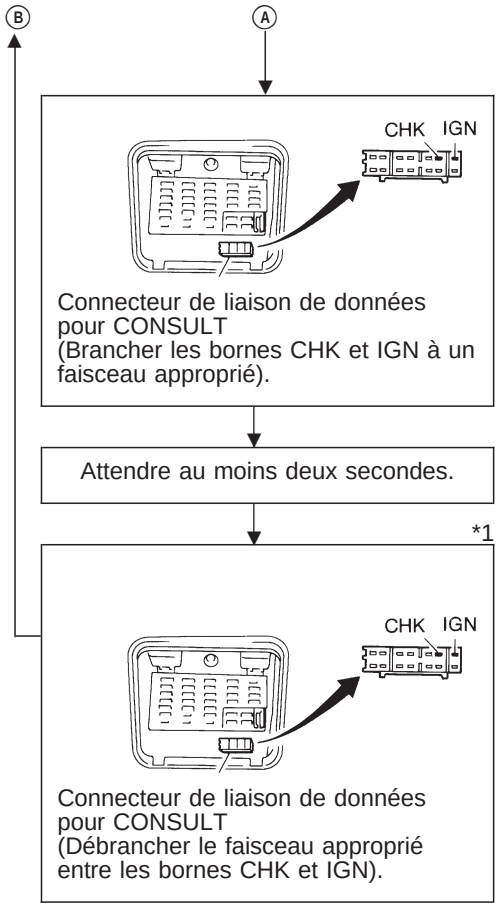

- **Il n'est pas possible de changer de mode lorsque le moteur est en marche.**
- **Lorsque le contact d'allumage est placé sur la position ''OFF'' pendant le diagnostic, l'alimentation de l'ECM chutera après 5 secondes environ.**
  Le diagnostic reviendra automatiquement au Mode I de test de diagnostic.

***1 : Si un faisceau particulier est débranché au même moment, le code de défaut de diagnostic sera effacé de la mémoire de sauvegarde de l'ECM.**

Simpo PDF Merge and Split Unregistered Version - http://www.simpopdf.com

Témoin de défaut (MIL) (Suite)

COMMENT CHANGER DE MODE DE TEST DE DIAGNOSTIC (conduite à droite)

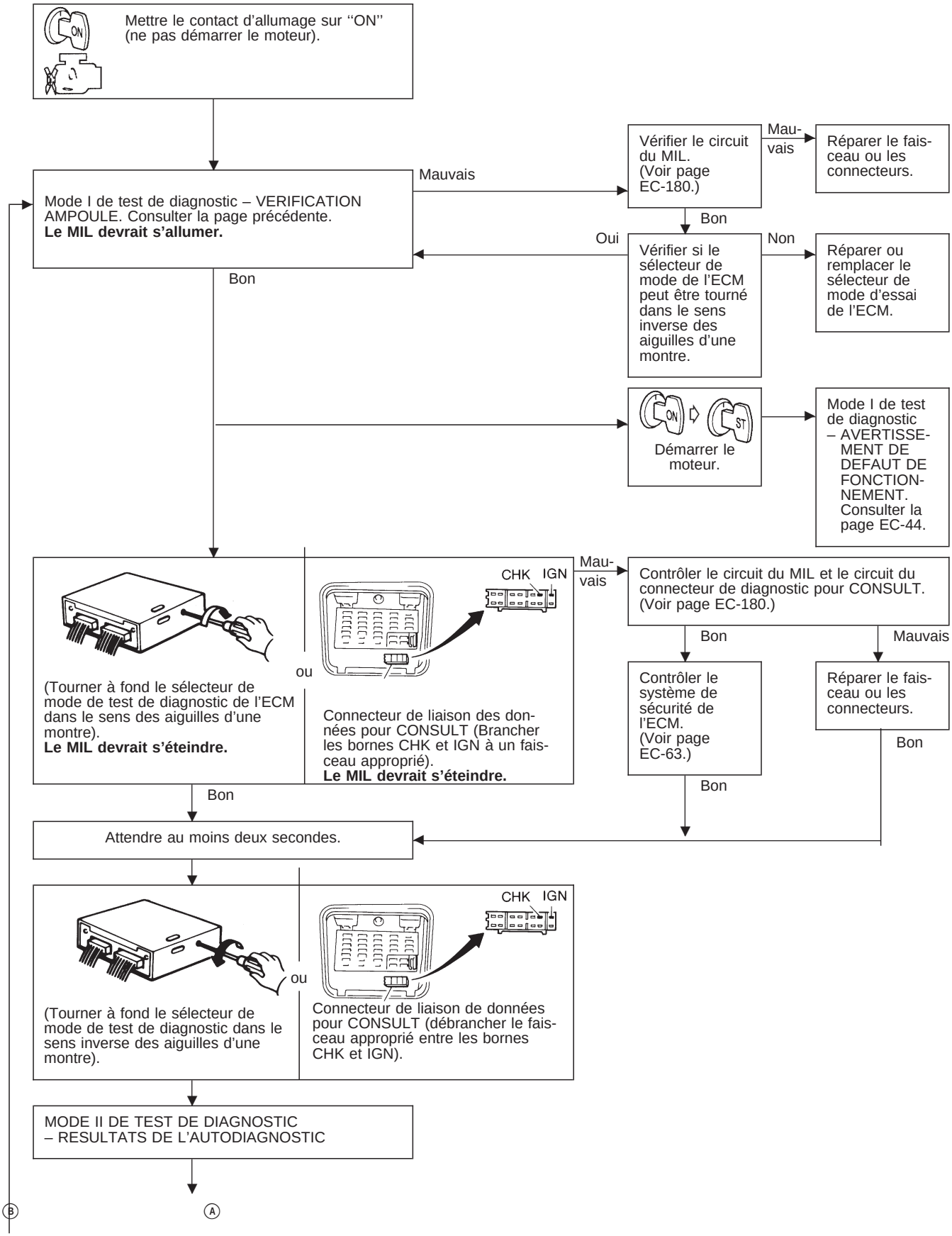

Simpo PDF Merge and Split Unregistered Version - http://www.simpopdf.com

Témoin de défaut (MIL) (Suite)

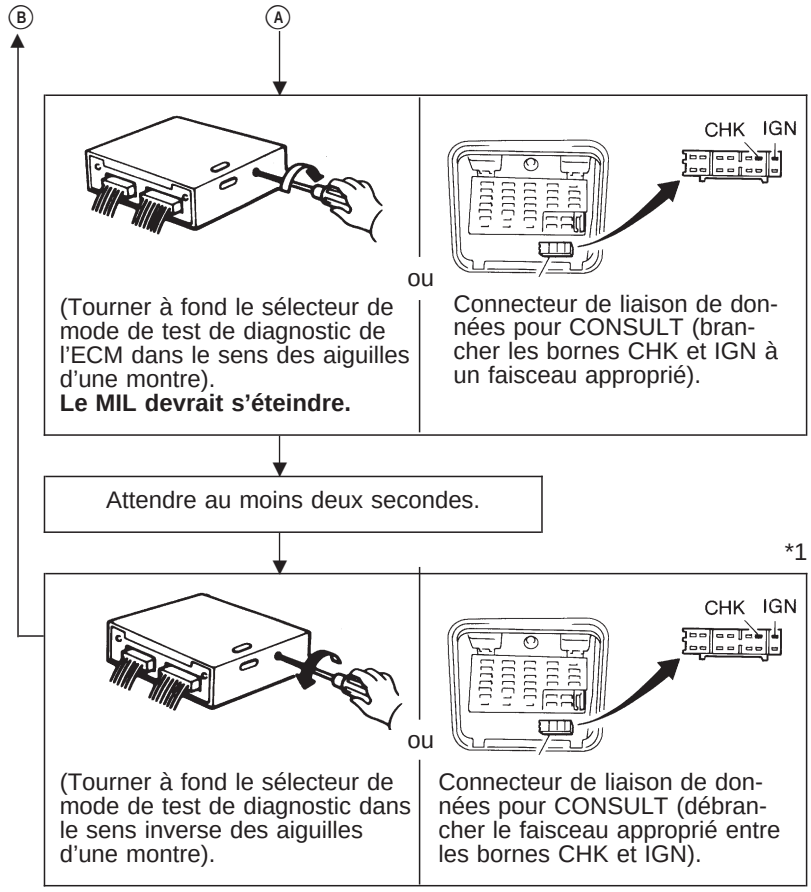

- **Il n'est pas possible de changer de mode lorsque le moteur est en marche.**
- **Quand le contact d'allumage est sur la position OFF pendant le diagnostic, l'alimentation électrique adressée à l'ECM chutera après env. 5 secondes.**
  Le diagnostic reviendra automatiquement au Mode I de test de diagnostic.
- **Tourner à nouveau le sélecteur de mode de diagnostic à fond dans le sens inverse des aiguilles d'une montre lorsque le véhicule est en marche.**

***1 : Si le sélecteur est tourné à fond dans le sens contraire des aiguilles d'une montre, ou si un faisceau particulier est débranché au même moment, le code de défaut de diagnostic sera effacé de la mémoire de l'ECM.**

Simpo PDF Merge and Split Unregistered Version - http://www.simpopdf.com

Témoin de défaut (MIL) (Suite)

MODE I DE TEST DE DIAGNOSTIC – VERIFICATION AMPOULE

Dans ce mode, le TEMOIN DE DEFAUT sur le tableau de bord doit demeurer allumé. S'il demeure éteint, vérifier l'ampoule (voir TEMOINS LUMINEUX ET TEMOINS SONORES à la section EL ou voir EC-179, 180).

MODE I DE TEST DE DIAGNOSTIC – AVERTISSEMENT DE DEFAUT DE FONCTIONNEMENT

TEMOIN LUMINEUX DE DEFAUT	Condition
MARCHE	Lorsqu'un défaut est détecté (consulter EC-1) ou que l'unité centrale de l'ECM est défectueuse.
ARRET	Pas de défaut

- Les numéros de codes de diagnostic sont identifiés en mode II d'essai de diagnostic (RESULTATS D'AUTODIAGNOSTIC).

MODE II DE TEST DE DIAGNOSTIC – RESULTATS D'AUTODIAGNOSTIC

Dans ce mode, le code de défaut de diagnostic est indiqué par le nombre de clignotements du TEMOIN DE DEFAUT de la manière indiquée ci-dessous.

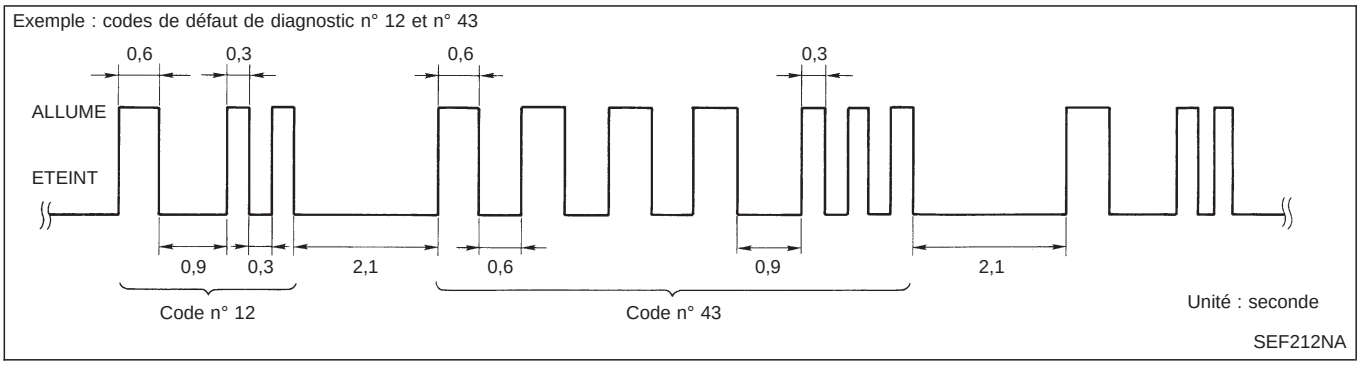

Un clignotement long (0,6 seconde) indique le chiffre des dizaines, et un clignotement court (0,3 seconde) celui des unités. Par exemple, le témoin de défaut clignote 4 fois en 5 secondes environ (0,6 sec x 8 fois) puis il clignote trois fois pendant environ 1 seconde (0,3 sec x 3 fois). Ce signal indique le code de défaut DTC ''43'' et donc un défaut du capteur de position de papillon.
De cette façon, tous les défauts détectés sont classés par leurs numéros de code de défaut de diagnostic. Le DTC ''55'' indique qu'il n'y a aucun défaut (voir l'INDEX DES CODES DE DEFAUT DE DIAGNOSTIC, à la page EC-1).

Comment effacer le mode II de test de diagnostic (résultats de l'autodiagnostic)

Le code de défaut peut être effacé de la mémoire de sauvegarde dans l'ECM lorsque le mode de diagnostic passe du ''Mode II d'essai de diagnostic'' au ''Mode I d'essai de diagnostic'' (se reporter à ''COMMENT CHANGER DE MODE DE TEST DE DIAGNOSTIC'').

- **Si la borne de la batterie est débranchée, le code de défaut de diagnostic sera effacé de la mémoire de sauvegarde au bout de 24 heures.**
- **Veiller à ne pas effacer la mémoire enregistrée avant de commencer les diagnostics de défaut.**

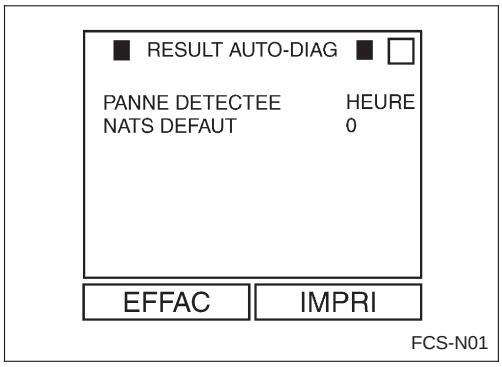

- **Si le MIL clignote ou que ''DEFAUT DU NATS'' s'affiche sur l'écran de ''RESULT AUTO-DIAG'', effectuer le mode de résultats d'autodiagnostic à l'aide du CONSULT avec une carte de programme NATS (NATS-E940). Consulter la section EL.**
- **Confirmer qu'aucun résultat d'autodiagnostic NATS n'est affiché avant d'appuyer sur ''EFFAC'' en mode ''RESULT AUTO-DIAG'' avec CONSULT.**
- **Lorsque l'on remplace l'ECM, il est nécessaire de procéder à l'initialisation du système NATS V.2.0 et à l'enregistrement de tous les codes d'identification des clés de contact NATS V.2.0 à l'aide du CONSULT et de la carte de programme NATS (NATS-F940).**
  S'assurer par conséquent que le client a bien remis tou-

Simpo PDF Merge and Split Unregistered Version - http://www.simpopdf.com

Témoin de défaut (MIL) (Suite)

tes ses clés.
Pour les procédures d'initialisation du système NATS et d'enregistrement des clés de contact NATS, se reporter au manuel d'utilisation de CONSULT, NATS V.2.0.

MODE II DE TEST DE DIAGNOSTIC – CONTROLE DE LA SONDE A OXYGENE CHAUFFEE

Dans ce mode, le TEMOIN DE DEFAUT affiche l'état du mélange (pauvre ou riche), lequel est surveillé par la sonde à oxygène chauffée.

TEMOIN LUMINEUX DE DEFAUT	Richesse de mélange de carburant dans les gaz d'échappement	Condition de contrôle du signal de réponse du mélange air/carburant
MARCHE	Pauvre	Commande en boucle fermée
ARRET	Riche	
*Reste sur MARCHE ou ARRET.	Toute condition	Commande en boucle ouverte

* : Maintient les conditions juste avant de passer en boucle ouverte.

Pour vérifier le fonctionnement de la sonde à oxygène chauffée, démarrer le moteur en mode de diagnostic II et le laisser chauffer jusqu'à ce que l'indicateur de température du réfrigérant moteur pointe vers le milieu de la jauge.
Puis faire tourner le moteur à environ 2 000 tr/mn pendant environ 2 minutes à vide. Puis s'assurer que le témoin de défaut s'allume plus de 5 fois toutes les 10 secondes lorsque le moteur tourne à 2 000 tr/mn sans charge.

Simpo PDF Merge and Split Unregistered Version - http://www.simpopdf.com

Conduite à gauche

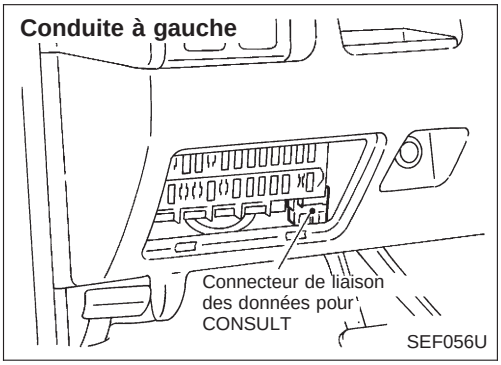

SEF056U

Conduite à droite

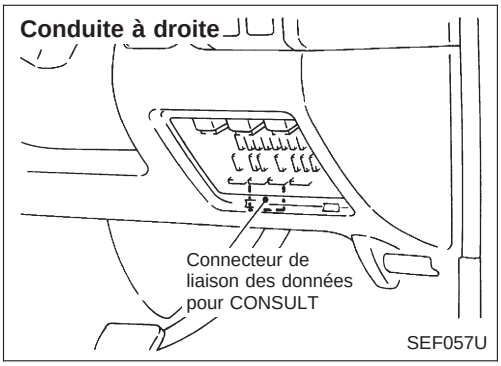

SEF057U

CONSULT

PROCEDURE D'INSPECTION CONSULT

1. Mettre le contact d'allumage sur ''OFF''.
2. Brancher ''CONSULT'' sur connecteur de diagnostic pour CONSULT.
   (Le connecteur de liaison de données pour CONSULT est situé derrière le couvercle du boîtier à fusibles).

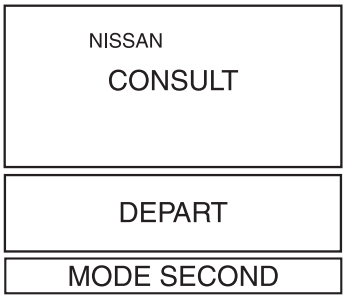

FCNCS04

3. Mettre le contact d'allumage sur ''ON''.
4. Appuyer sur ''DEPART''.

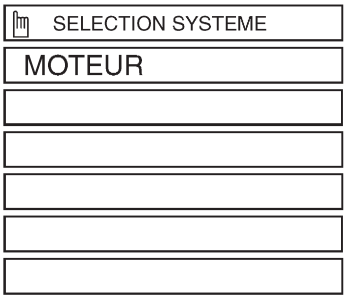

FCSSE02

5. Sélectionner ''MOTEUR''.

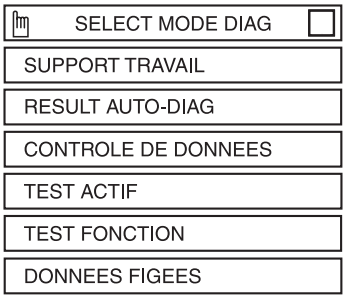

FCSDM02A

6. Effectuer chaque mode de diagnostic en fonction de chaque procédure d'entretien.

Pour de plus amples informations, voir le Manuel d'utilisation de CONSULT.

Simpo PDF Merge and Split Unregistered Version - http://www.simpopdf.com

CONSULT (Suite)

FONCTION

Mode de test de diagnostic	Fonctionnement
Support de travail	Les indications fournies par CONSULT permettent au mécanicien de procéder plus rapidement et plus précisément aux réglages de certains dispositifs.
Résultats de l'autodiagnostic	Les résultats de l'autodiagnostic peuvent être rapidement lus et effacés.
Contrôle des données	Il est possible de lire les données d'entrée/sortie de l'ECM.
Test actif	Le CONSULT pilote certains actionneurs indépendamment de l'ECM et modifie certains paramètres dans une plage spécifiée.
Test de fonction	Effectué par CONSULT au lieu d'un technicien afin d'établir si chaque système est bon ou mauvais.
Numéro de pièce de l'ECM	Le numéro de pièce de l'ECM peut être lu.

MODE SUPPORT DE TRAVAIL

INTERVENTION	CONDITION	UTILISATION
REGL CAP PAPILLON	VERIFIER LE SIGNAL DU CAPTEUR DE POSITION DE PAPILLON. L'AJUSTER A LA VALEUR SPECIFIEE EN FAISANT TOURNER LE CORPS DU CAPTEUR DANS LES CONDITIONS SUIVANTES. ● CON ALL ''ON'' ● MOTEUR A L'ARRET ● PEDALE D'ACCELERATEUR LIBRE	Au réglage de la position initiale du capteur de position de papillon
REG CALAGE ALLUMAGE	● ON MAINTIENT LE CONTROLE AUTOMATIQUE DU CALAGE DE L'ALLUMAGE EN APPUYANT SUR ''DEPART''. PUIS AJUSTER LE CALAGE DE L'ALLUMAGE AVEC UNE LAMPE STROBOSCOPIQUE EN TOURNANT LE CAPTEUR D'ANGLE DE VILEBREQUIN.	Au réglage du calage d'allumage initial
REGL VANNE AAC	REGLER LE REGIME (TR/MN) DU MOTEUR SELON LA VALEUR SPECIFIEE ET DANS LES CONDITIONS SUIVANTES : ● MOTEUR CHAUD ● A VIDE	
DETENT PRESS D'ALIM	● LA POMPE D'ALIMENTATION S'ARRETE LORSQUE L'ON APPUIE SUR ''DEPART'' PENDANT QUE LE MOTEUR TOURNE AU RALENTI. RELANCER LE MOTEUR PLUSIEURS FOIS, APRES QU'IL A CALE.	A la dépressurisation des canalisations d'alimentation

Simpo PDF Merge and Split Unregistered Version - http://www.simpopdf.com

CONSULT (Suite)

ELEMENTS DES COMPOSANTS DE L'ECCS/APPLICATION DES SYSTEMES DE COMMANDE

Elément			MODE DE DIAGNOSTIC				
			SUPPORT DE TRAVAIL	RESULTATS DE L'AUTO-DIAGNOSTIC	CONTROLE DES DON-NEES	TEST ACTIF	TEST DE FONCTION
COMPOSANTS DE L'ECCS	ENTREE	Capteur d'angle d'arbre à cames		X	X		
		Débitmètre d'air		X	X		
		Capteur de température du réfrigérant moteur		X	X	X	
		Sonde à oxygène chauffée			X		
		Capteur de vitesse du véhicule			X		X
		Capteur de position de papillon	X	X	X		X
		Capteur de température d'air d'admission		X	X		
		Contact d'allumage (signal de démarrage)			X		X
		Contact de position de papillon fermé			X		X
		Interrupteur de climatiseur			X		
		Contact de point mort			X		X
		Manocontact d'huile de direc-tion assistée			X		X
		Tension de la batterie			X		
	SORTIE	Injecteurs			X	X	X
		Transistor de puissance (calage d'allumage)	X	X (Signal d'allumage)	X	X	X
		Vanne IACV-AAC	X		X	X	X
		Relais de climatiseur			X		
		Relais de pompe d'alimentation	X		X	X	X
		Electrovanne de contrôle de vanne de commande de tour-billon			X	X	X
		Electrovanne de commande de purge de cartouche EVAP*			X	X	X

X : Applicable
* : Cet élément est désigné par ''EV COM EGR'' sur l'écran CONSULT.

Simpo PDF Merge and Split Unregistered Version - http://www.simpopdf.com

CONSULT (Suite)

MODE D'AUTODIAGNOSTIC

En ce qui concerne les éléments détectés en mode de ''RESULT AUTO-DIAG'', consulter l''INDEX DES CODES DE DEFAUT DE DIAGNOSTIC'', page EC-1.

MODE DE CONTROLE DE DONNEES

Elément contrôlé [Unité]	Signaux d'entrée de l'ECM	Signaux principaux	Description	Remarques
CPA•TR/MN (POS) [t/mn]	◯	◯	• Indique le régime moteur calculé à partir du signal POS (signal de 1°) du capteur d'angle d'arbre à cames.	
DEBITMET AIR [V]	◯	◯	• La tension de signal du débitmètre d'air est affichée.	• Une fois le moteur arrêté, une certaine valeur est indiquée.
CAP TEMP MOT [°C]	◯	◯	• La température du réfrigérant moteur (déterminée par la tension de signal du capteur de température du réfrigérant moteur) est affichée.	• Si le circuit du capteur de température du réfrigérant moteur est ouvert ou court-circuité, l'ECM passe en mode de sécurité. La température du réfrigérant moteur déterminée par l'ECM est affichée.
CAP GAS ECH [V]	◯	◯	• La tension du signal de la sonde à oxygène chauffée est affichée.	• Modèles avec conduite à gauche uniquement
CON F/C MEL [RICH/PAUV]	◯	◯	• Affichage du signal de la sonde à oxygène chauffée pendant le contrôle de signal réponse du mélange air/carburant : RICH ... signifie que le mélange est devenu ''riche'', et la commande est affectée vers un mélange plus pauvre. PAUV ... signifie que le mélange est devenu trop pauvre et la commande est affectée vers un mélange plus riche.	• Lorsque la clé de contact est en position ''ON'', ''RICH'' est affiché jusqu'à ce que le contrôle de signal réponse du mélange air/carburant commence. • Lorsque le signal réponse du mélange air/carburant est verrouillé, la valeur trouvée juste avant le verrouillage est affichée de façon continue. • Modèles avec conduite à gauche uniquement
CAP VIT VEHI [km/h]	◯	◯	• La vitesse du véhicule calculée à partir du signal de capteur de vitesse du véhicule est affichée.	
TENS BATTERIE [V]	◯	◯	• La tension d'alimentation électrique de l'ECM est affichée.	
CAP PAPILLON [V]	◯	◯	• La tension de signal du capteur de position de papillon est affichée.	
CAP TEMP ADMI [°C]	◯		• La température d'air d'admission (déterminée par la tension du signal du capteur de température d'air d'admission) est indiquée.	
SIGNAL DEMAR [MAR/ARR]	◯	◯	• Indique l'état [MARCHE/ARRET] du signal de démarreur.	• Après avoir démarré le moteur, l'état [ARRET] est affiché quel que soit le signal du démarreur.
POSIT RALENTI [MAR/ARR]	◯	◯	• Indique l'état [MAR/ARR] à partir du signal du capteur de position de papillon.	
SIGNAL CLIMAT [MAR/ARR]	◯	◯	• Indique l'état [MARCHE/ARRET] de l'interrupteur de climatiseur de la manière déterminée par le signal du climatiseur.	
CON NEUTRE [MAR/ARR]	◯	◯	• Indique l'état [MARCHE/ARRET] depuis le signal du contact de stationnement/point mort.	

NOTE :
Tout élément contrôlé qui ne correspond pas au véhicule diagnostiqué est automatiquement effacé de l'affichage.

Simpo PDF Merge and Split Unregistered Version - http://www.simpopdf.com

CONSULT (Suite)

Elément contrôlé [Unité]	Signaux d'entrée de l'ECM	Signaux principaux	Description	Remarques
SIG DIR ASSIS [MAR/ARR]	◯	◯	● Indique l'état [MARCHE/ARRET] du manocontact d'huile de direction assistée déterminé par le signal de pression d'huile de direction assistée.	
IMPUL INJ [msec]		◯	● Indique l'amplitude réelle des impulsion d'injection de carburant compensées par l'ECM en fonction des signaux d'entrée.	● Une fois le moteur arrêté, une certaine valeur calculée est indiquée.
CALAGE ALLUM [APMH]		◯	● Indique le calage de l'allumage calculé par l'ECM en fonction des signaux d'entrée.	● Une fois le moteur arrêté, une certaine valeur est indiquée.
VANNE AAC [%]		◯	● Indique la valeur de commande de la vanne de commande d'air de ralenti (vanne IACV-AAC) calculée par l'ECM en fonction des signaux d'entrée.	
ALPHA A/CARB [%]		◯	● La valeur moyenne du facteur de correction du retour de mélange air/carburant par cycle est indiquée.	● Une fois le moteur arrêté, une certaine valeur est indiquée. ● Ces données comprennent également les données pour la commande d'auto-instruction du rapport air/carburant.
RELAIS CLIMAT [MAR/ARR]		◯	● La condition de commande du relais de climatiseur (déterminée par l'ECM en fonction du signal d'entrée) est indiquée.	
REL POMP ALI [MAR/ARR]		◯	● Indique la condition de la commande du relais de la pompe d'alimentation déterminée par l'ECM en fonction des signaux d'entrée.	
EV COM TOURBI [MAR/ARR]		◯	● Le contrôle de l'état de l'électrovanne de contrôle de vanne de commande de tourbillon (déterminé par l'ECM en fonction du signal d'entrée) est indiqué. MARCHE ... vanne de commande de tourbillon fermée ARRET ... la vanne de commande de tourbillon est ouverte	
EV COM EGR (Electrovanne de commande de purge de cartouche EVAP) [MAR/ARR]		◯	● Le contrôle de l'état de l'électrovanne de commande de purge de cartouche EVAP (déterminé par l'ECM en fonction du signal d'entrée) est indiqué. MARCHE ... La commande de purge de cartouche EVAP ne fonctionne pas ARRET... La commande de purge de cartouche EVAP est en état de marche.	
TENSION [V]			● Tension mesurée par la sonde de tension.	
IMPULSIONS [msec] ou [Hz] ou [%]			● Amplitude, fréquence ou cycle d'impulsions mesurés par la sonde d'impulsions.	● Seul "#" est affiché si l'élément ne peut pas être mesuré. ● Les valeurs accompagnées du signe "#" sont temporaires. Elles sont identiques aux données mesurées précédemment.

Simpo PDF Merge and Split Unregistered Version - http://www.simpopdf.com

CONSULT (Suite)

MODE DE TEST ACTIF

ELEMENT DE TEST	CONDITION	JUGEMENT	ELEMENT A VERIFIER (REMISE EN ETAT)
INJECTION CARBURANT	● Moteur : retour à la condition de défaut original ● Modifier la quantité de carburant injecté au moyen du CONSULT.	Si les symptômes du défaut disparaissent, voir la colonne ELEMENT A VERIFIER.	● Faisceau et connecteur ● Injecteurs de carburant ● Sonde à oxygène chauffée
OUVERT VANNE AAC	● Moteur : après échauffement, faire tourner au ralenti. ● Changer le pourcentage d'ouverture de la vanne IACV-AAC à l'aide du CONSULT.	Le régime du moteur change avec le taux d'ouverture.	● Faisceau et connecteur ● Vanne IACV-AAC
TEMPERATURE MOTEUR	● Moteur : retour à la condition de défaut original ● Changer la température du réfrigérant moteur au moyen du CONSULT.	Si les symptômes du défaut disparaissent, voir la colonne ELEMENT A VERIFIER.	● Faisceau et connecteur ● Capteur de température du réfrigérant moteur ● Injecteurs de carburant
CALAGE ALLUMAGE	● Moteur : retour à la condition de défaut original ● Lampe stroboscopique installée ● Retarder le calage de l'allumage au moyen du CONSULT.	Si les symptômes du défaut disparaissent, voir la colonne ELEMENT A VERIFIER.	● Régler le calage de l'allumage (en déplaçant le capteur d'angle d'arbre à cames).
EQUILIBR PUISSANCE	● Moteur : après échauffement, faire tourner au ralenti. ● Interrupteur de climatiseur à l'arrêt ● Levier de vitesse en position ''N'' ● Couper chaque signal d'injecteur un par un, au moyen du CONSULT.	Le moteur tourne mal ou s'arrête.	● Faisceau et connecteur ● Compression ● Injecteurs ● Bobine d'allumage avec transistor d'alimentation ● Bougies d'allumage
RELAIS POMPE D'ALIM	● Contact d'allumage : ''ON'' (moteur à l'arrêt) ● Mettre le relais de la pompe d'alimentation en marche puis à l'arrêt au moyen du CONSULT et en écouter le bruit de fonctionnement.	Le relais de la pompe d'alimentation produit son bruit de fonctionnement.	● Faisceau et connecteur ● Relais de pompe d'alimentation
EV COM EGR (Electrovanne de commande de purge de cartouche EVAP)	● Contact d'allumage : ''ON'' ● Tourner l'électrovanne sur ''MAR'' et ''ARR'' avec le CONSULT et écouter son bruit de fonctionnement.	L'électrovanne émet un bruit de fonctionnement.	● Faisceau et connecteur ● Electrovanne de commande de purge de cartouche EVAP
EV COM TOURBIL	● Contact d'allumage : ''ON'' (moteur à l'arrêt) ● Tourner l'électrovanne sur ''MAR'' et ''ARR'' avec le CONSULT et écouter son bruit de fonctionnement.	L'électrovanne émet un bruit de fonctionnement.	● Faisceau et connecteur ● Electrovanne de contrôle de vanne de commande de tourbillon
COM AUTO INSTRUCT	● Dans ce test, le coefficient original de commande d'auto-instruction de richesse de mélange peut être rappelé en appuyant sur ''EFFAC'' sur l'écran.		

Simpo PDF Merge and Split Unregistered Version - http://www.simpopdf.com

CONSULT (Suite)

MODE DE TEST DE FONCTION

ELEMENT DE TEST DE FONCTION	CONDITION	JUGEMENT		ELEMENT A VERIFIER (REMISE EN ETAT)
RESULT AUTO-DIAG	● Contact d'allumage : ''ON'' (Moteur à l'arrêt) ● Affiche les résultats d'autodiagnostic du système.	–		Système objectif
CON RALENTI	● Contact d'allumage : ''ON'' (Moteur à l'arrêt) ● Le circuit du capteur de position de papillon est testé lorsque la vanne papillon est entièrement ouverte et fermée (''POSITION RALENTI'' désigne l'élément de test pour les véhicules dont le ralenti est sélectionné par le capteur de position de papillon).	Vanne de papillon : ouverte	ARRET	● Faisceau et connecteur ● Capteur de position de papillon (position de papillon fermé) ● Réglage du capteur de position du papillon (position de papillon fermé) ● Timonerie de papillon ● Vérifier le fonctionnement en mode ''CONTROLE DE DONNEES''.
		Vanne de papillon : fermée	MARCHE	
CIRC CAP PAPILLON	● Contact d'allumage : ''ON'' (Moteur à l'arrêt) ● Le circuit du capteur de position de papillon est testé lorsque la vanne papillon est entièrement ouverte et fermée.	Gamme (vanne de papillon ouverte à fond – vanne de papillon fermée à fond)	Supérieur à 3,0V	● Faisceau et connecteur ● Capteur de position de papillon ● Réglage du capteur de position de papillon ● Timonerie de papillon ● Vérifier le fonctionnement en mode ''CONTROLE DE DONNEES''.
CIRC CON NEUTRE	● Contact d'allumage : ''ON'' (Moteur à l'arrêt) ● Le circuit du contact de position de point mort est testé quand le levier de passage de vitesse est manipulé.	Sauf positions N/P (Point Mort)	ARRET	● Faisceau et connecteur ● Contact de point mort ● Réglage de la timonerie
		En position N/P (Point Mort)	MARCHE	
CIRC POMPE ALIM	● Contact d'allumage : ''ON'' (Moteur à l'arrêt) ● Le circuit de pompe d'alimentation est testé par le contrôle des pulsations de la pression de carburant lorsque l'on pince la canalisation d'alimentation.	Le flexible d'alimentation émet des impulsions de pression.		● Faisceau et connecteur ● Pompe d'alimentation ● Relais de pompe d'alimentation ● Obturateur de filtre d'alimentation ● Niveau de carburant
CIRC EV COMM EGR (Circuit d'électrovanne de commande de purge de cartouche EVAP)	● Contact d'allumage : ''ON'' (Moteur à l'arrêt) ● Le circuit de l'électrovanne de commande de purge de cartouche EVAP est testé en observant le bruit de fonctionnement de l'électrovanne.	L'électrovanne émet un bruit de fonctionnement toutes les 3 secondes.		● Faisceau et connecteur ● Electrovanne de commande de purge de cartouche EVAP

Simpo PDF Merge and Split Unregistered Version - http://www.simpopdf.com

CONSULT (Suite)

ELEMENT DE TEST DE FONCTION	CONDITION	JUGEMENT		ELEMENT A VERIFIER (REMISE EN ETAT)
CIRC SIGNAL DEMARR	● Contact d'allumage : ''ON'' → ''START'' ● Le circuit de signal de démarrage est testé lorsque le moteur est démarré en actionnant le démarreur. La tension de la batterie et la température d'eau avant démarrage, la tension moyenne de la batterie, la tension de sortie du débitmètre d'air et la vitesse de démarrage durant le démarrage sont affichées.	Signal de démarrage : DECLENCHE → ENCLENCHE		● Faisceau et connecteur ● Contact d'allumage
CIRC SIGNAL DIR AS	● Contact d'allumage : ''ON'' (Moteur en marche) ● Le circuit du manocontact d'huile de direction assistée est testé en tournant le volant à fond, puis en le plaçant en ligne droite.	Position verrouillée	MARCHE	● Faisceau et connecteur ● Manocontact d'huile de direction assistée ● Pompe à huile de direction assistée
		Position de point mort	ARRET	
CIRC EV COMM TOURB	● Contact d'allumage : ''ON'' (Moteur à l'arrêt) ● Le circuit de l'électrovanne de contrôle de vanne de commande de tourbillon est testé par le contrôle du bruit de fonctionnement de l'électrovanne.	L'électrovanne émet un bruit de fonctionnement toutes les 3 secondes.		● Faisceau et connecteur ● Electrovanne ● Vanne de commande de tourbillon ● Flexible à dépression
CIRC CAP VITES VEH	● Le circuit du capteur de vitesse du véhicule est testé en conduisant le véhicule à 10 km/h ou plus.	Le signal d'entrée du capteur de vitesse du véhicule est supérieur à 4 km/h.)		● Faisceau et connecteur ● Capteur de vitesse du véhicule ● Compteur de vitesses
REGL CALAGE ALLUMA	● Faire chauffer le moteur, puis le faire tourner au ralenti. ● Le calage d'allumage est contrôlé en observant le calage de l'allumage à l'aide d'une lampe stroboscopique et en contrôlant s'il est identique aux spécifications.	La lampe stroboscopique affiche la même valeur à l'écran.		● Régler le calage de l'allumage (en déplaçant le capteur d'angle d'arbre à cames ou le distributeur) ● Mécanisme d'entraînement du capteur d'angle d'arbre à cames

Simpo PDF Merge and Split Unregistered Version - http://www.simpopdf.com

CONSULT (Suite)

ELEMENT DE TEST DE FONCTION	CONDITION	JUGEMENT	ELEMENT A VERIFIER (REMISE EN ETAT)
TEST RICHESS MELAN	● Le circuit de régulation du mélangle air/carburant (systèmes d'injection, d'allumage, de dépression, etc.) est testé par l'examen de la sortie de la sonde à oxygène chauffée lorsque le moteur tourne à 2 000 tr/mn à vide.	Sonde à oxygène chauffée - COMPTE : plus de 5 fois pendant 10 secondes	● SYSTEME D'INJECTION (injecteur, régulateur de pression d'alimentation, faisceau ou connecteur) ● SYSTEME D'ALLUMAGE (faisceau ou connecteur de bougie d'allumage, bobine d'allumage, transistor d'alimentation) ● SYSTEME DE DEPRESSION (fuites d'air d'admission) ● Circuit de la sonde à oxygène chauffée ● Fonctionnement de la sonde à oxygène chauffée ● Haute ou basse pression d'alimentation ● Débitmètre d'air
EQUILIBR PUISSANCE	● Faire chauffer le moteur, puis le faire tourner au ralenti. ● Les injecteurs de chaque cylindre s'arrêtent de fonctionner l'un après l'autre et le changement enregistré dans le régime du moteur est examiné pour évaluer la combustion de chaque cylindre (affichage seulement pour les modèles équipés d'un système d'injection multipoint séquentielle).	La différence de régime du moteur est supérieure à 25 tr/mn avant et après avoir coupé l'injecteur de chaque cylindre.	● Circuit d'injecteur (injecteur, faisceau ou connecteur) ● Circuit d'allumage (faisceau ou connecteur de bougie d'allumage, bobine d'allumage, transistor d'alimentation) ● Compression ● Synchronisation de soupapes
SYST VANNE AAC	● Faire chauffer le moteur, puis le faire tourner au ralenti. ● Le système de vanne IACV-AAC est testé en détectant le changement dans le régime du moteur lorsque l'ouverture de la vanne IACV-AAC passe de 0%, à 20% et 80%.	La différence de régime du moteur est supérieure à 150 tr/mn lorsque l'ouverture de la soupape est comprise entre 80% et 20%.	● Faisceau et connecteur ● Vanne IACV-AAC ● Restriction du passage d'air entre l'entrée d'air et la vanne IACV-AAC ● Réglage de la vis de réglage de ralenti

Simpo PDF Merge and Split Unregistered Version - http://www.simpopdf.com

CONSULT (Suite)

DIAGNOSTIC EN TEMPS REEL EN MODE DE CONTROLE DES DONNEES

Le CONSULT possède deux types d'enclencheurs et ils peuvent être sélectionnés en appuyant sur ''INSTAUR'' en mode de ''CONTROLE DE DONNEES''.

1. ''ENCLEN AUTO'' (enclencheur automatique) :
   - Le défaut sera identifié sur l'écran de CONSULT en temps réel.
     En d'autres termes, l'élément responsable du défaut s'affichera au moment où le défaut est détecté par l'ECM.
     Le CONTROLE DES DONNEES peut être effectué de façon continue jusqu'à ce que le défaut soit détecté. Toutefois, le CONTROLE DES DONNEES ne peut pas être poursuivi longtemps après la détection du défaut.
2. ''ENCLEN MANU'' (Enclencheur manuel) :
   - L'élément de défaut ne peut pas être affiché automatiquement sur l'écran CONSULT même si l'ECM a détecté un défaut.
     Le CONTROLE DES DONNEES peut être effectué continuellement même si un mauvais fonctionnement est détecté.

Utiliser ces enclencheurs comme suit :

1. ''ENCLEN AUTO''
   - Lorsque l'on essaye de détecter le DTC en réalisant une ''PROCEDURE DE CONFIRMATION DTC'', veiller à sélectionner le mode ''CONTROLE DE DONNEES (ENCLEN AUTO)''. Le défaut peut être confirmé au moment où il est détecté.
   - Pour procéder à l'élimination des causes possibles, le CONSULT doit être réglé en mode ''CONTROLE DES DONNEES (ENCLEN AUTO)'', particulièrement si le défaut se produit de façon intermittente.
     Lors du contrôle du circuit en secouant avec précaution (ou en tordant) les connecteurs, pièces ou faisceau suspects dans la ''PROCEDURE DE CONFIRMATION DTC'', dès qu'un défaut est dépisté, le DTC s'affichera (se reporter à la section GI, ''Essais de simulation des problèmes'' au chapitre ''COMMENT ACCOMPLIR UN DIAGNOSTIC EFFICACE EN CAS D'INCIDENT ELECTRIQUE'').
2. ''ENCLEN MANU''
   - Si le défaut s'affiche dès que le ''CONTROLE DE DONNEES'' est sélectionné, régler le CONSULT sur ''ENCLEN MANU''. Il est possible de contrôler et enregistrer les données en sélectionnant ''ENCLEN MANU''. Les données peuvent être utilisées pour d'autres diagnostics, telle que la comparaison de la valeur avec des conditions normales de fonctionnement.

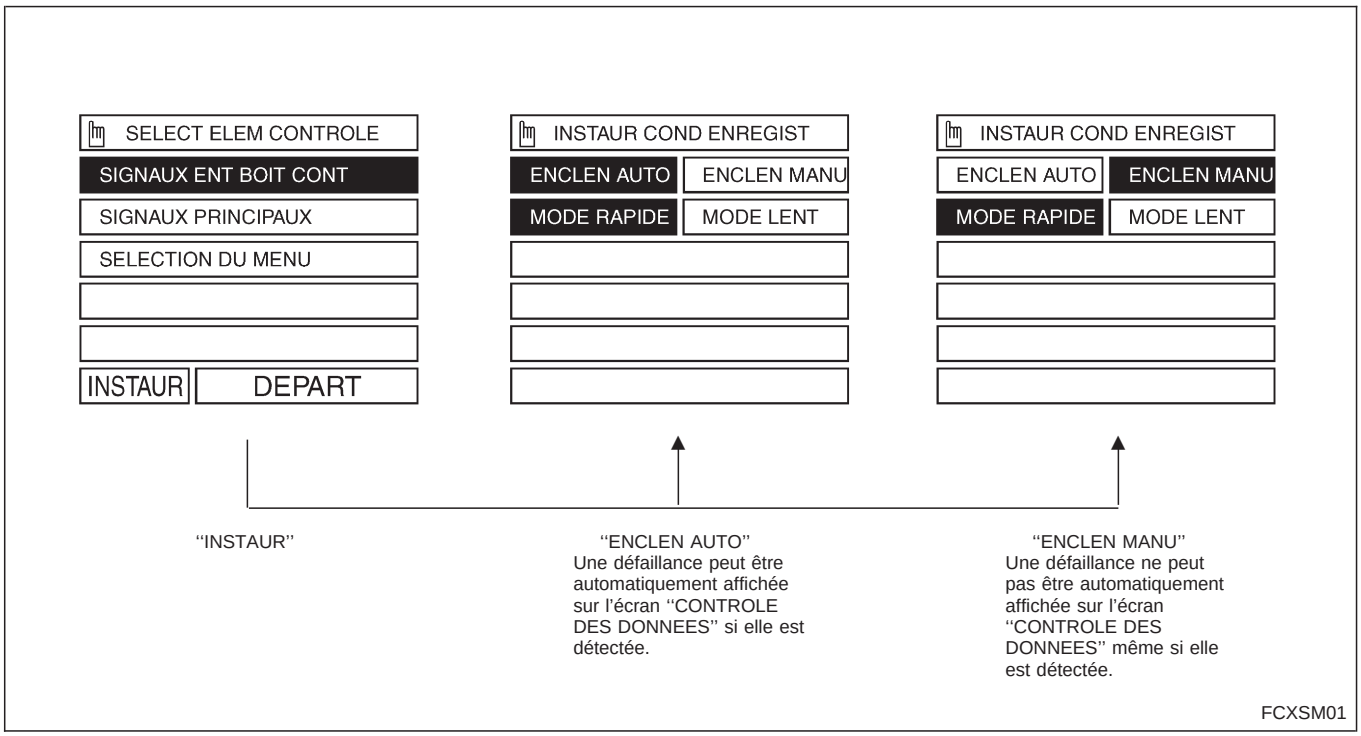

Simpo PDF Merge and Split Unregistered Version - http://www.simpopdf.com

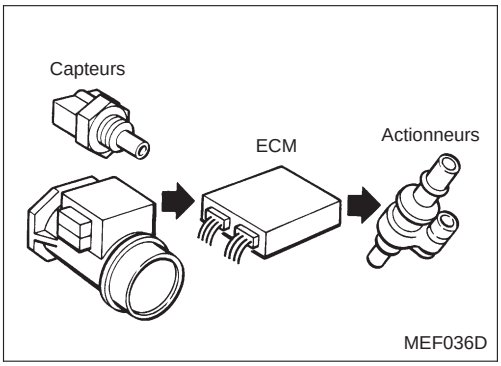

MEF036D

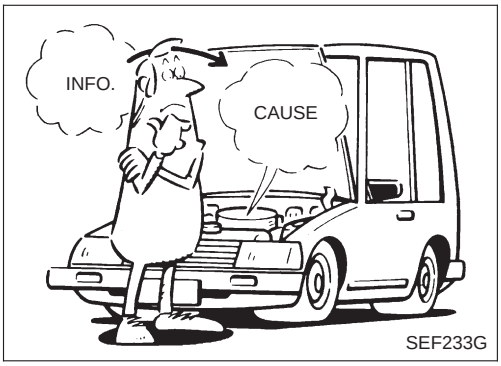

SEF233G

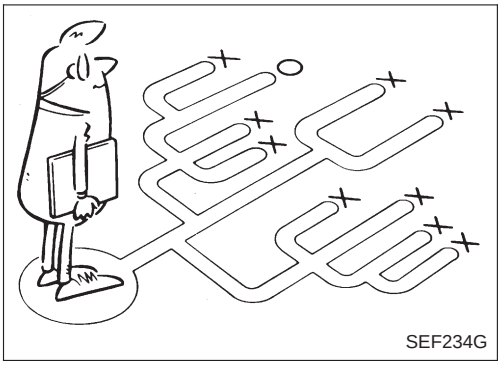
SEF234G

POINTS CLES

QUOI	.....	Modèle de moteur et de véhicule
QUAND	.....	Date, frequences
OU	.....	Conditions de la route
COMMENT	.....	Conditions de fonctionnement, conditions climatiques, symptômes

SEF907L

Introduction

Le moteur dispose d'un ECM pour commander les principaux systèmes tels que l'injection, l'allumage, la régulation du ralenti, etc. L'ECM reçoit des signaux d'entrée que lui délivrent les capteurs, et en réponse, commande instantanément les actionneurs. Il est essentiel que les signaux d'entrée et de sortie soient corrects et stables. Parallèlement, il ne doit pas y avoir de problèmes tels que des fuites au niveau de la conduite de dépression, bougies d'allumage encrassées ou autre, affectant le moteur.

Il est beaucoup plus difficile de faire le diagnostic d'un problème qui se manifeste de manière intermittente que celui d'un problème constant. La plupart des problèmes intermittents sont causés par de mauvaises connexions électriques ou un câblage incorrect. En pareil cas, une vérification soigneuse des circuits suspects peut éventuellement éviter le remplacement de pièces qui n'étaient pas fautives.

Le contrôle visuel seul ne permet pas toujours de déterminer la cause des défauts. Il convient d'effectuer un essai sur route à l'aide du CONSULT ou d'un testeur de circuit branché. Suivre ''Procédure de travail'' à la page EC-58.

Avant d'entreprendre les vérifications, prendre quelques minutes pour parler à un client qui se plaint d'une mauvaise conduite. Le client peut fournir des renseignements utiles quant à ces problèmes, en particulier les problèmes se produisant de façon intermittente. Se renseigner sur les symptômes présents et sur les conditions dans lesquelles ils se présentent. Il convient d'utiliser une ''Fiche de contrôle de diagnostic'' comme celle présentée à la page suivante.

Commencer le diagnostic en recherchant d'abord les problèmes ''conventionnels''. Ceci aidera à dépister les problèmes de conduite sur un véhicule à moteur à commande électronique.

Fiche de contrôle de diagnostic

Il existe de nombreuses conditions de fonctionnement qui conduisent vers le défaut des composants du moteur. Une bonne connaissance de ces cas peut accélérer la procédure et en améliorer l'exactitude.

En règle générale, la capacité de cerner le problème dépend de chaque client. Il est important de bien comprendre les symptômes ou les conditions liées à la plainte du client.

Il convient donc d'utiliser une fiche de contrôle de diagnostic comme celle présentée à la page suivante pour récapituler les informations nécessaires à la recherche des pannes.

Simpo PDF Merge and Split Unregistered Version - http://www.simpopdf.com

Fiche de contrôle de diagnostic (Suite)

EXEMPLE DE FICHE DE CONTROLE DE DIAGNOSTIC

Nom du client M./Mme/Mlle		Modèle et année	Immatriculation
N# de moteur		Transmission	Kilométrage
Date de l'incident		Date de fabrication	Date d'entrée en service
Carburant et bouchon de remplissage de carburant.		☐ Le véhicule peut manquer de carburant, ce qui provoque des ratées à l'allumage. ☐ Le bouchon de remplissage de carburant n'a pas été reposé ou n'est pas bien revissé.	
Symptômes	☐ Démarrage	☐ Démarrage impossible ☐ Pas de combustion ☐ Combustion partielle ☐ Combustion partielle affectée par la position du papillon ☐ Combustion partielle NON affectée par la position du papillon ☐ Démarrage possible mais récalcitrant ☐ Autres [ ]	
	☐ Ralenti	☐ Pas de ralenti accéléré ☐ Instable ☐ Ralenti accéléré ☐ Bas régime de ralenti ☐ Autres [ ]	
	☐ Conduite	☐ Hésitation ☐ Etranglement ☐ Détonation ☐ Manque de puissance ☐ Retour de flamme admission ☐ Retour de flamme échappement ☐ Autres [ ]	
	☐ Calage du moteur	☐ Au démarrage ☐ Au ralenti ☐ En accélération ☐ En décélération ☐ Peu après l'immobilisation ☐ Lors de l'application d'une charge	
Manifestation de l'incident		☐ Peu après la livraison ☐ Récemment ☐ Le matin ☐ La nuit ☐ Dans la journée	
Fréquence		☐ Constamment ☐ Dans certaines conditions ☐ Parfois	
Conditions climatiques		☐ Sans effet	
	Temps	☐ Beau ☐ Pluie ☐ Neige ☐ Autres [ ]	
	Température	☐ Chaud ☐ Tempéré ☐ Frais ☐ Froid ☐ Humide °C	
Conditions du moteur		☐ Froid ☐ Pendant la période d'échauffement ☐ Une fois le moteur chaud Régime du moteur **0 2 000 4 000 6 000 8 000 rpm**	
Conditions de la route		☐ Cycle urbain ☐ Cycle banlieue ☐ Autoroute ☐ Tous terrains (haut/bas)	
Conditions de conduite		☐ Sans effet ☐ Au démarrage ☐ Au ralenti ☐ En conduite sportive ☐ En accélération ☐ En vitesse de croisière ☐ En décélération ☐ En tournant (droite/gauche) Vitesse du véhicule **0 20 40 60 80 100 120** km/h	
Témoin de défaut		☐ Allumé ☐ Eteint	

Simpo PDF Merge and Split Unregistered Version - http://www.simpopdf.com

Procédure de travail

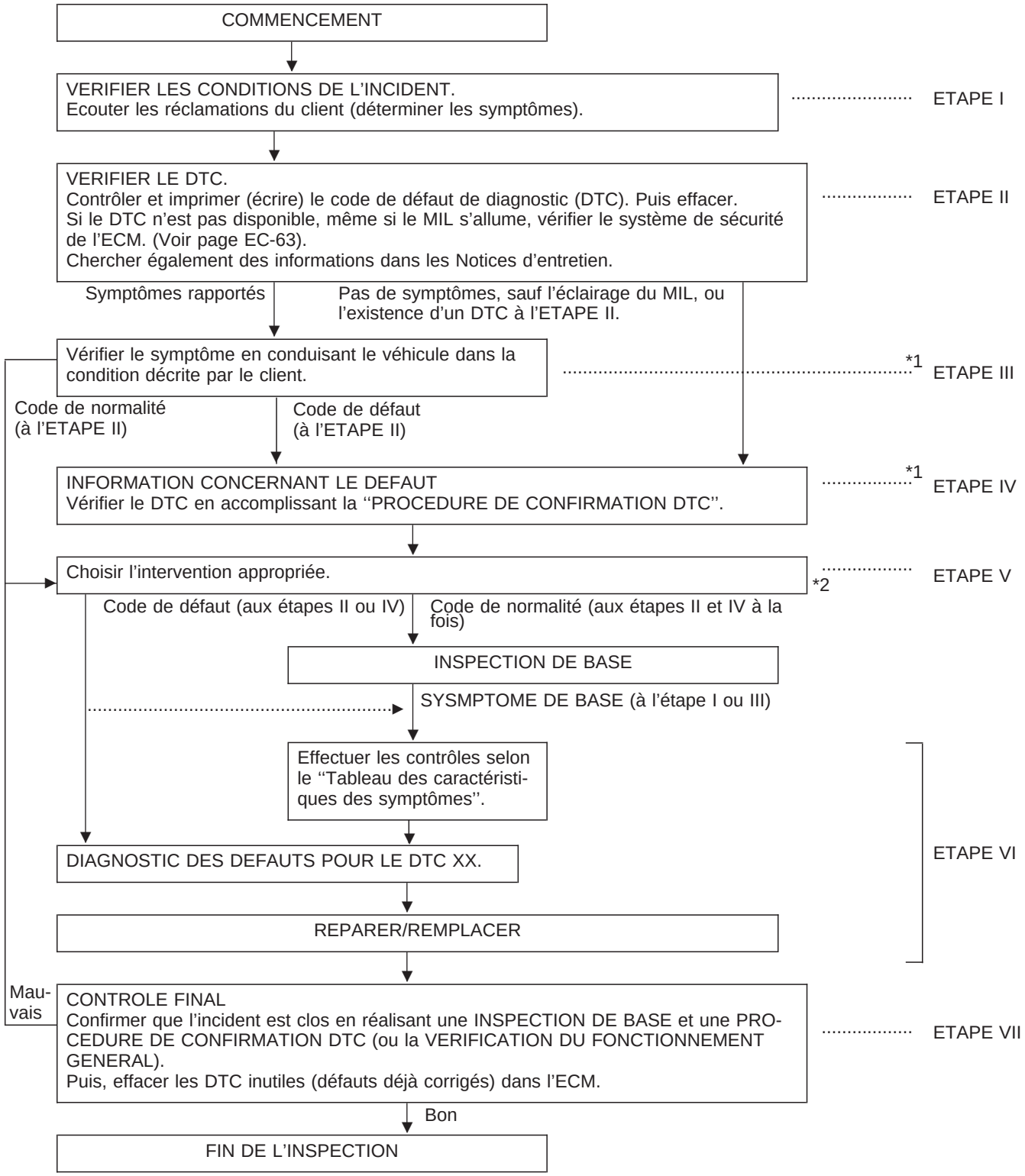

***1 : Si un défaut ne peut pas être reproduit, voir ''Essais de simulation de défaut'' au chapitre ''COMMENT EFFECTUER UN DIAGNOSTIC EFFICACE EN CAS D'INCIDENT ELECTRIQUE'' à la section GI.**

***2 : Si l'autodiagnostic ne peut être exécuté, contrôler les circuits d'alimentation principale et de masse (voir ''DIAGNOSTIC DES DEFAUTS POUR L'ALIMENTATION ELECTRIQUE'', page EC-78).**

Simpo PDF Merge and Split Unregistered Version - http://www.simpopdf.com

Description de la procédure

ETAPE	DESCRIPTION
ETAPE I	Obtenir des renseignements détaillés sur les conditions et l'environnement dans lesquels le défaut/ symptôme s'est produit en utilisant la ''FICHE DE CONTROLE DE DIAGNOSTIC'', illustrée à la page EC-56.
ETAPE II	Avant de confirmer ce défaut, vérifier et noter le code de défaut de diagnostic (DTC) (l'imprimer à l'aide du CONSULT), puis effacer ce code (voir page EC-37). Le DTC peut être utilisé lors de la simulation de l'incident aux ETAPES III et IV. Etudier la relation entre la cause, spécifiée par le DTC, et le symptôme décrit par le client (le ''Tableau des caractéristiques des symptômes'' sera utile). Voir page EC-64. Chercher également des informations dans les Notices d'entretien.
ETAPE III	Essayer de confirmer le symptôme et les conditions dans lesquelles le défaut se produit. La ''FICHE DE CONTROLE DE DIAGNOSTIC'' est utile pour vérifier le défaut. Adapter le CONSULT sur le véhicule en mode ''CONTROLE DE DONNEES (ENCLEN AUTO) et vérifier les résultats d'autodiagnostic en temps réel. Si le défaut ne peut pas être reproduit, effectuer les ''ESSAIS DE SIMULATION DE DEFAUT'' (se reporter à la section GI). Si le code de défaut est détecté, sauter l'étape IV et effectuer l'étape V.
ETAPE IV	Essayer de détecter le code de défaut de diagnostic (DTC) en conduisant (ou effectuant) la ''PROCEDURE DE CONFIRMATION DTC''. Vérifier et lire le code de défaut à l'aide du CONSULT. Pendant la vérification DTC, s'assurer que le CONSULT est adapté sur le véhicule en mode ''CONTROLE DE DONNEES'' (ENCLEN AUTO) et vérifier les résultats de diagnostic en temps réel. Si le défaut ne peut pas être reproduit, effectuer les ''ESSAIS DE SIMULATION DE DEFAUT'' (se reporter à la section GI). Si la ''PROCEDURE DE CONFIRMATION DTC'' n'est pas disponible, effectuer la ''VERIFICATION DU FONCTIONNEMENT GENERAL'' à la place. Le DTC ne peut pas s'afficher grâce à ce contrôle, toutefois, ce contrôle simplifié est une alternative efficace. Le mauvais résultat de la ''VERIFICATION DU FONCTIONNEMENT GENERAL'' est le même que pour la détection DTC.
ETAPE V	Prendre les mesures apropriées sur la base des résultats des étapes I à IV. Si le code de défaut est indiqué, passer à ''DIAGNOSTIC DES DEFAUTS POUR LE DTC XX''. Si le code normal est indiqué, procéder à l'INSPECTION DE BASE à la page suivante. Puis effectuer les inspections conformément au tableau des caractéristiques des symptômes (voir page EC-64).
ETAPE VI	Déterminer où commencer le diagnostic en fonction de l'étude de la relation entre le symptôme et les causes possibles. Inspecter le système en cas de grippage mécanique, connecteurs desserrés ou câblage endommagé à l'aide de la ''Disposition des faisceaux''. Secouer avec précaution les connecteurs correspondants, composants ou faisceau de câblage avec CONSULT réglé en mode de ''CONTROLE DE DONNEES (ENCLEN AUTO)''. Contrôler la tension des bornes de l'ECM en question ou contrôler les données de sortie des capteurs avec le CONSULT. Consulter les pages EC-67, EC-71. La ''PROCEDURE DE DIAGNOSTIC'' à la section EC contient une description basée sur l'inspection du circuit ouvert. Une inspection des courts-circuits est également requise pour le contrôle du circuit dans la PROCEDURE DE DIAGNOSTIC. Pour plus de détails, se reporter à la section GI (''COMMENT EFFECTUER UN DIAGNOSTIC EFFICACE EN CAS D'INCIDENT ELECTRIQUE'' et ''Inspection du circuit''). Réparer ou remplacer les pièces défectueuses.
ETAPE VII	Après avoir réparé le circuit ou remplacé un composant, faire tourner le moteur dans les mêmes conditions et circonstances qui sont à l'origine du problème initialement décrit par le client. Effectuer la ''PROCEDURE DE CONFIRMATION DTC'' et confirmer que le code normal (code de défaut de diagnostic n° 55) est détecté. Si le défaut est toujours présent lors du contrôle final, effectuer l'ETAPE VI en utilisant une méthode différente de la précédente. Avant de rendre le véhicule au client, veiller à effacer le DTC inutile (déjà enregistré) dans l'ECM (voir page EC-37).

Simpo PDF Merge and Split Unregistered Version - http://www.simpopdf.com

A

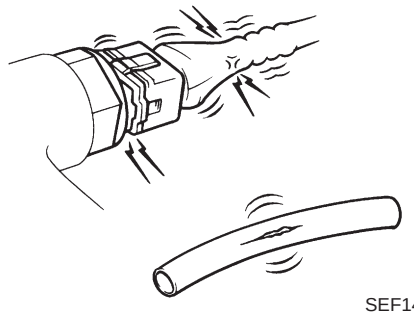

SEF142I

B

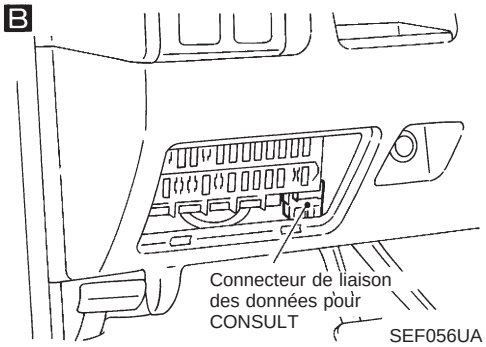

SEF056UA

C

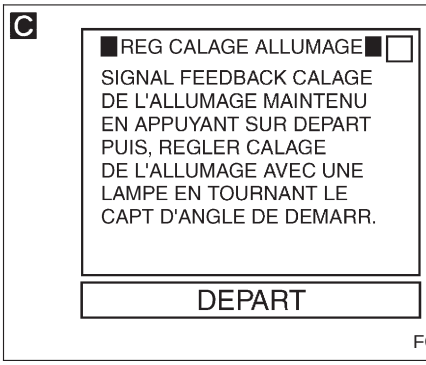

FCITA02

C

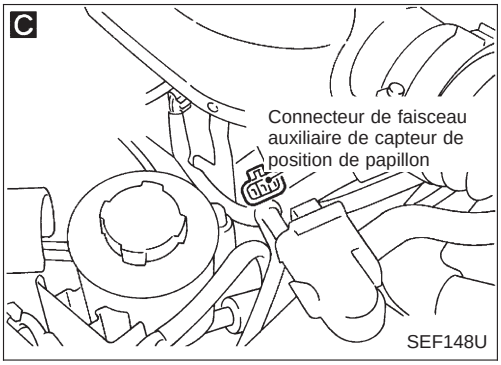

SEF148U

C

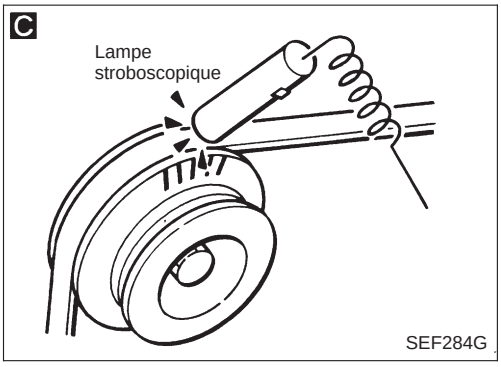

SEF284G

Inspection de base

Précaution :

Effectuer une inspection de base sans appliquer de charge électrique ou mécanique ;

- **La commande des phares n'est pas actionnée,**
- **L'interrupteur de climatiseur est à l'arrêt,**
- **L'interrupteur de désembuage de lunette arrière est à l'arrêt,**
- **Le volant est dans la position droite, etc.**

A

AVANT LE DEMARRAGE

1. Vérifier les documents d'entretien pour voir si des réparations récentes ont été effectuées qui pourraient indiquer un problème connexe, ou si un entretien est prévu sous peu.
2. Ouvrir le capot et vérifier :

- Que les connecteurs de faisceau ne sont pas mal branchés
- Que les flexibles à dépression ne sont pas fissurés, n'ont pas de défauts et sont bien raccordés
- Que les câbles ne sont pas desserrés, coincés ou coupés.

↓

B

BRANCHER CONSULT AU VEHICULE.

Brancher CONSULT sur le connecteur de liaison des données et sélectionner "MOTEUR" dans le menu. Consulter la page EC-46.

↓

C

VERIFIER LE CALAGE D'ALLUMAGE.

1. Faire chauffer le moteur suffisamment.
2. Sélectionner "REGL CALAGE ALLUMA" dans le mode "SUPPORT TRAVAIL".
3. Appuyer sur "DEPART".
4. Vérifier le calage de l'allumage au ralenti à l'aide d'une lampe stroboscopique.

Calage de l'allumage :
10°±2° avant P.M.H.

OU

1. Faire chauffer le moteur suffisamment.
2. Couper le moteur et débrancher le connecteur de faisceau auxiliaire du capteur de position de papillon.
3. Démarrer le moteur.
4. Vérifier le calage de l'allumage au ralenti à l'aide d'une lampe stroboscopique.

Calage de l'allumage :
10°±2° avant P.M.H.

Mauvais → Régler le calage de l'allumage en faisant tourner le capteur d'angle d'arbre à cames.

Bon ↓

Ⓐ

(Aller à la page suivante).

Simpo PDF Merge and Split Unregistered Version - http://www.simpopdf.com

Inspection de base (Suite)

D

REG CALAGE ALLUMAGE

SIGNAL FEEDBACK CALAGE DE L'ALLUMAGE MAINTENU EN APPUYANT SUR DEPART PUIS, REGLER CALAGE DE L'ALLUMAGE AVEC UNE LAMPE EN TOURNANT LE CAPT D'ANGLE DE DEMARR.

DEPART

FCITA02

D

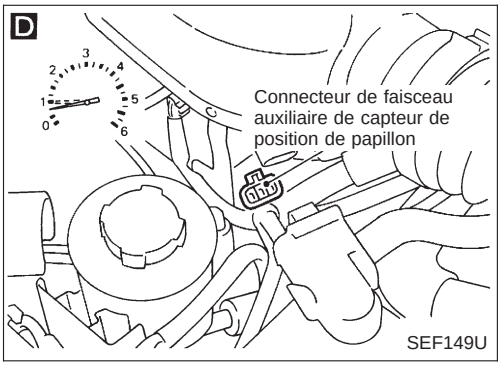

Ⓐ

D

VERIFIER LE REGL. DU REGIME DE RALENTI, REGLAGE INITIAL DE LA VIS (SUR LA BASE DU RALENTI).

1. Sélectionner ''REG CALAGE ALLUMA'' dans le mode ''SUPPORT TRAVAIL''.
2. En touchant ''DEPART'', le régime moteur tombe-t-il à 750±50 tr/mn ?

OU

Le moteur tourne-t-il à 750±25 tr/mn lorsqu'on débranche le connecteur du faisceau auxiliaire du capteur de position de papillon ?

Mauvais → Régler le régime de ralenti de base en tournant la vis de réglage du régime de ralenti.

Bon ↓

VERIFIER LA POSITION DE RALENTI DU CAPTEUR DE POSITION DE PAPILLON.

1. Effectuer ''REGL CAP PAPILLON'' en mode ''SUPPORT TRAVAIL''.
2. Vérifier la tension de sortie du capteur de position de papillon.
   Tension : 0,35 - 0,65V

OU

1. Rebrancher le connecteur du faisceau auxiliaire du capteur de position de papillon.
2. Vérifier la tension de sortie entre la borne ② du capteur de position de papillon et la masse à l'aide d'un voltmètre.
   Tension : 0,35 - 0,65V

Mauvais → Régler la tension de sortie sur 0,5V en tournant le corps du capteur de position de papillon.

REMETTRE A ZERO LA MEMOIRE DE POSITION DE RALENTI.

1. Débrancher le connecteur de faisceau auxiliaire du capteur de position de papillon.
2. Faire chauffer le moteur suffisamment.
3. Sélectionner ''POSIT RALENTI'' en mode ''CONTROLE DE DONNEES'' (déclencheur manuel) à l'aide du CONSULT avant de couper le moteur.
4. Rebrancher le connecteur du faisceau auxiliaire du capteur de position de papillon.
5. Démarrer le moteur et attendre quelques secondes.
6. Mettre le contact d'allumage sur ''OFF'' et attendre 5 secondes au moins.
7. Répéter les étapes 5 et 6 jusqu'à ce que le ''POSIT RALENTI'' passe sur ''MAR'' en mode ''CONTROLE DE DONNEES'' avec CONSULT.
   Répéter 10 fois les étapes 5 et 6.

Bon ↓

Ⓑ

(Aller à la page suivante).

Simpo PDF Merge and Split Unregistered Version - http://www.simpopdf.com

Inspection de base (Suite)

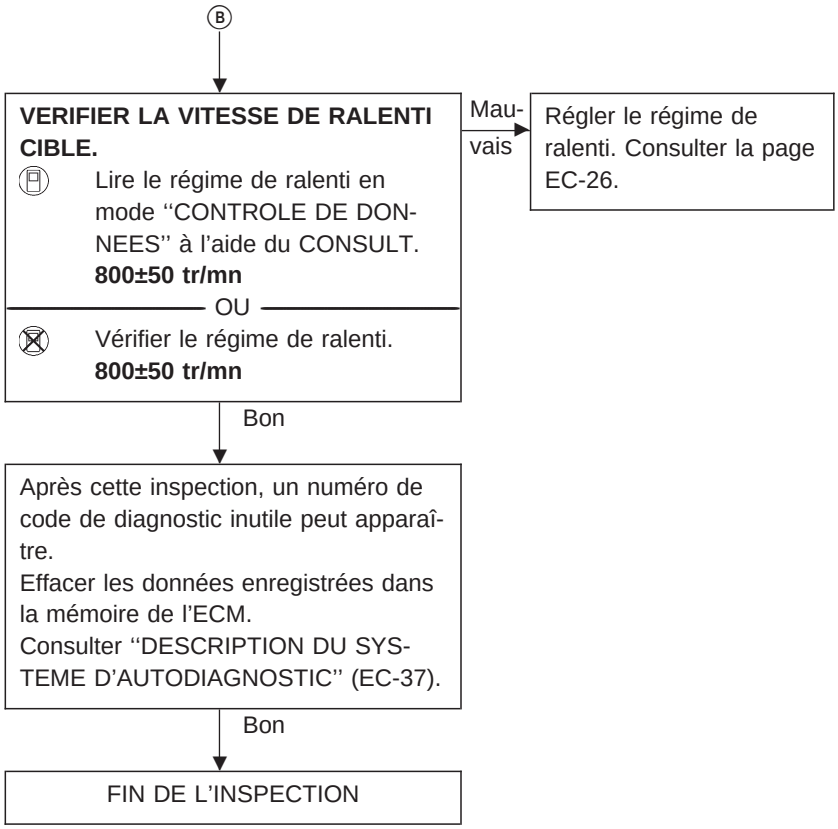

Simpo PDF Merge and Split Unregistered Version - http://www.simpopdf.com

Tableau de sécurité

L'ECM passe en mode de sécurité, lorsqu'un des défauts suivants est détecté en raison d'un circuit ouvert ou d'un court-circuit.
Quand l'ECM passe en mode de sécurité répertorié dans la dernière colonne ci-dessus, le MIL s'allume.

<table>
<tr><th>N° de DTC</th><th>Eléments détectés</th><th>Condition de fonctionnement du moteur en mode de sécurité</th></tr>
<tr><td>12</td><td>Circuit du débitmètre d'air</td><td>Le régime du moteur ne dépassera pas 2 400 tr/mn en raison de la coupure d'alimentation.</td></tr>
<tr><td>13</td><td>Circuit du capteur de température du réfrigé-rant moteur</td><td>La température du réfrigérant moteur sera déterminée sur la base du temps suivant la mise du contact d'allumage sur ''ON'' ou ''START''.
Le CONSULT affiche la température du réfrigérant moteur déterminée par l'ECM.
<table>
<tr><th>Condition</th><th>Température du réfrigérant moteur déterminée (Affichage CONSULT)</th></tr>
<tr><td>Au moment de la mise du contact d'allumage sur ''ON'' ou ''START''</td><td>20°C</td></tr>
<tr><td>Plus de 6 minutes après que l'allumage est mis sur ''START''</td><td>80°C</td></tr>
<tr><td>Sauf comme indiqué ci-dessus</td><td>20 - 80°C
(en fonction du temps écoulé)</td></tr>
</table></td></tr>
<tr><td>41</td><td>Circuit de la sonde de température d'air d'admission</td><td>L'ECM remplit sa mission de contrôle en partant de l'hypothèse que la température d'air d'admission est de 20°C.</td></tr>
<tr><td>43</td><td>Circuit du capteur de position de papillon</td><td>La position du papillon sera déterminée sur la base du débitmètre d'air et du régime moteur.
Par conséquent l'accélération sera mauvaise.
<table>
<tr><th></th><th>Condition de conduite</th></tr>
<tr><td>Moteur au ralenti</td><td>Normal</td></tr>
<tr><td>Lors de l'accélération</td><td>Mauvaise accélération</td></tr>
</table></td></tr>
<tr><td>Impossibilité d'accéder au mode II de test de diagnostic</td><td>ECM</td><td>Condition de déclenchement du système de sécurité de l'ECM
Le fonctionnement de la fonction de calcul du boîtier de contrôle de L'ECCS a été jugé défec-tueux.
Lorsque le système de sécurité est enclenché, c'est à dire si l'ECM détecte un défaut de fonc-tionnement dans son unité centrale, le TEMOIN ''CHECK ENGINE (Vérifier le moteur)'' s'éclaire sur le tableau de bord pour prévenir le conducteur.
Toutefois, il n'est pas possible d'accéder à l'ECCS et le DTC ne peut pas être confirmé.
Commande du moteur avec système de sécurité de l'ECM
Lorsque le système de sécurité intégré fonctionne, le fonctionnement de l'injection de carburant, du calage d'allumage, de la pompe d'alimentation et de la vanne IACV-AAC sont contrôlés dans certaines limites.
<table>
<tr><th></th><th>Fonctionnement du système de sécurité de l'ECM</th></tr>
<tr><td>Régime du moteur</td><td>Le régime du moteur ne dépassera pas 3 000 tr/mn.</td></tr>
<tr><td>Injection de carburant</td><td>Système d'injection multipoint simultanée</td></tr>
<tr><td>Calage de l'allumage</td><td>Le calage de l'allumage est fixé à la valeur préétablie.</td></tr>
<tr><td>Pompe d'alimentation</td><td>Le relais de pompe d'alimentation se met en marche lorsque le moteur tourne et se met hors circuit lorsque le moteur cale.</td></tr>
<tr><td>Vanne IACV-AAC</td><td>Complètement ouverte</td></tr>
</table>
Remplacer l'ECM, après confirmation que l'ECM se trouve en mode sécurité.</td></tr>
</table>

Simpo PDF Merge and Split Unregistered Version - http://www.simpopdf.com

Tableau des caractéristiques des symptômes

			SYMPTOME																Page de référence
			DEMARRAGE DUR/PAS DE DEMARRAGE/REDEMARRAGE (SAUF HA)	CALAGE DU MOTEUR	HESITATION/TROU D'ACCELERATION/BAISSE DE REGIME	COGNEMENT A L'ALLUMAGE/DETONATION	MANQUE DE PUISSANCE/MAUVAISE ACCELERATION	RALENTI ACCELERE/RALENTI LENT	MAUVAIS RALENTI/EFFET DE SCIAGE	VIBRATION AU RALENTI	RETOUR LENT/PAS DE RETOUR AU RALENTI	SURCHAUFFE/TEMPERATURE D'EAU ELEVEE	CONSOMMATION EXCESSIVE DE CARBURANT	CONSOMMATION EXCESSIVE D'HUILE	BATTERIE A PLAT (CHARGE INSUFFISANTE)	REFROIDISSEMENT EXCESSIF	SURCHARGE	
Code de symtôme de garantie			AA	AB	AC	AD	AE	AF	AG	AH	AJ	AK	AL	AM	HA	1P	1X	
Système de gestion de moteur de base	Carburant	Circuit de pompe d'alimentation	●	●	●	○	●		●	○			○		○			EC-159
		Système de régulation de pression d'alimentation	●	●	●	○	●	○	●	●	○		●					EC-22
		Circuit d'injecteur	●	●	●	○	●		●	●			●					EC-150
		Système d'émission évaporative	○	○	○	○	●	○	○	○	○		○					EC-19
	Air	Système de ventilation positive de carter	○	○	○	○	●	○	○	○	○		○	○				EC-21
		Réglage incorrect du régime de ralenti	○	○				○	○	○	○		○					EC-26
		Circuit de vanne de commande de tourbillon		○	○					●								EC-169
		Circuit de vanne IACV-AAC	●	●	●	○	●	●	●	●	●		○		○			EC-139
		Circuit d'électrovanne FICD	○	○	○	○	○	○	○	○	○		○					EC-175
	Allumage	Réglage incorrect du calage d'allumage	○	○	●	●	●		●	●			●					EC-26
		Circuit d'allumage	●	●	●	●	●		●	●			●					EC-105
	EVAP	Circuit d'électrovanne de commande de purge de cartouche EVAP	●	○	○	○	○		○				○					EC-147
	Alimentation électrique principale et circuit de mise à la masse		●	●	●	○	○		○	○		○	○		○			EC-78
	Circuit de climatiseur		○	○	○	○	○	○	○	○	○		○		○			Section HA
Système de l'ECCS	ECCS	Circuit du capteur d'angle d'arbre à cames	●	●	●	●	●		○	○			○					EC-89
		Circuit du débitmètre d'air	●	●	●	●	●		●	○			○					EC-95
		Circuit de la sonde à oxygène chauffée		●	●	○	●		●	○			●					EC-130, 134
		Circuit du capteur de température du réfrigérant moteur	●	●	●	○	●	●	●	○	○		●					EC-100
		Circuit du capteur de position de papillon		●	●		●	●	●	●	●		●					EC-121
		Réglage incorrect du capteur de position de papillon		●	○		○	●	○	○	●		○					EC-60
		Circuit du capteur de vitesse du véhicule		○	○		○						○					EC-125
		ECM	○	○	○	○	○	○	○	○	○	○	○					EC-63
		Circuit de signal de démarrage	○															EC-155
		Circuit du contact de position de point mort			○		○		○	○			○					EC-143
		Circuit de manocontact d'huile de direction assistée		○					○	○								EC-163

● ; Forte probabilité
○ ; Faible probabilité

(suite à la page suivante)

Simpo PDF Merge and Split Unregistered Version - http://www.simpopdf.com

Tableau des caractéristiques des symptômes (Suite)

SYSTEME – Pièce mécanique du moteur et autres		SYMPTOME															Page de référence
		DEMARRAGE DUR/PAS DE DEMARRAGE/REDEMARRAGE (SAUF HA)	CALAGE DU MOTEUR	HESITATION/TROU D'ACCELERATION/BAISSE DE REGIME	COGNEMENT A L'ALLUMAGE/DETONATION	MANQUE DE PUISSANCE/MAUVAISE ACCELERATION	RALENTI ACCELERE/RALENTI LENT	MAUVAIS RALENTI/EFFET DE SCIAGE	VIBRATION AU RALENTI	RETOUR LENT/PAS DE RETOUR AU RALENTI	SURCHAUFFE/TEMPERATURE D'EAU ELEVEE	CONSOMMATION EXCESSIVE DE CARBURANT	CONSOMMATION EXCESSIVE D'HUILE	BATTERIE A PLAT (CHARGE INSUFFISANTE)	REFROIDISSEMENT EXCESSIF	SURCHARGE	
Code de symptôme de garantie		AA	AB	AC	AD	AE	AF	AG	AH	AJ	AK	AL	AM	HA	1P	1X	
Carburant	Réservoir de carburant	●	●														
	Tuyauterie d'alimentation	●	●	○	○	●		○	○			○					
	Blocage des vapeurs d'échappement		○														
	Dépôt de vanne	○	○	○	○	○		○	○			○					
	Mauvais carburant (lourd, faible en octane)	○	○	○	○	○		○	○			○					—
Air	Conduit d'air		○	○		○		○	○			○					
	Filtre à air		○	●		●		●	○			○					
	Fuite d'air du conduit d'air (Débitmètre d'air – corps de papillon)	○	○	○	○	○	○	○	○	○		○					
	Corps de papillon, câble de papillon	○	●	●		○	●	●	○	○		○					Section FE
	Fuite d'air au niveau du collecteur d'admission/ collecteur/joint d'étanchéité	○	●	○	○	○	○	●	○	○		●					—
Démarrage	Batterie	○	○	○		○		○	○			○		○		○	
	Circuit d'alternateur	○	○	○		○		○	○			○		○		○	Section EL
	Circuit de démarreur	●															
	Volant-moteur	●															—
Moteur	Culasse	●	○	●	○	○		●	○			○					
	Joint plat de culasse	○	○	○	○	○		●	○		●	○	○				
	Bloc-cylindres	○	○	○	○	●		○	○			○	○				
	Piston	○	○	○	○	○		○	●			○	●				
	Segment de piston	○	○	○	○	●		●	○			○	●				
	Bielle	●	○	○	○	○		○	○			○					
	Roulement	●	●	○	●	○		○	●			○					
	Vilebrequin	○	○	○	○	○		○	○			○					
Mécanisme de vanne	Chaîne de distribution	●	○	●	○	●		○	○			○					—
	Arbre à cames	●	○	○	○	○		○	○			○					
	Soupape d'admission	○	●	●	○	○		●	○			○	○				
	Soupape d'échappement	●	○	●	○	●		●	○			○	●				
Echappement	Collecteur d'échappement/tube/silencieux/joint plat	○	●	●	●	●		●	○			●					
	Catalyseur trois voies	○	●	○	○	●		○	○			○					
Lubrification	Carter d'huile/crépine d'huile/pompe à huile/filtre à huile/galerie d'huile	●	○	○	●	●		○	○			○	●				
	Niveau d'huile (bas)/huile sale	○	○	○	○	○		○	○			○	○				

Simpo PDF Merge and Split Unregistered Version - http://www.simpopdf.com

Tableau des caractéristiques des symptômes (Suite)

SYSTEME – Pièce mécanique du moteur et autres		SYMPTOME															Page de référence
		DEMARRAGE DUR/PAS DE DEMARRAGE/REDEMARRAGE (SAUF HA)	CALAGE DU MOTEUR	HESITATION/TROU D'ACCELERATION/BAISSE DE REGIME	COGNEMENT A L'ALLUMAGE/DETONATION	MANQUE DE PUISSANCE/MAUVAISE ACCELERATION	RALENTI ACCELERE/RALENTI LENT	MAUVAIS RALENTI/EFFET DE SCIAGE	VIBRATION AU RALENTI	RETOUR LENT/PAS DE RETOUR AU RALENTI	SURCHAUFFE/TEMPERATURE D'EAU ELEVEE	CONSOMMATION EXCESSIVE DE CARBURANT	CONSOMMATION EXCESSIVE D'HUILE	BATTERIE A PLAT (CHARGE INSUFFISANTE)	REFROIDISSEMENT EXCESSIF	SURCHARGE	
Code de symptôme de garantie		AA	AB	AC	AD	AE	AF	AG	AH	AJ	AK	AL	AM	HA	1P	1X	
Refroidissement	Radiateur/flexible/bouchon de remplissage de radiateur	○	○	○	○	○		○	○		●	○					—
	Thermostat	○	○	○	○	○	○	●	○	○	●	○			○		
	Pompe à eau	●	○	○	○	○		○	○		●	○					
	Galerie d'eau	○	○	○	○	○		○	○		○	○					
	Ventilateur de refroidissement	○	○	○	○	●	○	●	○	○	●	○			○		
	Niveau de réfrigérant (bas)/réfrigérant contaminé	○	○	○	○	○		○	○		○	○					

● ; Forte probabilité
○ ; Faible probabilité

Simpo PDF Merge and Split Unregistered Version - http://www.simpopdf.com

Valeur de référence de CONSULT en mode de contrôle de données

Remarques :

- Les données de spécification sont des valeurs de référence.
- Les données de spécification sont des valeurs de sortie/entrée détectées ou transmises au connecteur par l'ECM.
  * Les données de spécification peuvent ne pas être directement en rapport avec le fonctionnement, les signaux et les valeurs de leurs composants.

  i.e. Régler le calage de l'allumage avec une lampe stroboscopique avant de contrôler le ''CALAGE ALLUM'', car le contrôleur peut indiquer les données de spécification en dépit du fait que le calage de l'allumage n'est pas réglé selon ces données. Le ''CALAGE ALLUM'' contrôle les données calculées par l'ECM selon les signaux d'entrée provenant du capteur d'angle d'arbre à cames et des autres capteurs qui contrôlent le calage de l'allumage.
- Si les résultats de diagnostic en temps réel sont mauvais et que les résultats du système d'autodiagnostic sont bons lorsqu'on effectue le diagnostic du débitmètre d'air, vérifier tout d'abord que le circuit de commande de pompe d'alimentation fonctionne normalement.

ELEMENT DE CONTROLE	CONDITION		SPECIFICATION
CPA•TR/MN (POS)	● Compte-tours : brancher ● Faire tourner le moteur et comparer l'indication du compte-tours et la valeur de CONSULT.		Presque la même vitesse que la valeur donnée par CONSULT.
DEBITMET AIR	● Moteur : après échauffement ● Interrupteur de climatiseur : à l'arrêt ● Levier de passage : point mort ● A vide	Ralenti	1,3 - 1,7V
		2 500 tr/mn	1,7 - 2,1V
CAP TEMP MOT	● Moteur : après échauffement		Plus de 70°C
CAP GAZ ECH	● Moteur : après échauffement	Maintenir le régime moteur à 2 000 tr/mn	0 - 0,3V ↔ 0,6 - 1,0V
CON F/C MEL			PAUVRE ↔ RICHE Change plus de 5 fois en 10 secondes.
CAP VIT VEHI	● Faire tourner les roues motrices et comparer l'indication du compteur de vitesse et la valeur donnée par CONSULT.		Presque la même vitesse que la valeur donnée par CONSULT
TENS BATTERIE	● Contact d'allumage : ''ON'' (moteur à l'arrêt)		11 - 14V
CAP PAPILLON	● Contact d'allumage : ''ON'' (Moteur à l'arrêt)	Papillon : complètement fermé	0,35 - 0,65V
		Papillon : complètement ouvert	Env. 4,0V
SIGNAL DE DEMARRAGE	● Contact d'allumage : ''ON'' → ''START'' → ''ON''		ARRET → MARCHE → ARRET
POSIT RALENTI	● Contact d'allumage : ''ON'' (Moteur à l'arrêt)	Papillon : position de ralenti	MARCHE
		Vanne de papillon : légèrement ouverte	ARRET
SIGNAL CLIMAT	● Moteur : après échauffement, faire tourner au ralenti	Interrupteur de climatiseur : à l'arrêt	ARRET
		Interrupteur de climatiseur : en marche (Le compresseur fonctionne).	MARCHE
CON NEUTRE	● Contact d'allumage : ''ON''	Levier de passage : point mort	MARCHE
		Sauf ci-dessus	ARRET
SIG DIR ASSIS	● Moteur : après échauffement, faire tourner au ralenti	Position neutre du volant de direction (vers l'avant)	ARRET
		Le volant est tourné.	MARCHE

Simpo PDF Merge and Split Unregistered Version - http://www.simopdf.com

Valeur de référence de CONSULT en mode de contrôle de données (Suite)

ELEMENT DE CONTROLE	CONDITION		SPECIFICATION
IMPUL INJ	● Moteur : après échauffement ● Interrupteur de climatiseur : à l'arrêt ● Levier de passage : point mort ● A vide	Ralenti	2,4 - 3,2 m/sec.
		2 000 tr/mn	1,9 - 3,2 m/sec.
CALAGE ALLUM	dito	Ralenti	10° avant P.M.H.
		2 000 tr/mn	Plus de 25° avant P.M.H.
VANNE AAC	dito	Ralenti	20 - 40%
		2 000 tr/mn	–
ALPHA A/CARB	● Moteur : après échauffement	Maintenir le régime moteur à 2 000 tr/mn	65 - 140%
RELAIS CLIMAT	● Interrupteur de climatiseur : ARRET → MARCHE		ARRET → MARCHE
REL POMP ALI	● Le contact d'allumage est mis sur "ON" (fonctionne pendant 5 secondes) ● Le moteur tourne et démarre ● Lorsque le moteur est arrêté (il s'arrête en 1 seconde)		MARCHE
	Sauf comme indiqué ci-dessus		ARRET
EV COM TOURBI	● Le moteur tourne à un régime inférieur à 3 600 tr/mn.		MARCHE
	● Sauf ci-dessus		ARRET
EV COM EGR	● Moteur : après échauffement ● Interrupteur de climatiseur : à l'arrêt ● Levier de passage : point mort ● A vide	Ralenti	ARRET
		Supérieur à 3 800 tr/mn	MARCHE

Simpo PDF Merge and Split Unregistered Version - http://www.simpopdf.com

Graphique de référence du capteur principal en mode de contrôle de données

Les courbes suivantes sont les courbes de référence principales des capteurs en mode de ‘‘CONTROLE DE DONNEES’’.
(Sélectionner ‘‘MODE RAPIDE’’ en ‘‘CONTROLE DE DONNEES’’ avec CONSULT).

CAP PAPILLON, POSIT RALENTI

On trouvera ci-dessous les données des paramètres ‘‘CAP PAPILLON’’ et ‘‘POSIT RALENTI’’ lorsqu’on enfonce la pédale d’accélérateur alors que le contact d’allumage est sur ‘‘ON’’.
Le signal de ‘‘CAP PAPILLON’’ doit augmenter progressivement sans chute ou pointe intermittente après avoir changé le paramètre de ‘‘POSIT PAPILLON’’ de ‘‘MAR’’ à ‘‘ARR’’.

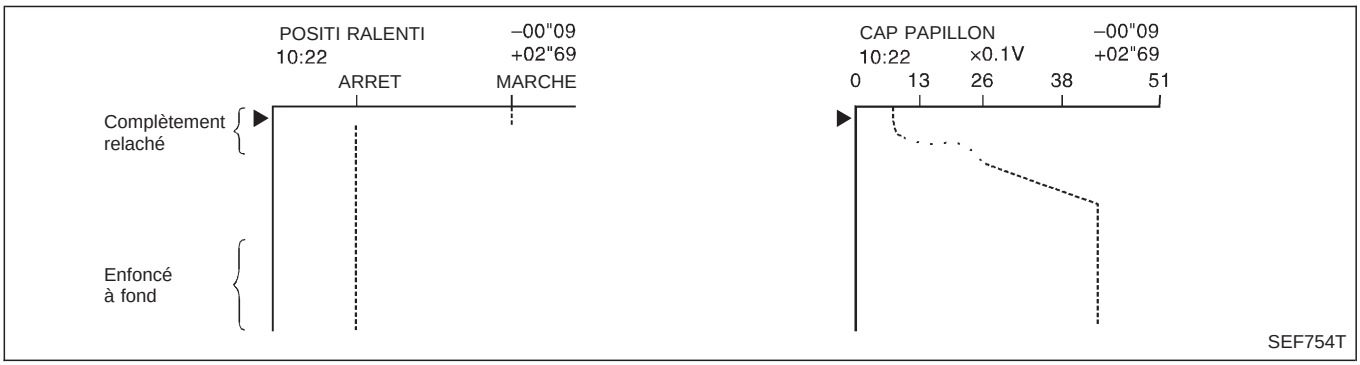

CPA•TR/MN (POS), DEBITMET AIR, CAP PAPILLON, CAP GAS ECH, IMPUL INJ

On trouvera ci-dessous les données des paramètres ‘‘CPA▪TR/MN (POS)’’, ‘‘DEBITMET AIR’’, ‘‘CAP PAPILLON’’, ‘‘CAP GAS ECH’’ et ‘‘IMPUL INJ’’ lorsque l’on emballe rapidement le moteur à 4 800 tr/mn à vide après avoir suffisamment chauffé le moteur.
Chaque valeur sert de référence, la valeur exacte peut varier.

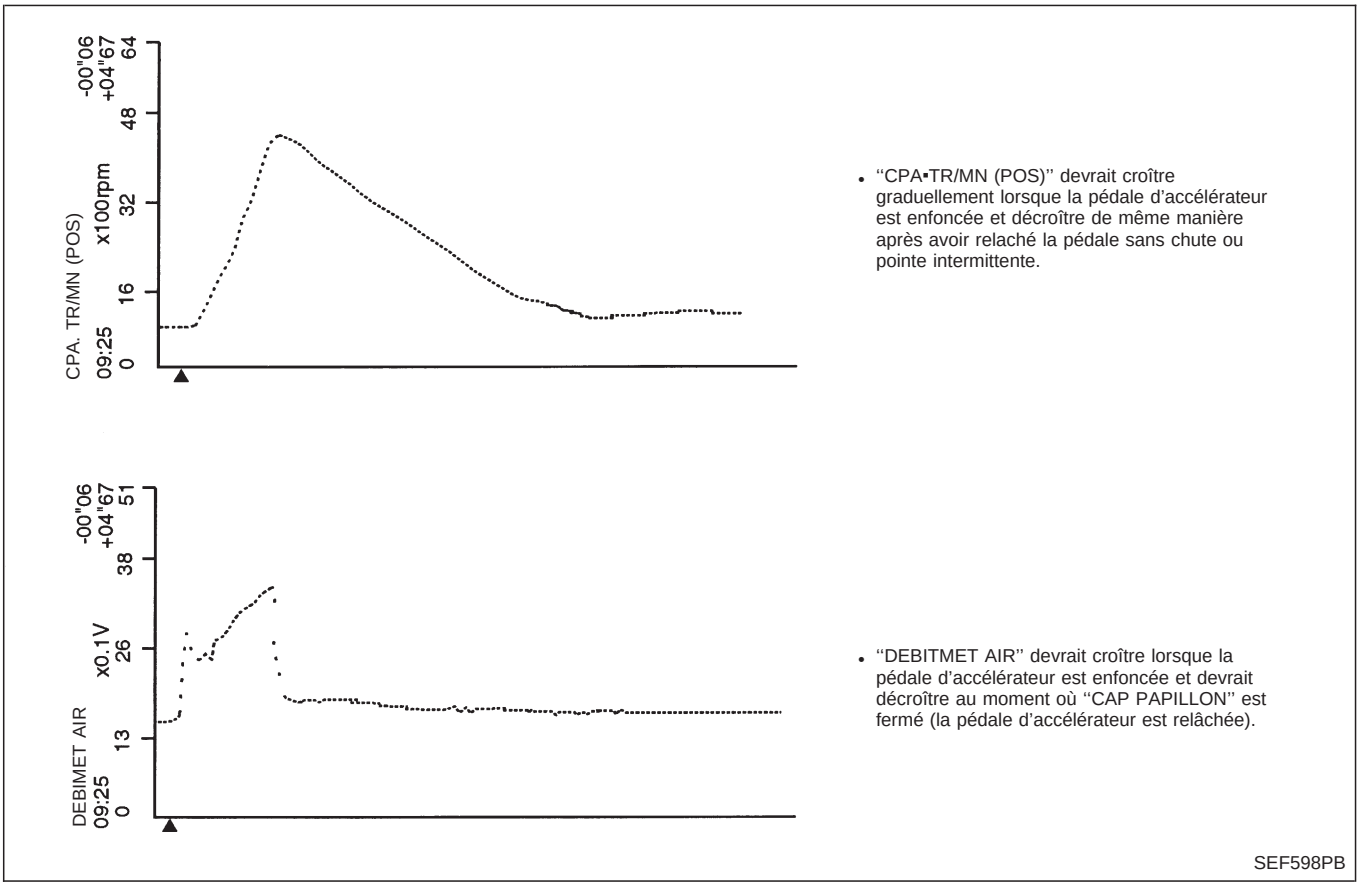

- ‘‘CPA▪TR/MN (POS)’’ devrait croître graduellement lorsque la pédale d’accélérateur est enfoncée et décroître de même manière après avoir relaché la pédale sans chute ou pointe intermittente.
- ‘‘DEBITMET AIR’’ devrait croître lorsque la pédale d’accélérateur est enfoncée et devrait décroître au moment où ‘‘CAP PAPILLON’’ est fermé (la pédale d’accélérateur est relâchée).

Simpo PDF Merge and Split Unregistered Version - http://www.simopdf.com

Graphique de référence du capteur principal en mode de contrôle de données (Suite)

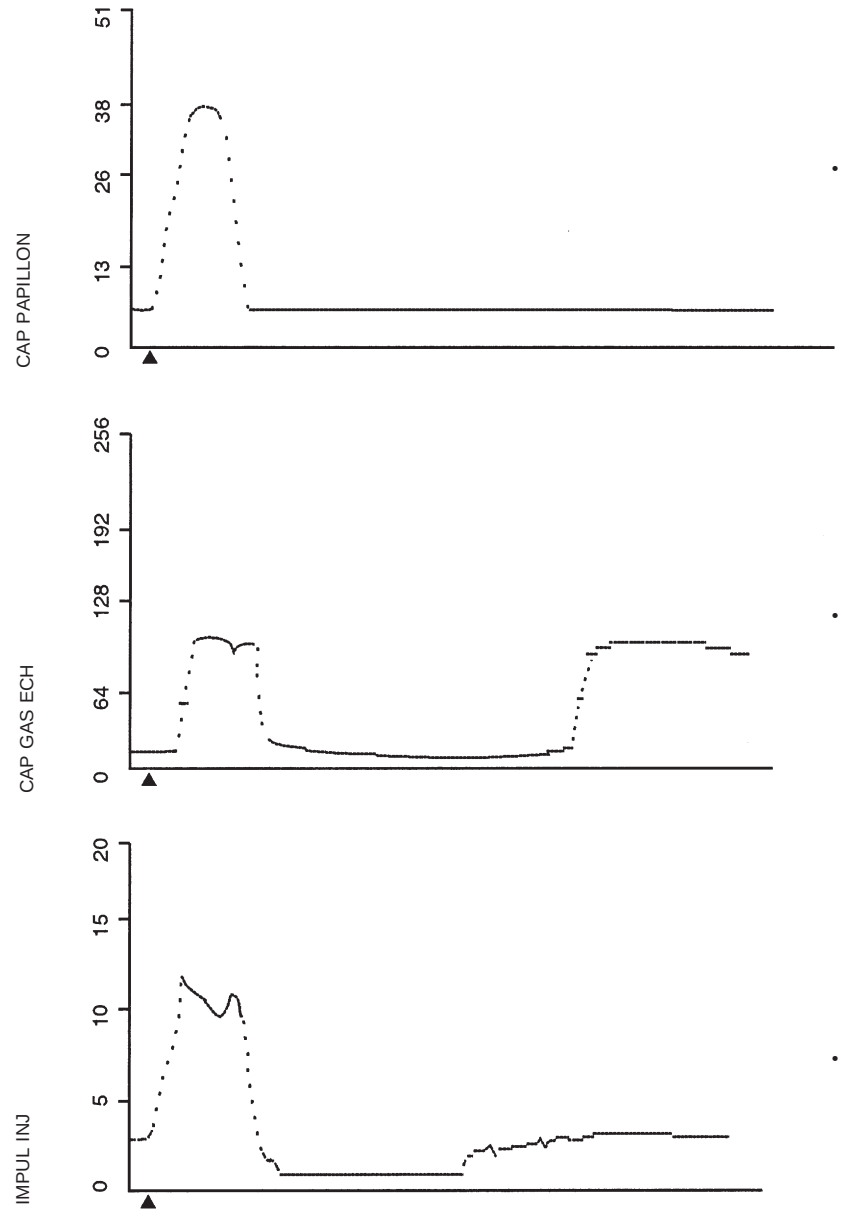

- "CAP PAPILLON" devrait croître lorsque la pédale d'accélérateur est enfoncée et décroître lorsqu'elle est relâchée.
- "CAP GAS ECH" peut croître immédiatement après avoir enfoncé la pédale d'accélérateur et peut décroître après avoir relaché la pédale.
- "IMPUL INJ" devrait croître lorsque la pédale d'accélérateur est enfoncée et devrait décroître lorsque la pédale est relâchée.

SEF259QA

Simpo PDF Merge and Split Unregistered Version - http://www.simpopdf.com

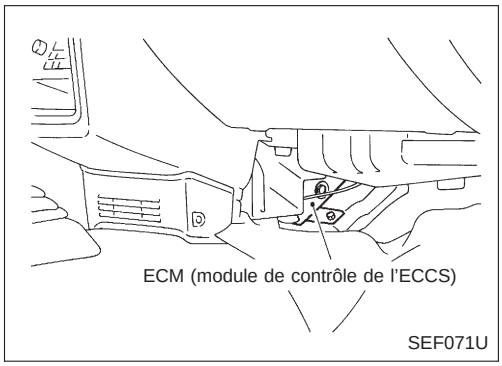

Bornes de l'ECM et valeurs de référence

PREPARATION

1. L'ECM se trouve derrière le tableau de bord inférieur.

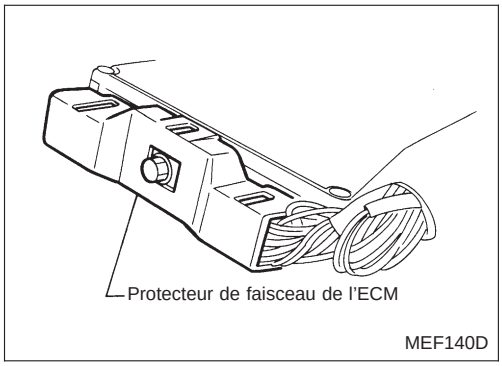

2. Déposer le protecteur du faisceau du module de contrôle de l'ECCS.

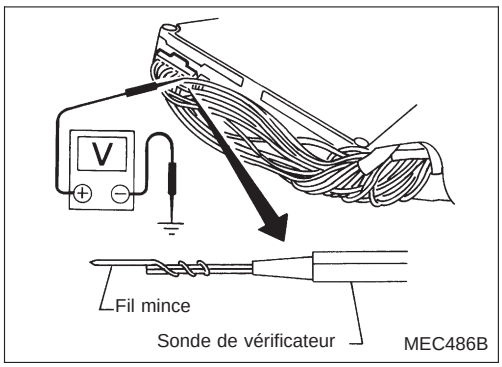

3. Effectuer toutes les mesures de tension alors que les connecteurs sont branchés. Les sondes prolongées de la façon illustrée ci-contre permettent d'effectuer les tests plus facilement.

DISPOSITION DES BORNES DU CONNECTEUR DE FAISCEAU DE L'ECM

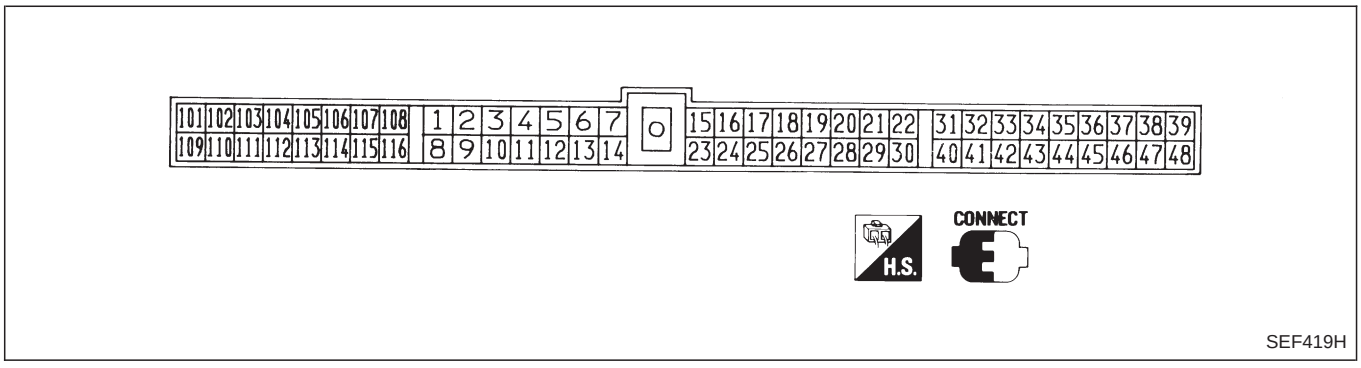

Simpo PDF Merge and Split Unregistered Version - http://www.simpopdf.com

Bornes de l'ECM et valeurs de référence (Suite)

TABLEAU D'INSPECTION DE L'ECM

Remarques : Les données de spécifications sont des valeurs de réference et sont mesurées entre chaque borne et ㊴ (masse de l'ECCS) à l'aide d'un voltmètre.

N° DE BORNE	COULEUR DE CABLE	ELEMENT	CONDITION	DONNEES (tension du courant continu)
1	W/PU	Signal d'allumage	Moteur en marche. └ Régime de ralenti	Environ 0,3V 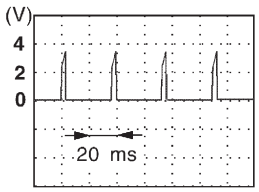 SEF058U
			Moteur en marche. └ Le régime moteur est de 2 000 tr/mn.	Environ 0,7V 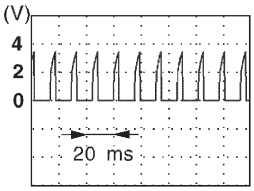 SEF059U
2	W	Compte-tours (Modèles avec compte-tours)	Moteur en marche. └ Régime de ralenti	Environ 0,7V 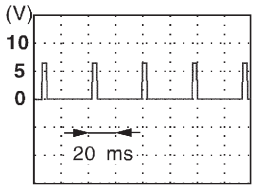 SEF060U
			Moteur en marche. └ Le régime moteur est de 2 000 tr/mn.	Environ 1,6V 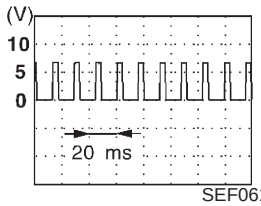 SEF061U

Simpo PDF Merge and Split Unregistered Version - http://www.simopdf.com

Bornes de l'ECM et valeurs de référence (Suite)

N° DE BORNE	COULEUR DE CABLE	ELEMENT	CONDITION	DONNEES (tension du courant continu)
3	W/G	Contrôle de l'allumage	Moteur en marche. └ Régime de ralenti	Environ 13V 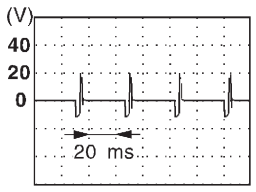 SEF062U
			Moteur en marche. └ Le régime moteur est de 2 000 tr/mn.	Environ 13V 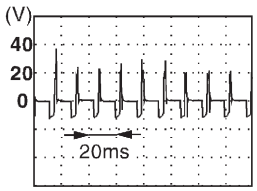 SEF063U
4	L/R	Relais de l'ECCS (coupure automatique)	Moteur en marche. Contact d'allumage sur "OFF" └ Pendant quelques secondes après avoir mis le contact d'allumage sur "OFF".	0 - 1V
			Contact d'allumage sur "OFF" └ Quelques secondes après que le contact d'allumage est mis sur "OFF".	TENSION DE LA BATTERIE (11 - 14V)
6	B/P	Masse de l'ECCS	Moteur en marche. └ Régime de ralenti	Masse du moteur
7	W	Connecteur de liaison de données pour CONSULT	Moteur en marche. ├ Régime de ralenti └ Brancher le CONSULT et sélectionner le mode "CONTROLE DE DONNEES".	Environ 0,1V
14	Y/R			Environ 3,5V
15	L			Environ 4 - 6V
23	L			Environ 0V
11	G/R	Relais de climatiseur	Moteur en marche. └ Les interrupteurs de climatiseur et de ventilateur de soufflerie sont en marche.(Le compresseur fonctionne).	Environ 1V
			Moteur en marche. └ L'interrupteur de climatiseur est à l'arrêt.	TENSION DE LA BATTERIE (11 - 14V)
12	G/Y	Electro-vanne de contrôle de vanne de commande de tourbillon	Moteur en marche. └ Régime de ralenti	0 - 1V
			Moteur en marche. └ Le régime moteur est supérieur à 3 600 tr/mn.	TENSION DE LA BATTERIE (11 - 14V)
13	B/P	Masse de l'ECCS	Moteur en marche. └ Régime de ralenti	Masse du moteur

Simpo PDF Merge and Split Unregistered Version - http://www.simpopdf.com

Bornes de l'ECM et valeurs de référence (Suite)

N° DE BORNE	COULEUR DE CABLE	ELEMENT	CONDITION	DONNEES (tension du courant continu)
16	B	Débitmètre d'air	Moteur en marche. (Condition d'échauffement) └ Régime de ralenti	1,3 - 1,7V
			Moteur en marche. (Condition d'échauffement) └ Le régime moteur est de 2 500 tr/mn.	1,7 - 2,1V
17	W	Masse du débitmètre d'air	Moteur en marche. (Condition d'échauffement) └ Régime de ralenti	0,005 - 0,02V
18	LG/R	Capteur de température du réfrigérant moteur	Moteur en marche.	Environ 0 - 4,8V La tension de sortie varie en fonction de la température du réfrigérant moteur.
19	W	Sonde à oxygène chauffée	Moteur en marche. └ Moteur suffisamment échauffé et régime moteur à 2 000 tr/mn.	0 - Approximately 1,0V (fluctue temporairement)
20	LG	Capteur de position de papillon	Contact d'allumage sur "ON" (Condition d'échauffement) └ Pédale d'accélérateur relâchée	0,35 - 0,65V
			Contact d'allumage sur "ON" └ Pédale d'accélérateur enfoncée complètement	Environ 4V
21 29	B/G B/G	Masse de sonde	Moteur en marche. (Condition d'échauffement) └ Régime de ralenti	0,001 - 0,02V
22 30	W	Capteur d'angle d'arbre à cames (REF) (signal de 180°)	Moteur en marche. (Condition d'échauffement) └ Régime de ralenti	Environ 0,4V 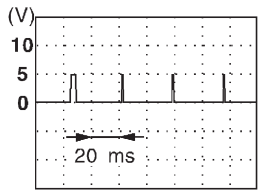 SEF064U
			Moteur en marche. (Condition d'échauffement) └ Le régime moteur est de 2 000 tr/mn.	Environ 0,4V 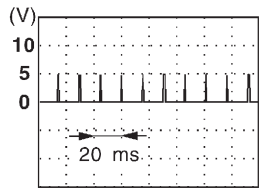 SEF065U
24	R/W	Témoin de défaut	Contact d'allumage sur "ON"	Environ 1,5V
			Moteur en marche. └ Régime de ralenti	TENSION DE LA BATTERIE (11 - 14V)

Simpo PDF Merge and Split Unregistered Version - http://www.simpopdf.com

Bornes de l'ECM et valeurs de référence (Suite)

N° DE BORNE	COULEUR DE CABLE	ELEMENT	CONDITION	DONNEES (tension du courant continu)
26	Y/L	Capteur de température d'air d'admission	Moteur en marche.	Environ 0 - 4,8V La tension de sortie varie selon la température d'air d'admission.
31 40	B	Capteur d'angle d'arbre à cames (POS) (signal de 1°)	Moteur en marche. (Condition d'échauffement) └ Régime de ralenti	Environ 2,5V 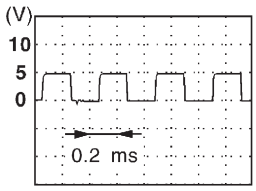 SEF066U
			Moteur en marche. (Condition d'échauffement) └ Le régime moteur est de 2 000 tr/mn.	Environ 2,5V 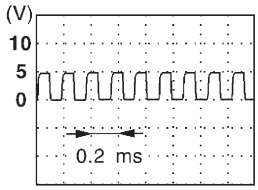 SEF067U
32	W/L	Capteur de vitesse du véhicule	Contact d'allumage sur "ON" └ Soulever toutes les roues à l'aide d'un cric et faire tourner le moteur au ralenti en 1ère position.	Varie de 0 à 5V 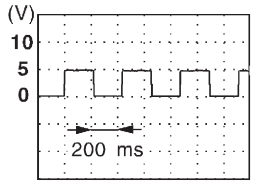 SEF068U
34	B/Y	Signal de démarrage	Contact d'allumage sur "ON"	Environ 0V
			Contact d'allumage sur "START"	TENSION DE LA BATTERIE (11 - 14V)
35	L/B	Contact de point mort	Contact d'allumage sur "ON" └ Position de point mort	0V
			Contact d'allumage sur "ON" └ Autres positions du levier de vitesse	Environ 5V
36	B/L	Contact d'allumage	Contact d'allumage sur "OFF"	0V
			Contact d'allumage sur "ON"	TENSION DE LA BATTERIE (11 - 14V)
37	PU	Alimentation du capteur de position de papillon	Contact d'allumage sur "ON"	Environ 5V
38 47	B/W	Alimentation électrique de l'ECM	Contact d'allumage sur "ON"	TENSION DE LA BATTERIE (11 - 14V)

Simpo PDF Merge and Split Unregistered Version - http://www.simpopdf.com

Bornes de l'ECM et valeurs de référence (Suite)

N° DE BORNE	COULEUR DE CABLE	ELEMENT	CONDITION	DONNEES (tension du courant continu)
39	B	Masse de l'ECCS	Moteur en marche. └ Régime de ralenti	Masse du moteur
41	Y	Interrupteur de climatiseur	Moteur en marche. └ Les interrupteurs de climatiseur et de ventilateur de soufflerie sont en marche (le compresseur fonctionne).	Environ 0V
			Moteur en marche. └ L'interrupteur de climatiseur est à l'arrêt.	TENSION DE LA BATTERIE (11 - 14V)
43	G	Manocontact d'huile de direction assistée	Moteur en marche. └ Le volant est braqué.	0V
			Moteur en marche. └ Le volant n'est pas tourné.	Environ 5V
46	GY/L	Alimentation électrique (réserve)	Contact d'allumage sur "OFF"	TENSION DE LA BATTERIE (11 - 14V)
48	B	Masse de l'ECCS	Moteur en marche. └ Régime de ralenti	Masse du moteur
101 103 110 112	W/B W/R W/L W/G	Injecteur n° 1 Injecteur n° 3 Injecteur n° 2 Injecteur n° 4	Moteur en marche. (Condition d'échauffement) └ Régime de ralenti	TENSION DE LA BATTERIE (11 - 14V) 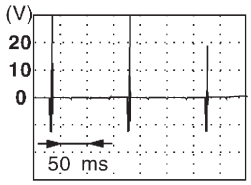 SEF069U
			Moteur en marche. └ Le régime moteur est de 2 000 tr/mn.	TENSION DE LA BATTERIE (11 - 14V) 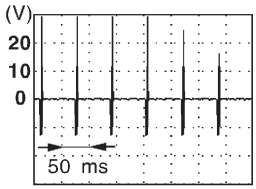 SEF070U
104	W/R	Relais de pompe d'alimentation	Contact d'allumage sur "ON" └ Pendant 5 secondes après avoir mis le contact d'allumage sur "ON" Moteur en marche.	Environ 1V
			Contact d'allumage sur "ON" └ 5 secondes après avoir mis le contact d'allumage sur "ON"	TENSION DE LA BATTERIE (11 - 14V)

Simpo PDF Merge and Split Unregistered Version - http://www.simpopdf.com

Bornes de l'ECM et valeurs de référence (Suite)

N° DE BORNE	COULEUR DE CABLE	ELEMENT	CONDITION	DONNEES (tension du courant continu)
105	W/L	Electro-vanne de commande de purge de cartouche EVAP	Moteur en marche. (Condition d'échauffement) └ Régime de ralenti	TENSION DE LA BATTERIE (11 - 14V)
			Moteur en marche. (Condition d'échauffement) └ Régime moteur supérieur à 3 800 tr/mn.	Environ 1V
107 108	B/P	Masse de l'ECCS	Moteur en marche. └ Régime de ralenti	Masse du moteur
109	B/W	Retour de courant	Moteur en marche. └ Régime de ralenti	TENSION DE LA BATTERIE (11 - 14V)
113	W/G	Vanne IACV-AAC	Moteur en marche. └ Régime de ralenti	10 - 13V
			Moteur en marche. — Le volant est braqué. — Climatiseur en marche. — Interrupteur de désembuage de lunette arrière en marche. └ La commande d'éclairage sur ''ON''.	5 - 10V
114	R	Dispositif de chauffage de la sonde à oxygène chauffée	Moteur en marche. └ Le régime moteur est inférieur à 3 200 tr/mn	Environ 0V
			Moteur en marche. └ Le régime moteur est supérieur à 3 200 tr/mn.	TENSION DE LA BATTERIE (11 - 14V)
116	B/P	Masse de l'ECCS	Moteur en marche. └ Régime de ralenti	Masse du moteur

Simpo PDF Merge and Split Unregistered Version - http://www.simpopdf.com

Alimentation électrique principale et circuit de mise à la masse

BORNES DE L'ECM ET VALEURS DE REFERENCE

Remarques : Les données de spécifications sont des valeurs de référence et sont mesurées entre chaque borne et ㊴ (masse de l'ECCS) à l'aide d'un voltmètre.

N° DE BORNE	COULEUR DE CABLE	ELEMENT	CONDITION	DONNEES (Tension du courant continu)
4	L/R	Relais de l'ECCS (coupure automatique)	Moteur en marche. Contact d'allumage sur "OFF" └ Pendant quelques secondes après avoir mis le contact d'allumage sur "OFF".	0 - 1V
			Contact d'allumage sur "OFF" └ Quelques secondes après que le contact d'allumage est mis sur "OFF".	TENSION DE LA BATTERIE (11 - 14V)
36	B/L	Contact d'allumage	Contact d'allumage sur "OFF"	0V
			Contact d'allumage sur "ON"	TENSION DE LA BATTERIE (11 - 14V)
38 47	B/W	Alimentation électrique de l'ECM	Contact d'allumage sur "ON"	TENSION DE LA BATTERIE (11 - 14V)
46	GY/L	Alimentation électrique (réserve)	Contact d'allumage sur "OFF"	TENSION DE LA BATTERIE (11 - 14V)
109	B/W	Retour de courant	Moteur en marche. └ Régime de ralenti	TENSION DE LA BATTERIE (11 - 14V)

Simpo PDF Merge and Split Unregistered Version - http://www.simpopdf.com

Alimentation électrique principale et circuit de mise à la masse (Suite)

CONDUITE A GAUCHE

EC-MAIN-01

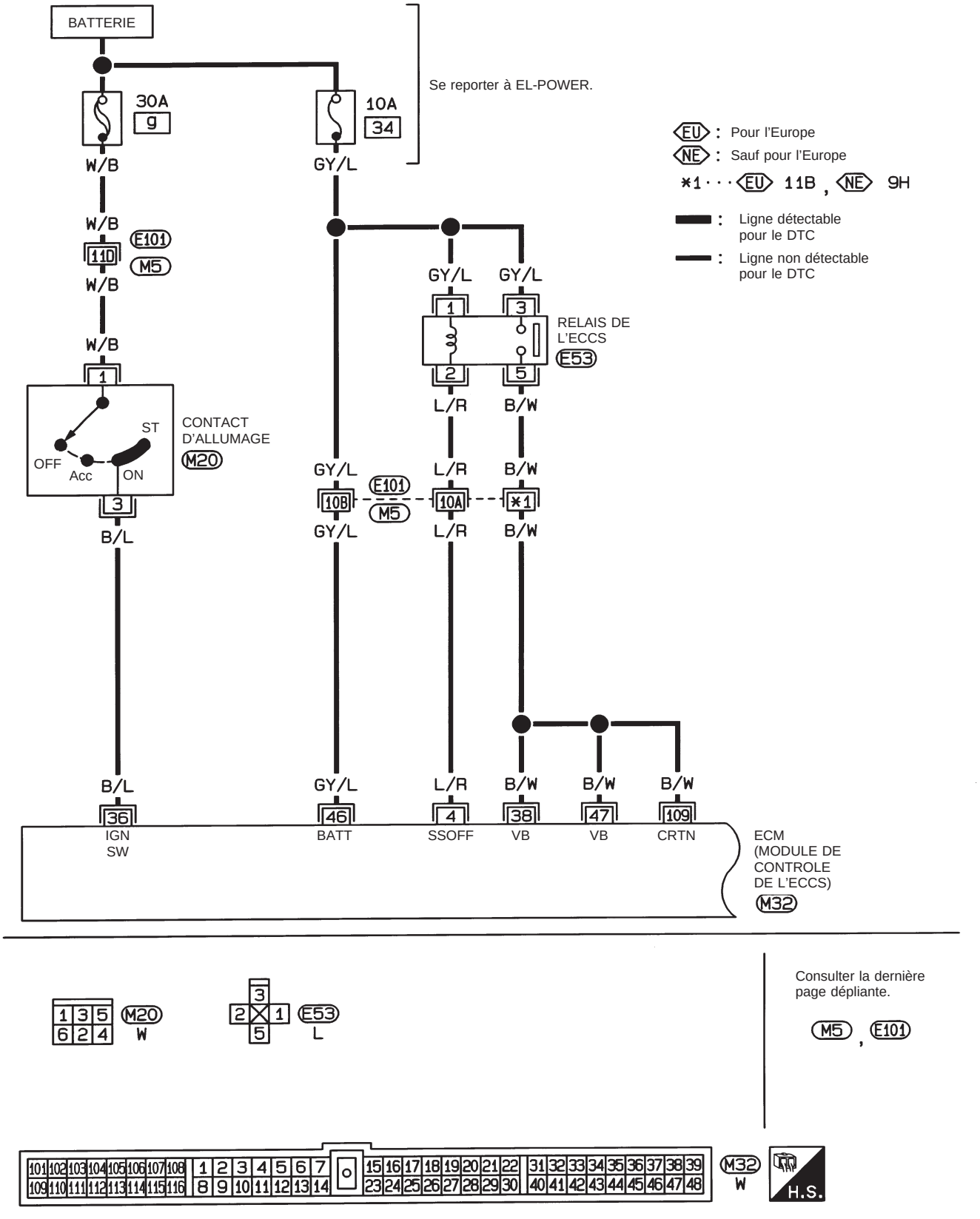

HEC558

Simpo PDF Merge and Split Unregistered Version - http://www.simpopdf.com

Alimentation électrique principale et circuit de mise à la masse (Suite)

EC-MAIN-02

: Ligne détectable pour le DTC

: Ligne non détectable pour le DTC

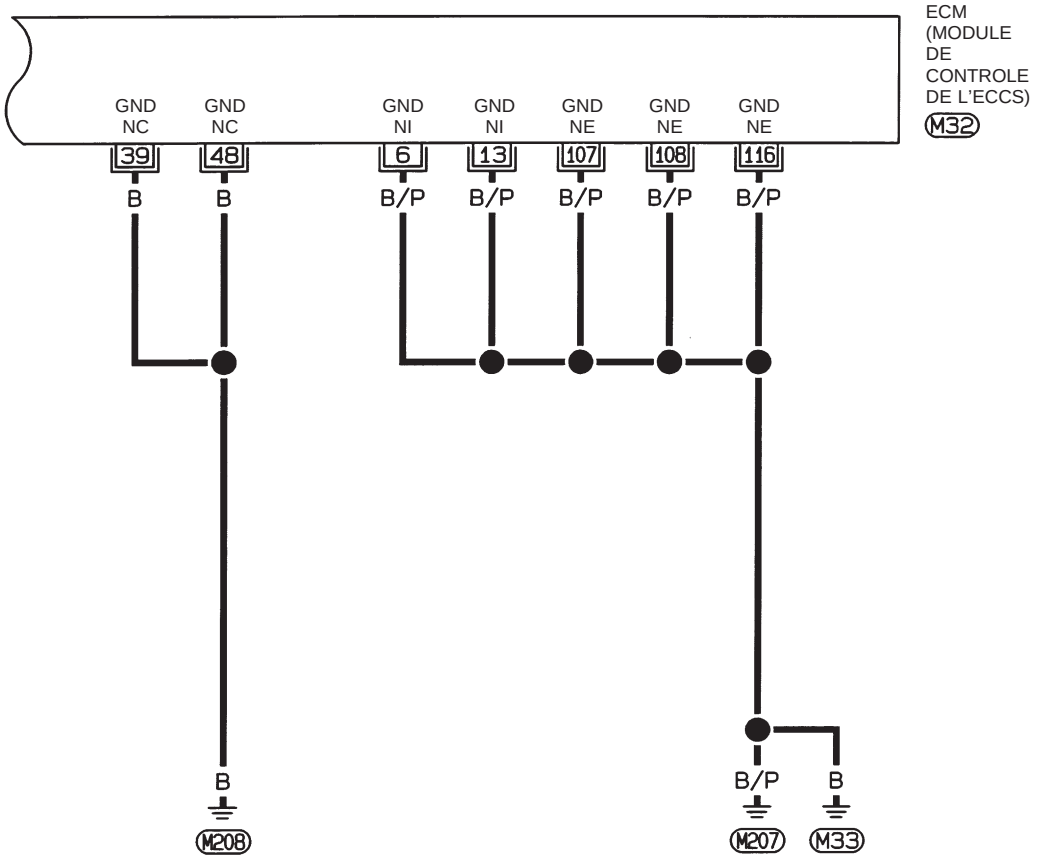

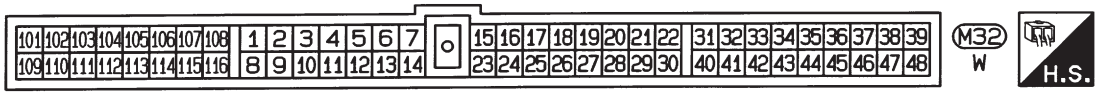

HEC336

Simpo PDF Merge and Split Unregistered Version - http://www.simpopdf.com

Alimentation électrique principale et circuit de mise à la masse (Suite)

CONDUITE A DROITE

EC-MAIN-03

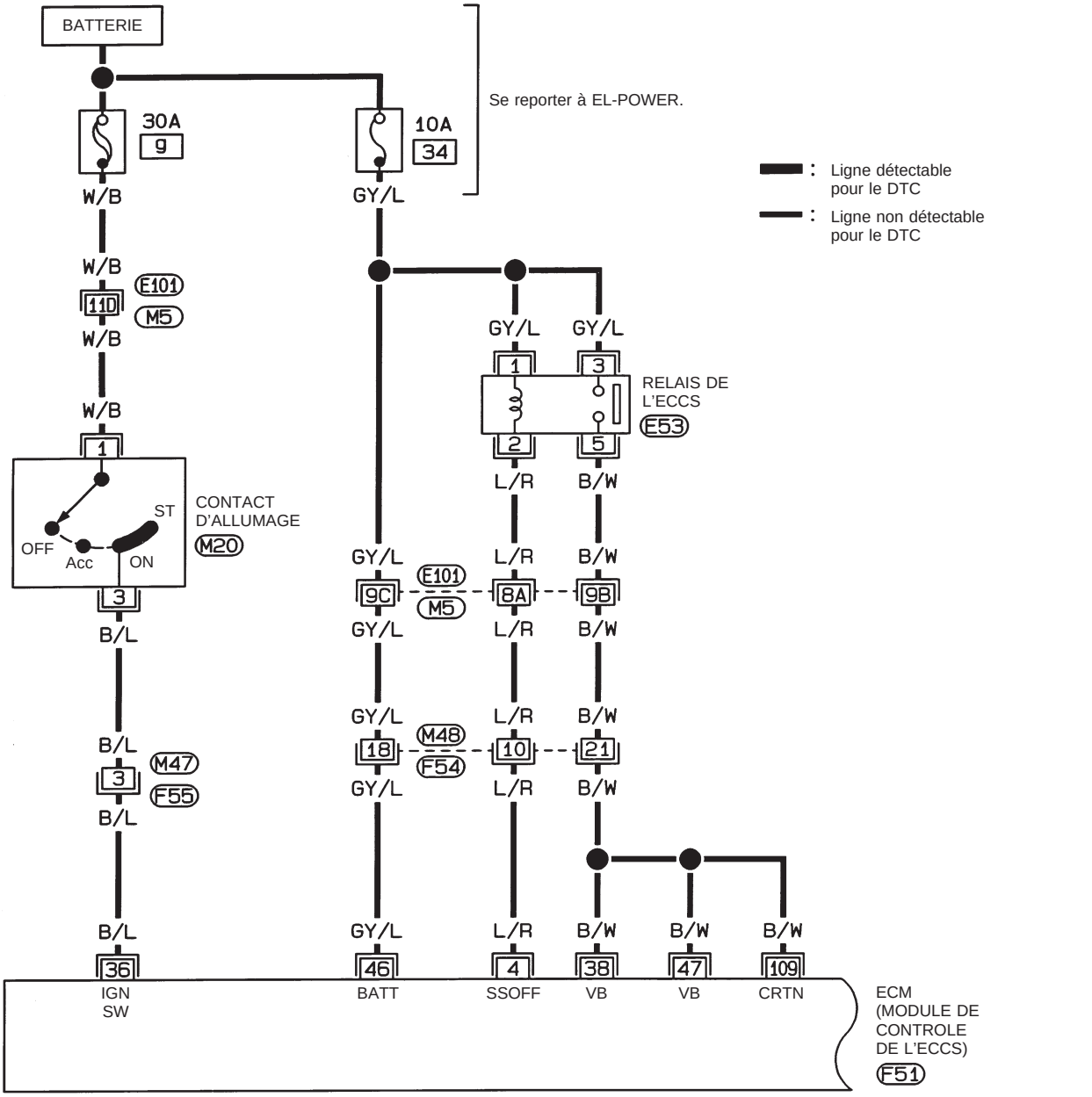

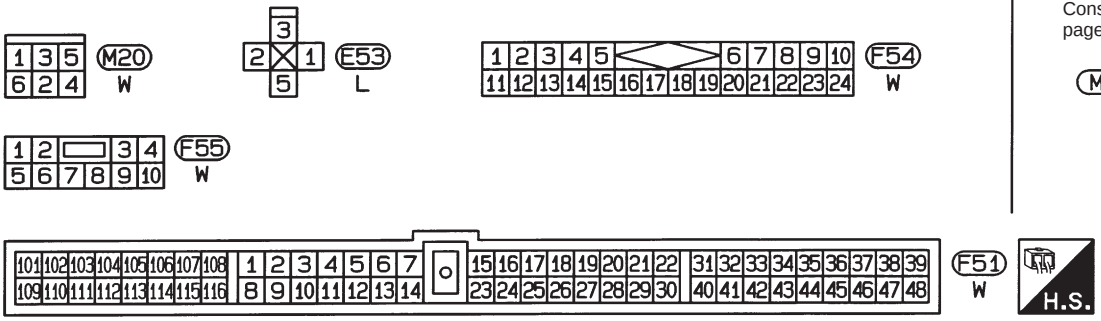

Consulter la dernière page dépliante.

M5 , E101

HEC337

Simpo PDF Merge and Split Unregistered Version - http://www.simpopdf.com

Alimentation électrique principale et circuit de mise à la masse (Suite)

EC-MAIN-04

: Ligne détectable pour le DTC

: Ligne non détectable pour le DTC

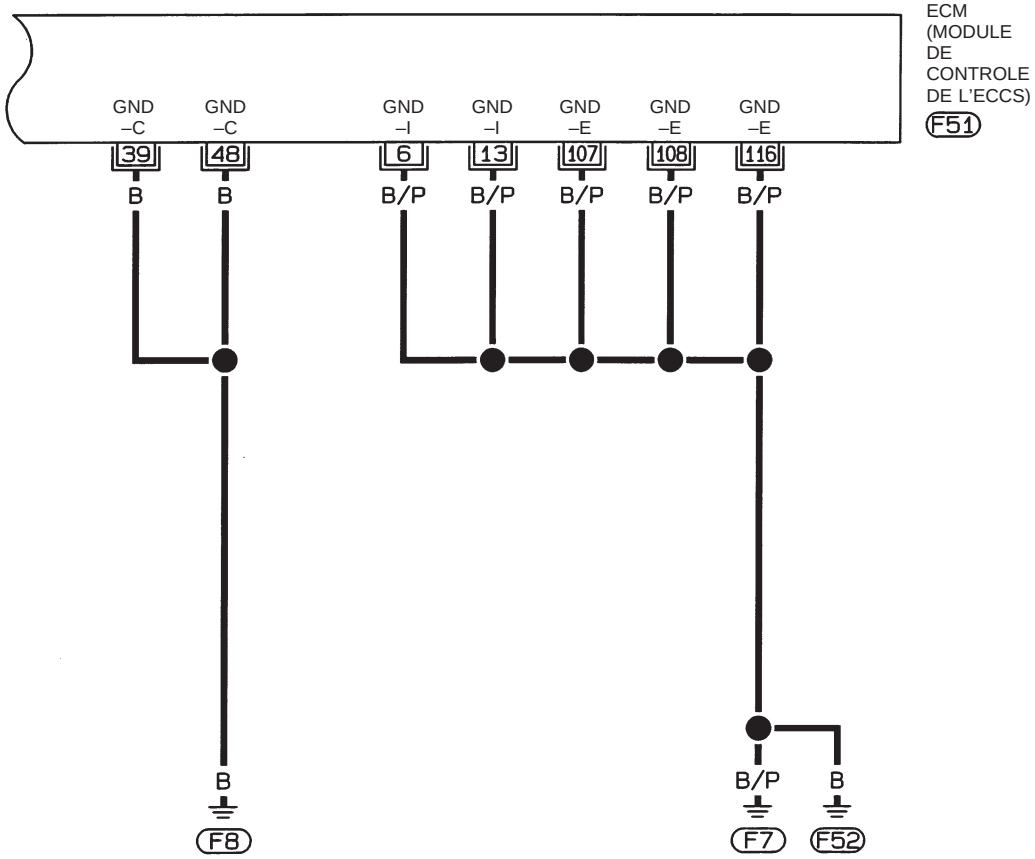

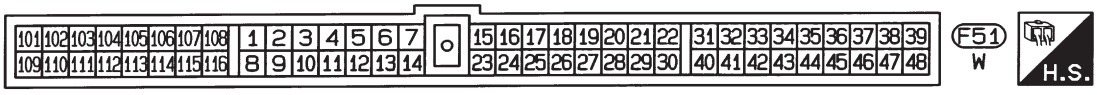

HEC338

Simpo PDF Merge and Split Unregistered Version - http://www.simpopdf.com

Alimentation électrique principale et circuit de mise à la masse (Suite)

A

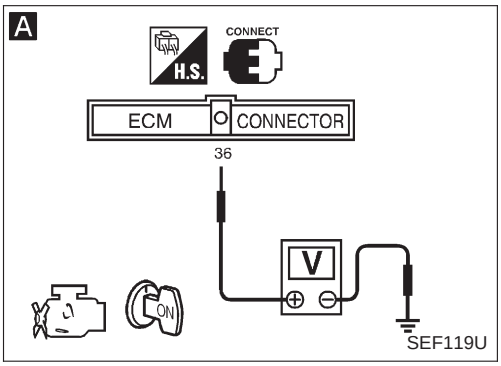

B

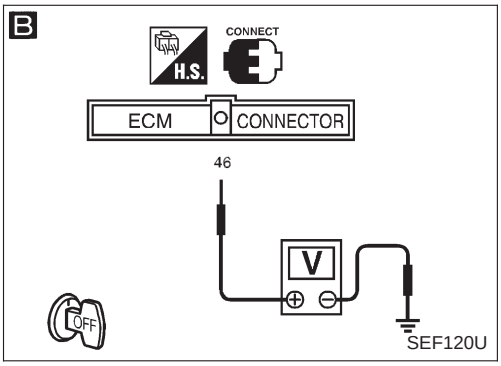

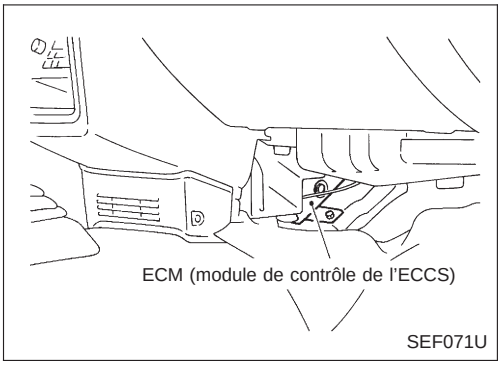

C

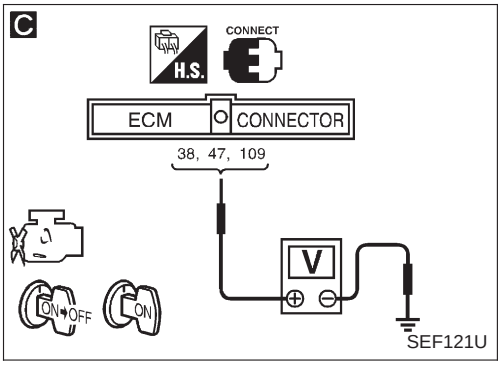

DEBUT DE L'INSPECTION

Démarrer le moteur.
Le moteur tourne-t-il ?

Non → A

Oui

A

VERIFIER L'ALIMENTATION ELECTRIQUE I.
1. Mettre le contact d'allumage sur "ON".
2. Vérifier la tension entre la borne (36) de l'ECM et la masse à l'aide du CONSULT ou d'un testeur.
   Tension : tension de la batterie

Si le résultat est mauvais, vérifier les points suivants.
- Connecteurs de faisceau (F55), (M47) (conduite à droite)
- Faisceau ouvert ou court-circuit entre l'ECM et le contact d'allumage

Si le résultat est mauvais, réparer le faisceau ou les connecteurs.

Bon → Voir "VERIFIER LE CIRCUIT DE MISE A LA MASSE" à la page suivante.

B

VERIFIER L'ALIMENTATION ELECTRIQUE II.
1. Arrêter le moteur.
2. Vérifier la tension entre la borne (46) de l'ECM et la masse à l'aide du CONSULT ou d'un testeur.
   Tension : tension de la batterie

Mauvais →
Vérifier les points suivants.
- Connecteurs de faisceau (F54), (M48) (conduite à droite)
- Connecteurs de faisceau (M5), (E101)
- Fusible de 10A
- Faisceau ouvert ou court-circuité entre l'ECM et la batterie

Si le résultat est mauvais, réparer le faisceau ou les connecteurs.

Bon

C

VERIFIER L'ALIMENTATION ELECTRIQUE III.
1. Tourner le contact d'allumage sur "ON" puis sur "OFF".
2. Vérifier la tension entre les bornes (38), (47), (109) de l'ECM et la masse à l'aide du CONSULT ou d'un testeur.
   Tension :
   Après avoir mis le contact d'allumage sur "OFF", il y aura tension de la batterie pendant quelques secondes avant que la tension ne retombe à 0V.

Bon → Voir "VERIFIER LE CIRCUIT DE MISE A LA MASSE" à la page 85.

Cas 1 : il n'y a pas tension de la batterie.
Cas 2 : il y a tension de la batterie pendant plus de quelques secondes.

Mauvais
Cas-2
Cas 1 → Voir "VERIFIER LE RELAIS DE L'ECCS" à la page suivante.

Ⓐ

Simpo PDF Merge and Split Unregistered Version - http://www.simpopdf.com

Alimentation électrique principale et circuit de mise à la masse (Suite)

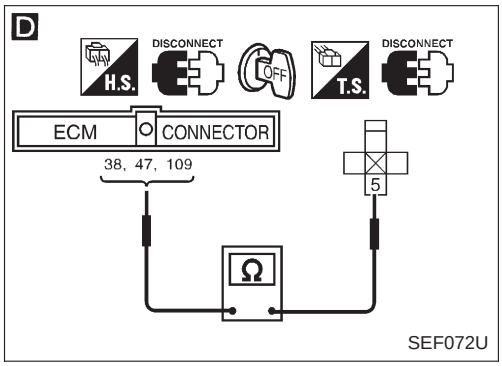

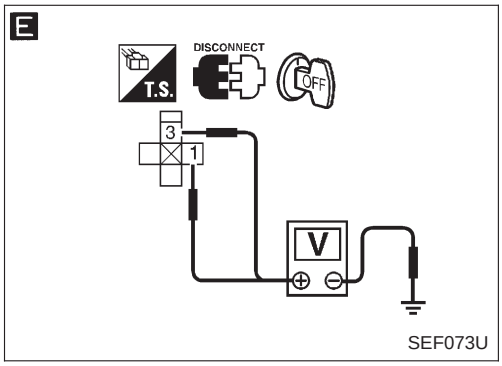

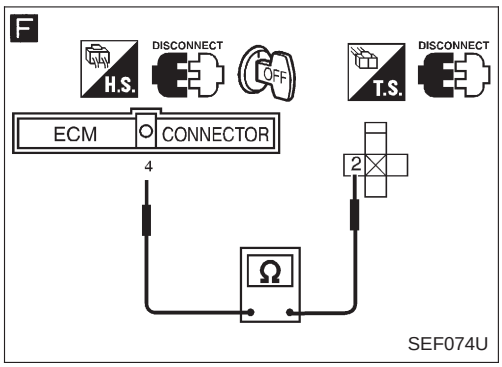

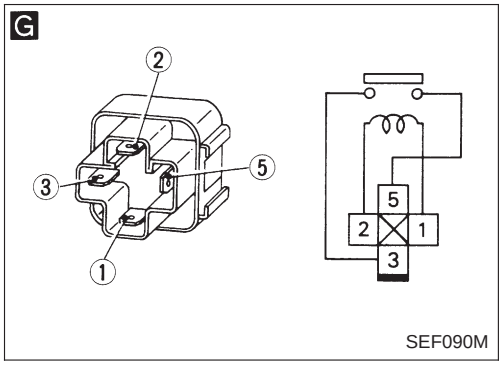

Ⓐ

D

VERIFIER LA CONTINUITE DU FAISCEAU ENTRE LE RELAIS DE L'ECCS ET L'ECM.

1. Débrancher le connecteur de faisceau de l'ECM.
2. Débrancher le relais de l'ECCS.
3. Vérifier la continuité du faisceau entre les bornes (38), (47), (109) de l'ECM et la borne (5).
   Il doit y avoir continuité.
   Si le résultat est bon, vérifier si le faisceau n'est pas court-circuité à la masse ou à l'alimentation.

Mauvais → Vérifier les points suivants.
- Connecteurs de faisceau (F54), (M48) (conduite à droite)
- Connecteurs de faisceau (M5), (E101)
- Faisceau ouvert ou court-circuité entre l'ECM et le relais de l'ECCS

Si le résultat est mauvais, réparer le circuit ouvert, court-circuité à la masse ou court-circuité à l'alimentation du faisceau ou des connecteurs.

Bon ↓

E

VERIFIER LA TENSION ENTRE LE RELAIS DE L'ECCS ET LA MASSE.

Vérifier la tension entre les bornes (1), (3) et la masse avec le CONSULT ou un testeur.
Tension : tension de la batterie

Mauvais → Vérifier les points suivants.
- Faisceau ouvert ou court-circuité entre le relais de l'ECCS et le fusible

Si le résultat est mauvais, réparer le faisceau ou les connecteurs.

Bon ↓

F

VERIFIER LE CIRCUIT DE SIGNAL DE SORTIE.

Vérifier la continuité du faisceau entre la borne (4) de l'ECM et la borne (2) de relais.
Il doit y avoir continuité.
Si le résultat est bon, vérifier si le faisceau n'est pas court-circuité à la masse ou à l'alimentation.

Mauvais → Vérifier les points suivants.
- Connecteurs de faisceau (F54), (M48) (conduite à droite)
- Connecteurs de faisceau (M5), (E101)
- Faisceau ouvert ou court-circuité entre l'ECM et le relais de l'ECCS

Si le résultat est mauvais, réparer le circuit ouvert, court-circuité à la masse ou court-circuité à l'alimentation du faisceau ou des connecteurs.

Bon ↓

G

VERIFIER LE RELAIS DE L'ECCS.

1. Appliquer un courant continu de 12V entre les bornes (1) et (2) du relais.
2. Vérifier la continuité entre les bornes (3) et (5) du relais.
   12V ((1) - (2)) sont appliqués :
   Il y a continuité.
   Pas de tension appliquée :
   Pas de continuité

Mauvais → Remplacer le relais de l'ECCS.

Bon ↓

Ⓑ

Simpo PDF Merge and Split Unregistered Version - http://www.simpopdf.com

Alimentation électrique principale et circuit de mise à la masse (Suite)

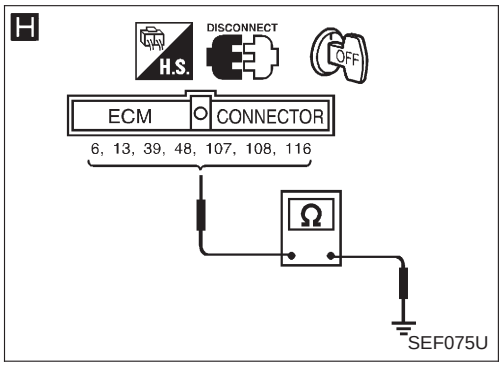

Ⓑ

H

VERIFIER LE CIRCUIT DE MISE A LA MASSE.

1. Mettre le contact d'allumage sur ''OFF''.
2. Desserrer et resserrer les vis de masse du moteur.
3. Débrancher le connecteur de faisceau de l'ECM.
4. Vérifier la continuité du faisceau entre les bornes (6), (13), (39), (48), (107), (108), (116) de l'ECM et la masse de moteur.
   Il doit y avoir continuité.
   Si le résultat est bon, vérifier si le faisceau n'est pas court-circuité à la masse ou à l'alimentation.

Mauvais → Réparer le circuit ouvert, court-circuité à la masse ou court-circuité à l'alimentation dans un faisceau ou des connecteurs.

Bon ↓

Vérifier si les bornes à broches de l'ECM sont endommagées et vérifier la connexion du connecteur de faisceau de l'ECM.

↓

FIN DE L'INSPECTION

Simpo PDF Merge and Split Unregistered Version - http://www.simpopdf.com

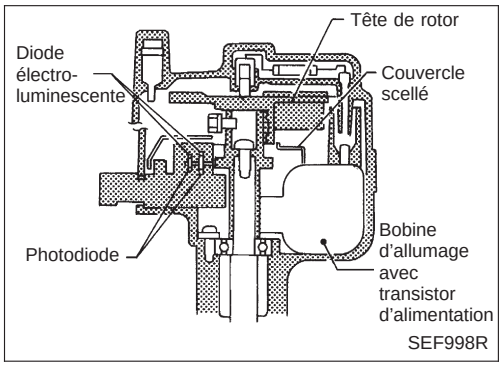

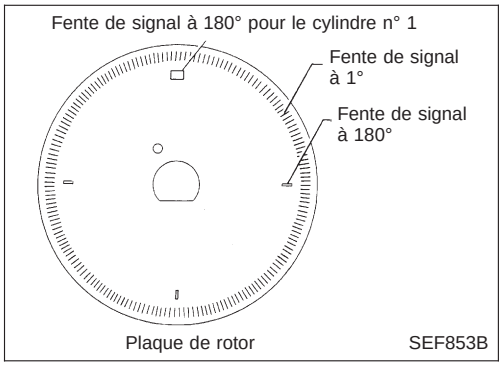

Capteur d'angle d'arbre à cames (CMPS)

DESCRIPTION DES COMPOSANTS

Le capteur d'angle d'arbre à cames forme un composant de base de l'ECCS. Il surveille le régime du moteur et la position du piston. Ces signaux d'entrée à l'ECM sont utilisés pour commander l'injection de carburant, le calage de l'allumage et d'autres fonctions.

Le capteur d'angle d'arbre à cames comporte une plaque de rotor et un circuit de formation d'ondes. La plaque de rotor comporte 360 fentes pour le signal de 1° et 4 fentes pour le signal de 180°. Le circuit de formation d'ondes se compose de diodes électroluminescentes (DEL) et de photodiodes.

La plaque de rotor est située entre la DEL et la photodiode. La DEL transmet la lumière à la photodiode. Pendant la rotation de la plaque de rotor, les fentes coupent la lumière pour produire des impulsions brutales. Ces impulsions sont converties en signaux de marche-arrêt par le circuit de formation d'onde et ces signaux sont adressés à l'ECM.

Le distributeur n'est pas réparable et il doit être remplacé en tant qu'ensemble, à l'exception de son chapeau.

Simpo PDF Merge and Split Unregistered Version - http://www.simpopdf.com

Capteur d'angle d'arbre à cames (CMPS) (Suite)

BORNES DE L'ECM ET VALEURS DE REFERENCE

Remarques : les données de spécifications sont des valeurs de référence et sont mesurées entre chaque borne et ㊴ (masse de l'ECCS) à l'aide d'un voltmètre.

N° DE BORNE	COULEUR DE CABLE	ELEMENT	CONDITION	DONNEES (Tension du courant continu)
22 30	W W	Capteur d'angle d'arbre à cames (REF) (signal de 180°)	Moteur en marche. (Condition d'échauffement) └ Régime de ralenti	Environ 0,4V 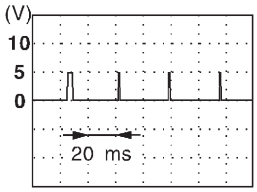 SEF064U
			Moteur en marche. (Condition d'échauffement) └ Le régime moteur est de 2 000 tr/mn.	Environ 0,4V 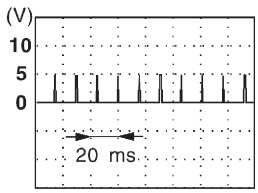 SEF065U
31 40	B B	Capteur d'angle d'arbre à cames (POS) (signal de 1°)	Moteur en marche. (Condition d'échauffement) └ Régime de ralenti	Environ 2,5V 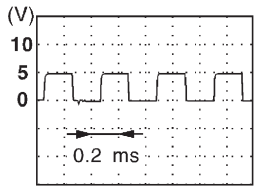 SEF066U
			Moteur en marche. (Condition d'échauffement) └ Le régime moteur est de 2 000 tr/mn.	Environ 2,5V 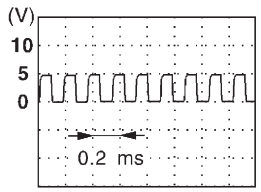 SEF067U

Simpo PDF Merge and Split Unregistered Version - http://www.simpopdf.com

Capteur d'angle d'arbre à cames (CMPS) (Suite)

LOGIQUE DE DIAGNOSTIC DE BORD

N° de code de défaut de diagnostic	Le défaut est détecté quand ...	Eléments à vérifier (Cause possible)
11	● Le signal à 1° ou 180° n'est pas adressé à l'ECM pendant les premières secondes de lancement du moteur. ● Ni le signal de 1°, ni celui de 180° n'est envoyé à l'ECM lorsque le moteur tourne. ● Un signal de 1° ou 180° n'est pas habituel lorsque le moteur tourne.	● Faisceau ou connecteurs (Le circuit du capteur d'angle d'arbre à cames est ouvert ou court-circuité). ● Capteur d'angle d'arbre à cames ● Démarreur (se reporter à la section EL). ● Circuit de démarrage (se reporter à la section EL). ● Batterie à plat (faible)

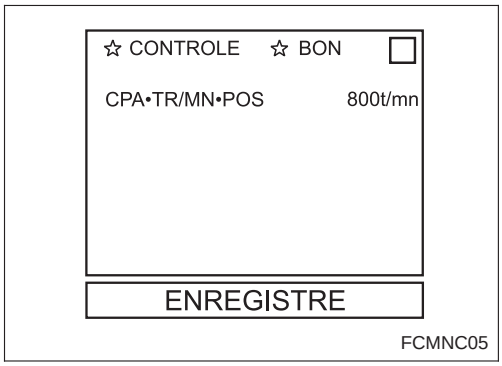

PROCEDURE DE CONFIRMATION DU CODE DE DEFAUT DE DIAGNOSTIC

Avant d'effectuer la procédure suivante, vérifier que la tension de la batterie est supérieure à 10V.

1) Mettre le contact d'allumage sur ''ON'' et sélectionner le mode ''CONTROLE DE DONNEES'' à l'aide du CONSULT.
2) Démarrer le moteur et le faire tourner pendant au moins 2 secondes au régime de ralenti.
   (Si le moteur ne tourne pas, mettre le contact d'allumage sur ''START'' pendant au moins 2 secondes).

OU

1) Démarrer le moteur et le faire tourner pendant au moins 2 secondes au régime de ralenti.
   (Si le moteur ne tourne pas, mettre le contact d'allumage sur ''START'' pendant au moins 2 secondes).
2) Tourner le contact d'allumage sur ''OFF'', attendre au moins 5 secondes puis le tourner sur ''ON''.
3) Effectuer ''Mode II de test de diagnostic'' (résultats d'autodiagnostic) à l'aide de l'ECM.

Simpo PDF Merge and Split Unregistered Version - http://www.simpopdf.com

Capteur d'angle d'arbre à cames (CMPS) (Suite)

CONDUITE A GAUCHE

EC-CMPS-01

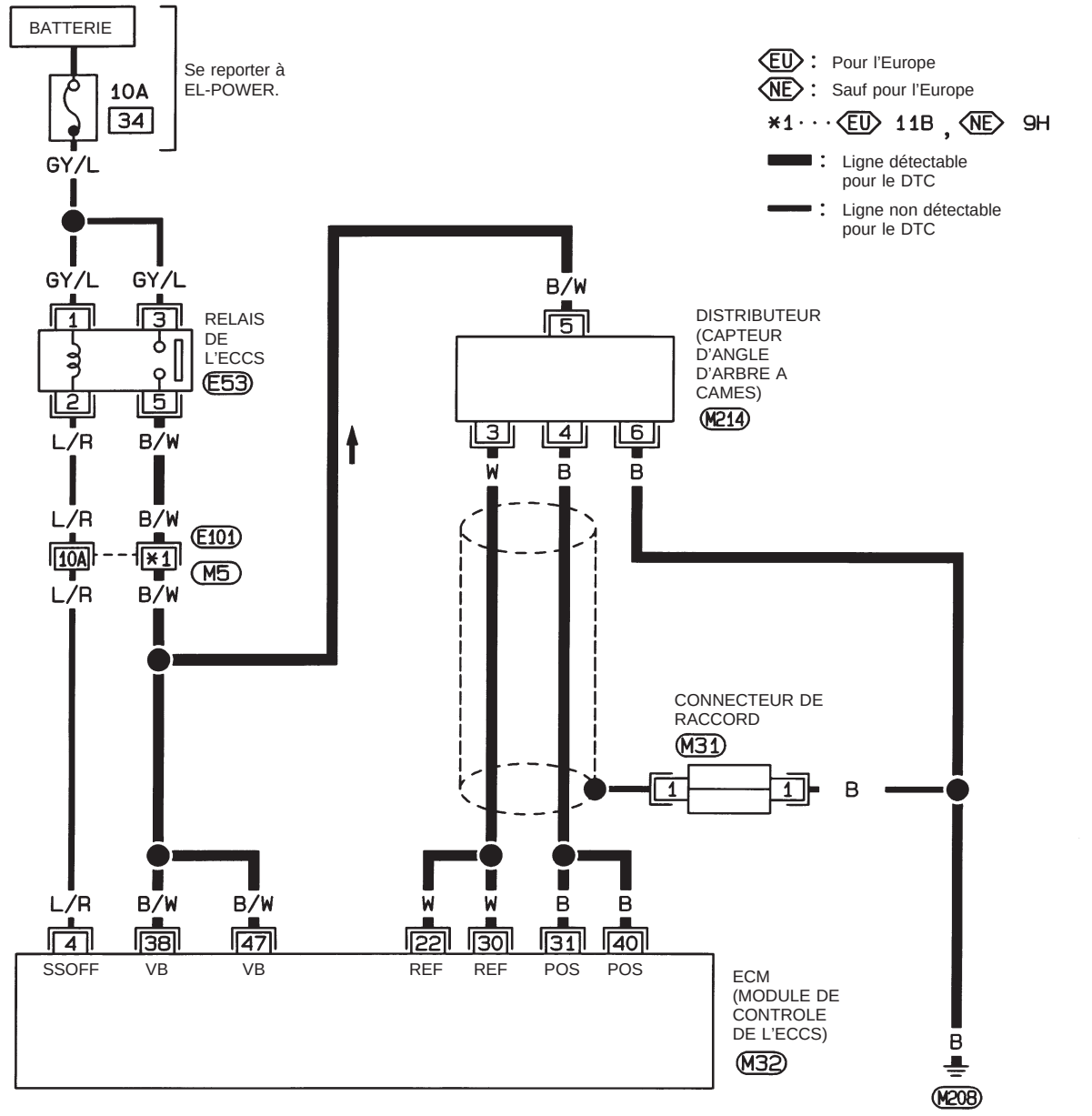

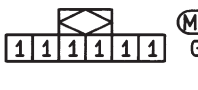



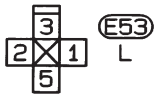

Consulter la dernière page dépliante.

M5 , E101

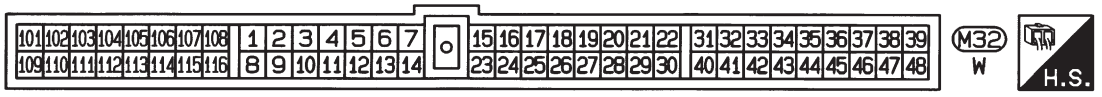

HEC559

Simpo PDF Merge and Split Unregistered Version - http://www.simpopdf.com

Capteur d'angle d'arbre à cames (CMPS) (Suite)

CONDUITE A DROITE

EC-CMPS-02

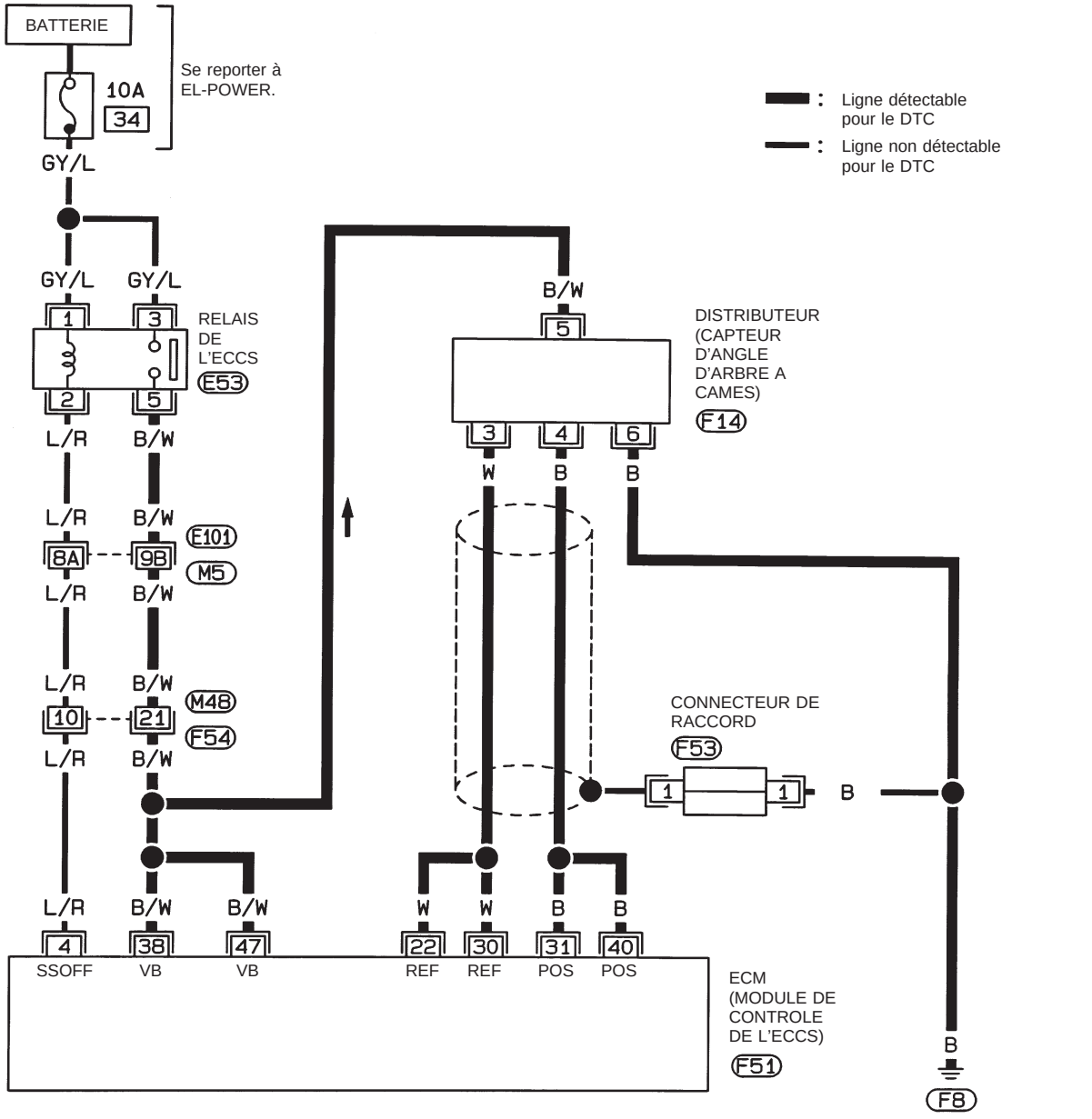

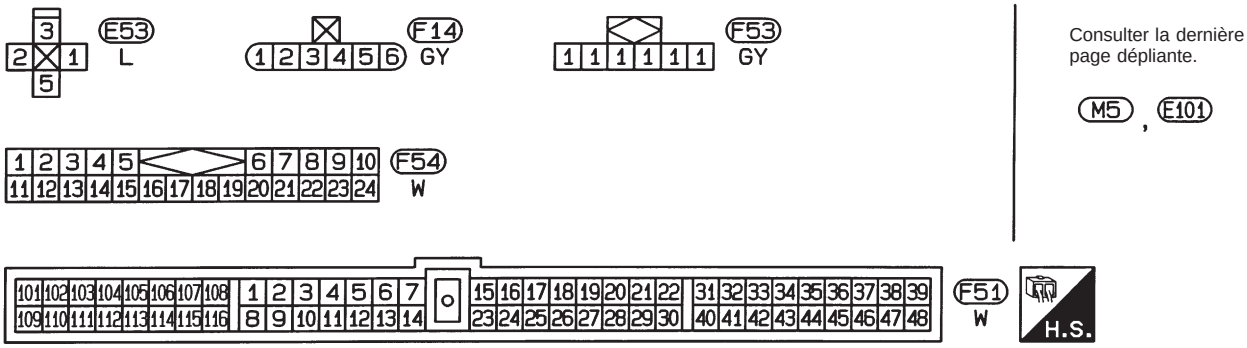

Consulter la dernière page dépliante.

M5 , E101

HEC340

Simpo PDF Merge and Split Unregistered Version - http://www.simpopdf.com

Capteur d'angle d'arbre à cames (CMPS) (Suite)

PROCEDURE DE DIAGNOSTIC

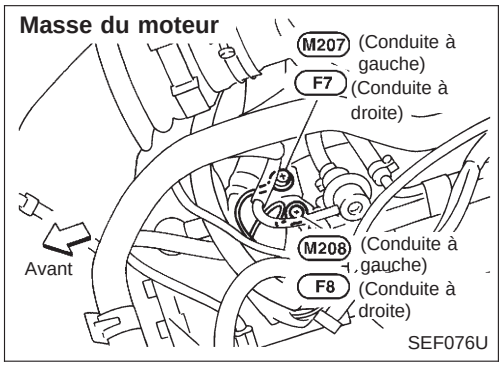

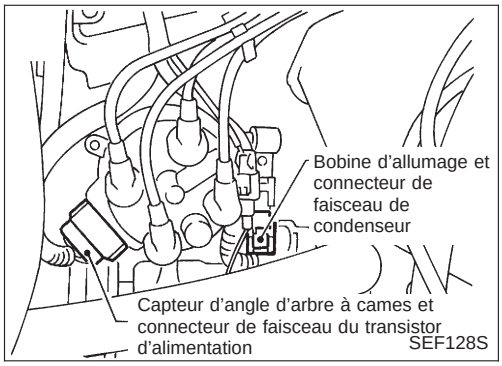

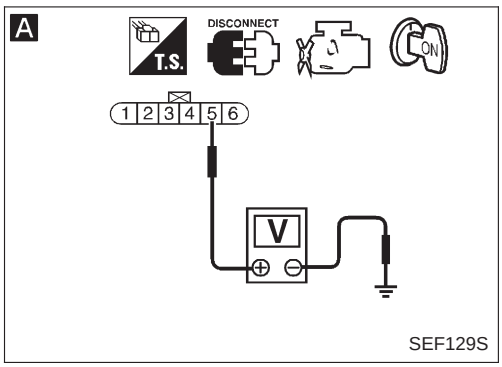

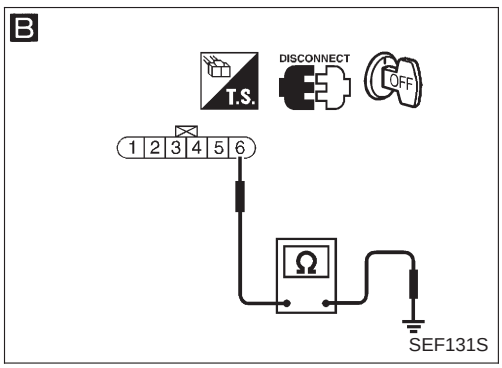

DEBUT DE L'INSPECTION

↓

VERIFIER LE SYSTEME DE DEMARRAGE.
Le moteur tourne-t-il au ralenti ?
(Est-ce que le démarreur fonctionne ?)

Non → Vérifier le système de démarrage.
(Se reporter à la section EL).

↓ Oui

VERIFIER LE CIRCUIT PROTECTEUR.
1. Mettre le contact d'allumage sur "OFF".
2. Desserrer et resserrer les vis de masse du moteur (M208 et F8).
3. Déposer le connecteur de raccord M31 ou F53.
4. Vérifier les points suivants.
   - Continuité entre la borne ① du connecteur de raccord et la masse
   - Connecteur de raccord
     (Consulter la "DISPOSITION DES FAISCEAUX" à la section EL).

   Il doit y avoir continuité.

   Si le résultat est bon, vérifier si le faisceau n'est pas court-circuité à la masse ou à l'alimentation. Puis rebrancher le connecteur de raccord.

Mauvais → Réparer le circuit ouvert, court-circuité à la masse ou court-circuité à l'alimentation dans un faisceau ou des connecteurs.

↓ Bon

A

VERIFIER L'ALIMENTATION ELECTRIQUE.
1. Débrancher le connecteur de faisceau du capteur d'angle d'arbre à cames.
2. Mettre le contact d'allumage sur "ON".
3. Vérifier la tension entre la borne ⑤ et la masse avec le CONSULT ou un testeur.

   Tension : tension de la batterie

Mauvais → Vérifier les points suivants.
- Connecteurs de faisceau M5, E101
- Connecteurs de faisceau F54, M48 (conduite à droite)
- Faisceau ouvert ou court-circuité entre le capteur d'angle d'arbre à cames et l'ECM
- Faisceau ouvert ou court-circuité entre le capteur d'angle d'arbre à cames et le relais de l'ECCS

Si le résultat est mauvais, réparer le faisceau ou les connecteurs.

↓ Bon

B

VERIFIER LE CIRCUIT DE MISE A LA MASSE.
1. Débrancher le connecteur de faisceau du capteur d'angle d'arbre à cames.
2. Vérifier la continuité du faisceau entre la borne ⑥ et la masse de moteur.

   Il doit y avoir continuité.

   Si le résultat est bon, vérifier si le faisceau n'est pas court-circuité.

Mauvais → Réparer le circuit ouvert, court-circuité à la masse ou court-circuité à l'alimentation dans le faisceau ou les connecteurs.

↓ Bon

Ⓐ

Simpo PDF Merge and Split Unregistered Version - http://www.simpopdf.com

Capteur d'angle d'arbre à cames (CMPS) (Suite)

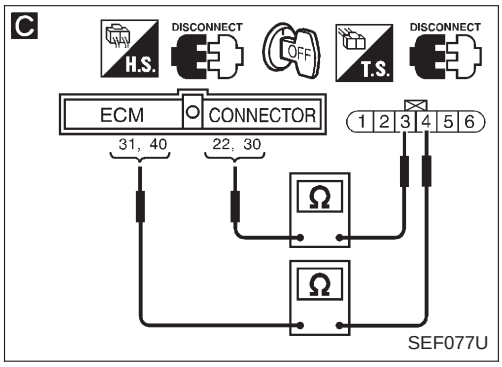

C

(A)

VERIFIER LE CIRCUIT DE SIGNAL D'ENTREE.
1. Mettre le contact d'allumage sur "OFF".
2. Débrancher le connecteur de faisceau de l'ECM.
3. Vérifier la continuité du faisceau entre la borne (4) et les bornes (31), (40) de l'ECM (signal 1°), la borne (3) et les bornes (22), (30) de l'ECM (signal 180°).
   Il doit y avoir continuité.
   Si le résultat est bon, vérifier si le faisceau n'est pas court-circuité à la masse ou à l'alimentation.

Mauvais → Réparer le circuit ouvert, court-circuité à la masse ou court-circuité à l'alimentation dans faisceau ou les connecteurs.

Bon ↓

VERIFIER LE COMPOSANT (Capteur d'angle d'arbre à cames). Consulter l'"INSPECTION DES COMPOSANTS" ci-dessous.

Mauvais → Remplacer le capteur d'angle d'arbre à cames.

Bon ↓

Débrancher et rebrancher sur les circuits les connecteurs de faisceau. Puis procéder à un nouvel essai.

Le problème n'est pas résolu. ↓

Vérifier si les bornes à broches de l'ECM sont endommagées et vérifier la connexion du connecteur de faisceau de l'ECM. Rebrancher le connecteur de faisceau de l'ECM et tester à nouveau.

FIN DE L'INSPECTION

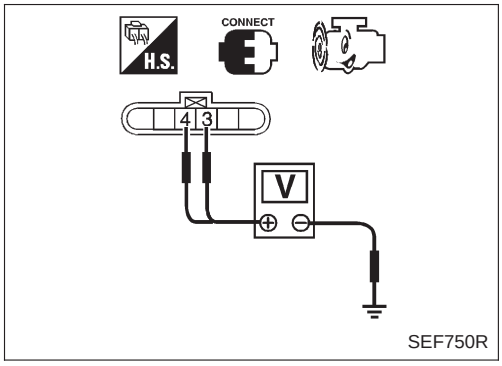

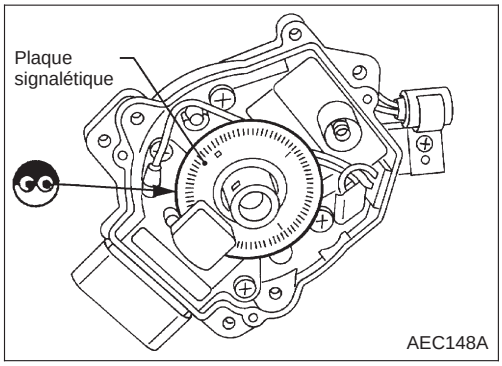

INSPECTION DES COMPOSANTS

Capteur d'angle d'arbre à cames

1. Démarrer le moteur.
2. Vérifier la tension entre les bornes (3), (4) et la masse sur la plage C. C.

Condition	Bornes	Tension
Le moteur tourne au ralenti	(3) et la masse	Environ 0,4V*
	(4) et la masse	Environ 2,5V*

* : La tension moyenne du signal d'impulsion (le signal d'impulsion peut être confirmé à l'aide d'un oscilloscope).

Si le résultat est mauvais, remplacer l'ensemble du distributeur avec le capteur d'angle d'arbre à cames.

3. Vérifier visuellement la plaque de signal pour déceler toute présence de dommage ou de poussière.

Simpo PDF Merge and Split Unregistered Version - http://www.simpopdf.com

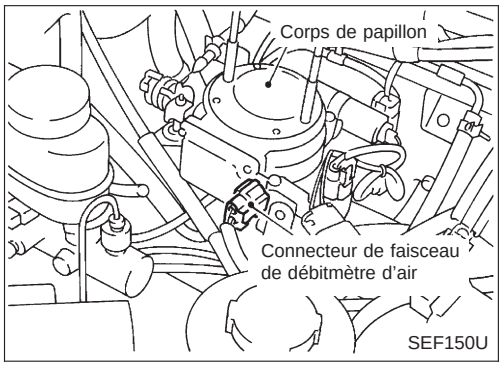

Débitmètre d'air (MAFS)

DESCRIPTION DES COMPOSANTS

Le débitmètre d'air est situé dans le passage d'air d'admission. Il mesure le débit d'admission en mesurant une partie du débit total. Il consiste en un fil chaud qui est alimenté en courant électrique depuis l'ECM. La température du fil chaud est contrôlée en partie par l'ECM. La chaleur produite par le fil chaud est réduite au fur et à mesure que l'air d'admission circule autour de lui. Plus il y a d'air, plus la perte de chaleur est importante.
Par conséquent, l'ECM doit fournir une alimentation électrique plus importante au fil chaud alors que le débit de l'air augmente. Ceci maintient la température du fil chaud. Le module de contrôle de l'ECCS détecte le débit de l'air par le changement du courant électrique.

VALEUR DE REFERENCE DE CONSULT EN MODE DE CONTROLE DE DONNEES

Remarques : les données de spécification sont des valeurs de référence.

ELEMENT DE CONTROLE	CONDITION		SPECIFICATION
DEBITMET AIR	● Moteur : après échauffement ● Interrupteur de climatiseur : à l'arrêt ● Levier de passage : point mort ● A vide	Ralenti	1,3 - 1,7V
		2 500tr/mn	1,7 - 2,1V

BORNES DE L'ECM ET VALEURS DE REFERENCE

Remarques : les données de spécifications sont des valeurs de référence et sont mesurées entre chaque borne et ㊴ (masse de l'ECCS) à l'aide d'un voltmètre.

N° DE BORNE	COULEUR DE CABLE	ELEMENT	CONDITION	DONNEES (Tension du courant continu)
16	B	Débitmètre d'air	Moteur en marche. (Condition d'échauffement) └ Régime de ralenti	1,3 - 1,7V
			Moteur en marche. (Condition d'échauffement) └ Le régime moteur est de 2 500 tr/mn.	1,7 - 2,1V
17	W	Masse du débitmètre d'air	Moteur en marche. (Condition d'échauffement) └ Régime de ralenti	0,005 - 0,02V

LOGIQUE DE DIAGNOSTIC DE BORD

Diagnostic de défaut N° de code	Le défaut est détecté quand ...	Eléments à vérifier (Cause possible)
12	● Une tension excessivement haute ou basse provenant du capteur est adressée à l'ECM.*	● Faisceau ou connecteurs (Le circuit du capteur est ouvert ou court-circuité) ● Débitmètre d'air

* : Lorsque ce défaut est détecté, l'ECM passe en mode de sécurité.

Condition de fonctionnement du moteur en mode de sécurité	Le régime du moteur ne dépassera pas 2 400 tr/mn en raison de la coupure d'alimentation.

Simpo PDF Merge and Split Unregistered Version - http://www.simpopdf.com

Débitmètre d’air (MAFS) (Suite)

PROCEDURE DE CONFIRMATION DU CODE DE DEFAUT DE DIAGNOSTIC

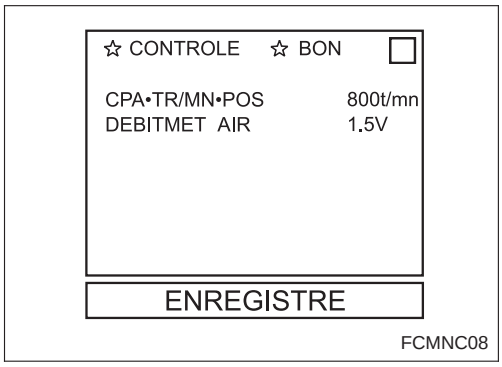

1) Tourner le contact d’allumage sur ‘‘ON’’ et attendre au moins 6 secondes.
2) Effectuer ‘‘CONTROLE DE DONNEES’’ avec le CONSULT.
3) Démarrer le moteur et attendre au moins 3 secondes.

OU

1) Tourner le contact d’allumage sur ‘‘ON’’ et attendre au moins 6 secondes.
2) Démarrer le moteur et attendre au moins 3 secondes.
3) Tourner le contact d’allumage sur ‘‘OFF’’, attendre au moins 5 secondes puis le tourner sur ‘‘ON’’.
4) Effectuer ‘‘Mode II de test de diagnostic’’ (résultats d’autodiagnostic) à l’aide de l’ECM.

Simpo PDF Merge and Split Unregistered Version - http://www.simpopdf.com

Débitmètre d'air (MAFS) (Suite)

CONDUITE A GAUCHE

EC-MAFS-01

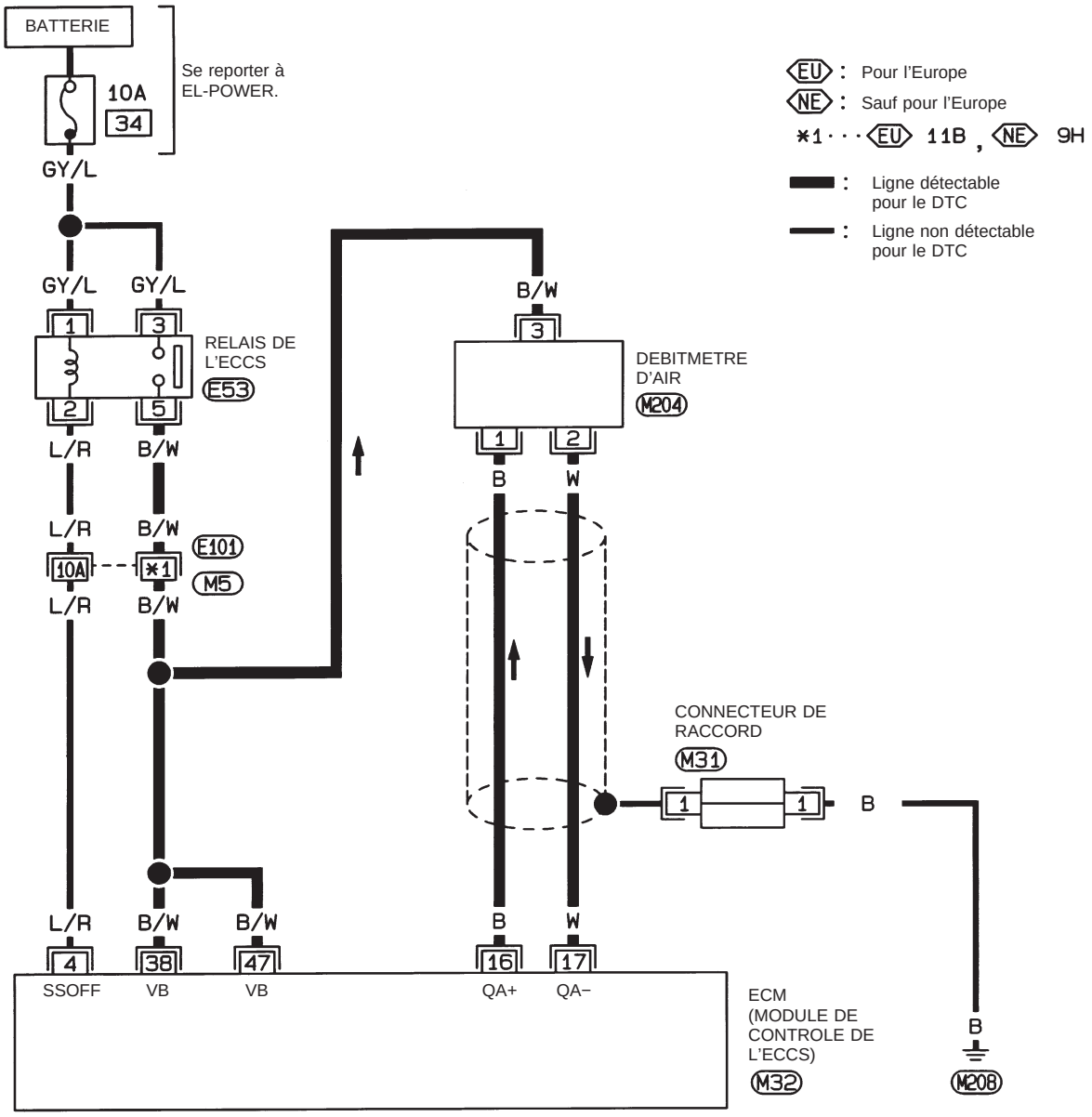





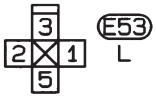

Consulter la dernière page dépliante.

M5 , E101

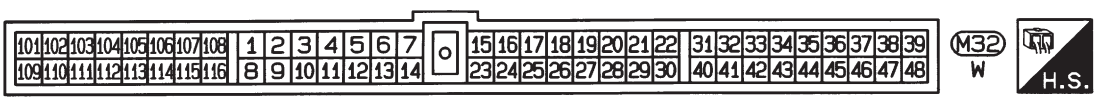

HEC560

Simpo PDF Merge and Split Unregistered Version - http://www.simpopdf.com

Débitmètre d'air (MAFS) (Suite)

CONDUITE A DROITE

EC-MAFS-02

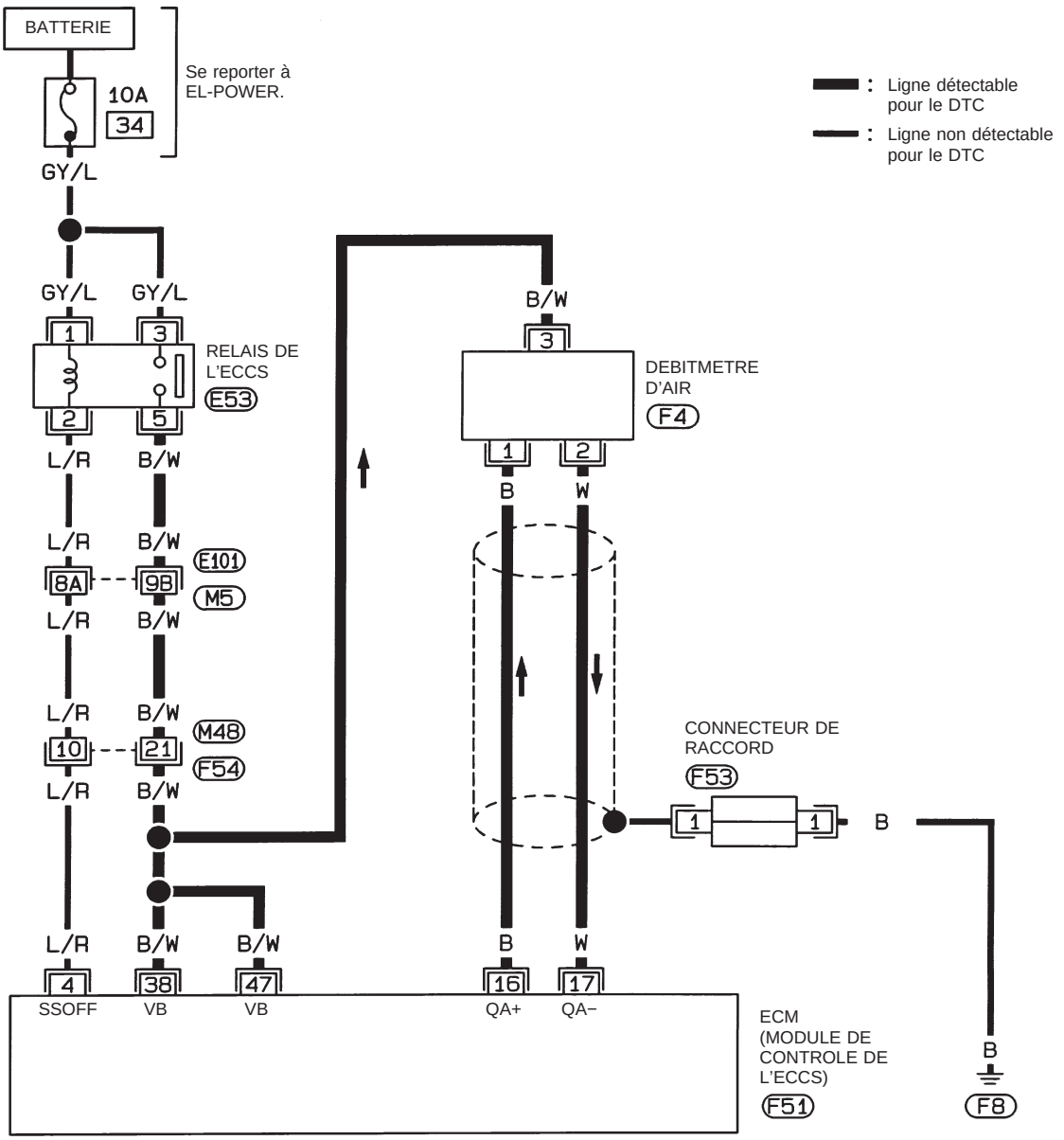

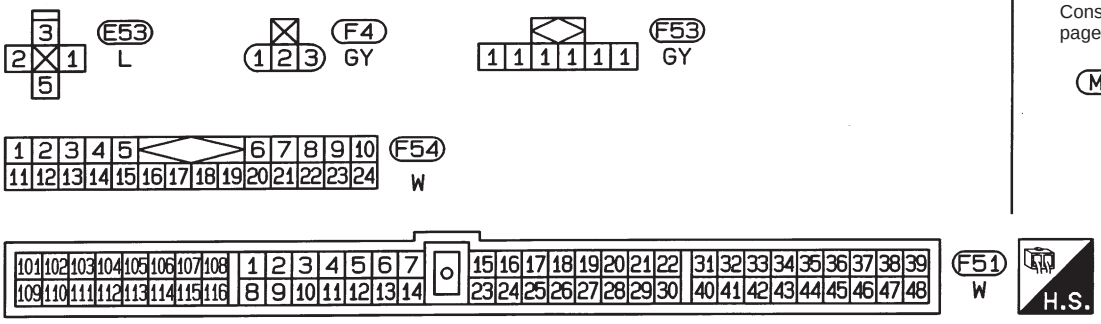

Consulter la dernière page dépliante.

M5 , E101

HEC342

Simpo PDF Merge and Split Unregistered Version - http://www.simpopdf.com

Débitmètre d'air (MAFS) (Suite)

PROCEDURE DE DIAGNOSTIC

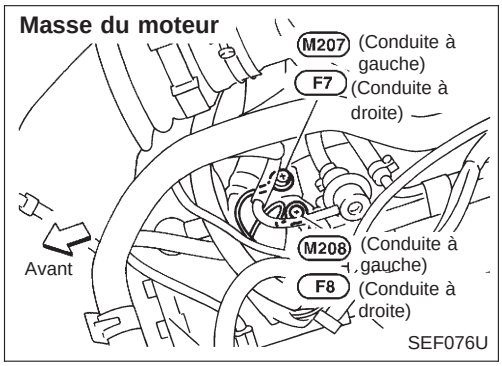

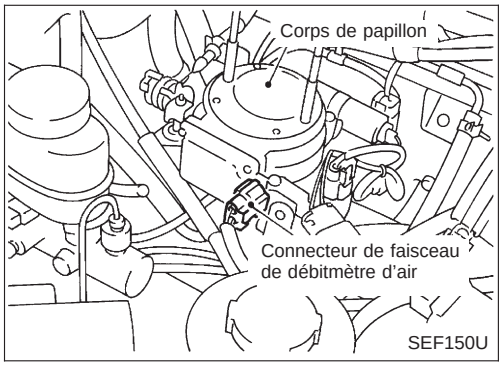

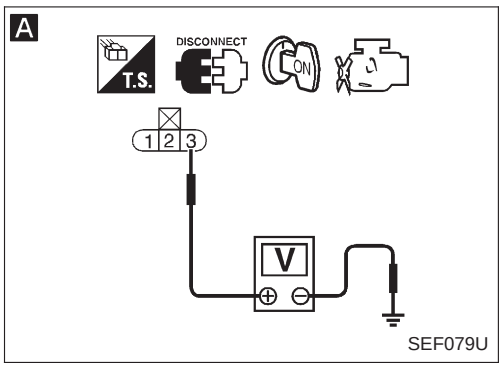

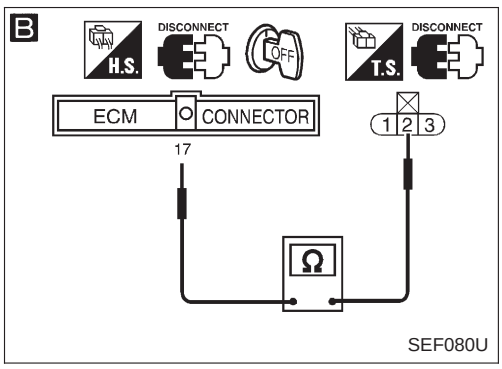

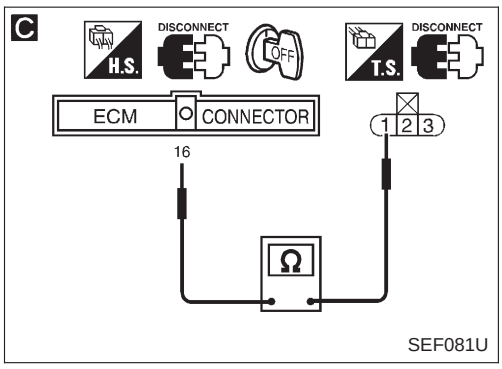

DEBUT DE L'INSPECTION

VERIFIER LE CIRCUIT PROTECTEUR.
1. Mettre le contact d'allumage sur "OFF".
2. Desserrer et resserrer les vis de masse du moteur (M208 et F8).
3. Déposer le connecteur de raccord M31 ou F53.
4. Vérifier les points suivants.
   - Continuité entre la borne ① du connecteur de raccord et la masse
   - Connecteur de raccord (Consulter la "DISPOSITION DES FAISCEAUX" à la section EL).

Il doit y avoir continuité.
Si le résultat est bon, vérifier si le faisceau n'est pas court-circuité à la masse ou à l'alimentation. Puis rebrancher le connecteur de raccord.

Mauvais → Réparer le circuit ouvert, court-circuité à la masse ou court-circuité à l'alimentation dans faisceau ou les connecteurs.

Bon

A

VERIFIER L'ALIMENTATION ELECTRIQUE.
1. Débrancher le connecteur de faisceau du débitmètre d'air.
2. Mettre le contact d'allumage sur "ON".
3. Vérifier la tension entre la borne ③ et la masse avec le CONSULT ou un testeur.

Tension : tension de la batterie

Mauvais → Vérifier les points suivants.
- Connecteurs de faisceau M5, E101
- Connecteurs de faisceau F54, M48 (conduite à droite)
- Faisceau ouvert ou court-circuité entre le débitmètre d'air et l'ECM
- Faisceau ouvert ou court-circuité entre le débitmètre d'air et le relais de l'ECCS

Si le résultat est mauvais, réparer le faisceau ou les connecteurs.

Bon

B

VERIFIER LE CIRCUIT DE MISE A LA MASSE.
1. Mettre le contact d'allumage sur "OFF".
2. Débrancher le connecteur de faisceau de l'ECM.
3. Vérifier la continuité du faisceau entre la borne ② et la borne ⑰ de l'ECM.

Il doit y avoir continuité.
Si le résultat est bon, vérifier si le faisceau n'est pas court-circuité à la masse ou à l'alimentation.

Mauvais → Réparer le circuit ouvert, court-circuité à la masse ou court-circuité à l'alimentation dans le faisceau ou les connecteurs.

Bon

C

VERIFIER LE CIRCUIT DE SIGNAL D'ENTREE.
Vérifier la continuité du faisceau entre la borne ① et la borne ⑯ de l'ECM.

Il doit y avoir continuité.
Si le résultat est bon, vérifier si le faisceau n'est pas court-circuité à la masse ou à l'alimentation.

Mauvais → Réparer le circuit ouvert, court-circuité à la masse ou court-circuité à l'alimentation dans le faisceau ou les connecteurs.

Bon

Ⓐ

Simpo PDF Merge and Split Unregistered Version - http://www.simpopdf.com

Débitmètre d’air (MAFS) (Suite)

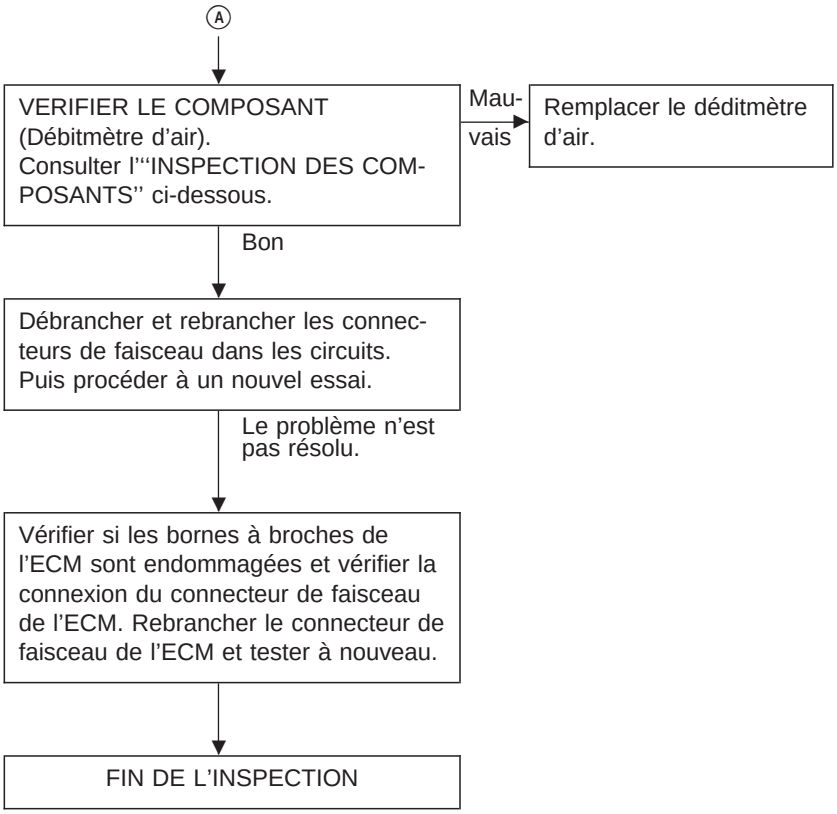

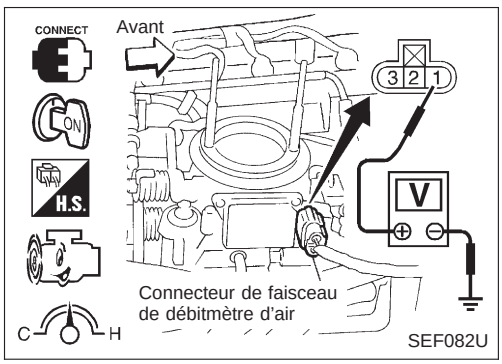

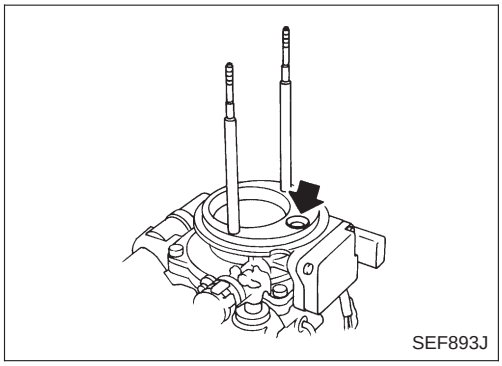

INSPECTION DES COMPOSANTS

Débitmètre d’air

1. Mettre le contact d’allumage sur ‘‘ON’’.
2. Démarrer le moteur et le laisser s’échauffer suffisamment.
3. Vérifier la tension entre la borne ① et la masse.

Conditions	Tension V
Contact d’allumage sur ‘‘ON’’ (moteur arrêté)	Moins de 1,0
Ralenti (le moteur est suffisamment réchauffé).	1,3 - 1,7
2 500 tr/mn	1,7 - 2,1
Ralenti d’environ 4 000 tr/mn*	1,3 - 1,7 à environ 4,0

* : Vérifier la montée de la tension linéaire par rapport aux augmentations de régime du moteur jusqu’à environ 4 000 tr/mn.

4. Si le résultat est mauvais, déposer le débitmètre d’air du conduit d’air. Vérifier l’état et l’encrassement du filament chauffant.

Simpo PDF Merge and Split Unregistered Version - http://www.simpopdf.com

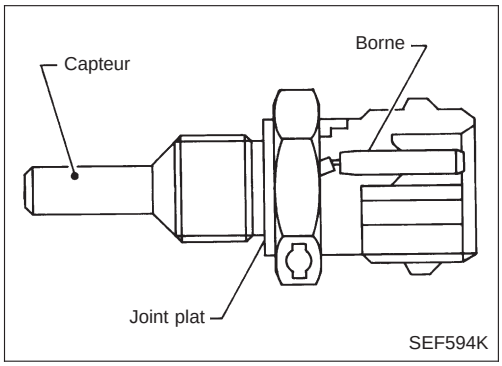

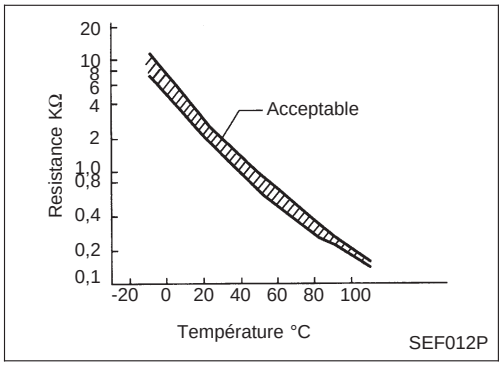

Capteur de température du réfrigérant moteur (ECTS)

DESCRIPTION DES COMPOSANTS

Le capteur de température du réfrigérant moteur est utilisé pour détecter la température du réfrigérant moteur. Le capteur modifie un signal de tension depuis l'ECM. Le signal modifié retourne à l'ECM en tant qu'entrée de température du réfrigérant moteur. Le capteur utilise une thermistance qui est sensible au changement de température. La résistance électrique de la thermistance diminue au fur et à mesure que la température monte.

<Données de référence>

Température du réfrigérant moteur °C	Tension* (V)	Résistance (kΩ)
−10	4,4	7,0 - 11,4
20	3,5	2,1 - 2,9
50	2,2	0,68 - 1,00
90	1,0	0,236 - 0,260

* : Ces données sont des valeurs de référence et sont mesurées entre la borne (18) de l'ECM (capteur de température du réfrigérant moteur) et la borne (39) de l'ECM (masse de l'ECCS).

LOGIQUE DE DIAGNOSTIC DE BORD

N° de code de défaut de diagnostic	Le défaut est détecté quand ...	Eléments à vérifier (Cause possible)
13	● Une tension excessivement haute ou basse provenant du capteur est adressée à l'ECM.*	● Faisceau ou connecteurs (Le circuit du capteur est ouvert ou court-circuité) ● Capteur de température du réfrigérant moteur

* : Lorsque ce défaut est détecté, l'ECM passe en mode de sécurité.

Condition de fonctionnement du moteur en mode de sécurité	Condition	Température du réfrigérant moteur déterminée (AFFICHAGE CONSULT)
La température du réfrigérant moteur sera déterminée sur la base du temps suivant la mise du contact d'allumage sur "ON" ou "START". Le CONSULT affiche la température du réfrigérant moteur déterminée par l'ECM.	Au moment de la mise du contact d'allumage sur "ON" ou "START"	20°C
	Plus de 6 minutes après que l'allumage est mis sur "START"	80°C
	Sauf comme indiqué ci-dessus	20 - 80°C (en fonction du temps écoulé)

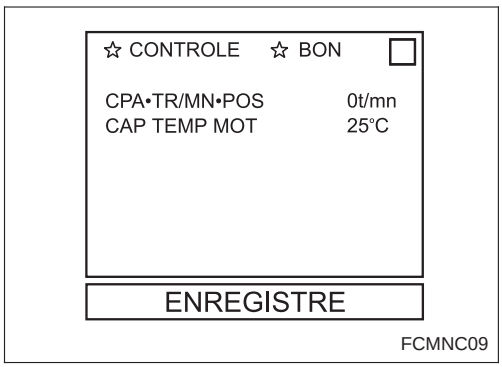

PROCEDURE DE CONFIRMATION DU CODE DE DEFAUT DE DIAGNOSTIC

1) Mettre le contact d'allumage sur "ON".
2) Effectuer "CONTROLE DE DONNEES" avec le CONSULT.
3) Attendre au moins 5 secondes.

OU

1) Tourner le contact d'allumage sur "ON" et attendre au moins 5 secondes.
2) Tourner le contact d'allumage sur "OFF", attendre au moins 5 secondes puis le tourner sur "ON".
3) Effectuer "Mode II de test de diagnostic" (résultats d'autodiagnostic) à l'aide de l'ECM.

Simpo PDF Merge and Split Unregistered Version - http://www.simpopdf.com

Capteur de température du réfrigérant moteur (ECTS) (Suite)

EC-ECTS-01

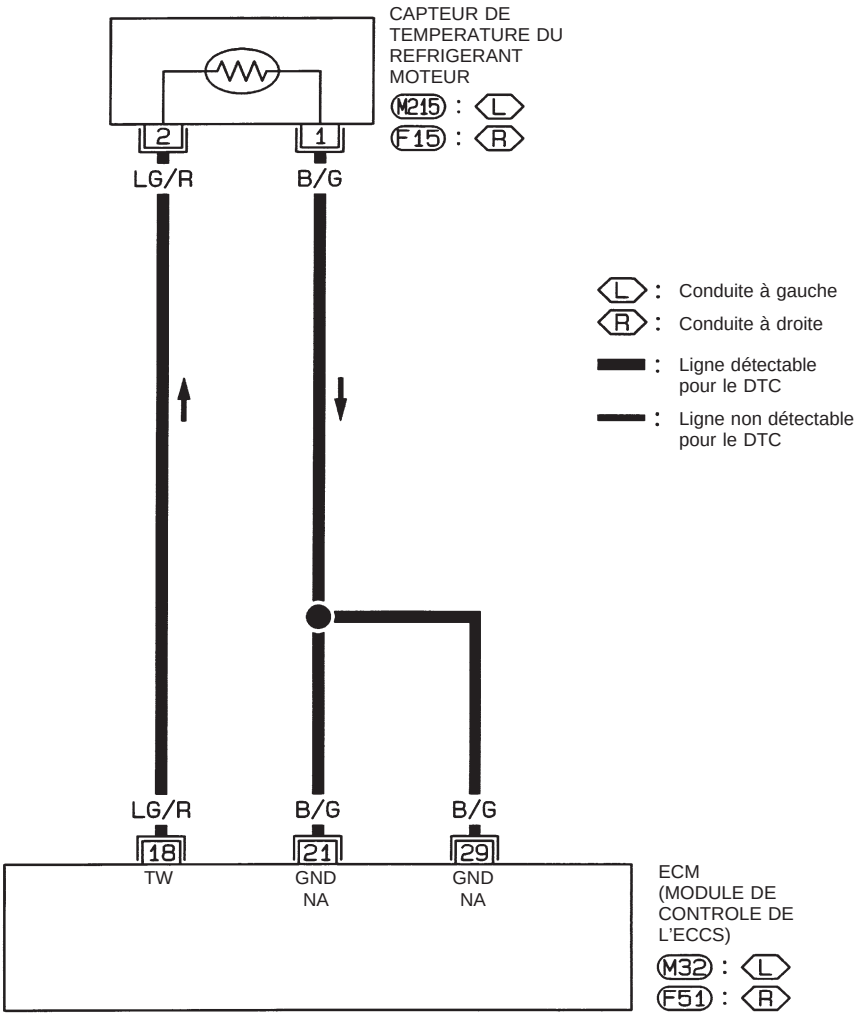



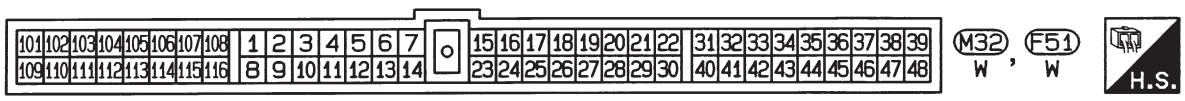

HEC343

Simpo PDF Merge and Split Unregistered Version - http://www.simpopdf.com

Capteur de température du réfrigérant moteur (ECTS) (Suite)

PROCEDURE DE DIAGNOSTIC

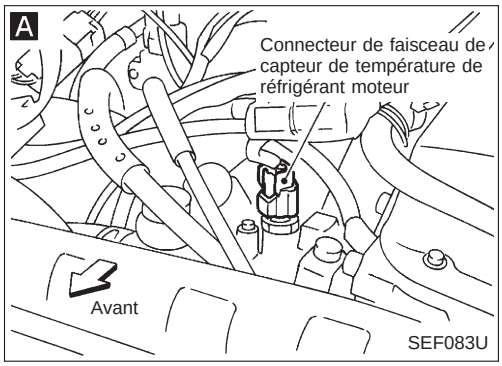

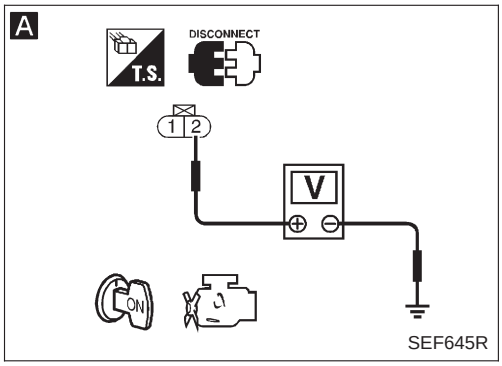

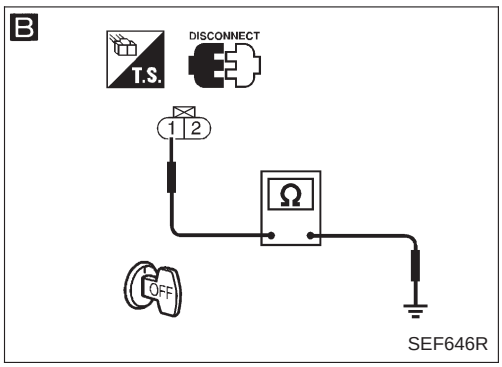

DEBUT DE L'INSPECTION

A

VERIFIER L'ALIMENTATION ELECTRIQUE.
1. Mettre le contact d'allumage sur "OFF".
2. Débrancher le connecteur de faisceau du capteur de température du réfrigérant moteur.
3. Mettre le contact d'allumage sur "ON".
4. Vérifier la tension entre la borne ② et la masse avec le CONSULT ou un testeur.
   Tension :
   Environ 5V

Mauvais → Réparer le faisceau ou les connecteurs.

Bon

B

VERIFIER LE CIRCUIT DE MISE A LA MASSE.
1. Mettre le contact d'allumage sur "OFF".
2. Vérifier la continuité du faisceau entre la borne ① et la masse de moteur.
   Il doit y avoir continuité.
   Si le résultat est bon, vérifier si le faisceau n'est pas court-circuité à la masse ou à l'alimentation.

Mauvais → Vérifier les points suivants.
- Faisceau ouvert ou court-circuité entre l'ECM et le capteur de température du réfrigérant moteur

Si le résultat est mauvais, réparer le circuit ouvert, court-circuité à la masse ou court-circuité à l'alimentation du faisceau ou des connecteurs.

Bon

VERIFIER LE COMPOSANT
(Capteur de température du réfrigérant moteur).
Consulter l'"INSPECTION DES COMPOSANTS" à la page suivante.

Mauvais → Remplacer le capteur de température du réfrigérant moteur.

Bon

Débrancher et rebrancher sur les circuits les connecteurs de faisceau. Puis procéder à un nouvel essai.

Le problème n'est pas résolu.

Vérifier si les bornes à broches de l'ECM sont endommagées et vérifier la connexion du connecteur de faisceau de l'ECM. Rebrancher le connecteur de faisceau de l'ECM et tester à nouveau.

FIN DE L'INSPECTION

Simpo PDF Merge and Split Unregistered Version - http://www.simpopdf.com

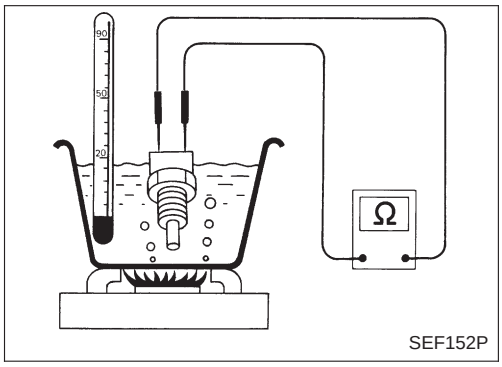

SEF152P

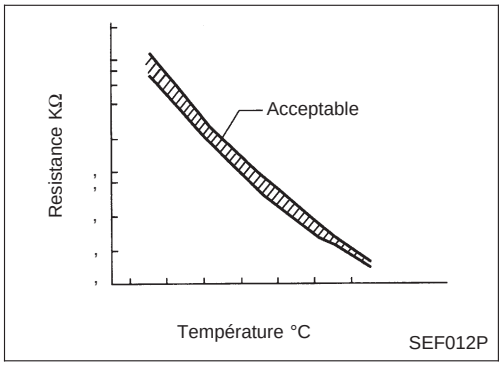

SEF012P

Capteur de température du réfrigérant moteur (ECTS) (Suite)

INSPECTION DES COMPOSANTS

Capteur de température du réfrigérant moteur

Vérifier la résistance comme indiqué sur la figure ci-contre.

<Données de référence>

Température °C	Résistance kΩ
20	2,1 - 2,9
50	0,68 - 1,00
90	0,236 - 0,260

Si le résultat est mauvais, remplacer le capteur de température du réfrigérant moteur.

Simpo PDF Merge and Split Unregistered Version - http://www.simpopdf.com

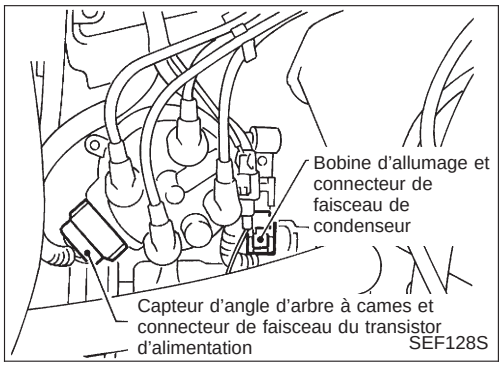

Signal d'allumage

DESCRIPTION DES COMPOSANTS

Bobine d'allumage et transistor d'alimentation (intégrés au distributeur)

Le signal d'allumage depuis l'ECM est délivré à et amplifié par le transistor d'alimentation. Le transistor d'alimentation excite et coupe le circuit primaire de la bobine d'allumage. Ce fonctionnement intermittent alimente la tension élevée correcte dans le circuit secondaire de la bobine.

VALEUR DE REFERENCE DE CONSULT EN MODE DE CONTROLE DE DONNEES

Remarques : les données de spécification sont des valeurs de référence.

ELEMENT DE CONTROLE	CONDITION		SPECIFICATION
CALAGE ALLUM	● Moteur : après échauffement ● Interrupteur de climatiseur : à l'arrêt ● Levier de passage : point mort ● A vide	Ralenti	10° avant P.M.H.
		2 000 tr/mn	Plus de 25° avant P.M.H.

BORNES DE L'ECM ET VALEURS DE REFERENCE

Remarques : les données de spécifications sont des valeurs de référence et sont mesurées entre chaque borne et ㊴ (masse de l'ECCS) à l'aide d'un voltmètre.

N° DE BORNE	COULEUR DE CABLE	ELEMENT	CONDITION	DONNEES (Tension du courant continu)
1	W/PU	Signal d'allumage	Moteur en marche. └ Régime de ralenti	Environ 0,3V 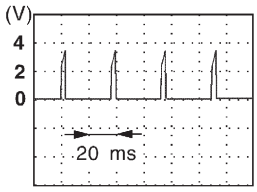 SEF058U
			Moteur en marche. └ Le régime moteur est de 2 000 tr/mn.	Environ 0,7V 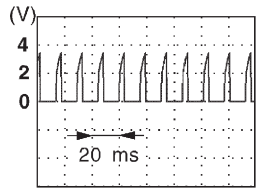 SEF059U

Simpo PDF Merge and Split Unregistered Version - http://www.simpopdf.com

Signal d'allumage (Suite)

N° DE BORNE	COULEUR DE CABLE	ELEMENT	CONDITION	DONNEES (Tension du courant continu)
3	W/G	Contrôle de l'allumage	Moteur en marche. └ Régime de ralenti	Environ 13V 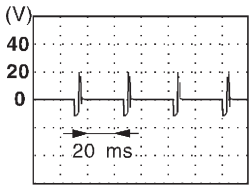 SEF062U
			Moteur en marche. └ Le régime moteur est de 2 000 tr/mn.	Environ 13V 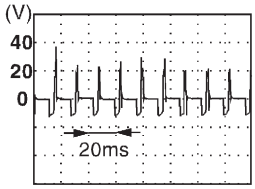 SEF063U

LOGIQUE DE DIAGNOSTIC DE BORD

Diagnostic de défaut N° de code	Le défaut est détecté quand ...	Eléments à vérifier (Cause possible)
21	● Le signal d'allumage du circuit primaire n'est pas envoyé pendant le lancement ou le fonctionnement du moteur.	● Faisceau ou connecteurs (Le circuit primaire d'allumage est ouvert ou court-circuité.) ● Transistor d'alimentation ● Résistance ● Capteur d'angle d'arbre à cames ● Circuit du capteur d'angle d'arbre à cames

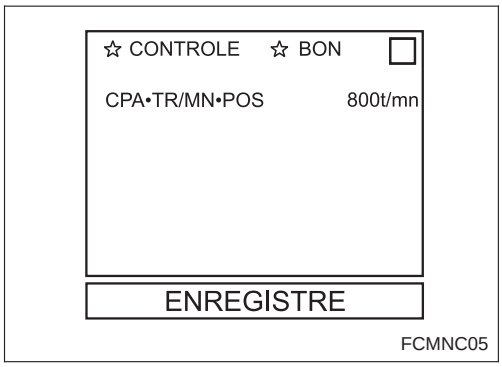

FCMNC05

PROCEDURE DE CONFIRMATION DU CODE DE DEFAUT DE DIAGNOSTIC

Note : Si les codes DTC 21 et 11 sont tous deux affichés, effectuer d'abord le DIAGNOSTIC DES DEFAUTS POUR LE DTC 11 (voir page EC-86).

Ⓟ
1) Mettre le contact d'allumage sur "ON".
2) Effectuer "CONTROLE DE DONNEES" avec le CONSULT.
3) Démarrer le moteur et attendre au moins 2 secondes (si le moteur ne tourne pas, mettre le contact d'allumage sur 'START'' pendant au moins 5 secondes).

OU

Ⓝ
1) Mettre le contact d'allumage sur "ON".
2) Démarrer le moteur et attendre au moins 2 secondes (si le moteur ne tourne pas, mettre le contact d'allumage sur 'START'' pendant au moins 5 secondes).
3) Tourner le contact d'allumage sur "OFF", attendre au moins 5 secondes puis le tourner sur "ON".
4) Effectuer "Mode II de test de diagnostic" (résultats d'autodiagnostic) à l'aide de l'ECM.

Simpo PDF Merge and Split Unregistered Version - http://www.simpopdf.com

Signal d'allumage (Suite)

CONDUITE A GAUCHE

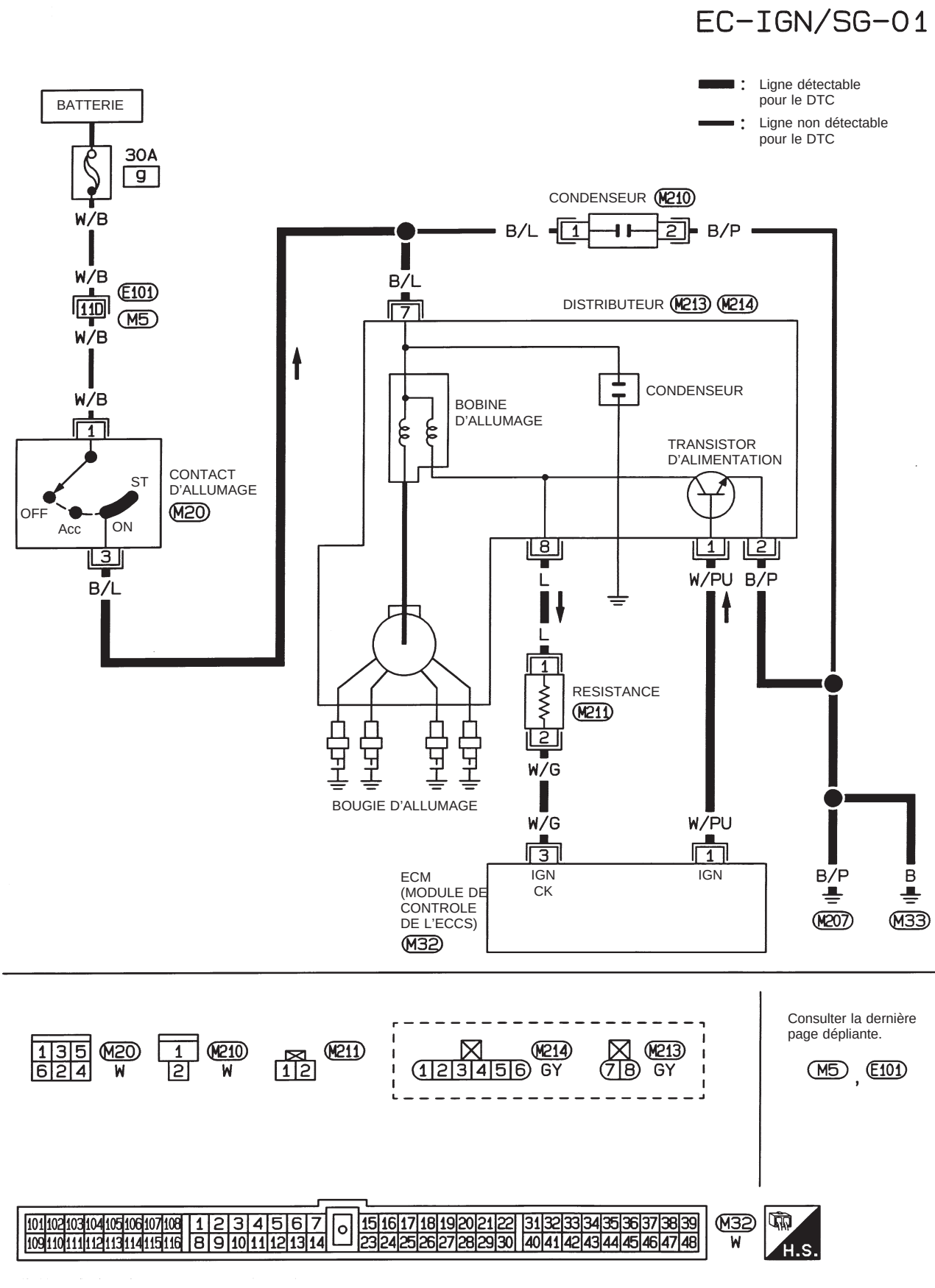

HEC344

Simpo PDF Merge and Split Unregistered Version - http://www.simpopdf.com

Signal d'allumage (Suite)

CONDUITE A DROITE

EC-IGN/SG-02

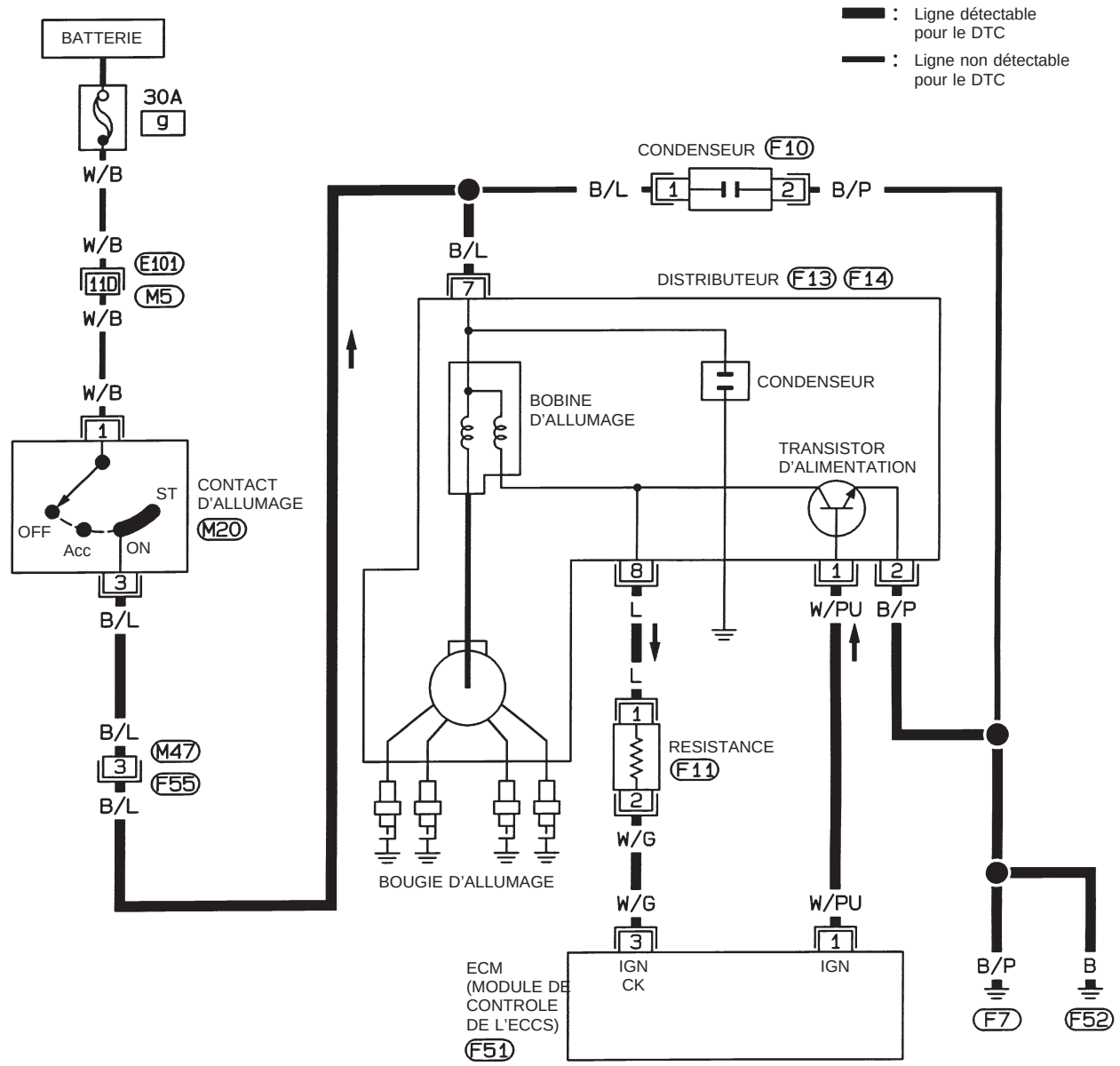

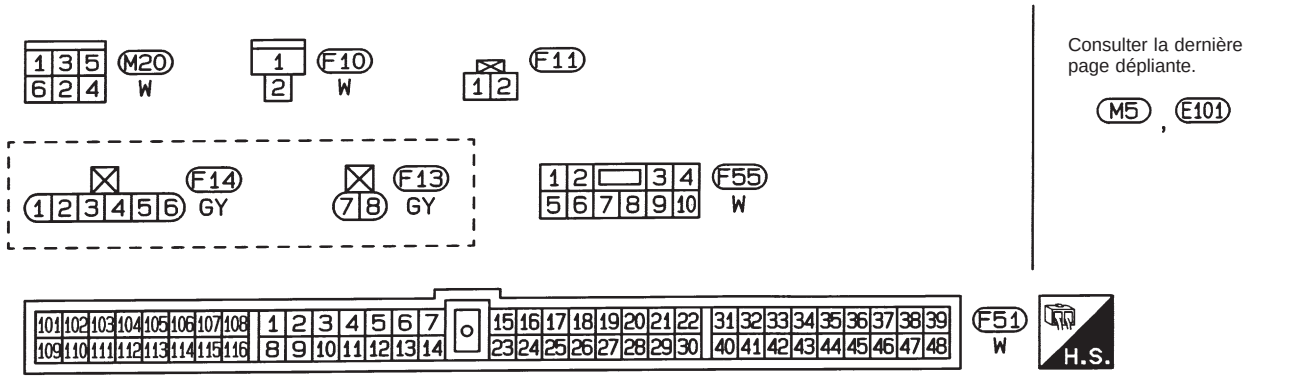

Consulter la dernière page dépliante.

M5, E101

HEC345

Simpo PDF Merge and Split Unregistered Version - http://www.simpopdf.com

Signal d'allumage (Suite)

PROCEDURE DE DIAGNOSTIC

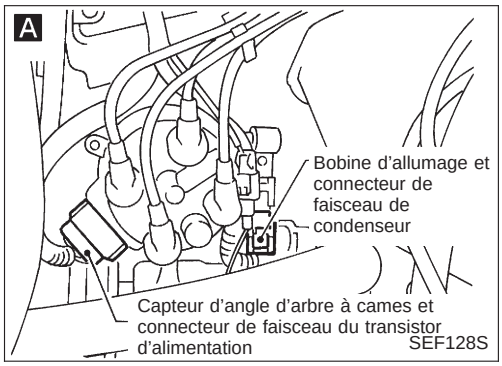

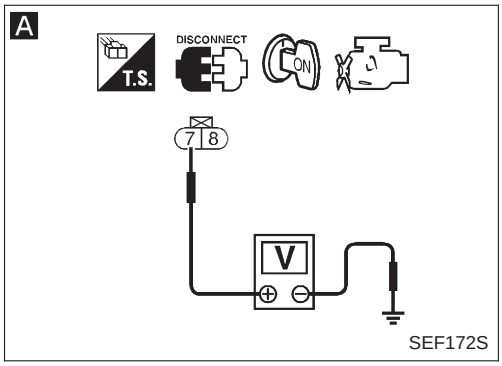

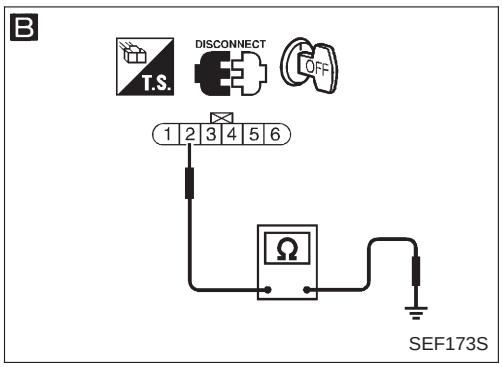

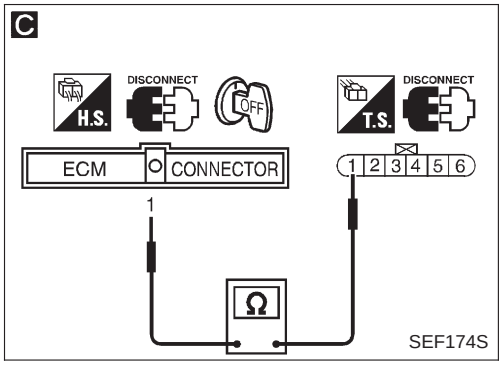

DEBUT DE L'INSPECTION

Mettre le contact d'allumage sur "OFF", et redémarrer le moteur.
Le moteur tourne-t-il ?

Oui → Ⓐ (Aller à la page suivante).

Non

A

VERIFIER L'ALIMENTATION ELECTRIQUE.
1. Mettre le contact d'allumage sur "OFF".
2. Débrancher le connecteur de faisceau de la bobine d'allumage.
3. Mettre le contact d'allumage sur "ON".
4. Vérifier la tension entre la borne ⑦ et la masse avec le CONSULT ou un testeur.
   Tension : tension de la batterie

Mauvais → Vérifier les points suivants.
- Connecteurs de faisceau (F55), (M47) (conduite à droite)
- Faisceau ouvert ou court-circuité entre la bobine d'allumage et le contact d'allumage

Si le résultat est mauvais, réparer le faisceau ou les connecteurs.

Bon

B

VERIFIER LE CIRCUIT DE MISE A LA MASSE.
1. Mettre le contact d'allumage sur "OFF".
2. Débrancher le connecteur de faisceau du transistor d'alimentation.
3. Vérifier la continuité du faisceau entre la borne ② et la masse de moteur.
   Il doit y avoir continuité.
   Si le résultat est bon, vérifier si le faisceau n'est pas court-circuité à la masse ou à l'alimentation.

Mauvais → Réparer le circuit ouvert, court-circuité à la masse ou court-circuité à l'alimentation dans le faisceau ou les connecteurs.

Bon

C

VERIFIER LE CIRCUIT DE SIGNAL DE SORTIE.
1. Débrancher le connecteur de faisceau de l'ECM.
2. Vérifier la continuité du faisceau entre la borne ① de l'ECM et la borne ① .
   Il doit y avoir continuité.
   Si le résultat est bon, vérifier si le faisceau n'est pas court-circuité à la masse ou à l'alimentation.

Mauvais → Réparer le circuit ouvert, court-circuité à la masse ou court-circuité à l'alimentation dans le faisceau ou les connecteurs.

Bon

VERIFIER LES COMPOSANTS
(Bobine d'allumage, transistor d'alimentation).
Consulter l'"INSPECTION DES COMPOSANTS", EC-109.

Mauvais → Remplacer le(s) composant(s) défectueux.

Bon

Débrancher et rebrancher sur les circuits les connecteurs de faisceau. Puis procéder à un nouvel essai.

Le problème n'est pas résolu.

Vérifier si les bornes à broches de l'ECM sont endommagées et vérifier la connexion du connecteur de faisceau de l'ECM. Rebrancher le connecteur de faisceau de l'ECM et tester à nouveau.

FIN DE L'INSPECTION

Simpo PDF Merge and Split Unregistered Version - http://www.simpopdf.com

Signal d’allumage (Suite)

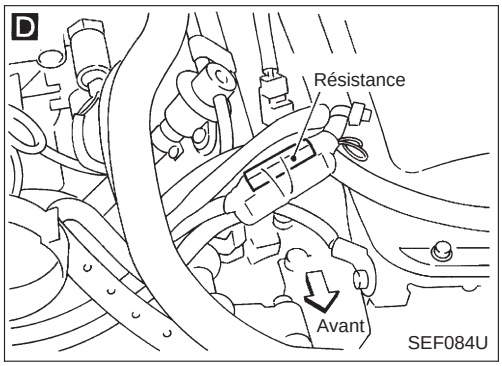

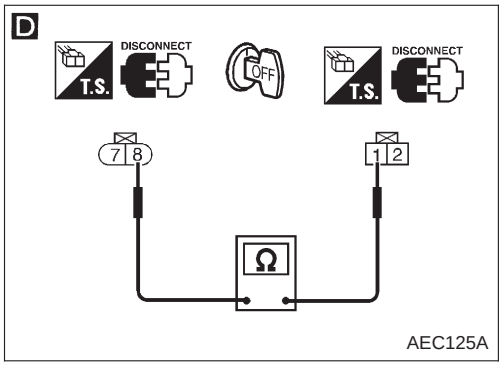

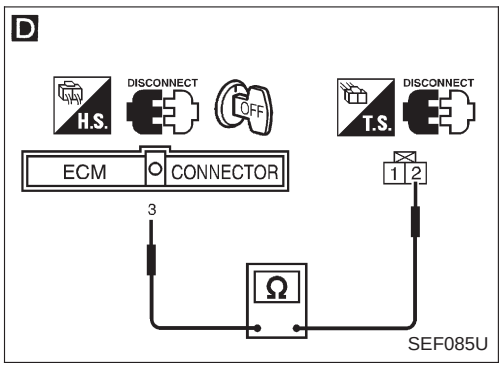

Ⓐ

D

VERIFIER LE CIRCUIT DE SIGNAL D’ENTREE.
1. Arrêter le moteur.
2. Débrancher le connecteur de faisceau de la bobine d’allumage.
3. Retirer le ruban adhésif couvrant la résistance.
4. Débrancher le connecteur de faisceau de la résistance.
5. Débrancher le connecteur de faisceau de l’ECM.
6. Vérifier la continuité du faisceau entre la borne ⑧ et la borne ①, la borne ② et la borne ③ de l’ECM.
   Il doit y avoir continuité.
   Si le résultat est bon, vérifier si le faisceau n’est pas court-circuité à la masse ou à l’alimentation.

Mauvais → Réparer le circuit ouvert, court-circuité à la masse ou court-circuité à l’alimentation dans le faisceau ou les connecteurs.

Bon

VERIFIER LE COMPOSANT (Résistance).
Consulter l’“INSPECTION DES COMPOSANTS” à la page suivante.

Mauvais → Remplacer la résistance.

Bon

Débrancher et rebrancher sur les circuits les connecteurs de faisceau. Puis procéder à un nouvel essai.

Le problème n’est pas résolu.

Vérifier si les bornes à broches de l’ECM sont endommagées et vérifier la connexion du connecteur de faisceau de l’ECM. Rebrancher le connecteur de faisceau de l’ECM et tester à nouveau.

FIN DE L’INSPECTION

Simpo PDF Merge and Split Unregistered Version - http://www.simpopdf.com

Signal d’allumage (Suite)

INSPECTION DES COMPOSANTS

Bobine d’allumage

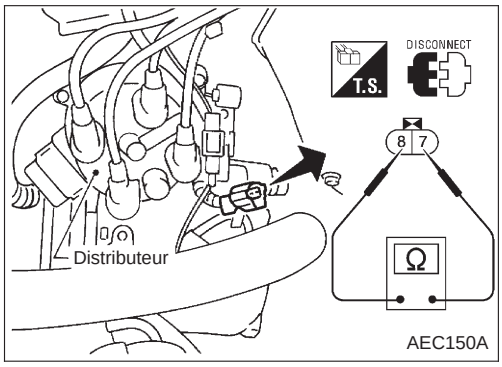

1. Débrancher le connecteur de faisceau de la bobine d’allumage.
2. Déposer le chapeau de distributeur.
3. Vérifier la résistance comme indiqué sur la figure ci-contre.

Borne	Résistance (à 25°C)
⑦ - ⑧	Moins de 1Ω
⑦ - ⑨	7 - 13 kΩ

Si le résultat est mauvais, remplacer l’ensemble de distributeur.

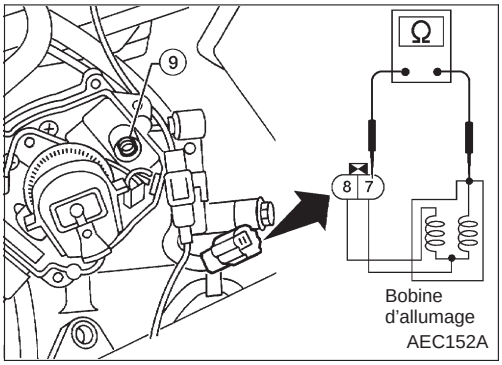

Transistor d’alimentation

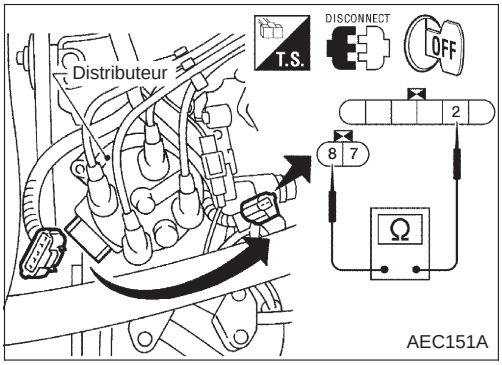

1. Débrancher le connecteur de faisceau du capteur d’angle d’arbre à cames et du transistor d’alimentation et le connecteur du faisceau de la bobine d’allumage.
2. Vérifier la résistance du transistor d’alimentation entre les bornes ② et ⑧.

Bornes	Résistance	Résultat
② et ⑧	Sauf 0Ω	Bon
	0Ω	Mauvais

Si le résultat est mauvais, remplacer l’ensemble de distributeur.

Simpo PDF Merge and Split Unregistered Version - http://www.simpopdf.com

Signal d'allumage (Suite)

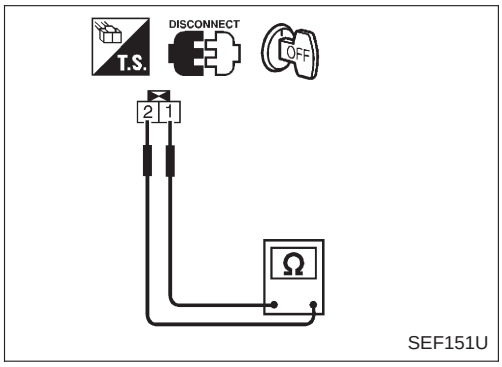

Résistance

1. Débrancher le connecteur de faisceau de la résistance.
2. Vérifier la résistance entre les bornes ① et ② .
   Résistance : environ 2,2 kΩ
   Si le résultat est mauvais, remplacer la résistance.

Simpo PDF Merge and Split Unregistered Version - http://www.simpopdf.com

Surchauffe

LOGIQUE DE DIAGNOSTIC DE BORD

Si le ventilateur de refroidissement ou tout autre composant du système de refroidissement est défectueux, la température moteur augmentera.
Lorsque la température du réfrigérant moteur atteint un degré de température anormalement élevé, un défaut est indiqué.

N° de code de défaut de diagnostic	Le défaut est détecté quand ...	Eléments à vérifier (Cause possible)
28	● La température du réfrigérant moteur devient anormalement élevée.	● Ventilateur de refroidissement ● Flexible de radiateur ● Radiateur ● Bouchon du radiateur ● Pompe à eau ● Thermostat Pour plus d'information, consulter ''12 CAUSES PRINCIPALES DE SURCHAUFFE'', à la page EC-114.

ATTENTION :
Lorsqu'un défaut est indiqué, veiller à remplacer le réfrigérant en suivant la procédure indiquée à la section MA (''Remplacement du réfrigérant moteur'', ''ENTRETIEN DU MOTEUR''). Remplacer également l'huile moteur.

- **Faire le plein du radiateur jusqu'au niveau spécifié en versant 2 litres de réfrigérant par minute. Veiller à utiliser un réfrigérant contenant une richesse de mélange appropriée. Consulter la section MA (''Richesse de mélange de réfrigérant antigel'', dans ''FLUIDES ET LUBRIFIANTS RECOMMANDES'').**
- **Après avoir fait le plein de réfrigérant, faire tourner le moteur pour s'assurer que l'on entend aucun bruit d'écoulement d'eau.**

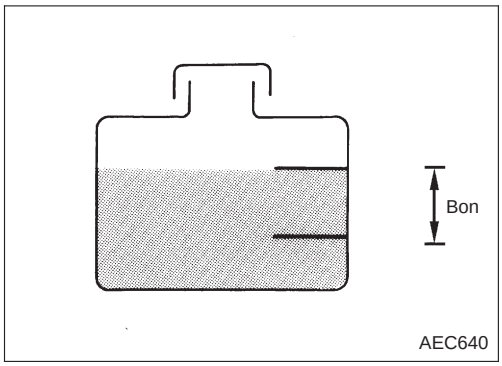

VERIFICATION DU FONCTIONNEMENT GENERAL

AVERTISSEMENT :
Ne jamais déposer le bouchon de radiateur lorsque le moteur est chaud. Le liquide haute pression s'échappant du radiateur peut occasionner de sérieuses brûlures.
Entourer le bouchon d'un chiffon épais. Retirer le bouchon avec précaution en le tournant d'un quart de tour pour permettre à la pression de s'échapper. Puis tourner le bouchon à fond.

1. Contrôler le niveau de réfrigérant dans le réservoir et dans le radiateur.
   Laisser le moteur refroidir avant de vérifier le niveau de réfrigérant.
   Si le niveau de réfrigérant dans le réservoir et/ou dans le radiateur est en dessous du niveau adéquat, sauter les étapes suivantes et passer à ''PROCEDURE DE DIAGNOSTIC'' à la page suivante.
2. S'assurer que le client a fait le plein de réfrigérant ou non.
   Si le client a fait le plein de réfrigérant, passer à la ''PROCEDURE DE DIAGNOSTIC'', à la page suivante.

Simpo PDF Merge and Split Unregistered Version - http://www.simpopdf.com

Surchauffe (Suite)

PROCEDURE DE DIAGNOSTIC

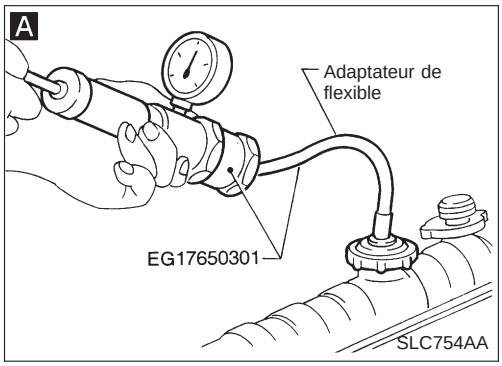

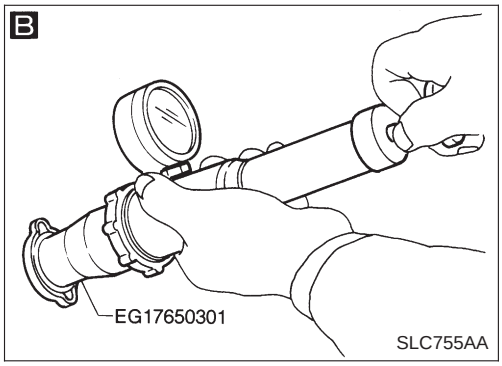

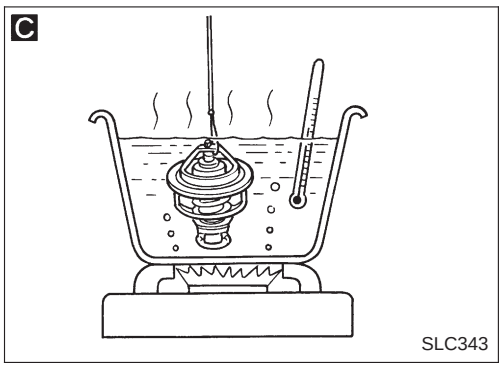

DEBUT DE L'INSPECTION

↓

A

VERIFIER SI LE SYSTEME DE REFROIDISSEMENT NE FUIT PAS.
Augmenter la pression du système de refroidissement à l'aide d'un testeur, et vérifier si la pression chute.
Pression d'essai :
157 kPa (1,57 bar, 1,6 kg/cm^2)
La pression ne doit pas chuter.
ATTENTION :
Une pression supérieure à celle spécifiée pourrait endommager le radiateur.

Mauvais → Vérifier si les éléments suivants ne fuient pas.
- Flexible
- Radiateur
- Pompe à eau

Consulter la section LC ("Pompe à eau").

↓ Bon

B

VERIFIER LE BOUCHON DU RADIATEUR.
Mettre le couvercle sous pression à l'aide d'un testeur.
Pression de décharge du bouchon de radiateur :
78 - 98 kPa
(0,78 - 0,98 bar, 0,8 - 1,0 kg/cm^2)

Mauvais → Remplacer le bouchon de radiateur.

↓ Bon

C

VERIFIER LE THERMOSTAT.
1. Vérifier l'assise de la vanne à température ambiante normale.
   Elle doit être assise en contact étroit avec le siège.
2. Vérifier la température d'ouverture de soupape et la levée de soupape.
   Température d'ouverture de soupape
   76,5°C (standard)
   Levée de soupape :
   Plus de 10 mm/90°C
3. Vérifier si la soupape est fermée à 5°C au-dessous de la température d'ouverture de la soupape.

Pour plus de détails, consulter la section LC ("Thermostat").

Mauvais → Remplacer le thermostat

↓ Bon

Vérifier le capteur de température du réfrigérant moteur. Consulter l'"INSPECTION DES COMPOSANTS", EC-102.

Mauvais → Remplacer le capteur de température du réfrigérant moteur.

↓ Bon

Si la cause ne peut pas être identifiée, aller à "12 CAUSES PRINCIPALES DE SURCHAUFFE" à la page 114.

↓

FIN DE L'INSPECTION

Simpo PDF Merge and Split Unregistered Version - http://www.simpopdf.com

Surchauffe (Suite)

Effectuer un CONTROLE FINAL à l'aide de la procédure suivante une fois la réparation achevée.

1. Laisser chauffer le moteur. Faire tourner le moteur pendant au moins 20 minutes. Faire attention à la jauge de température du réfrigérant moteur située sur le tableau de bord. Si la lecture indique une température anormalement haute, il se peut qu'une autre pièce soit défectueuse.
2. Arrêter le véhicule et garder le régime de ralenti. Vérifier si les systèmes d'admission et d'échappement ne fuient pas en écoutant tous les bruits et en inspectant visuellement les composants.
3. Laisser le moteur refroidir puis vérifier toute présence de fuites d'huile ou de réfrigérant. Puis, effectuer la ''VERIFICATION DU FONCTIONNEMENT GENERAL''.

Simpo PDF Merge and Split Unregistered Version - http://www.simpopdf.com

Surchauffe (Suite)

12 PRINCIPALES CAUSES DE SURCHAUFFE

Moteur	Etape	Elément d'inspection	Equipement	Standard	Page de référence
ARRET	1	● Radiateur encrassé ● Condenseur bouché ● Grille de radiateur encrassée ● Pare-chocs bloqué	● Visuel	Pas de blocage	–
	2	● Mélange de réfrigérant	● Testeur de réfrigérant	Mélange eau/antigel 50 - 50%	Voir ''LIQUIDES ET LUBRIFIANTS CONSEILLES'' à la section MA.
	3	● Niveau de réfrigérant	● Visuel	Réfrigérant au niveau ''MAX'' dans le réservoir et le goulot de remplissage du radiateur	Consulter ''Remplacement du réfrigérant moteur'' au chapitre ''ENTRETIEN DU MOTEUR'' à la section MA.
	4	● Bouchon du radiateur	● Contrôleur de pression	78 - 98 kPa (0,78 - 0,98 bar, 0,8 - 1,0 kg/cm^2) 59 - 98 kPa (0,59 - 0,98 bar, 0,6 - 1,0 kg/cm^2) (Limite)	Voir ''Contrôle du système'' dans ''SYSTEME DE REFROIDISSEMENT DU MOTEUR'' à la section LC.
MARCHE*2	5	● Fuites de réfrigérant	● Visuel	Absence de fuites	Voir ''Contrôle du système'' dans ''SYSTEME DE REFROIDISSEMENT DU MOTEUR'' à la section LC.
MARCHE*2	6	● Thermostat	● Toucher les flexibles supérieur et inférieur du radiateur	Les deux flexibles doivent être brûlants	Voir ''Thermostat'' et ''Radiateur'' au chapitre ''SYSTEME DE REFROIDISSEMENT DU MOTEUR'' à la section LC.
MARCHE*1	7	● Ventilateur de refroidissement	● Visuel	En marche	Consulter ''Ventilateur de refroidissement'', ''CIRCUIT DE REFROIDISSEMENT DU MOTEUR'' à la section LC.
ARRET	8	● Fuite du gaz de combustion	● Contrôleur de couleur testeur chimique analyseur de gaz 4	Négatif	–
MARCHE*3	9	● Jauge de température de réfrigérant	● Visuel	La jauge n'est pas aux 3/4 lors de la conduite	–
		● Trop-plein de réfrigérant au réservoir	● Visuel	Pas de trop-plein lors de la conduite et du ralenti	Consulter ''Remplacement du réfrigérant moteur'' au chapitre ''ENTRETIEN DU MOTEUR'' à la section MA.
ARRET*4	10	● Le réfrigérant repart du réservoir vers le radiateur	● Visuel	Le niveau du réservoir doit être le même qu'au départ	Voir ''ENTRETIEN DU MOTEUR'' à la section MA.
ARRET	11	● Culasse	● Règle, jauge d'épaisseur	0,1 mm de défaut de planéité max. (gauchissement)	Voir ''Inspection'', ''CULASSE'' à la section EM.
	12	● Bloc-cylindres et pistons	● Visuel	Pas de frottement sur les parois du cylindre ou sur le piston	Voir ''Inspection'', ''BLOC-CYLINDRES'' à la section EM.

*1 : Le moteur tourne au ralenti.
*2 : Le moteur tourne à 3 000 tr/mn pendant 10 minutes.
*3 : Conduire à 90 km/h pendant 30 minutes puis laisser le moteur tourner au ralenti pendant 10 minutes.
*4 : Après 60 minutes de refroidissement.
Pour plus d'informations, consulter ''ANALYSE DES CAUSES DE SURCHAUFFE'' à la section LC.

Simple PDF Merge and Split Unregistered Version - http://www.simpopdf.com

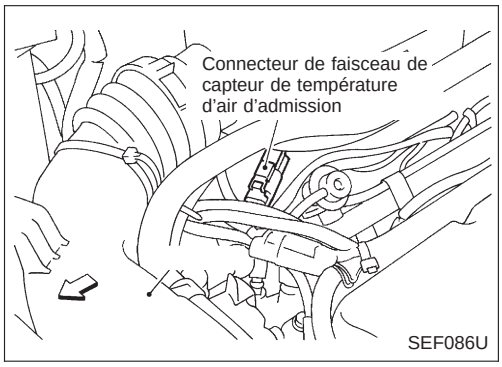

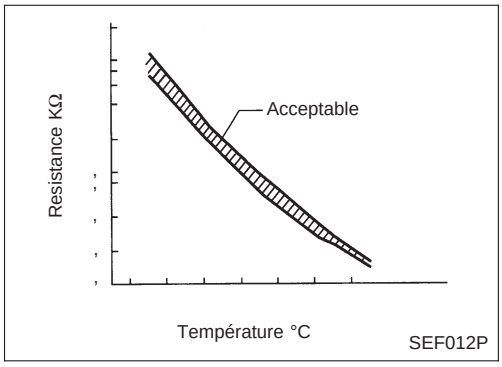

Capteur de température d'air d'admission

Le capteur de température d'air d'admission est monté sur la conduite d'air. Le capteur détecte la température d'air d'admission et transmet un signal à l'ECM.
Le capteur de température est doté d'une thermistance qui est sensible au changement de température. La résistance électrique de cette thermistance chute en réponse à l'élévation de la température.

<Données de référence>

Température de l'air d'admission °C	Résistance kΩ
−10	7,0 - 11,4
20	2,1 - 2,9
80	0,27 - 0,38

LOGIQUE DE DIAGNOSTIC DE BORD

N° de code de défaut de diagnostic	Le défaut est détecté quand ...	Eléments à vérifier (Cause possible)
41	● Une tension excessivement haute ou basse est envoyée du capteur à l'ECM*.	● Faisceau ou connecteurs (Le circuit du capteur est ouvert ou court-circuité). ● Capteur de température d'air d'admission

* : Lorsque ce défaut est détecté, l'ECM passe en mode de sécurité.

Condition de fonctionnement du moteur en mode de sécurité	L'ECM remplit sa mission de contrôle en partant de l'hypothèse que la température d'admission est de 20°C.

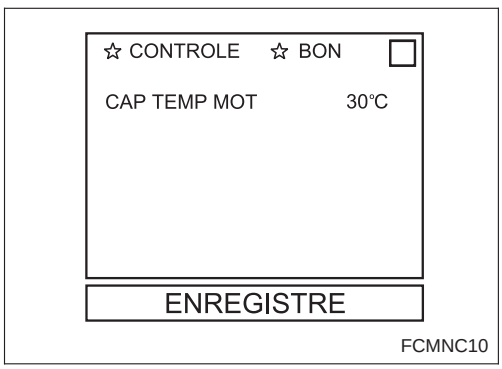

PROCEDURE DE CONFIRMATION DU CODE DE DEFAUT DE DIAGNOSTIC

1) Mettre le contact d'allumage sur "ON".
2) Effectuer "CONTROLE DE DONNEES" avec le CONSULT.
3) Attendre au moins deux secondes.

OU

1) Tourner le contact d'allumage sur "ON" et attendre au moins 2 secondes.
2) Tourner le contact d'allumage sur "OFF", attendre au moins 5 secondes puis le tourner sur "ON".
3) Effectuer "Mode II de test de diagnostic" (résultats d'autodiagnostic) à l'aide de l'ECM.

Simple PDF Merge and Split Unregistered Version - http://www.simpopdf.com

Capteur de température d'air d'admission (Suite)

EC-IATS-01

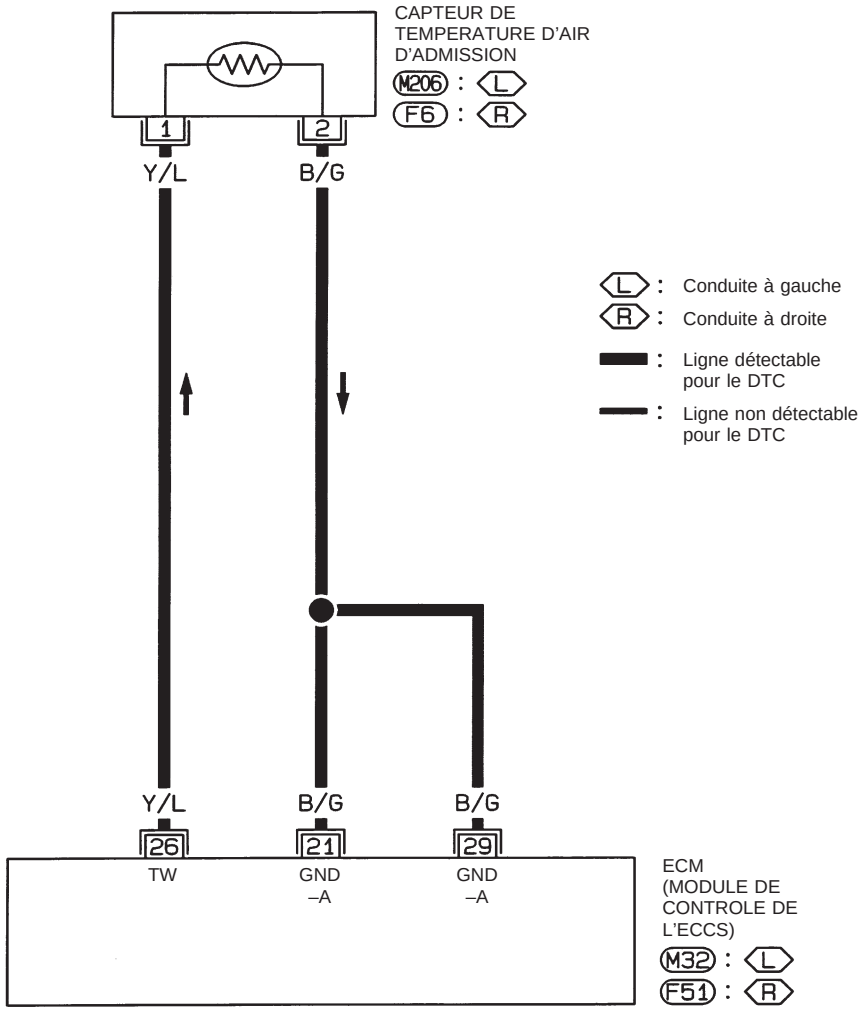



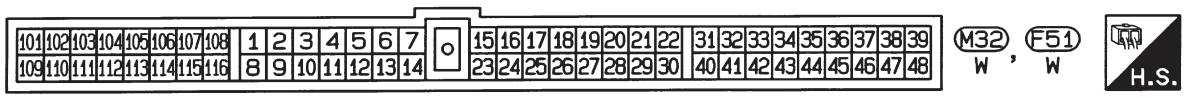

HEC346

Simple PDF Merge and Split Unregistered Version - http://www.simpopdf.com

Capteur de température d'air d'admission (Suite)

PROCEDURE DE DIAGNOSTIC

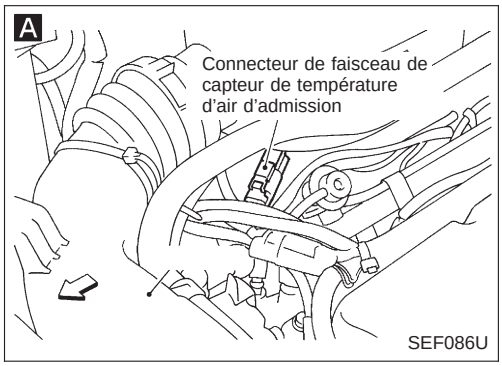

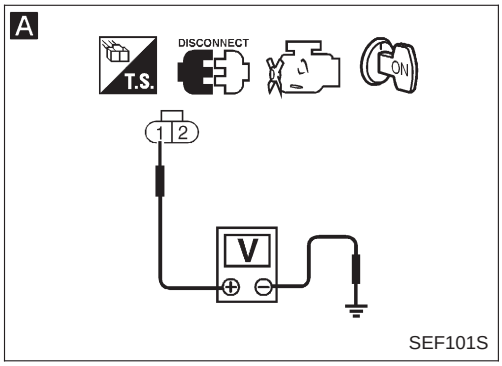

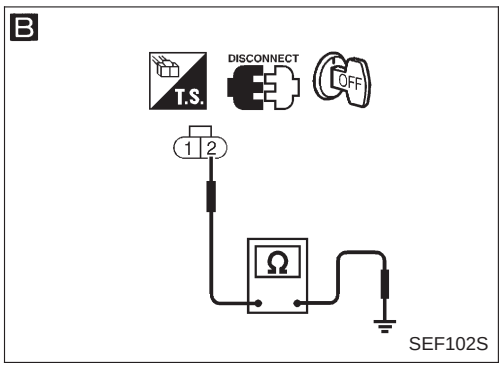

DEBUT DE L'INSPECTION

↓

A

VERIFIER L'ALIMENTATION ELECTRIQUE.
1. Mettre le contact d'allumage sur "OFF".
2. Débrancher le connecteur de faisceau du capteur de température d'air d'admission.
3. Mettre le contact d'allumage sur "ON".
4. Vérifier la tension entre la borne ① et la masse.
   Tension :
   Environ 5V

Mauvais → Réparer le faisceau ou les connecteurs.

↓ Bon

B

VERIFIER LE CIRCUIT DE MISE A LA MASSE.
1. Mettre le contact d'allumage sur "OFF".
2. Vérifier la continuité du faisceau entre la borne ② et la masse de moteur.
   Il doit y avoir continuité.
   Si le résultat est bon, vérifier si le faisceau n'est pas court-circuité à la masse ou à l'alimentation.

Mauvais → Vérifier les points suivants.
- Faisceau ouvert ou court-circuité entre l'ECM et le capteur de température d'air d'admission

Si le résultat est mauvais, réparer le circuit ouvert, court-circuité à la masse ou court-circuité à l'alimentation du faisceau ou des connecteurs.

↓ Bon

VERIFIER LE COMPOSANT
(Capteur de température d'air d'admission).
Consulter l'"INSPECTION DES COMPOSANTS" à la page suivante.

Mauvais → Remplacer le capteur de température d'air d'admission.

↓ Bon

Débrancher et rebrancher sur les circuits les connecteurs de faisceau. Puis procéder à un nouvel essai.

↓ Le problème n'est pas résolu.

Vérifier si les bornes à broches de l'ECM sont endommagées et vérifier la connexion du connecteur de faisceau de l'ECM.
Rebrancher le connecteur de faisceau de l'ECM et tester à nouveau.

↓

FIN DE L'INSPECTION

Simpo PDF Merge and Split Unregistered Version - http://www.simpopdf.com

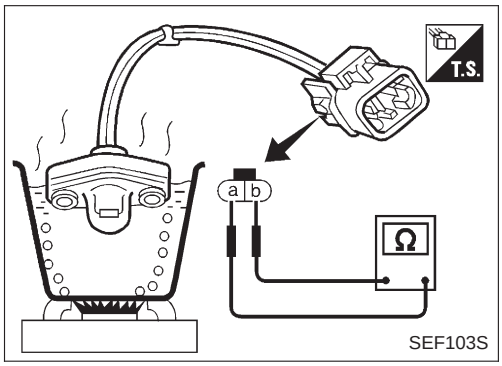

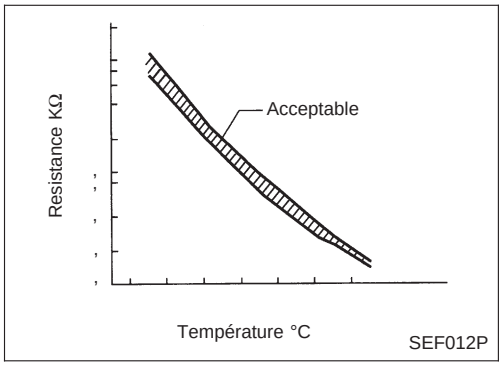

Capteur de température d'air d'admission (Suite)

INSPECTION DES COMPOSANTS

Capteur de température d'air d'admission

Vérifier la résistance comme indiqué sur la figure ci-contre.

<Données de référence>

Température de l'air d'admission °C	Résistance kΩ
20	2,1 - 2,9
80	0,27 - 0,38

Si le résultat est mauvais, remplacer la température d'air d'admission.

Simpo PDF Merge and Split Unregistered Version - http://www.simpopdf.com

Capteur de position de papillon

DESCRIPTION DES COMPOSANTS

Le capteur de position de papillon répond aux mouvements de la pédale d'accélérateur. Ce capteur est une sorte de potentiomètre qui transforme la position du papillon en tension électrique qu'il transmet à l'ECM. De plus, le capteur détecte la vitesse d'ouverture et de fermeture du papillon et transmet un signal de tension à l'ECM.
La position de ralenti de la vanne de papillon est déterminée par l'ECM recevant le signal du capteur de position de papillon. Il contrôle les modes d'exploitation du moteur tel que la coupure d'alimentation.

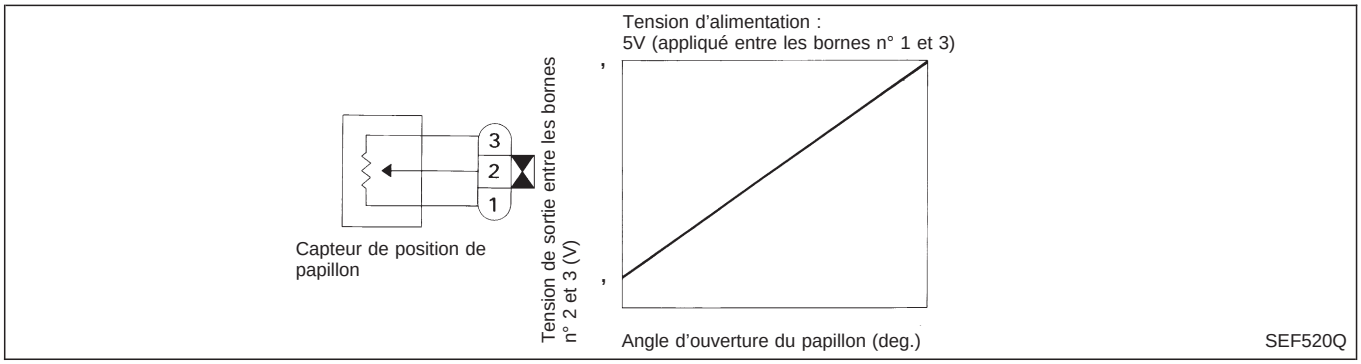

VALEUR DE REFERENCE DE CONSULT EN MODE DE CONTROLE DE DONNEES

Remarques : les données de spécification sont des valeurs de référence.

ELEMENT DE CONTROLE	CONDITION		SPECIFICATION
CAP PAPILLON	● Contact d'allumage : "ON" (Moteur à l'arrêt)	Papillon : complètement fermé	0,35 - 0,65V
		Papillon : complètement ouvert	Env. 4,0V
POSIT RALENTI	● Contact d'allumage : "ON" (Moteur à l'arrêt)	Papillon : position de ralenti	MARCHE
		Vanne de papillon : légèrement ouverte	ARRET

BORNES DE L'ECM ET VALEURS DE REFERENCE

Remarques : les données de spécifications sont des valeurs de référence et sont mesurées entre chaque borne et ㊴ (masse de l'ECCS) à l'aide d'un voltmètre.

N° DE BORNE	COULEUR DE CABLE	ELEMENT	CONDITION	DONNEES (Tension du courant continu)
20	LG	Signal du capteur de position de papillon	Contact d'allumage sur "ON" (Condition d'échauffement) — Pédale d'accélérateur relâchée	0,35 - 0,65V
			Contact d'allumage sur "ON" — Pédale d'accélérateur enfoncée complètement	Environ 4V
37	PU	Alimentation du capteur de position de papillon	Contact d'allumage sur "ON"	Environ 5V
21 29	B/G B/G	Masse de sonde	Moteur en marche. (Condition d'échauffement) — Régime de ralenti	0,001 - 0,02V

Simpo PDF Merge and Split Unregistered Version - http://www.simpopdf.com

Capteur de position de papillon (Suite)

LOGIQUE DE DIAGNOSTIC DE BORD

Diagnostic de défaut N° de code	Le défaut est détecté quand ...	Eléments à vérifier (Cause possible)
43	● Une tension anormalement basse ou élevée provenant du capteur est adressée à l'ECM.*	● Faisceau ou connecteurs (Le circuit du capteur est ouvert ou court-circuité) ● Capteur de position de papillon

* : Lorsque ce défaut est détecté, l'ECM passe en mode de sécurité.

Condition de fonctionnement du moteur en mode de sécurité	Condition	Condition de conduite
La position du papillon sera déterminée sur la base du débitmètre d'air et du régime moteur. Par conséquent l'accélération sera mauvaise.	Moteur au ralenti	Normal
	Lors de l'accélération	Mauvaise accélération

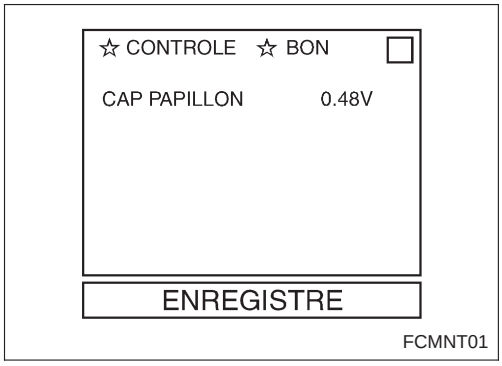

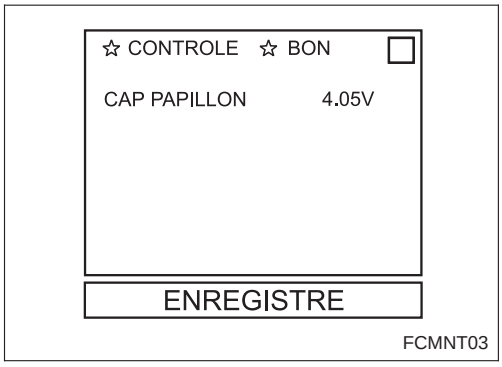

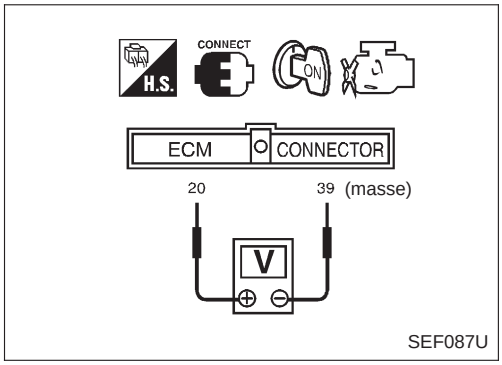

VERIFICATION DU FONCTIONNEMENT GENERAL

Utiliser cette procédure pour vérifier le fonctionnement général du circuit du capteur de position de papillon. Pendant ce contrôle, il se peut que le DTC ne soit pas confirmé.

1) Démarrer le moteur et le laisser chauffer suffisamment.
2) Mettre le contact d'allumage sur "OFF" et attendre 5 secondes au moins.
3) Mettre le contact d'allumage sur "ON".
4) Sélectionner "CAP PAPILLON" en mode "CONTROLE DE DONNEES" avec CONSULT.
5) Lire le signal "CAP PAPILLON" et vérifier les points suivants :
   - Quand la pédale d'accélérateur est en position repos, la tension est d'environ 0,35 - 0,65 V.
   - Quand la pédale d'accélérateur est enfoncée à fond, la tension est d'environ 4V.

OU

1) Démarrer le moteur et le laisser s'échauffer suffisamment.
2) Mettre le contact d'allumage sur "OFF" et attendre 5 secondes au moins.
3) Mettre le contact d'allumage sur "ON".
4) Vérifier la tension entre les bornes ⑳ et ㊴ (masse) de l'ECM et vérifier les points suivants :
   - Quand la pédale d'accélérateur est en position repos, la tension est d'environ 0,35 - 0,65 V.
   - Quand la pédale d'accélérateur est enfoncée à fond, la tension est d'environ 4V.

Simpo PDF Merge and Split Unregistered Version - http://www.simpopdf.com

Capteur de position de papillon (Suite)

EC-TPS-01

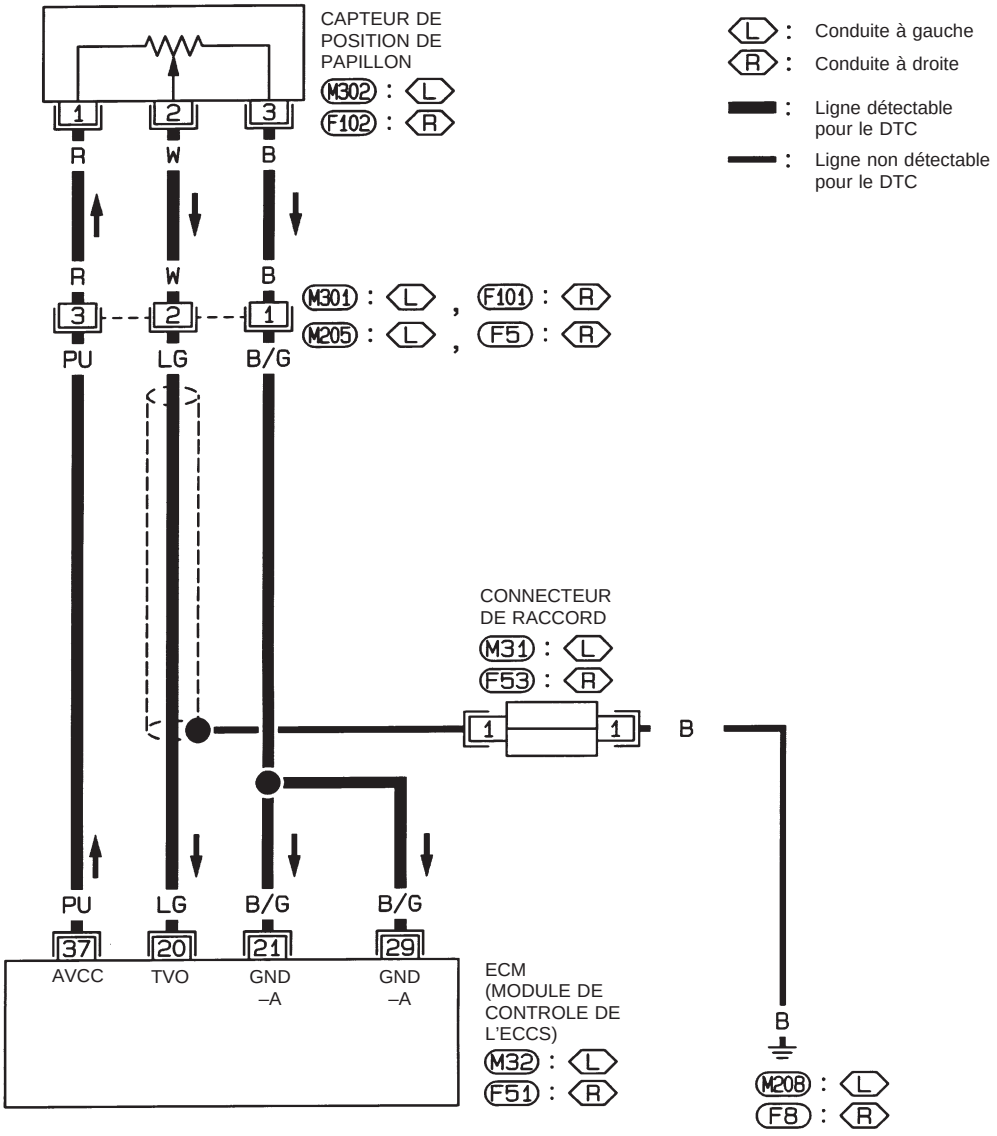

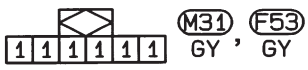





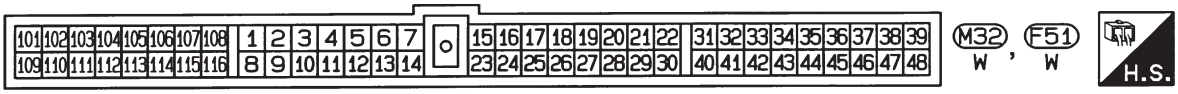

HEC347

Simpo PDF Merge and Split Unregistered Version - http://www.simpopdf.com

Capteur de position de papillon (Suite)

PROCEDURE DE DIAGNOSTIC

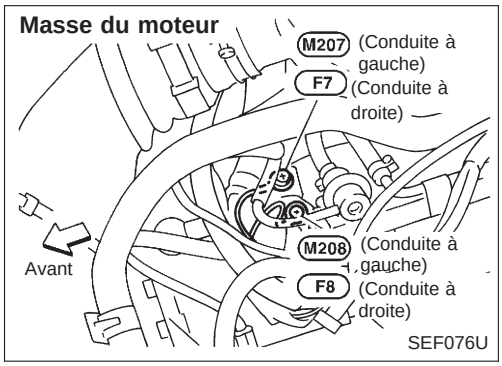

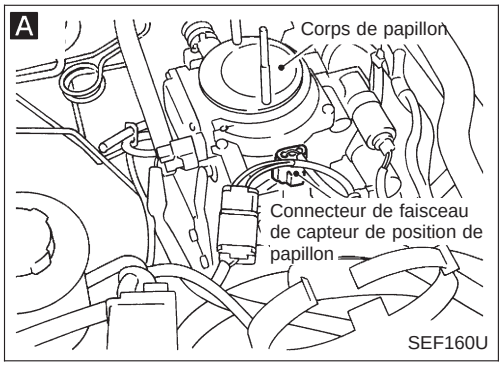

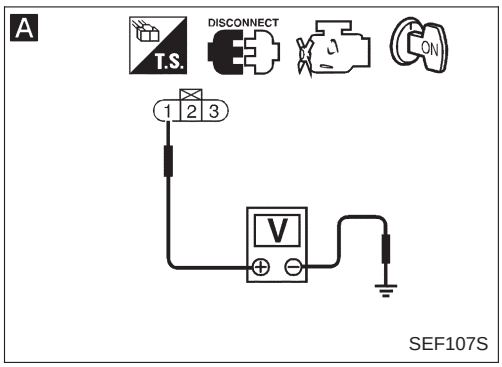

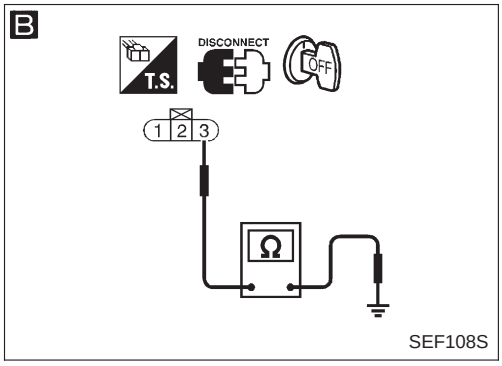

DEBUT DE L'INSPECTION

↓

REGLER LE CAPTEUR DE POSITION DE PAPILLON.
Effectuer une INSPECTION DE BASE, EC-60.

↓ Bon

VERIFIER LE CIRCUIT PROTECTEUR.
1. Mettre le contact d'allumage sur "OFF".
2. Desserrer et resserrer les vis de masse du moteur (M208 et F8).
3. Déposer le connecteur de raccord M31 ou F53.
4. Vérifier les points suivants.
   - Continuité entre la borne ① du connecteur de raccord et la masse
   - Connecteur de raccord (Consulter la "DISPOSITION DES FAISCEAUX" à la section EL).

   Il doit y avoir continuité.

   Si le résultat est bon, vérifier si le faisceau n'est pas court-circuité à la masse ou à l'alimentation. Puis rebrancher le connecteur de raccord.

Mauvais → Réparer le circuit ouvert, court-circuité à la masse ou court-circuité à l'alimentation dans le faisceau ou les connecteurs.

↓ Bon

A

VERIFIER L'ALIMENTATION ELECTRIQUE.
1. Débrancher le connecteur de faisceau du capteur de position de papillon.
2. Mettre le contact d'allumage sur "ON".
3. Vérifier la tension entre la borne ① et la masse avec le CONSULT ou un testeur.

   Tension : environ 5V

Mauvais → Vérifier les points suivants.
- Connecteurs de faisceau M205, M301 (conduite à gauche) F5, F101 (conduite à droite)
- Faisceau ouvert ou court-circuité entre le capteur de position de papillon et l'ECM

Si le résultat est mauvais, réparer le faisceau ou les connecteurs.

↓ Bon

B

VERIFIER LE CIRCUIT DE MISE A LA MASSE.
1. Mettre le contact d'allumage sur "OFF".
2. Vérifier la continuité du faisceau entre la borne ③ et la masse de moteur.

   Il doit y avoir continuité.

   Si le résultat est bon, vérifier si le faisceau n'est pas court-circuité à la masse ou à l'alimentation.

Mauvais → Vérifier les points suivants.
- Connecteurs de faisceau M205, M301 (conduite à gauche) F5, F101 (conduite à droite)
- Faisceau ouvert ou court-circuité entre le capteur de position de papillon et l'ECM

Si le résultat est mauvais, réparer le circuit ouvert, court-circuité à la masse ou court-circuité à l'alimentation du faisceau ou des connecteurs.

↓ Bon

Ⓐ

Simpo PDF Merge and Split Unregistered Version - http://www.simpopdf.com

Capteur de position de papillon (Suite)

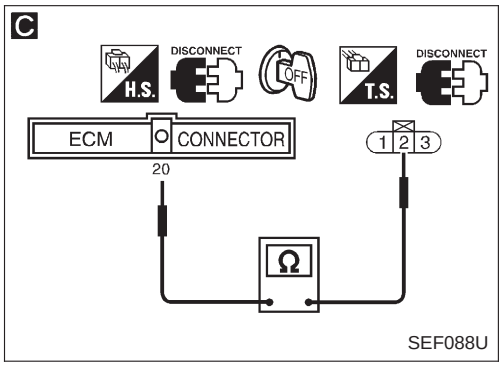

Ⓐ

C

VERIFIER LE CIRCUIT DE SIGNAL D'ENTREE.
1. Débrancher le connecteur de faisceau de l'ECM.
2. Vérifier la continuité du faisceau entre la borne ⑳ de l'ECM et la borne ②.
   Il doit y avoir continuité.
   Si le résultat est bon, vérifier si le faisceau n'est pas court-circuité à la masse ou à l'alimentation.

Mauvais → Vérifier les points suivants.
- Connecteurs de faisceau (M205), (M301) (conduite à gauche)
  (F5), (F101) (conduite à droite)
- Faisceau ouvert ou court-circuité entre le capteur de position de papillon et l'ECM

Si le résultat est mauvais, réparer le circuit ouvert, court-circuité à la masse ou court-circuité à l'alimentation du faisceau ou des connecteurs.

Bon ↓

VERIFIER LE COMPOSANT (Capteur de position de papillon). Consulter l'"INSPECTION DES COMPOSANTS" ci-dessous.

Mauvais → Remplacer le capteur de papillon. Pour le régler, effectuer une "INSPECTION DE BASE", EC-60.

Bon ↓

Débrancher et rebrancher sur les circuits les connecteurs de faisceau. Puis procéder à un nouvel essai.

Le problème n'est pas résolu. ↓

Vérifier si les bornes à broches de l'ECM sont endommagées et vérifier la connexion du connecteur de faisceau de l'ECM.
Rebrancher le connecteur de faisceau de l'ECM et tester à nouveau.

↓

FIN DE L'INSPECTION

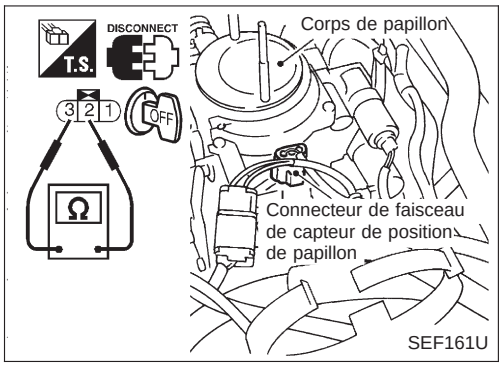

INSPECTION DES COMPOSANTS
Capteur de position de papillon

1. Démarrer le moteur et le laisser s'échauffer suffisamment.
2. Mettre le contact d'allumage sur "OFF".
3. Débrancher le connecteur de faisceau du capteur de position de papillon.
4. S'assurer que la résistance entre les bornes ② et ③ varie lorsque la vanne de papillon est ouverte manuellement.

Conditions de vanne de papillon	Résistance à 25°C
Complètement fermée	Environ 0,6 kΩ
Ouvert à demi	0,6 - 4,0 kΩ
Complètement ouverte	Environ 4 kΩ

Si le résultat est mauvais, remplacer le capteur de position de papillon.
Pour régler le capteur de position de papillon, effectuer une "INSPECTION DE BASE", EC-60.

Simpo PDF Merge and Split Unregistered Version - http://www.simpopdf.com

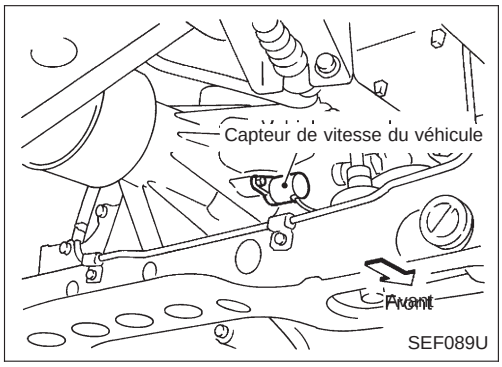

Capteur de vitesse du véhicule (VSS)

DESCRIPTION DES COMPOSANTS

Le capteur de vitesse du véhicule est monté dans la transmission. Il contient un générateur d'impulsions qui délivre le signal de vitesse du véhicule au compteur de vitesse. Le compteur de vitesse envoie alors un signal à l'ECM.

BORNES DE L'ECM ET VALEURS DE REFERENCE

Remarques : Les données de spécifications sont des valeurs de référence et sont mesurées entre chaque borne et ㊴ (masse de l'ECCS) à l'aide d'un voltmètre.

N° DE BORNE	COULEUR DE CABLE	ELEMENT	CONDITION	DONNEES (Tension du courant continu)
32	W/L	Capteur de vitesse du véhicule	Moteur en marche. └ Soulever toutes les roues à l'aide d'un cric et faire tourner le moteur au ralenti en 1ère position.	Varie de 0 à 5V 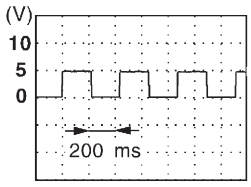 SEF068U

Simpo PDF Merge and Split Unregistered Version - http://www.simpopdf.com

Capteur de vitesse du véhicule (VSS) (Suite)

CONDUITE A GAUCHE

EC-VSS-01

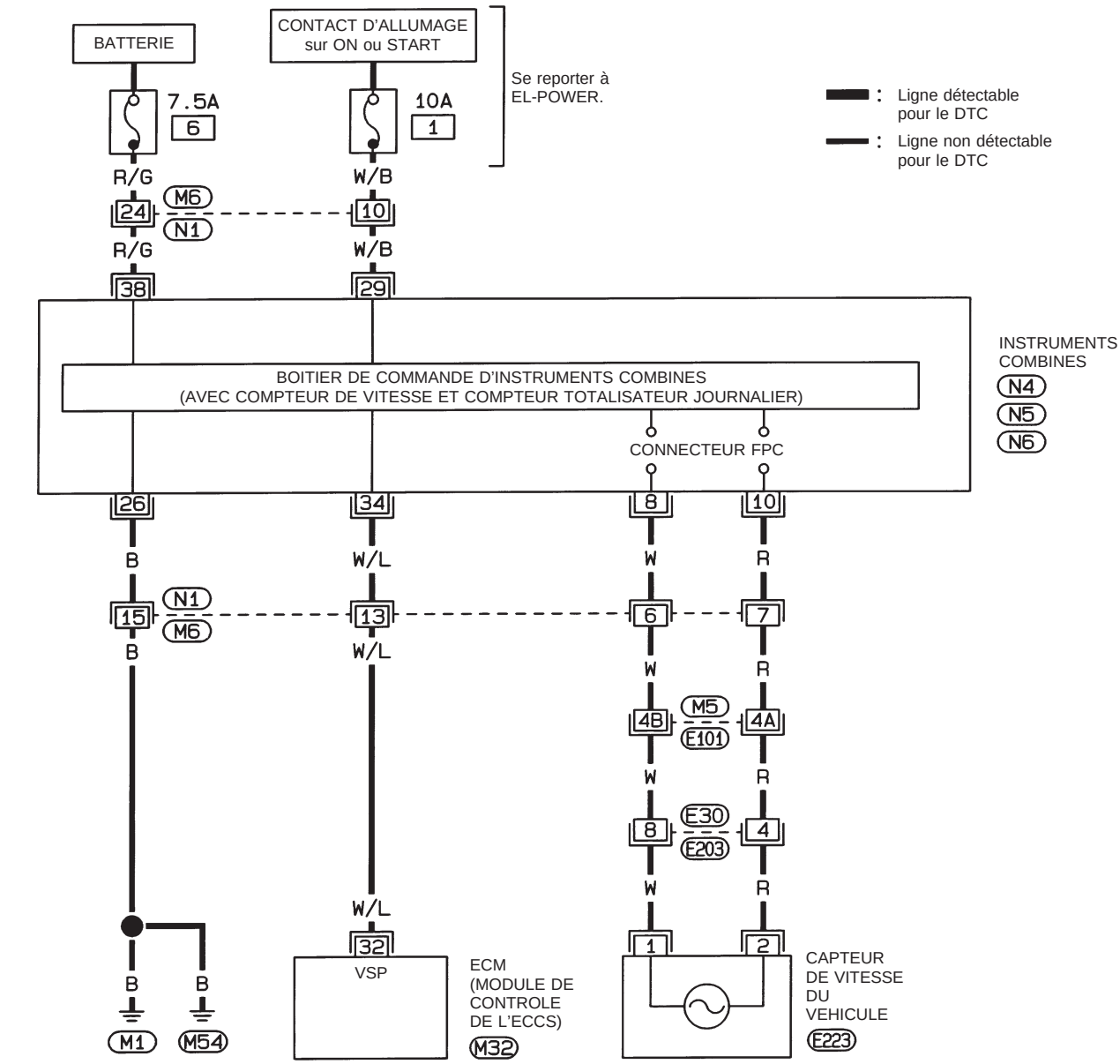

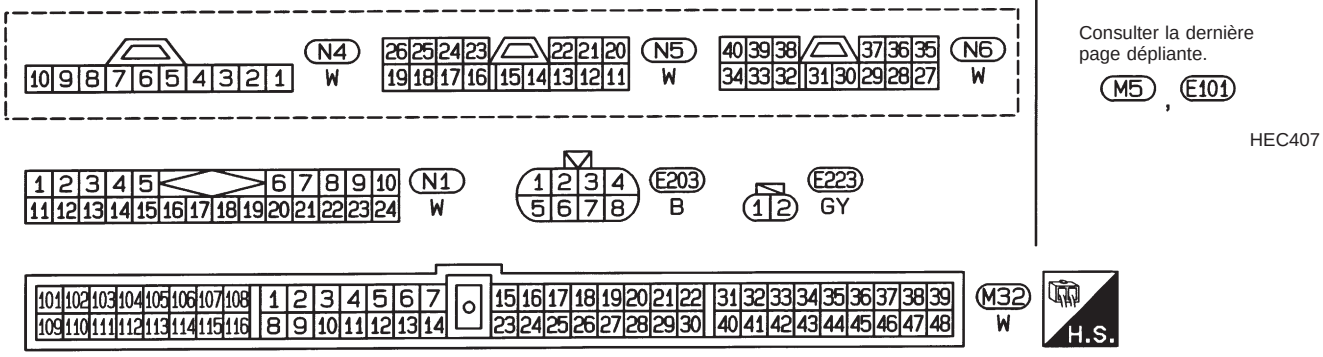

Consulter la dernière page dépliante.
M5, E101

HEC407

Simpo PDF Merge and Split Unregistered Version - http://www.simpopdf.com

Capteur de vitesse du véhicule (VSS) (Suite)

CONDUITE A DROITE

EC-VSS-02

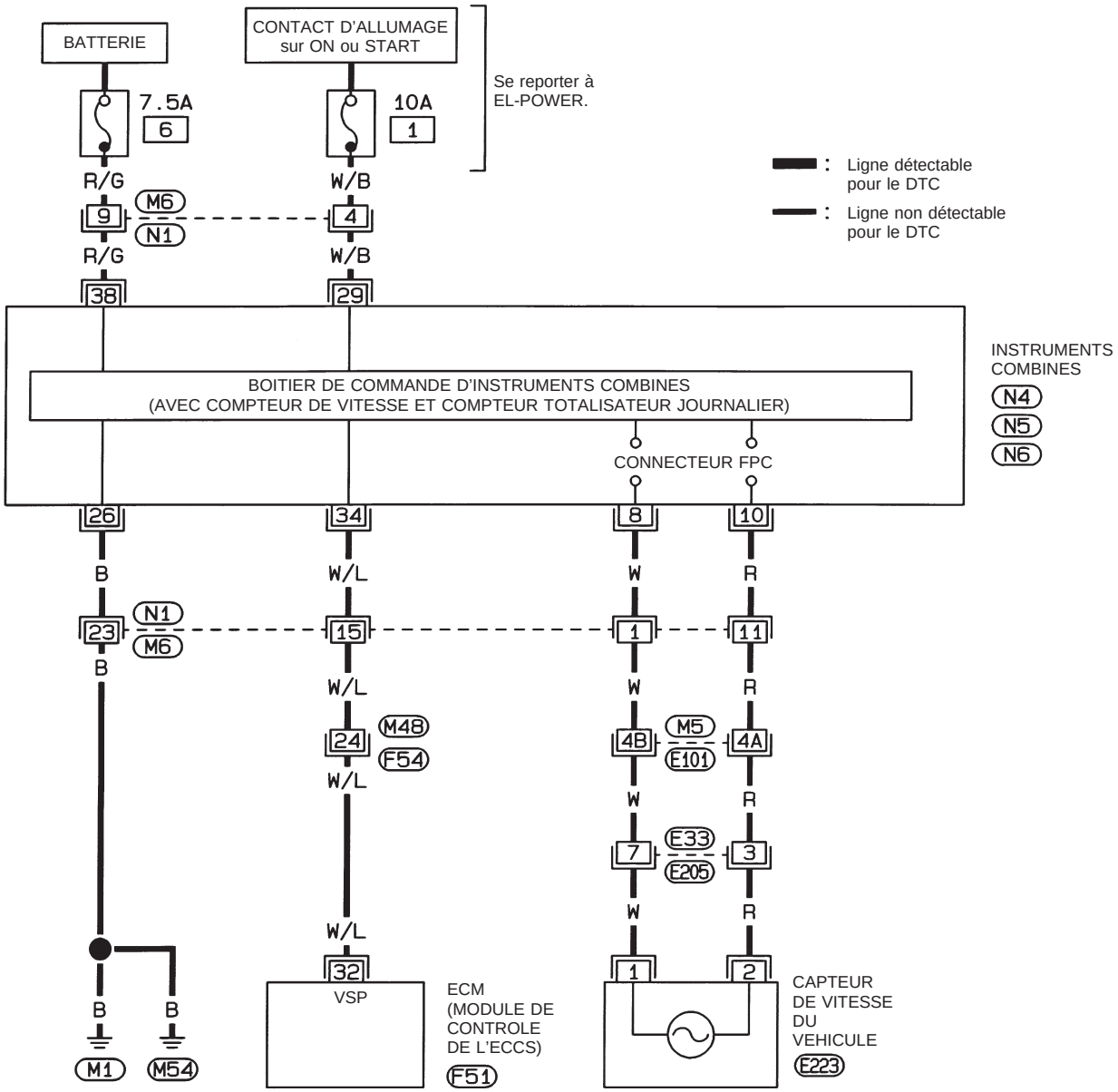

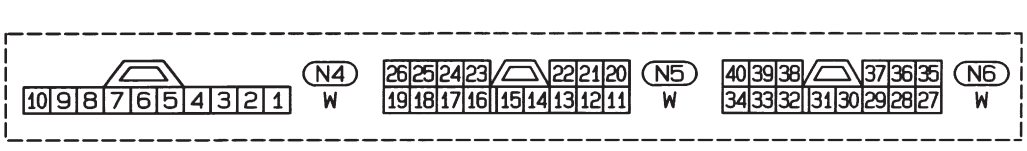

Consulter la dernière page dépliante.

M5 , E101

HEC408

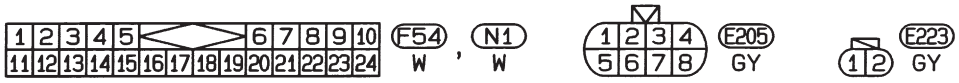

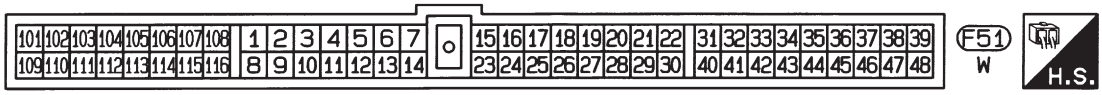

Simpo PDF Merge and Split Unregistered Version - http://www.simpopdf.com

Capteur de vitesse du véhicule (VSS) (Suite)

PROCEDURE DE DIAGNOSTIC

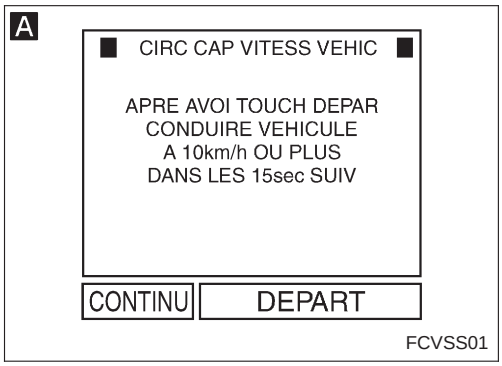

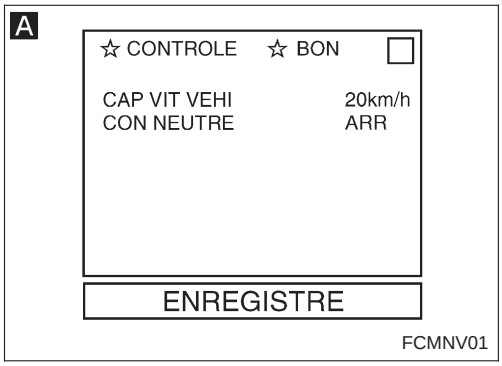

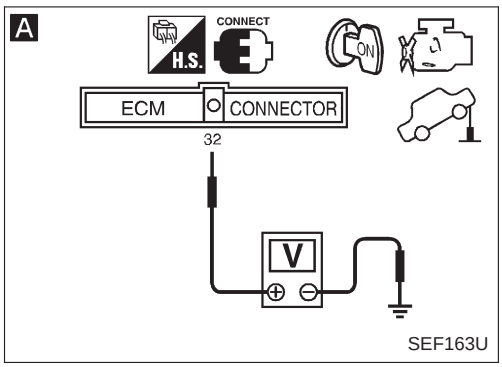

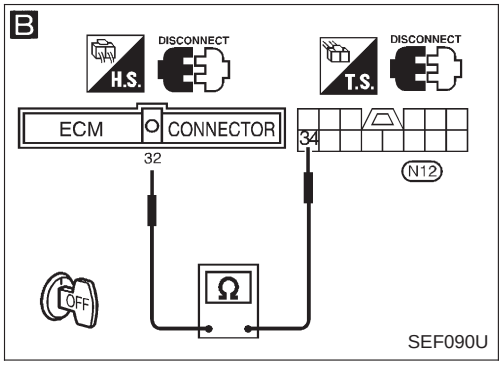

DEBUT DE L'INSPECTION

A

VERIFIER LE FONCTIONNEMENT GENERAL.
1. Soulever le véhicule.
2. Démarrer le moteur.
3. Effectuer "CIRC CAP VITES VEH" en mode "TEST FONCTION" à l'aide du CONSULT.

Bon → FIN DE L'INSPECTION

OU

2. Démarrer le moteur.
3. Lire le signal "CAP VIT VEHI" en mode "CONTROLE DE DONNEES" à l'aide du CONSULT.
La vitesse du véhicule indiquée par CONSULT devrait pouvoir dépasser 10 km/h quand on fait tourner les roues avec un rapport approprié sélectionné.

OU

2. Mettre le contact d'allumage sur "ON".
3. Faire tourner la roue motrice à la main.
4. Vérifier la tension entre la borne (32) de l'ECM et la masse.
La tension devrait osciller entre environ 0 - 5V.

Mauvais

B

VERIFIER LE CIRCUIT DE SIGNAL D'ENTREE.
1. Mettre le contact d'allumage sur "OFF".
2. Débrancher le connecteur de faisceau de l'ECM et le connecteur de faisceau des instruments combinés.
3. Vérifier la continuité du faisceau entre la borne (32) de l'ECM et la borne (34).
Il doit y avoir continuité.
Si le résultat est bon, vérifier si le faisceau n'est pas court-circuité à la masse ou à l'alimentation.

Mauvais → Vérifier les points suivants.
- Connecteurs de faisceau (F54), (M48) (conduite à droite)
- Connecteurs de faisceau (M6), (N1)
- Faisceau ouvert ou court-circuité entre l'ECM et les instruments combinés

Si le résultat est mauvais, réparer le circuit ouvert, court-circuité à la masse ou court-circuité à l'alimentation du faisceau ou des connecteurs.

Bon

VERIFIER LE FONCTIONNEMENT DU COMPTEUR DE VITESSE.
S'assurer que le compteur de vitesse fonctionne correctement.

Mauvais → Vérifier les points suivants.
- Faisceau ouvert ou court-circuité entre les instruments combinés et le capteur de vitesse du véhicule

Si le résultat est mauvais, réparer le faisceau ou les connecteurs.
- Capteur de vitesse du véhicule et son circuit (Se reporter à la section EL).

Bon

(A)

Simpo PDF Merge and Split Unregistered Version - http://www.simpopdf.com

Capteur de vitesse du véhicule (VSS) (Suite)

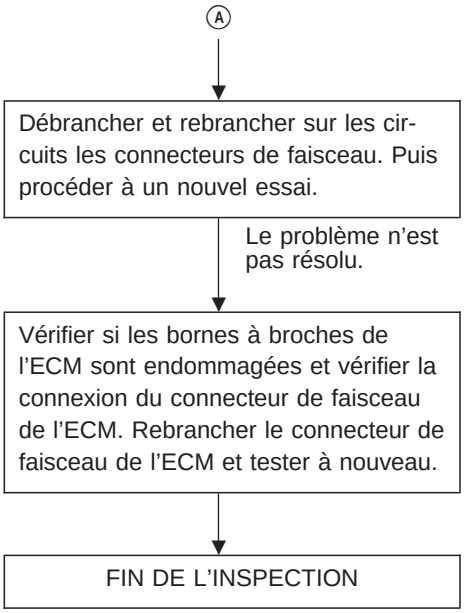

Simpo PDF Merge and Split Unregistered Version - http://www.simpopdf.com

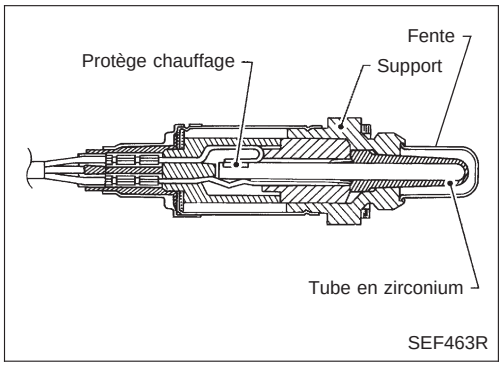

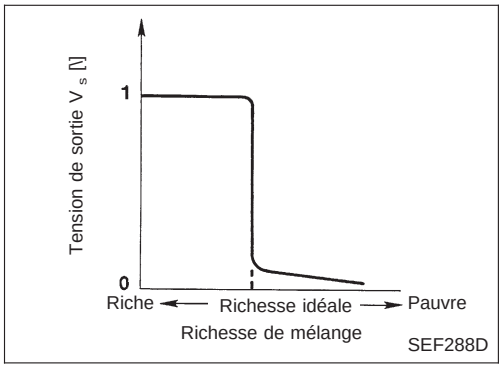

Sonde à oxygène chauffée (HO2S) – Conduite à gauche –

DESCRIPTION DES COMPOSANTS

La sonde à oxygène chauffée est placée dans le tuyau d'échappement avant. Elle détecte la quantité d'oxygène contenue dans les gaz d'échappement par comparaison avec l'air extérieur. La sonde à oxygène chauffée comporte un tube fermé fait de céramique de zirconium. Le zirconium produit une tension d'environ 1V dans des conditions de mélange plus riche à 0V dans des conditions de mélange plus pauvre. Le signal de la sonde à oxygène chauffée est adressé à l'ECM. L'ECM règle la durée d'impulsion d'injection pour obtenir le mélange idéal air/carburant. Le mélange idéal air/carburant a lieu près du changement radical de 1V à 0V.

VALEUR DE REFERENCE DE CONSULT EN MODE DE CONTROLE DE DONNEES

Remarques : les données de spécification sont des valeurs de référence.

ELEMENT DE CONTROLE	CONDITION		SPECIFICATION
CAP GAZ ECH	● Moteur : après échauffement	Maintenir le régime moteur à 2 000 tr/mn	0 - 0,3V ↔ 0,6 - 1,0V

BORNES DE L'ECM ET VALEURS DE REFERENCE

Remarques : les données de spécifications sont des valeurs de référence et sont mesurées entre chaque borne et ㊴ (masse de l'ECCS) à l'aide d'un voltmètre.

N° DE BORNE	COULEUR DE CABLE	ELEMENT	CONDITION	DONNEES (Tension du courant continu)
19	W	Sonde à oxygène chauffée	Moteur en marche. └ Moteur suffisamment échauffé et régime moteur à 2 000 tr/mn.	0 - environ 1,0V (fluctue temporairement)

Simpo PDF Merge and Split Unregistered Version - http://www.simpopdf.com

Sonde à oxygène chauffée (HO2S) – Conduite à gauche – (Suite)

EC-H02S-01

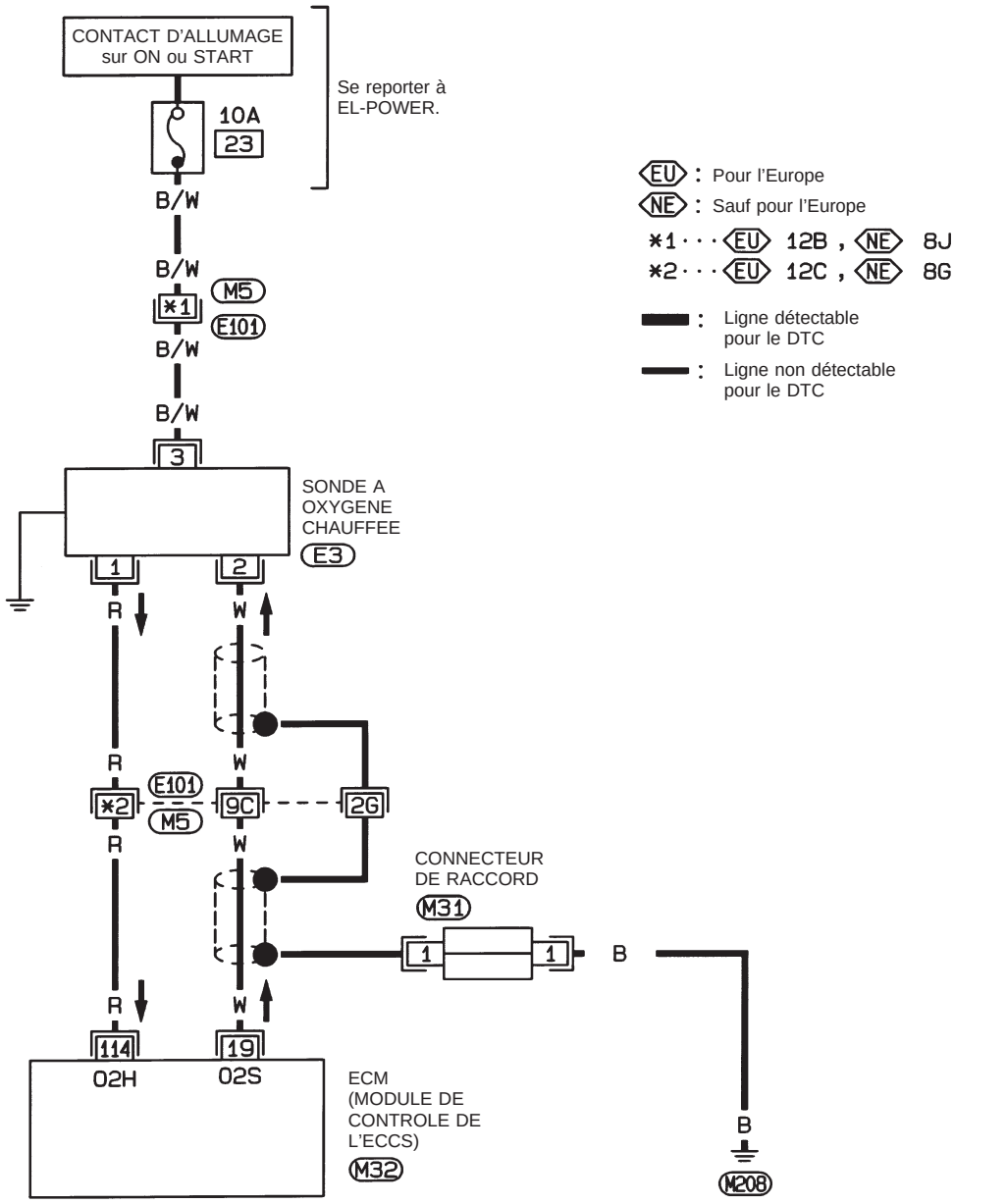



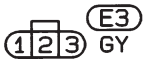

Consulter la dernière page dépliante.

M5, E101

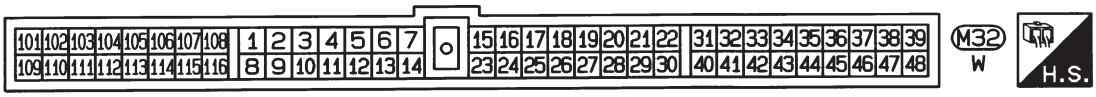

HEC561

Simpo PDF Merge and Split Unregistered Version - http://www.simpopdf.com

Sonde à oxygène chauffée (HO2S) – Conduite à gauche – (Suite)

PROCEDURE DE DIAGNOSTIC

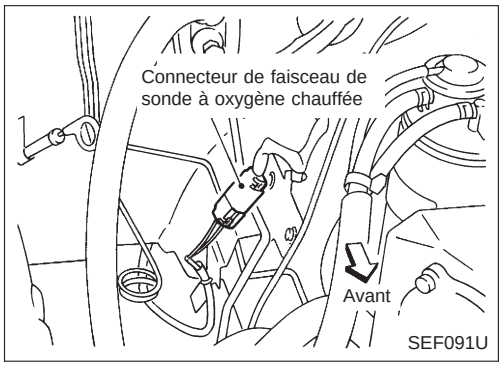

A

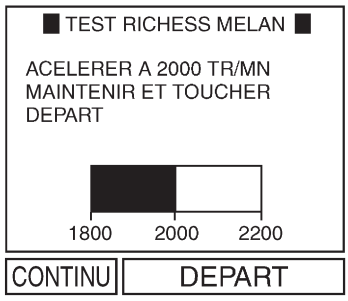

A

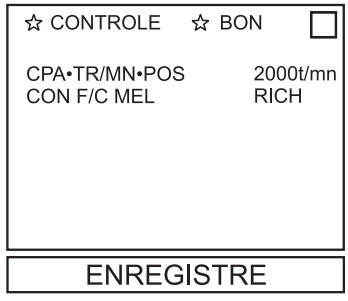

A

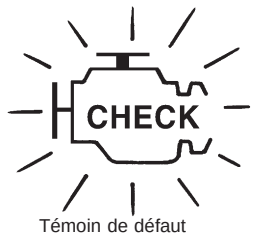

DEBUT DE L'INSPECTION

A

VERIFIER LE CIRCUIT DE LA SONDE A OXYGENE CHAUFFEE.

1. Démarrer le moteur et le laisser s'échauffer suffisamment.

2. Effectuer ''TEST RICHESS MELAN'' en mode ''TEST FONCTION'' à l'aide du CONSULT.

OU

2. S'assurer que ''CON F/C MEL'' en mode ''CONTROLE DE DONNEES'' indique ''RICH'' et ''PAUV'' alternativement et plus de 5 fois en 10 secondes, à 2 000 tr/mn.

OU

2. Arrêter le moteur et régler le mode de diagnostic II de l'ECM (contrôle de la sonde à oxygène chauffée).
3. Redémarrer le moteur et le faire tourner à environ 2 000 tr/mn pendant environ 2 minutes à vide.
4. Maintenir le régime du moteur à 2 000 tr/mn et s'assurer que le témoin de défaut situé sur le tableau de bord clignote plus de 5 fois en 10 secondes.

Bon → FIN DE L'INSPECTION

Mauvais

Ⓐ

Simpo PDF Merge and Split Unregistered Version - http://www.simpopdf.com

Sonde à oxygène chauffée (HO2S) – Conduite à gauche – (Suite)

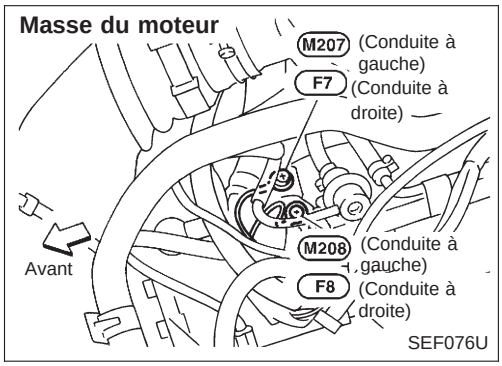

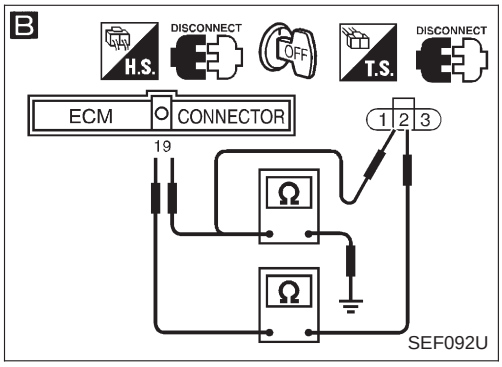

Ⓐ

VERIFIER LE CIRCUIT PROTECTEUR.
1. Mettre le contact d'allumage sur "OFF".
2. Desserrer et resserrer les vis de masse du moteur (M208 et F8).
3. Déposer le connecteur de raccord M31.
4. Vérifier les points suivants.
   - Continuité entre la borne ① du connecteur de raccord et la masse
   - Connecteur de raccord (Consulter la "DISPOSITION DES FAISCEAUX" à la section EL).

   Il doit y avoir continuité.

   Si le résultat est bon, vérifier si le faisceau n'est pas court-circuité à la masse ou à l'alimentation. Puis rebrancher le connecteur de raccord.

Mauvais → Réparer le circuit ouvert, court-circuité à la masse ou court-circuité à l'alimentation dans un faisceau ou des connecteurs.

Bon ↓

B

VERIFIER LE CIRCUIT DE SIGNAL D'ENTREE.
1. Mettre le contact d'allumage sur "OFF".
2. Débrancher le connecteur de faisceau de la sonde à oxygène chauffée et le connecteur de faisceau de l'ECM.
3. Vérifier la continuité du faisceau entre la borne ⑲ de l'ECM et la borne ② .

   Il doit y avoir continuité.
4. Vérifier la continuité du faisceau entre la borne ⑲ de l'ECM (ou la borne ②) et la masse.

   Il ne doit pas y avoir continuité.

   Si le résultat est bon, vérifier si le faisceau n'est pas court-circuité à la masse ou à l'alimentation.

Mauvais → Réparer le circuit ouvert, court-circuité à la masse ou court-circuité à l'alimentation dans le faisceau ou les connecteurs.

Bon ↓

Débrancher et rebrancher sur les circuits les connecteurs de faisceau. Puis procéder à un nouvel essai.

Le problème n'est pas résolu. ↓

Vérifier si les bornes à broches de l'ECM sont endommagées et vérifier la connexion du connecteur de faisceau de l'ECM. Rebrancher le connecteur de faisceau de l'ECM et tester à nouveau.

Mauvais → Remplacer la sonde à oxygène chauffée.

Bon ↓

FIN DE L'INSPECTION

Simpo PDF Merge and Split Unregistered Version - http://www.simpopdf.com

Dispositif de chauffage de la sonde à oxygène chauffée – Conduite à gauche –

DESCRIPTION DU SYSTEME

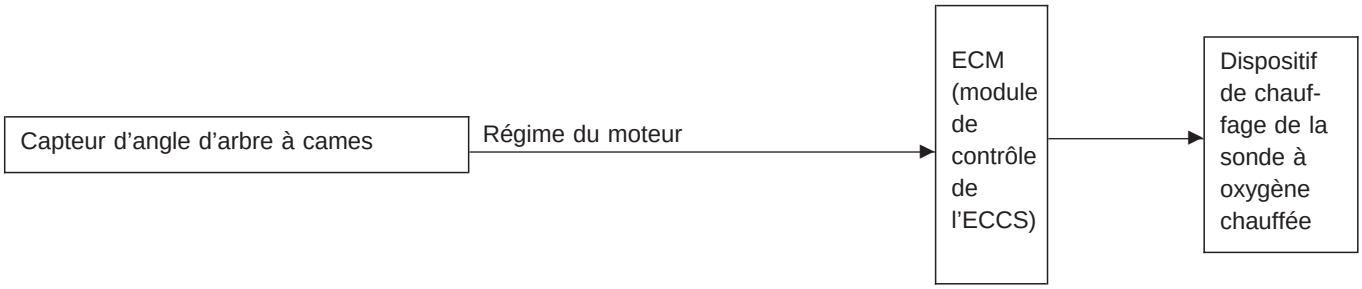

L'ECM commande la MARCHE/l'ARRET du chauffage de la sonde à oxygène chauffée en fonction du régime du moteur.

FONCTIONNEMENT

Régime moteur tr/mn	Dispositif de chauffage de la sonde à oxygène chauffée
Supérieur à 3 200	ARRET
Inférieur à 3 200	MARCHE

BORNES DE L'ECM ET VALEURS DE REFERENCE

Remarques : les données de spécifications sont des valeurs de référence et sont musurées entre chaque borne et ㊴ (masse de l'ECCS) à l'aide d'un voltmètre.

N° DE BORNE	COULEUR DE CABLE	ELEMENT	CONDITION	DONNEES (Tension du courant continu)
114	R	Dispositif de chauffage de la sonde à oxygène chauffée	Moteur en marche. └ Le régime moteur est inférieur à 3 200 tr/mn	Environ 0V
			Moteur en marche. └ Le régime moteur est supérieur à 3 200 tr/mn.	TENSION DE LA BATTERIE (11 - 14V)

Simpo PDF Merge and Split Unregistered Version - http://www.simpopdf.com

Dispositif de chauffage de la sonde à oxygène chauffée – Conduite à gauche – (Suite)

EC-H02S-01

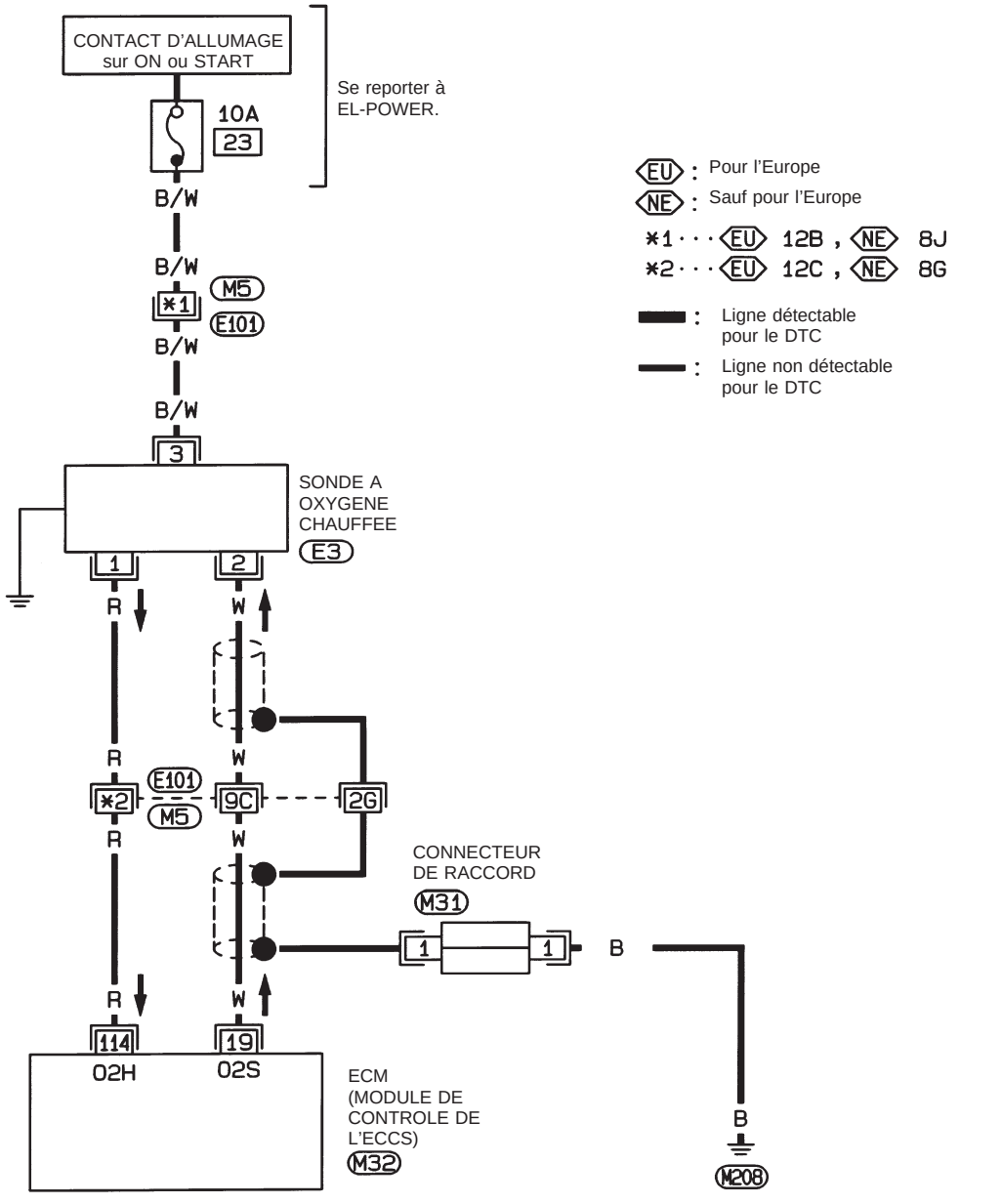

Consulter la dernière page dépliante.



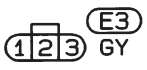

M5, E101

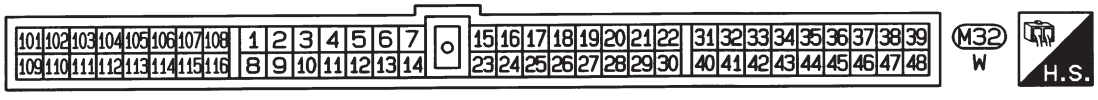

HEC561

Simpo PDF Merge and Split Unregistered Version - http://www.simpopdf.com

Dispositif de chauffage de la sonde à oxygène chauffée – Conduite à gauche – (Suite)

PROCEDURE DE DIAGNOSTIC

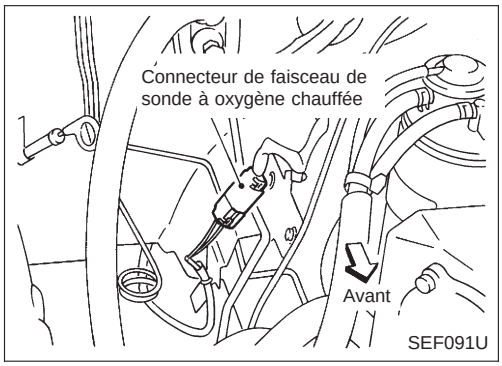

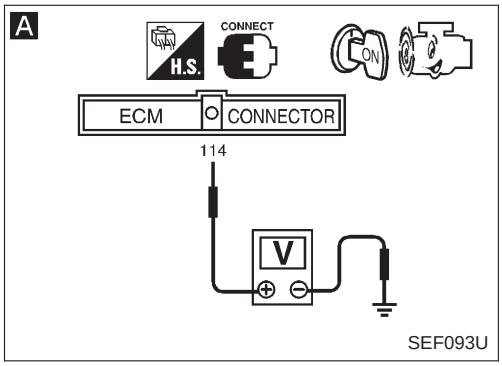

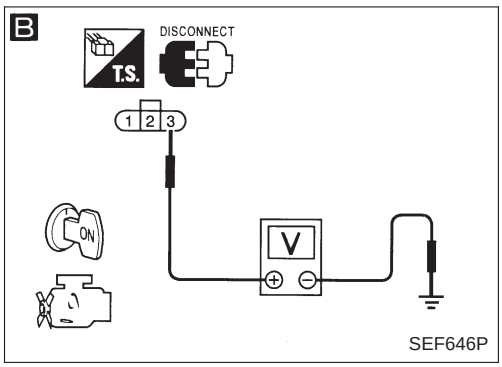

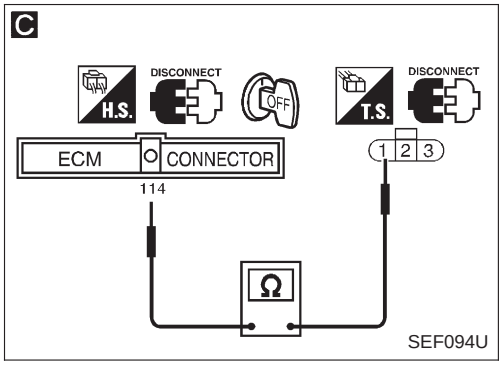

DEBUT DE L'INSPECTION

A

VERIFIER LE FONCTIONNEMENT GENERAL.
1. Démarrer le moteur.
2. Vérifier la tension entre la borne (114) de l'ECM et la masse à l'aide du CONSULT ou d'un testeur dans les conditions suivantes.

Tension :
Le régime moteur est inférieur à 3 200 tr/mn.
Environ 0V
Le régime moteur est supérieur à 3 200 tr/mn
Tension de la batterie

Bon → FIN DE L'INSPECTION

Mauvais

B

VERIFIER L'ALIMENTATION ELECTRIQUE.
1. Mettre le contact d'allumage sur ''OFF''.
2. Débrancher le connecteur de faisceau de la sonde à oxygène chauffée.
3. Mettre le contact d'allumage sur ''ON''.
4. Vérifier la tension entre la borne (3) et la masse avec le CONSULT ou un testeur.

Tension : tension de la batterie

Mauvais →
Vérifier les points suivants.
- Connecteurs de faisceau (E101), (M5)
- Fusible de 10A
- Faisceau ouvert ou court-circuité entre la sonde à oxygène chauffée et le fusible

Si le résultat est mauvais, réparer le faisceau ou les connecteurs.

Bon

C

VERIFIER LE CIRCUIT DE MISE A LA MASSE.
1. Mettre le contact d'allumage sur ''OFF''.
2. Débrancher le connecteur de faisceau de l'ECM.
3. Vérifier la continuité du faisceau entre la borne (1) et la borne (114) de l'ECM.

Il doit y avoir continuité.
Si le résultat est bon, vérifier si le faisceau n'est pas court-circuité à la masse ou à l'alimentation.

Mauvais →
Vérifier les points suivants.
- Connecteurs de faisceau (M5), (E101)
- Faisceau ouvert ou court-circuité entre la sonde à oxygène chauffée et l'ECM

Si le résultat est mauvais, réparer le circuit ouvert, court-circuité à la masse ou court-circuité à l'alimentation du faisceau ou des connecteurs.

Bon

VERIFIER LE COMPOSANT
(Dispositif de chauffage de la sonde à oxygène chauffée).
Consulter l'''INSPECTION DES COMPOSANTS'' à la page suivante.

Mauvais → Remplacer la sonde à oxygène chauffée.

Bon

Débrancher et rebrancher sur les circuits les connecteurs de faisceau. Puis procéder à un nouvel essai.

Le problème n'est pas résolu.

Vérifier si les bornes à broches de l'ECM sont endommagées et vérifier la connexion du connecteur de faisceau de l'ECM. Rebrancher le connecteur de faisceau de l'ECM et tester à nouveau.

FIN DE L'INSPECTION

Simpo PDF Merge and Split Unregistered Version - http://www.simpopdf.com

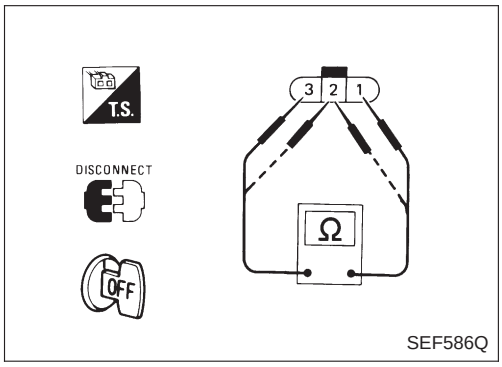

Dispositif de chauffage de la sonde à oxygène chauffée – Conduite à gauche – (Suite)

INSPECTION DES COMPOSANTS

Dispositif de chauffage de la sonde à oxygène chauffée

Vérifier la résistance entre les bornes ③ et ①.

Résistance : 2,3 - 4,3Ω à 25°C

Vérifier la continuité entre les bornes ② et ①, ③ et ②.

Il ne doit pas y avoir continuité.

Si le résultat est mauvais, remplacer la sonde à oxygène chauffée.

ATTENTION :

Jeter toute sonde à oxygène chauffée tombée d'une hauteur supérieure à 0,5 m sur une surface dure tel qu'un plancher en béton, et la remplacer par une sonde neuve.

Simpo PDF Merge and Split Unregistered Version - http://www.simpopdf.com

Vanne de commande d'air de ralenti (IACV) – Vanne de commande d'air auxiliaire (AAC)

DESCRIPTION DU SYSTEME

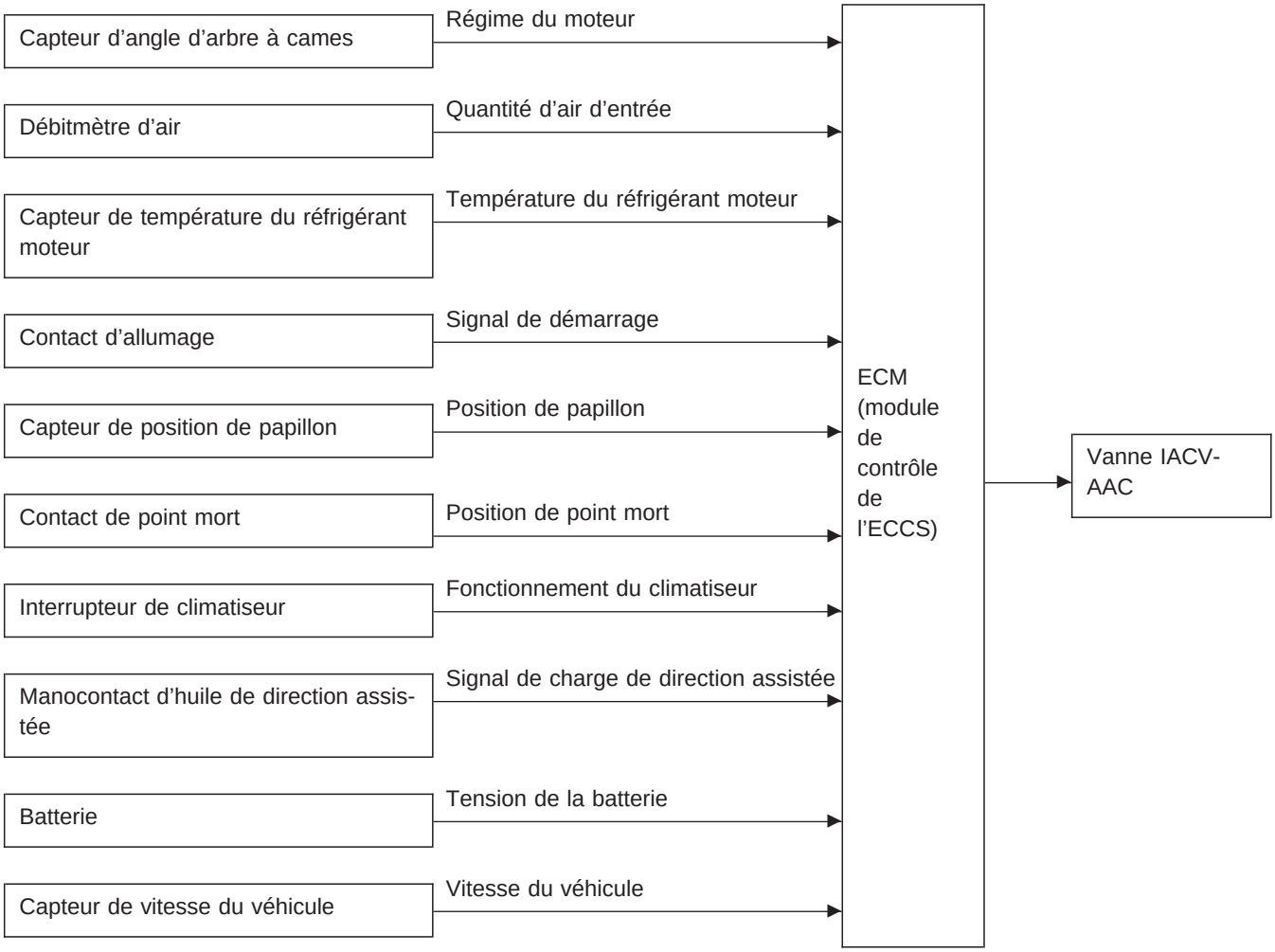

Ce système assure la régulation automatique du ralenti moteur à un régime spécifié. Le régime de ralenti est contrôlé par un réglage précis de la quantité d'air qui est admise directement par la vanne IACV-AAC, sans passer par le papillon. La vanne IACV-AAC s'ouvre et se ferme successivement en fonction du signal transmis par l'ECM. Le capteur d'angle d'arbre à cames détecte la vitesse réelle du moteur et envoie un signal à l'ECM. L'ECM commande alors la durée de MARCHE/ARRET de la vanne IACV-AAC de manière à ce que le régime de moteur corresponde à la valeur cible mémorisée dans l'ECM. Le régime moteur cible est le régime le plus bas auquel le moteur peut tourner de façon stable. La valeur optimum conservée dans la mémoire de l'ECM est déterminée en prenant en considération les diverses conditions du moteur telles que : la durée de réchauffement du moteur, la décélération et la charge du moteur (fonctionnement du climatiseur ou de la direction assistée).

Simpo PDF Merge and Split Unregistered Version - http://www.simpopdf.com

Vanne de commande d'air de ralenti (IACV) – Vanne de commande d'air auxiliaire (AAC) (Suite)

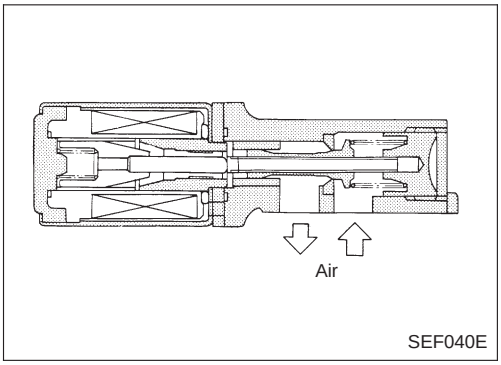

DESCRIPTION DES COMPOSANTS

Vanne IACV-AAC

La vanne IACV-AAC se déplace en fonction des impulsions de MARCHE/ARRET adressées par l'ECM. Plus l'impulsion ''MARCHE'' est longue et plus la quantité d'air qui passe à travers la vanne sera grande. Plus la quantité d'air qui passe à travers la vanne est grande et plus le régime du moteur est élevé.

VALEUR DE REFERENCE DE CONSULT EN MODE DE CONTROLE DE DONNEES

Remarques : les données de spécification sont des valeurs de référence.

ELEMENT DE CONTROLE	CONDITION		SPECIFICATION
VANNE AAC	● Moteur : après échauffement ● Interrupteur de climatiseur : à l'arrêt ● Levier de passage : point mort ● A vide	Ralenti	20 - 40%
		2 000 tr/mn	–

BORNES DE L'ECM ET VALEURS DE REFERENCE

Remarques : les données de spécifications sont des valeurs de référence et sont mesurées entre chaque borne et ㊴ (masse de l'ECCS) à l'aide d'un voltmètre.

N° DE BORNE	COULEUR DE CABLE	ELEMENT	CONDITION	DONNEES (Tension du courant continu)
113	W/G	Vanne IACV-AAC	Moteur en marche. └ Régime de ralenti	10 - 13V
			Moteur en marche. ├ Le volant est braqué. ├ Climatiseur en marche. ├ Interrupteur de désembuage de lunette arrière en marche. └ La commande d'éclairage sur ''ON''.	5 - 10V

Simpo PDF Merge and Split Unregistered Version - http://www.simpopdf.com

Vanne de commande d'air de ralenti (IACV) – Vanne de commande d'air auxiliaire (AAC) (Suite)

EC-AAC/V-01

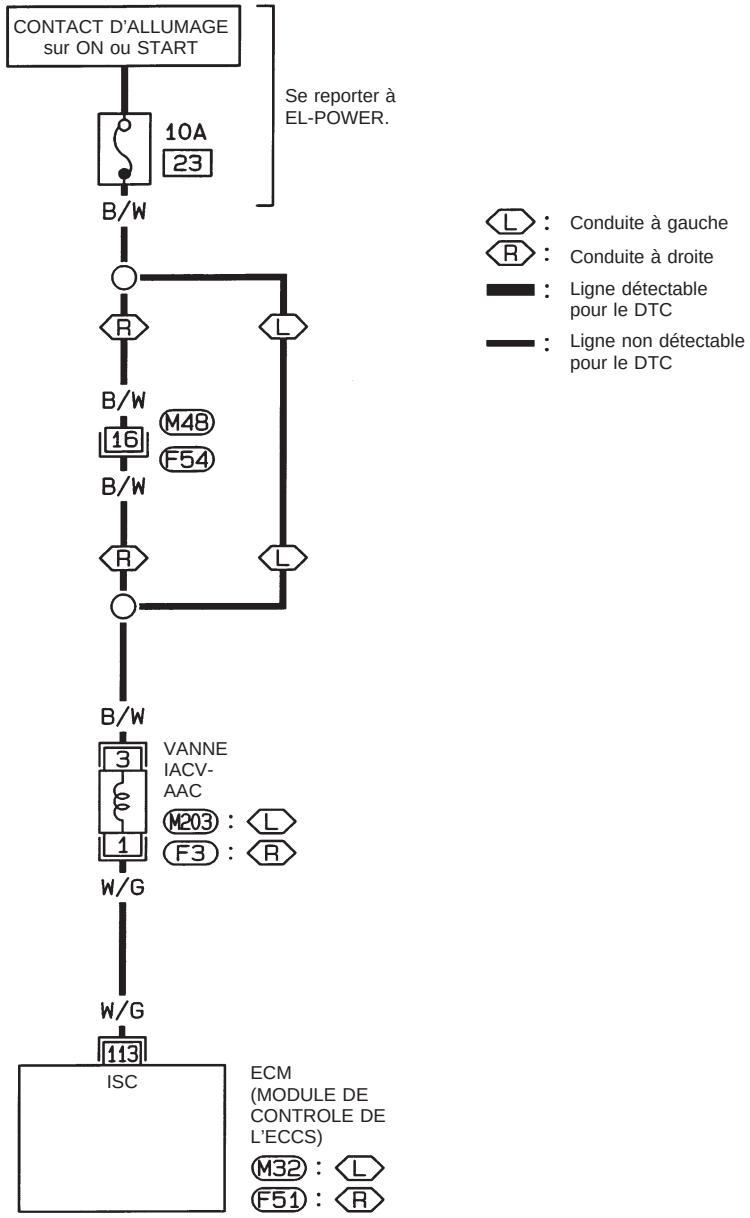





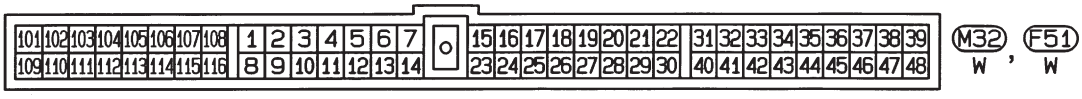

HEC355

Simpo PDF Merge and Split Unregistered Version - http://www.simpopdf.com

Vanne de commande d'air de ralenti (IACV) – Vanne de commande d'air auxiliaire (AAC) (Suite)

PROCEDURE DE DIAGNOSTIC

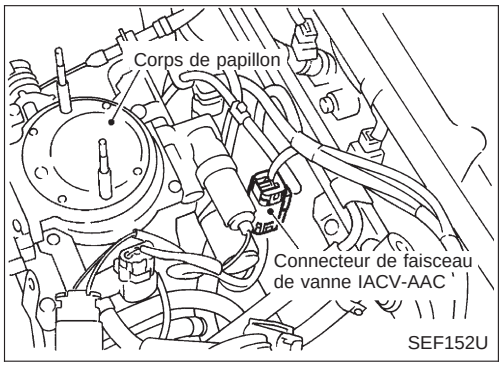

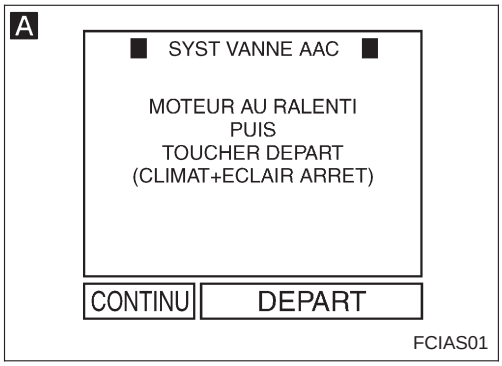

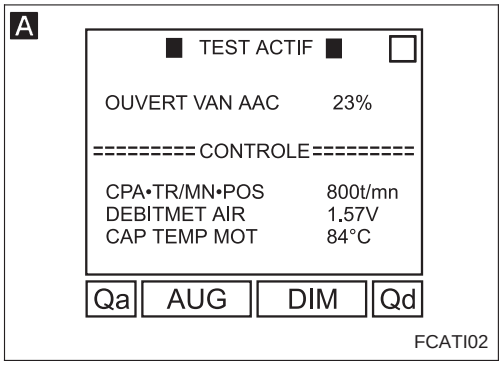

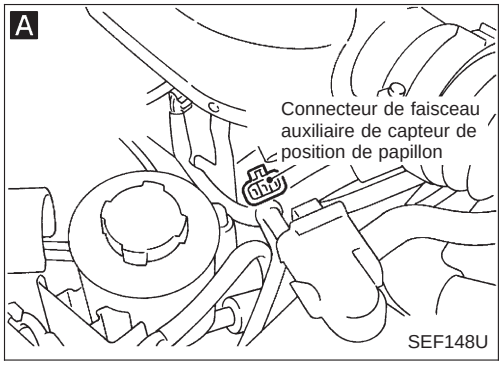

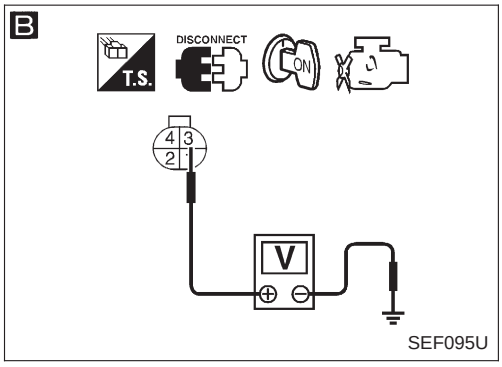

DEBUT DE L'INSPECTION

A

VERIFIER LE FONCTIONNEMENT GENERAL.

1. Démarrer le moteur et le laisser s'échauffer suffisamment.
2. Effectuer "SYST VANNE AAC" en mode "TEST FONCTION" à l'aide du CONSULT.

OU

2. Effectuer "OUVERTURE VANNE AAC" en mode "TEST ACTIF" à l'aide du CONSULT.
3. S'assurer que le régime moteur varie en fonction du pourcentage d'ouverture de la VANNE IACV-AAC.

OU

2. Vérifier le régime de ralenti.
   800±50 tr/mn
   Si le résultat est mauvais, régler le régime de ralenti.
3. Couper le moteur et débrancher le connecteur de faisceau auxiliaire du capteur de position de papillon.
4. Redémarrer le moteur et le laisser tourner au ralenti après l'avoir emballé plusieurs fois à 2 000 - 3 000 tr/mn.
5. Vérifier le régime de ralenti à nouveau.
   750±25 tr/mn

Bon → FIN DE L'INSPECTION

Mauvais

B

VERIFIER L'ALIMENTATION ELECTRIQUE.

1. Arrêter le moteur.
2. Débrancher le connecteur de faisceau de la vanne IACV-AAC.
3. Mettre le contact d'allumage sur "ON".
4. Vérifier la tension entre la borne (3) et la masse avec le CONSULT ou un testeur.
   Tension : tension de la batterie

Mauvais → Vérifier les points suivants.
- Fusible de 10A
- Connecteurs de faisceau (F54), (M48) (conduite à droite)
- Faisceau ouvert ou court-circuité entre la vanne IACV-AAC et le fusible

Si le résultat est mauvais, réparer le faisceau ou les connecteurs.

Bon

(A)

Simpo PDF Merge and Split Unregistered Version - http://www.simpopdf.com

Vanne de commande d'air de ralenti (IACV) – Vanne de commande d'air auxiliaire (AAC) (Suite)

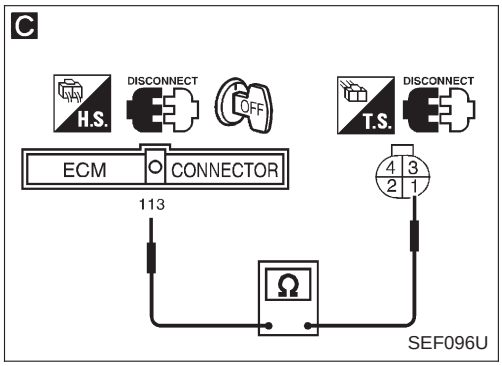

Ⓐ

C

VERIFIER LE CIRCUIT DE SIGNAL DE SORTIE.
1. Mettre le contact d'allumage sur "OFF".
2. Débrancher le connecteur de faisceau de l'ECM.
3. Vérifier la continuité du faisceau entre la borne (113) de l'ECM et la borne (1).
   Il doit y avoir continuité.
   Si le résultat est bon, vérifier si le faisceau n'est pas court-circuité à la masse ou à l'alimentation.

Mauvais → Réparer le circuit ouvert, court-circuité à la masse ou court-circuité à l'alimentation dans un faisceau ou des connecteurs.

Bon ↓

VERIFIER LE COMPOSANT (Vanne IACV-AAC).
Consulter l'"INSPECTION DES COMPOSANTS" ci-dessous.

Mauvais → Remplacer la vanne IACV-AAC

Bon ↓

Débrancher et rebrancher sur les circuits les connecteurs de faisceau. Puis procéder à un nouvel essai.

Le problème n'est pas résolu. ↓

Vérifier si les bornes à broches de l'ECM sont endommagées et vérifier la connexion du connecteur de faisceau de l'ECM. Rebrancher le connecteur de faisceau de l'ECM et tester à nouveau.

↓

FIN DE L'INSPECTION

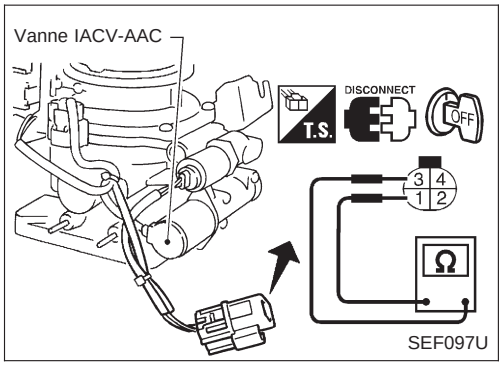

INSPECTION DES COMPOSANTS

Vanne IACV-AAC

Débrancher le connecteur de faisceau de la vanne IACV-AAC.

- Vérifier la résistance de la vanne IACV-AAC.
  Résistance :
  Approximativement 10Ω à 25°C
- Vérifier que le plongeur n'est ni grippé ni collé.
- Vérifier que le ressort n'est pas cassé.

Simpo PDF Merge and Split Unregistered Version - http://www.simpopdf.com

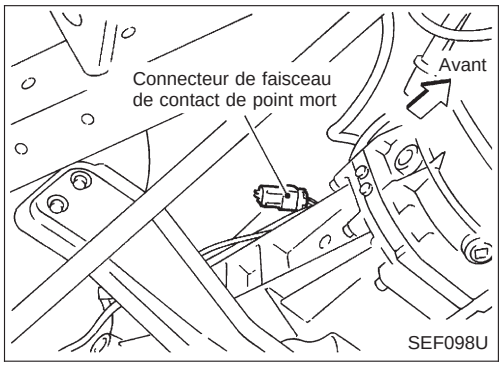

Contact de point mort

DESCRIPTION DES COMPOSANTS

Lorsque le levier sélecteur est sur ‘‘N’’, le contact de position de point mort est sur ‘‘ON’’. L’ECM détecte la position car il y a continuité de la ligne (signal ‘‘ON’’).

VALEUR DE REFERENCE DE CONSULT EN MODE DE CONTROLE DE DONNEES

Remarques : les données de spécification sont des valeurs de référence.

ELEMENT DE CONTROLE	CONDITION		SPECIFICATION
CON NEUTRE	● Contact d’allumage : ‘‘ON’’	Levier de passage : point mort	MARCHE
		Sauf ci-dessus	ARRET

BORNES DE L’ECM ET VALEURS DE REFERENCE

Remarques : les données de spécifications sont des valeurs de référence et sont mesurées entre chaque borne et ㊴ (masse de l’ECCS) à l’aide d’un voltmètre.

N° DE BORNE	COULEUR DE CABLE	ELEMENT	CONDITION	DONNEES (Tension du courant continu)
35	L/B	Position de point mort	Contact d’allumage sur ‘‘ON’’ └ Position de point mort	Environ 0V
			Contact d’allumage sur ‘‘ON’’ └ Autres positions du levier de vitesse	Environ 5V

Simpo PDF Merge and Split Unregistered Version - http://www.simpopdf.com

Contact de point mort (Suite)

EC-PNP/SW-01

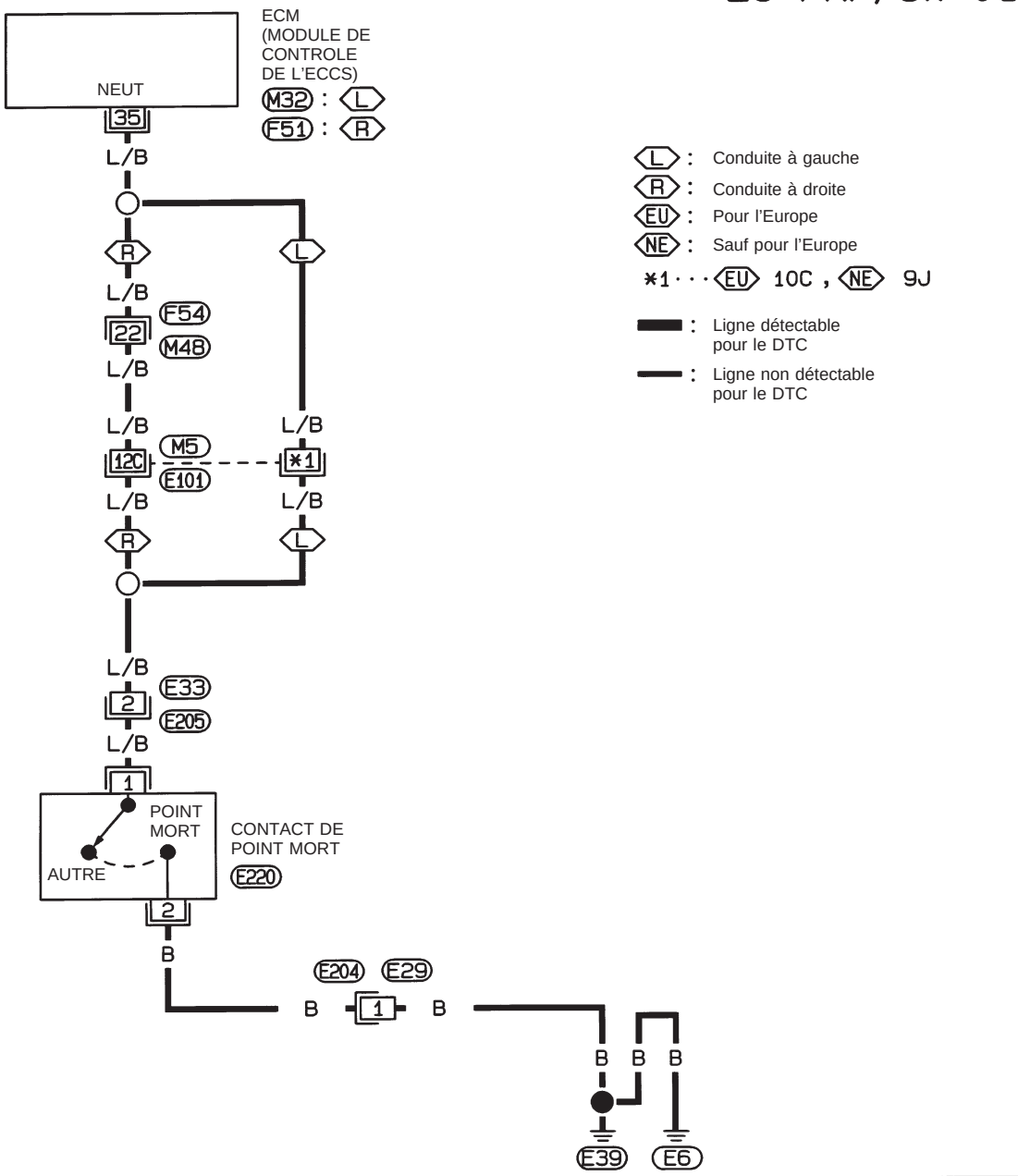

L : Conduite à gauche
R : Conduite à droite
EU : Pour l'Europe
NE : Sauf pour l'Europe
*1 ··· EU 10C , NE 9J

: Ligne détectable pour le DTC
: Ligne non détectable pour le DTC

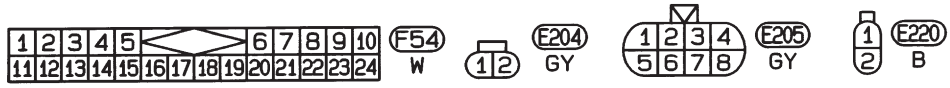

Consulter la dernière page dépliante.

M5 , E101

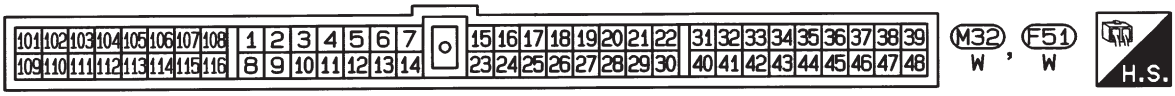

HEC562

Simpo PDF Merge and Split Unregistered Version - http://www.simpopdf.com

Contact de point mort (Suite)

PROCEDURE DE DIAGNOSTIC

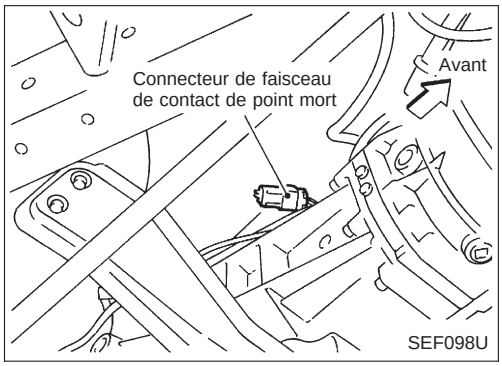

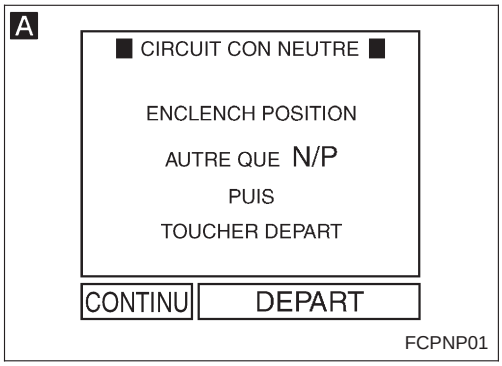

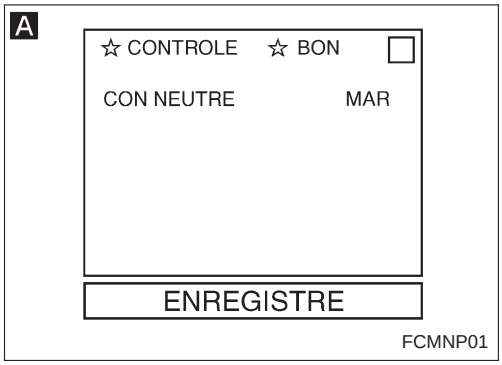

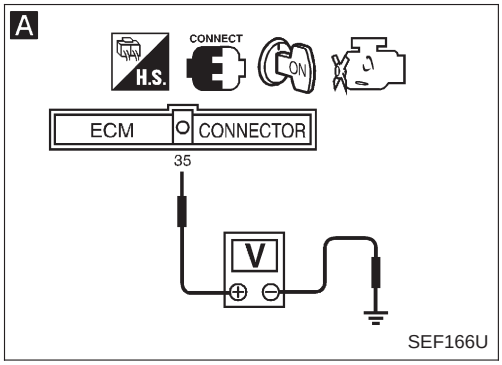

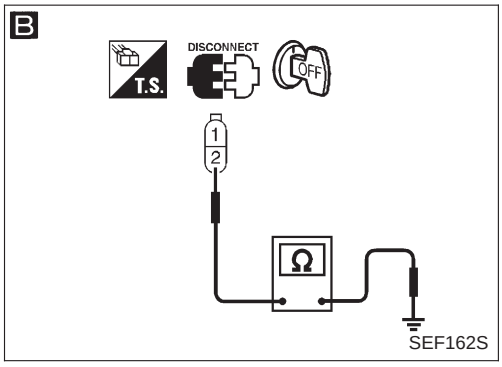

DEBUT DE L'INSPECTION

A

VERIFIER LE FONCTIONNEMENT GENERAL.

1. Mettre le contact d'allumage sur "ON".
2. Effectuer "CIRC CON NEUTRE" en mode "TEST FONCTION" à l'aide du CONSULT.

OU

2. Sélectionner "CON NEUTRE" en mode "CONTROLE DE DONNEES" avec CONSULT.
3. Vérifier le signal "CON NEUTRE" dans les conditions suivantes.
   Point mort : MARCHE
   Position autre que ci-dessus : ARRET

OU

2. Vérifier la tension entre la borne (35) de l'ECM et la masse à l'aide du CONSULT ou d'un testeur dans les conditions suivantes.
   Tension :
   Position de point mort
   Environ 0V
   Position autre que ci-dessus
   Environ 5V

Bon → FIN DE L'INSPECTION

Mauvais

B

VERIFIER LE CIRCUIT DE MISE A LA MASSE.

1. Débrancher le connecteur de faisceau du contact de position de point mort.
2. Vérifier la continuité du faisceau entre la borne (2) et la masse de carrosserie.
   Il doit y avoir continuité.
   Si le résultat est bon, vérifier si le faisceau n'est pas court-circuité à la masse ou à l'alimentation.

Mauvais → Vérifier les points suivants.
- Connecteurs de faisceau (E204), (E29)
- Faisceau ouvert ou court-circuité entre le capteur de position de point mort et la masse de carrosserie

Si le résultat est mauvais, réparer le circuit ouvert, court-circuité à la masse ou court-circuité à l'alimentation du faisceau ou des connecteurs.

Bon → (A)

Simpo PDF Merge and Split Unregistered Version - http://www.simpopdf.com

Contact de point mort (Suite)

C

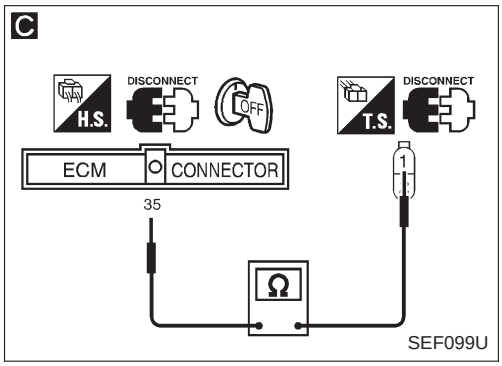

Ⓐ

C

VERIFIER LE CIRCUIT DE SIGNAL D'ENTREE.
1. Débrancher le connecteur de faisceau de l'ECM.
2. Vérifier la continuité du faisceau entre la borne (35) de l'ECM et la borne (1).
   Il doit y avoir continuité.
   Si le résultat est bon, vérifier si le faisceau n'est pas court-circuité à la masse ou à l'alimentation.

Mauvais →
Vérifier les points suivants.
- Connecteurs de faisceau (E205), (E33)
- Connecteurs de faisceau (E101), (M5)
- Connecteurs de faisceau (M48), (F54) (conduite à droite)
- Faisceau ouvert ou court-circuité entre l'ECM et le contact de position de point mort

Si le résultat est mauvais, réparer le circuit ouvert, court-circuité à la masse ou court-circuité à l'alimentation du faisceau ou des connecteurs.

Bon ↓

VERIFIER LE COMPOSANT (Contact de point mort).
Se reporter à la section MT.

Mauvais → Remplacer le contact de position de point mort.

Bon ↓

Débrancher et rebrancher sur les circuits les connecteurs de faisceau. Puis procéder à un nouvel essai.

Le problème n'est pas résolu. ↓

Vérifier si les bornes à broches de l'ECM sont endommagées et vérifier la connexion du connecteur de faisceau de l'ECM. Rebrancher le connecteur de faisceau de l'ECM et tester à nouveau.

↓

FIN DE L'INSPECTION

Simpo PDF Merge and Split Unregistered Version - http://www.simpopdf.com

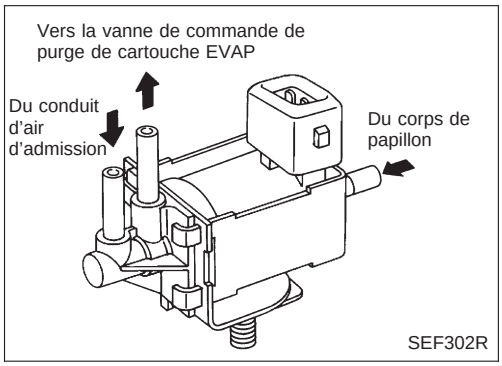

Electrovanne de commande de purge de cartouche EVAP

DESCRIPTION DES COMPOSANTS

Electrovanne de commande de purge de cartouche EVAP

L'électrovanne de commande de purge de cartouche EVAP répond aux signaux de l'ECM. Lorsque l'ECM transmet un signal ARRET, le signal de dépression (du corps de papillon à la vanne de commande de purge de cartouche EVAP) passe par l'électrovanne de commande de purge de cartouche EVAP. Le signal atteint alors la vanne de commande de purge de cartouche EVAP.
Lorsque l'ECM transmet un signal MARCHE (masse), le signal de dépression est coupé.

VALEUR DE REFERENCE DE CONSULT EN MODE DE CONTROLE DE DONNEES

Remarques : les données de spécification sont des valeurs de référence.

ELEMENT DE CONTROLE	CONDITION		SPECIFICATION
EV COM EGR	● Moteur : après échauffement ● Interrupteur de climatiseur : à l'arrêt ● Levier de passage : point mort ● A vide	Ralenti	ARRET
		Supérieur à 3 800 tr/mn	MARCHE

BORNES DE L'ECM ET VALEURS DE REFERENCE

Remarques : Les données de spécifications sont des valeurs de référence et sont mesurées entre chaque borne et ㊴ (masse de l'ECCS) à l'aide d'un voltmètre.

N° DE BORNE	COULEUR DE CABLE	ELEMENT	CONDITION	DONNEES (Tension du courant continu)
105	W/L	Electrovanne de commande de purge de cartouche EVAP	Moteur en marche. (Condition d'échauffement) └ Régime de ralenti	TENSION DE LA BATTERIE (11 - 14V)
			Moteur en marche. (Condition d'échauffement) └ Régime moteur supérieur à 3 800 tr/mn.	Environ 1V

Simpo PDF Merge and Split Unregistered Version - http://www.simpopdf.com

Electrovanne de commande de purge de cartouche EVAP (Suite)

EC-PGC/V-01

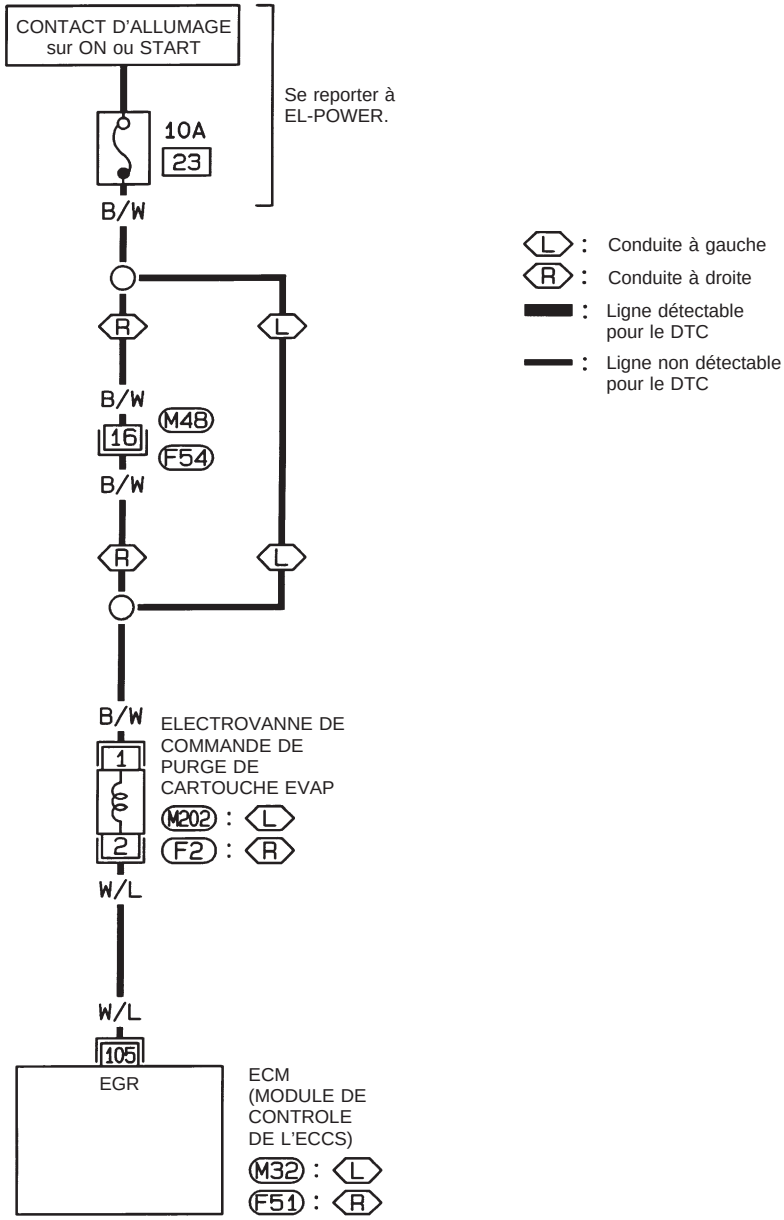



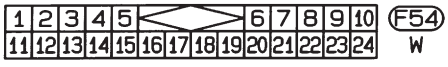

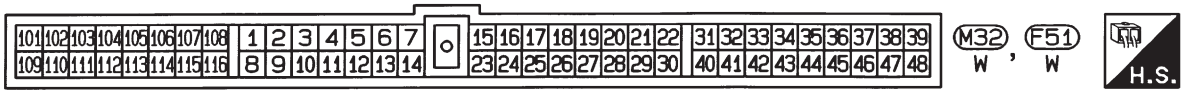

HEC358

Simpo PDF Merge and Split Unregistered Version - http://www.simpopdf.com

Electrovanne de commande de purge de cartouche EVAP (Suite)

PROCEDURE DE DIAGNOSTIC

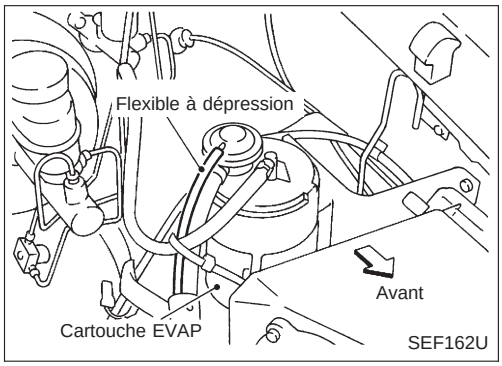

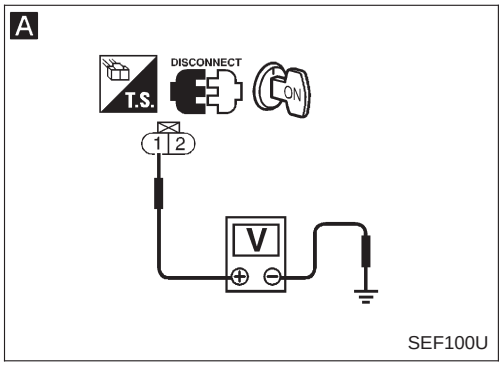

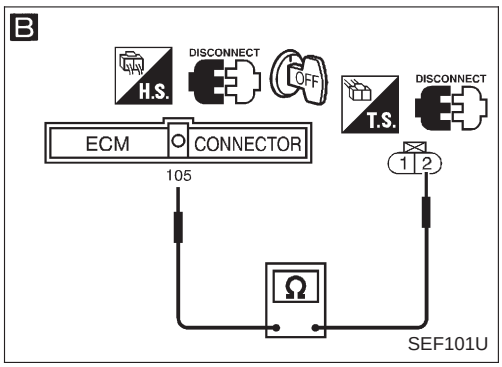

DEBUT DE L'INSPECTION

VERIFIER LE FONCTIONNEMENT GENERAL.
1. Effectuer ''Mode II de test de diagnostic'' (résultats de l'autodiagnostic).
   S'assurer que le code de diagnostic n° 55 est affiché.
2. Démarrer le moteur et le laisser s'échauffer suffisamment.
3. Débrancher le flexible à dépression de la cartouche EVAP.
4. S'assurer qu'il y a une dépression dans les conditions suivantes :
   Emballer le moteur à moins de 3 800 tr/mn :
   Il doit y avoir une dépression.
   Au dessus de 3 800 tr/mn :
   Il ne doit pas y avoir de dépression.

Bon → VERIFIER LE COMPOSANT (cartouche EVAP). Consulter ''CARTOUCHE EVAP'', EC-19. Si le résultat est mauvais, remplacer la cartouche EVAP.

Bon → FIN DE L'INSPECTION

Mauvais

VERIFIER LE FONCTIONNEMENT DE L'ELECTROVANNE.
L'électrovanne de commande de purge de cartouche EVAP émet-elle un bruit de fonctionnement lors de la VERIFICATION DU FONCTIONNEMENT GENERAL ci-dessus ?

Oui → **VERIFIER LE FLEXIBLE A DEPRESSION.** Vérifier que le flexible à dépression n'est pas bouché, fissuré ou mal connecté. Consulter ''Schéma des flexibles à dépression'', EC-12.

Non

A

VERIFIER L'ALIMENTATION ELECTRIQUE.
1. Mettre le contact d'allumage sur ''OFF''.
2. Débrancher le connecteur de faisceau de l'électrovanne de commande de purge de cartouche EVAP.
3. Mettre le contact d'allumage sur ''ON''.
4. Vérifier la tension entre la borne ① et la masse de moteur avec le CONSULT ou un testeur.
   Tension : tension de la batterie

Mauvais → Vérifier les points suivants.
- Connecteurs de faisceau F54, M48 (conduite à droite)
- Fusible de 10A
- Faisceau ouvert ou court-circuité entre l'électrovanne de commande de purge de cartouche EVAP et le fusible

Si le résultat est mauvais, réparer le faisceau ou les connecteurs.

Bon

B

VERIFIER LE CIRCUIT DE SIGNAL DE SORTIE.
1. Mettre le contact d'allumage sur ''OFF''.
2. Débrancher le connecteur de faisceau de l'ECM.
3. Vérifier la continuité du faisceau entre la borne 105 de l'ECM et la borne ② .
   Il doit y avoir continuité.
   Si le résultat est bon, vérifier si le faisceau n'est pas court-circuité à la masse ou à l'alimentation.

Mauvais → Réparer le circuit ouvert, court-circuité à la masse ou court-circuité à l'alimentation dans un faisceau ou des connecteurs.

Bon

Ⓐ

Simpo PDF Merge and Split Unregistered Version - http://www.simpopdf.com

Electrovanne de commande de purge de cartouche EVAP (Suite)

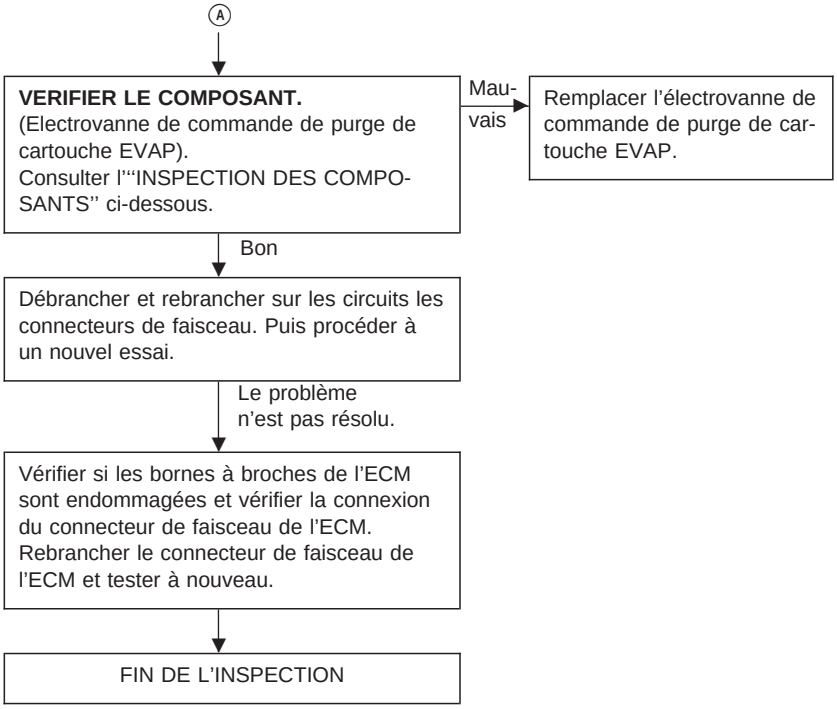

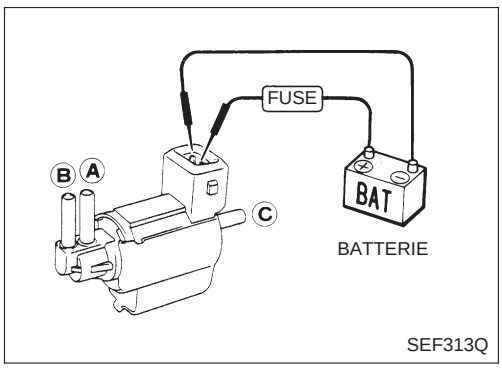

INSPECTION DES COMPOSANTS

Electrovanne de commande de purge de cartouche EVAP

Vérifier la continuité du passage de l'air.

Condition	Continuité du passage d'air entre A et B	Continuité du passage d'air entre A et C
Courant continu de 12 V alimenté entre les bornes	Oui	Non
Aucun courant alimenté	Non	Oui

Si le résultat est mauvais, remplacer l'électrovanne.

Simpo PDF Merge and Split Unregistered Version - http://www.simpopdf.com

Injecteur

CONDUITE A GAUCHE

EC-INJECT-01

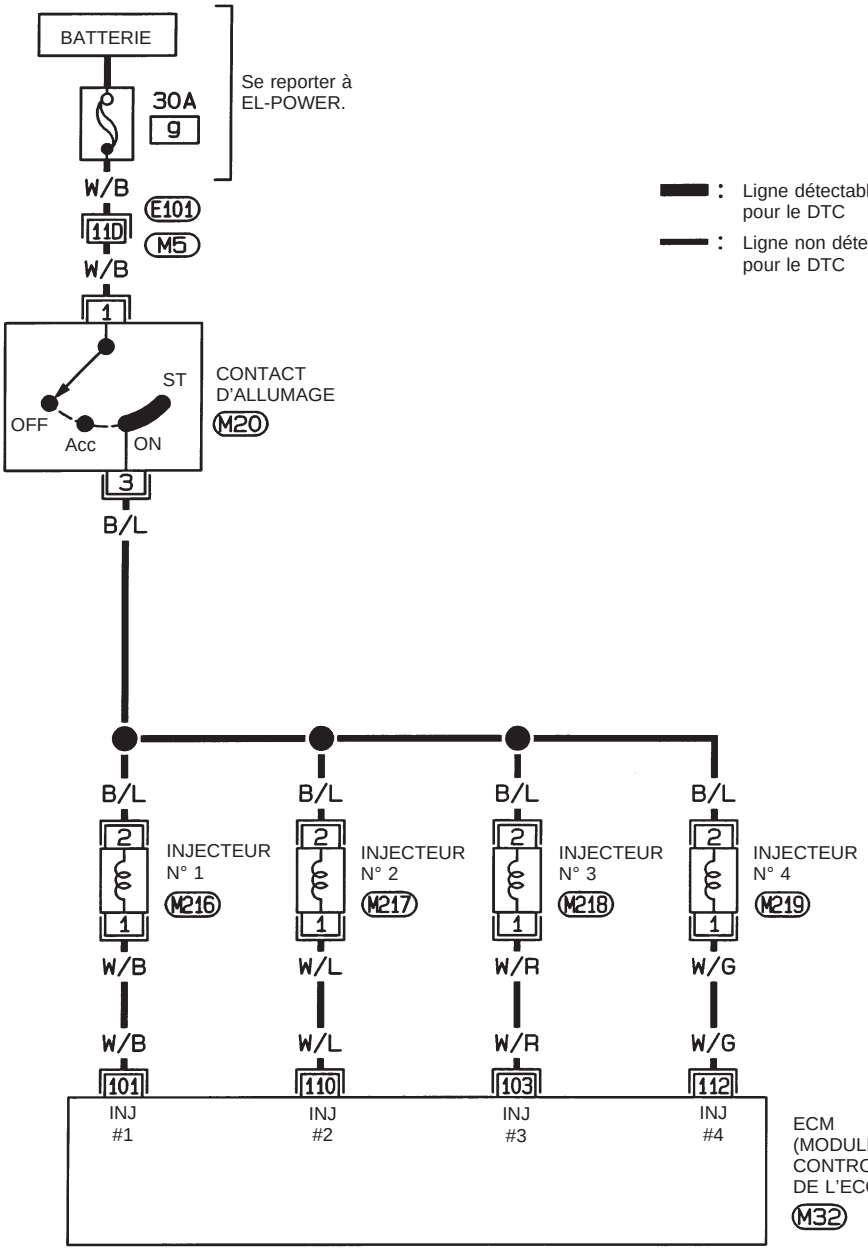





Consulter la dernière page dépliante.

M5 , E101

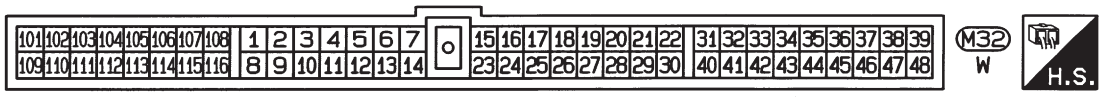

HEC351

Simpo PDF Merge and Split Unregistered Version - http://www.simpopdf.com

Injecteur (Suite)

CONDUITE A DROITE

EC-INJECT-02

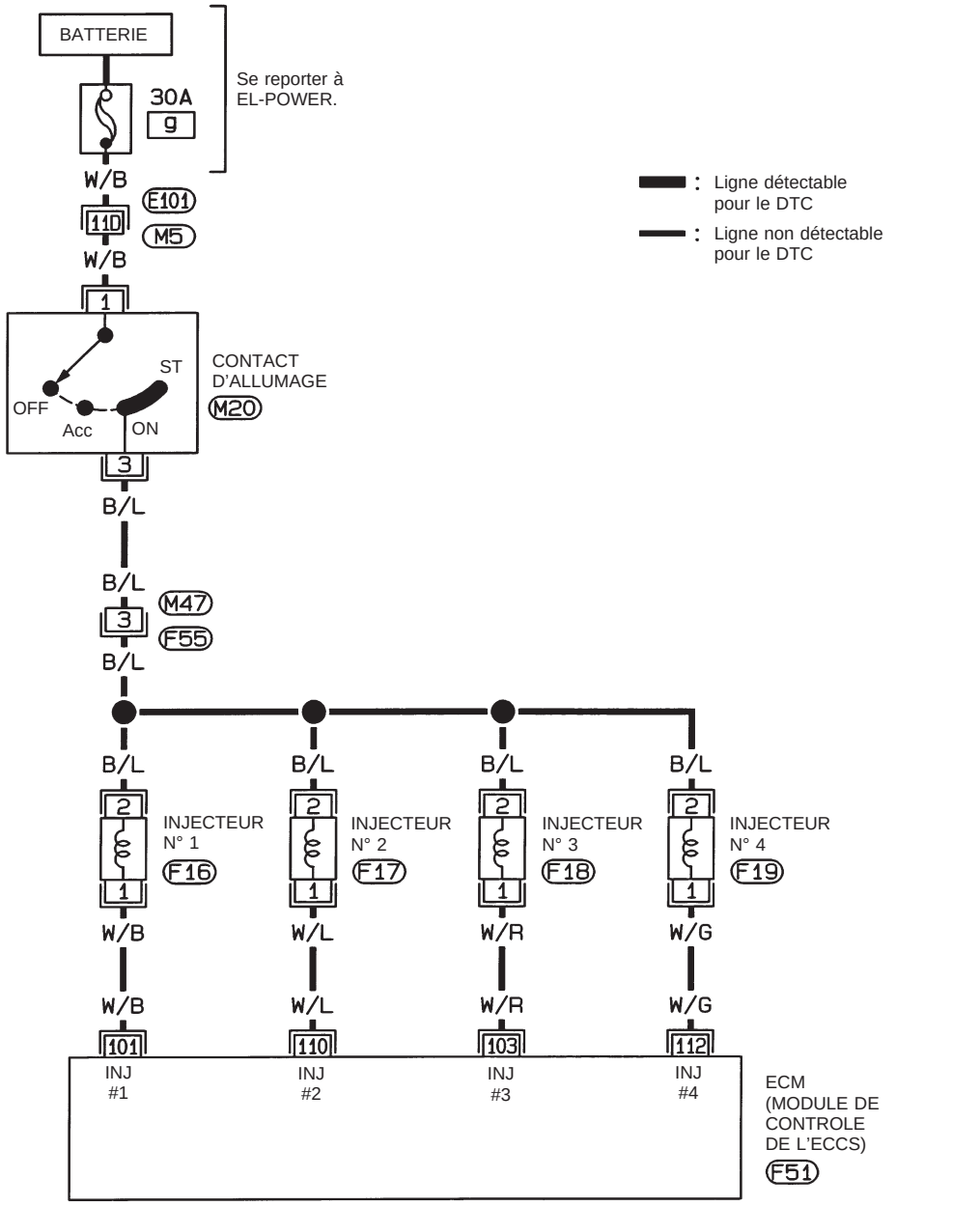





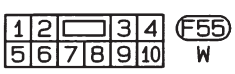

Consulter la dernière page dépliante.

M5 , E101

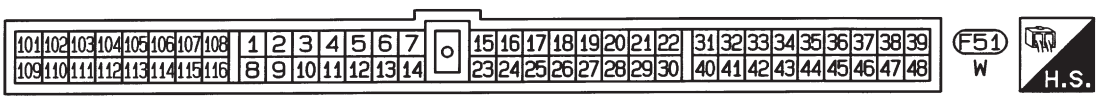

HEC352

Simpo PDF Merge and Split Unregistered Version - http://www.simpopdf.com

Injecteur (Suite)

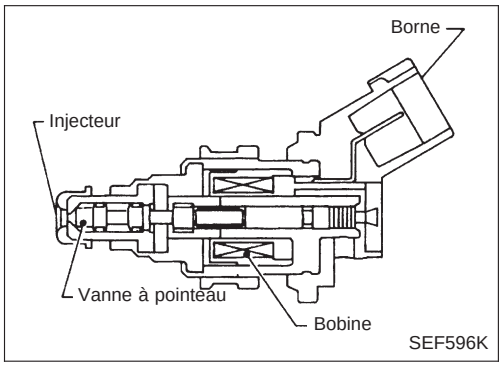

DESCRIPTION DES COMPOSANTS

L'injecteur de carburant est une électrovanne précise de petite dimension. Quand l'ECM fournit une masse au circuit d'injecteur, la bobine dans l'injecteur est alimentée en courant. La bobine alimentée tire la vanne à pointeau et permet au carburant de couler par l'injecteur dans le collecteur d'admission. La quantité de carburant injectée est déterminée par la durée de l'impulsion d'injection. La durée d'impulsion correspond au temps où l'injecteur reste ouvert. L'ECM commande la durée d'impulsion d'injection basée sur les besoins en carburant du moteur.

BORNES DE L'ECM ET VALEURS DE REFERENCE

Remarques : les données de spécifications sont des valeurs de référence et sont mesurées entre chaque borne et (39) (masse de l'ECCS) à l'aide d'un voltmètre.

N° DE BORNE	COULEUR DE CABLE	ELEMENT	CONDITION	DONNEES (Tension du courant continu)
101 103 110 112	W/B W/R W/L W/G	Injecteur n° 1 Injecteur n° 3 Injecteur n° 2 Injecteur n° 4	Moteur en marche. (Condition d'échauffement) └ Régime de ralenti	TENSION DE LA BATTERIE (11 - 14V) 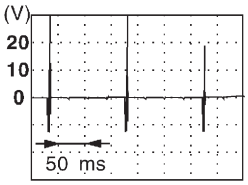 SEF069U
			Moteur en marche. └ Le régime moteur est de 2 000 tr/mn.	TENSION DE LA BATTERIE (11 - 14V) 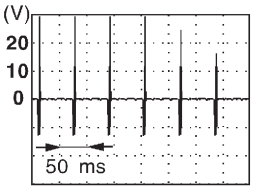 SEF070U

Simpo PDF Merge and Split Unregistered Version - http://www.simpopdf.com

Injecteur (Suite)

PROCEDURE DE DIAGNOSTIC

A

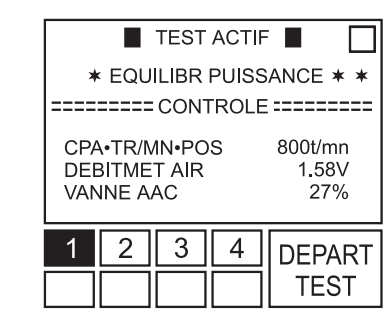

FCATP02

A

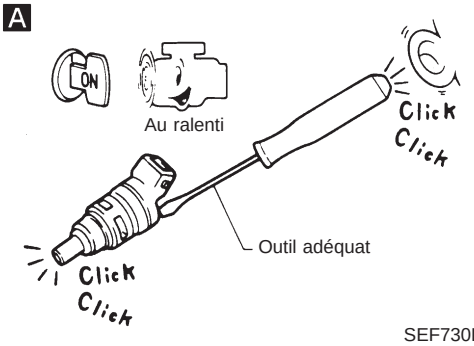

SEF730L

B

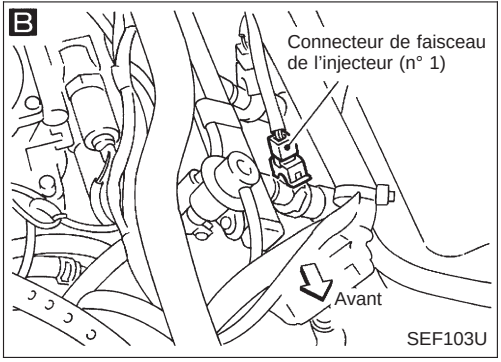

SEF103U

B

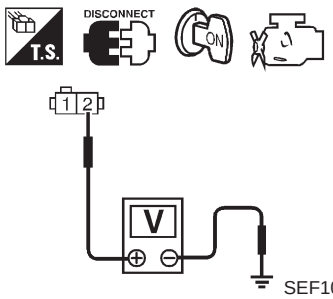

SEF104U

C

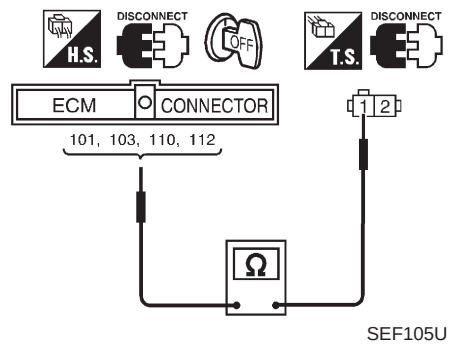

SEF105U

DEBUT DE L'INSPECTION

A

VERIFIER LE FONCTIONNEMENT GENERAL.
1. Démarrer le moteur.
2. Effectuer un test de "EQUILIBR PUISSANCE" en mode "TEST ACTIF" à l'aide du CONSULT.
3. Vérifier que chaque circuit entraîne une baisse momentanée du régime du moteur.

OU

2. Vérifier le bruit du fonctionnement de chaque injecteur.
On doit entendre un cliquetis.

Bon → FIN DE L'INSPECTION

Mauvais

B

VERIFIER L'ALIMENTATION ELECTRIQUE.
1. Arrêter le moteur.
2. Débrancher le connecteur de faisceau de l'injecteur.
3. Mettre le contact d'allumage sur "ON".
4. Vérifier la tension entre la borne (2) et la masse avec le CONSULT ou un testeur.
Tension : tension de la batterie

Mauvais → Vérifier les points suivants.
- Connecteurs de faisceau (F55), (M47) (conduite à droite)
- Faisceau ouvert ou court-circuit entre l'injecteur et le contact d'allumage

Si le résultat est mauvais, réparer le faisceau ou les connecteurs.

Bon

C

VERIFIER LE CIRCUIT DE SIGNAL DE SORTIE.
1. Mettre le contact d'allumage sur "OFF".
2. Débrancher le connecteur de faisceau de l'ECM.
3. Vérifier la continuité du faisceau entre la borne (1) et les bornes (101), (103), (110), (112) de l'ECM.
Il doit y avoir continuité.
Si le résultat est bon, vérifier si le faisceau n'est pas court-circuité à la masse ou à l'alimentation.

Mauvais → Réparer le circuit ouvert, court-circuité à la masse ou court-circuité à l'alimentation dans un faisceau ou des connecteurs.

Bon

VERIFIER LE COMPOSANT (Injecteur).
Consulter l'"INSPECTION DES COMPOSANTS" à la page suivante.

Mauvais → Remplacer l'injecteur.

Bon

Débrancher et rebrancher sur les circuits les connecteurs de faisceau. Puis procéder à un nouvel essai.

Le problème n'est pas résolu.

Vérifier si les bornes à broches de l'ECM sont endommagées et vérifier la connexion du connecteur de faisceau de l'ECM. Rebrancher le connecteur de faisceau de l'ECM et tester à nouveau.

FIN DE L'INSPECTION

Simpo PDF Merge and Split Unregistered Version - http://www.simpopdf.com

Injecteur (Suite)

INSPECTION DES COMPOSANTS

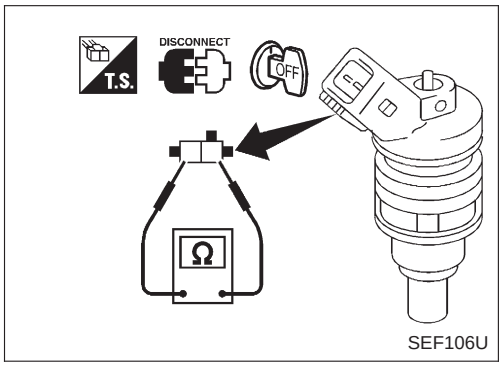

Injecteur

1. Débrancher le connecteur de faisceau de l'injecteur.
2. Vérifier la résistance entre les bornes comme indiqué sur la figure ci-contre.
   Résistance : 10 - 14Ω à 25°C
   Si le résultat est mauvais, remplacer l'injecteur.

Simpo PDF Merge and Split Unregistered Version - http://www.simpopdf.com

Signal de démarrage

EC-S/SIG-01

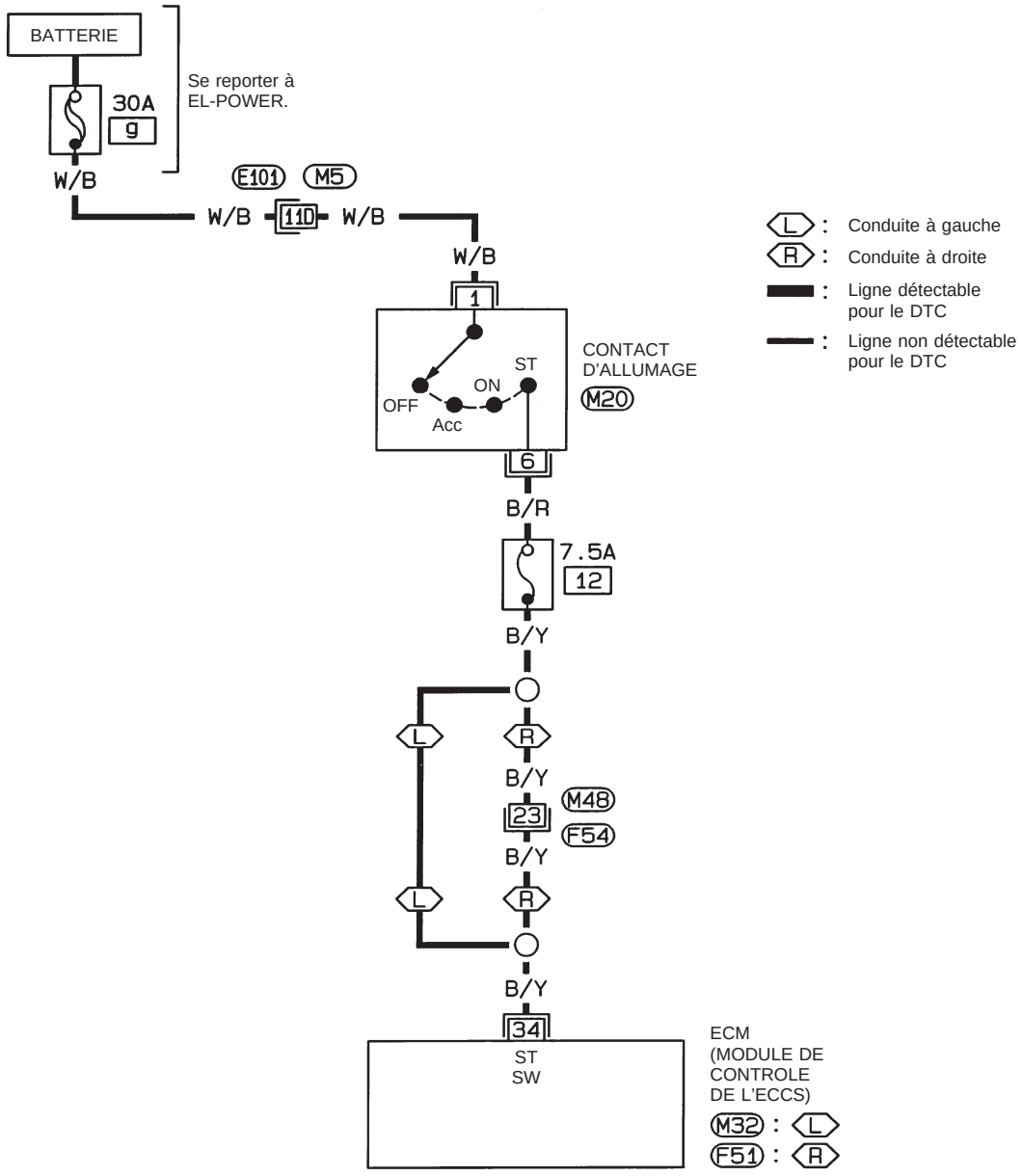

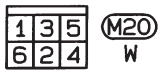



Consulter la dernière page dépliante.

M5 , E101

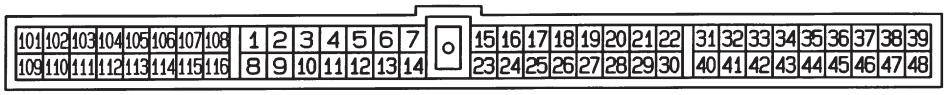

HEC350

Simpo PDF Merge and Split Unregistered Version - http://www.simpopdf.com

Signal de démarrage (Suite)

PROCEDURE DE DIAGNOSTIC

A

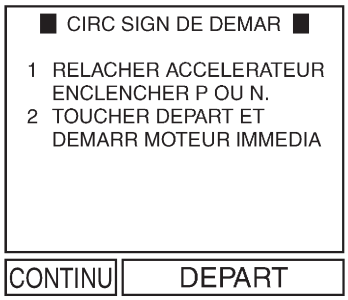

FCSSC01

A

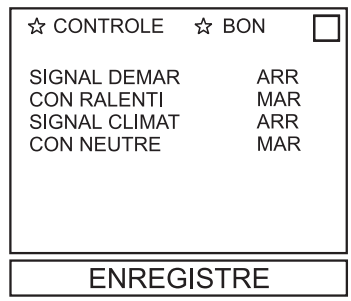

FCMNS02

A

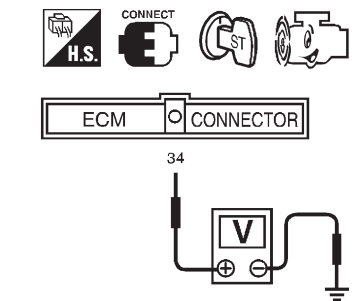

SEF107U

B

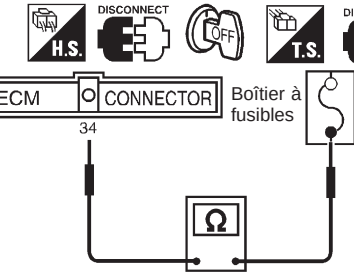

SEF108U

DEBUT DE L'INSPECTION

A

VERIFIER LE FONCTIONNEMENT GENERAL.

1. Mettre le contact d'allumage sur "ON".
2. Effectuer "CIRC SIGN DE DEMAR" en mode "TEST FONCTION" avec le CONSULT.

OU

1. Mettre le contact d'allumage sur "ON".
2. Vérifier le "SIGNAL DEMAR" en mode "CONTROLE DE DONNEES" à l'aide du CONSULT.

ALL "ON"	ARRET
ALL "START"	MARCHE

OU

1. Mettre le contact d'allumage sur "START".
2. Vérifier la tension entre la borne (34) de l'ECM et la masse.

Tension :
Contact d'allumage sur "START"
Tension de la batterie
Sauf ci-dessus
Environ 0V

Bon → FIN DE L'INSPECTION

Mauvais

Vérifier si le fusible de 7,5A est en bon état.

Mauvais → Remplacer le fusible de 7,5A.

Bon

B

VERIFIER LE CIRCUIT DE SIGNAL D'ENTREE.

1. Mettre le contact d'allumage sur "OFF".
2. Débrancher le connecteur de faisceau de l'ECM et le fusible de 7,5A.
3. Vérifier la continuité du faisceau entre la borne (34) de l'ECM et le boîtier à fusibles.
   Il doit y avoir continuité.
   Si le résultat est bon, vérifier si le faisceau n'est pas court-circuité à la masse ou à l'alimentation.

Mauvais → Vérifier les points suivants.
- Connecteurs de faisceau (F54), (M48) (conduite à droite)
- Faisceau ouvert ou court-circuité entre l'ECM et le boîtier à fusibles

Si le résultat est mauvais, réparer le circuit ouvert, court-circuité à la masse ou court-circuité à l'alimentation du faisceau ou des connecteurs.

Bon

Débrancher et rebrancher sur les circuits les connecteurs de faisceau. Puis procéder à un nouvel essai.

Le problème n'est pas résolu.

Vérifier si les bornes à broches de l'ECM sont endommagées et vérifier la connexion du connecteur de faisceau de l'ECM. Rebrancher le connecteur de faisceau de l'ECM et tester à nouveau.

FIN DE L'INSPECTION

Simpo PDF Merge and Split Unregistered Version - http://www.simpopdf.com

Pompe d'alimentation

DESCRIPTION DU SYSTEME

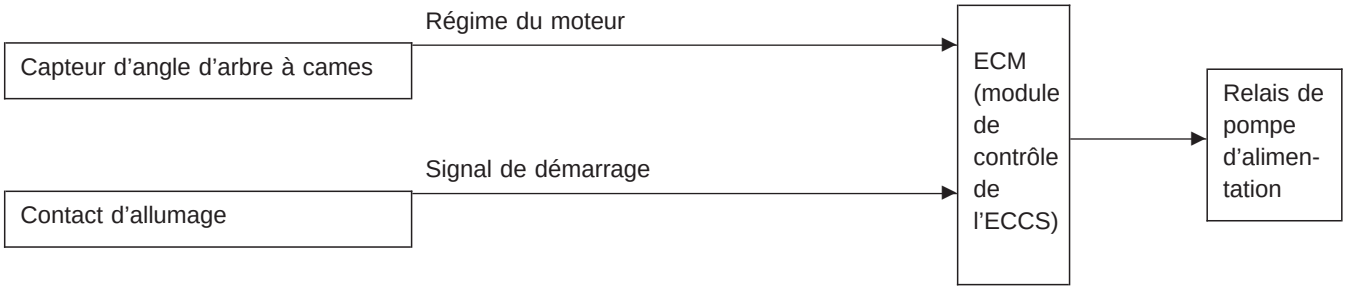

L'ECM actionne la pompe d'alimentation pendant plusieurs secondes après que le contact d'allumage a été établi afin d'améliorer l'aptitude au démarrage du moteur. Si l'ECM reçoit un signal 180° du capteur d'angle d'arbre à cames, il sait que le moteur tourne et commande la mise en marche de la pompe. Si le signal 180° n'est pas reçu lorsque le contact d'allumage est mis, le moteur cale. L'ECM arrête la pompe et empêche la batterie de se décharger, renforçant ainsi la sécurité. L'ECM n'entraîne pas directement la pompe d'alimentation. Il commande l'état de MARCHE/ARRET du relais de la pompe d'alimentation, qui à son tour commande la pompe d'alimentation.

Condition	Fonctionnement de la pompe d'alimentation
Le contact d'allumage est mis sur ''ON''	Fonctionne pendant 5 secondes.
Le moteur tourne et démarre	Fonctionne.
Le moteur est arrêté	S'arrête après 1 seconde.
Sauf comme indiqué ci-dessus.	S'arrête.

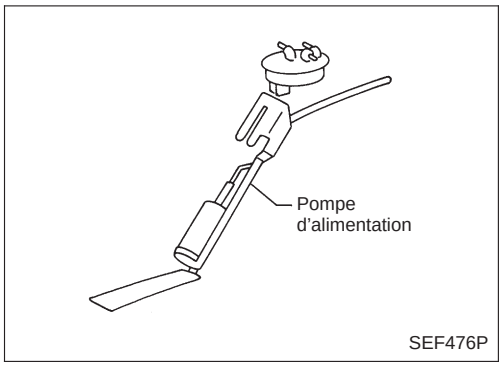

DESCRIPTION DES COMPOSANTS

La pompe d'alimentation à turbine est immergée (la pompe et la turbine sont situées dans le réservoir de carburant).

VALEUR DE REFERENCE DE CONSULT EN MODE DE CONTROLE DE DONNEES

Remarques : les données de spécification sont des valeurs de référence.

ELEMENT DE CONTROLE	CONDITION	SPECIFICATION
REL POMP ALI	● Le contact d'allumage est mis sur ''ON'' (fonctionne pendant 5 secondes). ● Le moteur tourne et démarre ● Lorsque le moteur est arrêté (il s'arrête en 1 seconde)	MARCHE
	Sauf comme indiqué ci-dessus	ARRET

Simpo PDF Merge and Split Unregistered Version - http://www.simpopdf.com

Pompe d’alimentation (Suite)

BORNES DE L’ECM ET VALEURS DE REFERENCE

Remarques : les données de spécifications sont des valeurs de référence et sont mesurées entre chaque borne et ㊴ (masse de l’ECCS) à l’aide d’un voltmètre.

N° DE BORNE	COULEUR DE CABLE	ELEMENT	CONDITION	DONNEES (Tension du courant continu)
104	W/R	Relais de pompe d’alimentation	Contact d’allumage sur ‘‘ON’’ └ Pendant 5 secondes après avoir mis le contact d’allumage sur ‘‘ON’’ Moteur en marche.	Environ 1V
			Contact d’allumage sur ‘‘ON’’ └ 5 secondes après avoir mis le contact d’allumage sur ‘‘ON’’	TENSION DE LA BATTERIE (11 - 14V)

Simpo PDF Merge and Split Unregistered Version - http://www.simpopdf.com

Pompe d'alimentation (Suite)

CONDUITE A GAUCHE

EC-F/PUMP-01

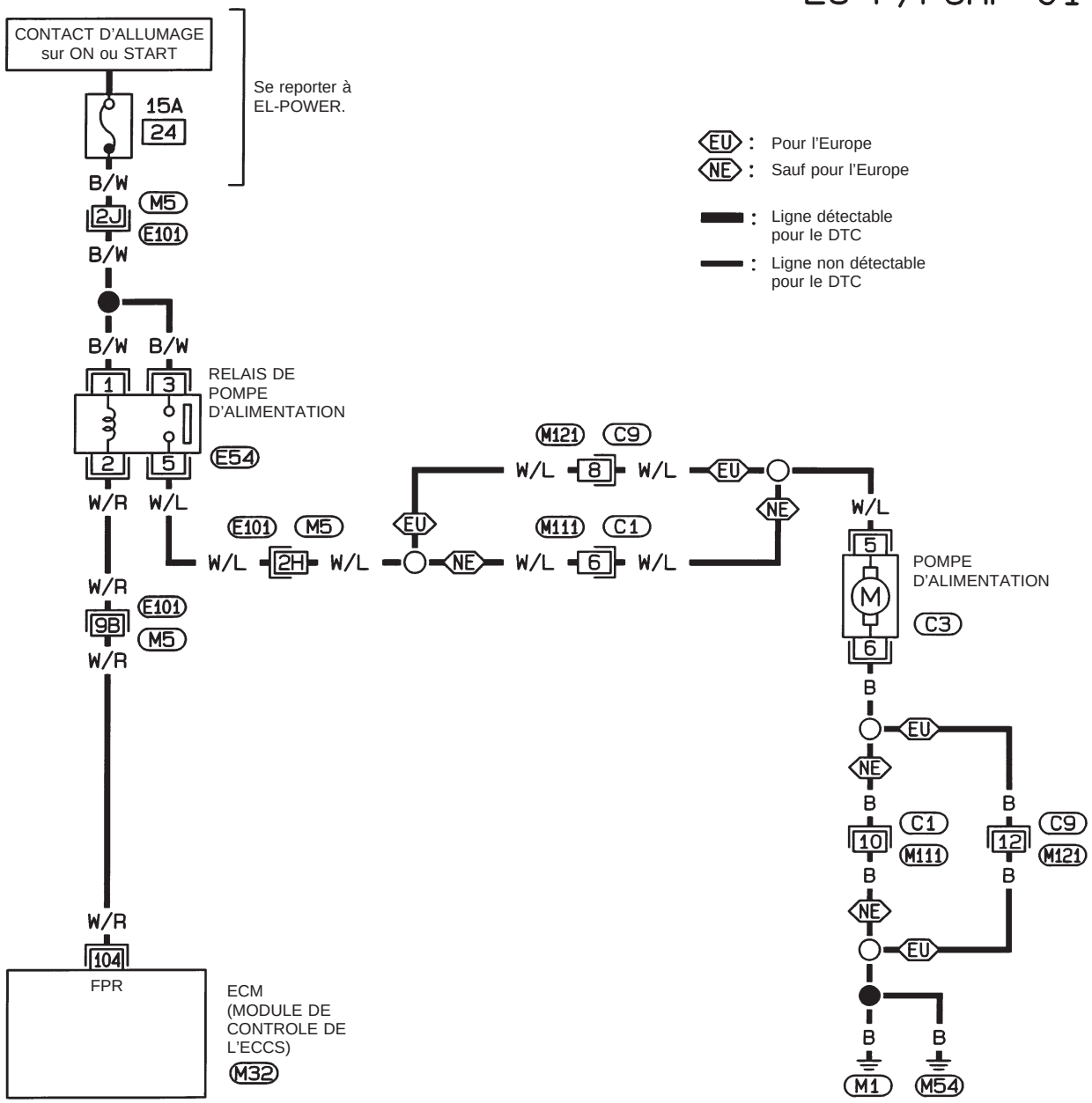

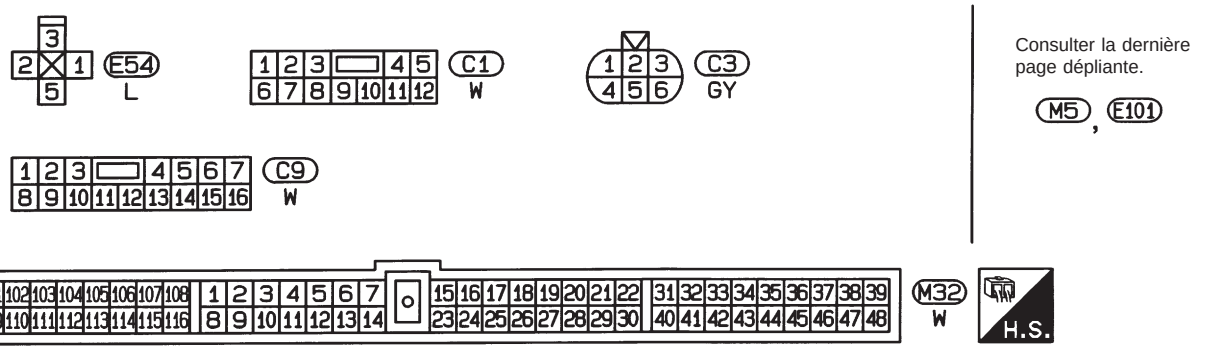

Consulter la dernière page dépliante.

M5, E101

HEC563

Simpo PDF Merge and Split Unregistered Version - http://www.simpopdf.com

Pompe d'alimentation (Suite)

CONDUITE A DROITE

EC-F/PUMP-02

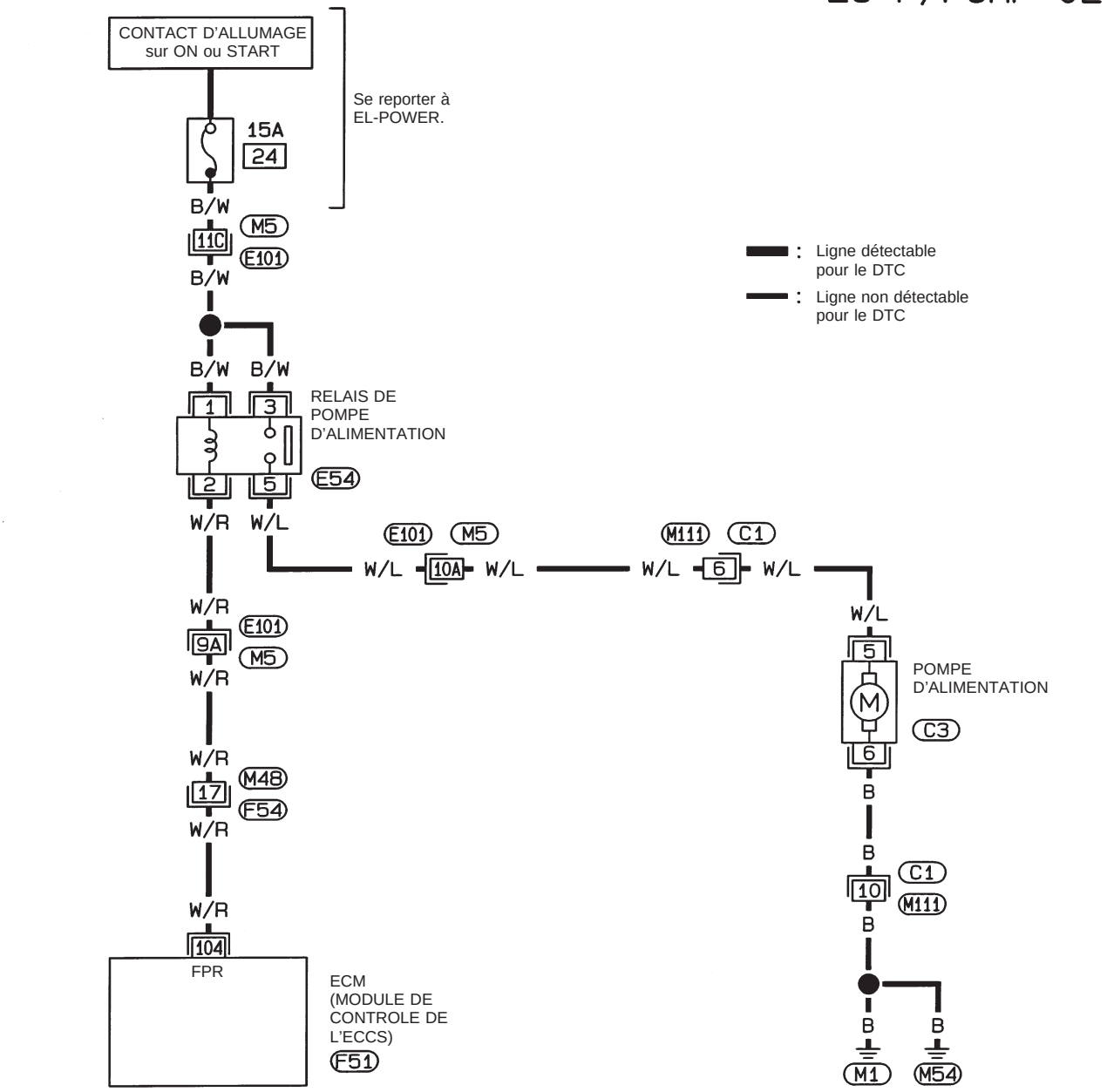

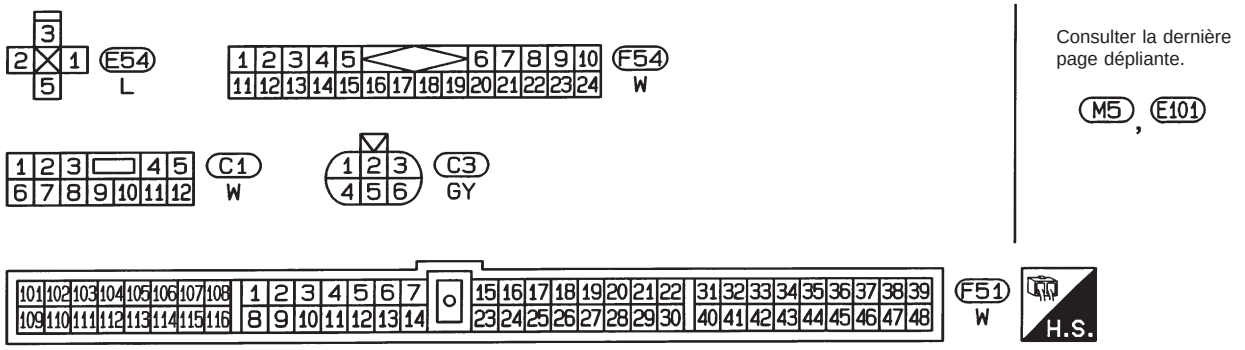

Consulter la dernière page dépliante.

M5, E101

HEC354

Simpo PDF Merge and Split Unregistered Version - http://www.simpopdf.com

Pompe d'alimentation (Suite)

PROCEDURE DE DIAGNOSTIC

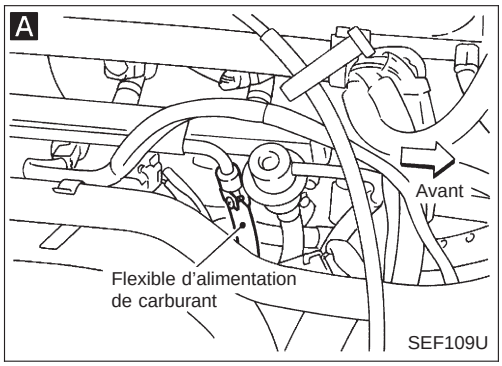

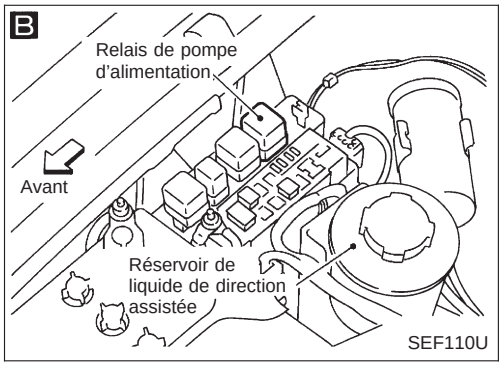

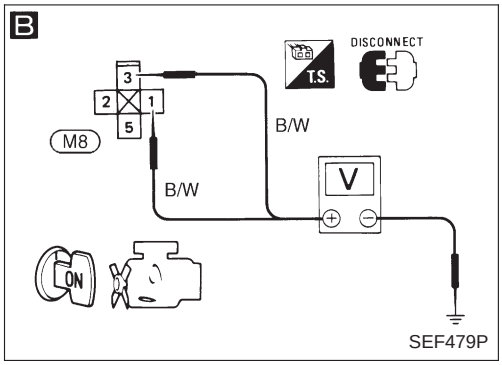

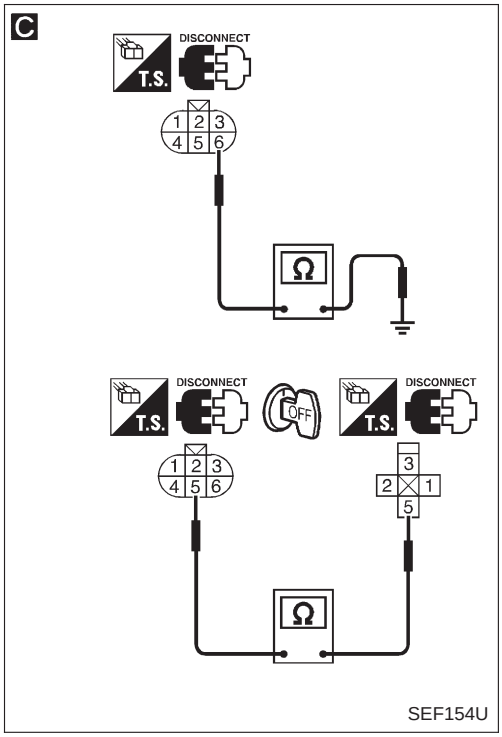

DEBUT DE L'INSPECTION

A

VERIFIER LE FONCTIONNEMENT GENERAL.
1. Mettre le contact d'allumage sur "ON".
2. Pincer avec les doigts le flexible d'alimentation.
   L'impulsion de la pression d'alimentation doit se faire sentir dans le flexible d'alimentation de carburant pendant 5 secondes après avoir mis le contact d'allumage sur "ON".

Bon → FIN DE L'INSPECTION

Mauvais ↓

B

VERIFIER L'ALIMENTATION ELECTRIQUE.
1. Mettre le contact d'allumage sur "OFF".
2. Débrancher le relais de pompe d'alimentation.
3. Mettre le contact d'allumage sur "ON".
4. Vérifier la tension entre les bornes ①, ③ et la masse avec le CONSULT ou un testeur.
   Tension : tension de la batterie

Mauvais → Vérifier les points suivants.
- Fusible de 15A
- Connecteurs de faisceau E101, M5
- Faisceau ouvert ou court-circuité entre le fusible et le relais de pompe d'alimentation

Si le résultat est mauvais, réparer le faisceau ou les connecteurs.

Bon ↓

C

VERIFIER LE CIRCUIT DE MISE A LA MASSE.
1. Mettre le contact d'allumage sur "OFF".
2. Débrancher le connecteur de faisceau de la pompe d'alimentation.
3. Vérifier la continuité du faisceau entre la borne ⑥ et la masse de carrosserie, la borne ⑤ de relais et la borne ⑤.
   Il doit y avoir continuité.
   Si le résultat est bon, vérifier si le faisceau n'est pas court-circuité à la masse ou à l'alimentation.

Mauvais → Vérifier les points suivants.
- Connecteurs de faisceau C9, M121 (Conduite à gauche pour l'Europe)
- Connecteurs de faisceau E101, M5
- Faisceau ouvert ou court-circuité entre la pompe d'alimentation et la masse de carrosserie
- Faisceau ouvert ou court-circuité entre la pompe d'alimentation et le relais de pompe d'alimentation

Si le résultat est mauvais, réparer le circuit ouvert, court-circuité à la masse ou court-circuité à l'alimentation du faisceau ou des connecteurs.

Bon ↓

D

VERIFIER LE CIRCUIT DE SIGNAL DE SORTIE.
1. Débrancher le connecteur de faisceau de l'ECM.
2. Vérifier la continuité du faisceau entre la borne 104 de l'ECM et la borne ②.
   Il doit y avoir continuité.
   Si le résultat est bon, vérifier si le faisceau n'est pas court-circuité à la masse ou à l'alimentation.

Mauvais → Vérifier les points suivants.
- Connecteurs de faisceau E101, M5
- Connecteurs de faisceau M48, F54 (conduite à droite)
- Faisceau ouvert ou court-circuit entre l'ECM et le relais de pompe d'alimentation

Si le résultat est mauvais, réparer le circuit ouvert, court-circuité à la masse ou court-circuité à l'alimentation du faisceau ou des connecteurs.

Bon ↓

Ⓐ
(Aller à la page suivante).

Simpo PDF Merge and Split Unregistered Version - http://www.simpopdf.com

Pompe d'alimentation (Suite)

D

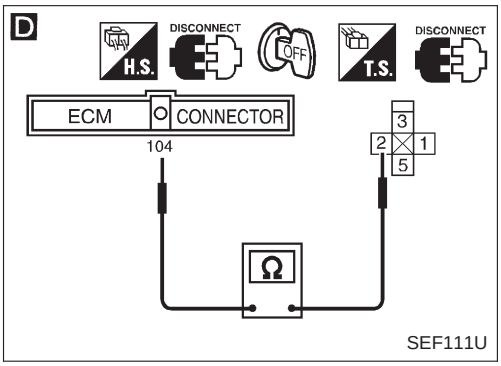

SEF111U

E

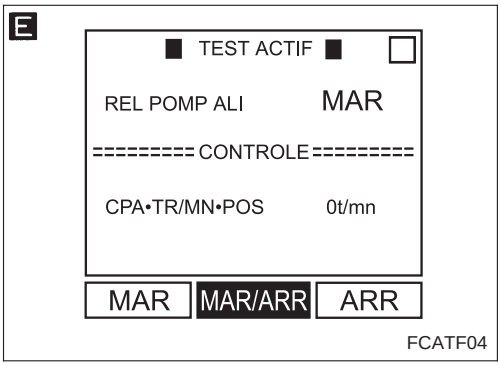

FCATF04

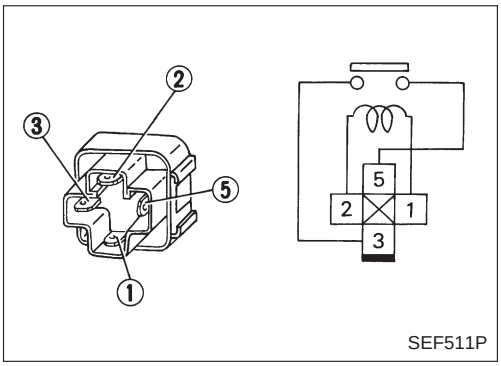

SEF511P

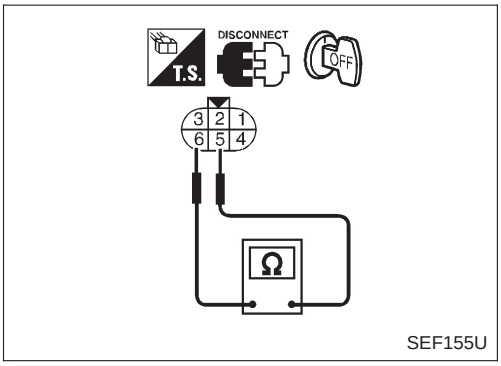

SEF155U

E

Ⓐ

VERIFIER LE COMPOSANT
(Relais de pompe d'alimentation).

1. Rebrancher le relais de pompe d'alimentation, le connecteur de faisceau de pompe d'alimentation et le connecteur de faisceau de l'ECM.
2. Mettre le contact d'allumage sur "ON".
3. Mettre le relais de pompe d'alimentation en circuit et hors circuit en mode "TEST ACTIF" à l'aide du CONSULT et vérifier le bruit de fonctionnement.

OU

Consulter l'"INSPECTION DES COMPOSANTS" ci-dessous.

Mauvais → Remplacer le relais de pompe d'alimentation.

Bon

VERIFIER LE COMPOSANT
(Pompe d'alimentation).
Consulter l'"INSPECTION DES COMPOSANTS" ci-dessous.

Mauvais → Remplacer la pompe d'alimentation.

Bon

Débrancher et rebrancher sur les circuits les connecteurs de faisceau. Puis procéder à un nouvel essai.

Le problème n'est pas résolu.

Vérifier si les bornes à broches de l'ECM sont endommagées et vérifier la connexion du connecteur de faisceau de l'ECM. Rebrancher le connecteur de faisceau de l'ECM et tester à nouveau.

FIN DE L'INSPECTION

INSPECTION DES COMPOSANTS

Relais de pompe d'alimentation

Vérifier la continuité entre les bornes ③ et ⑤.

Conditions	Continuité
Courant continu de 12V entre les bornes ① et ② du relais	Oui
Aucun courant alimenté	Non

Si le résultat est mauvais, remplacer le relais.

Pompe d'alimentation

1. Débrancher le connecteur de faisceau de la pompe d'alimentation.
2. Vérifier la résistance entre les bornes ⑤ et ⑥.
   Resistance : 0,2 - 5,0Ω à 25°C
   Si le résultat est mauvais, remplacer la pompe d'alimentation.

Simpo PDF Merge and Split Unregistered Version - http://www.simpopdf.com

Manocontact d'huile de direction assistée

EC-PST/SW-01

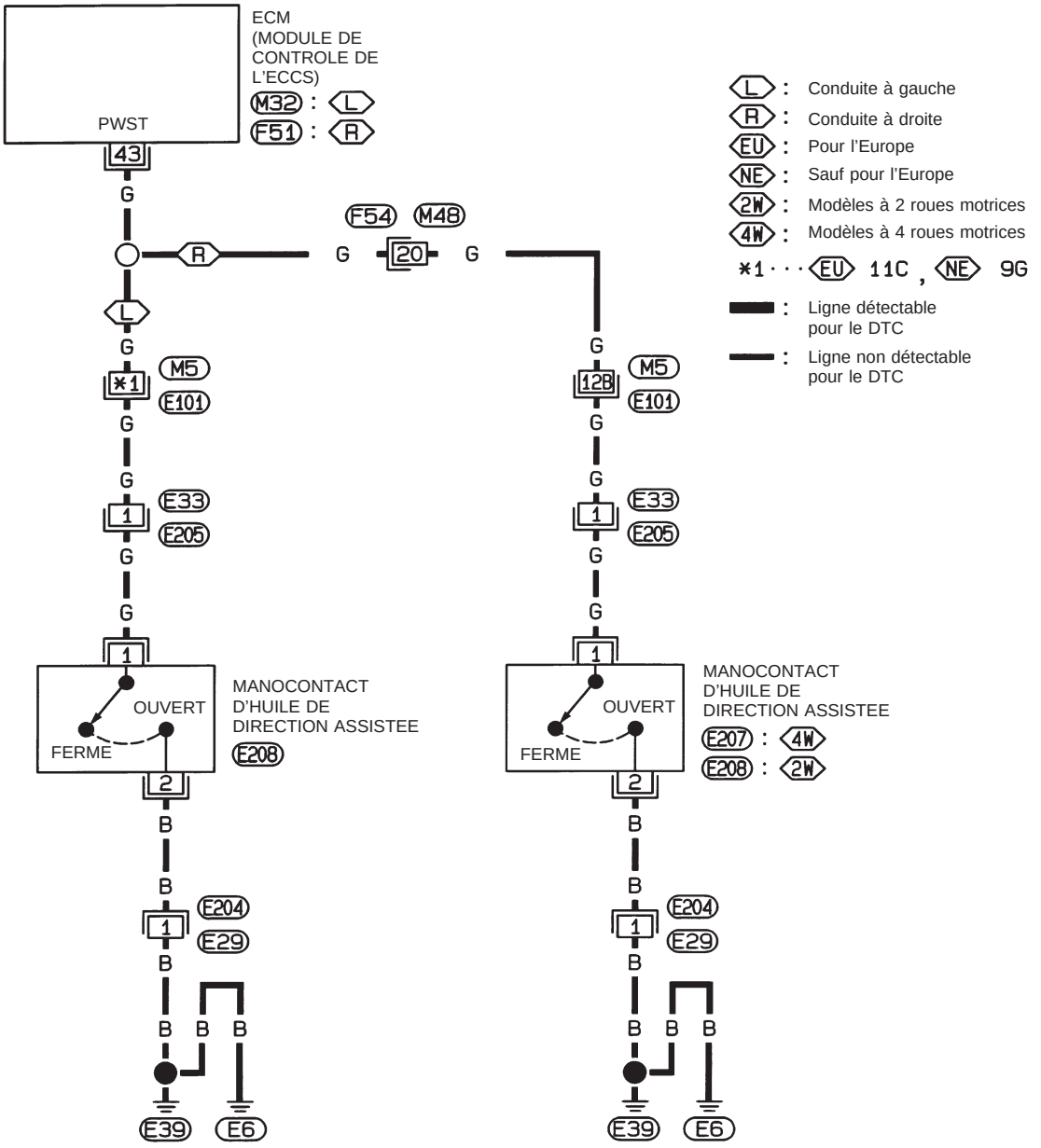



Consulter la dernière page dépliante.

M5 , E101

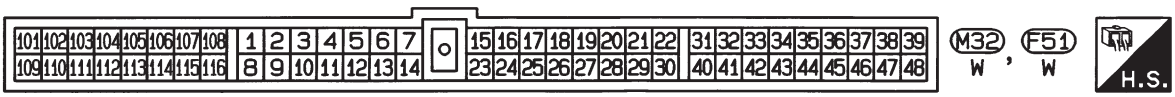

HEC564

Simpo PDF Merge and Split Unregistered Version - http://www.simpopdf.com

Manocontact d’huile de direction assistée (Suite)

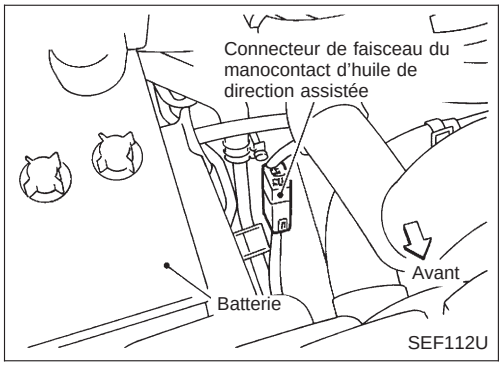

DESCRIPTION DES COMPOSANTS

Le manocontact d’huile de direction assistée est relié au tube haute-pression de la direction assistée et détecte la charge de la direction assistée. Lorsqu’une charge de direction assistée est détectée, le manocontact la signale à l’ECM. L’ECM règle la vanne IACV-AAC pour augmenter le régime de ralenti et pour tenir compte de la charge augmentée.

VALEUR DE REFERENCE DE CONSULT EN MODE DE CONTROLE DE DONNEES

Remarques : les données de spécification sont des valeurs de référence.

ELEMENT DE CONTROLE	CONDITION		SPECIFICATION
SIG DIR ASSIS	● Moteur : après échauffement, faire tourner au ralenti	Position neutre du volant de direction (vers l’avant)	ARRET
		Le volant est tourné.	MARCHE

BORNES DE L’ECM ET VALEURS DE REFERENCE

Remarques : les données de spécifications sont des valeurs de référence et sont mesurées entre chaque borne et ㊴ (masse de l’ECCS) à l’aide d’un voltmètre.

N° DE BORNE	COULEUR DE CABLE	ELEMENT	CONDITION	DONNEES (Tension du courant continu)
43	G	Manocontact d’huile de direction assistée	Moteur en marche. └ Le volant est braqué.	0V
			Moteur en marche. └ Le volant n’est pas tourné.	Environ 5V

Simpo PDF Merge and Split Unregistered Version - http://www.simpopdf.com

Manocontact d'huile de direction assistée (Suite)

PROCEDURE DE DIAGNOSTIC

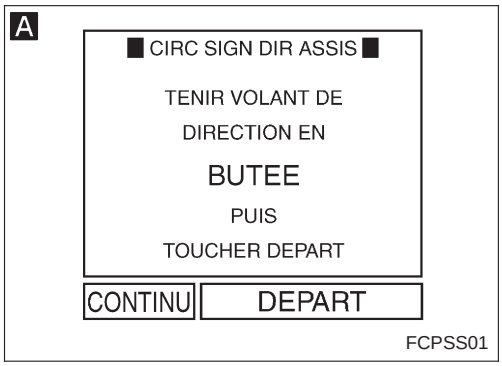

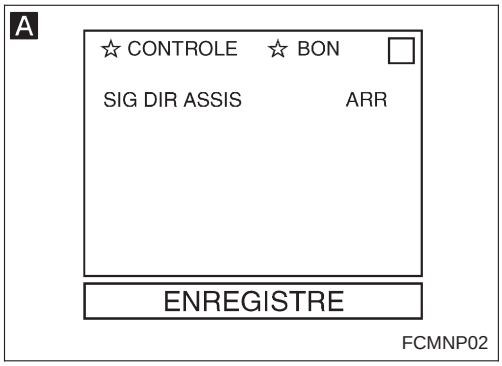

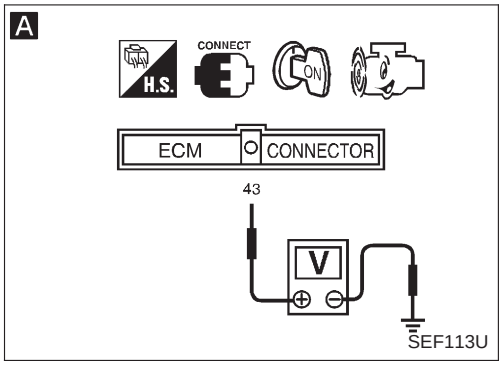

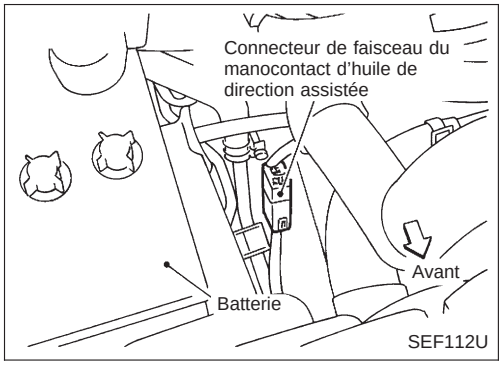

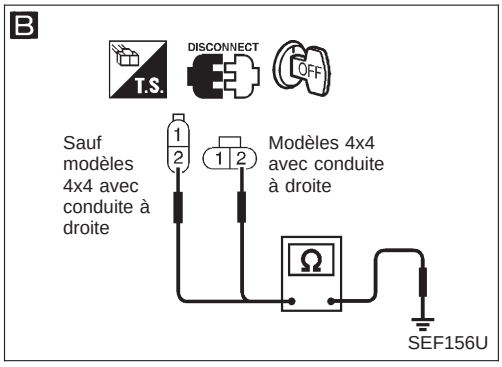

DEBUT DE L'INSPECTION

A

VERIFIER LE FONCTIONNEMENT GENERAL.

1. Mettre le contact d'allumage sur "ON".
2. Effectuer "CIRC SIGN DIR ASSIS" en mode "TEST FONCTION" à l'aide du CONSULT.

OU

1. Démarrer le moteur.
2. Contrôler "SIG DIR ASSIS" en mode "CONTROLE DE DONNEES" à l'aide du CONSULT.

Volant en position neutre : ARRET
Volant braqué : MARCHE

OU

1. Démarrer le moteur.
2. Vérifier la tension entre la borne (43) de l'ECM et la masse.

Tension :
Lorsque le volant de direction est braqué rapidement
Environ 0V
Sauf ci-dessus
Environ 5V

Bon → FIN DE L'INSPECTION

Mauvais

B

VERIFIER LE CIRCUIT DE MISE A LA MASSE.

1. Mettre le contact d'allumage sur "OFF".
2. Débrancher le connecteur de faisceau du manocontact d'huile de direction assistée.
3. Vérifier la continuité du faisceau entre la borne (2) et la masse de moteur.

Il doit y avoir continuité.

Si le résultat est bon, vérifier si le faisceau n'est pas court-circuité à la masse ou à l'alimentation.

Mauvais → Vérifier les points suivants.
- Connecteurs de faisceau (E204), (E29)
- Faisceau ouvert ou court-circuité entre le manocontact d'huile de direction assistée et la masse de moteur

Si le résultat est mauvais, réparer le circuit ouvert, court-circuité à la masse ou court-circuité à l'alimentation du faisceau ou des connecteurs.

Bon

(A)

(Aller à la page suivante).

Simpo PDF Merge and Split Unregistered Version - http://www.simpopdf.com

Manocontact d'huile de direction assistée (Suite)

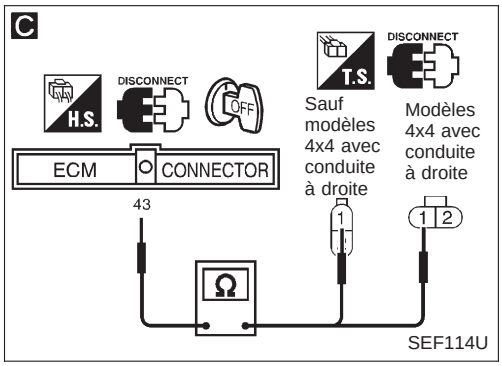

Ⓐ

C

VERIFIER LE CIRCUIT DE SIGNAL D'ENTREE.
1. Débrancher le connecteur de faisceau de l'ECM.
2. Vérifier la continuité du faisceau entre la borne (43) de l'ECM et la borne (1).
   Il doit y avoir continuité.
   Si le résultat est bon, vérifier si le faisceau n'est pas court-circuité à la masse ou à l'alimentation.

Mauvais → Vérifier les points suivants.
- Connecteurs de faisceau (E205), (E33)
- Connecteurs de faisceau (E101), (M5)
- Connecteurs de faisceau (M48), (F54) (conduite à droite)
- Faisceau ouvert ou court-circuité entre l'ECM et le manocontact d'huile de direction assistée

Si le résultat est mauvais, réparer le circuit ouvert, court-circuité à la masse ou court-circuité à l'alimentation du faisceau ou des connecteurs.

Bon ↓

VERIFIER LE COMPOSANT (Manocontact d'huile de direction assistée). Consulter l'"INSPECTION DES COMPOSANTS" ci-dessous.

Mauvais → Remplacer le manocontact d'huile de direction assistée.

Bon ↓

Débrancher et rebrancher sur les circuits les connecteurs de faisceau. Puis procéder à un nouvel essai.

Le problème n'est pas résolu. ↓

Vérifier si les bornes à broches de l'ECM sont endommagées et vérifier la connexion du connecteur de faisceau de l'ECM. Rebrancher le connecteur de faisceau de l'ECM et tester à nouveau.

FIN DE L'INSPECTION

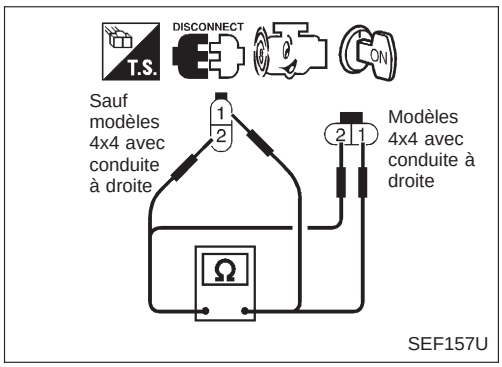

INSPECTION DES COMPOSANTS

Manocontact d'huile de direction assistée

1. Débrancher le connecteur de faisceau du manocontact d'huile de direction assistée, puis démarrer le moteur.
2. Vérifier la continuité entre les bornes (1) et (2).

Conditions	Continuité
Le volant est braqué	Oui
Le volant n'est pas tourné	Non

Si le résultat est mauvais, remplacer le manocontact d'huile de direction assistée.

Simpo PDF Merge and Split Unregistered Version - http://www.simpopdf.com

Electrovanne de contrôle de vanne de commande de tourbillon

DESCRIPTION DU SYSTEME

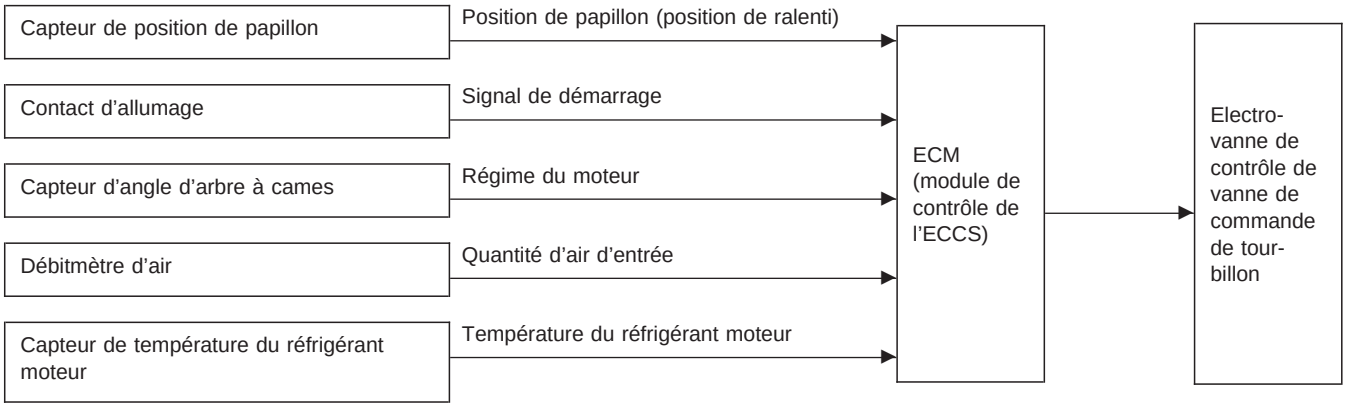

Ce système comporte une vanne de commande de tourbillon située dans le passage d'admission de chaque cylindre.
Au ralenti et à régime moteur bas, la vanne de commande de tourbillon se ferme. De ce fait, la vitesse de l'air dans le passage d'admission augmente, favorisant la vaporisation du carburant et produisant un tourbillon dans la chambre de combustion.
En raison de cette action, le système tend à augmenter la vitesse de combustion du mélange gazeux, à améliorer la consommation en carburant et à accroître la stabilité de la marche du moteur.
De même, dans des conditions autres que le ralenti et le régime moteur bas, ce système ouvre la vanne de commande de tourbillon. Dans ce cas, il tend à augmenter la puissance en améliorant l'efficacité de l'admission via la réduction de la résistance du flux d'admission, et du flux d'admission.
L'électrovanne contrôle l'ouverture et la fermeture de la vanne de commande de tourbillon. Cette électrovanne est actionnée par l'ECM.

Contact de position de papillon	Régime du moteur	Electrovanne de contrôle de vanne de commande de tourbillon	Vanne de commande de tourbillon
Ralenti	Inférieur à 3 600 tr/mn	MARCHE	Fermée
Sauf au ralenti	Plus de 3 600 tr/mn	ARRET	Ouverte

Lorsque la température du réfrigérant moteur est inférieure à 0°C, la vanne de commande de tourbillon est maintenue ouverte.

VALEUR DE REFERENCE DE CONSULT EN MODE DE CONTROLE DE DONNEES

Observation : les données de spécification sont des valeurs de référence.

ELEMENT DE CONTROLE	CONDITION	SPECIFICATION
EV COM TOURBI	● Le moteur tourne à un régime inférieur à 3 600 tr/mn.	MARCHE
	● Sauf ci-dessus	ARRET

BORNES DE L'ECM ET VALEURS DE REFERENCE

Remarques : les données de spécifications sont des valeurs de référence et sont mesurées entre chaque borne et ㊴ (masse de l'ECCS) à l'aide d'un voltmètre.

Simpo PDF Merge and Split Unregistered Version - http://www.simpopdf.com

Electrovanne de contrôle de vanne de commande de tourbillon (Suite)

N° DE BORNE	COULEUR DE CABLE	ELEMENT	CONDITION	DONNEES (Tension du courant continu)
12	GY	Electrovanne de contrôle de vanne de commande de tourbillon	Moteur en marche. └ Régime de ralenti	0 - 1V
			Moteur en marche. └ Le régime moteur est supérieur à 3 600 tr/mn.	TENSION DE LA BATTERIE (11 - 14V)

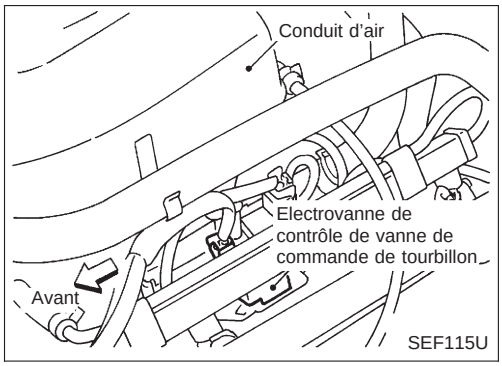

DESCRIPTION DES COMPOSANTS

Electrovanne de contrôle de vanne de commande de tourbillon

L'électrovanne de contrôle de vanne de commande de tourbillon répond au signal de l'ECM. Lorsque l'ECM transmet un signal MARCHE (masse), l'électrovanne est dérivée pour appliquer la dépression du collecteur d'admission à l'actionneur de vanne de commande de tourbillon. Ceci ferme la vanne de commande de tourbillon. Lorsque l'ECM transmet un signal ARRET, le signal de dépression est coupé et la vanne de commande de tourbillon s'ouvre.

Simpo PDF Merge and Split Unregistered Version - http://www.simpopdf.com

Electrovanne de contrôle de vanne de commande de tourbillon (Suite)

EC-SWL/V-01

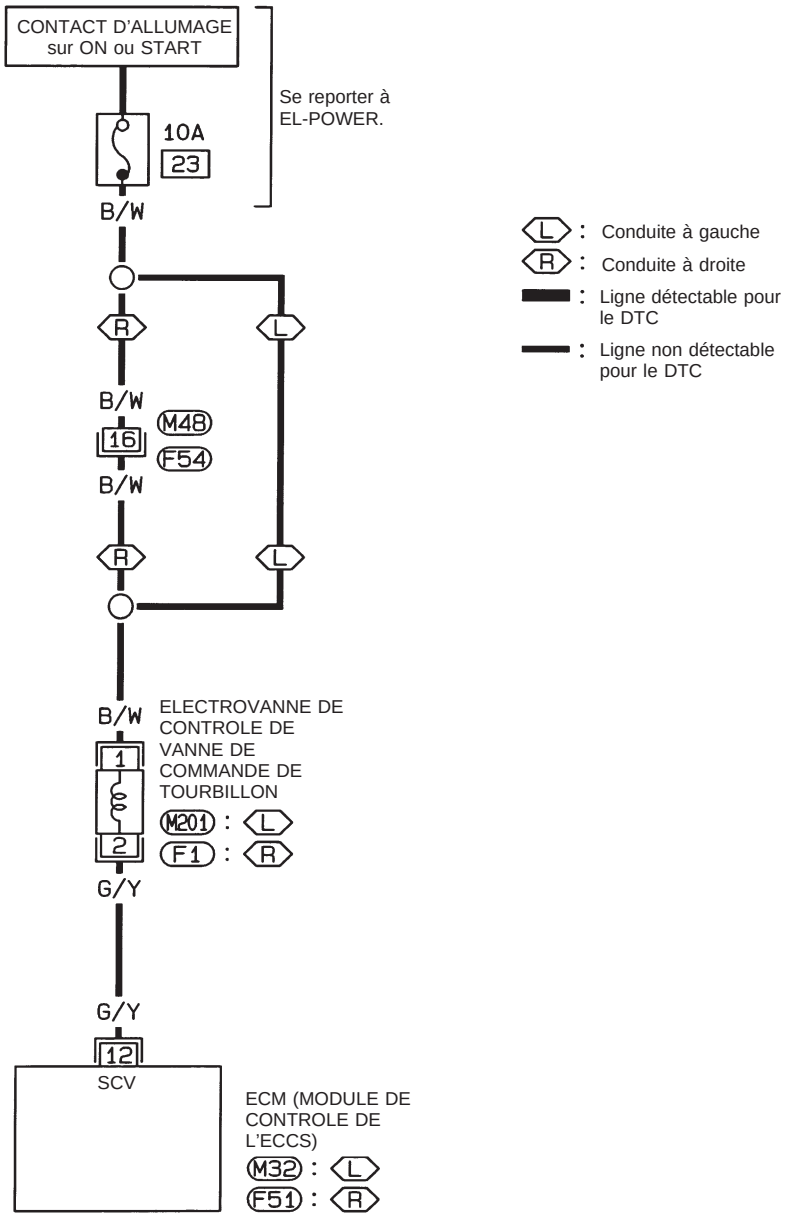



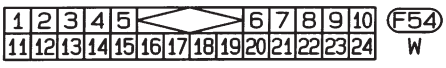

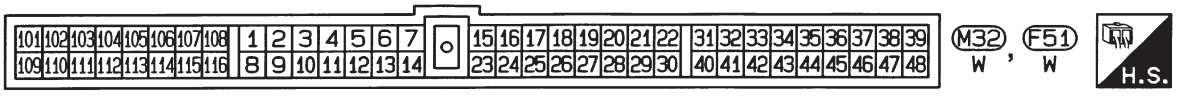

HEC360

Simpo PDF Merge and Split Unregistered Version - http://www.simpopdf.com

Electrovanne de contrôle de vanne de commande de tourbillon (Suite)

PROCEDURE DE DIAGNOSTIC

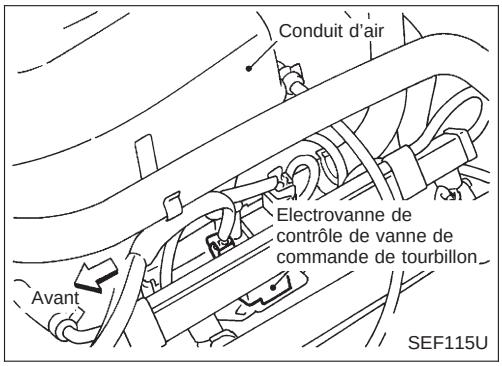

A

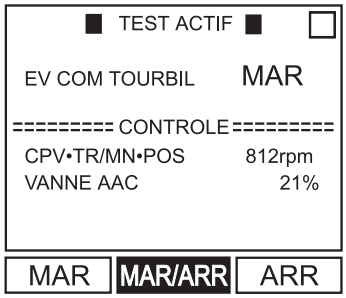

A

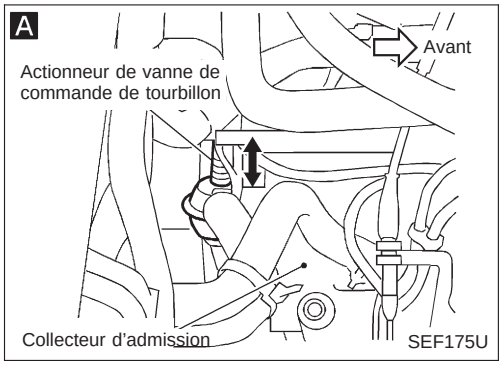

B

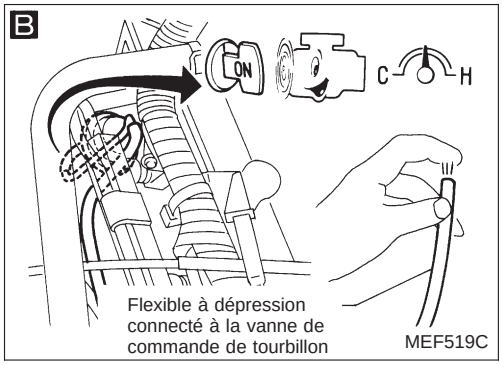

DEBUT DE L'INSPECTION

A

VERIFIER LE FONCTIONNEMENT GENERAL.

1. Démarrer le moteur et le laisser s'échauffer suffisamment.
2. Effectuer "EV COMM TOURBIL" en mode "TEST ACTIF" à l'aide du CONSULT.
3. Tourner l'électrovanne de contrôle de vanne de commande de tourbillon sur "MAR" et "ARR", et vérifier que l'actionneur de la vanne de commande de tourbillon fonctionne.

OU

1. Démarrer le moteur et le laisser s'échauffer suffisamment.
2. Emballer le moteur du ralenti à plus de 3 600 tr/mn, et vérifier que l'actionneur de vanne de commande de tourbillon fonctionne.

Bon → VERIFIER LE COMPOSANT (vanne de commande de tourbillon). Consulter l'"INSPECTION DES COMPOSANTS", EC-173. Si le résultat est mauvais, remplacer la vanne de commande de tourbillon.

Bon → FIN DE L'INSPECTION

Mauvais

B

VERIFIER LA PRESSION A LA VANNE DE COMMANDE DE TOURBILLON.

1. Arrêter le moteur.
2. Débrancher le flexible à dépression de la vanne de commande de tourbillon et redémarrer le moteur.
3. Vérifier s'il y a dépression dans les conditions suivantes.
   Le régime moteur est inférieur à 3 600 tr/mn :
   Il doit y avoir une dépression.
   Le régime moteur est supérieur à 3 600 tr/mn :
   Il ne doit pas y avoir de dépression.

Bon → **VERIFIER LE COMPOSANT (actionneur de vanne de commande de tourbillon).** Consulter l'"INSPECTION DES COMPOSANTS", EC-173. Si le résultat est mauvais, remplacer l'actionneur de vanne de commande de tourbillon.

Mauvais

Ⓐ
(Aller à la page suivante).

Simpo PDF Merge and Split Unregistered Version - http://www.simpopdf.com

Electrovanne de contrôle de vanne de commande de tourbillon (Suite)

C

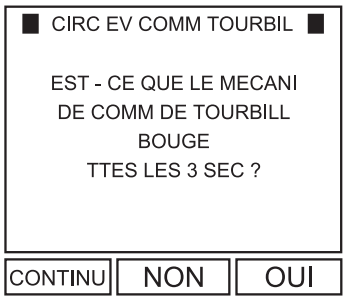

FCSCS01

C

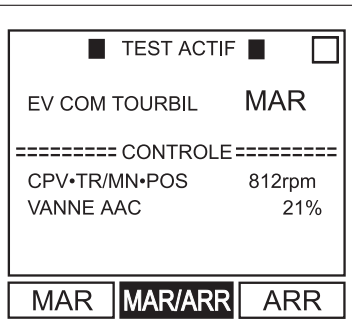

FCATF05

C

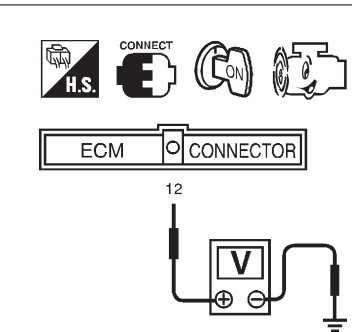

SEF176U

D

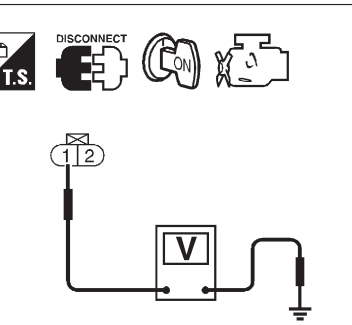

SEF212S

E

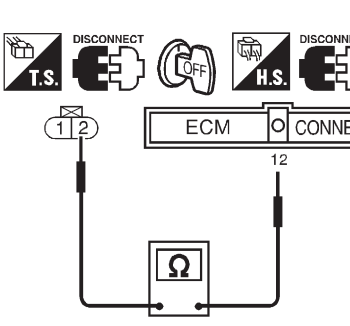

SEF116U

Ⓐ

C

VERIFIER LE FONCTIONNEMENT DE L'ELECTROVANNE DE CONTROLE DE VANNE DE COMMANDE DE TOURBILLON.

1. Arrêter le moteur.
2. Mettre le contact d'allumage sur "ON".
3. Effectuer un test de "CIRC EV COMM TOURBIL" en mode "TEST FONCTION" à l'aide du CONSULT.

OU

2. Mettre le contact d'allumage sur "ON".
3. Effectuer "CIRC EV COMM TOURBIL" en mode "TEST ACTIF" à l'aide du CONSULT.
4. Tourner l'électrovanne de contrôle de vanne de commande de tourbillon sur "MAR" et "ARR", et vérifier son bruit de fonctionnement.

OU

2. Démarrer le moteur et le laisser s'échauffer suffisamment.
3. Vérifier la tension entre la borne ⑫ de l'ECM et la masse dans les conditions suivantes.
   Le régime moteur est inférieur à 3 600 tr/mn:
   Tension : 0 - 1V
   Le régime moteur est supérieur à 3 600 tr/mn :
   Tension : tension de la batterie

Bon → Vérifier les points suivants.
- Flexible à dépression mal raccordé
  Consulter "Schéma des flexibles à dépression", EC-12.
- Flexible à dépression bouché ou fissuré.
- Réservoir à dépression
  Consulter l'"INSPECTION DES COMPOSANTS", EC-173.
- Clapet sens unique
  Consulter l'"INSPECTION DES COMPOSANTS", EC-173.

Si le résultat est mauvais, réparer ou remplacer la(les) pièce(s) défectueuse(s).

Mauvais

D

VERIFIER L'ALIMENTATION ELECTRIQUE.

1. Mettre le contact d'allumage sur "OFF".
2. Débrancher le connecteur de faisceau de l'électrovanne de contrôle de la vanne de commande de tourbillon.
3. Mettre le contact d'allumage sur "ON".
4. Vérifier la tension entre la borne ① et la masse avec le CONSULT ou un testeur.
   Tension : tension de la batterie

Mauvais → Vérifier les points suivants.
- Connecteurs de faisceau F54, M48 (conduite à droite)
- Fusible de 10A
- Faisceau ouvert ou court-circuité entre l'électrovanne de contrôle de la vanne de commande de tourbillon et le fusible

Si le résultat est mauvais, réparer le faisceau ou les connecteurs.

Bon

E

VERIFIER LE CIRCUIT DE SIGNAL D'ENTREE.

1. Mettre le contact d'allumage sur "OFF".
2. Débrancher le connecteur de faisceau de l'ECM.
3. Vérifier la continuité entre la borne ② et la borne ⑫ de l'ECM.
   Il doit y avoir continuité.
   Si le résultat est bon, vérifier si le faisceau n'est pas court-circuité à la masse ou à l'alimentation.

Mauvais → Réparer le circuit ouvert, court-circuité à la masse ou court-circuité à l'alimentation dans un faisceau ou des connecteurs.

Bon

Ⓑ

Simpo PDF Merge and Split Unregistered Version - http://www.simpopdf.com

Electrovanne de contrôle de vanne de commande de tourbillon (Suite)

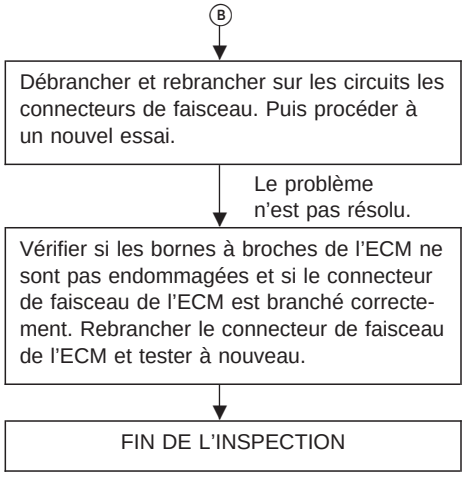

Simpo PDF Merge and Split Unregistered Version - http://www.simpopdf.com

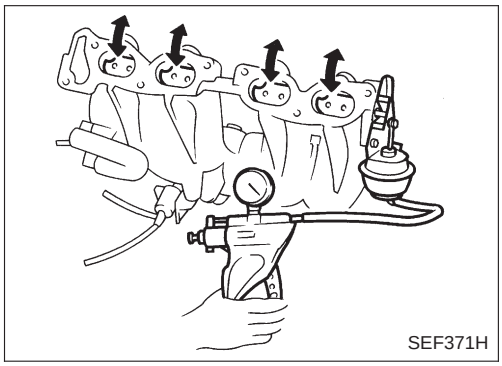
SEF371H

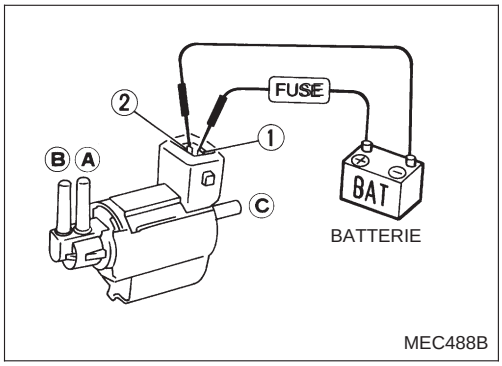

MEC488B

Electrovanne de contrôle de vanne de commande de tourbillon (Suite)

INSPECTION DES COMPOSANTS

Vanne de commande de tourbillon

Appliquer la dépression à l'actionneur et vérifier le fonctionnement de la vanne de commande de tourbillon.

Condition	Vanne de commande de tourbillon
Appliquer la dépression à l'actionneur	Fermée
Aucun courant alimenté	Ouverte

Electrovanne de contrôle de vanne de commande de tourbillon

Vérifier la continuité du passage d'air par l'électrovanne.

Condition	Continuité du passage d'air entre Ⓐ et Ⓑ	Continuité du passage d'air entre Ⓐ et Ⓒ
Courant continu de 12V entre les bornes ① et ② du relais	Oui	Non
Aucun courant alimenté	Non	Oui

Si le résultat est mauvais, remplacer l'électrovanne.

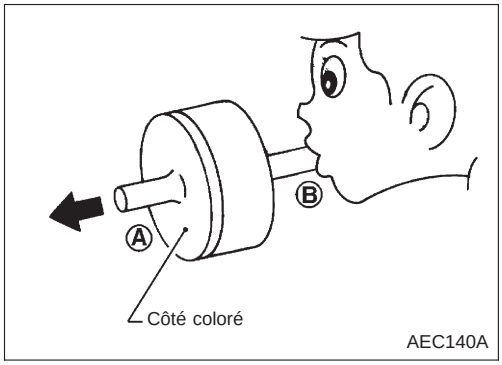

AEC140A

Clapet sens unique

Vérifier la continuité du passage d'air dans le clapet sens unique.

Condition	Continuité du passage d'air
Purger l'air du côté B vers A	Oui
Purger l'air du côté A vers B	Non

Si le résultat est mauvais, remplacer le clapet sens unique.

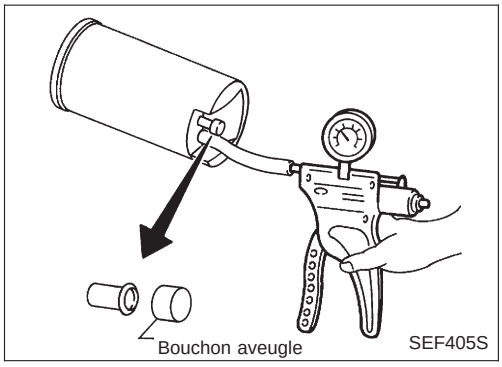

SEF405S

Réservoir à dépression

Vérifier si le réservoir à dépression ne fuit pas.
Appliquer une dépression de −80,0 kPa (−800 mbar, −600 mmHg). Puis la maintenir pendant 10 secondes et vérifier s'il n'y a pas de fuites.

Simpo PDF Merge and Split Unregistered Version - http://www.simpopdf.com

Electrovanne FICD

SAUF POUR L'EUROPE

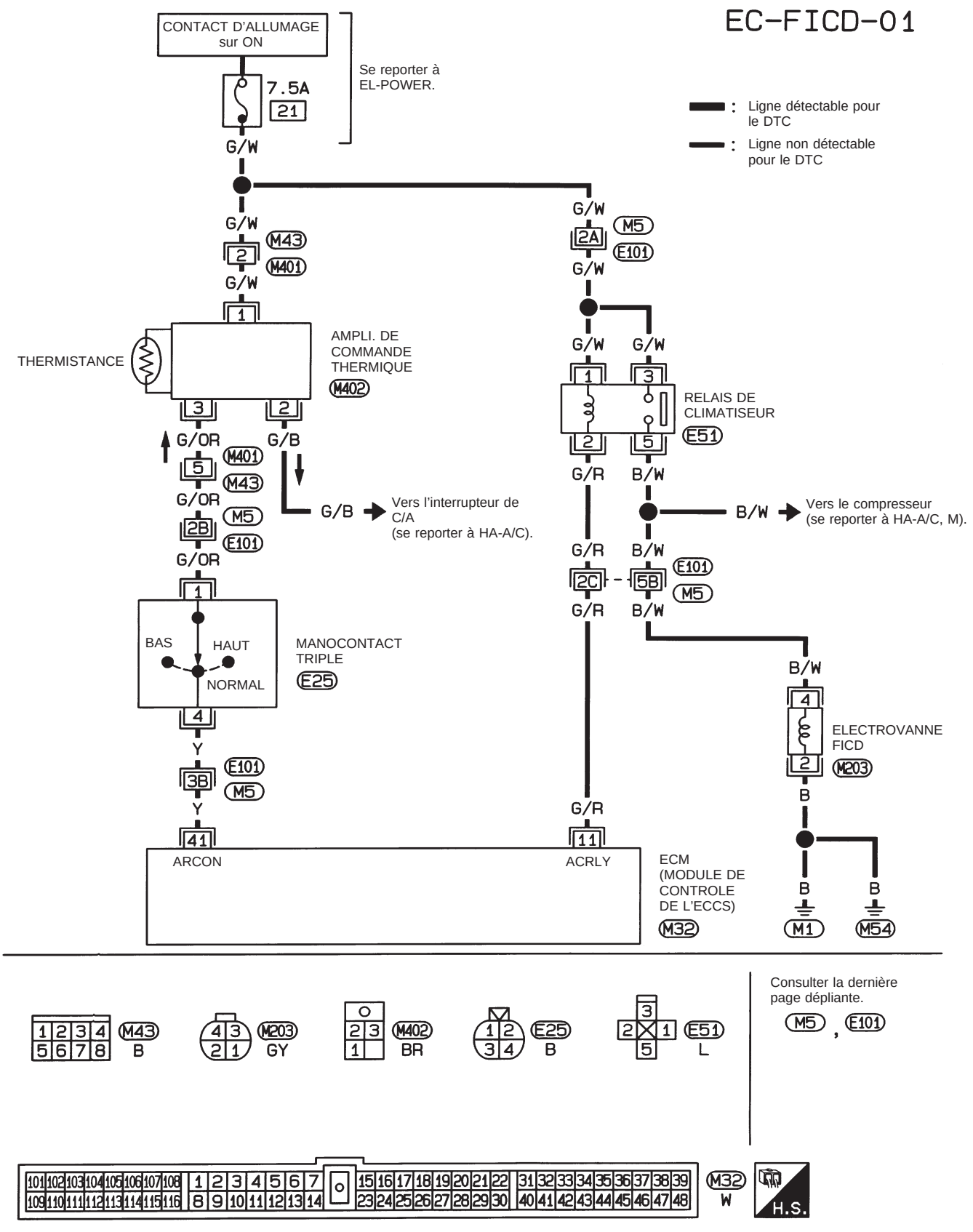

HEC565

Simpo PDF Merge and Split Unregistered Version - http://www.simpopdf.com

Electrovanne FICD (Suite)

POUR L'EUROPE

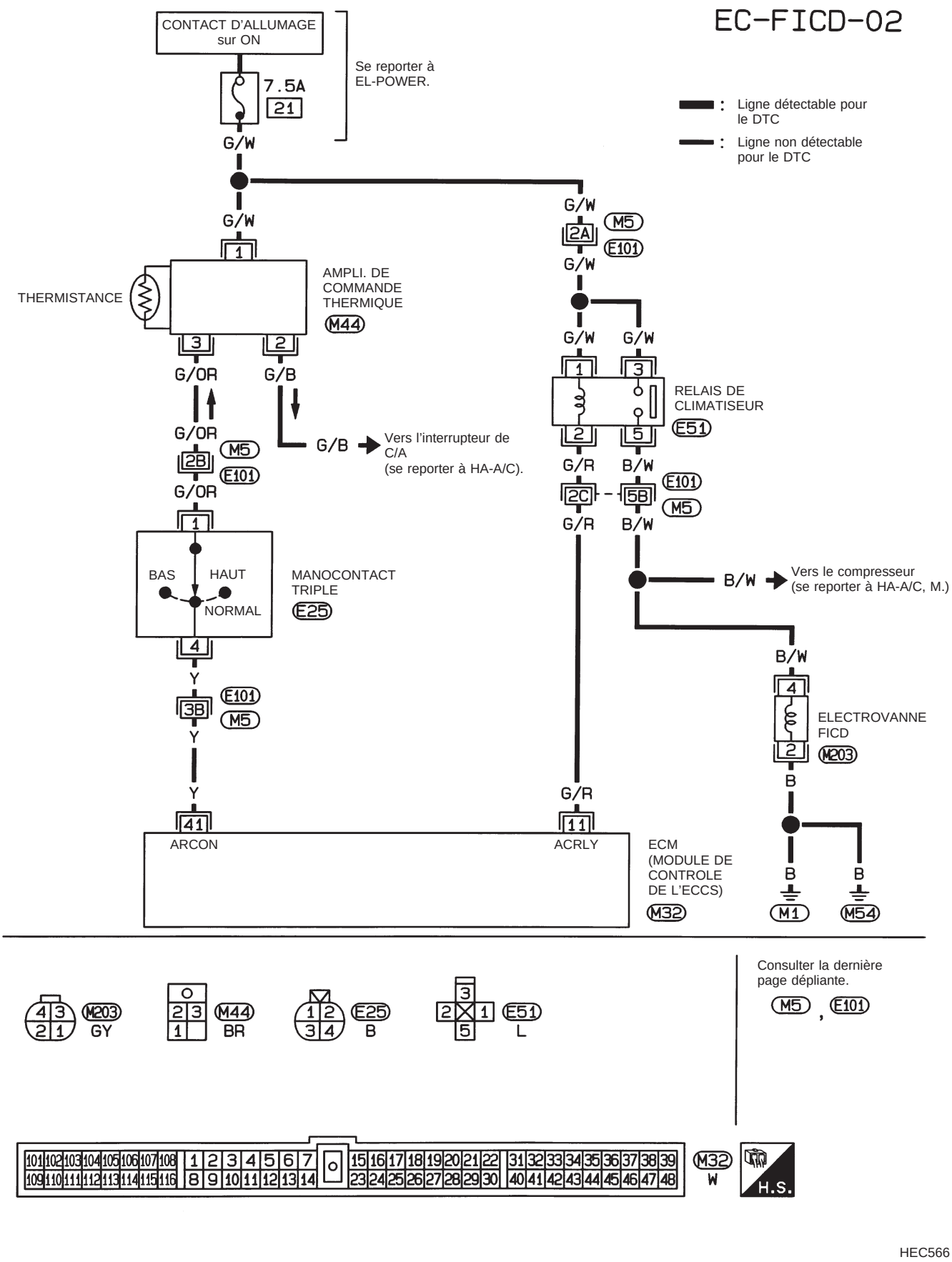

HEC566

Simpo PDF Merge and Split Unregistered Version - http://www.simpopdf.com

Electrovanne FICD (Suite)

DESCRIPTION DES COMPOSANTS

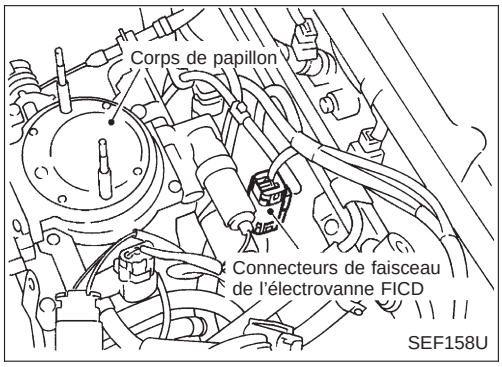

Le dispositif de réglage d'air de ralenti (IAA) est composé de la vanne IACV-AAC, de l'électrovanne FICD et de la vis de réglage de ralenti. Ce dispositif reçoit le signal provenant de l'ECM et il règle le régime de ralenti à la valeur préréglée.

BORNES DE L'ECM ET VALEURS DE REFERENCE

Remarques : les données de spécifications sont des valeurs de référence et sont mesurées entre chaque borne et ㊴ (masse de l'ECCS) à l'aide d'un voltmètre.

N° DE BORNE	COULEUR DE CABLE	ELEMENT	CONDITION	DONNEES (Tension du courant continu)
11	G/R	Relais de climatiseur	Moteur en marche. └ L'interrupteur de climatiseur et le commutateur de soufflerie sont en marche (le compresseur fonctionne).	Environ 1V
			Moteur en marche. └ L'interrupteur de climatiseur est à l'arrêt.	TENSION DE LA BATTERIE (11 - 14V)
41	Y	Interrupteur de climatiseur	Moteur en marche. └ L'interrupteur de climatiseur et le commutateur de soufflerie sont en marche (le compresseur fonctionne).	Environ 0V
			Moteur en marche. └ L'interrupteur de climatiseur est à l'arrêt.	TENSION DE LA BATTERIE (11 - 14V)

Simpo PDF Merge and Split Unregistered Version - http://www.simpopdf.com

Electrovanne FICD (Suite)

PROCEDURE DE DIAGNOSTIC

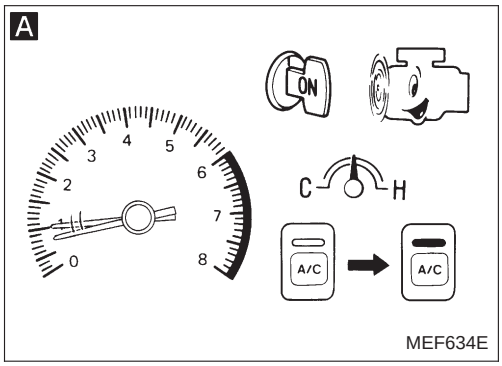

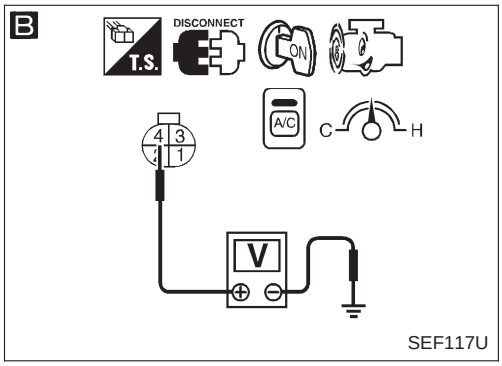

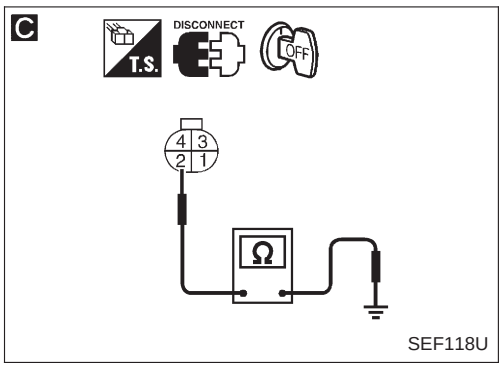

DEBUT DE L'INSPECTION

A

VERIFIER LE FONCTIONNEMENT GENERAL.
1. Démarrer le moteur et le laisser chauffer suffisamment.
2. Vérifier le régime de ralenti.
   800±50 tr/mn
   Si le résultat est mauvais, régler le régime de ralenti.
3. Mettre l'interrupteur de climatiseur et le commutateur de ventilateur de soufflerie sur "ON".
4. Vérifier de nouveau le régime de ralenti.
   900 tr/mn ou plus

Bon → FIN DE L'INSPECTION

Mauvais

Vérifier si le compresseur de climatiseur fonctionne normalement.

Mauvais → Se reporter à la section HA.

Bon

B

VERIFIER L'ALIMENTATION ELECTRIQUE.
1. Arrêter le moteur.
2. Débrancher le connecteur de faisceau de l'électrovanne FICD.
3. Démarrer à nouveau le moteur et tourner l'interrupteur de climatisation et le commutateur de ventilateur de soufflerie sur "ON" (MARCHE).
4. Vérifier la tension entre la borne ④ et la masse avec le CONSULT ou un testeur.
   Tension : tension de la batterie

Mauvais → Vérifier les points suivants.
- Connecteurs de faisceau (E101), (M5)
- Faisceau ouvert ou court-circuité entre l'électrovanne FICD et le relais de climatiseur

Si le résultat est mauvais, réparer le faisceau ou les connecteurs.

Bon

C

VERIFIER LE CIRCUIT DE MISE A LA MASSE.
1. Mettre le contact d'allumage sur "OFF".
2. Vérifier la continuité du faisceau entre la borne ② et la masse de carrosserie.
   Il doit y avoir continuité.
   Si le résultat est bon, vérifier si le faisceau n'est pas court-circuité à la masse ou à l'alimentation.

Mauvais → Réparer le circuit ouvert, court-circuité à la masse ou court-circuité à l'alimentation dans un faisceau ou des connecteurs.

Bon

VERIFIER LE COMPOSANT (Electrovanne IACV-FICD).
Consulter l'"INSPECTION DES COMPOSANTS" à la page suivante.

Mauvais → Remplacer l'électrovanne FICD

Bon

Ⓐ
(Aller à la page suivante).

Simpo PDF Merge and Split Unregistered Version - http://www.simpopdf.com

Electrovanne FICD (Suite)

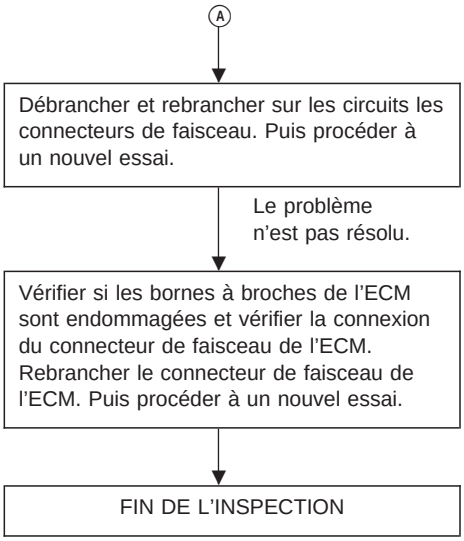

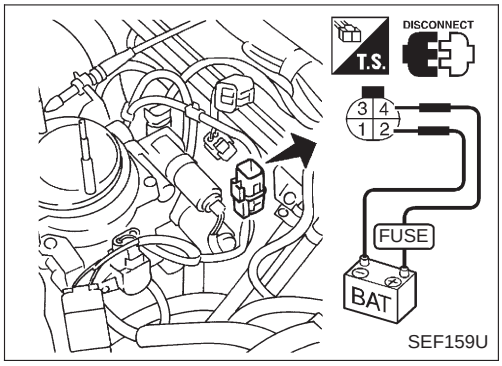

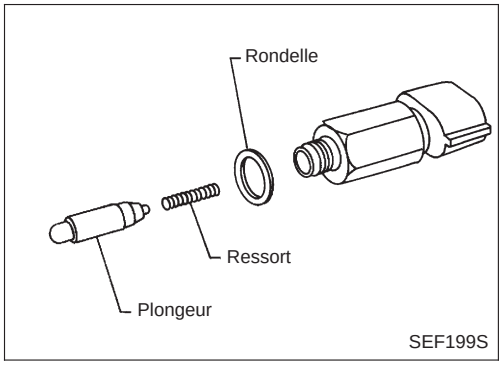

INSPECTION DES COMPOSANTS

Electrovanne FICD

Débrancher le connecteur de faisceau de l'électrovanne FICD.

- Vérifier que l'on entend un déclic lorsqu'un courant continu de 12V est appliquée aux bornes.

- Vérifier que le plongeur n'est ni grippé ni collé.
- Vérifier que le ressort n'est pas cassé.

Simpo PDF Merge and Split Unregistered Version - http://www.simpopdf.com

Connecteurs du témoin (MIL) et de liaison des données

CONDUITE A GAUCHE SAUF POUR L'EUROPE

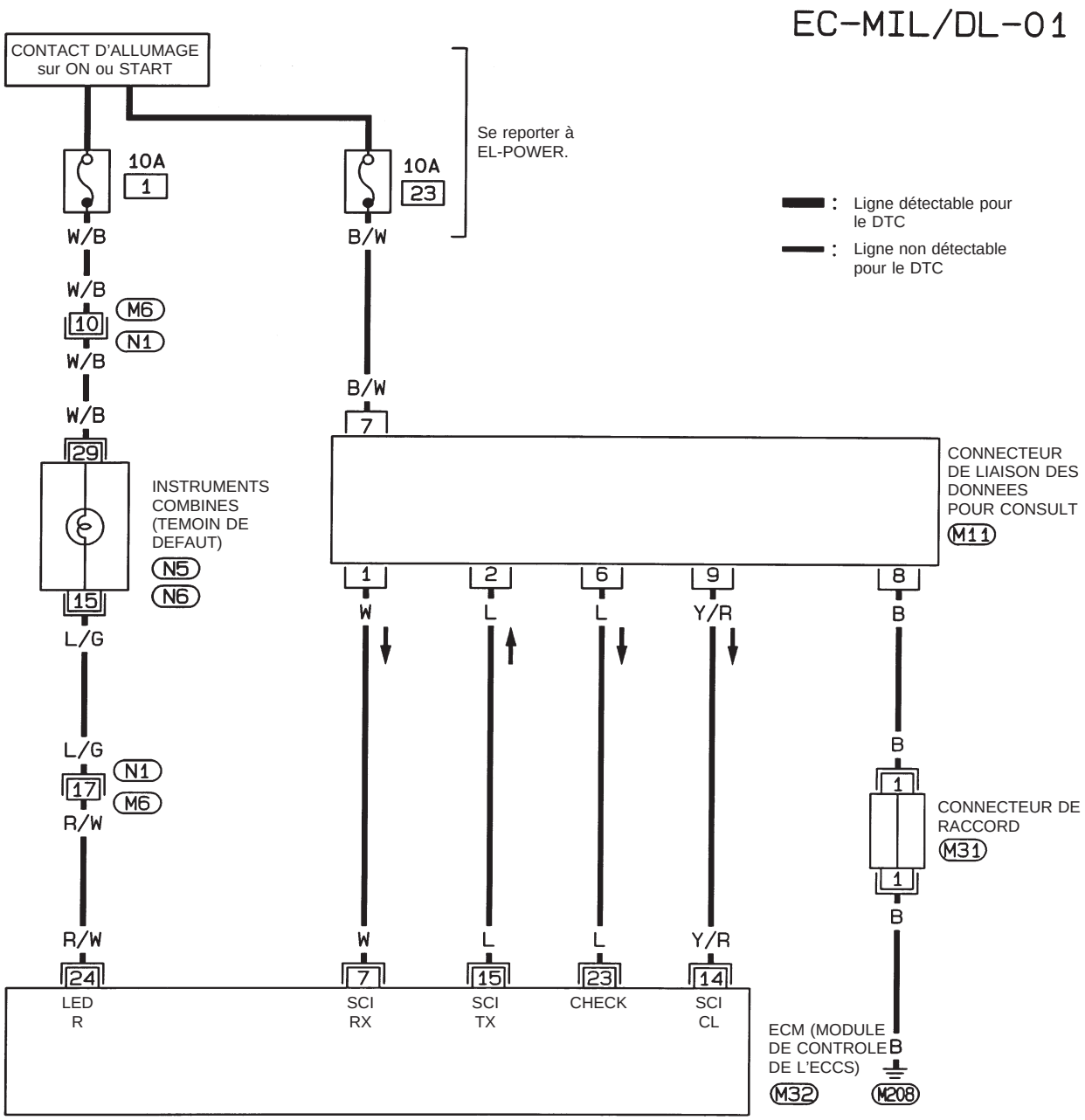

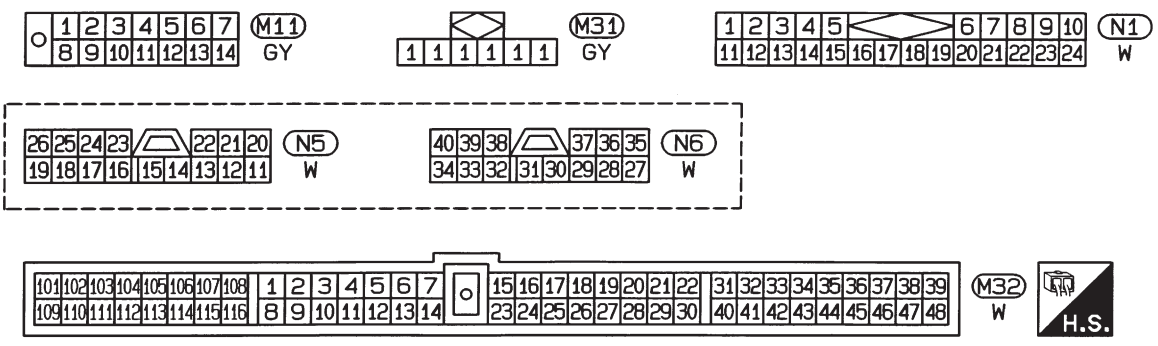

HEC362

Simpo PDF Merge and Split Unregistered Version - http://www.simpopdf.com

Connecteurs du témoin (MIL) et de liaison des données (Suite)

CONDUITE A DROITE

EC-MIL/DL-02

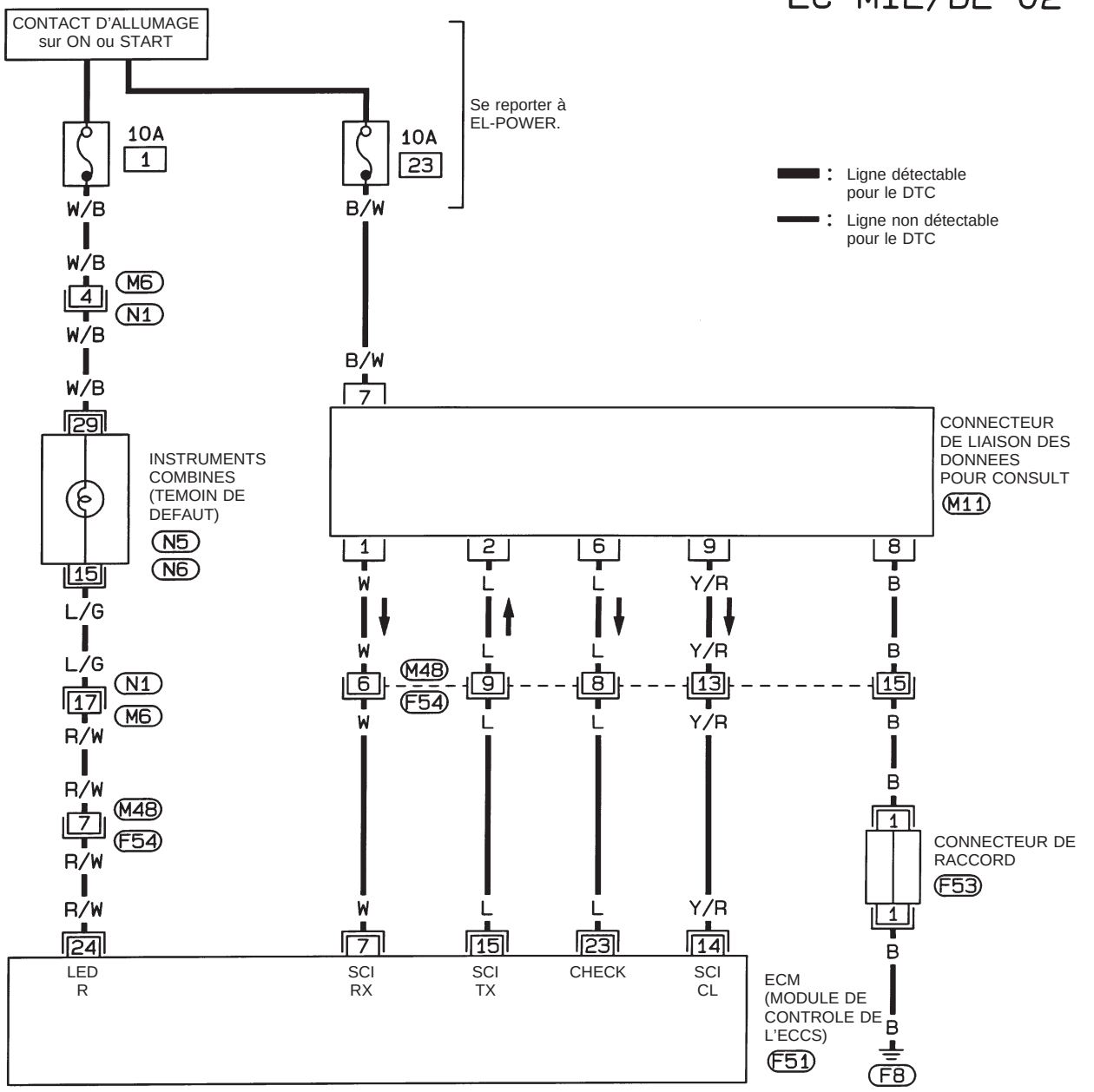

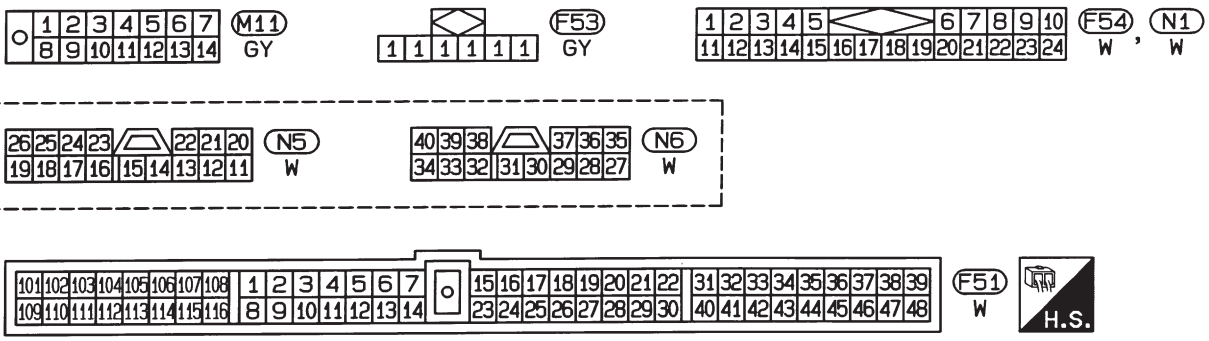

HEC363

Simpo PDF Merge and Split Unregistered Version - http://www.simpopdf.com

Connecteurs du témoin (MIL) et de liaison des données (Suite)

POUR L'EUROPE

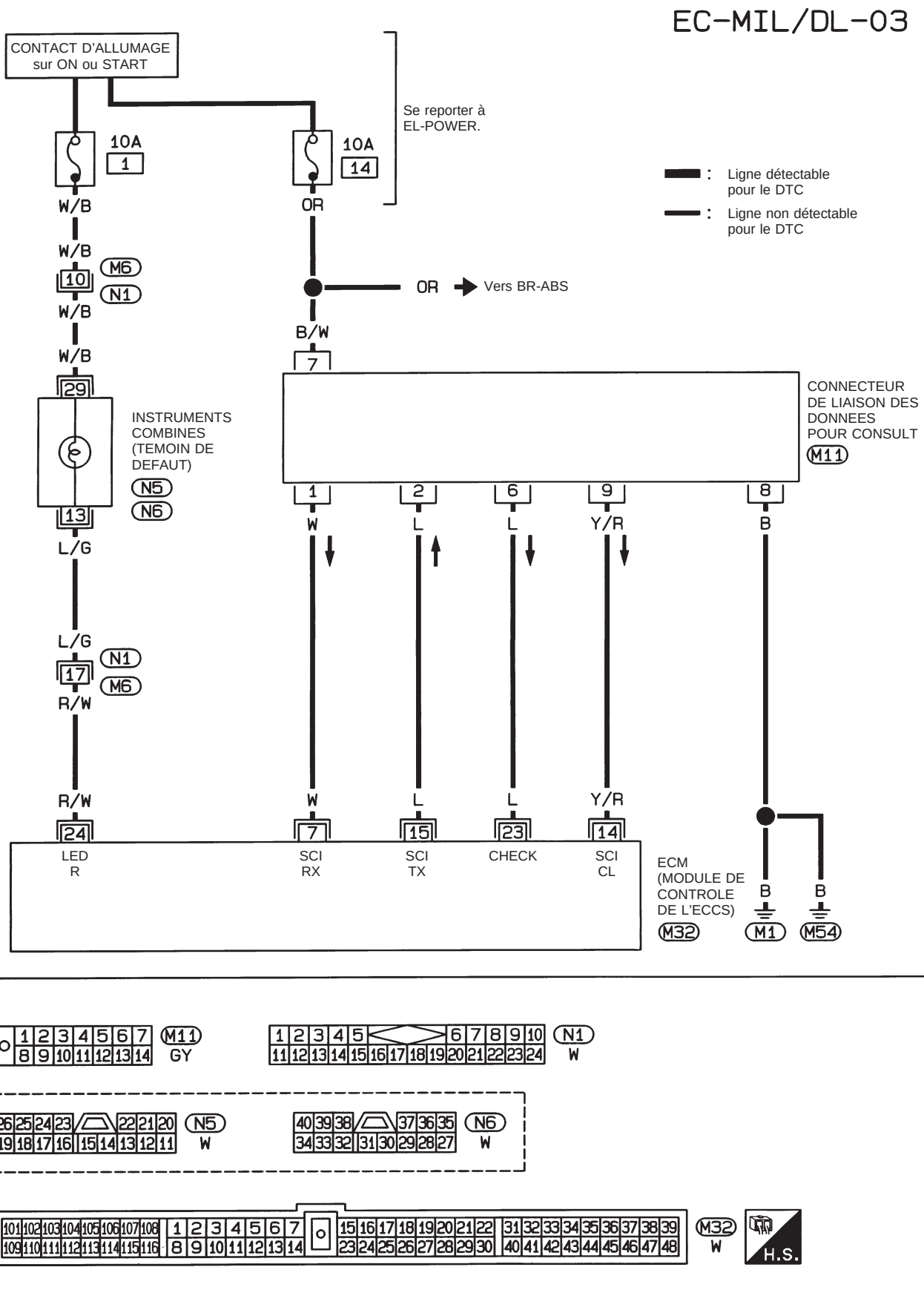

HEC567

Simpo PDF Merge and Split Unregistered Version - http://www.simpopdf.com

ATTENTION :

- **Le démontage et le remontage de la pompe à injection doivent être uniquement réalisés dans des ateliers agréés par NISSAN ou auprès du fabricant de la pompe.**
- **Un appareil d'essai de pompe est nécessaire pour effectuer les réglages et les réparations de la pompe.**
- **Avant de déposer la pompe à injection du véhicule, s'assurer qu'il y a réellement une défaillance apparente.**

Pour les moteurs TD25 avec système antivol Nissan (NATS)

- **Pour l'inspection de l'unité de solénoïde codée (MSOLC), consulter le NATS (diesel) dans la section EL.**
- **Lors du remplacement de l'ensemble de pompe à injection en même temps que le MSOLC, procéder à l'initialisation du NATS à l'aide du CONSULT.**
  Pour la procédure d'initialisation, se reporter au NATS (diesel) dans la section EL.

Circuit d'alimentation

Type 1

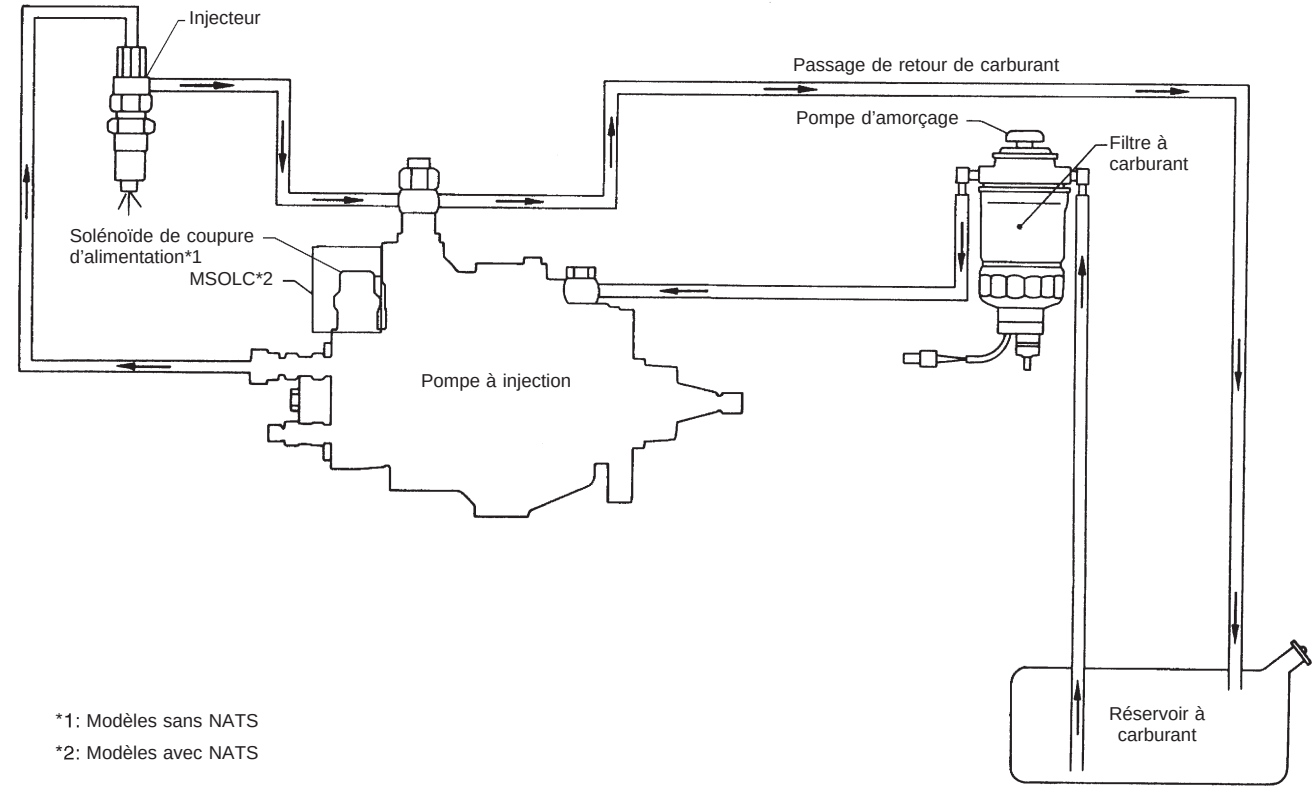

Simpo PDF Merge and Split Unregistered Version - http://www.simpopdf.com

Circuit d'alimentation (Suite)

Type 2

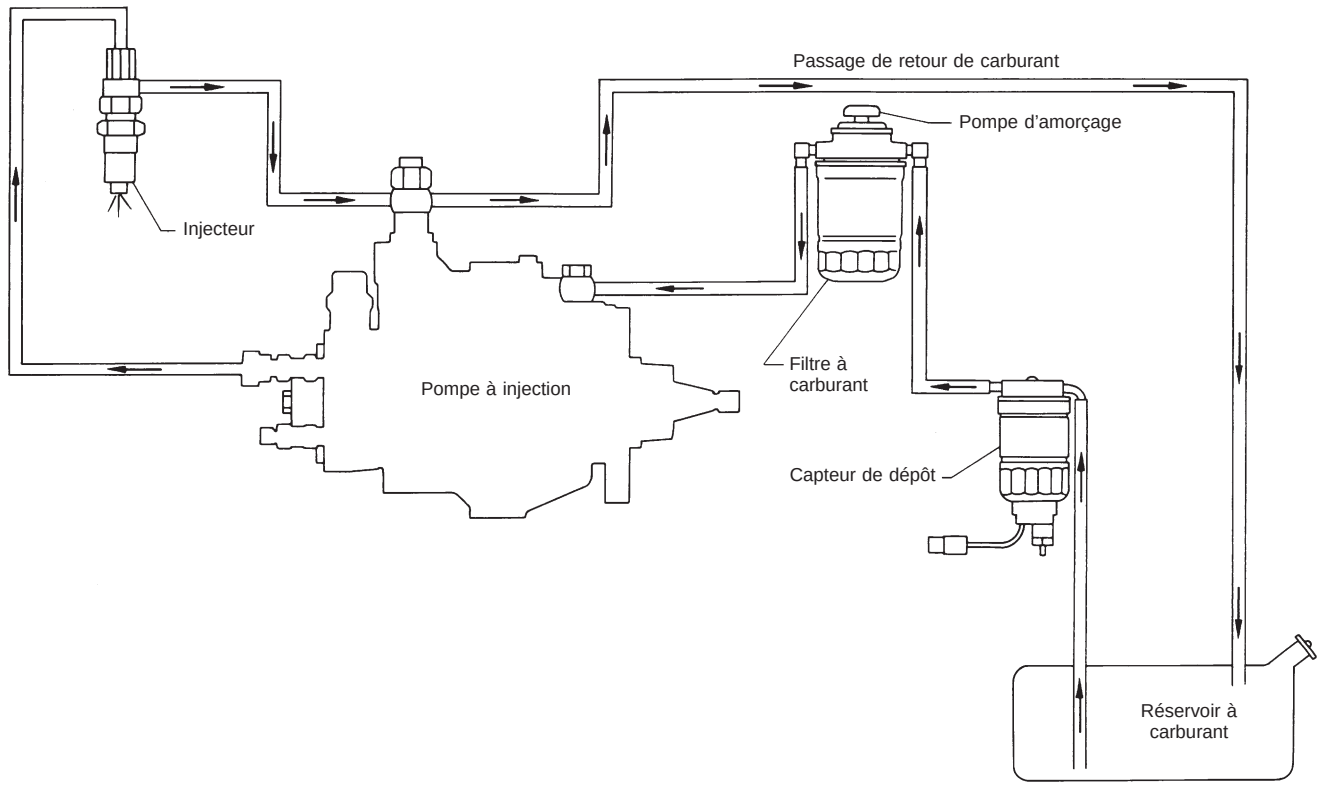

SEF383FA

Type 3

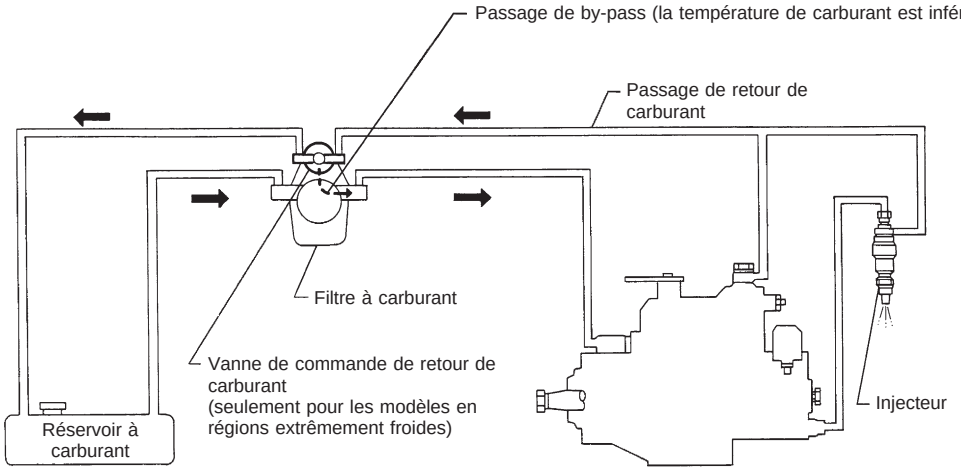

Température de carburant : chaud

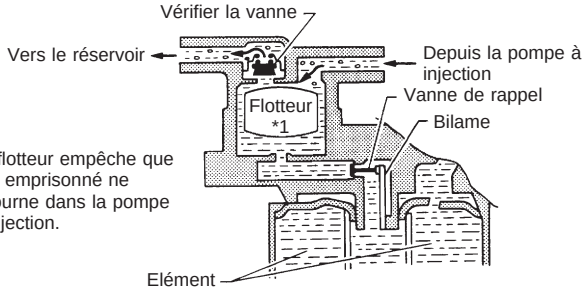

*1: Le flotteur empêche que l'air emprisonné ne retourne dans la pompe à injection.

Température de carburant : froid

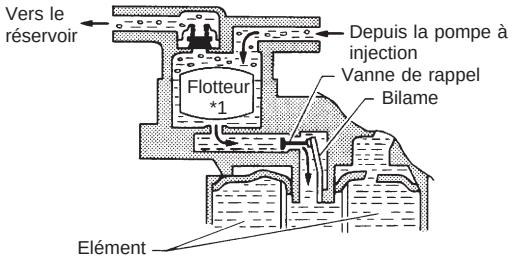

SEF151RA

Simpo PDF Merge and Split Unregistered Version - http://www.simpopdf.com

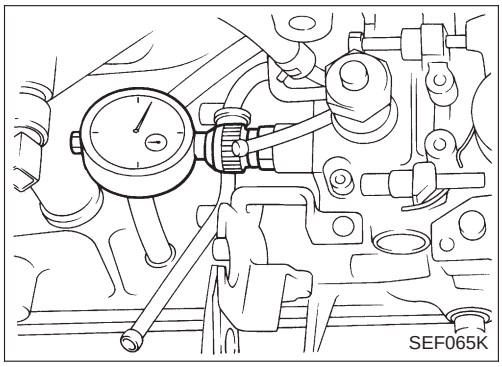
SEF065K

Inspection

INSPECTION DE LA LEVEE DU PLONGEUR

1. Déposer les tubes à injection.
2. Déposer le boulon de bouchon de la tête de distributeur et monter le comparateur à cadran.
3. Mesure de la levée du plongeur

(1) Tourner le vilebrequin dans le sens inverse des aiguilles d'une montre de 20 à 25° à partir de la position P.M.H. du piston n° 1.
(2) Trouver la position de repos de l'aiguille du comparateur à cadran en effectuant l'étape (1), puis ramener la jauge à ''0''.
(3) Tourner le vilebrequin dans le sens des aiguilles d'une montre, jusqu'à ce que le piston n° 1 se trouve au P.M.H.
(4) Prendre note de l'indication donnée par le comparateur à cadran.
0,71±0,05 mm
(5) S'il n'est pas compris dans la plage ci-dessus, le régler jusqu'à ce que la valeur adéquate soit obtenue.

Consulter la page EC-187.

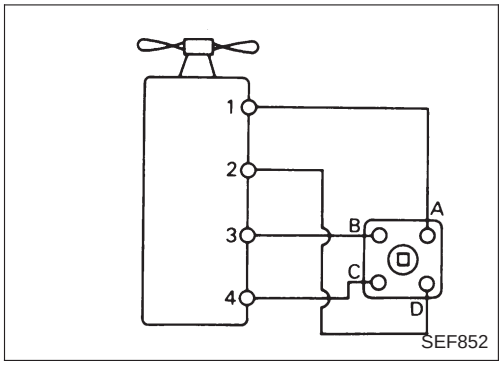

SEF852

4. Débrancher le comparateur à cadran et remonter le boulon de bouchon avec une rondelle neuve.
: 14 - 20 N·m (1,4 - 2,0 kg-m)
5. Raccorder les tuyaux d'injection.
Ecrou évasé :
: 20 - 25 N·m (2,0 - 2,5 kg-m)
6. Purger l'air du système d'alimentation.
Consulter la page EC-197.

CALIBRAGE DE POMPE A INJECTION

Etalonner la pompe à injection sur l'appareil d'essai.
Consulter ''Calibrage standard de la pompe à injection'' dans les SDS, EC-240.

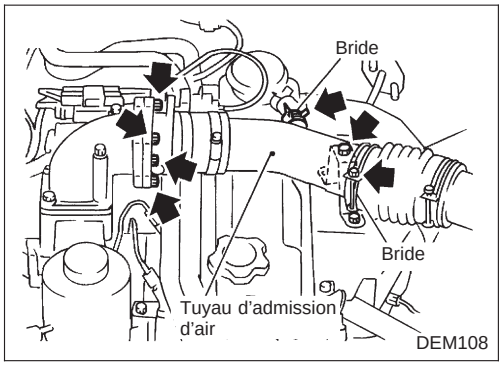

DEM108

Dépose

1. Débrancher le conduit d'air et le boîtier d'admission d'air.

Simpo PDF Merge and Split Unregistered Version - http://www.simpopdf.com

Dépose (Suite)

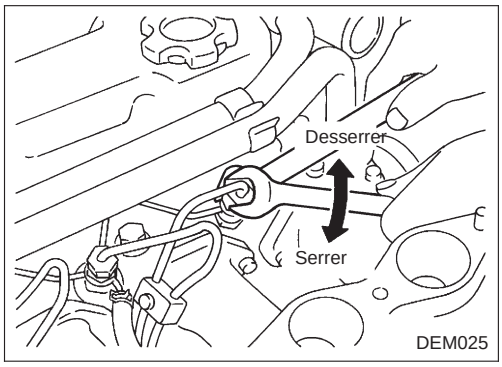

2. Déposer le tube à injection.

Couvrir l'ensemble d'injecteur avec un bouchon pour empêcher la poussière de pénétrer.

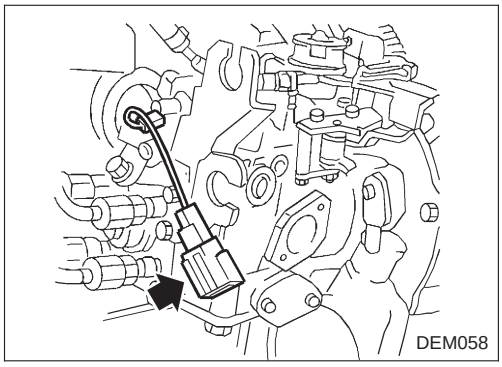

3. Mettre le contact d'allumage sur la position OFF et débrancher les connecteurs de faisceau de câble branchés sur la pompe à injection.

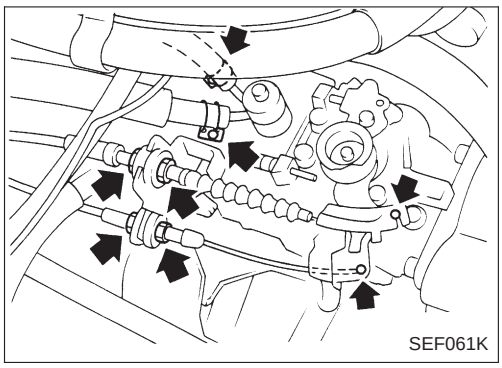

4. Déposer le câble d'accélérateur et débrancher le flexible de trop-plein, le flexible d'entrée de carburant et le flexible de retour de carburant.

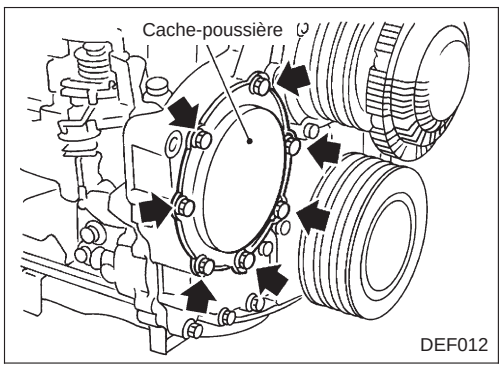

5. Déposer le couvercle du pignon d'entraînement de la pompe à injection.

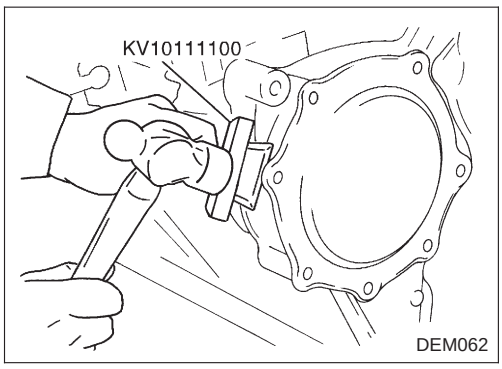

6. Desserrer l'écrou du pignon d'entraînement de la pompe à injection, puis déposer le pignon avec un extracteur.

Simpo PDF Merge and Split Unregistered Version - http://www.simpopdf.com

Dépose (Suite)

7. Déposer la pompe à dépression.
- Déposer le boulon à œil fixant le tuyau d'huile. Déposer la pompe à dépression. Veiller à ne pas plier le tuyau d'huile lors de la dépose de la pompe à dépression.

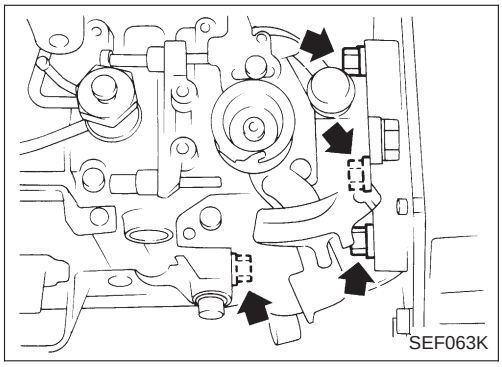
SEF063K

8. Déposer les écrous et boulons de fixation de la pompe à injection.

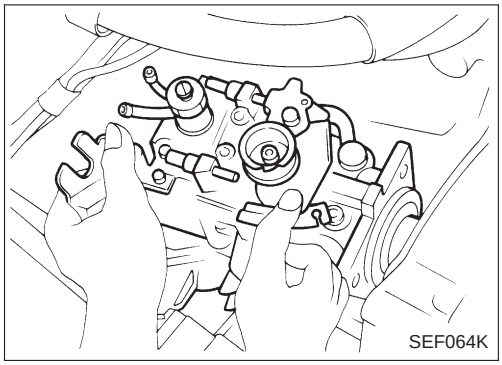
SEF064K

9. Déposer la pompe à injection avec les tubes à injection.
Débrancher le tube à injection de la pompe une fois qu'il est déposé.

Repose et réglage

1. S'assurer que le piston n° 1 est au point mort haut (P.M.H.) dans sa course de compression.

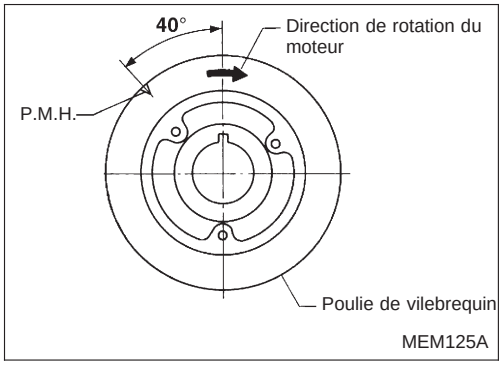

MEM125A

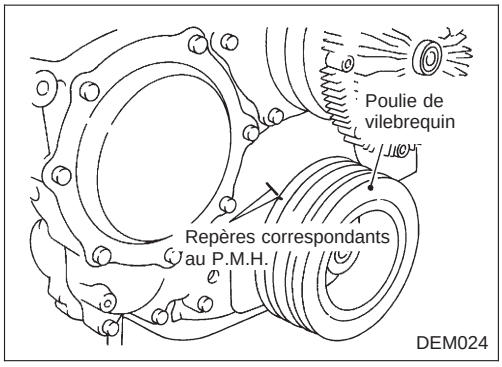

DEM024

Simpo PDF Merge and Split Unregistered Version - http://www.simpopdf.com

Repose et réglage (Suite)

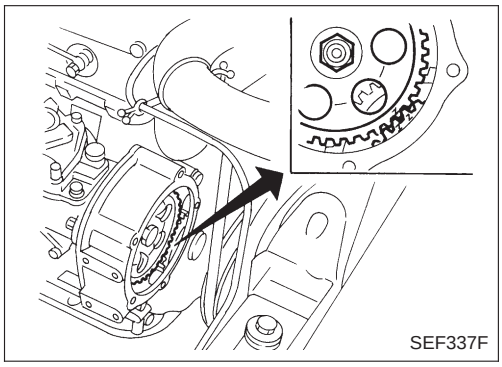
SEF337F

2. Monter la pompe à injection.
(1) Monter provisoirement la pompe à injection de manière à ce que le flasque de la pompe soit aligné avec la marque de repère du couvercle avant.
(2) Reposer le pignon d'entraînement d'injection sur la clavette.
: 59 - 69 N·m (6 - 7 kg-m)

Enduire la clavette de graisse pour l'empêcher de tomber dans le couvercle avant. Veiller à bien aligner les repères "Z".

(3) Reposer le couvercle du pignon d'entraînement en appliquant un cordon uniforme de joint liquide.

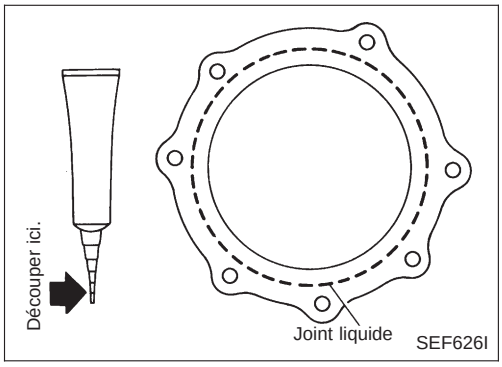

SEF626I

- **S'assurer que le joint liquide fait 2,5 à 3,5 mm de large.**
- **Fixer le couvercle du carter de distribution au carter dans les 5 minutes suivant le revêtement.**
- **Attendre pendant au moins 30 minutes avant de refaire le plein d'huile moteur.**
- **Utiliser du joint liquide d'origine ou un produit équivalent.**

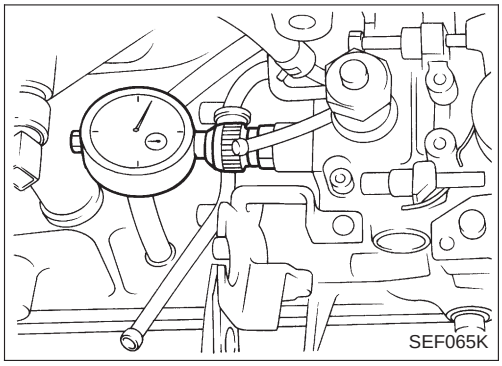
SEF065K

REGLAGE DE LA LEVEE DU PLONGEUR

1. Desserrer les écrous de fixation de pompe à injection et le boulon de support de montage.
2. Déposer le boulon de bouchon de la tête de distributeur et monter le comparateur.
3. Mesure et réglage de la levée du plongeur
(1) Tourner le vilebrequin dans le sens inverse des aiguilles d'une montre de 20 à 25° à partir de la position P.M.H. du piston n° 1.
(2) Trouver la position de repos de l'aiguille du comparateur en effectuant l'étape (1), puis ramener la jauge à "0".
(3) Tourner le vilebrequin dans le sens des aiguilles d'une montre, jusqu'à ce que le piston n° 1 se trouve au P.M.H.
(4) Prendre note de l'indication donnée par le comparateur.
0,71±0,02 mm
(5) Si l'indication donnée par le comparateur n'est pas dans la plage ci-dessus, tourner le corps de pompe jusqu'à ce que la valeur adéquate soit obtenue.

a. Si l'indication est inférieure à la valeur spécifiée, tourner le corps de pompe dans le sens inverse des aiguilles d'une montre.

b. Si l'indication est supérieure à la valeur spécifiée, tourner le corps de pompe dans le sens des aiguilles d'une montre.

4. Serrer soigneusement la pompe à injection.
Boulon de fixation de pompe à injection :
: 20 - 25 N·m (2,0 - 2,5 kg-m)
Pompe à injection au support de fixation :
: 30 - 41 N·m (3,1 - 4,2 kg-m)

Simpo PDF Merge and Split Unregistered Version - http://www.simpopdf.com

Repose et réglage (Suite)

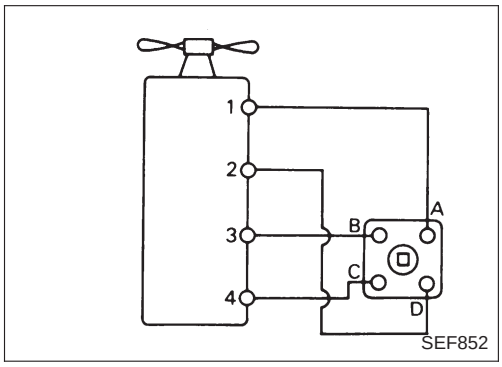

5. Débrancher le comparateur et remonter le boulon de bouchon avec une rondelle neuve.
   : 14 - 20 N·m (1,4 - 2,0 kg-m)
6. Raccorder les tuyaux d'injection.
   Ecrou évasé :
   : 20 - 25 N·m (2,0 - 2,5 kg-m)
7. Purger l'air du système d'alimentation.
   Consulter la page EC-197.

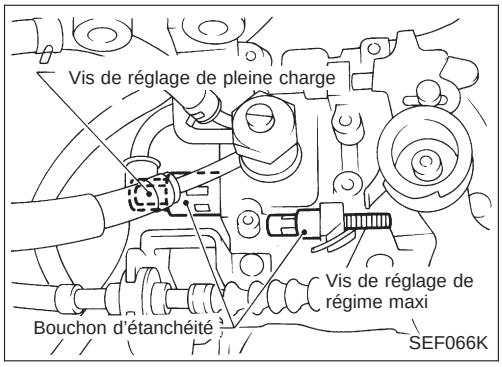

REGLAGE DU RALENTI ET DU REGIME MAXI

ATTENTION :

- **Ne pas déposer les câbles d'étanchéité, sauf nécessité absolue.**
- **Le fait de déranger la position de la vis de réglage pleine charge changera les caractéristiques du débit de carburant, ce qui entraînera un mauvais réglage du moteur. Il faut donc effectuer alors un réglage de la pompe à injection à l'aide de l'appareil d'essai de pompe à injection.**
- **Si on tourne la vis de réglage de régime maxi dans le sens qui augmente l'angle du levier de commande, le moteur risque d'être endommagé.**

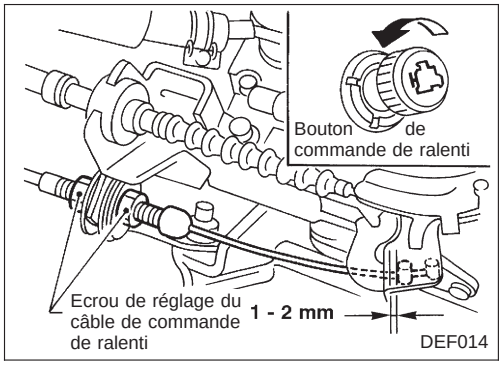

Réglage du câble de commande d'accélérateur

1. Tourner le bouton de commande de ralenti à bout de course en sens inverse des aiguilles d'une montre.
2. S'assurer que le jeu entre l'axe du levier de commande de ralenti et le levier de commande de pompe à injection est conforme aux limites spécifiées.
   Jeu :
   1 - 2 mm
3. Si le jeu n'est pas dans les limites spécifiées, régler à l'aide de l'écrou de réglage de câble de commande de ralenti.
4. Après avoir réglé le jeu, serrer le contre-écrou.

Réglage du ralenti

Consulter ''Contrôle du régime de ralenti'', ''ENTRETIEN DU MOTEUR'' à la section MA.

Simpo PDF Merge and Split Unregistered Version - http://www.simpopdf.com

Repose et réglage (Suite)

Réglage du régime maxi

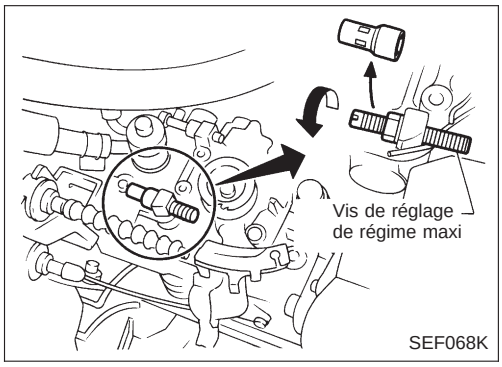

La vis de réglage de régime maxi est retenue par un câble d'étanchéité et ne doit pas être réglée en temps normal. Néanmoins, s'il est absolument nécessaire de l'ajuster, il faut procéder comme suit :

1. Mettre le moteur en marche et le réchauffer jusqu'à ce que l'aiguille de l'indicateur de température du liquide de refroidissement soit au milieu du cadran.
2. Raccorder la prise de compte-tours au tuyau d'injection n° 1.

Pour obtenir une lecture précise du régime moteur, enlever les brides fixant le tuyau d'injection n° 1.

3. Enfoncer à bout de course la pédale d'accélérateur à vide et, à ce point, prendre note de l'indication du compte-tours.

Régime maxi du moteur (à vide) :

5 000 $^{+100}_{-200}$ tr/mn

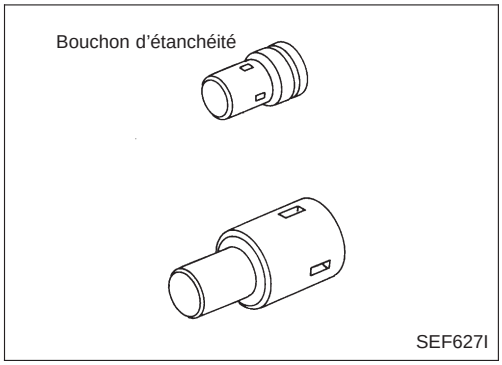

4. Si l'indication est inférieure au régime maximum spécifié, tourner la vis de réglage de régime maxi dans le sens inverse des aiguilles d'une montre, d'un ou deux tours. Enfoncer alors la pédale d'accélérateur au plancher, à vide, et à ce point, lire l'indication donnée par le compte-tours.
5. Si le régime indiqué est encore inférieur à la valeur spécifiée, répéter l'étape 4 ci-dessus jusqu'à ce que le régime adéquat soit atteint.
6. Après réglage, serrer soigneusement le contre-écrou.
7. Sceller avec un câble d'étanchéité ou monter un bouchon d'étanchéité.

Démontage

Consulter ''POMPE A INJECTION VE'' à la section EF du Manuel de Réparation pour les moteurs diesel de série TD (1ère révision).

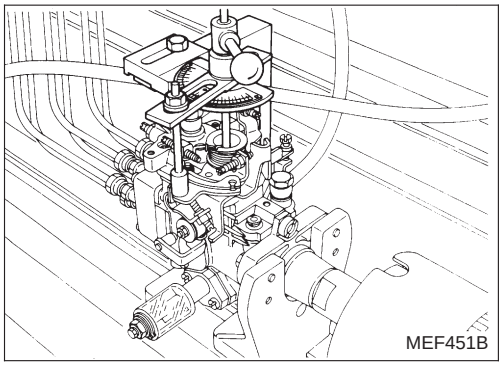

Réglage du minuteur de charge

1. Après réglage de la course du minuteur, chercher la position du levier de commande permettant à la quantité d'injection d'être dans les limites spécifiées, puis fixer le levier à l'aide du dispositif de réglage (KV11282617).

Simpo PDF Merge and Split Unregistered Version - http://www.simpopdf.com

Réglage du minuteur de charge (Suite)

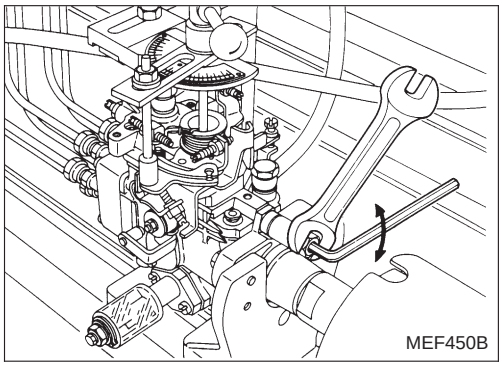
MEF450B

2. Faire tourner la pompe à injection à la vitesse spécifiée, puis régler la position de montage de l'arbre de régulateur de façon à ce que la course du minuteur soit comprise dans les valeurs spécifiées.
   Consulter ''Calibrage standard de la pompe à injection'' dans les SDS pour la course du minuteur.

Levier de réglage de démarrage Q (Quantité)

DEMONTAGE

1. Attacher la pompe à injection au support à l'aide de deux boulons.
2. Déposer le levier de réglage de démarrage Q en enlevant l'écrou, sans omettre de marquer la position de l'installation au préalable.
3. Déposer l'écrou et la rondelle de l'extrémité du levier de commande, puis déposer le levier de réglage de démarrage Q, le ressort, la rondelle et le joint torique.
4. Déposer l'axe de levier et la rondelle à l'intérieur du couvercle de régulateur.

INSPECTION

1. S'assurer que la surface de glissement de l'axe de levier n'est pas usée, rayée ou excessivement endommagée, et que son rebord n'est pas tordu, usé ou endommagé excessivement.
   Remplacer l'axe de levier s'il est endommagé.
2. Inspecter les autres pièces avec attention. Les remplacer si elles sont endommagées, usées, rouillées ou tordues excessivement.

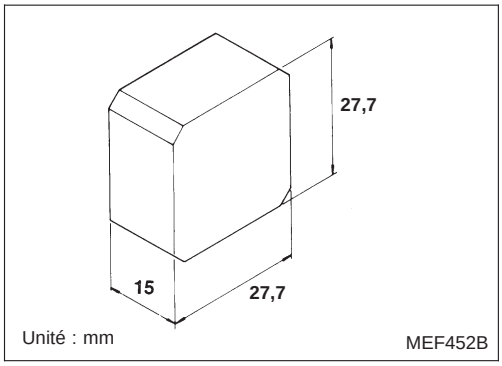

MEF452B

REMONTAGE

Lors du remontage de la pompe à injection de carburant avec le levier de réglage de démarrage Q, une cale d'épaisseur doit être utilisée pour déterminer la position de l'installation du levier.

Simpo PDF Merge and Split Unregistered Version - http://www.simpopdf.com

Levier de réglage de démarrage Q (Quantité) (Suite)

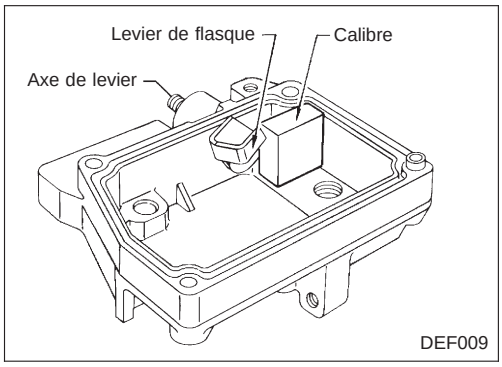

1. En utilisant une cale d'épaisseur, s'assurer que la distance entre la face interne du couvercle et la pointe du rebord du levier de flasque est de 27,7 mm. Maintenir l'axe de levier dans cette position.

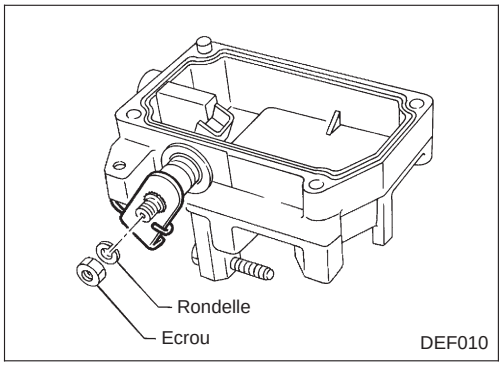

2. Installer le levier de réglage de démarrage Q sur l'axe de levier de sorte que le levier de réglage de démarrage Q entre en contact (ou quasiment en contact) avec le côté inférieur de la base du boulon de réglage.
   Puis fixer le levier de réglage de démarrage Q sur l'axe de levier en utilisant une rondelle et un écrou.

Si le levier de réglage de démarrage Q ne peut pas être installé comme décrit ci-dessus, utiliser un levier de réglage de démarrage Q possédant une dentelure à phases différentes.

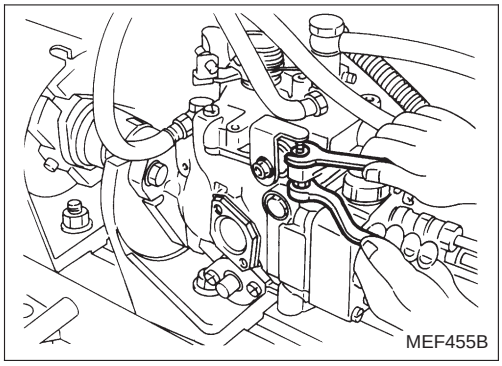

REGLAGE

Ajuster le boulon de réglage du côté de fonctionnement normal de sorte que la quantité d'injection de départ soit comprise dans les spécifications.
Consulter ''Calibrage standard de la pompe à injection'' dans les SDS pour la quantité d'injection de départ.

Simpo PDF Merge and Split Unregistered Version - http://www.simpopdf.com

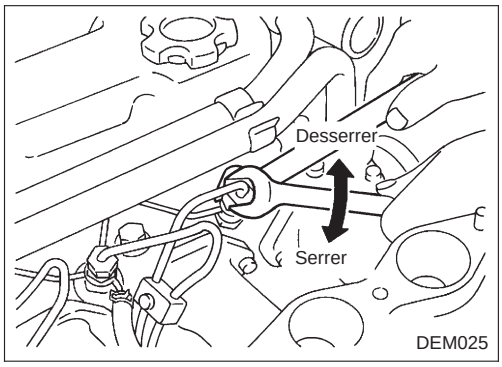

Dépose et repose

1. Déposer l'ensemble de tube à injection.
2. Déposer l'ensemble du tube de trop-plein.

Pour éviter que le tube de trop-plein ne se casse, le déposer en serrant le porte-injecteur.

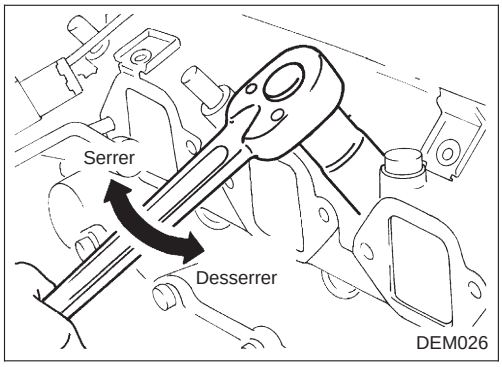

3. Déposer l'ensemble injecteur à l'aide d'une clé à douille longue.
4. Reposer l'injecteur dans l'ordre inverse de la dépose.

Injecteur à culasse :
: 54 - 64 N·m (5,5 - 6,5 kg-m)
Ecrou de tube de trop-plein :
: 29 - 39 N·m (3,0 - 4,0 kg-m)
Ecrou évasé de tube à injection :
: 20 - 25 N·m (2,0 - 2,5 kg-m)

a. Il faut toujours remplacer les joints d'injecteur par des pièces neuves.
b. Pour éviter que le tube de trop-plein ne se casse par la suite, il convient de serrer ses écrous progressivement en séquence.

5. Purger l'air du système d'alimentation.

Consulter ''Système de purge de carburant'', page EC-197.

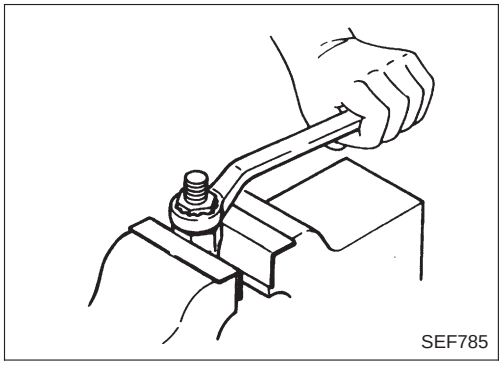

Démontage

1. Desserrer le connecteur d'admission tout en empêchant le sommet de l'injecteur de tourner.

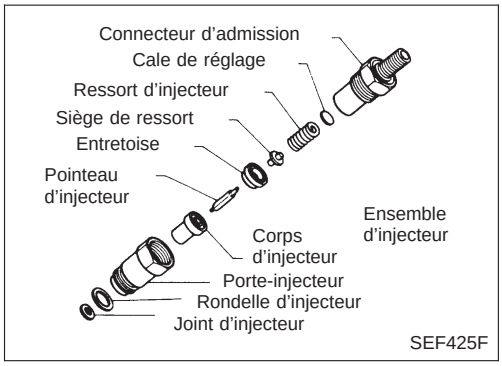

2. Disposer toutes les pièces démontées dans l'ordre indiqué ci-contre.

Simpo PDF Merge and Split Unregistered Version - http://www.simpopdf.com

Inspection

Nettoyer soigneusement toutes les pièces démontées dans du kérosène ou du solvant frais.

- Si le pointeau est endommagé ou fendu, remplacer l'ensemble injecteur par un ensemble neuf.
- Si l'extrémité du pointeau est grippée ou excessivement décolorée, remplacer l'ensemble injecteur.
- Vérifier le corps injecteur et l'entretoise pour s'assurer que le contact est correct. Remplacer l'ensemble injecteur ou porte-injecteur s'ils sont excessivement usés ou endommagés.
- Vérifier le contact entre l'entretoise et le porte-injecteur. Remplacer l'entretoise ou le porte-injecteur s'ils sont excessivement usés ou endommagés.
- Vérifier si le ressort d'injecteur n'est pas excessivement usé ou endommagé. Le remplacer par un ressort neuf s'il est excessivement usé ou endommagé.

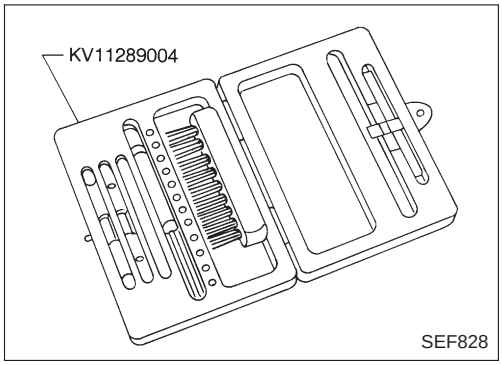

Nettoyage

a. Ne pas toucher les surfaces de contact de l'injecteur avec ses doigts.

b. Pour nettoyer les injecteurs, utiliser une tige en bois et une brosse en laiton avec du gazole propre.

1. Nettoyer l'ensemble de l'injecteur en utilisant son kit de nettoyage.

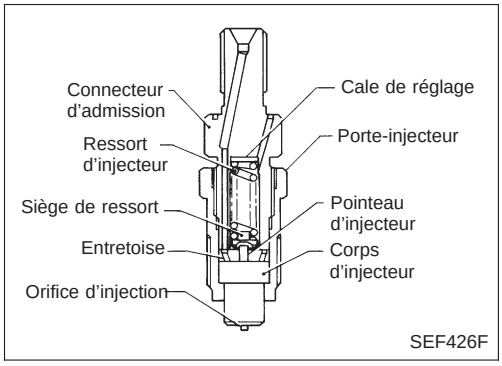

2. Les parties à nettoyer sont indiquées sur la figure de gauche.

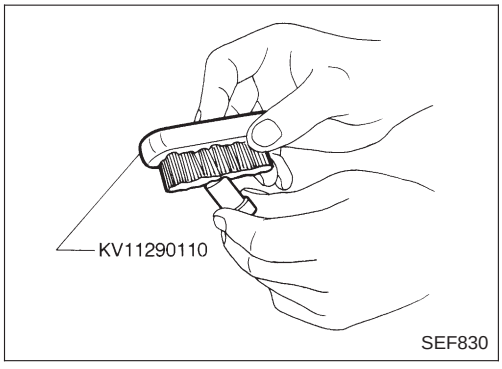

3. Enlever tous les dépôts de charbon de la surface extérieure du corps d'injecteur (sauf la partie enveloppante) à l'aide de l'outil spécial.

Simpo PDF Merge and Split Unregistered Version - http://www.simpopdf.com

Nettoyage (Suite)

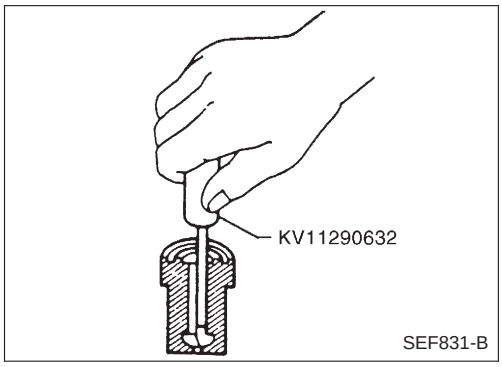

4. Nettoyer le carter à carburant de l'injecteur avec l'outil spécial.

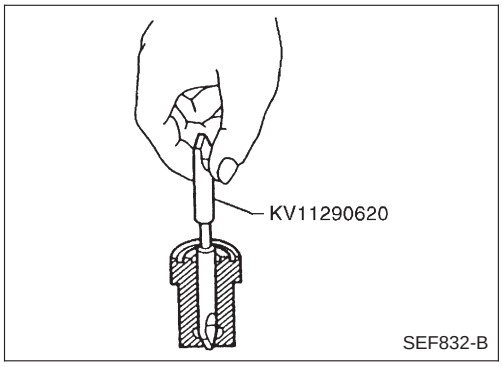

5. Nettoyer le siège de l'injecteur à l'aide de l'outil spécial.

Ce travail requiert un soin extrême car le fonctionnement efficace de l'injecteur dépend en grande partie de l'état du siège.

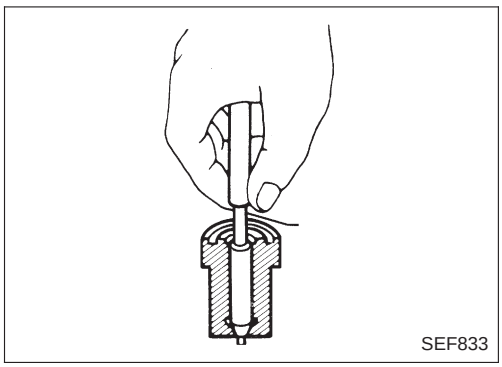

6. Nettoyer l'orifice d'injection à l'aide de l'outil spécial.

Procéder toujours en partant de l'intérieur vers l'extérieur pour éviter de chanfreiner l'orifice d'injection.

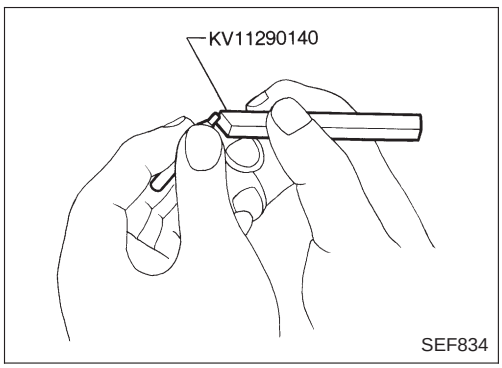

7. Décarboniser l'extrémité du pointeau de l'injecteur avec l'outil spécial.

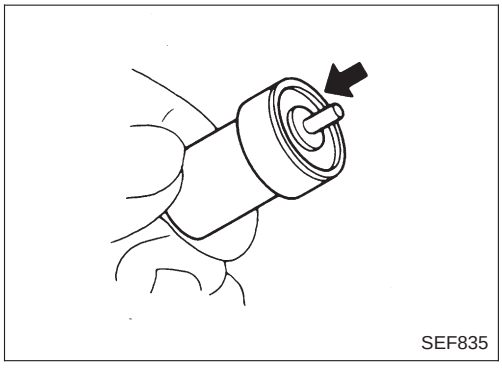

8. Vérifier si le pointeau est en position correcte.
(1) Tirer le pointeau à environ mi-course de son siège et le relâcher.
(2) Le pointeau doit s'enfoncer très régulièrement dans le corps, sous son propre poids.
(3) Répéter cet essai et faire tourner le pointeau légèrement à chaque fois.

Si le pointeau ne retombe pas librement à partir d'une position quelconque, remplacer le pointeau et le corps comme un ensemble.

Simpo PDF Merge and Split Unregistered Version - http://www.simpopdf.com

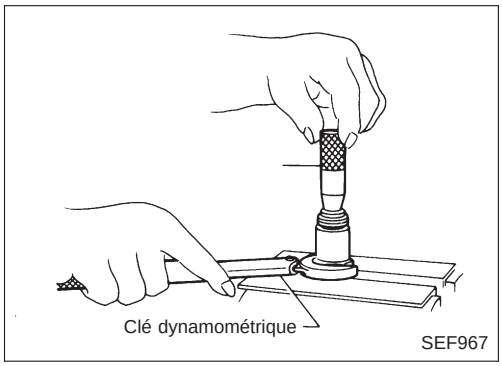

Remontage

Remonter dans l'ordre inverse du démontage.

Connecteur d'admission à porte-injecteur :
: 29 - 49 N·m (3,0 - 5,0 kg-m)

Essai et réglage

AVERTISSEMENT :
Lorsqu'on utilise un appareil d'essai pour injecteur, il faut veiller à ne pas laisser le carburant diesel vaporisé par l'injecteur entrer en contact avec les mains ou avec le corps, et il faut s'assurer que les yeux sont correctement protégés par des lunettes de travail.

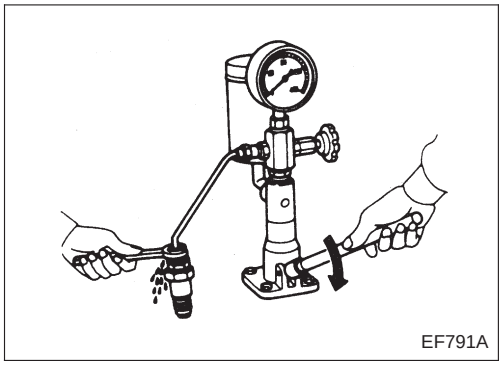

ESSAI DE PRESSION D'INJECTION

1. Monter l'injecteur sur l'appareil d'essai et purger l'air par l'écrou évasé.

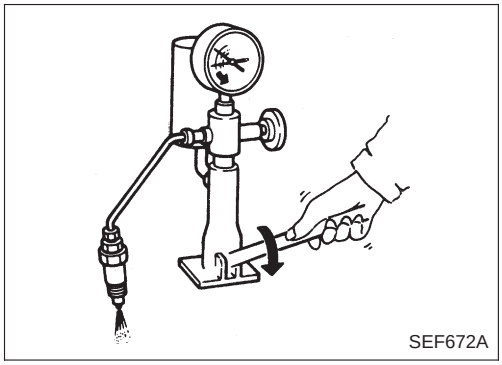

2. Pomper lentement la poignée de l'appareil (une fois par seconde) et surveiller le manomètre.
3. Prendre note de la valeur indiquée par le manomètre, lorsque la pression d'injection commence juste à chuter.

Pression d'injection initiale :
Usagé 9 807 - 10 297 kPa
(98,1 - 103,0 bar, 100 - 105 kg/cm^2)
Neuf 10 297 - 11 278 kPa
(103,0 - 112,8 bar, 105 - 115 kg/cm^2)

Vérifier systématiquement la pression d'injection initiale á l'aide d'un injecteur neuf.

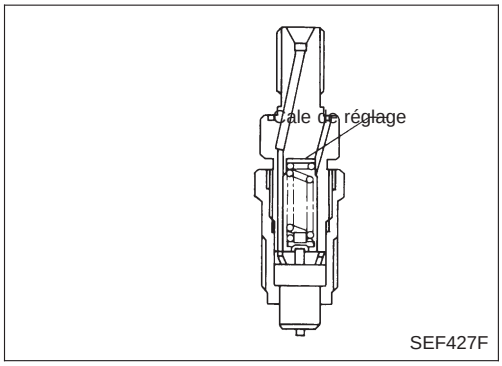

4. Pour régler la pression d'injection, changer les cales de réglage.

a. Le fait d'augmenter l'épaisseur des cales augmente la pression d'injection initiale. Le fait de diminuer l'épaisseur réduit la pression initiale.
b. Une cale d'épaisseur de 0,04 mm correspond à une différence approximative de 471 kPa (4,71 bar, 4,8 kg/cm^2) de la pression d'injection initiale.

Consulter ''Injecteur'' dans les SDS pour les cales de réglage, EC-239.

Simpo PDF Merge and Split Unregistered Version - http://www.simpopdf.com

Essai et réglage (Suite)

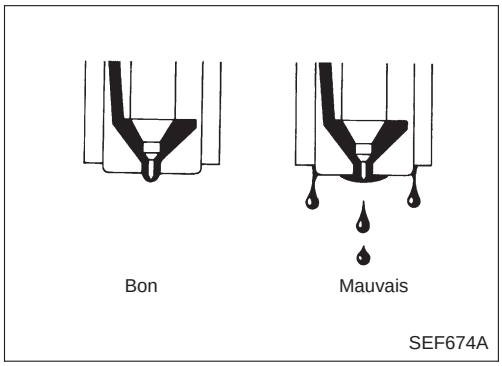

ESSAI D'ETANCHEITE

1. Maintenir la pression d'environ 981 à 1 961 kPa (9,8 à 19,6 bar, 10 à 20 kg/cm^2) sous la pression à injection initiale.
2. Vérifier que la pointe de l'injecteur et le contour du corps ne gouttent pas.
3. S'il y a des fuites, nettoyer, réparer ou remplacer l'injecteur.

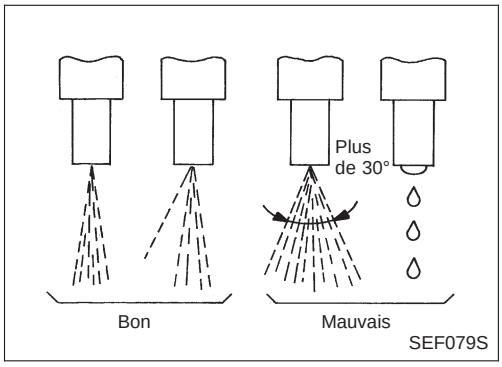

ESSAI DU JET D'INJECTION

1. Contrôler le cône d'injection en pompant une fois par seconde la poignée du contrôleur d'injecteurs.

a. Si l'angle de jet principal est inférieur à 30 degrés (comme indiqué), l'injecteur est bon.

b. L'injecteur est normal même si un mince jet dévie du jet principal (forme B).

2. Si l'injecteur n'est pas normal, le régler ou le nettoyer, ou bien le remplacer.

Simpo PDF Merge and Split Unregistered Version - http://www.simpopdf.com

Système de purge de carburant

Il faut purger l'air du système lorsque la pompe à injection est déposée ou lorsque le système d'alimentation est réparé.
Protéger la pompe et les supports de moteur des éclaboussures de carburant avec des chiffons.
Si le moteur ne démarre pas après avoir purgé l'air, desserrer les tubes à injection du côté injecteur et lancer le moteur jusqu'à ce que le trop-plein de carburant s'écoule du tube à injection. Serrer les écrous évasés du tube à injection.
Si le moteur ne fonctionne pas régulièrement après son démarrage, l'emballer trois fois.

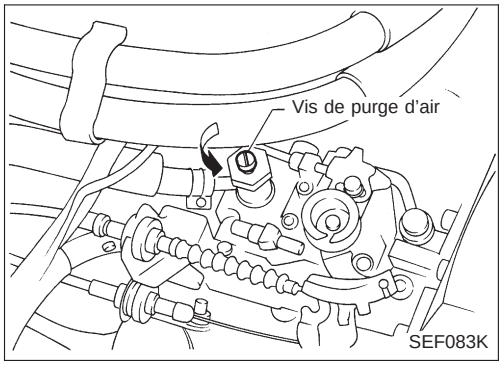

ATTENTION :
Essuyer toute trace de carburant qui serait sorti au moment de la purge de l'air à chaque étape.

- **Etape 1 : purge du filtre à carburant et de la pompe à injection**

1. Desserrer la vis de purge d'air de la pompe à injection.
2. Déplacer la pompe d'amorçage de filtre à carburant vers le haut et vers le bas jusqu'à ce qu'il n'y ait plus d'air qui s'échappe de la vis de purge d'air.
3. Serrer la vis de purge d'air.

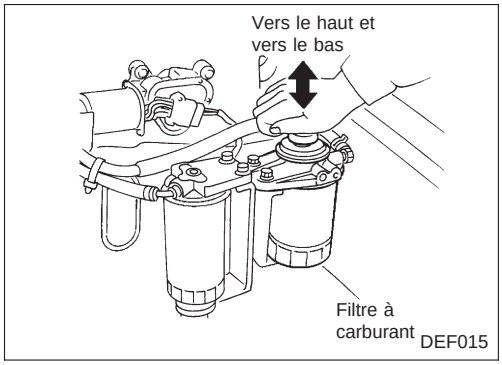

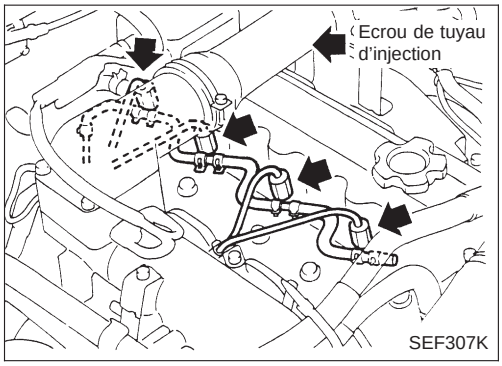

- **Etape 2 : purge d'air du tube à injection de carburant et du tube de trop-plein**

1. Desserrer les écrous du tube à injection du côté porte-injecteur.
2. Déplacer la pompe d'amorçage de filtre à carburant vers le haut et vers le bas jusqu'à ce qu'il n'y ait plus d'air qui s'échappe des écrous du tube à injection.
3. Serrer les écrous évasés du tube à injection.
   : 20 - 25 N·m (2,0 - 2,5 kg-m)

Simpo PDF Merge and Split Unregistered Version - http://www.simpopdf.com

Purge du filtre à carburant

1. Déplacer la pompe d'amorçage de haut en bas pour purger l'air du filtre à carburant.
2. Lorsque l'air est totalement évacué de la pompe à carburant, le fonctionnement de la pompe d'amorçage devient sensiblement lourd. Arrêter la pompe.

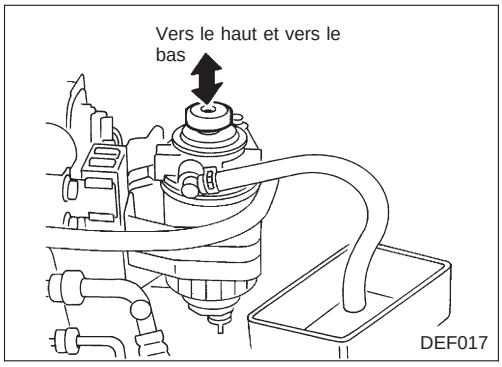

Contrôle de la pompe d'amorçage

Avant de vérifier la pompe d'amorçage, s'assurer que le filtre à carburant est rempli de carburant.

1. Débrancher le flexible de retour de carburant.

Placer un récipient adéquat sous l'extrémité du flexible.

2. Actionner la pompe d'amorçage et vérifier le trop-plein du carburant qui s'écoule de l'extrémité du flexible. Si tel n'est pas le cas, remplacer la pompe d'amorçage.

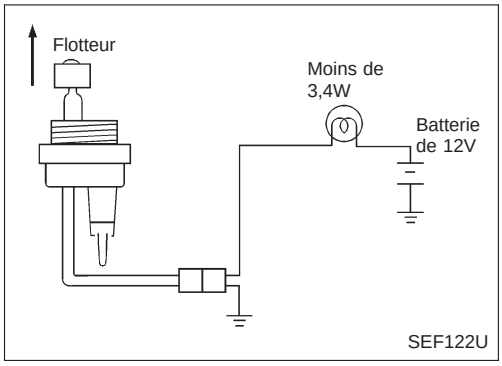

Contrôle du contact de filtre à carburant

1. Déposer le connecteur du filtre et du contact du filtre à carburant.
2. Tourner la clé d'allumage sur ''ON''. Lever le flotteur pour s'assurer que la lampe témoin s'allume.

Couple de serrage du contact de filtre à carburant :
: 3,9 - 5,9 N·m (0,4 - 0,6 kg-m)

Jeter l'ancien joint d'huile et le remplacer par un joint neuf.

Simpo PDF Merge and Split Unregistered Version - http://www.simpopdf.com

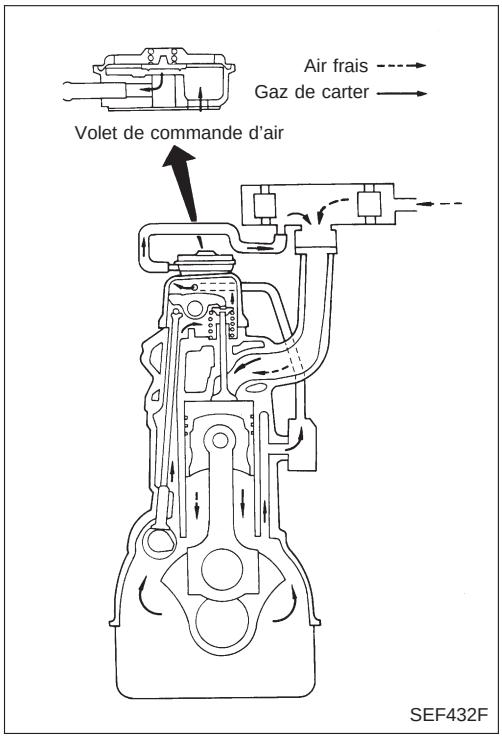

SEF432F

Description

Le système de ventilation du carter de type ouvert est utilisé comme un système d'aspiration des gaz du carter.
Le système d'aspiration des gaz du carter de type ouvert empêche les gaz de pénétrer dans l'atmosphère et maintient le carter interne à pression constante.
Lors du fonctionnement de la vanne, le collecteur d'admission est alimenté en gaz de carter par le volet de commande d'air.
Ceci est activé par la pression du cache-culbuteurs interne. Lorsque le débit de l'air d'admission est réduit par le corps de papillon, la pression du cache-culbuteurs interne diminue. La soupape de commande des émissions de carter maintient alors les cache-culbuteurs à pression constante de façon à ce que l'air ou la poussière ne soit pas aspiré autour du joint d'huile de vilebrequin.

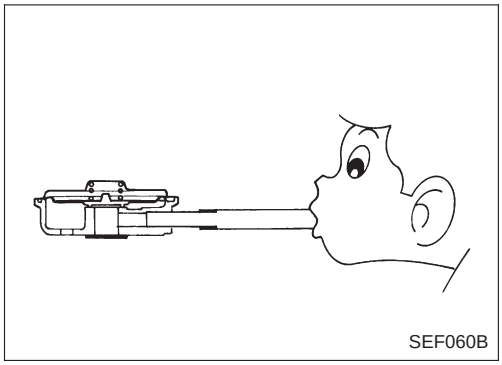
SEF060B

Inspection

VOLET DE COMMANDE D'AIR

1. Déposer le cache-culbuteurs.
2. Déposer la vanne de commande du cache-culbuteurs.
3. Après avoir bouché l'orifice central avec du ruban adhésif, vérifier que de l'air passe par l'orifice d'admission en soufflant de l'air par l'orifice d'échappement, et qu'il n'y a pas de passage d'air par aspiration.

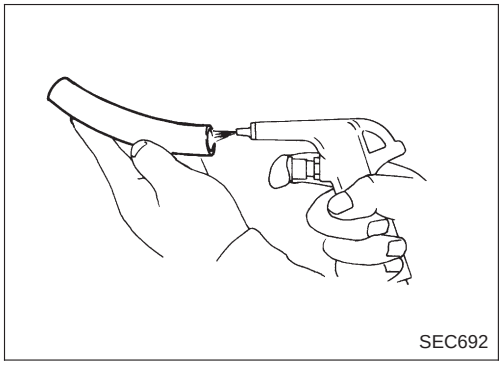
SEC692

FLEXIBLE DE VENTILATION

1. Vérifier les flexibles et les raccords de flexible pour déceler toute présence de fuite.
2. Débrancher tous les flexibles et les nettoyer à l'air comprimé. Remplacer tous les flexibles qui ne peuvent pas être débouchés de façon satisfaisante.

Simpo PDF Merge and Split Unregistered Version - http://www.simpopdf.com

Emplacement des composants

Sous le tableau de bord

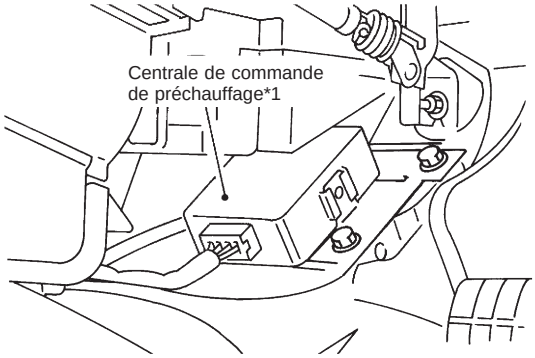

*1: Module de commande du moteur (pour l'Europe)

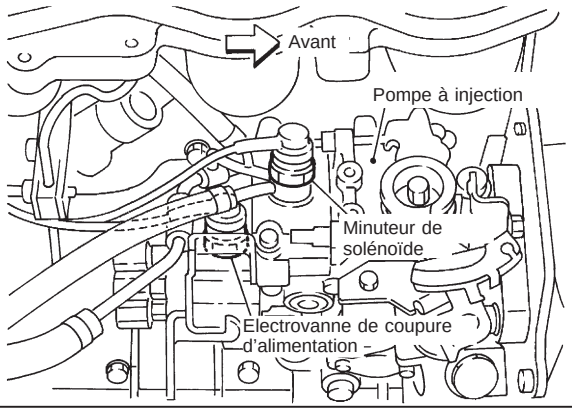

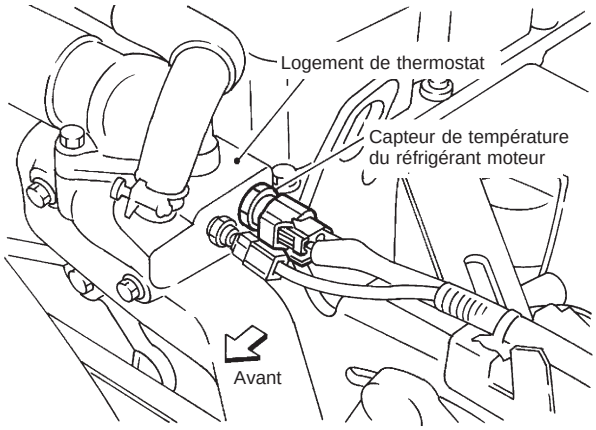

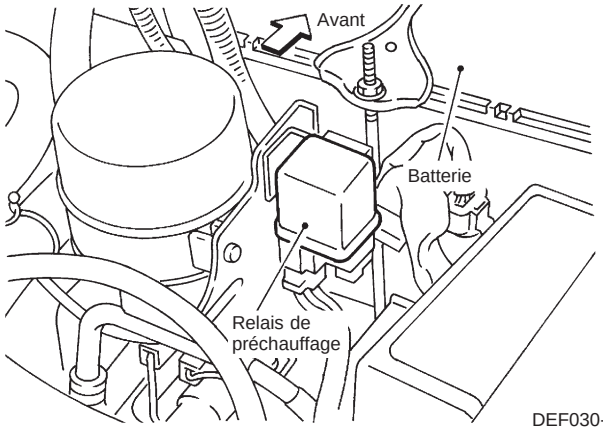

DEF030-N

Simpo PDF Merge and Split Unregistered Version - http://www.simpopdf.com

Schéma de circuit

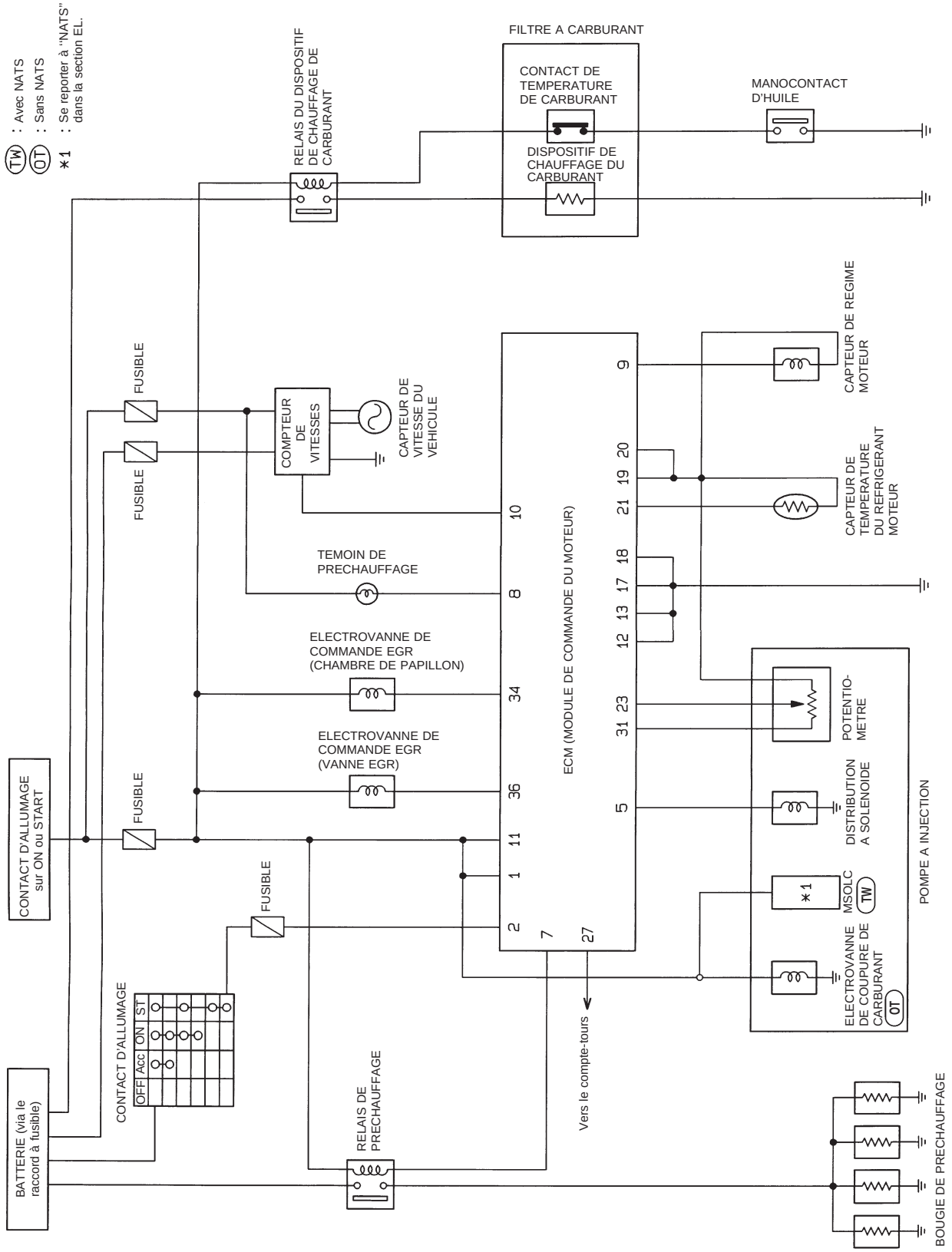

HEC570

Simpo PDF Merge and Split Unregistered Version - http://www.simpopdf.com

Description

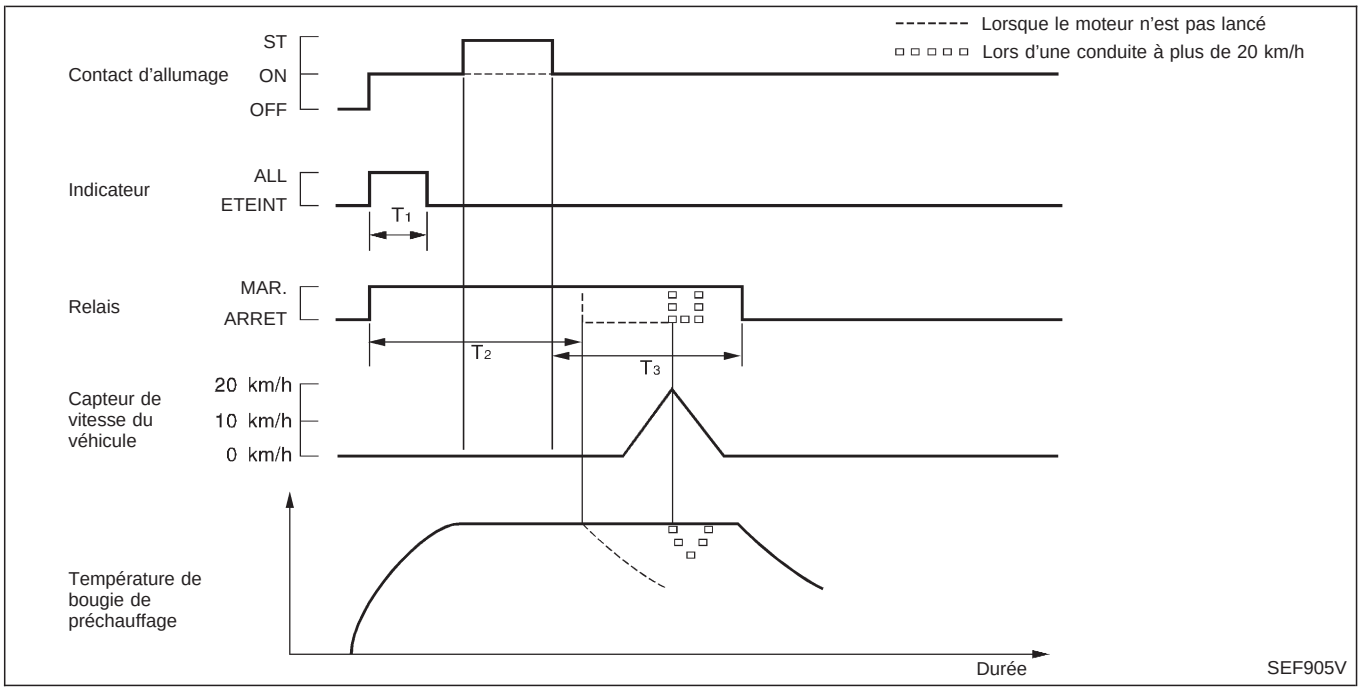

Lorsque la température du réfrigérant est inférieure à 50°C, le relais s'enclenche au moment où le contact d'allumage est mis sur ''ON''. Dès lors, un courant électrique passe dans les bougies de préchauffage qui sont instantanément chauffées. Après un délai de T_1 secondes, l'indicateur est automatiquement éteint à partir de l'unité de commande. Le relais est automatiquement coupé après avoir fonctionné pendant T_2 secondes ou après le temps de démarrage, selon la première éventualité.
Le relais reste allumé pendant T_3 secondes après que le contact d'allumage a été remis sur ''ON'' depuis ''START''. Ces dispositifs améliorent les performances de la combustion du moteur après le démarrage.
Lorsque la température du réfrigérant est supérieure à 50°C, le relais n'est activé que lors du lancement du moteur.

T_1 : env. 2 - 6	[sec.]	(Varie en fonction de la température du réfrigérant).
T_2 : 30	[sec.]	(Quand la température du réfrigérant est inférieure à 50°C).
5	[sec.]	(Quand la température du réfrigérant est supérieure à 50°C).
T_3 : 600	[sec.]	(Quand la température du réfrigérant est inférieure à 50°C).
0	[sec.]	(Quand la température du réfrigérant est supérieure à 50°C).

Simpo PDF Merge and Split Unregistered Version - http://www.simpopdf.com

Schéma de câblage

MOTEUR TD25 (CONDUITE A GAUCHE)

EC-GLOW-01

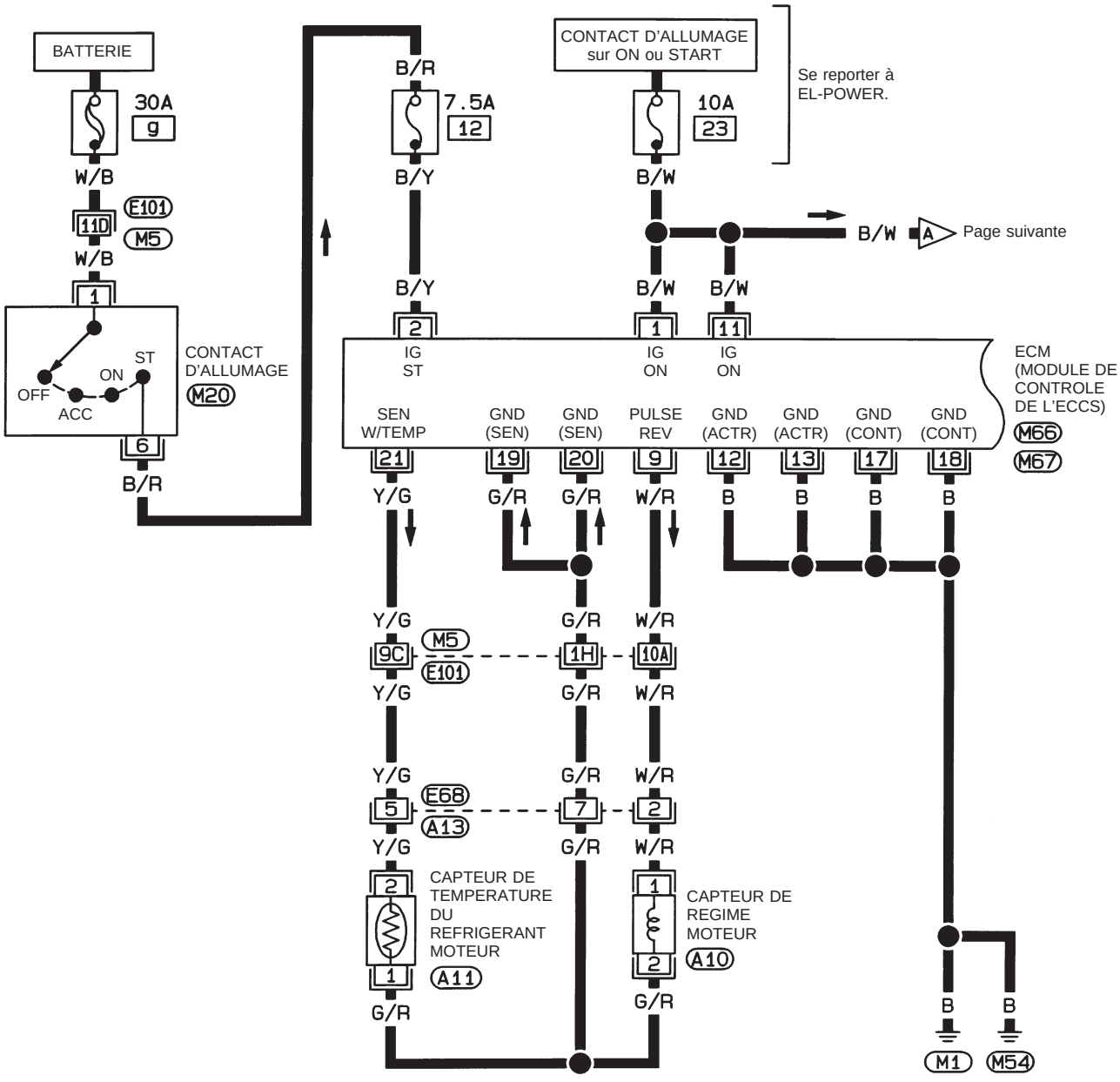

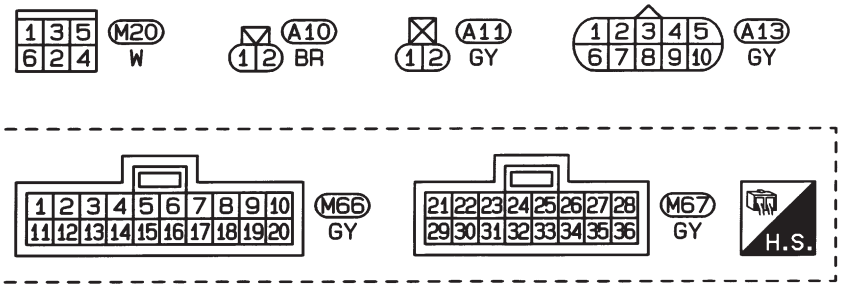

Consulter la dernière page dépliante.

M5, E101

HEC571

Simpo PDF Merge and Split Unregistered Version - http://www.simpopdf.com

Schéma de câblage (Suite)

MOTEUR TD25 (CONDUITE A GAUCHE)

EC-GLOW-14

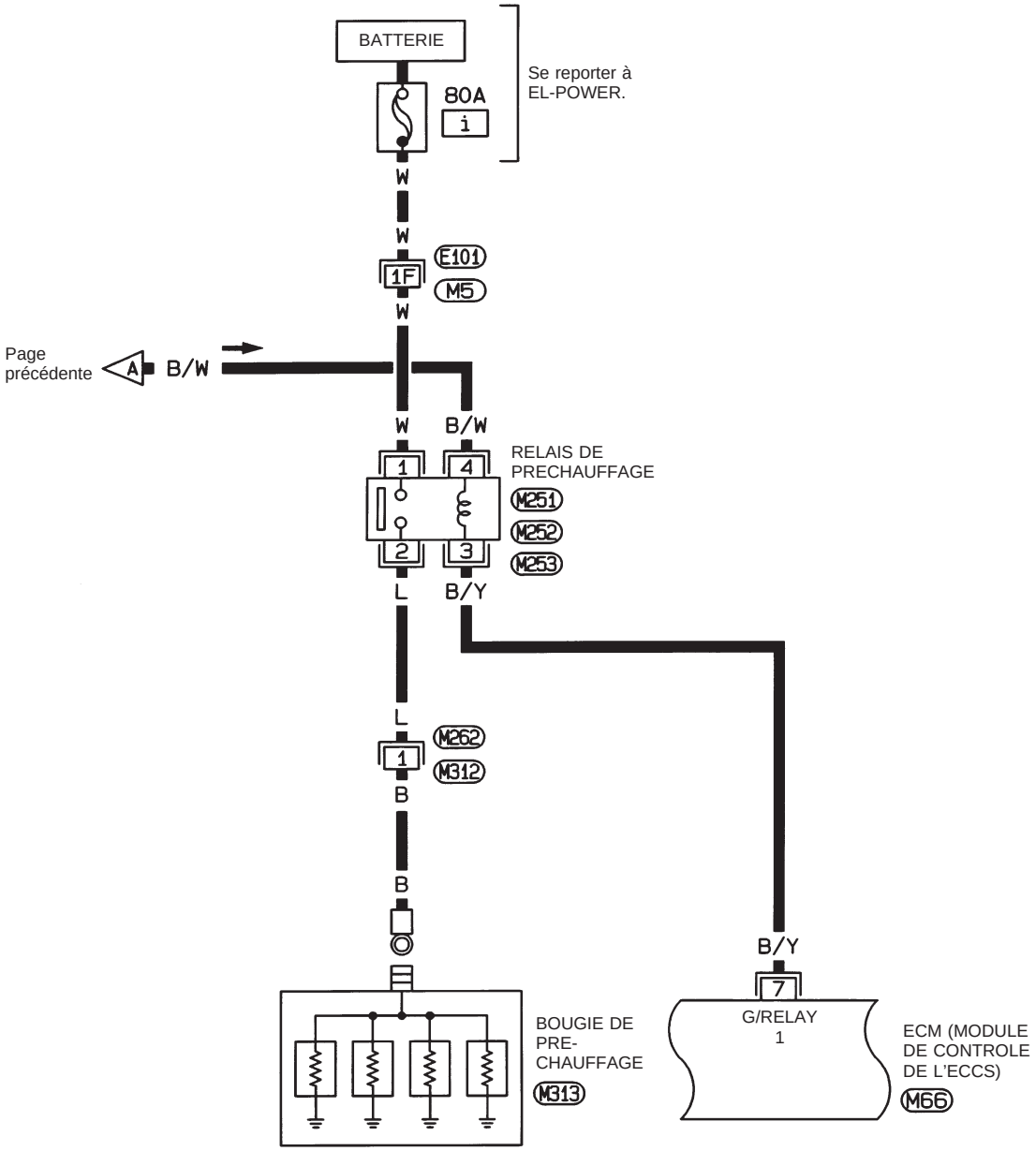

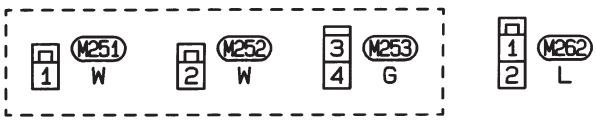

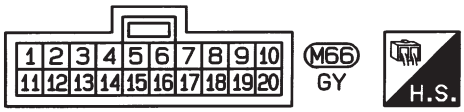

Consulter la dernière page dépliante.

M5, E101

HEC572

Simpo PDF Merge and Split Unregistered Version - http://www.simpopdf.com

Schéma de câblage (Suite)

MOTEUR TD25 (CONDUITE A GAUCHE)

EC-GLOW-03

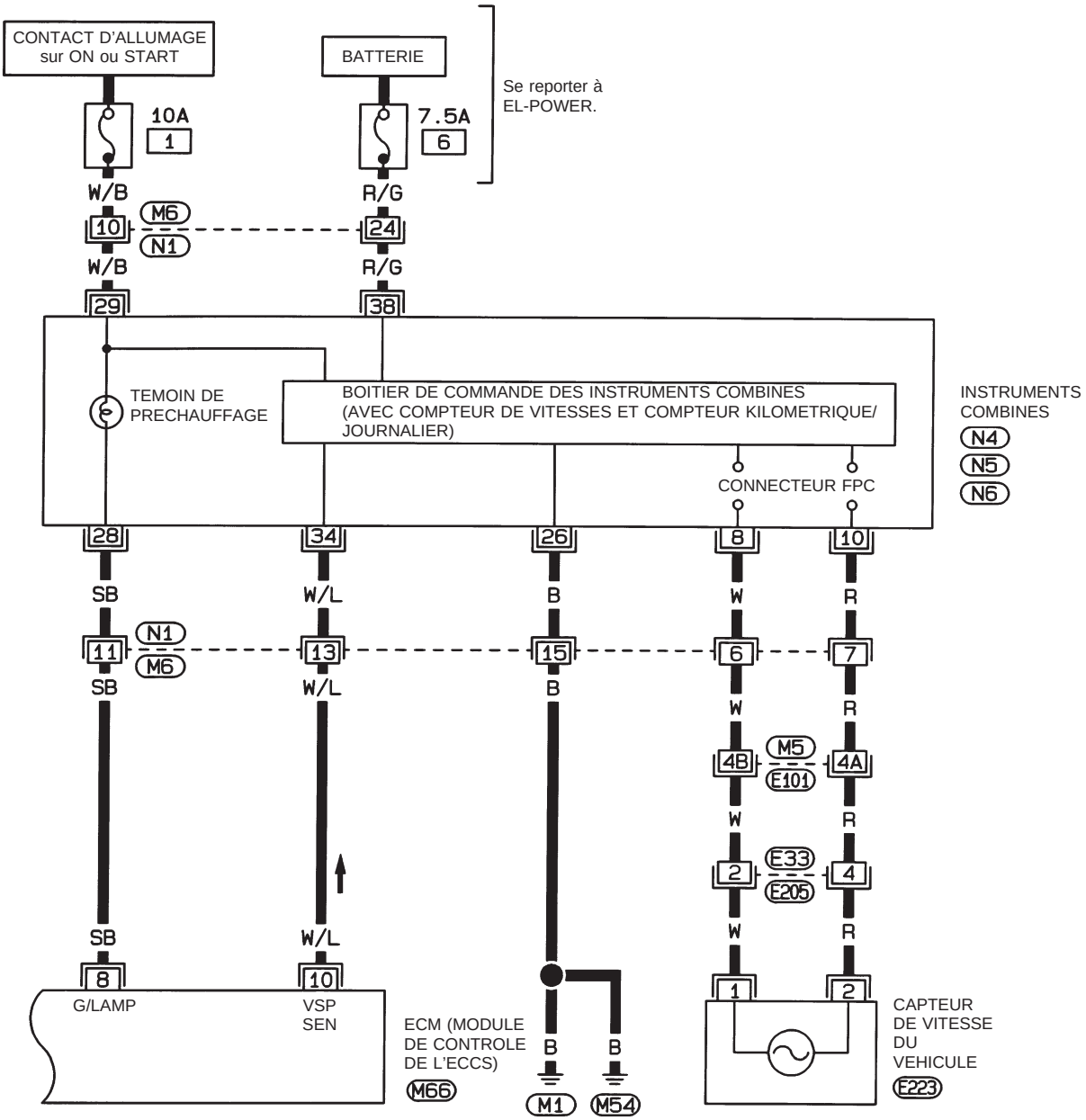







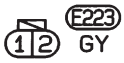

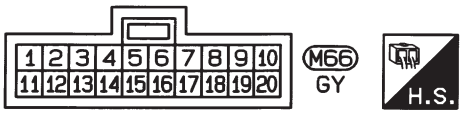

Consulter la dernière page dépliante.

M5 , E101

HEC573

Simpo PDF Merge and Split Unregistered Version - http://www.simpopdf.com

Schéma de câblage (Suite)

MOTEUR TD25 (CONDUITE A DROITE)

EC–GLOW–04

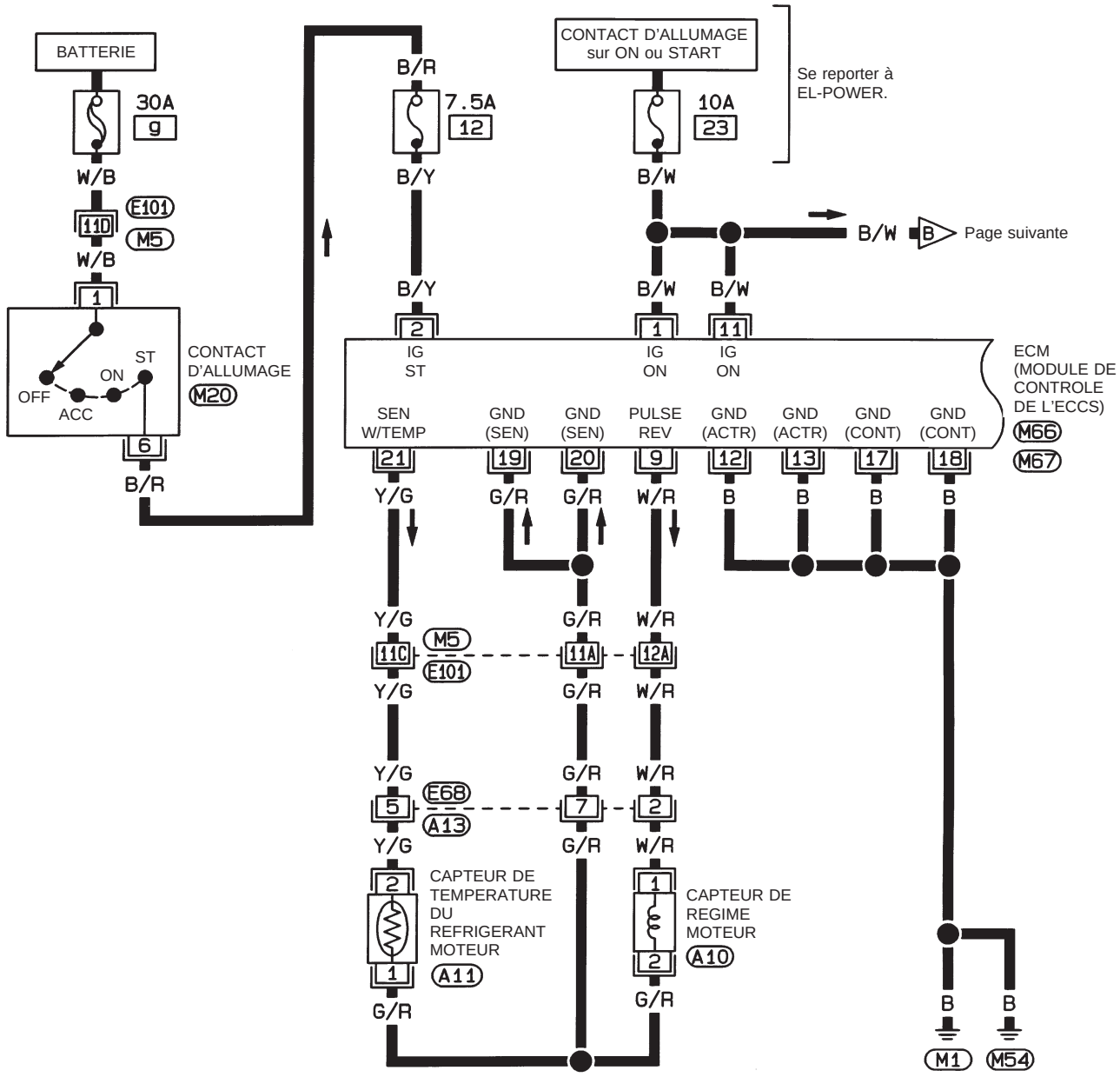

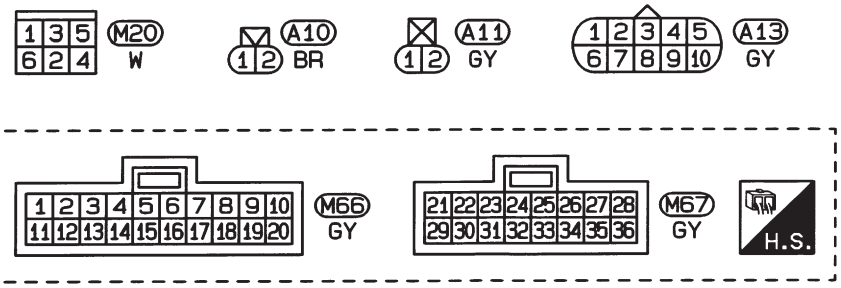

Consulter la dernière page dépliante.

M5, E101

HEC574

Simpo PDF Merge and Split Unregistered Version - http://www.simpopdf.com

Schéma de câblage (Suite)

MOTEUR TD25 (CONDUITE A DROITE)

EC–GLOW–05

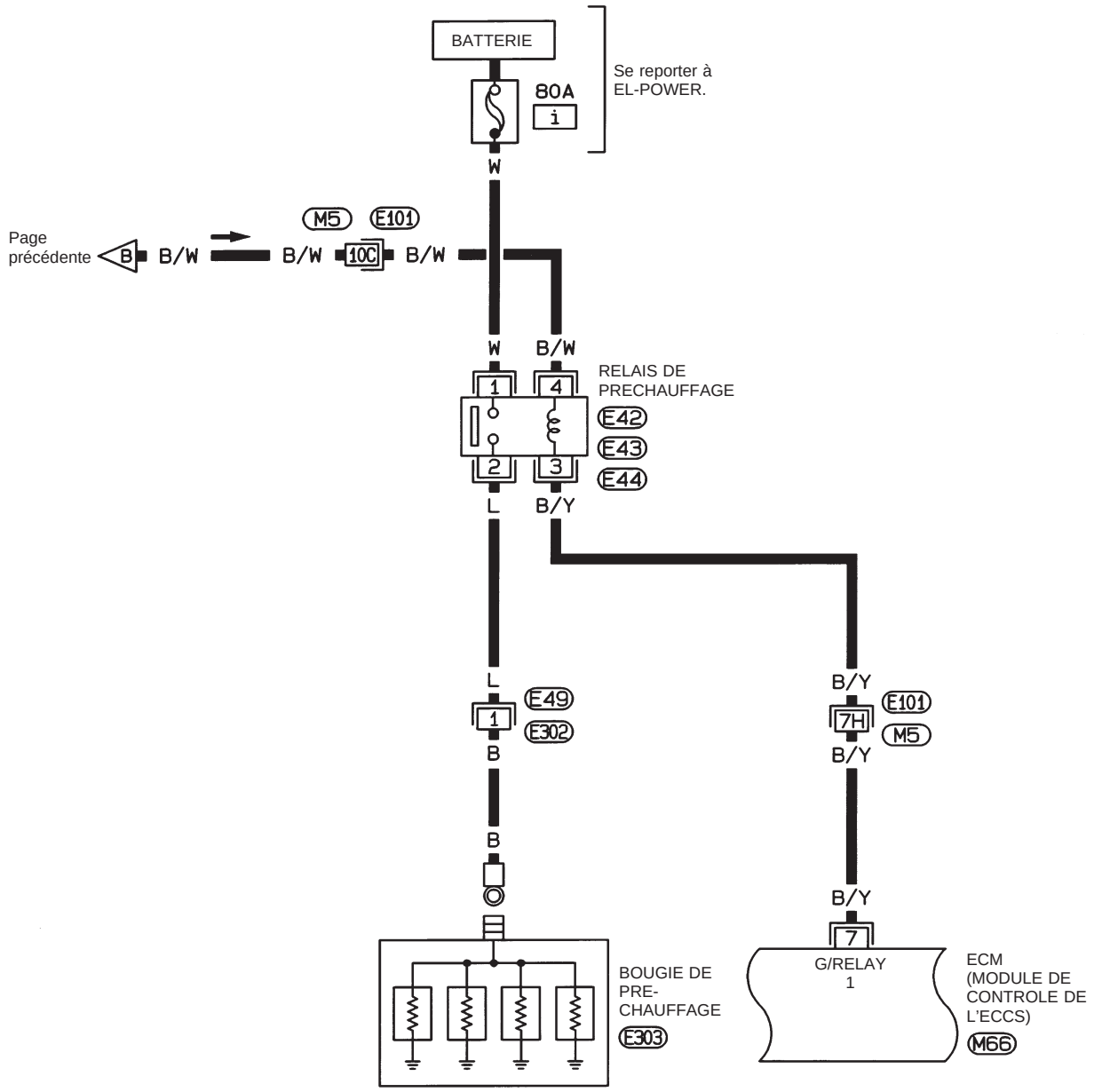

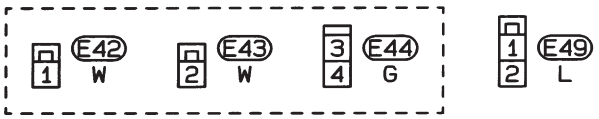

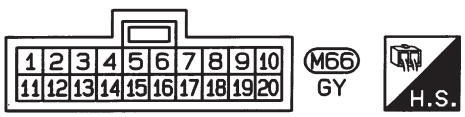

Consulter la dernière page dépliante.
M5, E101

HEC575

Simpo PDF Merge and Split Unregistered Version - http://www.simpopdf.com

Schéma de câblage (Suite)

MOTEUR TD25 (CONDUITE A DROITE)

EC–GLOW–06

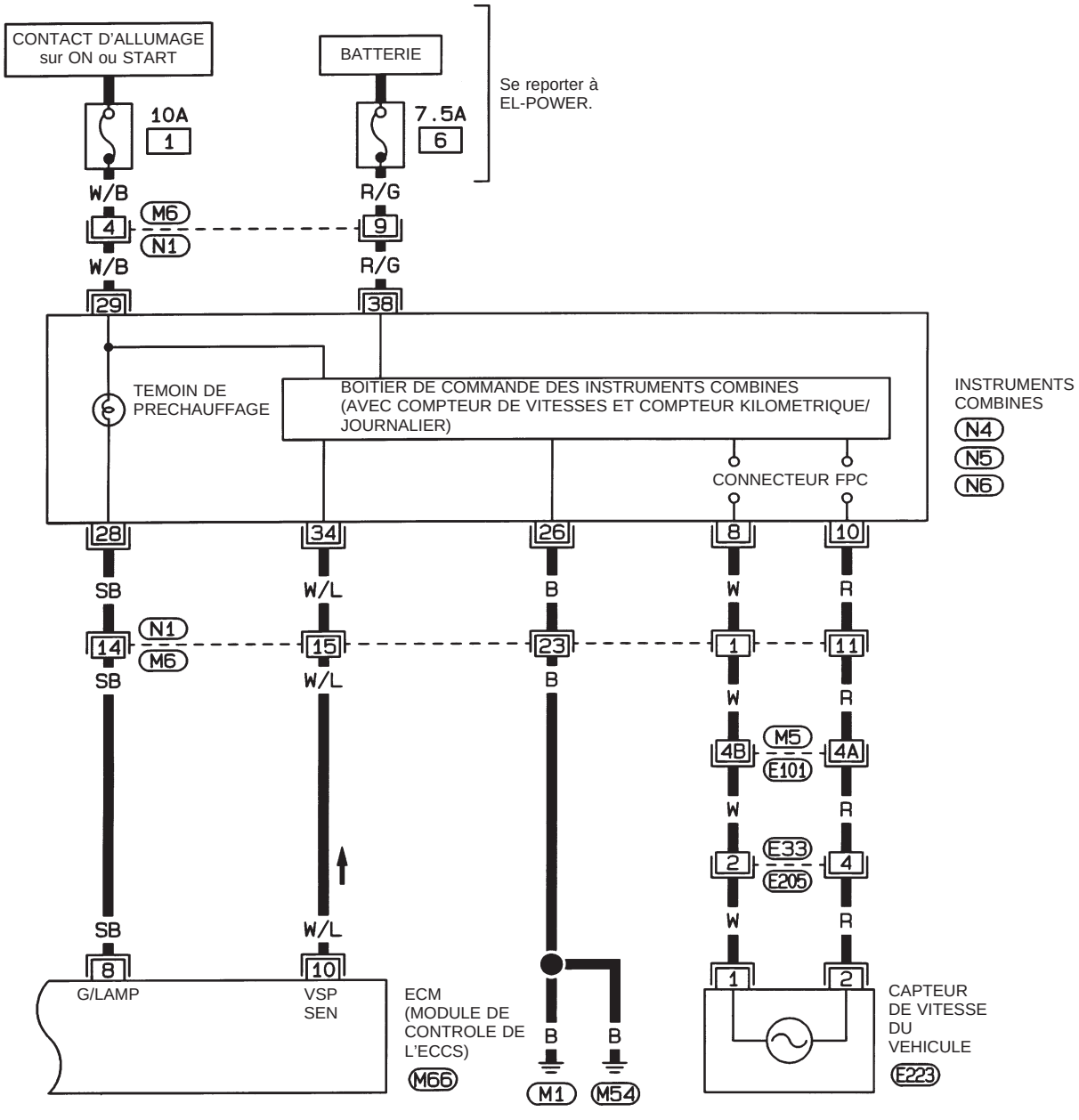

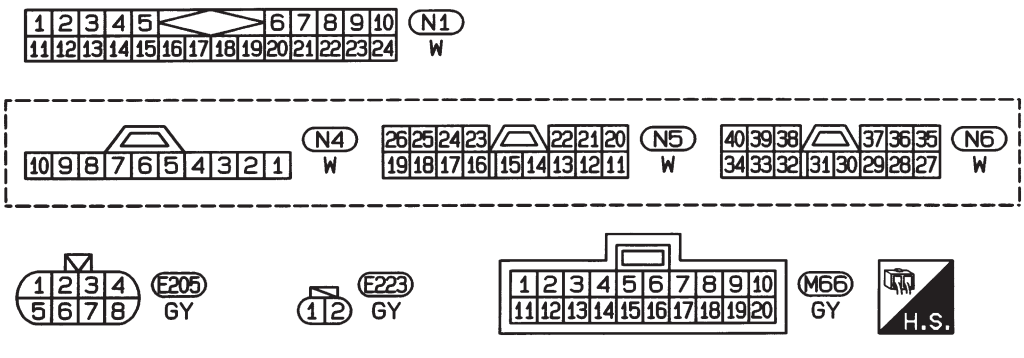

Consulter la dernière page dépliante.

M5 , E101

HEC576

Simpo PDF Merge and Split Unregistered Version - http://www.simpopdf.com

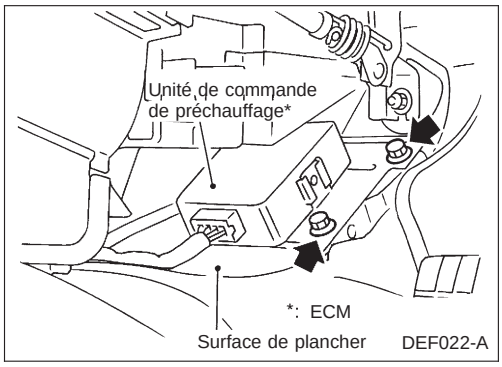

Inspection du circuit de l'unité de commande de préchauffage (Pour les pays froids)

Enrouler la surface de plancher. Vérifier l'unité de commande de préchauffage.

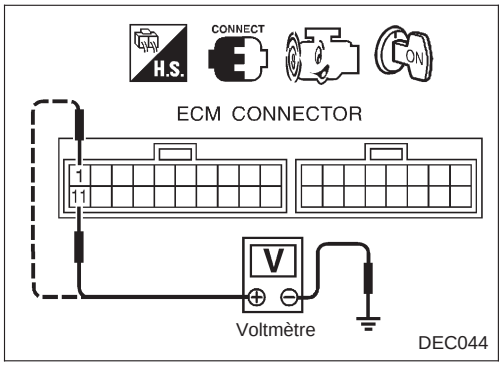

CIRCUIT D'ALIMENTATION ELECTRIQUE

Mettre le contact d'allumage sur ON et vérifier la tension entre la borne ① ou ⑪ et la masse de carrosserie.

Tension : environ 12V

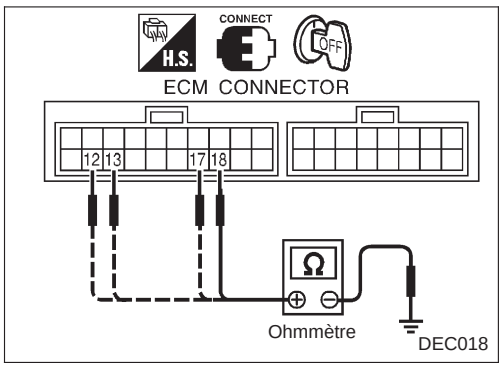

CIRCUIT DE MASSE

Vérifier la continuité entre les bornes ⑫, ⑬, ⑰ ou ⑱ et la masse de carrosserie.

Il doit y avoir continuité.

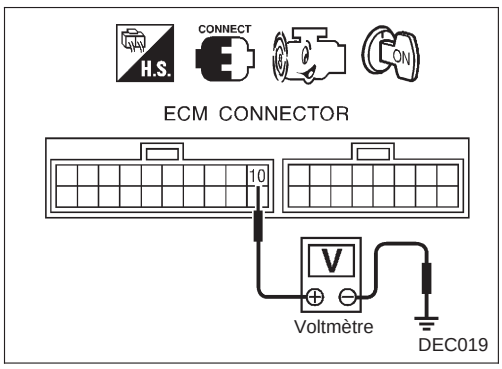

CIRCUIT DU CAPTEUR DE VITESSE DU VEHICULE

Vérifier que la tension entre la borne ⑩ et la masse de carrosserie varie quand le véhicule fonctionne ou que les roues arrière sont levées en position deux roues motrices.

Tension : env. 5V

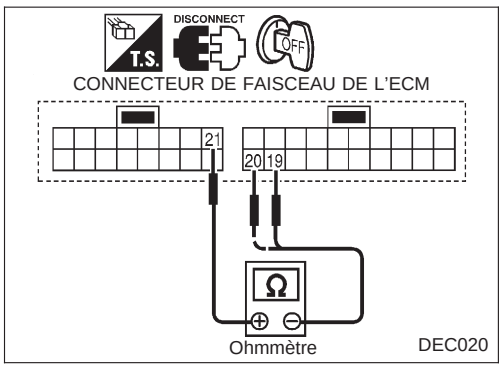

CIRCUIT DU CAPTEUR DE TEMPERATURE DU REFRIGERANT MOTEUR

Vérifier la continuité entre les bornes ㉑ et ⑲ ou ⑳.

Mesurer la résistance à la température de manière similaire à celle indiquée au chapitre ''CAPTEUR DE TEMPERATURE DU REFRIGERANT MOTEUR'', ''Inspection des composants'', EC-215.

Simpo PDF Merge and Split Unregistered Version - http://www.simpopdf.com

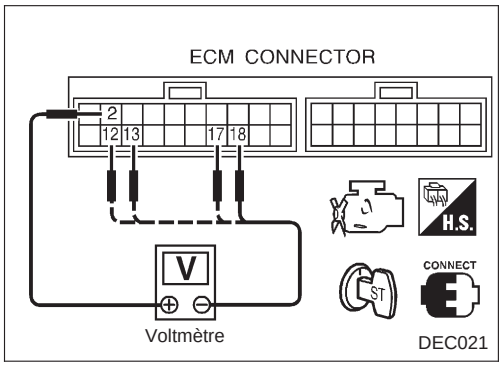

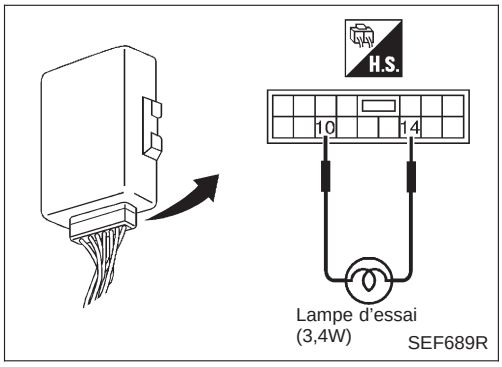

Inspection du circuit de l'unité de commande de préchauffage (Pour les pays froids) (Suite)

CIRCUIT D'ENTREE DU SIGNAL DE DEMARRAGE

1. Mettre le contact d'allumage sur ''OFF''.
2. Débrancher le connecteur de faisceau de la borne ''S'' du démarreur.
3. Vérifier la tension de borne entre les bornes ②, ⑫, ⑬, ⑰ ou ⑱ lorsque le contact d'allumage est sur ''START''.
   Tension : environ 12V

CIRCUIT DE COMMANDE D'INDICATEUR DE PRECHAUFFAGE

1. Mettre le contact d'allumage sur ''OFF''.
2. Laisser le connecteur de faisceau relié au boîtier de contrôle de préchauffage.
3. Brancher la lampe d'essai sur le boîtier de contrôle de préchauffage comme indiqué.
4. Mettre le contact d'allumage sur ''ON'' et mesurer le laps de temps durant lequel la lampe d'essai reste allumée.
   Temps pendant lequel la lampe d'essai doit rester allumée :
   Env. 2 à 6 secondes.
   (Le temps varie en fonction de la température du liquide de refroidissement).

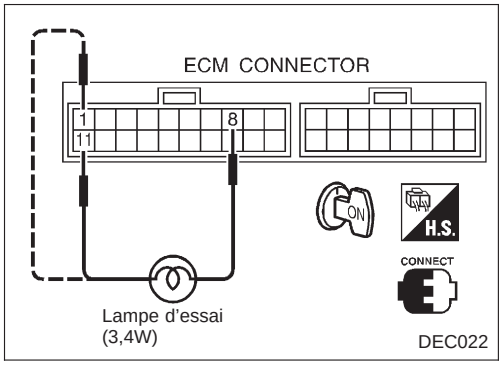

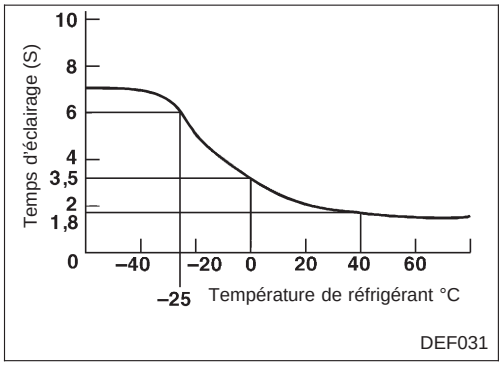

Simpo PDF Merge and Split Unregistered Version - http://www.simpopdf.com

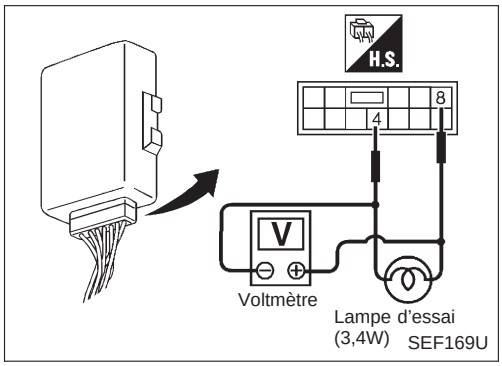

Inspection du circuit de l'unité de commande de préchauffage (Pour les pays froids) (Suite)

CIRCUIT DE COMMANDE DE PRECHAUFFAGE

1. Mettre le contact d'allumage sur ''OFF''.
2. Laisser le connecteur de faisceau relié au boîtier de contrôle de préchauffage.
3. Brancher la lampe d'essai à l'unité de commande de préchauffage comme indiqué ci-dessous.
4. Mettre le contact d'allumage sur ''ON'' et mesurer la tension au moment où la lampe d'essai reste allumée.

Il devrait y avoir tension de la batterie pendant 30 secondes à une température du réfrigérant inférieure à 50°C.
Il devrait y avoir tension de la batterie pendant 5 secondes à une température du réfrigérant supérieure à 50°C.

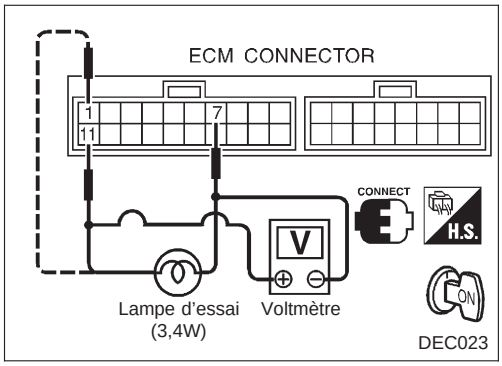

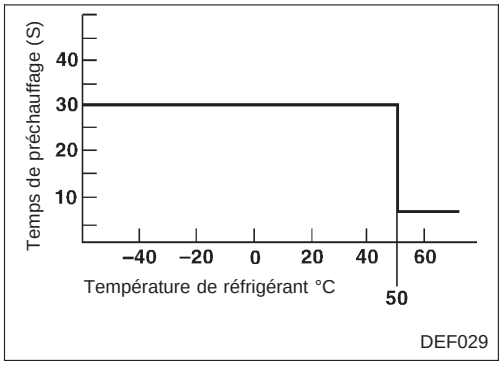

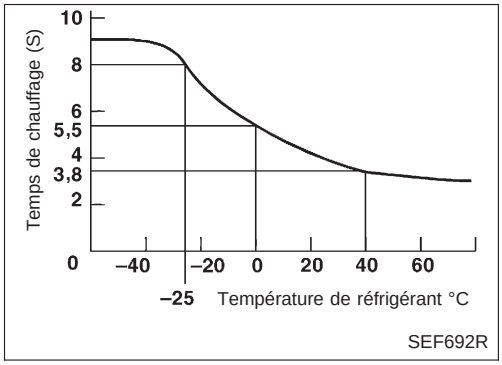

- **Le temps sera raccourci si le contact d'allumage est coupé seulement pendant un court instant.**
  Pour mesurer le temps, laisser le contact d'allumage sur ''OFF'' pendant plus de 1 minute, puis tourner le contact d'allumage sur ''ON''.
- **Lorsque la température du réfrigérant est inférieure à 10°C, la tension de la batterie doit apparaître pendant 30 secondes.**

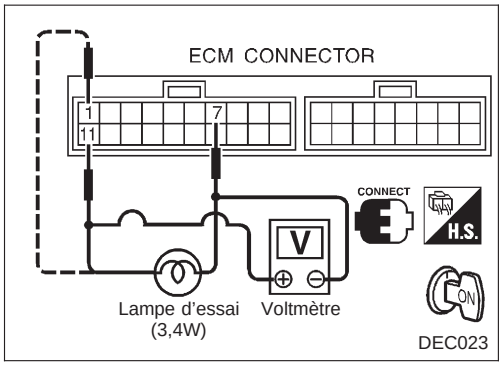

CIRCUIT DE COMMANDE DE POST-CHAUFFAGE

1. Brancher la lampe d'essai sur le boîtier de contrôle de préchauffage comme indiqué.
2. Mettre le contact d'allumage sur ''START'' et faire tourner le moteur, puis mesurer la tension à la borne de la bougie de préchauffage au moment où la lampe d'essai reste allumée.

Simpo PDF Merge and Split Unregistered Version - http://www.simpopdf.com

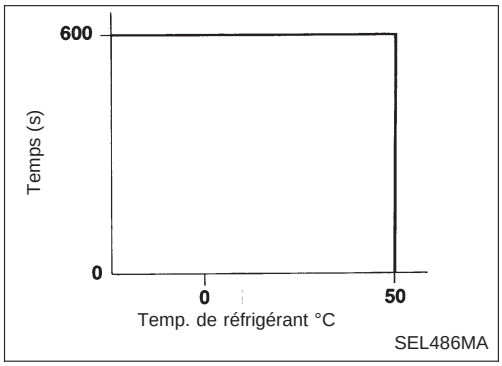

Inspection du circuit de l'unité de commande de préchauffage (Pour les pays froids) (Suite)

Il devrait y avoir tension de la batterie pendant 10 minutes à une température du réfrigérant inférieure à 50°C.
(Si la vitesse du véhicule est supérieure à 20 km/h, la tension à la borne de la bougie de préchauffage doit chuter à 0V. Si la vitesse chute en dessous de 10 km/h, la tension de la batterie doit apparaître.)
La tension ne devrait pas apparaître à une température de plus de 50°C.

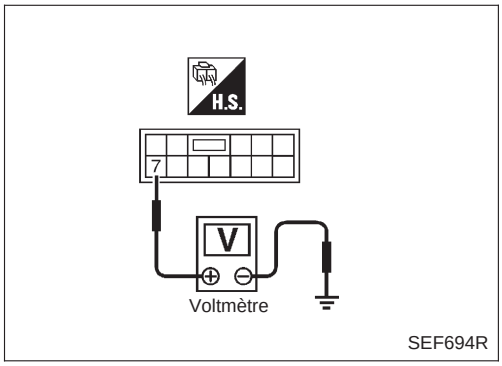

Inspection du circuit de l'unité de commande de préchauffage (Sauf pour les pays froids)

CIRCUIT D'ALIMENTATION ELECTRIQUE

Mettre le contact d'allumage sur ON et vérifier la tension entre la borne ⑦ et la masse de carrosserie.

Tension : environ 12V

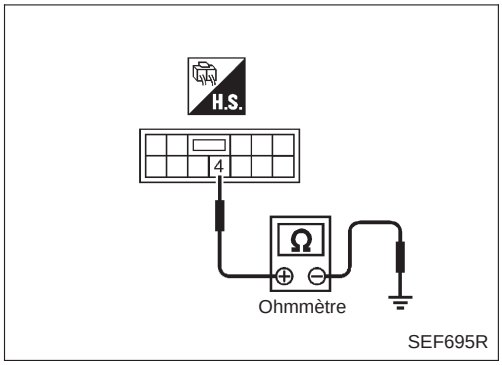

CIRCUIT DE MASSE

Vérifier la continuité entre la borne ④ et la masse de carrosserie.

Il doit y avoir continuité.

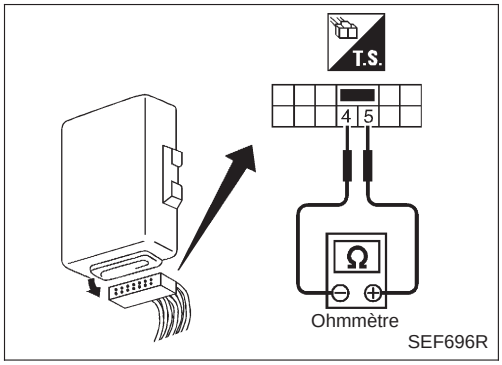

CIRCUIT DU CAPTEUR DE TEMPERATURE DU REFRIGERANT MOTEUR

Vérifier la continuité entre les bornes ⑤ et ④.
Mesurer la résistance à la température de manière similaire à celle indiquée au chapitre ''CAPTEUR DE TEMPERATURE DU REFRIGERANT MOTEUR'', ''Inspection des composants'', EC-215.

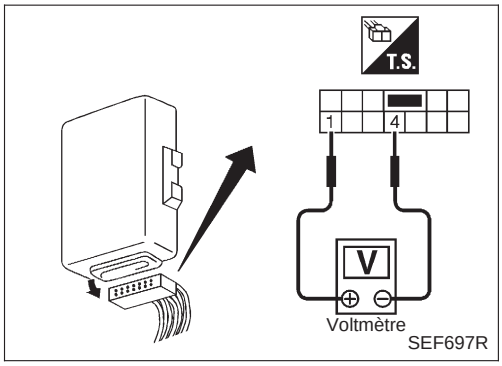

CIRCUIT D'ENTREE DU SIGNAL DE DEMARRAGE

1. Mettre le contact d'allumage sur ''OFF''.
2. Débrancher le connecteur de faisceau de la borne ''S'' du démarreur.
3. Vérifier la tension de borne entre les bornes ① et ④ lorsque le contact d'allumage est sur ''START''.

Tension : environ 12V

Simpo PDF Merge and Split Unregistered Version - http://www.simpopdf.com

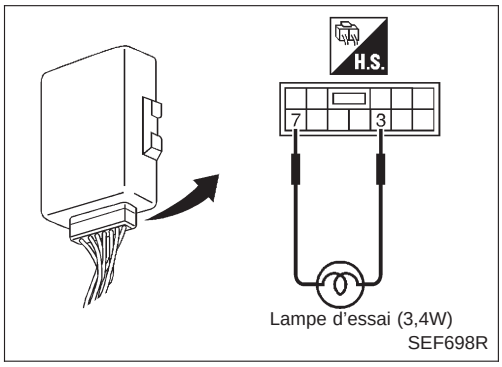

Lampe d'essai (3,4W)
SEF698R

Inspection du circuit de l'unité de commande de préchauffage (Sauf pour les pays froids) (Suite)

CIRCUIT DE COMMANDE D'INDICATEUR DE PRECHAUFFAGE

1. Mettre le contact d'allumage sur ''OFF''.
2. Laisser le connecteur de faisceau relié au boîtier de contrôle de préchauffage.
3. Brancher la lampe d'essai sur le boîtier de contrôle de préchauffage comme indiqué.
4. Mettre le contact d'allumage sur ''ON'' et mesurer le laps de temps où la lampe d'essai reste allumée.

   Temps pendant lequel la lampe d'essai doit rester allumée :

   Env. 2 à 6 secondes.

   (Le temps varie en fonction de la température du liquide de refroidissement).

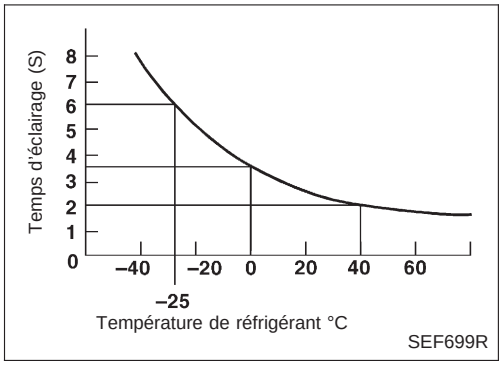

SEF699R

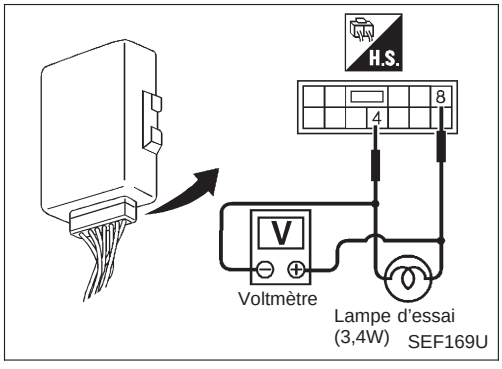

SEF169U

CIRCUIT DE COMMANDE DE PRECHAUFFAGE

Commande de préchauffage

1. Mettre le contact d'allumage sur ''OFF''.
2. Laisser le connecteur de faisceau relié au boîtier de contrôle de préchauffage.
3. Connecter la lampe d'essai sur le boîtier de contrôle de préchauffage comme indiqué.
4. Mettre le contact d'allumage sur ''ON'' et mesurer la tension de la borne au moment où la lampe d'essai clignote.

1) A une température du réfrigérant inférieure à 50°C, la tension de la batterie apparaît pendant 15 secondes.

- **La tension de la batterie doit exister pendant 4 à 8 secondes*, puis être coupée alternativement pendant le reste du temps.**

  *** Temps de préchauffage (varie en fonction de la température du liquide de refroidissement)**

Simpo PDF Merge and Split Unregistered Version - http://www.simpopdf.com

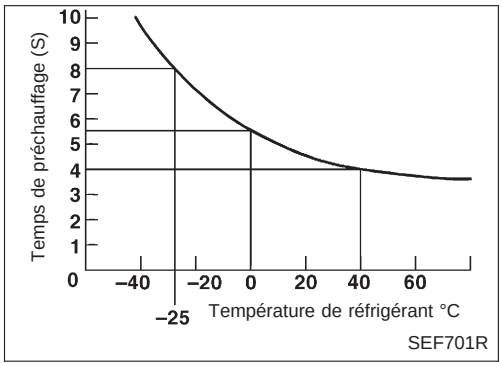

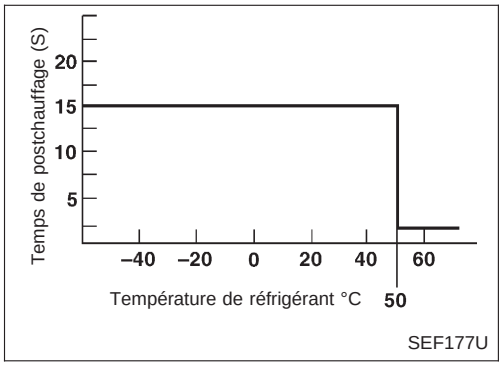

Inspection du circuit de l'unité de commande de préchauffage (Sauf pour les pays froids) (Suite)

- **Le temps sera raccourci si le contact d'allumage est coupé seulement pendant un court instant.**
  Pour mesurer le temps, laisser le contact d'allumage sur ''OFF'' pendant plus de 1 minute, puis tourner le contact d'allumage sur ''ON''.
  La lampe d'essai s'allume et s'éteint environ 1 à 3 fois après s'être allumée.

2) A une température du réfrigérant supérieure à 50°C, la tension de la batterie apparaît pendant environ 3 secondes.

Commande de postchauffage

1. Mettre le contact d'allumage sur ''OFF''.
2. Laisser le connecteur de faisceau relié au boîtier de contrôle de préchauffage.
3. Brancher la lampe d'essai à l'unité de commande de préchauffage comme indiqué dans le ''Contrôle de préchauffage''.
4. Mettre le contact d'allumage sur ''START'' puis à nouveau sur ''ON''. Mesurer la tension aux bornes et compter le nombre de fois où la lampe d'essai clignote.

1) A une température du réfrigérant inférieure à 50°C, la tension de la batterie apparaît de façon intermittente pendant 15 secondes. La lampe d'essai clignote environ 3 fois.
2) A une température du réfrigérant supérieure à 50°C, la tension de la batterie apparaît pendant 2 secondes.

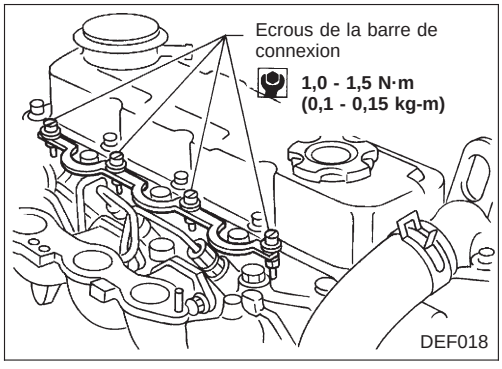

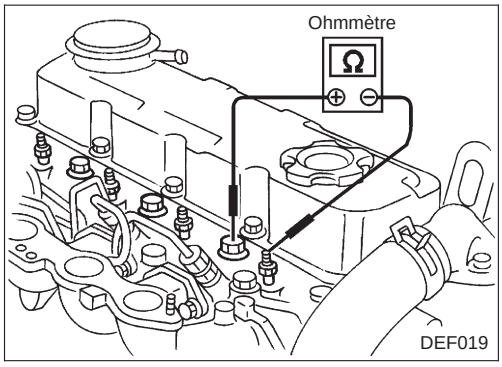

Inspection des composants

ECROUS DE BARRE DE CONNEXION DES BOUGIES DE PRECHAUFFAGE

S'assurer que les écrous de la barre de connexion des bougies de préchauffage, ainsi que l'écrou de faisceau, sont correctement installés.

BOUGIE DE PRECHAUFFAGE

Déposer la barre de connexion des bougies de préchauffage et effectuer un test de continuité entre chaque bougie de préchauffage et la culasse.

Pas de continuité ... remplacer la bougie de préchauffage.

Les moteurs TD25 sont équipés de deux bougies de préchauffage en céramique disponibles chez le fabricant.
Une marque de couleur orange ou bleue est apposée sur la tête de la bougie de préchauffage.
Ne pas les interchanger dans un moteur. Ne pas les utiliser si elles sont tombées parterre.

Simpo PDF Merge and Split Unregistered Version - http://www.simpopdf.com

Inspection des composants (Suite)

RELAIS DE PRECHAUFFAGE

Le relais de préchauffage est normallement ouvert.

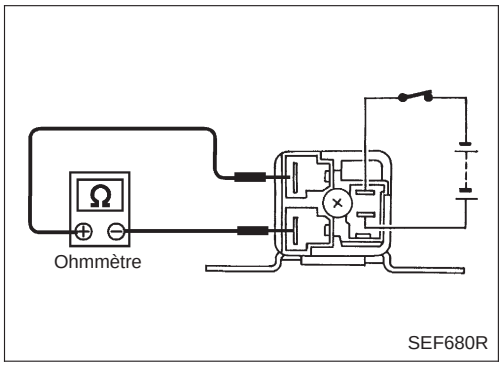

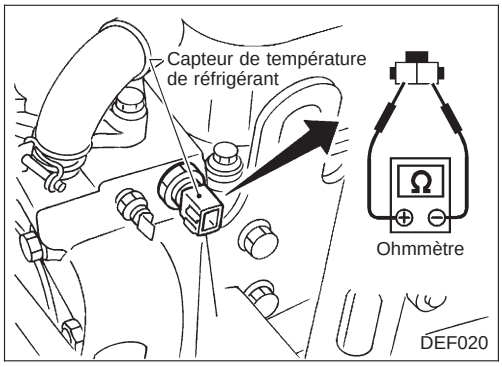

CAPTEUR DE TEMPERATURE DU REFRIGERANT MOTEUR

Débrancher le connecteur de faisceau de température du réfrigérant moteur et mesurer la résistance.

Température du réfrigérant °C	Résistance kΩ
−25	19
0	5,6
20	2,5
40	1,2

Simpo PDF Merge and Split Unregistered Version - http://www.simpopdf.com

Emplacement des composants

Sous le tableau de bord

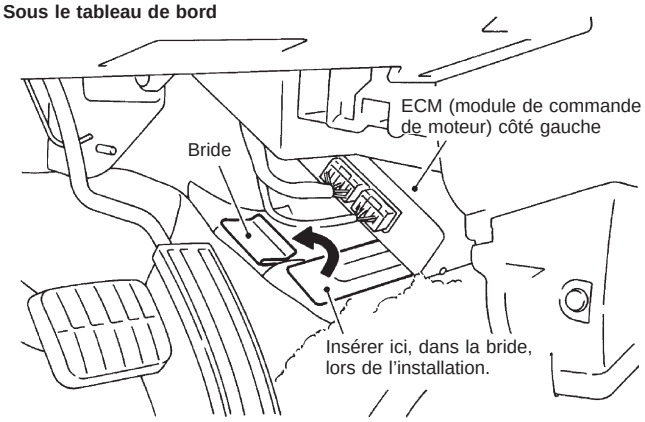

Sous le tableau de bord

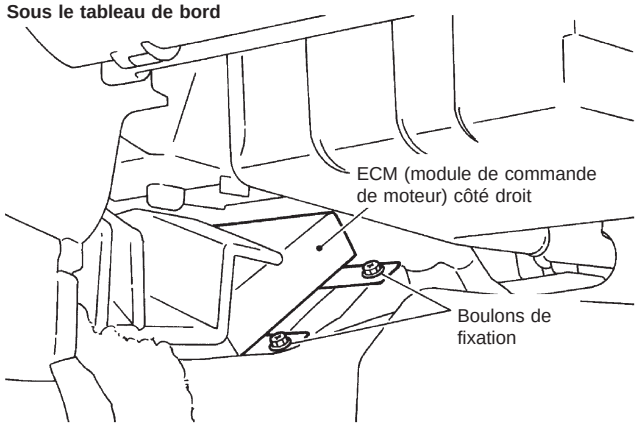

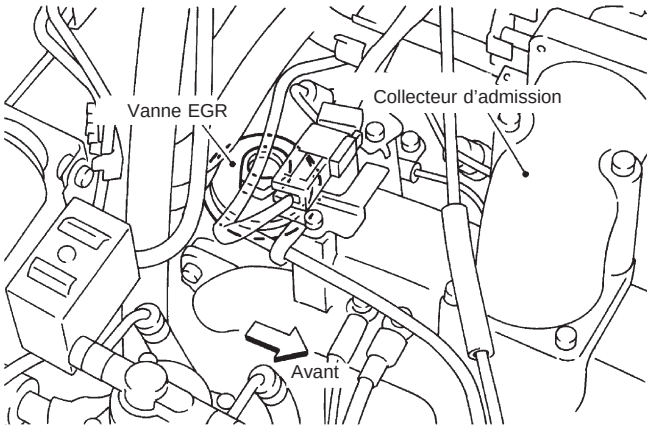

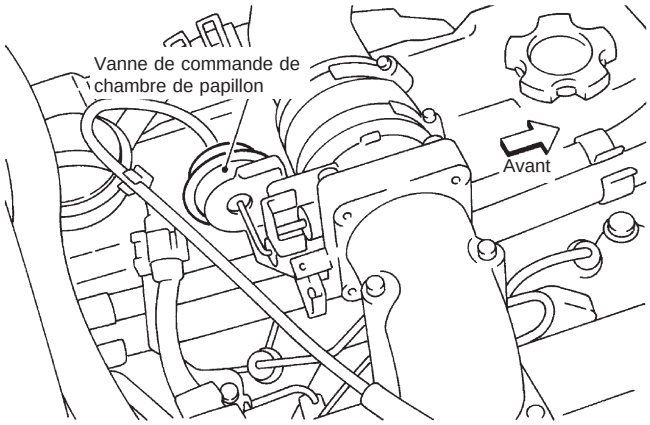

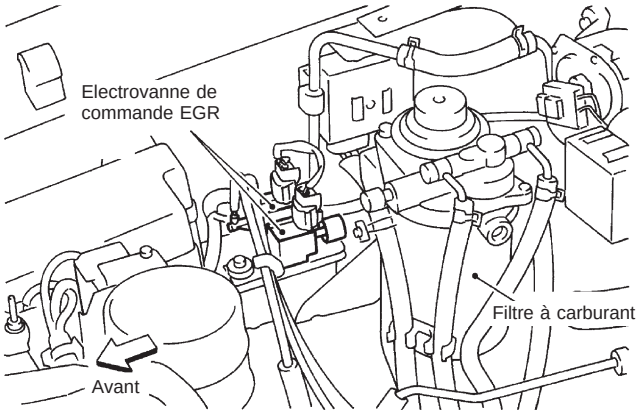

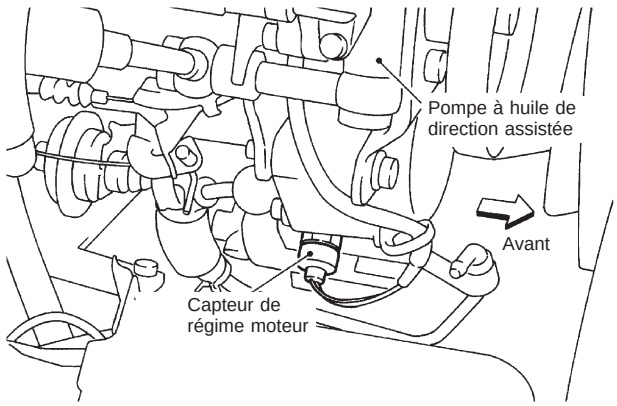

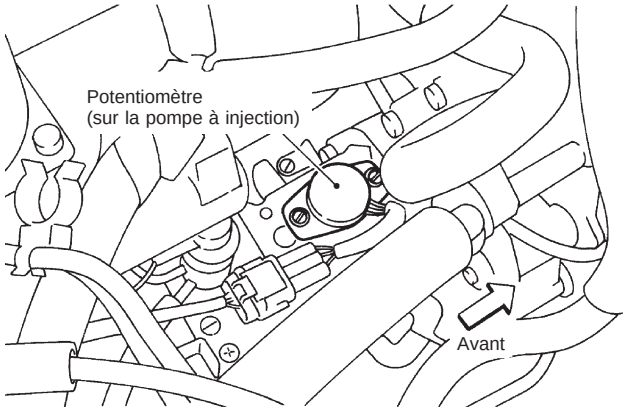

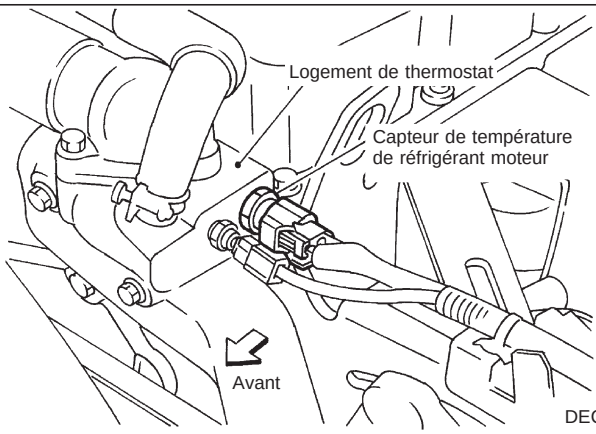

DEC024

Simpo PDF Merge and Split Unregistered Version - http://www.simpopdf.com

Description

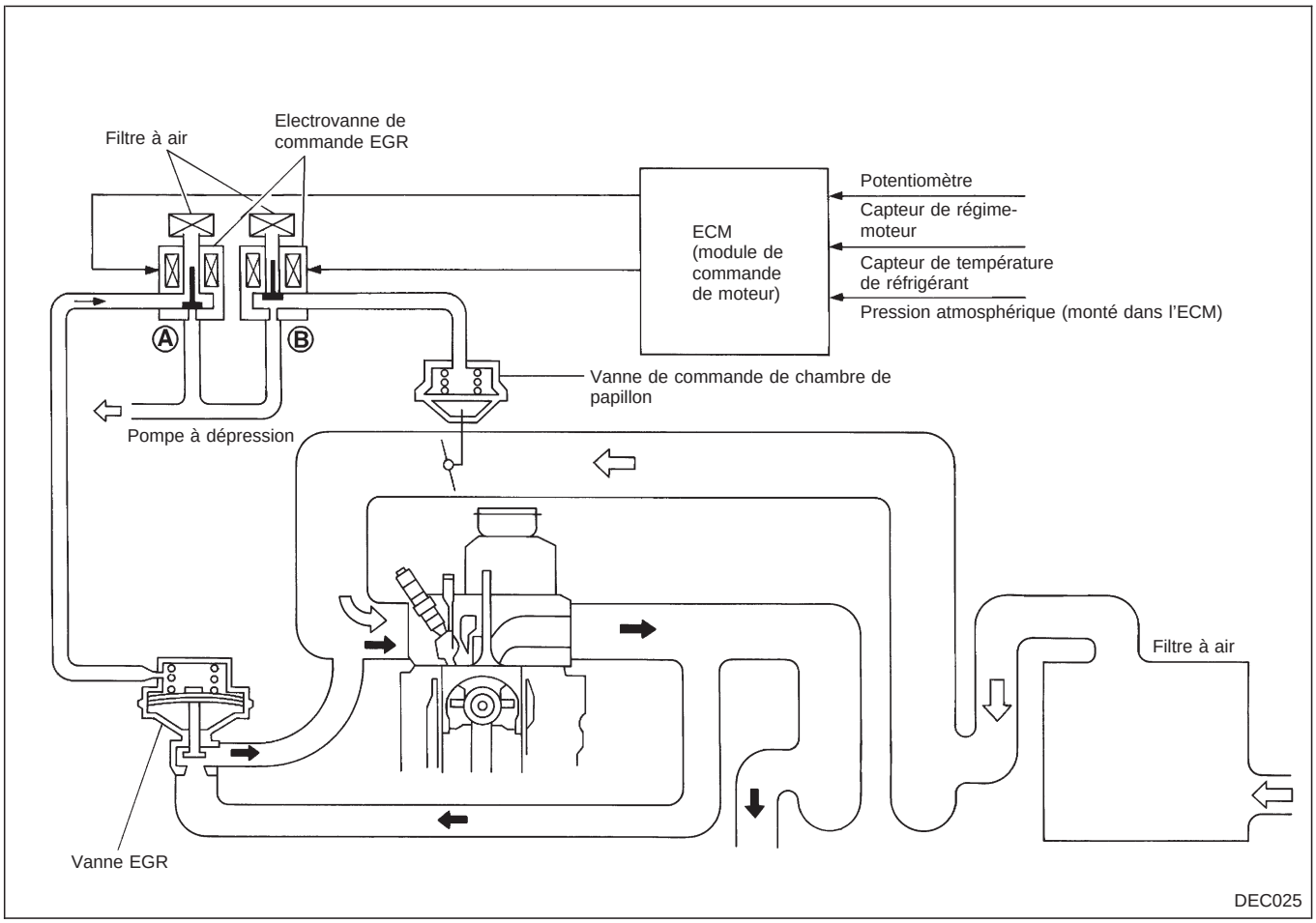

Le système EGR est conçu pour contrôler l'émission d'oxydes d'azote (NOx) en redistribuant les gaz d'échappement dans le collecteur d'admission par l'intermédiaire de la vanne de commande EGR.
Pour le circuit électrique du système EGR, se reporter au 'Schéma de câblage'', ''SYSTEME DE PRE-CHAUFFAGE RAPIDE'', EC-203.

Simpo PDF Merge and Split Unregistered Version - http://www.simpopdf.com

Fonctionnement

Température de réfrigérant °C	Charge du moteur (Zone EGR)	Electrovanne de commande EGR		Vanne EGR	Vanne de commande de chambre de papillon	Quantité de gaz EGR
		A	B			
Inférieure à 60	Tout	ARRET (Fermé)	ARRET (Fermé)	Fermée	Ouverte	–
Supérieure à 60 (140)	Charge légère (Zone ①)	MARCHE (Ouvert)	MARCHE (Ouvert)	Ouverte	Quasiment fermé	Haute
	Charge moyenne (Zone ②)	ARRET (Fermé)	MARCHE (Ouvert)	Ouverte	Ouverte	Faible
	Forte charge*1 (Zone ③)	ARRET (Fermé)	ARRET (Fermé)	Fermée	Ouverte	–

*1 : Cela comprend également les conditions dans lesquelles le moteur est arrêté avec le contact d'allumage sur ON ou lorsque la pression atmosphérique est inférieure à 90,0 kPa (900 mbar, 675 mmHg).

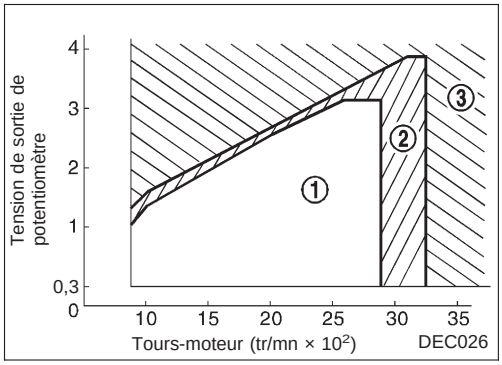

Simpo PDF Merge and Split Unregistered Version - http://www.simpopdf.com

Schéma de câblage

MOTEUR TD25 (CONDUITE A GAUCHE)

EC-EGRC/V-01

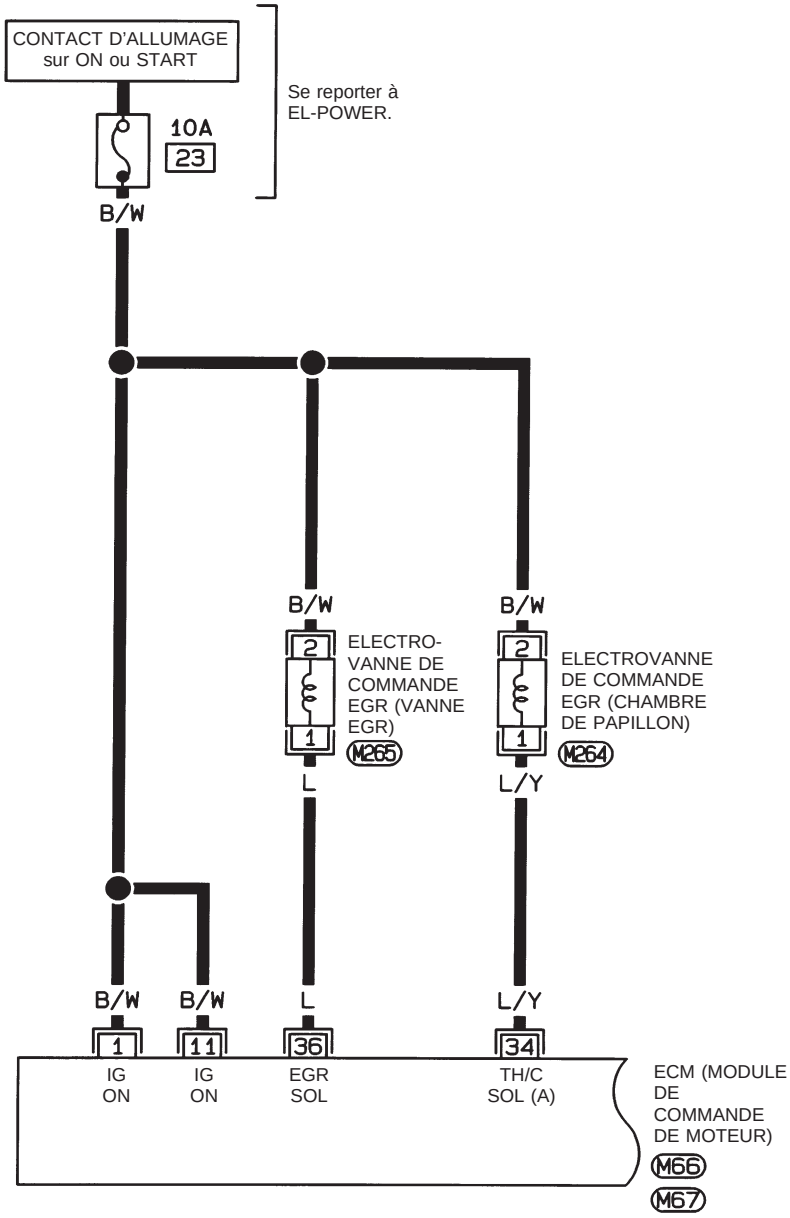



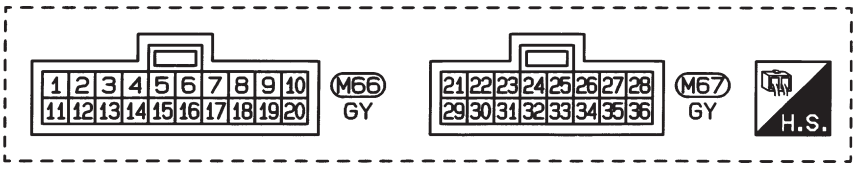

HEC579

Simpo PDF Merge and Split Unregistered Version - http://www.simpopdf.com

Schéma de câblage (Suite)

MOTEUR TD25 (CONDUITE A GAUCHE)

EC-EGRC/V-02

TW : Avec NATS
OT : Sans NATS

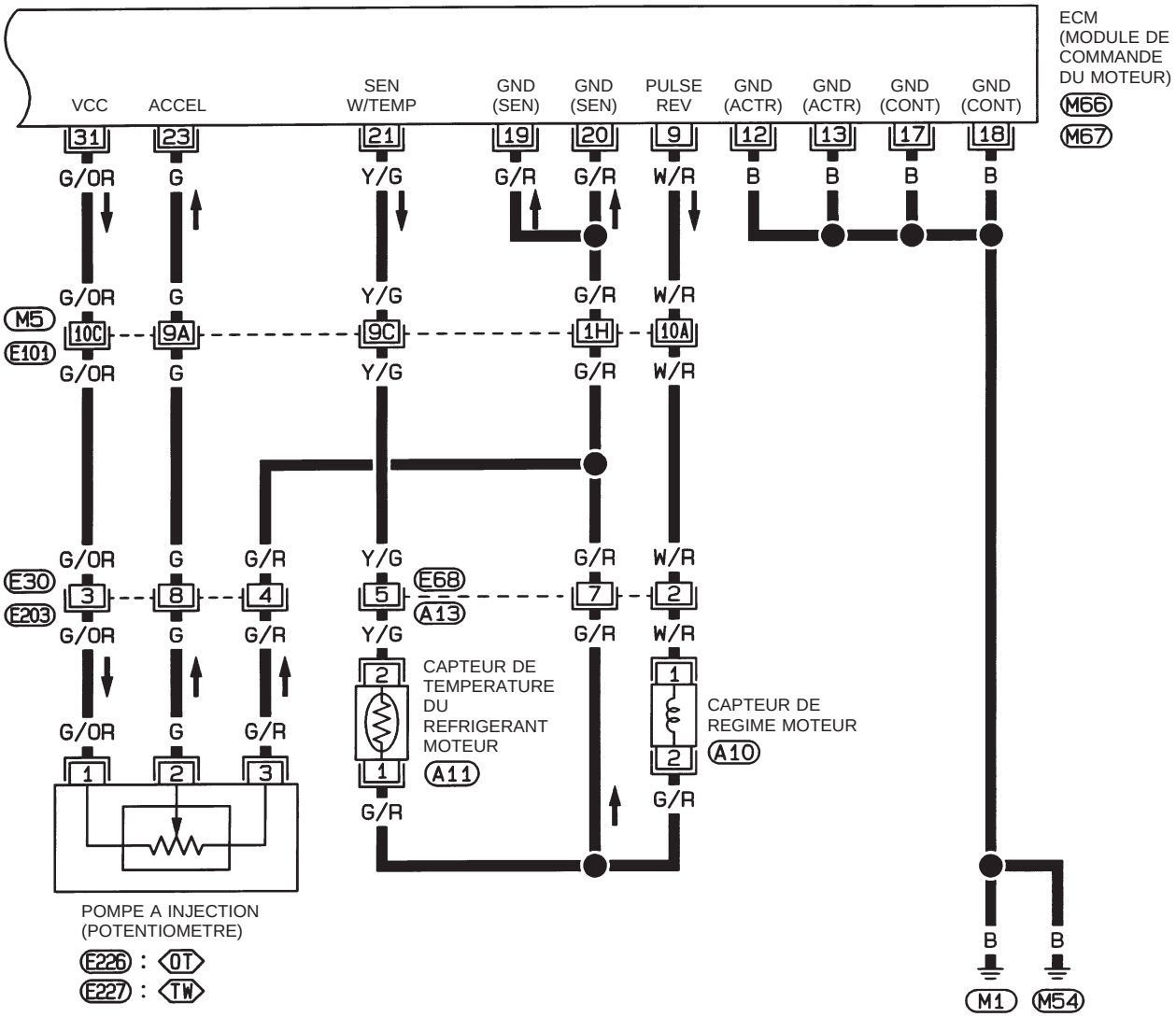

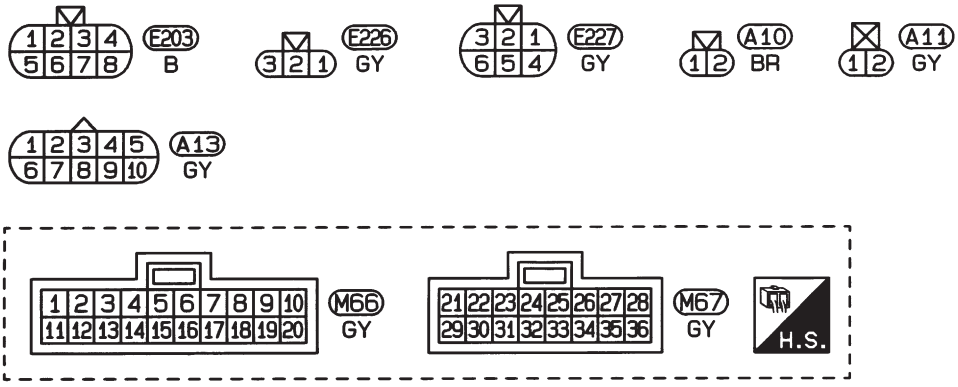

Consulter la dernière page dépliante.

M5, E101

HEC580

Simpo PDF Merge and Split Unregistered Version - http://www.simpopdf.com

Schéma de câblage (Suite)

MOTEUR TD25 (CONDUITE A DROITE)

EC-EGRC/V-03

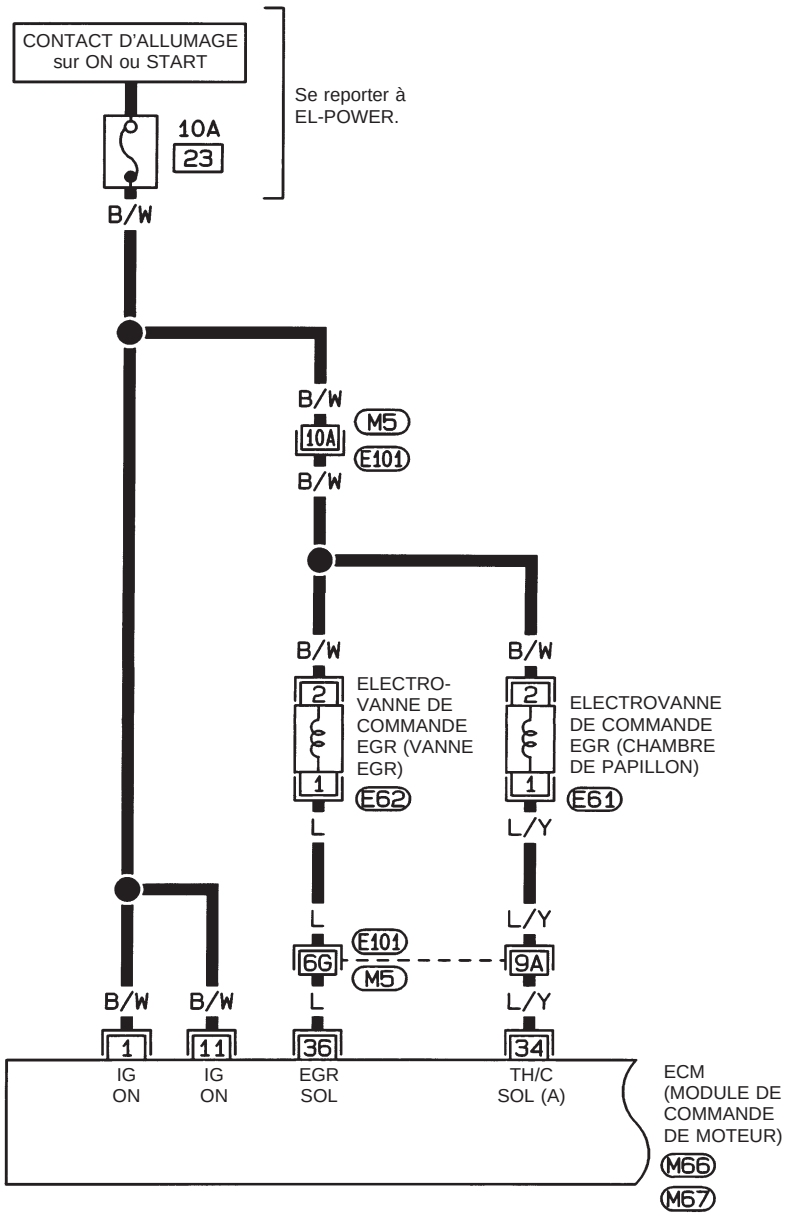

E61, E62
BR, B

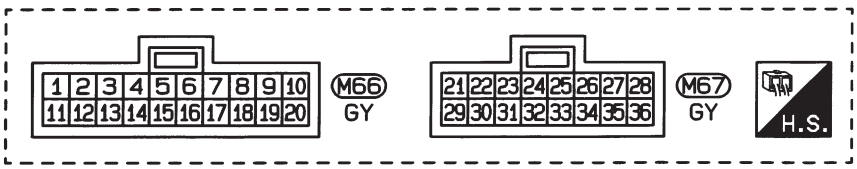

Consulter la dernière page dépliante.

M5, E101

HEC581

Simpo PDF Merge and Split Unregistered Version - http://www.simpopdf.com

Schéma de câblage (Suite)

MOTEUR TD25 (CONDUITE A DROITE)

EC-EGRC/V-04

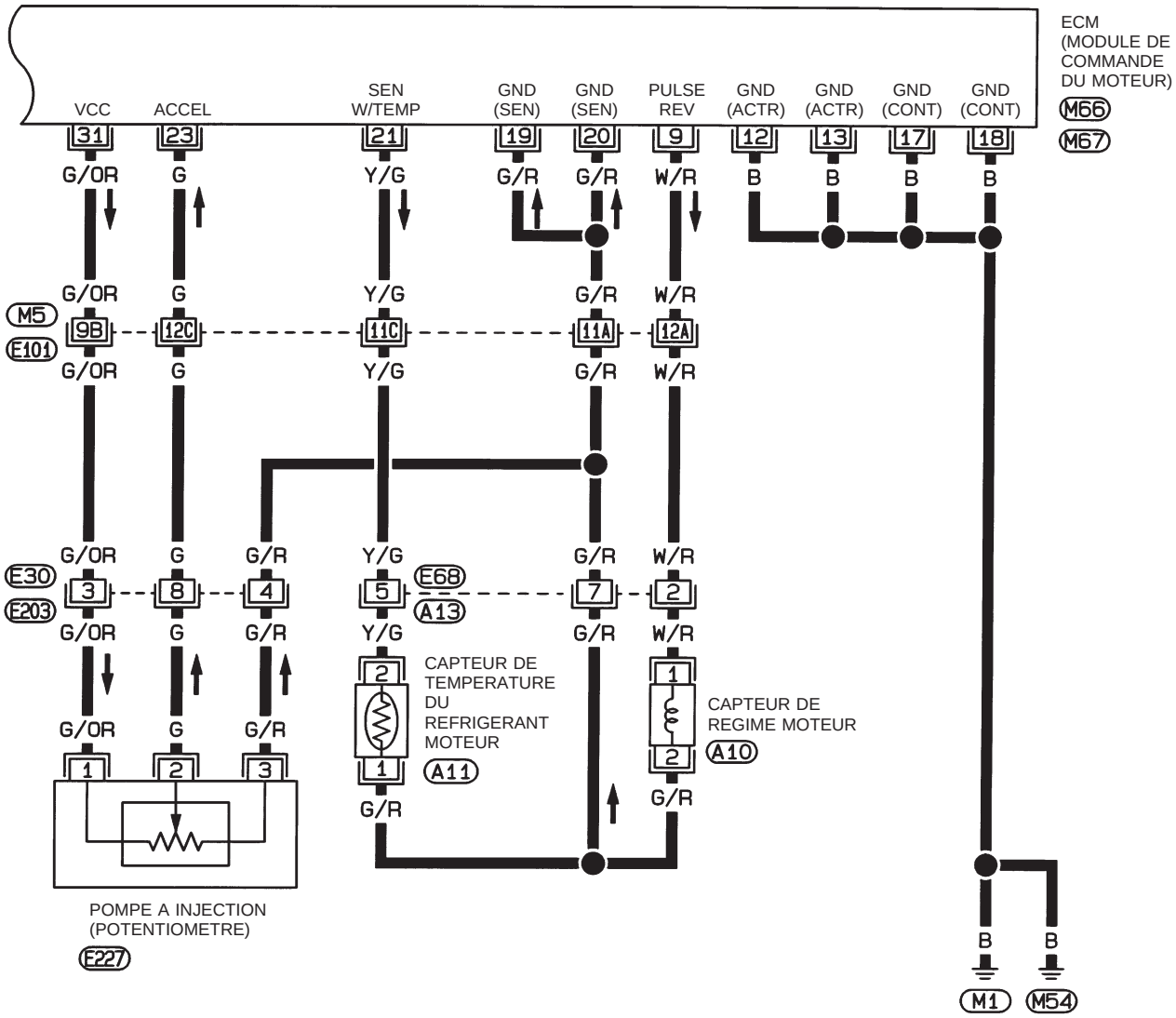



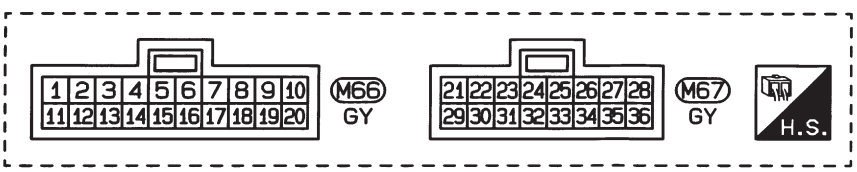

Consulter la dernière page dépliante.

M5, E101

HEC582

Simpo PDF Merge and Split Unregistered Version - http://www.simpopdf.com

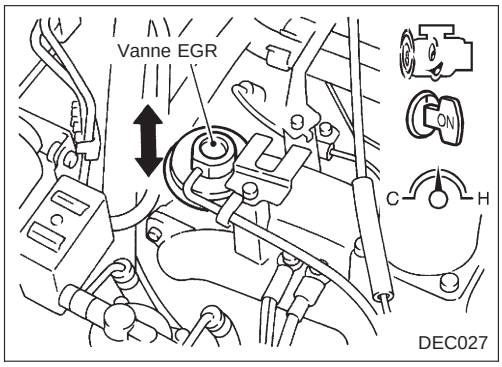

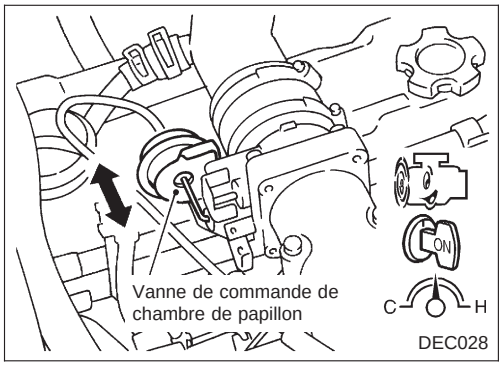

Inspection du système

FONCTIONNEMENT GENERAL

1. Démarrer le moteur et le laisser chauffer suffisamment.
2. S'assurer que le diaphragme de la vanne EGR et le mouvement de l'axe de commande de chambre de papillon (utiliser les doigts pour s'assurer du mouvement de diaphragme de vanne EGR) sous les conditions suivantes.

   Au ralenti :

   Le diaphragme et la tige ne bougent pas.

   En emballant le moteur du ralenti à un régime de 1 000 à 2 800 tr/mn :

   Le diaphragme et la tige bougent.

   En maintenant le régime moteur entre 2 900 et 3 200 tr/mn :

   Le diaphragme et la tige demeurent en position ouverte.

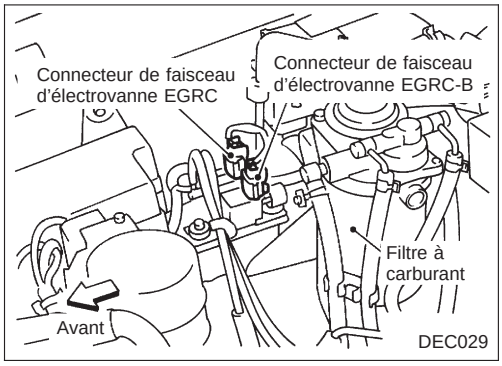

CIRCUIT D'ALIMENTATION ELECTRIQUE

1. Mettre le contact d'allumage sur ''OFF''.
2. Débrancher le connecteur de faisceau de l'électrovanne EGRC A et B.
3. Mettre le contact d'allumage sur ''ON''.

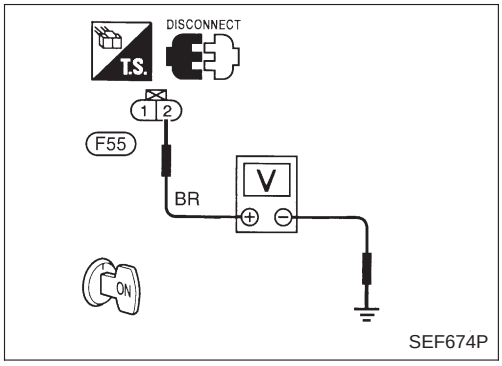

4. Vérifier la tension entre la borne ② et la masse.

   Tension : tension de la batterie

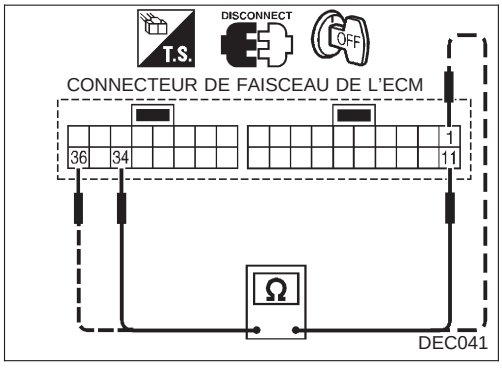

CIRCUIT DU SIGNAL DE SORTIE

1. Mettre le contact d'allumage sur ''OFF''.
2. Débrancher le connecteur de faisceau de l'ECM.
3. Vérifier la continuité du faisceau entre les bornes.

   Il doit y avoir continuité.

   Si le résultat est bon, vérifier si le faisceau n'est pas court-circuité.

   Electrovanne EGRC A :

   Borne ㊱ de l'ECM et borne ① ou ⑪

   Electrovanne EGRC B :

   Borne ㉞ de l'ECM et borne ① ou ⑪

Simpo PDF Merge and Split Unregistered Version - http://www.simpopdf.com

Inspection du système (Suite)

CIRCUIT DU SIGNAL D'ENTREE

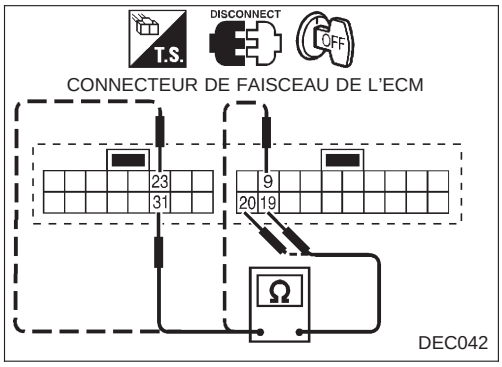

1. Mettre le contact d'allumage sur ''OFF''.
2. Débrancher le connecteur de faisceau de l'ECM.
3. Vérifier la continuité du faisceau entre les bornes.
   Il doit y avoir continuité.
   Si le résultat est bon, vérifier si le faisceau n'est pas court-circuité.
   Potentiomètre :
   Borne (31) de l'ECM et borne (19) ou (20).
   Borne (23) de l'ECM et borne (19) ou (20).
   Capteur de régime moteur :
   Borne (9) de l'ECM et borne (19) ou (20).
   Capteur de température du réfrigérant moteur :
   Se reporter à ''Inspection du circuit de l'unité de commande de préchauffage'' dans ''SYSTEME DE PRECHAUFFAGE RAPIDE'', EC-209.

Inspection des composants

Vanne EGR

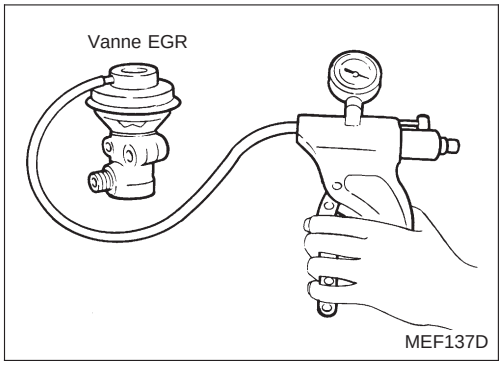

Appliquer une dépression à l'orifice de dépression de la vanne EGR à l'aide d'une pompe à vide manuelle.
Le diaphragme de la vanne EGR doit se soulever.
Si le résultat est mauvais, remplacer la vanne EGR.

Vanne de commande de chambre de papillon

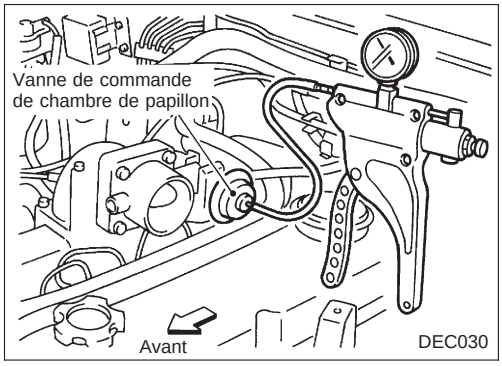

Appliquer une dépression à l'orifice de dépression de la soupape de commande de chambre de papillon à l'aide d'une pompe à vide manuelle.
La vanne de commande de chambre de papillon doit être fermée.
Si le résultat est mauvais, remplacer la soupape de commande de chambre de papillon.

Electrovanne EGRC A et B

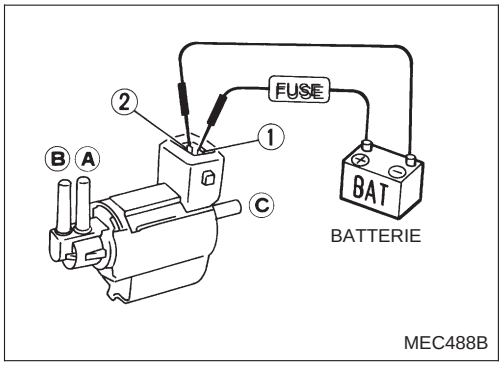

Vérifier la continuité du passage de l'air.

Condition	Continuité du passage d'air entre (A) et (B)	Continuité du passage d'air entre (A) et (C)
Courant continu de 12V entre les bornes (1) et (2) du relais	Oui	Non
Aucun courant alimenté	Non	Oui

Si le résultat est mauvais, remplacer l'(les) électrovanne(s).

Simpo PDF Merge and Split Unregistered Version - http://www.simpopdf.com

Inspection des composants (Suite)

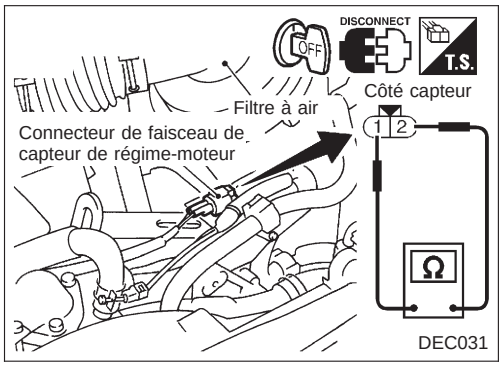

Capteur de régime moteur

1. Débrancher le connecteur de faisceau du capteur de régime moteur.
2. Vérifier la résistance entre les bornes ① et ②.
   Résistance : environ 1,6 kΩ (à 25°C)
   Si le résultat est mauvais, remplacer le capteur.

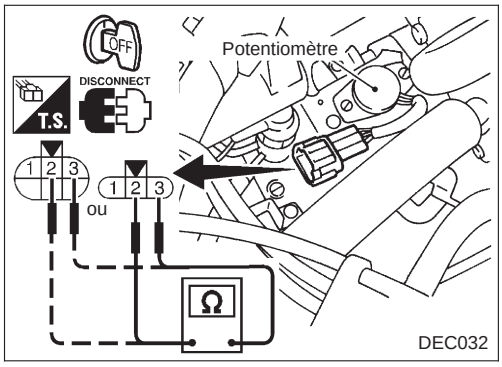

Potentiomètre

1. Débrancher le connecteur de faisceau du potentiomètre.
2. S'assurer que la résitance entre les bornes ② et ③ change lorsque l'accélérateur est utilisé.

Condition de la pédale d'accélérateur	Résistance kΩ (à 20°C)
Complètement relâchée	Environ 0,7
Partiellement enfoncée	0,7 - 5
Enfoncée à pleine course	Environ 5

Si le résultat est mauvais, remplacer le potentiomètre.

Capteur de pression atmosphérique

Ce capteur est à l'intérieur de l'ECM et n'est pas rempla vrait pas fonctionner dans des conditions de pressions atmosphériques inférieures à 90,0 kPa (900 mbar, 675 mmHg).

Capteur de température du réfrigérant moteur

Consulter ''Inspection des composants'', ''SYSTEME DE PRECHAUFFAGE RAPIDE'', EC-214.

Simpo PDF Merge and Split Unregistered Version - http://www.simpopdf.com

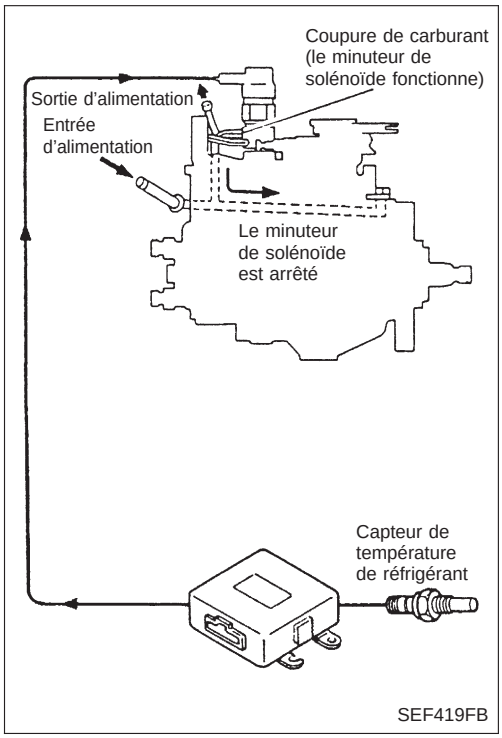

Description

Pour améliorer le démarrage, les modèles pour pays froids sont équipés d'un minuteur de solénoïde. Son objet est d'avancer l'avance à l'injection de carburant en fonction de la température du réfrigérant pendant une certaine période suivant le démarrage du moteur.
Le minuteur est contrôlé par le signal depuis le boîtier de commande de préchauffage (ou de l'ECM). En condition de démarrage à froid, l'unité de commande envoie un signal pour activer le mécanisme d'avancement de la pompe à injection.
Consulter ''Schéma de câblage'', ''SYSTEME DE PRECHAUFFAGE RAPIDE'', EC-203.

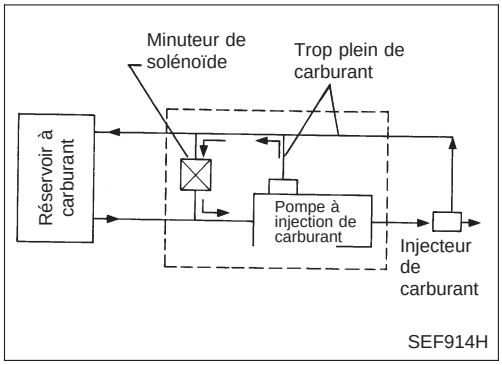

Fonctionnement

Une partie du carburant du conduit de retour est renvoyée à l'entrée de la pompe à injection quand le minuteur de solénoïde est coupé. Lors du démarrage à froid, le minuteur de solénoïde s'enclenche pour stopper le retour de carburant à l'admission. Ceci augmente la pression de carburant dans la pompe à injection de sorte que l'avance à l'injection progresse. La durée de l'avance à l'injection de carburant varie en fonction des changements de température du liquide de refroidissement.

Simpo PDF Merge and Split Unregistered Version - http://www.simpopdf.com

Fonctionnement (Suite)

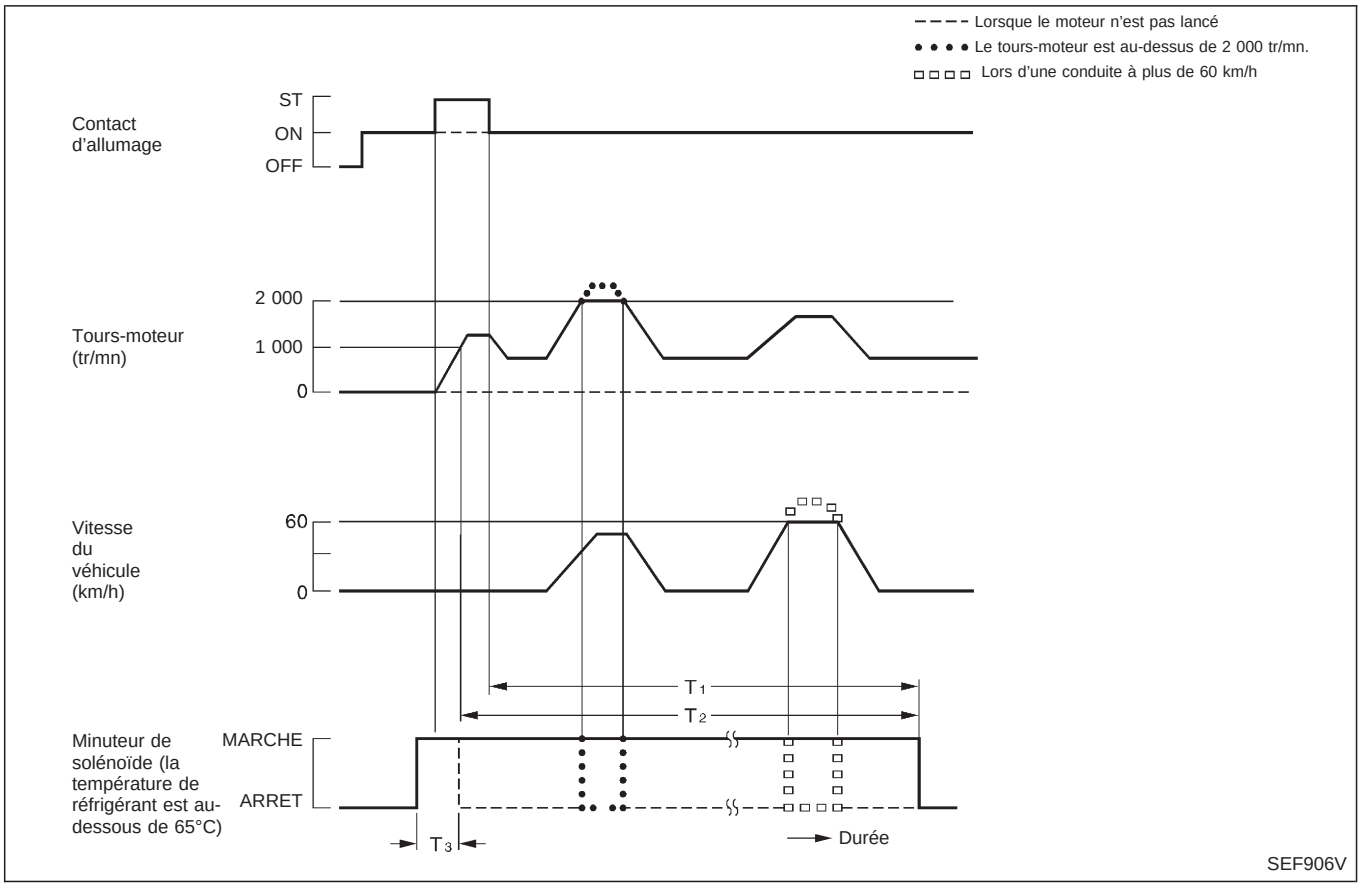

Quand la température du réfrigérant est inférieure à 65°C et que le moteur tourne dans les conditions définies par le régime moteur et le potentiomètre, le minuteur de solénoïde fonctionne. Il s'allume lorsque le contact d'allumage est tourné sur la position ''START''.
Le minuteur de solénoïde reste enclenché pendant T_1 ou T_2 secondes. Le T_1 démarre lorsque le régime moteur a atteint plus de 1 000 tr/mn sur la position START. Le T_2 démarre après que le contact d'allumage a été ramené à la position ON avec le moteur en marche.
Si le moteur ne démarre pas en T_3 secondes ou s'il s'arrête pendant plus de T_3 secondes, le chronomètre de solénoïde s'éteint. Il s'arrête également si le régime du moteur dépasse 2 000 tr/mn ou si la vitesse du véhicule dépasse 60 km/h, cependant il est rétabli si ces situations sont en dessous de la limite.

T_1, T_2 : 30 [sec.]
T_3 : env. 1 [sec.]

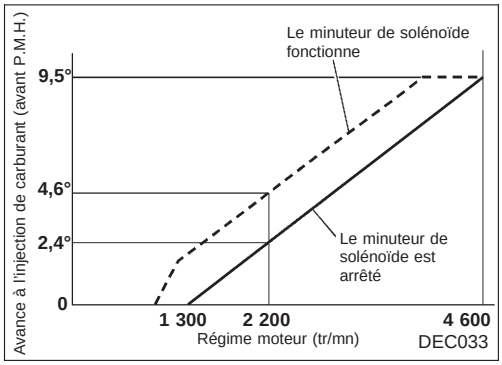

CARACTERISTIQUES DU MINUTEUR

Les illustrations indiquent les différences de l'avance à l'injection de carburant par rapport au régime moteur lorsque le minuteur de solénoïde est actionné ou non.
Lorsque le minuteur de solénoïde s'enclenche, l'avance à l'injection progresse d'environ 2°. Ainsi, le démarrage à froid du moteur par temps froid est grandement amélioré.

Application :

	N° de pièce	N° d'assemblage de pompe
TD25	16700 3S301	104780-4961
	16700 3S300	104780-4951

Simpo PDF Merge and Split Unregistered Version - http://www.simpopdf.com

Schéma de câblage

MOTEUR TD25 (CONDUITE A GAUCHE)

EC–PLA–01

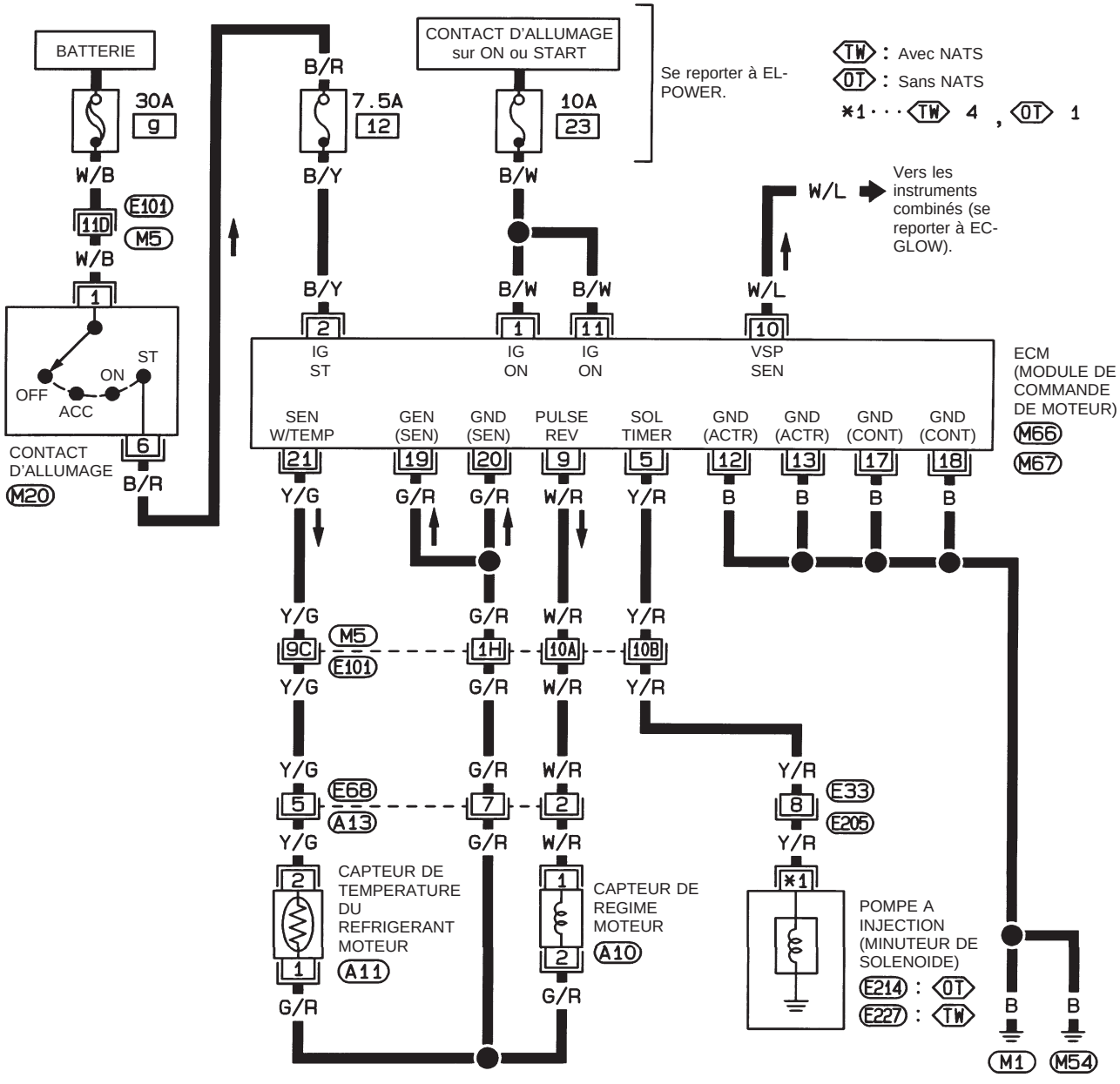

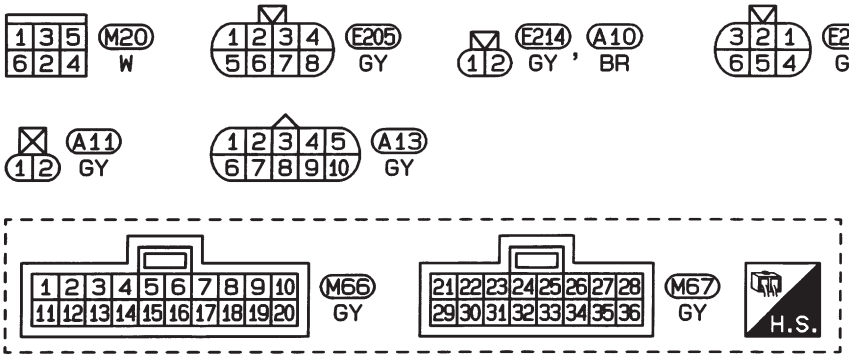

Consulter la dernière page dépliante.

M5 , E101

NOTE : se reporter à "EC-GLOW-03" pour le capteur de vitesse du véhicule, et "EC-EGRC/V-02" pour le potentiomètre.

HEC577

Simpo PDF Merge and Split Unregistered Version - http://www.simpopdf.com

Schéma de câblage (Suite)

MOTEUR TD25 (CONDUITE A DROITE)

EC–PLA–02

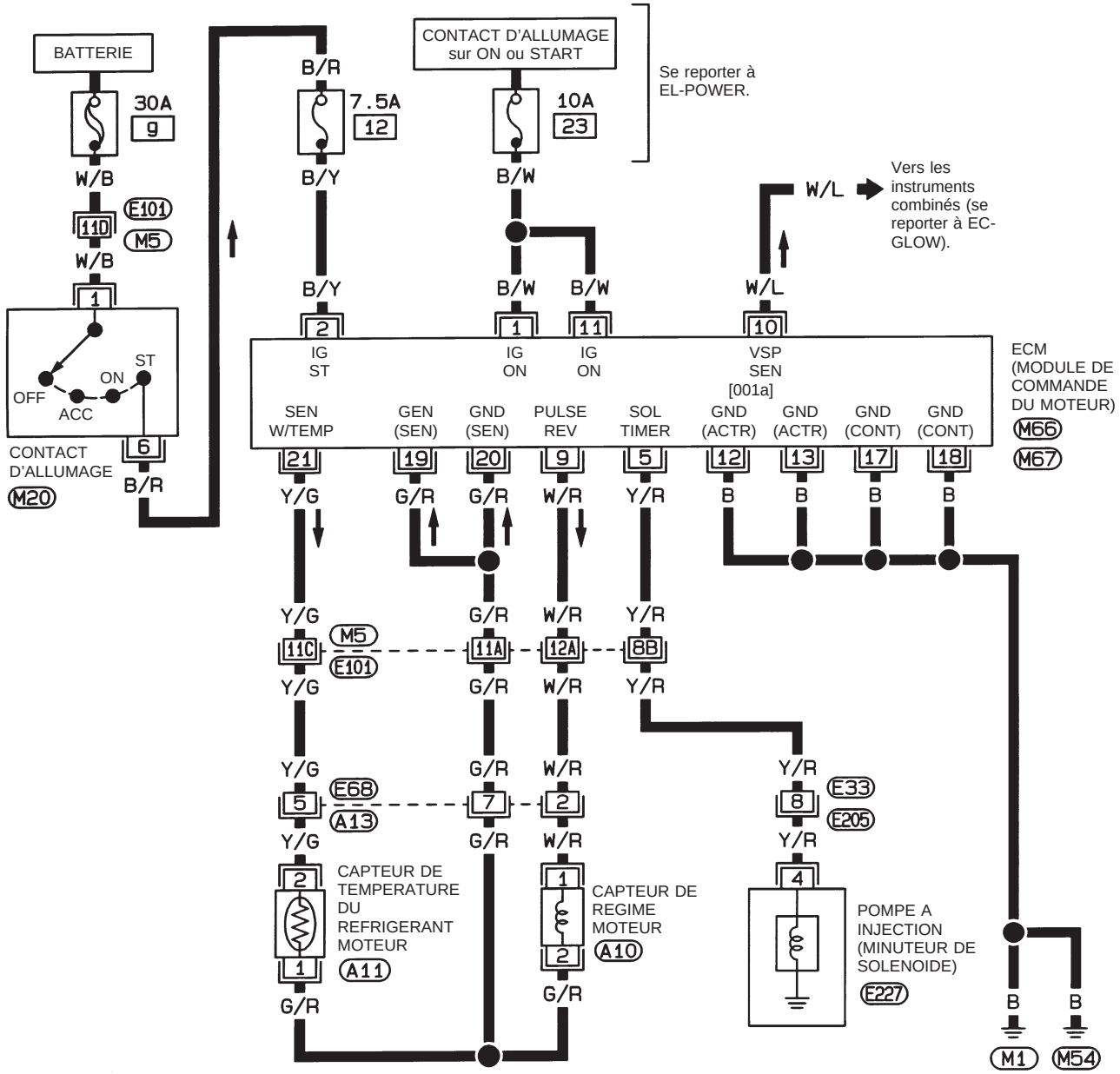

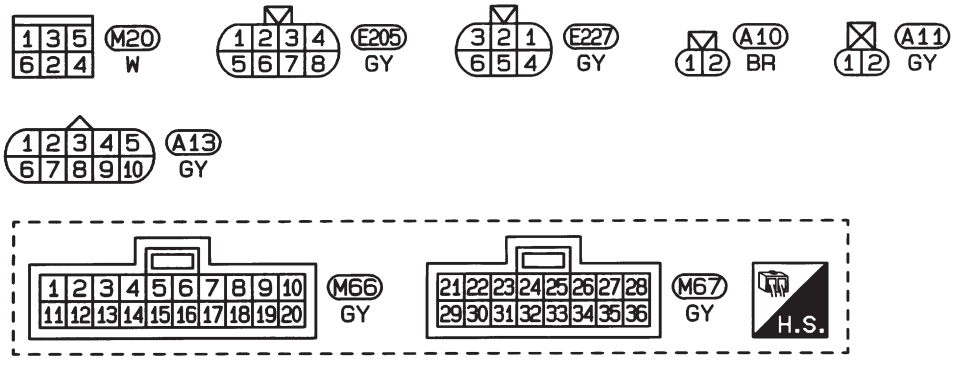

Consulter la dernière page dépliante.

M5, E101

NOTE : Se reporter à ''EC-GLOW-06'' pour le capteur de vitesse du véhicule, et ''EC-EGRC/V-04'' pour le potentiomètre.

HEC578

Simpo PDF Merge and Split Unregistered Version - http://www.simpopdf.com

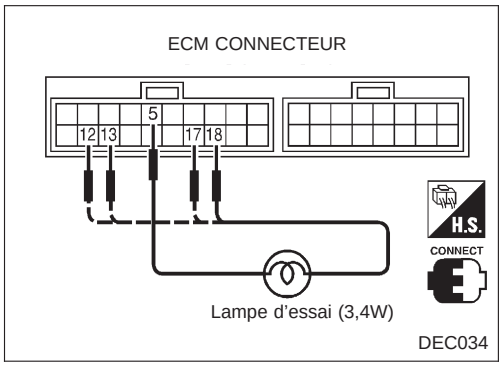

Inspection

CIRCUIT DE COMMANDE DU MINUTEUR DE SOLENOIDE

1. Connecter la lampe d'essai sur le boîtier de contrôle de préchauffage comme indiqué.
2. Débrancher le connecteur de faisceau de la borne ''S'' du moteur de démarreur.
3. S'assurer que la lampe d'essai s'allume quand le contact d'allumage est mis sur ''START''.
4. Mesurer le laps de temps durant lequel la lampe d'essai reste allumée lorsque le contact d'allumage est tourné de ''ON'' sur ''START''.

Temps pendant lequel la lampe d'essai doit rester allumée :

Environ 30 secondes à une température du réfrigérant inférieure à 65°C
0 seconde à une température du réfrigérant supérieure à 65°C.

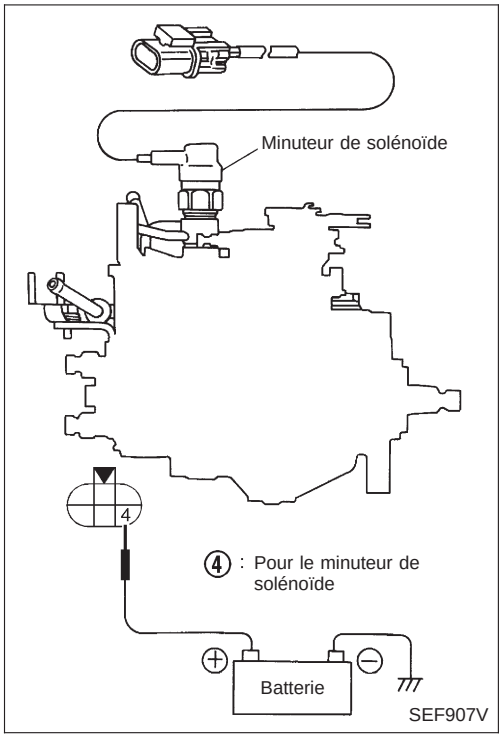

MINUTEUR DE SOLENOIDE

1. Débrancher le faisceau de minuterie du solénoïde et s'assurer que le solénoïde émet un bruit de déclic lorsque la batterie est branchée et débranchée.
   Si le solénoïde comporte un défaut, le remplacer.

Rebrancher le connecteur après contrôle.

COURSE DU PISTON DE MINUTEUR (avec un appareil d'essai de pompe)

Mesurer les courses du piston de distribution aux régimes spécifiés de la pompe à injection quand le minuteur de solénoïde est allumé et éteint.
Consulter ''Calibrage standard de la pompe à injection'' dans les SDS.

Simpo PDF Merge and Split Unregistered Version - http://www.simpopdf.com

Schéma de câblage

EC-FCUT-01

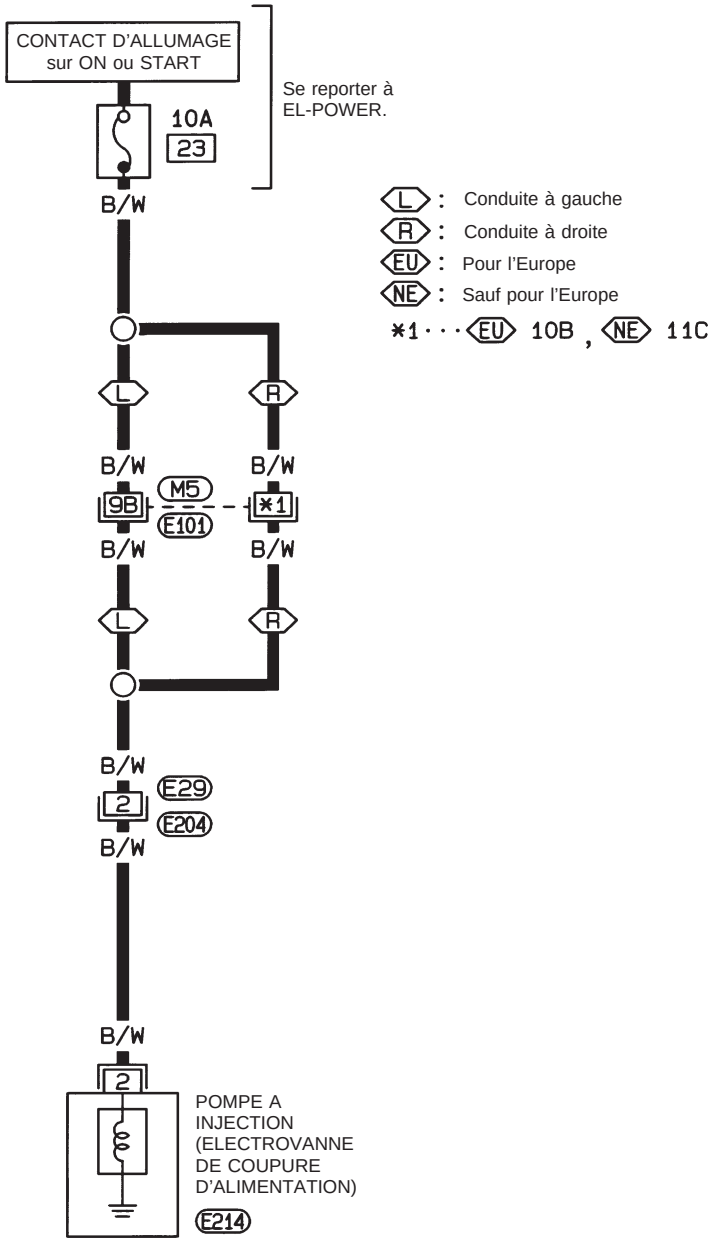

E204 GY

E214 GY

Consulter la dernière page dépliante.

M5, E101

HEC583

Simpo PDF Merge and Split Unregistered Version - http://www.simpopdf.com

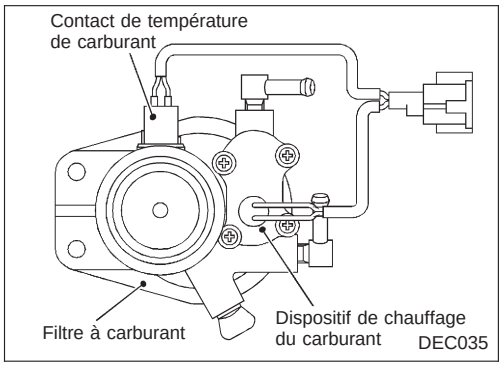

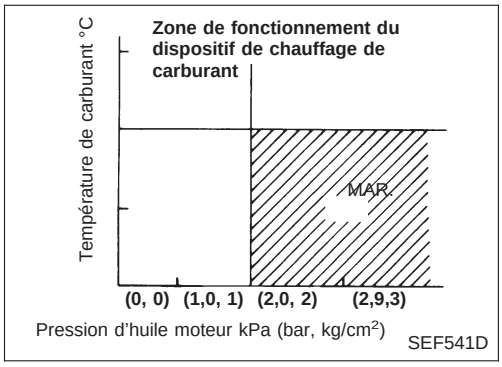

Description

Ce système permet d'éviter au filtre à carburant de se boucher avec de la cire de carburant.
Le système du dispositif de chauffage de carburant est actionné lorsque le contact de température de carburant et le manocontact d'huile fonctionnent.
Le contact de température de carburant est enclenché lorsque la température du carburant passe en-dessous de −15°C. Il reste enclenché jusqu'à ce que la température du carburant atteigne environ 0°C.
Si la température du carburant ne décroît pas au-dessous de −15°C, le contact de température de carburant ne s'enclenchera pas même si la température du carburant est au-dessous de 0°C.

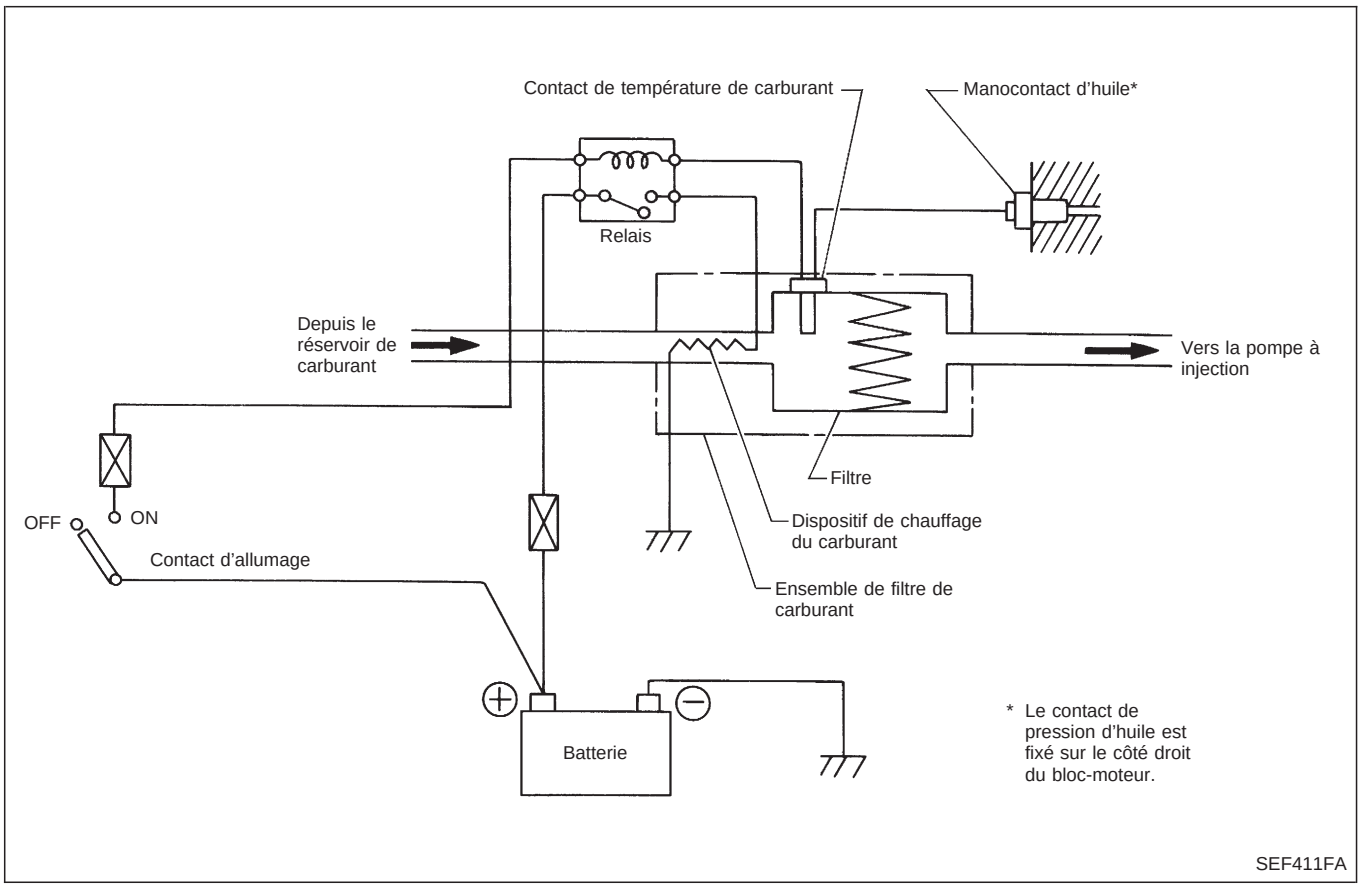

Simpo PDF Merge and Split Unregistered Version - http://www.simpopdf.com

Schéma de câblage

EC-F/HEAT-01

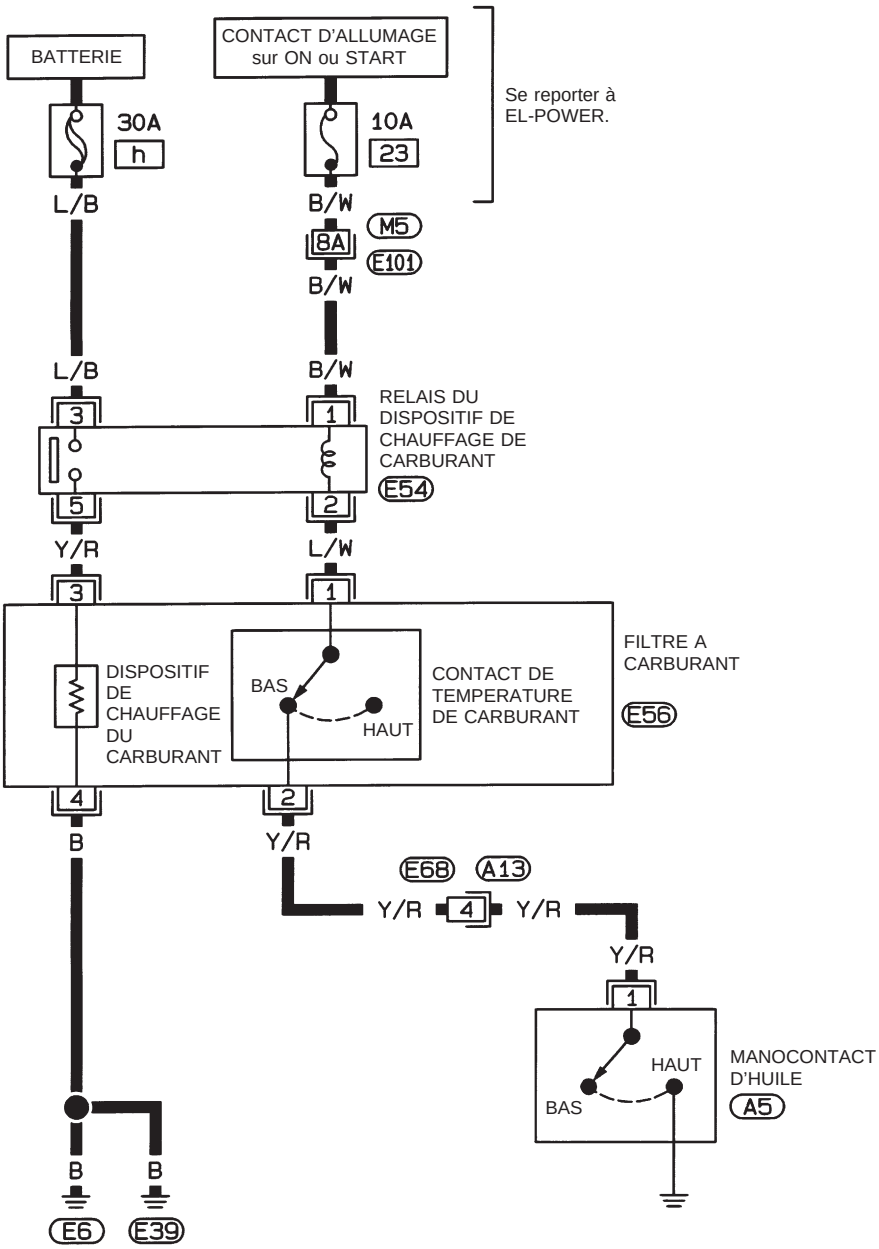

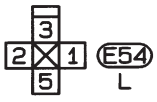





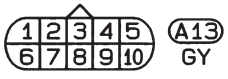

Consulter la dernière page dépliante.
M5, E101

HEC584

Simpo PDF Merge and Split Unregistered Version - http://www.simpopdf.com

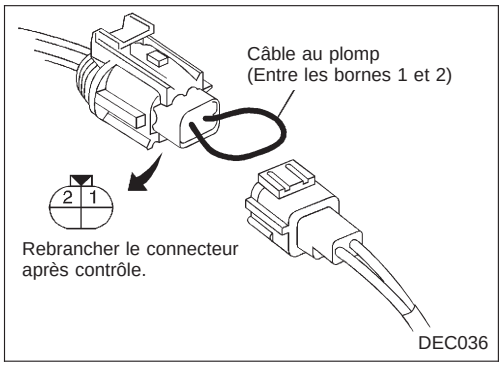

Inspection du système

1. Mettre le contact d'allumage sur ''OFF''. Débrancher le connecteur de faisceau du contact de température de carburant.
2. Brancher le câble au plomp, comme indiqué, entre les bornes du contact de température de carburant.

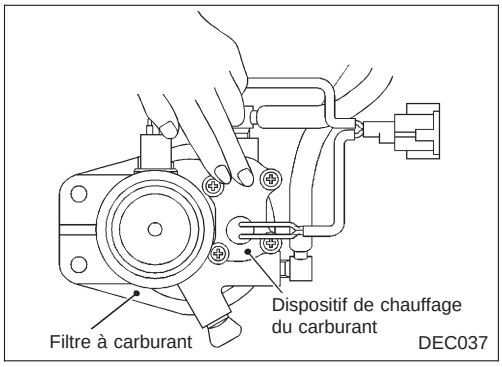

3. Faire tourner le moteur à un régime de 1 000 tr/mn. Après quelques minutes, s'assurer que le dispositif de chauffage de carburant est chaud.

Faire attention à ne pas se brûler.

4. Si le dispositif de chauffage de carburant ne fonctionne pas, vérifier le faisceau de câble et les composants électriques du système de dispositif de chauffage du carburant.

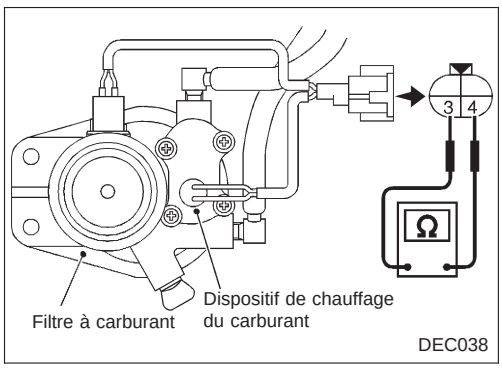

Inspection des composants

Dispositif de chauffage du carburant

1. Vérifier la continuité du dispositif de chauffage de carburant.
2. Si le dispositif de chauffage de carburant fonctionne mal, remplacer le dispositif de chauffage du filtre de carburant.

Simpo PDF Merge and Split Unregistered Version - http://www.simpopdf.com

Inspection des composants (Suite)

Contact de température de carburant

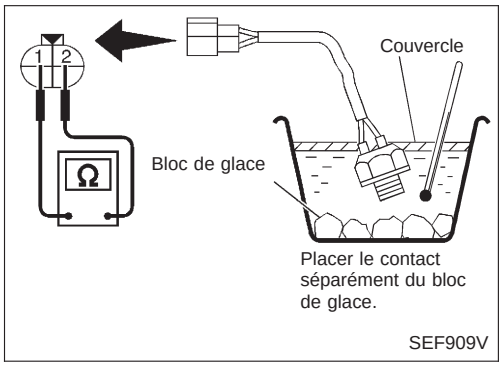

Déposer le contact de température de carburant et vérifier l'opération en changeant la température atmosphérique à l'aide d'un bloc de glace.

Température °C	Fonctionnement	Continuité
Diminué à moins 11 - 19	ARRET → MARCHE	MARCHE : existe.
Augmenté jusqu'à environ 0	Marche → Arrêt	ARRET : n'existe pas.

Si le résultat est mauvais, remplacer le contact de température de carburant.
Au montage, utiliser un nouveau joint torique.
AVERTISSEMENT :
Ne pas toucher le contact de température de carburant refroidi à main nue.

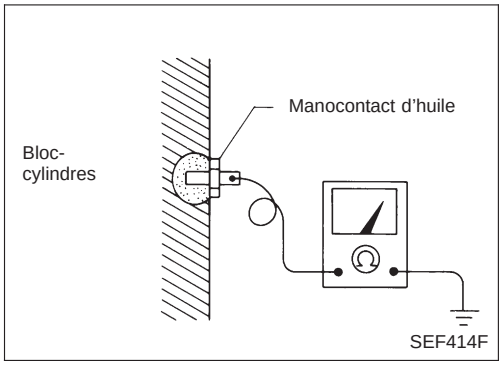

Manocontact d'huile

1. Faire tourner le moteur à un régime de 1 000 tr/mn.
2. Vérifier la continuité du manocontact d'huile.
3. Si le contact de pression d'huile comporte un défaut, le remplacer.

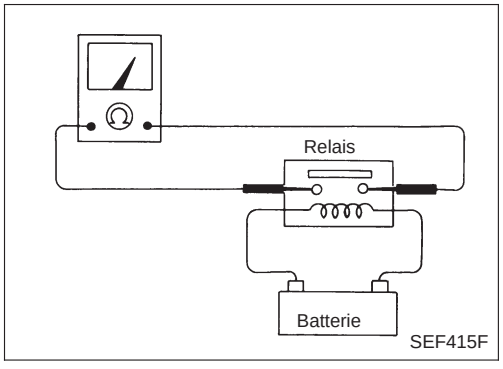

Relais du dispositif de chauffage de carburant

1. Vérifier le fonctionnement du relais du dispositif de chauffage de carburant.
2. Si le relais du dispositif de chauffage de carburant ne fonctionne pas, le remplacer.

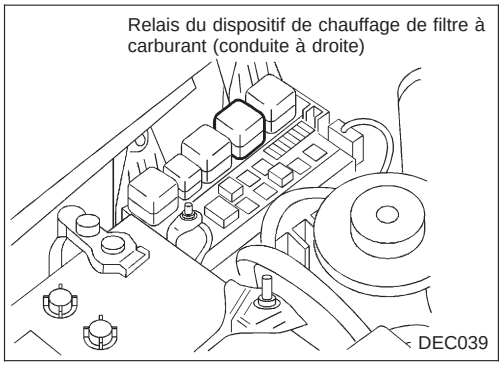

Simpo PDF Merge and Split Unregistered Version - http://www.simpopdf.com

Schéma de câblage

EC–FICD–01

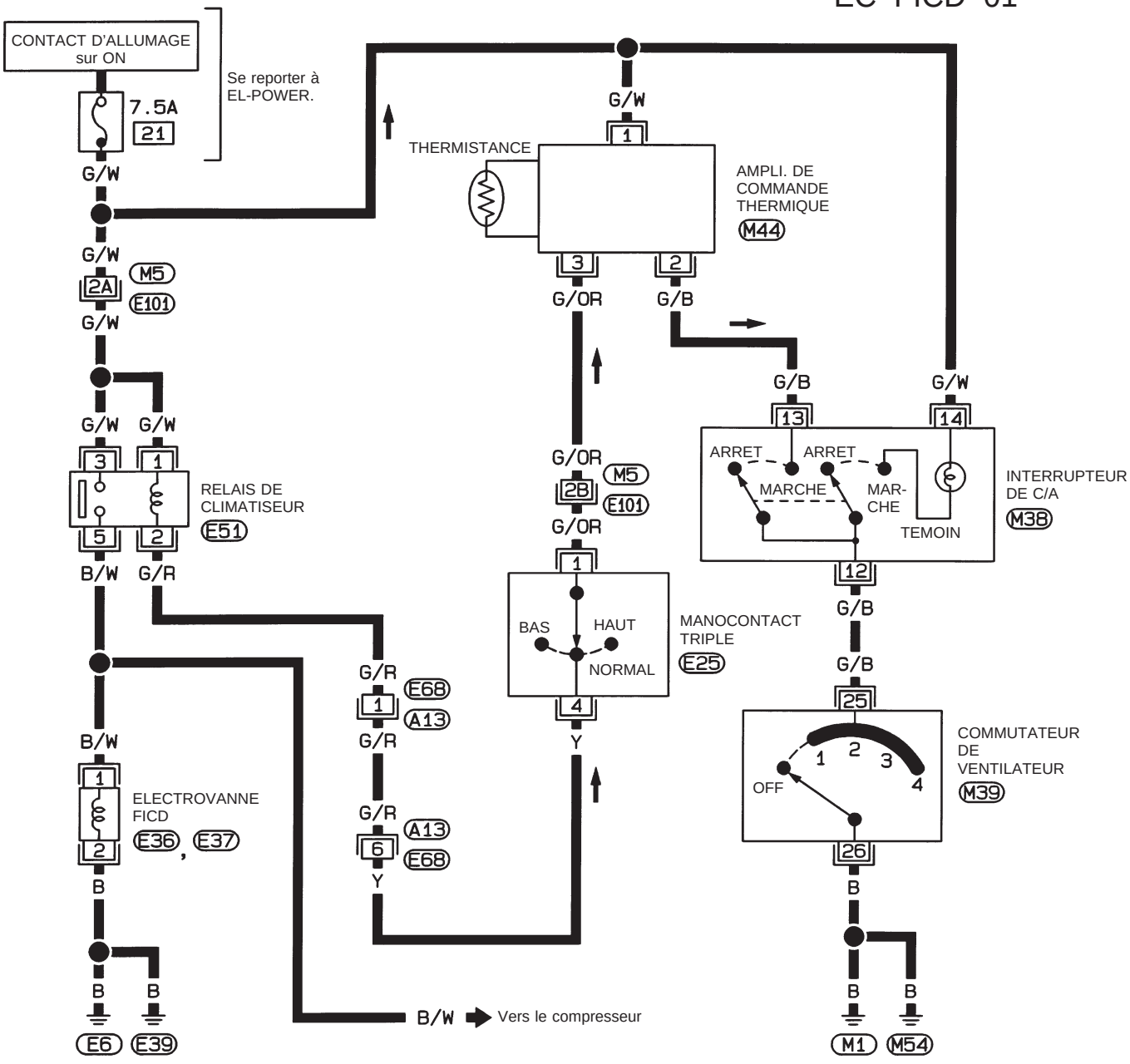

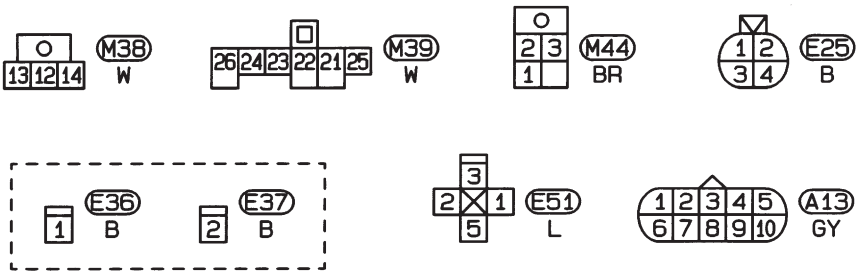

Consulter la dernière page dépliante.

M5 , E101

Simpo PDF Merge and Split Unregistered Version - http://www.simpopdf.com

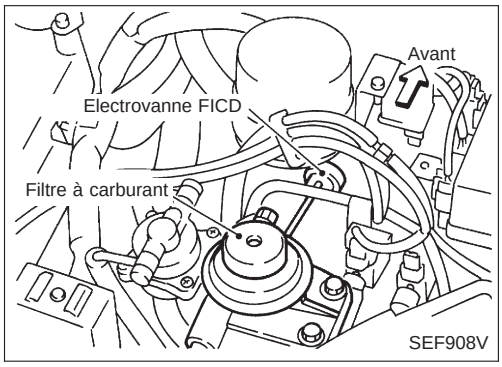

Inspection des composants électriques

Electrovanne FICD

1. Débrancher les connecteurs de faisceau de l'électrovanne FICD et les flexibles à dépression.
2. Brancher le connecteur de l'électrovanne à la batterie et des flexibles à dépression appropriés à l'électrovanne comme indiqué dans la figure.
3. Insuffler de l'air dans les flexibles.
   Présence de débit d'air : bon
   Absence de débit d'air : mauvais

Si le résultat est mauvais, remplacer l'électrovanne FICD.

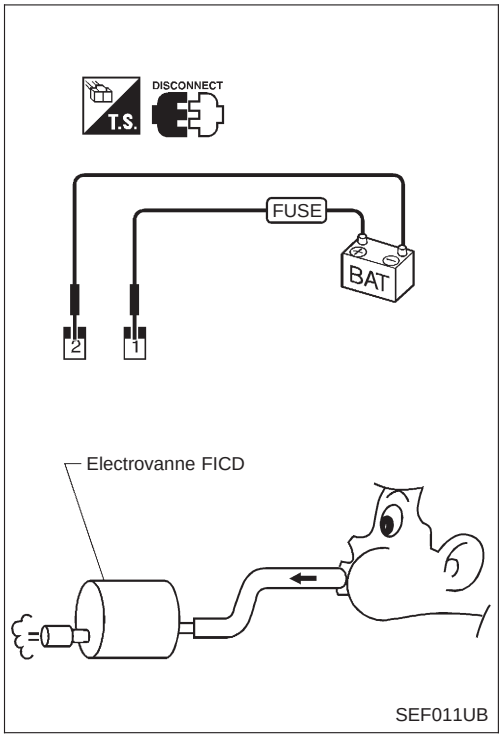

COMPOSANTS RELATIFS AU CLIMATISEUR

Se reporter à ''Inspection des composants électriques'', ''DIAGNOSTICS DES DEFAUTS'' dans la section HA.

Simpo PDF Merge and Split Unregistered Version - http://www.simpopdf.com

Caractéristiques générales

REGULATEUR DE PRESSION

Pression d'alimentation kPa (bar, kg/cm^2)	
Au ralenti	Environ 235 (2,35, 2,4)
Quelques secondes après que le contact d'allumage est passé de ''OFF'' à ''ON''	Environ 294 (2,94, 3,0)

Inspection et réglage

Régime de ralenti*1 tr/mn	Régime de ralenti de base*3	750±25
A vide*2 (en position ''N'')	Régime de ralenti à cible	800±50
Climatiseur : MARCHE (en position ''N'')	900 ou plus	
Calage de l'allumage	10°±2° avant P.M.H.	
Régime de contact de la position de papillon tr/mn	1 000±150	

*1 : Régulation automatique et ne nécessitant aucun réglage
*2 : Dans les conditions suivantes :
- Interrupteur de climatiseur : à l'arrêt
- Volant : maintenu en position de marche en ligne droite
- Charge électrique : ETEINTS (Feux, chauffage, ventilateur et désembuage de lunette arrière)

*3 : Le connecteur du capteur de position de papillon est débranché.

BOBINE D'ALLUMAGE

Tension primaire V	Tension de la batterie 11 - 14
Résistance primaire (à 25°C) Ω	Moins de 1,0
Résistance secondaire (à 25°C) kΩ	7 - 13

DEBITMETRE D'AIR

Tension d'alimentation V	Tension de la batterie (11 à 14)
Tension de sortie au ralenti V	1,3 - 1,7 au ralenti* 1,7 - 2,1 à 2 500 tr/mn*

* : Le moteur est réchauffé suffisamment et tourne à vide.

CAPTEUR DE TEMPERATURE DU REFRIGERANT MOTEUR

Température °C	Résistance
20	2,1 - 2,9 kΩ
50	0,68 - 1,00 kΩ
90	0,236 - 0,260 kΩ

POMPE D'ALIMENTATION

Résistance (à 25°C) Ω	0,2 - 5,0

VANNE IACV-AAC

Résistance (à 25°C) Ω	Environ 10,0

INJECTEUR

Résistance (à 25°C) Ω	10 - 14

RESISTANCE

Résistance (à 25°C) kΩ	Environ 2,2

CAPTEUR DE POSITION DE PAPILLON

Positions de la vanne de papillon	Résistance (à 25°C)
Complètement fermée	Environ 0,6 kΩ
Ouverte à demi	0,6 - 4,0 kΩ
Complètement ouverte	Environ 4,0 kΩ

DISPOSITIF DE CHAUFFAGE DE SONDE A OXYGENE CHAUFFEE

Résistance (à 25°C) Ω	2,3 - 4,3

CAPTEUR DE TEMPERATURE D'AIR D'ADMISSION

Température °C	Résistance
20	2,1 - 2,9 kΩ
80	0,27 - 0,38 kΩ

Simpo PDF Merge and Split Unregistered Version - http://www.simpopdf.com

Pompe à injection de type VE

APPLICATION

Moteur	Destination	N° pièce	N° d'assemblage de pompe	Remarques
TD25	Europe	16700 3S300	104780-4951	Avec système antivol Nissan (NATS)
		16700 3S301	104780-4961	

CONTROLE ET REGLAGE

Levée de plongeur

Moteur	Levée du plongeur au P.M.H. mm		N° pièce	N° d'assemblage de pompe
	Inspection	Réglage		
TD25	0,71±0,05	0,71±0,02	16700 3S300	104780-4951
			16700 3S301	104780-4961

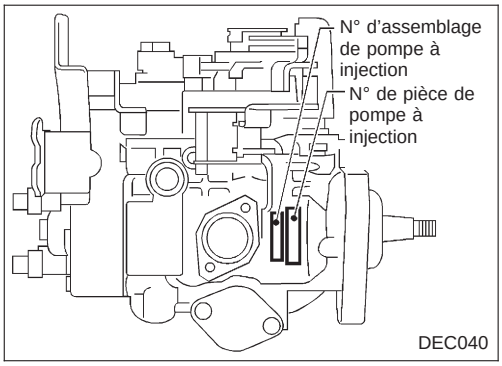

Régime maxi. du moteur

Moteur	Régime maxi. du moteur (à vide) tr/mn
TD25	5 000 $^{+100}_{-200}$

Injecteur

CONTROLE ET REGLAGE

Ensemble injecteur

Unité : kPa (bar, kg/cm^2)

Pression d'injection initiale	
Neuf	10 297 - 11 278 (103,0 - 112,8, 105 - 115)
Usagé	9 807 - 10 297 (98,1 - 103,0, 100 - 105)

Cales d'épaisseur

Epaisseur mm	N° pièce
0,1	16613-65N00
0,2	16613-65N01
0,3	16613-65N02
0,4	16613-65N03
0,5	16613-65N04
0,52	16613-65N05
0,54	16613-65N06
0,56	16613-65N07
0,58	16613-65N08
0,8	16613-65N09

Simpo PDF Merge and Split Unregistered Version - http://www.simpopdf.com

Calibrage standard de la pompe à injection

N° d'assemblage de pompe à injection	104780-4951/ 104780-4961
N° pièce	16700 3S300/ 106700 3S301

Sens de rotation de la pompe : sens des aiguilles d'une montre–vue du côté entraînement

1. Conditions d'essai

1 - 1 Injecteur : 105780-0060 (NP-DN0SD1510)
1 - 2 Support d'injecteur : 105780-2150
1 - 3 Pression d'ouverture d'injecteur : 13 000 $^{+300}_{0}$ kPa ($130,0^{+3,0}_{0}$ bar, 133^{+3}_{0} kg/cm^2)
1 - 4 Tuyau d'injection : 2 dia. x 6 dia. x 450 mm
1 - 5 Température du carburant : 45^{+5}_{0} °C
1 - 6 Pression de pompe d'alimentation : 20 kPa (0,20 bar, 0,2 kg/cm^2)

2. Réglage		Régime de la pompe tr/mn	Réglages	Pression d'air de charge kPa (mbar, mmHg)	Différence de débit mℓ
2 - 1	Course du dispositif de distribution	1 100	MARCHE 3,4 - 4,2 mm ARRET 1,8 - 2,2 mm MARCHE 471 - 549 kPa (4,71 - 5,49 bar, 4,8 - 5,6 kg/cm^2)	—	—
2 - 2	Pression de la pompe d'alimentation	1 100	ARRET 402 - 461 kPa (4,02 - 4,61 bar, 4,1 - 4,7 kg/cm^2)		–
2 - 3	Débit à pleine charge	1 100	46,9 - 47,9 mℓ /1 000 course		3,5
2 - 4	Régulation du régime de ralenti	375	5,1 - 9,1 mℓ /1 000 course		2,0
2 - 5	Démarrage	100	45, 0 - 80,0 mℓ /1 000 course		—
2 - 6	Régulation du régime à pleine charge	2 500	12,9 - 16,9 mℓ /1 000 course		—
2 - 7	Réglage du minuteur de charge	1 100	0,1 - 0,5 mm		–

3. Caractéristiques d'essai		Distribution à solénoïde	MARCHE		ARRET		
3 - 1	Dispositif de distribution	N = tr/mn mm	1 100 3,3 - 4,3	2 150 7,3 - 8,2	700 Inférieur à 0,8	1 100 1,7 - 2,3	2 150 6,3 - 7,5
3 - 2	Pompe d'alimentation	N = tr/mn kPa (bar, kg/cm^2)				1 100 392 - 471 (3,92 - 4,71, 4,0 - 4,8)	2 150 618 - 696 (6,18 - 6,96, 6,3 - 7,1)
3 - 3	Débit de trop-plein	N = tr/mn mℓ/min.	1 100 310 - 570		–		

3 - 4 Quantités de carburant injecté

Position du levier de commande de régime	Régime de la pompe tr/mn	Débit de carburant mℓ/1 000 course	Pression d'air de charge kPa (mbar, mmHg)
Régime maxi	1 100	46,4 - 48,4	–
	500	41,3 - 47,3*	
	2 150	41,2 - 48,2*	
	2 500	11,9 - 17,9	
	2 700	Inférieur à 5,0	
Contact coupé Vanne magnétique	375	0	–
Ralenti	375	4,6 - 9,6	–
3 - 5 Solénoïde	Tension d'enclenchement maxi : 8V Tension d'essai : 12 - 14V		

4. Dimensions	
K	3,2 - 3,4 mm
KF	5,7 - 5,9 mm
MS	0,9 - 1,1 mm
BCS	–
Pré-course	0,08 - 0,12 mm
Angle du levier de commande	
α	51,5 - 59,5 degrés
β	31,0 - 41,0 degrés
γ	–

MARCHE : le minuteur de solénoïde est en marche. * : Valeur de référence
ARRET : le minuteur de solénoïde est arrêté.
Lorsque la position MARCHE-ARRET du chronomètre de solénoïde n'est pas indiquée dans les spécifications, c'est que la position est sur ARRET.

Simpo PDF Merge and Split Unregistered Version - http://www.simpopdf.com

Calibrage standard de la pompe à injection (Suite)

Position de mesure de l'angle du levier de commande

Mesurer les angles (α, β) du levier de commande.

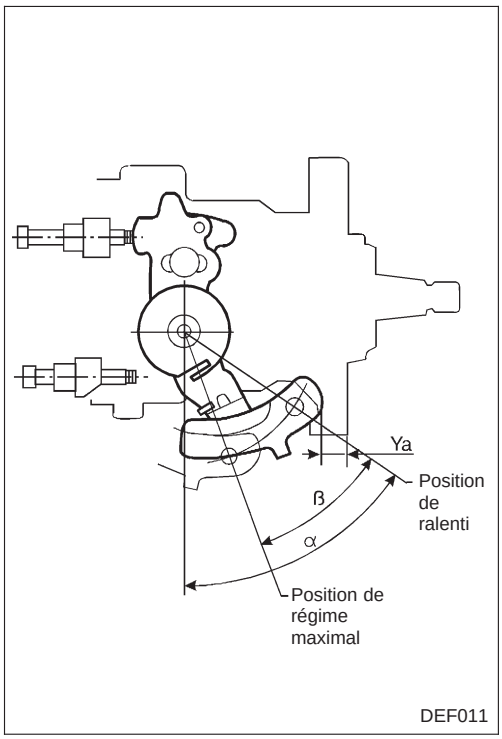

Réglage du minuteur de charge

1. Fixer le levier de commande dans une position satisfaisant aux conditions suivantes.
   Régime de la pompe : 1 100tr/mn
   Quantité de carburant injecté : 33,0±0,5 mℓ/1 000 course
2. Levier de commande positionné comme décrit au numéro 1 ci-dessus, régler le manchon du régulateur de façon à ce que la course du minuteur soit conforme aux valeurs spécifiées (élément 2 - 7).

Position du levier de commande			Valeurs spécifiées	
Régime de la pompe tr/mn	Quantité de carburant injecté mℓ/1 000 course	Pression de suralimentation kPa (mbar, mmHg)	Course du minuteur mm	Valeur de réduction de la course du minuteur mm
1 100	33,0±1,0	–	1,7	0,3±0,3
1 100	20,0±2,5*	–	1,1*	0,9±0,4*

* : Valeur de référence

Réglage du potentiomètre

1. Maintenir le levier de commande dans la position de ralenti.
2. Régler le potentiomètre de façon à ce que la tension de sortie soit de 5,64±0,03V. Puis fixer le potentiomètre.
3. Après avoir réglé le potentiomètre, déposer le faux boulon puis confirmer les spécifications de tension de sortie du potentiomètre ci-dessous.

Régime de la pompe tr/mn	Q'té d'njection de carburant mℓ/1 000 course	Tension de sortie V	Angle du levier de commande	Remarques
1 075	23,3±1,0	5,64±0,03	–	Point de réglage
–	1,34*	–	Ralenti	Point de vérification
–	Supérieur à 9,7	–	Plein	Point de vérification

* : Valeur de référence (Tension d'entrée : 10V)

Simpo PDF Merge and Split Unregistered Version - http://www.simpopdf.com

EQUIPEMENT ELECTRIQUE

SECTION EL

Lecture des schémas de câblage :
● **Lire la section GI, ‘‘COMMENT LIRE LES SCHEMAS DE CABLAGE’’.**
Pour les diagnostics des défauts, lire la section GI, ‘‘COMMENT LIRE LES ORGANIGRAMMES DANS LES DIAGNOSTICS DES DEFAUTS’’ et ‘‘COMMENT ACCOMPLIR UN DIAGNOSTIC EFFICACE EN CAS D’INCIDENT ELECTRIQUE’’.

TABLE DES MATIERES

PRECAUTIONS 1
Système de retenue supplémentaire ‘‘COUSSIN GONFLABLE’’ (SRS) (modèles à 4 roues motrices) 1
Système de retenue supplémentaire ‘‘COUSSIN GONFLABLE’’ (SRS) (modèles à 2 roues motrices) 1
CONNECTEUR DE FAISCEAU 2
Description 2
RELAIS STANDARDISE 3
Description 3
DISPOSITION DE L’ALIMENTATION ELECTRIQUE 5
Schéma 5
Schéma de câblage – POWER – 6
Fusible 13
Raccord à fusible 13
Inspection du rupteur 13
DISTRIBUTION DE LA MASSE 14
BATTERIE 19
Comment manipuler la batterie 19
Tableau d’essai et de charge de la batterie 22
Caractéristiques et valeurs de réglage (SDS) 26
CIRCUIT DE DEMARRAGE 27
Schéma de câblage – START – 27
Diagnostics des défauts 28
Construction 29
Dépose et repose 31
Inspection 31
Remontage 33
Caractéristiques et valeurs de réglage (SDS) 34
CIRCUIT DE CHARGE 35
Schéma de câblage – CHARGE –/Moteur à essence 35
Schéma de câblage – CHARGE –/Moteur diesel 36
Diagnostics des défauts 37
Construction 39
Dépose et repose 40
Démontage 40
Inspection 40
Remontage 41
Caractéristiques et valeurs de réglage (SDS) 42
COMMANDE COMBINEE 43
Contrôle 43
Remplacement 44
PHARES – Type conventionnel – 45
Schéma de câblage – H/LAMP –/Conduite à gauche 45
Schéma de câblage – H/LAMP –/Conduite à droite 47
Diagnostics des défauts 49
Remplacement des ampoules 50
Réglage des faisceaux 50
Feu de code 51
PHARES – Système d’éclairage de jour – 52
Description du système 52
Schéma 54
Schéma de câblage – DTRL – 55
Diagnostics des défauts 58
Remplacement des ampoules 58
Réglage des faisceaux 58

Simpo PDF Merge and Split Unregistered Version - http://www.simpopdf.com

PHARES – Système de mise en veilleuse des codes – 59
Description du système 59
Schéma 59
Schéma de câblage – DIMDIP – 60
Diagnostics des défauts 63
Remplacement des ampoules 63
Réglage des faisceaux 63
PHARES – Commande de réglage des faisceaux – 64
Description du système 64
Schéma de câblage – H/AIM – 65
FEUX DE STATIONNEMENT, ECLAIRAGE DE PLAQUE MINERALOGIQUE ET FEUX ARRIERE 67
Schéma de câblage – TAIL/L –/Sauf conduite à gauche pour l'Europe 67
Schéma de câblage – TAIL/L –/Conduite à gauche pour l'Europe 69
FEUX DE STOP 71
Schéma de câblage – STOP/L – 71
FEUX DE MARCHE ARRIERE 72
Schéma de câblage –BACK/L – 72
FEU ANTIBROUILLARD ARRIERE 73
Schéma de câblage – R/FOG –/Conduite à gauche 73
Schéma de câblage – R/FOG –/Conduite à droite 74
CLIGNOTANTS ET FEUX DE DETRESSE 75
Schéma 75
Schéma de câblage – TURN –/Sauf modèles à 4 roues motrices pour l'Europe 76
Schéma de câblage – TURN –/Modèles à 4 roues motrices pour l'Europe 78
Diagnostics des défauts 81
Vérification de la centrale de clignotants combinée 81
ECLAIRAGE 82
Schéma de câblage – ILL –/Conduite à gauche 82
Schéma de câblage – ILL –/Conduite à droite 84
PLAFONNIER ET SPOT DE LECTURE 86
Schéma de câblage – INT/L – 86
INSTRUMENTS ET JAUGES 88
Instruments combinés 88
Schéma 90
Schéma de câblage – METER –/Conduite à gauche 91
Schéma de câblage – METER –/Conduite à droite 94
Description du système des instruments à commande intégrée 97
Fonctionnement des instruments/jauges et contrôle des segments de compteur kilométrique/journalier en mode de diagnostic 97
Circuit imprimé souple (FPC) 98
Diagnostics des défauts 99
Inspection des composants électriques 104
TEMOINS LUMINEUX 106
Schéma 106
Schéma de câblage – WARN –/Conduite à gauche 107
Schéma de câblage – WARN –/Conduite à droite 112
Inspection des composants électriques 117
TEMOINS SONORES 118
Schéma de câblage – BUZZER –/Conduite à gauche pour l'Europe 118
Schéma de câblage – BUZZER –/Conduite à droite pour l'Europe 119
Inspection des composants électriques 120
ESSUIE-GLACE ET LAVE-GLACE AVANT 121
Description du système 121
Schéma de câblage – WIPER –/Conduite à gauche avec essuie-glace à balayage intermittent 123
Schéma de câblage – WIPER –/Conduite à droite sans essuie-glace à balayage intermittent 125
Diagnostics des défauts 127
Repose et réglage de l'essuie-glace 128
Réglage du gicleur de lave-glace 129
Disposition du tuyau de lave-glace 129
Timonerie d'essuie-glace 130
LAVE-PHARES 131
Schéma de câblage – HLC – 131
Diagnostics des défauts 132
Disposition du tuyau de lave-phares 132
Clapet sens unique 132
AVERTISSEUR SONORE 133
Schéma de câblage – HORN – 133
ALLUME-CIGARE 134
Schéma de câblage – CIGAR – 134
MONTRE 135
Schéma de câblage – CLOCK – 135
DESEMBUAGE DE LUNETTE ARRIERE 136
Schéma de câblage – DEF – 136
Inspection des composants électriques 137
Vérification des filaments 137
Remise en état du filament 138
SYSTEME AUDIO 140
Schéma de câblage – AUDIO –/Conduite à gauche type-2 140
Schéma de câblage – AUDIO –/Conduite à gauche type-3 141
Schéma de câblage – AUDIO –/Conduite à droite 143
Diagnostics des défauts 144

Simpo PDF Merge and Split Unregistered Version - http://www.simpopdf.com

Système CATS (code)/Pour l'Europe, conduite à droite 145
Liaison audio NATS/Pour l'Europe, conduite à gauche (KA24E) 146
ANTENNE AUDIO 148
Antenne manuelle 148
Antenne électrique/Schéma de câblage – P/ANT – 149
Antenne électrique 150
RETROVISEUR ELECTRIQUE DE PORTE 152
Schéma de câblage – MIRROR – 152
SIEGE CHAUFFANT 154
Schéma de câblage – H/SEAT – 154
LEVE-GLACE ELECTRIQUE 156
Description du système 156
Schéma 158
Schéma de câblage – WINDOW –/Conduite à gauche 159
Schéma de câblage – WINDOW –/Conduite à droite 163
Diagnostics des défauts 167
VERROUILLAGE ELECTRIQUE DE PORTE 168
Description du système 168
Schéma de câblage – D/LOCK – 169
Diagnostic des défauts 171
SYSTEME DE MULTI-TELECOMMANDE/POUR L'EUROPE 175
Description du système 175
Schéma 176
Schéma de câblage – MULTI –/Conduite à gauche 177
Diagnostics des défauts 181
Procédure d'entrée du code d'identification 184
NATS (Système antivol NISSAN)/Moteur à essence, conduite à gauche 185
Emplacement des composants et des connecteurs de faisceau 185
Description du système 185
Composition du système 186
Schéma de câblage – NATS – 187
CONSULT 188
Diagnostics des défauts 190
Comment remplacer l'IMMO NATS 199
NATS (Système antivol NISSAN)/Moteur diesel 200
Emplacement des composants et des connecteurs de faisceau 200
Description du système 201
Composition du système 201
Schéma de câblage – NATS –/Conduite à gauche 202
Schéma de câblage – NATS –/Conduite à droite 203
CONSULT 204
Diagnostics des défauts 207
EMPLACEMENT DES DISPOSITIFS ELECTRIQUES 219
Compartiment moteur 219
Compartiment passager 220
DISPOSITION DES FAISCEAUX 222
Généralités 222
Comment lire un schéma de disposition des faisceaux 223
Faisceau principal 224
Faisceau de compartiment moteur 234
Faisceau de commande du moteur 242
Faisceau de moteur 244
Faisceau d'alternateur 246
Faisceau d'instruments 247
Faisceau de plafonnier/Conduite à gauche 248
Faisceau de plafonnier/Conduite à droite 249
Faisceau de châssis et faisceau arrière 250
Faisceau de porte avant (côté gauche) 251
Faisceau de porte avant (côté droit) 252
Faisceau de porte arrière 253
CARACTERISTIQUES DES AMPOULES 254
Phares 254
Eclairage extérieur 254
Eclairage intérieur 254
CODES DE SCHEMA DE CABLAGE (CODES DE CELLULES) 255

TABLEAU DE REFERENCE DES SCHEMAS DE CABLAGE

VENTILATEUR DE REFROIDISSEMENT ..... SECTION LC
ECCS, SYSTEME DE COMMANDE DE L'ALLUMAGE, SYSTEME DE PRECHAUFFAGE RAPIDE, SYSTEME DE CHAUFFAGE DE CARBURANT ..... SECTION EC
SYSTEME ANTI-ENRAYEUR DES FREINS ..... SECTION BR
'COUSSIN GONFLABLE'' (AIR BAG) du SRS ..... SECTION RS
CHAUFFAGE ET CLIMATISEUR ..... SECTION HA

Simpo PDF Merge and Split Unregistered Version - http://www.simpopdf.com

Système de retenue supplémentaire ‘‘COUSSIN GONFLABLE’’ (SRS) (modèles à 4 roues motrices)

Utilisé avec une ceinture de sécurité, le ‘‘COUSSIN GONFLABLE’’ (air bag) du système de retenue supplémentaire contribue à réduire les risques ou la gravité des blessures subies par le conducteur en cas de collision frontale. Le système de retenue supplémentaire se compose d’un module de coussin gonflable (air bag) (situé dans le moyeu du volant), d’une unité de capteur de diagnostic, d’un témoin avertisseur, d’un faisceau de câblage et d’un câble spiralé. Les informations nécessaires à l’entretien en toute sécurité du système figurent à la **section RS** de ce Manuel de Réparation.

AVERTISSEMENT :

- **Pour ne pas affecter le fonctionnement du SRS, ce qui augmenterait les risques de blessures graves ou mortelles en cas de collision entraînant le déploiement du coussin gonflable (air bag), toutes les opérations d’entretien doivent être effectuées par un concessionnaire NISSAN agréé.**
- **Un entretien incorrect, y compris une mauvaise dépose ou repose du SRS, pourra entraîner des risques de blessures dues au déploiement accidentel du système.**
- **Ne pas utiliser d’équipement d’essai électrique sur les circuits connexes au SRS sauf si indiqué dans ce manuel de réparation. Les faisceaux de câblage électrique du SRS sont équipés d’une gaine d’isolation jaune, soit juste devant les connecteurs de faisceau, soit sur le faisceau tout entier, pour une identification plus rapide.**

Système de retenue supplémentaire ‘‘COUSSIN GONFLABLE’’ (SRS) (modèles à 2 roues motrices)

Utilisé avec une ceinture de sécurité, le ‘‘COUSSIN GONFLABLE’’ (air bag) du système de retenue supplémentaire contribue à réduire les risques ou la gravité des blessures subies par le conducteur en cas de collision frontale. Le système de retenue supplémentaire se compose d’un module de coussin gonflable (air bag) (situé dans le moyeu du volant), d’une unité de capteur de diagnostic, d’un témoin avertisseur et d’un câble spiralé. Les informations nécessaires à l’entretien en toute sécurité du système figurent à la **section RS** de ce Manuel de Réparation.

AVERTISSEMENT :

- **Pour ne pas affecter le fonctionnement du SRS, ce qui augmenterait les risques de blessures graves ou mortelles en cas de collision entraînant le déploiement du coussin gonflable (air bag), toutes les opérations d’entretien doivent être effectuées par un concessionnaire NISSAN agréé.**
- **Un entretien incorrect, y compris une mauvaise dépose ou repose du SRS, pourra entraîner des risques de blessures dues au déploiement accidentel du système.**
- **Ne pas utiliser d’équipement d’essai électrique sur les circuits connexes au SRS.**

Simpo PDF Merge and Split Unregistered Version - http://www.simpopdf.com

Description

CONNECTEUR DE FAISCEAU

- Tous les connecteurs de faisceau ont été modifiés pour éviter qu'ils ne se desserrent ou ne se débranchent par accident.
- Le connecteur peut être débranché en enfonçant ou en soulevant la languette de verrouillage.

ATTENTION :
Ne pas tirer le faisceau lors du débranchement du connecteur.

[Exemple]

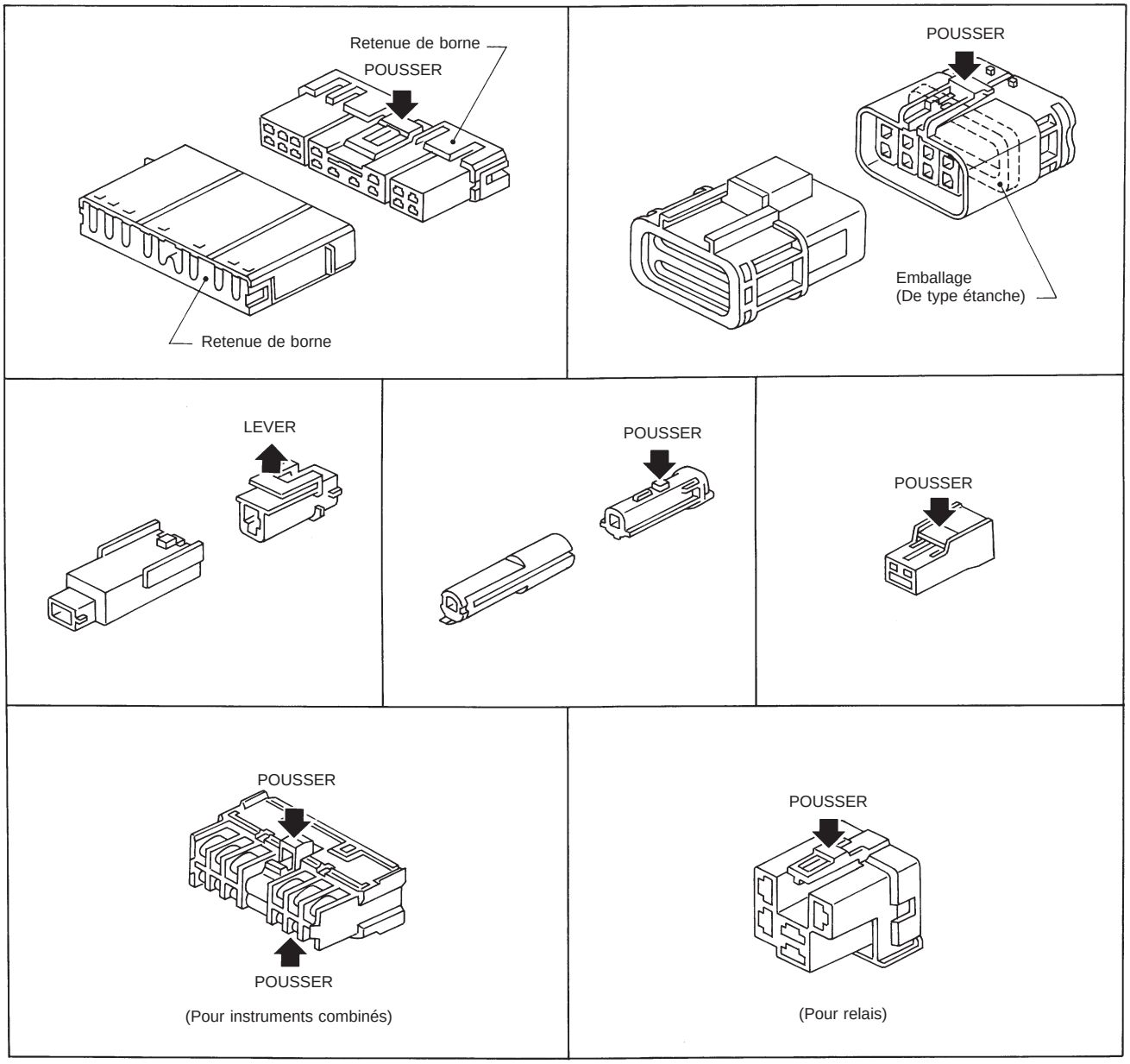

SEL769D

Simpo PDF Merge and Split Unregistered Version - http://www.simpopdf.com

Description

RELAIS NORMALEMENT OUVERTS, NORMALEMENT FERMES ET DE TYPE MIXTE

Les relais peuvent être principalement divisés en trois types : normalement ouvert, normalement fermé et relais de type mixte.

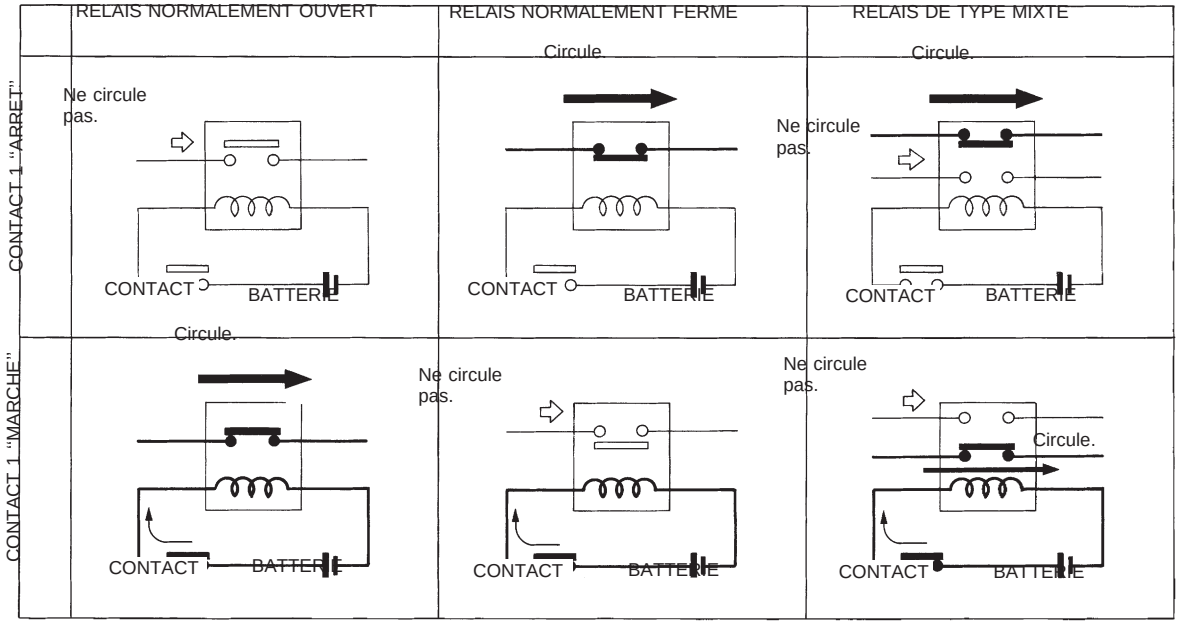

SEL881H

TYPE DE RELAIS STANDARDISES

1M	.....	1 Conjonction	2M	.....	2 Conjonctions
1T	.....	1 Transfert	1M·1B	.....	1 Conjonction 1 Disconjonction

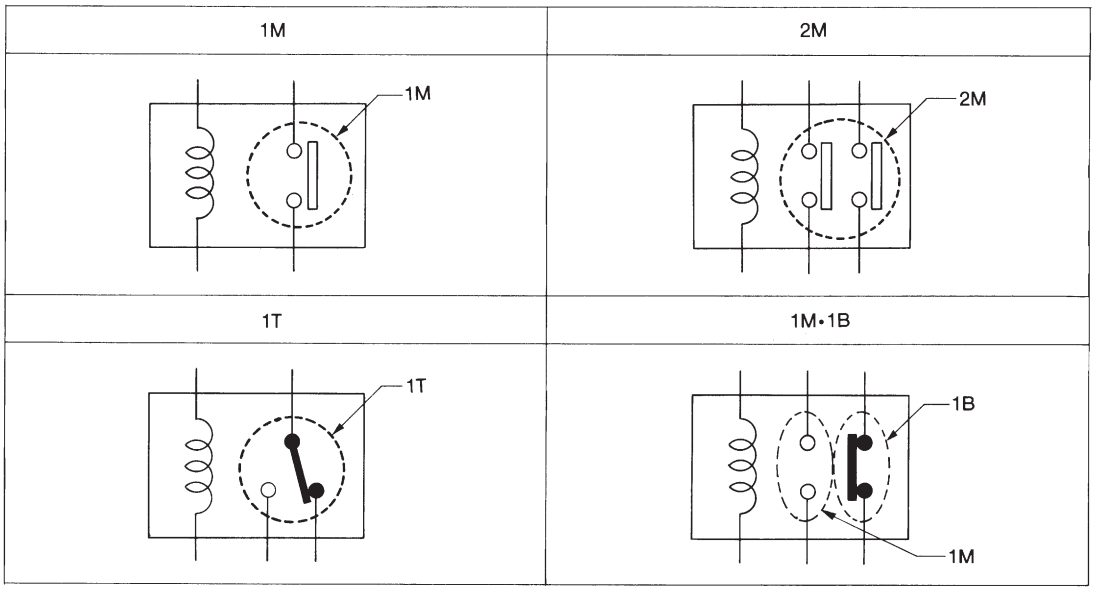

SEL882H

Simpo PDF Merge and Split Unregistered Version - http://www.simpopdf.com

Description (Suite)

Type	Vue externe	Circuit	Symbole de connecteur et raccord	Couleur de boîte
	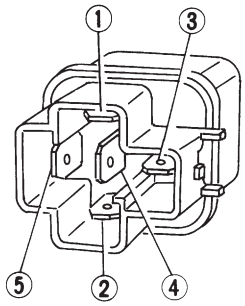	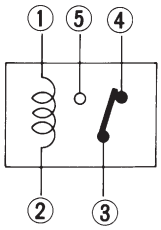	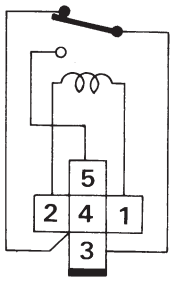	NOIR
	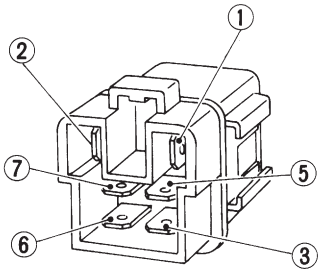	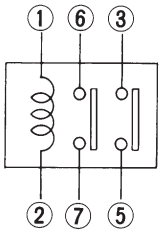	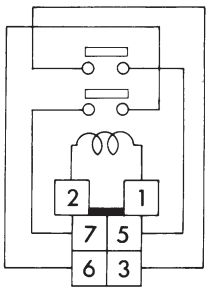	MARRON
	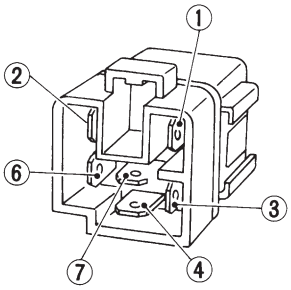	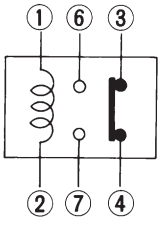	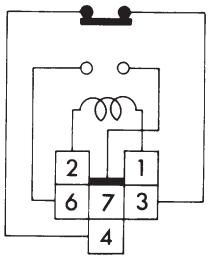	GRIS
	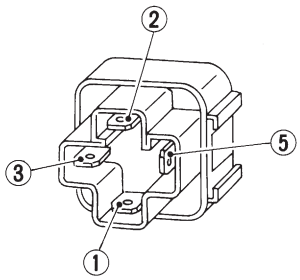	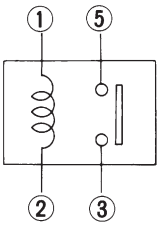	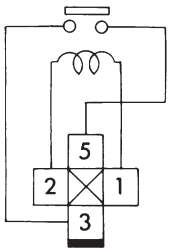	BLEU

La disposition des numéros de bornes sur les relais peut varier par rapport à la numérotation indiquée ci-dessus.

SEL661TA

Simpo PDF Merge and Split Unregistered Version - http://www.simpopdf.com

Schéma

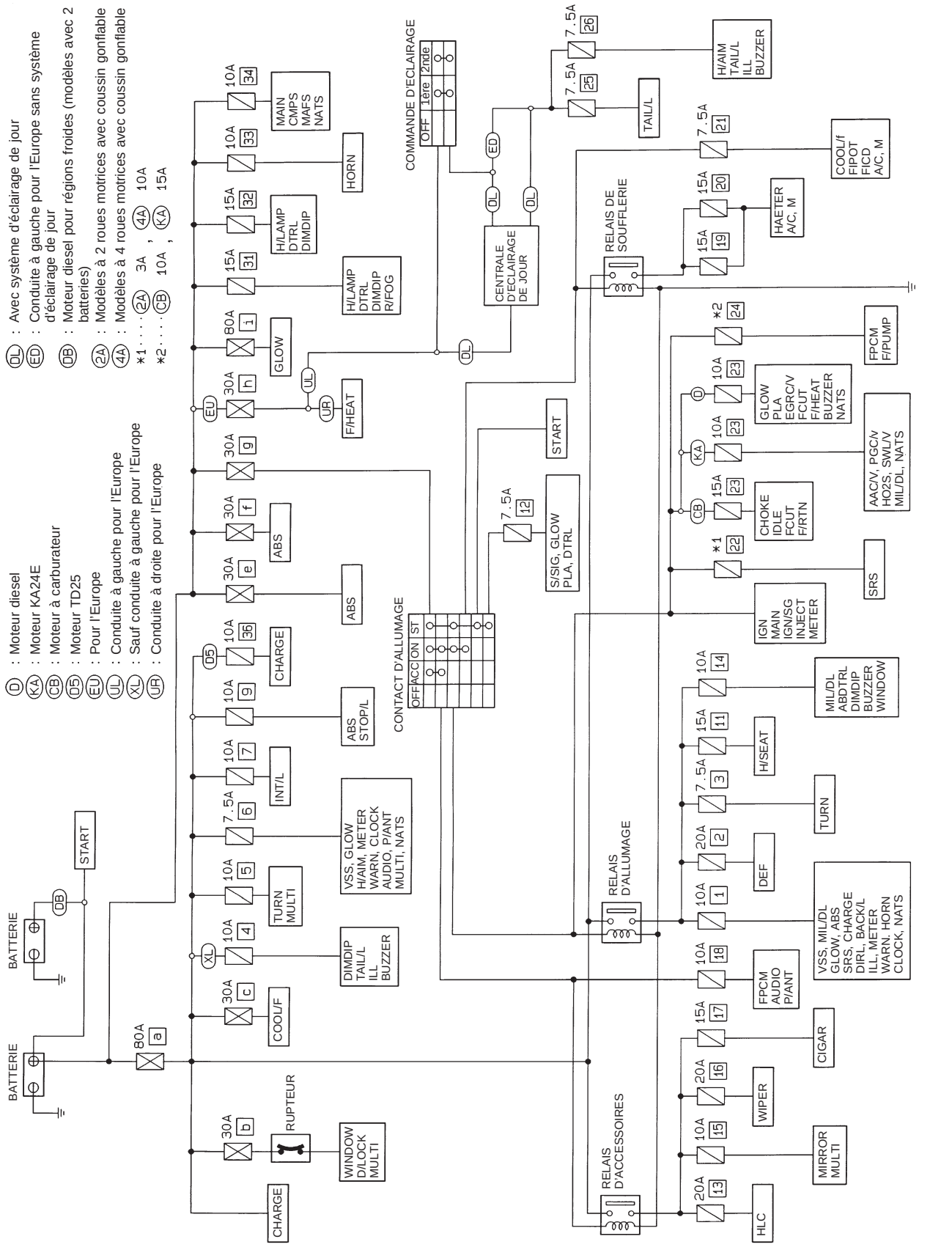

HEL309A

Simpo PDF Merge and Split Unregistered Version - http://www.simpopdf.com

Schéma de câblage – POWER –

ALIMENTATION ELECTRIQUE DE LA BATTERIE – CONTACT D'ALLUMAGE DANS N'IMPORTE QUELLE POSITION

EL-POWER-01

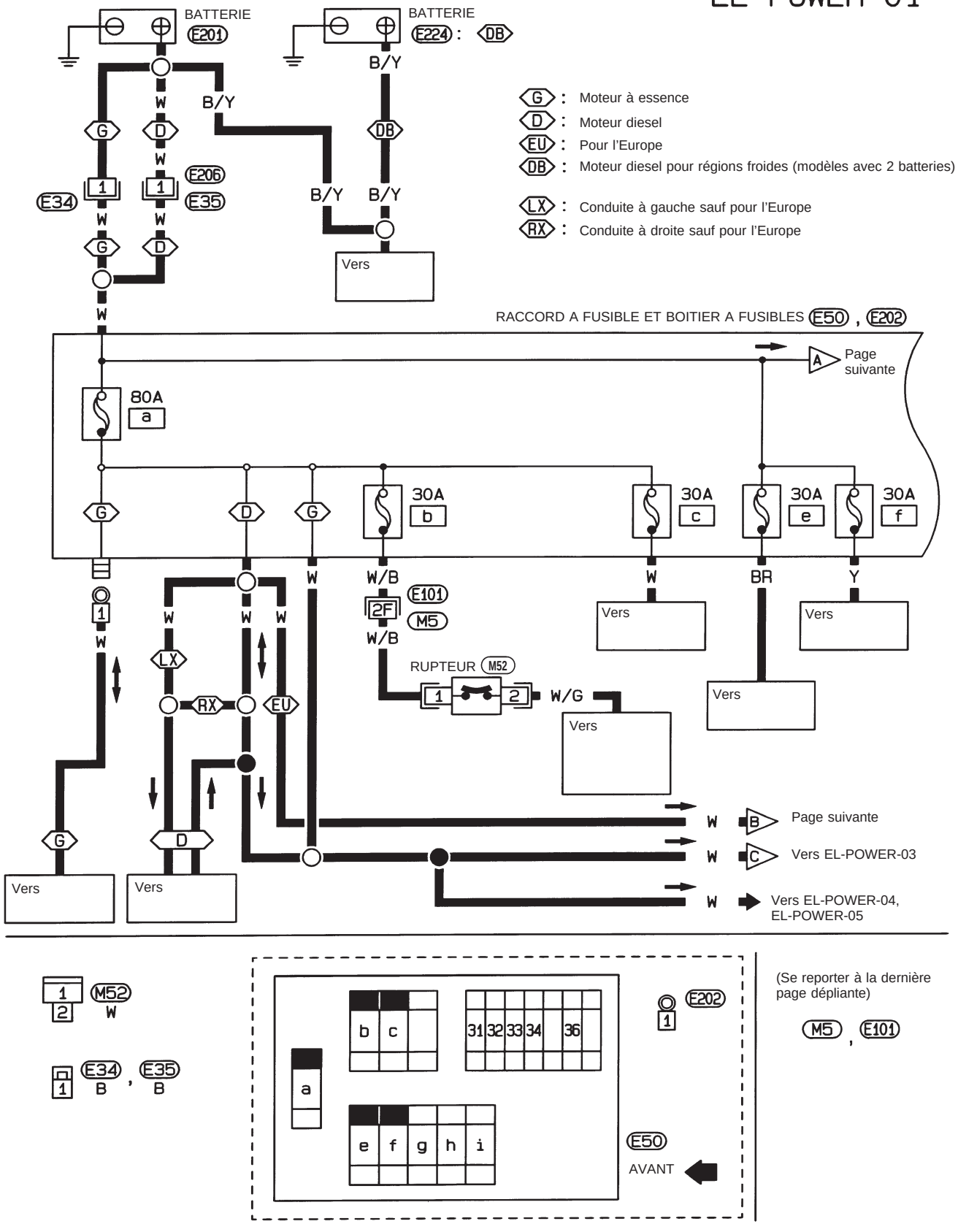

HEL310A

Simpo PDF Merge and Split Unregistered Version - http://www.simpopdf.com

Schéma de câblage – POWER – (Suite)

EL-POWER-02

UL : Conduite à gauche pour l'Europe
UR : Conduite à droite pour l'Europe
D5 : Moteur TD25

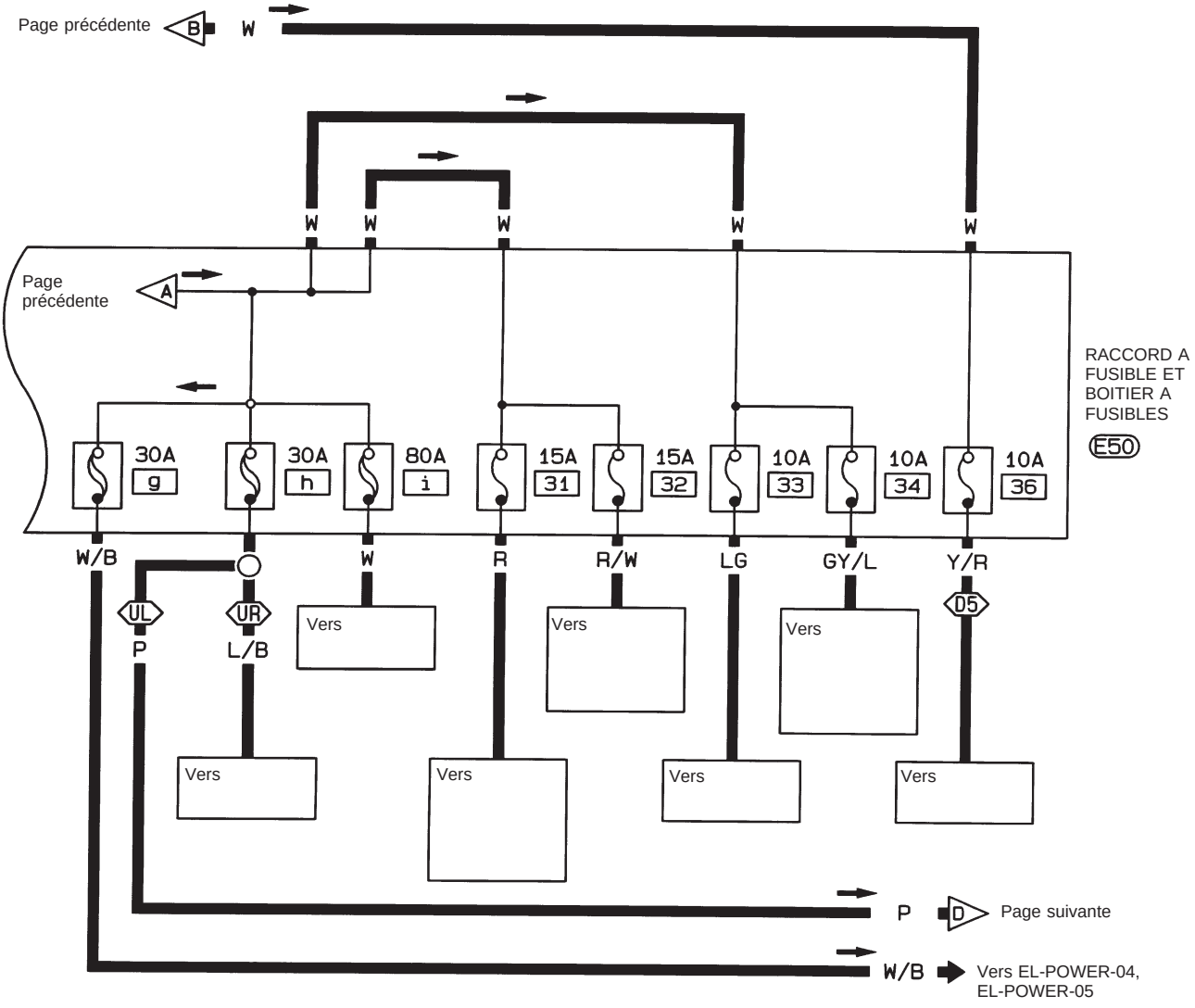

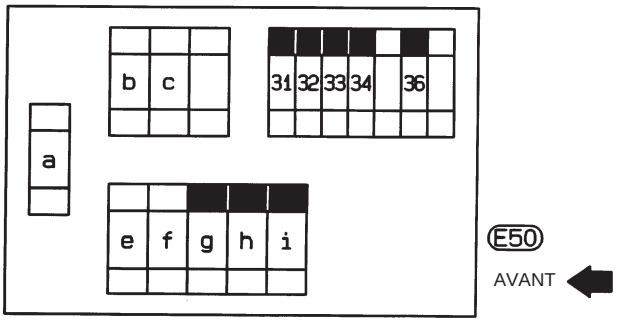

HEL311A

Simpo PDF Merge and Split Unregistered Version - http://www.simpopdf.com

Schéma de câblage – POWER – (Suite)

ALIMENTATION ELECTRIQUE DE LA BATTERIE – CONTACT D'ALLUMAGE DANS N'IMPORTE QUELLE POSITION

EL-POWER-03

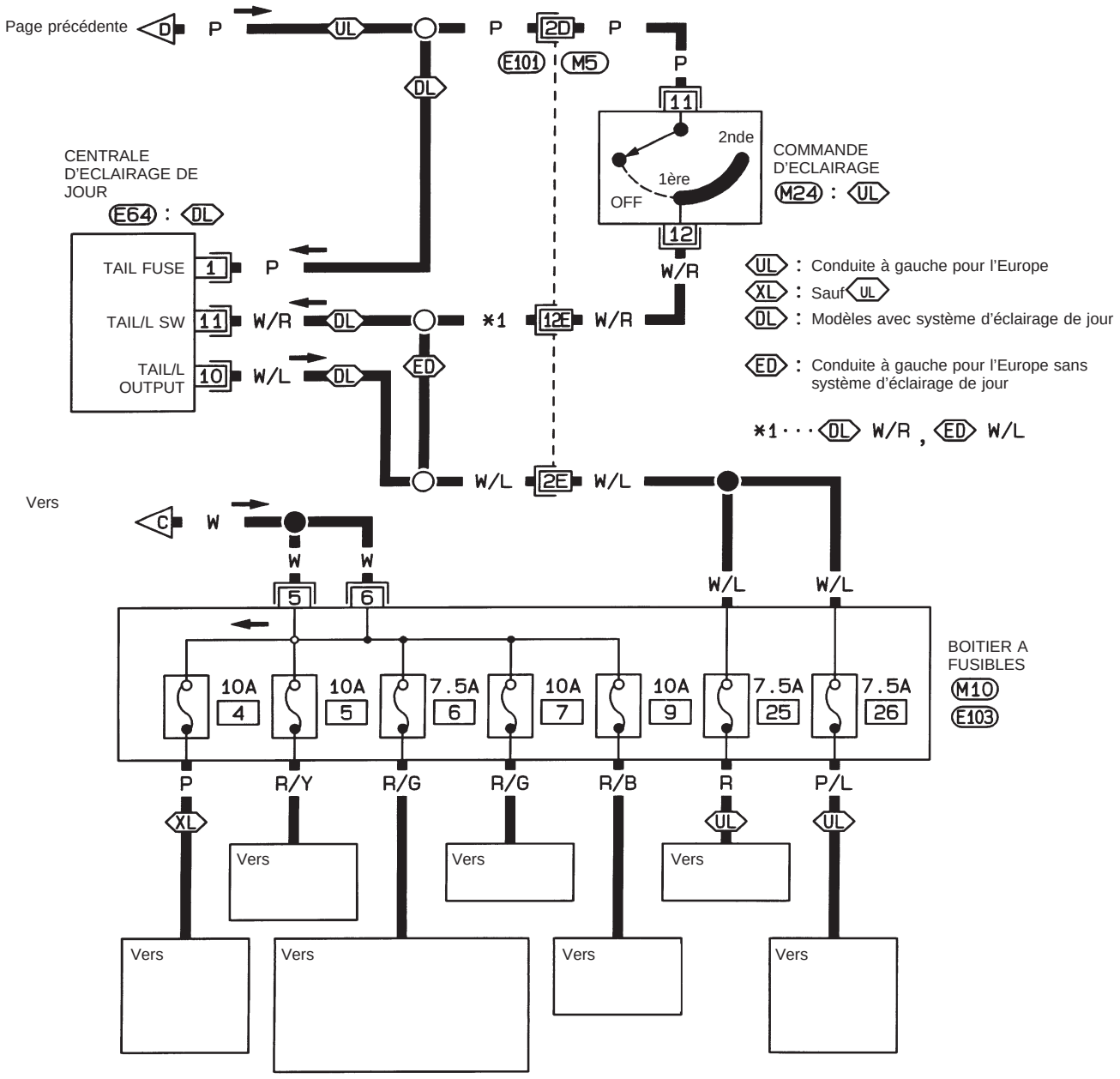

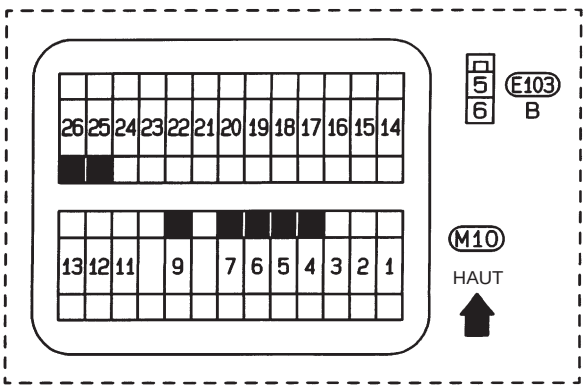

(Se reporter à la dernière page dépliante)

M5 , E101

HEL312A

Simpo PDF Merge and Split Unregistered Version - http://www.simpopdf.com

Schéma de câblage – POWER – (Suite)

EL-POWER-04

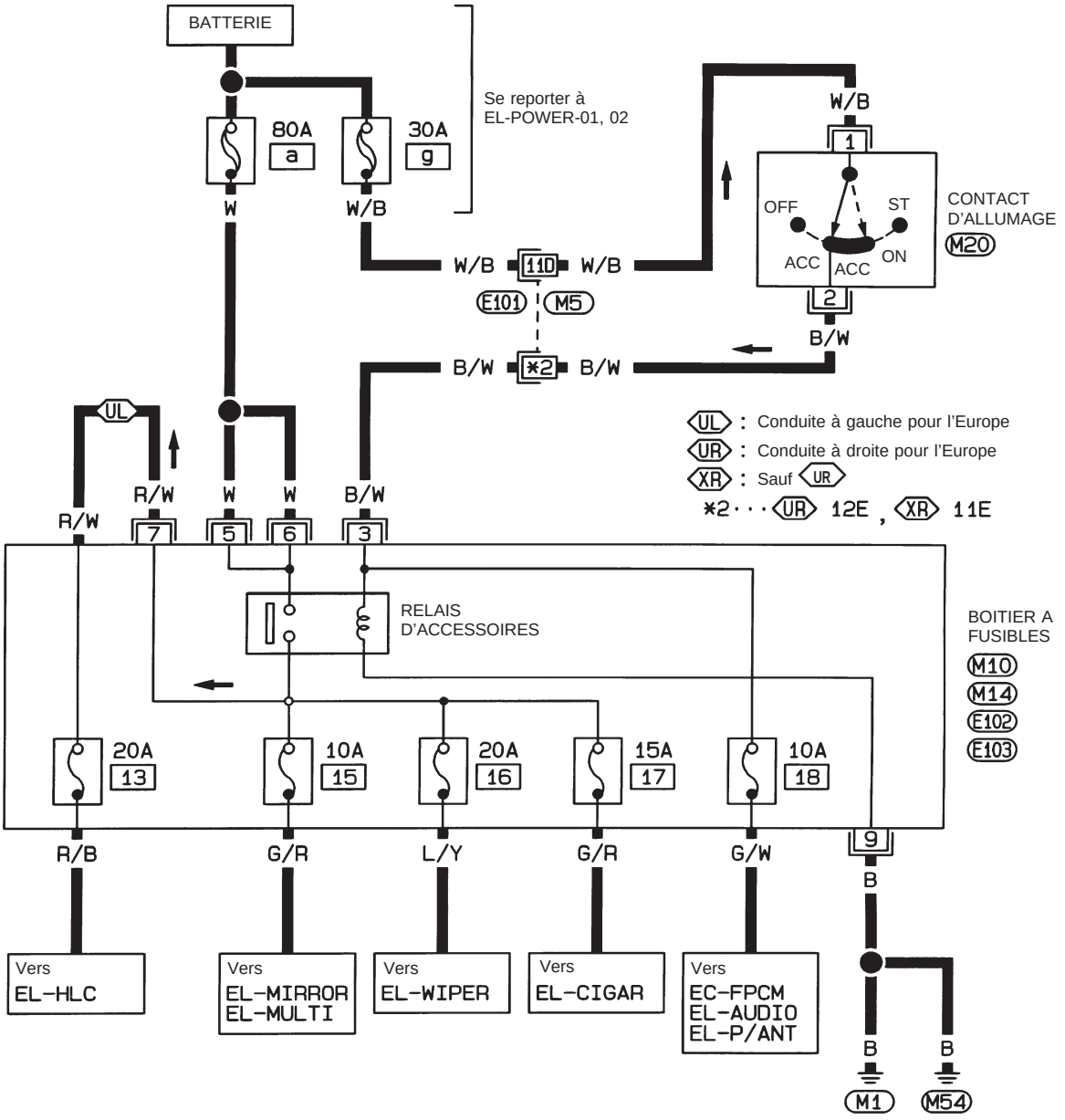

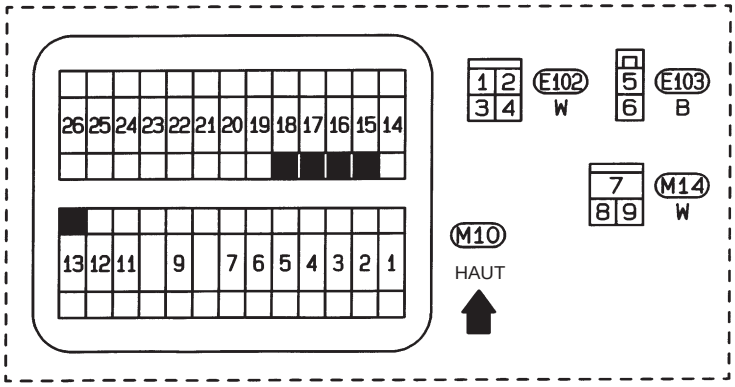

(Se reporter à la dernière page dépliante)

M5 , E101

HEL313A

Simpo PDF Merge and Split Unregistered Version - http://www.simpopdf.com

Schéma de câblage – POWER – (Suite)

ALIMENTATION ELECTRIQUE AUXILIAIRE – CONTACT D'ALLUMAGE SUR "ACC" OU "ON"

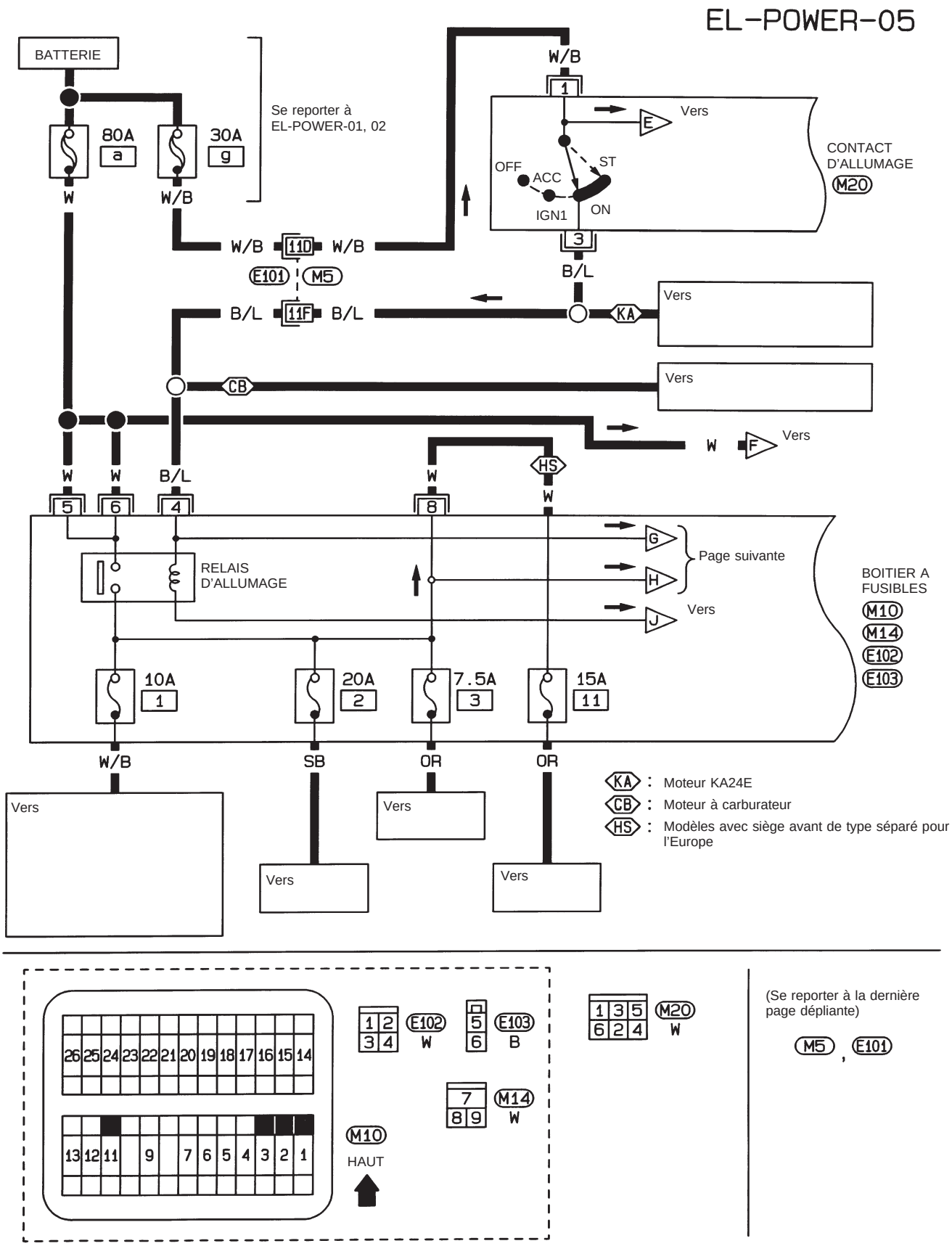

HEL314A

Simpo PDF Merge and Split Unregistered Version - http://www.simpopdf.com

Schéma de câblage – POWER – (Suite)

ALIMENTATION ELECTRIQUE D'ALLUMAGE – CONTACT D'ALLUMAGE SUR "ON" ET/OU "START"

EL-POWER-06

D : Moteur diesel
NA : Moteur NA20S
Z : Moteur Z24S
KA : Moteur KA24E
CB : Moteur à carburateur
AS : Modèles avec ABS
PW : Modèles avec lève-glace électrique sans ABS
PN : Modèles sans ABS ni lève-glace électrique
2A : Modèles à 2 roues motrices avec coussin gonflable
4A : Modèles à 4 roues motrices avec coussin gonflable
*3 : Pour l'Europe OU Sauf pour l'Europe AS OR, PW W/B, PN B/W
*4 ··· 2A 3A , 4A 10A
*5 ··· NA W/G , Z W/L
*6 ··· CB 10A , KA 15A

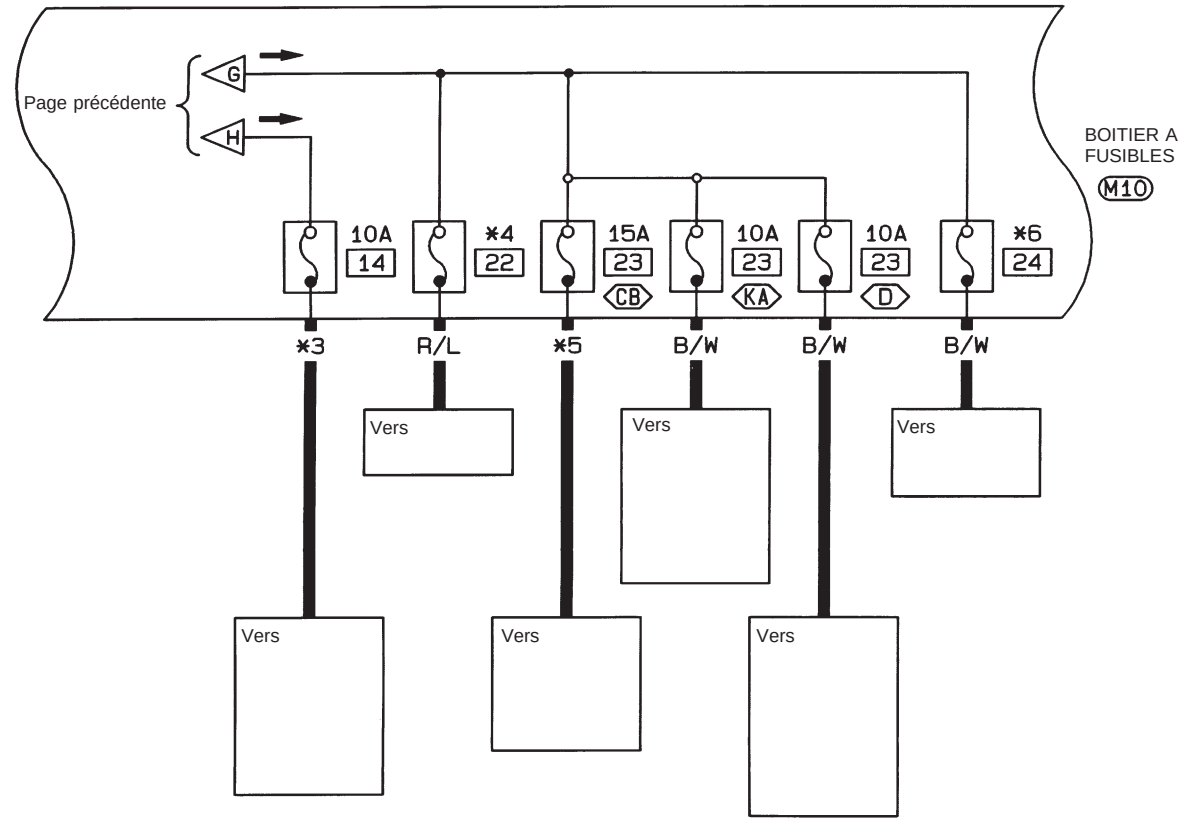

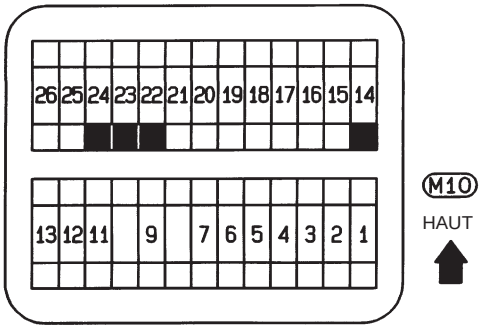

HEL315A

Simpo PDF Merge and Split Unregistered Version - http://www.simpopdf.com

Schéma de câblage – POWER – (Suite)

EL-POWER-07

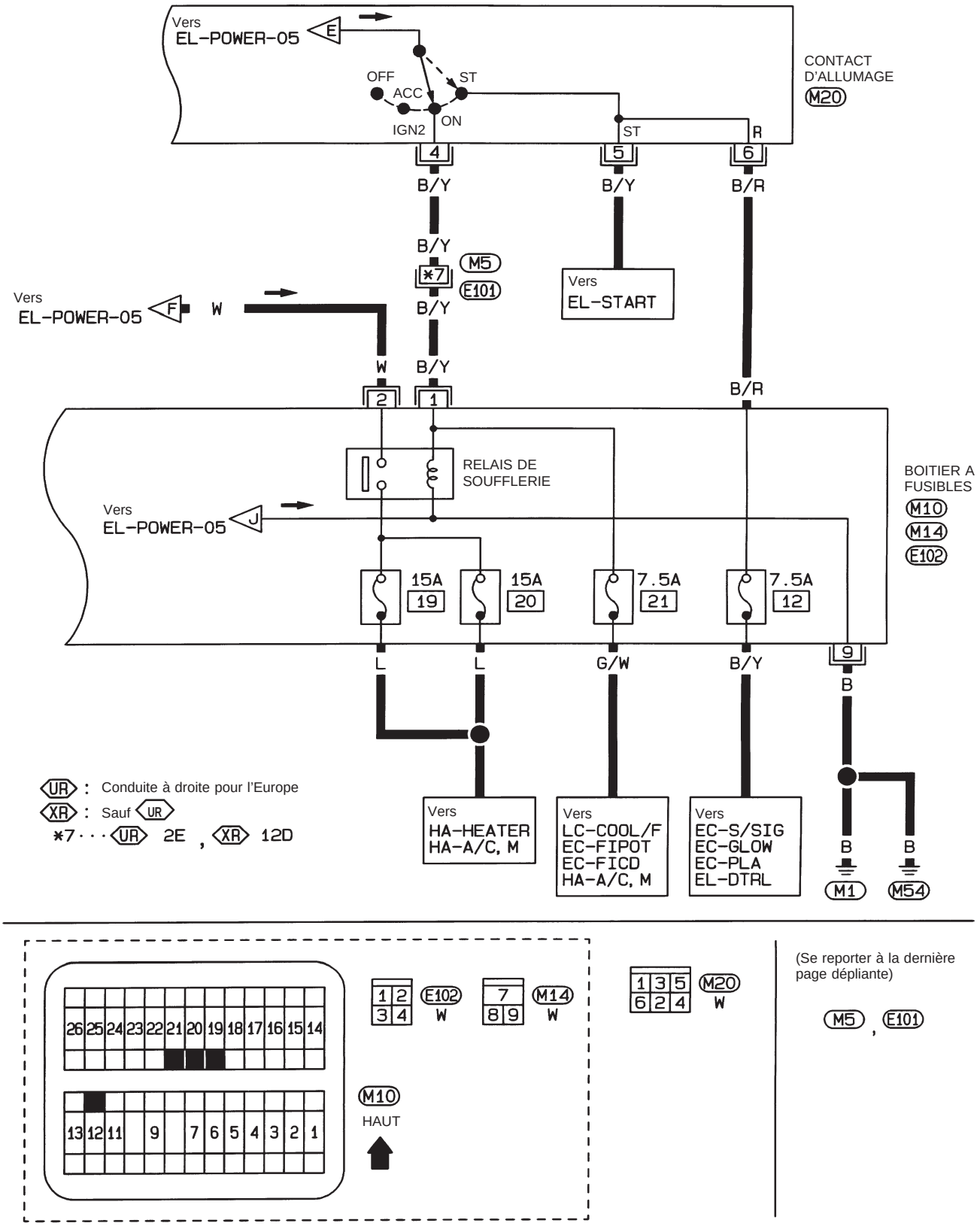

(Se reporter à la dernière page dépliante)

M5 , E101

HEL316A

Simpo PDF Merge and Split Unregistered Version - http://www.simpopdf.com

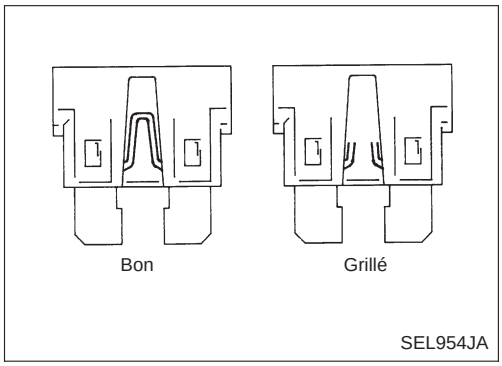

Fusible

a. Si un fusible saute, veiller à corriger l'origine de la défaillance avant de le remplacer.
b. Utiliser un fusible de l'ampérage spécifié. Ne jamais utiliser un fusible d'une valeur nominale supérieure à celle spécifiée.
c. Ne pas reposer le fusible à moitié ; toujours insérer correctement le fusible dans le porte-fusible.
d. Déposer le fusible ''ELEC B'' si le véhicule n'est pas utilisé pendant une longue période.

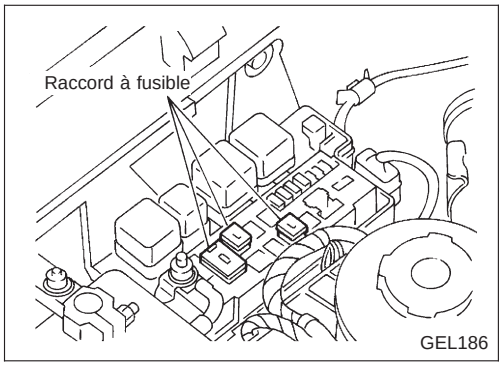

Raccord à fusible

Il est possible de repérer un raccord à fusible fondu à l'oeil nu, ou du bout du doigt. S'il y a un doute quant à son état, vérifier à l'aide d'un vérificateur de circuit ou d'une lampe d'essai.

ATTENTION :

- **Si un raccord à fusible fond, il se peut que le circuit correspondant (alimentation ou circuit porteur de forte intensité) soit en court-circuit. Dans un tel cas, il convient de procéder à une vérification soigneuse et de corriger le défaut.**
- **Ne jamais recouvrir l'extérieur d'un raccord à fusible de ruban adhésif en vinyle. Important : ne jamais laisser un raccord à fusible entrer en contact avec un faisceau de câblage ou toute autre pièce recouverte de vinyle ou de caoutchouc.**

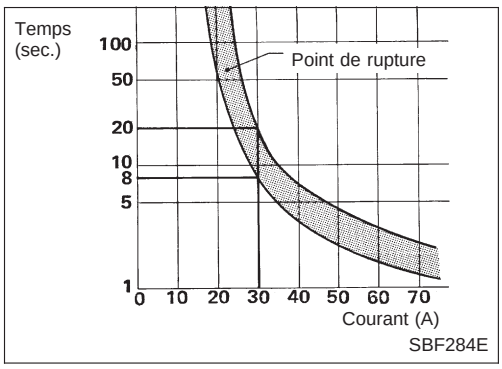

Inspection du rupteur

Par exemple, dans le cas d'un courant de 30A, le circuit est coupé en 8 à 20 secondes.

Les rupteurs sont utilisés dans les systèmes suivants.

- Lève-glace électrique
- Verrouillage électrique de porte
- Circuit de multi-télécommande

Simpo PDF Merge and Split Unregistered Version - http://www.simpopdf.com

TERRE	CONNECTE A	N° DU CONNECTEUR	CODE DE CELLULE
M1/M54	RELAIS D'ACCESSOIRES (dans le boîtier à fusibles)	M14	EL-POWER
	BOITIER DE CAPTEUR DE DIAGNOSTIC DE COUSSIN GONFLABLE (AIR BAG) (modèles 4 roues motrices)	M110	RS-SRS
	ECLAIRAGE DE CENDRIER	M34	EL-ILL
	RELAIS DE SOUFFLERIE (Dans le boîtier à fusibles)	M14	EL-POWER
	CONNECTEUR DE CONTROLE (Moteur NA)	M12	EC-CHOKE
	CONNECTEUR DE CONTROLE (Moteur Z)	M13	EC-CHOKE
	DOUILLE D'ALLUME-CIGARE	M37	EL-CIGAR
	CENTRALE CLIGNOTANTE COMBINEE	M15	EL-TURN
	MINUTERIE DE VERROUILLAGE DE PORTE	M51	EL-D/LOCK
	CONTACT DE PORTE COTE CONDUCTEUR (Pour l'Europe)	M118	EL-BUZZER EL-MULTI
	ECM (BOITIER DE CONTROLE DU MOTEUR)	M66	EC-GLOW EC-PLA EC-EGRC/V
	ECLAIRAGE DE L'INTERRUPTEUR DE VENTILATEUR (Sauf pour l'Europe et l'Australie)	M403	HA-HEATER HA-A/C,M EL-ILL
	ECLAIRAGE DE L'INTERRUPTEUR DE VENTILATEUR (Pour l'Europe et l'Australie)	M40	HA-HEATER HA-A/C,M EL-ILL
	COMMUTATEUR DE VENTILATEUR (Sauf pour l'Europe et l'Australie)	M404	EC-FIPOT HA-HEATER HA-A/C,M
	COMMUTATEUR DE VENTILATEUR (Pour l'Europe et l'Australie)	M39	HA-HEATER HA-A/C,M
	SIEGE AVANT GAUCHE	M119	EL-H/SEAT
	SIEGE AVANT DROIT	M122	EL-H/SEAT
	AMPLIFICATEUR D'ESSUIE-GLACE DE PARE-BRISE (Modèles conduite à droite sauf avec moteur KA et conduite à gauche)	M220	EL-WIPER
	COMMANDE DE L'ESSUIE-GLACE ET DU LAVE-GLACE AVANT	M28	EL-WIPER
	MOTEUR D'ESSUIE-GLACE AVANT (Modèles conduite à droite sauf avec moteur KA et conduite à gauche)	M221	EL-WIPER
	CONTACT DE FILTRE A CARBURANT (Conduite à gauche avec moteur diesel)	M259	EL-WARN EL-BUZZER
	MODULE DE COMMANDE DE LA POMPE A CARBURANT	M22	EC-FPCM
	ELECTROVANNE DE COMMANDE DE RETOUR DE CARBURANT (Conduite à gauche avec moteur NA)	M257	EC-F/RTN
	BOITIER DE CONTROLE DE PRECHAUFFAGE (Moteur TD27 sauf pour les régions froides et moteur QD)	M29	EC-GLOW EC-PLA
	BOITIER DE CONTROLE DE PRECHAUFFAGE (Moteur TD27 pour les régions froides)	M30	EC-GLOW EC-PLA
	RELAIS-1 DE PRECHAUFFAGE (Conduite à gauche avec moteur diesel sauf pour l'Europe)	M253	EC-GLOW
	RELAIS-2 DE PRECHAUFFAGE (Moteur TD27 pour les régions froides)	M256	EC-GLOW
	INTERRUPTEUR DE FEUX DE DETRESSE	M41	EL-TURN EL-ILL
	COMMANDE DE LAVE-PHARES	M70	EL-ILL EL-HLC
	INTERRUPTEUR DE SIEGE CHAUFFANT GAUCHE	M602	EL-H/SEAT
	INTERRUPTEUR DE SIEGE CHAUFFANT DROIT	M603	EL-H/SEAT
	ELECTROVANNE FICD (Moteur KA)	M203	EC-FICD HA-A/C, M
	RELAIS D'ALLUMAGE (Dans le boîtier à fusibles)	M14	EL-POWER

Simpo PDF Merge and Split Unregistered Version - http://www.simpopdf.com

TERRE	CONNECTE A	N° DU CONNECTEUR	CODE DE CELLULE
M1/M54	RELAIS-3 DE MULTI-TELECOMMANDE	M706	EL-MULTI
	RELAIS-4 DE MULTI-TELECOMMANDE	M707	EL-MULTI
	BOITIER DE MULTI-TELECOMMANDE	M703	EL-MULTI
	RELAIS DE LEVE-GLACE ELECTRIQUE	M9	EL-WINDOW
	INTERRUPTEUR DE DESEMBUAGE DE LUNETTE ARRIERE	M42	EL-DEF
	CONTACT DE CEINTURE DE SECURITE	M109	EL-WARN
	CABLE SPIRALE (Modèles à 2 roues motrices avec coussin gonflable)	M26	RS-SRS
	INSTRUMENTS COMBINES (TEMOIN LUMINEUX 4 ROUES MOTRICES)	N6	EL-WARN
	INSTRUMENTS COMBINES (TEMOIN LUMINEUX ABS)	N6	BR-ABS EL-WARN
	INSTRUMENTS COMBINES (TEMOIN LUMINEUX COUSSIN GONFLABLE	N5	RS-SRS EL-WARN
	INSTRUMENTS COMBINES (ECLAIRAGE DE MONTRE)	N6	EL-ILL EL-CLOCK
	INSTRUMENTS COMBINES (MONTRE DIGITALE)	N6	EL-CLOCK
	INSTRUMENTS COMBINES (JAUGE DE CARBU-RANT)	N5	EL-METER
	INSTRUMENTS COMBINES (TEMOIN DE CODES)	N5	EL-H/LAMP EL-DTRL EL-DIMDIP
	INSTRUMENTS COMBINES (ECLAIRAGE DES INSTRUMENTS)	N6	EL-ILL
	INSTRUMENTS COMBINES (ECLAIRAGE DU COMPTEUR KILOMETRIQUE/JOURNALIER)	N6	EL-ILL
	INSTRUMENTS COMBINES (TEMOIN DU FEU ANTIBROUILARD ARRIERE)	N6	EL-R/FOG
	INSTRUMENTS COMBINES (TEMOIN DE CLI-GNOTANT GAUCHE)	N6	EL-TURN
	INSTRUMENTS COMBINES (TEMOIN DE CLI-GNOTANT DROIT)	N6	EL-TURN
	INSTRUMENTS COMBINES (BOITIER DE CONTROLE DES INSTRUMENTS COMBINES)	N5	EC-VSS EC-GLOW EL-METER
	INSTRUMENTS COMBINES (JAUGE DE TEMP. D'EAU)	N5	EL-METER
	CONTACT DE TELECOMMANDE DE RETROVI-SEUR DE PORTE	N3	EL-MIRROR
	AMPLIFICATEUR D'ESSUIE-GLACE DE PARE-BRISE (Modèles conduite à droite avec moteur KA)	F20	EL-WIPER
	MOTEUR D'ESSUIE-GLACE AVANT (Modèles conduite à droite avec moteur KA)	F21	EL-WIPER
	COMMUTATEUR DE REGLAGE DES FAISCEAUX	N7	EL-H/AIM
	ECLAIRAGE INTERIEUR (Cabine simple et grande cabine)	R4	EL-INT/L
	SPOT DE LECTURE	R3	EL-INT/L
	JAUGE DE RESERVOIR A CARBURANT (Avec pompe d'alimentation électrique)	C3	EC-FPCM EC-F/PUMP EL-METER EL-WARN
	JAUGE DE RESERVOIR A CARBURANT (Avec pompe d'alimentation mécanique)	C4	EL-METER EL-WARN
	ECLAIRAGE DE PLAQUE MINERALOGIQUE GAUCHE (Avec pare-chocs à marchepied)	T7	EL-TAIL/L
	ECLAIRAGE DE PLAQUE MINERALOGIQUE GAUCHE (Sans pare-chocs à marchepied)	T6	EL-TAIL/L
	ECLAIRAGE DE PLAQUE MINERALOGIQUE DROIT (Avec pare-chocs à marchepied)	T3	EL-TAIL/L
	ECLAIRAGE DE PLAQUE MINERALOGIQUE DROIT (Sans pare-chocs à marchepied)	T5	EL-TAIL/L
	BLOC OPTIQUE ARRIERE GAUCHE (FEU DE RECUL) (Modèles à châssis A, et sauf pour l'Europe, l'Australie et la Chine)	T8	EL-BACK/L

Simpo PDF Merge and Split Unregistered Version - http://www.simpopdf.com

TERRE	CONNECTE A	N° DU CONNECTEUR	CODE DE CELLULE
M1/M54	BLOC OPTIQUE ARRIERE GAUCHE (FEU DE RECUL) (Pour l'Europe, l'Australie et la Chine sauf modèles avec châssis A)	T9	EL-BACK/L
	BLOC OPTIQUE ARRIERE GAUCHE (ANTI-BROUILLARD ARRIERE) (Conduite à gauche, sauf modèles à châssis A)	T9	EL-R/FOG
	BLOC OPTIQUE ARRIERE GAUCHE (FEU ARRIERE ET FEU DE STOP) (Modèles à châssis A, et sauf pour l'Europe, l'Australie et la Chine)	T8	EL-TAIL/L EL-STOP/L
	BLOC OPTIQUE ARRIERE GAUCHE (FEU ARRIERE ET FEU DE STOP) (Pour l'Europe, l'Australie et la Chine sauf modèles avec châssis A)	T9	EL-TAIL/L EL-STOP/L
	BLOC OPTIQUE ARRIERE GAUCHE (CLIGNO-TANT) (Modèles à châssis A, et sauf pour l'Europe, l'Australie et la Chine)	T8	EL-TURN
	BLOC OPTIQUE ARRIERE GAUCHE (CLIGNO-TANT) (Pour l'Europe, l'Australie et la Chine sauf modèles avec châssis A)	T9	EL-TURN
	BLOC OPTIQUE ARRIERE DROIT (FEU DE RECUL) (Modèles à châssis A, et sauf pour l'Europe, l'Australie et la Chine)	T1	EL-BACK/L
	BLOC OPTIQUE ARRIERE DROIT (FEU DE RECUL) (Pour l'Europe, l'Australie et la Chine sauf modèles avec châssis A)	T2	EL-BACK/L
	BLOC OPTIQUE ARRIERE DROIT (ANTI-BROUILLARD ARRIERE) (Modèles conduite à droite sauf avec châssis A)	T2	EL-R/FOG
	BLOC OPTIQUE ARRIERE DROIT (FEU ARRIERE ET FEU DE STOP) (Modèles à châssis A, et sauf pour l'Europe, l'Australie et la Chine)	T1	EL-TAIL/L EL-STOP/L
	BLOC OPTIQUE ARRIERE DROIT (FEU ARRIERE ET FEU DE STOP) (Pour l'Europe, l'Australie et la Chine sauf modèles avec châssis A)	T2	EL-TAIL/L EL-STOP/L
	BLOC OPTIQUE ARRIERE DROIT (CLIGNOTANT) (Modèles à châssis A, et sauf pour l'Europe, l'Australie et la Chine)	T1	EL-TURN
	BLOC OPTIQUE ARRIERE DROIT (CLIGNOTANT) (Pour l'Europe, l'Australie et la Chine sauf modèles avec châssis A)	T2	EL-TURN
	FEU ANTIBROUILLARD ARRIERE GAUCHE (Modèles à châssis A, conduite à gauche)	T12	EL-R/FOG
	FEU ANTIBROUILLARD ARRIERE DROIT (Modèles conduite à droite avec châssis A)	T10	EL-R/FOG
	ACTIONNEUR DE VERROUILLAGE DE PORTE COTE CONDUCTEUR (Capteur de déverrouillage)	D10	EL-MULTI
	CONTACT DE BOUTON DE VERROUILLAGE	D8	EL-D/LOCK
	INTERRUPTEUR PRINCIPAL DE LEVE-GLACE ELECTRIQUE (Cabine double)	D5	EL-WINDOW EL-D/LOCK
	INTERRUPTEUR PRINCIPAL DE LEVE-GLACE ELECTRIQUE (Cabine simple et grande cabine)	D6	EL-WINDOW EL-D/LOCK
M33/M207 (Conduite à gauche avec moteur KA)	CONDENSEUR	M210	EC-IGN/SG
	DISTRIBUTEUR (TRANSISTOR D'ALIMENTA-TION)	M214	EC-IGN/SG
	ECM (BOITIER DE CONTROLE DE L'ECCS)	M32	EC-MAIN
M208 (Conduite à gauche avec moteur KA)	CONNECTEUR DE DIAGNOSTIC POUR CONSULT	M11	EC-MIL/DL
	DISTRIBUTEUR (CAPTEUR D'ANGLE D'ARBRE A CAMES)	M214	EC-CMPS
	ECM (BOITIER DE CONTROLE DE L'ECCS)	M32	EC-MAIN
	IMMO NATS	M68	EL-NATS
	FIL BLINDE (CAPTEUR D'ANGLE D'ARBRE A CAMES)	M214	EC-CMPS
	FIL BLINDE (DEBITMETRE D'AIR)	M204	EC-MAFS

Simpo PDF Merge and Split Unregistered Version - http://www.simpopdf.com

TERRE	CONNECTE A	N° DU CONNECTEUR	CODE DE CELLULE
M208 (Conduite à gauche avec moteur KA)	FIL BLINDE (CAPTEUR DE POSITION DE PAPILLON)	M302	EC-TPS
	FIL BLINDE (SONDE A OXYGENE CHAUFFEE)	E3	EC-HO2S
E6/E39	IMMO NATS (Moteur diesel)	M69	EL-NATS
	ACTIONNEUR ABS ET BOITIER ELECTRIQUE	E4	BR-ABS
	CONTACT DE NIVEAU DE LIQUIDE DE FREIN	E2	EL-WARN
	MOTEUR DE VENTILATEUR DE REFROIDISSEMENT	E24	LC-COOL/F
	CENTRALE D'ECLAIRAGE DE JOUR	E64	EL-DTRL
	CENTRALE DE MISE EN VEILLEUSE DES CODES	E67	EL-DIMDIP
	FEU COMBINE AVANT GAUCHE (PARKING) (Sauf pour l'Europe, l'Australie et la Chine)	E11	EL-TAIL/L
	FEU COMBINE AVANT GAUCHE (PARKING) (Pour l'Europe, l'Australie et la Chine)	E12	EL-TAIL/L
	FEU COMBINE AVANT GAUCHE (CLIGNOTANT) (Sauf pour l'Europe, l'Australie et la Chine)	E11	EL-TURN
	FEU COMBINE AVANT GAUCHE (CLIGNOTANT) (Pour l'Europe, l'Australie et la Chine)	E12	EL-TURN
	FEU COMBINE AVANT DROIT (PARKING) (Sauf pour l'Europe, l'Australie et la Chine)	E27	EL-TAIL/L
	FEU COMBINE AVANT DROIT (PARKING) (Pour l'Europe, l'Australie et la Chine)	E28	EL-TAIL/L
	FEU COMBINE AVANT DROIT (CLIGNOTANT) (Sauf pour l'Europe, l'Australie et la Chine)	E27	EL-TURN
	FEU COMBINE AVANT DROIT (CLIGNOTANT) (Pour l'Europe, l'Australie et la Chine)	E28	EL-TURN
	FILTRE A CARBURANT (DISPOSITIF DE CHAUFFAGE DE CARBURANT)	E56	EC-F/HEAT
	CONTACT DE FILTRE A CARBURANT (Modèles conduite à droite avec moteur diesel)	E5	EL-WARN EL-BUZZER
	ELECTROVANNE DE COMMANDE DE RETOUR DE CARBURANT (Modèles conduite à droite avec moteur NA)	E40	EC-F/RTN
	RELAIS DE PRECHAUFFAGE (Modèles conduite à droite avec moteur diesel sauf pour l'Europe)	E44	EC-GLOW
	MOTEUR DE REGLAGE DU FAISCEAU DE PHARE GAUCHE	E57	EL-H/AIM
	MOTEUR DE REGLAGE DU FAISCEAU DE PHARE DROIT	E60	EL-H/AIM
	PHARE GAUCHE	E13	EL-H/LAMP EL-DTRL
	PHARE DROIT	E26	EL-H/LAMP EL-DTRL EL-DIMDIP
	AMPLIFICATEUR DE LAVE-PHARES	E65	EL-HLC
	ELECTROVANNE FICD (Moteur diesel)	E37	HA-A/C,M
	ELECTROVANNE DE CONTROLE DE POT ISC-FI	E37	EC-FIPOT HA-A/C, M
	ANTENNE ELECTRIQUE	E46	EL-P/ANT
	FIL BLINDE (CAPTEUR DE ROUE AVANT GAUCHE)	E15	BR-ABS
	FIL BLINDE (CAPTEUR DE ROUE AVANT DROITE)	E31	BR-ABS
	INDICATEUR DE DIRECTION LATERAL GAUCHE	E1	EL-TURN
	INDICATEUR DE DIRECTION LATERAL DROIT	E45	EL-TURN
	CONTACT DE THERMOSTAT	E18	LC-COOL/F
	MANOCONTACT TRIPLE	E25	LC-COOL/F
	ELECTROVANNE DE COMMANDE DE DEPRESSION	E20	EC-IDLE
	ALTERNATEUR (Moteur à essence)	E211	EC-CHOKE EC-FPCM EL-CHARGE EL-WARN
	CONTACT DE POINT MORT	E220	EC-PNP/SW

Simpo PDF Merge and Split Unregistered Version - http://www.simpopdf.com

TERRE	CONNECTE A	N° DU CONNECTEUR	CODE DE CELLULE
E6/E39	MANOCONTACT D'HUILE DE DIRECTION ASSISTEE (Modèles conduite à droite, 2 roues motrices avec moteur KA et modèles conduite à gauche)	E208	EC-PST/SW
	MANOCONTACT D'HUILE DE DIRECTION ASSISTEE (Modèles conduite à droite, 2 roues motrices avec moteur KA)	E207	EC-PST/SW
	FIL BLINDE (CAPTEUR DE ROUE ARRIERE GAUCHE) (Modèles 4 roues motrices)	C5	BR-ABS
	FIL BLINDE (CAPTEUR DE ROUE ARRIERE DROITE) (Modèles 4 roues motrices)	C5	BR-ABS
	FIL BLINDE (CAPTEUR DE ROUE ARRIERE) (2 roues motrices)	C6	BR-ABS
F7/F52 (Modèles conduite à droite avec moteur KA)	CONDENSEUR	F10	EC-IGN/SG
	DISTRIBUTEUR (TRANSISTOR D'ALIMENTATION)	F14	EC-IGN/SG
	ECM (BOITIER DE CONTROLE DE L'ECCS)	F51	EC-MAIN
F8 (Modèles conduite à droite avec moteur KA)	CONNECTEUR DE DIAGNOSTIC POUR CONSULT	M11	EC-MIL/DL
	DISTRIBUTEUR (CAPTEUR D'ANGLE D'ARBRE A CAMES)	F14	EC-CMPS
	ECM (BOITIER DE CONTROLE DE L'ECCS)	F51	EC-MAIN
	FIL BLINDE (CAPTEUR D'ANGLE D'ARBRE A CAMES)	F14	EC-CMPS
	FIL BLINDE (DEBITMETRE D'AIR)	F4	EC-MAFS
	FIL BLINDE (CAPTEUR DE POSITION DE PAPILLON)	F102	EC-TPS
A1(Moteur diesel)	ALTERNATEUR	A7	EC-GLOW EL-CHARGE EL-WARN
	CAPTEUR DE TEMPERATURE DU MOTEUR (Sauf pour l'Europe)	A11	EC-GLOW
R54	DESEMBUAGE DE LUNETTE ARRIERE	R53	EL-DEF

Simpo PDF Merge and Split Unregistered Version - http://www.simpopdf.com

ATTENTION :
S'il est nécessaire de mettre le moteur en marche avec une batterie d'appoint et des câbles,
a. Utiliser une batterie d'appoint de 12 volts.
b. Après avoir raccordé les câbles de la batterie, s'assurer qu'ils sont fermement fixés aux bornes, afin d'assurer un bon contact.
c. Ne jamais rajouter de l'eau distillée par l'orifice servant à contrôler la densité.

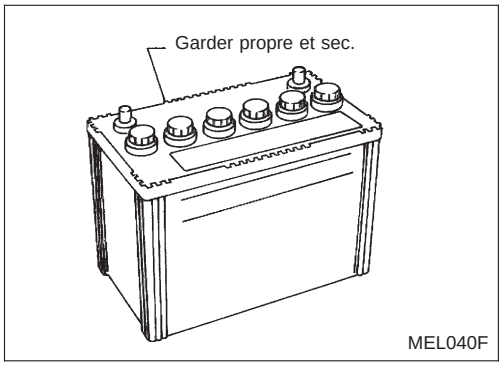

Comment manipuler la batterie

METHODES DE PREVENTION CONTRE L'EXCES DE DECHARGE

Les précautions suivantes doivent être prises pour éviter de décharger avec excès une batterie.

- La surface de la batterie (en particulier le haut) doit toujours rester propre et au sec.
- Les cosses doivent être propres et bien serrées.
- Contrôler le niveau d'électrolyte lors de toute révision périodique.
  Ceci s'applique aussi aux batteries désignées par ''entretien faible'' et ''sans entretien''.

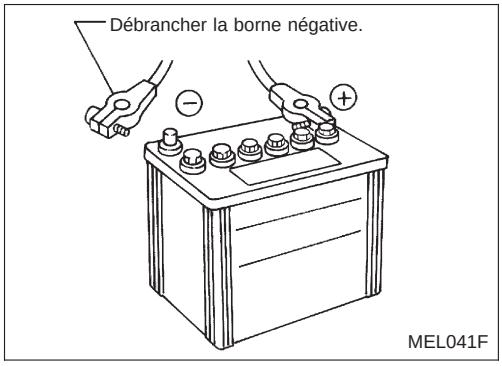

- Lorsque le véhicule ne va pas être utilisé pendant une longue période, débrancher la borne négative de la batterie.

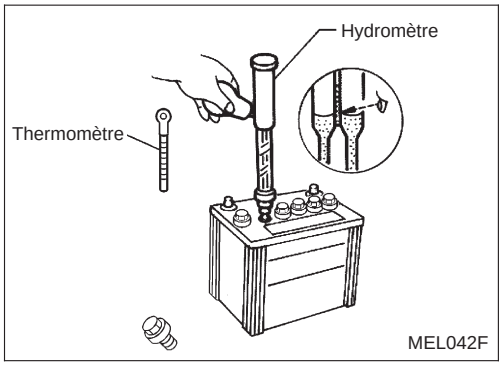

- Vérifier l'état de charge de la batterie.
  Vérifier périodiquement la densité d'électrolyte. Toujours garder un œil sur l'état de charge, pour éviter tout excès de décharge.

Simpo PDF Merge and Split Unregistered Version - http://www.simpopdf.com

Comment manipuler la batterie (Suite)

CONTROLE DE LA DENSITE DE L'ELECTROLYTE

AVERTISSEMENT :

Ne jamais laisser l'électrolyte entrer en contact avec la peau, les yeux, les tissus ou les surfaces peintes. Après avoir touché une batterie, ne pas se toucher les yeux ou se les frotter avant de s'être soigneusement lavé les mains. Si de l'acide entre en contact avec les yeux, la peau ou les vêtements, rincer immédiatement à l'eau claire pendant 15 minutes et consulter un médecin.

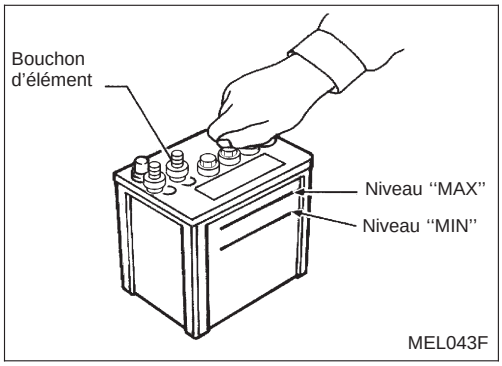

- Déposer le bouchon d'élément à l'aide d'un outil adéquat.
- Rajouter de l'eau distillée jusqu'au repère de niveau MAXI.

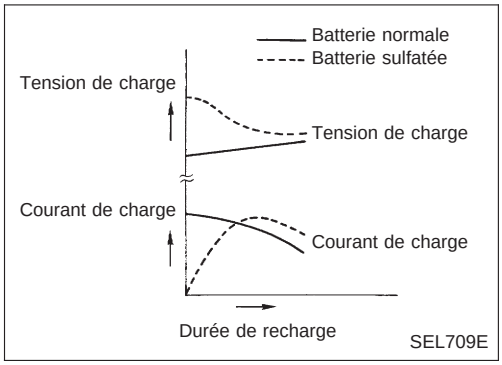

SULFATAGE

La batterie se décharge complètement lorsqu'elle est inutilisée pendant longtemps et que sa densitée chute au dessous de 1 100. Cela peut entraîner le sulfatage des plaques d'élément.

Pour déterminer si une batterie a été ''sulfatée'', noter sa tension et son courant lors de sa recharge. Comme indiqué dans la figure, si la batterie a été sulfatée, on observe un courant moindre et une tension supérieure au stade initial de la recharge.

Une batterie sulfatée devra parfois être remise en état au moyen d'une recharge longue et lente, pendant 12 heures ou plus, suivi d'un test de capacité de batterie.

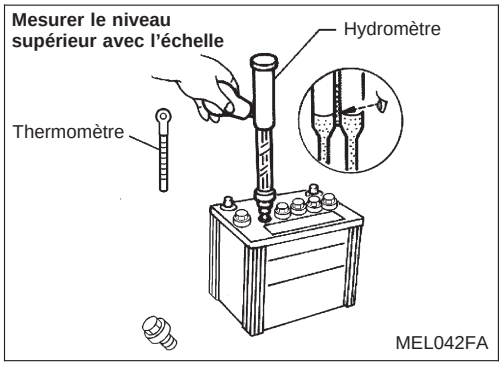

VERIFICATION DE LA DENSITE

1. Lire les indications de l'hydromètre et du thermomètre au niveau des yeux.

Simpo PDF Merge and Split Unregistered Version - http://www.simpopdf.com

Comment manipuler la batterie (Suite)

2. Convertir la valeur relevée en densité à 20°C.

Exemple :

- Quand la température de l'électrolyte est de 35°C et la densité de l'électrolyte de 1 230, la densité convertie à 20°C est de 1 240.
- Quand la température de l'électrolyte est de 0°C et la densité de l'électrolyte de 1 210, la densité convertie à 20°C est de 1 196.

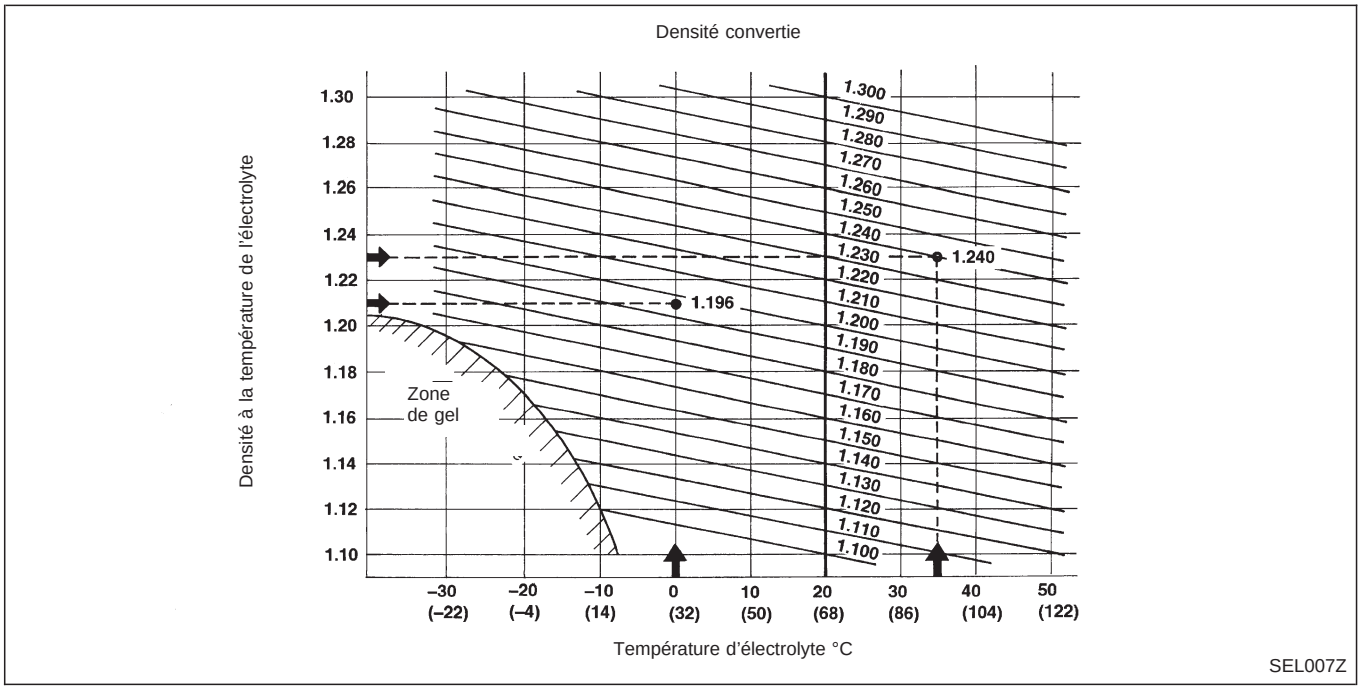

SEL007Z

Simpo PDF Merge and Split Unregistered Version - http://www.simpopdf.com

Tableau d’essai et de charge de la batterie

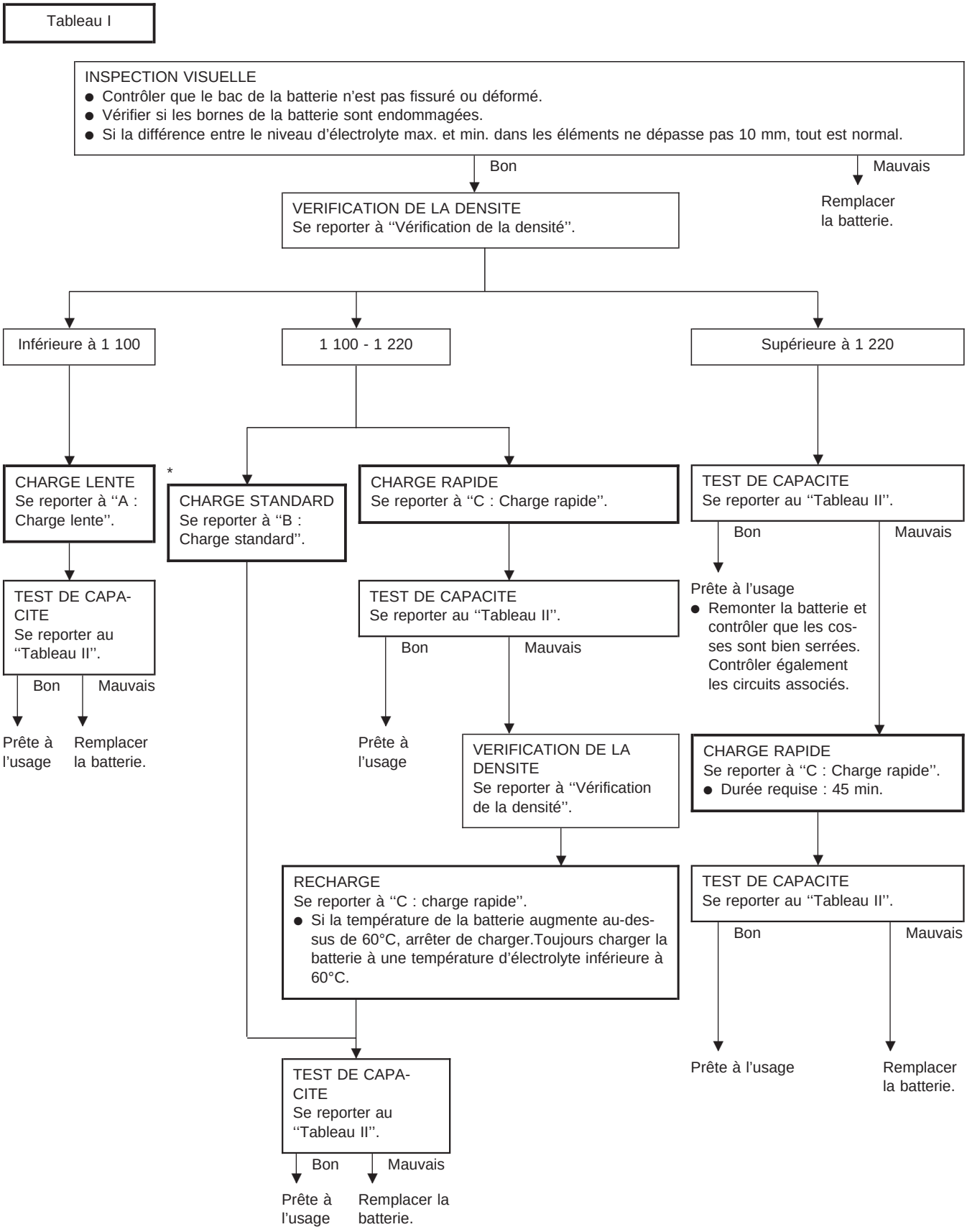

***La “CHARGE STANDARD” est recommandée si le véhicule est entreposé après la recharge.**

Simpo PDF Merge and Split Unregistered Version - http://www.simpopdf.com

Tableau d'essai et de charge de la batterie (Suite)

Tableau II

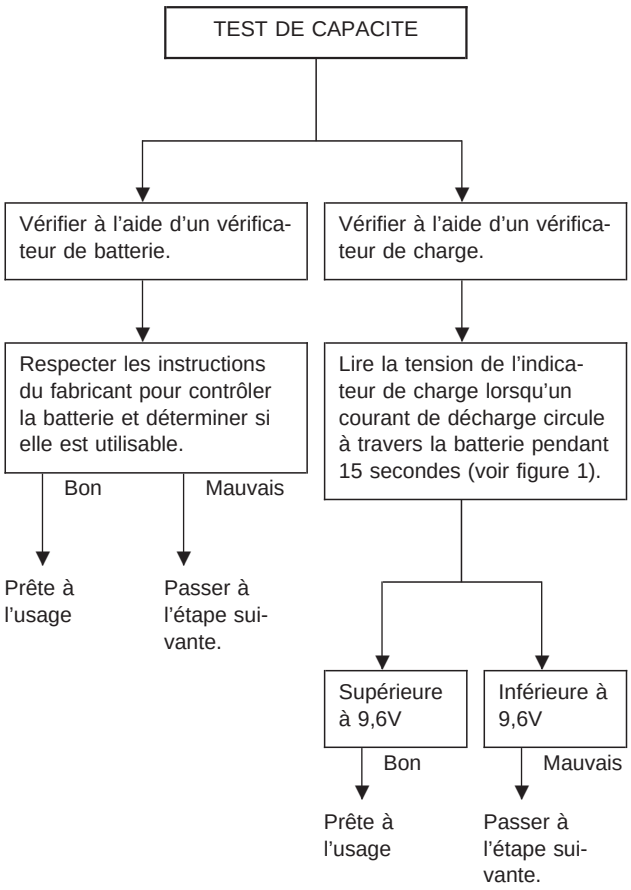

- Vérifier le type de la batterie et déterminer le courant spécifié à l'aide du tableau ci-après.

Fig. 1 COURANT DE DECHARGE
(Vérificateur de charge)

Type	Courant (A)
28B19R(L)	90
34B19R(L)	99
46B24R(L)	135
55B24R(L)	135
50D23R(L)	150
55D23R(L)	180
65D26R(L)	195
80D26R(L)	195
75D31R(L)	210
95D31R(L)	240
115D31R(L)	240
95E41R(L)	300
130E41R(L)	330

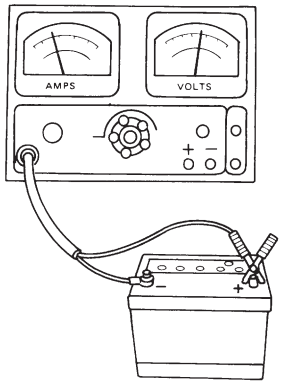

SEL008Z

Simpo PDF Merge and Split Unregistered Version - http://www.simpopdf.com

Tableau d'essai et de charge de la batterie (Suite)

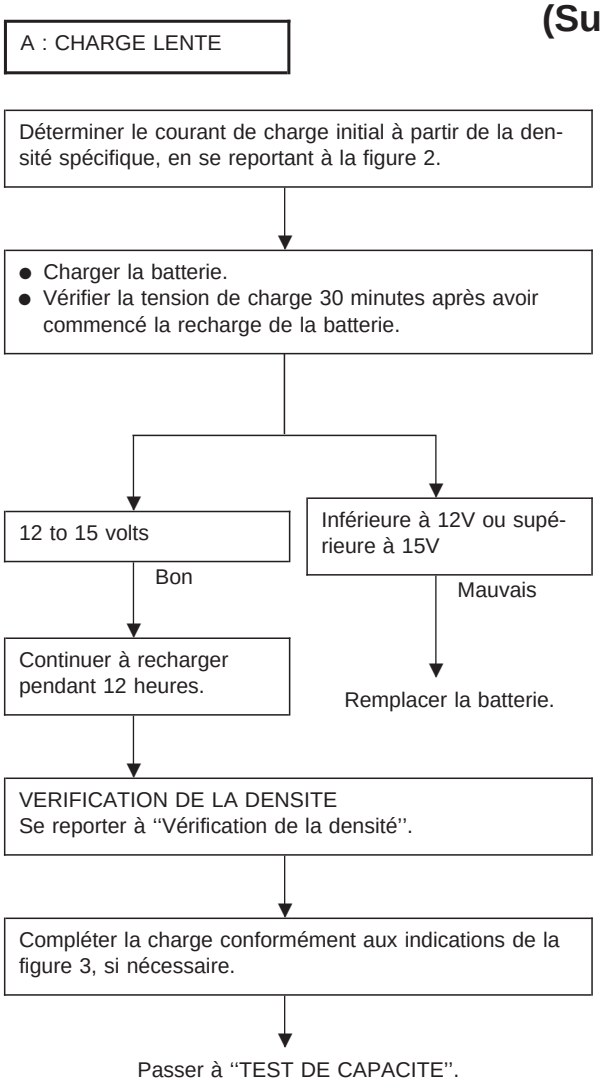

Fig. 2 REGLAGE DU COURANT DE CHARGE INITIAL (Charge lente)

DENSITE SPECIFIQUE CONVERTIE	TYPE DE BATTERIE												
	28B19R(L)	34B19R(L)	46B24R(L)	55B24R(L)	50D23R(L)	55D23R(L)	65D26R(L)	80D26R(L)	75D31R(L)	95D31R(L)	115D31R(L)	95E41R(L)	130E41R(L)
Inférieure à 1 100	4,0 (A)		5,0 (A)		7,0 (A)		8,0 (A)		9,0 (A)	10,0 (A)			14,0 (A)

- Vérifier le type de batterie et déterminer le courant spécifiée à partir des indications du tableau ci-dessus.
- Après le début de la recharge, il est inutile d'ajuster le courant de charge.

Fig. 3 CHARGE SUPPLEMENTAIRE (Charge lente)

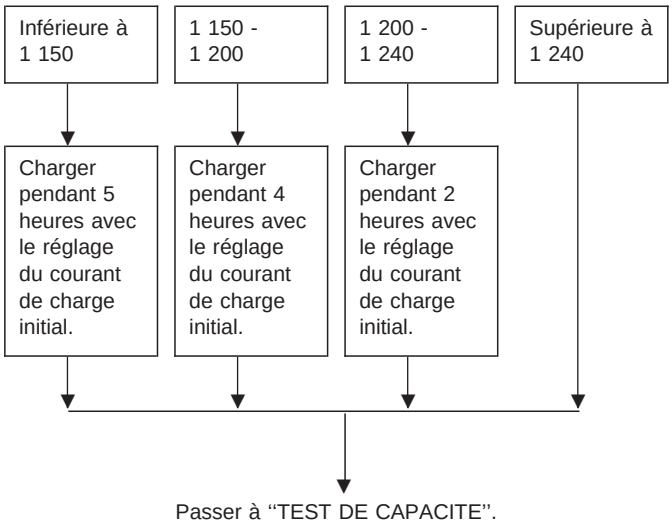

ATTENTION :

- **Régler le courant de charge en fonction de la valeur spécifiée à la figure 2. Si la capacité du chargeur ne permet pas d'obtenir l'intensité prescrite, régler le courant de charge aussi près que possible de cette valeur.**
- **Ne pas approcher de flammes de la batterie pendant la charge.**
- **Pour connecter le chargeur, brancher les fils conducteurs en premier, puis mettre le chargeur sous tension. Ne pas commencer par mettre le chargeur sous tension : ceci pourrait produire des étincelles.**
- **Si la température de la batterie s'élève au-dessus de 60°C, arrêter de charger. Toujours charger la batterie à une température d'électrolyte inférieure à 60°C.**

Simpo PDF Merge and Split Unregistered Version - http://www.simpopdf.com

Tableau d'essai et de charge de la batterie (Suite)

B : CHARGE STANDARD

Déterminer le courant de charge initial à partir de la densité en se reportant à la figure 4.

↓

Charger la batterie pendant 8 heures.

↓

VERIFICATION DE LA DENSITE
Se reporter à "Vérification de la densité".

↓

Effectuer une charge supplémentaire conformément à la figure 5, si nécessaire.

↓

Passer à "TEST DE CAPACITE".

Fig. 4 REGLAGE DU COURANT DE CHARGE INITIAL (Charge standard)

DENSITE SPECIFIQUE CONVERTIE	TYPE DE BATTERIE									
	28B19R(L) 34B19R(L)	46B24R(L) 55B24R(L)	50D23R(L) 55D23R(L)	65D26R(L) 80D26R(L)	75D31R(L)	95D31R(L) 115D31R(L) 95E41R(L)	130E41R(L)
1 100 - 1 130	4,0 (A)	5,0 (A)	6,0 (A)	7,0 (A)	8,0 (A)	9,0 (A)	13,0 (A)
1 130 - 1 160	3,0 (A)	4,0 (A)	5,0 (A)	6,0 (A)	7,0 (A)	8,0 (A)	11,0 (A)
1 160 - 1 190	2,0 (A)	3,0 (A)	4,0 (A)	5,0 (A)	6,0 (A)	7,0 (A)	9,0 (A)
1 190 - 1 220	2,0 (A)	2,0 (A)	3,0 (A)	4,0 (A)	5,0 (A)	5,0 (A)	7,0 (A)

- Vérifier le type de batterie et déterminer le courant spécifié à partir des indications du tableau ci-dessus.
- Après le début de la recharge, il est inutile d'ajuster le courant de charge.

Fig. 5 CHARGE SUPPLEMENTAIRE (Charge standard)

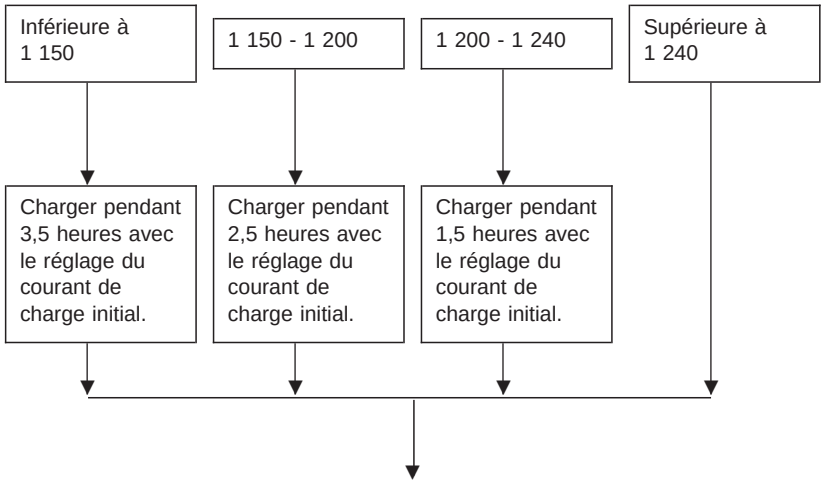

ATTENTION :

- **Ne pas avoir recours à la méthode de charge standard pour une batterie dont la densité est inférieure à 1 100.**
- **Régler le courant de charge en fonction de la valeur spécifiée à la figure 4. Si la capacité du chargeur ne permet pas d'obtenir l'intensité prescrite, régler le courant de charge aussi près que possible de cette valeur.**
- **Ne pas approcher de flammes de la batterie pendant la charge.**
- **Pour connecter le chargeur, brancher les fils conducteurs en premier, puis mettre le chargeur sous tension. Ne pas commencer par mettre le chargeur sous tension : ceci pourrait produire des étincelles.**
- **Si la température de la batterie augmente au-dessus de 60°C, arrêter de charger. Toujours charger la batterie à une température d'électrolyte inférieure à 60°C.**

Simpo PDF Merge and Split Unregistered Version - http://www.simpopdf.com

Tableau d'essai et de charge de la batterie (Suite)

C : CHARGE RAPIDE

Déterminer le réglage du courant de charge initial et la durée de charge à partir de la densité en se reportant à la figure 6.

↓

Charger la batterie.

↓

Passer à "TEST DE CAPACITE".

Fig. 6 REGLAGE DU COURANT DE CHARGE INITIAL ET TEMPS DE CHARGE (Charge rapide)

TYPE DE BATTERIE		28B19R(L) 34B19R(L)	46B24R(L) 55B24R(L) 50D23R(L)	55D23R(L) 65D26R(L) 80D26R(L)	75D31R(L) 95D31R(L) 115D31R(L) 95E41R(L)	130E41R(L)
COURANT [A]		10 (A)	15 (A)	20 (A)	30 (A)	40 (A)
DENSITE SPECIFIQUE CONVERTIE	1 100 - 1 130	2,5 heures				
	1 130 - 1 160	2 heures				
	1 160 - 1 190	1,5 heures				
	1 190 - 1 220	1 heure				
	Supérieure à 1 220	0,75 heure (45 min.)				

- Vérifier le type de batterie et déterminer le courant spécifié à partir des indications du tableau ci-dessus.
- Après le début de la recharge, il est inutile d'ajuster le courant de charge.

ATTENTION :

- **Ne pas avoir recours à la méthode de charge rapide pour une batterie dont la densité est inférieure à 1 100.**
- **Régler le courant de charge initial en fonction de la valeur spécifiée à la figure 6. Si la capacité du chargeur ne permet pas d'obtenir l'intensité prescrite, régler le courant de charge aussi près que possible de cette valeur.**
- **Ne pas approcher de flammes de la batterie pendant la charge.**
- **Pour connecter le chargeur, brancher les fils conducteurs en premier, puis mettre le chargeur sous tension. Ne pas commencer par mettre le chargeur sous tension : ceci pourrait produire des étincelles.**
- **Faire attention à l'élévation de la température de la batterie étant donné que l'opération de charge rapide implique un passage de courant considérable.**
  Si la température de la batterie augmente au-dessus de 60°C, arrêter de charger. Toujours charger la batterie à une température d'électrolyte inférieure à 60°C.
- **Ne jamais dépasser le temps de charge spécifié dans la figure 6 car, si on le dépasse, on risque de provoquer une détérioration de la batterie.**

Caractéristiques et valeurs de réglage (SDS)

Modèle concerné		Europe		
		KA24	TD25	
		Standard		Option
Type		55D23R	95D31R	80D26L, 80D26R
Capacité	V-AH	12-48	12-64	12-55

Simpo PDF Merge and Split Unregistered Version - http://www.simpopdf.com

Schéma de câblage – START –

EL-START-01

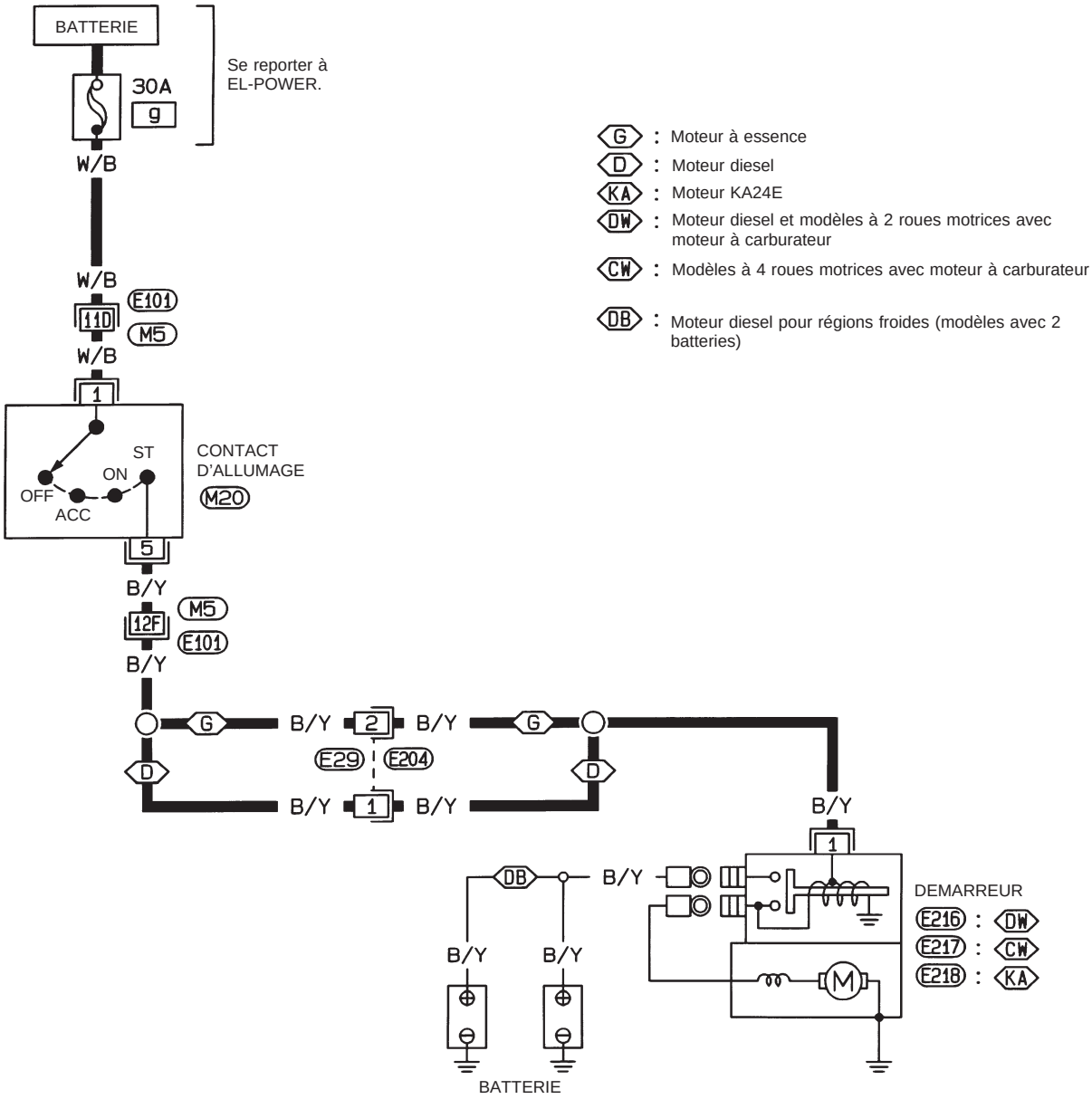

G : Moteur à essence
D : Moteur diesel
KA : Moteur KA24E
DW : Moteur diesel et modèles à 2 roues motrices avec moteur à carburateur
CW : Modèles à 4 roues motrices avec moteur à carburateur
DB : Moteur diesel pour régions froides (modèles avec 2 batteries)



(Se reporter à la dernière page dépliante)

M5, E101

HEL317A

Simpo PDF Merge and Split Unregistered Version - http://www.simpopdf.com

Diagnostics des défauts

S'il y a une anomalie, débrancher immédiatement la borne négative de la batterie.

Le démarreur ne s'arrête pas. → Remplacer le contact magnétique.

Le moteur ne démarre pas.

Est-ce qu'on peut lancer le moteur ?
- Oui → Est-ce que le moteur tourne normalement ?
  - Oui → Vérifier le système d'allumage/carburant.
  - Non (tourne lentement). → Vérifier la batterie comme suit :
    - Condition de charge
    - Raccords de borne
    - Corrosion de borne
    - Bon → Réparer le démarreur.
    - Mauvais → Ⓐ
- Non → Est-ce que le démarreur tourne ?
  - Oui → Est-ce que l'arbre de pignon tourne ?
    - Oui → Vérifier l'embrayage de pignon.
    - Non → Vérifier le pignon de réduction, l'induit et l'arbre de pignon.
  - Non → Vérifier le fusible et le raccord à fusible.
    - Mauvais → Remplacer.
    - Bon → Vérifier la batterie comme suit :
      - Condition de charge
      - Raccords de borne
      - Corrosion de borne
      - Mauvais → Ⓐ
        - Charger la batterie.
        - Réparer les raccords et retirer la corrosion des bornes de la batterie.
      - Bon → Vérifier le câblage du système de démarrage.
        - Mauvais → Réparer.
        - Bon → L'interrupteur magnétique produit-il le bruit caractéristique d'enclenchement ?
          - Non → Remplacer l'interrupteur magnétique.
          - Oui → Contrôler l'état du pignon et la denture de la couronne.
            - Mauvais
              - Régler la course du pignon.
              - Contrôler le mécanisme de manoeuvre du pignon.
              - Contrôler la couronne dentée.
            - Bon → Le démarreur tourne-t-il à vide lorsque le branchement suivant est effectué ?

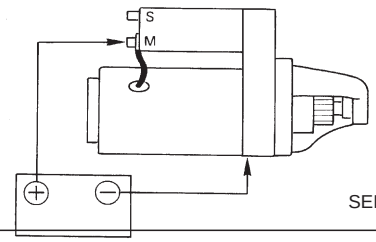

- Oui → Remplacer l'interrupteur magnétique.
- Non → Réparer le démarreur.

Simpo PDF Merge and Split Unregistered Version - http://www.simpopdf.com

Construction

SEC. 233
M3T70381

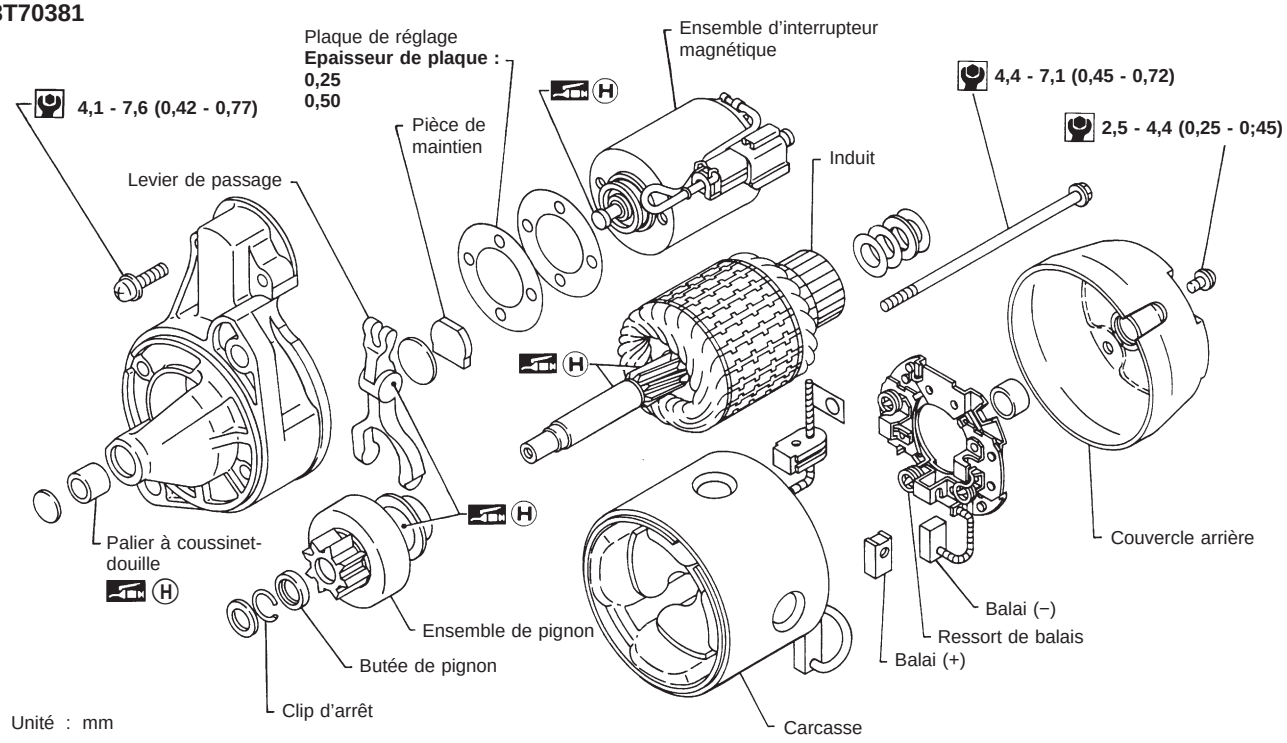

Unité : mm

: N·m (kg-m)

: Point de lubrification avec graisse haute température

MEL673EA

SEC. 233
M3T29482D

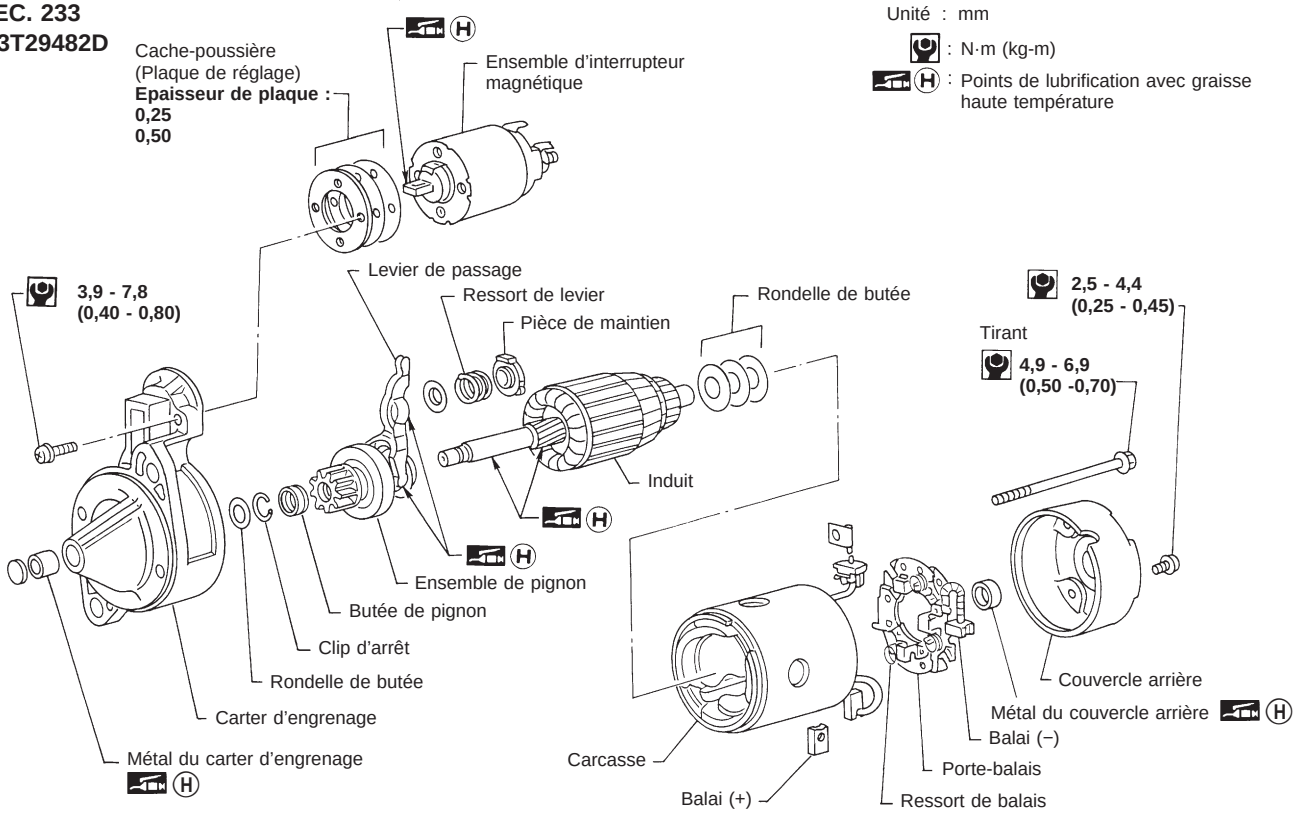

Unité : mm

: N·m (kg-m)

: Points de lubrification avec graisse haute température

SEL600JA

Simpo PDF Merge and Split Unregistered Version - http://www.simpopdf.com

Construction (Suite)

SEC. 233
S13-327

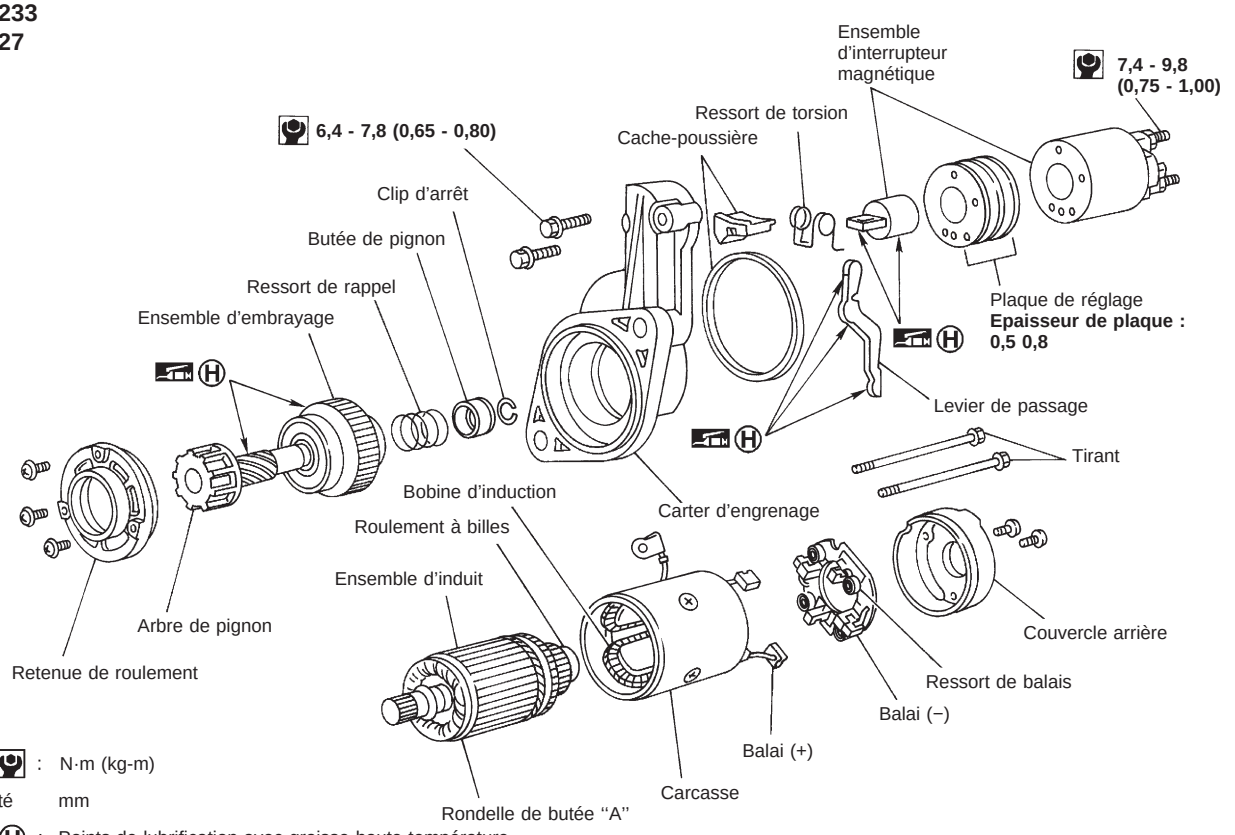

Simpo PDF Merge and Split Unregistered Version - http://www.simpopdf.com

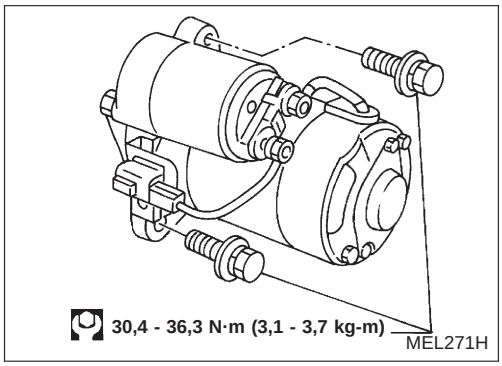

Dépose et repose

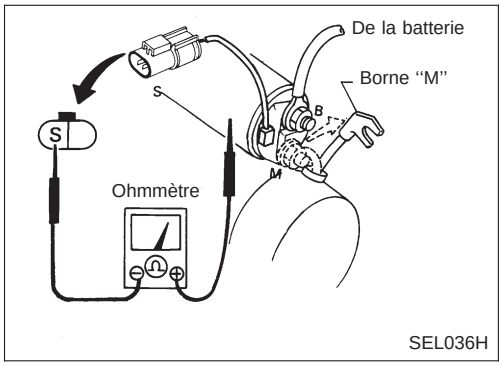

Inspection

VERIFICATION DE L'INTERRUPTEUR MAGNETIQUE

- Avant de commencer la vérification, débrancher le câble de masse de la batterie.
- Débrancher la borne "M" du démarreur.

1. Effectuer un essai de continuité (entre la borne "S" et le corps d'interrupteur).

- Absence de continuité ... Remplacer.

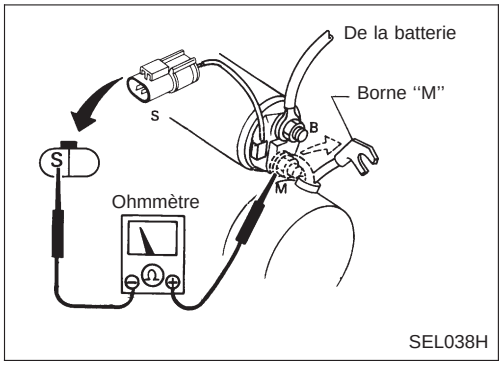

2. Effectuer un essai de continuité (entre les bornes "S" et "M").

- Absence de continuité ... Remplacer.

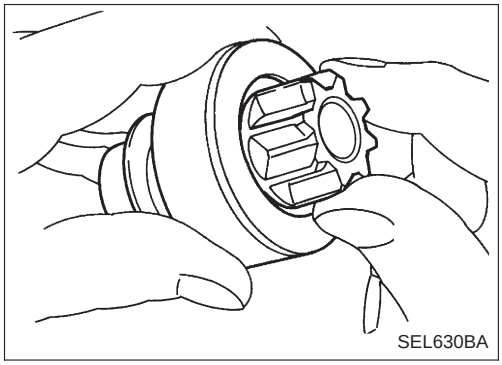

CONTROLE PIGNON/EMBRAYAGE

1. Vérifier les dents du pignon.

- Remplacer le pignon si les dents sont usées ou endommagées (dans ce cas, contrôler également l'état des dents de la couronne).

2. Vérifier les dents du pignon réducteur (selon modèles).

- Remplacer le pignon réducteur si les dents sont usées ou endommagées (dans ce cas, contrôler également l'état des dents du pignon d'arbre d'induit).

3. Vérifier si le pignon se bloque dans un sens et tourne librement dans le sens inverse.

- S'il se bloque ou tourne dans les deux sens ou qu'une résistance inhabituelle est évidente ... Remplacer.

Simpo PDF Merge and Split Unregistered Version - http://www.simpopdf.com

Inspection (Suite)

VERIFICATION DES BALAIS

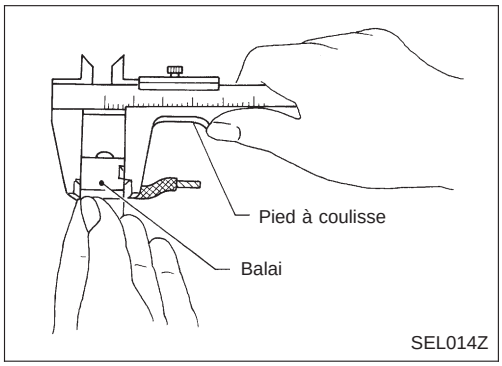

Balais

Vérifier le degré d'usure de chaque balai.

Limite d'usure (longueur) :
Se reporter aux SDS, EL-34.

- Usure excessive ... Remplacer.

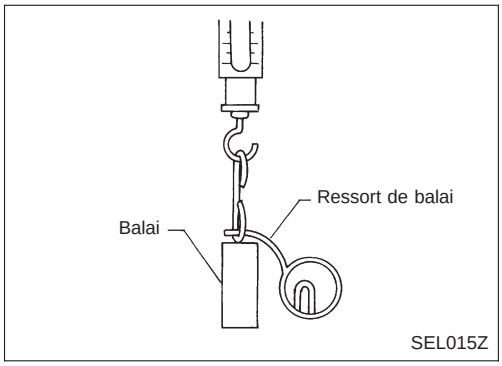

Pression du ressort de balais

Vérifier la pression du ressort des balais en séparant le ressort des balais.

Pression du ressort (avec balai neuf) :
Se reporter aux SDS, EL-34.

- Si la valeur obtenue n'est pas conforme ... Remplacer.

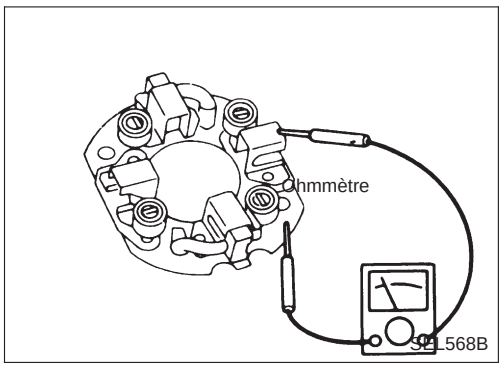

Porte-balais

1. Effectuer un essai d'isolation entre le porte-balai (côté positif) et son embase (côté négatif).
- Il y a continuité ... Remplacer.
2. Vérifier si le mouvement du balai est bien régulier.
- Remplacer le porte-balais s'il est tordu et le nettoyer si sa paroi de coulissement est sale.

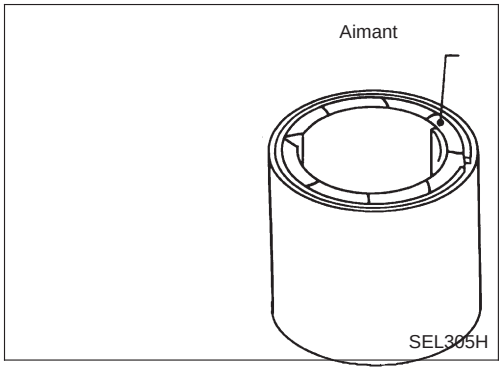

VERIFICATION DE LA CARCASSE

L'aimant est fixé à la carcasse par de la résine. Contrôler que l'aimant est bien fixé à la carcasse et qu'il n'y a aucune fissure. Remplacer les pièces défectueuses comme un ensemble.

ATTENTION :
Ne pas serrer la carcasse dans un étau et ne pas la frapper avec un maillet.

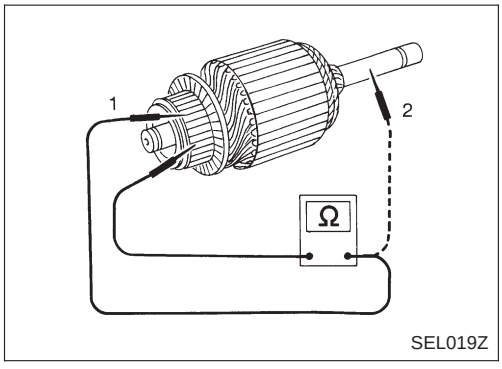

VERIFICATION DE L'INDUIT

1. Effectuer un essai de continuité (entre les deux segments côte à côte).
- Absence de continuité ... Remplacer.
2. Effectuer un essai d'isolation (entre chaque segment de collecteur et l'arbre).
- Il y a continuité ... Remplacer.

Simpo PDF Merge and Split Unregistered Version - http://www.simpopdf.com

Inspection (Suite)

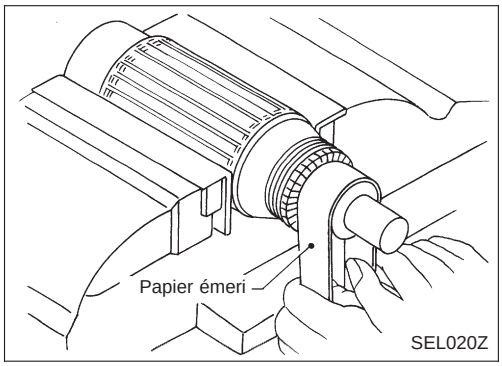

3. Vérifier la surface du collecteur.
- Rugueuse ... poncer doucement avec un papier émeri n° 500 - 600.

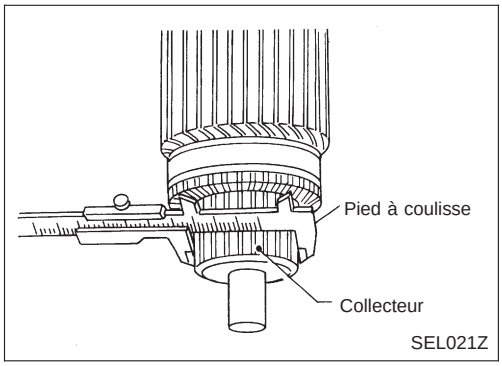

4. Vérifier le diamètre du collecteur.
Diamètre minimum du collecteur :
Se reporter aux SDS, EL-34.
- Inférieur à la valeur spécifiée ... Remplacer.

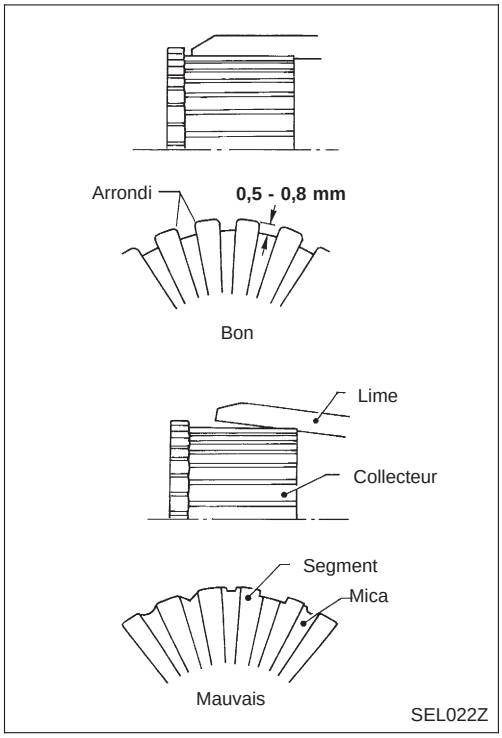

5. Vérifier la profondeur des isolants en mica depuis la surface du collecteur.
- Moins de 0,2 mm ... Limer jusqu'à 0,5 à 0,8 mm

Remontage

Lubrifier de graisse haute température le roulement, les pignons et les surfaces de friction lors du remontage du démarreur. Observer avec soin les instructions suivantes.

Simpo PDF Merge and Split Unregistered Version - http://www.simpopdf.com

Remontage (Suite)

REGLAGE DE LA DIMENSION DE DEPASSEMENT DU PIGNON

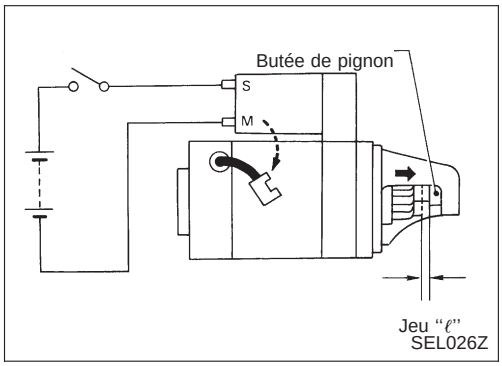

Jeu "ℓ"

Le pignon étant chassé vers l'extérieur par l'interrupteur magnétique, repousser le pignon vers l'arrière pour éliminer le jeu, et mesurer le jeu "ℓ" entre le bord avant du pignon et la butée.

Jeu "ℓ" :

Se reporter aux SDS, EL-34.

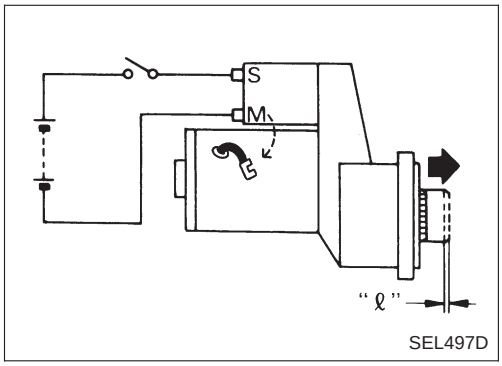

Mouvement "ℓ"

Comparer le mouvement "ℓ" dans la hauteur de pignon lorsque le pignon est poussé vers l'extérieur avec l'interrupteur magnétique sous tension et lorsqu'on le sort à la main jusqu'à ce qu'il touche la butée.

Mouvement "ℓ" :

Se reporter aux SDS, EL-34.

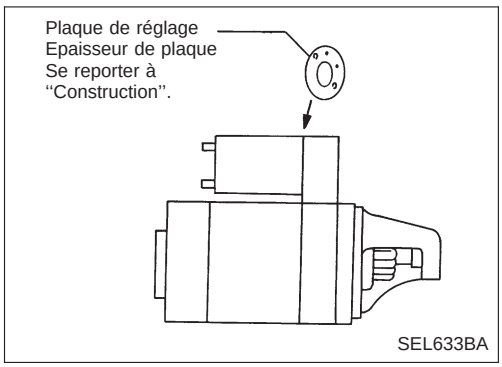

- Le jeu n'est pas dans les valeurs spécifiées ... Le régler à l'aide de la plaque de réglage.

Caractéristiques et valeurs de réglage (SDS)

DEMARREUR

Type		M3T70381	M3T29482D	S13-327
		MITSUBISHI		HITACHI
		Pas de réduction		Réduction
Modèle concerné		2 roues motrices	4 roues motrices	2 roues motrices
		KA24		TD25
		Standard		Standard
Tension du circuit	V	12		
A vide				
Tension de borne	V	11,5		11,0
Courant	A	Moins de 60		Moins de 160
Régime	tr/mn	Plus de 6 500		Plus de 4 000
Diamètre minimum du collecteur	mm	31,4		35,5
Longueur minimum des balais	mm	11,5		9,0
Tension du ressort de balai	N (kg)	13,7 - 25,5 (1,4 - 2,6)		–
Jeu entre métal du roulement et arbre d'induit	mm	–	Moins de 0,2	–
Jeu "ℓ" entre l'extrémité avant du pignon et la butée de pignon	mm	0,5 - 2,0		–
Mouvement "ℓ" en hauteur de l'ensemble pignon	mm	–		0,3 - 1,5

Simpo PDF Merge and Split Unregistered Version - http://www.simpopdf.com

Schéma de câblage – CHARGE –/Moteur à essence

EL–CHARGE–01

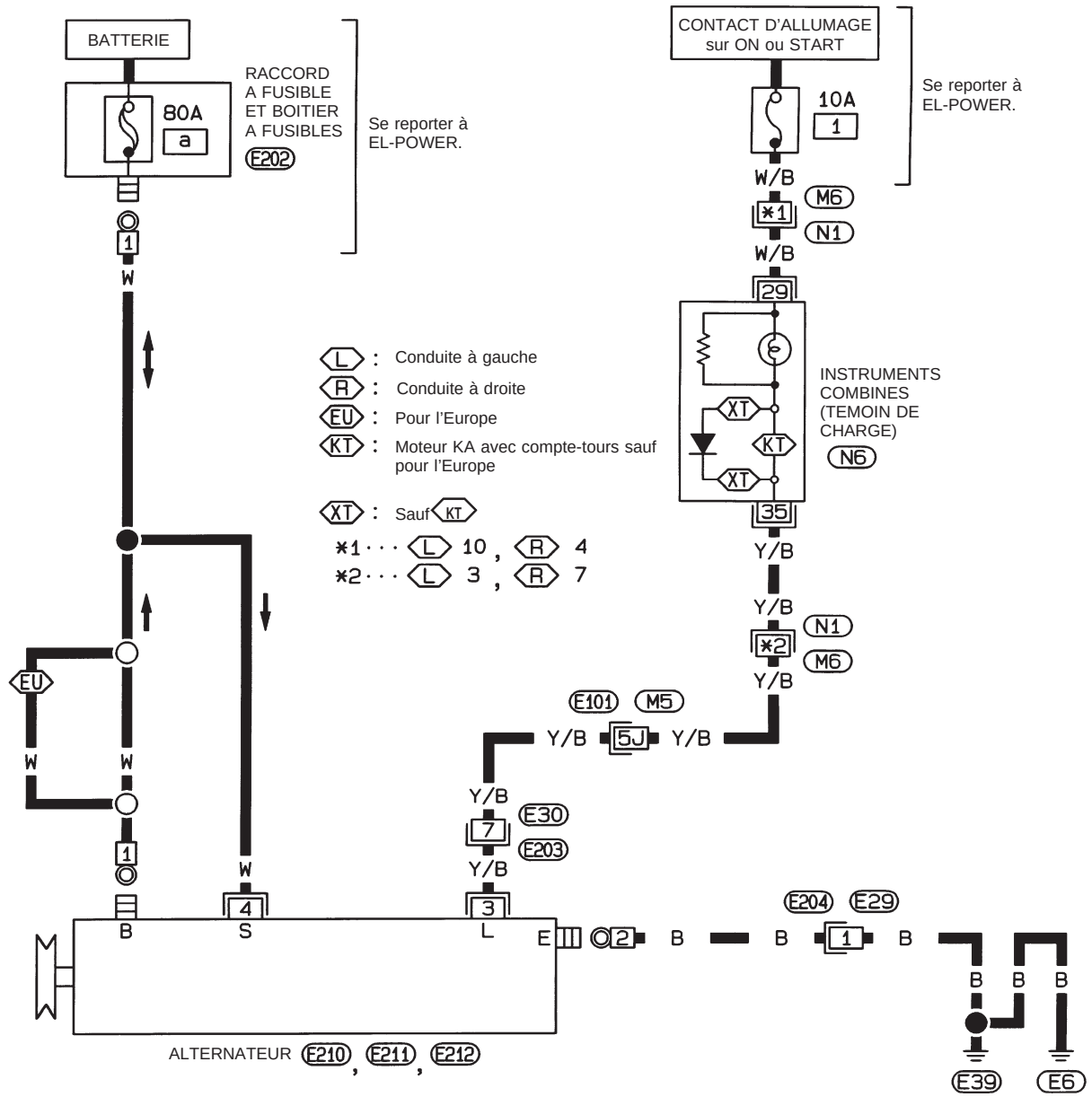



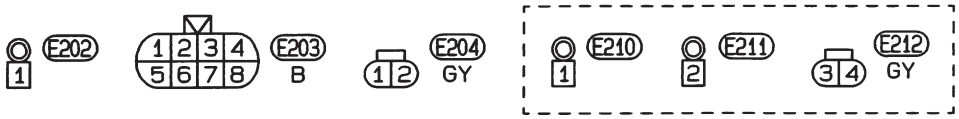

(Se reporter à la dernière page dépliante)
M5 , E101

HEL318A

Simpo PDF Merge and Split Unregistered Version - http://www.simpopdf.com

Schéma de câblage – CHARGE –/Moteur diesel

EL-CHARGE-03

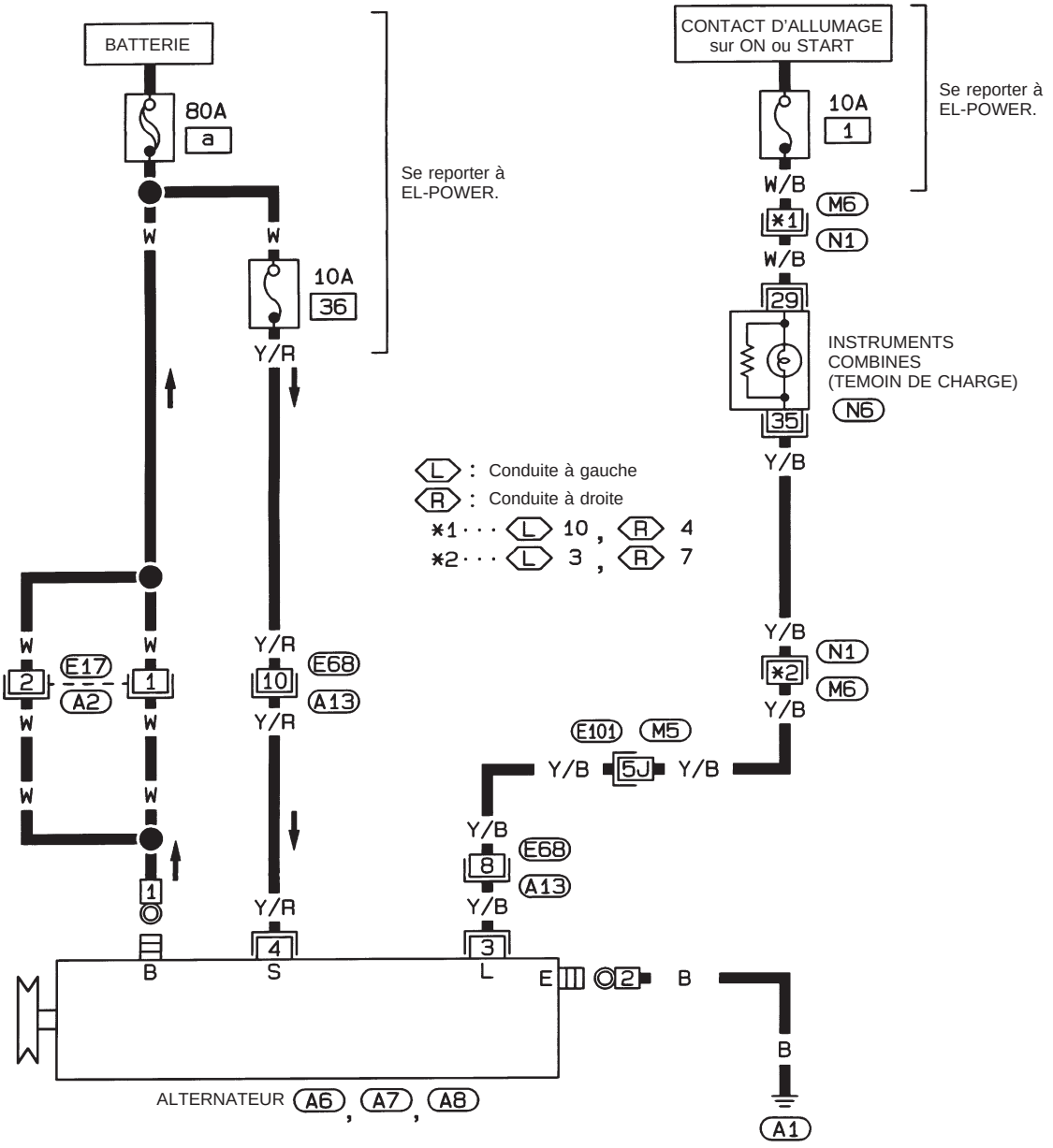

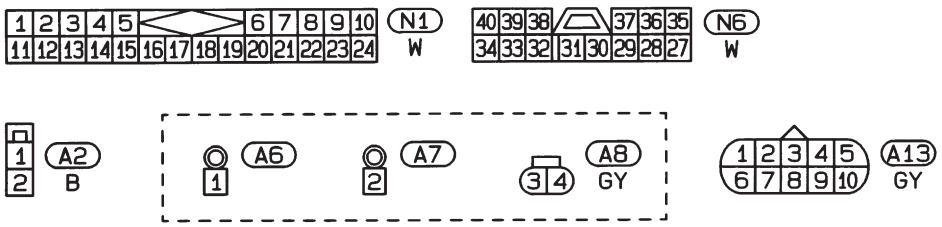

(Se reporter à la dernière page dépliante)

M5 , E101

HEL319A

Simpo PDF Merge and Split Unregistered Version - http://www.simpopdf.com

Diagnostics des défauts

Avant de faire un essai d'alternateur, s'assurer que la batterie est complètement chargée. Pour cet essai, il faut disposer d'un voltmètre de 30 volts et de sondes d'essais convenables. L'alternateur peut être facilement vérifié en se référant au tableau d'inspection.

- **Avant de démarrer, inspecter le raccord à fusible.**
- **Utiliser une batterie complètement chargé.**

MOTEURS A ESSENCE

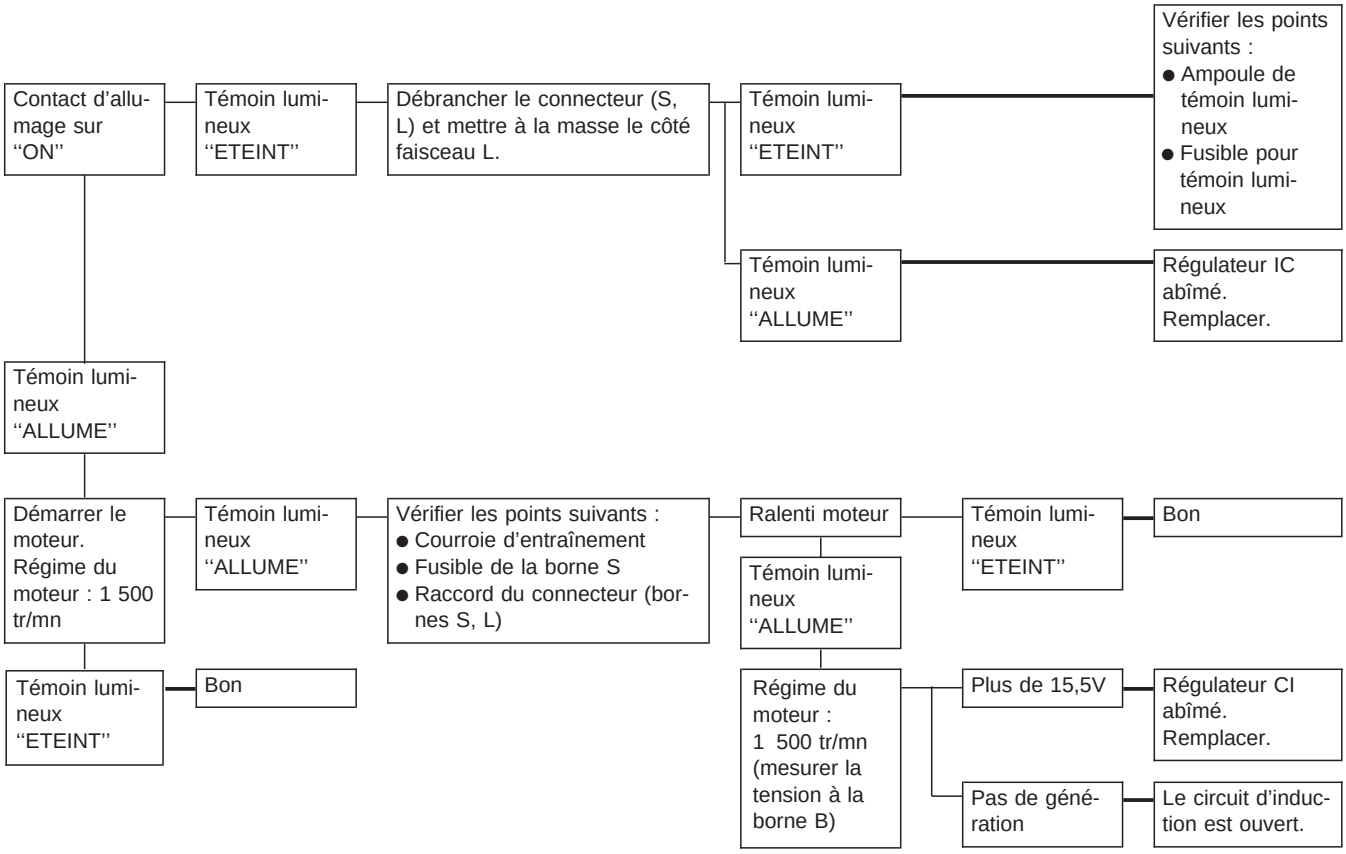

Témoin lumineux : témoin de "CHARGE" des instruments combinés

Note :

- **Si le résultat de l'inspection est satisfaisant même si le système de charge ne fonctionne pas, vérifier le raccord de la borne B (vérifier le couple de serrage).**
- **Lorsque le circuit d'induction est ouvert, vérifier l'état de la bobine, de la bague collectrice et du balai du rotor. Si nécessaire, remplacer les pièces défectueuses par des nouvelles.**

Témoin de défaut

Le témoin "CHARGE" s'allume grâce à la fonction d'alarme du régulateur CI (circuit intégré) si l'un des symptômes suivants se présente lorsque l'alternateur est en marche :

- Le circuit d'induction est ouvert.
- Une tension excessive est produite.

Simpo PDF Merge and Split Unregistered Version - http://www.simpopdf.com

Diagnostics des défauts (Suite)

MOTEUR DIESEL

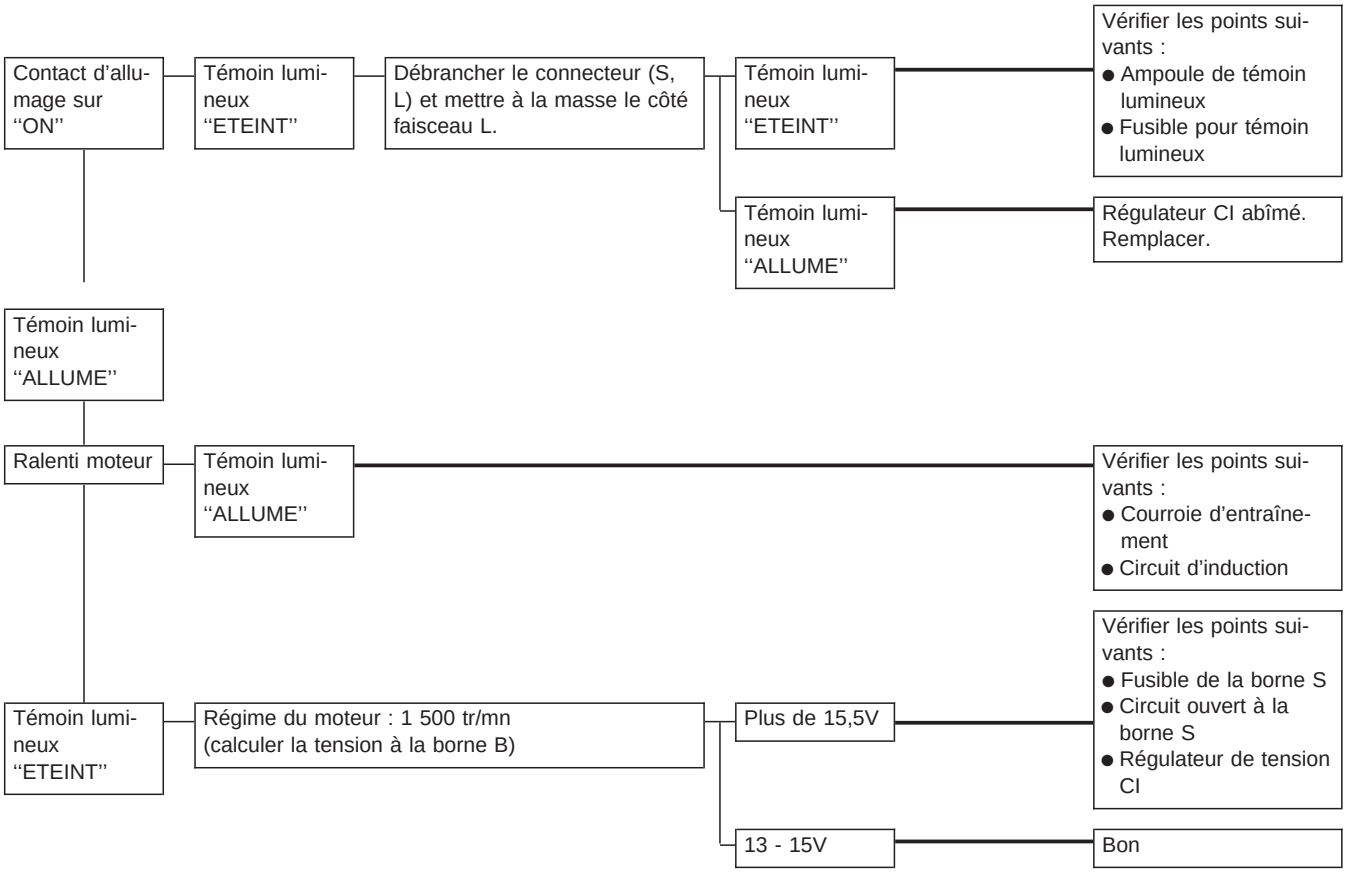

Témoin lumineux :Témoin lumineux "CHARGE" dans les instruments combinés

Note :

- **Si le résultat de l'inspection est satisfaisant même si le système de charge ne fonctionne pas, vérifier le raccord de la borne B (vérifier le couple de serrage).**
- **Lorsque le circuit d'induction est ouvert, vérifier l'état de la bobine, de la bague collectrice et du balai du rotor. Si nécessaire, remplacer les pièces défectueuses par des nouvelles.**

Simpo PDF Merge and Split Unregistered Version - http://www.simpopdf.com

Construction

SEC. 231
LR160-727C

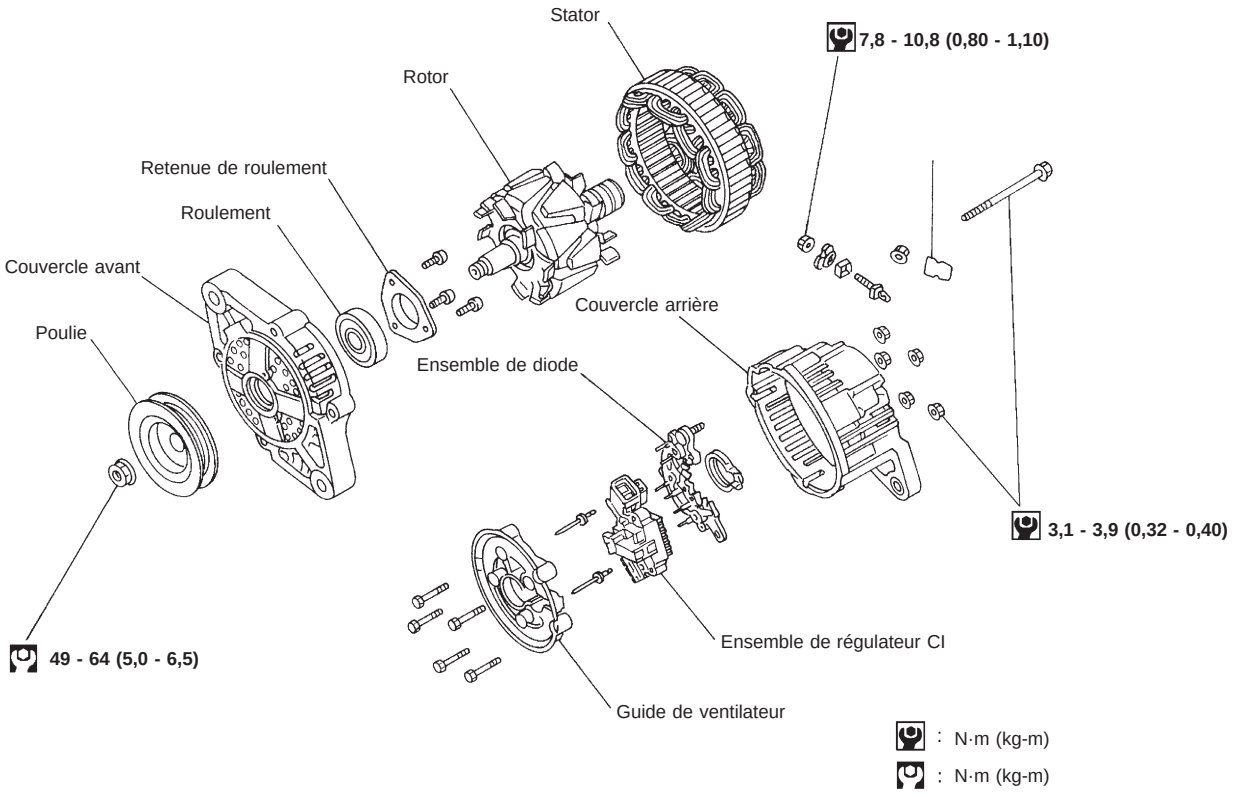

MEL383I

SEC. 231
LR160-728C

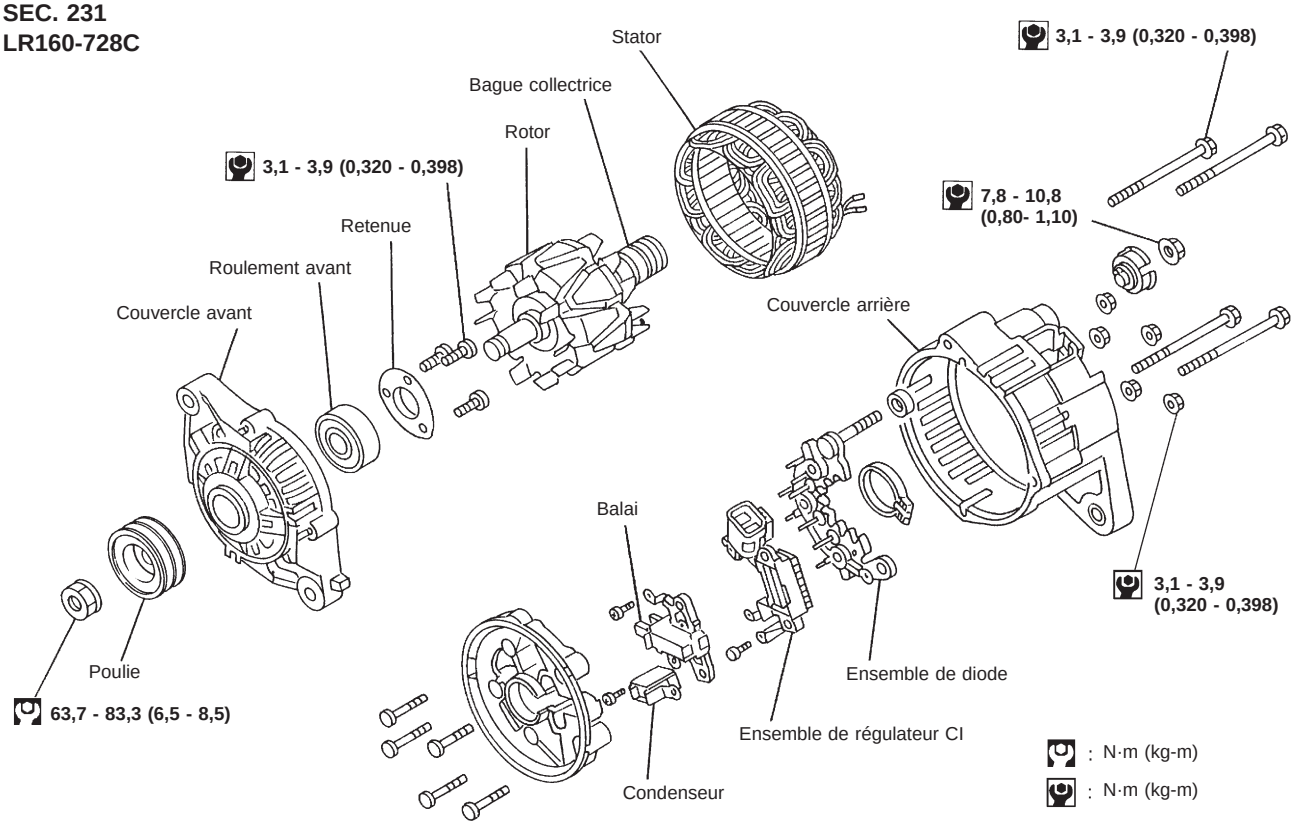

MEL443HA

Simpo PDF Merge and Split Unregistered Version - http://www.simpopdf.com

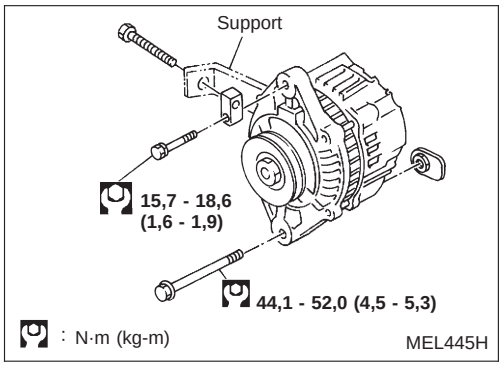

Dépose et repose

ATTENTION :

- **Commencer la procédure d'entretien après avoir déposé la borne négative de la batterie.**
- **Déposer aussi le capot inférieur, selon modèles, avant l'entretien.**

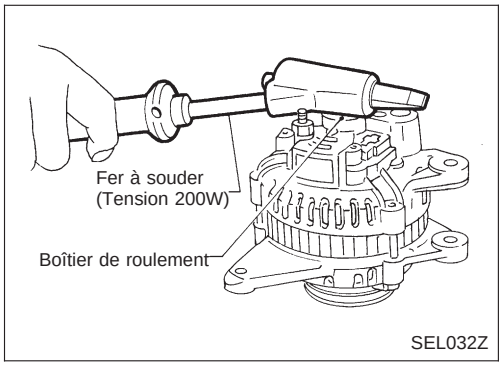

Démontage

COUVERCLE ARRIERE

ATTENTION :

Le couvercle arrière peut être difficile à déposer parce qu'un anneau est utilisé pour verrouiller la cuvette externe du roulement arrière. Pour faciliter la dépose du couvercle arrière, chauffer seulement le boîtier de roulement avec un fer à souder de 200W.

Ne pas utiliser un pistolet à air chaud car cela pourrait abîmer l'ensemble de diode.

ROULEMENT ARRIERE

ATTENTION :

- **Ne pas réutiliser le roulement arrière après la dépose. Remplacer par un neuf.**
- **Ne pas lubrifier la cuvette externe du roulement arrière.**

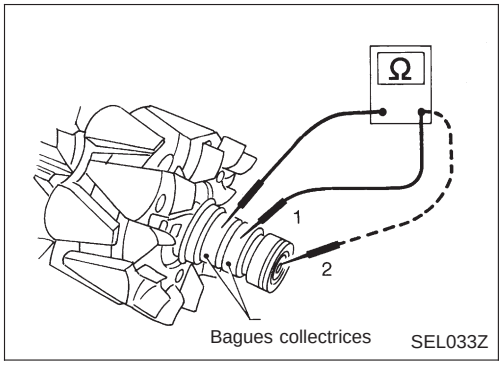

Inspection

VERIFICATION DU ROTOR

1. Test de résistance

   Résistance : se reporter aux SDS, EL-42.

- Si la valeur obtenue n'est pas conforme ... Remplacer le rotor.

2. Effectuer un essai d'isolation.

- Il y a continuité ... Remplacer le rotor.

3. Vérifier le degré d'usure des bagues collectrices.

   Diamètre externe minimum de la bague collectrice :
   Se reporter aux SDS, EL-42.

- Si la valeur obtenue n'est pas conforme ... Remplacer le rotor.

Simpo PDF Merge and Split Unregistered Version - http://www.simpopdf.com

Inspection (Suite)

VERIFICATION DES BALAIS

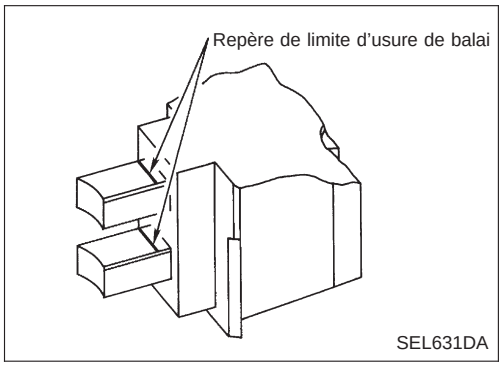

1. Vérifier le mouvement régulier du balai.
- Mouvement irrégulier ... Vérifier le porte-balai et le nettoyer.
2. Vérifier l'usure du balai.
- Remplacer le balai s'il est usé jusqu'àu repère limite.

VERIFICATION DU STATOR

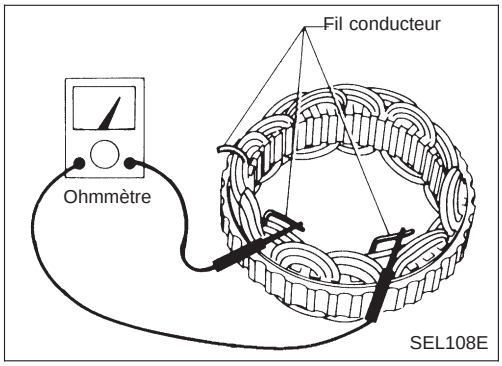

1. Essai de continuité
- Absence de continuité ... Remplacer le stator.

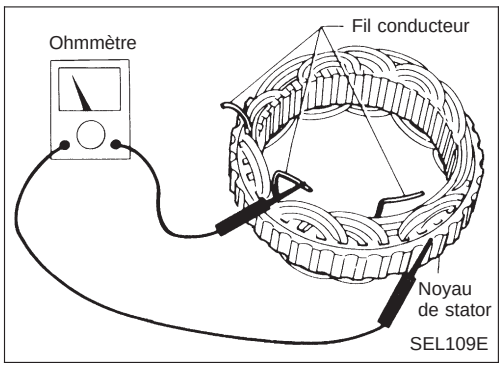

2. Essai de masse
- Il y a continuité ... Remplacer le stator.

Remontage

REGLAGE DE LA BAGUE DE ROULEMENT ARRIERE

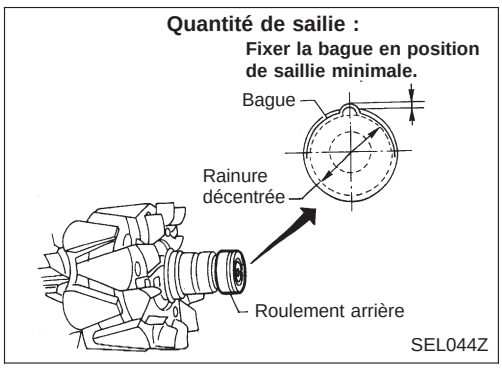

- Fixer la bague dans la rainure de roulement arrière de façon qu'elle s'approche de la partie adjacente autant que possible.

ATTENTION :
Ne pas réutiliser le roulement arrière après la dépose.

REPOSE DU COUVERCLE ARRIERE

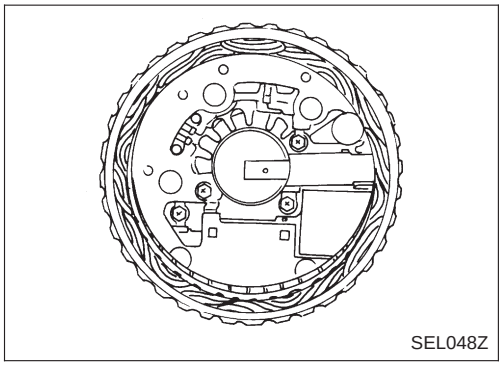

1. Mettre en place l'ensemble de balais, l'ensemble de diode, l'ensemble de régulateur et le stator.
2. Pousser les balais vers le haut avec les doigts et les reposer sur le rotor.

Veiller à ne pas endommager la paroi de coulissement de la bague collectrice.

Simpo PDF Merge and Split Unregistered Version - http://www.simpopdf.com

Remontage (Suite)

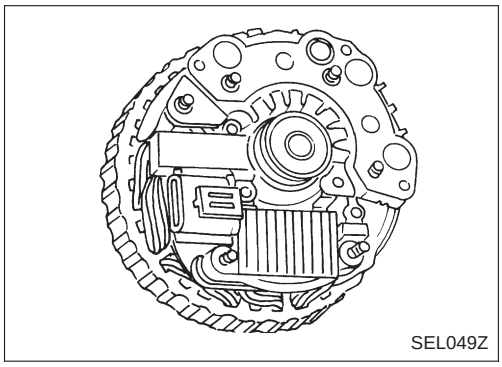
SEL049Z

Caractéristiques et valeurs de réglage (SDS)

ALTERNATEUR

Type		LR160-727C	LR160-728C
		HITACHI	
Modèle concerné		KA24	TD25
Puissance nominale	V-A	12-60	
Polarité de masse		Négative	
Régime minimum à vide (Avec une tension de 13,5V)	tr/mn	Moins de 1 000	
Courant de sortie à chaud	Amp./tr/mn	Plus de 77/1 300 Plus de 48/2 500 Plus de 57/5 000 (Avec une tension de 13,5V)	
Tension de sortie réglée	V	14,1 - 14,7	
Longueur minimum des balais	mm	6,0	
Pression du ressort de balai	N (g)	1,0 - 3,4 (102 - 350)	
Diamètre externe minimum de la bague collectrice	mm	26,0	
Résistance de rotor (bobine d'induction)	Ω	2,58	

Simpo PDF Merge and Split Unregistered Version - http://www.simpopdf.com

Contrôle

POUR L'EUROPE ET CONDUITE A GAUCHE

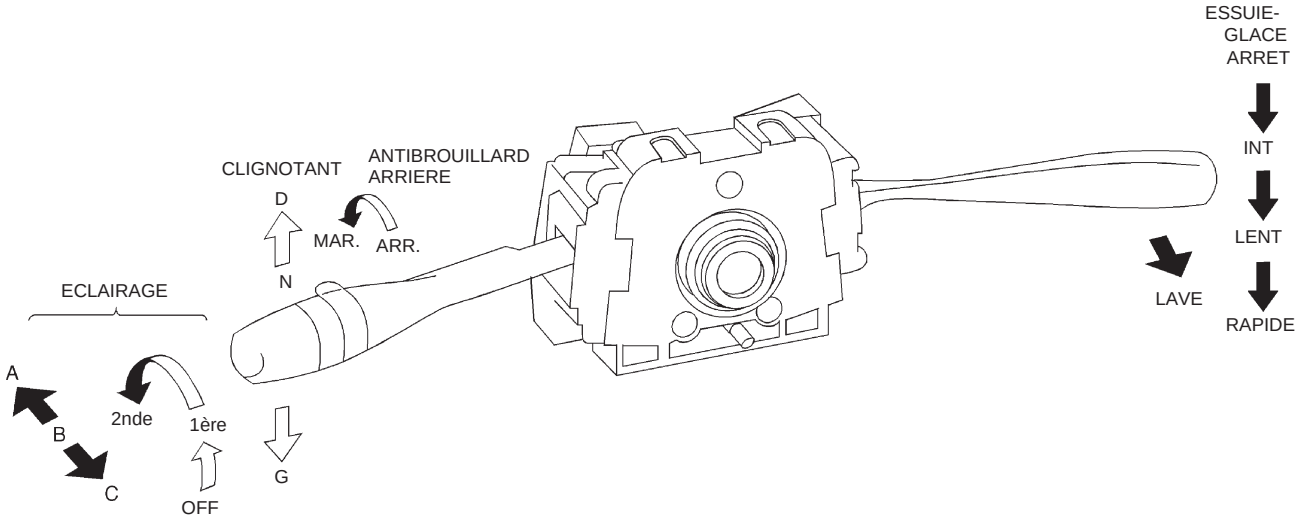

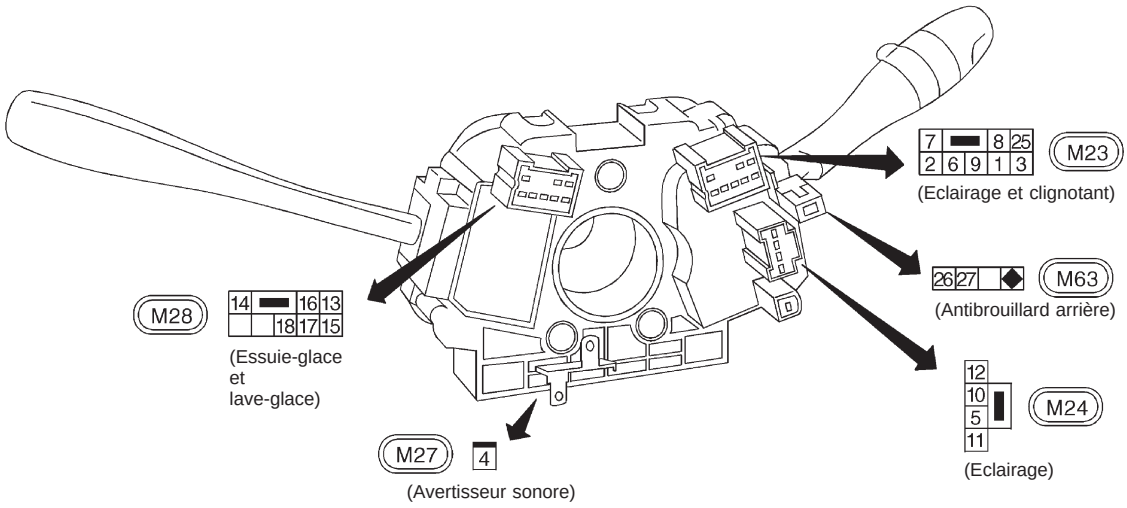

COMMANDE D'ECLAIRAGE

	OFF			1ère			2nde		
	A	B	C	A	B	C	A	B	C
5			○			○	○	○	○
6			○			○	○		○
7								○	
8		○			○	○	○	○	○
9		○			○	○			
10								○	
11				○	○	○	○	○	○
12				○	○	○	○	○	○
25							○	○	○

COMMANDE D'ESSUIE-GLACE ET DE LAVE-GLACE (Avec balayage intermittente)

	ARR.	INT	LENT	RAP.	LAVE
13	○	○			
14	○	○	○		
15		○			
16				○	
17		○	○	○	○
18					○

COMMANDE D'ESSUIE-GLACE ET DE LAVE-GLACE (Sans balayage intermittente)

	ARR.	LENT	RAP.	LAVE
13	○			
14	○	○		
15				
16			○	
17		○	○	○
18				○

COMMANDE DE CLIGNOTANT

	G	N	D
1	○		○
2			○
3	○		

COMMANDE DE FEU ANTIBROUILLARD ARRIERE

	MAR.	ARR.
26		○
27		○

CONTACT D'AVERTISSEUR SONORE (Sans coussin gonflable)

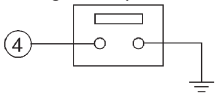

HEL320A

Simpo PDF Merge and Split Unregistered Version - http://www.simpopdf.com

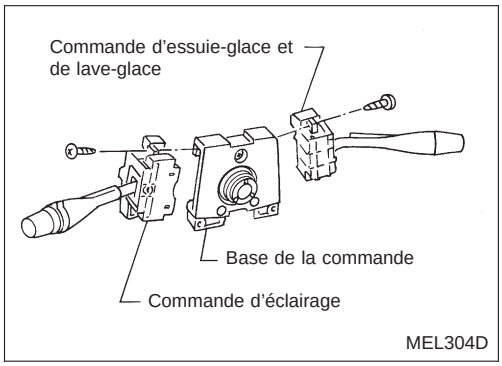

Remplacement

Pour la dépose et la repose du câble spiralé, se reporter à la section RS ["Repose – Module de coussin gonflable et câble spiralé", "SYSTEME DE RETENUE SUPPLEMENTAIRE (SRS)"]

- Chaque interrupteur peut être remplacé sans qu'il soit nécessaire de déposer la base de commande combinées.

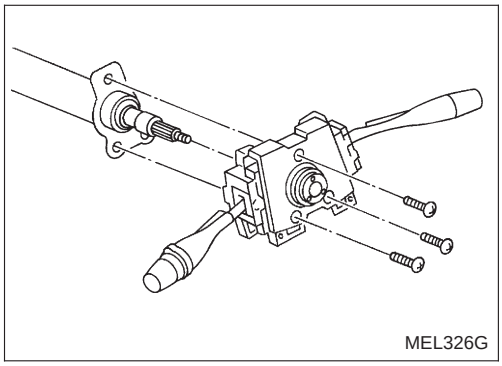

- Pour déposer la base de la commande combinée, déposer la vis fixant la base.

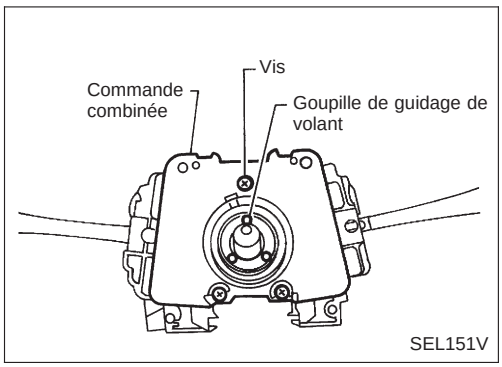

- Avant de reposer le volant, aligner les goupilles de guidage avec les vis qui fixent la commande combinée comme indiqué dans l'illustration.

Simpo PDF Merge and Split Unregistered Version - http://www.simpopdf.com

Schéma de câblage – H/LAMP –/Conduite à gauche

EL-H/LAMP-01

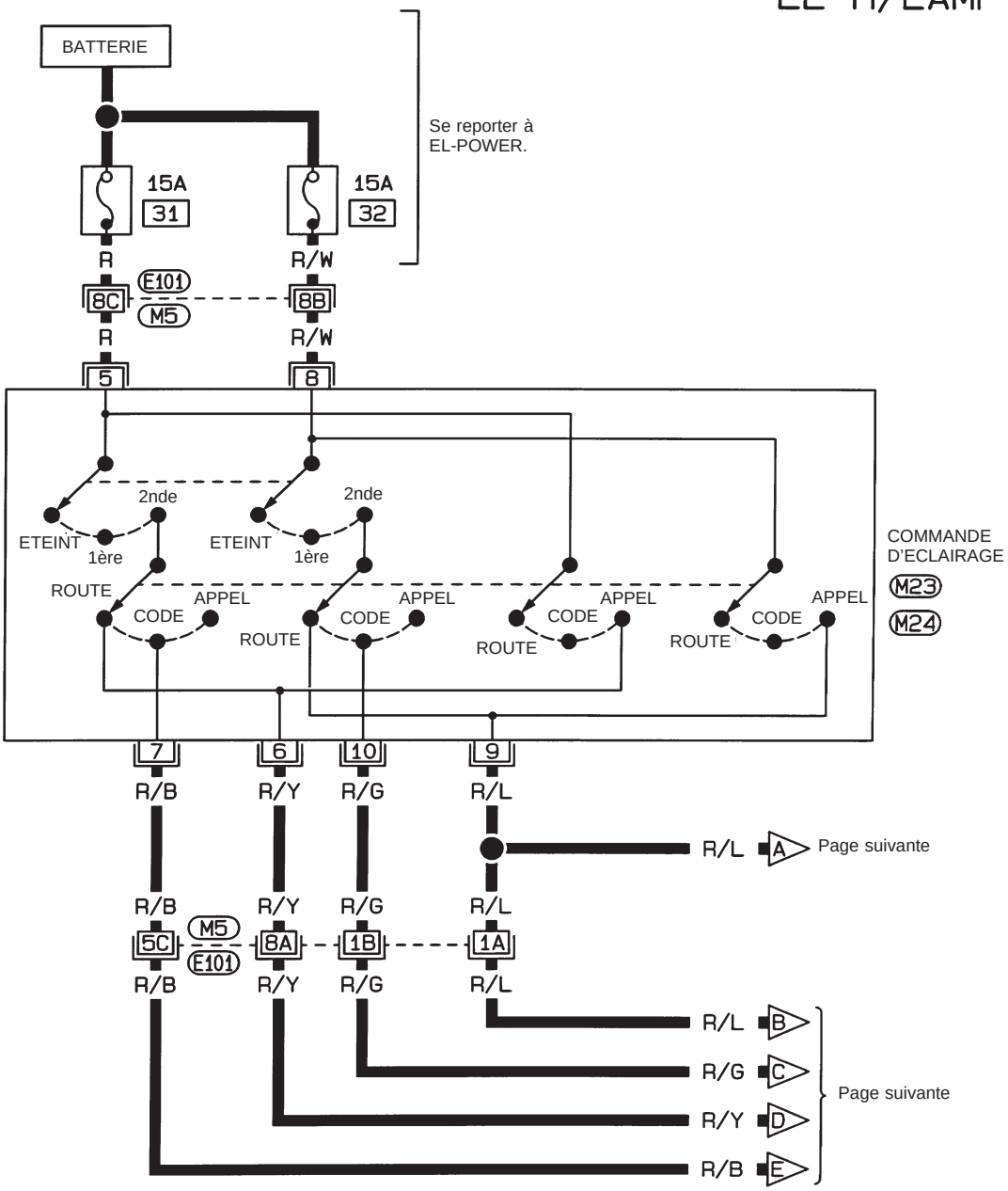



(Se reporter à la dernière page dépliante)

M5 , E101

HEL898

Simpo PDF Merge and Split Unregistered Version - http://www.simpopdf.com

Schéma de câblage – H/LAMP –/Conduite à gauche (Suite)

EL-H/LAMP-02

UM : Pour le Moyen-Orient et l'Europe
XU : Sauf UM
*1 ··· UM 18, XU 17
*2 ··· UM 17, XU 16

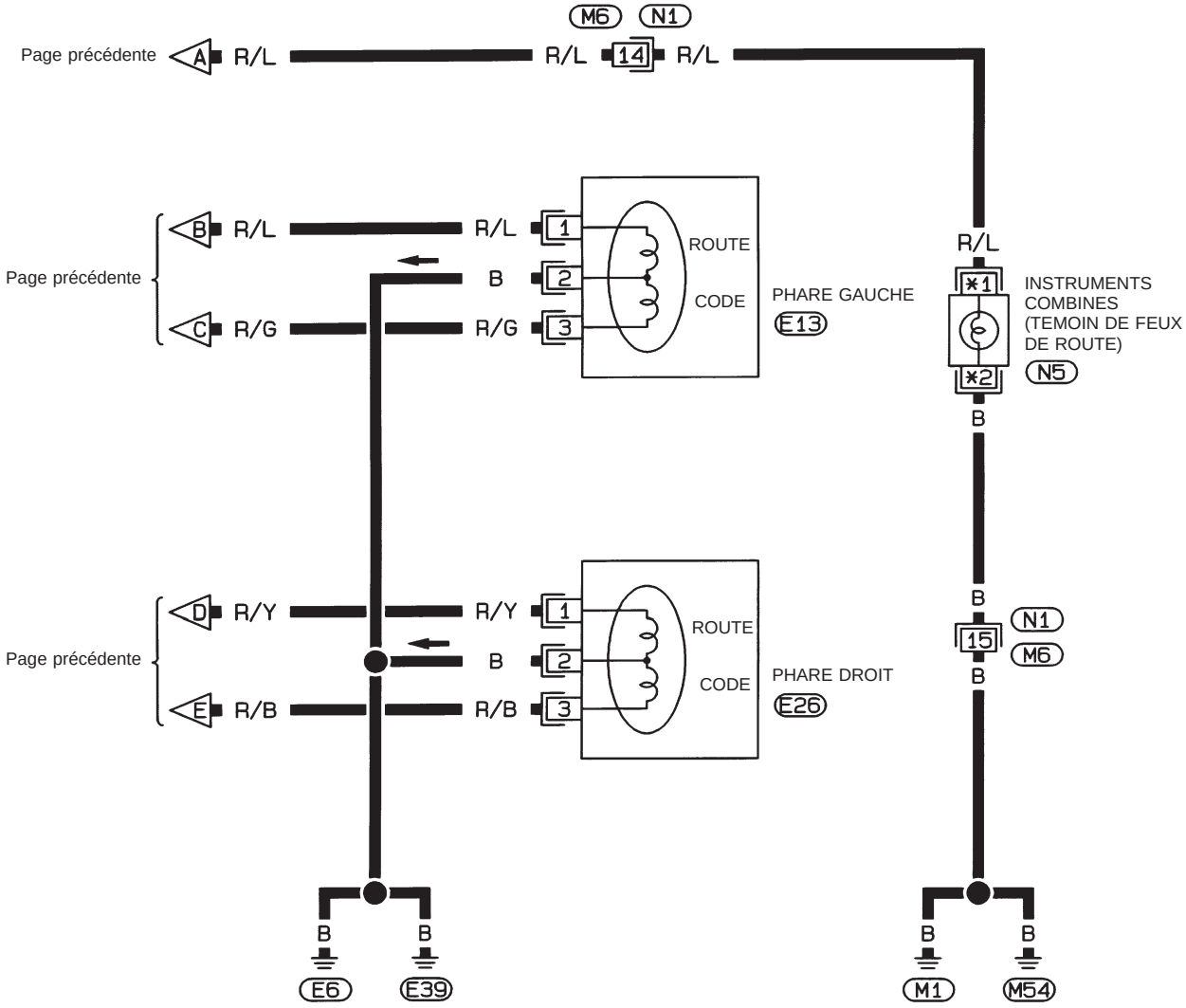



HEL321A

Simpo PDF Merge and Split Unregistered Version - http://www.simpopdf.com

Schéma de câblage – H/LAMP –/Conduite à droite

EL-H/LAMP-03

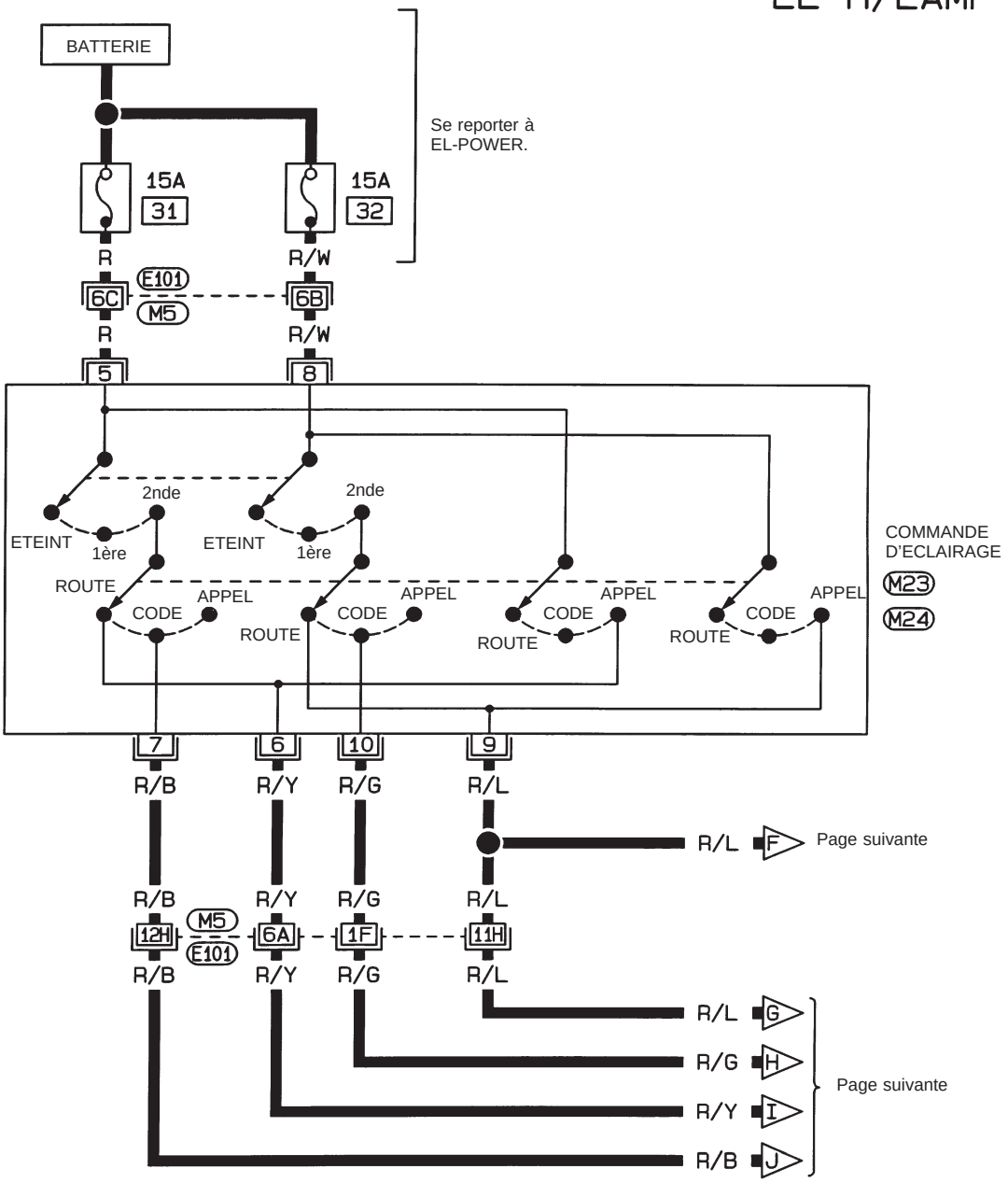



(Se reporter à la dernière page dépliante)

M5, E101

HEL900

Simpo PDF Merge and Split Unregistered Version - http://www.simpopdf.com

Schéma de câblage – H/LAMP –/Conduite à droite (Suite)

EL-H/LAMP-04

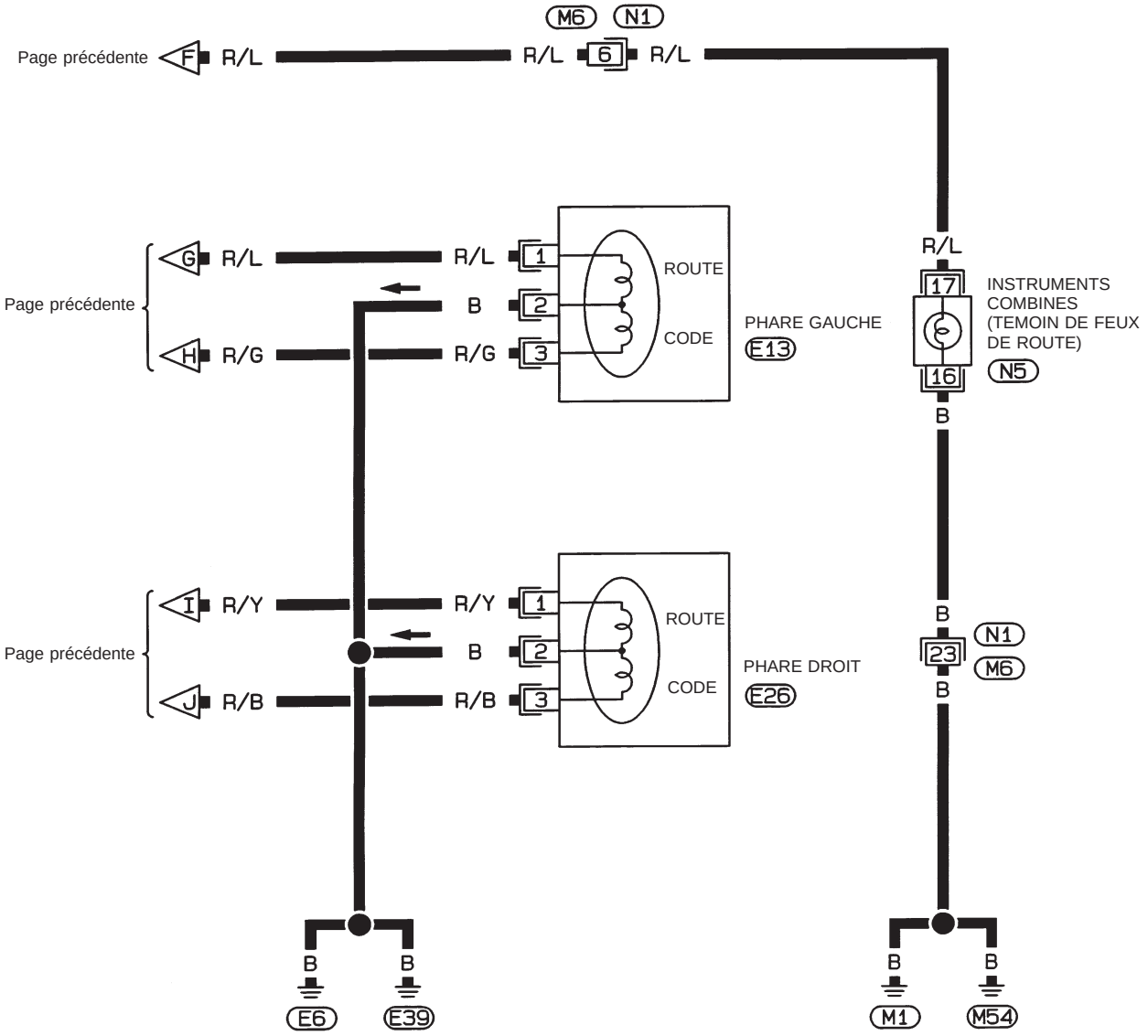







HEL901

Simpo PDF Merge and Split Unregistered Version - http://www.simpopdf.com

Diagnostics des défauts

Symptôme	Cause possible	Ordre de réparation
Les phares gauche ne fonctionnent pas.	1. Ampoule 2. Masses (E6) et (E39) 3. Fusible de 15A 4. Commutateur d'éclairage	1. Vérifier l'ampoule. 2. Vérifier les masses (E6) et (E39). 3. Vérifier le fusible de 15A (n° 32, situé dans la boîte à fusibles et de raccords à fusibles). Vérifier si la tension positive de la batterie est présente à la borne (8) de la commande d'éclairage. 4. Vérifier la commande d'éclairage.
Les phares droit ne fonctionnent pas.	1. Ampoule 2. Masses (E6) et (E39) 3. Fusible de 15A 4. Commutateur d'éclairage	1. Vérifier l'ampoule. 2. Vérifier les masses (E6) et (E39). 3. Vérifier le fusible de 15A (n° 31, situé dans la boîte à fusibles et de raccords à fusibles). Vérifier si la tension positive de la batterie est présente à la borne (5) de la commande d'éclairage. 4. Vérifier la commande d'éclairage.
Les feux de route gauche ne fonctionnent pas, mais le feu de code gauche fonctionne.	1. Ampoules 2. Circuit ouvert des feux de route gauche 3. Commutateur d'éclairage	1. Vérifier les ampoules. 2. Vérifier le câble R/L entre la commande d'éclairage et les phares gauche pour voir si le circuit n'est pas ouvert. 3. Vérifier la commande d'éclairage.
Le feu de code gauche ne fonctionne pas, mais le feu de route gauche fonctionne.	1. Ampoule 2. Circuit ouvert du feu de code gauche 3. Commutateur d'éclairage	1. Vérifier l'ampoule. 2. Vérifier le câble R/G entre la commande d'éclairage et le phare gauche pour voir si le circuit n'est pas ouvert. 3. Vérifier la commande d'éclairage.
Les feux de route droit ne fonctionnent pas, mais le feu de code droit fonctionne.	1. Ampoules 2. Circuit ouvert des feux de route droit 3. Commutateur d'éclairage	1. Vérifier les ampoules. 2. Vérifier le câble R/Y entre la commande d'éclairage et les phares droit pour voir si le circuit n'est pas ouvert. 3. Vérifier la commande d'éclairage.
Le feu de code droit ne fonctionne pas mais le feu de route droit fonctionne.	1. Ampoule 2. Circuit ouvert du feu de code droit 3. Commutateur d'éclairage	1. Vérifier l'ampoule. 2. Vérifier le câble R/B entre la commande d'éclairage et le phare droit pour voir si le circuit n'est pas ouvert. 3. Vérifier la commande d'éclairage.
Le témoin de feux de route ne fonctionne pas.	1. Ampoule 2. Masses (M1) et (M54) 3. Circuit ouvert du feu de route	1. Vérifier l'ampoule des instruments combinés. 2. Vérifier les masses (M1) et (M54). 3. Vérifier le câble R/L entre la commande d'éclairage et les instruments combinés pour voir si le circuit n'est pas ouvert.

Simpo PDF Merge and Split Unregistered Version - http://www.simpopdf.com

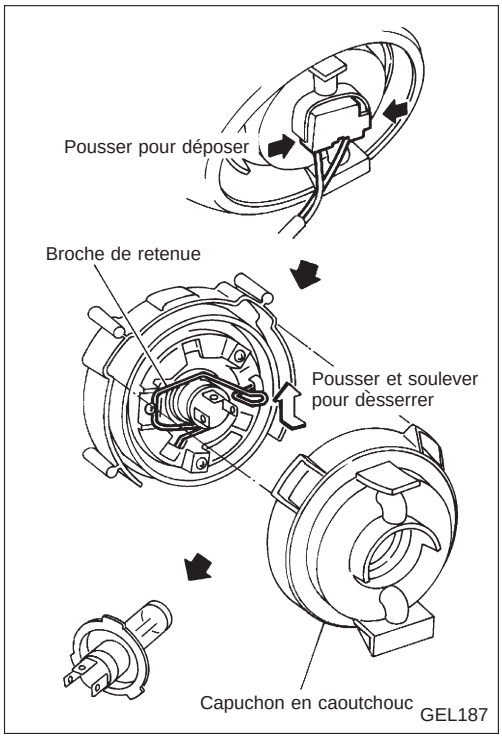

Remplacement des ampoules

Le phare est de type faisceau semi-étanche doté d'une ampoule halogène remplaçable. L'ampoule peut être remplacée depuis le compartiment moteur sans avoir à déposer l'optique de phare du véhicule.

- **Lors de la manipulation de l'ampoule halogène, ne toucher que le culot en plastique. Ne jamais toucher l'ampoule en verre.**

1. Débrancher le câble de batterie.
2. Débrancher le connecteur de faisceau à l'arrière de l'ampoule.
3. Enlever le capuchon en caoutchouc.
4. Pousser et lever la broche de retenue pour la desserrer.
5. Déposer l'ampoule de phare avec précaution. Ne pas secouer ou tourner l'ampoule pour l'enlever.
6. Reposer dans l'ordre inverse de la dépose.

ATTENTION :
Ne pas laisser l'optique de phare sans ampoule pendant trop longtemps. La poussière, la condensation, les fumées, etc. peuvent pénétrer à l'intérieur de l'optique et diminuer les performances du phare. Déposer l'ampoule du phare de l'optique de phare juste avant qu'une ampoule neuve soit installée.

Réglage des faisceaux

Lors du réglage des faisceaux, utiliser un appareil de réglage, un écran de réglage ou un appareil de contrôle des projecteurs. Les dispositifs de réglage doivent être en bon état, étalonnés et utilisés conformément aux manuels d'utilisation correspondants.
En l'absence de dispositif de réglage, le réglage des faisceaux doit être effectué comme indiqué ci-dessous :
Pour plus de détails, consulter la réglementation du pays concerné.

a. **Tous les pneumatiques doivent être correctement gonflés.**
b. **Amener le véhicule ainsi que l'appareil d'essai sur une seule et même surface parfaitement plane.**
c. **S'assurer que le véhicule est à vide (liquide de refroidissement, huile moteur au bon niveau et réservoir plein) à l'exception du conducteur (ou poids équivalent mis à la place du conducteur).**

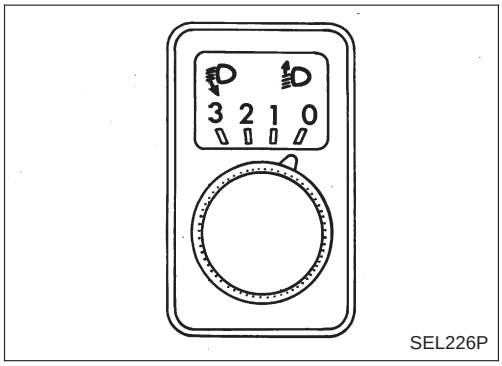

ATTENTION :
Vérifier que le commutateur de réglage des faisceaux est en position ''0'' lors du réglage des faisceaux sur les véhicules équipés d'un dispositif de contrôle de réglage des faisceaux.

Simpo PDF Merge and Split Unregistered Version - http://www.simpopdf.com

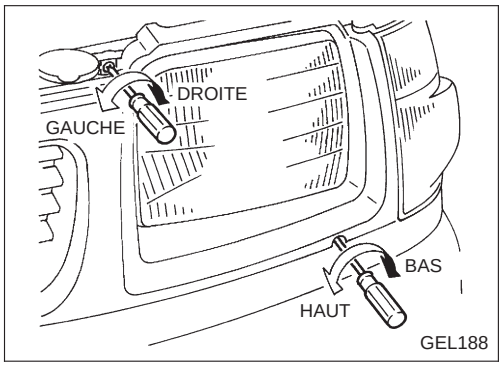

Feu de code

1. Allumer les codes.
2. Utiliser les vis de réglage pour effectuer le réglage des faisceaux.

- **Commencer par serrer la vis de réglage à fond puis régler en desserrant progressivement la vis.**

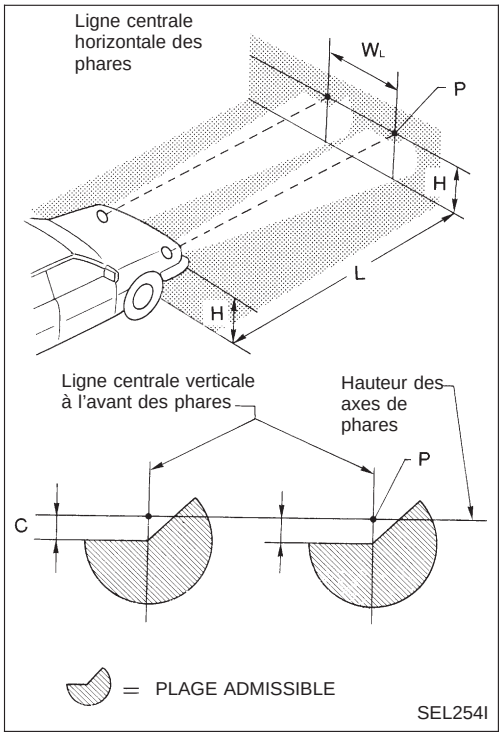

- **Régler les phares de manière à ce que l'axe principal du faisceau soit parallèle à la ligne centrale de la carrosserie et aligné sur le point P de l'illustration.**
- **La figure ci-contre est prévue pour le réglage des phares dans les pays où l'on roule à droite. Cette indication doit être inversée en ce qui concerne les pays où la conduite se fait à gauche.**
- **Les lignes pointillées de l'illustration représentent le centre de chaque phare.**

"H" : Ligne centrale horizontale des phares
"W_L" : Distance entre axes des phares
"L" : 5 000 mm
"C" : 65 mm

Simpo PDF Merge and Split Unregistered Version - http://www.simpopdf.com

Description du système

FONCTIONNEMENT

Le système de phares sur les véhicules pour l’Europe du Nord comporte une centrale d’éclairage de jour. L’unité fonctionne pour allumer automatiquement les feux de codes, de stationnement, arrière et de plaque d’immatriculation et l’éclairage de tableau de bord dans les conditions suivantes.

- Le moteur est en marche avec la commande d’éclairage sur la position ‘‘OFF’’.

Si l’une des conditions suivantes se présente, le fonctionnement de l’éclairage de jour est annulé.

- Contact d’allumage sur une position autre que ‘‘ON’’
- Moteur arrêté
- Commande d’éclairage sur la 1ère ou 2ème position.

Si le système d’éclairage de jour est annulé, les fonctions de la commande d’éclairage sont les mêmes que celles du système d’éclairage conventionnel.

L’ECLAIRAGE DE JOUR FONCTIONNE
[Avec moteur en marche et la commande d’éclairage sur la position OFF (ARRET)]

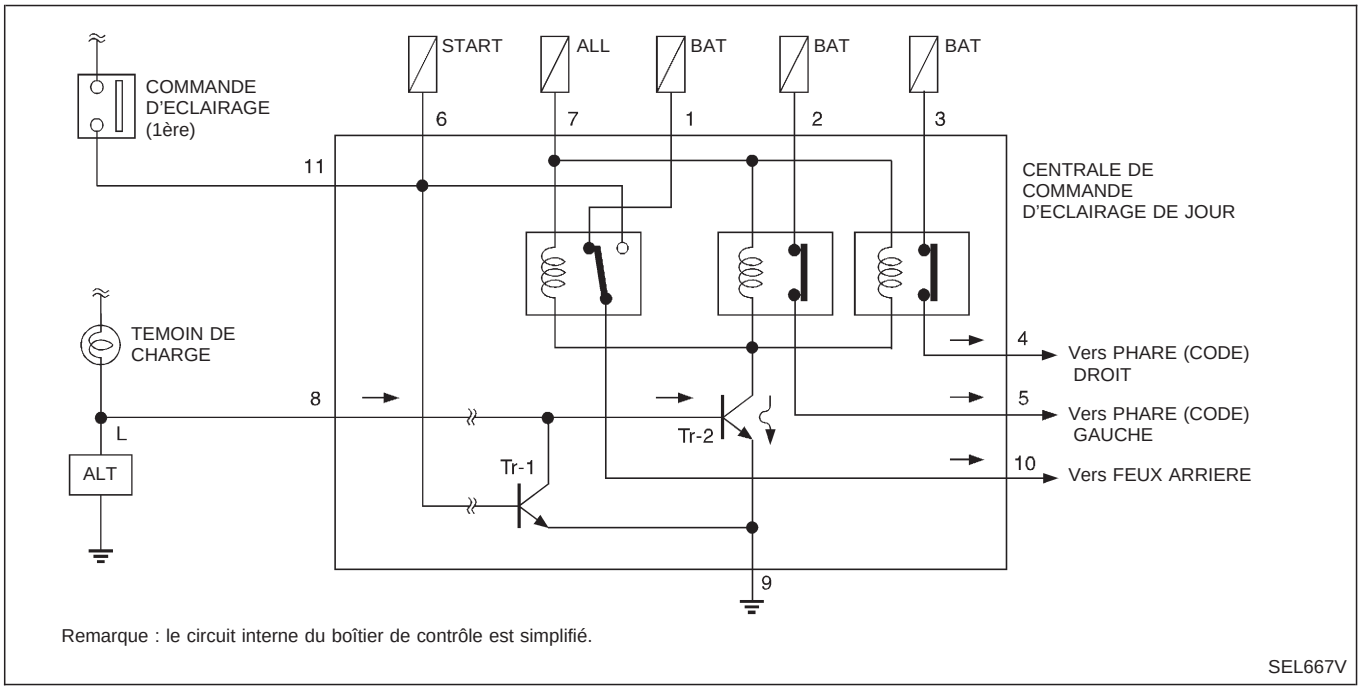

Remarque : le circuit interne du boîtier de contrôle est simplifié.

SEL667V

Avec moteur en marche, l’alimentation est fournie

- depuis la borne L de l’alternateur
- à travers la borne ⑧ de l’unité de commande de l’éclairage de jour
- à la base du transistor 2 dans l’unité de commande de l’éclairage de jour.

Le transistor-2 met à la masse tous les relais. Puis les relais sont activés pour éclairer les phares.

Simpo PDF Merge and Split Unregistered Version - http://www.simpopdf.com

Description du système (Suite)

L’ECLAIRAGE DE JOUR EST ANNULE
[Commande d’éclairage sur la 1ère ou 2ème position ou le contact d’allumage sur START (DEMARRAGE)]

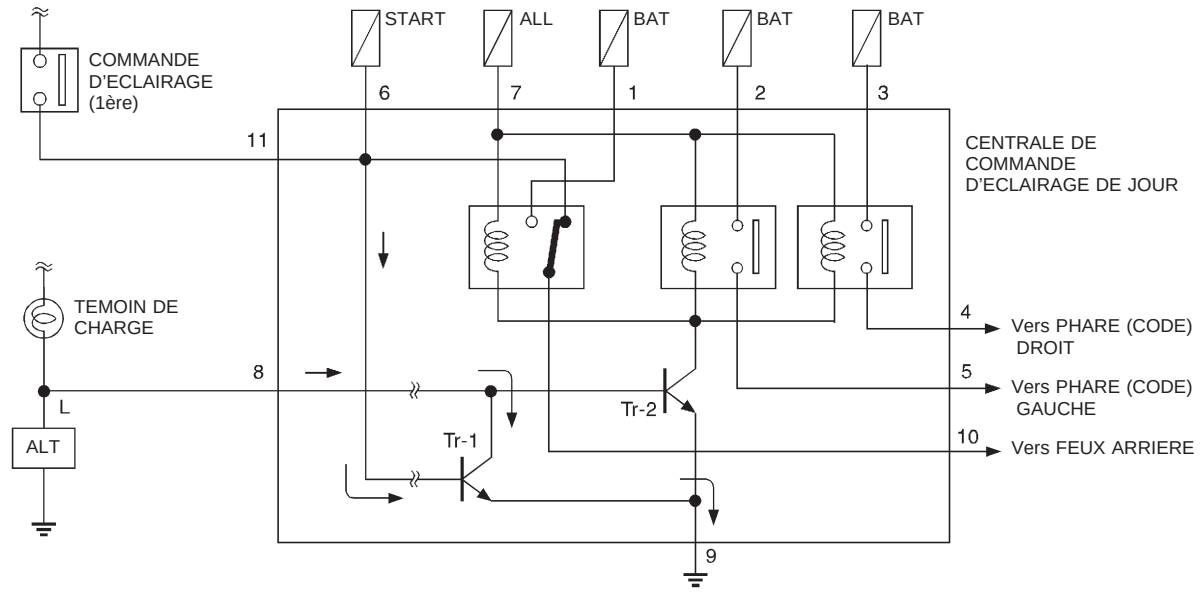

Remarque : le circuit interne du boîtier de contrôle est simplifié.

SEL668V

- Contact d’allumage sur la position START
- La commande d’éclairage est sur la 1ère ou 2ème position.

Lorsque l’une des conditions ci-dessus existe, l’alimentation est fournie

- à la base du transistor 1 dans l’unité de commande de l’éclairage de jour
- à travers la borne ⑪ ou ⑥ de l’unité de commande de l’éclairage de jour.

Puis, le cheminement de l’alimentation électrique vers le transistor-2 est interrompu pour annuler le fonctionnement de l’éclairage de jour.

Simpo PDF Merge and Split Unregistered Version - http://www.simpopdf.com

Schéma

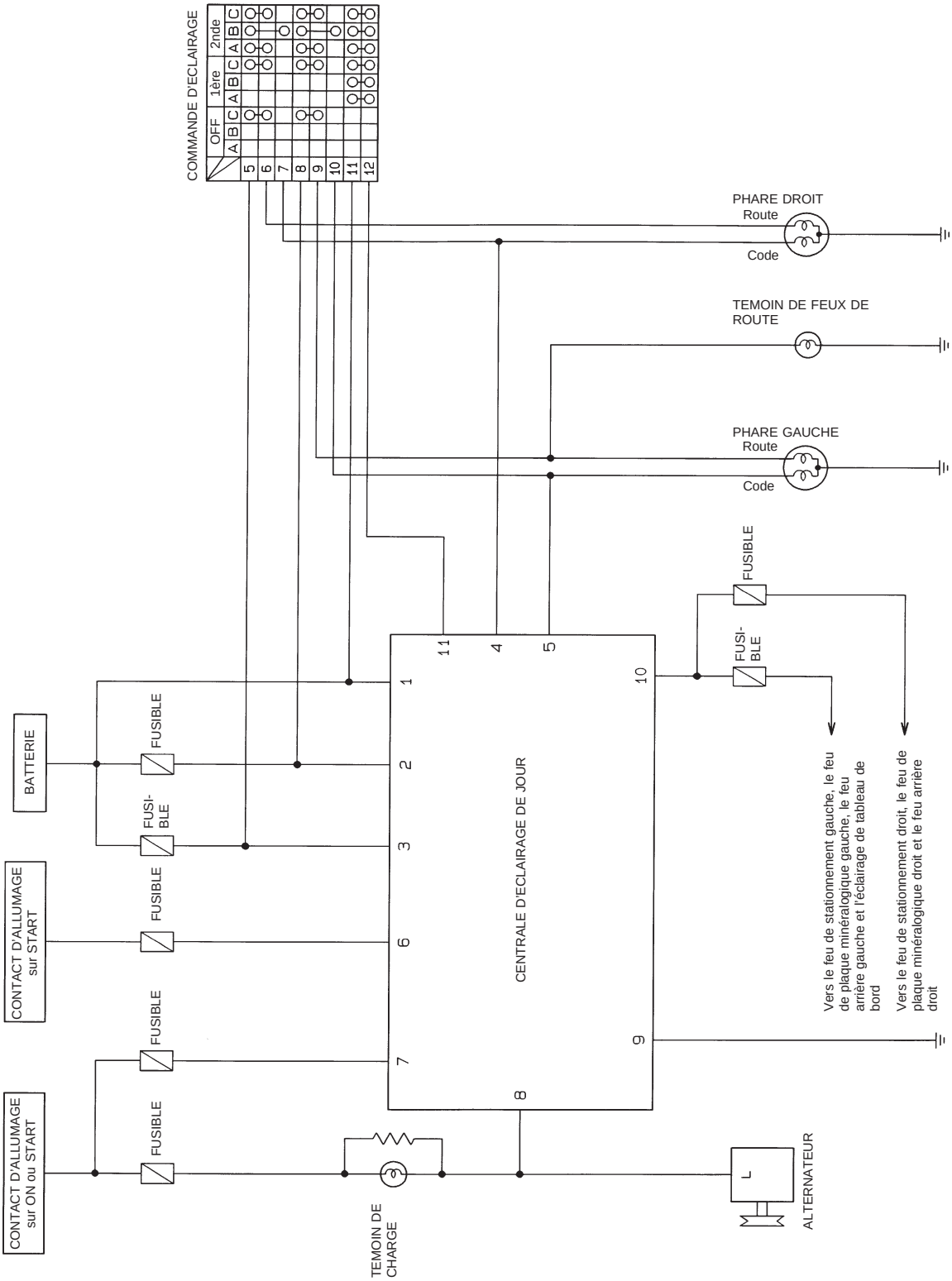

HEL322A

Simpo PDF Merge and Split Unregistered Version - http://www.simpopdf.com

Schéma de câblage – DTRL –

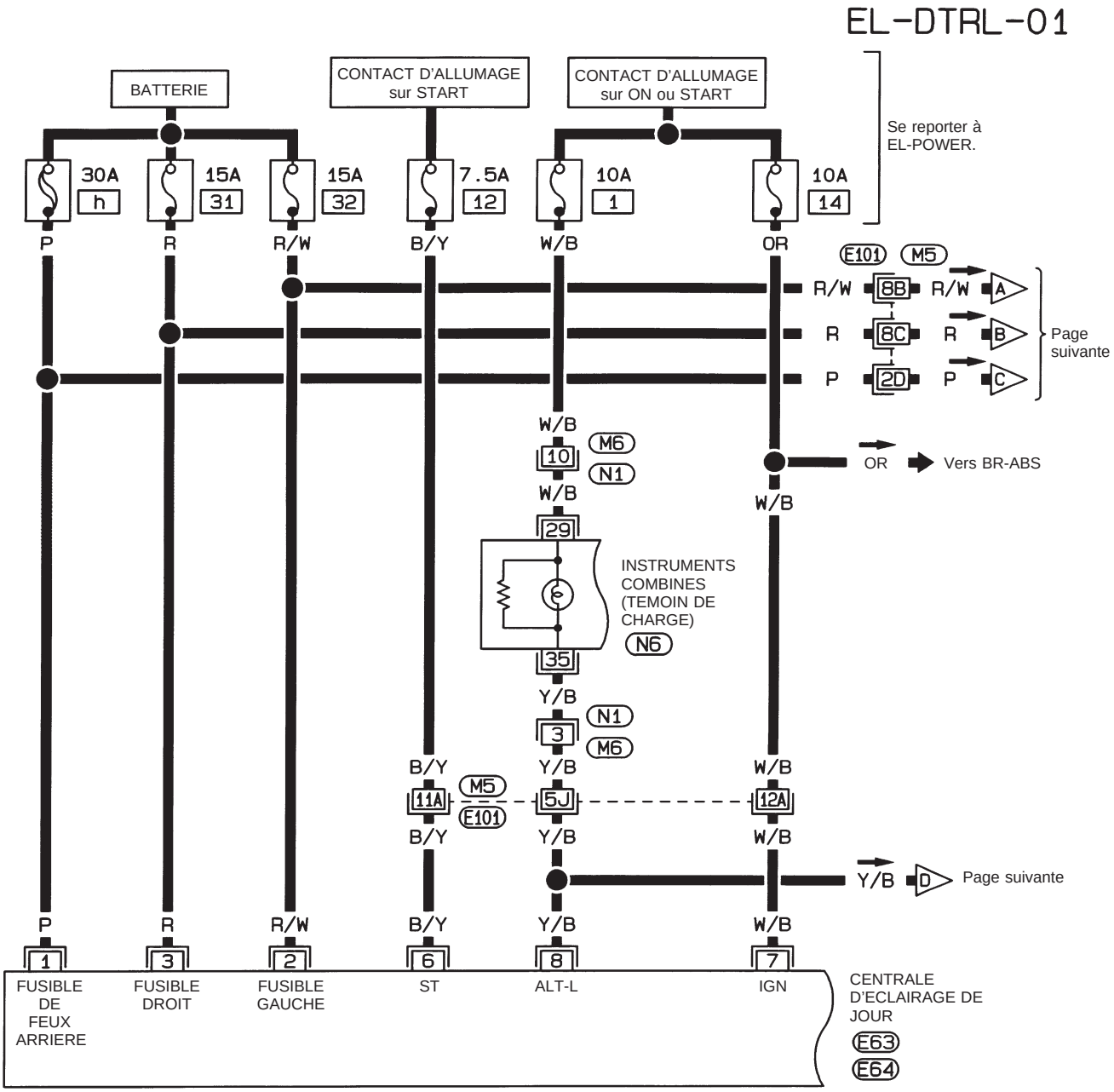





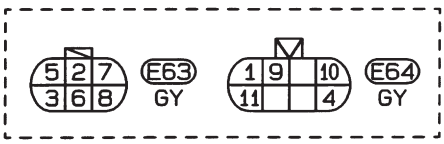

(Se reporter à la dernière page dépliante)

M5, E101

HEL323A

Simpo PDF Merge and Split Unregistered Version - http://www.simpopdf.com

Schéma de câblage – DTRL – (Suite)

EL-DTRL-02

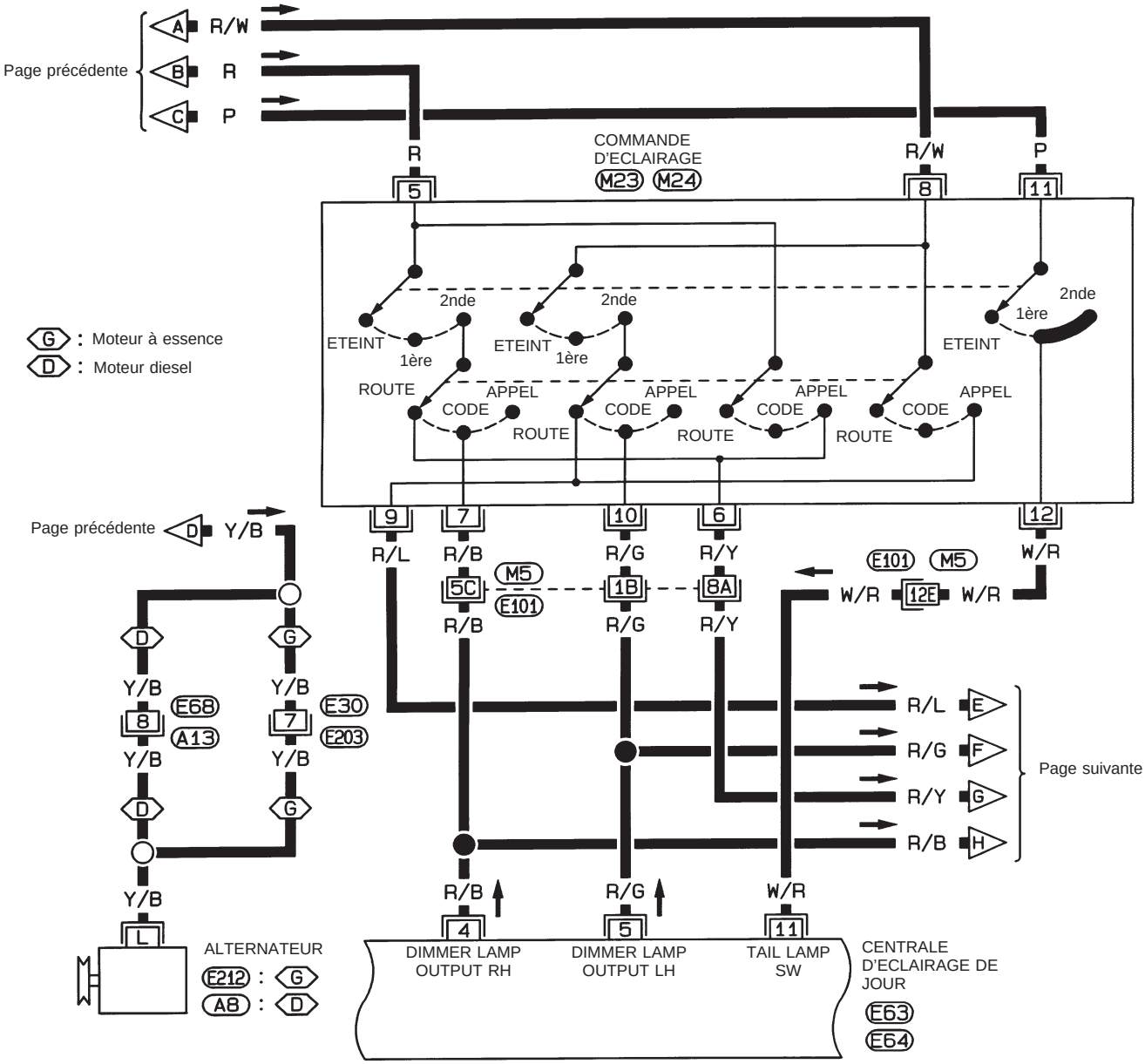

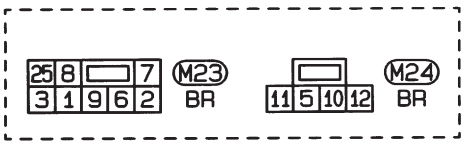

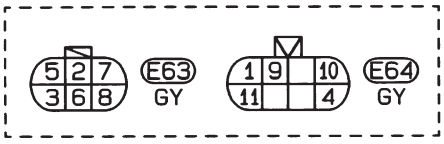

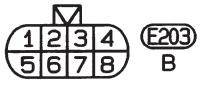

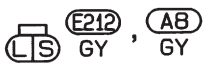

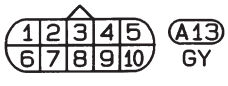

(Se reporter à la dernière page dépliante)



HEL324A

Simpo PDF Merge and Split Unregistered Version - http://www.simpopdf.com

Schéma de câblage – DTRL – (Suite)

EL-DTRL-03

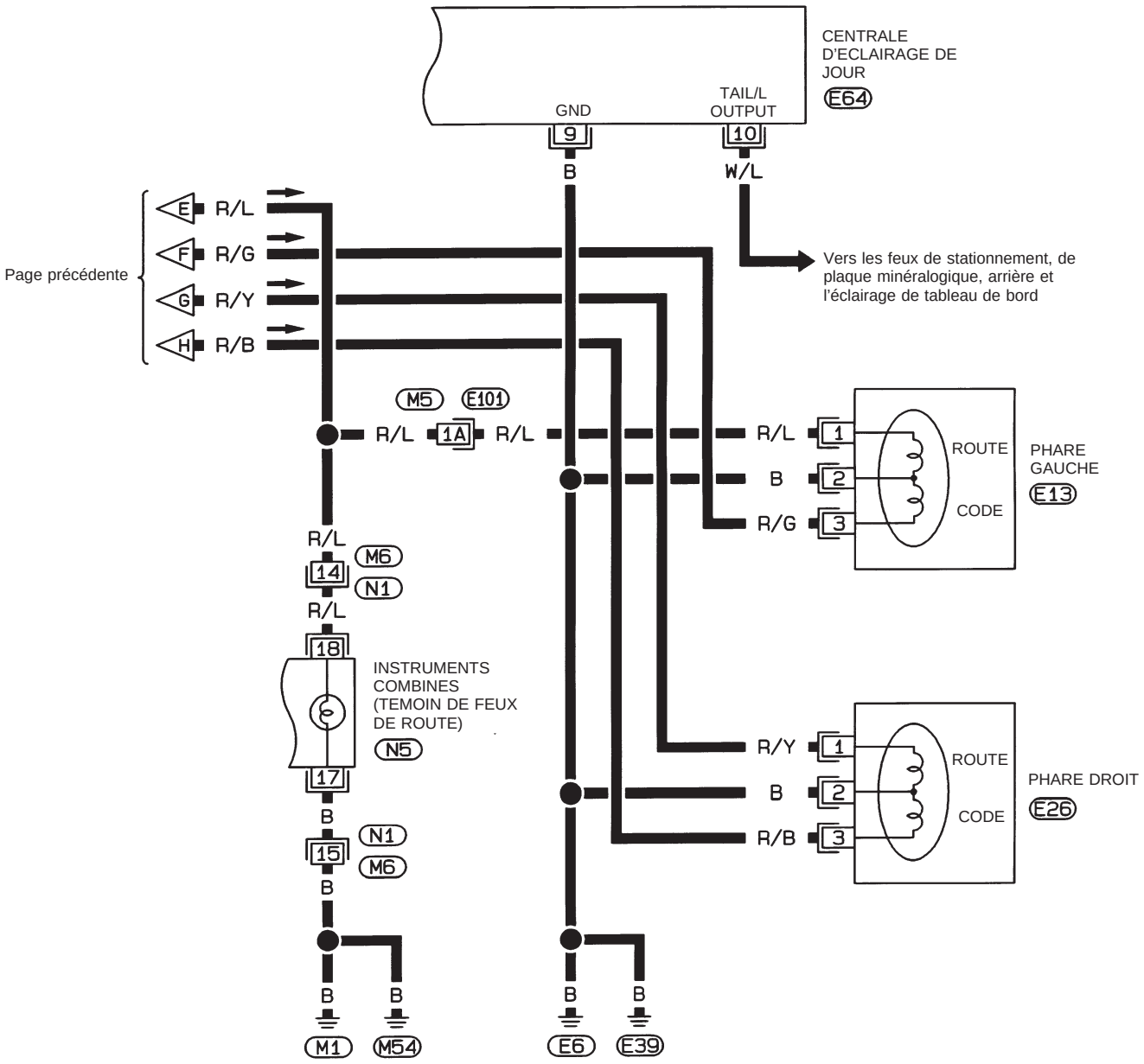







E13 B , E26 B

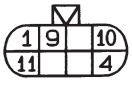

E64 GY

(Se reporter à la dernière page dépliante)

M5 , E101

HEL325A

Simpo PDF Merge and Split Unregistered Version - http://www.simpopdf.com

Diagnostics des défauts

TABLEAU D'INSPECTION DE LA CENTRALE DE COMMANDE D'ECLAIRAGE DE JOUR

N° borne	Connexions	ENTREE (I)/ SORTIE (O)	Condition de fonctionnement		Tension (V) (valeurs approximatives)
1	Source d'alimentation des feux d'éclairage et arrière	–	–		12
2	Source d'alimentation du phare gauche	–	–		12
3	Source d'alimentation du phare droit	–	–		12
4	Phare droit	O	ALLUME (éclairage de jour en fonction*)		12
			ARRET		0
5	Phare gauche	O	ALLUME (éclairage de jour en fonction*)		12
			ARRET		0
6	Signal de démarrage	I	Contact d'allumage	START	12
				ON, ACC ou OFF	0
7	Source d'alimentation électrique	–	Contact d'allumage	ON ou START	12
				ACC ou OFF	0
8	Borne "L" de l'alternateur	I	Moteur	En marche	12
				Arrêté	0
9	Masse	–	–		–
10	Eclairage et feu arrière	O	ALLUME (éclairage de jour en fonction*)		12
			ARRET		0
11	Commutateur d'éclairage	I	Position 1ERE·2NDE		12
			ARRET		0

* : Fonctionnement de l'éclairage de jour : la commande d'éclairage est sur "OFF" (ARRET) alors que le moteur tourne.

Remplacement des ampoules

Se reporter à "PHARES" (EL-50).

Réglage des faisceaux

Se reporter à "PHARES" (EL-50).

Simpo PDF Merge and Split Unregistered Version - http://www.simpopdf.com

Description du système

Le système de phares sur les véhicules avec conduite à droite pour l'Europe comprend un système de mise en veilleuse des codes. L'unité actionne les deux feux de codes à mi-éclairage dans les conditions suivantes.

- La commande d'éclairage est sur la 1ère position, avec le contact d'allumage sur ''ON''. Dans d'autres conditions, la mise en veilleuse des codes est annulée et les fonctions de la commande d'éclairage sont les mêmes que celles du système d'éclairage conventionnel.

Schéma

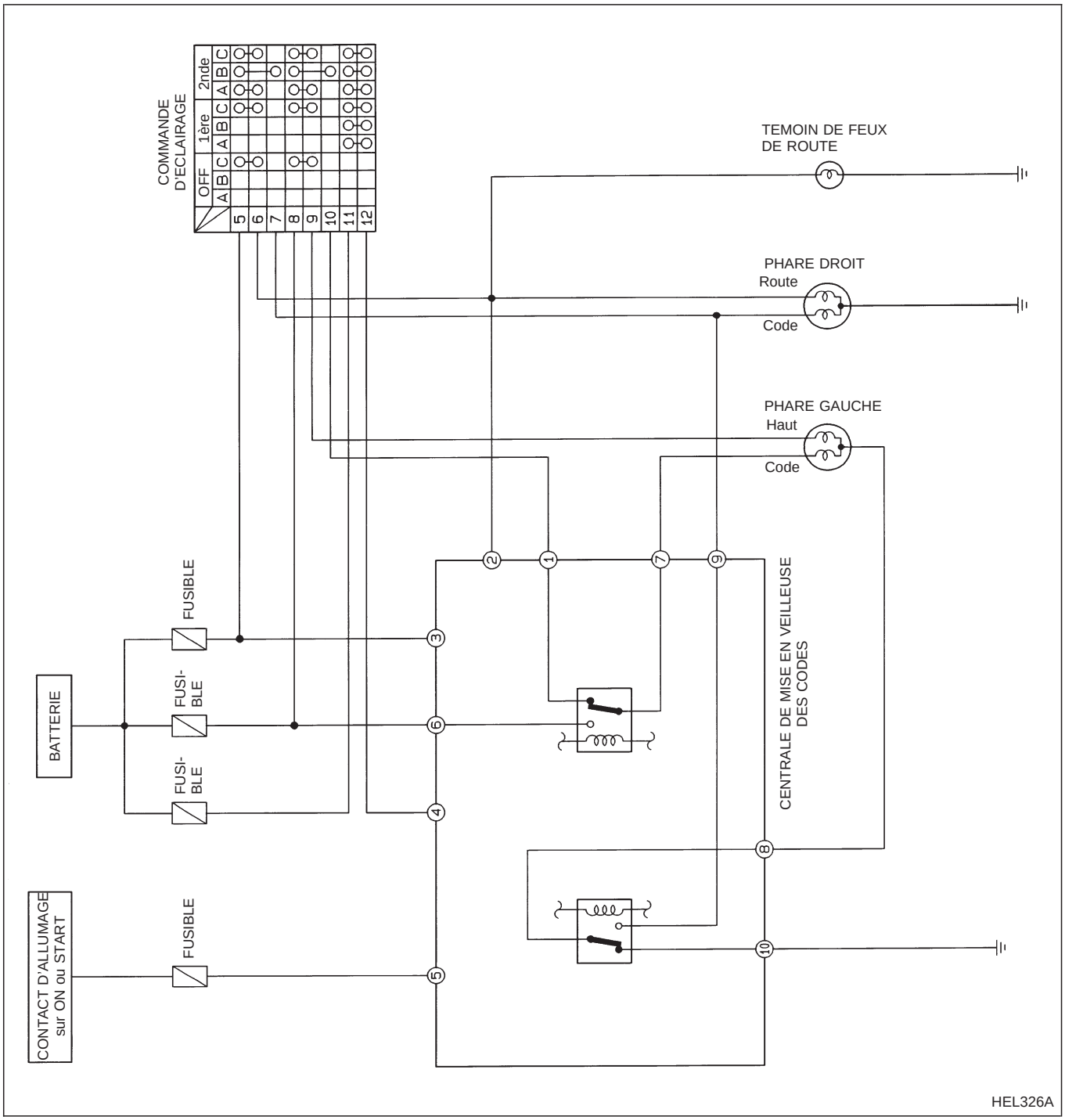

Simpo PDF Merge and Split Unregistered Version - http://www.simpopdf.com

Schéma de câblage – DIMDIP –

EL-DIMDIP-01

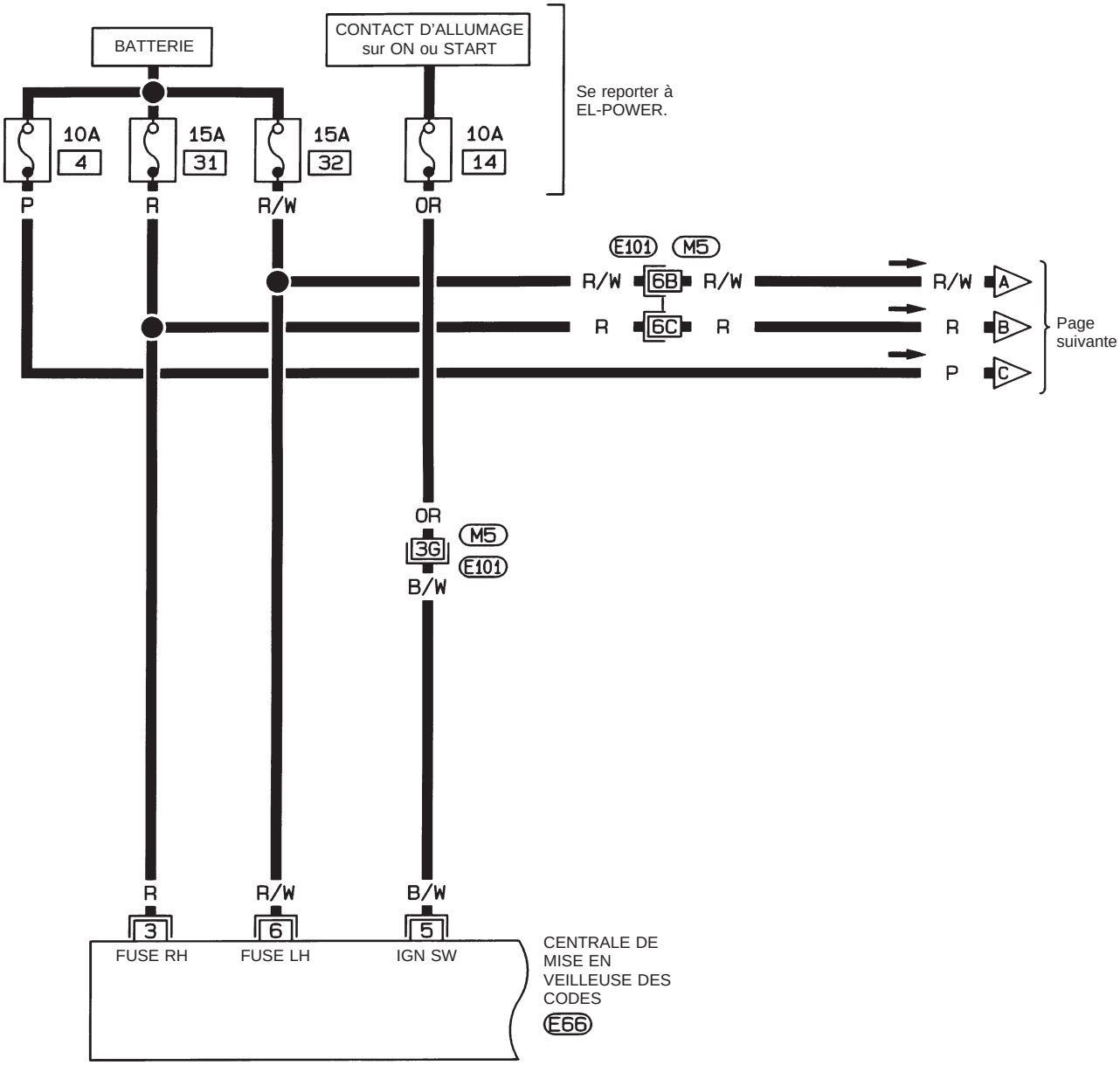

8 7 6
2 5 3
E66
GY

(Se reporter à la dernière page dépliante)

M5, E101

HEL327A

Simpo PDF Merge and Split Unregistered Version - http://www.simpopdf.com

Schéma de câblage – DIMDIP – (Suite)

EL-DIMDIP-02

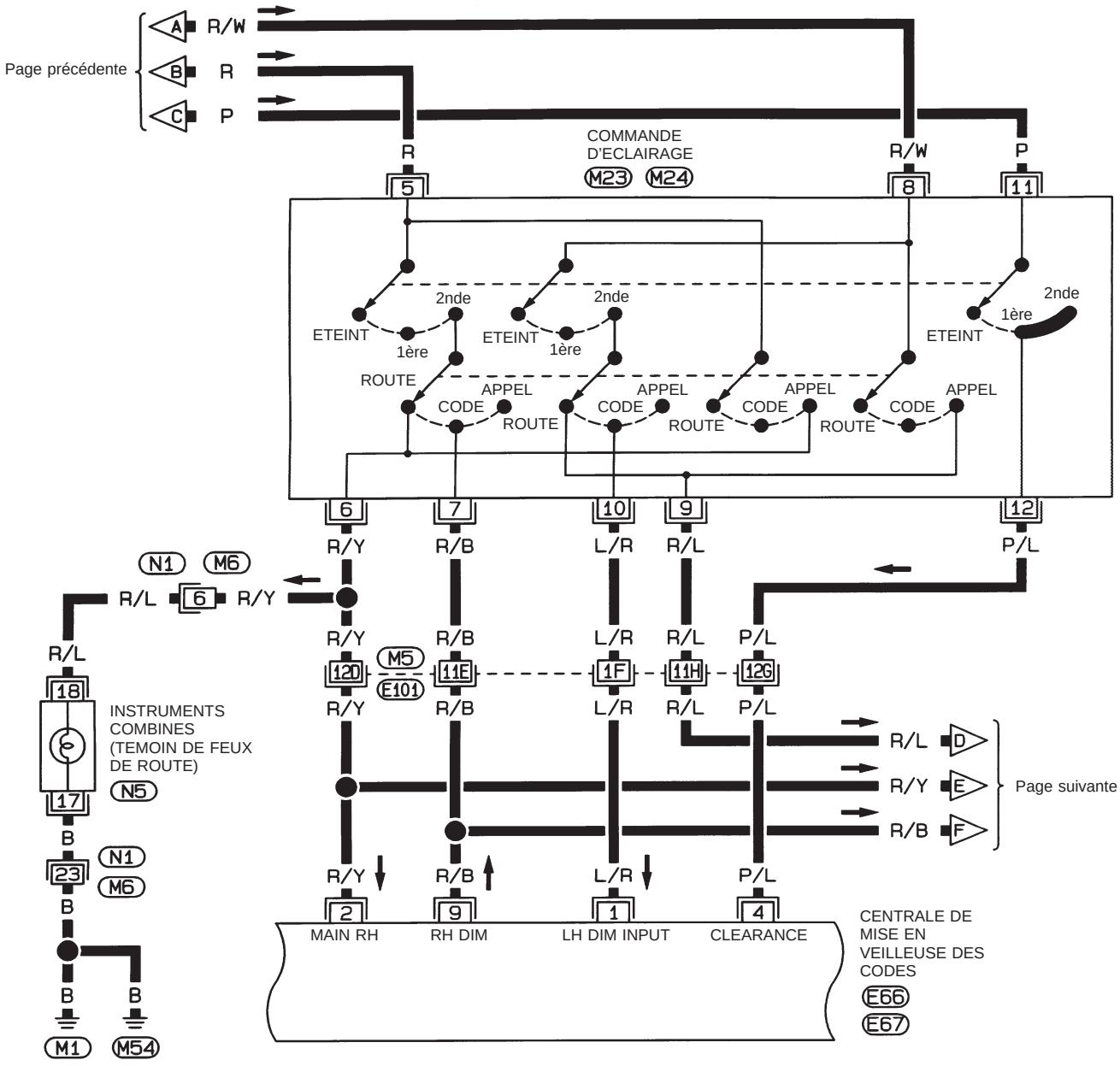

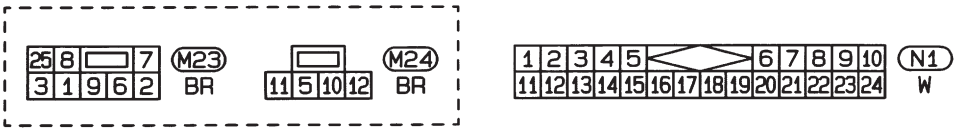

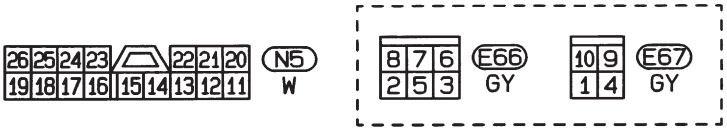

(Se reporter à la dernière page dépliante)

M5, E101

HEL328A

Simpo PDF Merge and Split Unregistered Version - http://www.simpopdf.com

Schéma de câblage – DIMDIP – (Suite)

EL-DIMDIP-03

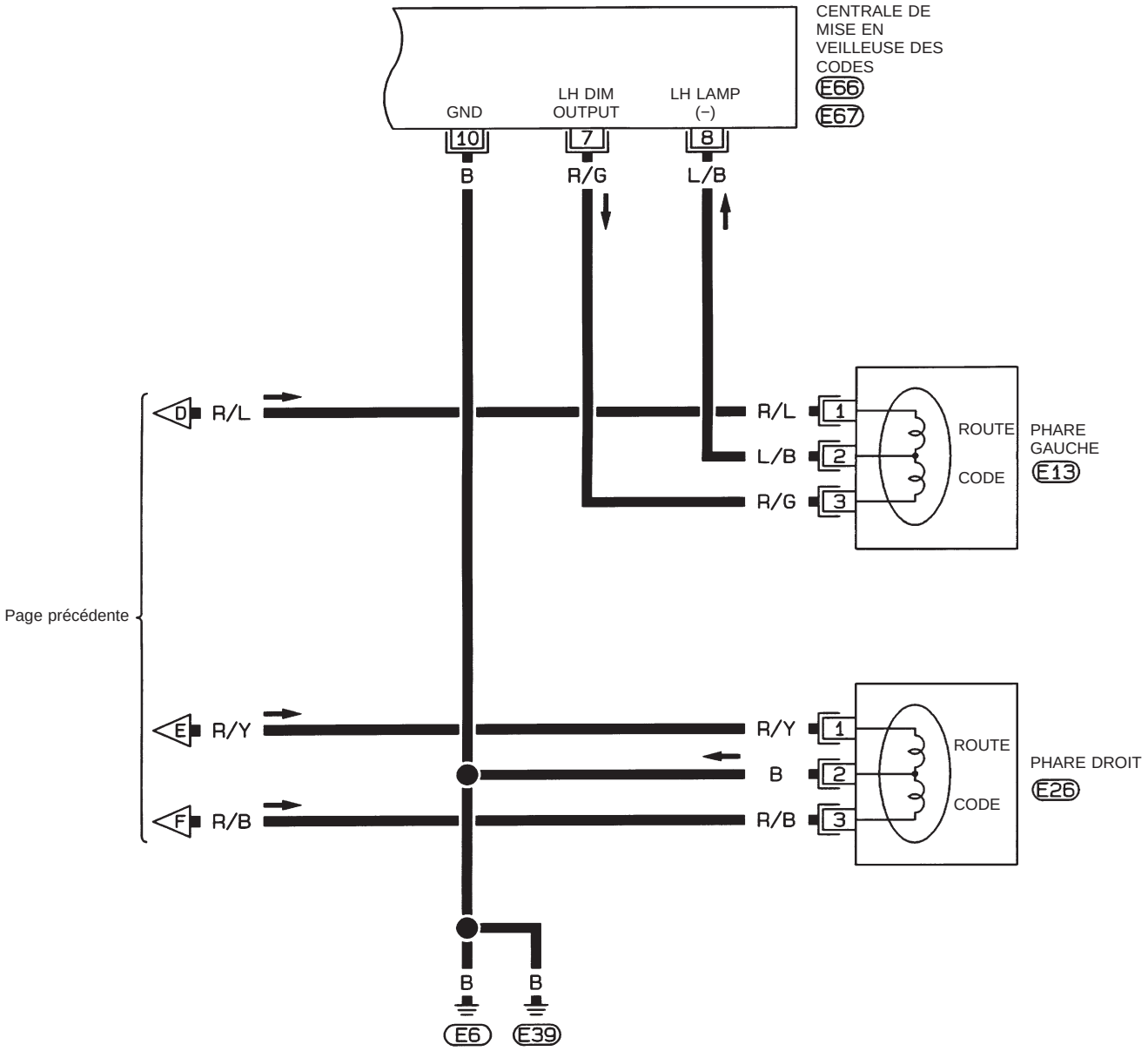

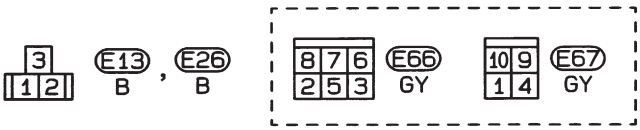

HEL329A

Simpo PDF Merge and Split Unregistered Version - http://www.simpopdf.com

Diagnostics des défauts

TABLEAU D'INSPECTION DE LA CENTRALE DE COMMANDE DE MISE EN VEILLEUSE DES CODES

N° borne	Connexions	ENTREE (I)/ SORTIE (O)	Condition de fonctionnement			Tension (V) (valeurs approximatives)
1	Commutateur d'éclairage (Feux de codes)	I	Commutateur d'éclairage	Feux de codes allumés		12
				Autre		0
2	Commutateur d'éclairage (Feux de route)	I	Commutateur d'éclairage	Feux de route allumés		12
				Autre		0
3	Source d'alimentation électrique	–	–			12
4	Commutateur d'éclairage	I	Position 1ERE·2NDE			12
			ARRET			0
5	Signal d'allumage sur on	I	Contact d'allumage	ON ou START		12
				ACC ou OFF		0
6	Source d'alimentation du phare gauche	–	–			12
7	Phare gauche	O	Commutateur d'éclairage	Feux de codes allumés		12
				Autre	Fonctionnement de l'éclairage de mise en veilleuse des codes	12
					Eclairage de mise en veilleuse des codes éteint	0
8	Masse de phare gauche	–	ALL. (Mise en veilleuse des codes en marche*)			6
			ARRET			0
9	Phare droit	O	Commutateur d'éclairage	Feux de route allumés		12
				Autre	Fonctionnement de l'éclairage mise en veilleuse des codes	6
					Eclairage mise en veilleuse des codes éteint	0
10	Masse	–	–			–

* : Fonctionnement de l'éclairage mise en veilleuse des codes : commande d'éclairage sur la position ''1ère'' avec le contact d'allumage sur ''ON''.

Remplacement des ampoules

Se reporter à ''PHARES'' (EL-50).

Réglage des faisceaux

Se reporter à ''PHARES'' (EL-50).

Simpo PDF Merge and Split Unregistered Version - http://www.simpopdf.com

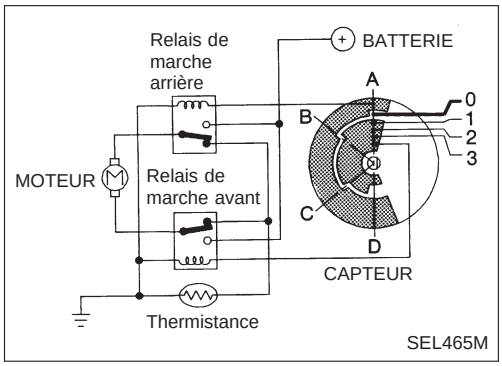

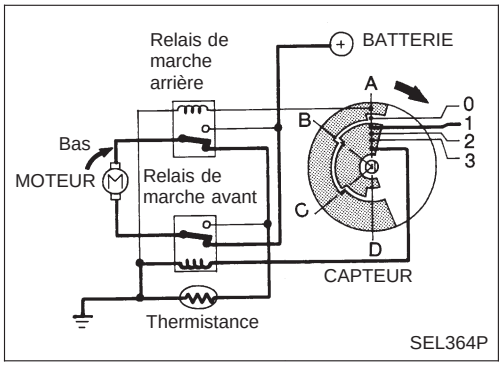

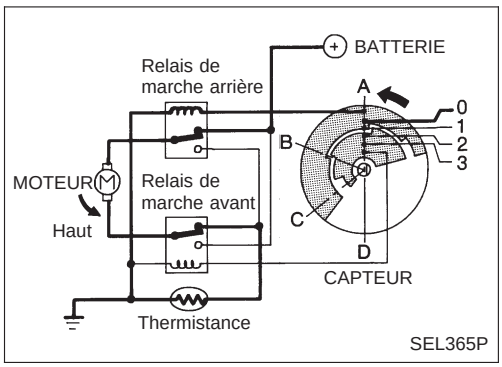

Description du système

FONCTIONNEMENT DU CIRCUIT

[Exemple]

Commutateur de réglage des faisceaux ‘‘0’’

- Lorsque la commande de réglage est sur ‘‘0’’, le moteur ne démarrera pas. Ceci est dû au fait que les bornes d’alimentation sont positionnées dans la partie non conductrice du capteur de l’ensemble rotatif.

Commutateur de réglage des faisceaux ‘‘0’’ → ‘‘1’’

- Lorsque la commande de réglage est déplacée de ‘‘0’’ à ‘‘1’’, la partie conductrice du capteur active le relais. Le moteur est alimenté par l’intermédiaire du relais. Les phares bougeront alors en direction ‘‘BAS’’.
- Le moteur continue à tourner lorsque l’élément rotatif du capteur se déplace du point A au point B.
- Les bornes d’alimentation seront alors positionnées dans la partie non conductrice, interrompant alors l’alimentation du moteur. Le moteur s’arrêtera alors.

Commutateur de réglage des faisceaux ‘‘1’’ → ‘‘0’’

- Lorsque la commande de réglage est déplacée de ‘‘1’’ à ‘‘0’’, la partie conductrice du capteur active le relais. Le moteur est alimenté par l’intermédiaire du relais. Le moteur tournera pour déplacer les phares en direction ‘‘HAUT’’.
- Quand l’élément rotatif du capteur se déplace du point B au point A, le moteur s’arrêtera.

Simpo PDF Merge and Split Unregistered Version - http://www.simpopdf.com

Schéma de câblage – H/AIM –

EL-H/AIM-01

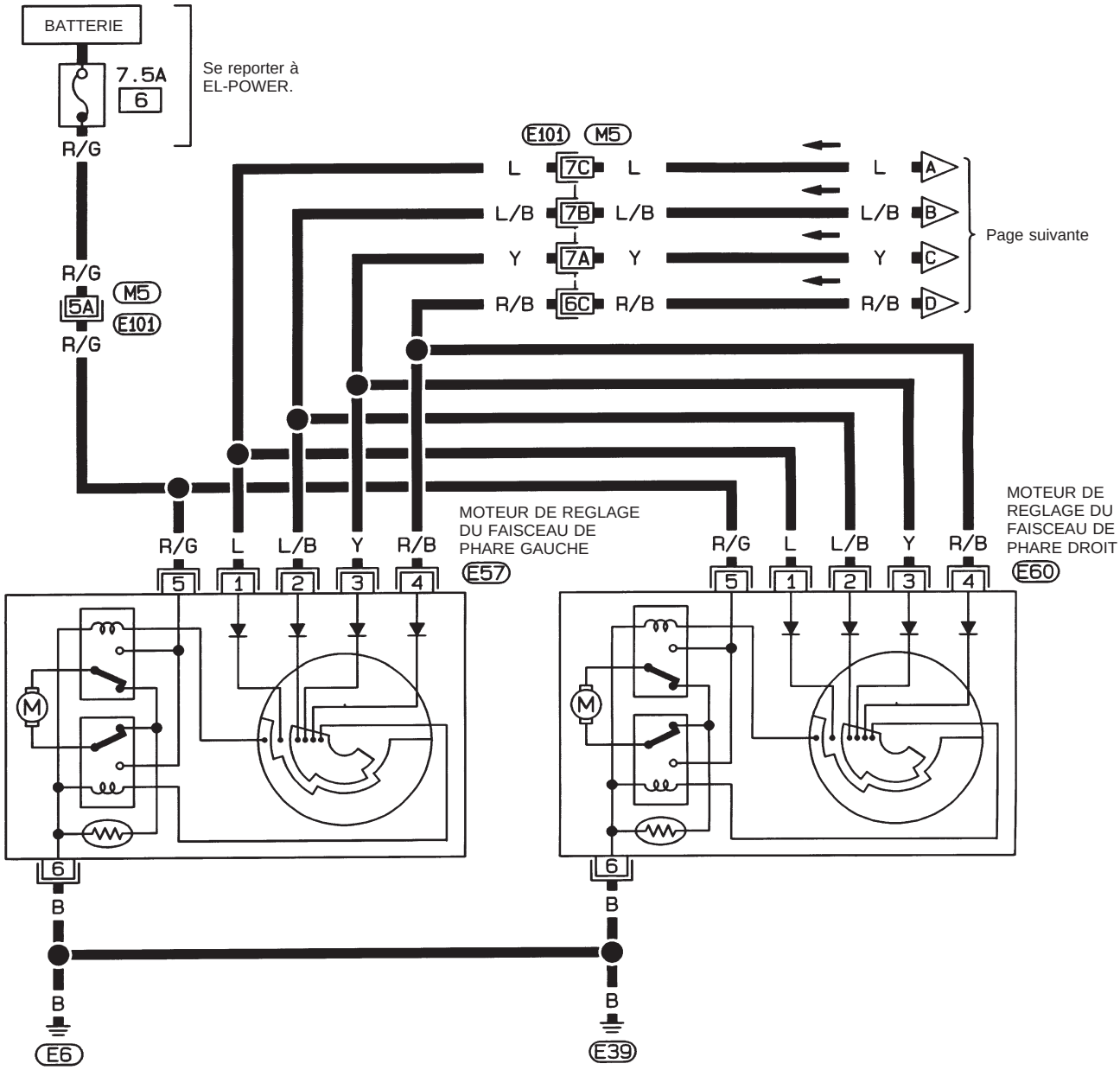

(Se reporter à la dernière page dépliante)

1 2 3 4 5 6 E57 GY , E60 GY

M5 , E101

HEL330A

Simpo PDF Merge and Split Unregistered Version - http://www.simpopdf.com

Schéma de câblage – H/AIM – (Suite)

EL-H/AIM-02

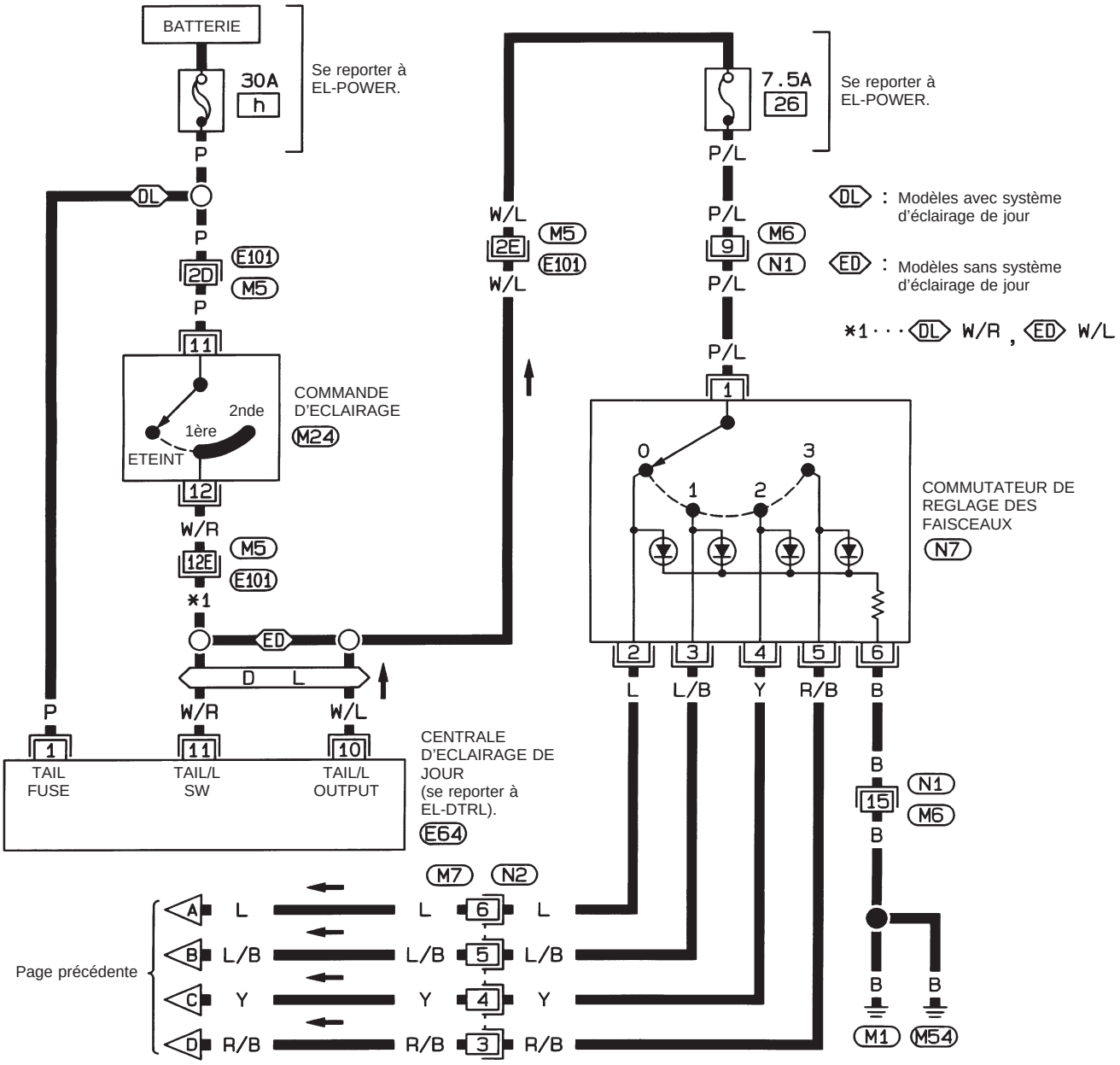

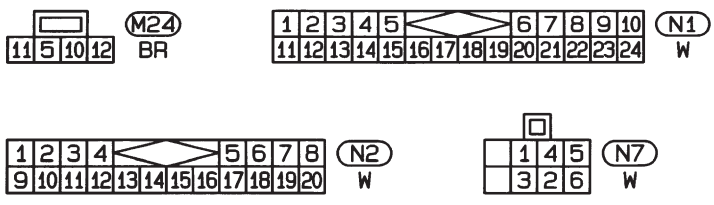

(Se reporter à la dernière page dépliante)

M5 , E101

HEL331A

Simpo PDF Merge and Split Unregistered Version - http://www.simpopdf.com

Schéma de câblage – TAIL/L –/Sauf conduite à gauche pour l'Europe

EL-TAIL/L-01

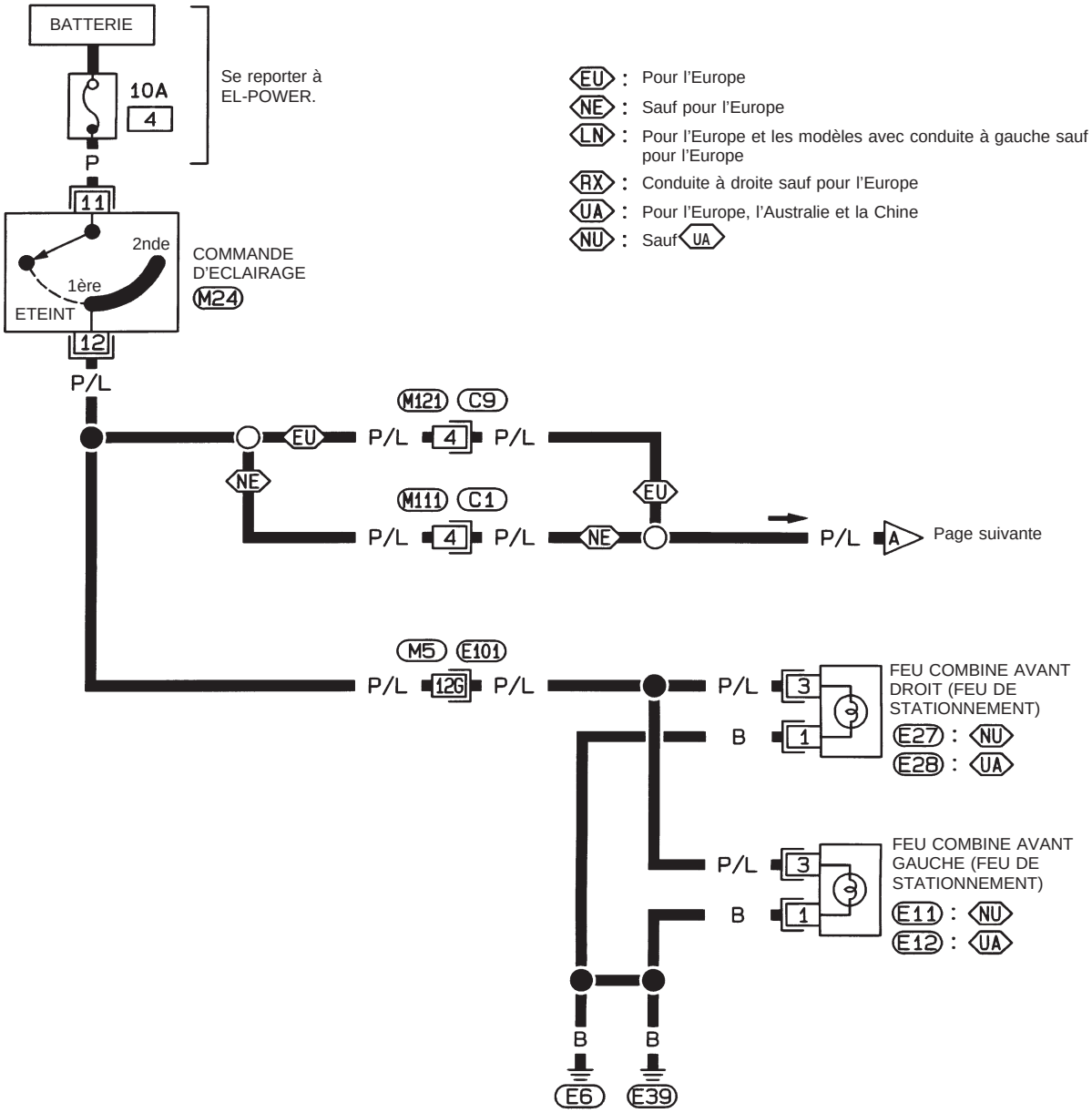

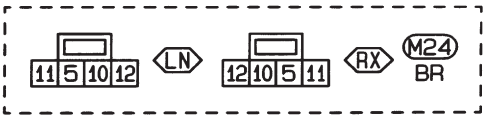



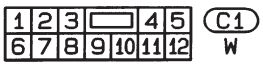

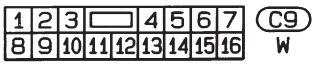

(Se reporter à la dernière page dépliante)
M5, E101

HEL332A

Simpo PDF Merge and Split Unregistered Version - http://www.simpopdf.com

Schéma de câblage – TAIL/L –/Sauf conduite à gauche pour l'Europe (Suite)

EL-TAIL/L-02

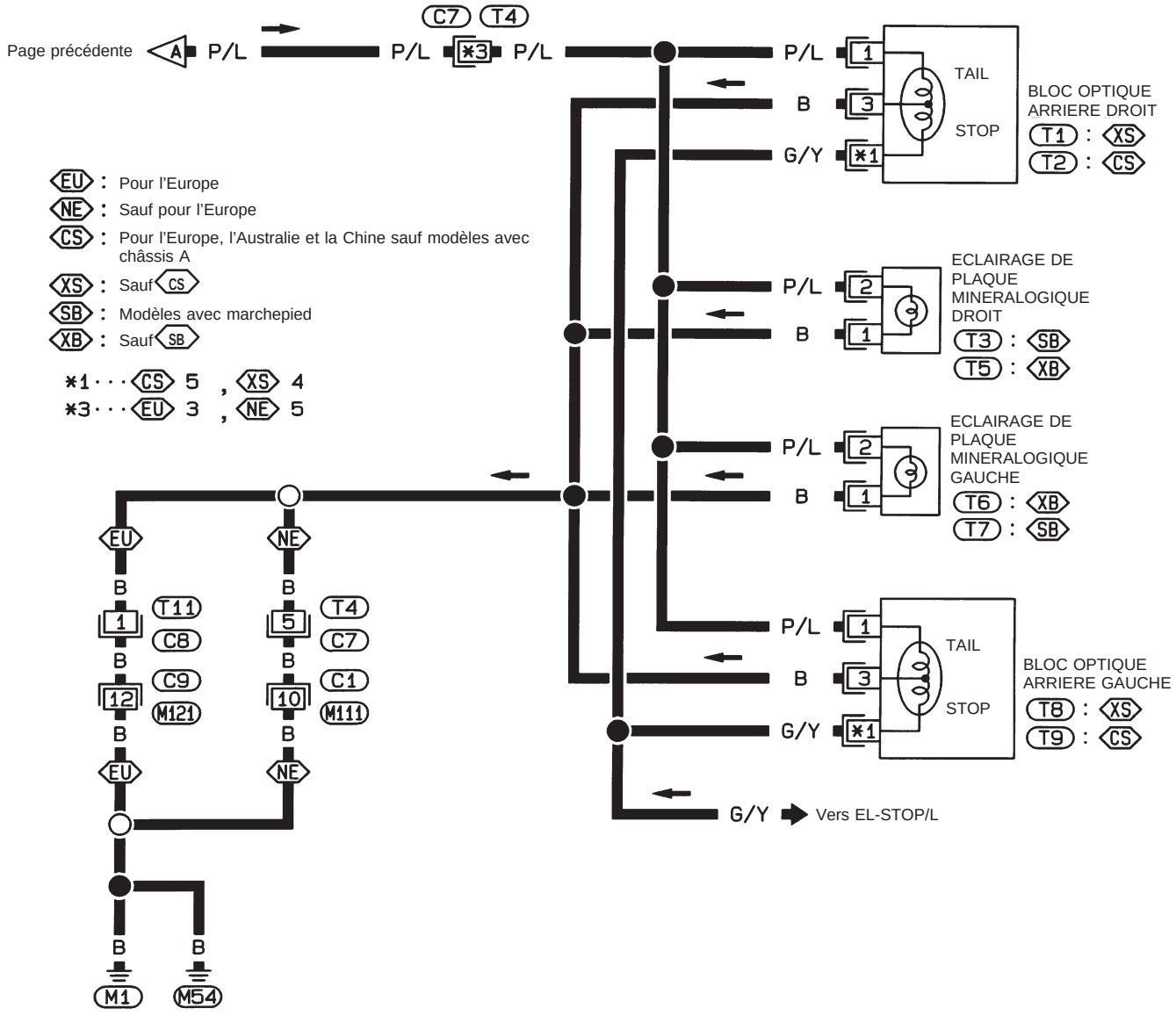

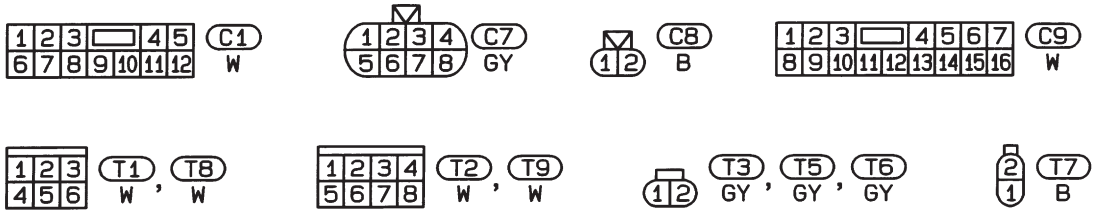

HEL333A

Simpo PDF Merge and Split Unregistered Version - http://www.simpopdf.com

Schéma de câblage – TAIL/L –/Conduite à gauche pour l'Europe

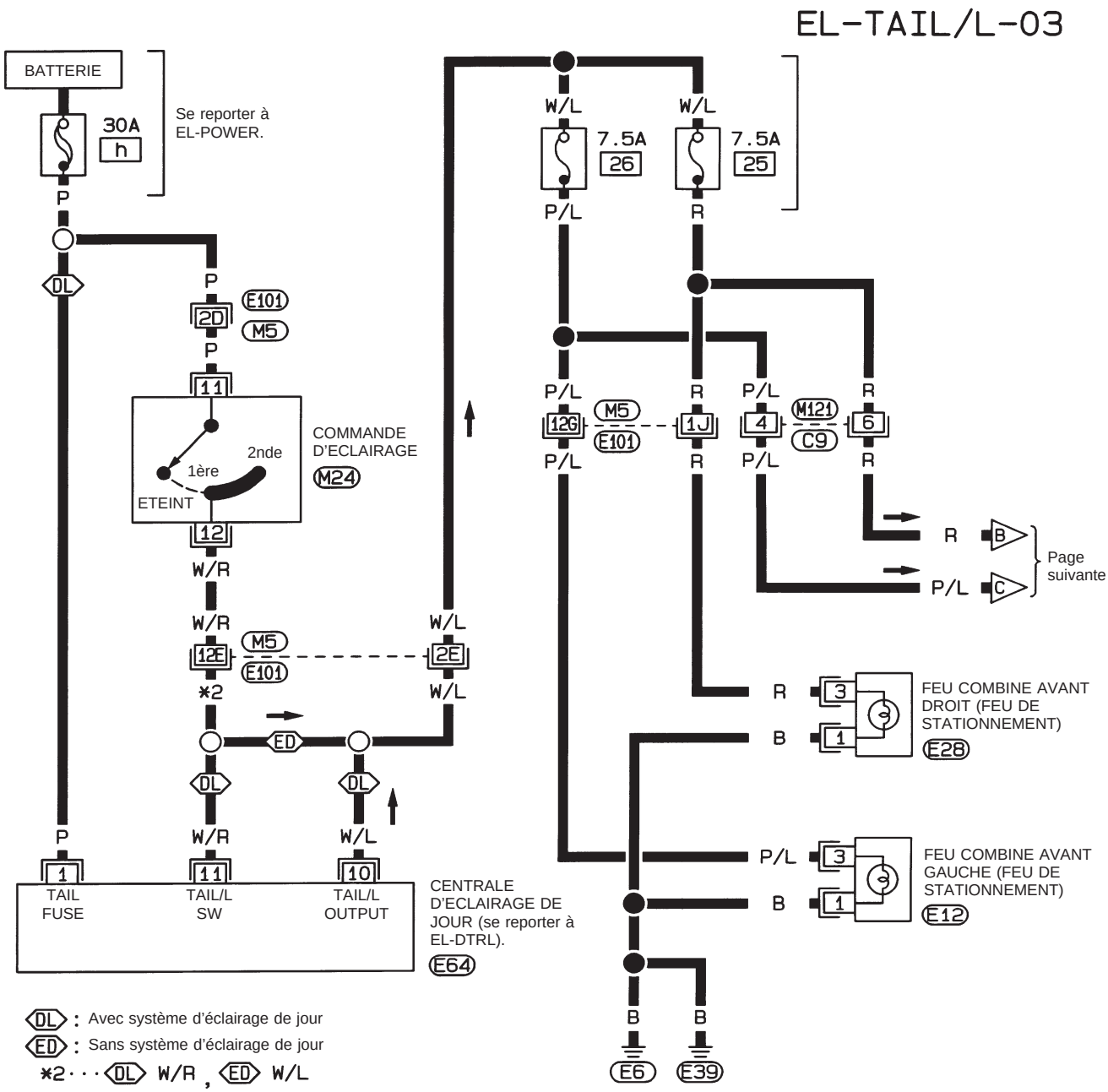





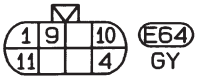

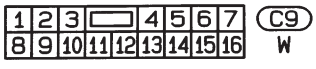

(Se reporter à la dernière page dépliante)

M5 , E101

HEL334A

Simpo PDF Merge and Split Unregistered Version - http://www.simpopdf.com

Schéma de câblage – TAIL/L –/Conduite à gauche pour l'Europe (Suite)

EL-TAIL/L-04

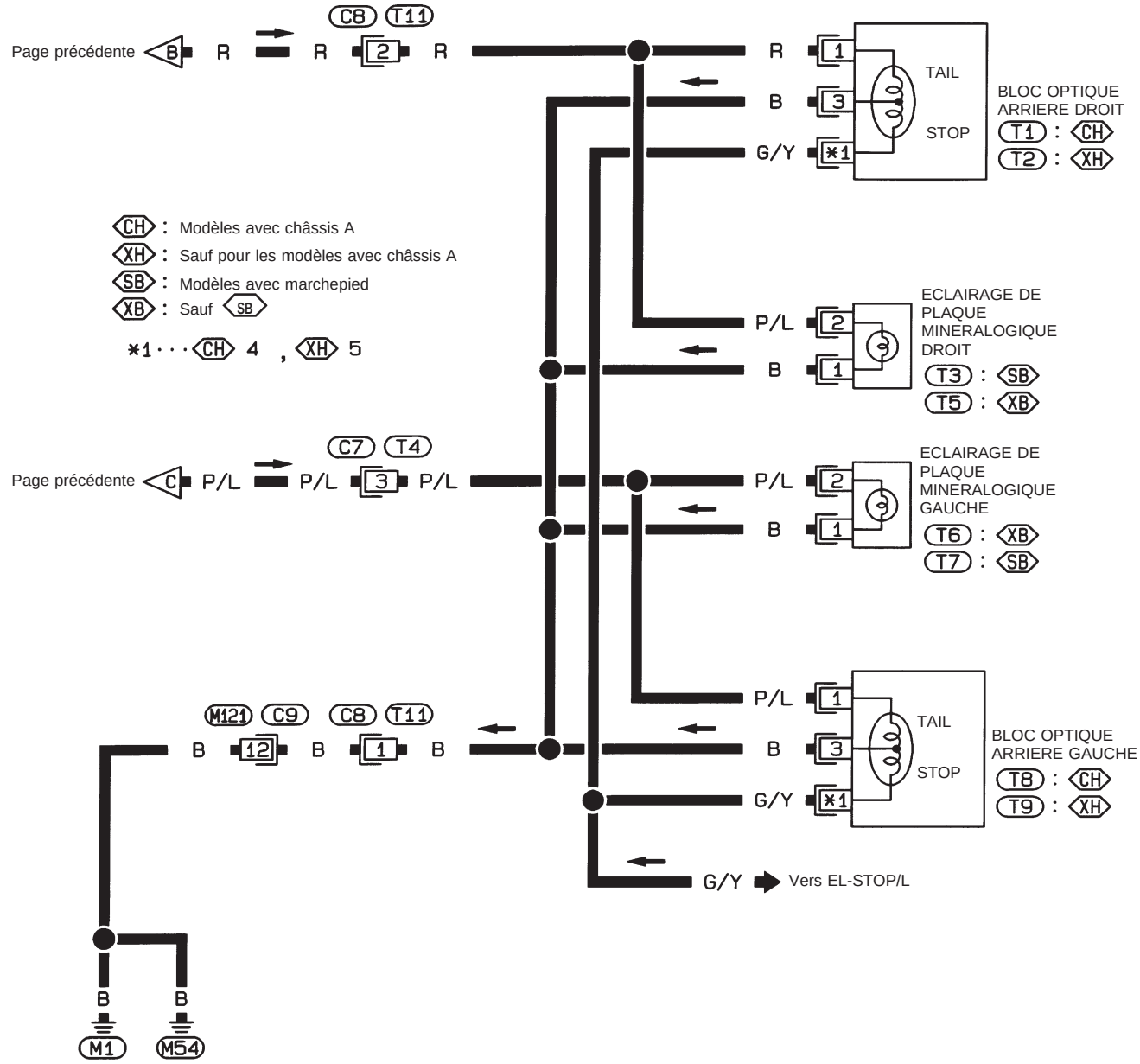

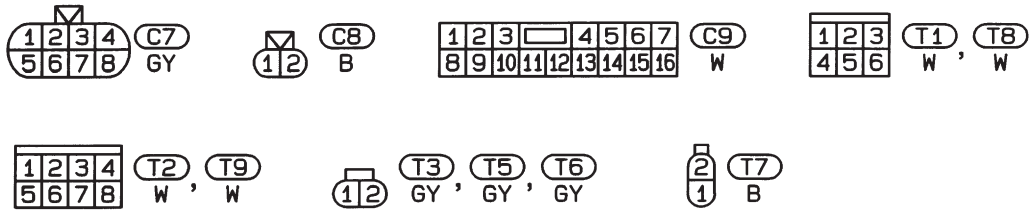

HEL335A

Simpo PDF Merge and Split Unregistered Version - http://www.simpopdf.com

Schéma de câblage – STOP/L –

EL-STOP/L-02

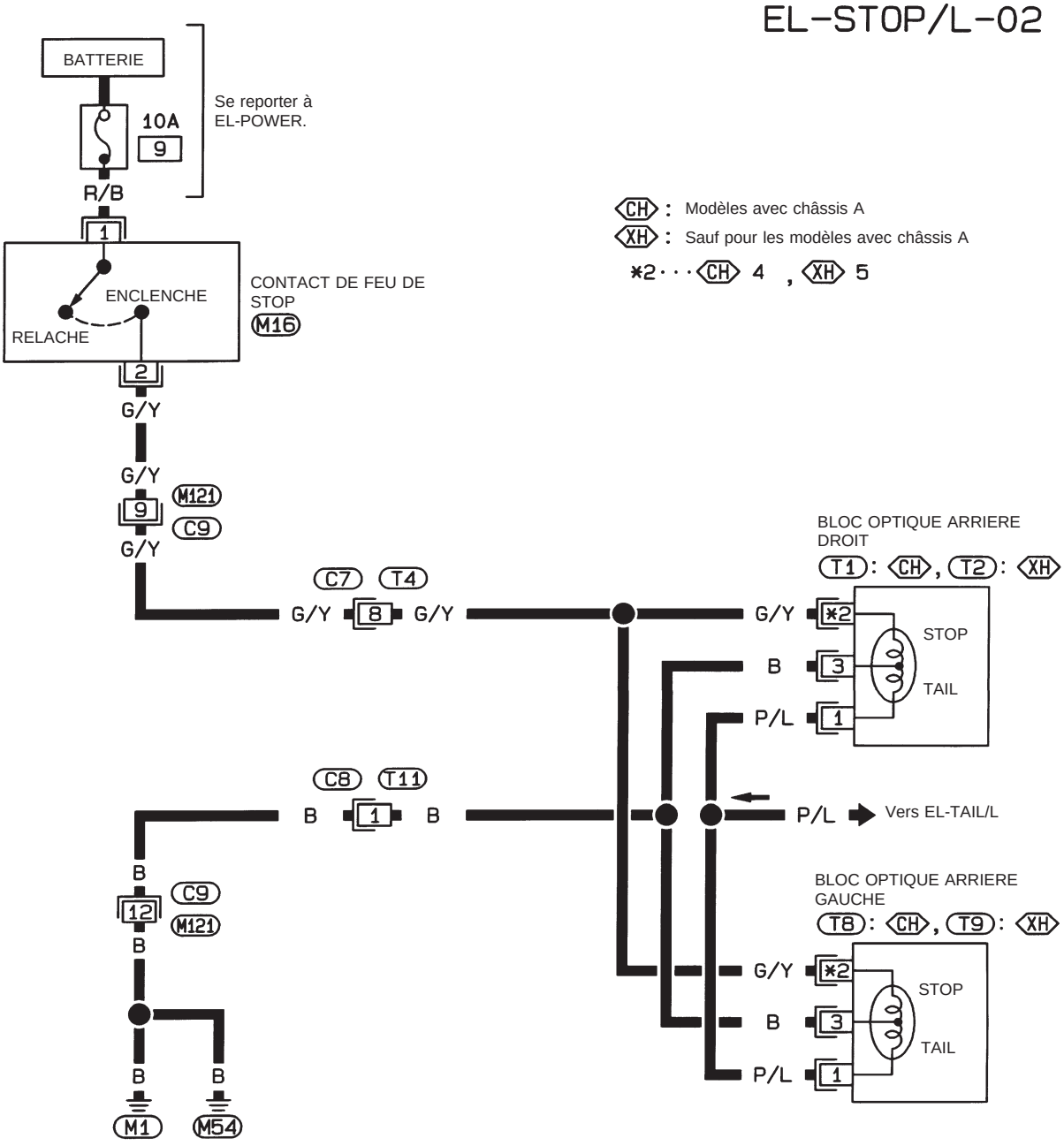

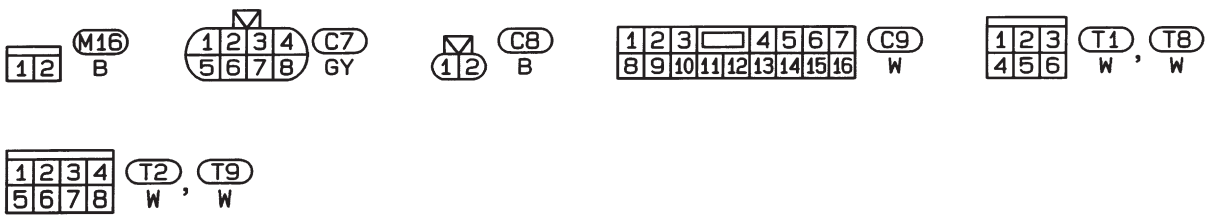

HEL336A

Simpo PDF Merge and Split Unregistered Version - http://www.simpopdf.com

Schéma de câblage –BACK/L –

EL-BACK/L-02

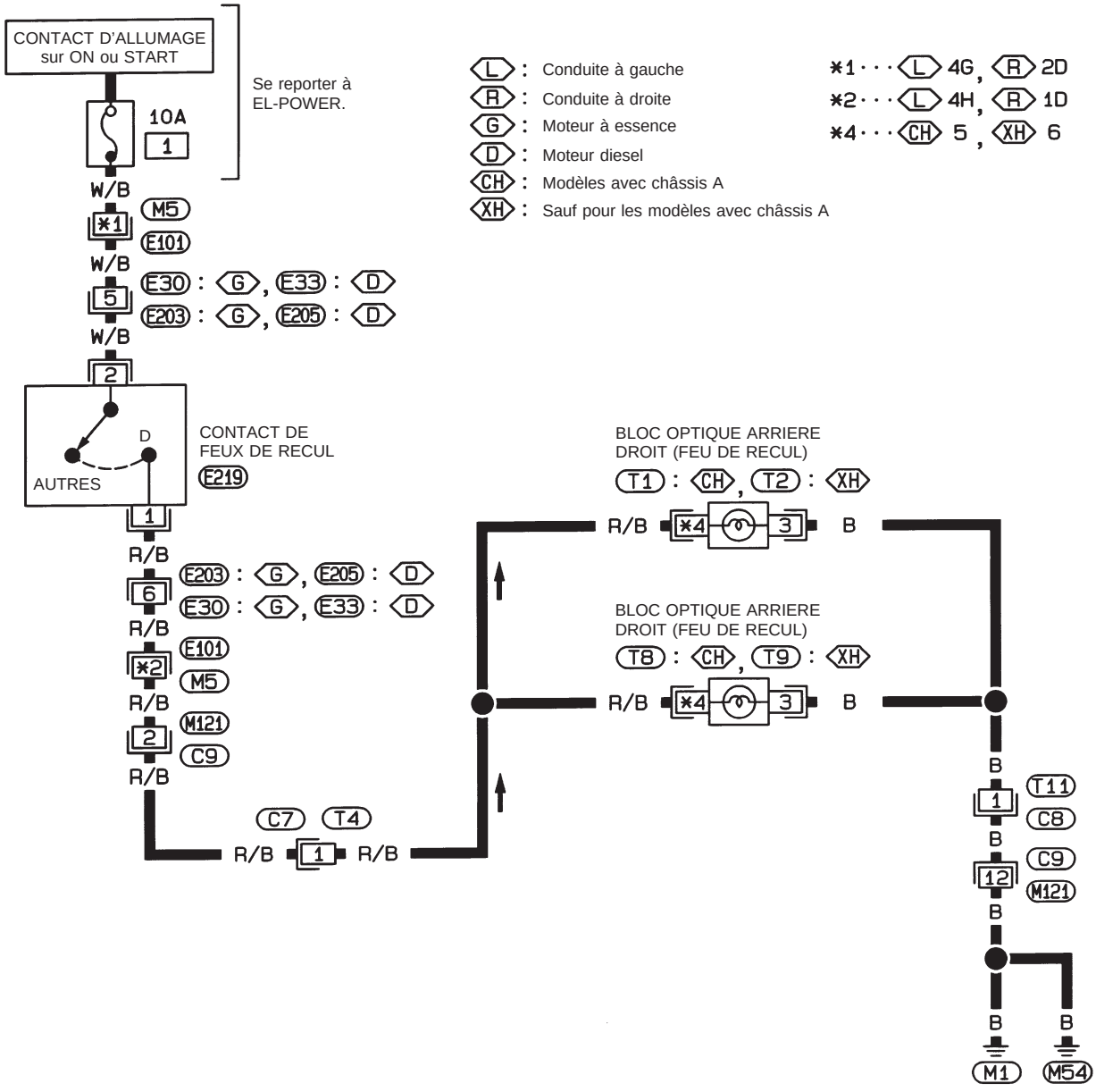

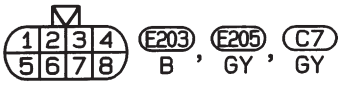

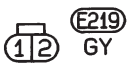



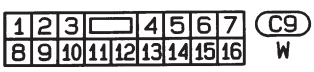

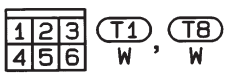

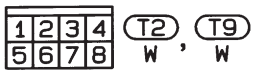

(Se reporter à la dernière page dépliante)

M5, E101

HEL337A

Simpo PDF Merge and Split Unregistered Version - http://www.simpopdf.com

Schéma de câblage – R/FOG –/Conduite à gauche

EL-R/FOG-01

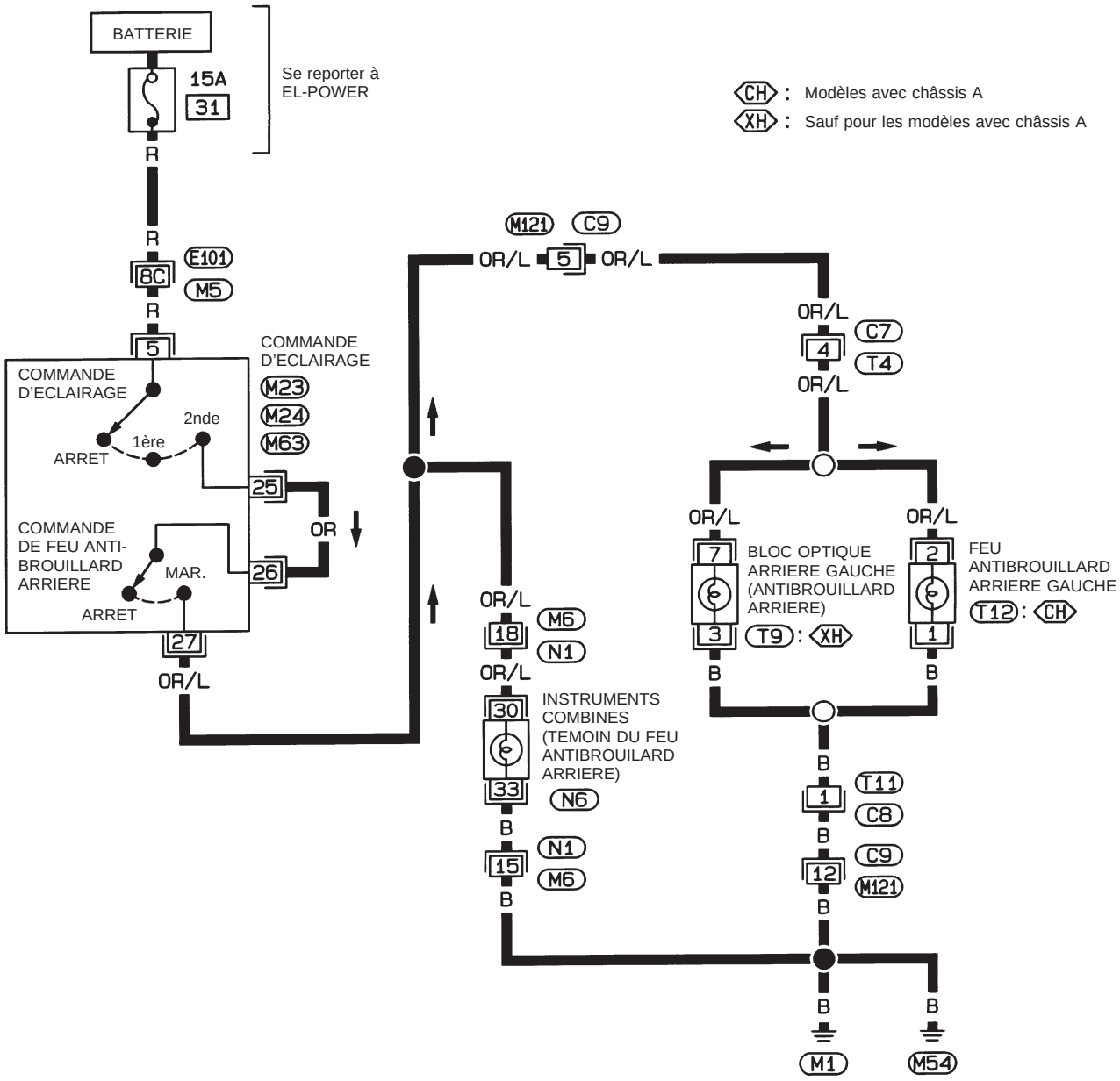

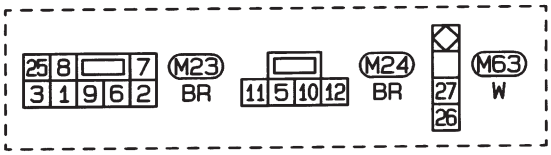





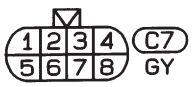



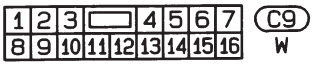

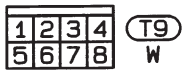

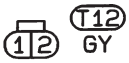

(Se reporter à la dernière page dépliante)

M5, E101

HEL338A

Simpo PDF Merge and Split Unregistered Version - http://www.simpopdf.com

Schéma de câblage – R/FOG –/Conduite à droite

EL-R/FOG-02

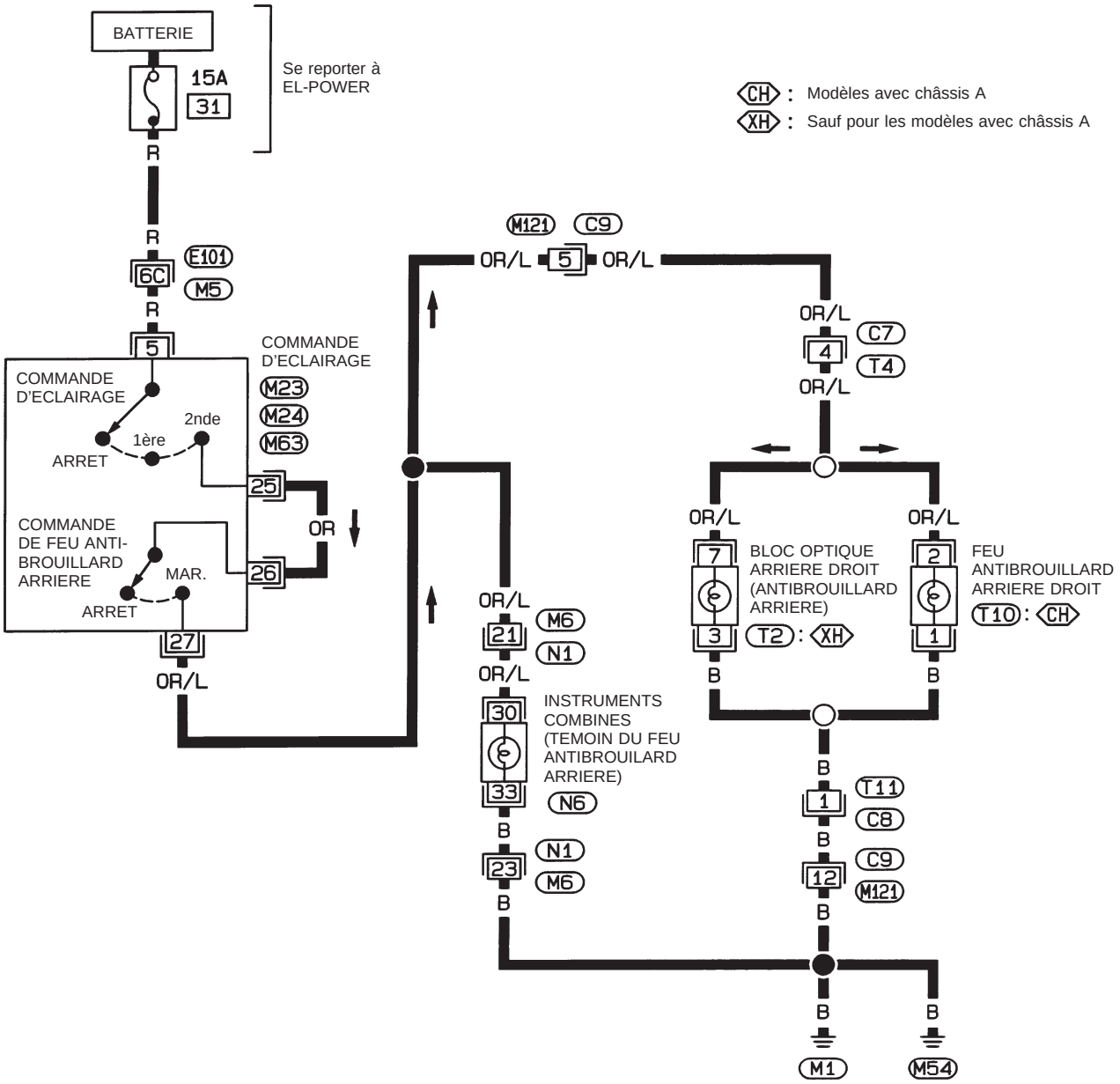

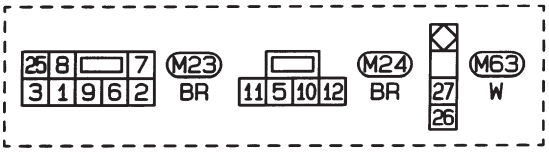







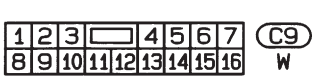

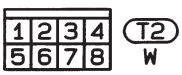

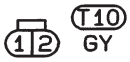

(Se reporter à la dernière page dépliante)

M5 , E101

HEL339A

Simpo PDF Merge and Split Unregistered Version - http://www.simpopdf.com

Schéma

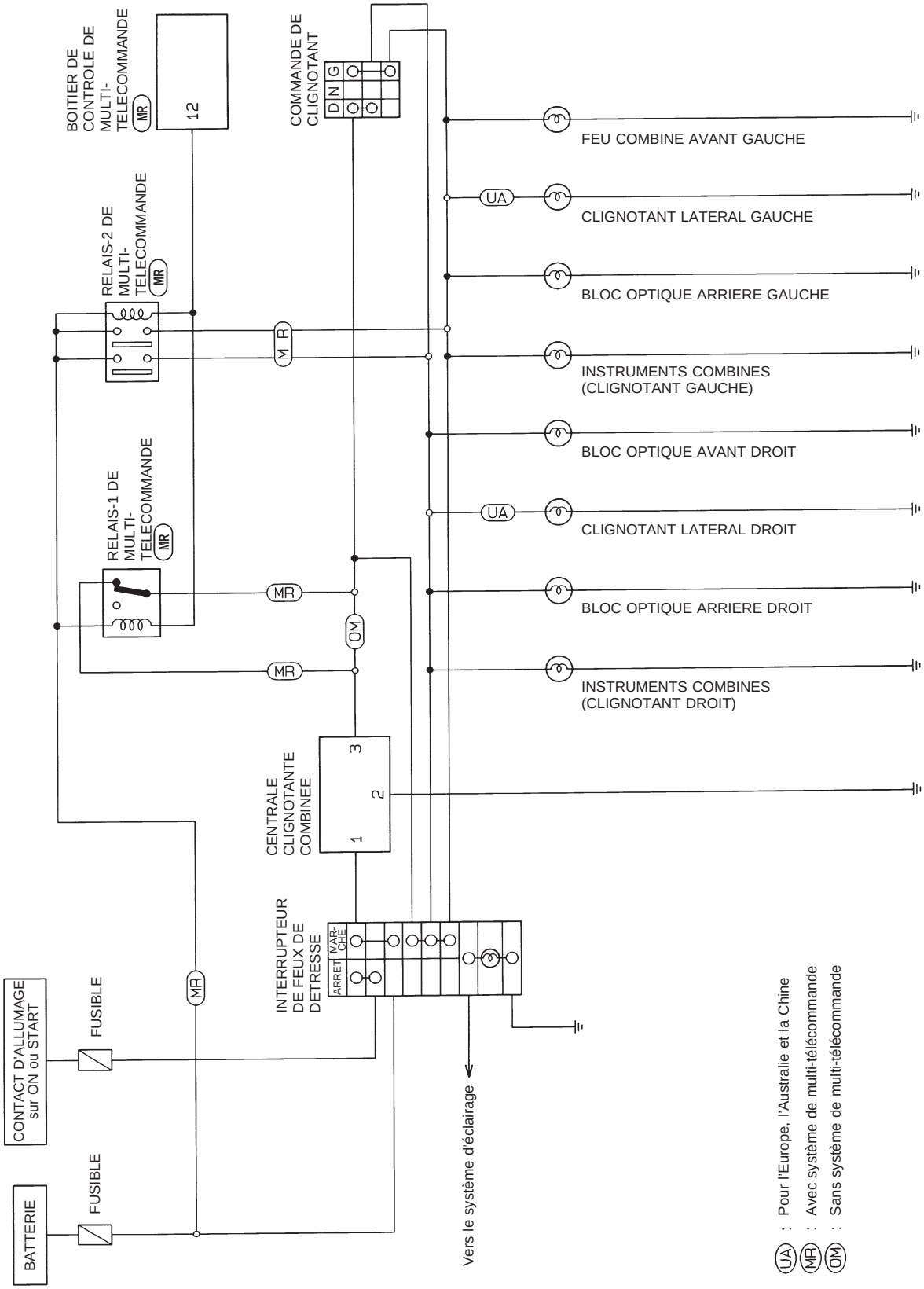

HEL340A

Simpo PDF Merge and Split Unregistered Version - http://www.simpopdf.com

Schéma de câblage – TURN –/Sauf modèles à 4 roues motrices pour l'Europe

EL-TURN-01

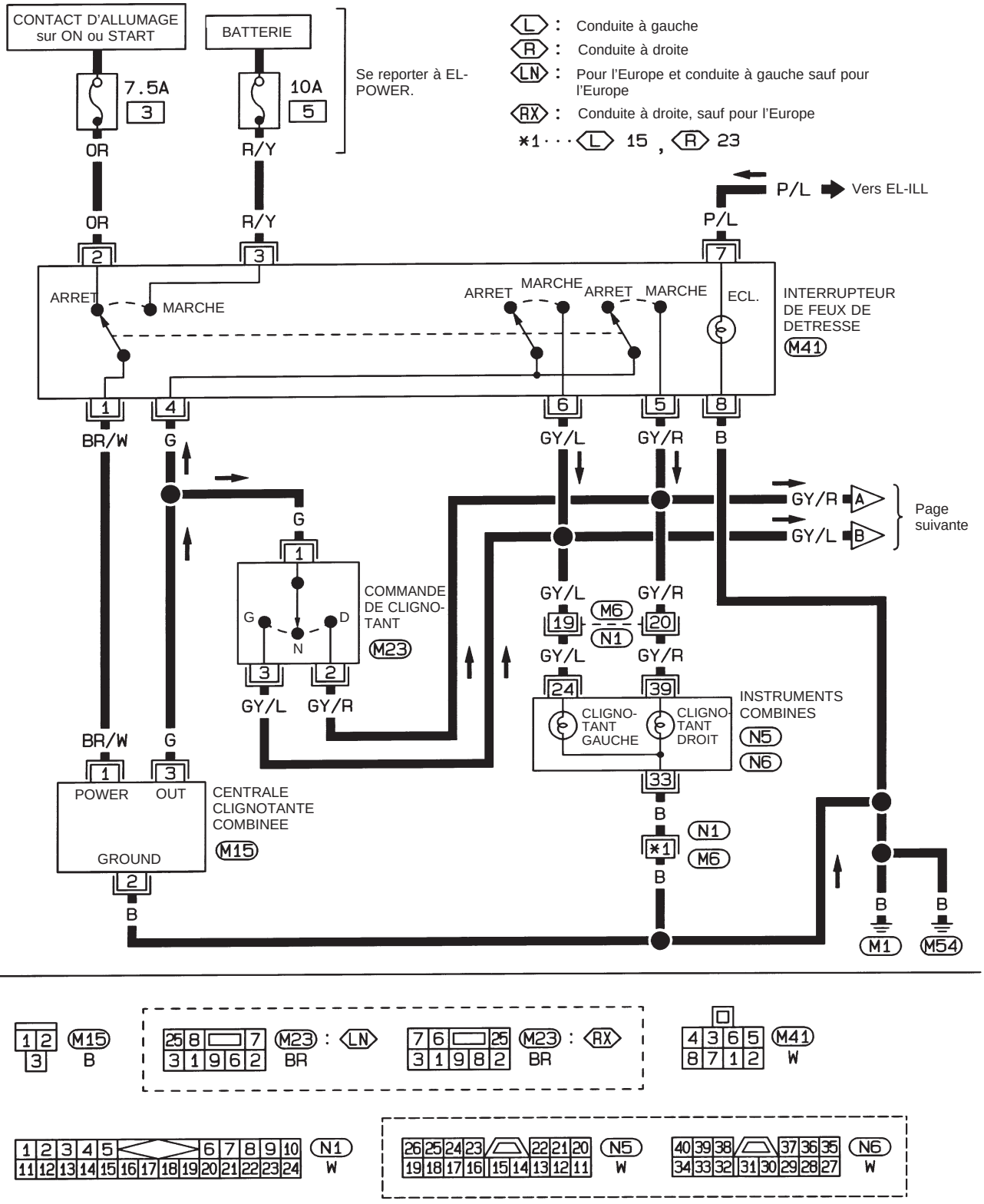

HEL426A

Simpo PDF Merge and Split Unregistered Version - http://www.simpopdf.com

Schéma de câblage – TURN –/Sauf modèles à 4 roues motrices pour l'Europe (Suite)

EL-TURN-02

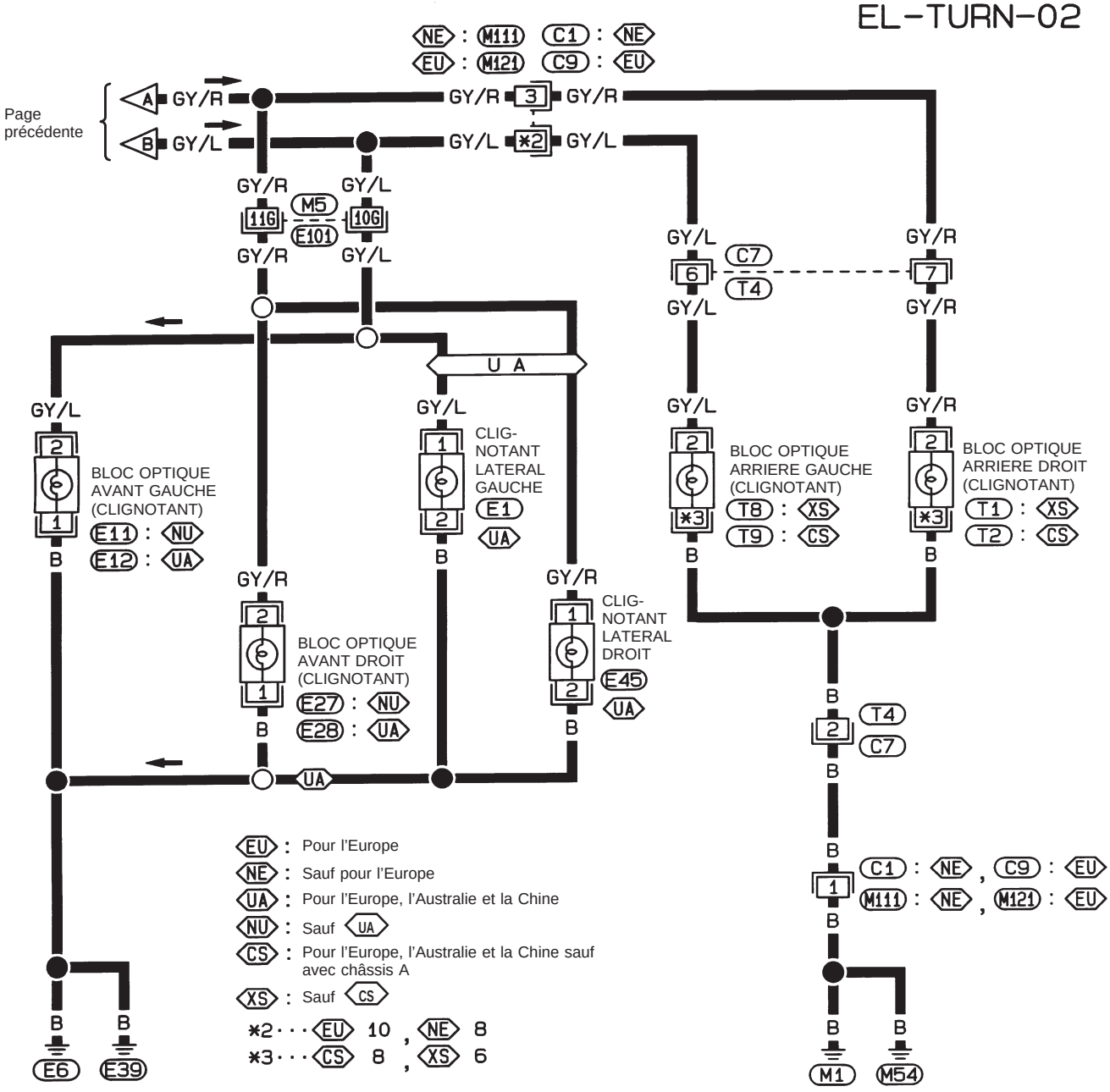

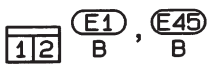



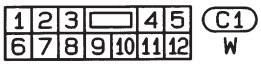

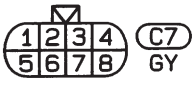

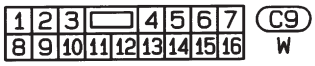

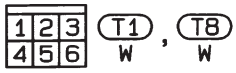

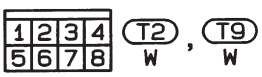

Se reporter à la dernière page dépliante.

M5 , E101

HEL427A

Simpo PDF Merge and Split Unregistered Version - http://www.simpopdf.com

Schéma de câblage – TURN –/Modèles à 4 roues motrices pour l'Europe

REMARQUE :Pour modèles à cabine simple avec coussin gonflable, se reporter à ''Schéma de câblage – TURN–/Sauf modèles à 4 roues motrices pour l'Europe''.

EL-TURN-03

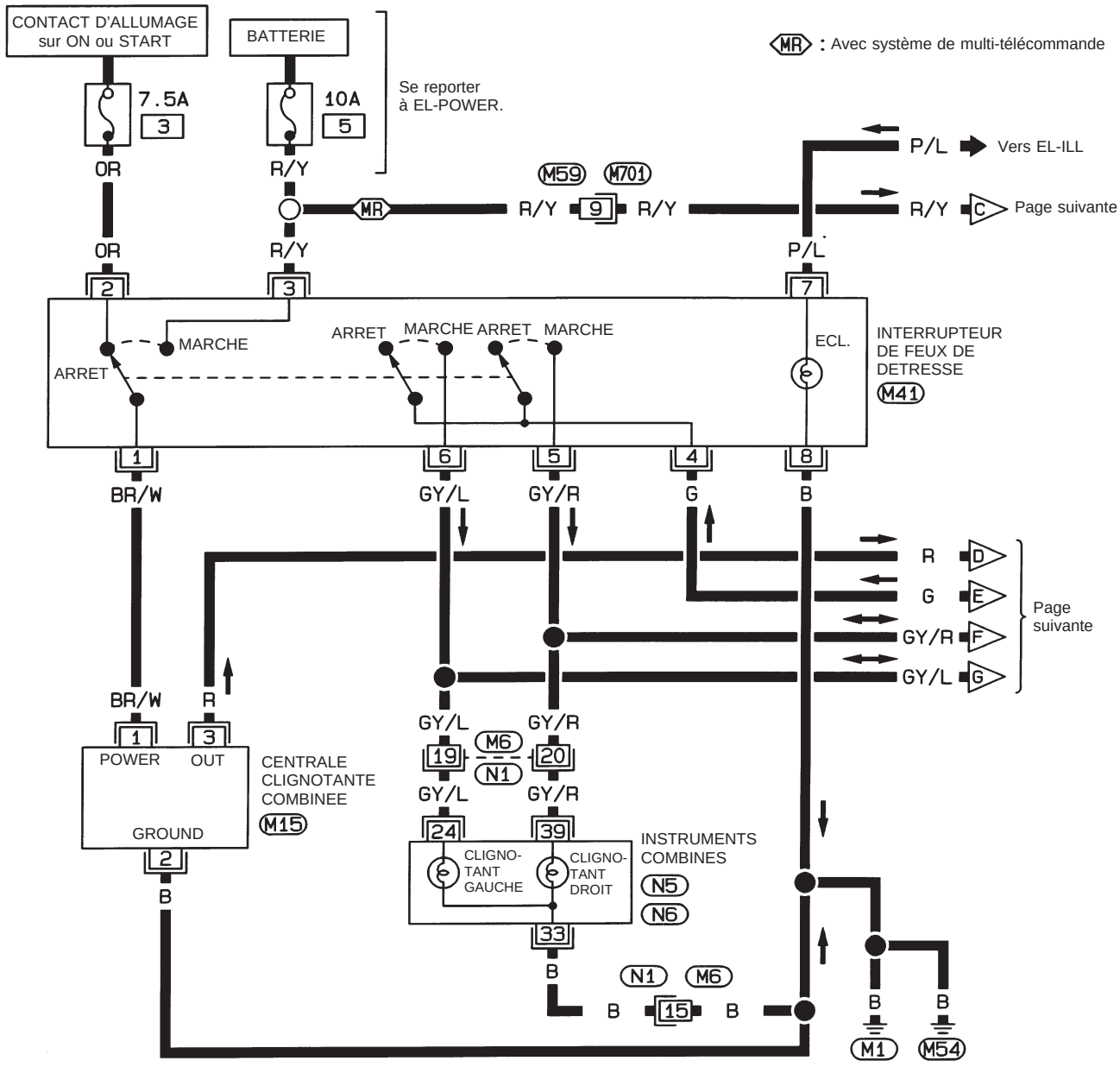

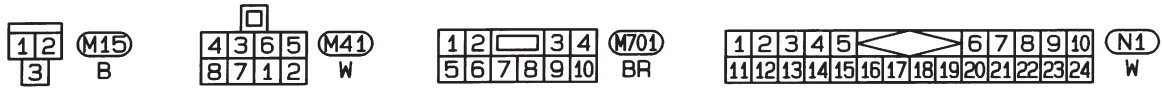

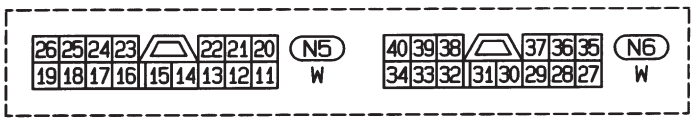

HEL341A

Simpo PDF Merge and Split Unregistered Version - http://www.simpopdf.com

Schéma de câblage – TURN –/Modèles à 4 roues motrices pour l'Europe (Suite)

EL-TURN-04

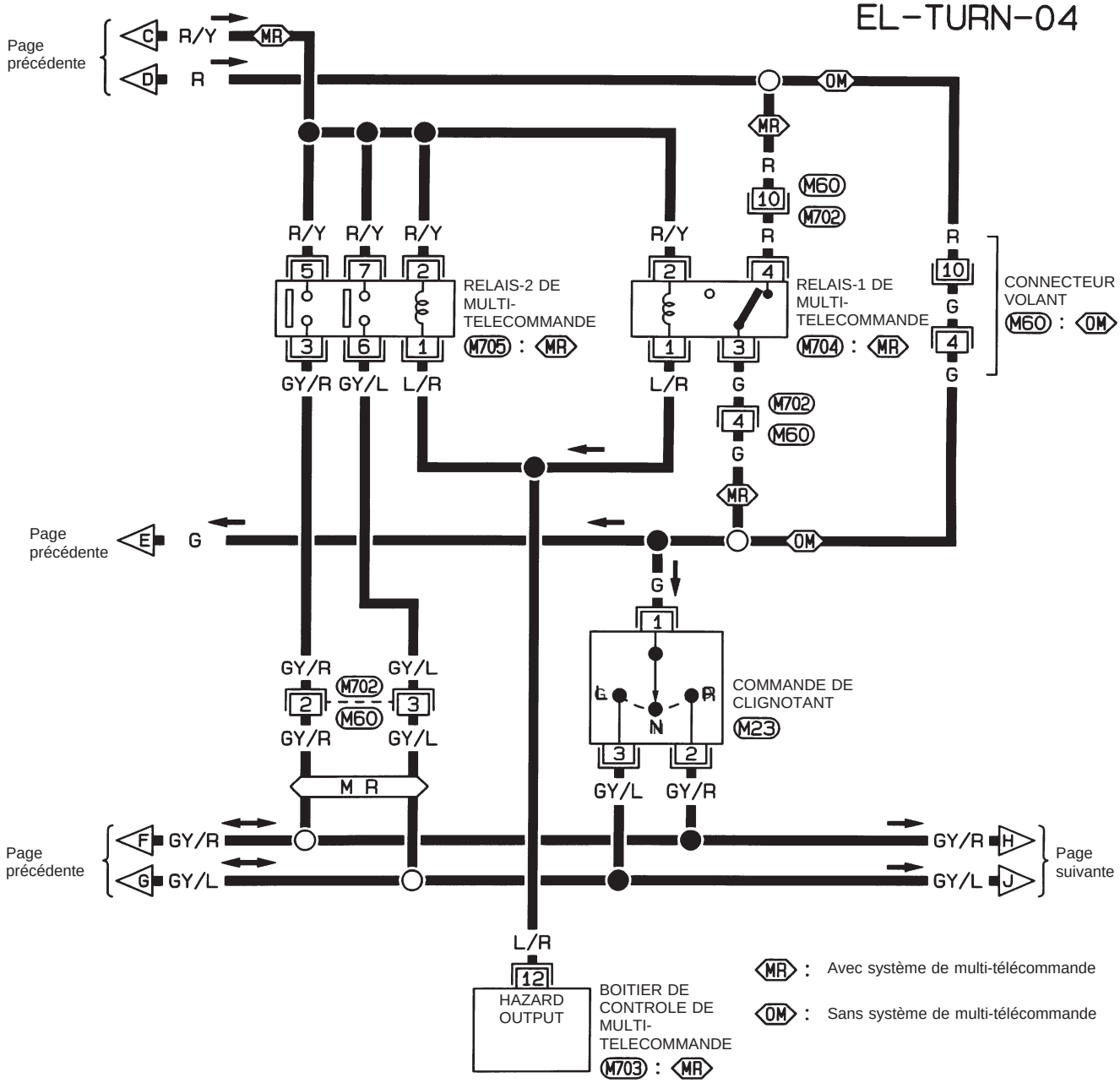

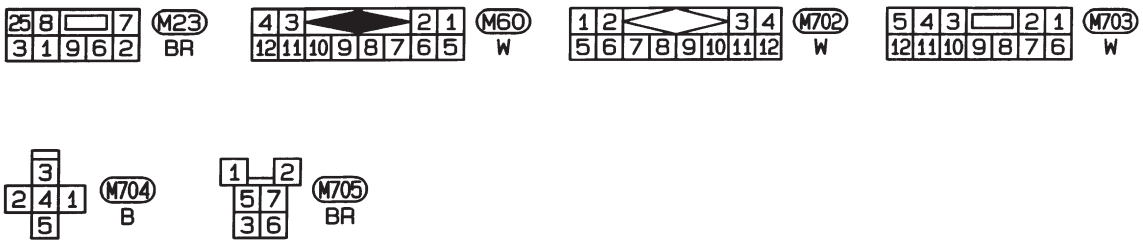

HEL342A

Simpo PDF Merge and Split Unregistered Version - http://www.simpopdf.com

Schéma de câblage – TURN –/Modèles à 4 roues motrices pour l'Europe (Suite)

EL-TURN-05

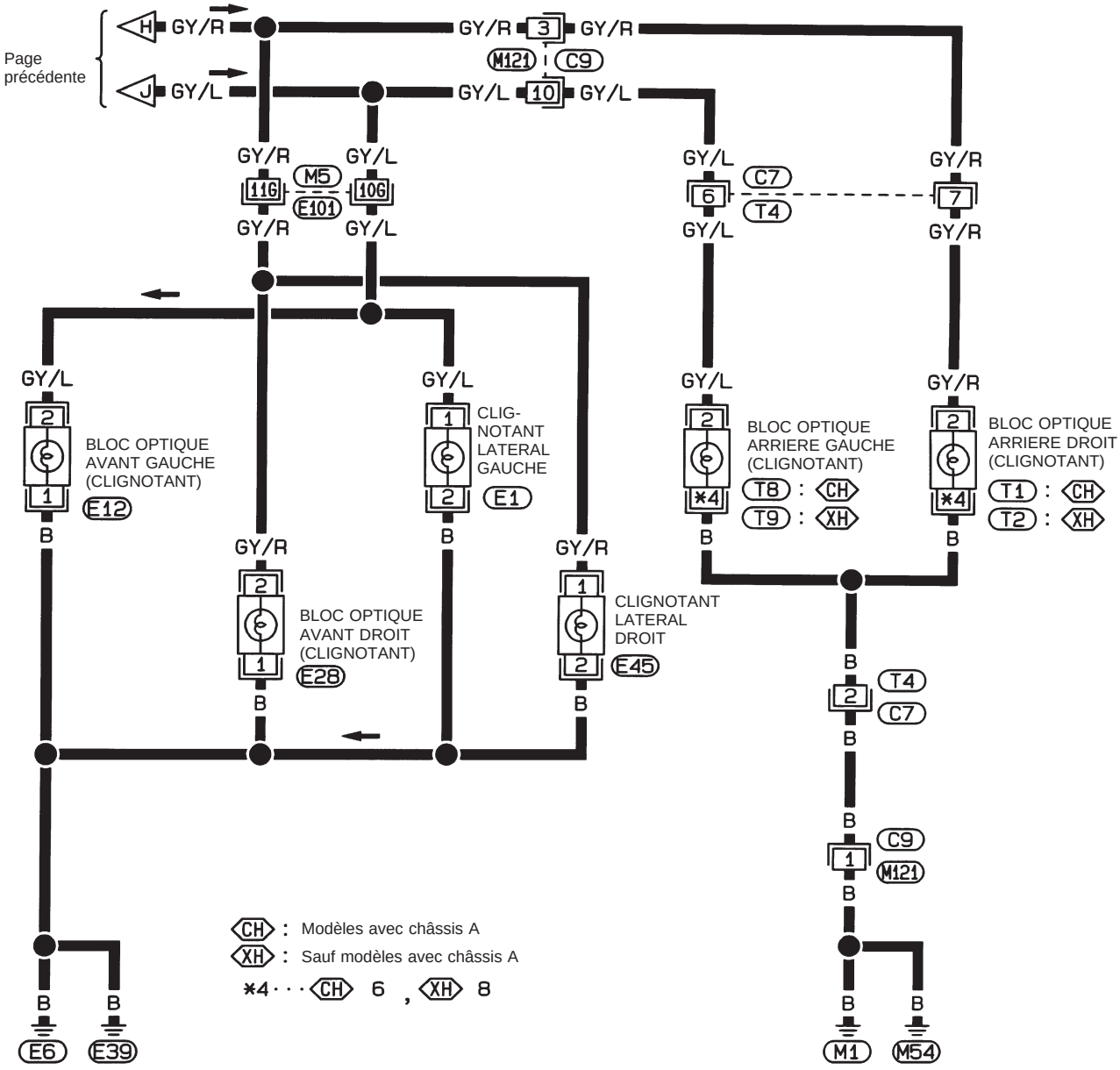

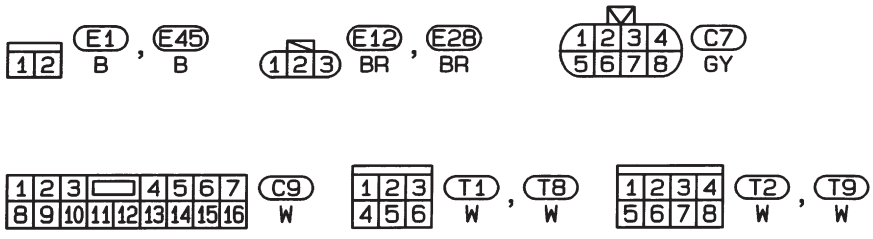

Se reporter à la dernière page dépliante.

M5 , E101

HEL343A

Simpo PDF Merge and Split Unregistered Version - http://www.simpopdf.com

Diagnostics des défauts

Symptôme	Cause possible	Ordre de réparation
Les clignotants et les feux de détresse ne fonctionnent pas.	1. Interrupteur de feux de détresse 2. Centrale de clignotants combinée 3. Circuit ouvert de la centrale de clignotants combinée	1. Vérifier l'interrupteur de feux de détresse. 2. Se reporter à ''Vérification de la centrale de clignotants combinée''. 3. Vérifier le câble de la centrale clignotante combinée pour voir si le circuit est ouvert.
Les clignotants ne fonctionnent pas alors que les feux de détresse fonctionnent.	1. Fusible de 7,5A 2. Interrupteur de feux de détresse 3. Commande de clignotants 4. Circuit ouvert de la commande de clignotant	1. Vérifier le fusible de 7,5A (n° 3, situé dans le boîtier à fusibles). Mettre le contact d'allumage sur ''ON''et vérifier qu'une tension positive de la batterie est appliquée à la borne ② de l'interrupteur des feux de détresse. 2. Vérifier l'interrupteur de feux de détresse. 3. Vérifier la commande de clignotant. 4. Vérifier le câble G entre la centrale clignotante combinée et la commande de clignotant pour voir si le circuit est ouvert.
Les feux de détresse ne fonctionnent pas mais les clignotants fonctionnent.	1. Fusible de 10A 2. Interrupteur de feux de détresse 3. Circuit ouvert de l'interrupteur de feux de détresse	1. Vérifier le fusible de 10A (n° 5, situé dans le boîtier à fusibles). Vérifier si la tension positive de la batterie est présente à la borne ③ de l'interrupteur des feux de détresse. 2. Vérifier l'interrupteur de feux de détresse. 3. Vérifier le câble G entre la centrale clignotante combinée et l'interrupteur de feux de détresse pour voir si le circuit est ouvert.
Le clignotant avant ou latéral, droit ou gauche ne fonctionne pas.	1. Ampoule 2. Masses E6 et E39	1. Vérifier l'ampoule. 2. Vérifier les masses E6 et E39.
Le clignotant arrière droit ou gauche ne fonctionne pas.	1. Ampoule 2. Masses M1 et M54	1. Vérifier l'ampoule. 2. Vérifier les masses M1 et M54.
Les clignotants gauche et droit ne fonctionnent pas.	1. Masse	1. Vérifier les masses M1 et M54.
Le clignotant gauche ou droit ne fonctionne pas.	1. Ampoule	1. Vérifier l'ampoule des instruments combinés.

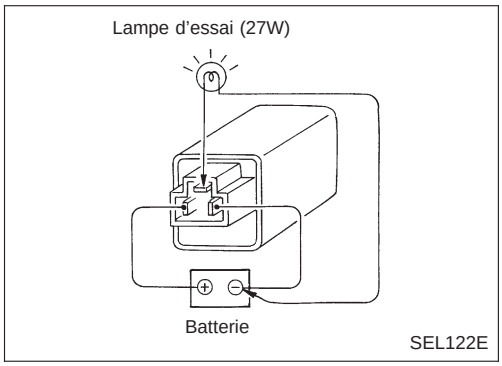

Vérification de la centrale de clignotants combinée

- Avant la vérification, s'assurer que les ampoules répondent aux spécifications.
- Raccorder une batterie et une ampoule d'essai à la centrale de clignotants combinée, comme illustré ci-contre. La centrale de clignotants combinée fonctionne bien si l'ampoule clignote lorsque le courant est envoyé au circuit.

Simpo PDF Merge and Split Unregistered Version - http://www.simpopdf.com

Schéma de câblage – ILL –/Conduite à gauche

EL-ILL-01

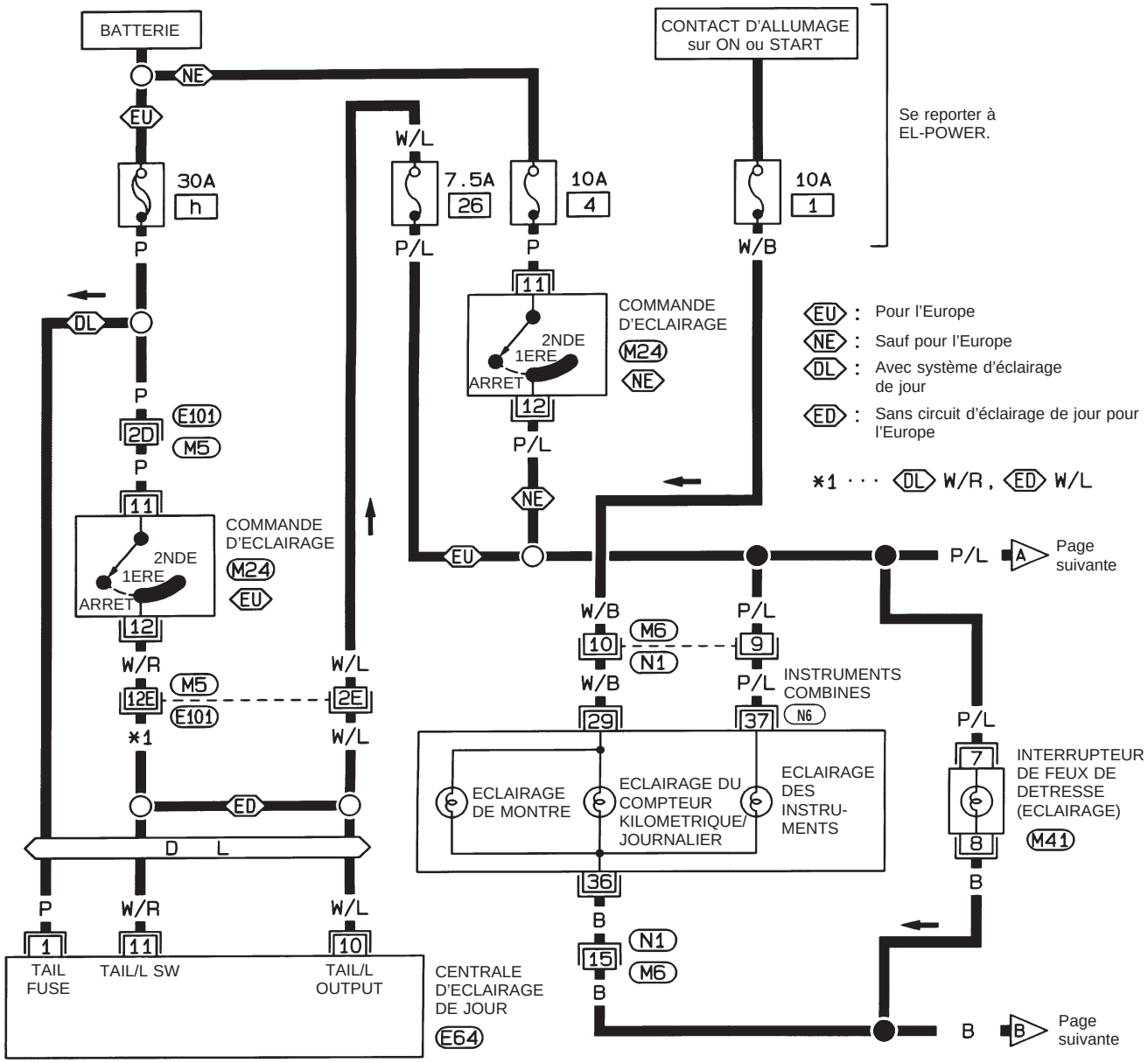

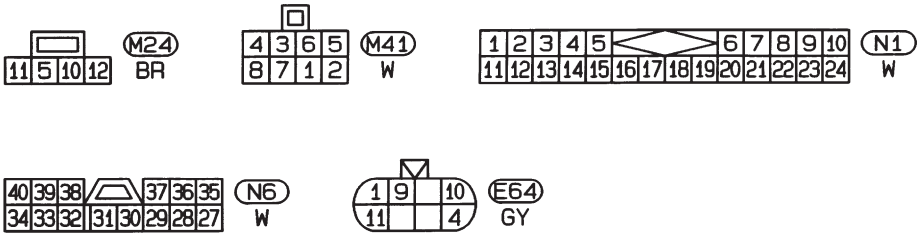

Se reporter à la dernière page dépliante.

M5, E101

HEL344A

Simpo PDF Merge and Split Unregistered Version - http://www.simpopdf.com

Schéma de câblage – ILL –/Conduite à gauche (Suite)

EL-ILL-02

EU : Pour l'Europe
NE : Sauf pour l'Europe
WC : Modèles avec lecteur CD
AM : Modèles sans lecteur CD (1 Haut-parleur de radio sauf pour l'Europe)
FM : Modèles sans lecteur CD (Pour l'Europe avec 2 ou 4 haut-parleurs de radio sauf pour l'Europe)
SG : Catégorie GL et S-GL pour le Moyen-Orient

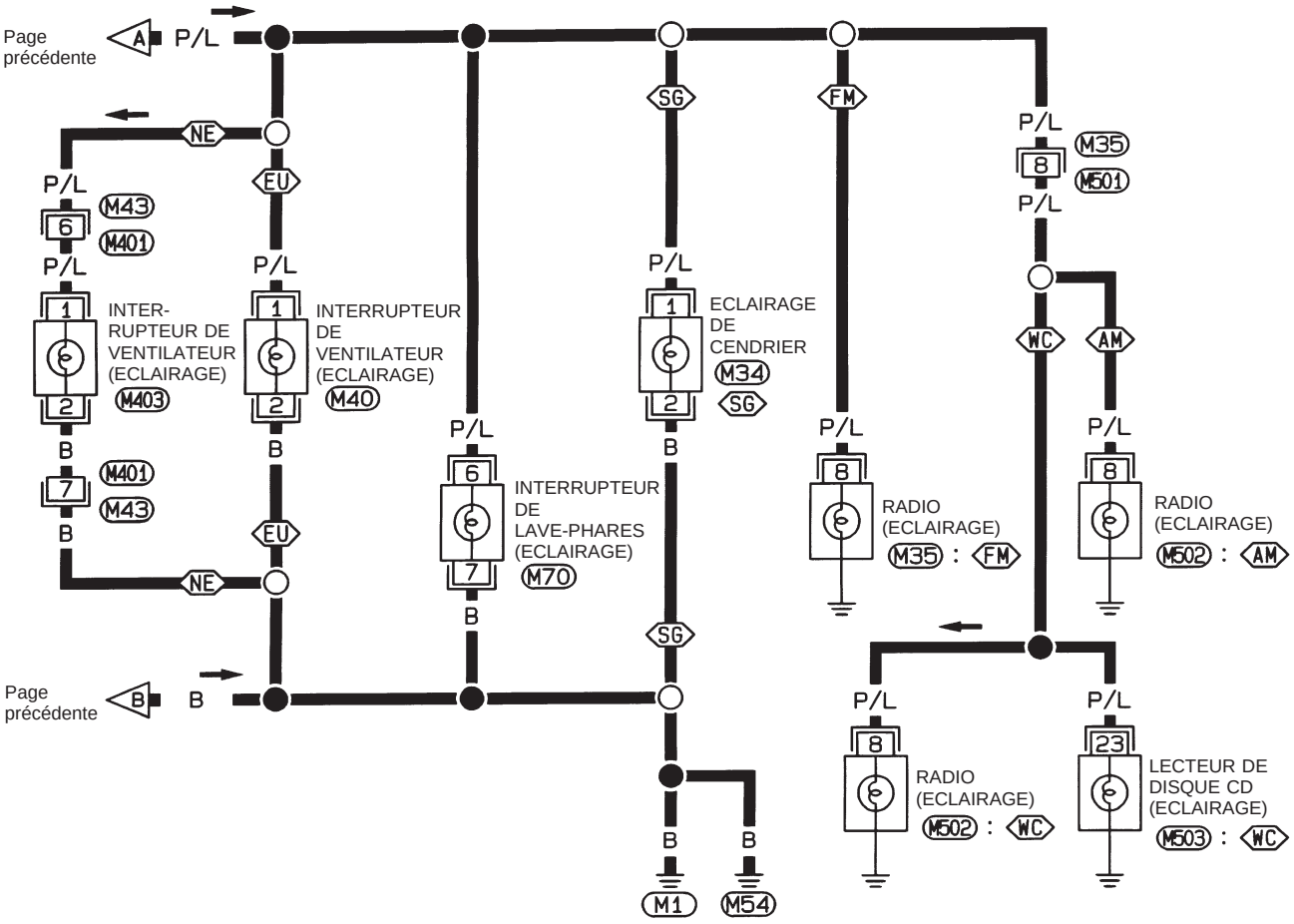

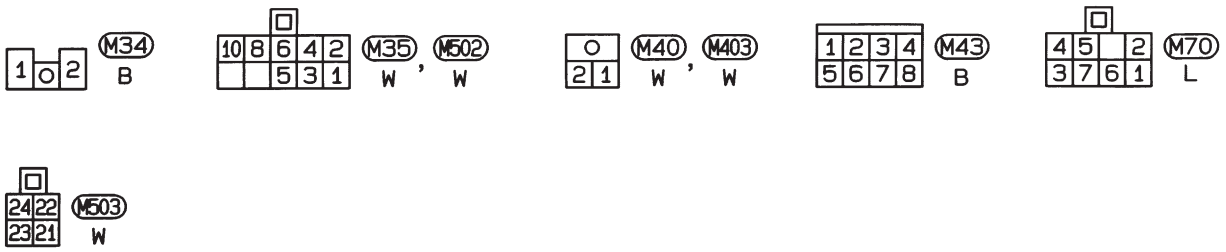

HEL345A

Simpo PDF Merge and Split Unregistered Version - http://www.simpopdf.com

Schéma de câblage – ILL –/Conduite à droite

EL-ILL-03

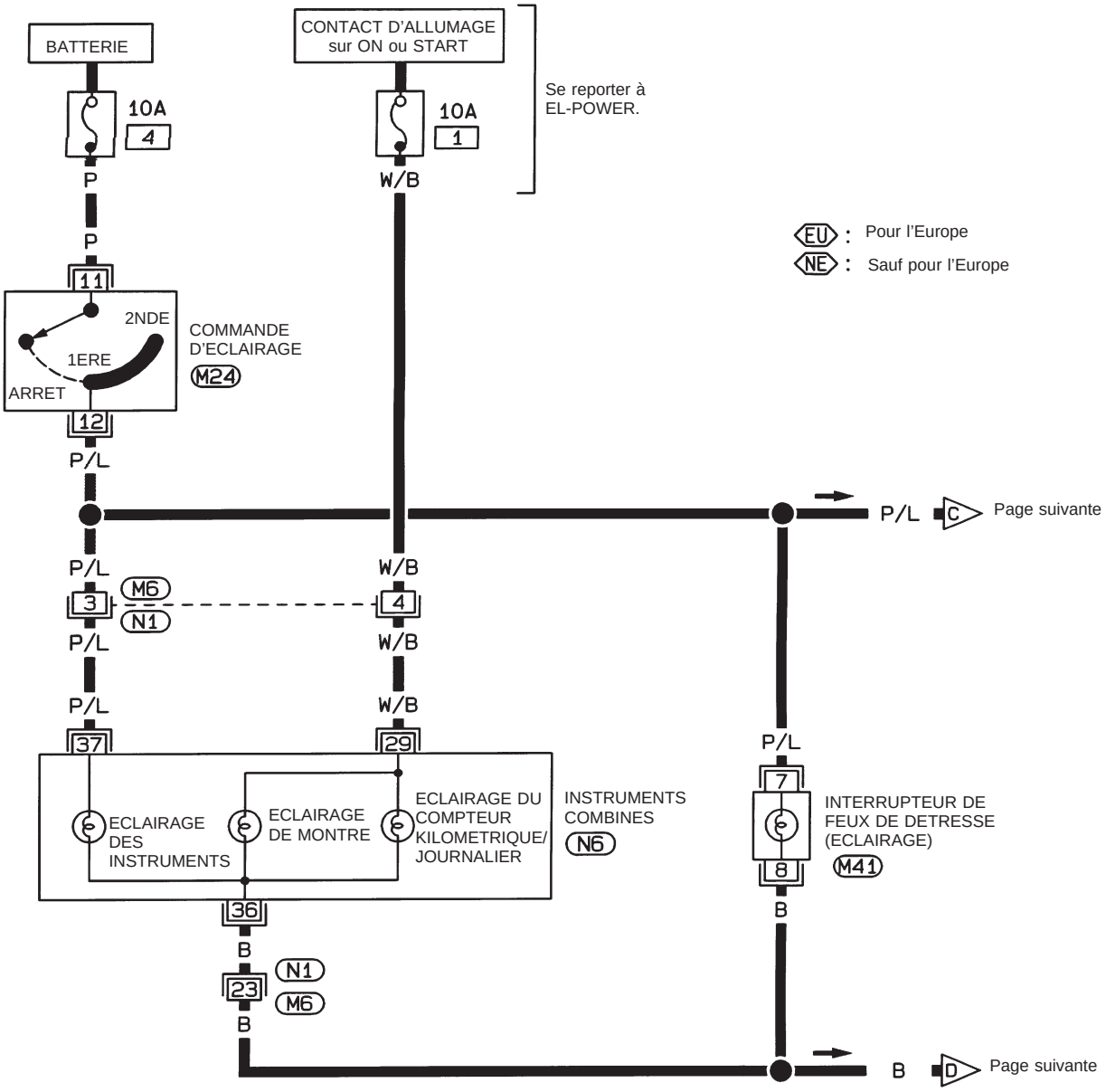

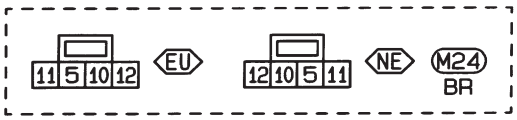

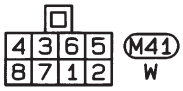

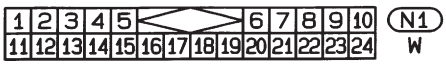

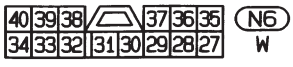

HEL346A

Simpo PDF Merge and Split Unregistered Version - http://www.simpopdf.com

Schéma de câblage – ILL –/Conduite à droite (Suite)

EL-ILL-04

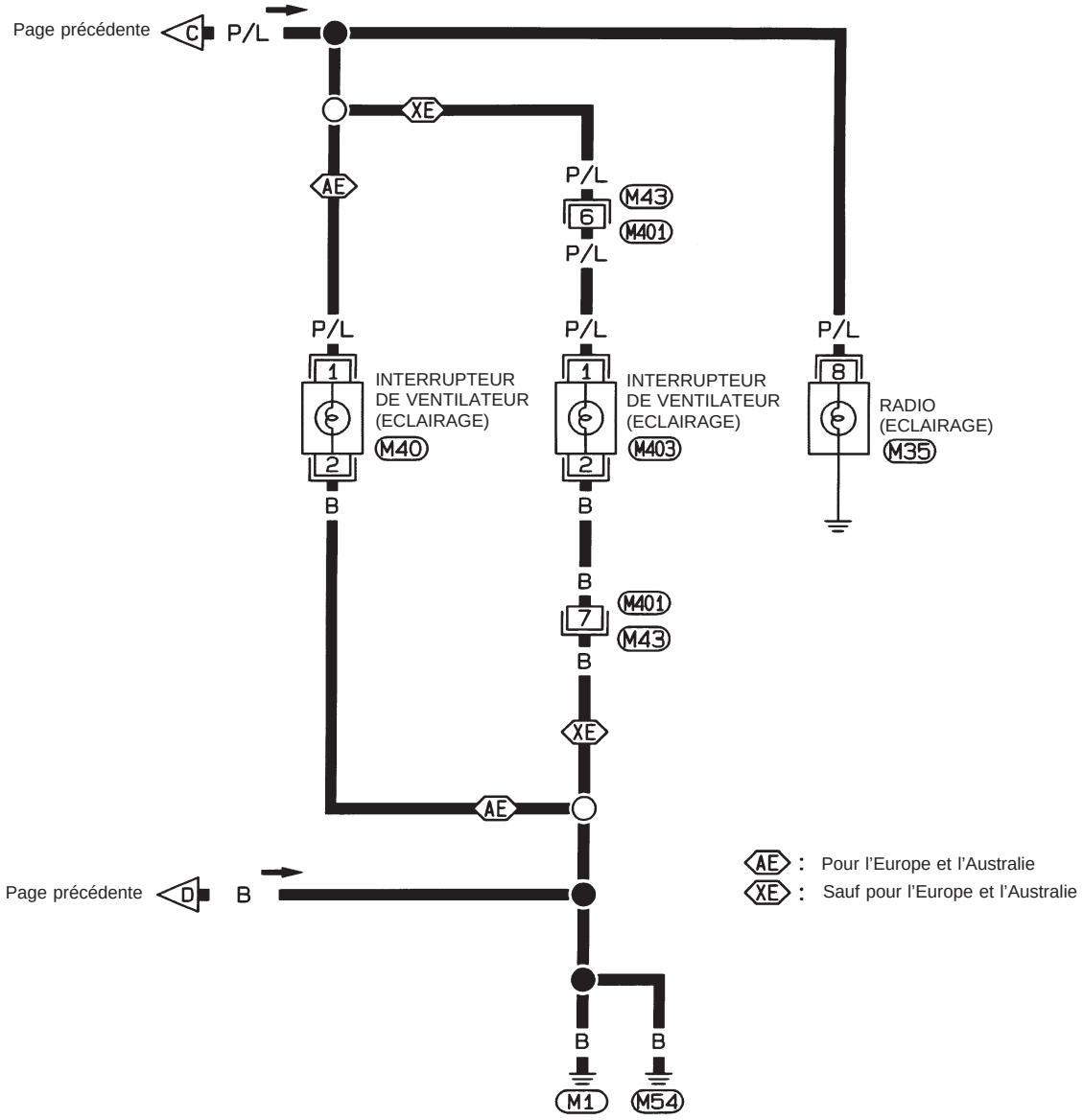

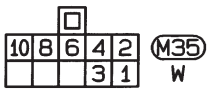



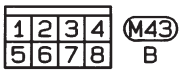

HEL347A

Simpo PDF Merge and Split Unregistered Version - http://www.simpopdf.com

Schéma de câblage – INT/L –

EL-INT/L-01

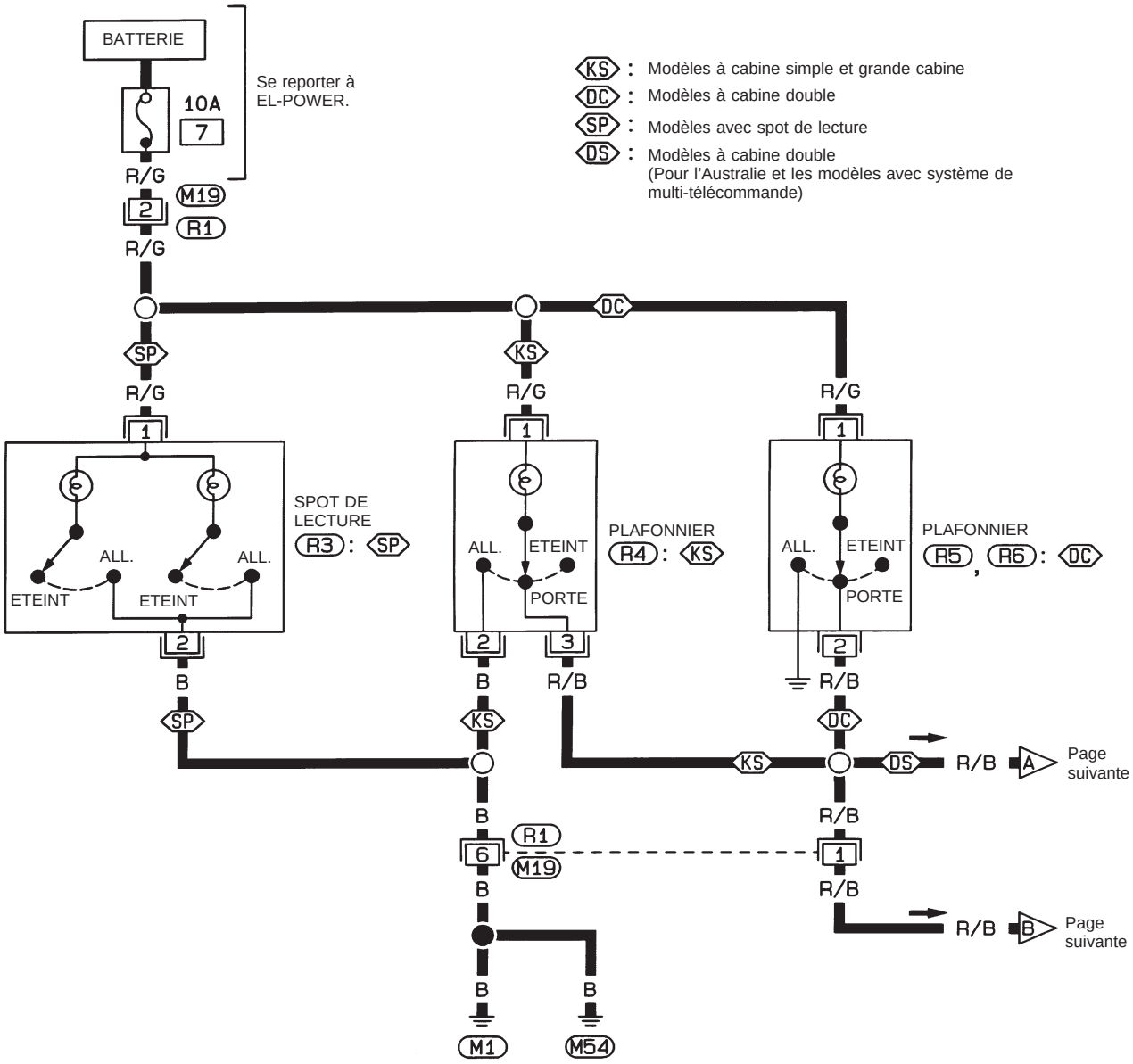

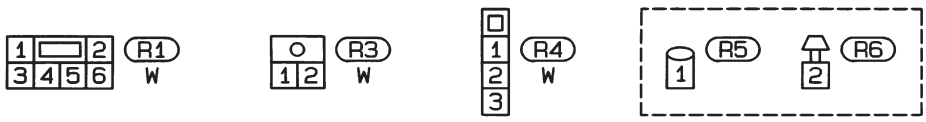

HEL348A

Simpo PDF Merge and Split Unregistered Version - http://www.simpopdf.com

Schéma de câblage – INT/L – (Suite)

EL-INT/L-02

EU : Pour l'Europe
NE : Sauf pour l'Europe
AD : Pour l'Australie et les modèles avec système de multi-télécommande
DS : Modèles à cabine double (Pour l'Australie et les modèles avec système de multi-télécommande)

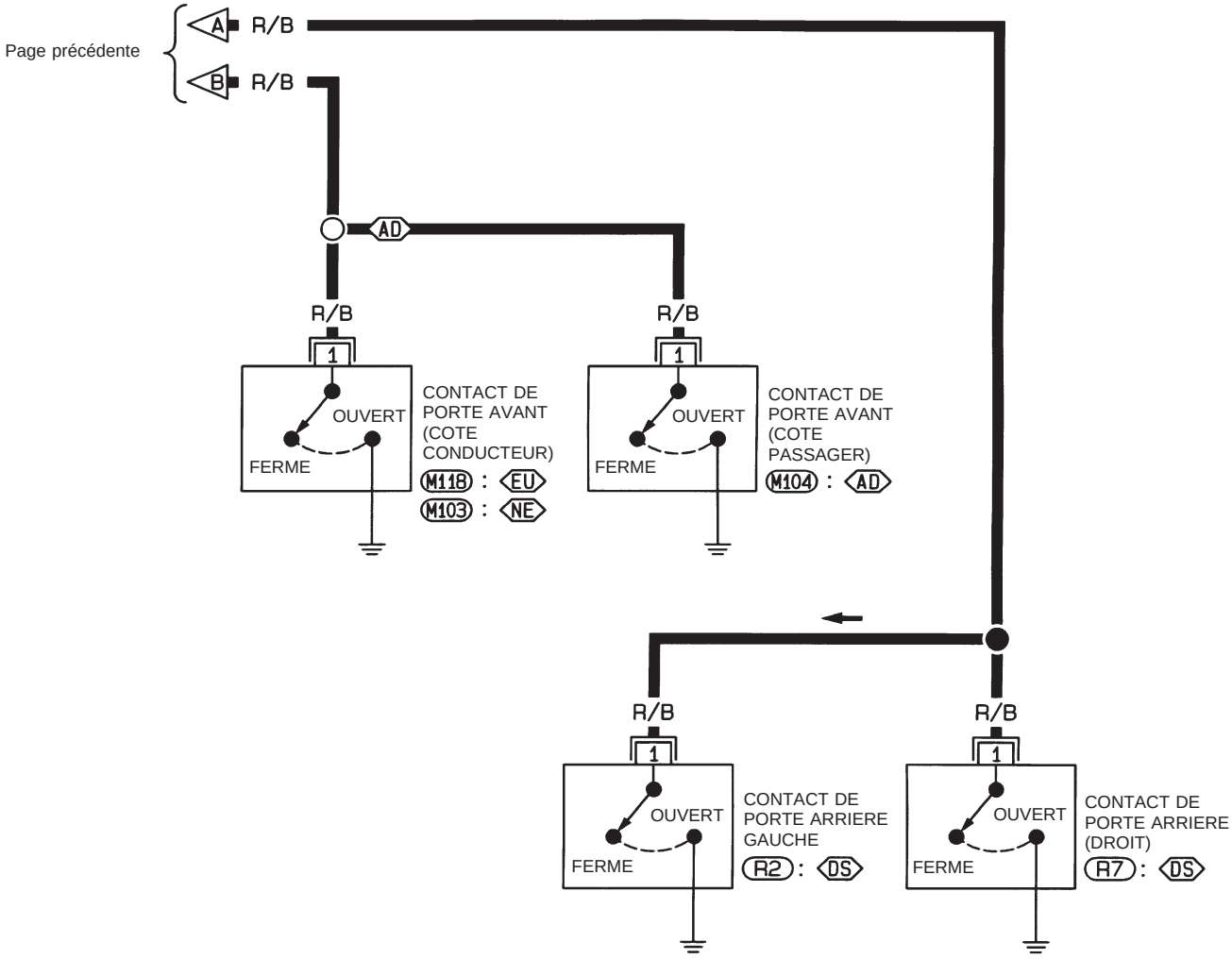



HEL349A

Simpo PDF Merge and Split Unregistered Version - http://www.simpopdf.com

Instruments combinés

POUR L'EUROPE ET LE MOYEN-ORIENT (Avec compte-tours)

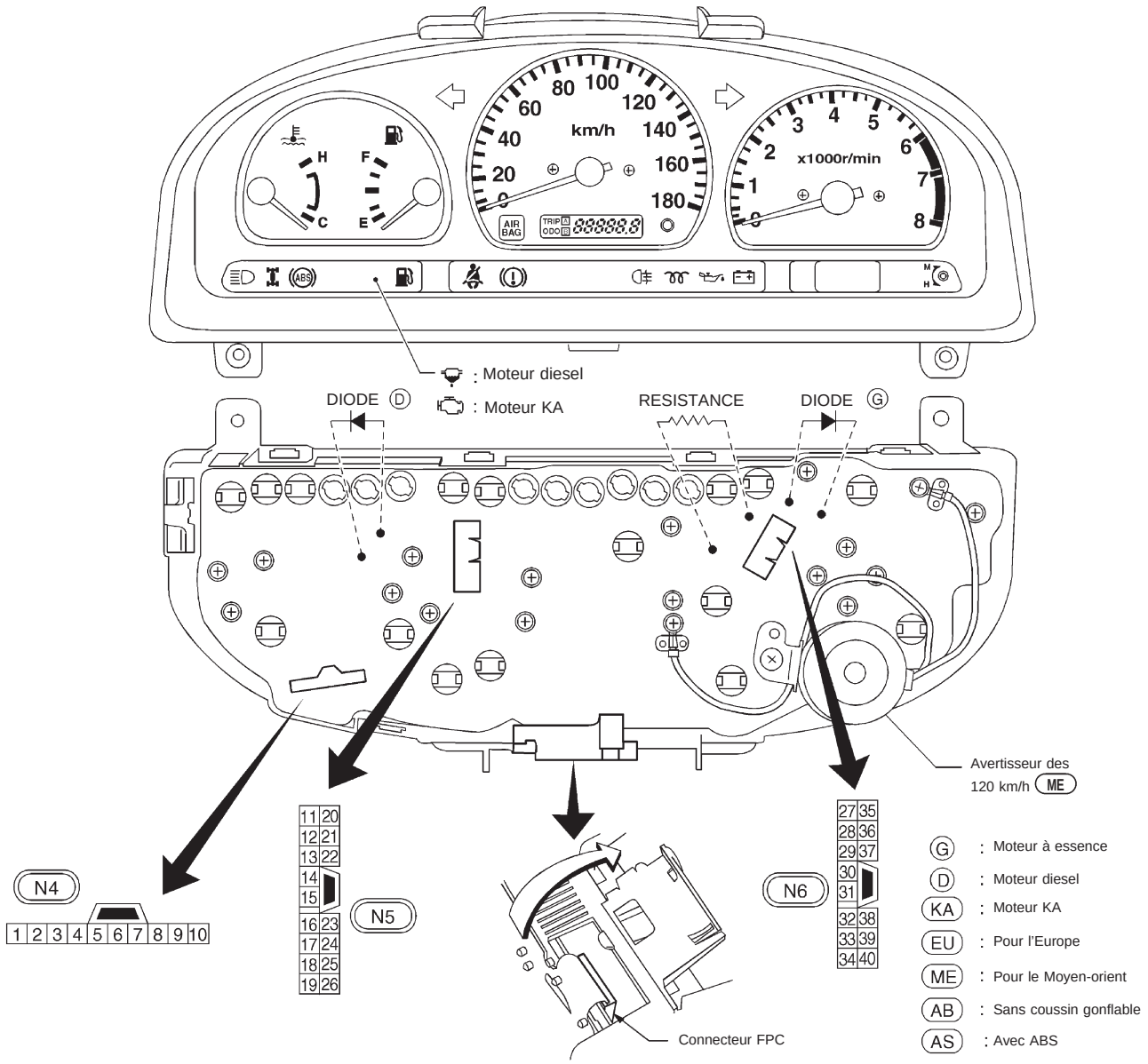

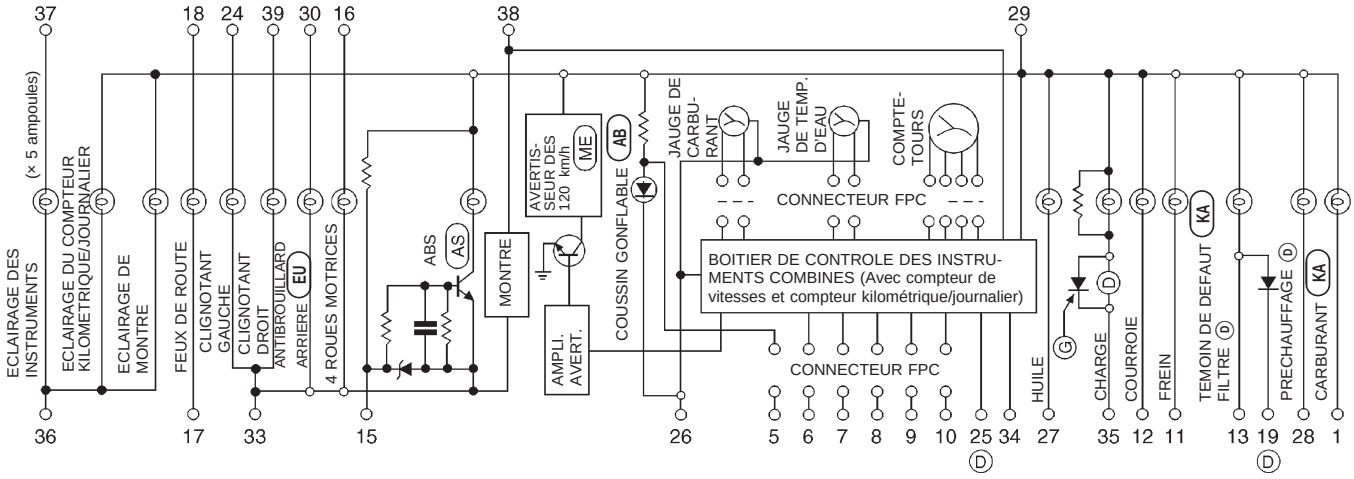

HEL350A

Simpo PDF Merge and Split Unregistered Version - http://www.simpopdf.com

Instruments combinés (Suite)

POUR L'EUROPE ET LE MOYEN-ORIENT (Sans compte-tours)

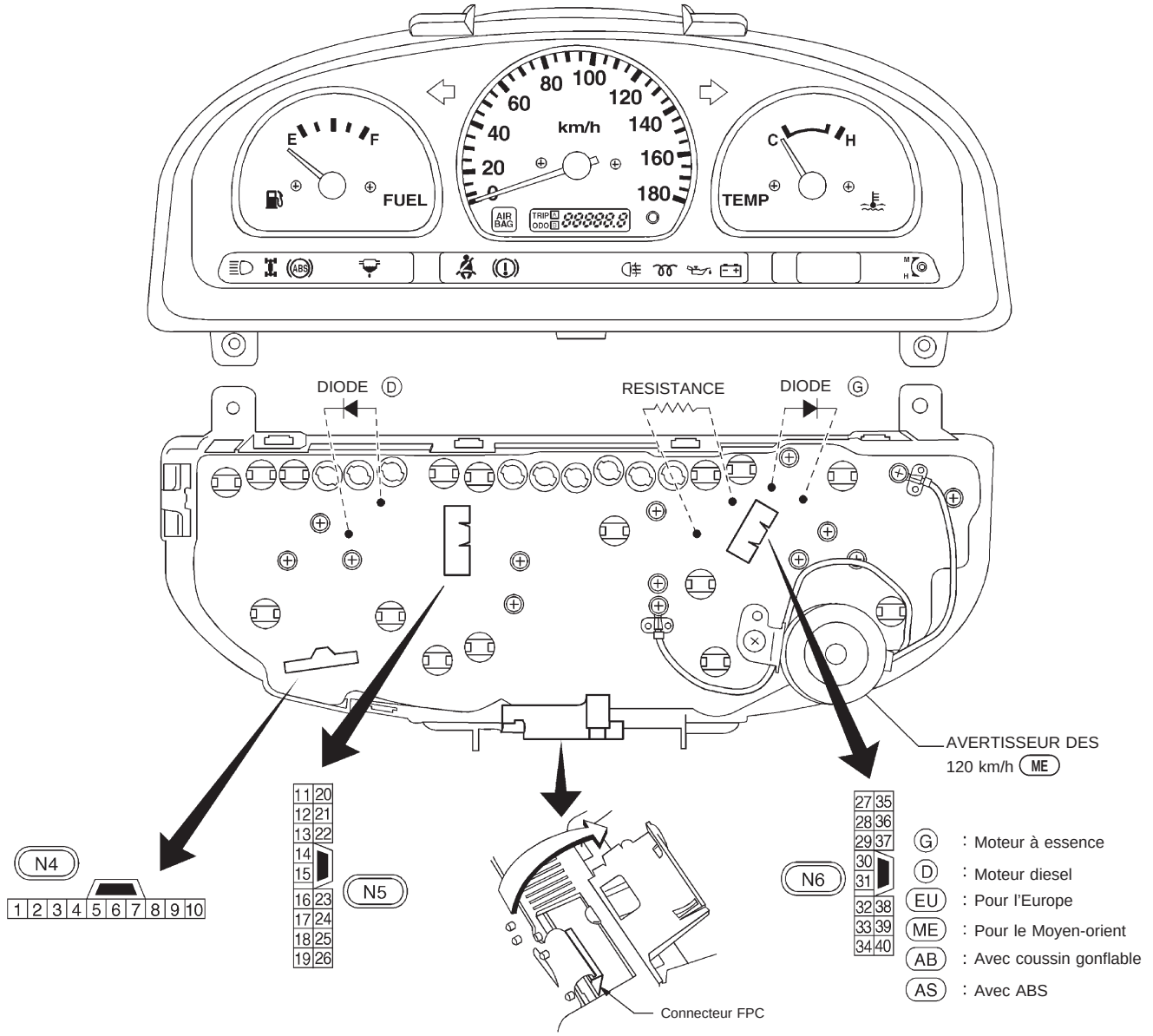

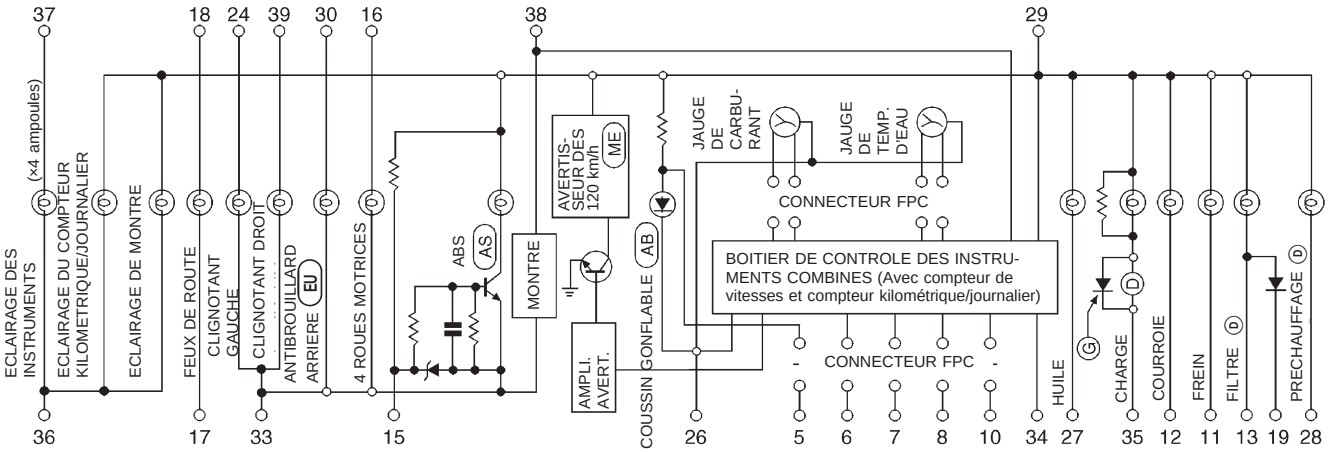

HEL351A

Simpo PDF Merge and Split Unregistered Version - http://www.simpopdf.com

Schéma

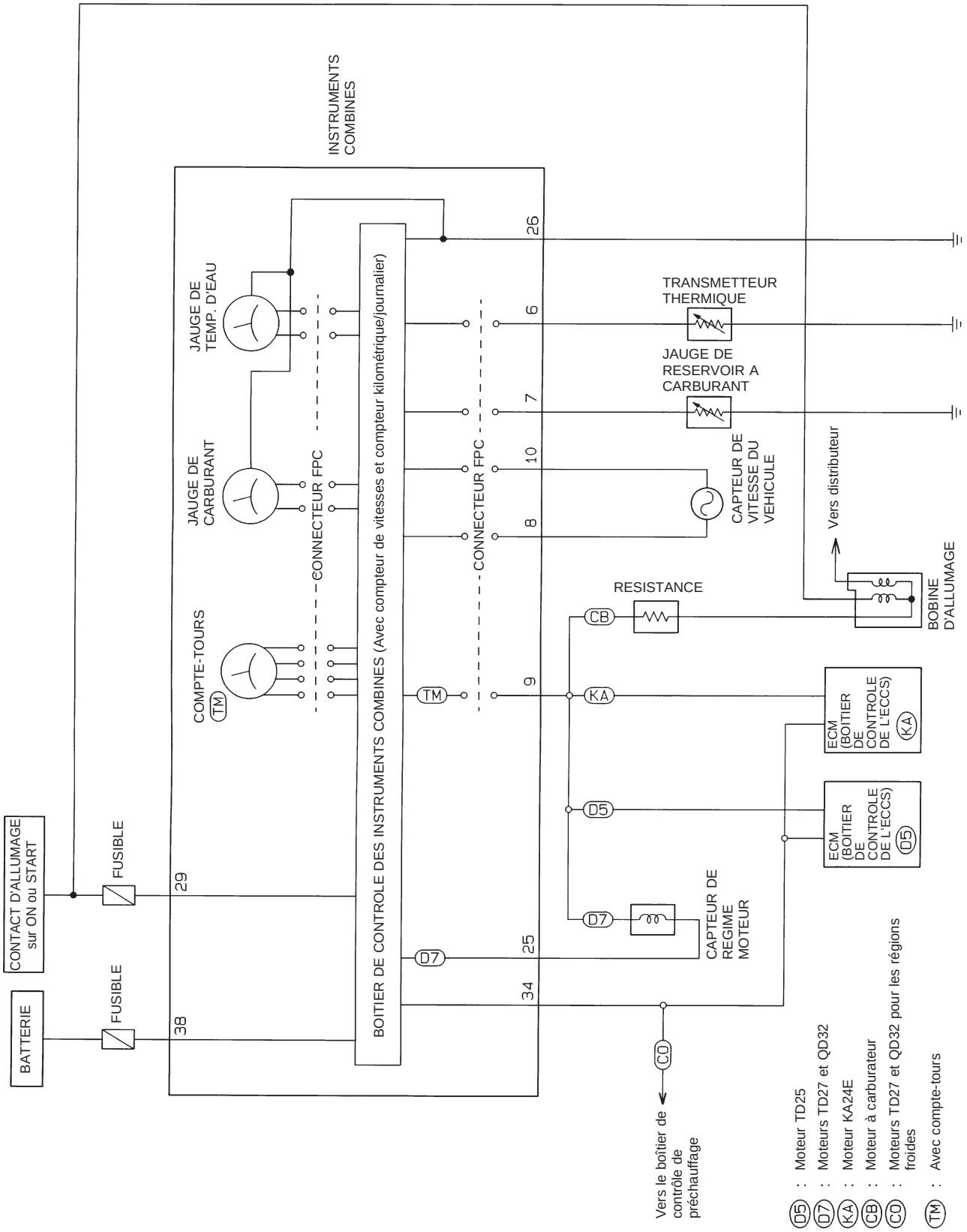

HEL352A

Simpo PDF Merge and Split Unregistered Version - http://www.simpopdf.com

Schéma de câblage – METER –/Conduite à gauche

EL-METER-01

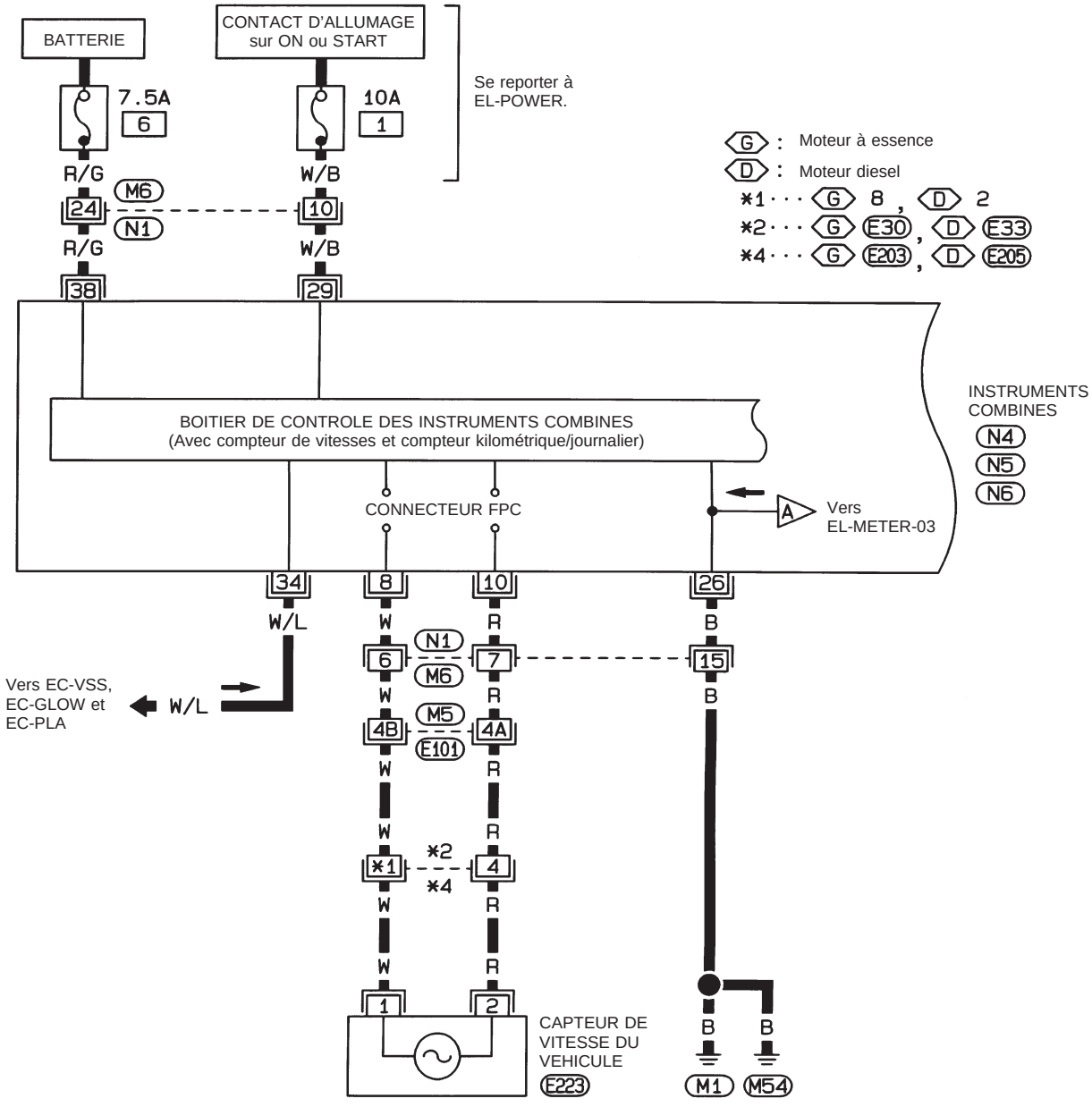





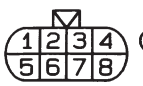

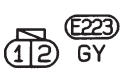

Se reporter à la dernière page dépliante.

M5 , E101

HEL353A

Simpo PDF Merge and Split Unregistered Version - http://www.simpopdf.com

Schéma de câblage – METER –/Conduite à gauche (Suite)

EL-METER-02

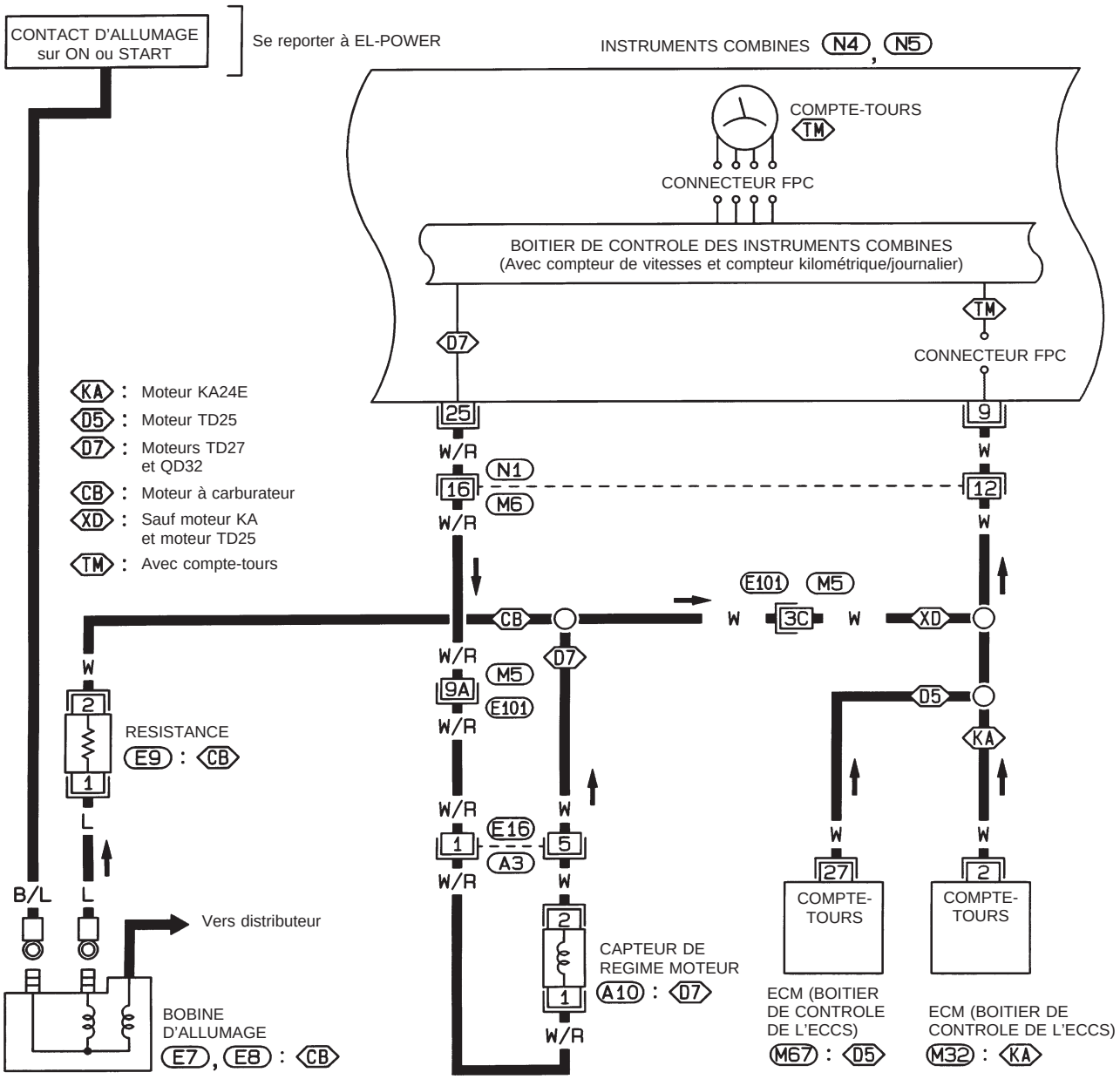

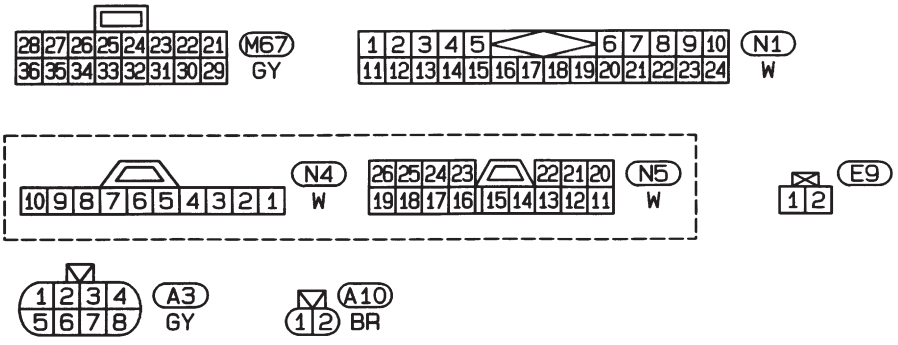

Se reporter à la dernière page dépliante.

M5, E101

M32

HEL354A

Simpo PDF Merge and Split Unregistered Version - http://www.simpopdf.com

Schéma de câblage – METER –/Conduite à gauche (Suite)

EL-METER-03

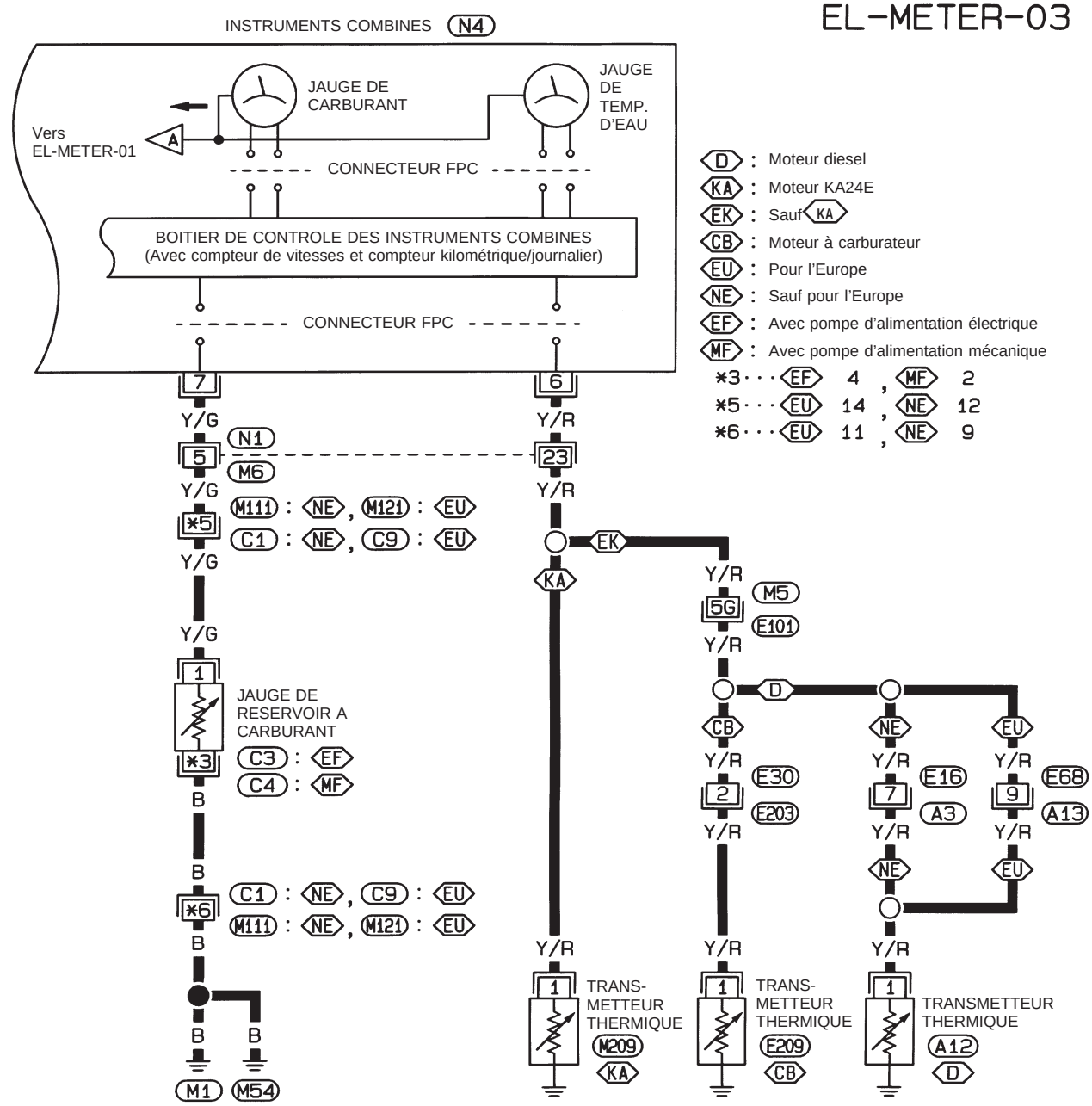

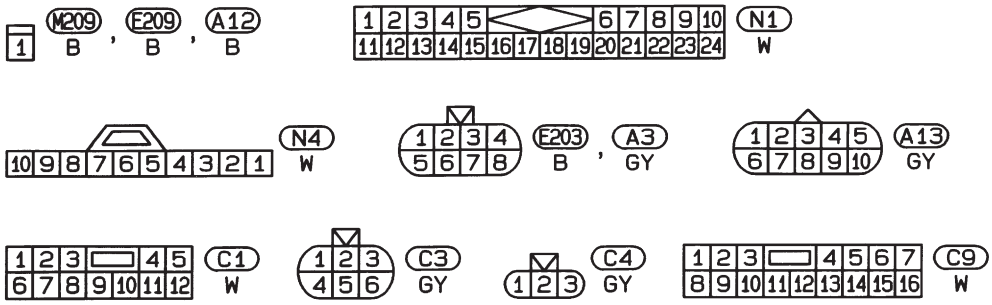

Se reporter à la dernière page dépliante.

M5 , E101

HEL355A

Simpo PDF Merge and Split Unregistered Version - http://www.simpopdf.com

Schéma de câblage – METER –/Conduite à droite

EL-METER-04

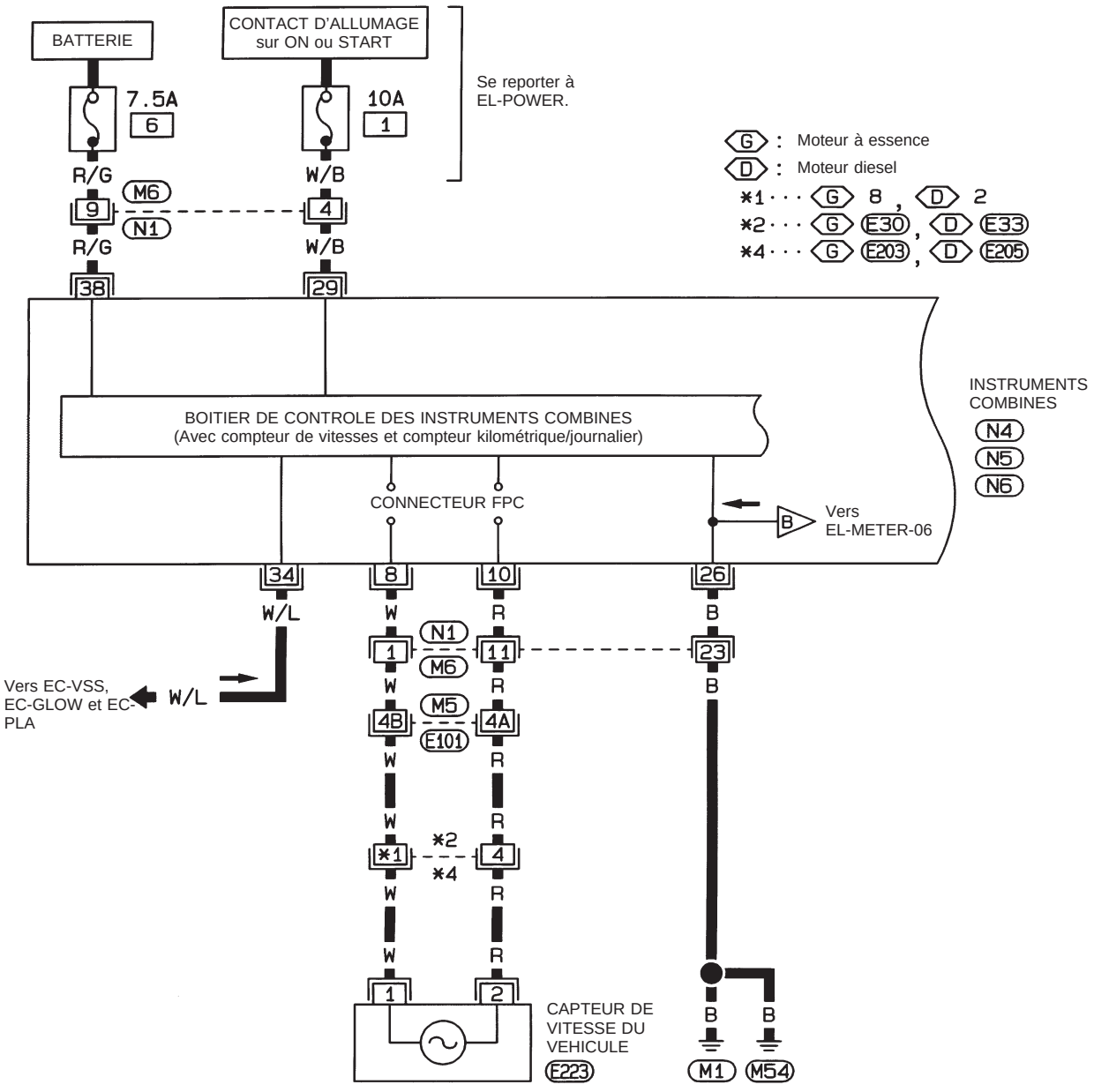

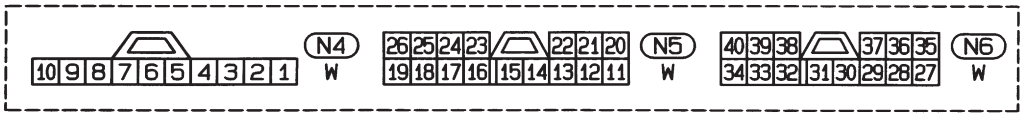

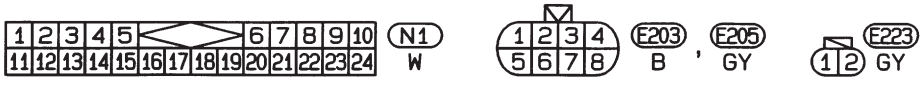

Se reporter à la dernière page dépliante.

M5 , E101

HEL356A

Simpo PDF Merge and Split Unregistered Version - http://www.simpopdf.com

Schéma de câblage – METER –/Conduite à droite (Suite)

EL-METER-05

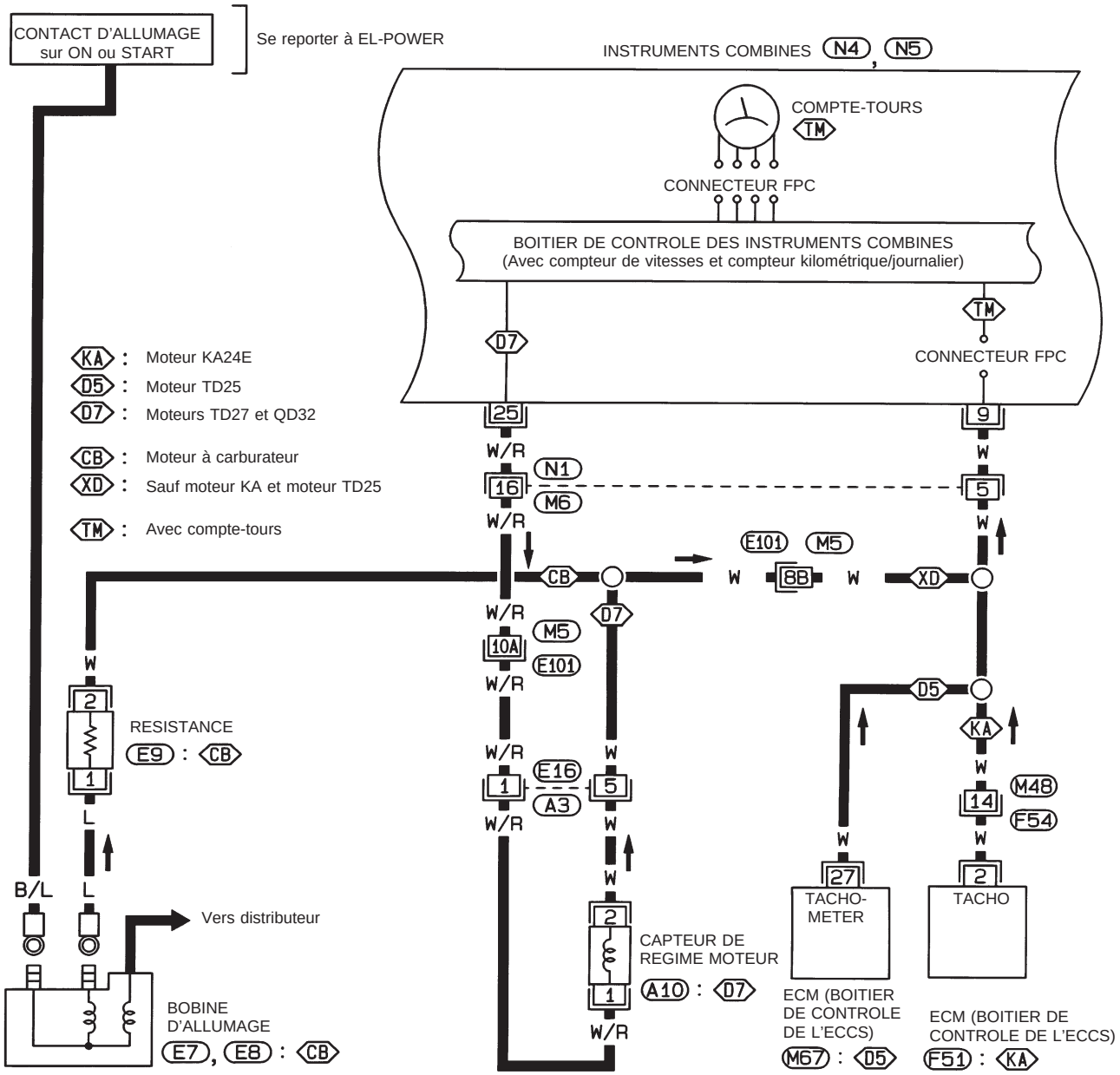

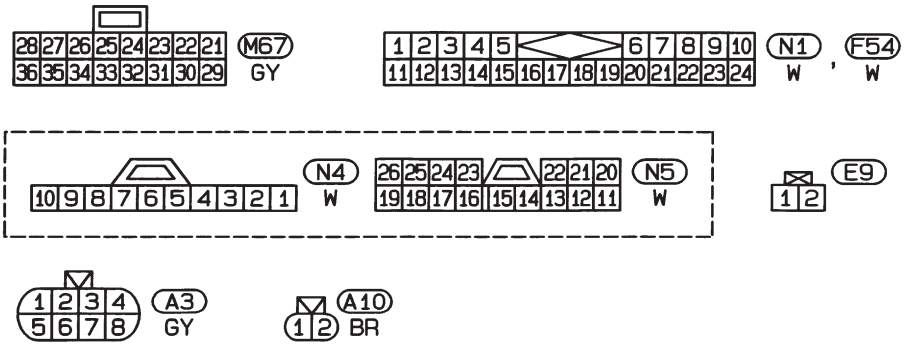

Se reporter à la dernière page dépliante.

M5, E101

F51

HEL357A

Simpo PDF Merge and Split Unregistered Version - http://www.simpopdf.com

Schéma de câblage – METER –/Conduite à droite (Suite)

EL-METER-06

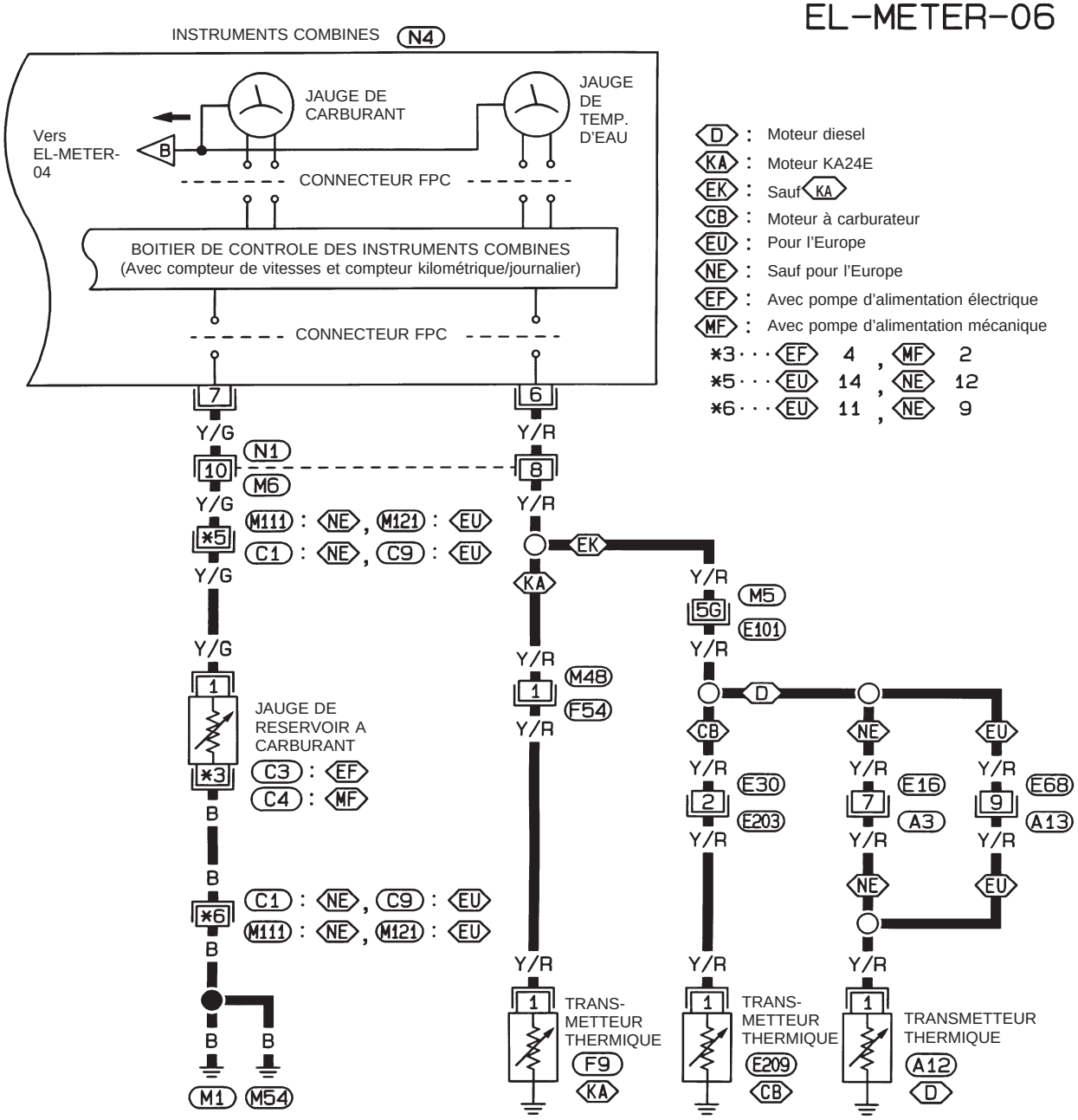

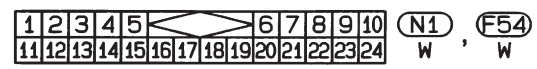



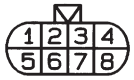



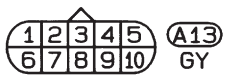

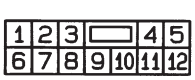

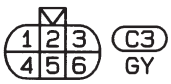

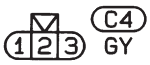

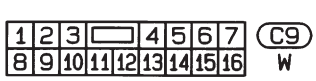

Se reporter à la dernière page dépliante.

M5 , E101

HEL358A

Simpo PDF Merge and Split Unregistered Version - http://www.simpopdf.com

Description du système des instruments à commande intégrée

INSTRUMENTS A COMMANDE INTEGREE

Le compteur de vitesse, le compteur kilométrique/journalier, le compte-tours, la jauge de carburant et la jauge de température d'eau sont entièrement contrôlés par le boîtier de contrôle intégré au compteur de vitesse.

Fonctionnement des instruments/jauges et contrôle des segments de compteur kilométrique/journalier en mode de diagnostic

FONCTION DE DIAGNOSTIC

- Les segments du compteur kilométrique/journalier peuvent être vérifiés en mode de diagnostic.
- Les instruments/Jauges peuvent être vérifiés en mode de diagnostic.

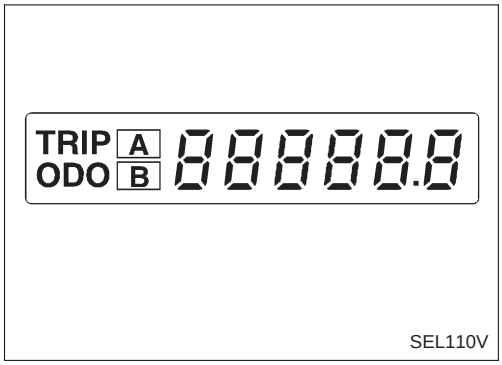

SEL110V

COMMENT PASSER D'UN MODE DE DIAGNOSTIC A L'AUTRE

1. Mettre le contact d'allumage sur ''ON'' et placer le compteur kilométrique/journalier en position ''TRIP A'' ou ''TRIP B''.
2. Mettre le contact d'allumage sur ''OFF''.
3. Mettre le contact d'allumage sur ''ON'' tout en poussant sur le bouton de réglage du compteur kilométrique/journalier.
4. Vérifier que le compteur kilométrique journalier indique ''000.0''.
5. Appuyer sur le bouton de réglage du compteur kilométrique/journalier plus de trois fois en 5 secondes.
6. Tous les segments du compteur kilométrique/journalier numérique doivent être allumés.

REMARQUE : Si certains segments ne s'allument pas, le compteur de vitesses (boîtier de contrôle des instruments combinés) ainsi que le compteur kilométrique/journalier doivent être remplacés.

A ce stade, les instruments à commande intégrée sont passés en mode de diagnostic.

Avec compte-tours

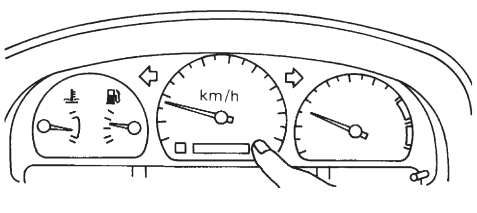

SEL163V

7. Appuyer sur le bouton de réglage du compteur kilométrique/journalier. Lorsque le bouton de réglage du compteur électrique/journalier est enclenché, l'indication sur chaque instrument/jauge doit être comme celle illustrée à gauche, s'il n'y a pas de défaut.

Note : Il faut environ 1 minute pour que l'indicateur de la jauge de réservoir à carburant se stabilise.

Simpo PDF Merge and Split Unregistered Version - http://www.simpopdf.com

Fonctionnement des instruments/jauges et contrôle des segments de compteur kilométrique/journalier en mode de diagnostic (Suite)

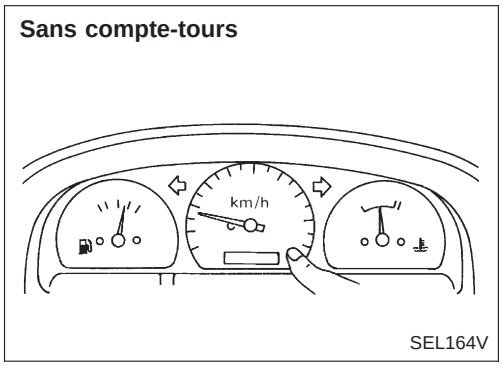

Circuit imprimé souple (FPC)

Le compte-tours, la jauge de réservoir à carburant et la jauge de température d'eau sont connectés au boîtier de contrôle des instruments combinés (compteur de vitesse) par le connecteur du circuit imprimé souple (FPC). Lors du remplacement ou de la dépose/repose des instruments à commande intégrée (compteur de vitesse), débrancher et rebrancher le connecteur FPC en procédant comme suit :

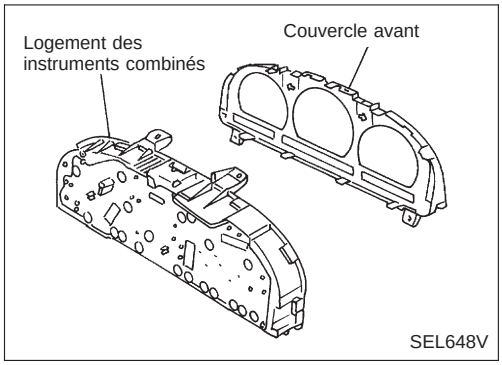

DEBRANCHEMENT

1. Déposer le couvercle avant du logement des instruments combinés.

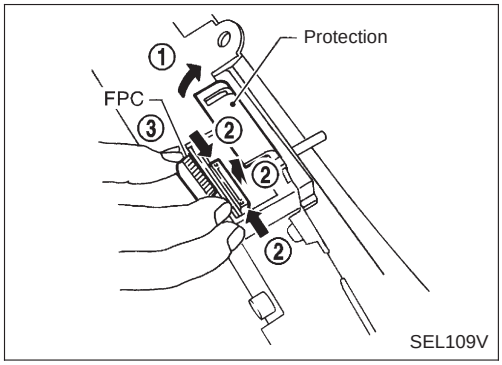

2. Ouvrir le cache de la protection du connecteur.
3. Déverrouiller le connecteur en maintenant ses deux extrémités et en le tirant vers le haut.
4. Débrancher le FPC en le tirant vers le haut.

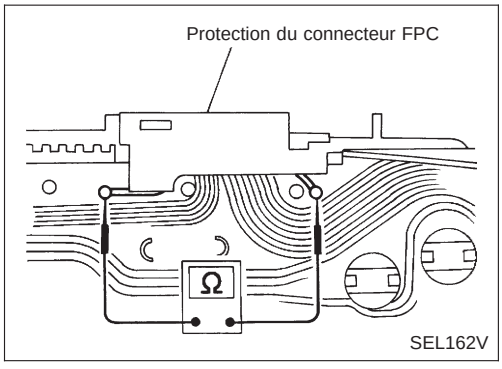

BRANCHEMENT

1. Insérer le FPC dans le connecteur puis verrouiller le connecteur en poussant le FPC vers le bas.
2. Vérifier si le FPC est correctement branché.
3. Vérifier la continuité aux bornes d'essai pour s'assurer que le FPC est fermement branché.
   Résistance : 0Ω
4. Fermer le cache de la protection du connecteur.

Simpo PDF Merge and Split Unregistered Version - http://www.simpopdf.com

Diagnostics des défauts

VERIFICATION PRELIMINAIRE

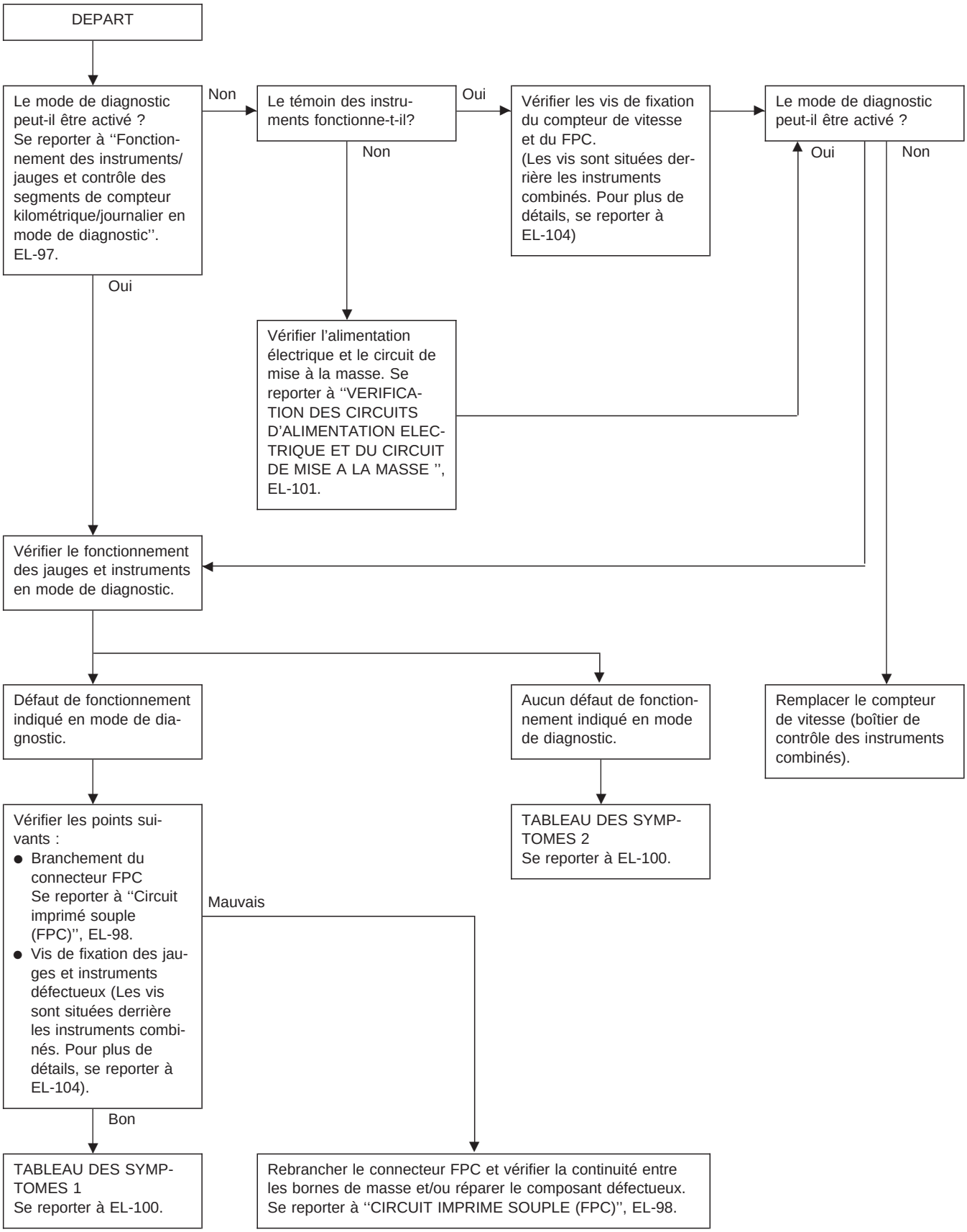

Simpo PDF Merge and Split Unregistered Version - http://www.simpopdf.com

Diagnostics des défauts (Suite)

Avant de procéder au diagnostic de défaut ci-dessous, effectuer le contrôle préliminaire, EL-99.

TABLEAU DES SYMPTOMES 1 (DEFAUT DE FONCTIONNEMENT INDIQUE EN MODE DE DIAGNOSCTIC)

Symptôme	Causes possibles	Ordre de réparation
Le compteur de vitesse et/ou le compteur kilométrique/journalier indiquent un défaut en mode de diagnostic.	● Compteur de vitesse (boîtier de contrôle des instruments intégré)	● Remplacer le compteur de vitesse (boîtier de contrôle des instruments intégré).
Plusieurs instruments/jauges présentent un défaut en mode de diagnostic.		
Le compte-tours, la jauge de carburant ou la jauge de température d'eau indique un défaut en mode de diagnostic.	● Instruments/Jauges ● Compteur de vitesse (boîtier de contrôle des instruments intégré)	1. Vérifier la résistance des jauges et instruments qui présentent un défaut. Si la résistance est mauvaise, remplacer la jauge/l'instrument. Se reporter à ''CONTROLE DE LA RESISTANCE DES INSTRUMENTS/JAUGES'', EL-104. 2. Si la resistance est bonne, remplacer le compteur de vitesse (boîtier de contrôle des instruments intégré).

TABLEAU DES SYMPTOMES 2 (AUCUN DEFAUT DE FONCTIONNEMENT INDIQUE EN MODE DE DIAGNOSCTIC)

Symptôme	Causes possibles	Ordre de réparation
Le compteur de vitesse et le compteur kilométrique/journalier sont défectueux.	1. Capteur - Compteur de vitesse et compteur kilométrique/journalier 2. Connecteur FPC 3. Compteur de vitesse (boîtier de contrôle des instruments intégré)	1. Vérifier le capteur de vitesse du véhicule. INSPECTION/CAPTEUR DE VITESSE DU VEHICULE (Se reporter à EL-102). 2. Vérifier le connecteur FPC.Se reporter à ''CIRCUIT IMPRIME SOUPLE (FPC)'', EL-98. 3. Remplacer le compteur de vitesse (boîtier de contrôle des instruments intégré).
Plusieurs instruments/jauges sont défectueux (sauf compteur de vitesse, compteur kilométrique/journalier).	1. Connecteur FPC 2. Compteur de vitesse (boîtier de contrôle des instruments intégré)	1. Vérifier le connecteur FPC. Se reporter à ''CIRCUIT IMPRIME SOUPLE (FPC)'', EL-98. 2. Remplacer le compteur de vitesse (boîtier de contrôle des instruments intégré).
Le compte-tours, la jauge de carburant ou la jauge de température d'eau est défectueux.	1. Capteur/Signal de régime moteur - Compte-tours - Jauge à carburant - Jauge de temp. d'eau 2. Connecteur FPC 3. Compteur de vitesse (boîtier de contrôle des instruments intégré)	1. Vérifier le capteur des jauges et instruments défectueux. INSPECTION/SIGNAL DE REGIME MOTEUR (Se reporter à EL-102). INSPECTION/JAUGE DE RESERVOIR A CARBURANT (Se reporter à EL-103). INSPECTION/TRANSMETTEUR THERMIQUE (Se reporter à EL-103). 2. Vérifier le connecteur FPC. Se reporter à ''CIRCUIT IMPRIME SOUPLE (FPC)'', EL-98. 3. Remplacer le compteur de vitesse (boîtier de contrôle des instruments intégré).

Simpo PDF Merge and Split Unregistered Version - http://www.simpopdf.com

Diagnostics des défauts (Suite)

VERIFICATION DES CIRCUITS D'ALIMENTATION ELECTRIQUE ET DU CIRCUIT DE MISE A LA MASSE

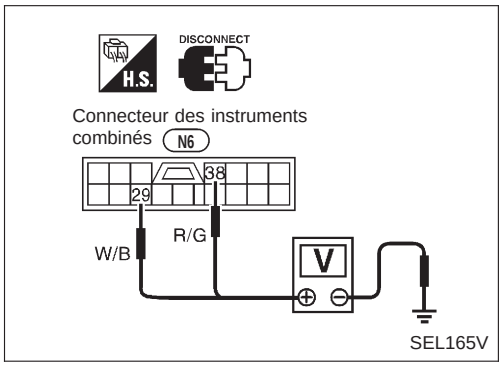

Vérification du circuit de l'alimentation électrique

Bornes		Position du contact d'allumage		
⊕	⊖	OFF	Acc	ON
㊳	Masse	Tension de la batterie	Tension de la batterie	Tension de la batterie
㉙	Masse	0V	0V	Tension de la batterie

Si le résultat n'est pas satisfaisant, vérifier les points suivants.

- Fusible de 7,5A [n° 6, situé dans le boîtier à fusibles (J/B)]
- Fusible de 10A [n° 1, situé dans le boîtier à fusibles (J/B)]
- Faisceau ouvert ou court-circuité entre le fusible et les instruments combinés

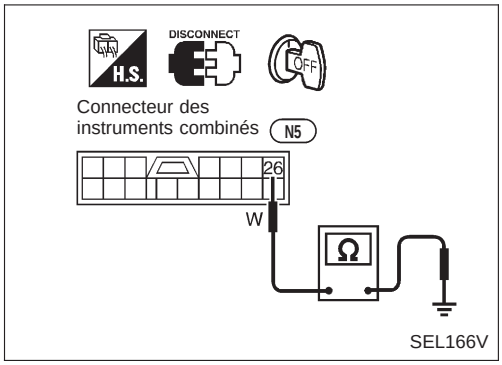

Vérification du circuit de masse

Bornes	Continuité
㉖ - Masse	Oui

Simpo PDF Merge and Split Unregistered Version - http://www.simpopdf.com

Diagnostics des défauts (Suite)

INSPECTION/CAPTEUR DE VITESSE DU VEHICULE

A

VERIFICATION DE LA SORTIE DU CAPTEUR DE VITESSE DU VEHICULE.
1. Déposer le capteur de vitesse du véhicule de la transmission.
2. Vérifier la tension entre les bornes ⑧ et ⑩ des instruments combinés tout en tournant rapidement le pignon du capteur de vitesse.
   Tension : environ 0,5V

Bon → Le capteur de vitesse du véhicule fonctionne correctement.

Mauvais ↓

B

VERIFICATION DU CAPTEUR DE VITESSE DU VEHICULE.
Vérifier la résistance entre les bornes ① et ② du capteur de vitesse du véhicule.
Résistance : Environ 250Ω

Mauvais → Remplacer le capteur de vitesse du véhicule.

Bon ↓

Vérifier le faisceau ou le connecteur entre le compteur de vitesse et le capteur de vitesse du véhicule.

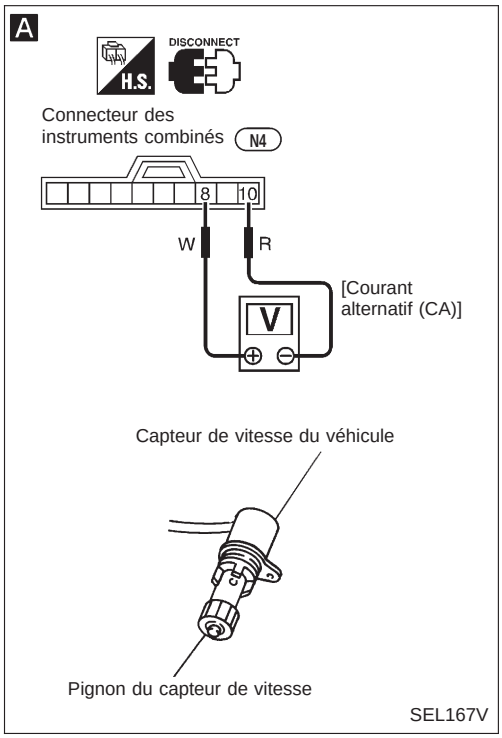

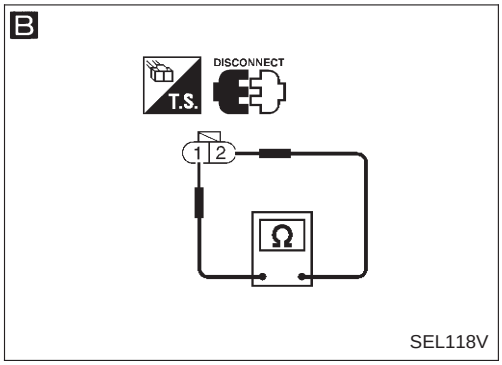

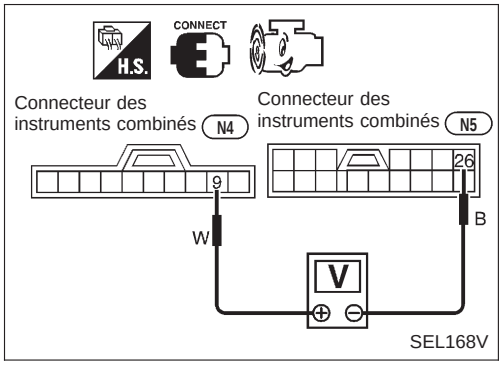

INSPECTION/SIGNAL DE REGIME MOTEUR (Modèles avec compte-tours)

Moteur	Elément de contrôle	Bornes ⊕	Bornes ⊖	Explication
Injection	Tension du courant continu	⑨	㉖	Tr/mn élevé = tension élevée Tr/mn inférieur = basse tension La tension variera en fonction du régime moteur.
Diesel (TD25)				
Carburateur	Tension du courant alternatif			

Si le résultat n'est pas satisfaisant, vérifier le point suivant.

Moteur	Elément de contrôle
Injection	● Faisceau ouvert ou court-circuité et raccords
Carburateur	● Faisceau ouvert ou court-circuité et raccords ● Résistance etc.
Diesel	● Faisceau ouvert ou court-circuité et raccords ● Capteur de régime moteur etc.

Simpo PDF Merge and Split Unregistered Version - http://www.simpopdf.com

Diagnostics des défauts (Suite)

INSPECTION/JAUGE DE RESERVOIR A CARBURANT

A

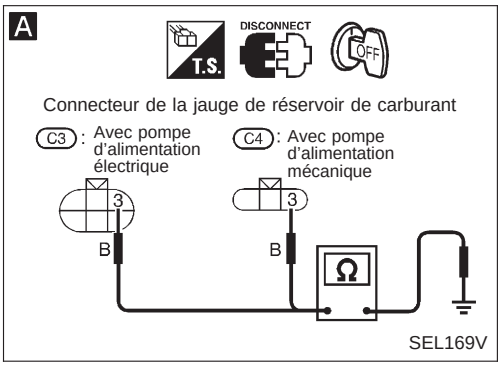

VERIFIER LE CIRCUIT DE MISE A LA MASSE DE LA JAUGE DE RESERVOIR A CARBURANT.
Vérifier la continuité du faisceau entre la borne ③ de la jauge de réservoir à carburant et la masse.
Il doit y avoir continuité.

Mauvais → Réparer le faisceau ou le connecteur.

Bon ↓

VERIFIER LES JAUGES.
Se reporter à ''CONTROLE DE LA JAUGE DE RESERVOIR A CARBURANT'', (EL-104).

Mauvais → Réparer ou remplacer. Se reporter à la section FE.

Bon ↓

B

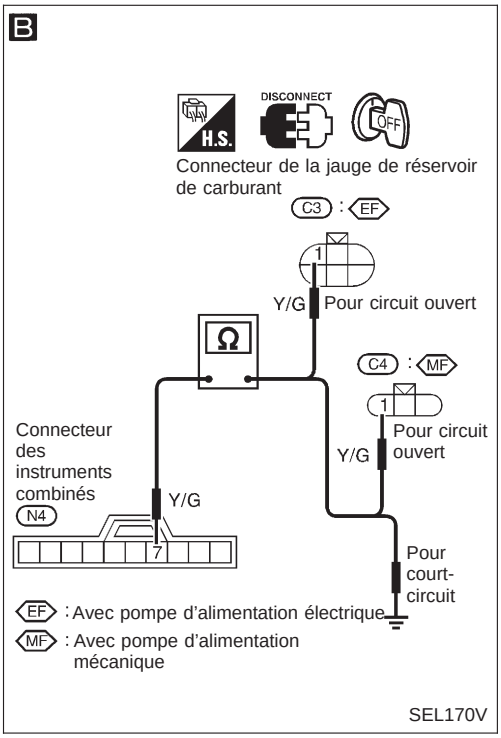

VERIFIER LE FAISCEAU.
1. Débrancher le connecteur N4 des instruments combinés ainsi que le connecteur de la jauge de réservoir à carburant.
2. Vérifier la continuité du faisceau entre la borne ⑦ des instruments combinés et la borne ① de la jauge de réservoir à carburant.

Il doit y avoir continuité.

3. Vérifier la continuité entre la borne ⑦ des instruments combinés et la masse.

Il ne doit pas y avoir continuité.

Mauvais → Réparer le faisceau ou le connecteur.

Bon ↓

La jauge de réservoir à carburant fonctionne correctement.

INSPECTION/TRANSMETTEUR THERMIQUE

VERIFIER LE TRANSMETTEUR THERMIQUE.
Se reporter à ''CONTROLE DU TRANSMETTEUR THERMIQUE', (EL-105).

Mauvais → Réparer ou remplacer.

Bon ↓

A

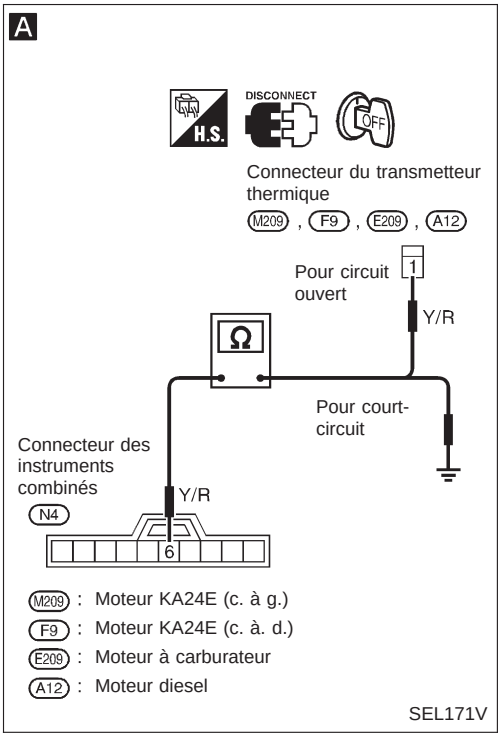

VERIFIER LE FAISCEAU.
1. Débrancher le connecteur N4 des instruments combinés ainsi que le connecteur du transmetteur thermique.
2. Vérifier que le faisceau n'est pas ouvert ou en court-circuit entre la borne ⑥ des instruments combinés et la borne ① du transmetteur thermique.
3. Vérifier la continuité entre la borne ⑥ des instruments combinés et la masse.

Il ne doit pas y avoir continuité.

Mauvais → Réparer le faisceau ou le connecteur.

Bon ↓

Le transmetteur thermique fonctionne correctement.

Simpo PDF Merge and Split Unregistered Version - http://www.simpopdf.com

Inspection des composants électriques

CONTROLE DE LA RESISTANCE DES INSTRUMENTS/JAUGES

1. Débrancher le connecteur FPC. Se reporter à EL-98.
2. Vérifier la résistance entre les vis de montage des jauges et instruments.

Vis		Résistance Ω
Compte-tours	Jauge Carburant/ Temp.	
A - C	A - C	Environ 70 - Environ 140
B - D	B - C	Environ 90 - Environ 170

Avec compte-tours

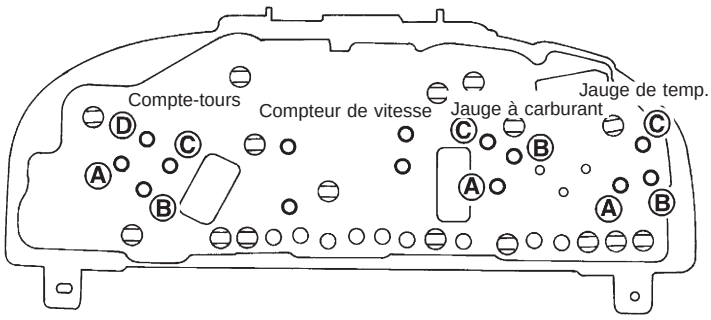

SEL172V

Sans compte-tours

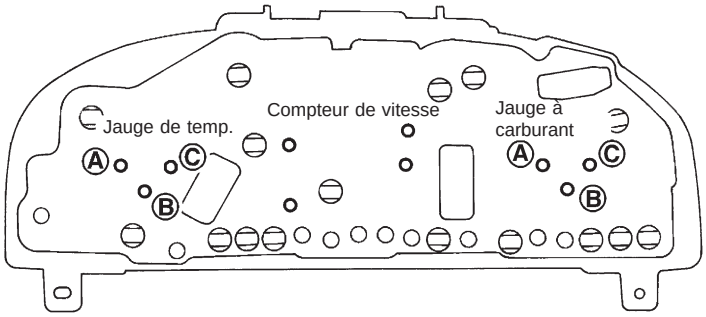

SEL173V

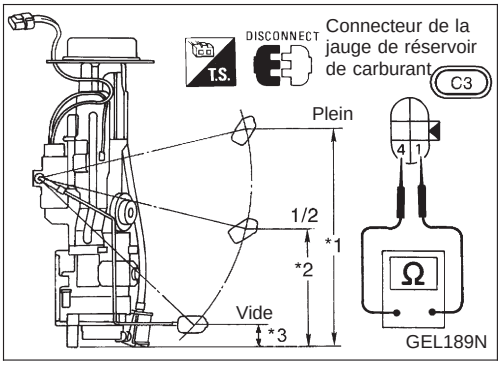

CONROLE DE LA JAUGE DE RESERVOIR A CARBURANT (Avec pompe d'alimentation électrique)

● Pour la dépose, consulter la section FE.

Contrôler la résistance entre les bornes ① et ④.

Ohmmètre		Position du flotteur mm				Valeur de résistance (Ω)
(+)	(−)			réservoir 60ℓ	réservoir 80ℓ	
①	④	*1	Plein	253	247	Environ 4 - 6
		*2	1/2	130	130	27 - 35
		*3	Vide	27	26	78 - 85

*1 et *3 : Lorsque la tige du flotteur est en contact avec la butée.

Simpo PDF Merge and Split Unregistered Version - http://www.simpopdf.com

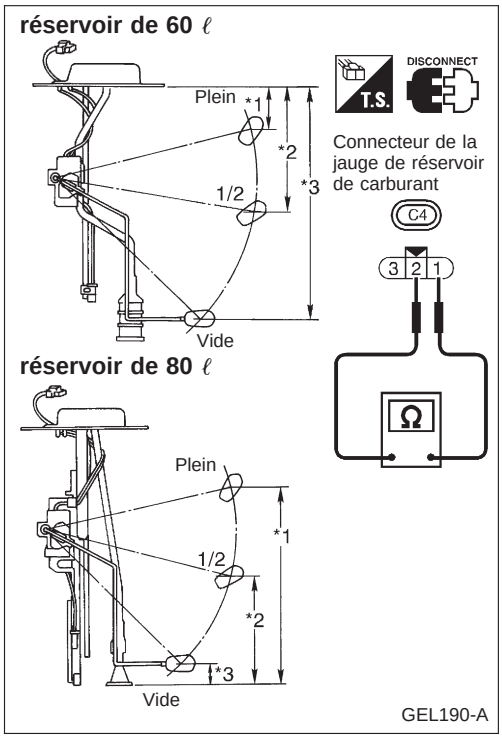

GEL190-A

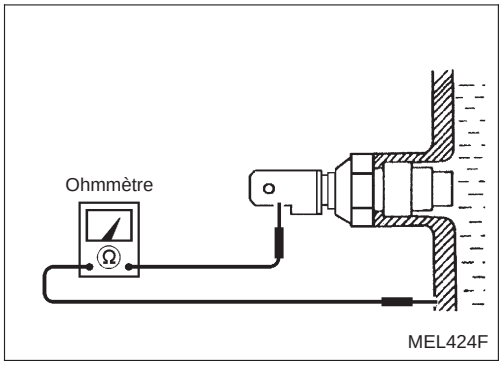

MEL424F

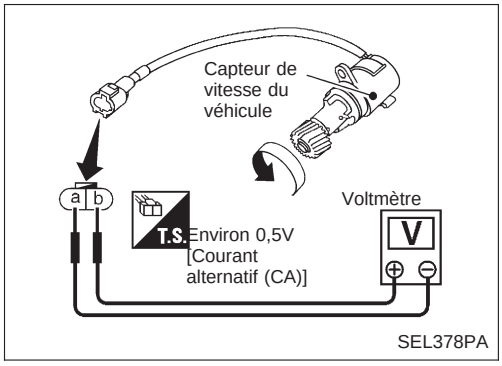

SEL378PA

Inspection des composants électriques (Suite)

CONTROLE DE LA JAUGE DE RESERVOIR A CARBURANT (Avec pompe d'alimentation mécanique)

- Pour la dépose, consulter la section FE.

Contrôler la résistance entre les bornes ① et ②.

Ohmmètre		Position du flotteur mm				Valeur de résistance (Ω)
(+)	(−)			réservoir 60ℓ	réservoir 80ℓ	
①	②	*1	Plein	50	247	Environ 4 - 6
		*2	1/2	174	130	27 - 35
		*3	Vide	277	26	78 - 85

VERIFICATION DU TRANSMETTEUR THERMIQUE

Vérifier la résistance entre les bornes du transmetteur thermique et la masse de carrosserie.

Temperature d'eau	Résistance
60°C	Environ 167 - 211Ω
100°C	Environ 47 - 53Ω

VERIFICATION DU SIGNAL DE CAPTEUR DE VITESSE DU VEHICULE

1. Déposer le capteur de vitesse du véhicule de la transmission.
2. Tourner rapidement le pignon du capteur de vitesse du véhicule et mesurer la tension entre les bornes ⓐ et ⓑ.

Simpo PDF Merge and Split Unregistered Version - http://www.simpopdf.com

Schéma

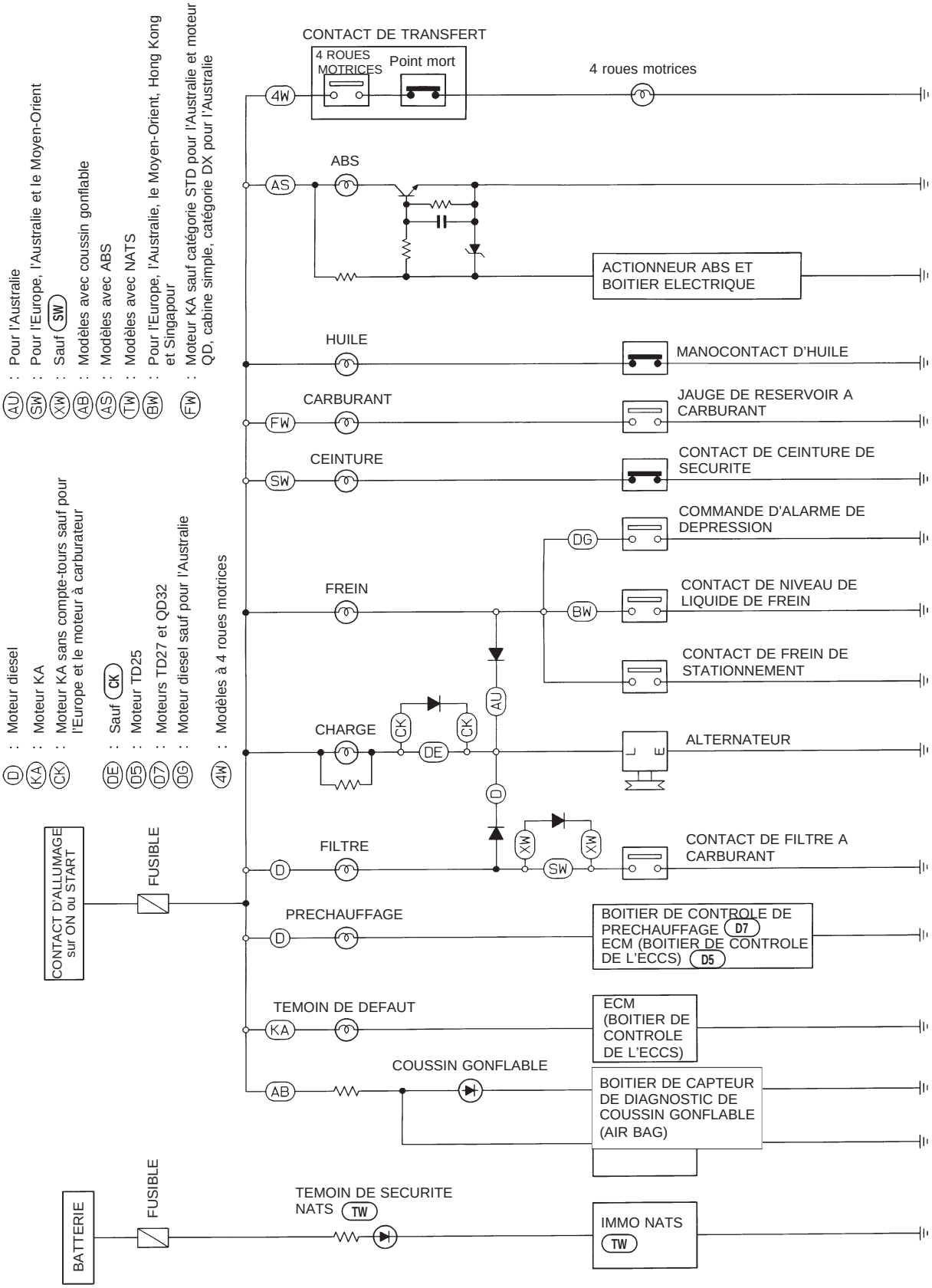

HEL359A

Simpo PDF Merge and Split Unregistered Version - http://www.simpopdf.com

Schéma de câblage – WARN –/Conduite à gauche

EL-WARN-01

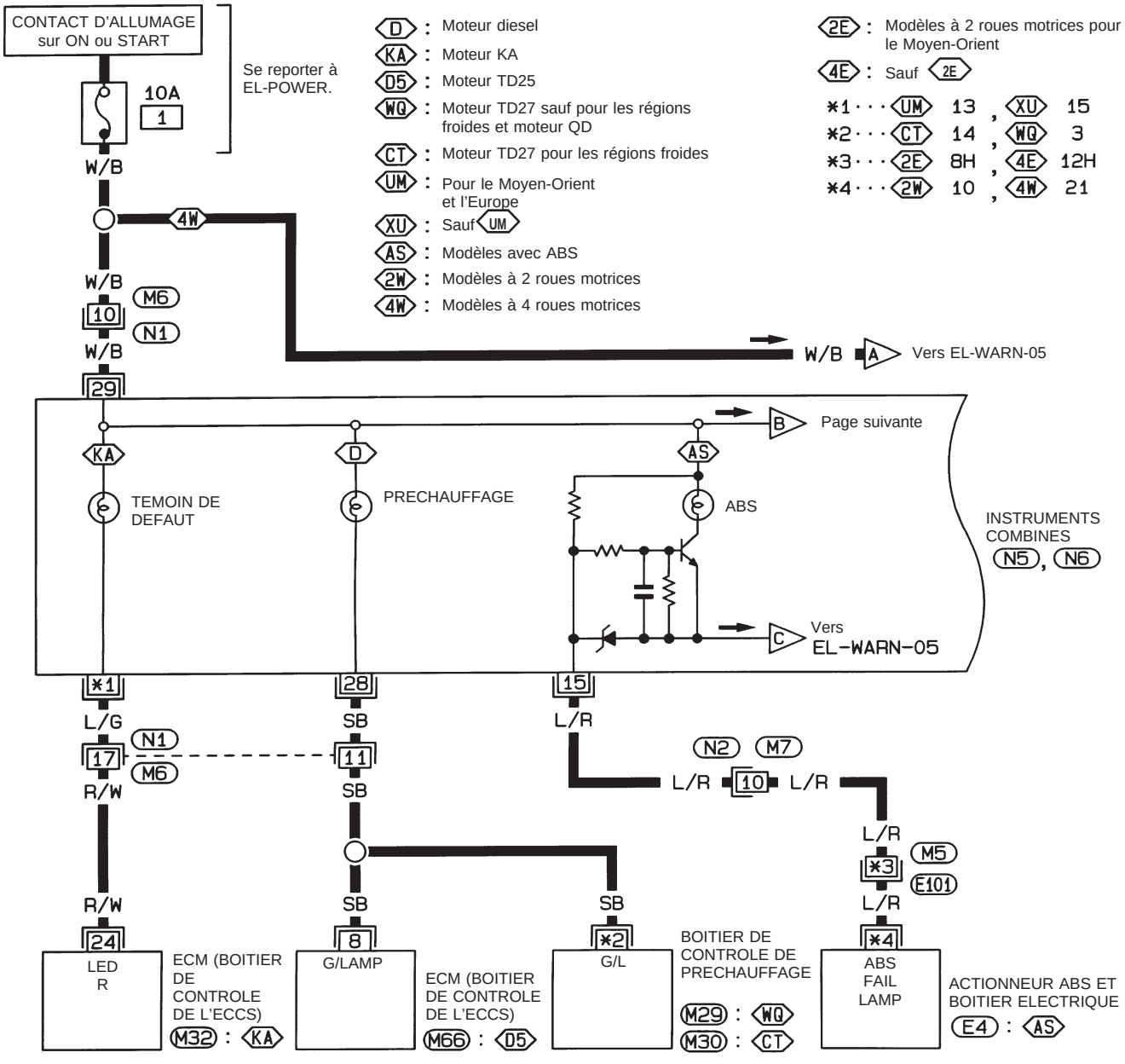

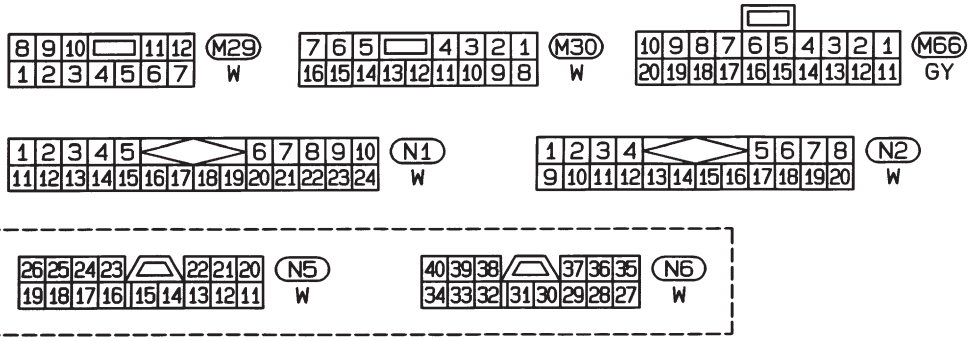

Se reporter à la dernière page dépliante.

M5 , E101
M32
E4

HEL360A

Simpo PDF Merge and Split Unregistered Version - http://www.simpopdf.com

Schéma de câblage – WARN –/Conduite à gauche (Suite)

EL-WARN-02

G : Moteur à essence
D : Moteur diesel
UM : Pour le Moyen-Orient et l'Europe
AB : Modèles avec système de coussin gonflable
2A : Modèles à 2 roues motrices avec système de coussin gonflable
4A : Modèles à 4 roues motrices avec système de coussin gonflable

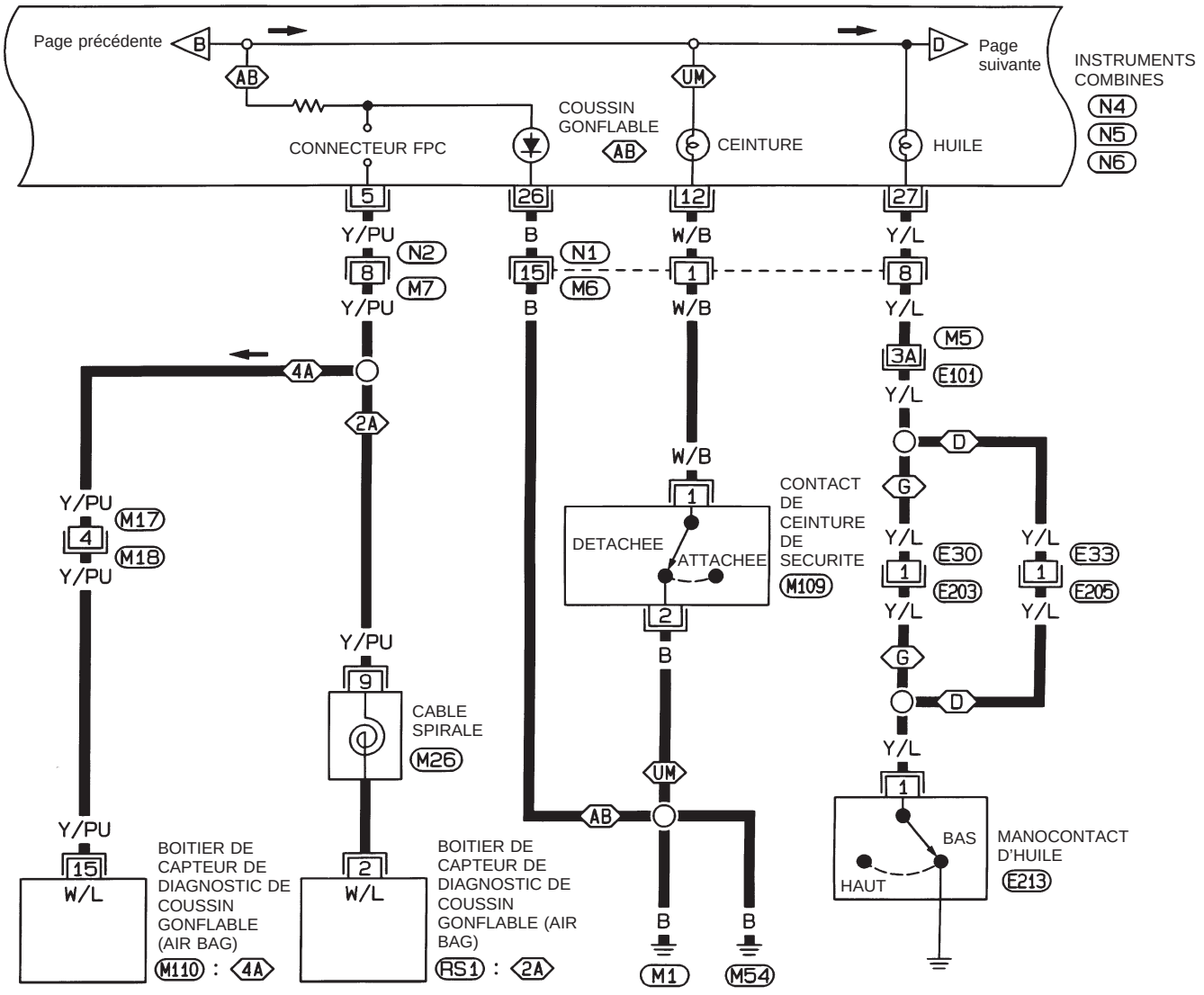

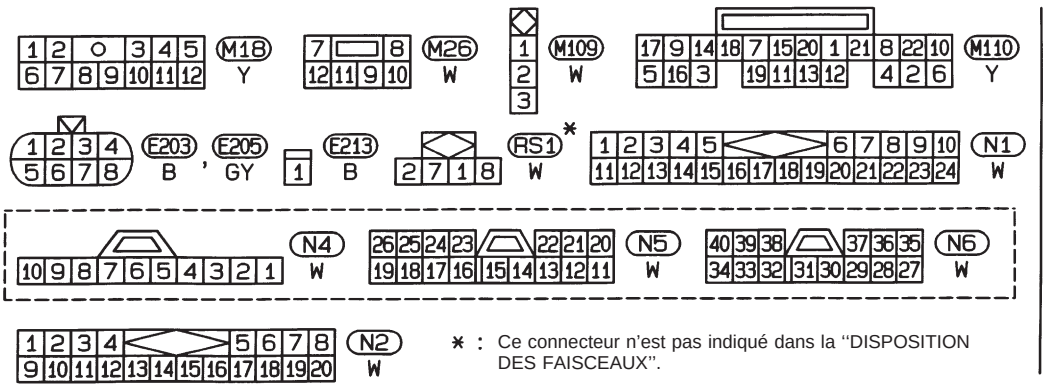

Se reporter à la dernière page dépliante.

M5 , E101

* : Ce connecteur n'est pas indiqué dans la "DISPOSITION DES FAISCEAUX".

HEL361A

Simpo PDF Merge and Split Unregistered Version - http://www.simpopdf.com

Schéma de câblage – WARN –/Conduite à gauche (Suite)

EL-WARN-03

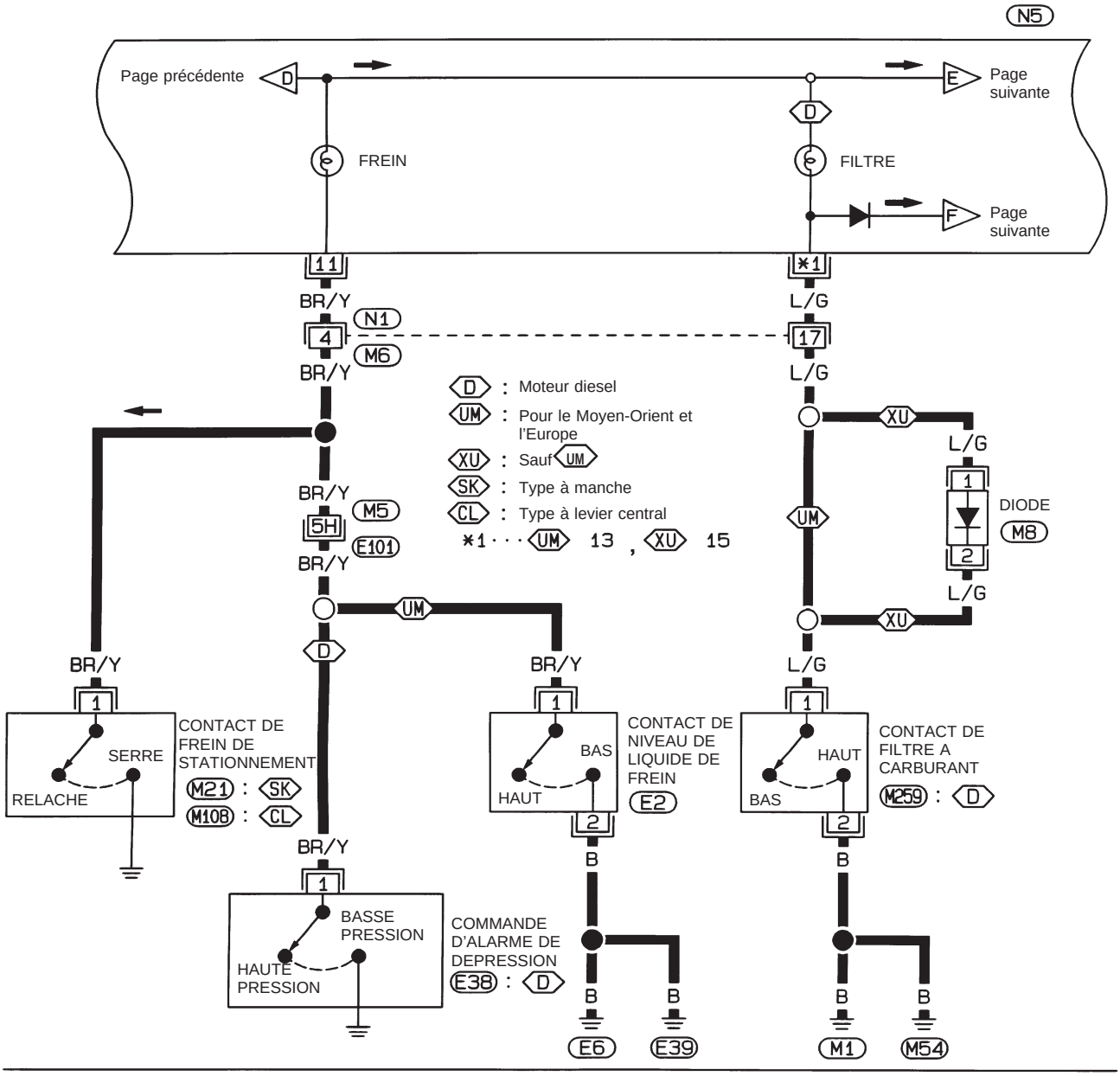

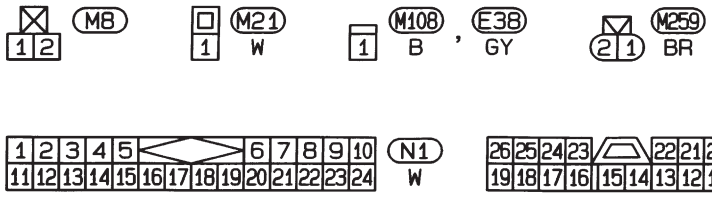

Se reporter à la dernière page dépliante.

M5 , E101

HEL362A

Simpo PDF Merge and Split Unregistered Version - http://www.simpopdf.com

Schéma de câblage – WARN –/Conduite à gauche (Suite)

EL-WARN-04

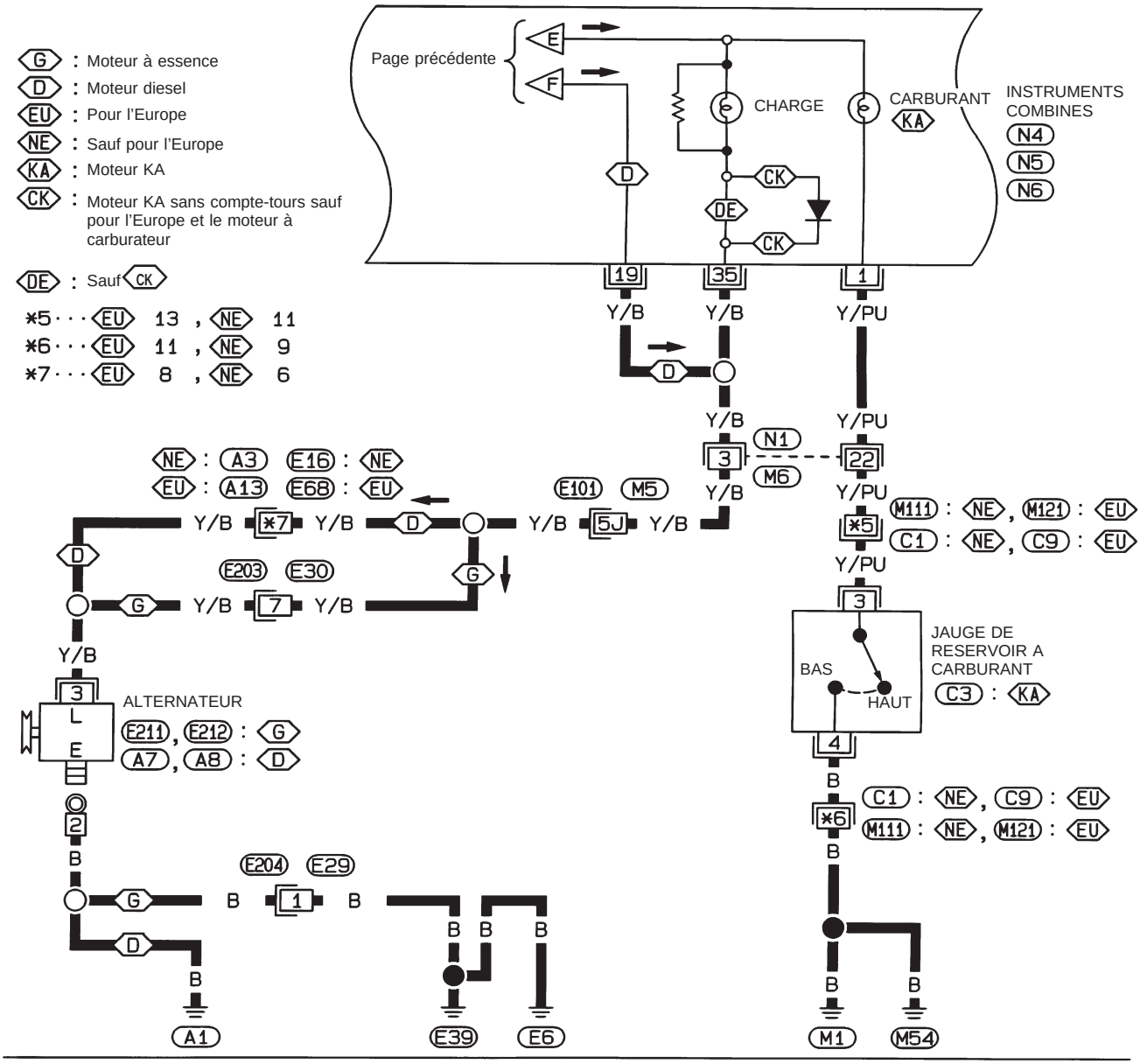

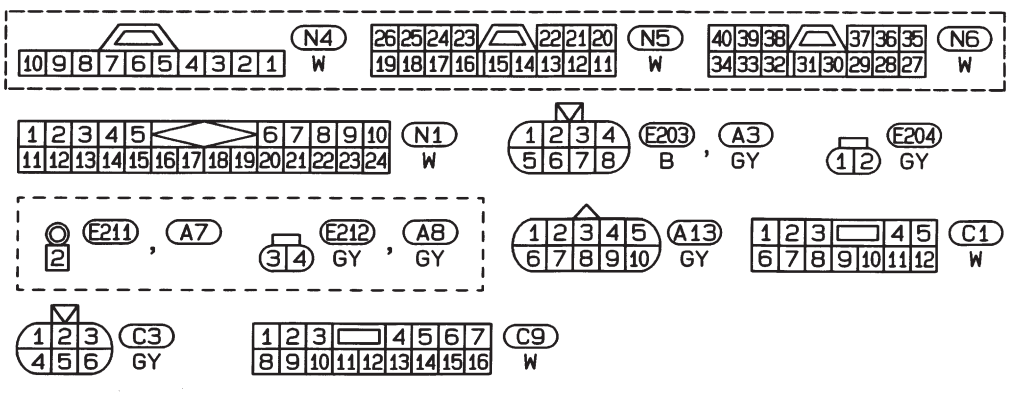

Se reporter à la dernière page dépliante.

M5 , E101

HEL363A

Simpo PDF Merge and Split Unregistered Version - http://www.simpopdf.com

Schéma de câblage – WARN –/Conduite à gauche (Suite)

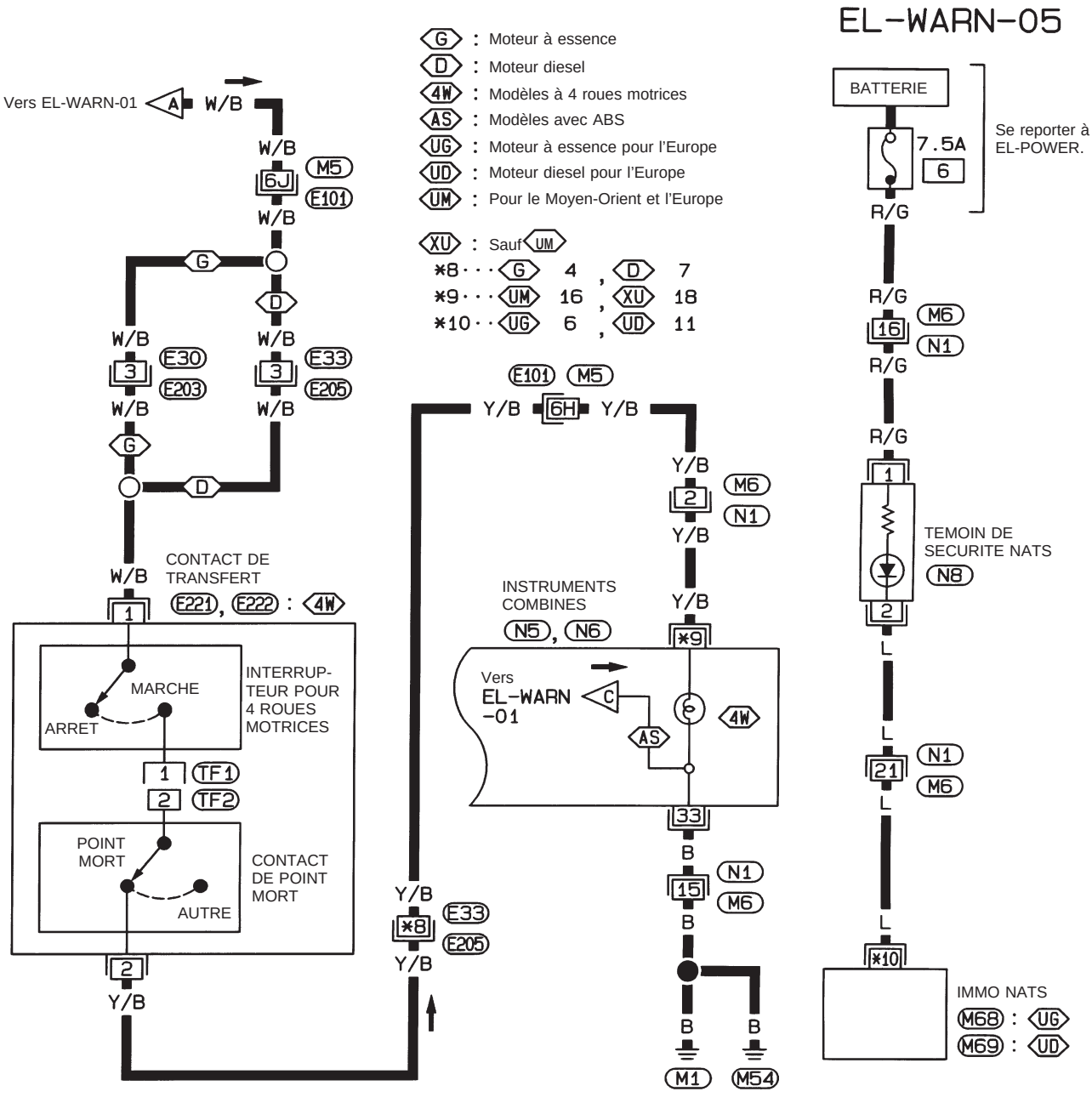

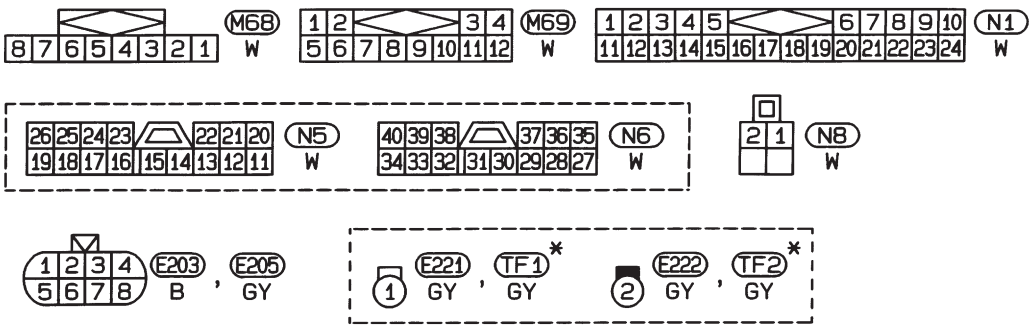

Se reporter à la dernière page dépliante.

M5 , E101

* : Ce connecteur n'est pas indiqué dans la "DISPOSITION DES FAISCEAUX".

HEL364A

Simpo PDF Merge and Split Unregistered Version - http://www.simpopdf.com

Schéma de câblage – WARN –/Conduite à droite

EL–WARN–06

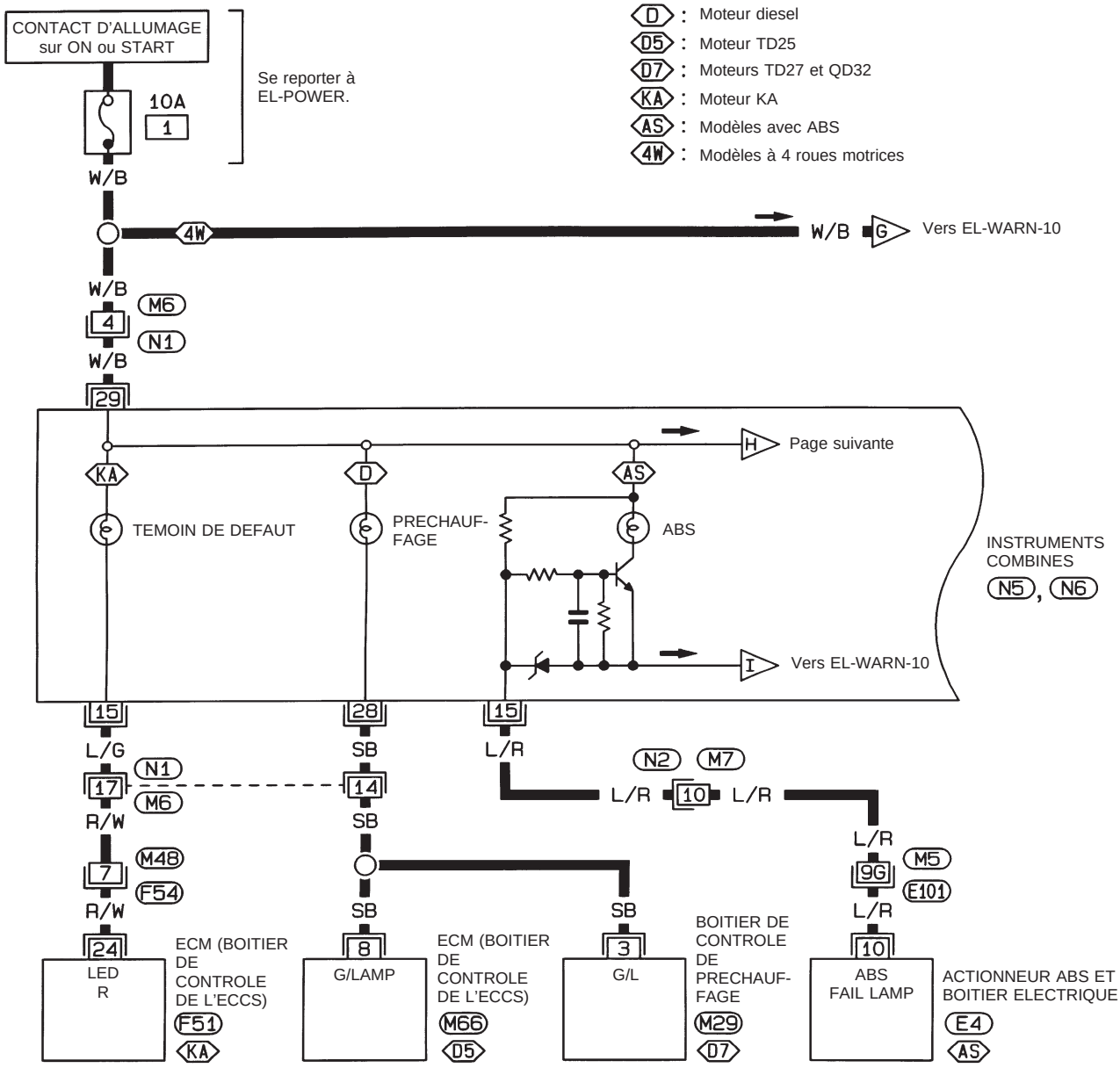

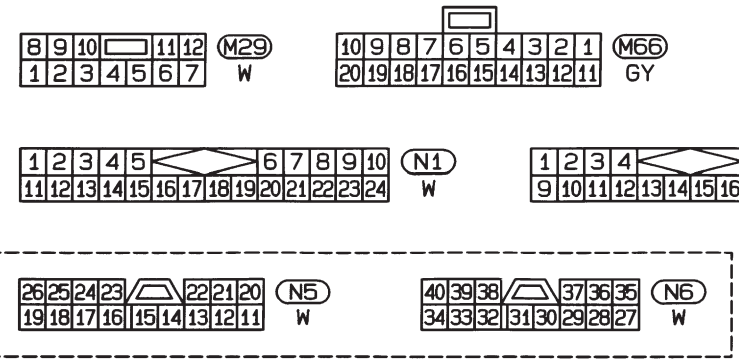

Se reporter à la dernière page dépliante.

M5 , E101
F51
E4

HEL365A

Simpo PDF Merge and Split Unregistered Version - http://www.simpopdf.com

Schéma de câblage – WARN –/Conduite à droite (Suite)

EL-WARN-07

G : Moteur à essence
D : Moteur diesel
AE : Pour l'Europe et l'Australie

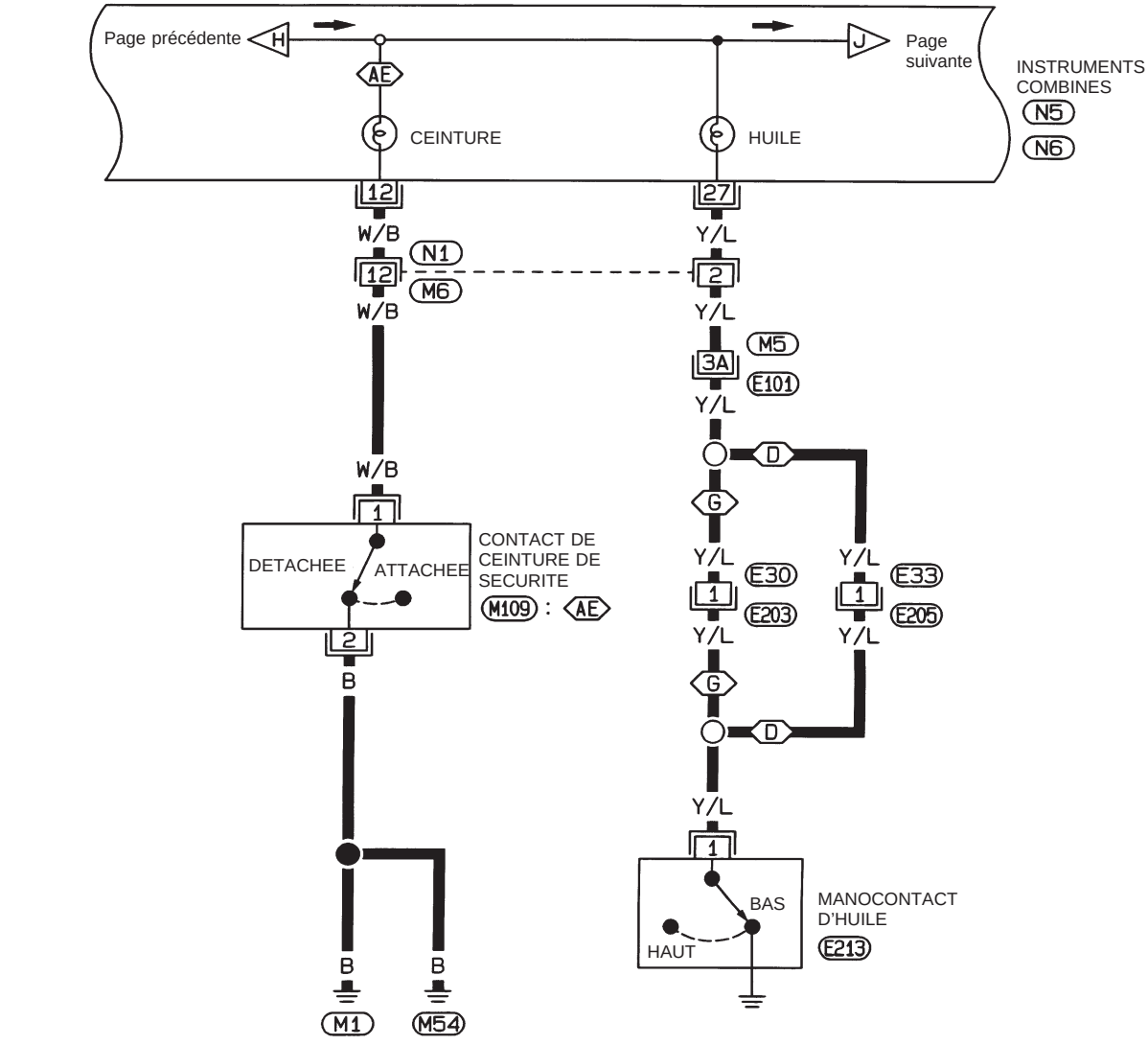

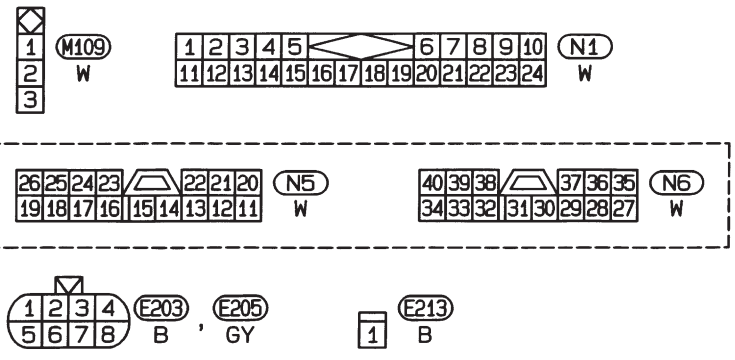

Se reporter à la dernière page dépliante.

M5 , E101

HEL366A

Simpo PDF Merge and Split Unregistered Version - http://www.simpopdf.com

Schéma de câblage – WARN –/Conduite à droite (Suite)

EL-WARN-08

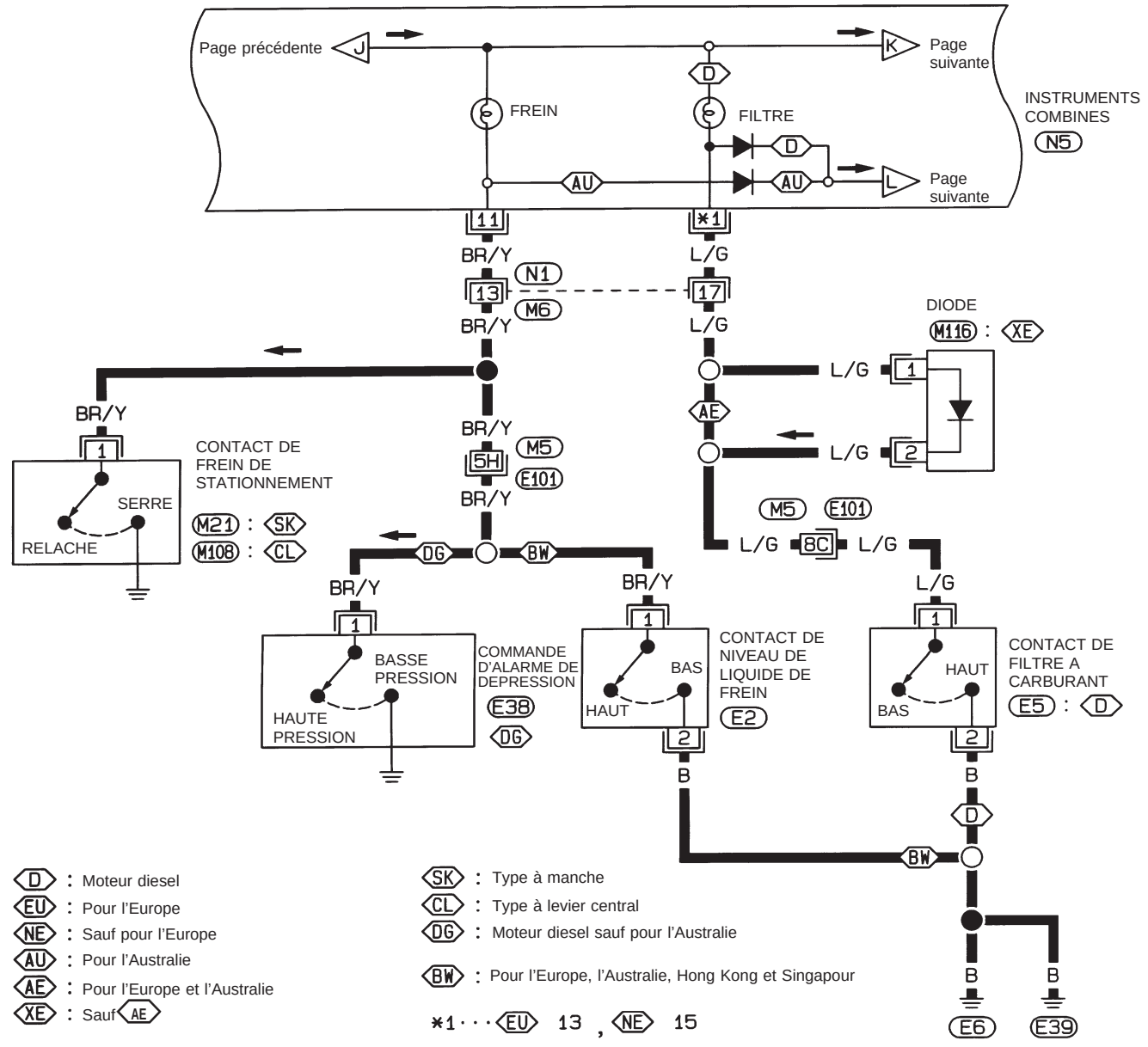

D : Moteur diesel
EU : Pour l'Europe
NE : Sauf pour l'Europe
AU : Pour l'Australie
AE : Pour l'Europe et l'Australie
XE : Sauf AE

SK : Type à manche
CL : Type à levier central
DG : Moteur diesel sauf pour l'Australie
BW : Pour l'Europe, l'Australie, Hong Kong et Singapour

*1 ··· EU 13 , NE 15

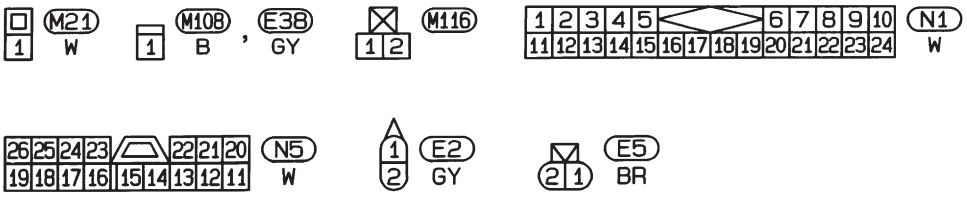

Se reporter à la dernière page dépliante.

M5 , E101

HEL367A

Simpo PDF Merge and Split Unregistered Version - http://www.simpopdf.com

Schéma de câblage – WARN –/Conduite à droite (Suite)

EL-WARN-09

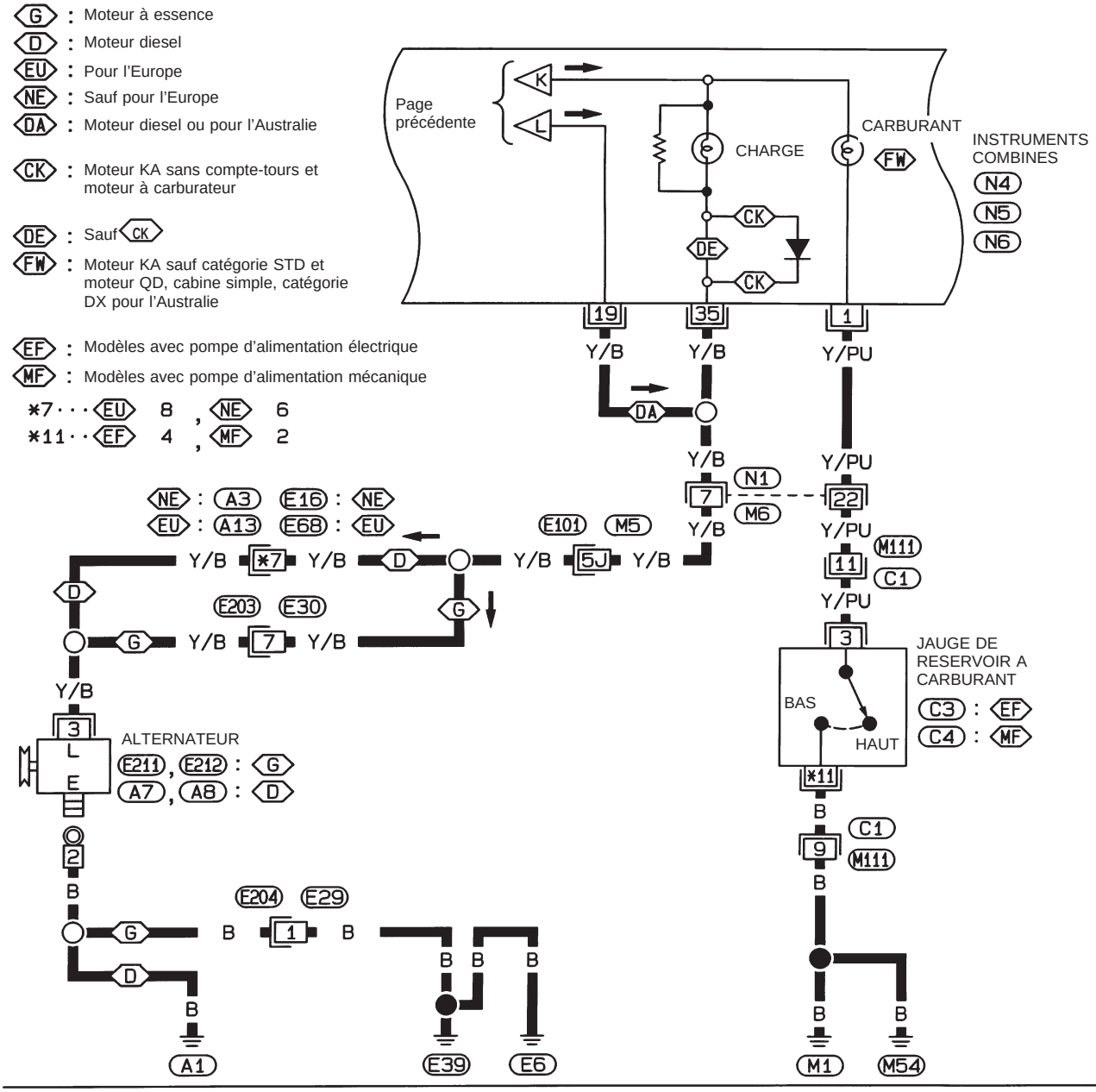

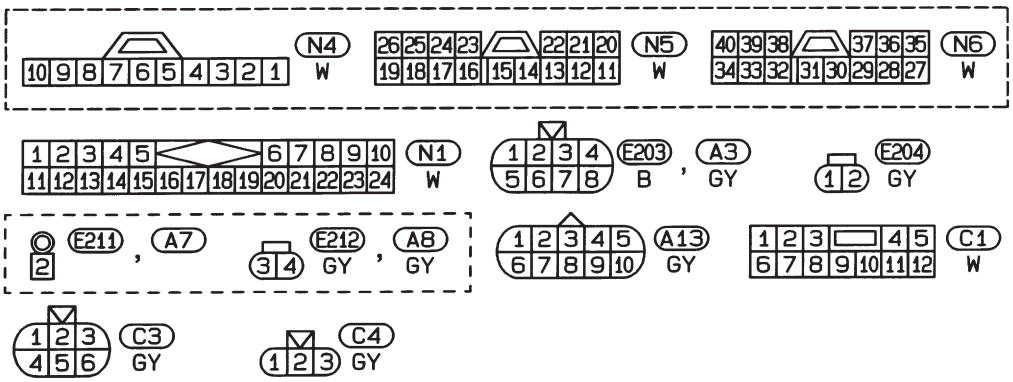

Se reporter à la dernière page dépliante.

M5 , E101

HEL368A

Simpo PDF Merge and Split Unregistered Version - http://www.simpopdf.com

Schéma de câblage – WARN –/Conduite à droite (Suite)

EL-WARN-10

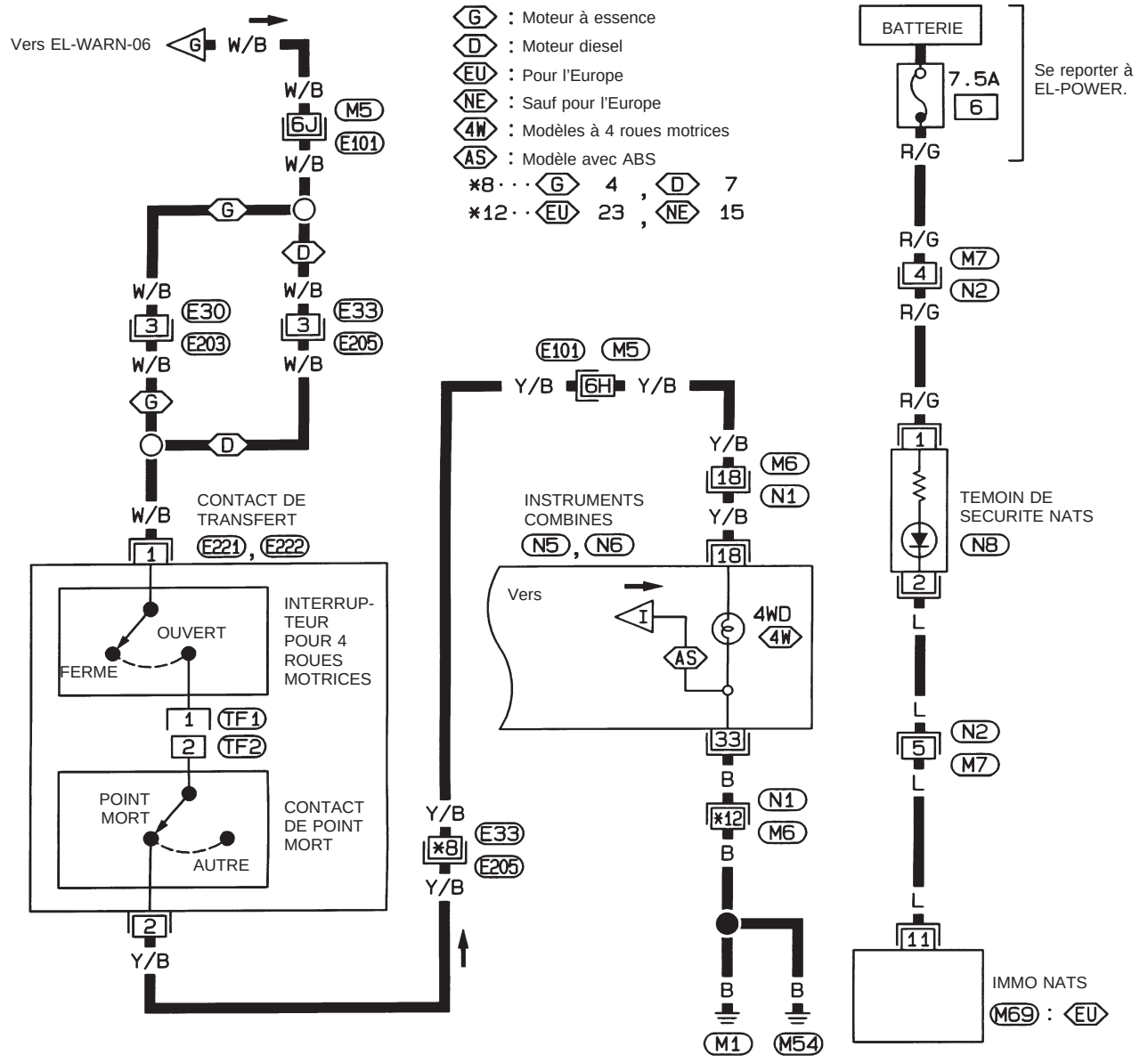

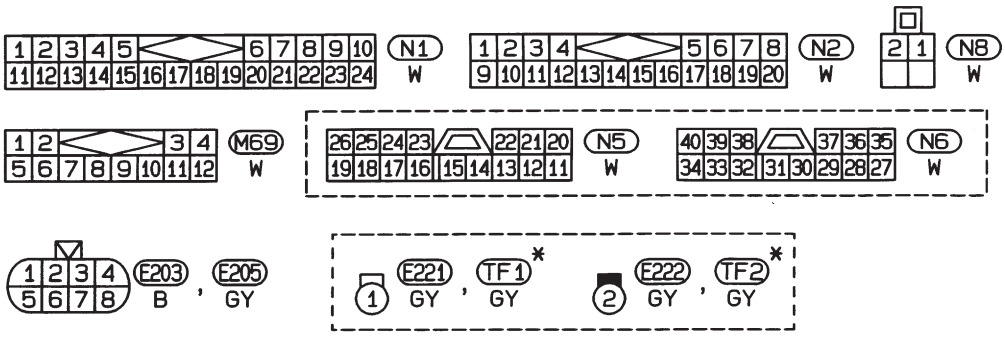

Se reporter à la dernière page dépliante.

M5, E101

* : Ce connecteur n'est pas indiqué dans la "DISPOSITION DES FAISCEAUX".

HEL369A

Simpo PDF Merge and Split Unregistered Version - http://www.simpopdf.com

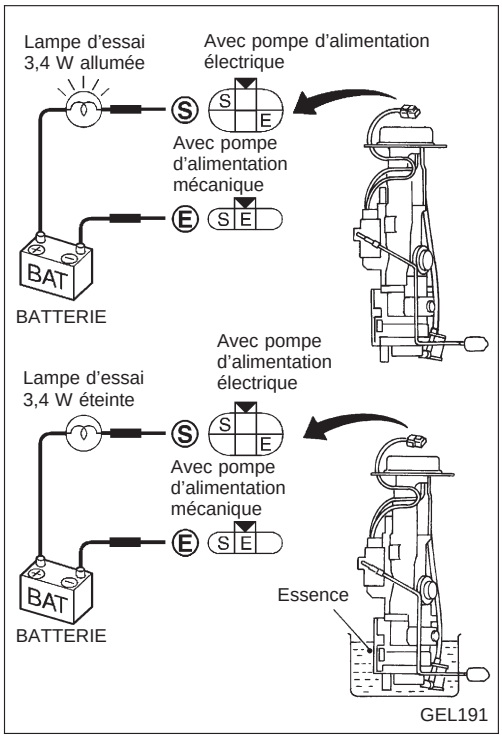

Inspection des composants électriques

CONTROLE DU CAPTEUR DE TEMOIN DE CARBURANT

- L'ampoule met quelques instants à s'éclairer.

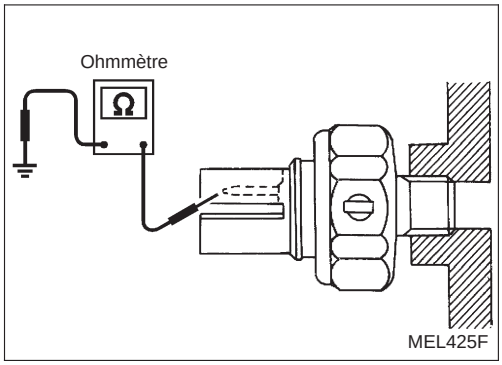

CONTROLE DU MANOCONTACT D'HUILE

	Pression d'huile kPa (bar, kg/cm^2)	Continuité
Le moteur tourne	Plus de 10 - 20 (0,10 - 0,20, 0,1 - 0,2)	NON
Le moteur est à l'arrêt	Moins de 10 - 20 (0,10 - 0,20, 0,1 - 0,2)	OUI

Vérifier la continuité entre les bornes du manocontact d'huile et la masse de carrosserie.

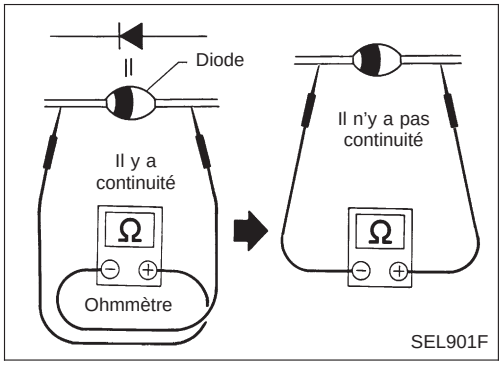

VERIFICATION DES DIODES

- Vérifier la continuité à l'aide d'un ohmmètre.
- La diode fonctionne bien si les résultats de l'essai correspondent à ceux qui sont indiqués ci-contre.

REMARQUE : Les caractéristiques peuvent varier selon le type d'appareil utilisé. Avant de procéder à cette inspection, se reporter au manuel d'utilisation de l'appareil de contrôle utilisé.

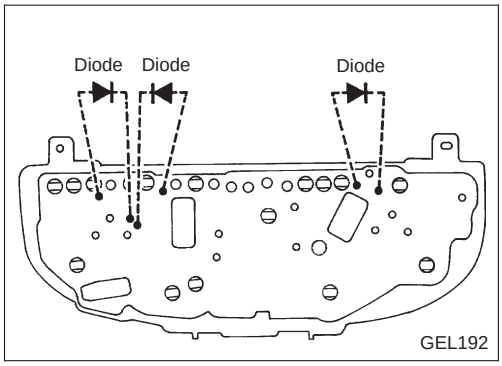

- Les diodes des témoins sont intégrés au circuit imprimé des instruments combinés.

Simpo PDF Merge and Split Unregistered Version - http://www.simpopdf.com

Schéma de câblage – BUZZER –/Conduite à gauche pour l'Europe

AVERTISSEUR SONORE D'ECLAIRAGE

EL-BUZZER-02

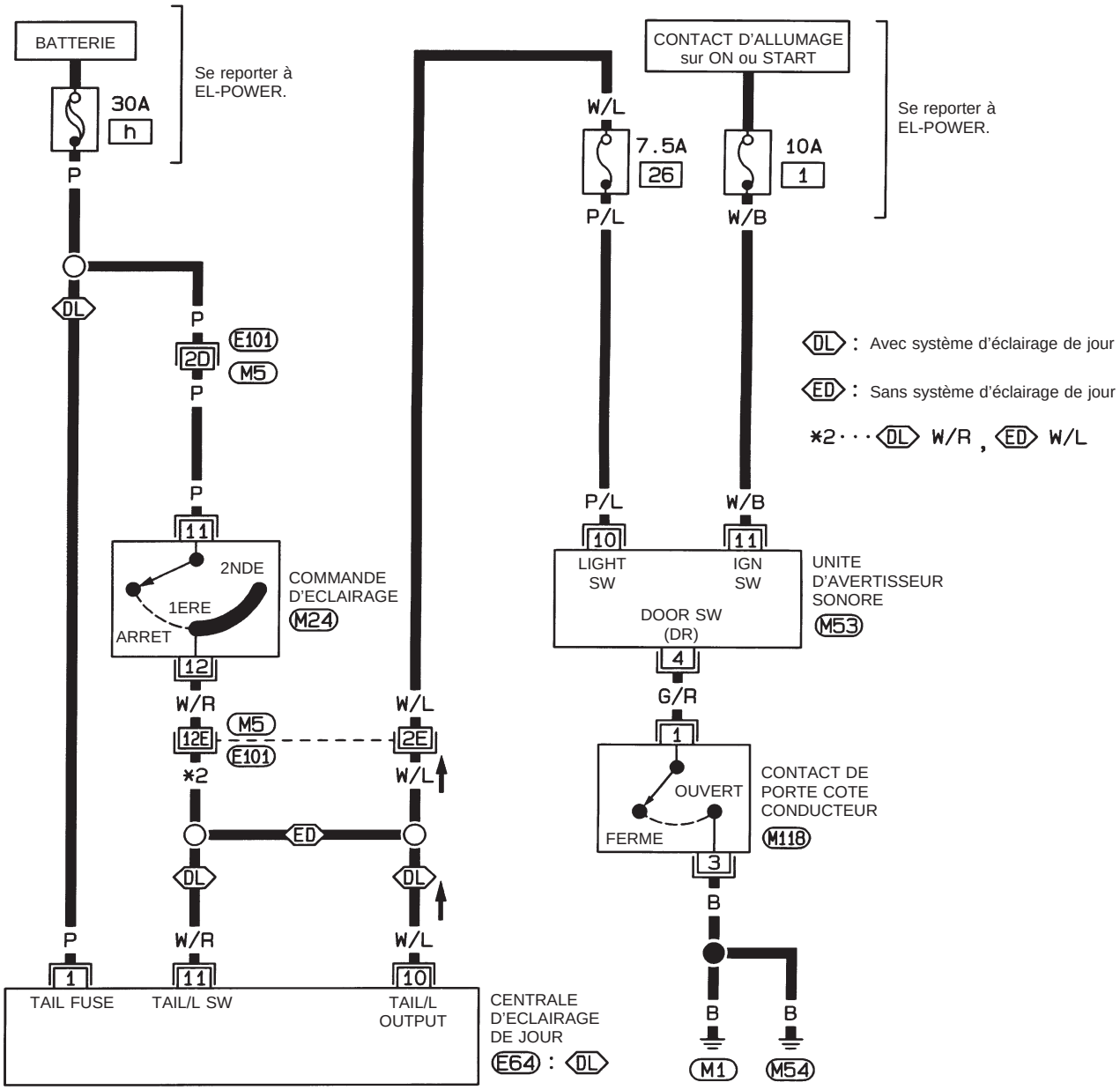

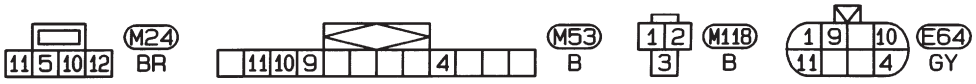

Se reporter à la dernière page dépliante.

M5 , E101

HEL370A

Simpo PDF Merge and Split Unregistered Version - http://www.simpopdf.com

Schéma de câblage – BUZZER –/Conduite à droite pour l'Europe

AVERTISSEUR SONORE D'ECLAIRAGE

EL-BUZZER-03

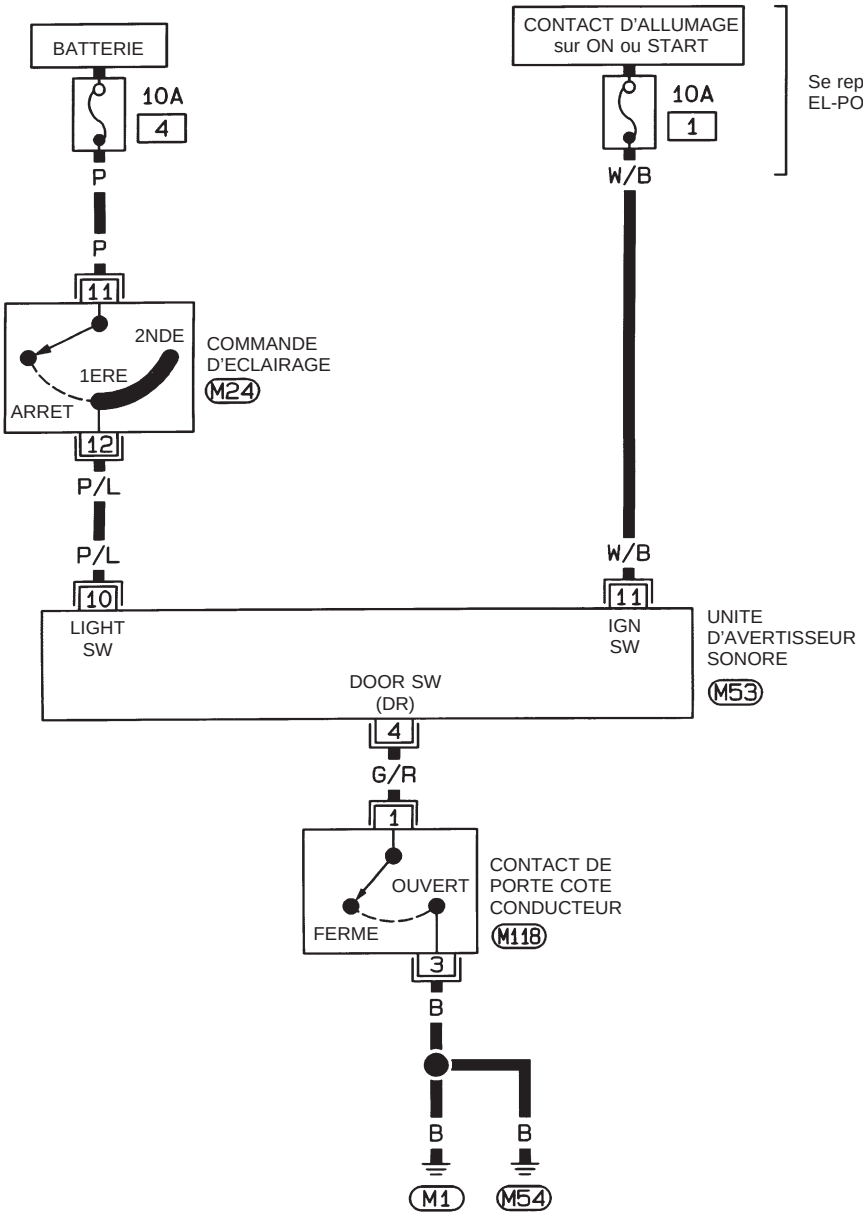

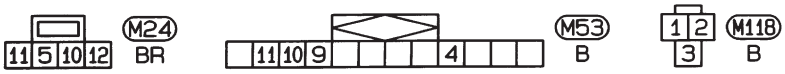

HEL371A

Simpo PDF Merge and Split Unregistered Version - http://www.simpopdf.com

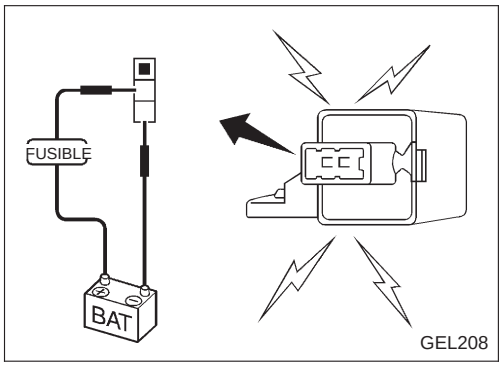

Inspection des composants électriques

VERIFICATION DE L'AVERTISSEUR SONORE DU FILTRE A CARBURANT

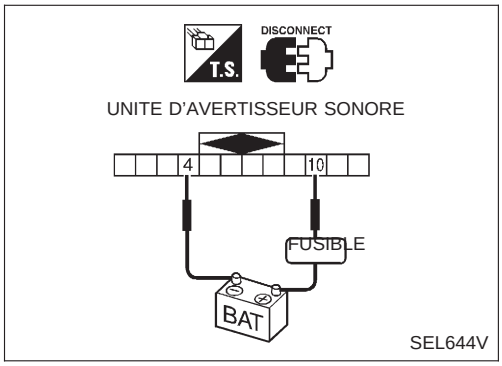

AVERTISSEUR SONORE D'ECLAIRAGE

1. Appliquer un courant continu de 12V sur les bornes ⑩ et ④ de l'unité d'avertisseur sonore.
   Le témoin sonore doit sonner.

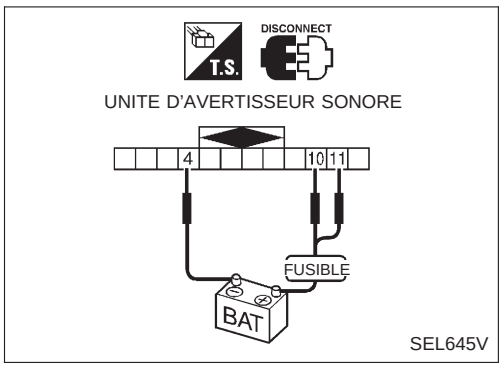

2. Appliquer une tension de 12V sur les bornes ⑩, ⑪ et ④ de l'unité d'avertisseur sonore.
   Le témoin sonore ne doit pas sonner.

Simpo PDF Merge and Split Unregistered Version - http://www.simpopdf.com

Description du système

FONCTIONNEMENT DE L'ESSUIE-GLACE

La commande d'essuie-glace est contrôlée par un levier intégré à la commande combinée.
Il existe deux ou trois positions de la commande d'essuie-glace :

- Vitesse LENTE (LO)
- Vitesse RAPIDE (HI)
- Vitesse intermittente (INT) (modèles équipés d'un essuie-glace à balayage intermittent seulement)

Lorsque le contact d'allumage est sur la position Acc ou ON, l'alimentation est fournie

- par le fusible de 20A (n° 16, situé dans le boîtier à fusibles)
- à la borne ④ du moteur d'essuie-glace.

Fonctionnement de l'essuie-glace à vitesse lente et rapide

La masse est également fournie à la borne ⑰ de la commande d'essuie-glace par les masses M1 et M54 de carrosserie.
Lorsque la commande d'essuie-glace est placée sur la position LENTE, la masse est fournie

- par la borne ⑭ de la commande d'essuie-glace
- à la borne ② du moteur d'essuie-glace.

Lorsque l'alimentation électrique et la masse sont fournies, le moteur d'essuie-glace fonctionne en vitesse lente.
Lorsque la commande d'essuie-glace est placée sur la position RAPIDE, la masse est fournie

- par la borne ⑯ de la commande d'essuie-glace
- à la borne ③ du moteur d'essuie-glace.

Lorsque l'alimentation électrique et la masse sont fournies, le moteur d'essuie-glace fonctionne en vitesse rapide.

Fonctionnement de l'arrêt automatique

Lorsque la commande d'essuie-glace est sur ARRET, le moteur d'essuie-glace continue à tourner jusqu'à ce que les bras d'essuie-glaces aient repris leur position de repos.
Quand les bras d'essuie-glaces ne sont pas à la position repos en bas du pare-brise alors que la commande d'essuie-glace est sur ARRET, la masse est fournie

- de la borne ⑭ de la commande d'essuie-glace
- à la borne ② du moteur d'essuie-glace afin que le moteur d'essuie-glace tourne toujours en vitesse lente.

La masse est également fournie

- par la borne ⑬ de la commande d'essuie-glace
- vers la borne ② de l'amplificateur de l'essuie-glace (uniquement modèles avec essuie-glace à position intermittente)
- par la borne ⑦ de l'amplificateur d'essuie-glace (uniquement modèles avec essuie-glace à position intermittente)
- à la borne ⑤ du moteur d'essuie-glace
- par la borne ⑥ du moteur d'essuie-glace, et
- par les masses de carrosserie M1 et M54.

Lorsque les bras d'essuie-glaces regagnent leur position de repos, les bornes ④ et ⑤ du moteur d'essuie-glace sont branchées à la place des bornes ⑤ et ⑥. Le moteur d'essuie-glace immobilise alors les bras d'essuie-glace en position de repos.

Fonctionnement intermittent

Le moteur d'essuie-glace actionne les bras de l'essuie-glace, à vitesse lente, à un intervalle d'environ 7 secondes. Cette fonction est commandée par l'amplificateur de l'essuie-glace.
Lorsque la commande d'essuie-glace est placée sur la position INT., la masse est fournie

- à la borne ① de l'amplificateur de l'essuie-glace
- de la borne ⑮ de la commande d'essuie-glace
- par les masses de carrosserie M1 et M54.
- à la borne ② du moteur d'essuie-glace
- par la borne ⑭ de la commande d'essuie-glace
- à la borne ⑬ de la commande d'essuie-glace
- par la borne ② de l'amplificateur d'essuie-glace
- à la borne ③ de l'amplificateur de l'essuie-glace
- par les masses de carrosserie M1 et M54.

Simpo PDF Merge and Split Unregistered Version - http://www.simpopdf.com

Description du système (Suite)

Lorsque l'alimentation électrique et la masse sont fournies, le moteur d'essuie-glace fonctionne en vitesse lente de façon intermittente.

FONCTIONNEMENT DU LAVE-GLACE

Lorsque le contact d'allumage est sur la position Acc ou ON, l'alimentation est fournie

- par le fusible de 20A (n°) 16, situé dans le boîtier à fusibles)
- à la borne (1) du moteur de lave-glace.

Avec essuie-glace à balayage intermittent

Lorsque le levier est placé sur la position LAVE, la masse est fournie

- à la borne (2) du moteur de lave-glace, et
- à la borne (6) de l'amplificateur de l'essuie-glace
- de la borne (18) de la commande d'essuie-glace
- par la borne (17) de la commande d'essuie-glace, et
- par les masses de carrosserie (M1) et (M54).

Lorsque l'alimentation électrique et la masse sont fournies, le moteur de lave-glace fonctionne.

Lorsque le levier est placé sur la position LAVE pendant une seconde ou plus, le moteur d'essuie-glace fonctionne à vitesse lente pendant environ 3 secondes après que le levier est relâché. Cette fonction est commandée par l'amplificateur de l'essuie-glace de la même manière qu'en position intermittente.

Sans essuie-glace à balayage intermittent

Lorsque le levier est placé sur la position LAVE, la masse est fournie

- à la borne (2) du moteur de lave-glace
- de la borne (18) de la commande d'essuie-glace
- par la borne (17) de la commande d'essuie-glace, et
- par les masses de carrosserie (M1) et (M54).

Lorsque l'alimentation électrique et la masse sont fournies, le moteur de lave-glace fonctionne.

Simpo PDF Merge and Split Unregistered Version - http://www.simpopdf.com

Schéma de câblage – WIPER –/Conduite à gauche avec essuie-glace à balayage intermittent

EL-WIPER-01

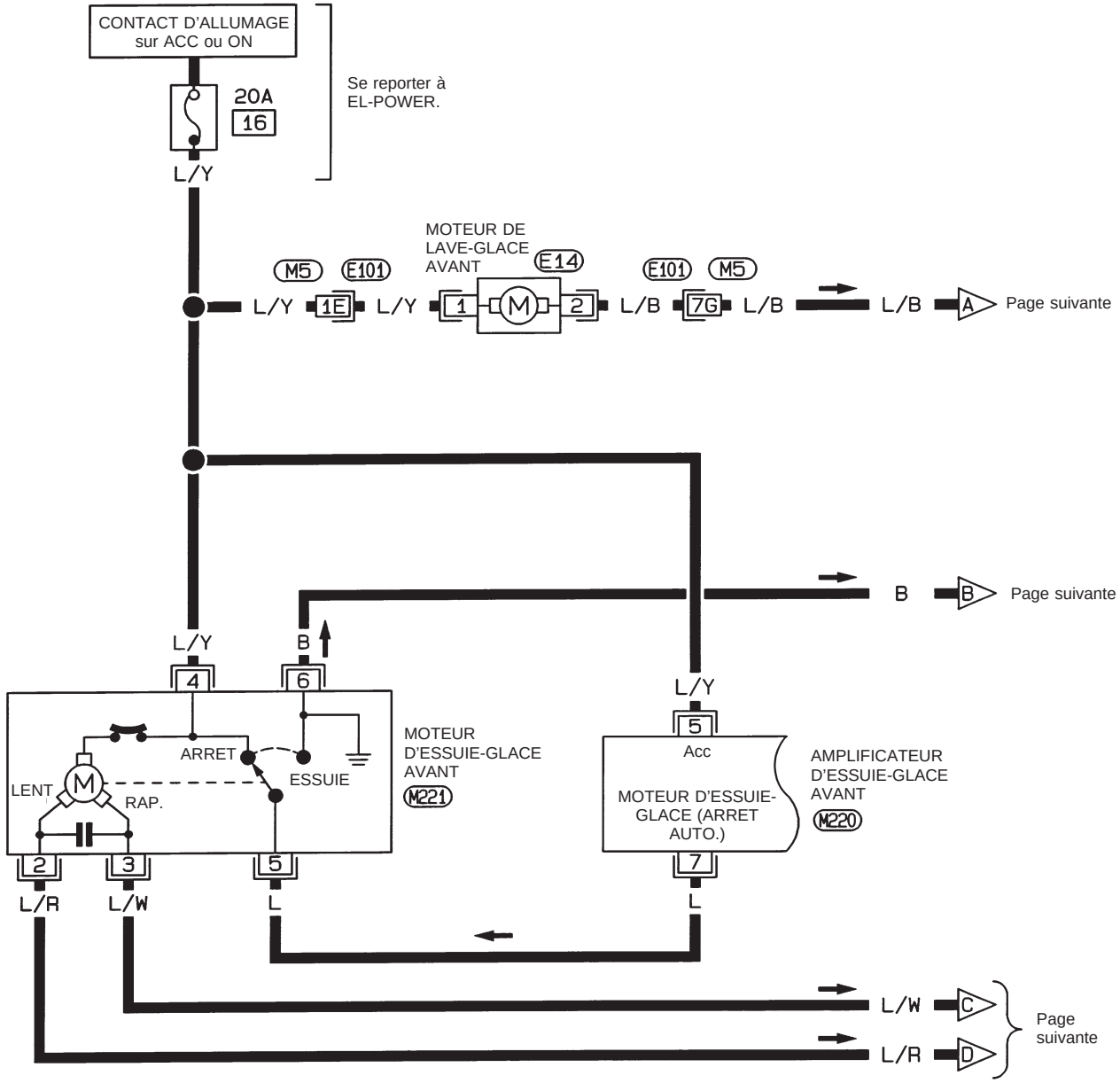

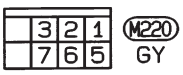

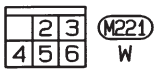

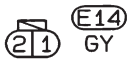

Se reporter à la dernière page dépliante.

M5 , E101

HEL934

Simpo PDF Merge and Split Unregistered Version - http://www.simpopdf.com

Schéma de câblage – WIPER –/Conduite à gauche avec essuie-glace à balayage intermittent (Suite)

EL-WIPER-02

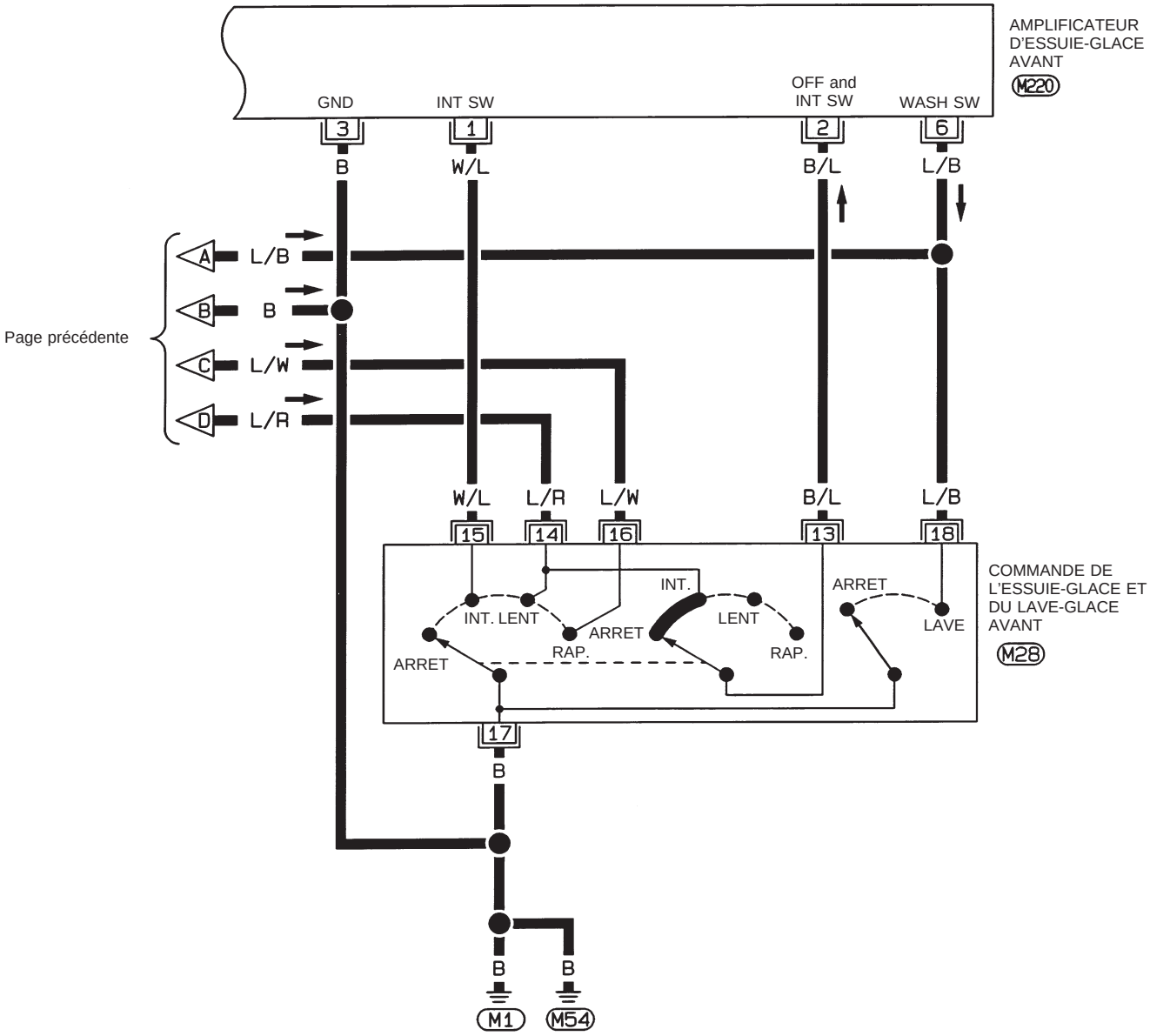

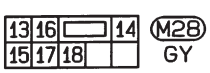

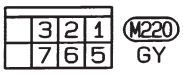

HEL935

Simpo PDF Merge and Split Unregistered Version - http://www.simpopdf.com

Schéma de câblage – WIPER –/Conduite à droite sans essuie-glace à balayage intermittent

EL-WIPER-04

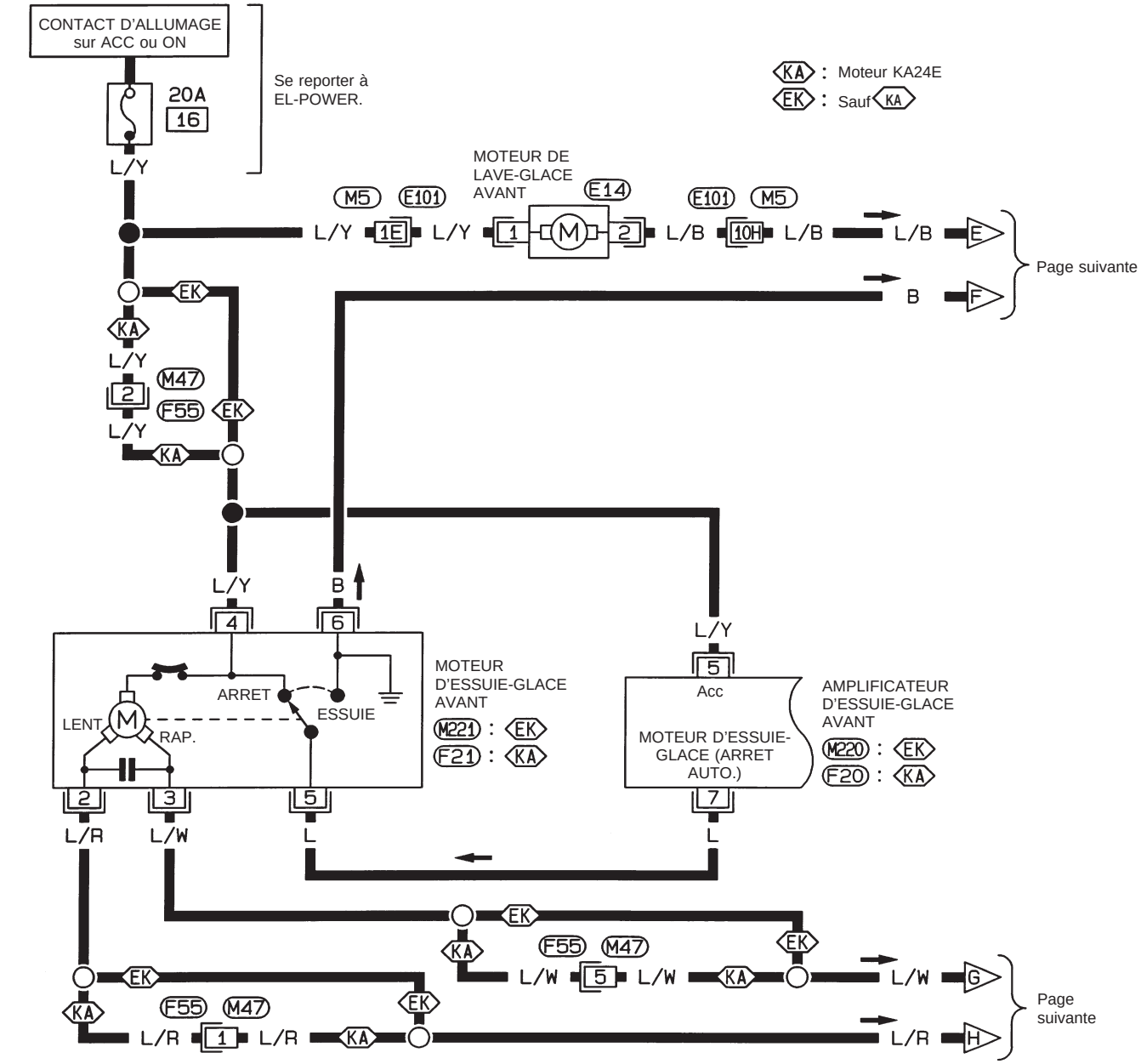

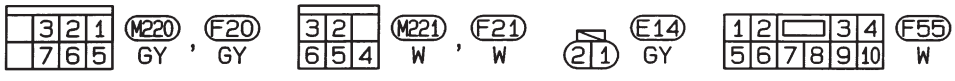

Se reporter à la dernière page dépliante.

M5 , E101

HEL937

Simpo PDF Merge and Split Unregistered Version - http://www.simpopdf.com

Schéma de câblage – WIPER –/Conduite à droite sans essuie-glace à balayage intermittent (Suite)

EL-WIPER-05

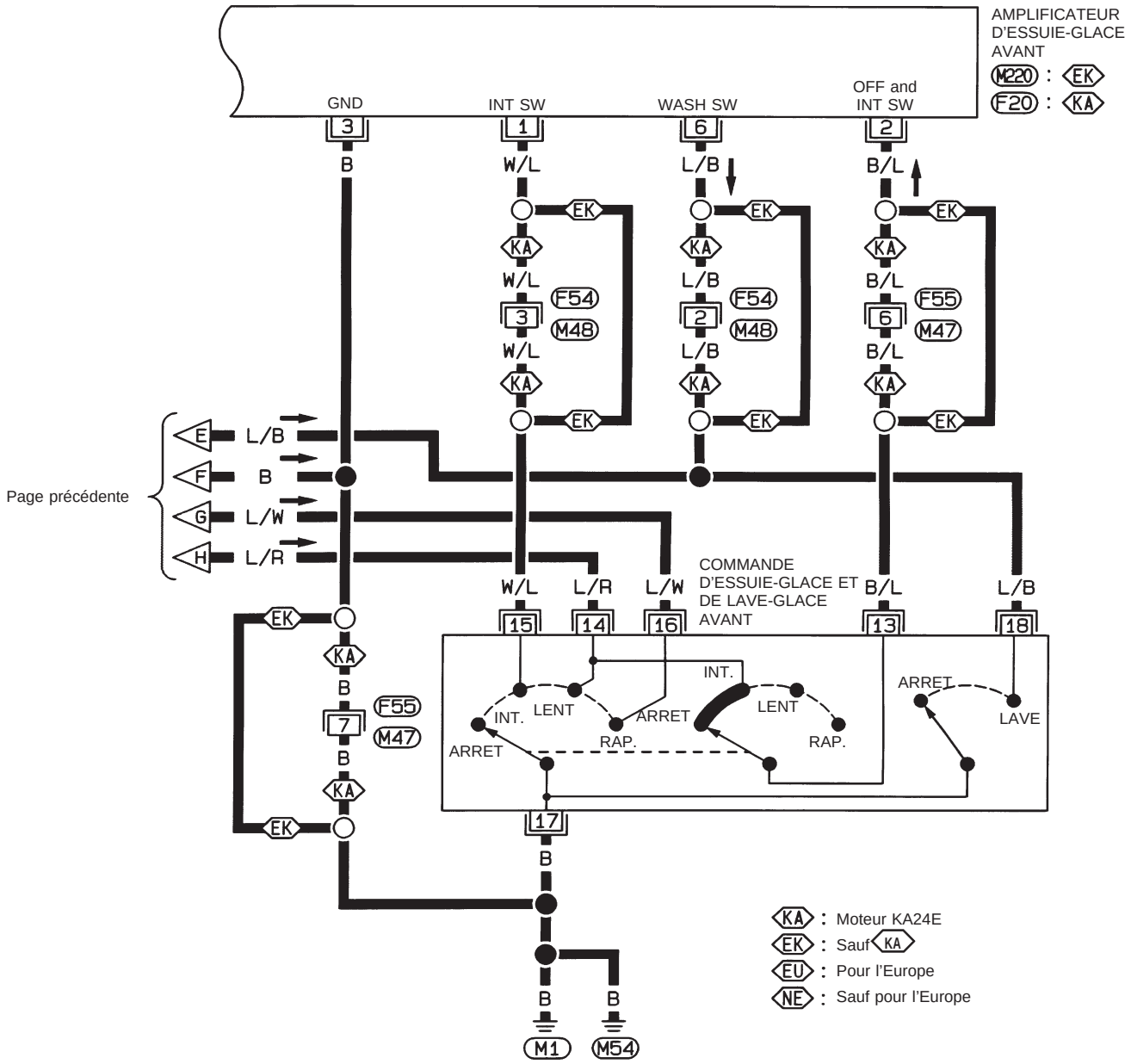

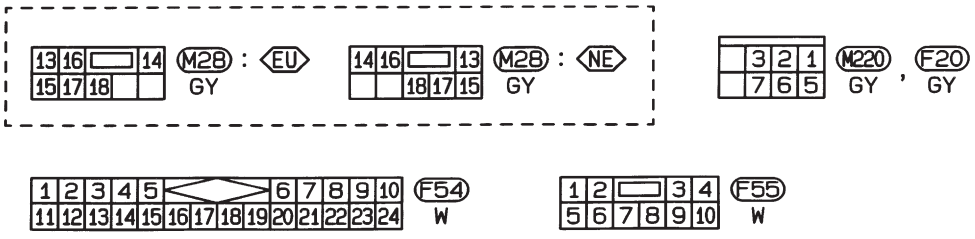

HEL372A

Simpo PDF Merge and Split Unregistered Version - http://www.simpopdf.com

A

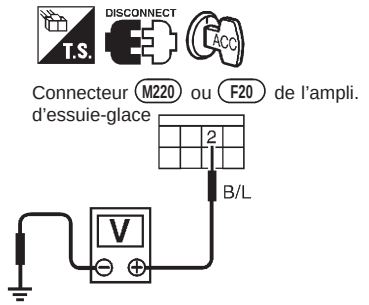

SEL140VB

B

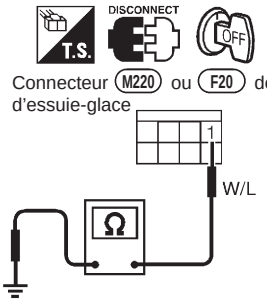

SEL141VB

C

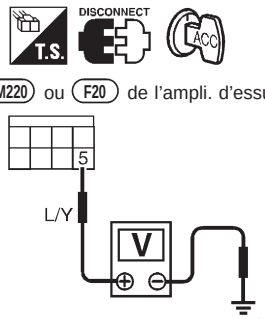

SEL142VB

D

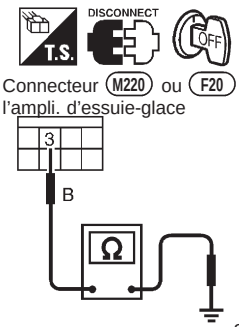

SEL143VB

Diagnostics des défauts

PROCEDURE DE DIAGNOSTIC 1

SYMPTOME : L'essuie-glace à balayage intermittent ne fonctionne pas.

Vérifier si l'essuie-glace fonctionne avec la commande d'essuie-glace sur la position Lo (Lent).

Mauvais → Vérifier les points suivants.
- Fusible de 20A (n° 16, situé dans le boîtier à fusibles)
- Moteur de l'essuie-glace
- Commande de l'essuie-glace
- Faisceau ouvert ou court-circuit du faisceau

Bon ↓

A

1) Tourner la commande d'essuie-glace avant sur OFF.
2) Débrancher le connecteur de l'ampli. d'essuie-glace.
3) Vérifier la tension entre la borne ② de l'ampli. d'essuie-glace et la masse.
Il doit y avoir tension de la batterie.

Mauvais → Vérifier les points suivants.
- Commande de l'essuie-glace
- Faisceau ouvert ou court-circuité entre la borne ② de l'ampli. d'essuie-glace et la borne ⑬ de la commande d'essuie-glace

Bon ↓

B

VERIFIER LE SIGNAL D'ENTREE DE LA COMMANDE DE POSITION INTERMITTENTE.
Vérifier la continuité du faisceau entre la borne ① de l'ampli. d'essuie-glace et la masse.

Position de la commande d'essuie-glace	Continuité
ARRET	Non
INT.	Oui

Mauvais → Vérifier les points suivants.
- Commande de l'essuie-glace
- Faisceau ouvert ou court-circuité entre la borne ① de l'ampli. d'essuie-glace et la borne ⑮ de la commande d'essuie-glace
- Circuit de mise à la masse pour la borne ⑰ de la commande d'essuie-glace avant

Bon ↓

C

VERIFIER L'ALIMENTAION ELECTRIQUE DE L'AMPLI. D'ESSUIE-GLACE.
Vérifier la tension entre la borne ⑤ de l'ampli. d'essuie-glace et la masse quand le contact d'allumage est sur "ACC".
Il doit y avoir tension de la batterie.

Mauvais → Vérifier les points suivants.
- Fusible de 20A (n° 16, situé dans le boîtier à fusibles)
- Faisceau ouvert ou court-circuité entre l'ampli. d'essuie-glace et le fusible

Bon ↓

D

VERIFIER LE CIRCUIT DE MASSE DE L'AMPLI. D'ESSUIE-GLACE.
Vérifier la continuité du faisceau entre la borne ③ de l'ampli. d'essuie-glace et la masse de carrosserie.
Il doit y avoir continuité.

Mauvais → Réparer le faisceau ou le connecteur.

Bon ↓

Remplacer l'ampli. d'essuie-glace.

Simpo PDF Merge and Split Unregistered Version - http://www.simpopdf.com

Diagnostics des défauts (Suite)

PROCEDURE DE DIAGNOSTIC 2

SYMPTOME : L'essuie-glace et le lave-glace fonctionnent individuellement mais pas en combinaison.

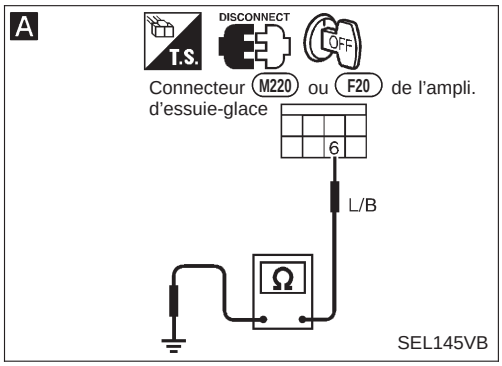

A

VERIFIER LE SIGNAL D'ENTREE DE LA COMMANDE DE LAVE-GLACE.
1) Mettre le contact d'allumage sur "OFF".
2) Débrancher le connecteur de l'ampli. d'essuie-glace.
3) Vérifier la continuité du faisceau entre la borne (6) de l'ampli. d'essuie-glace et la masse.

Position de la commande de lave-glace	Continuité
ARRET	Non
MARCHE	Oui

Mauvais → Vérifier si le faisceau est ouvert ou en court-circuit entre la borne (6) de l'ampli. d'essuie-glace et la borne (18) de la commande d'essuie-glace.

Bon ↓

Aller à la procédure de diagnostic 1.

Mauvais → Remplacer l'ampli. d'essuie-glace.

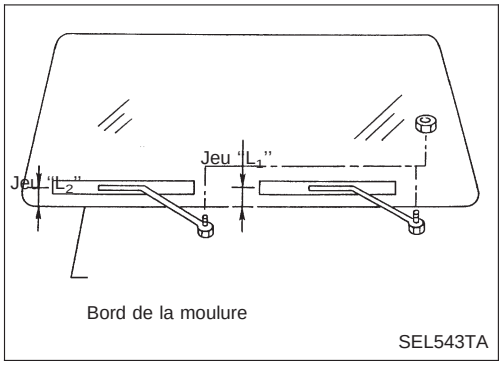

Repose et réglage de l'essuie-glace

1. Avant de monter les bras d'essuie-glaces, actionner la commande afin de mettre le moteur d'essuie-glace en marche puis la couper (arrêt automatique).
2. Soulever le balai d'essuie-glace puis le reposer sur le pare-brise de manière à régler le centre des balais aux jeux "L_1" & "L_2", et serrer l'écrou tout de suite après.
3. Ejecter le liquide de lave-glace. Mettre le moteur d'essuie-glace en marche puis placer la commande sur ARRET.
4. Veiller à ce que les balais d'essuie-glaces s'arrêtent bien en respectant les jeux "L_1" & "L_2".
   Jeu "L_1" : 20 - 30 mm
   Jeu "L_2" : 20 - 30 mm

- Serrer les écrous du bras d'essuie-glace au couple spécifié.
  Essuie-glace avant : 12,7 - 17,7 N·m (1,3 - 1,8 kg-m)

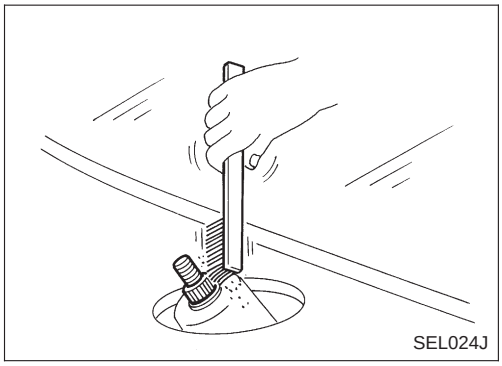

- **Avant la repose du bras d'essuie-glace, nettoyer son pivot de la manière indiquée sur l'illustration. Cela réduira la possibilité de desserrage du bras d'essuie-glace.**

Simpo PDF Merge and Split Unregistered Version - http://www.simpopdf.com

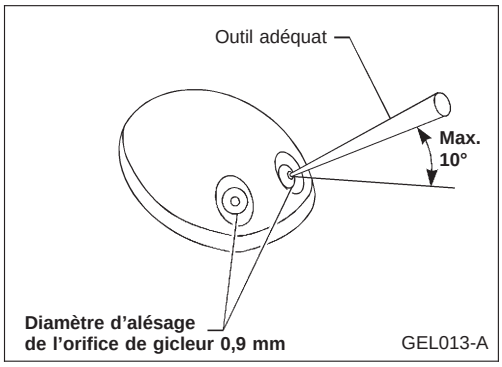

Réglage du gicleur de lave-glace

- Régler les gicleurs de lave-glace avec un outil adéquat comme indiqué sur la figure ci-contre.
  Gamme réglable : ±10°

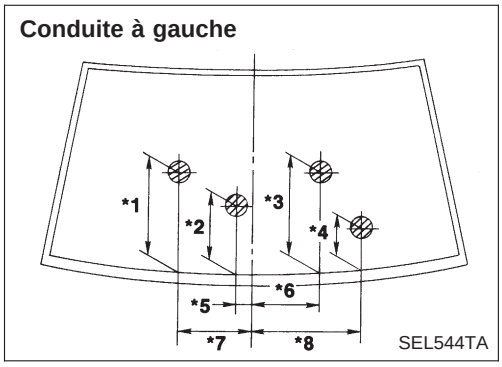

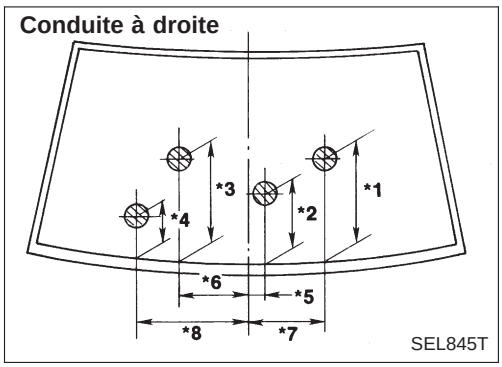

Unité : mm

*1	470	*5	60
*2	215	*6	225
*3	380	*7	255
*4	180	*8	460

* : Les diamètres de ces cercles sont inférieurs à de 60 mm.

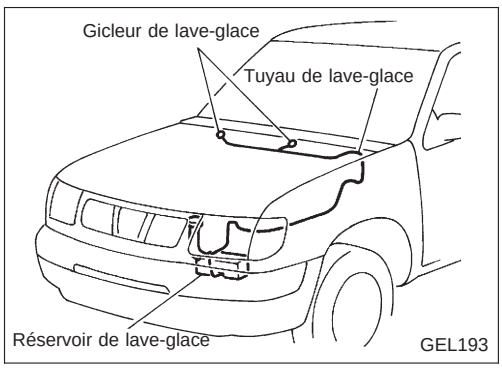

Disposition du tuyau de lave-glace

Simpo PDF Merge and Split Unregistered Version - http://www.simpopdf.com

Timonerie d'essuie-glace

Conduite à gauche*

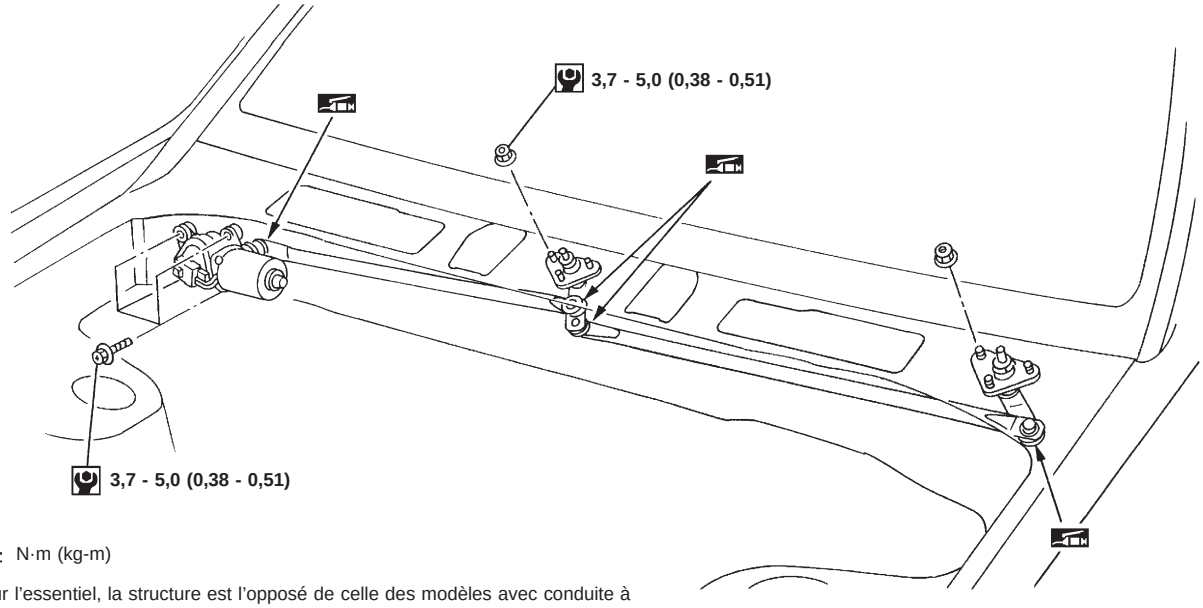

: N·m (kg-m)

* Pour l'essentiel, la structure est l'opposé de celle des modèles avec conduite à droite.

GEL194

DEPOSE

1. Déposer les 4 boulons qui fixent le moteur d'essuie-glace.
2. Désaccoupler le moteur d'essuie-glace de la timonerie d'essuie-glace au niveau du joint à rotule.
3. Déposer la timonerie d'essuie-glace.

Veiller à ne pas casser le soufflet en caoutchouc du joint à rotule.

REPOSE

- Graisser le joint à rotule avant la repose.

1. La repose se fait dans le sens inverse de la dépose.

Simpo PDF Merge and Split Unregistered Version - http://www.simpopdf.com

Schéma de câblage – HLC –

EL-HLC-01

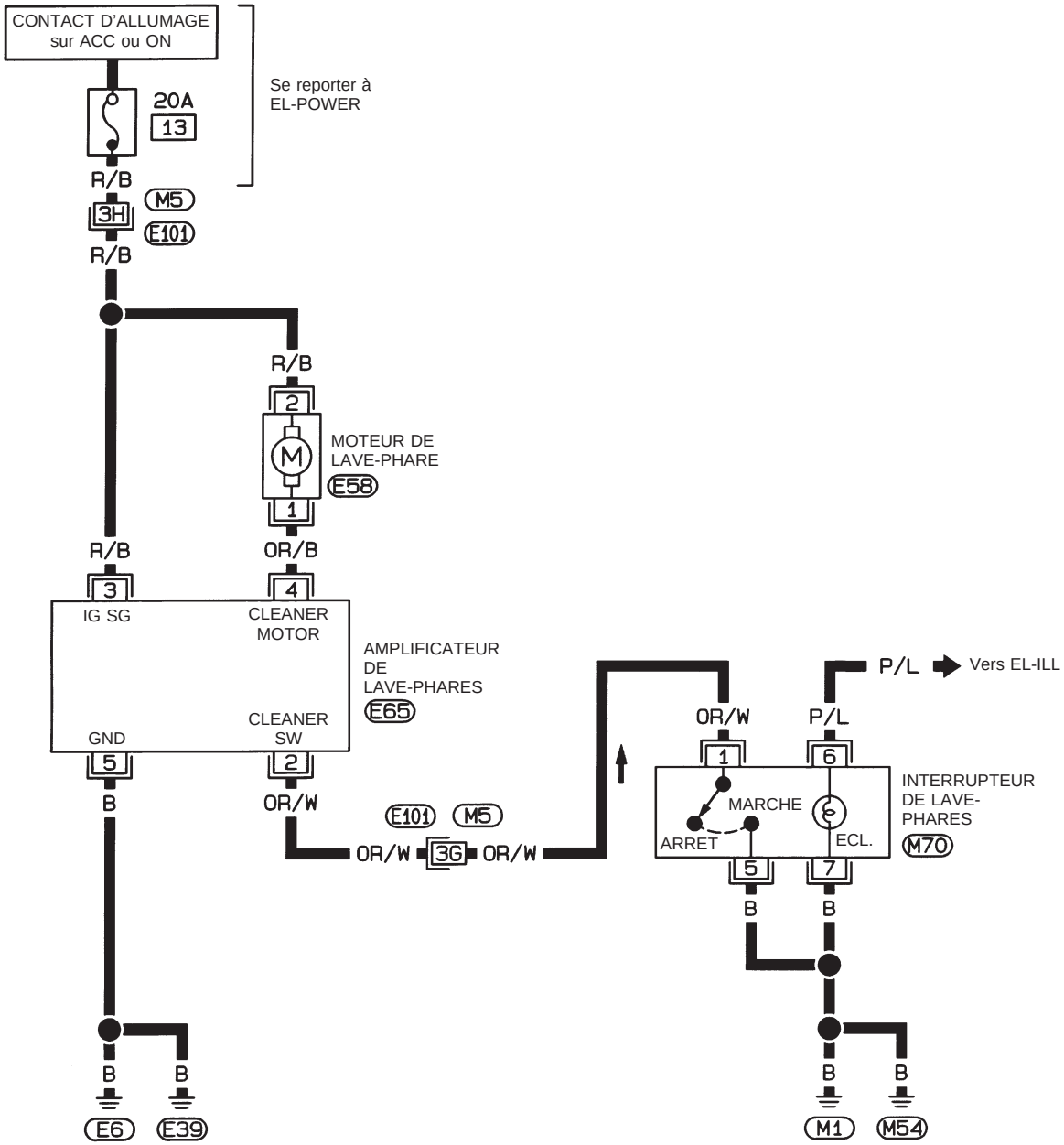

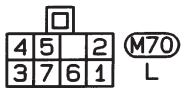



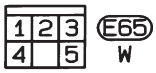

Se reporter à la dernière page dépliante.

M5 , E101

HEL373A

Simpo PDF Merge and Split Unregistered Version - http://www.simpopdf.com

Diagnostics des défauts

TABLEAU D'INSPECTION DE L'AMPLIFICATEUR DE LAVE-PHARES

La tension doit être calculée entre chaque borne de connecteur de faisceau de l'ampli. de lave-phare et la masse.

N° borne	Connexions	Condition de fonctionnement		Tension (V) (valeurs approximatives)
2	Commande de lave-phares	Commande de lave-phares	MARCHE	0V
			ARRET	12V
3	Source d'alimentation de l'amplificateur	Contact d'allumage sur ''Acc'' ou ''ON''		12V
4	Moteur de lave-phares	Commande de lave-phares	MARCHE	0V REMARQUE : Environ 0,5 sec.
			ARRET	12V
5	Masse	–		–

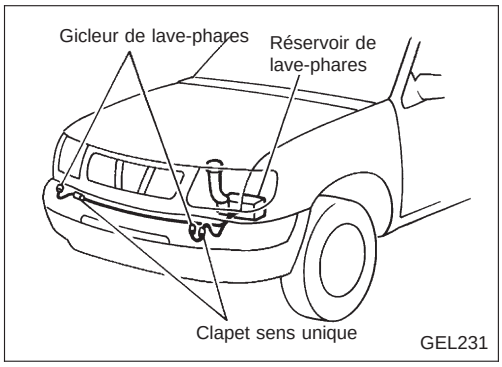

Disposition du tuyau de lave-phares

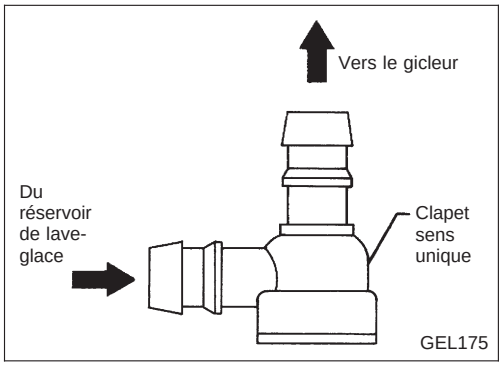

Clapet sens unique

Simpo PDF Merge and Split Unregistered Version - http://www.simpopdf.com

Schéma de câblage – HORN –

EL-HORN-01

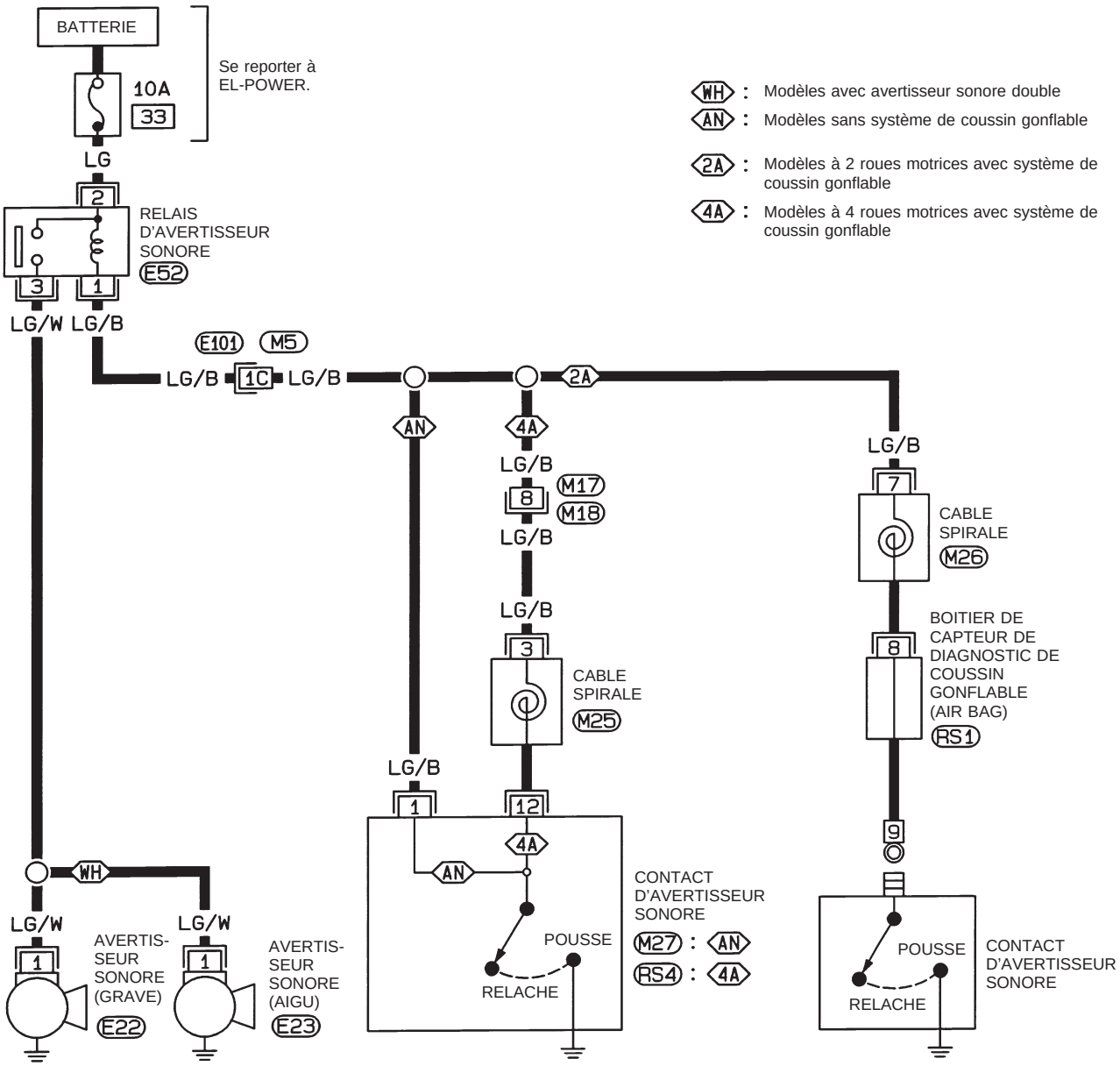

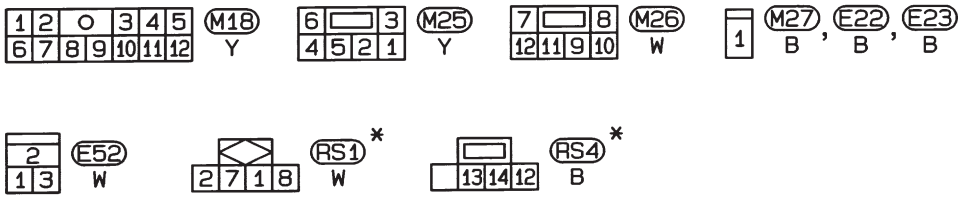

* : Ce connecteur n'est pas indiqué dans la "DISPOSITION DES FAISCEAUX".

Se reporter à la dernière page dépliante.

M5 , E101

HEL941

Simpo PDF Merge and Split Unregistered Version - http://www.simpopdf.com

Schéma de câblage – CIGAR –

EL-CIGAR-01

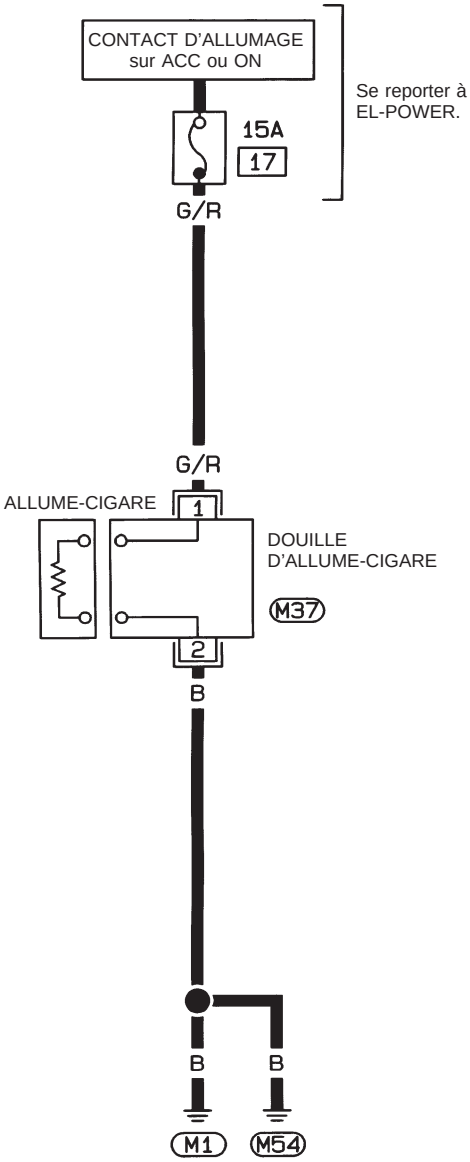

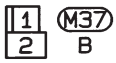

Simpo PDF Merge and Split Unregistered Version - http://www.simpopdf.com

Schéma de câblage – CLOCK –

EL-CLOCK-01

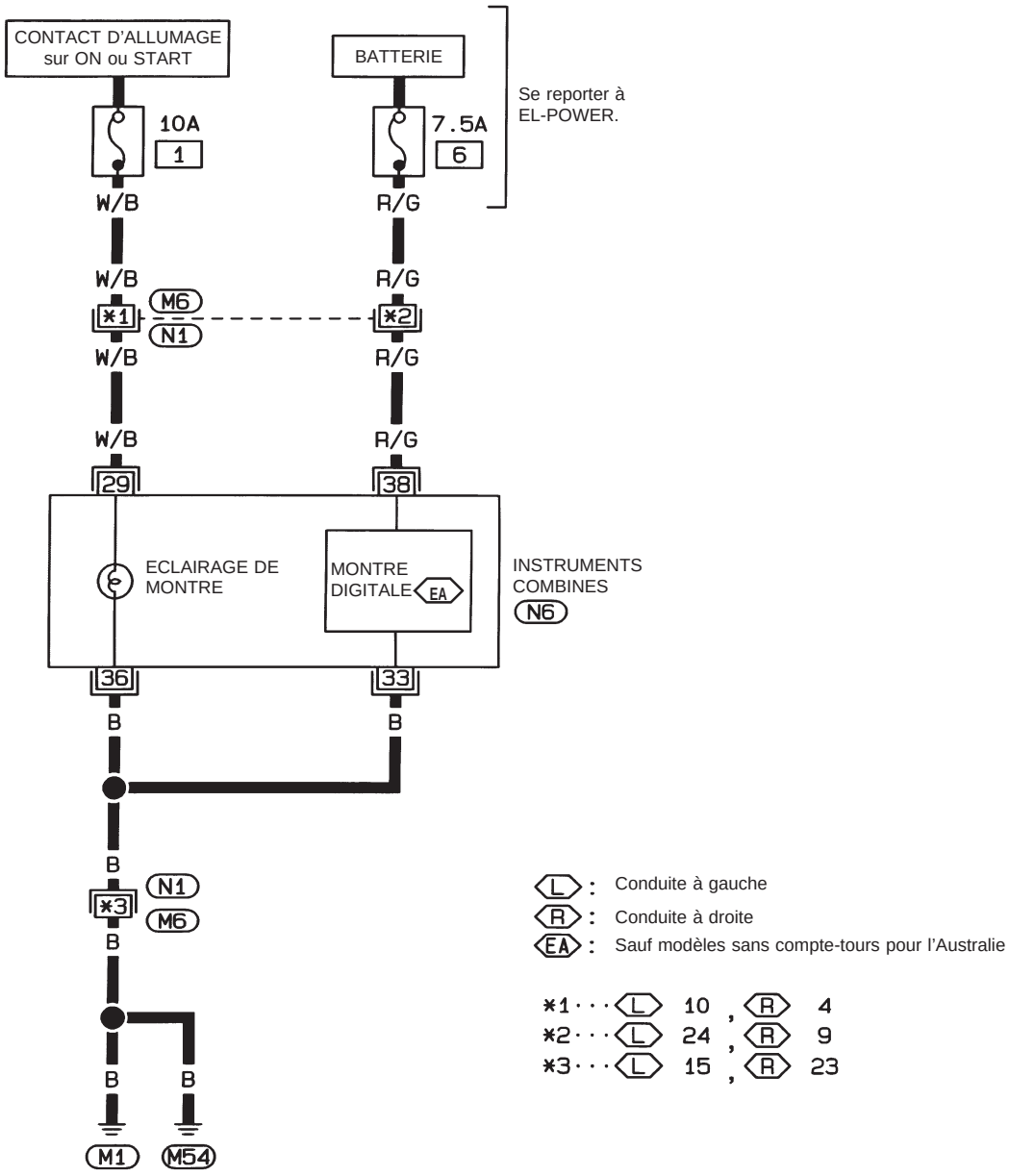



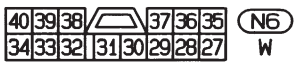

HEL375A

Simpo PDF Merge and Split Unregistered Version - http://www.simpopdf.com

Schéma de câblage – DEF –

EL–DEF–01

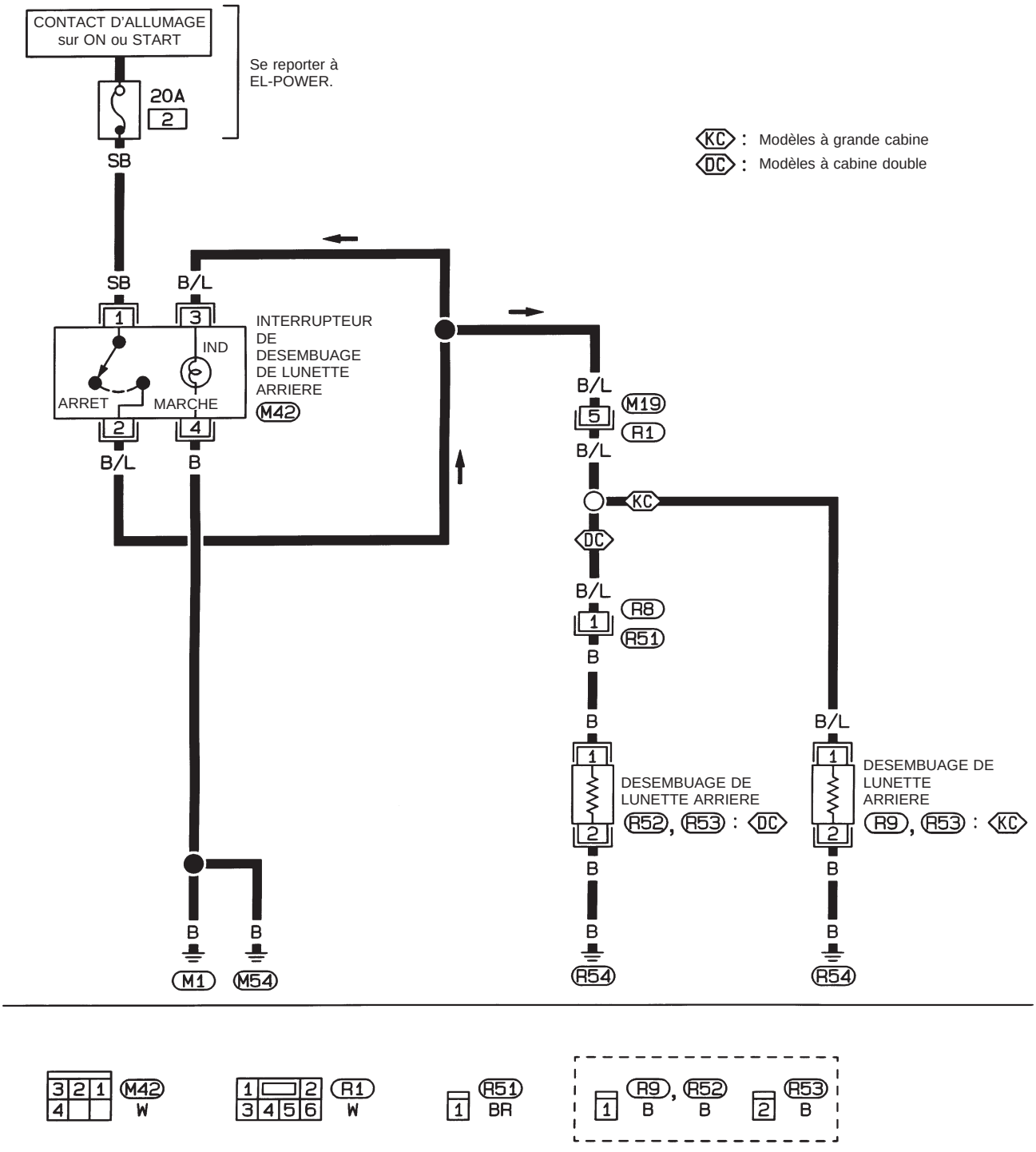

HEL376A

Simpo PDF Merge and Split Unregistered Version - http://www.simpopdf.com

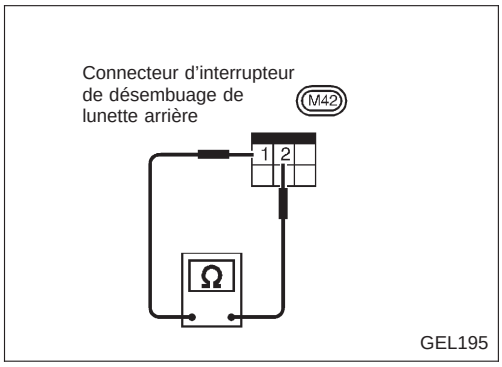

Inspection des composants électriques

INTERRUPTEUR DE DESEMBUAGE DE LUNETTE ARRIERE

Vérifier la continuité entre les bornes lorsque l'interrupteur de désembuage de lunette arrière est enfoncé et relâché.

Bornes	Condition	Continuité
① - ②	L'interrupteur de désembuage de lunette arrière est enfoncé	Oui
	L'interrupteur de désembuage de lunette arrière est relâché	Non

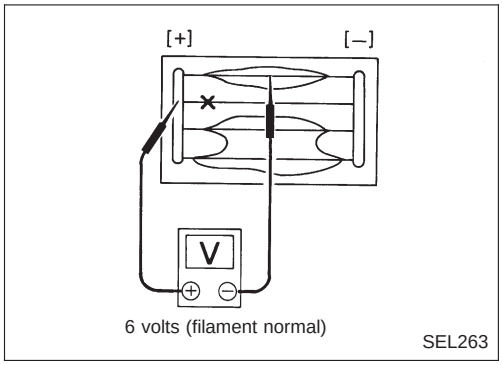

Vérification des filaments

1. Fixer la sonde d'un voltmètre (sur la plage des volts) sur la partie médiane de chaque filament.

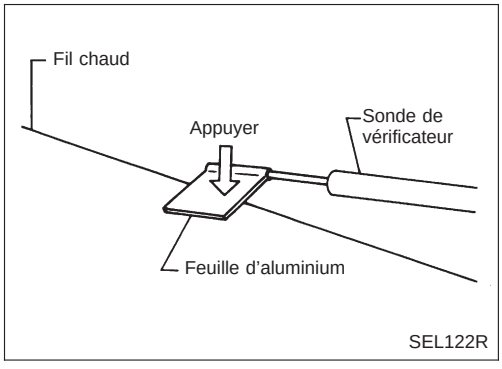

- **Pour mesurer la tension, entourer la pointe de la sonde négative d'une feuille d'aluminium. Appliquer ensuite l'aluminium sur le filament en appuyant du doigt.**

Simpo PDF Merge and Split Unregistered Version - http://www.simpopdf.com

Vérification des filaments (Suite)

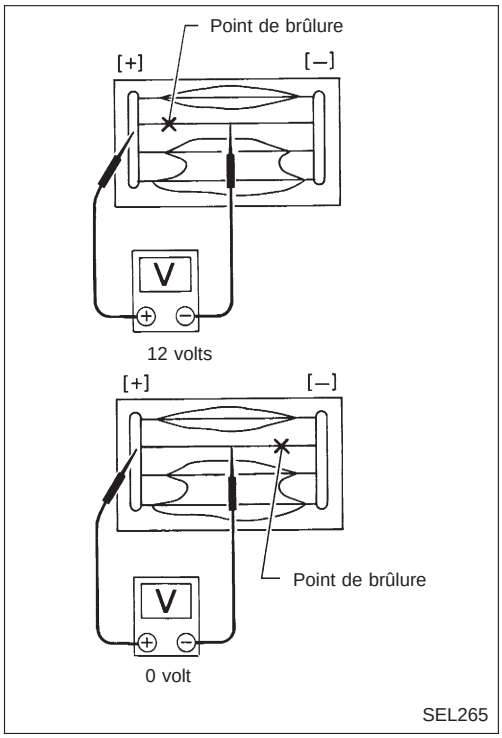

2. Si un filament est brûlé, le voltmètre enregistre 0 ou 12V.

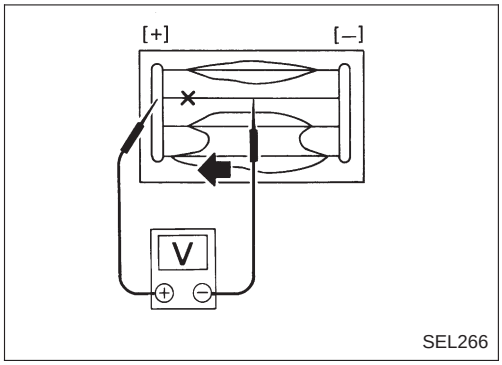

3. Pour localiser les endroits brûlés, déplacer la sonde vers la gauche et la droite le long du filament. L'aiguille de l'appareil retombe brusquement quand la sonde passe sur le point-brûlé.

Remise en état du filament

EQUIPEMENT DE REPARATION

1. Pâte d'argent conductive (Dupont n° 4817 ou équivalent)
2. Règle de 30 cm de long
3. Pointe à tracer
4. Pistolet à air chaud
5. Alcool
6. Chiffon

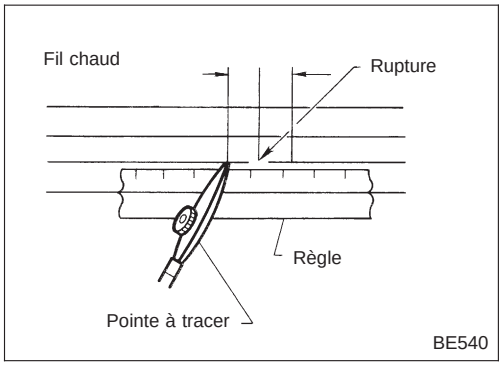

PROCEDURE DE REPARATION

1. Bien nettoyer le filament brisé ainsi que la zone avoisinante avec un chiffon imbibé d'alcool.
2. Apposer un petit peu de pâte d'argent conductive sur le bout de la pointe à tracer.

Secouer le conteneur de pâte d'argent avant l'usage.

3. Disposer la règle sur le verre, le long du filament brisé. Déposer la pâte d'argent conductive sur le point prisé à l'aide de la pointe à tracer. Recouvrir légèrement de pâte le fil chaud de part et d'autre de la brisure (sur 5 mm de préférence).

Simpo PDF Merge and Split Unregistered Version - http://www.simpopdf.com

Remise en état du filament (Suite)

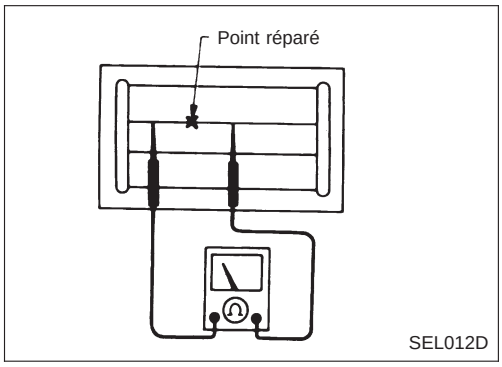

4. Après la remise en état, effectuer un essai de continuité du filament concerné. Cette vérification devrait être menée 10 minutes après l'application de la pâte d'argent.

Ne pas toucher la zone réparée pendant l'essai.

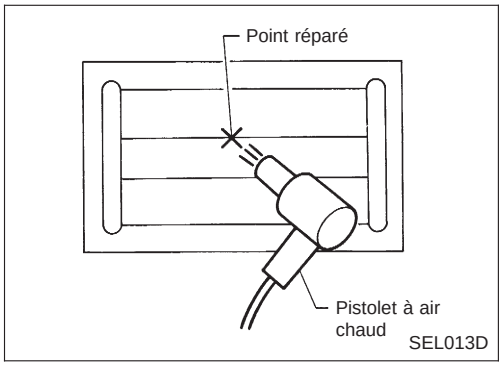

5. Envoyer un jet constant d'air chaud sur la zone remise en état pendant environ 20 minutes à l'aide d'un pistolet à air chaud. Eloigner la sortie d'air chaud de 3 cm par rapport à la zone remise en état. Si l'on ne dispose pas de pistolet à chaleur, il convient de laisser sécher la zone réparée pendant 24 heures.

Simpo PDF Merge and Split Unregistered Version - http://www.simpopdf.com

Schéma de câblage – AUDIO –/Conduite à gauche type-2

AVEC 2 OU 4 HAUT-PARLEURS (sans lecteur CD) ET AVEC 1 HAUT-PARLEUR (pour l'Europe)

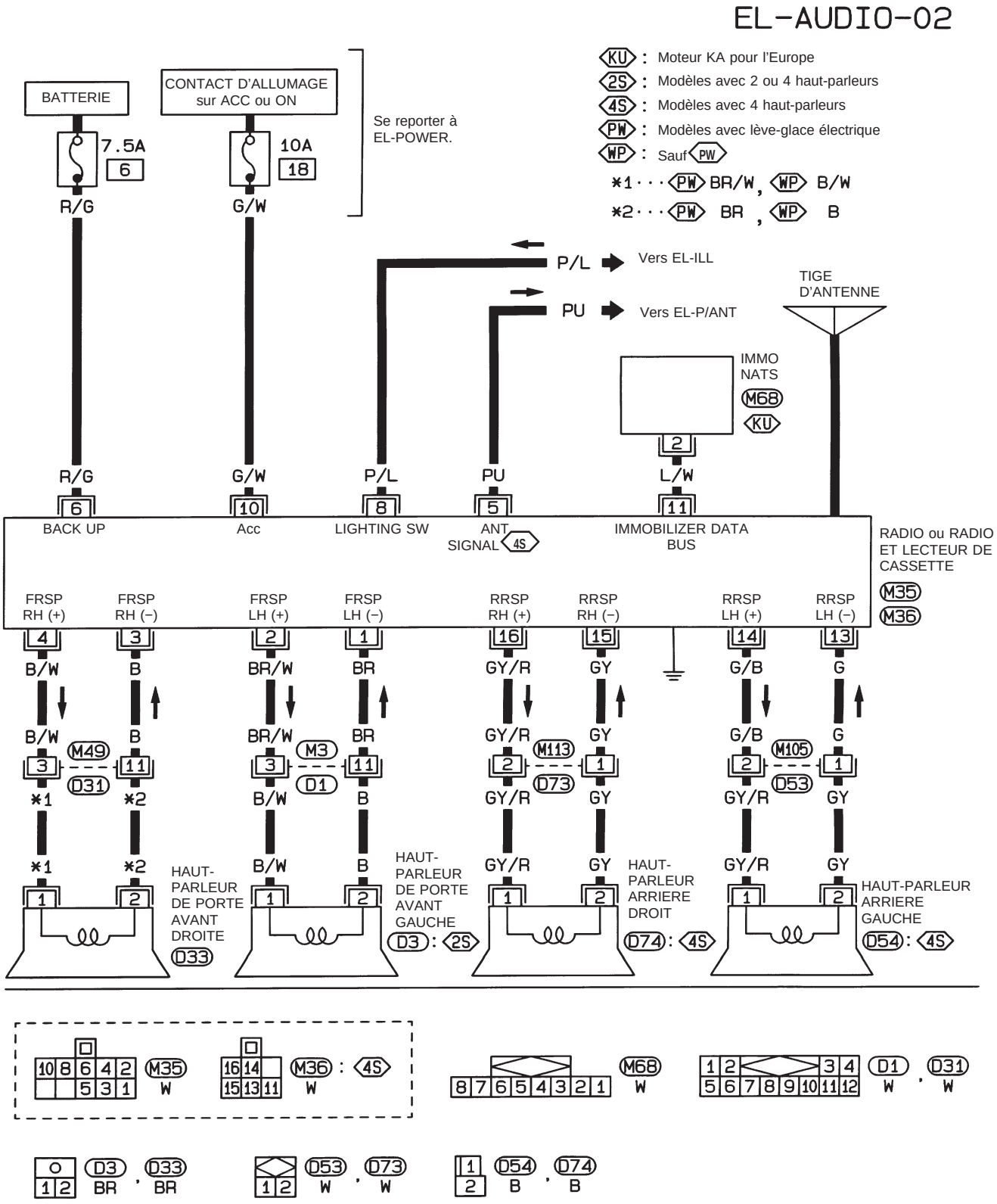

HEL377A

Simpo PDF Merge and Split Unregistered Version - http://www.simpopdf.com

Schéma de câblage – AUDIO –/Conduite à gauche type-3

AVEC 4 HAUT-PARLEURS (Avec lecteur CD)

EL-AUDIO-03

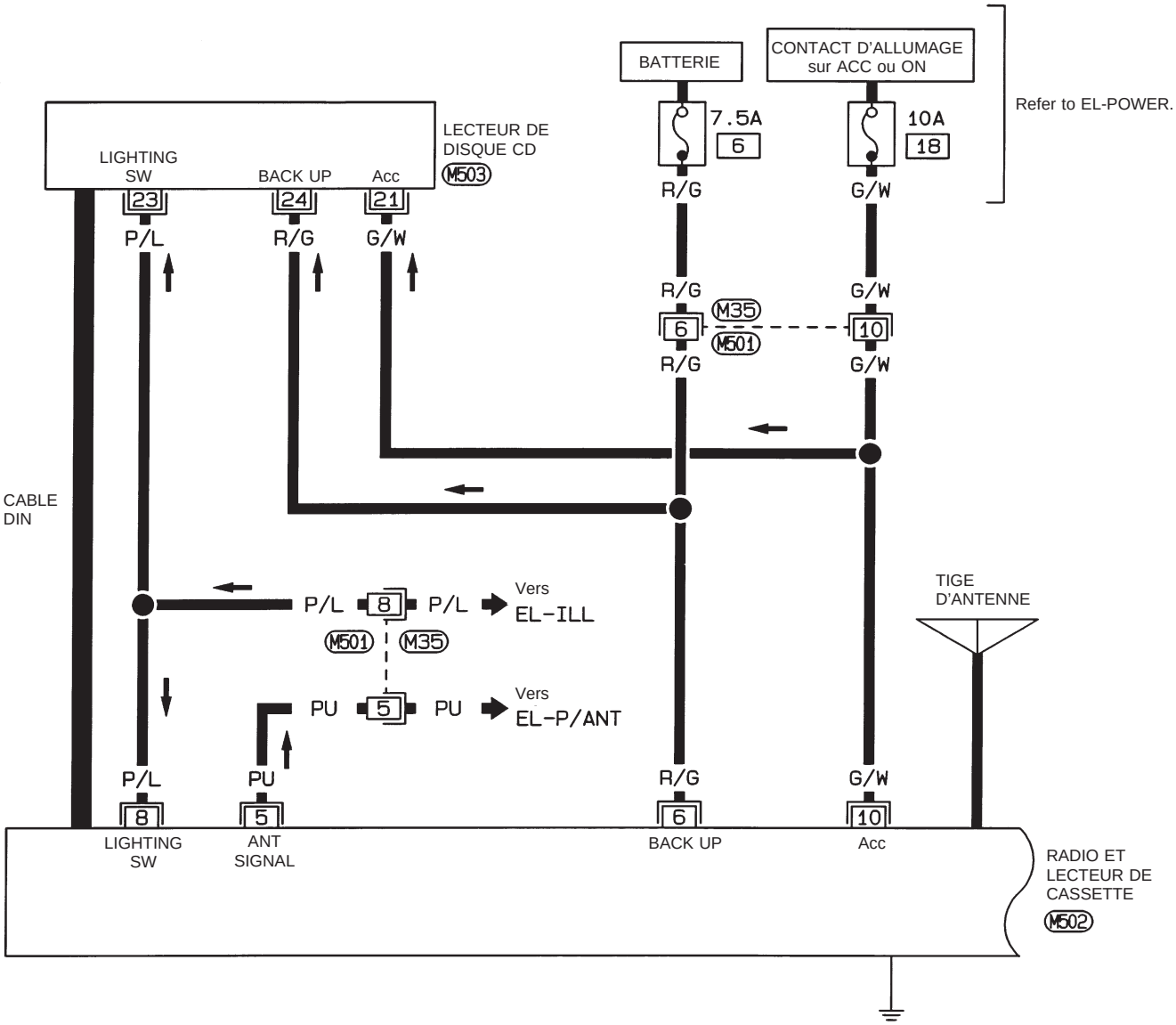

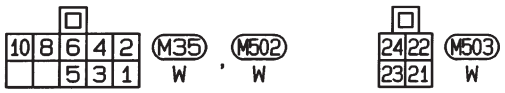

Simpo PDF Merge and Split Unregistered Version - http://www.simpopdf.com

Schéma de câblage – AUDIO –/Conduite à gauche type-3 (Suite)

EL-AUDIO-04

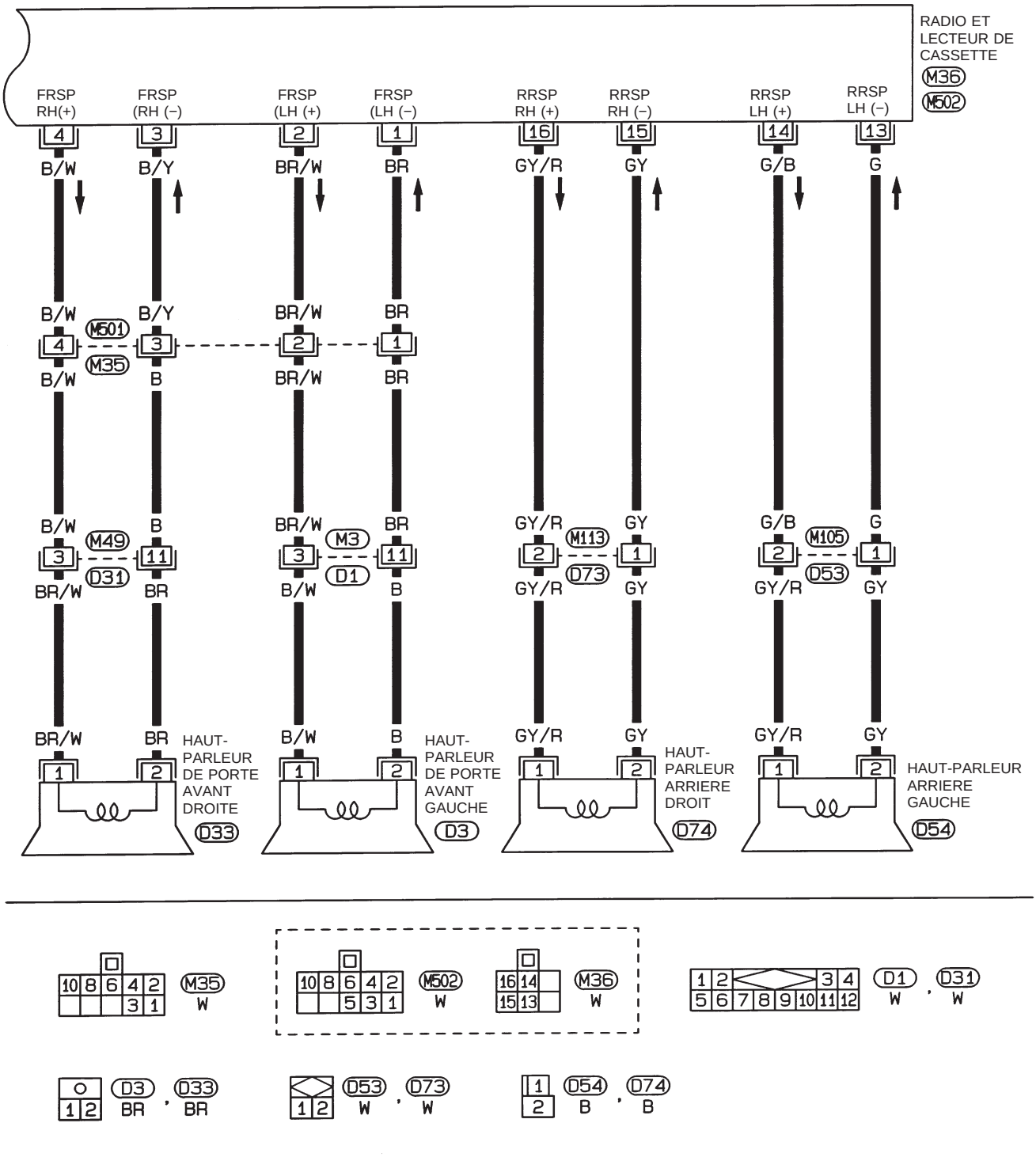

HEL947

Simpo PDF Merge and Split Unregistered Version - http://www.simpopdf.com

Schéma de câblage – AUDIO –/Conduite à droite

EL-AUDIO-05

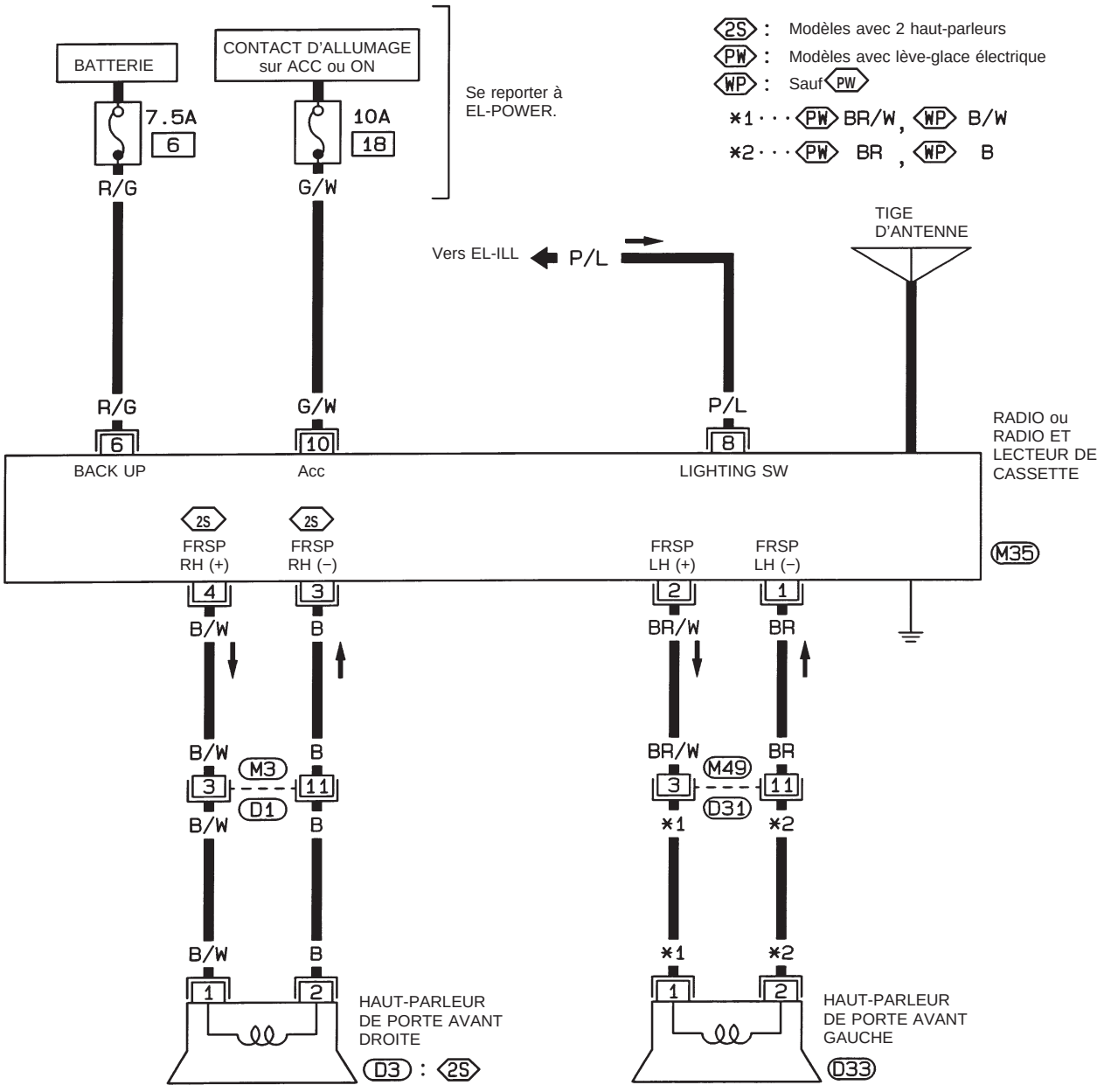

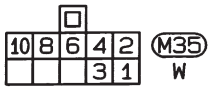

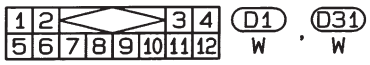



HEL948

Simpo PDF Merge and Split Unregistered Version - http://www.simpopdf.com

Diagnostics des défauts

Symptôme	Causes possibles	Ordre de réparation
Radio inopérante (pas d'affichage digital ni de son émis par les haut-parleurs).	1. Fusible de 10A 2. Mauvaise mise à la masse du boîtier radio 3. Radio	1. Vérifier le fusible de 10A (n° 18, situé dans le boîtier à fusibles). Mettre le contact d'allumage sur ''ON''et vérifier qu'une tension positive de la batterie est appliquée à la borne ⑩ de la radio. 2. Vérifier la masse du boîtier de radio. 3. Déposer la radio pour réparation.
Les commandes de la radio fonctionnent, mais aucun son n'est émis par les haut-parleurs.	1. Puissance de la radio 2. Radio	1. Vérifier les tensions de la sortie de la radio. 2. Déposer la radio pour réparation.
Les stations mémorisées s'effacent quand le contact d'allumage est sur OFF.	1. Fusible de 7,5A 2. Radio	1. Vérifier le fusible de 7,5A (n° 6, situé dans le boîtier à fusibles) et vérifier qu'une tension positive de la batterie est appliquée à la borne ⑥ de la radio. 2. Déposer la radio pour réparation.
Les haut-parleurs individuels émettent des parasites ou ne fonctionnent pas.	1. Haut-parleur 2. Puissance de la radio 3. Circuit de haut-parleur 4. Radio	1. Vérifier le haut-parleur. 2. Vérifier les tensions de la sortie de la radio. 3. Vérifier que les câbles ne sont pas ouverts ou court-circuités entre la radio et le haut-parleur. 4. Déposer la radio pour réparation.
Les stations de la radio sont faibles ou bruyantes.	1. Antenne 2. Mauvaise connexion à la masse de la radio 3. Radio	1. Vérifier l'antenne. 2. Vérifier la masse de radio. 3. Déposer la radio pour réparation.
La radio émet des parasites quand le moteur est en marche.	1. Mauvaise connexion à la masse de la radio 2. Fixations de la masse desserrées ou manquantes 3. Condenseur d'allumage ou condenseur antiparasite du chauffage de lunette arrière 4. Alternateur 5. Bobine d'allumage ou câblage secondaire 6. Radio	1. Vérifier la masse de radio. 2. Vérifier les fixations de la masse. 3. Remplacer le condenseur d'allumage ou le condenseur antiparasite du désembuage de lunette arrière. 4. Vérifier l'alternateur. 5. Vérifier la bobine d'allumage et le câblage secondaire. 6. Déposer la radio pour réparation.
La radio émet des parasites lorsque les accessoires sont allumés (bruits secs ou de moteur).	1. Mauvaise connexion à la masse de la radio 2. Antenne 3. Masse d'accessoires 4. Accessoires défectueux	1. Vérifier la masse de radio. 2. Vérifier l'antenne. 3. Vérifier la masse d'accessoires. 4. Remplacer les accessoires.

INSPECTION DES HAUT-PARLEURS

1. Débrancher le connecteur de faisceau du haut-parleur.
2. Mesurer la résistance entre les bornes ① et ② du haut-parleur.
- La résistance devrait être 2 - 4Ω.
3. A l'aide de câbles volants, brancher momentanément une batterie de 9V entre les bornes ① et ② du haut-parleur.
- On doit entendre un vrombissement ou un bruit sec momentané.

INSPECTION D'ANTENNE

A l'aide d'un câble volant, fixer une masse auxiliaire entre l'antenne et la carrosserie.
- Si cela améliore la réception, vérifier la connexion à la masse de l'antenne (à la surface de la carrosserie).
- Si cela n'améliore pas la réception, vérifier le câble d'alimentation principal pour vérifier qu'il n'y a pas de court-circuit ou de circuit ouvert.

INSPECTION DE LA RADIO

Toutes les inspections de tension doivent être effectuées dans les conditions suivantes :
- Contact d'allumage sur ''ON'' ou ''Acc''
- Radio allumée.
- Radio branchée (si la radio a été déposée pour une inspection, appliquer une masse au boîtier à l'aide d'un câble volant).

Simpo PDF Merge and Split Unregistered Version - http://www.simpopdf.com

Système CATS (code)/Pour l'Europe, conduite à droite

REMARQUE :
- **Ce système est utilisé pour les radios équipées d'un indicateur de code sur tous les modèles.**
- **Le modèle pour l'Europe, conduite à gauche, avec moteur KA24E, est équipé d'une fonction antivol NATS intégrée à la radio comme option, qui rend le système de code inopérant.**

DESCRIPTION

Grâce à un code personnel à quatre chiffres connu seulement du propriétaire du véhicule, l'éventualité d'un vol de la radio est considérablement réduite car sans le code, la radio ne peut pas être activée. En mode d'utilisation normale, l'appareil n'est pas bloqué et reste normalement utilisable.
Cependant, si quelqu'un tente d'enlever la radio ou si le câble de batterie est débranché de la batterie, le système antivol est activé et la radio est ''verrouillée''. L'utilisation d'un code personnel uniquement connu du propriétaire est le seul moyen pour débloquer l'appareil.

DEVERROUILLAGE DU BOITIER (Comment entrer un numéro de code personnel)

- Si l'alimentation de la batterie du véhicule est interrompue par accident, la radio se verrouillera. Pour déverrouiller l'unité, procéder comme suit :

1. Appuyer sur le bouton de commande du volume et d'alimentation pour mettre la radio en marche.
2. ''CODE IN'' s'affiche.
3. Entrer son code personnel en appuyant sur les boutons de présélection (1 à 4).
4. Appuyer sur le bouton ^ .
5. Si le numéro du code entré est correct, la radio s'allume.

Lorsque le code est incorrect

1. Si le code enregistré est incorrect, la radio reste inopérante pendant 10 secondes lors des trois premières tentatives, puis le mode d'entrée de code s'affiche automatiquement (''CODE IN'').
2. Si le code est incorrect la quatrième fois, la radio devient inopérante pendant 60 minutes et ''----'' s'affiche. Après 60 minutes, le mode d'entrée de code est automatiquement actionné (''CODE IN'' s'affiche).

REMARQUE :
Si l'opération ci-dessus se répète 17 fois, l'unité se verrouillera et ''LOCKED'' s'affichera.

3. Une fois ''LOCKED'' affiché, la radio peut repasser en mode d'entrée de code seulement trois fois (seulement 3 tentatives sont possibles pour déverrouiller la radio).

a. Appuyer sur le bouton de commande du volume et d'alimentation tout en appuyant sur les boutons MOD et TA.
b. La radio revient alors au mode d'entrée de code.

ATTENTION :
Si la troisième tentative est infructueuse, la radio se verrouillera définitivement.

Simpo PDF Merge and Split Unregistered Version - http://www.simpopdf.com

Liaison audio NATS/Pour l'Europe, conduite à gauche (KA24E)

DESCRIPTION

Le modèle pour l'Europe, conduite à gauche, avec moteur KA24E, est équipé d'une fonction antivol NATS intégrée à la radio comme option.
La liaison avec l'IMMO NATS implique que la radio ne fonctionne en principe que si elle est branchée à l'IMMO NATS assorti, auquel la radio avait été initialement associée sur la chaîne de fabrication.
Puisque le fonctionnement de la radio devient impossible après que la liaison avec le NATS a été interrompue, le vol de la radio est simplement vain puisqu'un équipement spécial serait nécessaire pour réinitialiser la radio.

Procédure d'initialisation pour les radios reliées à l'IMMO NATS

Les radios neuves seront délivrées aux usines en condition ''NEW'', c'est-à-dire prêtes à être reliées au NATS du véhicule.
Lorsque la radio en condition ''NEW'' est allumée pour la première fois à l'usine, cela déclenche la communication avec le boîtier de contrôle d'immobilisateur du véhicule (IMMO) et un code (le code de radio) est envoyé à l'IMMO. L'IMMO gardera alors ce code dans sa mémoire (permanente), propre à chaque radio.
Une fois que l'IMMO a reçu le code, le NATS confirme à la radio qu'il a bien reçu son code. Plus tard, la radio fonctionnera normalement.
Pendant le déroulement de l'initialisation, ''NEW'' s'affiche sur la radio. Normalement, la communication entre la radio et l'IMMO prend si peu de temps (300 ms) que la radio semble s'allumer directement sans afficher ''NEW''.

Fonctionnement normal

Chaque fois que la radio est allumée après l'initialisation, le code de la radio est vérifié entre le boîtier de radio et le NATS avant que la radio devienne opérationnelle. Pendant le déroulement de la vérification du code, ''WAIT'' s'affiche sur la radio. Une fois de plus la communication demande si peu de temps (300ms) que la radio semble s'allumer directement sans afficher ''WAIT''.

Quand la radio est verrouillée

Si la radio est reliée au NATS du véhicule (système d'immobilisation), tout branchement ou débranchement de la liaison entre la radio et l'IMMO entraînera le passage de la radio en mode de verrouillage (''SECURE''), mode dans lequel le boîtier de radio est entièrement inopérant. Par conséquent, la réparation de la radio devient impossible, à moins que la radio ne revienne en condition ''NEW'', position pour laquelle un équipement de décodage est nécessaire.
Blaupunkt et Clarion ont tous deux mis à disposition de leurs représentants autorisés pour l'entretien des ''décodeurs'' pouvant ramener le boîtier de radio en condition ''NEW''. Ceci permet d'allumer la radio, après quoi la réparation peut être effectuée. Par la suite, quand la radio réparée est délivrée de nouveau au dernier utilisateur, elle est en condition ''NEW'' pour rendre possible toute nouvelle liaison de la radio au système d'immobilisation du véhicule. Par conséquent, toute réparation de la radio ne pourra être faite que par un représentant autorisé Blaupunkt ou Clarion.

Note :
Le fabricant de radio des modèles Nissan D22 pour l'Europe est ''Clarion''.

PROCEDURE D'ENTRETIEN

Eléments	Procédure d'entretien	Description
Débranchement de la batterie	Pas de manipulation supplémentaire nécessaire.	–
La radio a besoin d'être réparée	Toute réparation doit être faite par un représentant autorisé par le fabricant de radio puisque la radio ne peut pas être mise en marche à moins qu'elle ne soit en condition ''NEW'', ce qui nécessite un équipement de décodage spécial.	–

Simpo PDF Merge and Split Unregistered Version - http://www.simpopdf.com

Liaison audio NATS/Pour l'Europe, conduite à gauche (KA24E) (Suite)

Eléments	Procédure d'entretien	Description
Remplacement de la radio par une pièce neuve	Pas de manipulation supplémentaire nécessaire.	La radio est délivrée en condition ''NEW''.
Transfert de la radio sur un autre véhicule/ remplacement de la radio par une pièce ''ancienne''	La radio a besoin d'être remise en condition ''NEW'' par un représentant autorisé par le fabricant de la radio.	–
Remplacement de l'IMMO par une pièce neuve	Pas de manipulation supplémentaire nécessaire.	Le nouvel IMMO sera reconnu par la radio puisqu'un code ''vide'' a été enregistré dans la mémoire de l'IMMO. Si la radio reconnaît ce code ''vide'', la procédure d'entrée du code CATS correct sera lancée, après quoi la radio reviendra à la procédure d'initialisation.
Remplacement de l'IMMO par une pièce ancienne	La radio a besoin d'être remise en condition ''NEW'' par un représentant autorisé par le fabricant de la radio.	Si un code de radio a déjà été mis en mémoire dans l'IMMO, la radio ne peut pas y être reliée. Après avoir allumé la radio, ''SECURE'' s'affichera après 1 minute.
Pas de communication de l'IMMO à la radio	1. Si le NATS ne fonctionne pas correctement, vérifier le système NATS. 2. Une fois le NATS réparé, faire installer la radio en condition ''NEW'' par un représentant autorisé par le fabricant de la radio.	Après avoir allumé la radio, la radio affichera ''SECURE'' après 1 minute. Il est n'est pas possible d'utiliser la radio avant que la communication soit de nouveau établie, ou après que la radio soit installée par un représentant autorisé par le fabricant de la radio.

REMARQUE : Une liste des représentants autorisés par les fabricants de la radio est disponible dans le bulletin technique TB-EL 96-001 publié par Nissan Europe N.V.

Simpo PDF Merge and Split Unregistered Version - http://www.simpopdf.com

Antenne manuelle

EMPLACEMENT DE L'ANTENNE DE TOIT

Conduite à gauche*

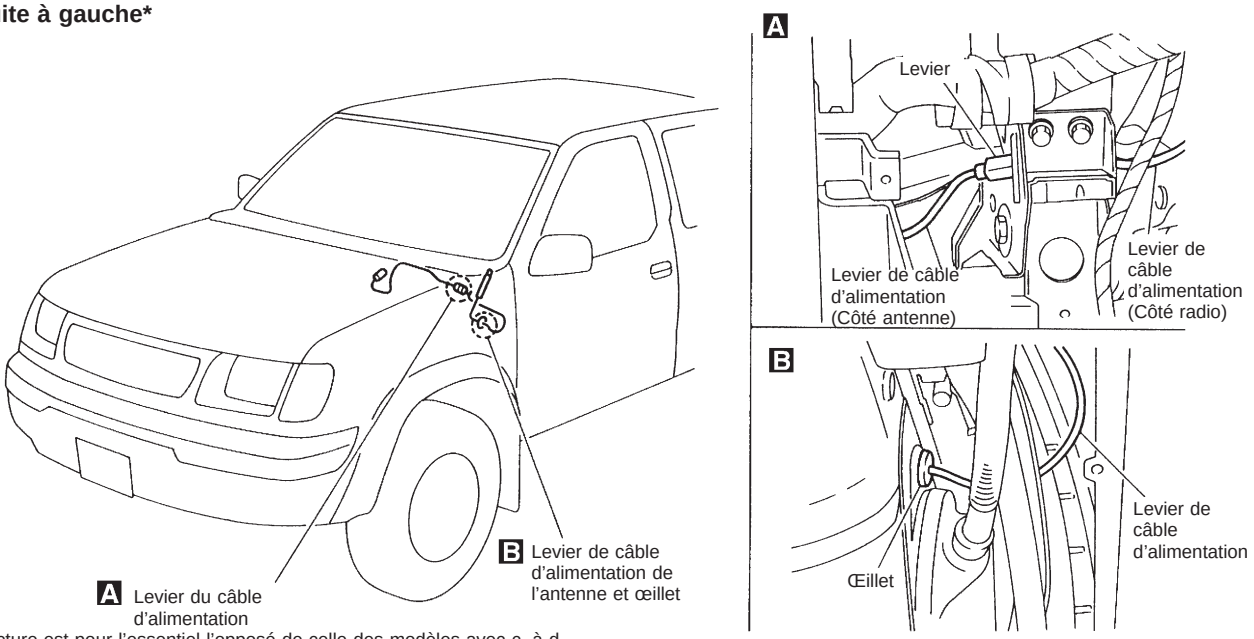

* La structure est pour l'essentiel l'opposé de celle des modèles avec c. à d..

GEL196

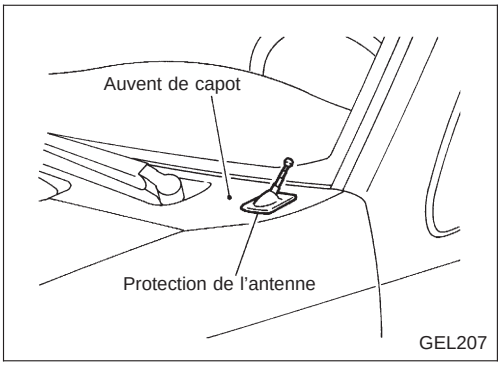

GEL207

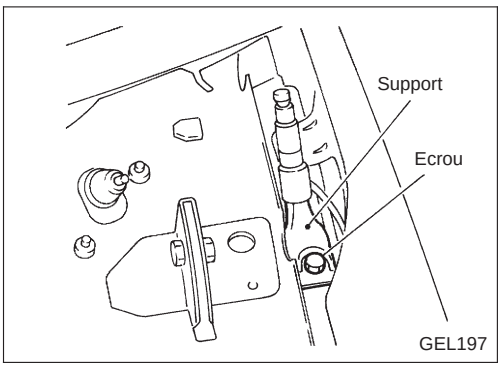

GEL197

REMPLACEMENT DE L'ENSEMBLE D'ANTENNE

1. Déposer la protection de l'antenne dans l'auvent.
2. Déposer l'arbre d'essuie-glace et l'auvent.
3. Desserrer l'écrou du support de l'antenne.
4. Débrancher le câble d'alimentation d'antenne comme indiqué dans l'illustration.
5. Déposer la protection de l'aile.
6. Déposer l'œillet et tirer le câble d'alimentation de l'aile de l'intérieur de l'aile.
7. Déposer l'ensemble de l'antenne et le remplacer par un neuf.

Simpo PDF Merge and Split Unregistered Version - http://www.simpopdf.com

Antenne électrique/Schéma de câblage – P/ANT –

EL-P/ANT-01

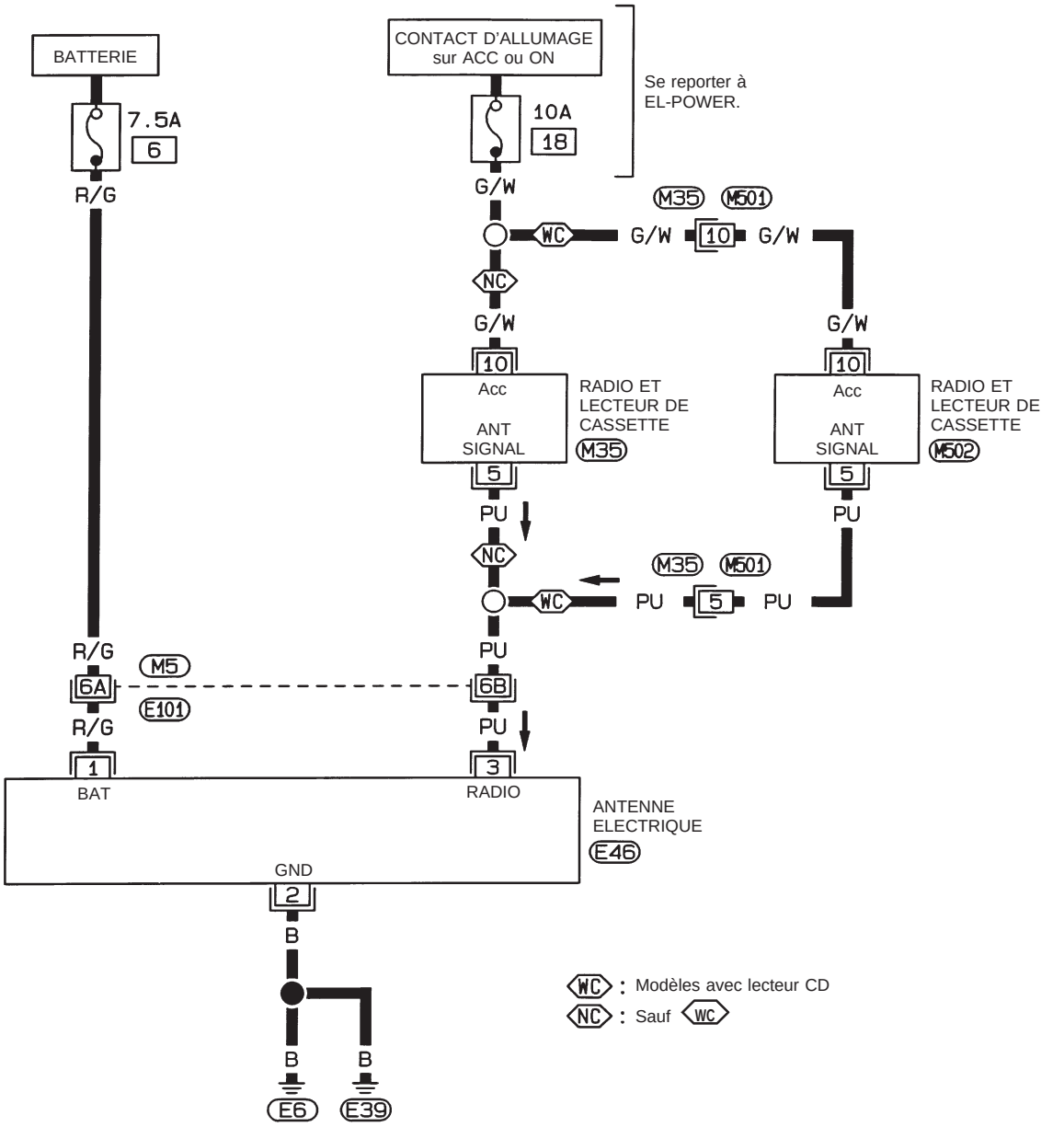

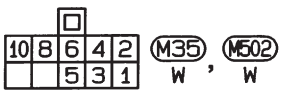

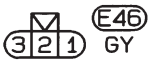

Se reporter à la dernière page dépliante.

M5 , E101

HEL949

Simpo PDF Merge and Split Unregistered Version - http://www.simpopdf.com

Antenne électrique

DIAGNOSTICS DES DEFAUTS

Symptôme	Causes possibles	Ordre de réparation
L'antenne électrique ne fonctionne pas.	1. Fusible de 7,5A 2. Signal de la radio 3. Masses E6 et E39	1. Vérifier le fusible de 7,5A (n° 6 situé dans le boîtier à fusibles). Vérifier si la tension positive de la batterie est présente à la borne ① de l'antenne électrique. 2. Mettre le contact d'allumage et la radio sur ON. Vérifier si la tension positive de la batterie est présente à la borne ③ de l'antenne électrique. 3. Vérifier les masses E6 et E39.

EMPLACEMENT DE L'ANTENNE DE TOIT

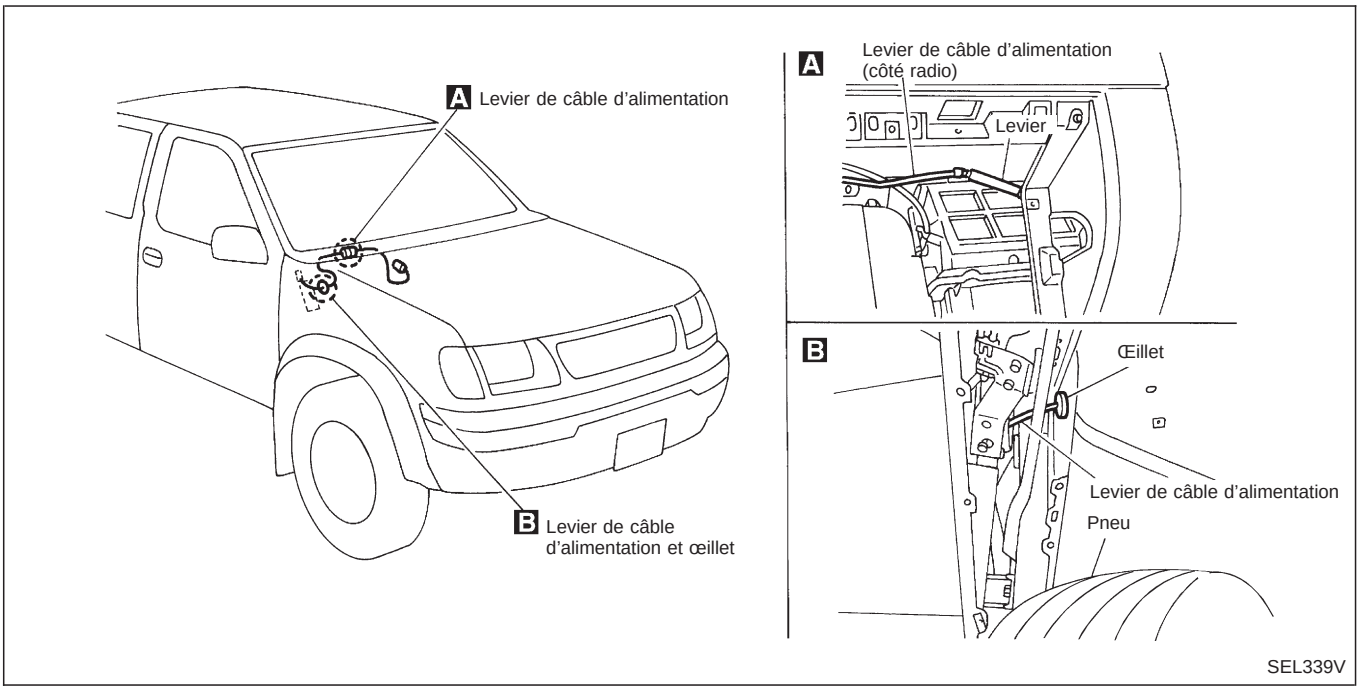

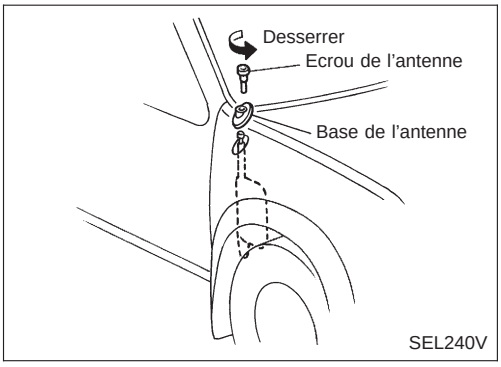

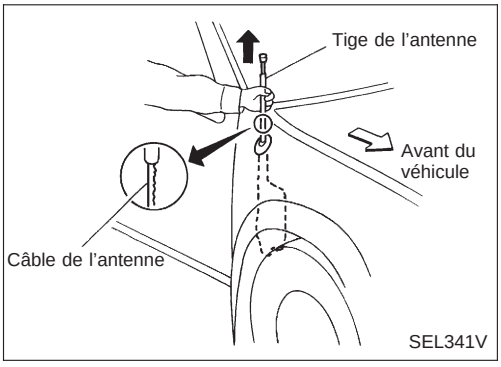

REMPLACEMENT DE LA TIGE DE L'ANTENNE

Dépose

1. Déposer l'écrou de l'antenne et sa base.
2. Replier la tige de l'antenne tout en la levant en actionnant le moteur de l'antenne.

Simpo PDF Merge and Split Unregistered Version - http://www.simpopdf.com

Antenne électrique (Suite)

Repose

1. Abaisser la tige de l’antenne en actionnant le moteur de l’antenne.
2. Introduire la partie dentée du câble d’antenne en position en la tournant vers le moteur d’antenne.
3. Dès que le câble d’antenne est enroulé autour du moteur d’antenne, arrêter celui-ci. Introduire l’extrémité inférieure de la tige d’antenne dans le tube du moteur d’antenne.
4. Rentrer entièrement la tige de l’antenne en actionnant le moteur de l’antenne.
5. Monter l’écrou et la base d’antenne.

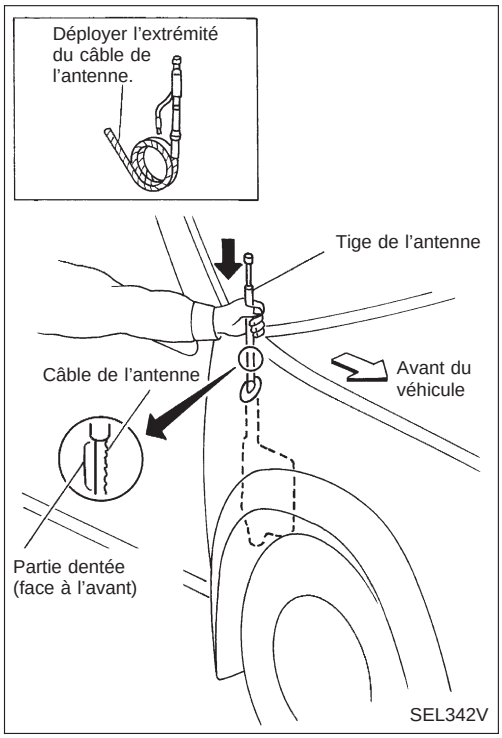

REMPLACEMENT DE L’ENSEMBLE D’ANTENNE

1. Déposer l’écrou et la base de l’antenne.
2. Desserrer les boulons du support de l’antenne et débrancher le connecteur de l’antenne électrique.
3. Débrancher les câbles d’alimentation d’antenne comme indiqué dans ‘‘EMPLACEMENT DE L’ANTENNE’’.
4. Déposer la protection de l’aile.
5. Déposer l’œillet et tirer le câble d’alimentation de l’aile de l’intérieur de l’aile.
6. Déposer l’ensemble de l’antenne et le remplacer par un neuf.

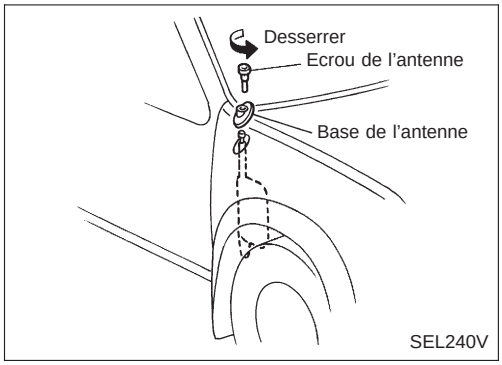

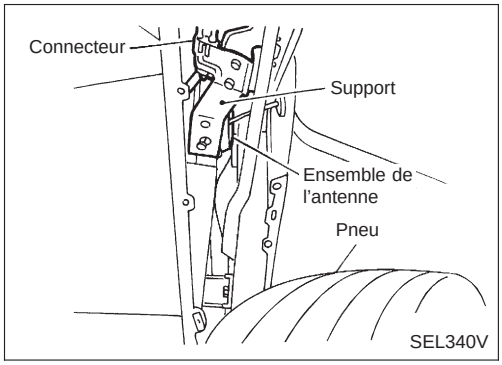

Simpo PDF Merge and Split Unregistered Version - http://www.simpopdf.com

Schéma de câblage – MIRROR –

EL-MIRROR-01

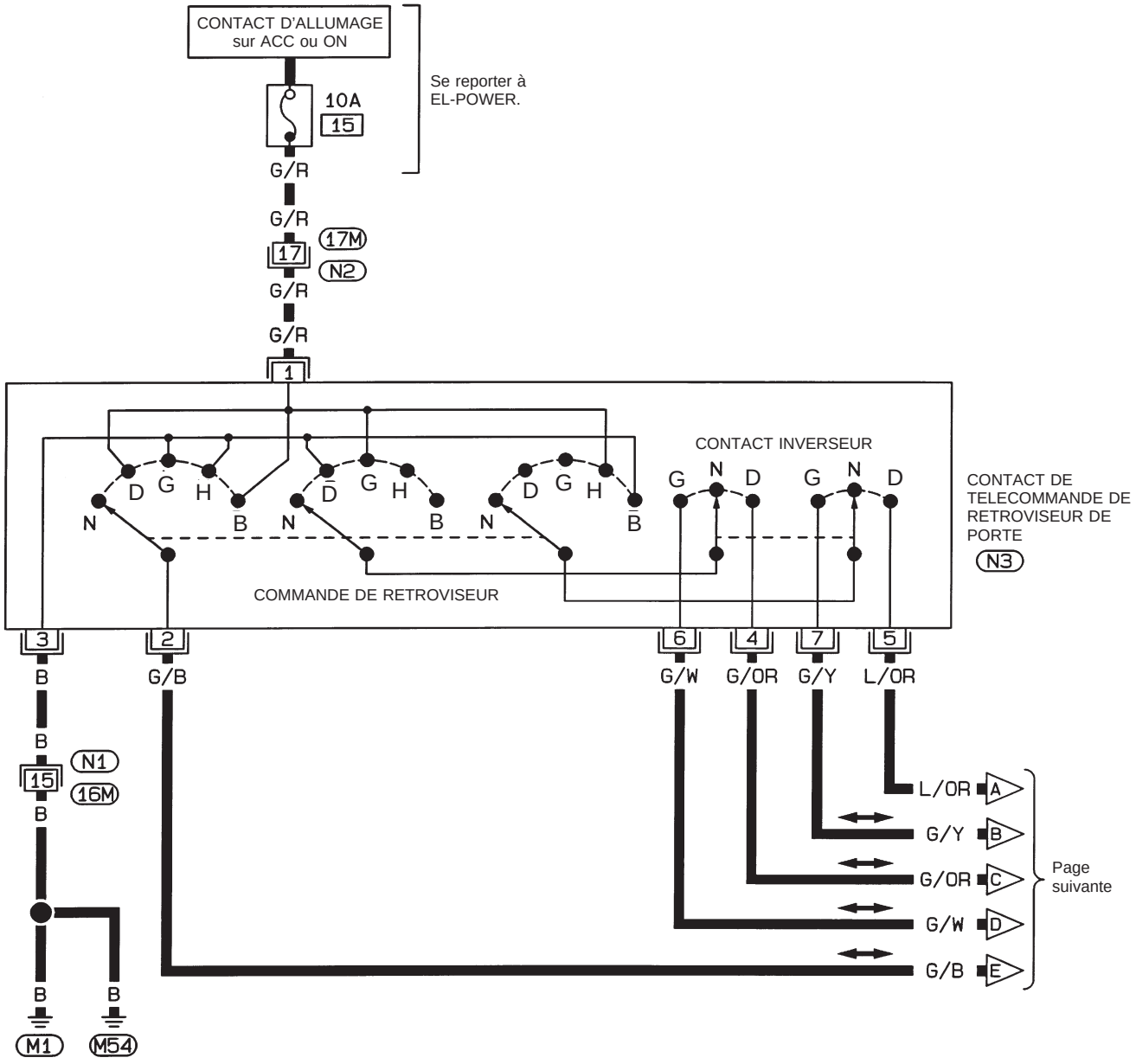

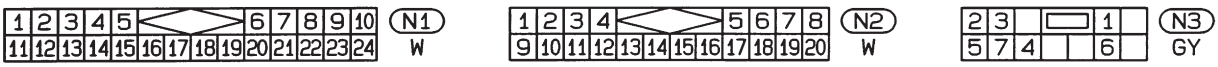

HEL950

Simpo PDF Merge and Split Unregistered Version - http://www.simpopdf.com

Schéma de câblage – MIRROR – (Suite)

EL-MIRROR-02

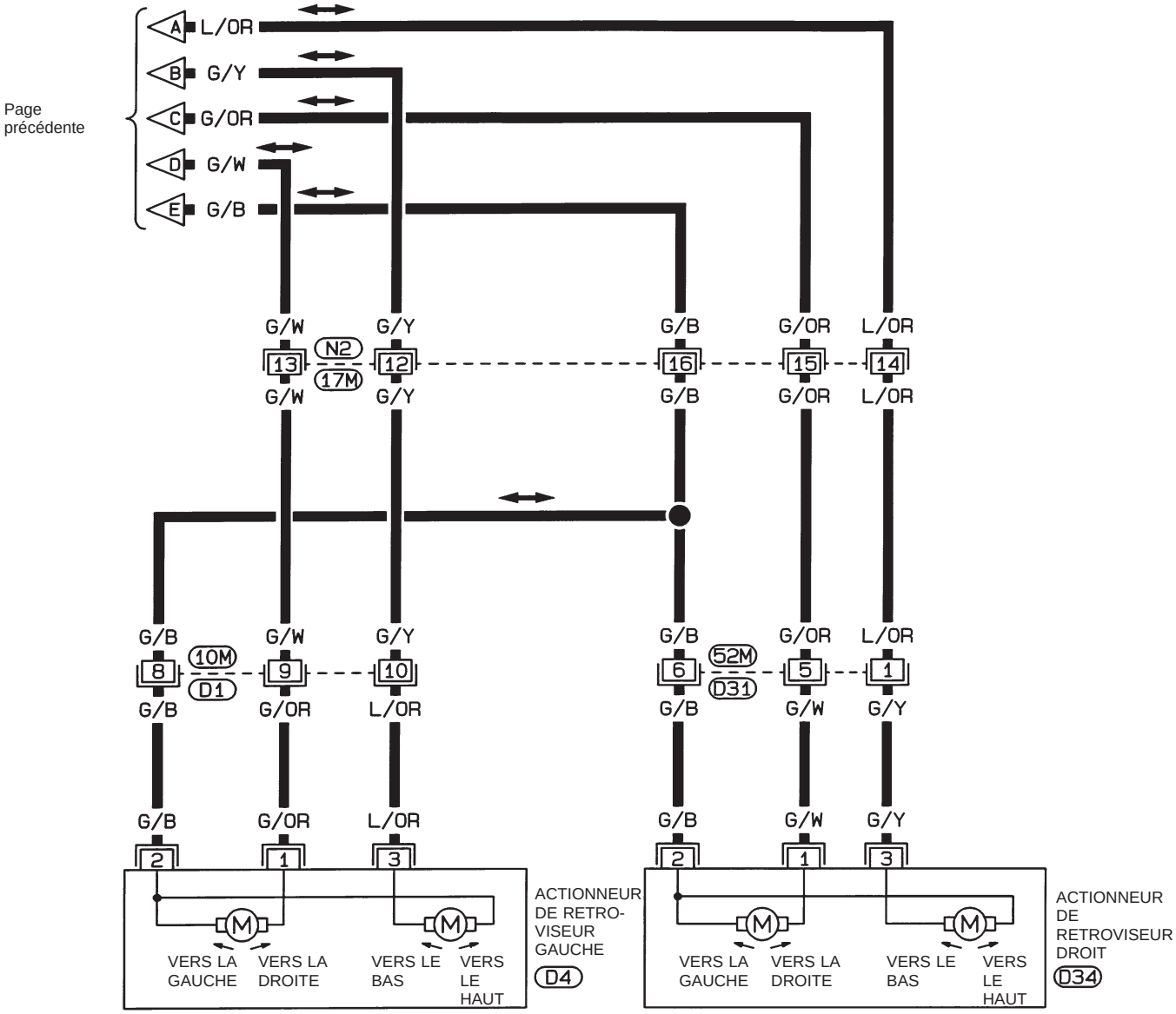

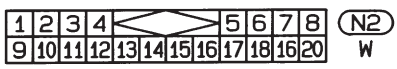





HEL951

Simpo PDF Merge and Split Unregistered Version - http://www.simpopdf.com

Schéma de câblage – H/SEAT –

EL-H/SEAT-01

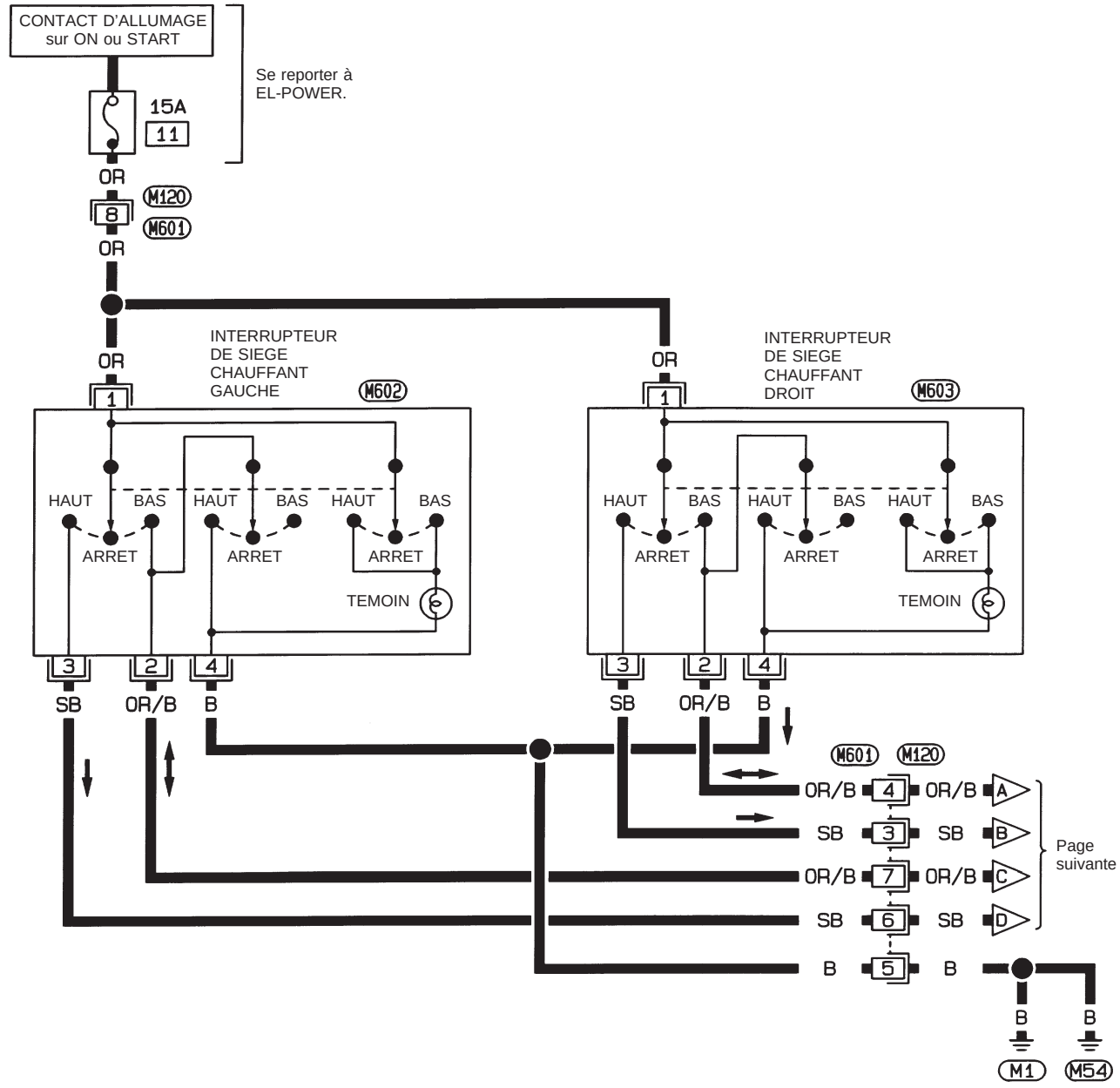



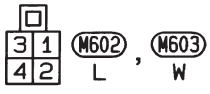

HEL378A

Simpo PDF Merge and Split Unregistered Version - http://www.simpopdf.com

Schéma de câblage – H/SEAT – (Suite)

EL-H/SEAT-02

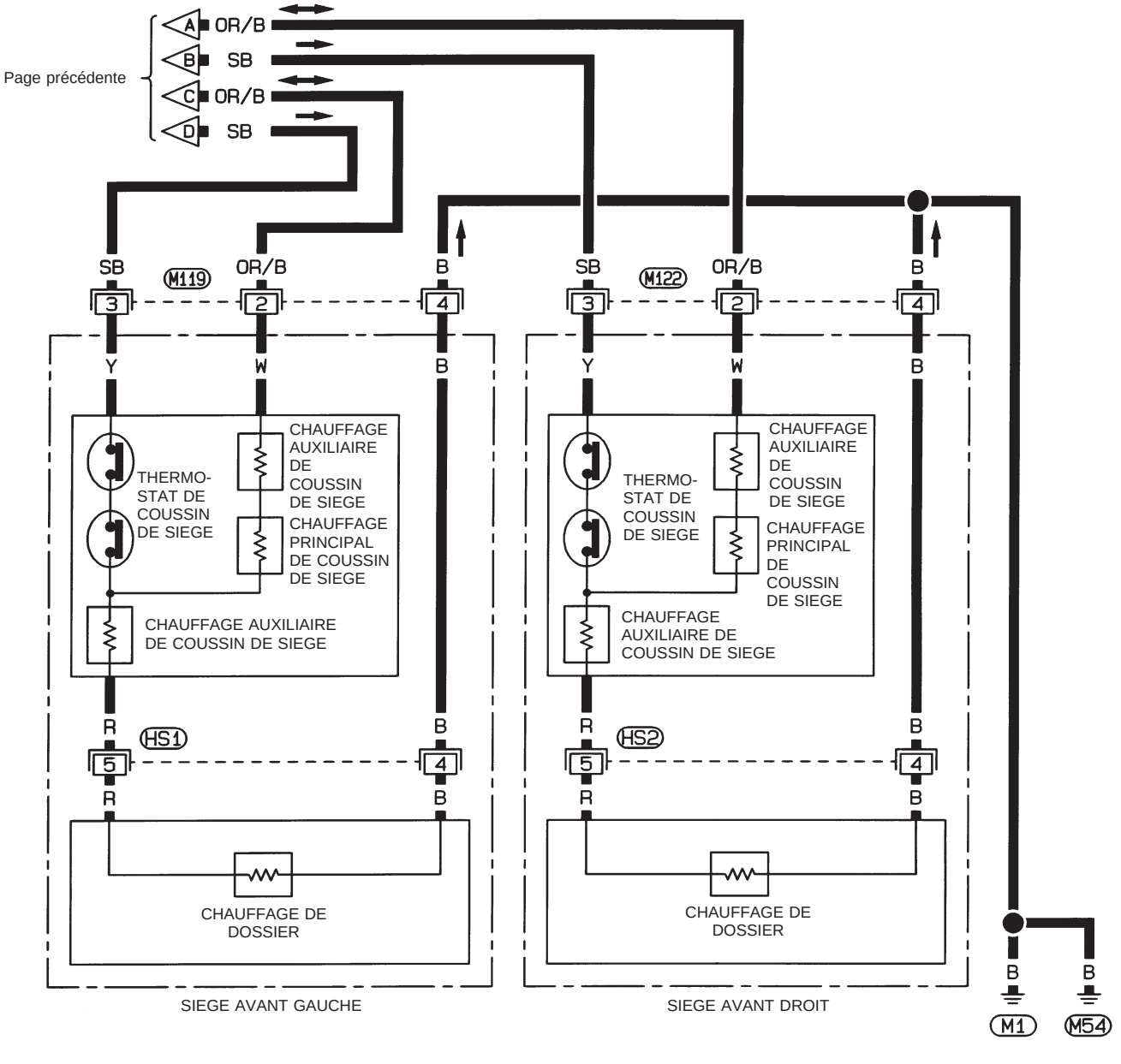



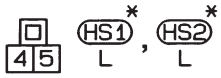

* : Ce connecteur n'est pas indiqué à "DISPOSITION DES FAISCEAUX".

HEL379A

Simpo PDF Merge and Split Unregistered Version - http://www.simpopdf.com

Description du système

L'alimentation est permanente
- depuis le raccord à fusible 30A (Lettre [b], situé dans le raccord de fusible et le boîtier à fusibles)
- à la borne (1) du rupteur de circuit
- à travers la borne (2) du rupteur de circuit
- vers la borne (3) du relais de lève-glace électrique.

Lorsque le contact d'allumage est sur la position ''ON'' ou ''START'', l'alimentation est fournie
- à travers le fusible de 10A (n° [14], situé dans le boîtier à fusibles)
- vers la borne (2) du relais de lève-glace électrique.

Le relais de lève-glace électrique est mis à la masse à sa borne (1)
- à travers les masses de carrosserie (M1) et (M54).

Le relais de lève-glace électrique est actionné et l'alimentation est fournie
- à travers la borne (5) du relais de lève-glace électrique
- à la borne (1) de l'interrupteur principal de lève-glace électrique
- vers la borne (5) de l'interrupteur auxiliaire de lève-glace électrique.

FONCTIONNEMENT MANUEL

Porte côté conducteur

La masse est fournie
- à la borne (3) de l'interrupteur principal de lève-glace électrique
- par les masses de carrosserie (M1) et (M54).

VITRE MONTEE
Lorsque l'interrupteur côté conducteur, intégré à l'interrupteur principal de lève-glace électrique, est enclenché vers le haut, l'alimentation est fournie
- à la borne (2) du régulateur de lève-glace électrique côté conducteur
- à travers la borne (9) de l'interrupteur principal de lève-glace électrique.

La masse est fournie
- à la borne (1) du régulateur de lève-glace électrique côté conducteur
- à travers la borne (8) de l'interrupteur principal de lève-glace électrique.

Puis, le moteur monte la vitre jusqu'à ce que l'interrupteur soit relâché.

VITRE BAISSEE
Lorsque l'interrupteur côté conducteur, intégré à l'interrupteur principal de lève-glace électrique, est enclenché vers le bas, l'alimentation est fournie
- à la borne (1) du régulateur de lève-glace électrique côté conducteur
- à travers la borne (8) de l'interrupteur principal de lève-glace électrique.

La masse est fournie
- à la borne (2) du régulateur de lève-glace électrique côté conducteur
- à travers la borne (9) de l'interrupteur principal de lève-glace électrique.

Puis, le moteur baisse la vitre jusqu'à ce que l'interrupteur soit relâché.

Porte côté passager avant

La masse est fournie
- vers la borne (3) de l'interrupteur principal de lève-glace électrique
- à travers les masses de carrosserie (M1) et (M54).

REMARQUE :
Les nombres entre parenthèses indiquent les numéros des bornes, lorsque l'interrupteur de lève-glace est actionné respectivement dans le sens de l'ouverture et de la fermeture.

FONCTIONNEMENT DE L'INTERRUPTEUR PRINCIPAL
L'alimentation est fournie
- à travers les bornes ((5) et (6)) de l'interrupteur principal de lève-glace électrique
- aux bornes ((4), (3)) de l'interrupteur auxiliaire de lève-glace électrique avant.

L'opération suivante est la même que celle concernant les interrupteurs auxiliaires.

Simpo PDF Merge and Split Unregistered Version - http://www.simpopdf.com

Description du système (Suite)

FONCTIONNEMENT DES INTERRUPTEURS AUXILLIAIRES
L'alimentation est fournie
- à travers la borne ② ou ① de l'interrupteur auxiliaire de lève-glace électrique avant
- aux bornes (② et ①) du régulateur de lève-glace électrique côté passager avant.

La masse est fournie
- aux bornes (① et ②) du régulateur de lève-glace électrique côté passager avant
- à travers la borne ① ou ② de l'interrupteur auxiliaire de lève-glace électrique avant
- aux bornes (③, ④) de l'interrupteur auxiliaire de lève-glace électrique avant
- à travers les bornes (⑥ et ⑤) de l'interrupteur principal de lève-glace électrique.

Le moteur monte ou descend les vitres jusqu'à ce que l'interrupteur soit relâché.

Porte arrière

Les vitres des portes arrière se monteront et se descendront de la même manière que la vitre du passager avant.

FONCTION AUTO

La fonction AUTO du lève-glace électrique permet au conducteur d'ouvrir ou de fermer sa fenêtre sans avoir à maintenir l'interrupteur dans la position correspondante.
Quand la position AUTO de l'interrupteur principal est enclenchée puis désenclenchée, la fenêtre du conducteur s'ouvre ou se ferme entièrement.

VERROUILLAGE DE LEVE-GLACE ELECTRIQUE

Le verrouillage de lève-glace électrique est conçu de façon à ce qu'aucune vitre ne fonctionne, à l'exception de celle du conducteur.
Lorsque l'interrupteur de verrouillage est en position de verrouillage, la masse des interrupteurs auxiliaires de lève-glace intégrés à l'interrupteur principal est déconnectée. Ceci empêche le moteur du lève-glace électrique de fonctionner.

Simpo PDF Merge and Split Unregistered Version - http://www.simpopdf.com

Schéma

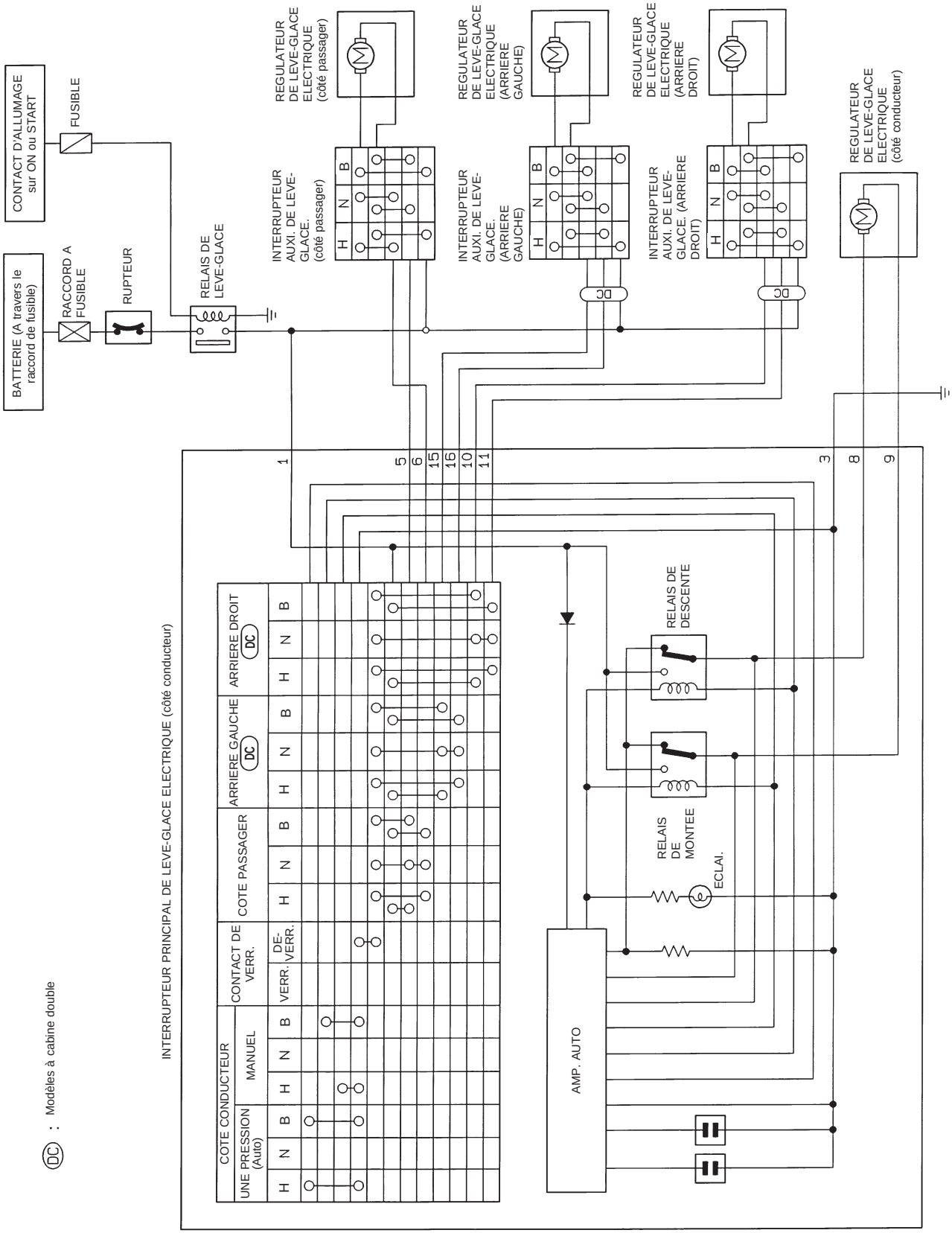

HEL952

Simpo PDF Merge and Split Unregistered Version - http://www.simpopdf.com

Schéma de câblage – WINDOW –/Conduite à gauche

EL-WINDOW-01

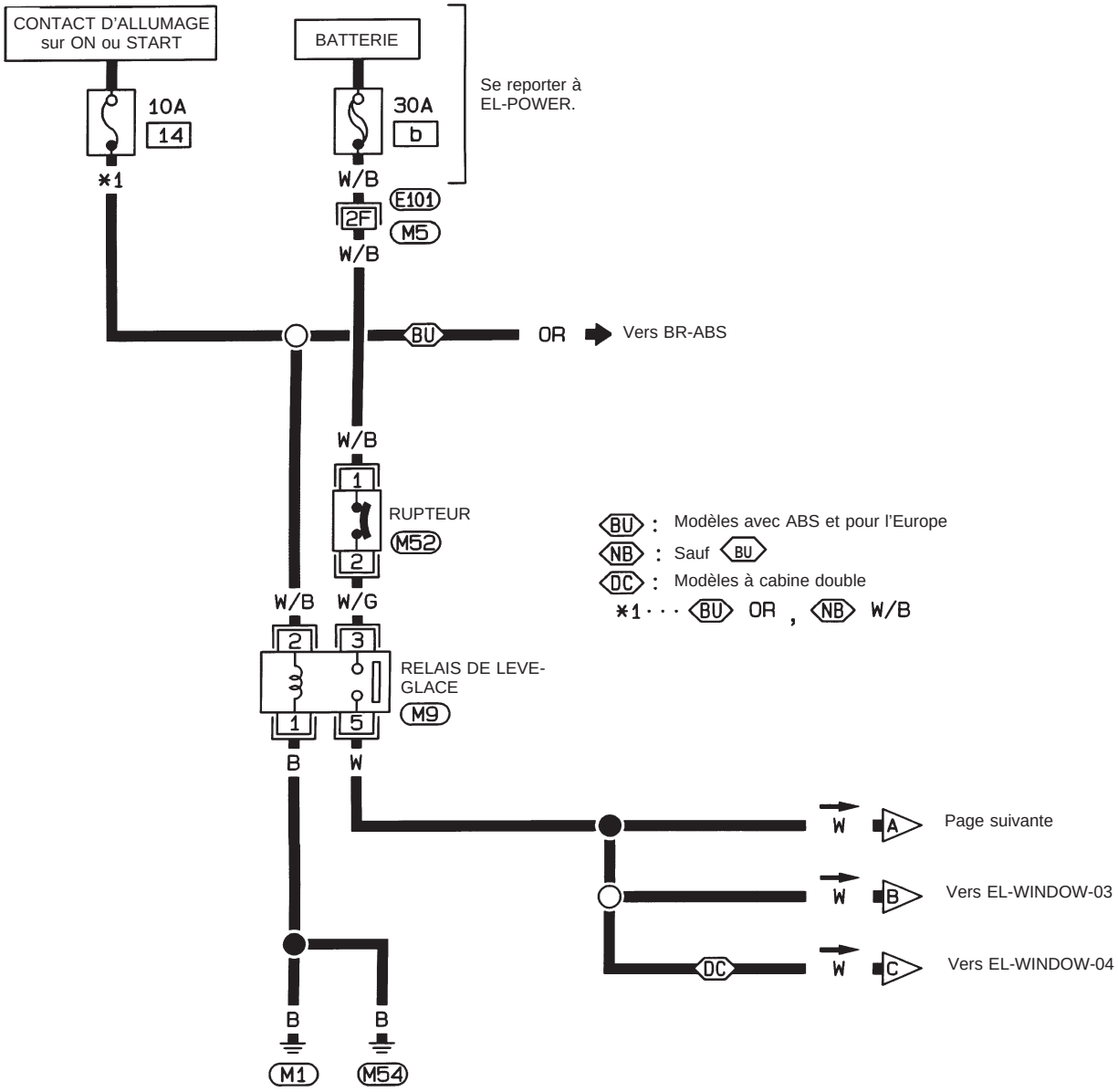

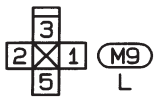



Se reporter à la dernière page dépliante.

M5 , E101

HEL425A

Simpo PDF Merge and Split Unregistered Version - http://www.simpopdf.com

Schéma de câblage – WINDOW –/Conduite à gauche (Suite)

EL-WINDOW-02

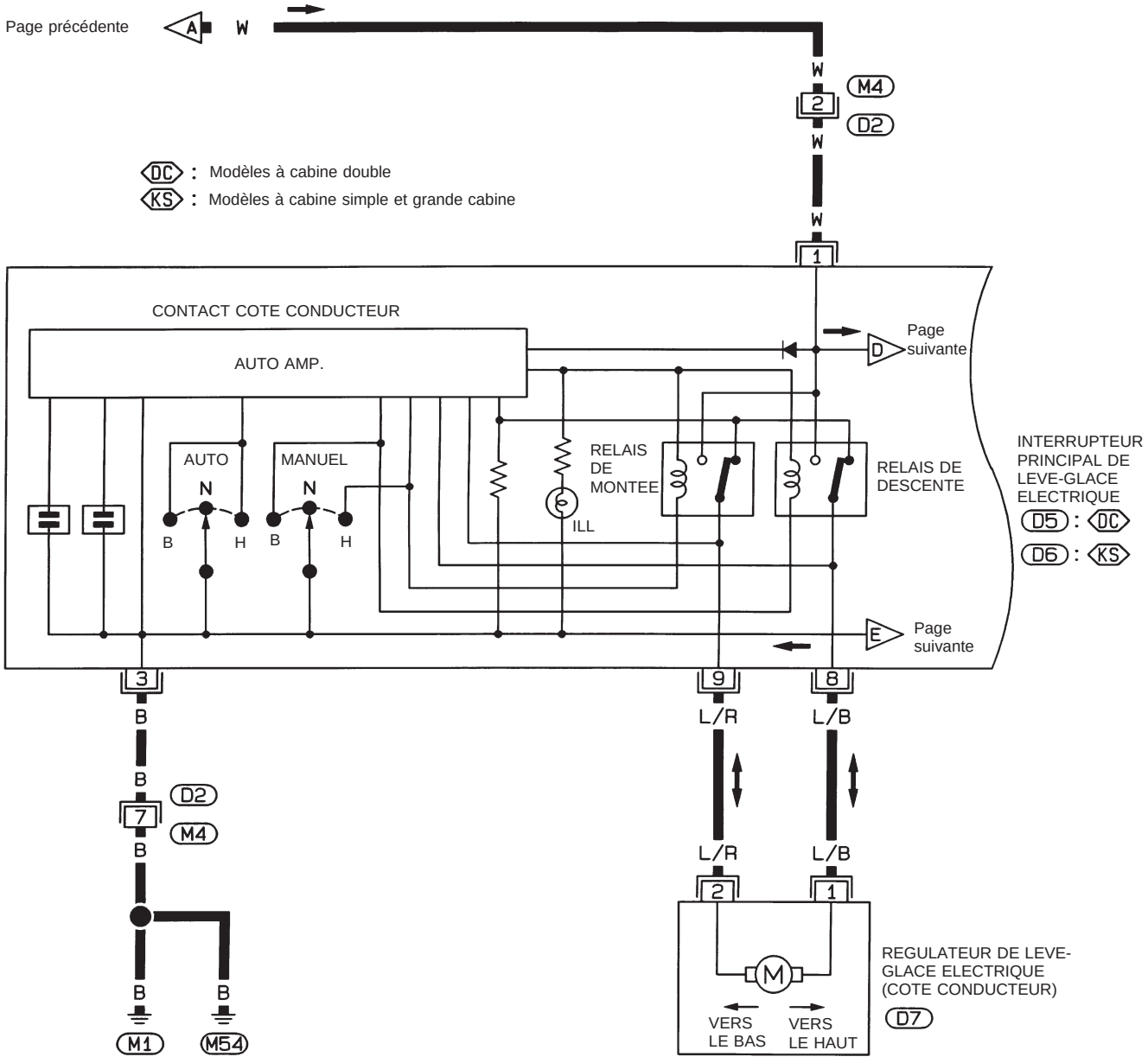

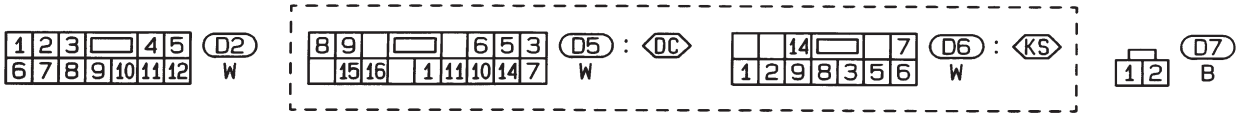

HEL380A

Simpo PDF Merge and Split Unregistered Version - http://www.simpopdf.com

Schéma de câblage – WINDOW –/Conduite à gauche (Suite)

EL-WINDOW-03

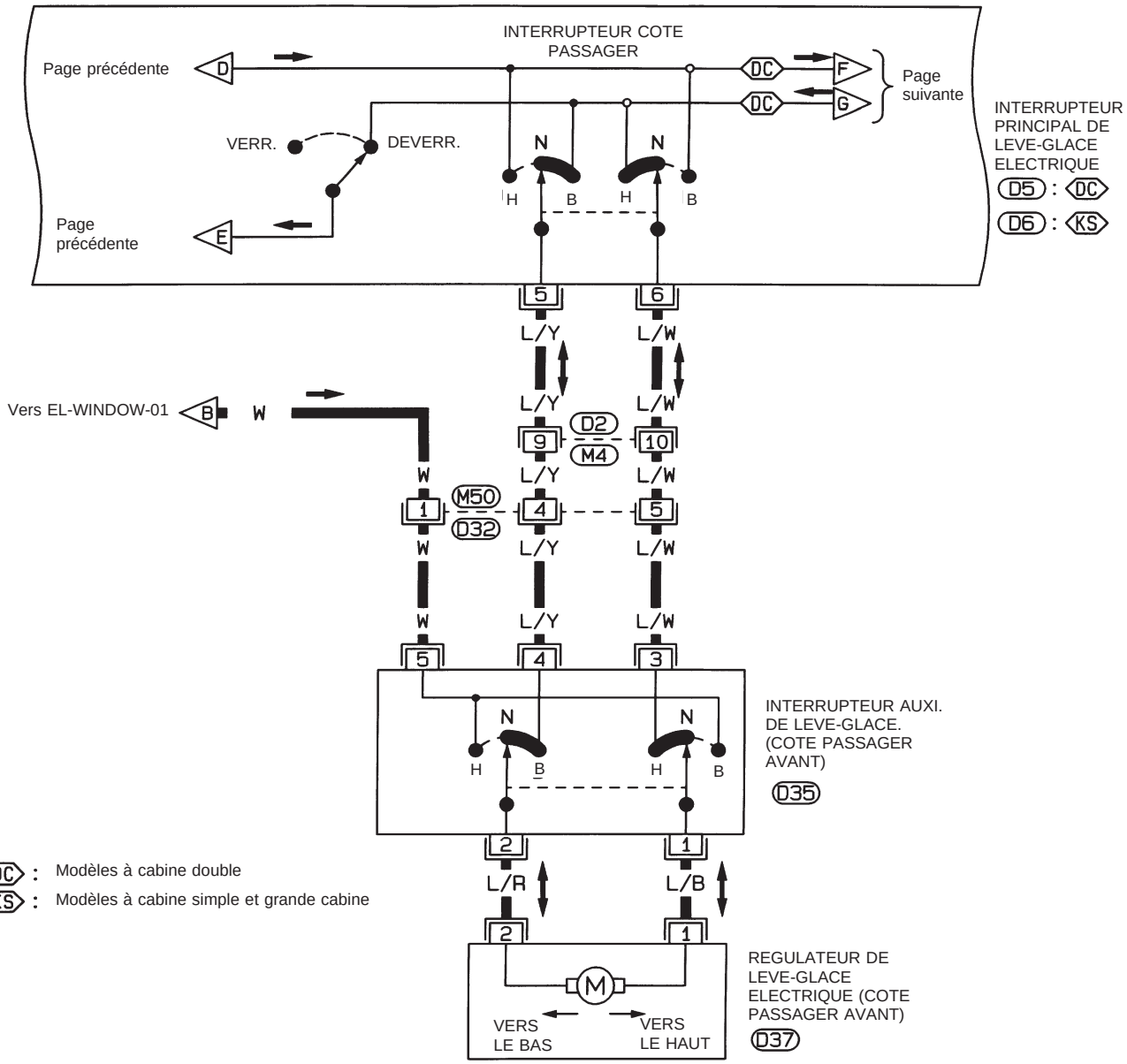

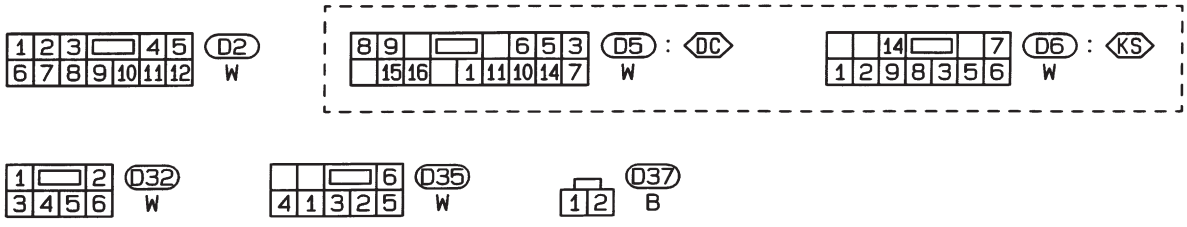

HEL381A

Simpo PDF Merge and Split Unregistered Version - http://www.simpopdf.com

Schéma de câblage – WINDOW –/Conduite à gauche (Suite)

EL-WINDOW-04

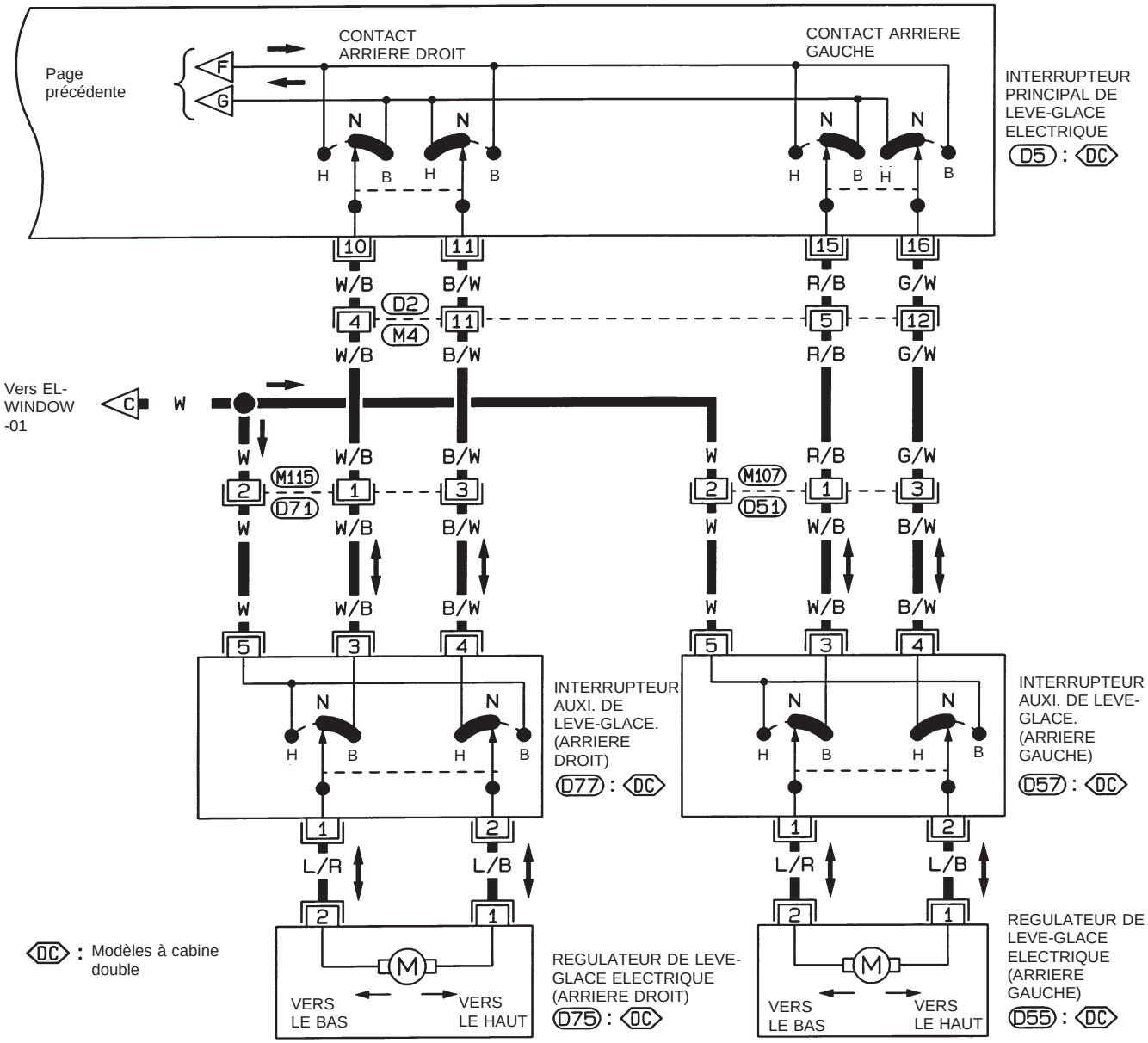

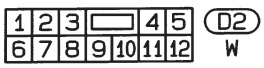
D2 W

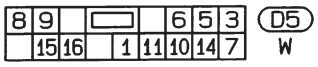
D5 W


D51 W, D71 W


D55 B, D75 B

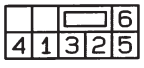
D57 W, D77 W

Simpo PDF Merge and Split Unregistered Version - http://www.simpopdf.com

Schéma de câblage – WINDOW –/Conduite à droite

EL-WINDOW-05

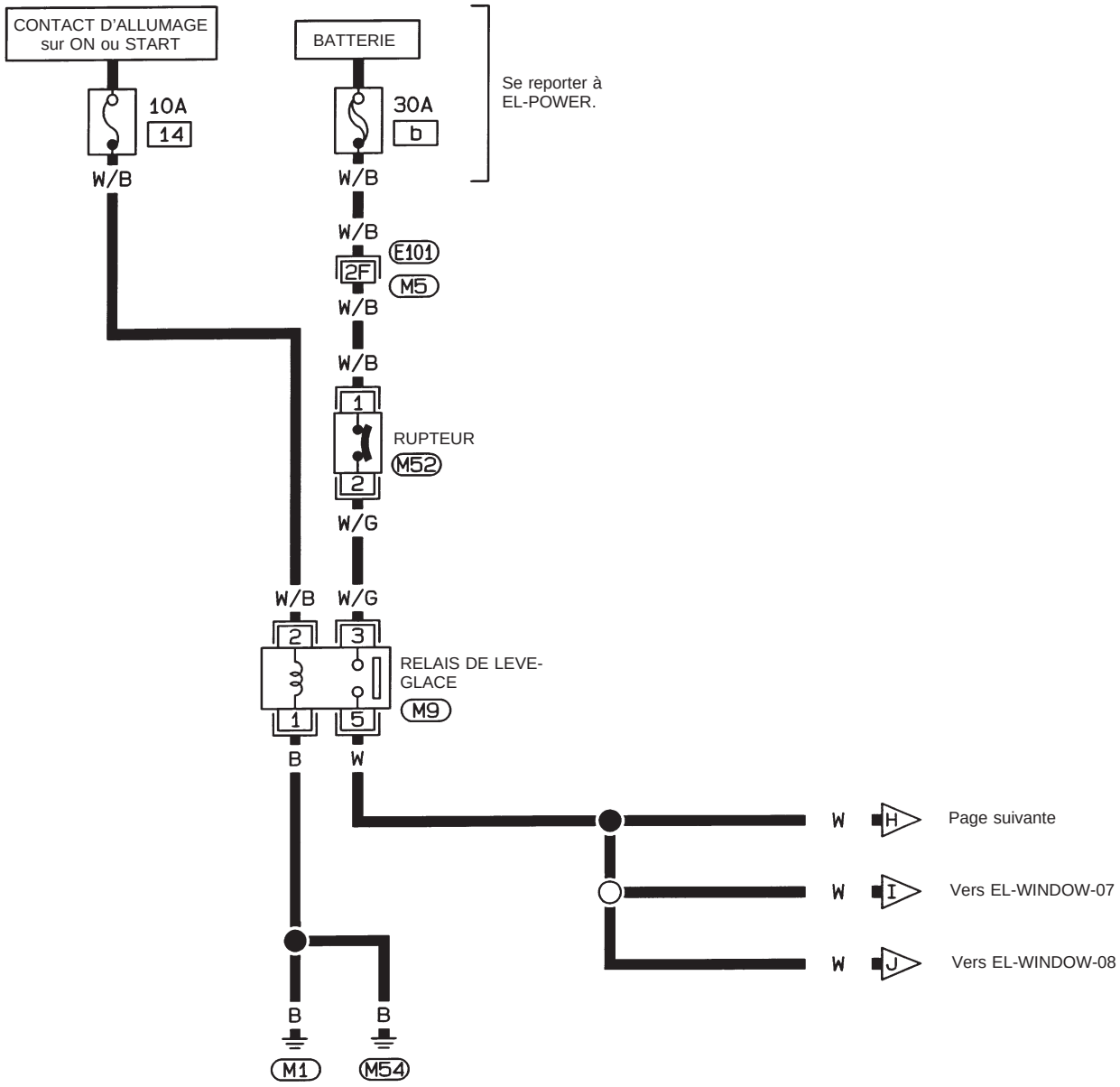

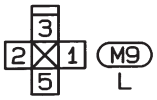

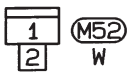

Se reporter à la dernière page dépliante.

M5 , E101

HEL957

Simpo PDF Merge and Split Unregistered Version - http://www.simpopdf.com

Schéma de câblage – WINDOW –/Conduite à droite (Suite)

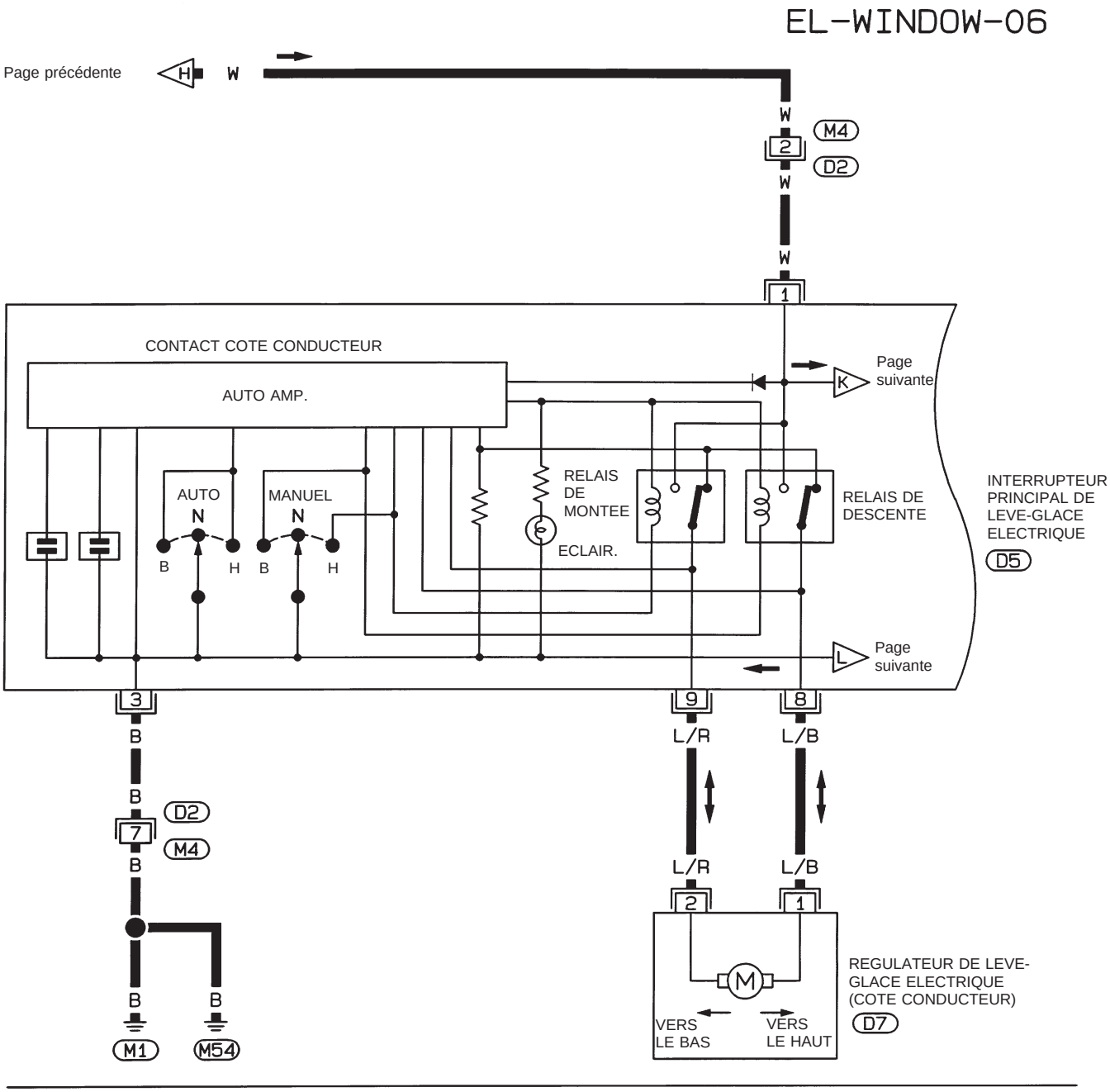

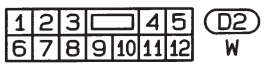

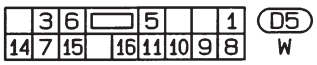

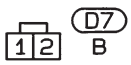

HEL958

Simpo PDF Merge and Split Unregistered Version - http://www.simpopdf.com

Schéma de câblage – WINDOW –/Conduite à droite (Suite)

EL-WINDOW-07

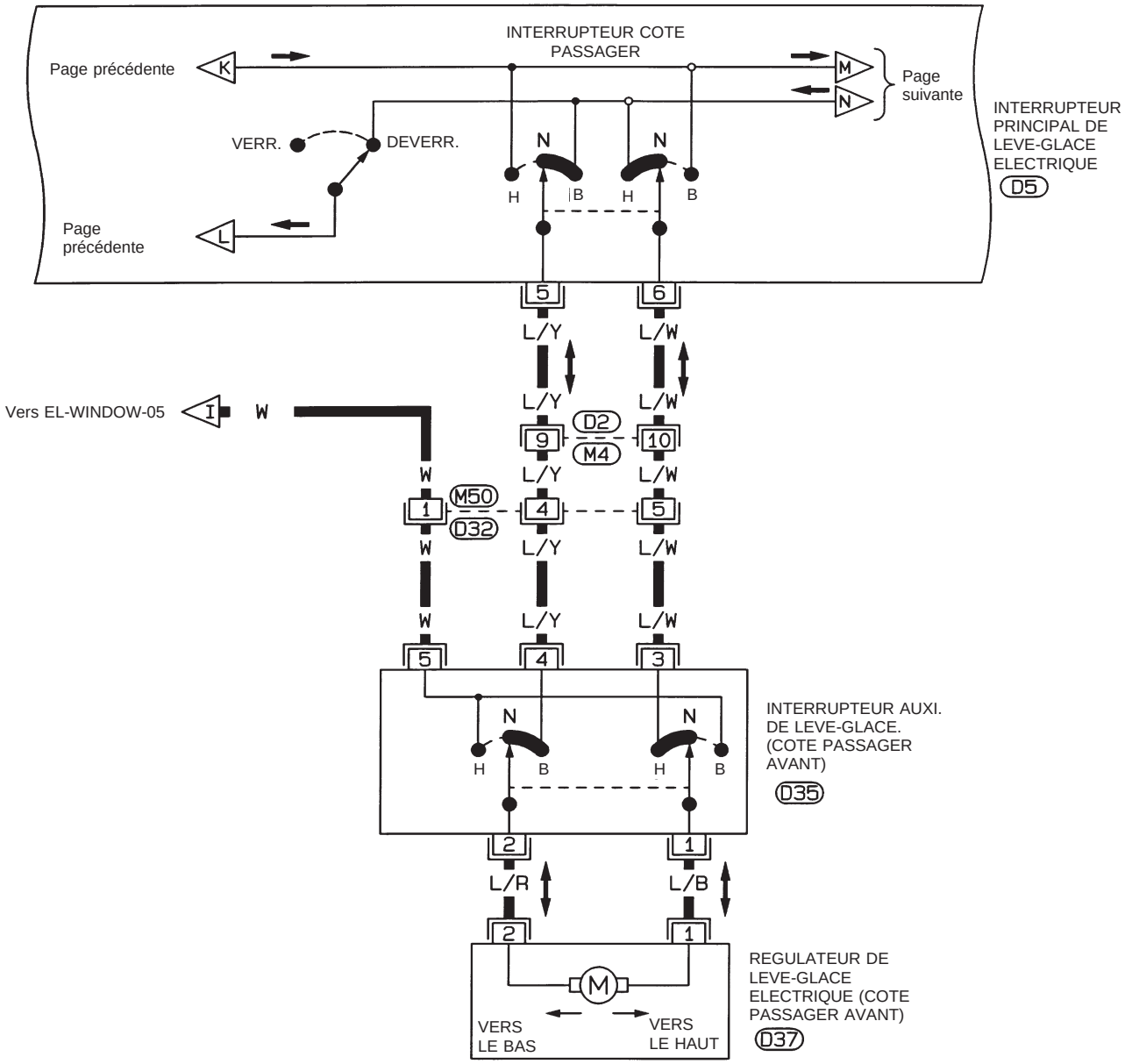



Simpo PDF Merge and Split Unregistered Version - http://www.simpopdf.com

Schéma de câblage – WINDOW –/Conduite à droite (Suite)

EL-WINDOW-08

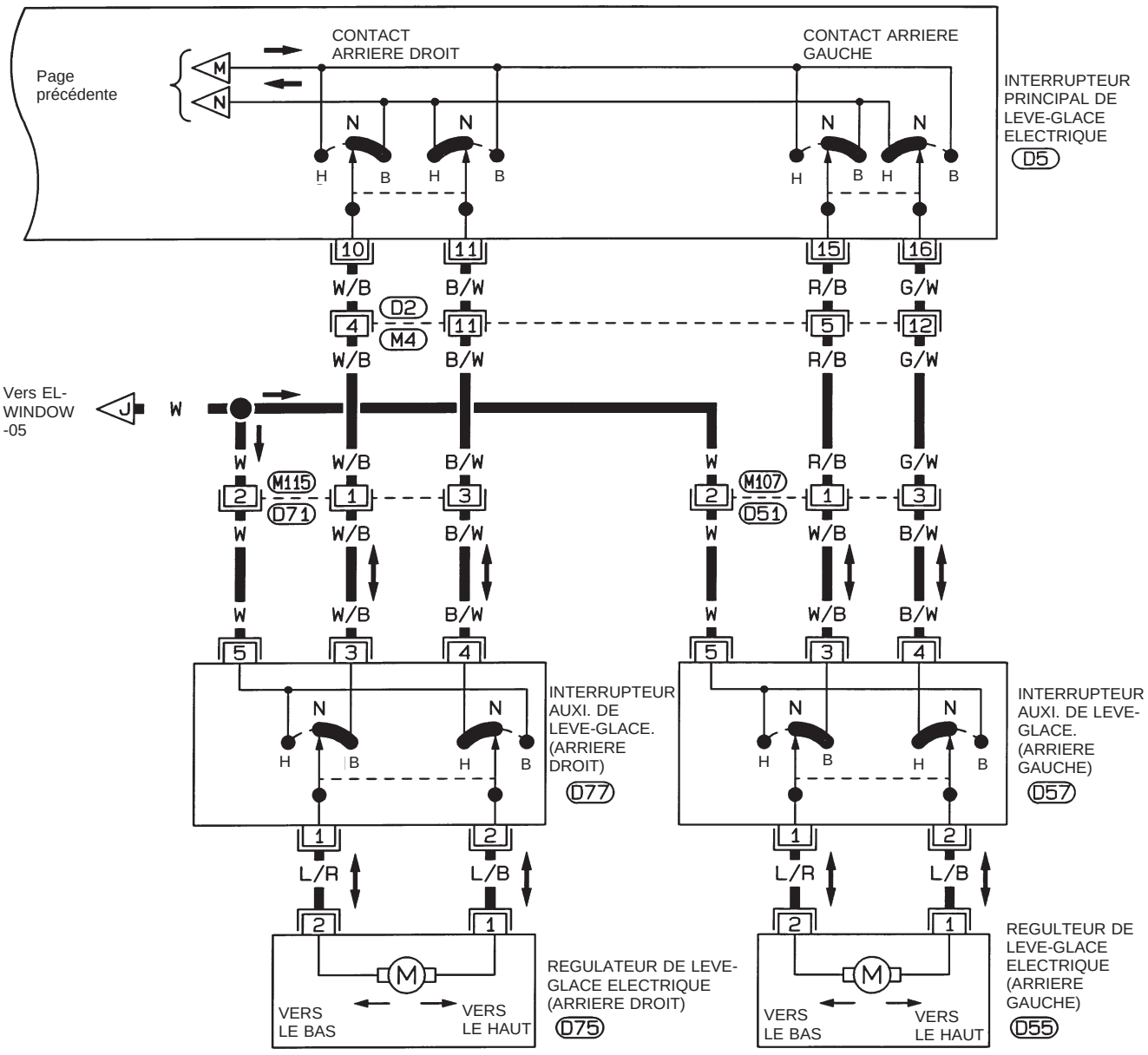

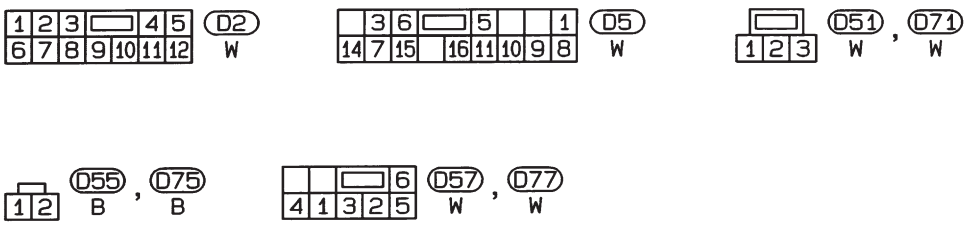

HEL960

Simpo PDF Merge and Split Unregistered Version - http://www.simpopdf.com

Diagnostics des défauts

Symptôme	Cause possible	Ordre de réparation
Aucun lève-glace ne peut être actionné par l'un des interrupteurs.	1. Fusible de 10A, raccord à fusible de 30A et rupteur (M52)	1. Vérifier le fusible de 10A (n° 14, situé dans le boîtier à fusibles), le fusible de 30A (lettre b, situé dans le raccord à fusibles et le boîtier à fusibles) et le rupteur (M52). Mettre le contact d'allumage sur ''ON'' et vérifier qu'une tension positive de la batterie est appliquée à la borne (1) de l'interrupteur principal de lève-glace électrique et à la borne (5) des interrupteurs auxiliaires.
	2. Masses (M1) et (M54)	2. Vérifier les masses (M1) et (M54).
	3. Relais de lève-glace	3. Vérifier le relais de lève-glace électrique.
	4. Circuit ouvert/court-circuit de l'interrupteur principal de lève-glace	4. Vérifier que le câble W n'est pas ouvert ou en court-circuit entre le relais de lève-glace électrique et l'interrupteur principal de lève-glace électrique.
Le lève-glace électrique du conducteur ne peut pas être actionné mais les autres fenêtres peuvent l'être.	1. Circuit du régulateur de lève-glace électrique du conducteur	1. Vérifier que le faisceau n'est pas ouvert ou court-circuité entre l'interrupteur principal et le régulateur de lève-glaces électrique.
	2. Régulateur de lève-glace électrique du conducteur	2. Vérifier le régulateur de lève-glace électrique côté conducteur.
Le lève-glace électrique du passager ne peut pas être actionné.	1. Interrupteurs auxiliaires de lève-glace.	1. Vérifier les interrupteurs auxiliaires de lève-glace électrique.
	2. Régulateurs de lève-glace électrique du passager	2. Vérifier le régulateur de lève-glace électrique du passager.
	3. Interrupteur principal de lève-glace	3. Vérifier l'interrupteur principal de lève-glace.
	4. Circuit du lève-glace électrique	4-1. Vérifier que le faisceau n'est pas ouvert ou court-circuité entre l'interrupteur principal et les interrupteurs auxiliaires de lève-glaces électriques. 4-2. Vérifier que le faisceau n'est pas ouvert ou court-circuité entre les interrupteurs auxiliaires et le régulateur de lève-glace électrique.
Le lève-glace électrique du passager ne peut pas être actionné à l'aide de l'interrupteur principal de lève-glace mais peut l'être à l'aide des interrupteurs auxiliaires.	1. Interrupteur principal de lève-glace	1. Vérifier l'interrupteur principal de lève-glace.
La fonction auto. du lève-glace électrique du conducteur ne peut être actionnée à l'aide de l'interrupteur principal de lève-glace électrique.	1. Interrupteur principal de lève-glace	1. Vérifier l'interrupteur principal de lève-glace.

Simpo PDF Merge and Split Unregistered Version - http://www.simpopdf.com

Description du système

L'alimentation est permanente
- à travers le raccord à fusibles 30A (Lettre (n° [b], situé dans le boîtier à fusibles et le raccord à fusibles)
- à la borne ① du rupteur de circuit
- à travers la borne ② du rupteur de circuit
- à la borne ③ de la minuterie de verrouillage de porte.

La masse est fournie à la borne ① de la minuterie du verrouillage par les masses de carrosserie (M54) et (M1).

ENTREE

Lorsque le contact de verrou. et déverrou. de porte (interrupteur principal de lève-glace) est sur la position ''LOCKED'' (VERR), le signal de masse est fourni
- à la borne ⑤ de la minuterie de verrouillage de porte
- à travers la borne ⑭ du contact de verrou. et déverrou. de porte
- à la borne ③ du contact de verrou. et déverrou. de porte
- à travers les masses de carrosserie (M1) et (M54).

Lorsque le contact de verrou. et déverrou. de porte (interrupteur principal de lève-glace) est sur la position ''UNLOCKED'' (DEVERR), le signal de masse est fourni
- à la borne ⑧ de la minuterie de verrouillage de porte
- à travers la borne ⑦ du contact de verrou. et déverrou. de porte
- à la borne ③ du contact de verrou. et déverrou. de porte
- à travers les masses de carrosserie (M1) et (M54).

Le canon de clé côté conducteur et le bouton de verrouillage côté conducteur sont connectés au contact de verrouillage au moyen d'une tige. Quand le du bouton de verrouillage est sur la position ''DEVERR.'', le signal de masse est fourni
- à la borne ⑥ de la minuterie de verrouillage de porte
- à travers la borne ② du contact du bouton de verrouillage
- à travers la borne ① du contact du bouton de verrouillage côté conducteur
- à travers les masses de carrosserie (M1) et (M54).

Quand la commande du bouton de verrouillage est sur la position ''VERR.'', le signal de masse est interromptu.

Le verrouillage de porte fonctionne en fonction des positions du contact de verrouillage et déverrouillage de porte (interrupteur principal de lève-glace) et du contact de bouton de verrouillage.

SORTIE

Déverrouillage

La masse est fournie
- vers l'actionneur de verrouillage de porte côté passager, vers la borne ① de l'actionneur de verr. des portes arrière gauche et droite (cabine double)
- à travers la borne ② de la minuterie de verrouillage de porte.

L'alimentation est fournie
- vers l'actionneur de verrouillage de porte côté passager, vers la borne ② de l'actionneur de verr. des portes arrière gauche et droite (double cabine)
- à travers la borne ④ de la minuterie de verrouillage de porte.

Les portes sont alors déverrouillées.

Verrouillage

La masse est fournie
- à l'actionneur de verrouillage de porte côté passager, à la borne ② de l'actionneur de verr. des portes arrière gauche et droite
- à travers la borne ④ de la minuterie de verrouillage de porte.

L'alimentation est fournie
- à l'actionneur de verrouillage de porte côté passager, à la borne ① de l'actionneur de verr. des portes arrière gauche et droite
- à travers la borne ② de la minuterie de verrouillage de porte.

Les portes sont alors verrouillées.

Simpo PDF Merge and Split Unregistered Version - http://www.simpopdf.com

Schéma de câblage – D/LOCK –

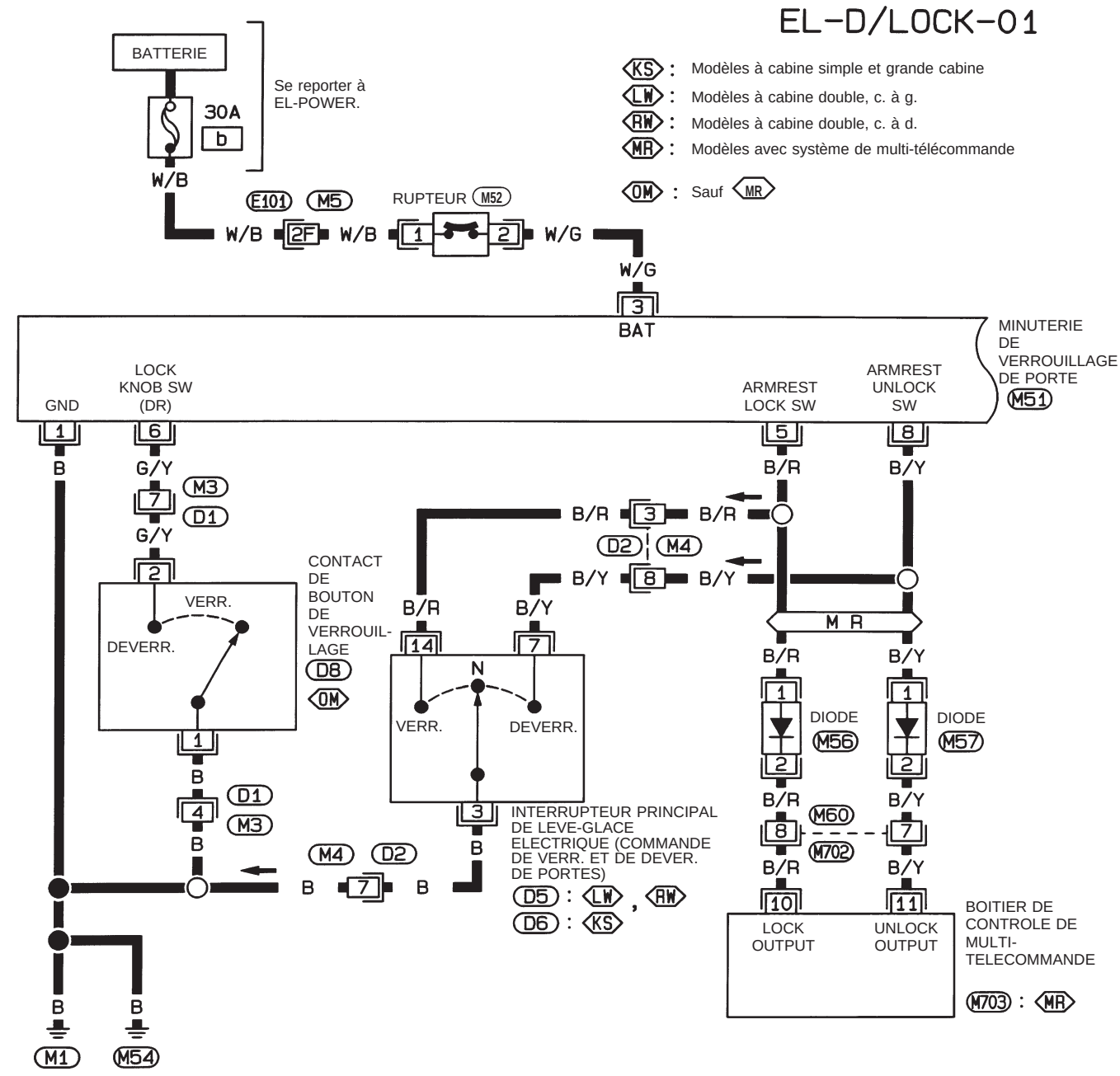

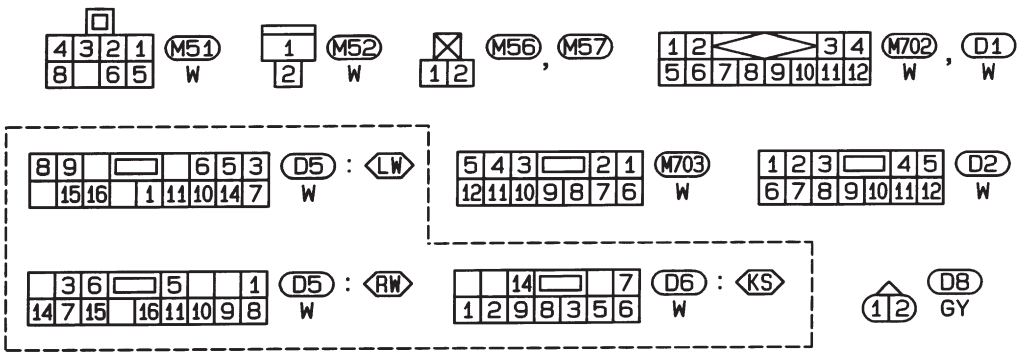

Se reporter à la dernière page dépliante.

M5 , E101

HEL382A

Simpo PDF Merge and Split Unregistered Version - http://www.simpopdf.com

Schéma de câblage – D/LOCK – (Suite)

EL-D/LOCK-02

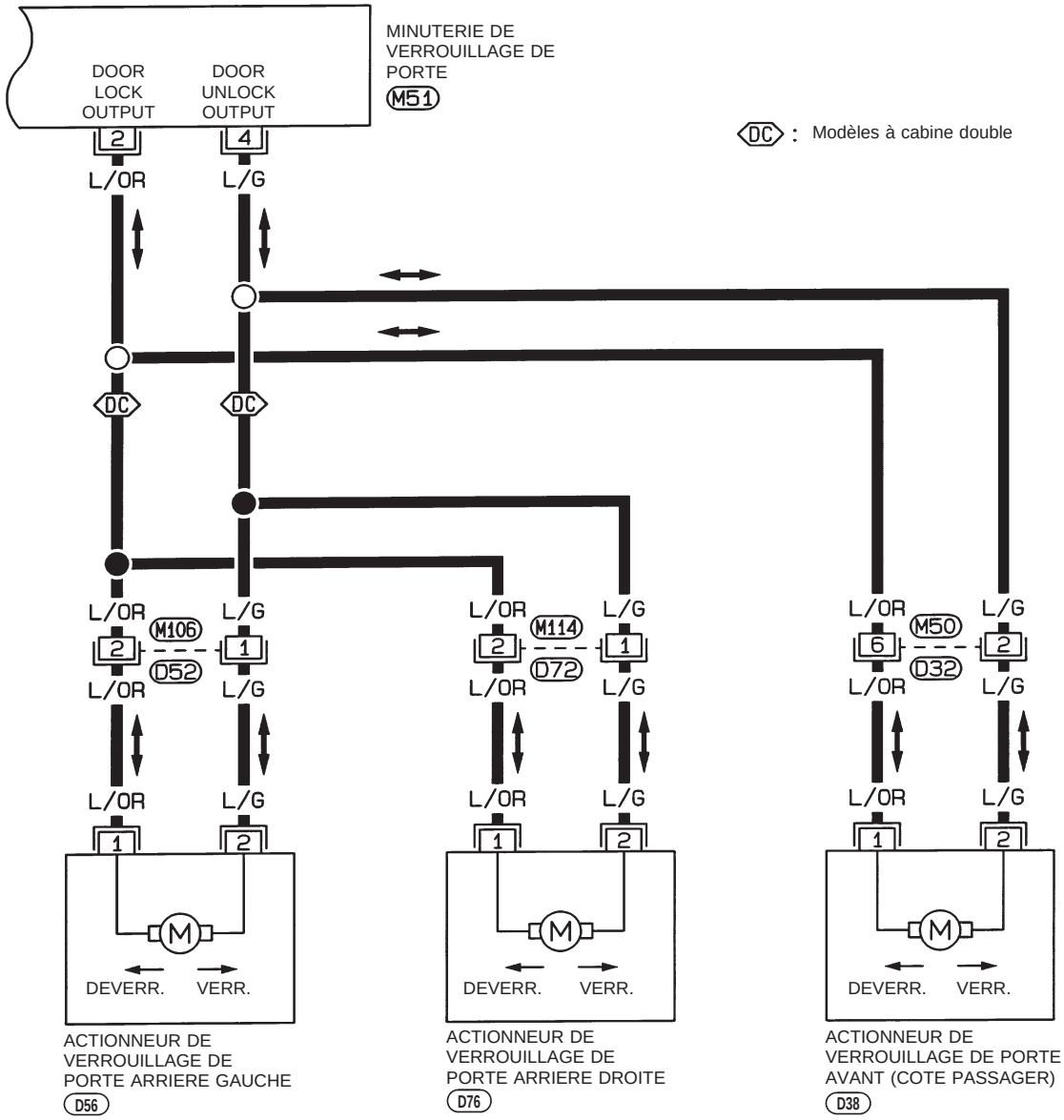

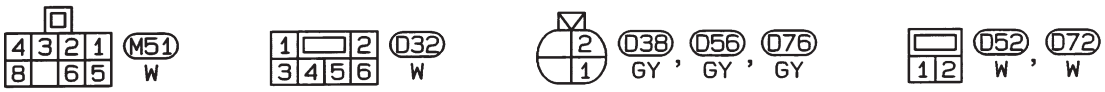

HEL962

Simpo PDF Merge and Split Unregistered Version - http://www.simpopdf.com

Diagnostic des défauts

TABLEAU DES SYMPTOMES

PAGE DE REFERENCE	EL-171	EL-172	EL-173	EL-174
SYMPTOME	Vérification de l'alimentation électrique principale et du circuit de mise à la masse	Procédure de diagnostic 1 (vérification du contact de verrouillage et de déverrouillage des portes)	Procédure de diagnostic 2 (Vérification de l'actionneur de verrouillage de porte)	Procédure de diagnostic 3 (Vérification du contact du bouton de verrouillage, côté conducteur)
Aucune porte ne peut être verrouillée ou déverrouillée lorsque les contacts sont actionnés.	X		X	
Une porte ou plus n'est pas verrouillée et/ou déverrouillée.			X	
Le contact de verrouillage et de déverrouillage ne fonctionne pas.		X		
Le contact de bouton de verrouillage, côté conducteur, ne fonctionne pas.				X

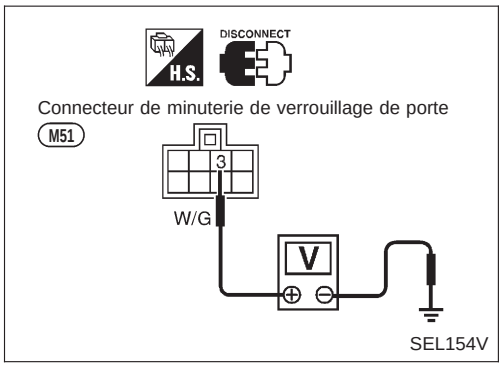

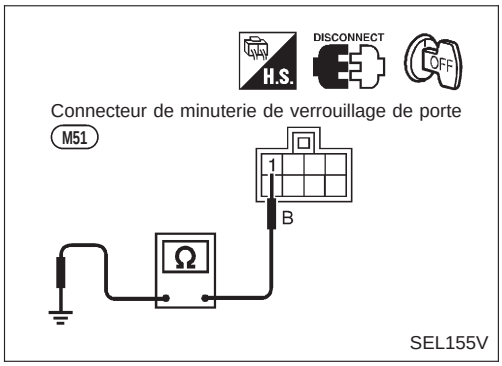

VERIFICATION DE L'ALIMENTATION ELECTRIQUE PRINCIPALE ET DU CIRCUIT DE MISE A LA MASSE

Alimentation électrique principale de la minuterie de verrouillage de porte

Borne		Contact d'allumage		
⊕	⊖	OFF	ACC	ON
③	Masse	Tension de la batterie	Tension de la batterie	Tension de la batterie

Circuit de mise à la masse de la minuterie de verrouillage de porte

Bornes	Continuité
① - Masse	Oui

Simpo PDF Merge and Split Unregistered Version - http://www.simpopdf.com

Diagnostic des défauts (Suite)

PROCEDURE DE DIAGNOSTIC 1

(Vérification du contact de verrouillage et de déverrouillage de portes)

A

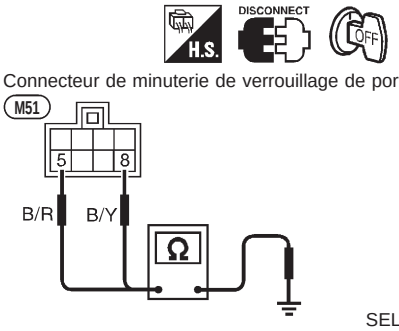

VERIFICATION DU SIGNAL D'ENTREE DE LA COMMANDE DE VERROUILLAGE ET DE DEVERROUILLAGE DE PORTES.

1. Débrancher le connecteur de la minuterie de verrouillage de porte.
2. Vérifier la continuité entre la borne (5) ou (8) du boîtier de contrôle et la masse.

Bornes	Position du contact de verrouillage et de déverrouillage	Continuité
(5) - Masse	Verrouillage	Oui
	N et Déverrouillage	Non
(8) - Masse	Déverrouillage	Oui
	N et Verrouillage	Non

Bon → Le contact de verrouillage et de déverrouillage fonctionne correctement.

Mauvais ↓

B

B

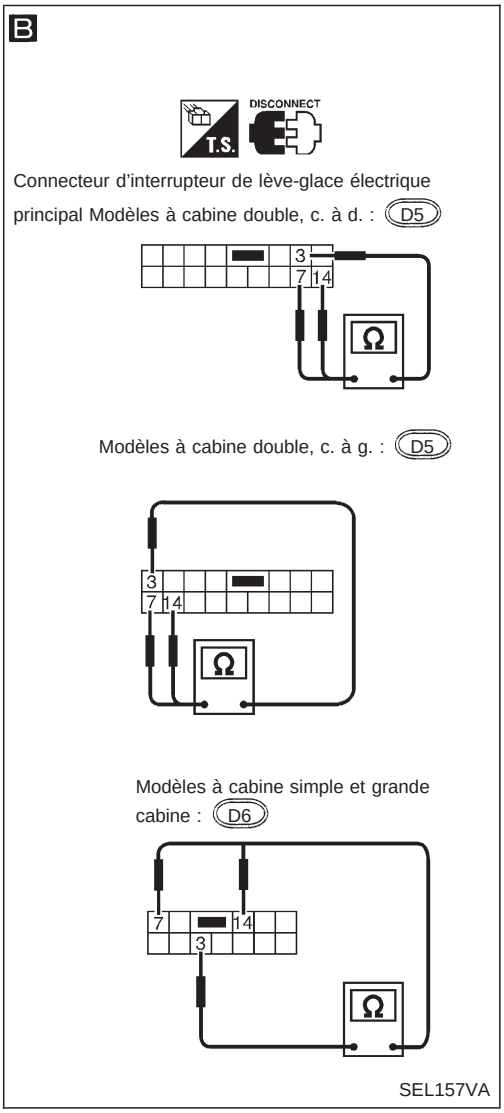

VERIFICATION DE LA COMMANDE DE VERROUILLAGE ET DE DEVERROUILLAGE DE PORTES

1. Débrancher le connecteur de contact de verrouillage et de déverrouillage de porte.
2. Vérifier la continuité entre les bornes de l'interrupteur principal de lève-glace (Interrupteur de verrouillage/déverrouillage de porte).

Condition	Bornes		
	3	7	14
Verrouillage	○		○
N	Absence de continuité		
Déverrouillage	○	○	

Mauvais → Remplacer l'interrupteur de verrouillage et déverrouillage de porte.

Bon ↓

Vérifier les points suivants.

- Circuit de mise à la masse pour le contact de verrouillage et de déverrouillage de porte
- Faisceau ouvert ou court-circuité entre l'interrupteur de verrouillage et de déverrouillage de porte et le connecteur de la minuterie de verrouillage de porte

Simpo PDF Merge and Split Unregistered Version - http://www.simpopdf.com

Diagnostic des défauts (Suite)

PROCEDURE DE DIAGNOSTIC 2

(Vérification de l'actionneur de verrouillage de porte)

A

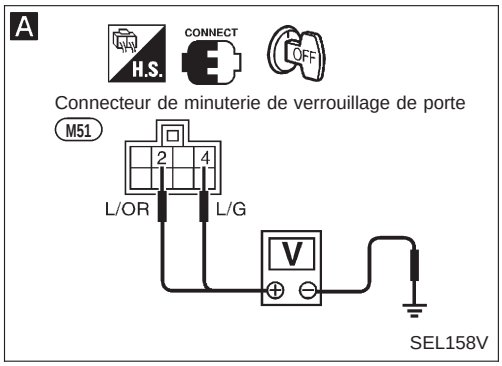

B

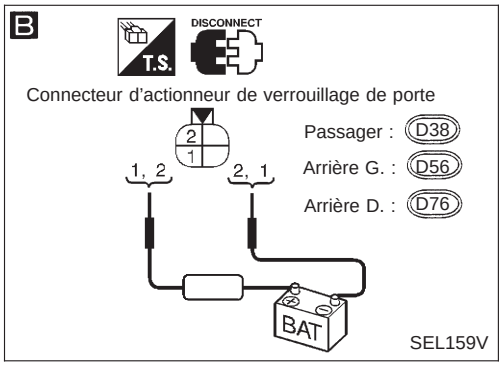

A

VERIFICATION DU CIRCUIT DE L'ACTIONNEUR DE VERROUILLAGE DE PORTE.
Vérifier la tension de l'actionneur de verrouillage de porte.

Position du contact de bouton de verrouillage	Bornes ⊕	Bornes ⊖	Tension (V)
Verrouillage	②	masse	Tension de la batterie
Déverrouillage	④	masse	

Mauvais → Remplacer la minuterie de verrouillage de porte (avant de remplacer le boîtier de contrôle, effectuer la PROCEDURE DE DIAGNOSTIC 1.)

Bon ↓

B

VERIFICATION DE L'ACTIONNEUR DE VERROUILLAGE DE PORTE.
1. Débrancher le connecteur d'actionneur de verrouillage de porte.
2. Appliquer une tension de 12V sur l'actionneur de verrouillage de porte et vérifier le fonctionnement.

Fonctionnement de l'actionneur de verrouillage de porte	Bornes ⊕	Bornes ⊖
Déverrouillé → Verrouillé	①	②
Verrouillé → Déverrouillé	②	①

Mauvais → Remplacer l'actionneur de verrouillage des portes.

Bon ↓

Réparer le faisceau entre le connecteur de la minuterie de verrouillage de porte et l'actionneur de verrouillage de porte.

Simpo PDF Merge and Split Unregistered Version - http://www.simpopdf.com

Diagnostic des défauts (Suite)

PROCEDURE DE DIAGNOSTIC 3

(Vérification du contact du bouton de verrouillage, côté conducteur)

A

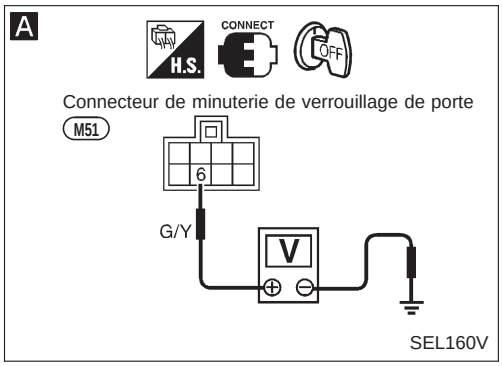

B

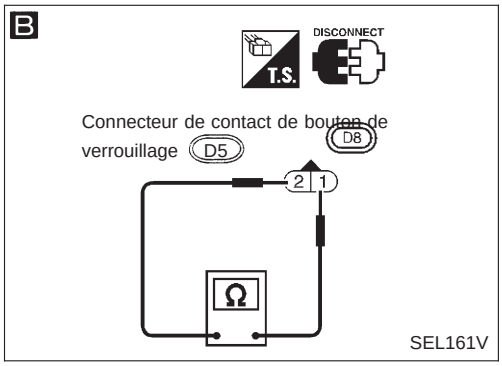

A

VERIFIER LE SIGNAL D'ENTREE DE LE CONTACT DU BOUTON DE VERROUILLAGE.
Vérifier la tension entre la borne ⑥ de la minuterie de verrouillage et la masse.

Position du contact de bouton de verrouillage	Tension (V)
Verrouillage	Environ 12
Déverrouillage	0

Bon → Le contact du bouton de verrouillage de porte du conducteur fonctionne correctement.

Mauvais ↓

B

VERIFIER LE CONTACT DU BOUTON DE VERROUILLAGE.
1. Débrancher le connecteur de contact de bouton de verrouillage de porte côté conducteur.
2. Vérifier la continuité des bornes du contact du bouton de verrouillage.

Bornes	Condition	Continuité
① - ②	Verrouillé	Non
	Déverrouillé	Oui

Mauvais → Remplacer le contact de bouton de verrouillage.

Bon ↓

Vérifier les points suivants.
- Circuit de mise à la masse pour le contact de bouton de verrouillage
- Faisceau ouvert ou court-circuité entre le contact de bouton de verrouillage de porte et la minuterie de verrouillage de porte

Simpo PDF Merge and Split Unregistered Version - http://www.simpopdf.com

Description du système

FONCTIONS

Le système de contrôle de la multi-télécommande est doté des fonctions suivantes.
- Verrouillage de porte
- Déverrouillage de porte
- Rappel de feux de détresse

FONCTIONNEMENT DU VERROUILLAGE

Pour verrouiller la porte à l'aide de la multi-télécommande, il faut que les deux signaux suivants soient reçus.
- Contact de clé sur OFF (quand la clé d'allumage n'est pas dans le cylindre de contact d'allumage).
- Tous les contacts de portes FERMES

Quand le signal de VERR. est entré dans le boîtier de contrôle de la multi-télécommande (l'antenne du système est combinée avec le boîtier de contrôle de la multi-télécommande), la masse est fournie
- à travers la borne ⑩ de la multi-télécommande
- à la borne ⑤ de la minuterie de verrouillage de porte et
- à la borne ① du relais 3 (VERR.) de la multi-télécommande.

La minuterie de verrouillage de porte fonctionne pour verrouiller les portes (sauf celle du conducteur) et le relais-3 de la multi-télécommande (VERR.) est activé pour verrouiller la porte du conducteur.

FONCTIONNEMENT DU DEVERROUILLAGE

Pour déverrouiller la porte à l'aide de la multi-télécommande, il faut que les deux signaux suivants soient reçus.
- Contact de clé sur OFF (quand la clé d'allumage n'est pas dans le cylindre de contact d'allumage)

Quand le signal de DEVERR. est entré dans le boîtier de contrôle de la multi-télécommande (l'antenne du système est combinée avec le boîtier de contrôle de la multi-télécommande), la masse est fournie
- à travers la borne ⑪ de la multi-télécommande
- à la borne ⑧ de la minuterie de verrouillage de porte et
- à la borne ① du relais 4 (DEVERR.) de la multi-télécommande.

La minuterie de verrouillage de porte fonctionne pour déverrouiller les portes (sauf celle du conducteur) et le relais-4 de la multi-télécommande (DEVERR.) est activé pour déverrouiller la porte du conducteur.

RAPPEL DE FEUX DE DETRESSE

Quand les portes sont verrouillées ou déverrouillées par la multi-télécommande, la masse est fournie
- vers la borne ① du relais 1 et 2 de multi-télécommande
- à travers la borne ⑫ de la multi-télécommande.

Puis les relais sont activés et les feux de détresse clignotent comme suit
- Fonctionnement de verrouillage : clignote une fois
- Fonctionnement de déverrouillage : clignote deux fois

SAISIE DU CODE D'IDENTIFICATION DE LA MULTI-TELECOMMANDE

Un maximum de quatre télécommandes peut être entré. Toute tentative pour entrer la télécommande effacera les codes d'identification entrés précédemment. Il faut par conséquent s'assurer que le propriétaire du véhicule a remis toutes les multi-télécommandes lorsqu'une saisie de code d'identification est effectuée.
Pour entrer la saisie du code d'identification, il faut que les signaux suivants soient intégrés au boîtier de contrôle de la multi-télécommande.
- Signal VERR. côté conducteur (depuis le capteur de déverrouillage de porte du conducteur)
- Signal FERME de contact de porte
- Signal du contact de clé (INSEREE/RETIREE)
- Alimentation électrique des accessoires
- Signal de la multi-télécommande

Pour plus de détails sur la procédure, se reporter à ''Procédure d'entrée du code d'identification'' à la page EL-184.

Simpo PDF Merge and Split Unregistered Version - http://www.simpopdf.com

Schéma

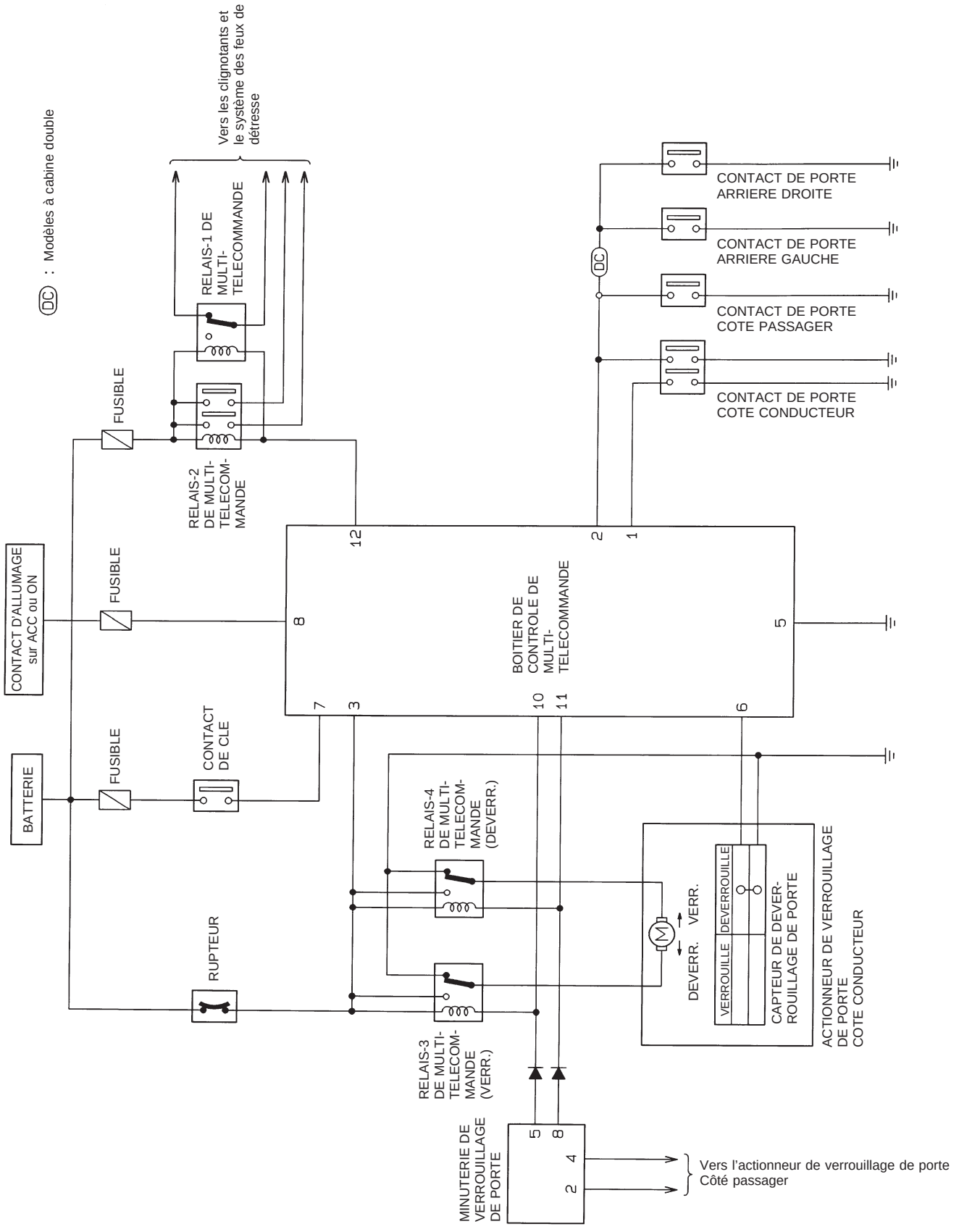

HEL383A

Simpo PDF Merge and Split Unregistered Version - http://www.simpopdf.com

Schéma de câblage – MULTI –/Conduite à gauche

EL-MULTI-01

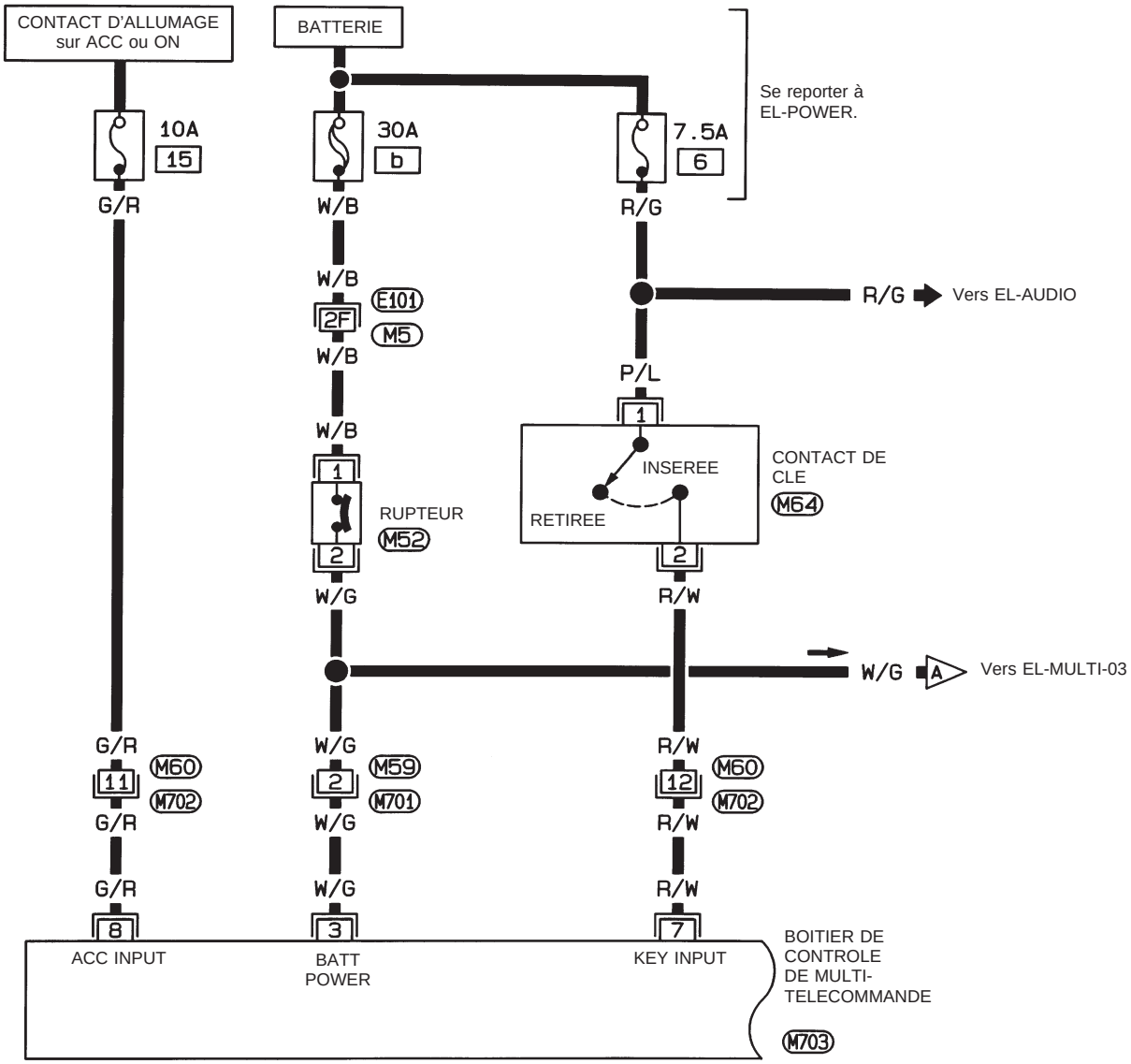

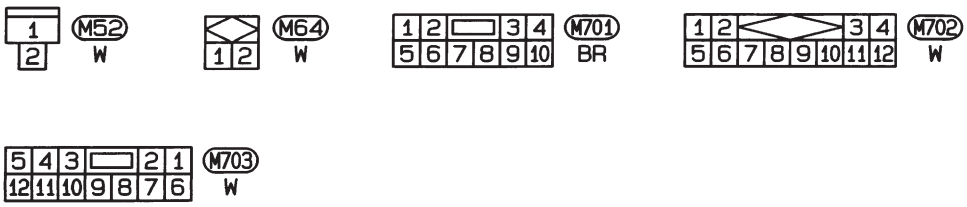

Se reporter à la dernière page dépliante.

M5 , E101

HEL384A

Simpo PDF Merge and Split Unregistered Version - http://www.simpopdf.com

Schéma de câblage – MULTI –/Conduite à gauche (Suite)

EL-MULTI-02

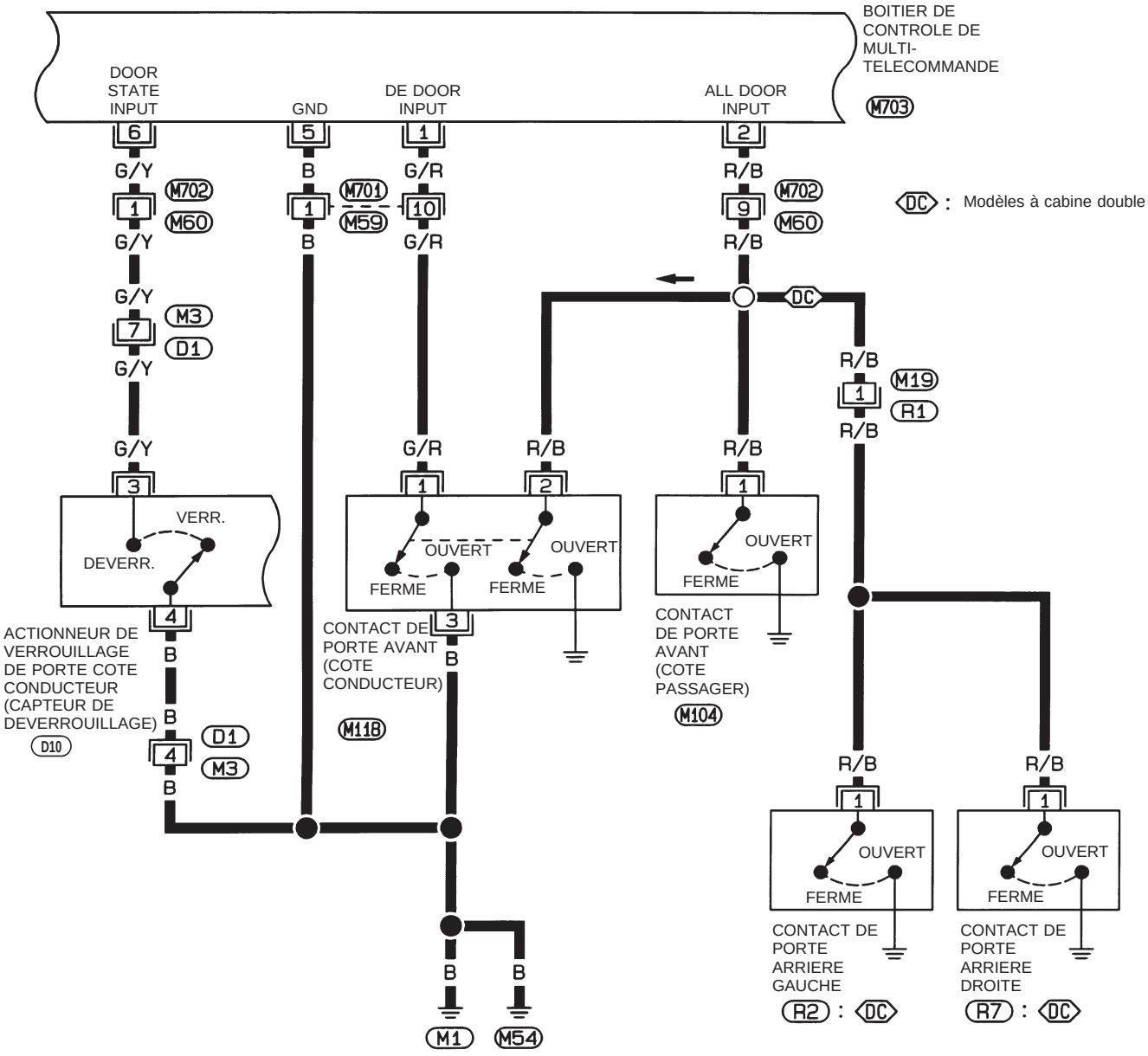

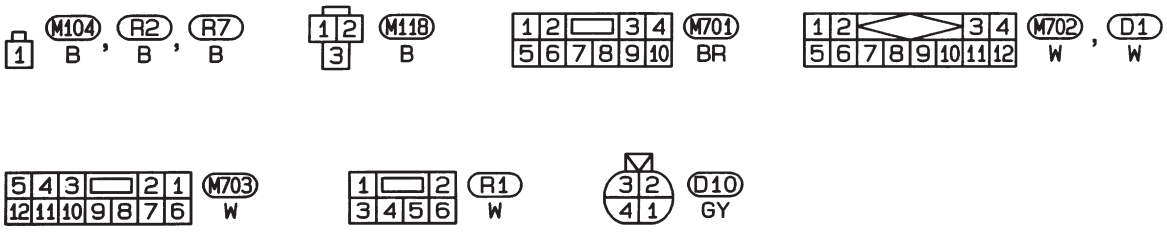

HEL385A

Simpo PDF Merge and Split Unregistered Version - http://www.simpopdf.com

Schéma de câblage – MULTI –/Conduite à gauche (Suite)

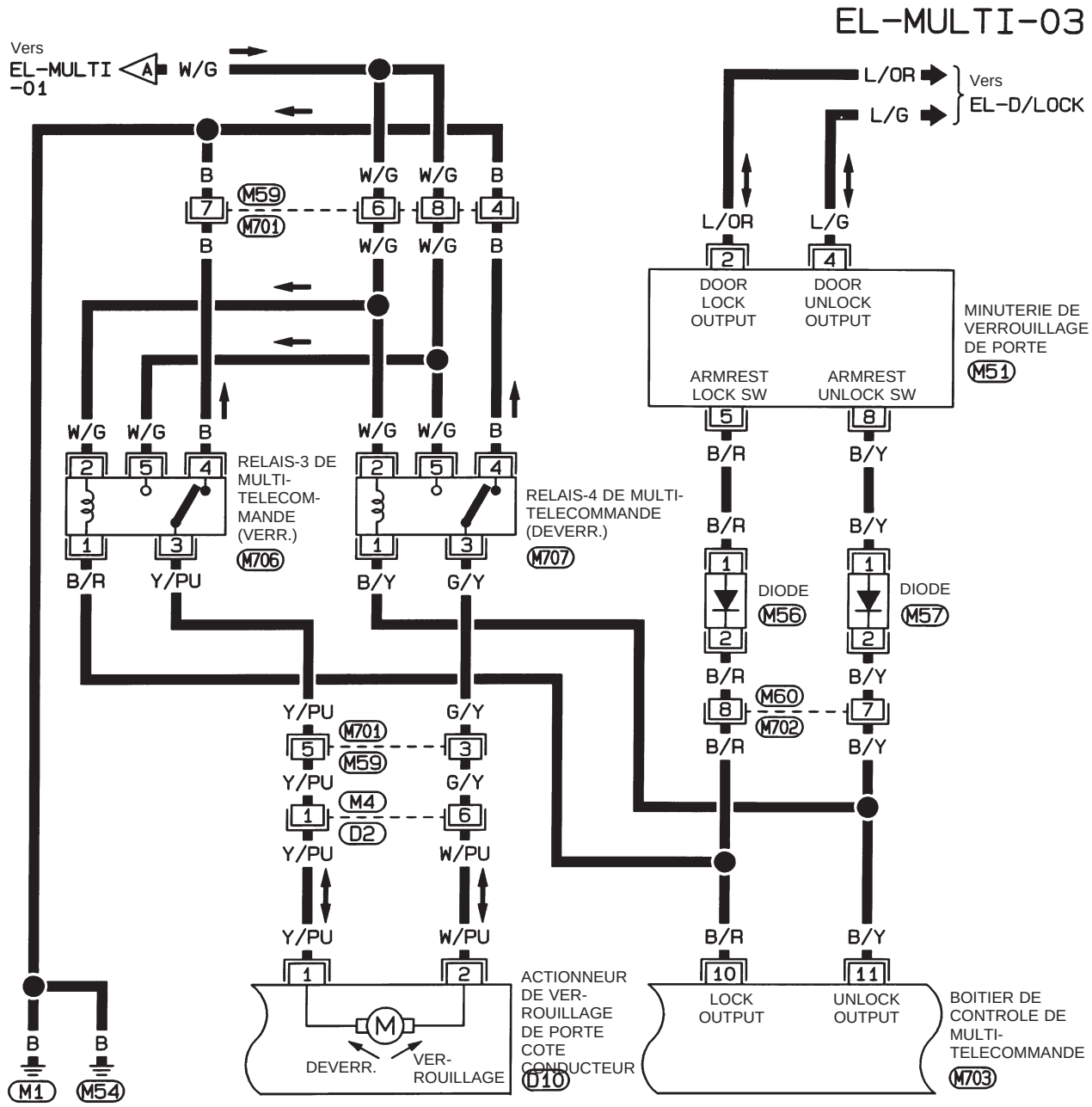

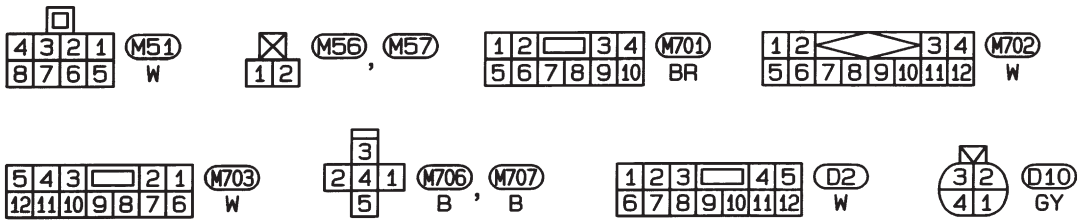

HEL386A

Simpo PDF Merge and Split Unregistered Version - http://www.simpopdf.com

Schéma de câblage – MULTI –/Conduite à gauche (Suite)

EL-MULTI-04

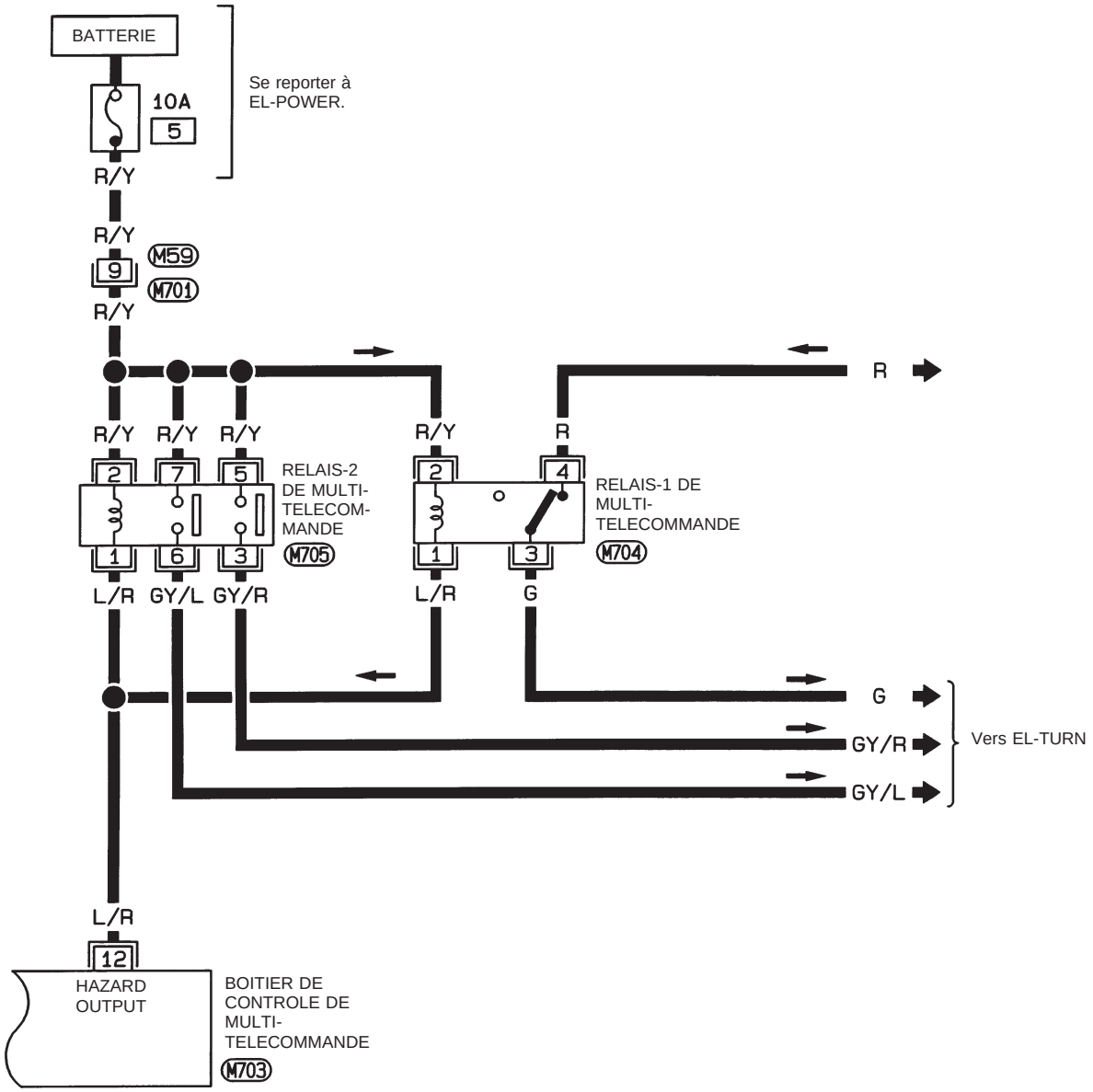

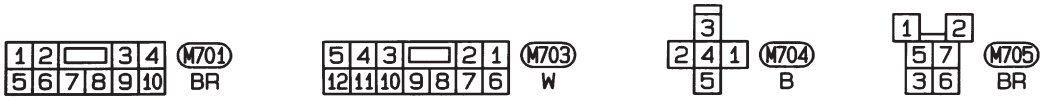

HEL387A

Simpo PDF Merge and Split Unregistered Version - http://www.simpopdf.com

Diagnostics des défauts

TABLEAU DES SYMPTOMES

Symptôme	Cause possible	Diagnostic/procédure d'entretien
Aucune porte ne peut être verrouillée ou déverrouillée par la multi-télécommande (voir NOTE).	1. Batterie de la télécommande 2. Contact de clé (insérer) 3. Contact de porte 4. Circuit d'alimentation électrique pour le boîtier de contrôle de la multi-télécommande 5. Circuit de masse du boîtier de contrôle de la multi-télécommande 6. Télécommande	1. Vérifier la batterie de la télécommande. Se reporter à EL-182. 2. Vérifier le signal du contact de clé (insérer) à la borne ⑦ du boîtier de la multi-télécommande. 3. Vérifier le signal du contact de porte aux bornes ① et ② du boîtier de contrôle de multi-télécommande. 4. S'assurer qu'il y a une tension de la batterie à la borne ③ du boîtier de contrôle de multi-télécommande. 5. Vérifier la continuité entre la borne ⑤ du boîtier de contrôle de multi-télécommande et la masse. 6. Remplacer la multi-télécommande. Se reporter à EL-184.
La porte du conducteur ne peut pas être verrouillée ou déverrouillée par l'actionnemnet de la multi-télécommande.	1. Circuit de l'actionneur de verrouillage de porte du conducteur	1. Vérifier le circuit de l'actionneur de verrouillage de porte côté conducteur. Se reporter à EL-183.
Les portes autres que celle du conducteur ne peuvent pas être verrouillées ou déverrouillées par l'actionnement de la multi-télécommande. (si le système de verrouillage électrique des portes ne fonctionne pas correctement, vérifier le système de verrouillage électrique des portes. Se reporter à EL-171).	1. Signal de verr./déverr. de la centrale de commande intelligente	● Lorsque le verrouillage n'est pas possible : Vérifier la continuité entre la borne ⑩ du boîtier de contrôle de multi-télécommande et la borne ⑤ de la minuterie de verrouillage. ● Quand le déverrouillage n'est pas possible : Vérifier la continuité entre la borne ⑪ du boîtier de contrôle de multi-télécommande et la borne ⑧ de la minuterie de verrouillage.
Le rappel de feux de détresse ne fonctionne pas correctement.	1. Fusible de 10A 2. Relais-1 et 2 de la multi-télécommande 3. Circuit du rappel de feux de détresse	1. Vérifier le fusible de 10A (n° 5 , situé dans le boîtier à fusibles). 2. Vérifier le relais-1 et 2 de multi-télécommande. 3. Vérifier si le faisceau est ouvert ou en court-circuit entre les relais et la borne ⑫ de la multi-télécommande
Le nouveau code d'identification de la multi-télécommande ne peut pas être entré.	1. Batterie de la télécommande 2. Contact de clé (insérer) 3. Contact de porte 4. Capteur de déverrouillage de porte côté conducteur 5. Circuit d'alimentation électrique des accessoires du boîtier de contrôle de multi-télécommande 6. Télécommande	1. Vérifier la pile de la télécommande. Se reporter à EL-182. 2. Vérifier le signal du contact de clé (insérer) à la borne ⑦ du boîtier de la multi-télécommande. 3. Vérifier le signal du contact de porte aux bornes ① et ② du boîtier de contrôle de multi-télécommande. 4. Vérifier le signal de capteur de déverrouillage de porte (côté conducteur) à la borne ⑥ du boîtier de contrôle de la multi-télécommande. 5. S'assurer qu'il y a une tension de la batterie à la borne ⑧ du boîtier de contrôle de multi-télécommande lorsque le contact d'allumage est sur la position ACC. 6. Remplacer la multi-télécommande. Se reporter à EL-184.

Se reporter au ''TABLEAU D'INSPECTION DU BOITIER DE CONTROLE DE MULTI-TELECOMMANDE'' de la page suivante pour vérifier les signaux du boîtier de contrôle.
REMARQUE :

- Le fonctionnement de déverrouillage de la multi-télécommande ne fonctionne pas lorsque la clé est insérée dans le cylindre.
- Le fonctionnement du verrouillage de la multi-télécommande ne fonctionne pas quand la clé est insérée dans le cylindre ou si l'une des portes est ouverte.

Simpo PDF Merge and Split Unregistered Version - http://www.simpopdf.com

Diagnostics des défauts (Suite)

TABLEAU D'INSPECTION DU BOITIER DE CONTROLE DE MULTI-TELECOMMANDE

N° borne	Connexions	Condition		Tension (V) (valeurs approximatives)
1	Contact de porte côté conducteur	Porte côté conducteur	Ouvert	0
			Fermé	12
2	Contact de porte (toutes les portes)	L'une des portes est ouverte		0
		Toutes les portes sont fermées		12
3	Source d'alimentation (BAT)	–		12
5	Masse	–		–
6	Capteur de déverrouillage de porte côté conducteur	Porte côté conducteur	Verrouillé	5
			Déverrouillé	0
7	Contact de clé (insérer)	La clé est dans le cylindre de contact d'allumage		12
		La clé n'est pas dans le cylindre de contact d'allumage		0
8	Alimentation électrique des accessoires	Contact d'allumage	ARRET	0
			Acc ou ON	12
10	Signal de verrouillage	Le bouton VERR. de la télécommande est enclenché (Toutes les portes sont fermées et la clé ne se trouve pas dans le cylindre de contact d'allumage)		0
		A l'exception des conditions ci-dessus.		12
11	Signal de déverrouillage	Le bouton DEVERR. de la télécommande est enclenché (La clé n'est pas dans le cylindre de contact d'allumage).		0
		A l'exception des conditions ci-dessus.		12
12	Relais-1, 2 de la multi-télécommande	Le bouton VERR./DEVERR. de la télécommande est enclenché (Toutes les portes sont fermées et la clé ne se trouve pas dans le cylindre de contact d'allumage)		0
		A l'exception des conditions ci-dessus.		12

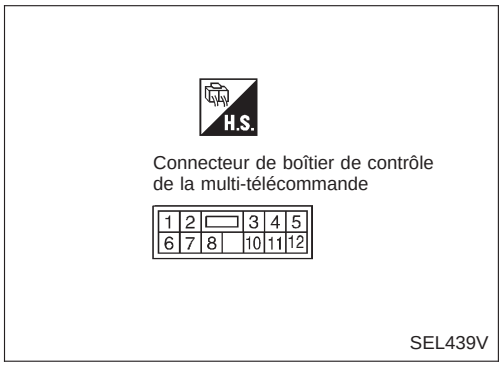

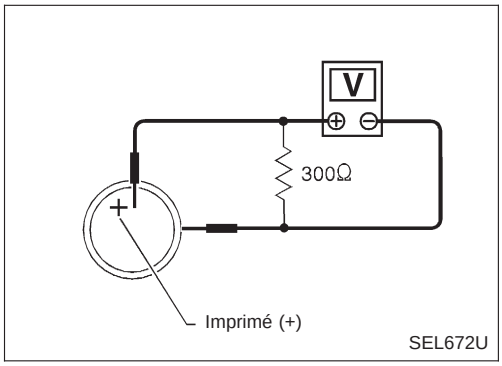

VERIFIVATION DE LA BATTERIE DE LA MULTI-TELECOMMANDE

Déposer la batterie et mesurer la tension entre les bornes positive ⊕ et négative ⊖ de la batterie.

Mesure de la borne		Valeur de standard
⊕	⊖	
Borne positive de batterie ⊕	Borne négative de batterie ⊖	2,5 - 3,0V

Note :
La télécommande ne fonctionne pas si la batterie n'est pas correctement installée.

Simpo PDF Merge and Split Unregistered Version - http://www.simpopdf.com

Diagnostics des défauts (Suite)

VERIFICATION DE L'ACTIONNEUR DE VERROUILLAGE DE PORTE COTE CONDUCTEUR

A

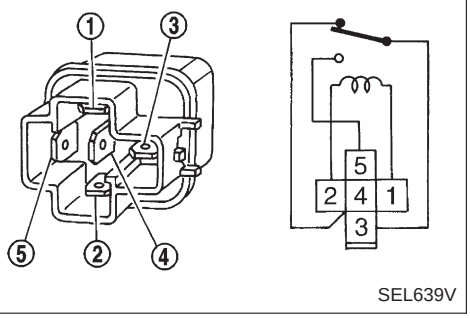

SEL639V

VERIFIER LES RELAIS-3, 4 DE LA MULTI-TELECOMMANDE.

condition		Continuité entre les bornes ③ et ④	Continuité entre les bornes ③ et ⑤
La tension de la batterie n'est pas appliquée entre chaque borne	① et ②	Oui	Non
La tension de la batterie est appliquée entre chaque borne	① et ②	Non	Oui

Pendant que la tension de la batterie est appliquée aux bornes du relais, insérer le fusible dans le circuit.

Mauvais → Remplacer le relais.

Bon ↓

B

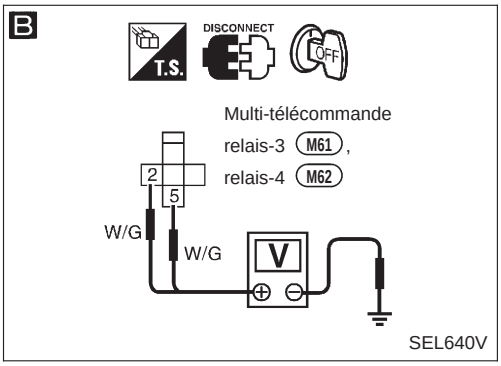

SEL640V

VERIFIER L'ALIMENTATION ELECTRIQUE DES RELAIS.
Vérifier la tension entre les bornes ②, ⑤ du relais-3, 4 de multi-télécommande et la masse.
Il doit y avoir tension de la batterie.

Mauvais → Vérifier les points suivants.
- Fusible de 30A (n° h, situé dans le raccord à fusibles et le boîtier à fusibles).
- Vérifier si le faisceau est ouvert ou en court-circuit entre le fusible et le relais.

Bon ↓

C

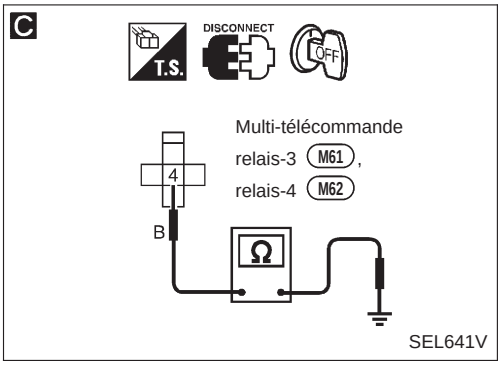

SEL641V

VERIFIER LE CIRCUIT DE MISE A LA MASSE DES RELAIS.
Vérifier la continuité entre la borne ④ du relais-3, 4 de la multi-télécommande et la masse.
Il doit y avoir continuité.

Mauvais → Réparer le faisceau.

Bon ↓

D

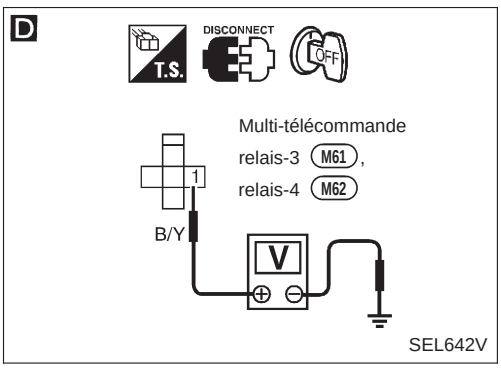

SEL642V

VERIFIER LE SIGNAL DE VERR./DEVERR. DES RELAIS.
Vérifier la tension entre la borne ① du relais-3, 4 de multi-télécommande et la masse.
Il devrait y avoir une tension de 5V.

Mauvais → Vérifier si le faisceau est ouvert ou en court-circuit entre le relais de la multi-télécommande et le boîtier de la multi-télécommande.

Bon ↓

E

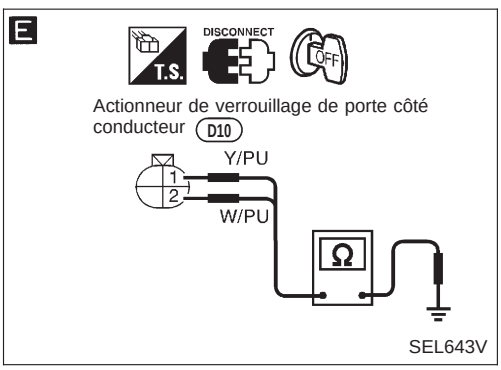

SEL643V

VERIFICATION DU CIRCUIT DE L'ACTIONNEUR DE VERROUILLAGE DE PORTE.
1. Brancher les relais.
2. Débrancher le connecteur de verrouillage de porte côté conducteur.
3. Vérifier la continuité du faisceau entre l'actionneur de verrouillage de porte côté conducteur et les relais.
   Il doit y avoir continuité.

Mauvais → Vérifier si le faisceau est ouvert ou en court-circuit entre les relais de la multi-télécommande et l'actionneur de verrouillage de porte.

Bon ↓

Remplacer l'actionneur de verrouillage des portes.

Simpo PDF Merge and Split Unregistered Version - http://www.simpopdf.com

Procédure d'entrée du code d'identification

Note :
Un maximum de quatre télécommandes peut être entré. Toute tentative pour entrer la télécommande effacera les codes d'identification entrés précédemment. Il faut par conséquent s'assurer que le propriétaire du véhicule a remis toutes les multi-télécommandes lorsqu'une saisie de code d'identification est effectuée.
Entrer le code d'identification (ID) manuellement lorsque :
- la multi-télécommande ou le boîtier de contrôle est remplacé.
- une multi-télécommande supplémentaire est activée.

Pour entrer le code d'identification, suivre les procédures ci-dessous.

PROCEDURE

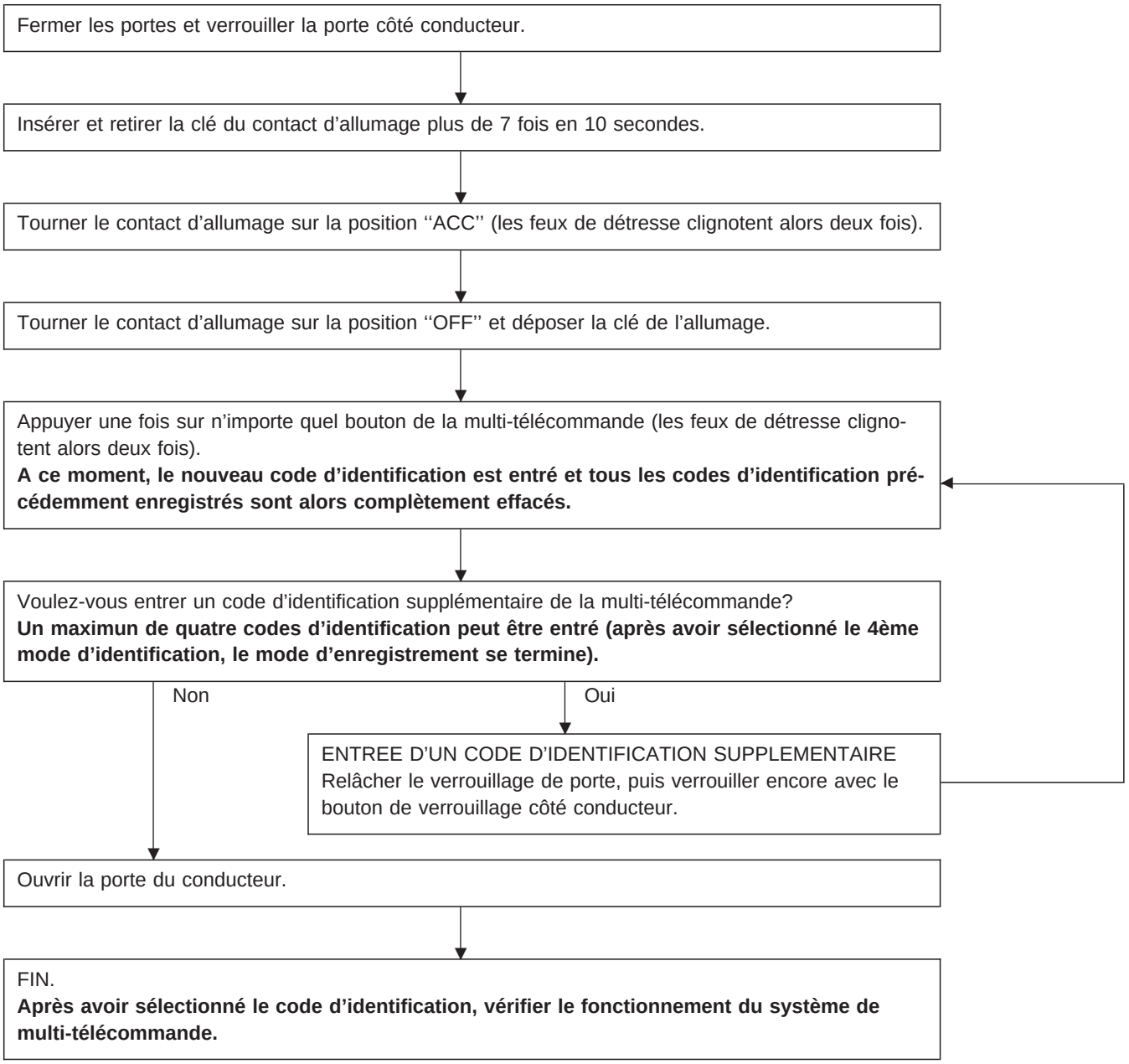

REMARQUE :
- **S'il est nécessaire d'activer plus de deux nouvelles télécommandes, répéter la procédure d''entrée de code d'identification supplémentaire'' pour chaque nouvelle télécommande.**
- **Tout code d'identification entré après la désactivation du mode de ''programmation'' ne sera pas accepté.**

Simpo PDF Merge and Split Unregistered Version - http://www.simpopdf.com

Emplacement des composants et des connecteurs de faisceau

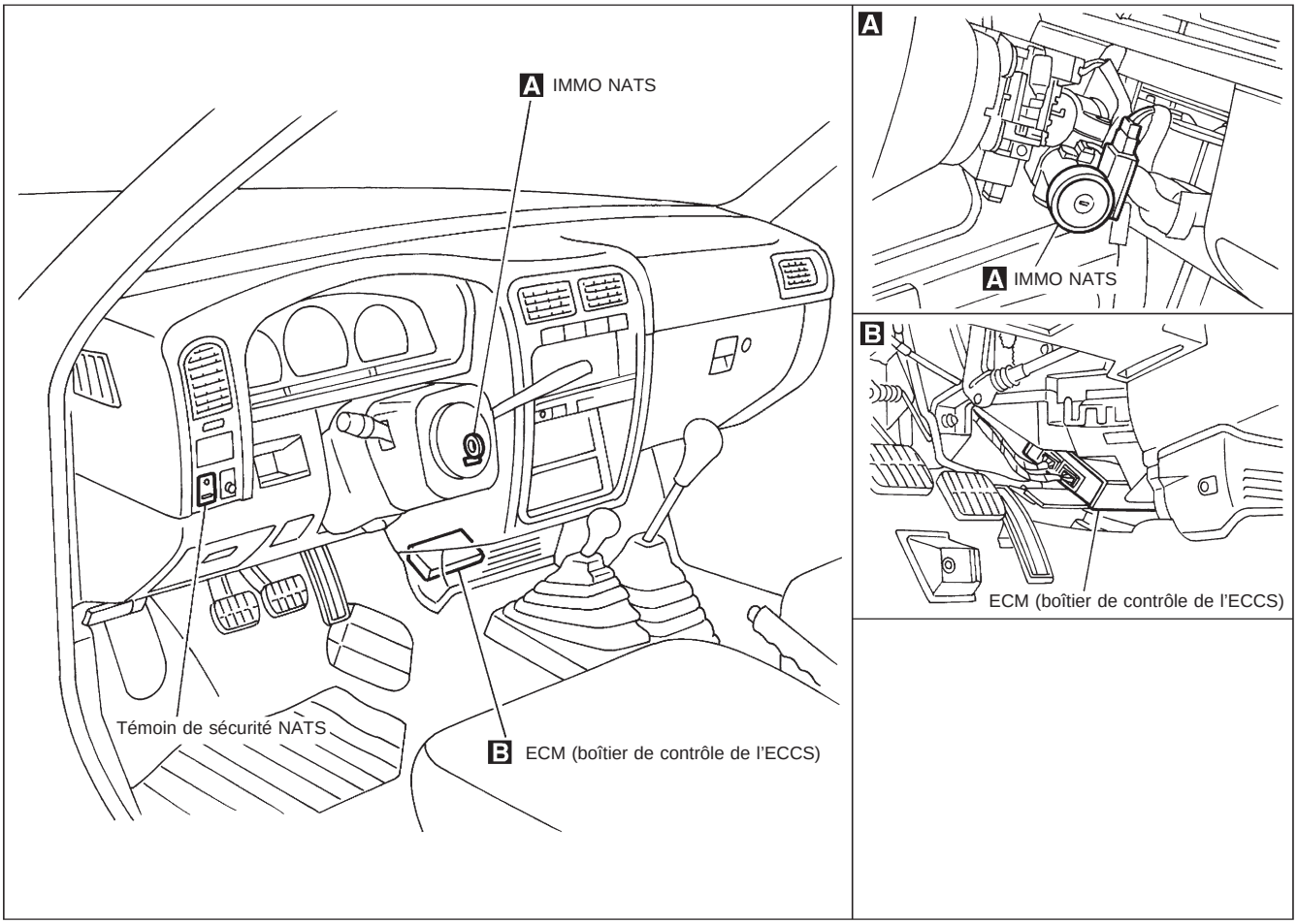

SEL649V

Description du système

Le système NATS présente les fonctions d'immobilisation suivantes :

- Dans la mesure où seules les clés de contact NATS dont les numéros d'identification ont été enregistrés dans l'ECM et l'IMMO du système NATS permettent de démarrer le moteur, le système NATS rend impossible l'utilisation d'un véhicule volé sans clé NATS.
  Cela signifie que le système NATS immobilisera le moteur si quelqu'un tente de le démarrer sans utiliser une clé NATS enregistrée.
- Les deux numéros d'identification des clés délivrées initialement ont été enregistrés dans le système NATS.
  A la demande du propriétaire du véhicule, un maximum de quatre numéros d'identification de clés peuvent être enregistrés dans les composants du système NATS.
- Le témoin de sécurité NATS clignote lorsque le contact d'allumage est sur ''OFF'' ou ''Acc''. De cette façon, toute personne étrangère est avertie que le système est équipé d'un système antivol.
- Lorsque le NATS détecte un défaut, le témoin de défaut (MIL) clignote.
- Tous les diagnostics des défauts du système NATS, l'initialisation du système et l'enregistrement de numéros d'identification de clés de contact NATS supplémentaires doivent être effectués à l'aide du matériel CONSULT et du logiciel CONSULT NATS.
  Une fois l'initialisation du système NATS terminée, le numéro d'identification de la clé de contact introduite est automatiquement enregistré dans le système NATS. Puis, si nécessaire, l'enregistrement de numéros d'identification de clé NATS supplémentaires peut être effectué.

Simpo PDF Merge and Split Unregistered Version - http://www.simpopdf.com

Description du système (Suite)

Pour les procédures d'initialisation du NATS et l'enregistrement d'un numéro d'identification de clé de contact NATS, se reporter au Manuel d'Utilisation CONSULT, NATS.

- **Lors de la réparation d'une panne du système NATS (indiquée par le clignotement du témoin de défaut MIL) ou lors de l'enregistrement d'un autre numéro d'identification de clé de contact NATS, il peut s'avérer nécessaire de réenregistrer le numéro d'identification de la clé originale. Il faut par conséquent s'assurer que le propriétaire du véhicule a remis toutes ses clés.**

Composition du système

La fonction d'immobilisation du NATS comprend :

- Une clé de contact NATS
- Boîtier de commande de l'immobilisateur NATS (IMMO NATS) situé dans le canon de clé de contact
- Un module de contrôle du moteur (ECM)
- Un témoin de sécurité NATS
- Un témoin de défaut (MIL)

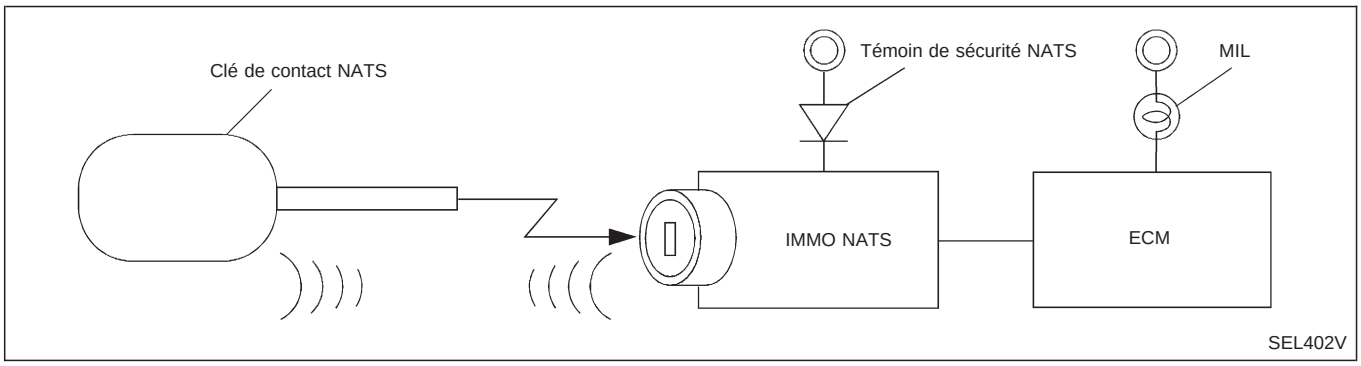

Simpo PDF Merge and Split Unregistered Version - http://www.simpopdf.com

Schéma de câblage – NATS –

EL-NATS-01

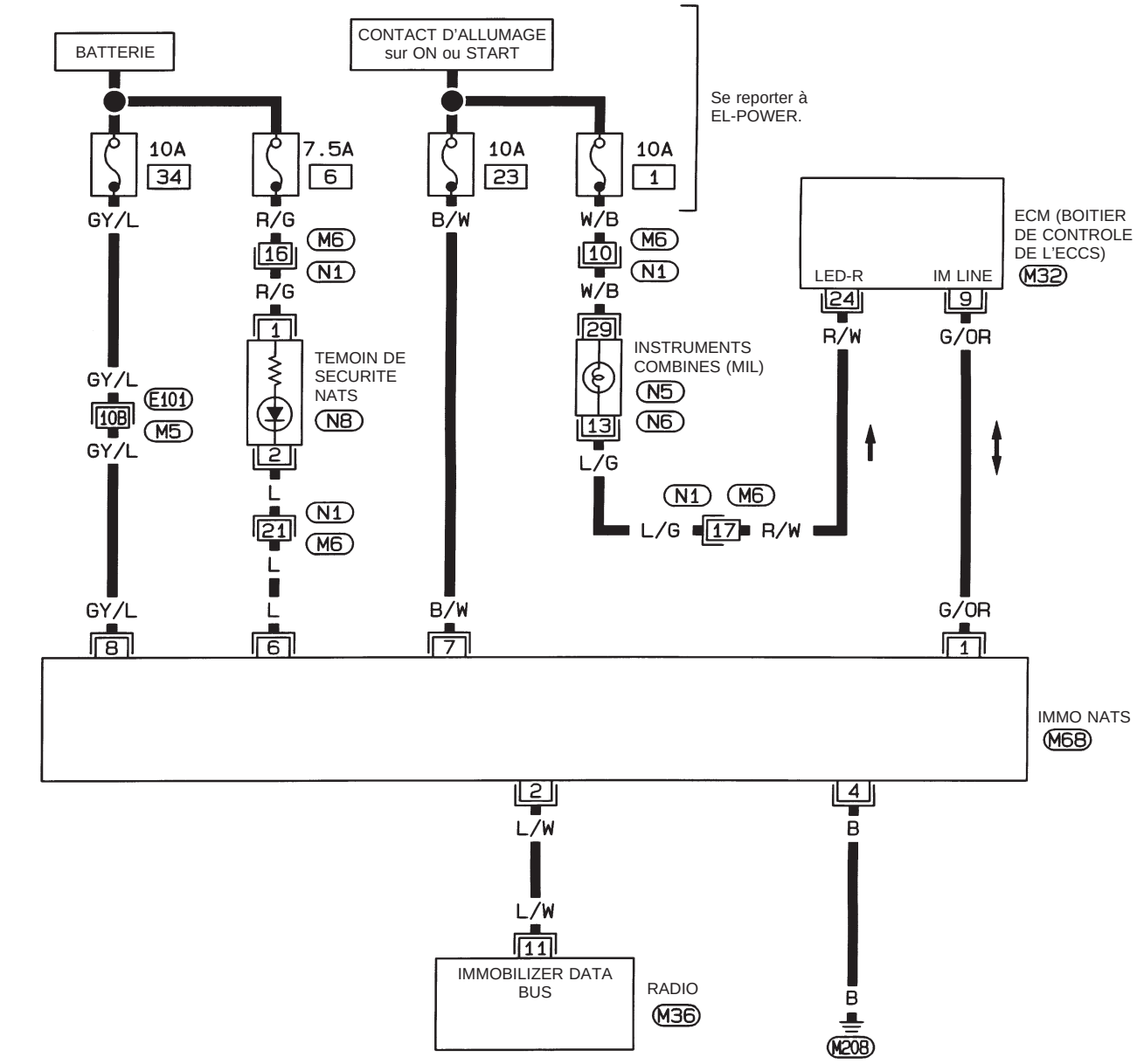

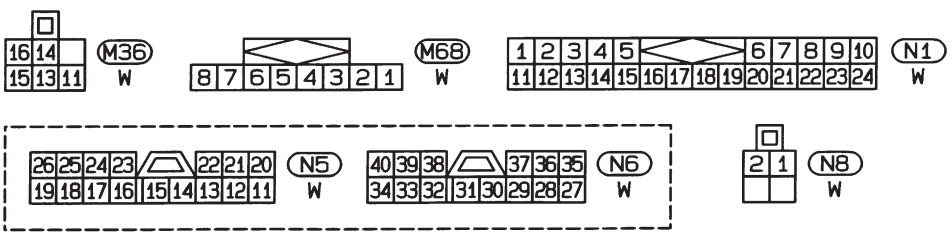

Se reporter à la dernière page dépliante.

M5, E101, M32

HEL388A

Simpo PDF Merge and Split Unregistered Version - http://www.simpopdf.com

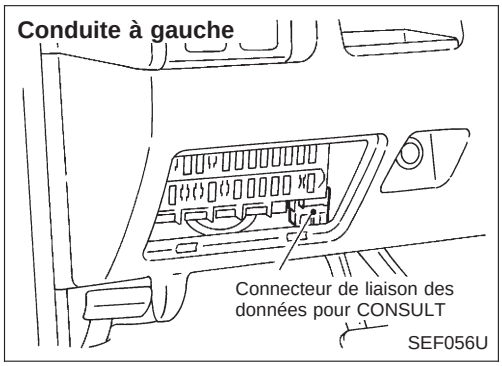

CONSULT

PROCEDURE D'INSPECTION CONSULT

1. Mettre le contact d'allumage sur ''OFF''.
2. Brancher le CONSULT sur le connecteur de liaison des données de diagnostic pour CONSULT.

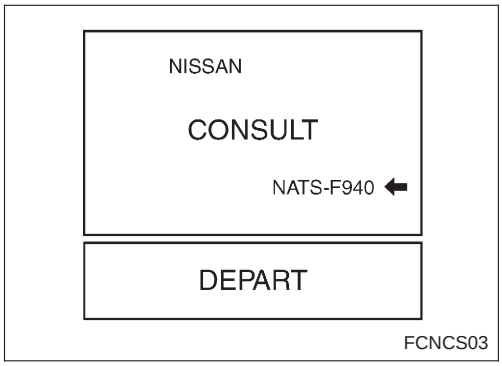

3. Insérer la carte-programme NATS dans le CONSULT.

: Carte programme NATS-F940

4. Mettre le contact d'allumage sur ''ON''.
5. Appuyer sur ''DEPART''.

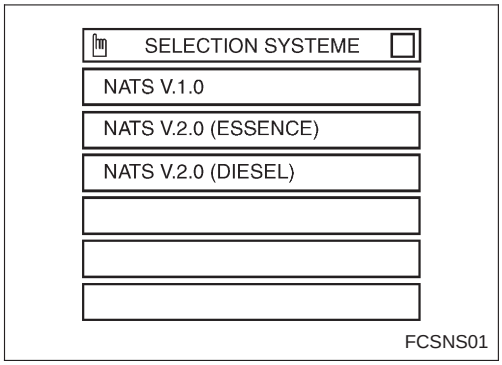

6. Appuyer sur ''NATS V.2.0 (ESSENCE)''.

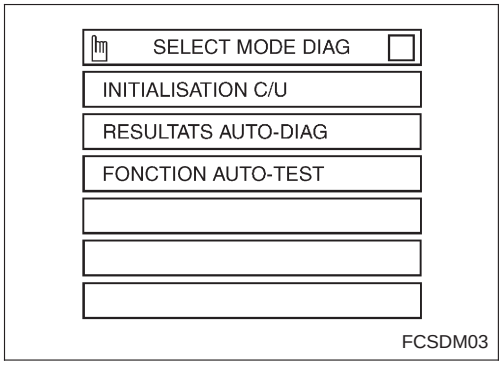

7. Effectuer chaque mode d'essai de diagnostic conformément à chaque procédure d'entretien.

Pour de plus amples informations, se reporter au Manuel d'Utilisation CONSULT, NATS V.2.0 (ESSENCE).

Simpo PDF Merge and Split Unregistered Version - http://www.simpopdf.com

CONSULT (Suite)

FONCTION DU MODE D'ESSAI DE DIAGNOSTIC DE CONSULT

MODE D'ESSAI DE DIAGNOSTIC CONSULT	Description
INITIALISATION C/U	Lors du remplacement de l'un des trois composants suivants, l'initialisation C/U est nécessaire. [clé de contact NATS/IMMO/ECM]
FONCTION AUTO-TEST	L'ECM vérifie lui-même sa propre interface de communication NATS.
RESULTATS DE L'AUTODIAGNOSTIC	Les éléments détectés (affichés sur l'écran) sont indiqués dans le tableau ci-dessous.

REMARQUE :
Lorsqu'une nouvelle initialisation est effectuée, tous les numéros d'identification enregistrés auparavant seront effacés. Dès lors, toutes les clés de contact NATS doivent être réenregistrées.
Le moteur ne peut être démarré avec une clé non enregistrée. Dans ce cas, le système peut afficher ''DIFFERENCE DE CLE'' ou ''MODE BLOCAGE'' sur l'écran CONSULT comme résultat de l'autodiagnostic.

COMMENT LIRE LES RESULTATS D'AUTODIAGNOSTIC

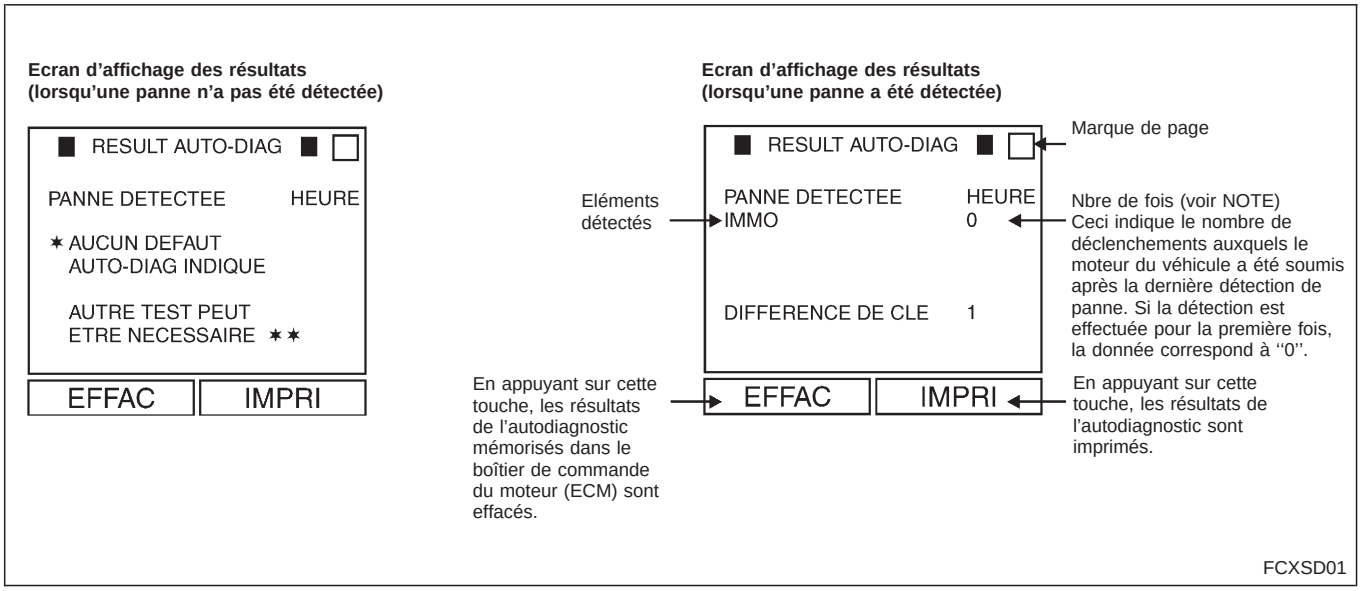

REMARQUE :
- **Si le nombre de déclenchement est supérieur à 1, le témoin MIL ne clignote pas.**
- **Les informations sur la durée ne sont pas indiquées pour ce modèle.**

TABLEAU DES RESULTATS D'AUTODIAGNOSTIC

Eléments détectés (termes affichés sur l'écran)	Description	Page de référence
IMMO	L'ECM reçoit le signal de l'IMMO indiquant que l'IMMO est défectueux.	EL-192
ECM	L'ECM est défectueux.	EL-192
LIGNE ECM/IMMO	Communication impossible entre l'ECM et l'IMMO.	EL-193
DIFFERENCE DE CLE	L'IMMO peut recevoir le signal d'identification de la clé mais le résultat de la vérification entre le code d'identification de la clé et l'IMMO est mauvais.	EL-195
LIGNE IMMO/CLE	L'IMMO ne reçoit pas le signal d'identification de la clé.	EL-196
CONTRAD ID IMM/ECM	Le résultat de la vérification du code d'identification entre l'IMMO et l'ECM est mauvais. Le système doit être initialisé.	EL-196
INTERFERENCES	Interférences sonores affectant les lignes de communication NATS pendant la communication.	EL-197
NE PAS EFFACER AV. VERIF. DIAG. MOTEUR	Des données de défauts du moteur et du système NATS ont été détectées dans l'ECM.	EL-190
MODE BLOCAGE	Lorsqu'on utilise une clé de contact non enregistrée ou que l'on effectue la procédure de démarrage deux ou trois fois de suite alors que la clé, l'IMMO ou l'ECM sont défectueux, le système NATS changera le mode et en sélectionnera un qui empêche le démarrage du moteur.	EL-198

Simpo PDF Merge and Split Unregistered Version - http://www.simpopdf.com

Diagnostics des défauts

ORGANIGRAMME

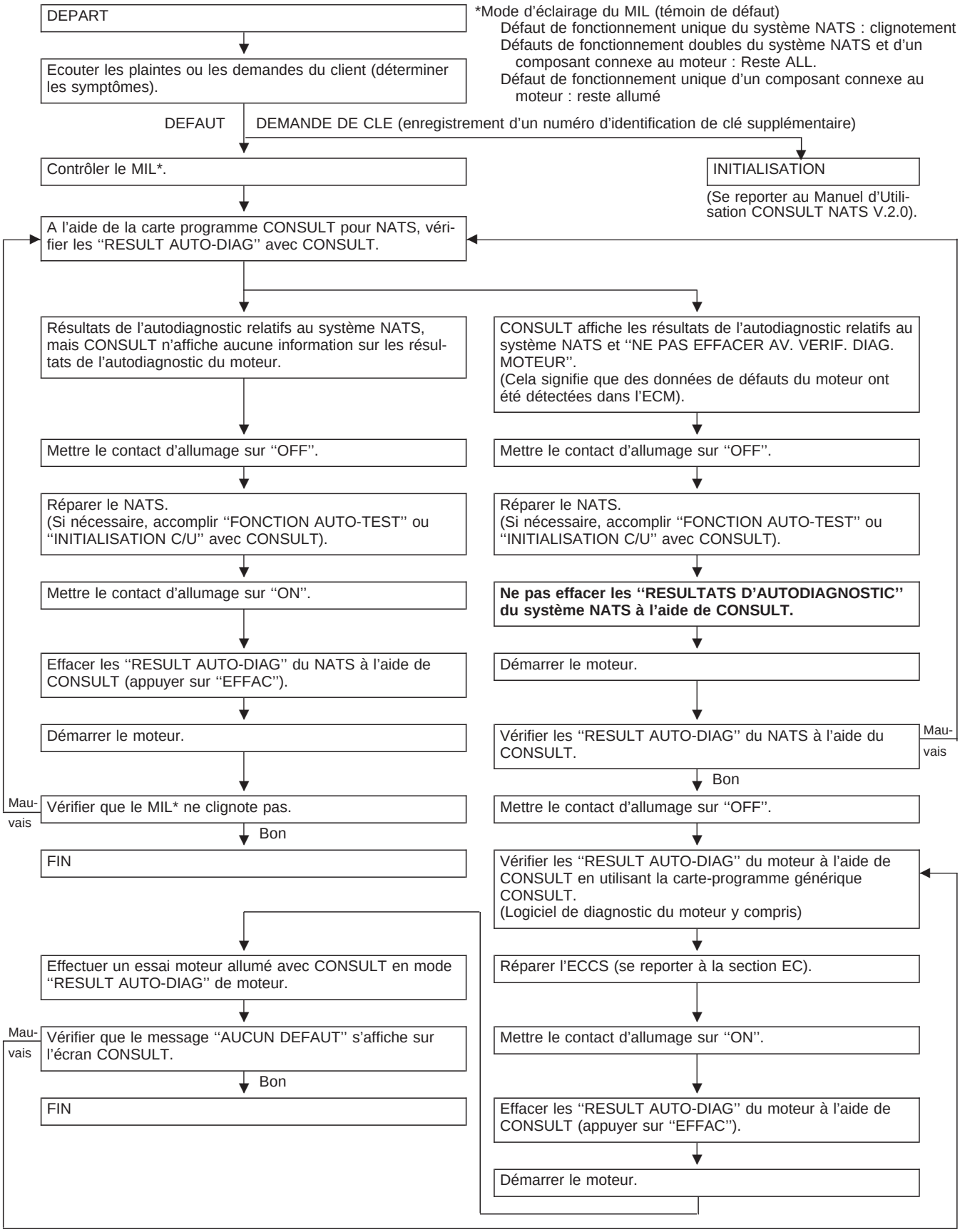

Simpo PDF Merge and Split Unregistered Version - http://www.simpopdf.com

TABLEAU DES SYMPTOMES

SYMPTOME	''RESULT AUTO-DIAG'' affichés sur l'écran CONSULT.	PROCEDURE DE DIAGNOSTIC (Page de référence)	SYSTEME (Pièce ou mode défectueux)
● Clignotement du MIL ● Le moteur démarre.	IMMO	PROCEDURE 1 (EL-192)	IMMO
	ECM	PROCEDURE 2 (EL-192)	ECM
● Clignotement du MIL ● Le moteur ne démarre pas.	LIGNE ECM/IMMO	PROCEDURE 3 (EL-193)	Circuit ouvert dans la ligne de tension de la batterie du circuit de l'IMMO
			Circuit ouvert dans la ligne d'allumage du circuit de l'IMMO
			Circuit ouvert dans la ligne de masse du circuit de l'IMMO
			Circuit ouvert ou court-circuit dans les lignes de communication entre IMMO et ECM
			ECM
			IMMO
	DIFFERENCE DE CLE	PROCEDURE 4 (EL-195)	Clé non enregistrée
			IMMO
	LIGNE IMMO/CLE	PROCEDURE 5 (EL-196)	Anomalie de fonctionnement de la puce d'identification de clé
			IMMO
	CONTRAD ID IMM/ECM	PROCEDURE 6 (EL-196)	L'initialisation du système n'est pas encore terminée.
			ECM
			IMMO
	INTERFERENCES	PROCEDURE 7 (EL-197)	Interférences sonores dans la ligne de communication
	MODE BLOCAGE	PROCEDURE 8 (EL-198)	MODE BLOCAGE
● Le MIL reste allumé	NE PAS EFFACER AV. VERIF. DIAG. MOTEUR	ORGANIGRAMME (EL-190)	Des données de défauts du moteur et du système NATS ont été détectées dans l'ECM.
● Le témoin de sécurité ne fonctionne pas correctement. ● Le moteur démarre correctement.	–	PROCEDURE 9 (EL-199)	Circuit du témoin de sécurité
			Témoin de sécurité
			Continuation du mode d'initialisation

*Mode d'éclairage du MIL (témoin de défaut)
Défaut de fonctionnement unique du système NATS : clignotement
Défauts de fonctionnement doubles du système NATS et d'un composant connexe au moteur : reste allumé
Défaut de fonctionnement unique d'un composant connexe au moteur : reste allumé

Simpo PDF Merge and Split Unregistered Version - http://www.simpopdf.com

Diagnostics des défauts (Suite)

PROCEDURE DE DIAGNOSTIC 1

Résultats de l’autodiagnostic :
‘‘IMMO’’ affiché sur l’écran CONSULT

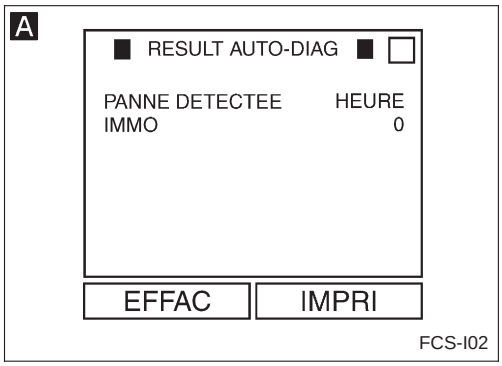

A

S’assurer que ‘‘IMMO’’ de ‘‘RESULT AUTO-DIAG’’ est affiché sur l’écran CONSULT.

↓

- L’IMMO est défectueux.

1. Remplacer l’IMMO.
2. Effectuer l’initialisation avec CONSULT.
   Pour la procédure d’initialisation, se reporter au ‘‘Manuel d’Utilisation CONSULT NATS V.2.0’’ (ESSENCE).

PROCEDURE DE DIAGNOSTIC 2

Résultats de l’autodiagnostic :
‘‘ECM’’ affiché sur l’écran CONSULT

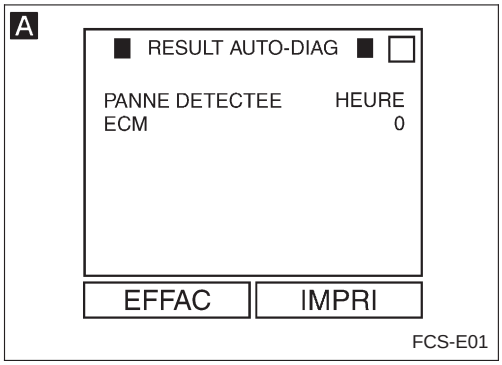

A

S’assurer que ‘‘ECM’’ de ‘‘RESULT AUTO-DIAG’’ est affiché sur l’écran CONSULT.

↓

- L’ECM est défectueux.

1. Remplacer l’ECM.
2. Effectuer l’initialisation avec CONSULT.
   Pour la procédure d’initialisation, se reporter au ‘‘Manuel d’Utilisation CONSULT NATS V.2.0’’ (ESSENCE).

Simpo PDF Merge and Split Unregistered Version - http://www.simpopdf.com

Diagnostics des défauts (Suite)

PROCEDURE DE DIAGNOSTIC 3

Résultats de l'autodiagnostic : ''LIGNE ECM/IMMO'' affiché sur l'écran CONSULT

A

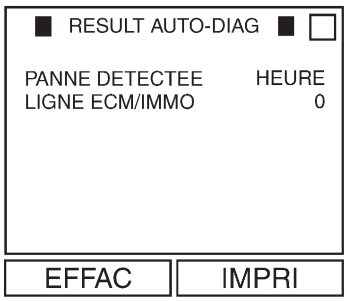

FCS-C01

B

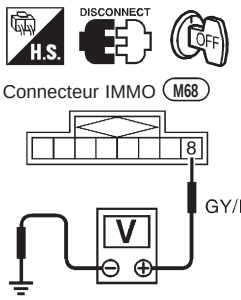

SEL395VC

C

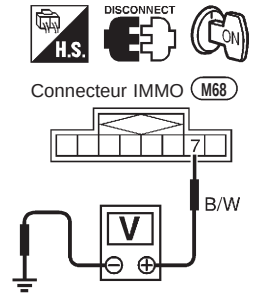

SEL396VC

D

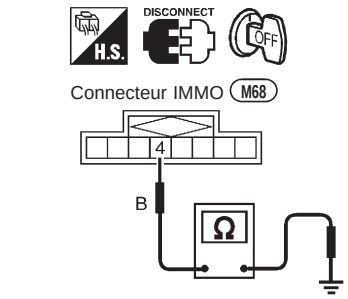

SEL397VC

E

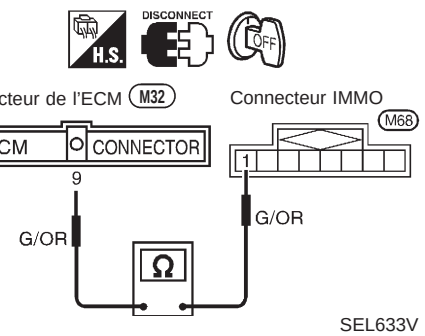

SEL633V

A

S'assurer que ''LIGNE ECM/IMMO'' de ''RESULT AUTO-DIAG'' est affiché sur l'écran CONSULT.

Bon ↓

B

VERIFIER LE CIRCUIT DE L'ALIMENTATION ELECTRIQUE DE L'IMMO.
Vérifier la tension entre la borne ⑧ de l'IMMO et la masse.
Il doit y avoir tension de la batterie.

Mauvais → Vérifier les points suivants.
- Fusible de 10A (n° 34, situé dans le raccord à fusible et dans le boîtier à fusibles)
- Faisceau ouvert ou court-circuit du faisceau entre le fusible et le connecteur de l'IMMO

Bon ↓

C

VERIFIER SI LE SIGNAL DU CONTACT D'ALLUMAGE EST ALLUME.
Vérifier la tension entre la borne ⑦ de l'IMMO et la masse pendant que le contact d'allumage est sur ''ON''.
Il doit y avoir tension de la batterie.

Mauvais → Vérifier les points suivants.
- Fusible de 10A (n° 23, situé dans le boîtier à fusibles)
- Faisceau ouvert ou court-circuit du faisceau entre le fusible et le connecteur de l'IMMO

Bon ↓

D

VERIFIER LE CIRCUIT DE MISE A LA MASSE DE L'IMMO.
Vérifier la continuité entre la borne ④ de l'IMMO et la masse.
Il doit y avoir continuité.

Mauvais → Réparer le faisceau.

Bon ↓

E

VERIFIER SI LA LIGNE DE COMMUNICATION EST EN CIRCUIT OUVERT.
Vérifier la continuité entre la borne ① de l'IMMO et la borne ⑨ de l'ECM.
Il doit y avoir continuité.

Mauvais → Réparer le faisceau.

Bon ↓

Ⓐ

Simpo PDF Merge and Split Unregistered Version - http://www.simpopdf.com

F

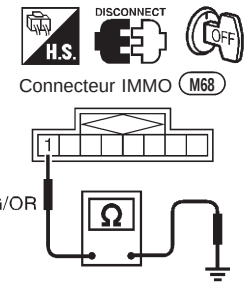

Court-circuit lors de la vérification de mise à la masse

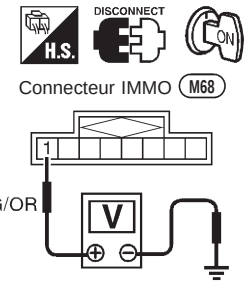

Court-circuit lors de la vérification du circuit électrique

SEL399VC

G

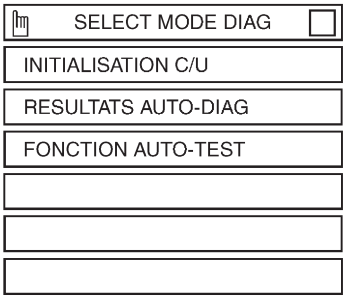

FCSDM03

H

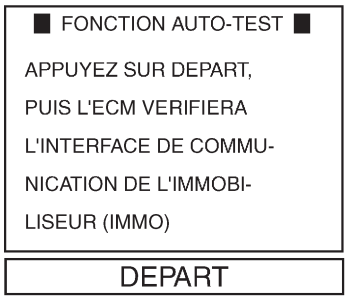

FCSFC01

I

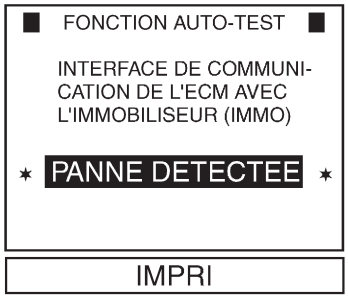

FCSFC02A

Ⓐ

F

VERIFIER SI LA LIGNE DE COMMUNICATION EST COURT-CIRCUITEE.

1. Débrancher le connecteur de l'ECM et le connecteur de l'IMMO.
2. Vérifier la continuité entre la borne ① de l'IMMO et la masse.
   Il ne doit pas y avoir continuité.
3. Mettre le contact d'allumage sur "ON".
4. Vérifier la tension entre la borne ① de l'IMMO et la masse.
   Il ne doit pas y avoir de tension.

Mauvais → Réparer le faisceau.

Bon

G

FONCTION AUTO-TEST

1. Brancher le connecteur de l'ECM et débrancher le connecteur de l'IMMO.
2. Mettre le contact d'allumage sur "ON".
3. Appuyer sur "FONCTION AUTO-TEST" sur l'écran "SELECT MODE DIAG" de CONSULT.

H

Appuyer sur "DEPART". L'ECM vérifie alors sa propre interface de communication.

Mauvais → I

- L'ECM est défectueux.

1. Remplacer l'ECM.
2. Effectuer l'initialisation avec CONSULT.
   Pour la procédure d'initialisation, se reporter au "Manuel d'Utilisation CONSULT NATS V.2.0" (ESSENCE).

Bon

J

- L'IMMO est défectueux.

1. Remplacer l'IMMO.
2. Effectuer l'initialisation avec CONSULT.
   Pour la procédure d'initialisation, se reporter au "Manuel d'Utilisation CONSULT NATS V.2.0".

Simpo PDF Merge and Split Unregistered Version - http://www.simpopdf.com

J

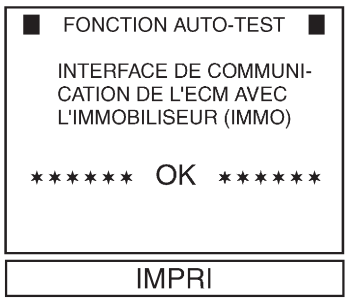

FCSFC02

A

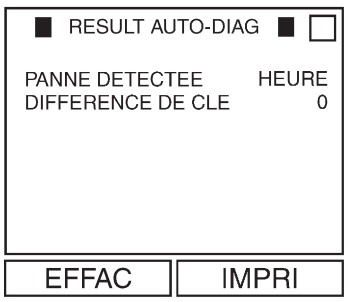

FCS-D01

B



FCCUI01

PROCEDURE DE DIAGNOSTIC 4

Résultats de l’autodiagnostic :
‘‘DIFFERENCE DE CLE’’ affiché sur l’écran CONSULT

A

S’assurer que ‘‘DIFFERENCE DE CLE’’ de ‘‘RESULT AUTO-DIAG’’ est affiché sur l’écran CONSULT.

Bon

EFFECTUER L’INITIALISATION.
Effectuer l’initialisation avec CONSULT.
Réenregistrer tous les numéros d’identification de clé de contact NATS.
Pour la procédure d’initialisation, se reporter au ‘‘Manuel d’Utilisation CONSULT NATS V.2.0’’.
Le système peut-il être initialisé ?
Note :Si l’initialisation est abandonnée ou avortée, l’écran CONSULT affichera le message B .

Non →

- L’IMMO est défectueux.

1. Remplacer l’IMMO.
2. Effectuer l’initialisation avec CONSULT. Pour la procédure d’initialisation, se reporter au ‘‘Manuel d’Utilisation CONSULT NATS V.2.0’’ (ESSENCE).

Oui

FIN.
(La clé de contact n’a pas été enregistrée).

Simpo PDF Merge and Split Unregistered Version - http://www.simpopdf.com

Diagnostics des défauts (Suite)

PROCEDURE DE DIAGNOSTIC 5

Résultats de l'autodiagnostic : ''LIGNE IMMO/CLE'' affiché sur l'écran CONSULT

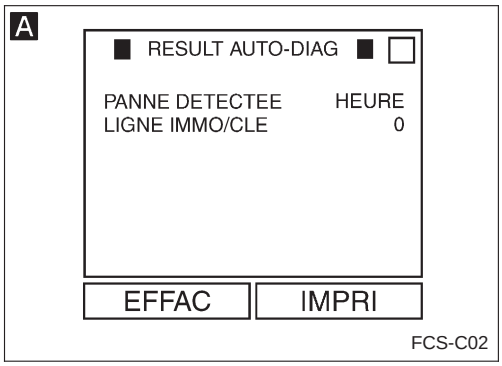

A

Vérifier les ''RESULT AUTO-DIAG'' de ''LIGNE IMMO/CLE'' affichés sur l'écran CONSULT.

↓ Bon

VERIFICATION DE LA PUCE D'IDENTIFICATION DE CLE DE CONTACT NATS.
Le moteur peut-il être démarré avec une autre clé de contact NATS enregistrée ?

Oui → ● Mauvais fonctionnement de la puce d'identification de la clé.
1. Remplacer la clé de contact.
2. Effectuer l'initialisation avec CONSULT.
Pour la procédure d'initialisation, se reporter au ''Manuel d'Utilisation CONSULT NATS V.2.0'' (ESSENCE).

Non ↓

● L'IMMO est défectueux.
1. Remplacer l'IMMO.
2. Effectuer l'initialisation avec CONSULT.
Pour la procédure d'initialisation, se reporter au ''Manuel d'Utilisation CONSULT NATS V.2.0''.

PROCEDURE DE DIAGNOSTIC 6

Résultats de l'autodiagnostic : ''CONTRAD ID IMM/ECM'' s'affiche sur l'écran CONSULT

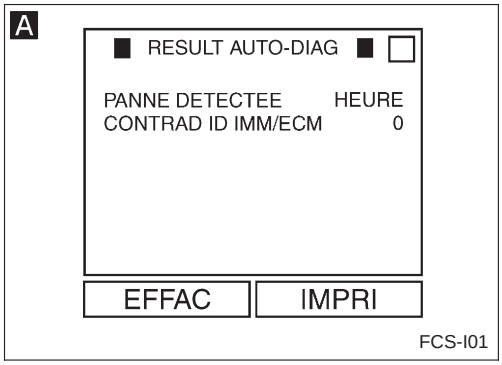

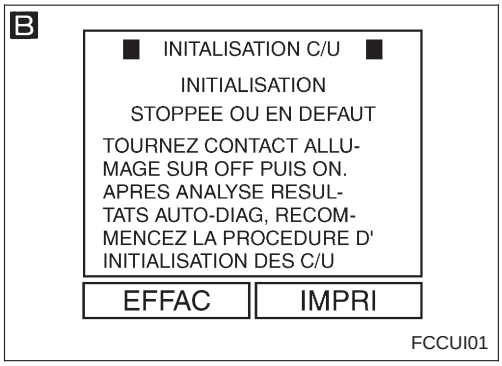

A

S'assurer que ''CONTRAD ID IMM/ECM*'' de ''RESULT AUTO-DIAG'' est affiché sur l'écran CONSULT.

* ''CONTRAD ID IMM/ECM'' : Le code d'identification enregistré de l'IMMO est en contradiction avec celui de l'ECM.

↓

EFFECTUER L'INITIALISATION.
Effectuer l'initialisation avec CONSULT.
Réenregistrer tous les numéros d'identification de clé de contact NATS.
Pour la procédure d'initialisation, se reporter au ''Manuel d'Utilisation CONSULT NATS V.2.0''.
Le système peut-il être initialisé ?
Note : Si l'initialisation est abandonnée ou avortée, l'écran CONSULT affichera le message B .

Non → ● L'ECM est défectueux.
1. Remplacer l'ECM.
2. Effectuer l'initialisation avec CONSULT.
Pour la procédure d'initialisation, se reporter au ''Manuel d'Utilisation CONSULT NATS V.2.0'' (ESSENCE).

Oui ↓

FIN.
(L'initialisation du système n'a pas été terminée).

Simpo PDF Merge and Split Unregistered Version - http://www.simpopdf.com

Diagnostics des défauts (Suite)

PROCEDURE DE DIAGNOSTIC 7

Résultats de l’autodiagnostic :
‘‘INTERFERENCES’’ affiché sur l’écran CONSULT

A

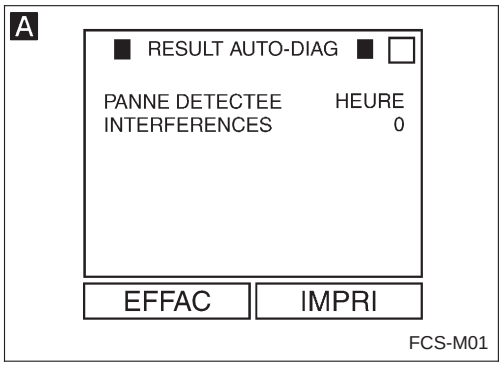

B

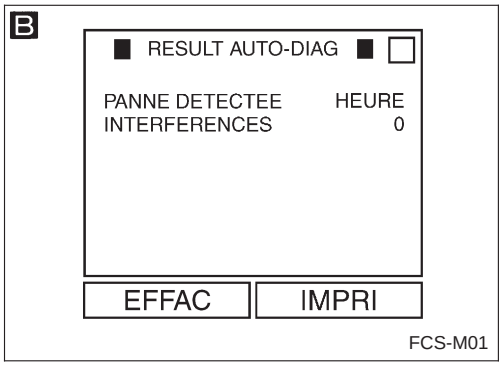

A

S’assurer que ‘‘INTERFERENCES’’ de ‘‘RESULT AUTO-DIAG’’ est affiché sur l’écran CONSULT.

Mettre hors tension ou éliminer toutes les sources de bruits possibles.

B

Appuyer sur ‘‘EFFAC’’ sur l’écran ‘‘RESULT AUTO-DIAG’’.

Le moteur peut-il être démarré ?

Non

Oui

FIN

Simpo PDF Merge and Split Unregistered Version - http://www.simpopdf.com

Diagnostics des défauts (Suite)

PROCEDURE DE DIAGNOSTIC 8

Résultats de l'autodiagnostic : ''MODE BLOCAGE'' affiché sur l'écran CONSULT

A

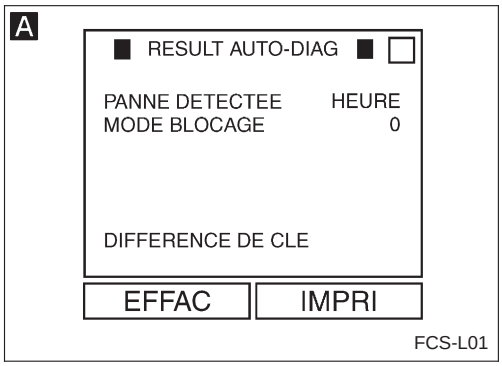

B

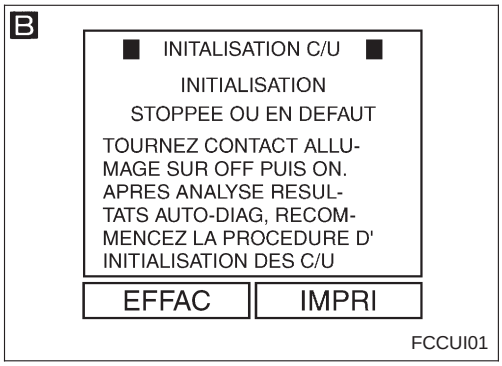

A

S'assurer que ''MODE BLOCAGE'' de ''RESULT AUTO-DIAG'' est affiché sur l'écran CONSULT.

↓

1. Couper le contact.
2. Mettre le contact d'allumage à l'aide d'une clé enregistrée.
   (Ne pas démarrer le moteur). Attendre 5 secondes.
3. Couper le contact d'allumage.
4. Répéter à deux reprises les étapes 2 et 3 (trois cycles au total).
5. Démarrer le moteur.

Le moteur peut-il être démarré ?

Oui → Le système fonctionne correctement.
(Le système n'est plus en ''MODE BLOCAGE'').

↓ Non

VERIFIER L'INSTALLATION DE L'IMMO NATS.
Se reporter à ''Comment remplacer l'IMMO NATS'' à la page EL-199.

Mauvais → Reposer correctement l'IMMO NATS.

↓ Bon

EFFECTUER L'INITIALISATION.
Effectuer l'initialisation avec CONSULT.
Pour la procédure d'initialisation, se reporter au ''Manuel d'Utilisation CONSULT NATS V.2.0'' (ESSENCE).
Le système peut-il être initialisé ?
Note : Si l'initialisation est abandonnée ou avortée, l'écran CONSULT affichera le message B .

Oui → Le système fonctionne correctement.

↓ Non

Passer à la PROCEDURE DE DIAGNOSTIC 5, EL-196 pour vérifier la ''LIGNE IMMO/CLE''.

Simpo PDF Merge and Split Unregistered Version - http://www.simpopdf.com

Diagnostics des défauts (Suite)

PROCEDURE DE DIAGNOSTIC 9

Vérification du témoin de sécurité

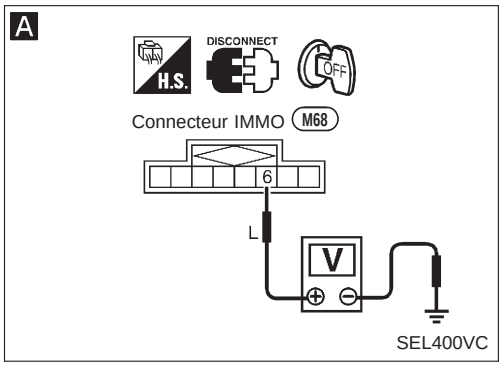

A

VERIFIER LE CIRCUIT DU TEMOIN.

1. Débrancher le connecteur de l'IMMO NATS.
2. Vérifier la tension entre la borne ⑥ de l'IMMO NATS et la masse.
   Il doit y avoir tension de la batterie.

Mauvais →

Vérifier les points suivants.

- Fusible de 7,5A (n° 6, situé dans le boîtier à fusibles)
- Témoin de sécurité
- Faisceau ouvert ou court-circuit du faisceau entre le fusible et le témoin de sécurité
- Faisceau ouvert ou court-circuit du faisceau entre l'IMMO NATS et le témoin de sécurité

Bon ↓

EFFECTUER L'INITIALISATION.
Effectuer l'initialisation avec CONSULT. Pour la procédure d'initialisation, se reporter au ''Manuel d'Utilisation CONSULT NATS V.2.0'' (ESSENCE).

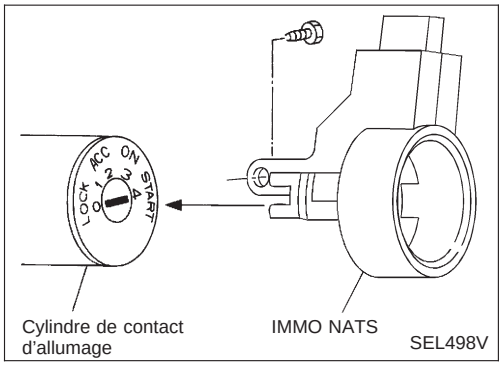

Comment remplacer l'IMMO NATS

REMARQUE :

- **Si l'IMMO NATS n'est pas correctement reposé, le système NATS ne fonctionnera pas normalement et les RESULTATS DE L'AUTODIAGNOSTIC affichés sur l'écran CONSULT indiqueront ''MODE BLOCAGE'' ou ''LIGNE IMMO/CLE''.**

Simpo PDF Merge and Split Unregistered Version - http://www.simpopdf.com

Emplacement des composants et des connecteurs de faisceau

Conduite à gauche

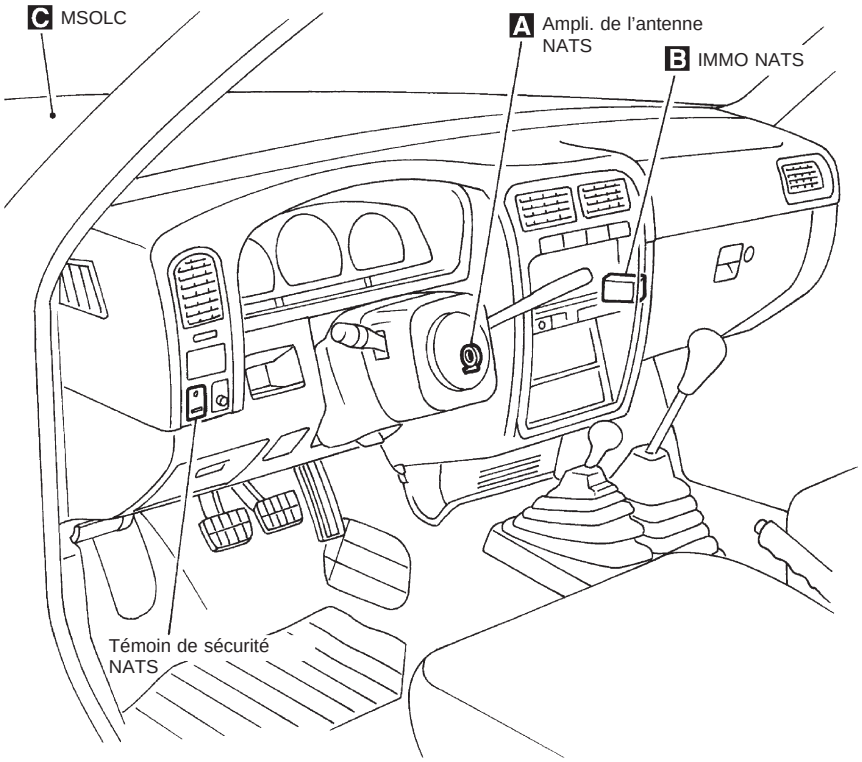

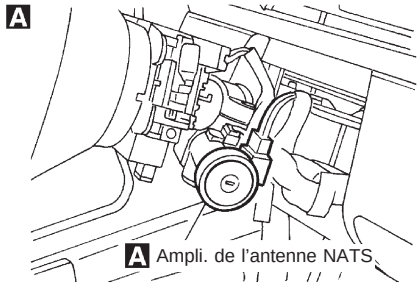

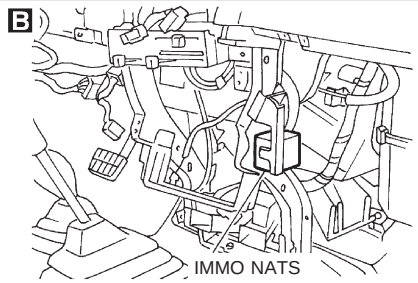

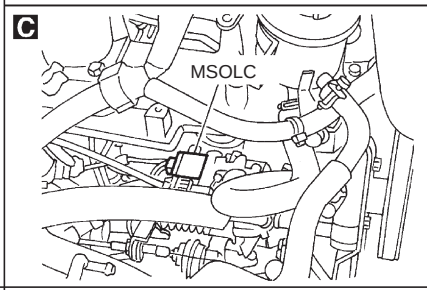

Conduite à droite

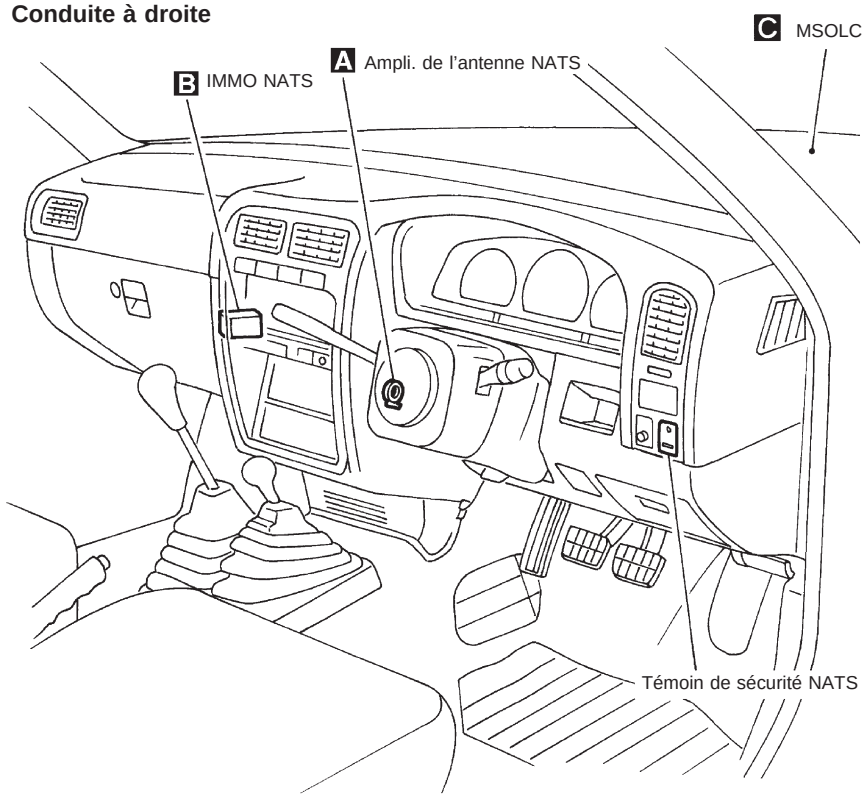

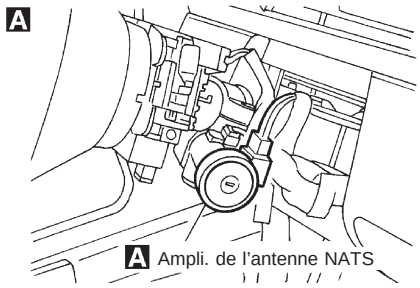

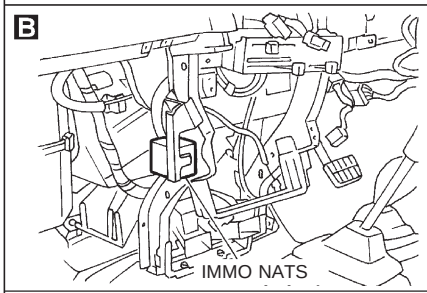

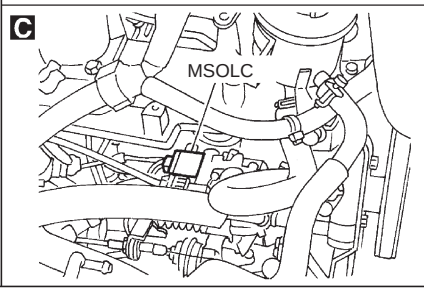

SEL650V

Simpo PDF Merge and Split Unregistered Version - http://www.simpopdf.com

Description du système

Le système NATS présente les fonctions d'immobilisation suivantes :

- Seules les clés de contact NATS, dont les numéros d'identification ont été enregistrés dans le boîtier de contrôle d'immobilisateur du NATS (IMMO NATS) permettent au moteur de marcher. Le NATS empêche donc l'utilisation d'un véhicule volé sans clé de contact enregistrée NATS.
- Les deux numéros d'identification des clés délivrées initialement ont été enregistrés dans le système NATS.
  A la demande du propriétaire du véhicule, un maximum de quatre numéros d'identification de clés peuvent être enregistrés dans les composants du système NATS.
- Le témoin de sécurité NATS clignote lorsque le contact d'allumage est sur ''OFF'' ou ''Acc''. De cette façon, toute personne étrangère est avertie que le système est équipé d'un système antivol.
- Lorsque le NATS détecte un problème, le témoin de sécurité du NATS s'allume alors que le moteur tourne ou que le contact d'allumage est sur la position ''ON''.
- Lors de l'entretien de NATS (diagnostics des défauts, initialisation du système NATS, l'enregistrement de numéros d'identification de clé NATS supplémentaires), le matériel CONSULT et le logiciel CONSULT sont nécessaires.
- Il existe deux types d'initialisation du NATS, l'une est ''INITIALISATION DU SYSTEME'' et l'autre est ''INITIALISATION DE L'IMMO''.
  Une fois l'initialisation du système NATS terminée, le numéro d'identication de la clé de contact introduite est automatiquement enregistré dans le système NATS. Puis, si nécessaire, l'enregistrement de numéros d'identification de clé NATS supplémentaires peut être effectué.
  Pour les procédures d'initialisation du NATS et l'enregistrement d'un numéro d'identification de clé de contact NATS, se reporter au Manuel d'Utilisation CONSULT, NATS V.2.0 (Diesel).
- **Lors de la réparation d'une panne du système NATS (indiquée par le clignotement du témoin de défaut MIL) ou lors de l'enregistrement d'un autre numéro d'identification de clé de contact NATS, il peut s'avérer nécessaire de réenregistrer le numéro d'identification de la clé originale. Il faut par conséquent s'assurer que le propriétaire du véhicule a remis toutes ses clés.**

Composition du système

La fonction d'immobilisation du NATS comprend :

- Une clé de contact NATS
- Un ampli. d'antenne NATS situé dans le canon de clé de contact
- Un boîtier de commande de l'immobilisateur NATS (IMMO NATS)
- Module de solénoïde codé situé dans l'ensemble de pompe à injection (MSOLC)
- Un témoin de sécurité NATS

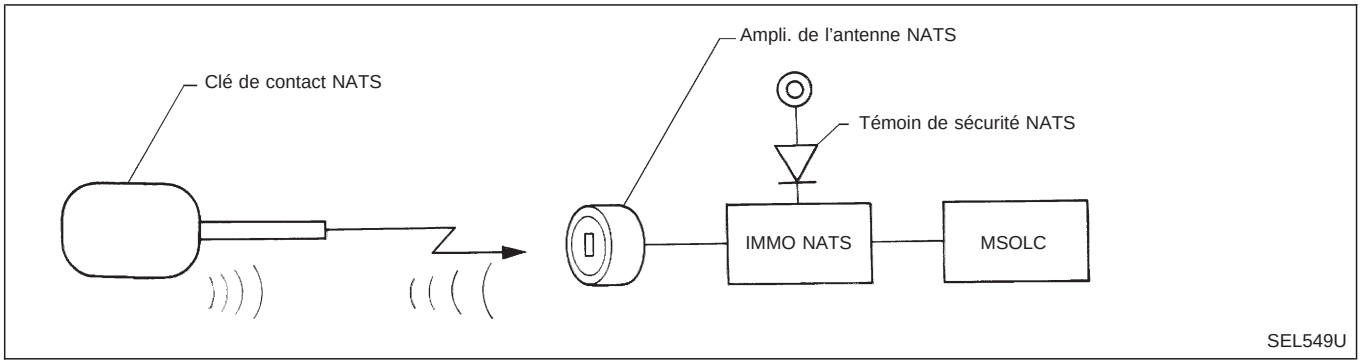

Simpo PDF Merge and Split Unregistered Version - http://www.simpopdf.com

Schéma de câblage – NATS –/Conduite à gauche

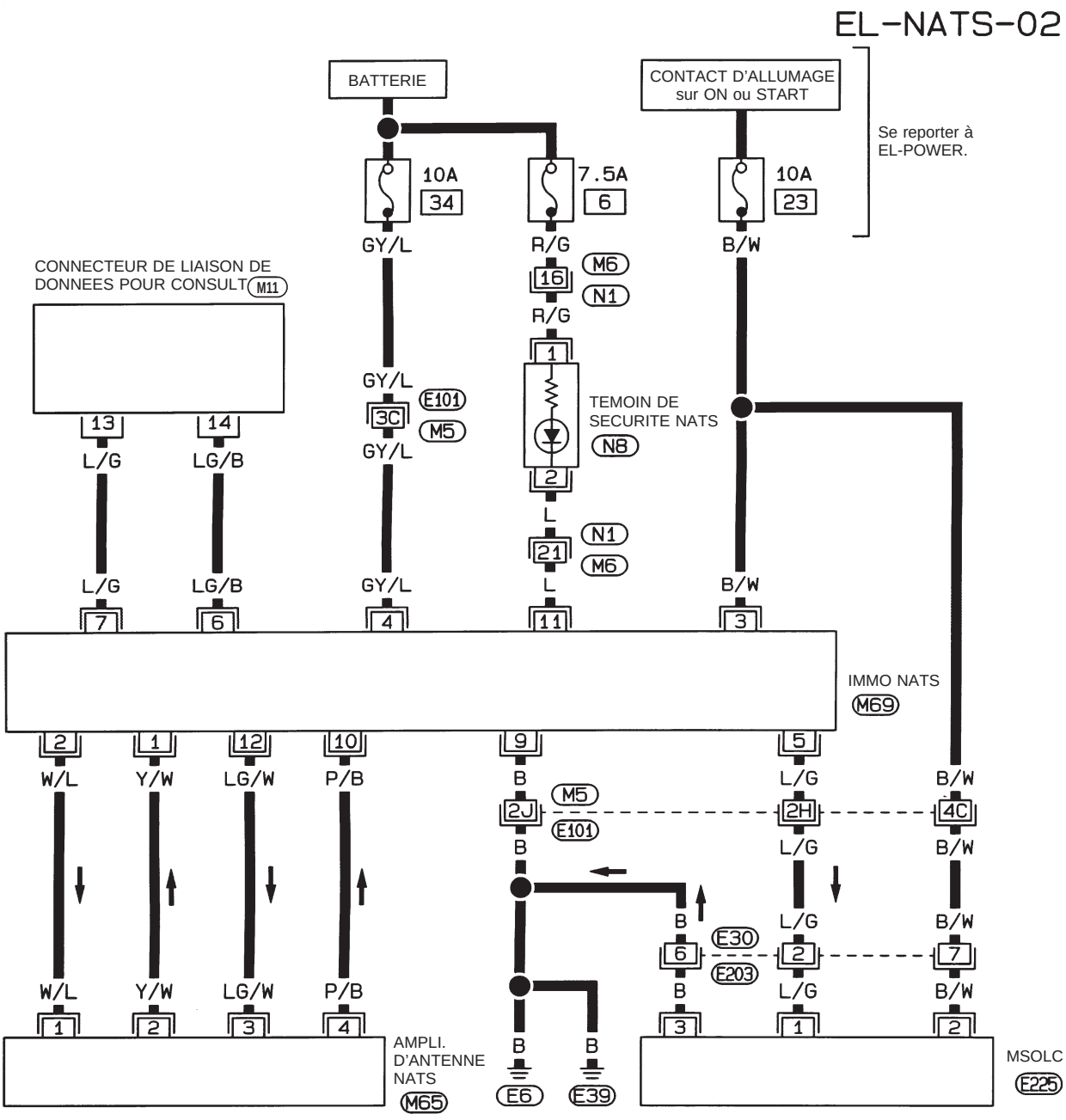

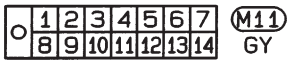



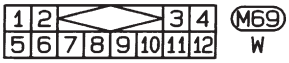





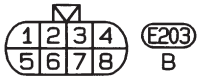

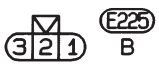

Se reporter à la dernière page dépliante.

M5, E101

HEL389A

Simpo PDF Merge and Split Unregistered Version - http://www.simpopdf.com

Schéma de câblage – NATS –/Conduite à droite

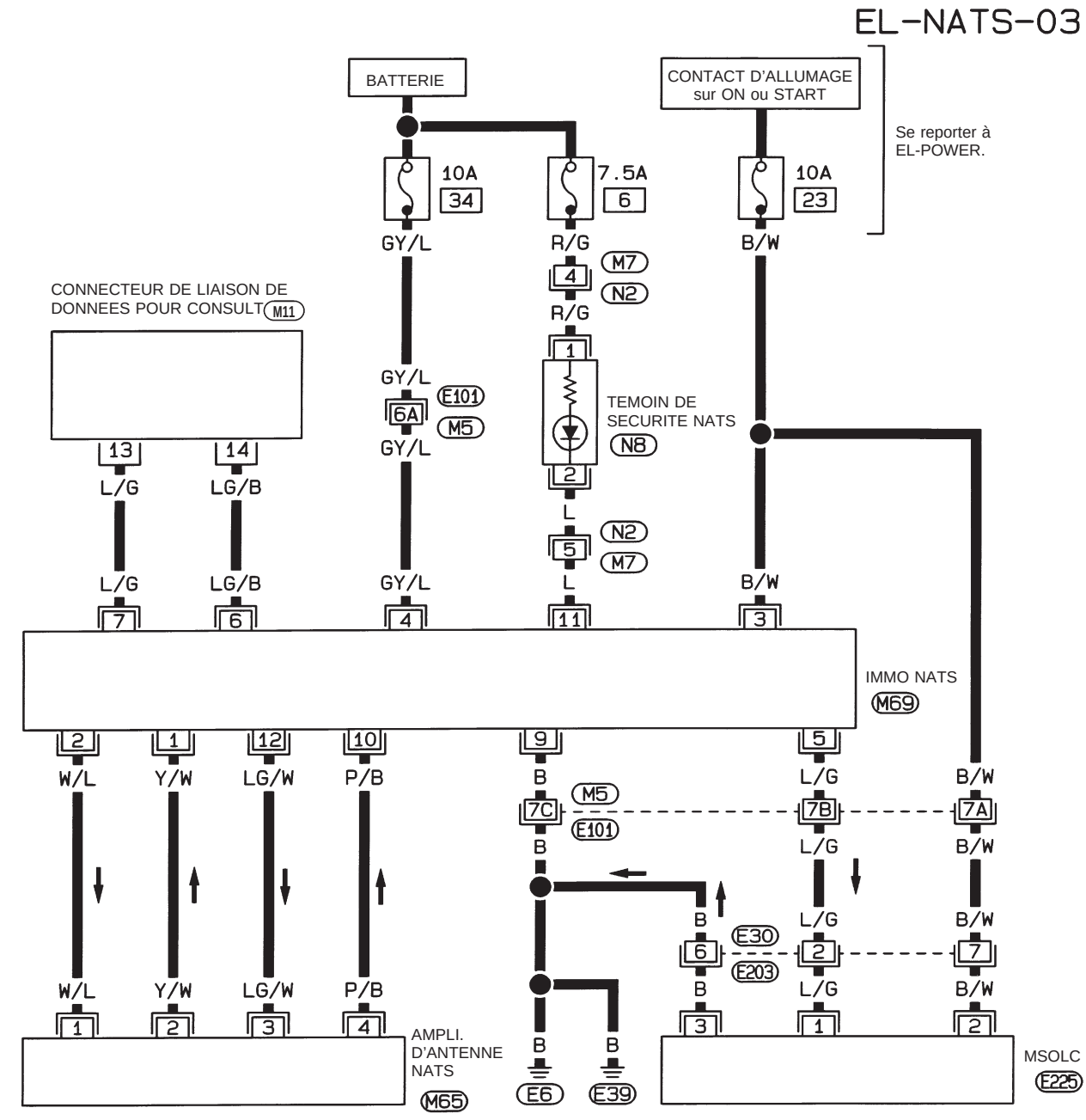

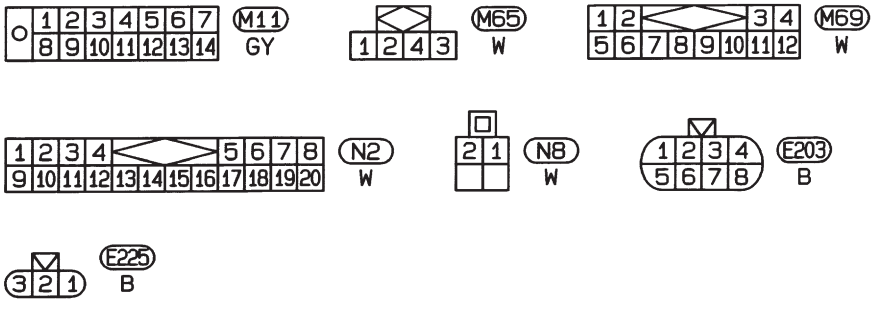

Se reporter à la dernière page dépliante.

M5, E101

HEL390A

Simpo PDF Merge and Split Unregistered Version - http://www.simpopdf.com

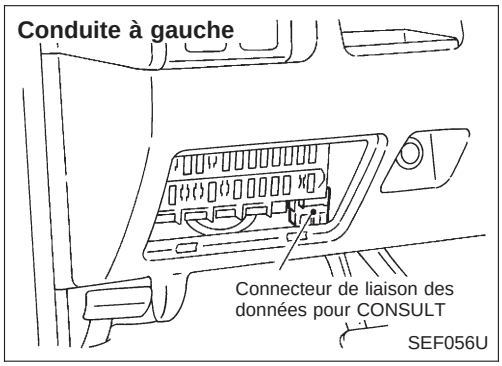

CONSULT

PROCEDURE D'INSPECTION CONSULT

1. Mettre le contact d'allumage sur ''OFF''.
2. Brancher le CONSULT sur le connecteur de liaison des données de diagnostic pour CONSULT.

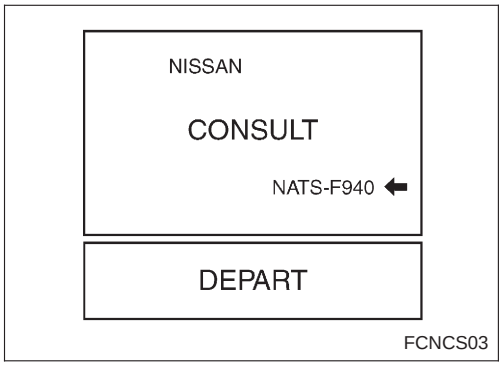

3. Insérer la carte-programme NATS dans le CONSULT.

◀ : Carte programme NATS-F940

4. Mettre le contact d'allumage sur ''ON''.
5. Appuyer sur ''DEPART''.

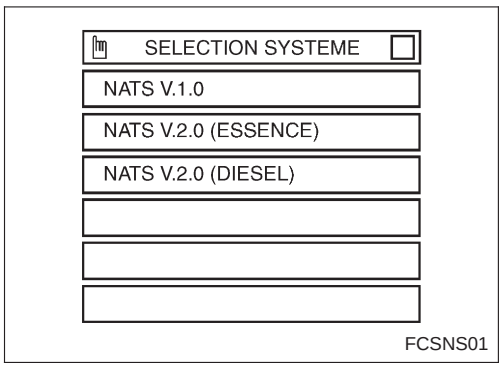

6. Appuyer sur ''NATS V.2.0 (DIESEL).

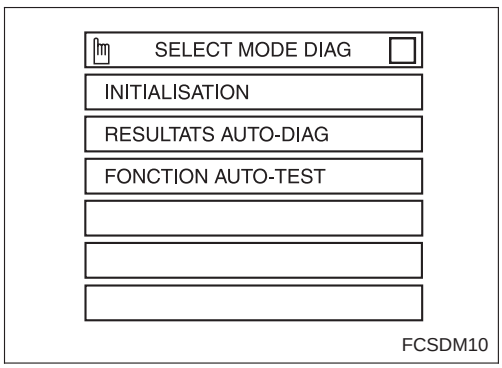

7. Effectuer chaque mode d'essai de diagnostic conformément à chaque procédure d'entretien.

Pour de plus amples informations, se reporter au Manuel d'Utilisation CONSULT, NATS V.2.0 (diesel).

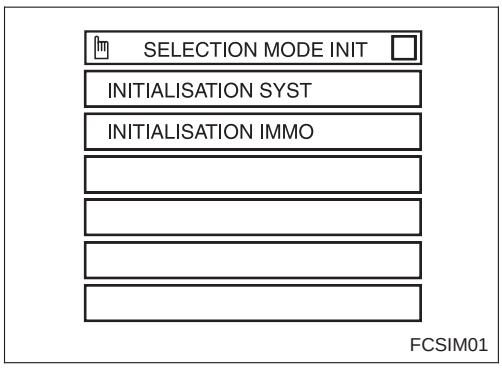

REMARQUE :
Deux types d'initialisations (initialisation du système et initialisation de l'IMMO) sont disponibles. Pour plus de détails, se reporter à ''INITIALISATION'' à la page suivante.

Simpo PDF Merge and Split Unregistered Version - http://www.simpopdf.com

CONSULT (Suite)

FONCTION DU MODE D'ESSAI DE DIAGNOSTIC DE CONSULT

Mode d'essai de diagnostic CONSULT	Description
INITIALISATION C/U	Deux types d'initialisations sont disponibles. Pour plus de détails, se reporter à ''INITIALISATION'' indiqué dessous.
FONCTION AUTO-TEST	L'IMMO contrôle lui-même sa propre interface de communication NATS.
RESULTATS DE L'AUTODIAGNOSTIC	Les résultats de l'autodiagnostic peuvent être lus puis effacés rapidement.

INITIALISATION

Type d'initialisation	Description
INITIALISATION DU SYSTEME	Tous les numéros d'identification de clés de contact enregistrées de l'IMMO et de MSOLC peuvent être enregistrés. **Cela prend environ 16 minutes.** Lorsque le composant suivant est remplacé, l'initilalisation est nécessaire. ● IMMO ● MSOLC
INITIALISATION DE L'IMMO	Tous les numéros d'identification de clés de contact enregistrées de l'IMMO peuvent être initialisés et de nouveaux numéros d'identification enregistrés. Lorsque le composant suivant est remplacé ou la nouvelle clé d'allumage NATS est enregistrée, l'initilalisation est nécessaire. ● Une clé de contact NATS

REMARQUE :
Lorsqu'aucune des initialisations n'a été effectuée, tous les codes d'identification entrés précédemment s'effaceront. Toutes les clés de contact NATS doivent donc être enregistrées de nouveau.
Si une clé non enregistrée est utilisée pour démarrer le moteur, le système peut afficher ''ID CLE [DIFFERENCE]'' sur l'écran CONSULT comme résultat de l'autodiagnostic.

Simpo PDF Merge and Split Unregistered Version - http://www.simpopdf.com

CONSULT (Suite)

COMMENT LIRE LES RESULTATS D'AUTODIAGNOSTIC

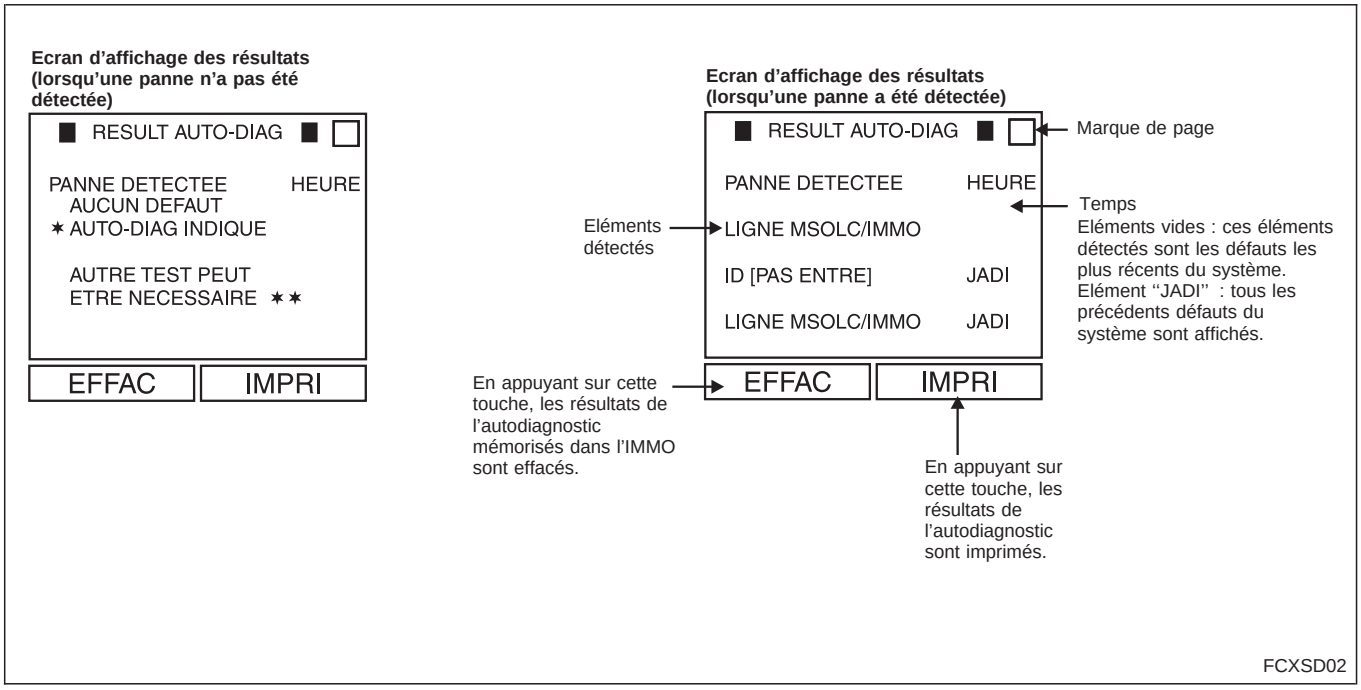

TABLEAU DES RESULTATS D'AUTODIAGNOSTIC

Eléments détectés (termes affichés sur l'écran)	Description	Page de référence
IMMO	L'IMMO est défectueux.	EL-209
MSOLC	L'IMMO a reçu du MSOLC le signal d'anomalie de fonctionnement du MSOLC.	EL-209
LIGNE MSOLC/IMMO	Communication impossible entre le MSOLC et l'IMMO.	EL-210
ID CLE [DIFFERENCE]	L'IMMO peut recevoir le signal d'identification de la clé mais le résultat de la vérification entre le code d'identification de la clé et l'IMMO est mauvais.	EL-212
ID CLE [PAS ENTRE]	L'IMMO ne reçoit pas le signal d'identification de la clé. Dans la cas de nombreuses pannes, seul cet élément peut être affiché avant les autres éléments défectueux.	EL-213
CONTRAD ID IMM/MSC	Le résultat de la vérification de l'identification entre l'IMMO et le MSOLC est mauvais. Le système doit être initialisé.	EL-215

REMARQUE :
Quand CONSULT affiche ''IMPOSSIBLE CONTINUER'' sur son écran, cela signifie que CONSULT ne parvient pas à accéder au NATS. Dans ce cas, effectuer la procédure de diagnostic 7, EL-216.

Simpo PDF Merge and Split Unregistered Version - http://www.simpopdf.com

Diagnostics des défauts

ORGANIGRAMME

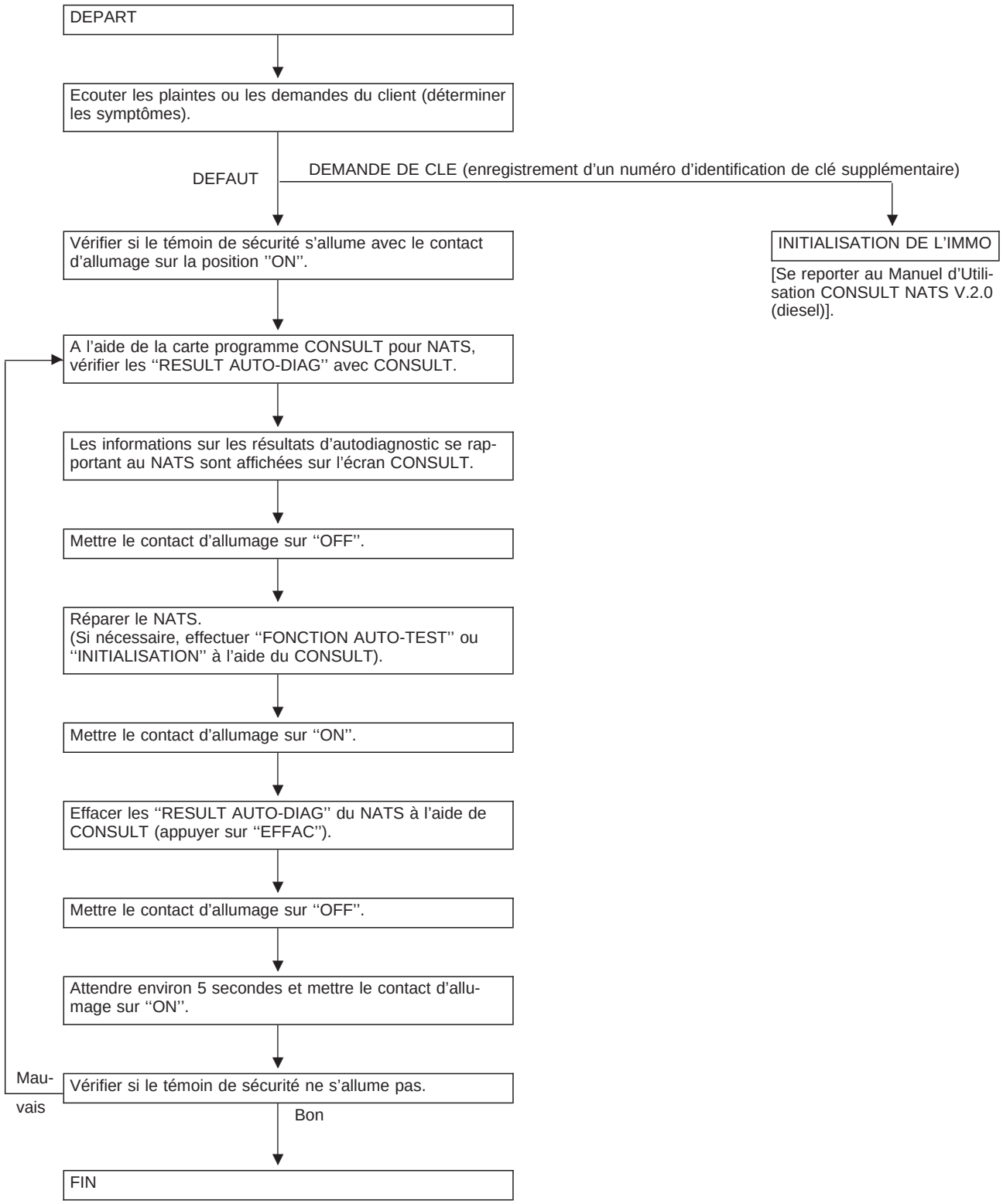

Simpo PDF Merge and Split Unregistered Version - http://www.simpopdf.com

Diagnostics des défauts (Suite)

TABLEAU DES SYMPTOMES

Symptôme	''RESULT AUTO-DIAG'' affichés sur l'écran CONSULT	Procédure de diagnostic (Page de référence)	Système (pièce ou mode défectueux)
● Pas d'éclairage/éclairage du témoin de sécurité avec le contact d'allumage sur la position ''ON'' ● Difficultés pour démarrer le moteur	IMMO	PROCEDURE 1 (EL-209)	IMMO
● Eclairage du témoin de sécurité avec le contact d'allumage sur la position ''ON'' ● Difficultés pour démarrer le moteur	MSOLC	PROCEDURE 2 (EL-209)	MSOLC
	LIGNE MSOLC/ IMMO	PROCEDURE 3 (EL-210)	Circuit ouvert dans la ligne d'allumage du MSOLC
			Circuit ouvert dans la ligne de masse du MSOLC
			Circuit ouvert ou court-circuit dans les lignes de communication entre IMMO et MSOLC
			IMMO
			MSOLC
	ID CLE [PAS ENTRE]	PROCEDURE 5 (EL-213)	Circuit ouvert ou court-circuit dans les lignes de communication ANT/AMP et IMMO
			Circuit ouvert dans la ligne d'alimentation du circuit d'ANT/AMP
			Circuit ouvert dans la ligne de masse du circuit d'ANT/AMP
			Anomalie de fonctionnement de la puce d'identification de clé
			IMMO
			Amp. d'antenne
	CONTRAD ID IMM/MSC	PROCEDURE 6 (EL-215)	L'initialisation du système n'est pas encore terminée.
			MSOLC
			IMMO
● Difficultés pour démarrer le moteur ● Eclairage du témoin de sécurité avec le contact d'allumage sur la position ''ON'' (voir Note)	ID CLE [DIFFERENCE]	PROCEDURE 4 (EL-212)	Clé non enregistrée
● Difficultés pour démarrer le moteur ● Pas d'éclairage du témoin de sécurité. ● Impossible de continuer avec les diagnostics du CONSULT	Après avoir appuyé sur ''DEPART'', l'écran CONSULT affiche ''IMPOSSIBLE CONTINUER''.	PROCEDURE 7 (EL-216)	Circuit ouvert ou court-circuit dans les lignes de communication entre IMMO et le connecteur de liaison de données de CONSULT
			Circuit ouvert ou court-circuit dans le circuit de la source d'alimentation de l'ampli. d'antenne entre l'IMMO et l'ampli. d'antenne
			Circuit ouvert dans la ligne de source d'alimentation du circuit de l'IMMO
			Circuit ouvert dans la ligne d'allumage du circuit de l'IMMO
			Circuit ouvert dans la ligne de masse du circuit de l'IMMO
			IMMO
● Le témoin de sécurité NATS ne clignote pas lorsque le contact d'allumage est sur ''OFF'' ou ''ACC''. ● Le moteur démarre correctement.	–	PROCEDURE 8 (EL-218)	Témoin de sécurité NATS
			Circuit ouvert entre le fusible et l'IMMO NATS
			Continuation du mode d'initialisation

REMARQUE : Le témoin de sécurité s'éteint pendant 1 minute après que le contact d'allumage est sur la position ''OFF''.

Simpo PDF Merge and Split Unregistered Version - http://www.simpopdf.com

Diagnostics des défauts (Suite)

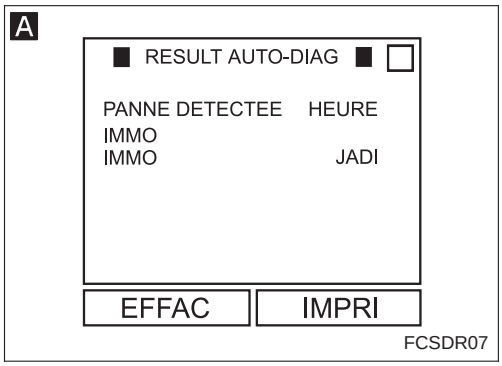

PROCEDURE DE DIAGNOSTIC 1

Résultats de l’autodiagnostic :

‘‘IMMO’’ affiché sur l’écran CONSULT

A

S’assurer que ‘‘IMMO’’ de ‘‘RESULT AUTO-DIAG’’ est affiché sur l’écran CONSULT.

↓

- L’IMMO est défectueux.

1. Remplacer l’IMMO.
2. Effectuer l’initialisation du système à l’aide du CONSULT.
   Pour la procédure d’initialisation, se reporter au ‘‘manuel d’utilisation NATS V2.0 (Diesel)’’.

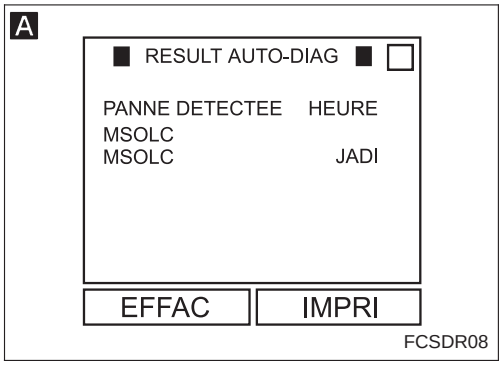

PROCEDURE DE DIAGNOSTIC 2

Résultats de l’autodiagnostic :

‘‘MSOLC’’ affiché sur l’écran CONSULT

A

S’assurer que ‘‘MSOLC’’ de ‘‘RESULT AUTO-DIAG’’ est affiché sur l’écran CONSULT.

↓

- Le MSOLC est défectueux.

1. Remplacer le MSOLC (voir NOTE).
2. Effectuer l’initialisation du système à l’aide du CONSULT.
   Pour la procédure d’initialisation, se reporter au ‘‘manuel d’utilisation NATS V2.0 (Diesel)’’.

REMARQUE :
Lors du remplacement MSOLC, ce dernier ne peut pas être déposé de l’ensemble de pompe d’injection en raison de sa construction antivol. L’ensemble de pompe d’injection devrait être entièrement déposé avec MSOLC, et avec une unité de rechange d’entretien de liaison.

Simpo PDF Merge and Split Unregistered Version - http://www.simpopdf.com

Diagnostics des défauts (Suite)

PROCEDURE DE DIAGNOSTIC 3

Résultats de l’autodiagnostic :

‘‘LIGNE MSOLC/IMMO’’ affiché sur l’écran CONSULT

A

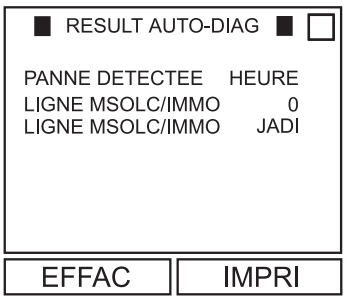

FCSDR09

B

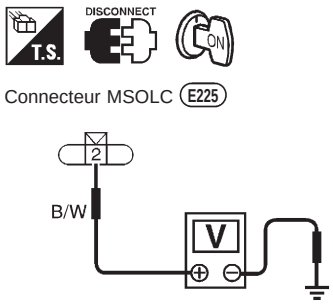

SEL467VA

C

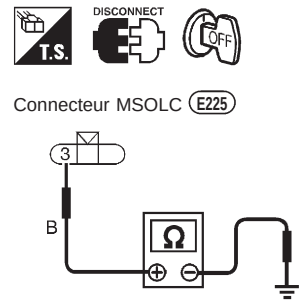

SEL468VA

D

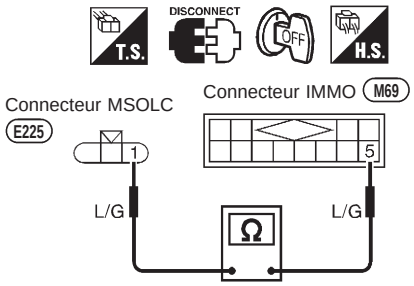

SEL469VA

A

S’assurer que ‘‘LIGNE MSOLC/IMMO’’ de ‘‘RESULT AUTO-DIAG’’ est affiché sur l’écran CONSULT.

Bon ↓

B

VERIFICATION DU CIRCUIT DE L’ALIMENTATION ELECTRIQUE DU MSOLC.
Vérifier la tension entre la borne (2) du MSOLC et la masse.
Il doit y avoir tension de la batterie.

Mauvais → Vérifier les points suivants.
- Fusible de 10A (n° 23 situé dans le boîtier à fusibles)
- Faisceau ouvert ou court-circuité entre le fusible et le connecteur MSOLC.

Bon ↓

C

VERIFIER LE CIRCUIT DE MASSE DU MSOLC
Vérifier la continuité du faisceau entre la borne (3) du MSOLC et la masse.
Il doit y avoir continuité.

Mauvais → Réparer le faisceau.

Bon ↓

D

VERIFIER SI LA LIGNE DE COMMUNICATION EST EN CIRCUIT OUVERT.
1. Débrancher le connecteur du MSOLC et celui de l’IMMO.
2. Vérifier la continuité du faisceau entre la borne (1) du MSOLC et la borne (5) de l’IMMO.
   Il doit y avoir continuité.

Mauvais → Réparer le faisceau.

Bon ↓

(A)

Simpo PDF Merge and Split Unregistered Version - http://www.simpopdf.com

Diagnostics des défauts (Suite)

E

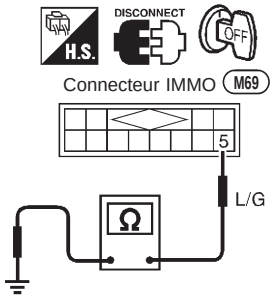

Court-circuit lors de la vérification de mise à la masse

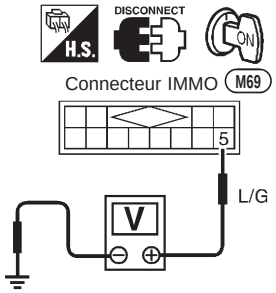

Court-circuit lors de la vérification du circuit électrique SEL455VA

F

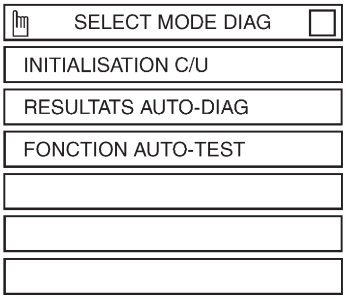

FCSDM03

G

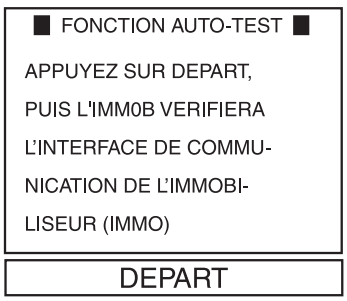

FCSFC03

H

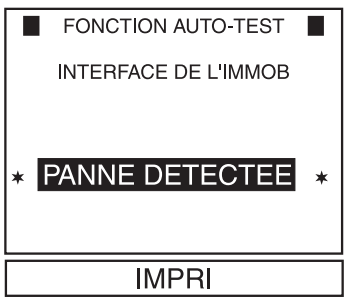

FCSFC04

Ⓐ

E

VERIFIER SI LA LIGNE DE COMMUNICATION EST COURT-CIRCUITEE.

1. Débrancher le connecteur du MSOLC et celui de l'IMMO.
2. Vérifier la continuité entre la borne ⑤ de l'IMMO et la masse.
   Il ne doit pas y avoir continuité.
3. Mettre le contact d'allumage sur "ON".
4. Vérifier la tension entre la borne ⑤ de l'IMMO et la masse.
   Il ne doit pas y avoir de tension.

Mauvais → Réparer le faisceau.

Bon

F

FONCTION AUTO-TEST

1. Brancher le connecteur de l'IMMO et débrancher le connecteur du MSOLC.
2. Mettre le contact d'allumage sur "ON".
3. Appuyer sur "FONCTION AUTO-TEST" sur l'écran "SELECT MODE DIAG" de CONSULT.

G

Appuyer sur "DEPART". L'IMMO contrôlera alors lui-même sa propre interface de communication.

Mauvais → **H**

- L'IMMO est défectueux.

1. Remplacer l'IMMO.
2. Effectuer l'initialisation du système à l'aide du CONSULT.
   Pour la procédure d'initialisation, se reporter au "manuel d'utilisation NATS V2,0 (Diesel)".

Bon

I

- Le MSOLC est défectueux.

1. Remplacer le MSOLC.
2. Effectuer l'initialisation du système à l'aide du CONSULT. Pour la procédure d'initialisation, se reporter au "manuel d'utilisation NATS V2,0 (Diesel)".

Simpo PDF Merge and Split Unregistered Version - http://www.simpopdf.com

I

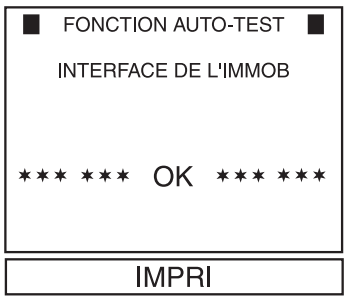

FCSFC04A

A

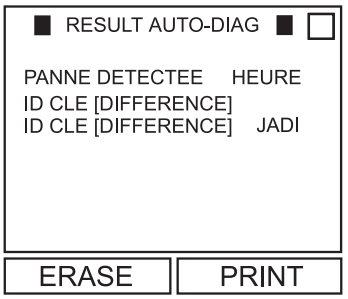

FCSDR10

B



FCIII01

PROCEDURE DE DIAGNOSTIC 4

Résultats de l'autodiagnostic :

''ID CLE [DIFFERENCE]'' affiché sur l'écran CONSULT

A

S'assurer que ''ID CLE [DIFFERENCE] de ''RESULT AUTO-DIAG'' est affiché sur l'écran CONSULT.

↓

1. Couper le contact d'allumage et attendre 1 minute.
   (Le témoin de sécurité commencera à clignoter au bout de 1 minute).
2. Mettre le contact d'allumage à l'aide d'une clé enregistrée.
   (Ne pas démarrer le moteur). Attendre 5 secondes.
3. Couper le contact d'allumage.
4. Répéter à deux reprises les étapes 2 et 3 (trois cycles au total).
5. Démarrer le moteur.
   Le moteur peut-il être démarré ?

Oui → Le système fonctionne correctement.

↓ Non

EFFECTUER L'INITIALISATION DE L'IMMO.
Effectuer l'initialisation de l'IMMO à l'aide du CONSULT.
Pour la procédure d'initialisation, se reporter au ''manuel d'utilisation NATS V2,0 (Diesel)''.
Le système peut-il être initialisé ?
Note : Si l'initialisation est abandonnée ou avortée, l'écran CONSULT affichera le message B.

Oui → Le système fonctionne correctement.

↓ Non

Aller à la procédure de diagnostic 5, EL-213 pour vérifier ''ID CLE [PAS ENTRE]''.

Simpo PDF Merge and Split Unregistered Version - http://www.simpopdf.com

Diagnostics des défauts (Suite)

PROCEDURE DE DIAGNOSTIC 5

Résultats de l’autodiagnostic :

“ID CLE [PAS ENTRE]” affiché sur l’écran CONSULT

A

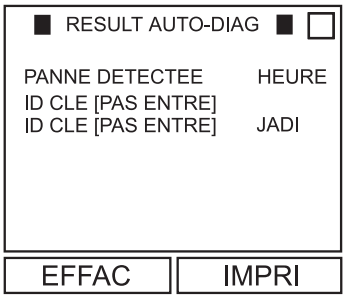

FCSDR11

S’assurer que “ID CLE [PAS ENTRE] de “RESULT AUTO-DIAG” est affiché sur l’écran CONSULT.

Bon

VERIFICATION DE LA PUCE D’IDENTIFICATION DE CLE DE CONTACT NATS.
Démarrer le moteur avec une autre clé de contact NATS enregistrée.
Le moteur peut-il être démarré ?

Oui →
- Mauvais fonctionnement de la puce d’identification de la clé.
1. Remplacer la clé de contact.
2. Effectuer l’initialisation de l’IMMO à l’aide du CONSULT. Pour la procédure d’initialisation, se reporter au “manuel d’utilisation NATS V2,0 (Diesel)”.

Non

B

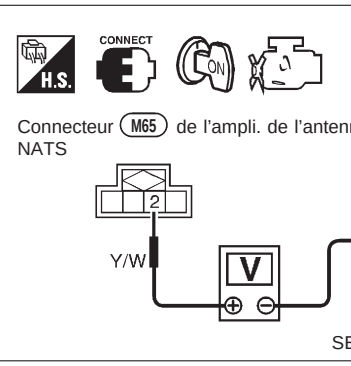

SEL634V

VERIFIER LA FONCTION 1 DE L’IMMO.
1. Mettre le contact d’allumage sur “ON”.
2. Vérifier la tension entre la borne (2) de l’IMMO et la masse.

Durée (après avoir mis le contact d’allumage sur “ON”).	Tension [V]
Pendant environ 0,5 sec.	Environ 2,3 - 5
Après 1 sec.	0

Note :
Ne pas retirer l’ampli. d’antenne NATS du canon de clé.

Mauvais →
Vérifier que les faisceaux ne sont pas ouverts ou court-circuités entre l’IMMO et l’ampli. d’antenne NATS. Si le faisceau fonctionne correctement, remplacer l’IMMO. Après avoir remplacé l’IMMO, effectuer l’initialisation du système à l’aide du CONSULT.
Pour la procédure d’initialisation, se reporter au “manuel d’utilisation NATS V2,0 (Diesel)”.

Bon

C

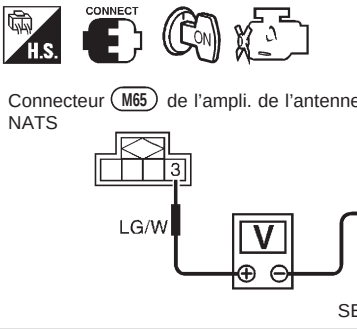

SEL635V

VERIFIER LA FONCTION 2 DE L’IMMO.
1. Mettre le contact d’allumage sur “ON”.
2. Vérifier la tension entre la borne (3) de l’ampli. d’antenne NATS et la masse.
   Tension : 6 sec. après avoir mis le contact d’allumage sur “ON”
   Environ 4,5 - 5,3V

Note :
Ne pas retirer l’ampli. d’antenne NATS du canon de clé.

Mauvais →
Vérifier que les faisceaux ne sont pas ouverts ou court-circuités entre l’IMMO et l’ampli. d’antenne NATS. Si le faisceau fonctionne correctement, remplacer l’IMMO. Après avoir remplacé l’IMMO, effectuer l’initialisation du système à l’aide du CONSULT.
Pour la procédure d’initialisation, se reporter au “manuel d’utilisation NATS V2,0 (Diesel)”.

Bon

D

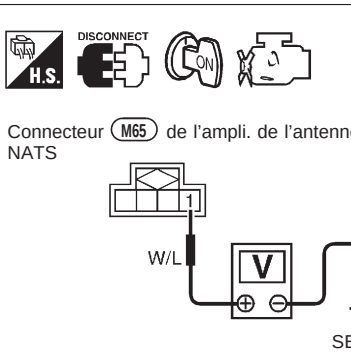

SEL636V

VERIFICATION DE LA TENSION DE SORTIE DE L’IMMO.
1. Mettre le contact d’allumage sur “ON”.
2. Vérifier la tension entre la borne (1) de l’ampli. d’antenne NATS et la masse.
   Tension : plus de 4,7V

Mauvais →
Vérifier que les faisceaux ne sont pas ouverts ou court-circuités entre l’IMMO et l’ampli. d’antenne NATS. Si le faisceau fonctionne correctement, remplacer l’IMMO. Après avoir remplacé l’IMMO, effectuer l’initialisation du système à l’aide du CONSULT.
Pour la procédure d’initialisation, se reporter au “manuel d’utilisation NATS V2,0 (Diesel)”.

Bon

(A)

Simpo PDF Merge and Split Unregistered Version - http://www.simpopdf.com

Diagnostics des défauts (Suite)

E

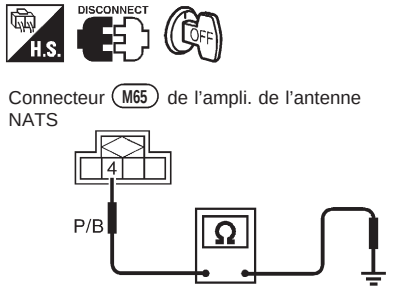

Ⓐ

E

VERIFIER LE CIRCUIT DE LIGNE DE MASSE DE L'AMPLI. D'ANTENNE.

1. Mettre le contact d'allumage sur ''OFF''.
2. Vérifier la continuité entre la borne ④ de l'ampli. d'antenne NATS et la masse.
   Il doit y avoir continuité.

Mau-vais → Vérifier si le faisceau n'est pas ouvert ou court-circuité entre l'ampli. d'antenne NATS et l'IMMO. Si le faisceau fonctionne correctement, remplacer l'IMMO. Après avoir remplacé l'IMMO, effectuer l'initialisation du système à l'aide du CONSULT. Pour la procédure d'initialisation, se reporter au ''manuel d'utilisation NATS V2,0 (Diesel)''.

Bon

L'ampli. d'antenne NATS est défectueux.
Bien maintenir le corps de l'ampli. lors du remplacement de l'ampli. Veiller à ne pas tirer sur le faisceau de l'ampli.

Simpo PDF Merge and Split Unregistered Version - http://www.simpopdf.com

Diagnostics des défauts (Suite)

PROCEDURE DE DIAGNOSTIC 6

Résultats de l’autodiagnostic :

‘‘CONTRAD ID IMM/MSC’’ affiché sur l’écran CONSULT

A

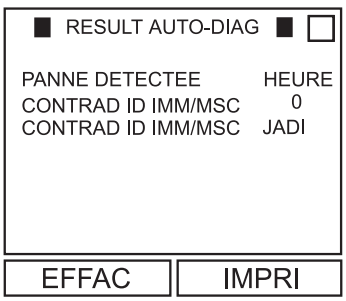

FCSDR12

B

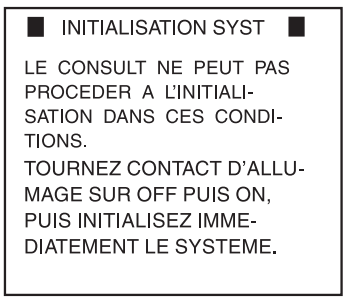

FCSIC01

C

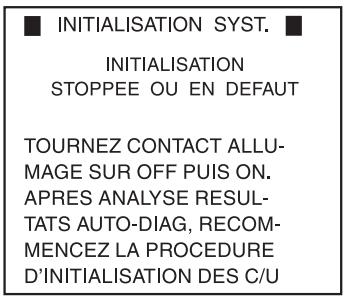

FCSIC02

D

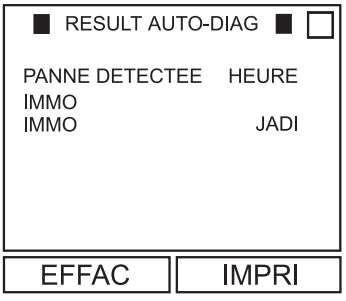

FCSDR07

E

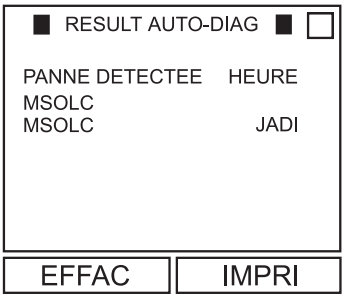

FCSDR08

A

S’assurer que ‘‘CONTRAD ID IMM/MSC*’’ de ‘RESULT AUTO-DIAG’’ est affiché sur l’écran CONSULT.

* ‘‘CONTRAD ID IMM-MSC’’ : L’ID enregistrée de l’IMMO ne correspond pas à celle du MSOLC.

Effectuer l’initialisation du système à l’aide du CONSULT. Réenregistrer tous les numéros d’identification de clé de contact NATS. Pour la procédure d’initialisation, se reporter au ‘‘Manuel d’Utilisation CONSULT NATS V2,0 (Diesel)’’.

Initialisation incomplète

B

Tourner la clé d’allumage et l’interrupteur de mise en marche de CONSULT sur OFF. Puis tourner la clé d’allumage sur ‘‘ON’’.

Initialisation incomplète ou défaut du CONSULT

C

Confirmation des résultats d’initialisation du système ‘‘INITIALISATION STOPPEE OU EN DEFAUT’’ affichés sur l’écran CONSULT.

Initialisation achevée

Démarrer le moteur.

Bon

FIN

VERIFICATION DES RESULTATS DE L’AUTODIAGNOSTIC.
1. Mettre le contact d’allumage sur ‘‘OFF’’ et ‘‘ON’’.
2. Appuyer sur ‘‘RESULT AUTO-DIAG’’ sur l’écran ‘‘SELECT MODE DIAG’’ de CONSULT.

‘‘IMMO’’ est affiché.

‘‘MSOLC’’ est affiché.

D

Si ‘‘IMMO’’ s’affiche sur l’écran CONSULT, l’IMMO ne fonctionne pas correctement.

Remplacer l’IMMO.

E

Si ‘‘MSOLC’’ s’affiche sur l’écran CONSULT, MSOLC ne fonctionne pas correctement.

Remplacer le MSOLC.

Effectuer l’initialisation du système à l’aide du CONSULT. Pour la procédure d’initialisation, se reporter au ‘‘Manuel d’Utilisation CONSULT NATS V2,0 (Diesel)’’.

Simpo PDF Merge and Split Unregistered Version - http://www.simpopdf.com

Diagnostics des défauts (Suite)

PROCEDURE DE DIAGNOSTIC 7

Résultats de l’autodiagnostic :

‘‘IMPOSSIBLE CONTINUER’’ affiché sur l’écran CONSULT.

A

VERIFIER L’ECRAN CONSULT.
1. Appuyer sur ‘‘NATS V.2,0 (DIESEL) sur ‘‘SELECT NATS SYSTEM’’ de l’écran.
2. Confirmation de ‘‘IMPOSSIBLE CONTINUER’’ affiché sur l’écran CONSULT.

↓

B

VERIFIER SI LE CIRCUIT EST OUVERT ENTRE L’IMMO ET LE CONSULT.
1. Débrancher le connecteur de l’IMMO et le CONSULT du connecteur de liaison des données.
2. Vérifier la continuité entre les bornes de l’IMMO et les bornes du connecteur de diagnostic.

Borne d’IMMO	Borne du connecteur de liaison des données	Continuité
⑦	⑬	Oui
⑥	⑭	Oui

Mauvais → Réparer le faisceau.

Bon ↓

C

VERIFIER S’IL Y A COURT-CIRCUIT ENTRE L’IMMO ET LE CONSULT.
1. Débrancher le connecteur de l’IMMO et le CONSULT du connecteur de liaison des données.
2. Vérifier la continuité entre la borne ⑥, ⑦ du connecteur de l’IMMO et la masse.
   Il ne doit pas y avoir continuité.
3. Mettre le contact d’allumage sur ‘‘ON’’.
4. Vérifier la tension entre les bornes ⑥, ⑦ de l’IMMO et la masse.
   Il ne doit pas y avoir de tension.

Mauvais → Réparer le faisceau.
Note :
Si le circuit est court-circuité au niveau du circuit d’alimentation, il se peut que l’IMMO soit soit endommagée. Après réparation, effectuer à nouveau l’autodiagnostic à l’aide du CONSULT.

Bon ↓

D

VERIFIER LE CIRCUIT DE L’ALIMENTATION ELECTRIQUE DE L’AMPLI. D’ANTENNE NATS.
1. Débrancher le connecteur de l’ampli. d’antenne NATS.
2. Mettre le contact d’allumage sur ‘‘ON’’.
3. Vérifier la tension entre la borne ① de l’ampli. d’antenne NATS et la masse.
   Tension : plus de 4,7V

Mauvais (0V) → La ligne de plus de 5V de l’ampli. d’antenne NATS est court-circuitée avec la ligne de masse. Réparer le faisceau ou les connecteurs.

Bon ↓

Ⓐ

A

IMPOSSIBLE
CONTINUER
1. Couper le CONTACT et CONSULT.
2. Recommencer du début.

FCSII01

B

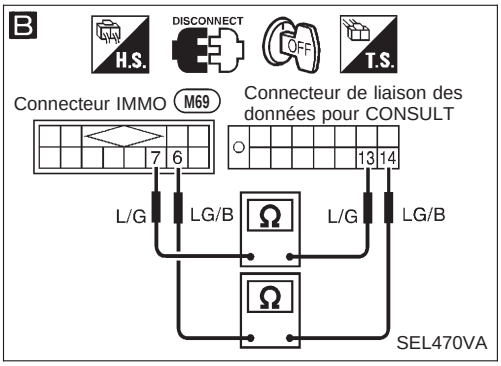

SEL470VA

C

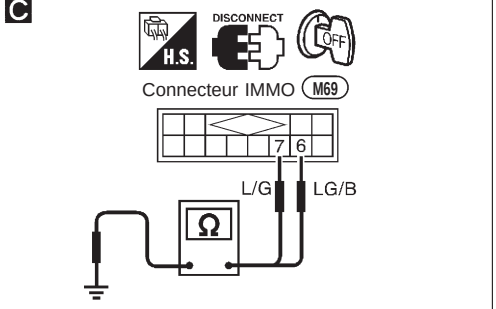

Court-circuit lors de la vérification de mise à la masse

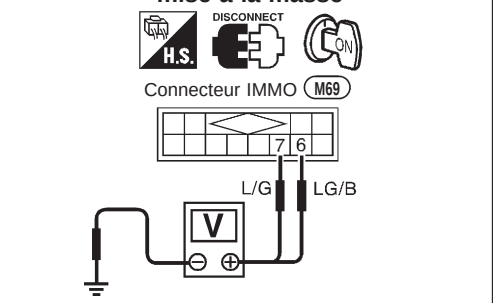

Court-circuit lors de la vérification du circuit électrique SEL471VA

D

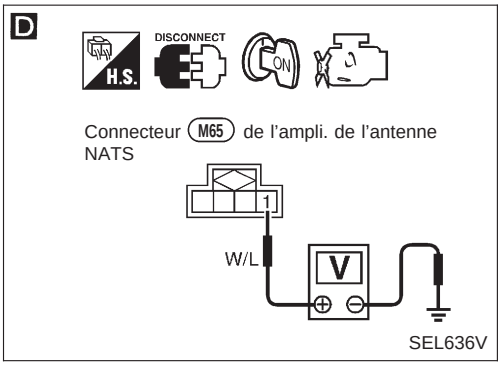

SEL636V

Simpo PDF Merge and Split Unregistered Version - http://www.simpopdf.com

Diagnostics des défauts (Suite)

E

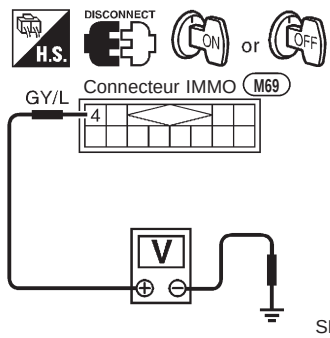

SEL867UE

F

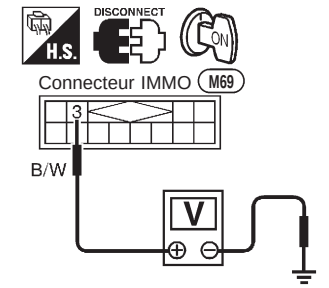

SEL868UE

G

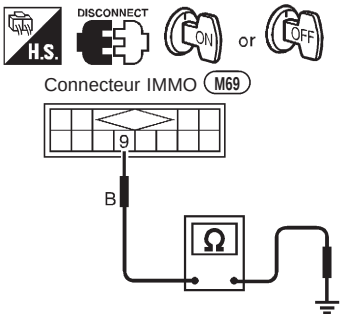

SEL453VA

Ⓐ

E

VERIFIER LE CIRCUIT DE L'ALIMENTATION ELECTRIQUE DE L'IMMO.
Vérifier la tension entre la borne ④ de l'IMMO et la masse à l'aide de CONSULT ou d'un testeur.
Tension : tension de la batterie

Mauvais → Vérifier les points suivants.
- Fusible de 10A (n° 34, situé dans le raccord à fusible et dans le boîtier à fusibles)
- Faisceau ouvert ou court-circuit du faisceau entre le fusible et le connecteur de l'IMMO

Bon ↓

F

VERIFIER SI LE SIGNAL DU CONTACT D'ALLUMAGE EST ALLUME.
Vérifier la tension entre la borne ③ de l'IMMO et la masse à l'aide de CONSULT ou d'un testeur.
Tension : tension de la batterie

Mauvais → Vérifier les points suivants.
- Fusible de 10A (n° 23, situé dans le boîtier à fusibles)
- Faisceau ouvert ou court-circuit du faisceau entre le fusible et le connecteur de l'IMMO

Bon ↓

G

VERIFIER LE CIRCUIT DE MISE A LA MASSE DE L'IMMO.
Vérifier la continuité du faisceau entre la borne ⑨ de l'IMMO et la masse.
Il doit y avoir continuité.

Mauvais → Réparer le faisceau.

Bon ↓

- L'IMMO est défectueux.

1. Remplacer l'IMMO.
2. Effectuer l'initialisation du système à l'aide du CONSULT.
   Pour la procédure d'initialisation, se reporter au ''Manuel d'Utilisation CONSULT NATS V2,0 (Diesel)''.

Simpo PDF Merge and Split Unregistered Version - http://www.simpopdf.com

Diagnostics des défauts (Suite)

PROCEDURE DE DIAGNOSTIC 8

‘‘LE TEMOIN DE SECURITE NATS NE S’ALLUME PAS’’

A

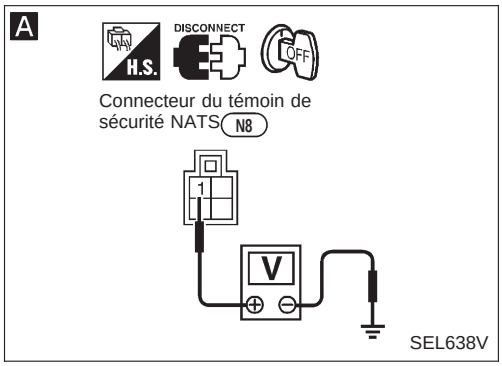

VERIFIER LE CIRCUIT D’ALIMENTATION ELECTRIQUE DU TEMOIN.
Vérifier la tension entre la borne ① du témoin de sécurité et la masse.
Il doit y avoir tension de la batterie.

Mauvais → Vérifier les points suivants.
- Fusible de 7,5A (n° 6, situé dans le boîtier à fusibles)
- Faisceau ouvert ou court-circuit du faisceau entre le fusible et le témoin de sécurité

Bon ↓

Vérifier le témoin de sécurité.

Mauvais → Remplacer le témoin de sécurité.

Bon ↓

EFFECTUER L’INITIALISATION.
Effectuer l’initialisation de l’IMMO à l’aide du CONSULT.
Pour la procédure d’initialisation, se reporter au ‘‘manuel d’utilisation NATS V2,0 (Diesel)’’.
Le témoin de sécurité fonctionne-t-il une fois l’initialisation terminée?

Non → Vérifier que les faisceaux ne sont pas ouverts ou court-circuités entre l’IMMO NATS et le témoin de sécurité.

Oui ↓

FIN

Simpo PDF Merge and Split Unregistered Version - http://www.simpopdf.com

Compartiment moteur

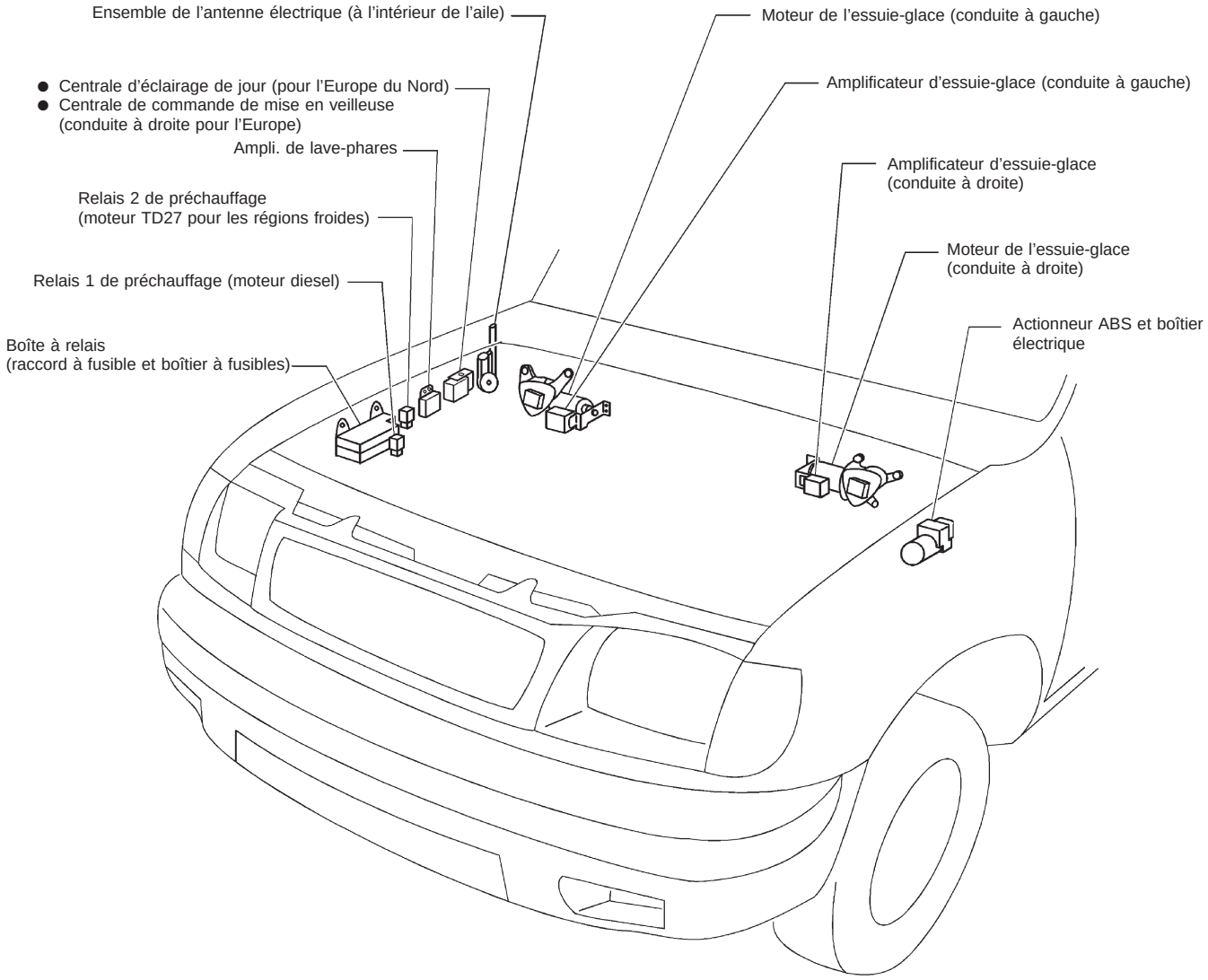

BOITE A RELAIS

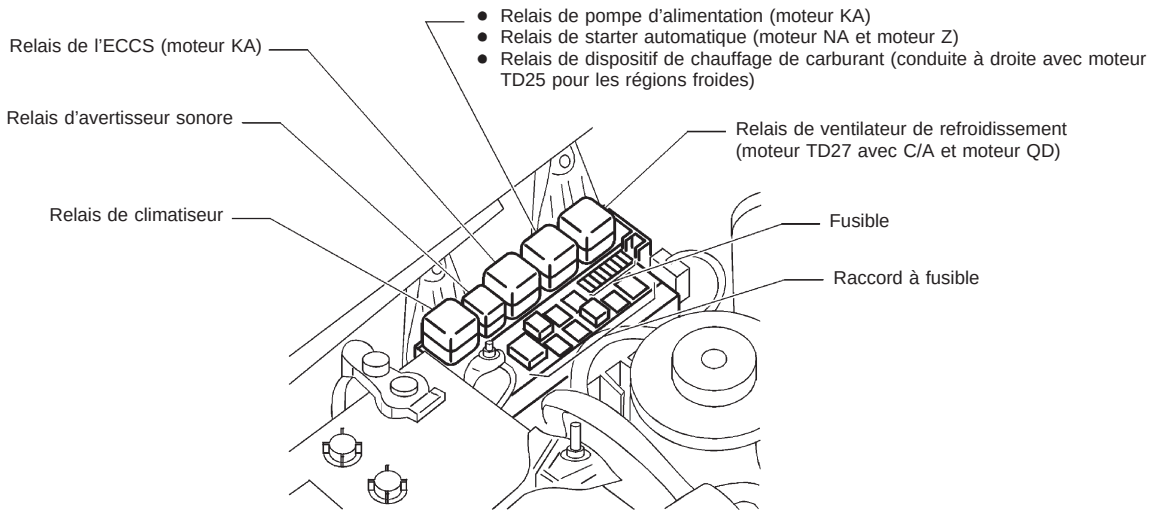

HEL391A

Simpo PDF Merge and Split Unregistered Version - http://www.simpopdf.com

Compartiment passager

CONDUITE A GAUCHE

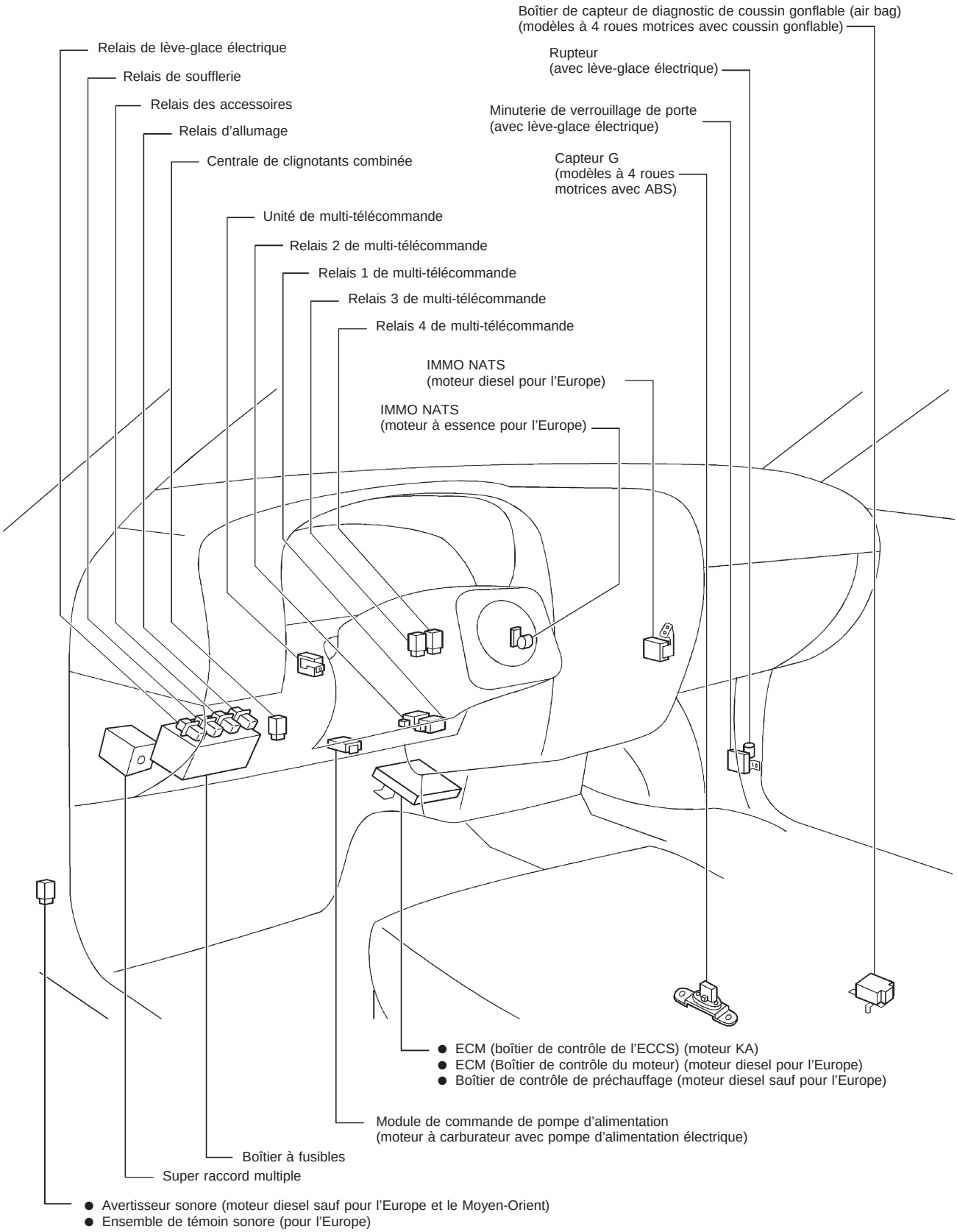

HEL392A

Simpo PDF Merge and Split Unregistered Version - http://www.simpopdf.com

Compartiment passager (Suite)

CONDUITE A DROITE

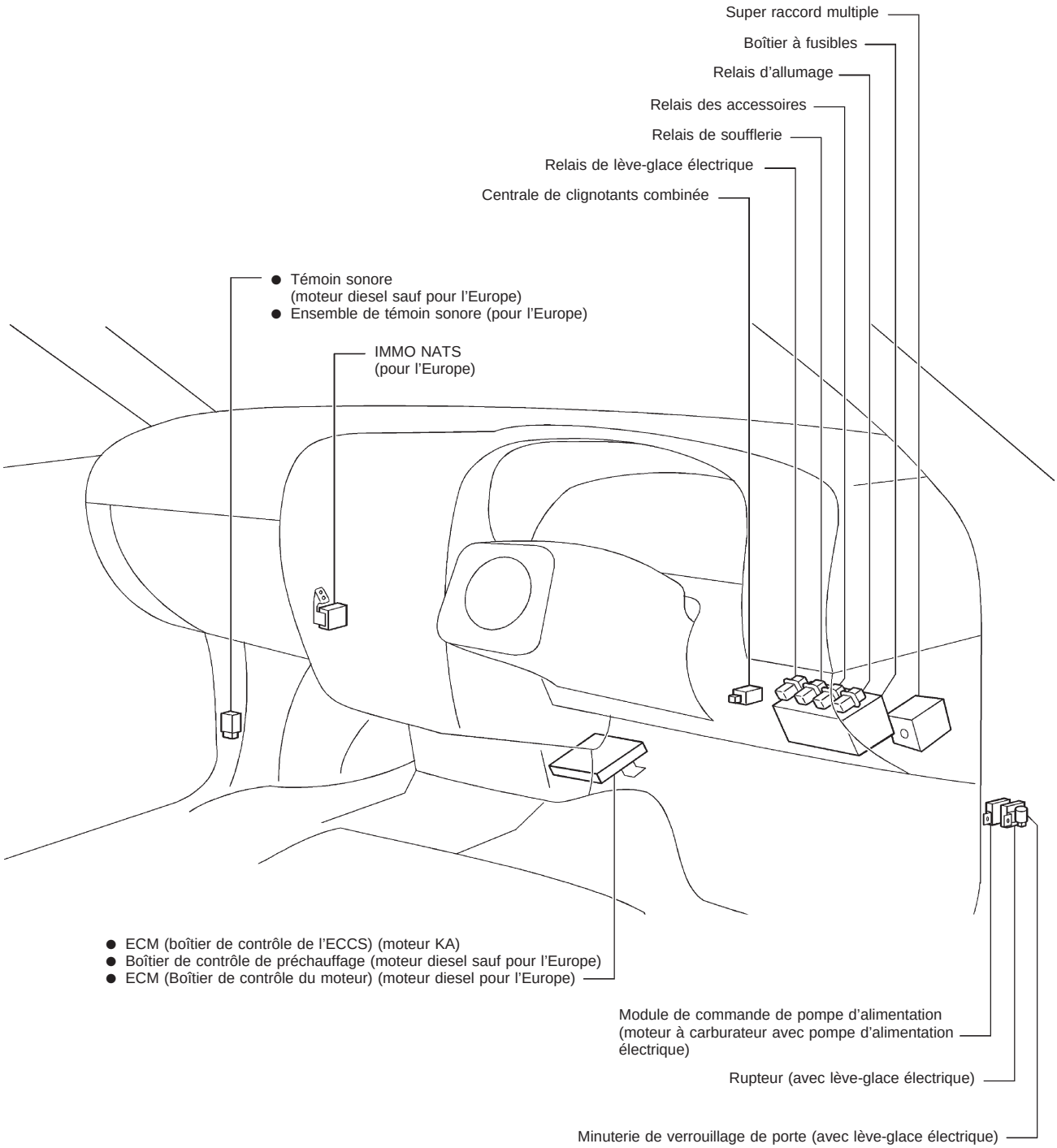

HEL393A

Simpo PDF Merge and Split Unregistered Version - http://www.simpopdf.com

Généralités

CONDUITE A GAUCHE

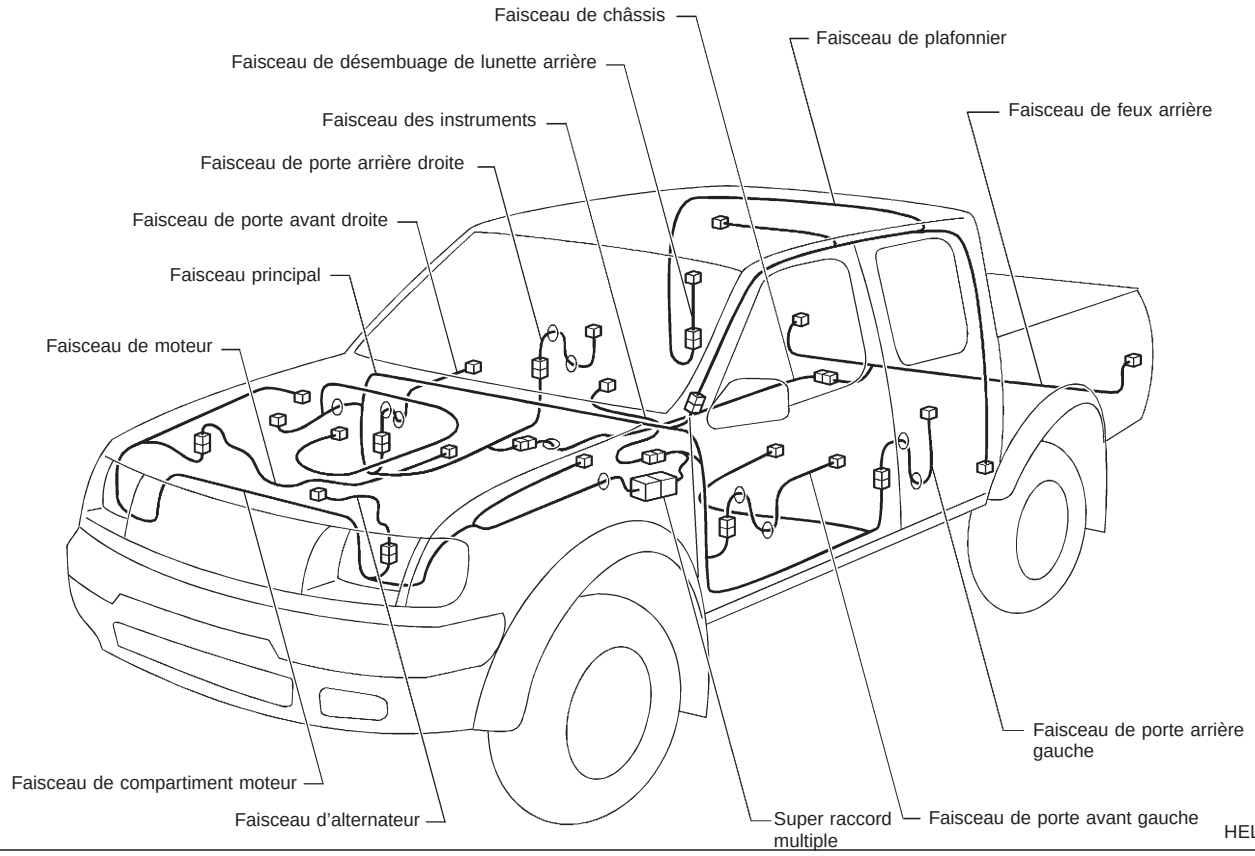

CONDUITE A DROITE

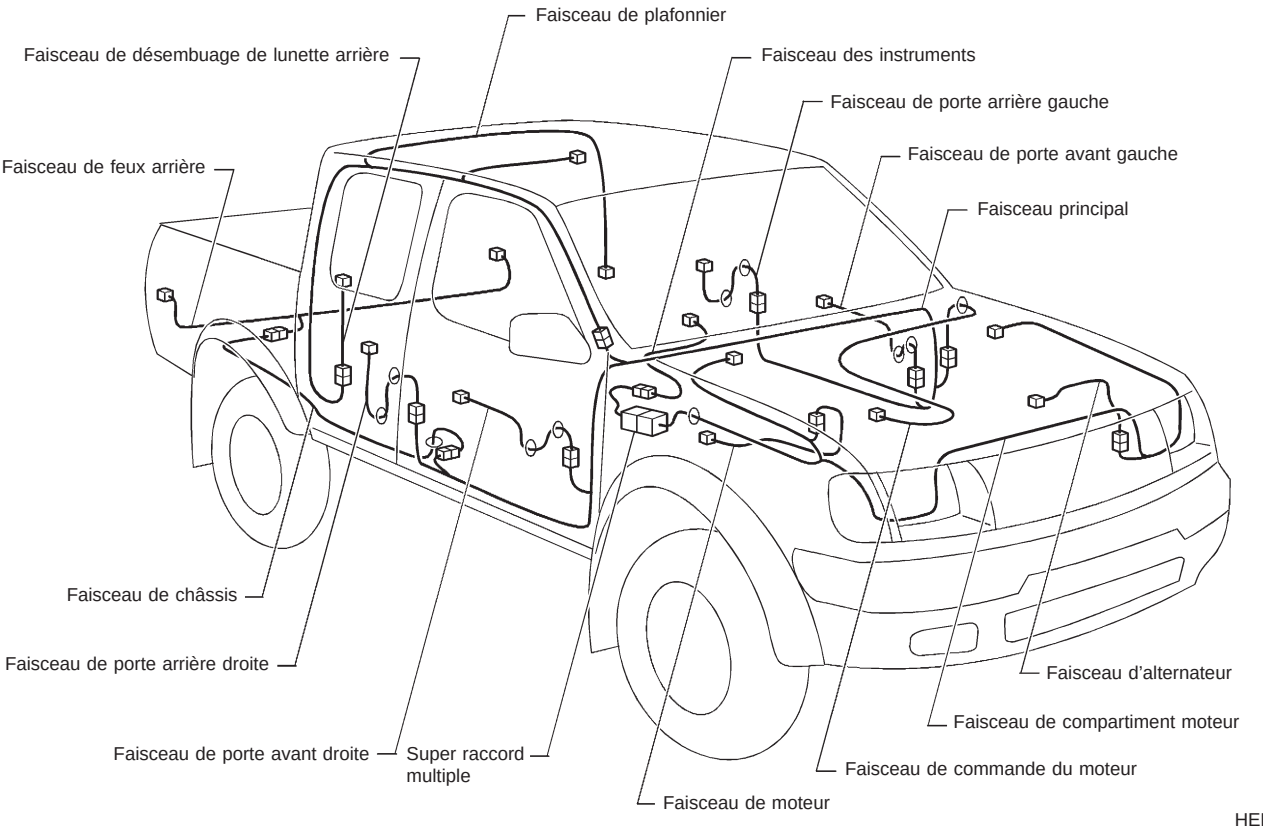

Simpo PDF Merge and Split Unregistered Version - http://www.simpopdf.com

Comment lire un schéma de disposition des faisceaux

Exemple :

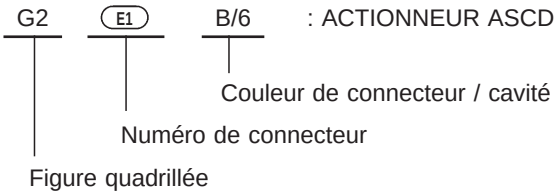

Les dispositions de faisceau suivantes utilisent une grille pour aider à localiser les connecteurs sur les dessins :

- Faisceau principal (tableau de bord, compartiment moteur)
- Faisceau de compartiment moteur
- Faisceau de commande du moteur

Pour utiliser une figure quadrillée

1) Rechercher le numéro du connecteur voulu dans la liste des connecteurs.
2) Rechercher la figure quadrillée.
3) Sur le dessin, rechercher l'intersection entre la colonne indiquée par une lettre et la rangée de chiffre.
4) Rechercher le numéro du connecteur dans la zone d'intersection.
5) Suivre la ligne (le cas échéant) jusqu'au connecteur.

SYMBOLE DE CONNECTEUR

Les principaux symboles des connecteurs (dans la disposition du faisceau) sont indiqués ci-dessous.

Type de connecteur	Type étanche		Type standard	
	Mâle	Femelle	Mâle	Femelle
● Cavité : moins de 4 ● Connecteur de relais				
● Cavité : de 5 à 8				
● Cavité : plus de 9				
● Borne de masse etc.	–			

Simpo PDF Merge and Split Unregistered Version - http://www.simpopdf.com

Faisceau principal

TABLEAU DE BORD – CONDUITE A GAUCHE POUR L'EUROPE



HEL395A

Simpo PDF Merge and Split Unregistered Version - http://www.simpopdf.com

A4	M1	–	:	Masse de carrosserie
A4	M3	W/12	:	Vers D1
A3	M4	W/12	:	Vers D2
A3	M5	SMJ	:	Vers E101
B3	M6	W/24	:	Vers N1
A3	M7	W/ 20	:	Vers N2
B3	M9	L/4	:	Relais de lève-glace électrique
B4	M10	–	:	Boîtier à fusibles
B4	M11	GY/14	:	Connecteur de liaison des données pour CONSULT
B3	M14	W/3	:	Boîtier à fusibles
B3	M15	B/3	:	Centrale de clignotants combinée
B2	M16	B/2	:	Contact de feux stop
C2	M17	Y/12	:	Vers M18 (modèles à 4 roues motrices avec coussin gonflable)
B1	M18	Y/12	:	Vers M17 (modèles à 4 roues motrices avec coussin gonflable)
A1	M19	W/6	:	Vers R1
D3	M20	W/6	:	Contact d'allumage
C1	M21	W/1	:	Contact de frein de stationnememt (type à manche)
D2	M23	BR/8	:	Commande d'éclairage · Commande de clignotant
D2	M24	BR/4	:	Commutateur d'éclairage
D3	M25	Y/6	:	Câble spiralé (modèles à 4 roues motrices avec coussin gonflable)
D3	M26	W/6	:	Câble spiralé (modèles à 2 roues motrices avec coussin gonflable)
D2	M27	B/1	:	Commande d'avertisseur sonore
D2	M28	GY/8	:	Contact d'essuie-glace et de lave-glace
D4	M31	GY/6	:	Connecteur de raccord (moteur KA)
E3	M32	W/64	:	ECM (boîtier de contrôle de l'ECCS) (moteur KA)
E4	M33	–	:	Masse de carrosserie (moteur KA)
E3	M35	W/10	:	Radio
F3	M36	W/6	:	Radio (modèles avec 4 haut-parleurs et moteur KA pour l'Europe)
E3	M37	B/2	:	Allume-cigare
E3	M38	W/3	:	Interrupteur de climatiseur
F3	M39	W/6	:	Commutateur de ventilateur
F2	M40	W/2	:	Eclairage d'interrupteur de ventilateur
E2	M41	W/8	:	Interrupteur de feux de détresse
E1	M42	W/6	:	Interrupteur de désembuage de lunette arrière
F2	M44	BR/4	:	Amplificateur de commande thermique
G2	M45	BR/4	:	Résistance du ventilateur
G2	M46	W/2	:	Moteur de soufflerie
G3	M49	W/12	:	Vers D31
G3	M50	W/6	:	Vers D32
G4	M51	W/B	:	Minuterie de verrouillage de porte
G3	M52	W/2	:	Rupteur
B4	M53	W/12	:	Ensemble de témoin sonore
G3	M54	–	:	Masse de carrosserie
A3	M56	–/2	:	Diode (pour système de multi-télécommande)
B2	M57	–/2	:	Diode (pour système de multi-télécommande)
C3	M59	BR/10	:	Vers M701 (modèles à 4 roues motrices)
C2	M60	W/12	:	Vers M702 ou connecteur volant (modèles 4 roues motrices)
D2	M63	W/3	:	Interrupteur de feu antibrouillard arrière
D3	M64	W/2	:	Contact de clé
E3	M65	W/4	:	Ampli. de l'antenne NATS (moteur TD)
D4	M66	GY/20	:	ECM (Boîtier de contrôle du moteur) (moteur TD)
D4	M67	GY/16	:	ECM (Boîtier de contrôle du moteur) (moteur TD)
E2	M68	W/8	:	IMMO NATS (moteur KA)
F3	M69	W/12	:	IMMO NATS (moteur TD)
E2	M70	L/8	:	Interrupteur de lave-phare

Faisceau auxiliaire (pour système de multi-télécommande)

C3	M701	BR/10	:	Vers M59
C3	M702	W/12	:	Vers M60
C2	M703	W/12	:	Boîtier de commande de multi-télécommande
D3	M704	B/5	:	Relais 1 de multi-télécommande
C3	M705	BR/6	:	Relais 2 de multi-télécommande
C2	M706	B/5	:	Relais 3 de multi-télécommande
C2	M707	B/5	:	Relais 4 de multi-télécommande

Diode M56, M57

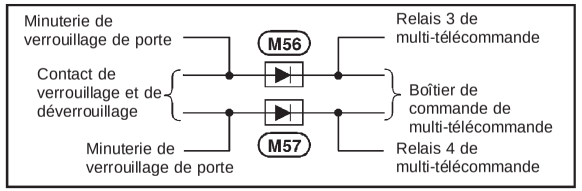

Simpo PDF Merge and Split Unregistered Version - http://www.simpopdf.com

Faisceau principal (Suite)

TABLEAU DE BORD – CONDUITE A DROITE

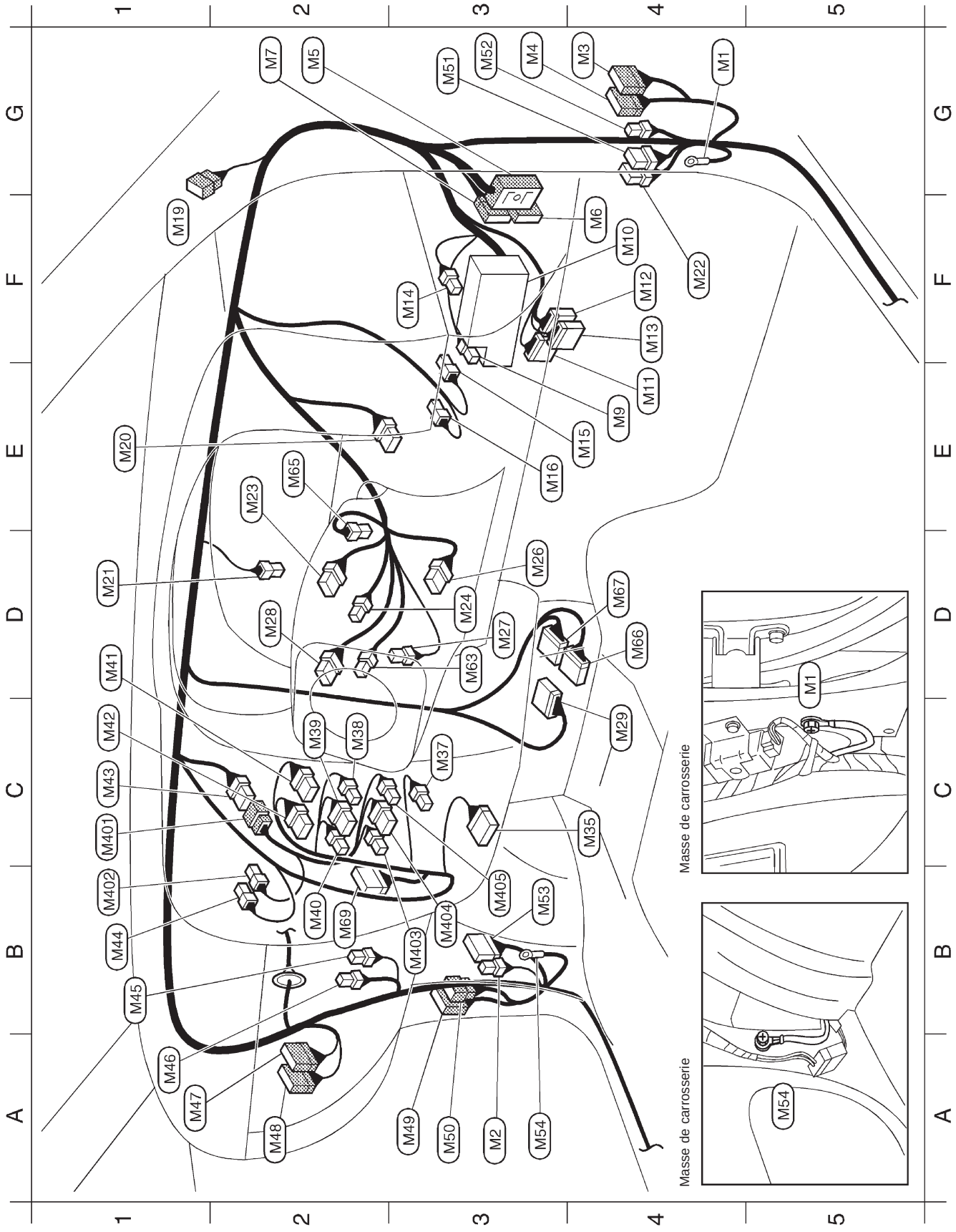

HEL397A

Simpo PDF Merge and Split Unregistered Version - http://www.simpopdf.com

A4	M1	–	:	Masse de carrosserie
A3	M2	W/2	:	Témoin sonore (moteur diesel sauf pour l'Europe et l'Australie)
G4	M3	W/12	:	Vers D1
G3	M4	W/12	:	Vers D2 (avec lève-glace électrique)
G2	M5	SMJ	:	Vers E101
F4	M6	W/24	:	Vers N1
G2	M7	W : 20	:	Vers N2 (pour l'Europe)
E4	M9	L/4	:	Relais de lève-glace électrique
F4	M10	–	:	Boîtier à fusibles
E4	M11	GY/14	:	Connecteur de liaison des données pour CONSULT (moteur KA et pour l'Europe)
M4	M12	B/12	:	Connecteur de contrôle (moteur NA)
F4	M13	B/10	:	Connecteur de contrôle (moteur Z)
F3	M14	W/3	:	Boîtier à fusibles
B3	M15	B/3	:	Centrale de clignotants combinée
B2	M16	B/2	:	Contact de feux stop
F1	M19	W/6	:	Vers R1
E1	M20	W/6	:	Contact d'allumage
C1	M21	W/1	:	Contact de frein de stationnement (type à manche)
F4	M22	W/6	:	Module de commande de pompe d'alimentation (moteur NA et moteur Z)
E2	M23	BR/8	:	Commande d'éclairage · Commande de clignotant
D3	M24	BR/4	:	Commutateur d'éclairage
D3	M26	W/6	:	Câble spiralé (pour l'Europe)
D3	M27	B/1	:	Commande d'avertisseur sonore
D2	M28	GY/8	:	Contact d'essuie-glace et de lave-glace
C4	M29	W/12	:	Boîtier de contrôle de préchauffage (moteur diesel sauf pour l'Europe)
C4	M35	W/10	:	Radio
C3	M37	B/2	:	Allume-cigare
C2	M38	W/3	:	Interrupteur de climatiseur (pour l'Europe et l'Australie)
C2	M39	W/6	:	Commutateur de ventilateur (pour l'Europe et l'Australie)
B2	M40	W/2	:	Eclairage de commutateur de ventilateur (pour l'Europe et l'Australie)
D1	M41	W/8	:	Interrupteur de feux de détresse
C1	M42	W/6	:	Interrupteur de désembuage de lunette arrière (pour l'Europe et cabine double pour l'Australie)
C1	M43	B/8	:	Vers M401 (sauf pour l'Europe et l'Australie)
B1	M44	BR/4	:	Amplificateur de commande thermique (pour l'Europe et l'Australie)
B1	M45	BR/4	:	Résistance du ventilateur
A1	M46	W/2	:	Moteur de soufflerie
A1	M47	W/10	:	Vers F55 (moteur KA)
A2	M48	W/24	:	Vers D54 (moteur KA)
A3	M49	W/12	:	Vers D31
A3	M50	W/6	:	Vers D32 (avec lève-glace électrique)
G3	M51	W/8	:	Minuterie de verrouillage de porte (cabine double catégorie ST)
G3	M52	W/2	:	Rupteur (cabine double catégorie ST)
B3	M53	B/12	:	Ensemble de témoin sonore (pour l'Europe)
A3	M54	–	:	Masse de carrosserie
D3	M63	W/3	:	Commande du feu antibrouillard arrière (pour l'Europe)
E2	M65	W/4	:	Ampli. de l'antenne NATS (pour l'Europe)
D4	M66	GY/20	:	ECM (Boîtier de contrôle du moteur) (moteur diesel pour l'Europe)
D4	M67	GY/16	:	ECM (Boîtier de contrôle du moteur) (moteur diesel pour l'Europe)
B2	M69	W/12	:	IMMO NATS (pour l'Europe)

Compartiment moteur

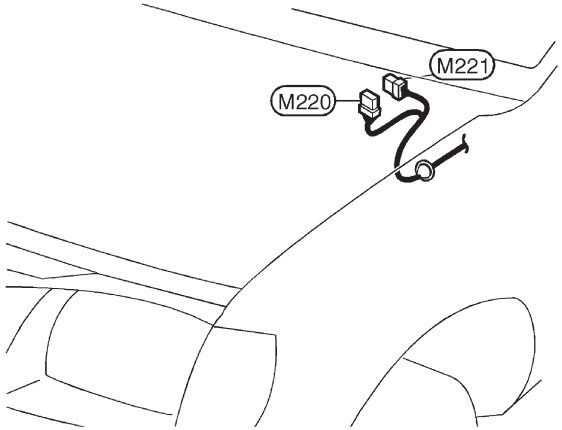

M220	GY/8	:	Amplificateur d'essuie-glace ou connecteur volant (moteur diesel pour l'Europe et l'Australie)
M221	W/6	:	Moteur de l'essuie-glace (sauf moteur KA)

Faisceau auxiliaire (sauf pour l'Europe et l'Australie)

C1	M401	B/8	:	Vers M43
B1	M402	BR/4	:	Amplificateur de commande thermique (modèles avec C/A)
B3	M403	W/2	:	Eclairage de commutateur de ventilateur
B3	M404	W/6	:	Commutateur de ventilateur
B3	M405	W/3	:	Interrupteur de climatiseur (modèles avec C/A)

Simpo PDF Merge and Split Unregistered Version - http://www.simpopdf.com

Faisceau principal (Suite)

COTE CARROSSERIE – CONDUITE A GAUCHE

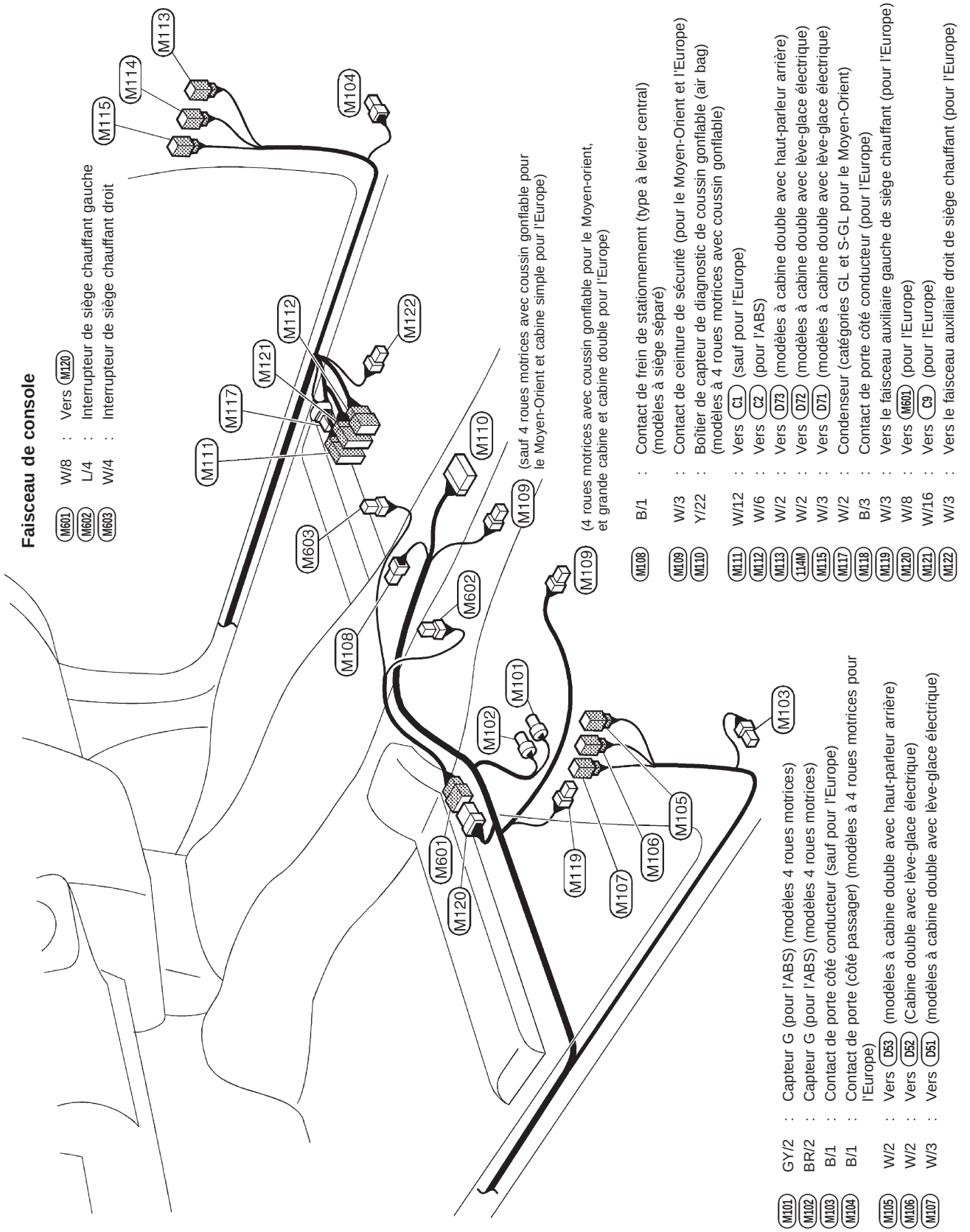

M108 B/1 : Contact de frein de stationnememt (type à levier central) (modèles à siège séparé)
M109 W/3 : Contact de ceinture de sécurité (pour le Moyen-Orient et l'Europe)
M110 Y/22 : Boîtier de capteur de diagnostic de coussin gonflable (air bag) (modèles à 4 roues motrices avec coussin gonflable)
M111 W/12 : Vers C1 (sauf pour l'Europe)
M112 W/6 : Vers C2 (pour l'ABS)
M113 W/2 : Vers D73 (modèles à cabine double avec haut-parleur arrière)
114M W/2 : Vers D72 (modèles à cabine double avec lève-glace électrique)
M115 W/3 : Vers D71 (modèles à cabine double avec lève-glace électrique)
M117 W/2 : Condenseur (catégories GL et S-GL pour le Moyen-Orient)
M118 B/3 : Contact de porte côté conducteur (pour l'Europe)
M119 W/3 : Vers le faisceau auxiliaire gauche de siège chauffant (pour l'Europe)
M120 W/8 : Vers M601 (pour l'Europe)
M121 W/16 : Vers C9 (pour l'Europe)
M122 W/3 : Vers le faisceau auxiliaire droit de siège chauffant (pour l'Europe)

M101 GY/2 : Capteur G (pour l'ABS) (modèles 4 roues motrices)
M102 BR/2 : Capteur G (pour l'ABS) (modèles 4 roues motrices)
M103 B/1 : Contact de porte côté conducteur (sauf pour l'Europe)
M104 B/1 : Contact de porte (côté passager) (modèles à 4 roues motrices pour l'Europe)
M105 W/2 : Vers D53 (modèles à cabine double avec haut-parleur arrière)
M106 W/2 : Vers D52 (Cabine double avec lève-glace électrique)
M107 W/3 : Vers D51 (modèles à cabine double avec lève-glace électrique)

HEL399A

Simpo PDF Merge and Split Unregistered Version - http://www.simpopdf.com

Faisceau principal (Suite)

COTE CARROSSERIE – CONDUITE A DROITE

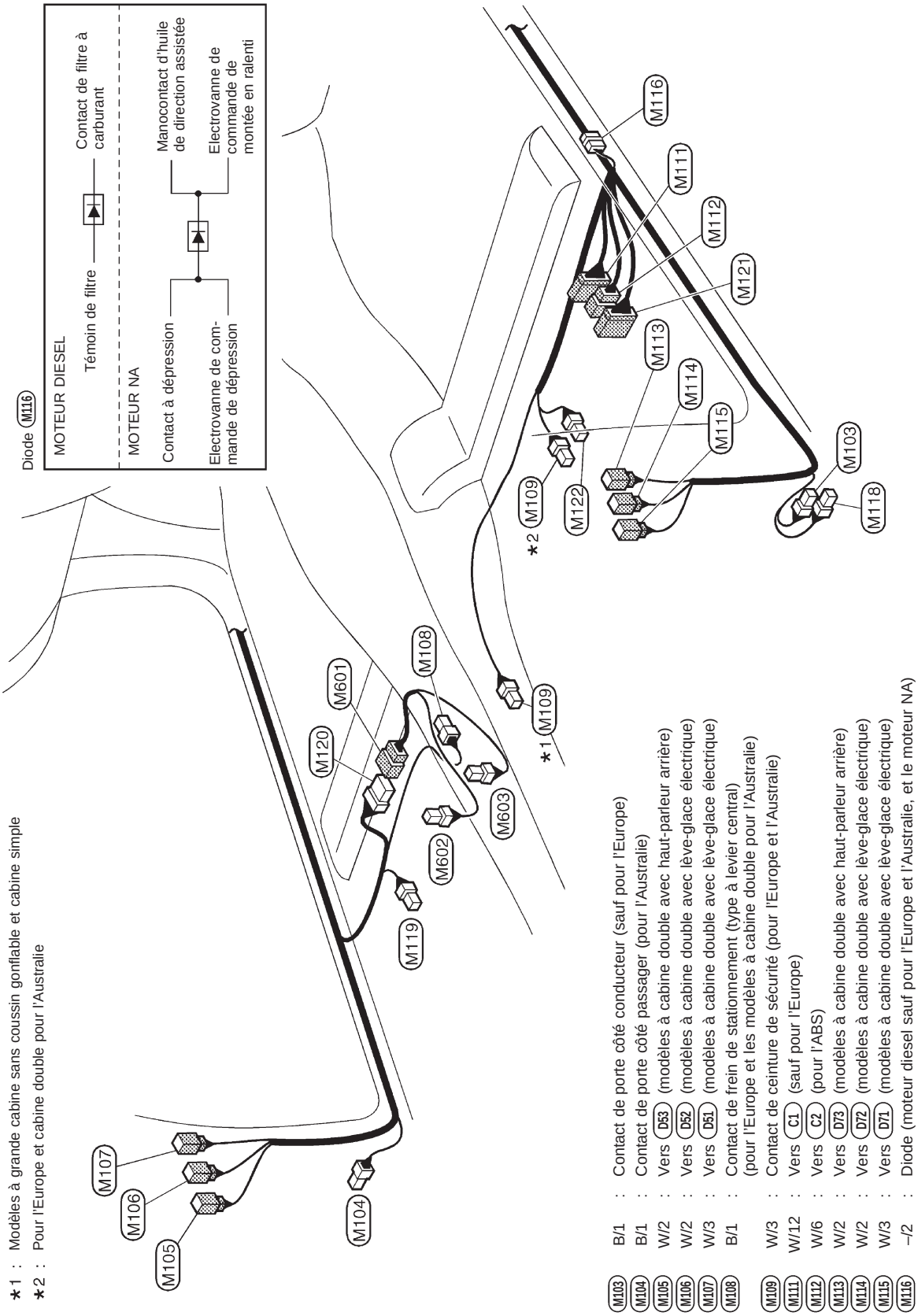

∗1 : Modèles à grande cabine sans coussin gonflable et cabine simple
∗2 : Pour l'Europe et cabine double pour l'Australie

M103	B/1	Contact de porte côté conducteur (sauf pour l'Europe)
M104	B/1	Contact de porte côté passager (pour l'Australie)
M105	W/2	Vers D53 (modèles à cabine double avec haut-parleur arrière)
M106	W/2	Vers D52 (modèles à cabine double avec lève-glace électrique)
M107	W/3	Vers D51 (modèles à cabine double avec lève-glace électrique)
M108	B/1	Contact de frein de stationnement (type à levier central) (pour l'Europe et les modèles à cabine double pour l'Australie)
M109	W/3	Contact de ceinture de sécurité (pour l'Europe et l'Australie)
M111	W/12	Vers C1 (sauf pour l'Europe)
M112	W/6	Vers C2 (pour l'ABS)
M113	W/2	Vers D73 (modèles à cabine double avec haut-parleur arrière)
M114	W/2	Vers D72 (modèles à cabine double avec lève-glace électrique)
M115	W/3	Vers D71 (modèles à cabine double avec lève-glace électrique)
M116	–/2	Diode (moteur diesel sauf pour l'Europe et l'Australie, et le moteur NA)
M118	B/3	Contact de porte côté conducteur (pour l'Europe)
M119	W/3	Vers le faisceau auxiliaire gauche de siège chauffant (pour l'Europe)
M120	W/8	Vers M106 (pour l'Europe)
M121	W/16	Vers C9 (pour l'Europe)
M122	W/3	Vers le faisceau auxiliaire droit de siège chauffant (pour l'Europe)

Faisceau de console

M601	W/8	Vers M120
M602	L/4	Interrupteur de siège chauffant gauche
M603	W/4	Interrupteur de siège chauffant droit

HEL400A

Simpo PDF Merge and Split Unregistered Version - http://www.simpopdf.com

Faisceau principal (Suite)

COMPARTIMENT MOTEUR – MOTEUR KA24E (Conduite à gauche)

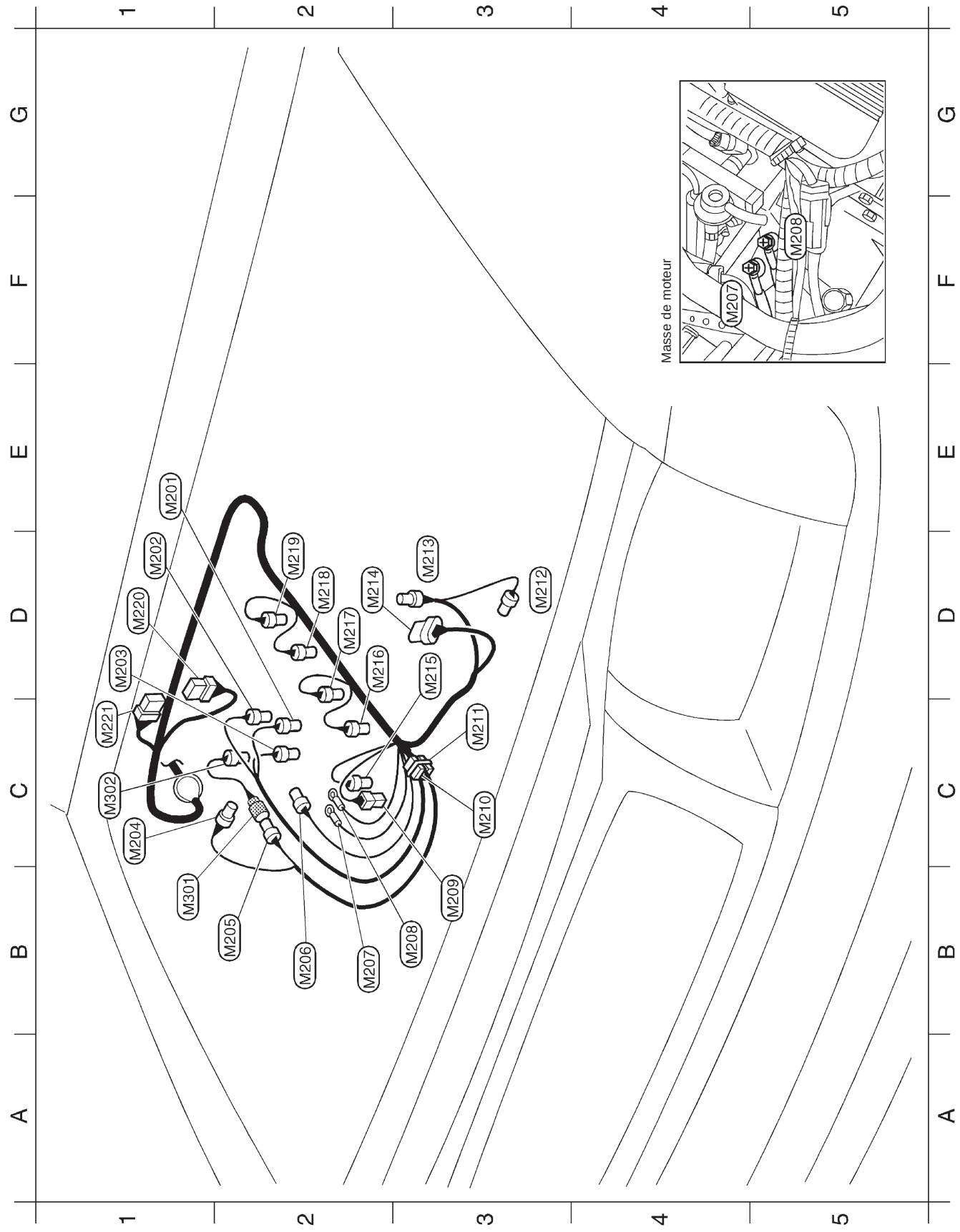

HEL854

Simpo PDF Merge and Split Unregistered Version - http://www.simpopdf.com

Faisceau principal (Suite)

E1	M201	BR/2	:	Electrovanne de contrôle de vanne de commande de tourbillon
D1	M202	B/2	:	Electrovanne de commande de purge de cartouche EVAP
D1	M203	GY/4	:	Vanne IACV-AAC · Electrovanne FICD
C1	M204	GY/3	:	Débitmètre d'air
B2	M205	GY/3	:	Vers M301
B2	M206	GY/2	:	Capteur de température d'air d'admission
B2	M207	–	:	Masse de moteur
B3	M208	–	:	Masse de moteur
B3	M209	B/1	:	Transmetteur thermique
C3	M210	W/2	:	Condenseur
C3	M211	–/2	:	Resistance
D3	M212	B/1	:	Compresseur
D3	M213	GY/2	:	Distributeur
D2	M214	GY/6	:	Distributeur
D3	M215	GY/2	:	Capteur de température du moteur
D2	M216	B/2	:	Injecteur n° 1
D2	M217	B/2	:	Injecteur n° 2
D2	M218	B/2	:	Injecteur n° 3
D2	M219	B/2	:	Injecteur n° 4
D1	M220	GY/8	:	Amplificateur d'essuie-glace ou connecteur volant (catégorie SE et pour l'Europe)
C1	M221	W/6	:	Moteur de l'essuie-glace

Faisceau auxiliaire

B1	M301	GY/3	:	Vers M205
C1	M302	BR/3	:	Capteur de position de papillon

Simpo PDF Merge and Split Unregistered Version - http://www.simpopdf.com

Faisceau principal (Suite)

COMPARTIMENT MOTEUR – SAUF MOTEUR KA24E (Conduite à gauche)

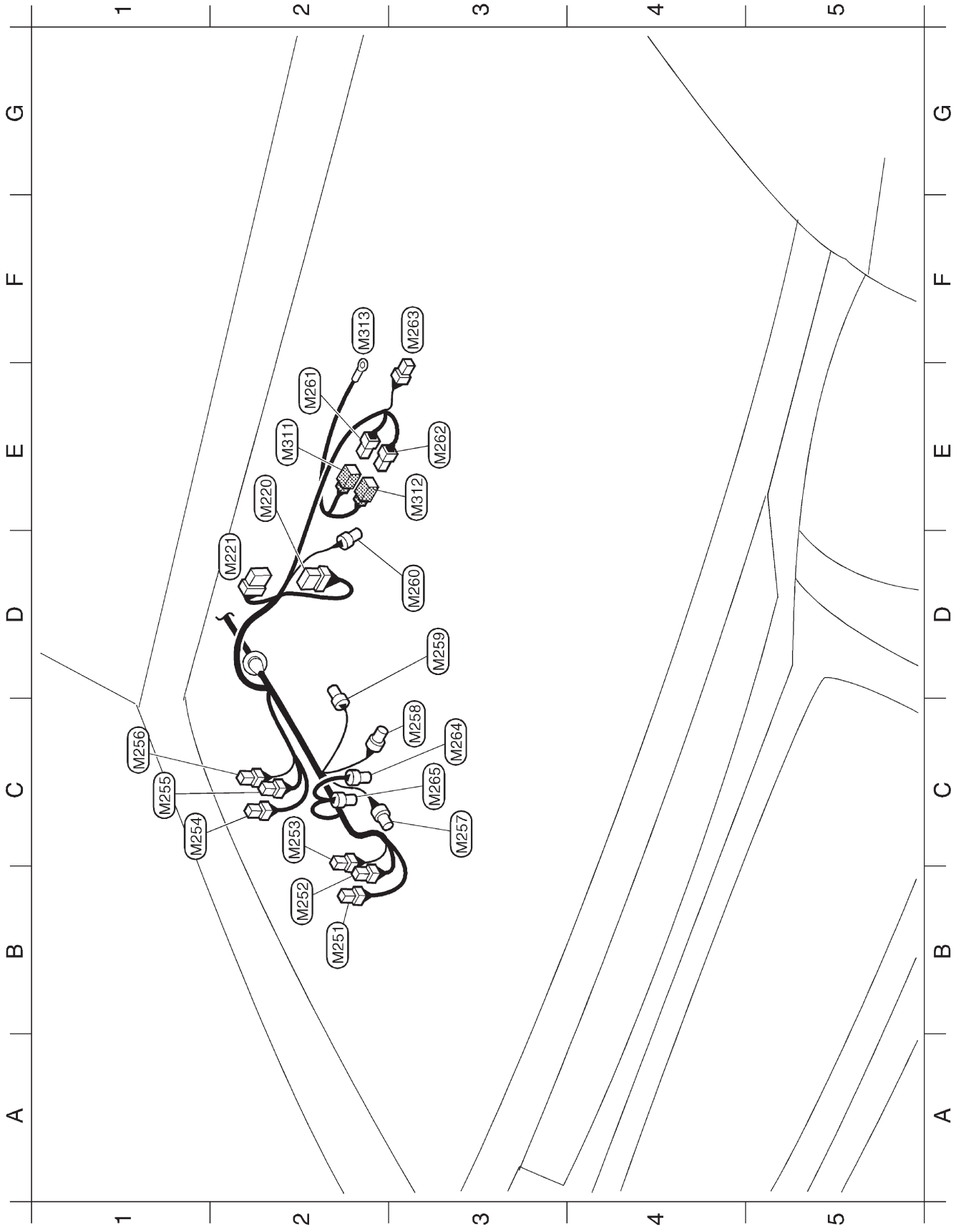

HEL402A

Simpo PDF Merge and Split Unregistered Version - http://www.simpopdf.com

Faisceau principal (Suite)

Faisceau auxiliaire (moteur diesel)

E2 (M311) B/1 : Vers (M261) (moteur QD)
E3 (M312) L/2 : Vers (M262) (moteur TD)
F2 (M313) – : Bougie de préchauffage

E2 (M220) GY/8 : Amplificateur d'essuie-glace (catégorie AX)
D2 (M221) W/6 : Moteur de l'essuie-glace
B2 (M251) W/1 : Relais 1 de préchauffage (moteur diesel)
B2 (M252) W/1 : Relais 1 de préchauffage (moteur diesel)
C2 (M253) G/2 : Relais 1 de préchauffage (moteur diesel)
C1 (M254) W/1 : Relais 2 de préchauffage (moteur TD27 pour les régions froides)
C1 (M255) W/1 : Relais 2 de préchauffage (moteur TD27 pour les régions froides)
C1 (M256) G/2 : Relais 2 de préchauffage (moteur TD27 pour les régions froides)
C3 (M257) BR/2 : Electrovanne de commande de retour de carburant (moteur NA)
C3 (M258) GY/2 : Contact à dépression (moteur NA)
D3 (M259) BR/2 : Contact de filtre à carburant (moteur diesel)
D3 (M260) GY/3 : Carburateur (moteur NA et moteur Z)
E2 (M261) B/1 : Vers (M311) (moteur QD)
E3 (M262) L/2 : Vers (M312) (moteur TD)
F3 (M263) B/2 : Résistance chutrice (moteur TD27 pour les régions froides)
C3 (M264) B/2 : Electrovanne EGRC (chambre de papillon) (pour l'Europe)
C3 (M265) BR/2 : Electrovanne EGRC (Vanne EGR) (pour l'Europe)

Simpo PDF Merge and Split Unregistered Version - http://www.simpopdf.com

Faisceau de compartiment moteur

CONDUITE A GAUCHE – MOTEUR A ESSENCE

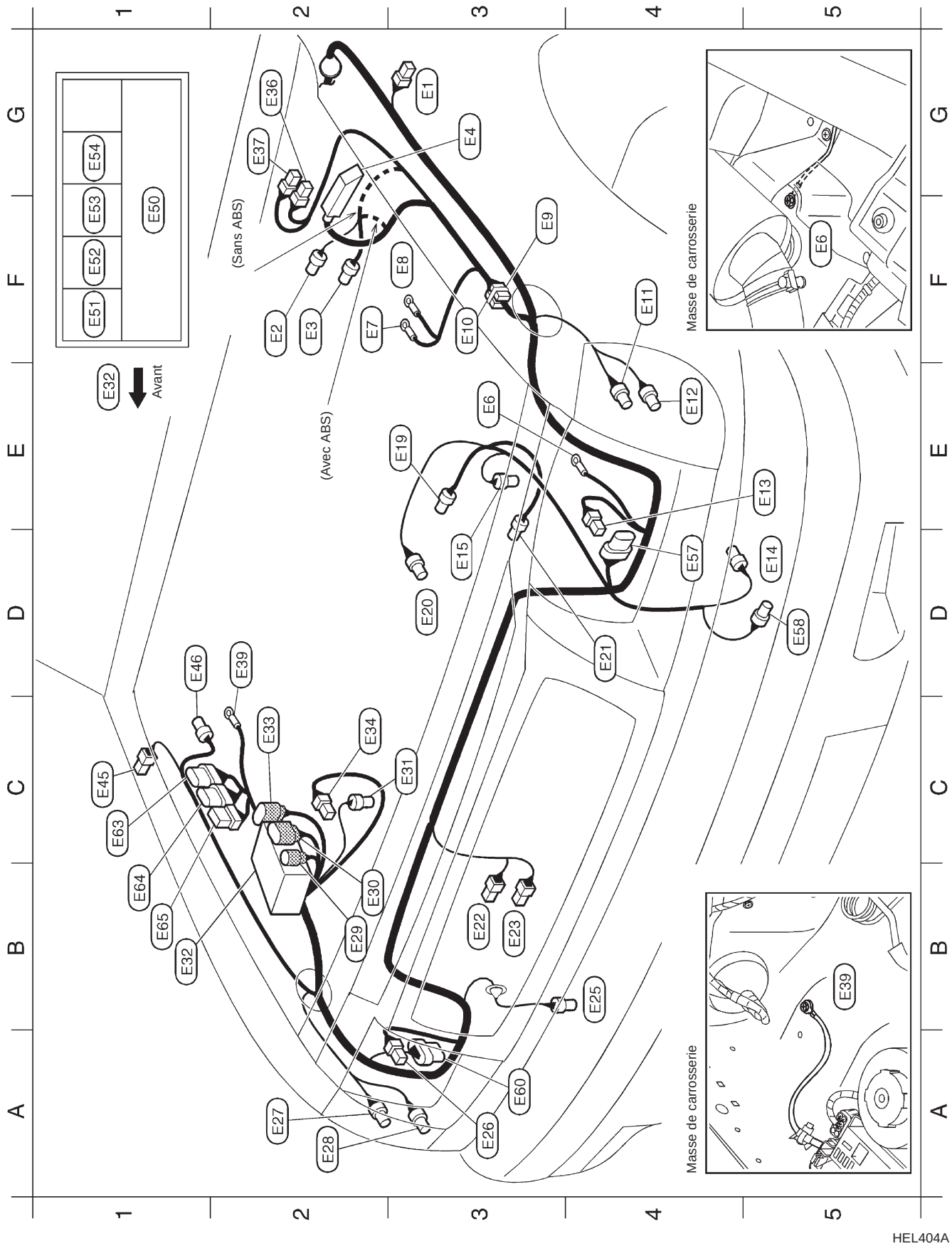

HEL404A

Simpo PDF Merge and Split Unregistered Version - http://www.simpopdf.com

G3	E1	B/2	:	Clignotant latéral gauche (pour l'Europe et la Chine)
F2	E2	GY/2	:	Contact de niveau de liquide de frein
F2	E3	GY/3	:	Sonde à oxygène chauffée (Moteur KA)
G3	E4	B/31	:	Actionneur ABS et boîtier électrique (pour l'ABS)
E3	E6	–	:	Masse de carrosserie
F2	E7	–	:	Bobine d'allumage (moteur NA et moteur Z)
F3	E8	–	:	Bobine d'allumage (moteur NA et moteur Z)
F3	E9	–/2	:	Résistance (moteur NA et moteur Z)
F3	E10	W/2	:	Condenseur (moteur NA et moteur Z)
F4	E11	GY/3	:	Feu combiné avant gauche (sauf pour l'Europe et la Chine)
E4	E12	BR/3	:	Feu combiné avant gauche (pour l'Europe et la Chine)
E5	E13	B/3	:	Phare gauche
D5	E14	GY/2	:	Moteur de lave-glace
D3	E15	BR/2	:	Capteur de roue avant gauche (pour l'ABS)
E3	E19	GY/3	:	Distributeur (moteur NA et moteur Z)
D3	E20	B/2	:	Electrovanne de commande de dépression (moteur NA)
D4	E21	B/1	:	Compresseur (moteur NA et moteur Z)
B3	E22	B/1	:	Avertisseur sonore (grave)
B3	E23	B/1	:	Avertisseur sonore (aigu)
B4	E25	B/4	:	Manocontact triple
A3	E26	B/3	:	Phare droit
A2	E27	GY/3	:	Feu combiné avant droit (sauf pour l'Europe et la Chine)
A2	E28	BR/3	:	Feu combiné avant droit (pour l'Europe et la Chine)
B2	E29	GY/2	:	Vers E204
B2	E30	B/8	:	Vers E203
C3	E31	GY/2	:	Capteur de roue avant droite (pour l'ABS)
B1	E32	–	:	Boîtier à relais (raccord à fusible et boîtier à fusibles)
C2	E33	GY/8	:	Vers E205
C2	E34	B/1	:	Batterie
G2	E36	B/1	:	Electrovanne de commande du pot ISC-FI (moteur NA et moteur Z)
G2	E37	B/1	:	Electrovanne de commande du pot ISC-FI (moteur NA et moteur Z)
D2	E39	–	:	Masse de carrosserie
C1	E45	B/2	:	Clignotant latéral droit (pour l'Europe et la Chine)
D1	E46	GY/3	:	Antenne électrique (pour le Moyen-Orient)
F1	E50	–	:	Boîte à fusibles et de raccords à fusibles
F1	E51	L/4	:	Relais de climatiseur
F1	E52	W/3	:	Relais d'avertisseur sonore
F1	E53	L/4	:	Relais de l'ECCS (moteur KA)
G1	E54	B/5	:	Relais de starter automatique (moteurs NA et Z)
		L/4	:	Relais de pompe d'alimentation (moteur KA)
D4	E57	GY/6	:	Moteur de réglage du faisceau de phare gauche (pour l'Europe)
D5	E58	GY/2	:	Moteur de lave-phare (pour l'Europe)
A3	E60	GY/6	:	Moteur de réglage du faisceau de phare droit (pour l'Europe)
C1	E63	GY/8	:	Centrale d'éclairage de jour (avec système d'éclairage de jour)
B1	E64	GY/6	:	Centrale d'éclairage de jour (avec système d'éclairage de jour)
B1	E65	W/6	:	Ampli. de lave-phares (pour l'Europe)

COMPARTIMENT PASSAGER

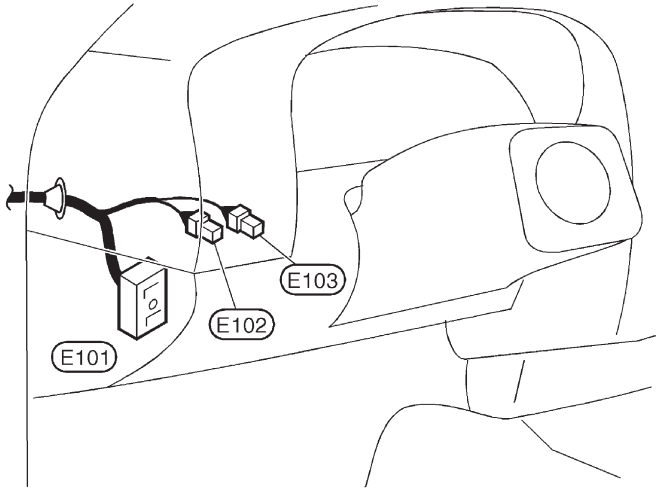

E101	SMJ	:	Vers M5
E102	W/4	:	Boîtier à fusibles
E103	B/2	:	Boîtier à fusibles

Résistance E9

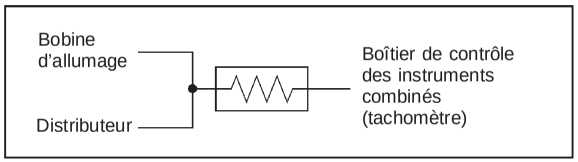

Condenseur E10

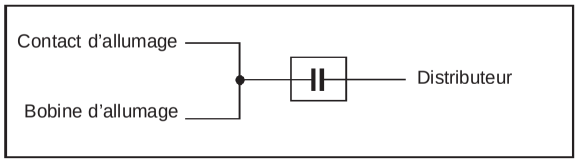

Simpo PDF Merge and Split Unregistered Version - http://www.simpopdf.com

Faisceau de compartiment moteur (Suite)

CONDUITE A GAUCHE – MOTEUR DIESEL

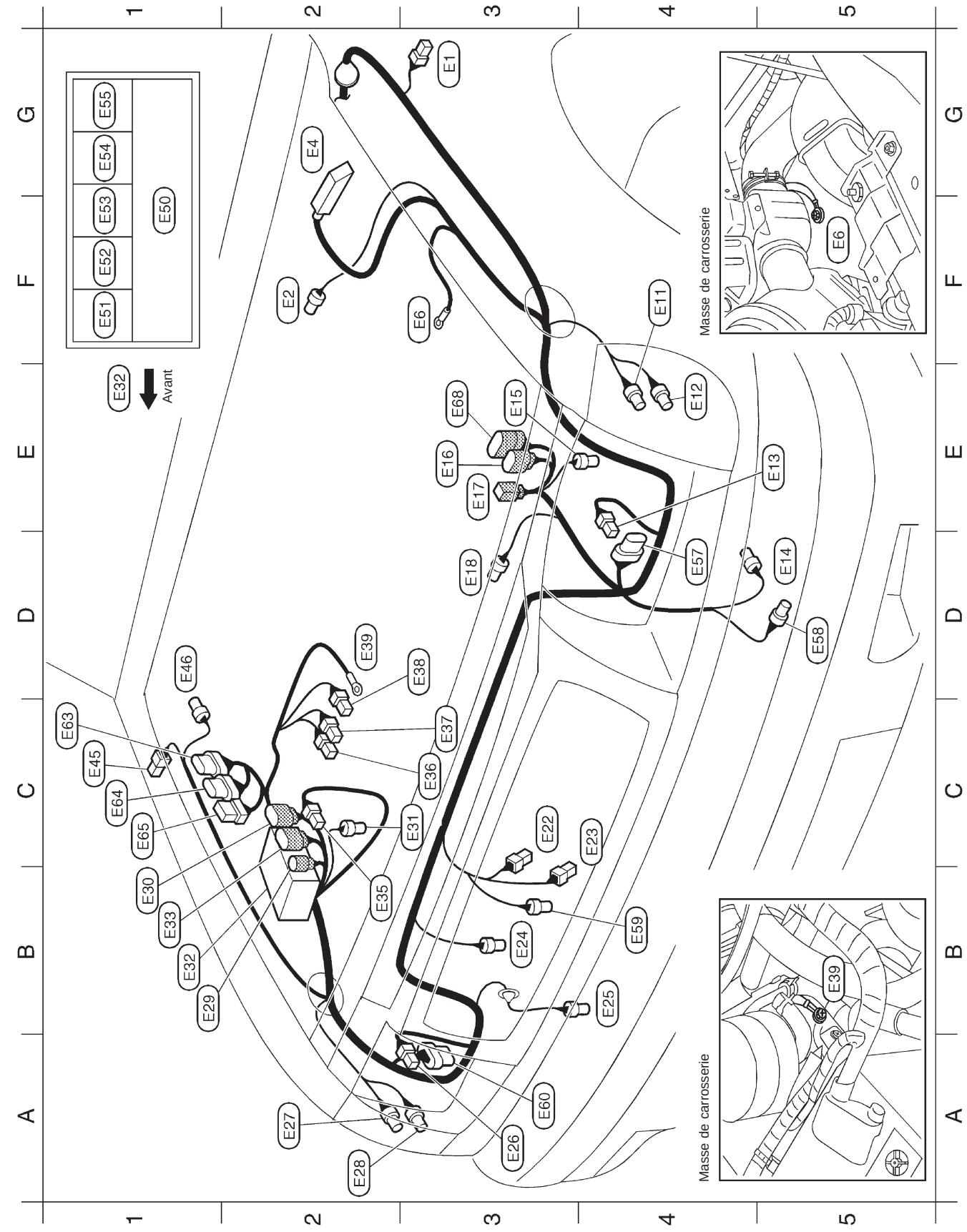

HEL406A

Simpo PDF Merge and Split Unregistered Version - http://www.simpopdf.com

Faisceau de compartiment moteur (Suite)

G3 (E1) B/2 : Clignotant latéral gauche (pour l'Europe)
F2 (E2) GY/2 : Contact de niveau de liquide de frein
G2 (E4) B/31 : Actionneur ABS et boîtier électrique (pour l'ABS)
F3 (E6) – : Masse de carrosserie
F4 (E11) GY/3 : Feu combiné avant gauche (sauf pour l'Europe)
E4 (E12) BR/3 : Feu combiné avant gauche (pour l'Europe)
E5 (E13) B/3 : Phare gauche
D5 (E14) GY/2 : Moteur de lave-glace
E3 (E15) BR/2 : Capteur de roue avant gauche (pour l'ABS)
E3 (E16) GY/8 : Vers (A3) (sauf pour l'Europe)
E3 (E17) B/2 : Vers (A2)
D3 (E18) GY/2 : Thermocontact (sauf moteur TD27 pour les régions froides et le moteur TD à 2 roues motrices avec coussin gonflable pour l'Europe)
C3 (E22) B/1 : Avertisseur sonore (grave)
C4 (E23) B/1 : Avertisseur sonore (aigu) (sauf moteur TD27 pour les régions froides)
B3 (E24) GY/2 : Moteur de ventilateur de refroidissement (sauf moteur TD27 pour les régions froides et le moteur TD à 2 roues motrices avec coussin gonflable pour l'Europe)
B4 (E25) B/4 : Manocontact triple
A3 (E26) B/3 : Phare droit
A2 (E27) GY/3 : Feu combiné avant droit (sauf pour l'Europe)
A2 (E28) BR/3 : Feu combiné avant droit (pour l'Europe)
B2 (E29) GY/2 : Vers (E204)
B1 (E30) B/8 : Vers (E203) (pour l'Europe)
C3 (E31) GY/2 : Capteur de roue avant droite (pour l'ABS)
B1 (E32) – : Boîtier à relais (raccord à fusible et boîtier à fusibles)
B1 (E33) GY/8 : Vers (E205)
B2 (E35) B/1 : Vers (E206)
C3 (E36) B/1 : Electrovanne FICD
C3 (E37) B/1 : Electrovanne FICD
D3 (E38) GY/1 : Commande d'alarme de dépression
D2 (E39) – : Masse de carrosserie
C1 (E45) B/2 : Clignotant latéral droit (pour l'Europe)
D1 (E46) GY/3 : Pas utilisé (pour l'Europe sauf 2 roues motrices avec ABS)
F1 (E50) – : Boîte à fusibles et de raccords à fusibles
F1 (E51) L/4 : Relais de climatiseur
F1 (E52) W/3 : Relais d'avertisseur sonore
F1 (E53) L/4 : Pas utilisé (pour l'Europe sauf 2 roues motrices avec ABS)
G1 (E54) L/4 : Pas utilisé (pour l'Europe sauf 2 roues motrices avec ABS)
G1 (E55) L/4 : Relais de ventilateur de refroidissement (sauf moteur TD27 pour les régions froides et le moteur TD à 2 roues motrices avec coussin gonflable pour l'Europe)

D4 (E57) GY/6 : Moteur de réglage du faisceau de phare gauche (pour l'Europe)
D5 (E58) GY/2 : Moteur de lave-phare (pour l'Europe)
B4 (E59) BR/2 : Pas utilisé (pour l'Europe sauf 2 roues motrices avec ABS)
A3 (E60) GY/6 : Moteur de réglage du faisceau de phare droit (pour l'Europe)
C1 (E63) GY/6 : Centrale d'éclairage de jour (avec système d'éclairage de jour)
C1 (E64) GY/8 : Centrale d'éclairage de jour (avec système d'éclairage de jour)
C1 (E65) W/6 : Ampli. de lave-phares (pour l'Europe)
E3 (E68) GY/10 : Vers (A13) (Pour l'Europe)

COMPARTIMENT PASSAGER

(E101) SMJ : Vers (M5)
(E102) W/4 : Boîtier à fusibles
(E103) B/2 : Boîtier à fusibles

HEL407A

Simpo PDF Merge and Split Unregistered Version - http://www.simpopdf.com

Faisceau de compartiment moteur (Suite)

CONDUITE A DROITE – MOTEUR A ESSENCE

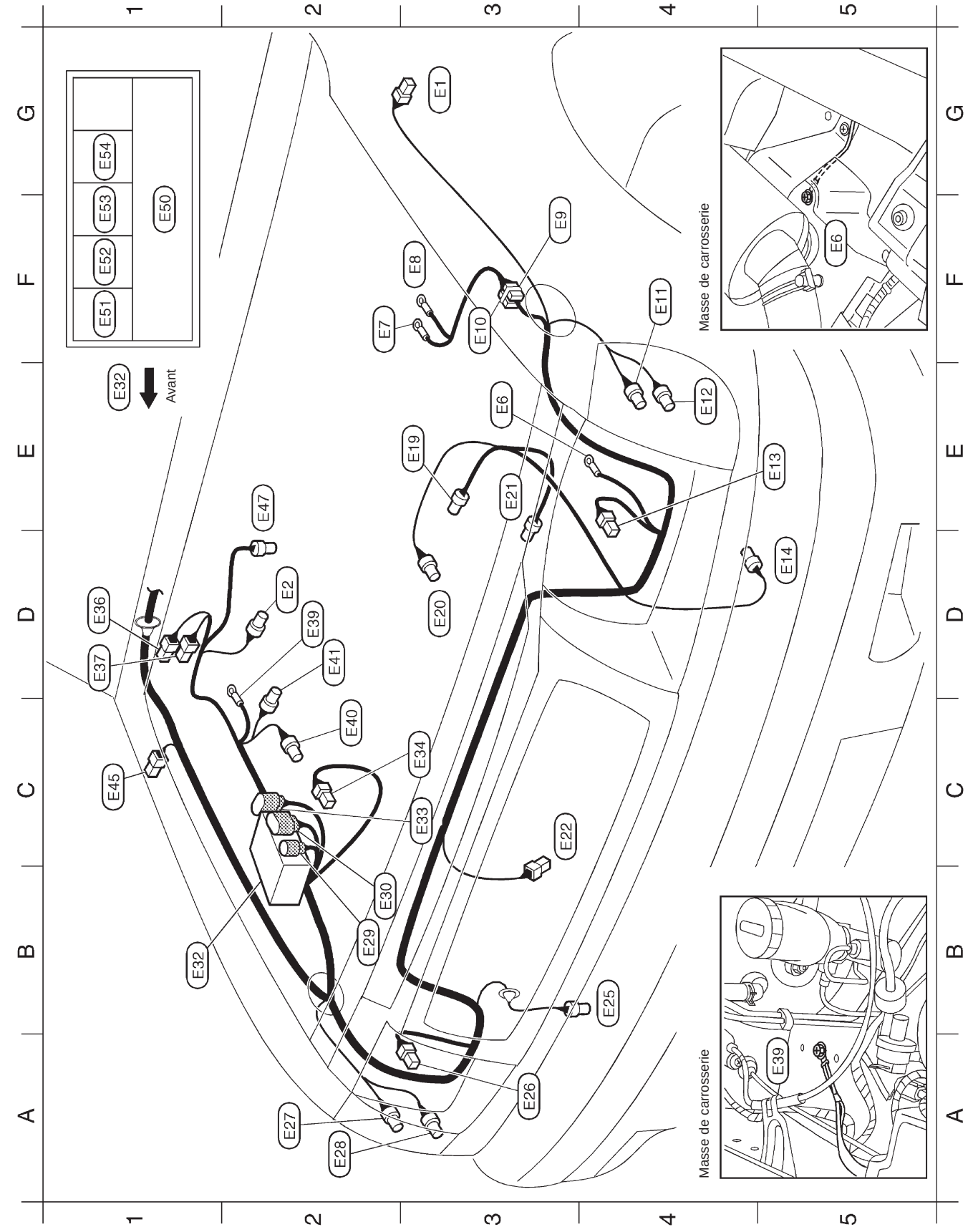

HEL862

Simpo PDF Merge and Split Unregistered Version - http://www.simpopdf.com

Faisceau de compartiment moteur (Suite)

G3 E1 B/2 : Clignotant latéral gauche (pour l'Australie)
D2 E2 GY/2 : Contact de niveau de liquide de frein
E3 E6 – : Masse de carrosserie
F2 E7 – : Bobine d'allumage (moteur NA et moteur Z)
F3 E8 – : Bobine d'allumage (moteur NA et moteur Z)
F3 E9 –/2 : Résistance (moteur NA et moteur Z)
F3 E10 W/2 : Condenseur (moteur NA et moteur Z)
F4 E11 GY/3 : Feu combiné avant gauche (sauf pour l'Australie)
E4 E12 BR/3 : Feu combiné avant gauche (pour l'Australie)
E5 E13 B/3 : Phare gauche
D5 E14 GY/2 : Moteur de lave-glace
E3 E19 GY/3 : Distributeur (moteur NA et moteur Z)
D3 E20 B/2 : Electrovanne de commande de dépression (moteur NA)
D4 E21 B/1 : Compresseur (sauf pour l'Australie)
B3 E22 B/1 : Avertisseur sonore (grave)
B4 E25 B/4 : Manocontact triple
A3 E26 B/3 : Phare droit
A2 E27 GY/3 : Feu combiné avant droit (sauf pour l'Australie)
A2 E28 BR/3 : Feu combiné avant droit (pour l'Australie)
B2 E29 GY/2 : Vers E204
B2 E30 B/8 : Vers E203
B1 E32 – : Boîtier à relais (raccord à fusible et boîtier à fusibles)
C3 E33 GY/8 : Vers E205
C2 E34 B/1 : Batterie
D1 E36 B/01 : Electrovanne de commande du pot ISC-FI (sauf pour l'Australie)
D1 E37 B/1 : Electrovanne de commande du pot ISC-FI (sauf pour l'Australie)
D2 E39 – : Masse de carrosserie
Cé E40 BR/2 : Electrovanne de commande de retour de carburant (moteur NA)
D2 E41 GY/2 : Contact à dépression (moteur NA)
C1 E45 B/2 : Clignotant latéral droit (pour l'Australie)
E2 E47 GY/3 : Carburateur (moteur NA et moteur Z)
F1 E50 – : Boîte à fusibles et de raccords à fusibles
F1 E51 L/4 : Relais de climatiseur
F1 E52 W/3 : Relais d'avertisseur sonore
F1 E53 L/4 : Relais de l'ECCS (moteur KA)
G1 E54 B/5 : Relais de starter automatique (moteur NA et moteur Z)
L/4 : Relais de pompe d'alimentation (moteur KA)

HEL863

Simpo PDF Merge and Split Unregistered Version - http://www.simpopdf.com

Faisceau de compartiment moteur (Suite)

CONDUITE A DROITE – MOTEUR DIESEL

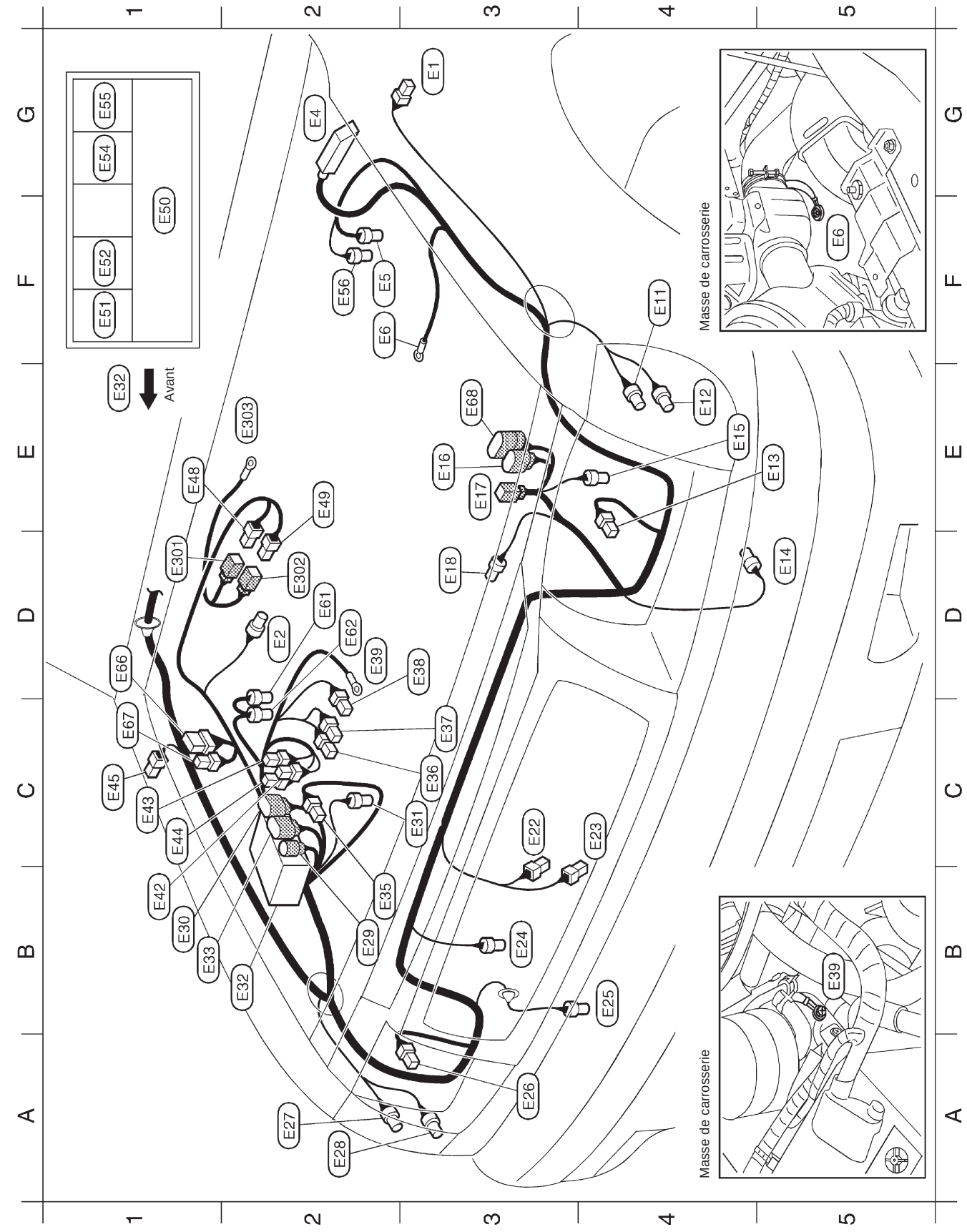

HEL408A

Simpo PDF Merge and Split Unregistered Version - http://www.simpopdf.com

G3	E1	B/2	:	Clignotant latéral gauche (pour l'Australie)
D2	E2	GY/2	:	Contact de niveau de liquide de frein
G2	E4	B/31	:	Actionneur ABS et boîtier électrique (pour l'ABS)
F2	E5	BR/2	:	Contact de filtre à carburant
F2	E6	–	:	Masse de carrosserie
F4	E11	GY/3	:	Feu combiné avant gauche (sauf pour l'Europe et l'Australie)
E4	E12	BR/3	:	Feu combiné avant gauche (pour l'Europe et l'Australie)
E5	E13	B/3	:	Phare gauche
D5	E14	GY/2	:	Moteur de lave-glace
E4	E15	BR/2	:	Capteur de roue avant gauche (pour l'ABS)
E3	E16	GY/8	:	Vers A3 (sauf pour l'Europe)
E3	E17	B/2	:	Vers A2
D3	E18	GY/2	:	Thermocontact (moteur TD25 sauf 2 roues motrices avec ABS et moteur QD)
C3	E22	B/1	:	Avertisseur sonore (grave)
C4	E23	B/1	:	Avertisseur sonore (aigu) (pour l'Europe)
B3	E24	GY/2	:	Moteur de ventilateur de refroidissement (moteur TD25 sauf 2 roues motrices avec ABS et moteur QD)
B4	E25	B/4	:	Manocontact triple
A3	E26	B/3	:	Phare droit
A2	E27	GY/3	:	Feu combiné avant droit (sauf pour l'Europe et l'Australie)
A2	E28	BR/3	:	Feu combiné avant droit (pour l'Europe et l'Australie)
B2	E29	GY/2	:	Vers E204
B1	E30	B/8	:	Vers E203 (pour l'Europe)
C3	E31	GY/2	:	Capteur de roue avant droite (Pour l'ABS)
B2	E32	–	:	Boîtier à relais (raccord à fusible et boîtier à fusibles)
B1	E33	GY/8	:	Vers E205
B2	E35	B/1	:	Vers E206
C3	E36	B/1	:	Electrovanne FICD
C3	E37	B/1	:	Electrovanne FICD
D3	E38	GY/1	:	Commande d'alarme de dépression (sauf pour l'Australie)
D2	E39	–	:	Masse de carrosserie
B1	E42	W/1	:	Relais 1 de préchauffage
C1	E43	W/1	:	Relais 1 de préchauffage
C1	E44	G/2	:	Relais 1 de préchauffage
C1	E45	B/2	:	Clignotant latéral droit (pour l'Europe et l'Australie)
E1	E48	B/1	:	Vers E301 (moteur QD)
E2	E49	L/2	:	Vers E302 (moteur TD)
F1	E50	–	:	Boîte à fusibles et de raccords à fusibles
F1	E51	L/4	:	Relais de climatiseur
F1	E52	W/3	:	Relais d'avertisseur sonore
G1	E54	L/4	:	Relais de dispositif de chauffage de carburant (pour l'Europe)
G1	E55	L/4	:	Relais de ventilateur de refroidissement (moteur TD25 sauf 2 roues motrices avec ABS et moteur QD)
F2	E56	GY/4	:	Filtre à carburant (pour dispositif de chauffage de carburant) (pour l'Europe)
D2	E61	B/2	:	Electrovanne EGRC (chambre de papillon) (pour l'Europe)
D2	E62	BR/2	:	Electrovanne EGRC (Vanne EGR) (pour l'Europe)
D1	E66	GY/¶	:	Centrale de commande de mise en veilleuse (pour l'Europe)
C1	E67	GY/4	:	Centrale de commande de mise en veilleuse (pour l'Europe)
E3	E68	GY/3	:	Vers A13 (pour l'Europe)

COMPARTIMENT PASSAGER

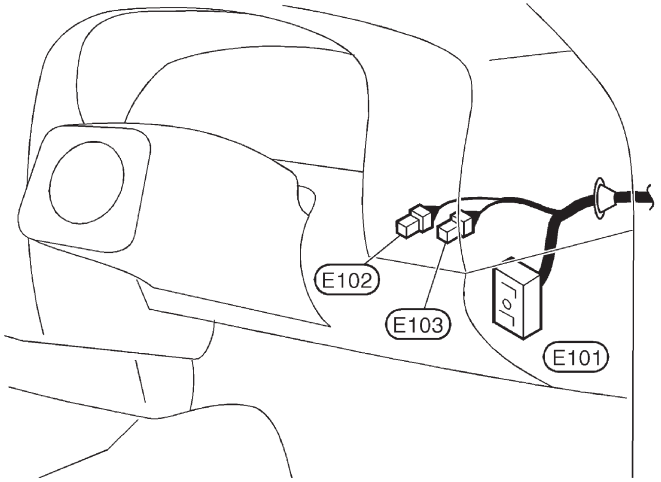

E101	SMJ	:	Vers M5	
E102	W/4	:	Boîtier à fusibles	
E103	B/2	:	Boîtier à fusibles	

Faisceau auxiliaire

D1	E301	B/1	:	Vers E48 (moteur QD)
D2	E302	L/2	:	Vers E49 (moteur TD)
E2	E303	–	:	Bougie de préchauffage

Simpo PDF Merge and Split Unregistered Version - http://www.simpopdf.com

Faisceau de commande du moteur

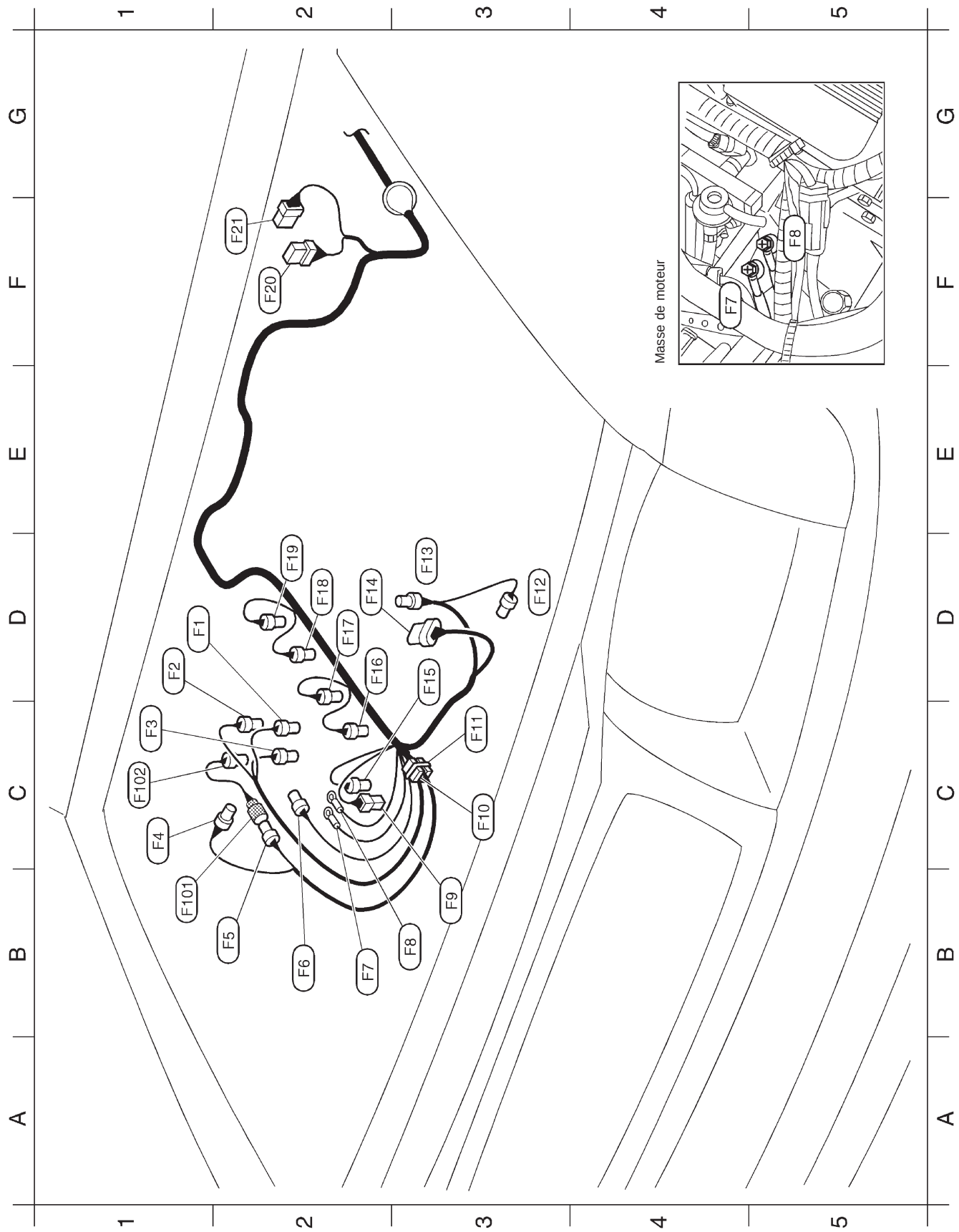

HEL866

Simpo PDF Merge and Split Unregistered Version - http://www.simpopdf.com

D1	F1	BR/2	:	Electrovanne de contrôle de vanne de commande de tourbillon
D1	F2	B/2	:	Electrovanne de commande de purge de cartouche EVAP
C1	F3	GY/4	:	Vanne IACV-AAC · Electrovanne FICD
C1	F4	GY/3	:	Débitmètre d'air
B2	F5	GY/3	:	Vers F101
B2	F6	GY/2	:	Capteur de température d'air d'admission
B2	F7	–	:	Masse de moteur
B3	F8	–	:	Masse de moteur
B3	F9	B/1	:	Transmetteur thermique
C3	F10	W/2	:	Condenseur
C3	F11	–/2	:	Resistance
D3	F12	B/1	:	Pas utilisé
D3	F13	GY/2	:	Distributeur
D2	F14	GY/6	:	Distributeur
D3	F15	GY/2	:	Capteur de température du réfrigérant moteur
D2	F16	B/2	:	Injecteur n° 1
D2	F17	B/2	:	Injecteur n° 2
D2	F18	B/2	:	Injecteur n° 3
D2	F19	B/2	:	Injecteur n° 4
F2	F20	GY/8	:	Amplificateur d'essuie-glace ou connecteur volant
F2	F21	W/6	:	Moteur de l'essuie-glace
	F51	GY/8	:	ECM (boîtier de contrôle de l'ECCS)
	F52	–	:	Masse de carrosserie
	F53	GY/6	:	Connecteur de raccord
	F54	W/24	:	Vers M48
	F55	W/10	:	Vers M47

Faisceau auxiliaire

B1	F101	GY/3	:	Vers F5
C1	F102	BR/3	:	Capteur de position de papillon

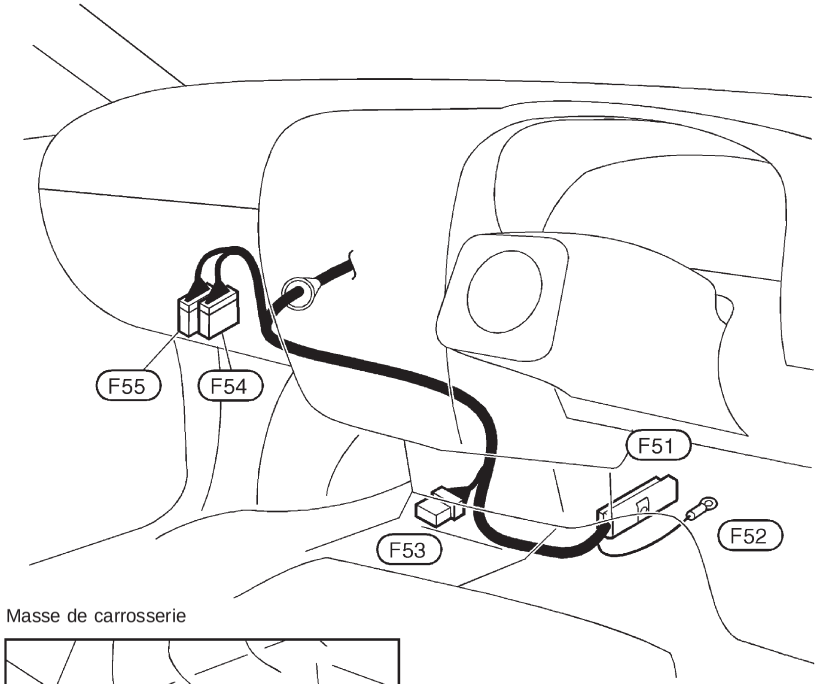

Masse de carrosserie

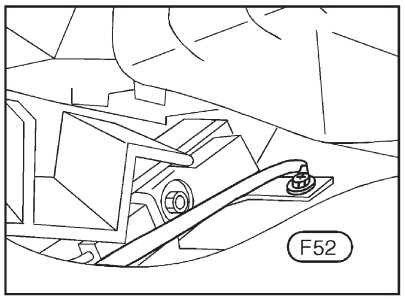

Résistance F11

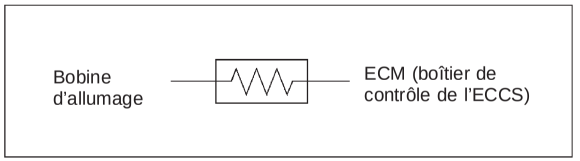

Condenseur F10

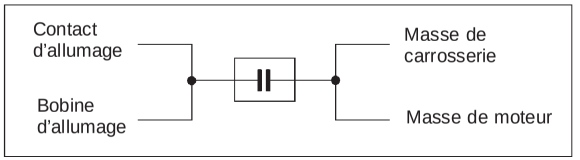

HEL867

Simpo PDF Merge and Split Unregistered Version - http://www.simpopdf.com

Faisceau de moteur

MOTEUR KA

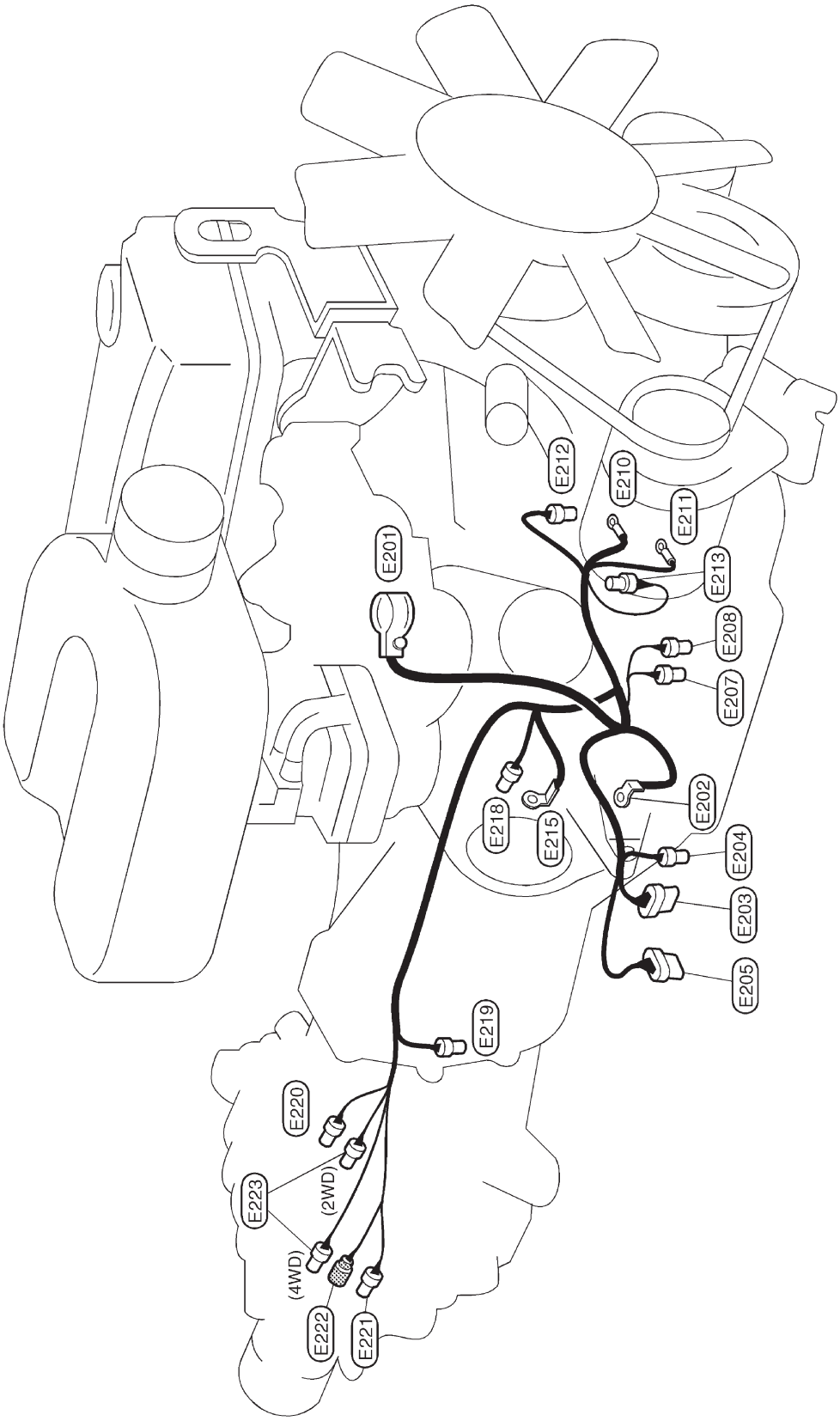

E201 : – : Batterie
E202 : – : Boîte à fusibles et de raccords à fusibles
E203 : B/8 : Vers E30
E204 : GY/2 : Vers E29
E205 : GY/8 : Vers E33
E207 : GY/2 : Manocontact d'huile de direction assistée (modèles à 4 roues motrices, c. à d.)
E208 : B/2 : Manocontact d'huile de direction assistée (sauf modèles à 4 roues motrices, c. à d.)
E210 : – : Alternateur (B)
E211 : – : Alternateur (E)
E212 : GY/2 : Alternateur (S, L)

E213 : B/1 : Manocontact d'huile
E215 : – : Démarreur
E218 : GY/1 : Démarreur
E219 : GY/2 : Contact de feux de recul
E220 : B/2 : Contact de point mort
E221 : GY/1 : Contact de transfert (modèles 4 roues motrices)
E222 : GY/1 : Contact de transfert (modèles 4 roues motrices)
E223 : GY/2 : Capteur de vitesse du véhicule

HEL870

Simpo PDF Merge and Split Unregistered Version - http://www.simpopdf.com

Faisceau de moteur (Suite)

MOTEUR TD

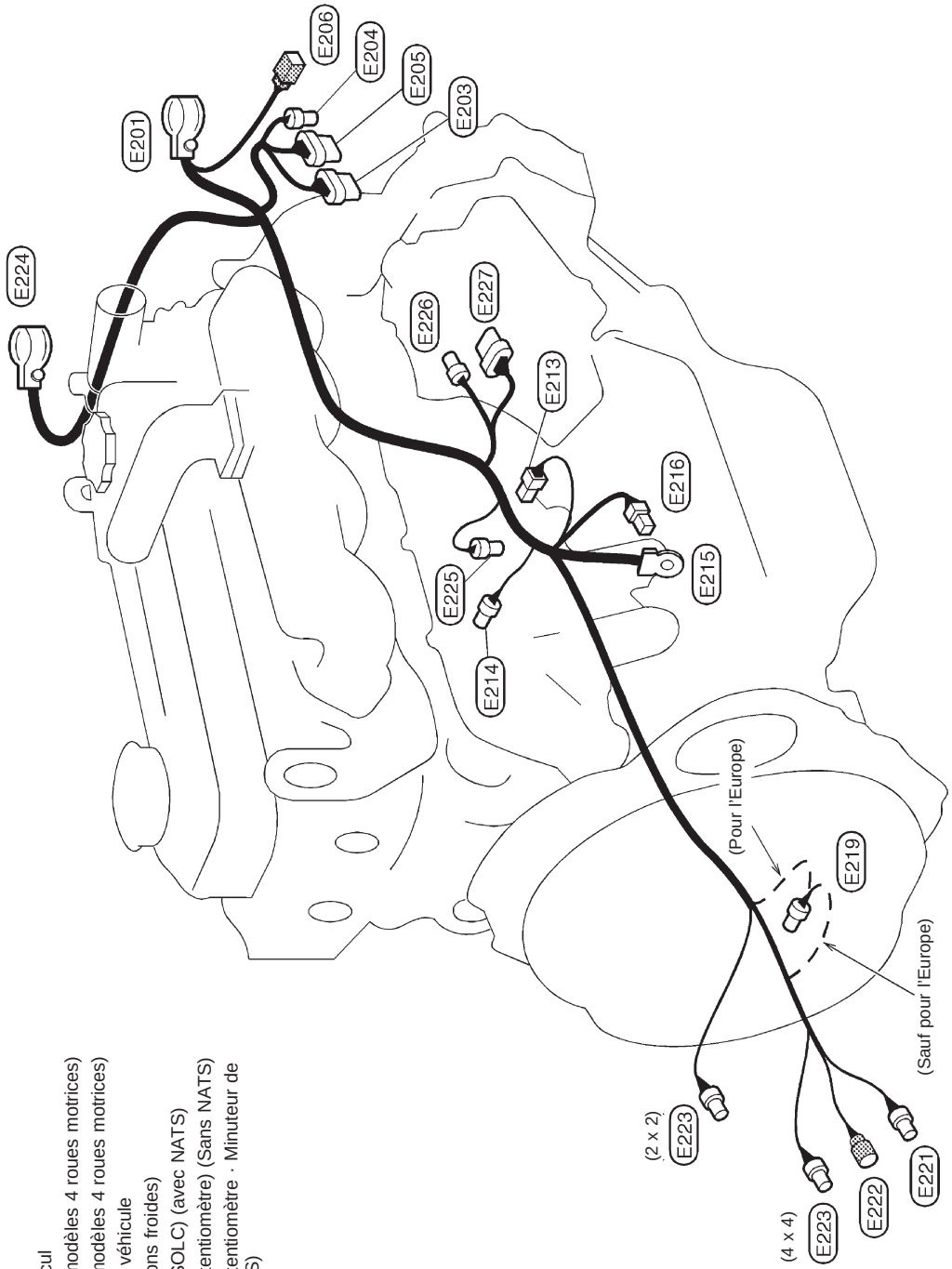

E201	–	Batterie
E203	B/8	Vers E30
E204	GY/2	Vers E29
E205	GY/8	Vers E33
E206	B/1	Vers E35
E213	B/1	Manocontact d'huile (pour témoin lumineux)
E214	GY/2	Pompe à injection (électrovanne de coupure d'alimentation · Minuterie du solénoïde) (sans NATS)
E215	–	Démarreur
E216	B/1	Démarreur
E219	GY/2	Contact de feux de recul
E221	GY/1	Contact de transfert (modèles 4 roues motrices)
E222	GY/1	Contact de transfert (modèles 4 roues motrices)
E223	GY/2	Capteur de vitesse du véhicule
E224	–	Batterie (pour les régions froides)
E225	B/3	Pompe à injection (MSOLC) (avec NATS)
E226	GY/3	Pompe à injection (potentiomètre) (Sans NATS)
E227	GY/6	Pompe à injection (potentiomètre · Minuteur de solénoïde) (avec NATS)

HEL410A

Simpo PDF Merge and Split Unregistered Version - http://www.simpopdf.com

Faisceau d'alternateur

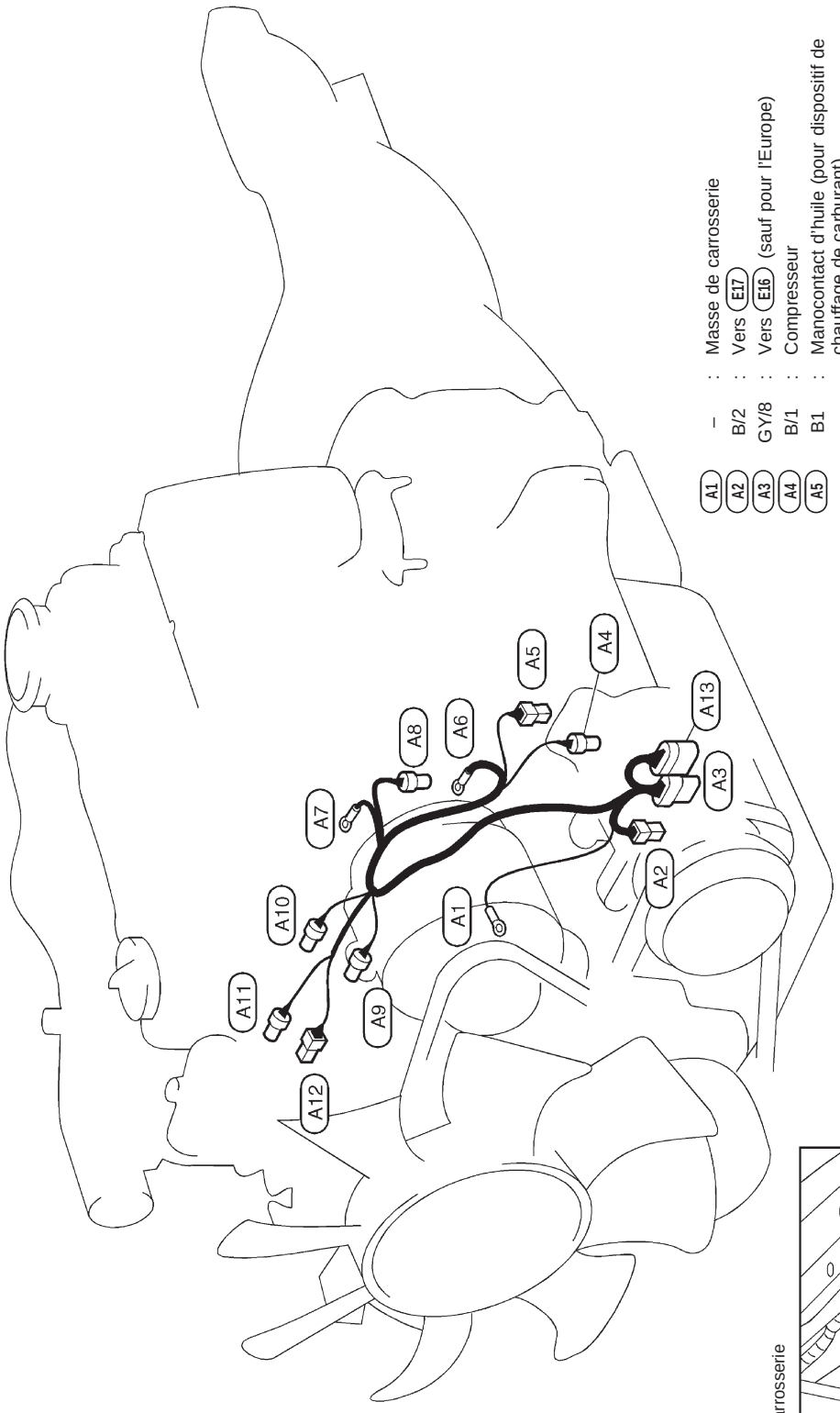

A1	–	:	Masse de carrosserie
A2	B/2	:	Vers E17
A3	GY/8	:	Vers E16 (sauf pour l'Europe)
A4	B/1	:	Compresseur
A5	B1	:	Manocontact d'huile (pour dispositif de chauffage de carburant)
A6	–	:	Alternateur (B)
A7	–	:	Alternateur (E)
A8	GY/2	:	Alternateur (S, L)
A9	GY/2	:	Pas utilisé (sauf pour l'Europe)
A10	BR/2	:	Capteur de régime
A11	GY/2	:	Capteur de température du réfrigérant moteur
A12	B/1	:	Transmetteur thermique
A13	GY/10	:	Vers E68 (pour l'Europe)

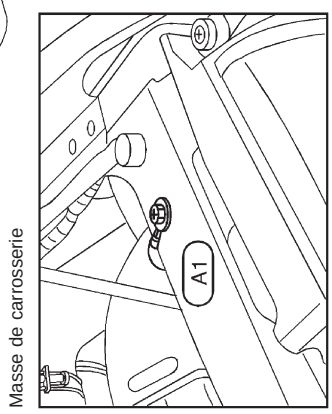

HEL411A

Simpo PDF Merge and Split Unregistered Version - http://www.simpopdf.com

CONDUITE A GAUCHE

Faisceau d'instruments

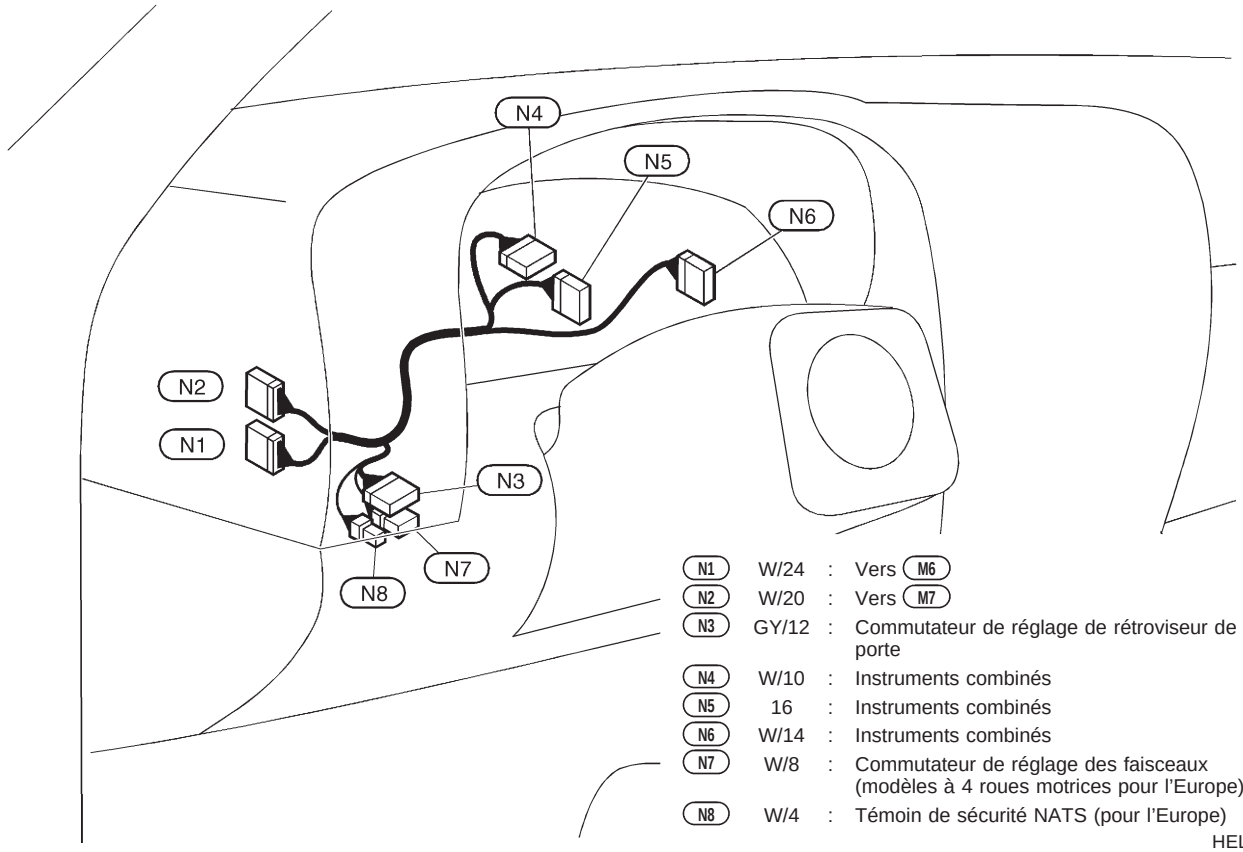

N1	W/24	:	Vers M6
N2	W/20	:	Vers M7
N3	GY/12	:	Commutateur de réglage de rétroviseur de porte
N4	W/10	:	Instruments combinés
N5	16	:	Instruments combinés
N6	W/14	:	Instruments combinés
N7	W/8	:	Commutateur de réglage des faisceaux (modèles à 4 roues motrices pour l'Europe)
N8	W/4	:	Témoin de sécurité NATS (pour l'Europe)

HEL412A

CONDUITE A DROITE

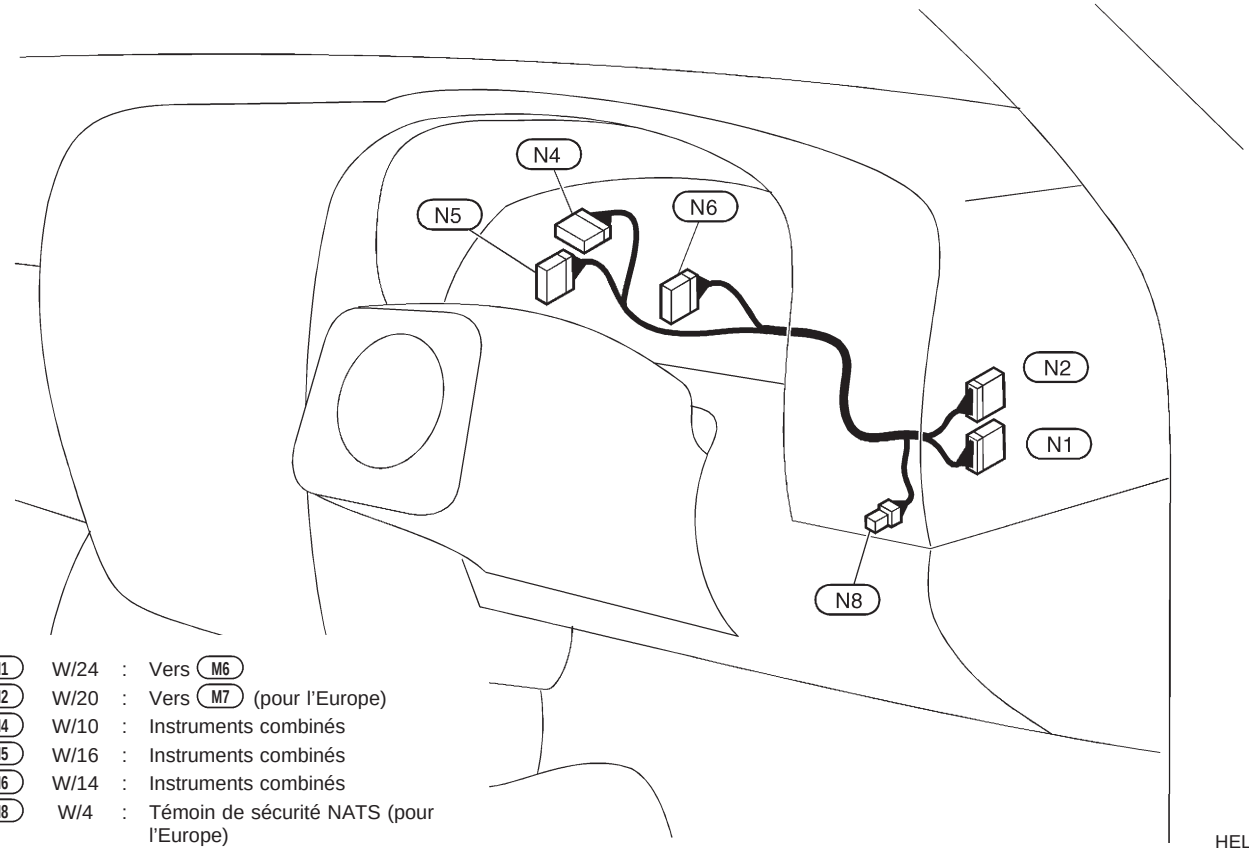

N1	W/24	:	Vers M6
N2	W/20	:	Vers M7 (pour l'Europe)
N4	W/10	:	Instruments combinés
N5	W/16	:	Instruments combinés
N6	W/14	:	Instruments combinés
N8	W/4	:	Témoin de sécurité NATS (pour l'Europe)

HEL413A

Simpo PDF Merge and Split Unregistered Version - http://www.simpopdf.com

Faisceau de plafonnier/Conduite à gauche

CABINE SIMPLE ET GRANDE CABINE

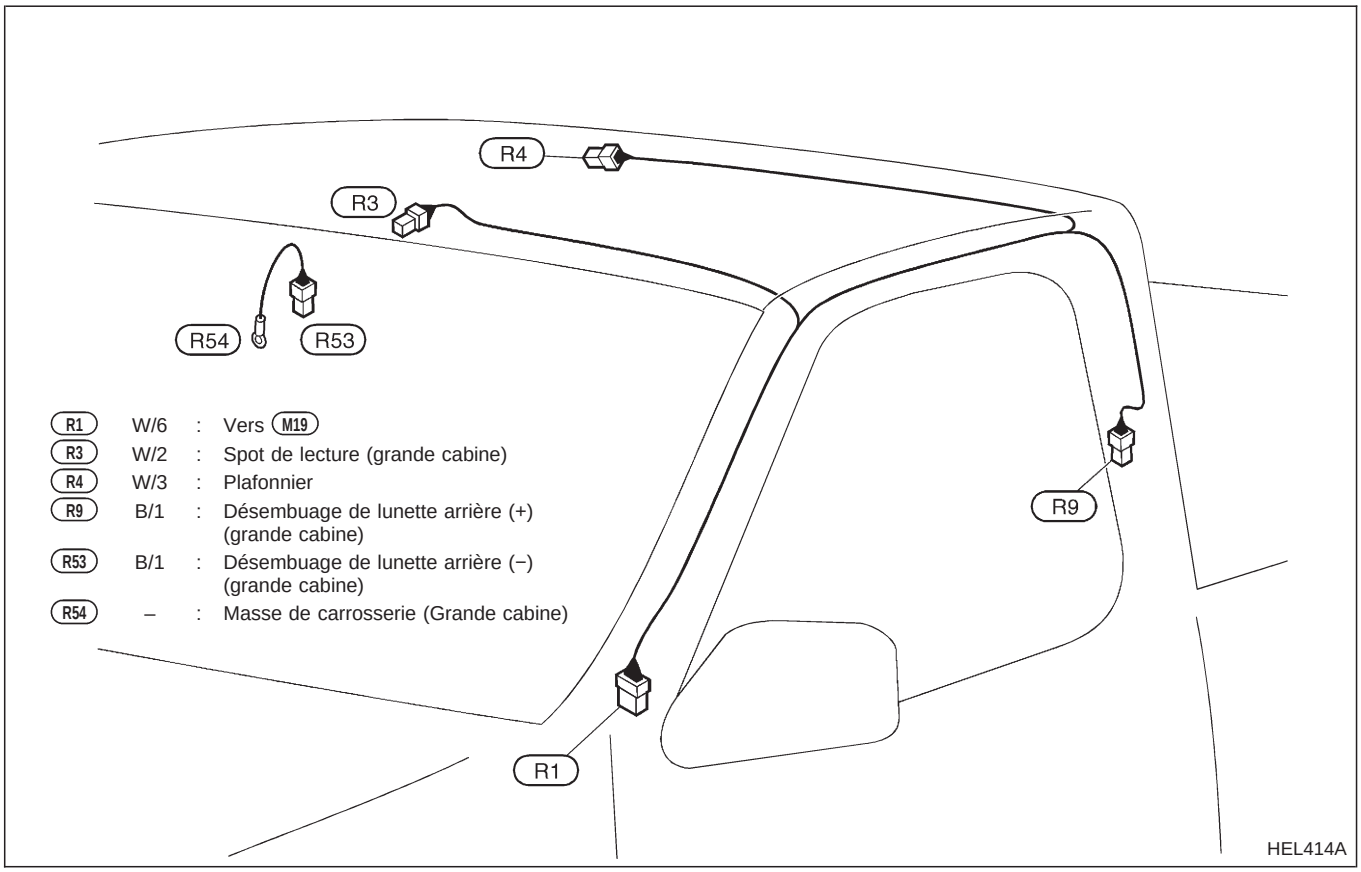

R1	W/6	:	Vers M19
R3	W/2	:	Spot de lecture (grande cabine)
R4	W/3	:	Plafonnier
R9	B/1	:	Désembuage de lunette arrière (+) (grande cabine)
R53	B/1	:	Désembuage de lunette arrière (−) (grande cabine)
R54	–	:	Masse de carrosserie (Grande cabine)

CABINE DOUBLE

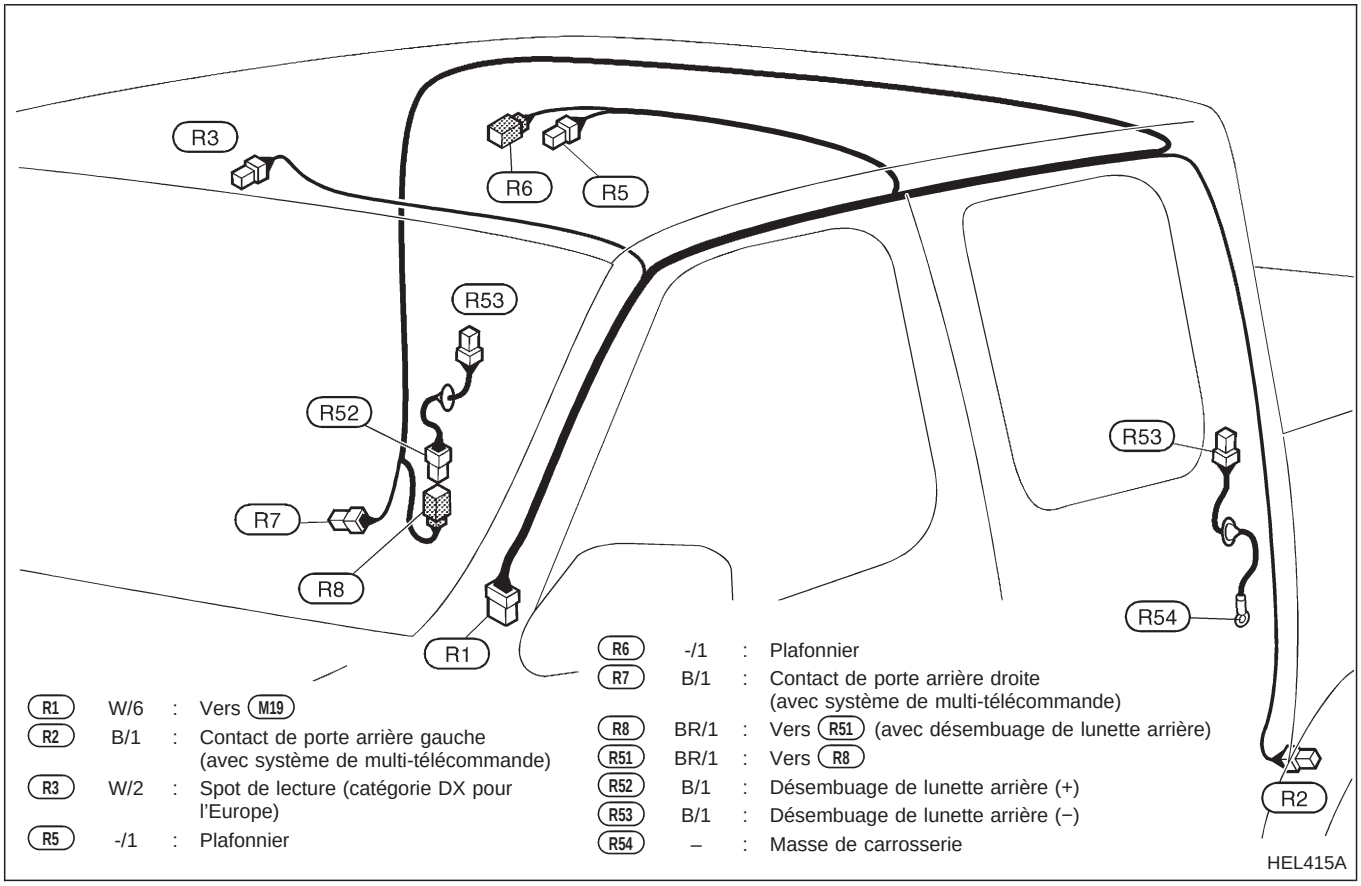

R1	W/6	:	Vers M19
R2	B/1	:	Contact de porte arrière gauche (avec système de multi-télécommande)
R3	W/2	:	Spot de lecture (catégorie DX pour l'Europe)
R5	-/1	:	Plafonnier
R6	-/1	:	Plafonnier
R7	B/1	:	Contact de porte arrière droite (avec système de multi-télécommande)
R8	BR/1	:	Vers R51 (avec désembuage de lunette arrière)
R51	BR/1	:	Vers R8
R52	B/1	:	Désembuage de lunette arrière (+)
R53	B/1	:	Désembuage de lunette arrière (−)
R54	–	:	Masse de carrosserie

Simpo PDF Merge and Split Unregistered Version - http://www.simpopdf.com

Faisceau de plafonnier/Conduite à droite

CABINE SIMPLE ET GRANDE CABINE

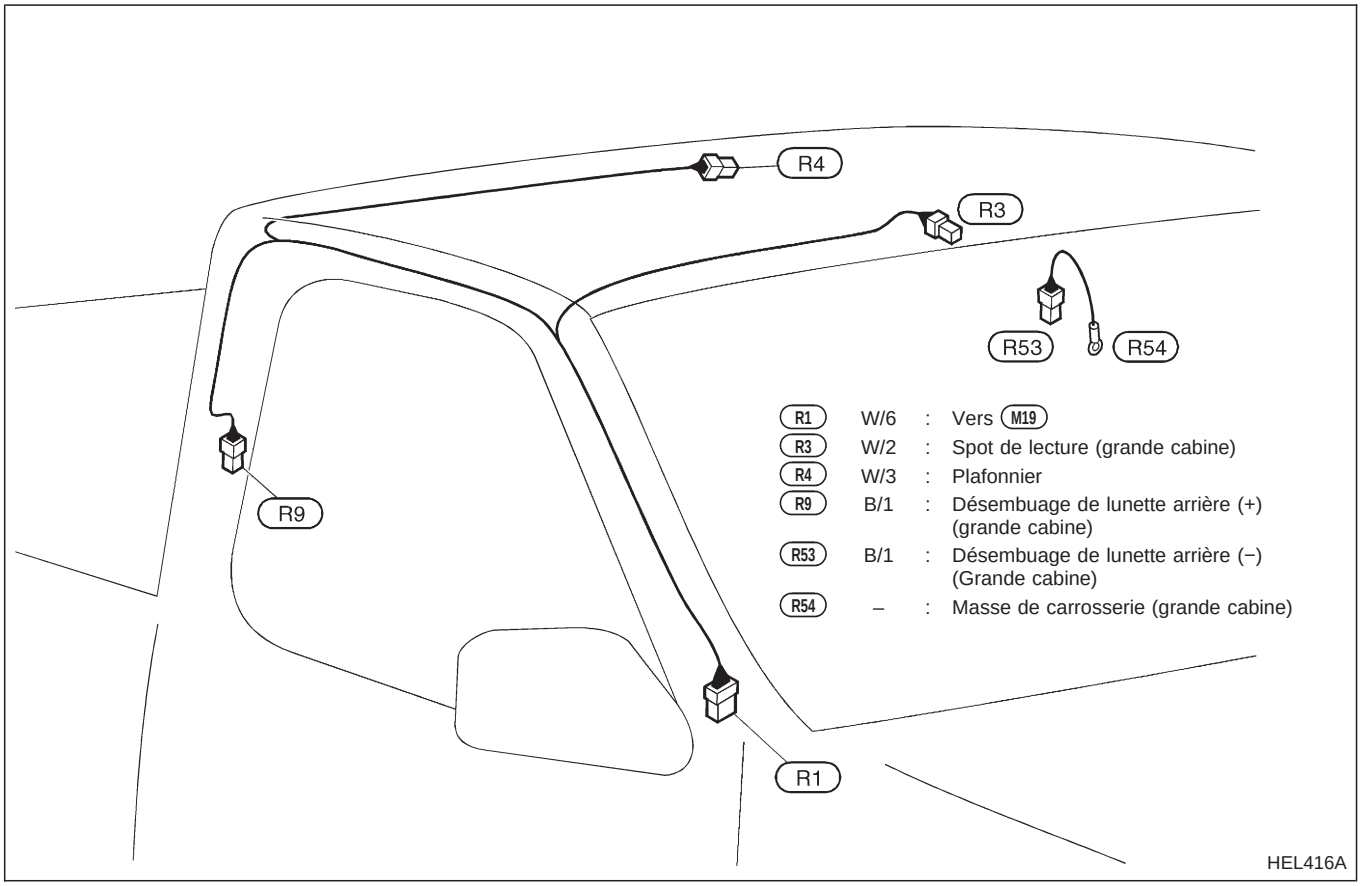

CABINE DOUBLE

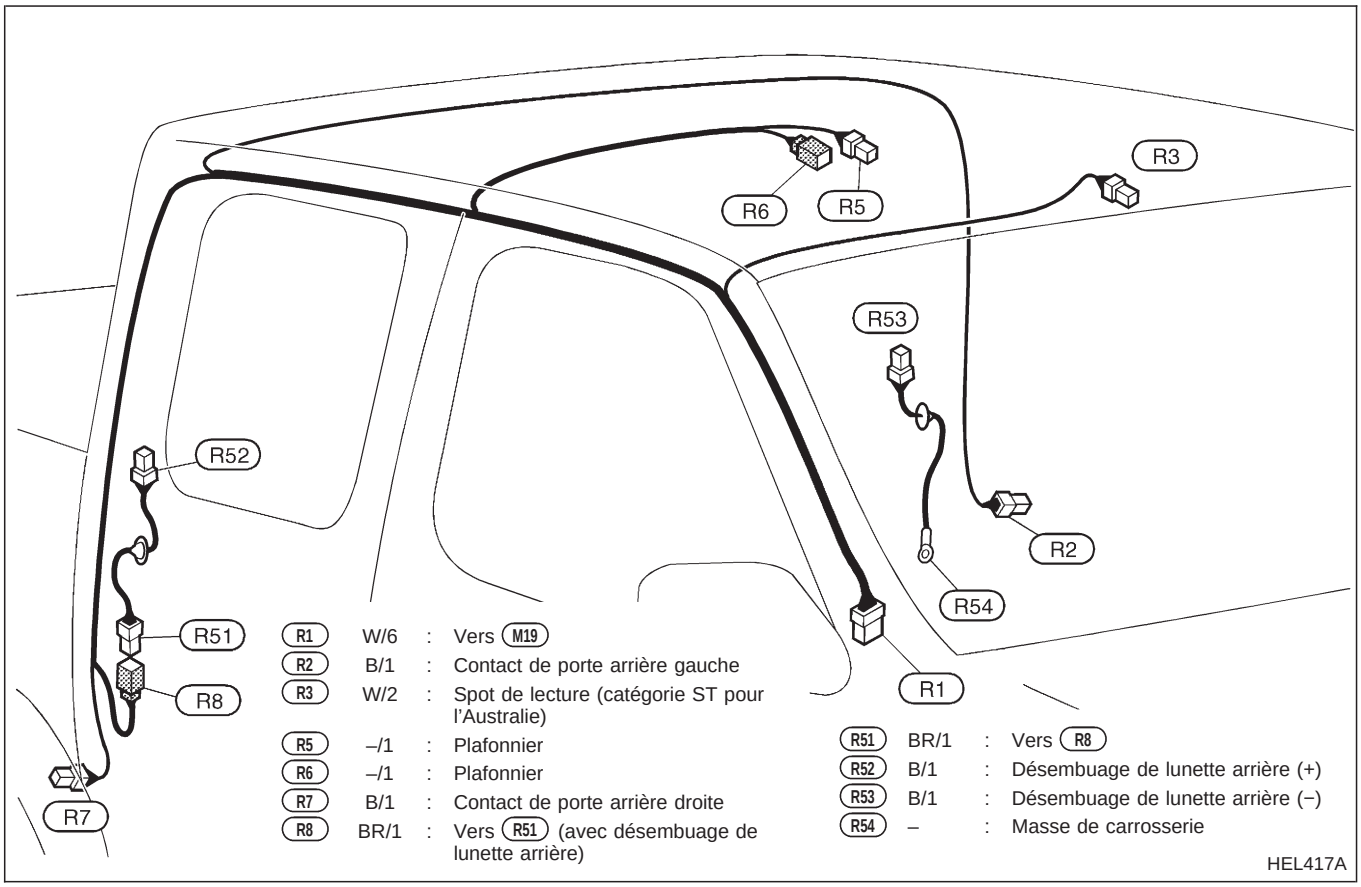

Simpo PDF Merge and Split Unregistered Version - http://www.simpopdf.com

Faisceau de châssis et faisceau arrière

Faisceau de châssis

C1	W/12	:	Vers M111 (sauf pour l'Europe)
C2	W/6	:	Vers M112 (avec ABS)
C3	GY/6	:	Jauge de réservoir à carburant (avec pompe d'alimentation électrique)
C4	GY/3	:	Jauge de réservoir à carburant (avec pompe d'alimentation mécanique)
C4	GY/4	:	Vers le faisceau auxiliaire de capteur de roue arrière (pour l'ABS) (modèles 4 roues motrices)
C6	GY/2	:	Capteur de roue arrière (pour l'ABS) (2 roues motrices)
C7	GY/8	:	Vers T4
C8	T/2	:	Vers T11 (pour l'Europe)
C9	W/16	:	Vers M121 (pour l'Europe)

Faisceau de feux arrière

T1	W/6	:	Feu combiné arrière droit (modèles à châssis A, et sauf pour l'Europe et l'Australie)
T2	W/8	:	Feu combiné arrière droit (pour l'Europe, l'Australie et la Chine sauf modèles avec châssis A)
T3	GY/2	:	Eclairage de plaque minéralogique droit (avec protection de marchepied)
T4	GY/8	:	Vers C7
T5	GY/2	:	Eclairage de plaque minéralogique droit (sans protection de marchepied)
T6	GY/2	:	Eclairage de plaque minéralogique gauche (sans protection de marchepied)
T7	B/2	:	Eclairage de plaque minéralogique gauche (avec protection de marchepied)
T8	W/6	:	Feu combiné arrière gauche (modèles à châssis A, et sauf pour l'Europe et l'Australie)
T9	W/8	:	Feu combiné arrière gauche (pour l'Europe, l'Australie et la Chine sauf modèles avec châssis A)
T10	GY/2	:	Feu antibrouillard arrière (conduite à droite avec châssis A pour l'Europe)
T11	B/2	:	Vers C8 (pour l'Europe)
T12	GY/2	:	Feu antibrouillard arrière (modèles à châssis A, conduite à gauche)

HEL418A

Simpo PDF Merge and Split Unregistered Version - http://www.simpopdf.com

CONDUITE A GAUCHE

Faisceau de porte avant (côté gauche)

- D1 W/12 : Vers M3
- D2 W/12 : Vers M4 (avec lève-glace électrique)
- D3 BR/2 : Haut-parleur avant
- D4 GY/5 : Actionneur de rétroviseur de porte (modèles à cabine double et grande cabine avec lève-glace électrique)
- D5 W/16 : Interrupteur principal de lève-glace (avec lève-glace électrique arrière et avant)
- D6 W/12 : Interrupteur principal de lève-glace (avec lève-glace électrique avant seulement)
- D7 B/2 : Régulateur de lève-glace (avec lève-glace électrique)
- D8 GY/2 : Contact de bouton de verrouillage (avec système de verrouillage électrique des portes sans système de multi-télécommande)
- D9 BR/3 : Pas utilisé (avec système de multi-télécommande)
- D10 GY/4 : Actionneur de verrouillage de porte (avec système de multi-télécommande)

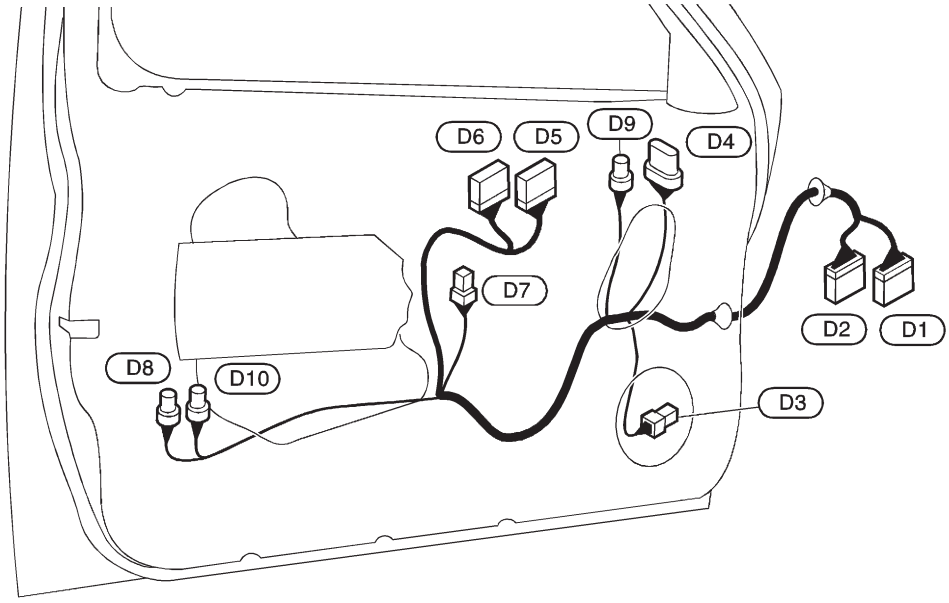

HEL419A

CONDUITE A DROITE

- D31 W/12 : Vers M49
- D32 W/6 : Vers M50 (avec lève-glace électrique)
- D33 BR/2 : Haut-parleur avant
- D35 W/8 : Interrupteur auxi. de lève-glace (avec lève-glace électrique)
- D37 B/2 : Régulateur de lève-glace (avec lève-glace électrique)
- D38 GY/4 : Actionneur de verrouillage de porte (avec système de verrouillage électrique des portes)

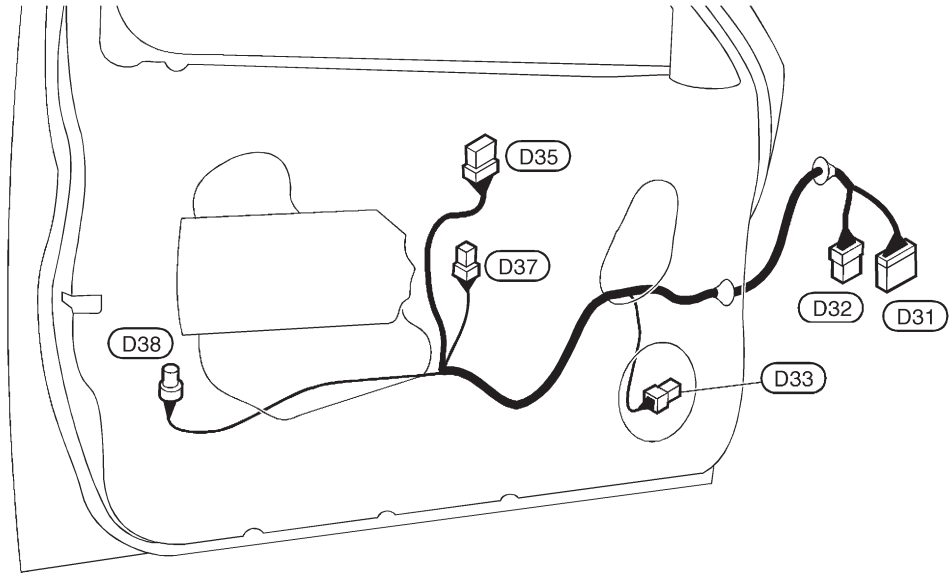

HEL420A

Simpo PDF Merge and Split Unregistered Version - http://www.simpopdf.com

CONDUITE A GAUCHE

Faisceau de porte avant (côté droit)

D31	W/12	:	Vers M49
D32	W/6	:	Vers M50 (avec lève-glace électrique)
D33	BR/2	:	Haut-parleur avant
D34	GY/5	:	Actionneur de rétroviseur de porte (avec lève-glace électrique)
D35	W/8	:	Interrupteur auxi. de lève-glace (avec lève-glace électrique)
D37	B/2	:	Régulateur de lève-glace (avec lève-glace électrique)
D38	GY/4	:	Actionneur de verrouillage de porte (avec système de verrouillage électrique des portes)

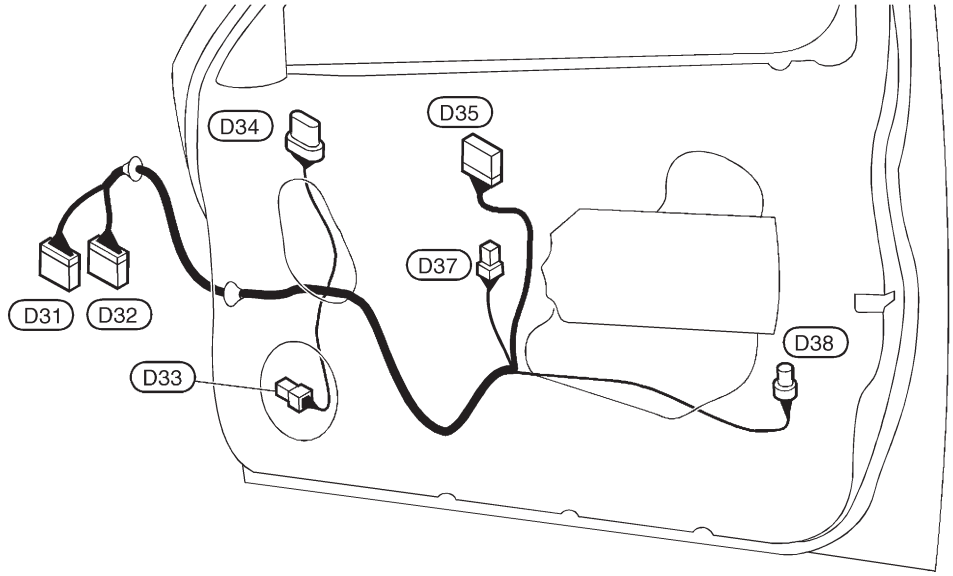

HEL880

CONDUITE A DROITE

D1	W/12	:	Vers M3
D2	W/12	:	Vers M4 (avec lève-glace électrique)
D3	BR/2	:	Haut-parleur avant
D5	W/16	:	Interrupteur principal de lève-glace (avec lève-glace électrique avant et arrière)
D7	B/2	:	Régulateur de lève-glace (avec lève-glace électrique)
D8	GY/2	:	Contact de bouton de verrouillage (avec système de verrouillage électrique des portes)

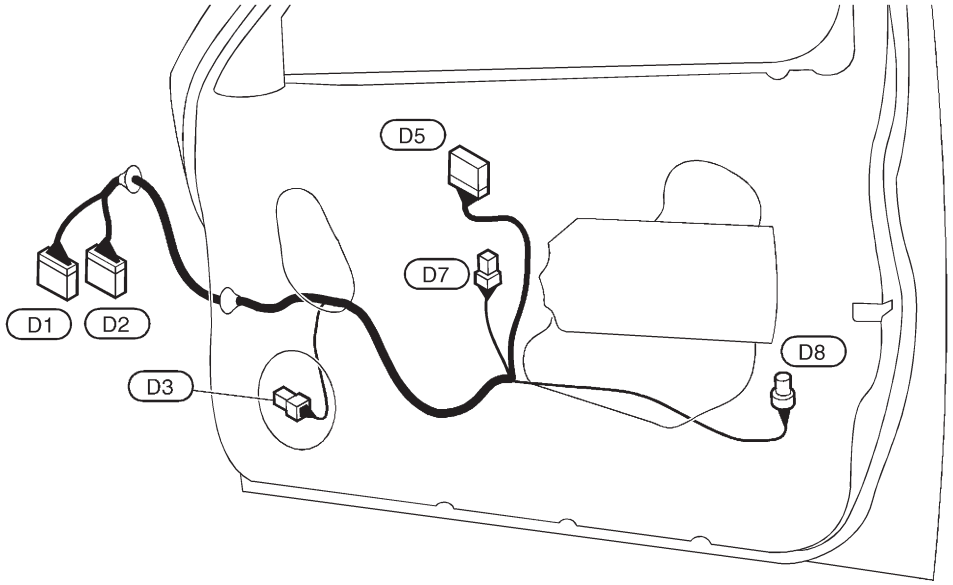

HEL881

Simpo PDF Merge and Split Unregistered Version - http://www.simpopdf.com

COTE GAUCHE

Faisceau de porte arrière

D51	W/3	:	Vers M107
D52	W/2	:	Vers M106
D53	W/2	:	Vers M105
D54	B/2	:	Haut-parleur
D55	B/2	:	Régulateur de lève-glace
D56	GY/4	:	Actionneur de verrouillage de porte
D57	W/8	:	Interrupteur auxi. de lève-glace

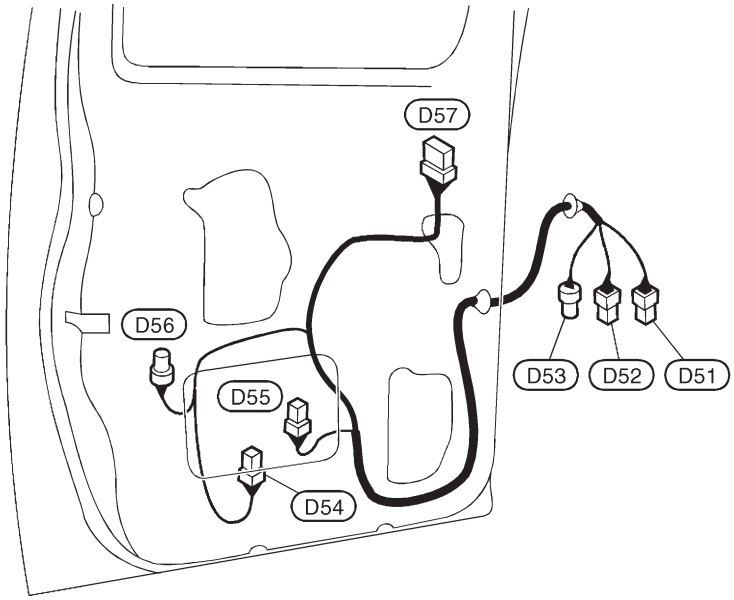

HEL421A

COTE DROIT

D71	W/3	:	Vers M115
D72	W/2	:	Vers M114
D73	W/2	:	Vers M113
D74	B/2	:	Haut-parleur
D75	B/2	:	Régulateur de lève-glace
D76	GY/4	:	Actionneur de verrouillage de porte
D77	W/8	:	Interrupteur auxi. de lève-glace

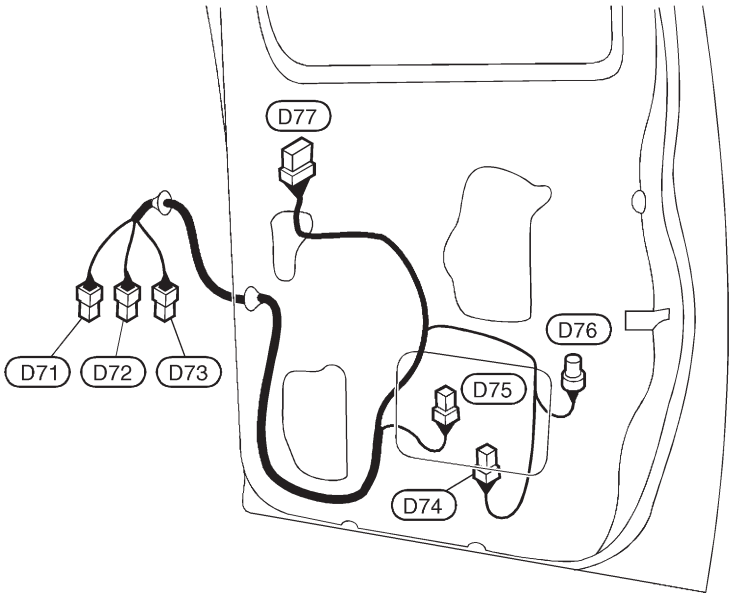

HEL422A

Simpo PDF Merge and Split Unregistered Version - http://www.simpopdf.com

Phares

	Puissance en watts (W)
Route/Code (faisceau semi-étanche)	60/55 (H4)

Eclairage extérieur

		Puissance en watts (W)
Feux combinés avant	Clignotant avant	21
	Stationnement	5
Clignotant latéral		5
Feu combiné arrière	Clignotant	21
	Feu de stop/Feux arrière	21/5
	Feux de recul	21
	Antibrouillard (sauf châssis A)	21
Feu antibrouillard arrière (châssis A)		21
Eclairage de plaque minéralogique	Pare-chocs standard	5
	Protection de marche-pied	21

Eclairage intérieur

	Puissance en watts (W)
Plafonnier	10
Spot de lecture	8

Simpo PDF Merge and Split Unregistered Version - http://www.simpopdf.com

Utiliser le tableau ci-dessous pour déterminer la signification des codes de schémas de câblage.
Se reporter aux codes des schémas de câblage dans l'index pour connaître l'emplacement (le numéro de page) de chaque schéma de câblage.

Code	Section	Nom du schéma de câblage
AAC/V	EC	Soupape IACV-AAC
ABS	BR	Système anti-enrayeur des freins
A/C, M	HA	Climatiseur manuel
AUDIO	EL	Audio
BACK/L	EL	Feux de recul
BUZZER	EL	Témoin sonore
CHARGE	EL	Système de charge
CHOKE	EC	Starter automatique
CIGAR	EL	Allume-cigare
CLOCK	EL	Montre
CMPS	EC	Capteur d'angle d'arbre à cames
COOL/F	LC	Commande du ventilateur de refroidissement
DEF	EL	Désembuage de lunette arrière
DIMDIP	EL	Phares – avec système de mise en veilleuse des codes
D/LOCK	EL	Verrouillage électrique de porte
DTRL	EL	Phares - avec système d'éclairage de jour
ECTS	EC	Capteur de température du moteur
EGRC/V	EC	EGRC – Electrovanne
FCUT	EC	Electrovanne de coupure de carburant
F/HEAT	EC	Système de chauffage de carburant
FICD	EC	Electrovanne FICD
FIPOT	EC	Pot ISC-FI
FPCM	EC	Module de commande de pompe à carburant
F/PUMP	EC	Pompe d'alimentation
F/RTN	EC	Electrovanne de commande de retour de carburant
GLOW	EC	Circuit de préchauffage rapide
H/AIM	EL	Commande de réglage des phares
HEATER	HA	Chauffage
H/LAMP	EL	Phares
HLC	EL	Lave-phares
HO2S	EC	Sonde à oxygène chauffée
HORN	EL	Avertisseur sonore
H/SEAT	EL	Siège chauffant

Code	Section	Nom du schéma de câblage
IATS	EC	Capteur de température d'air d'admission
IDLE	EC	Electrovanne IACV de contrôle de montée en ralenti
IGN	EC	Système d'allumage
IGN/SG	EC	Signal d'allumage
ILL	EL	Eclairage
INJECT	EC	Injecteur
INT/L	EL	Plafonnier et spot de lecture
MAFS	EC	Débitmètre d'air
MAIN	EC	Alimentation électrique principale et circuit et de mise à la masse
METER	EL	Compteur de vitesse, compte-tours et jauge de température et de carburant
MIL/DL	EC	Témoin MIL et connecteur de liaison des données de diagnostic pour CONSULT
MIRROR	EL	Rétroviseur électrique de porte
MULTI	EL	Système de contrôle de multi-télécommande
NATS	EL	Système antivol Nissan (NATS)
P/ANT	EL	Antenne électrique
PGC/V	EC	Electrovanne de commande de purge de cartouche
PLA	EC	Commande d'avance à charge partielle
PNP/SW	EC	Contact de stationnement/point mort
POWER	EL	Disposition de l'alimentation électrique
PST/SW	EC	Manocontact d'huile de direction assistée
R/FOG	EL	Feu antibrouillard arrière
SRS	RS	Système de retenue supplémentaire
S/SIG	EC	Signal de démarrage
START	EL	Circuit de démarrage
STOP/L	EL	Feu de stop
SWL/V	EC	Electrovanne de contrôle de vanne de commande de tourbillon

Simpo PDF Merge and Split Unregistered Version - http://www.simpopdf.com

Code	Section	Nom du schéma de câblage
TAIL/L	EL	Feux de stationnement, éclairage de plaque d'immatriculation et feux arrière
TPS	EC	Capteur de position de papillon
TURN	EL	Clignotants et feux de détresse

Code	Section	Nom du schéma de câblage
VSS	EC	Capteur de vitesse du véhicule
WARN	EL	Témoins lumineux
WINDOW	EL	Lève-glace électrique
WIPER	EL	Essuie-glace et lave-glace avant

Simpo PDF Merge and Split Unregistered Version - http://www.simpopdf.com

ELEMENTS DU MOTEUR

SECTION **EM**

TABLE DES MATIERES

PRECAUTIONS 1
Pièces nécessitant un serrage angulaire 1
Procédé d'application du joint liquide 1
PREPARATION 2

KA

COMPOSANTS EXTERNES 8
PRESSION DE COMPRESSION 9
Mesure de la pression de compression 9
CARTER D'HUILE 10
Dépose 10
Repose 11
CHAINE DE DISTRIBUTION 12
Dépose 12
Inspection 16
Repose 16
REMPLACEMENT DES JOINTS D'HUILE 21
Joint d'huile de soupape 21
Joint d'huile avant 21
Joint d'huile arrière 22
CULASSE 23
Joint d'huile arrière 24
Dépose 24
Démontage 26
Inspection 26
Remontage 32
Repose 34
DEPOSE DU MOTEUR 36
Dépose 37
Repose 37
BLOC-CYLINDRES 38
Démontage 39
Inspection 39
Remontage 46

TD

COMPOSANTS EXTERNES 49
PRESSION DE COMPRESSION 51
Mesure de la pression de compression 51
CARTER D'HUILE 52
Dépose 52
Repose 53
CULASSE 54
Dépose 55
Démontage 56
Inspection 57
Remontage 64
Repose 65
REMPLACEMENT DES JOINTS D'HUILE 68
DEPOSE DU MOTEUR 70
Dépose 71
Repose 71
REVISION DU MOTEUR 72
Démontage 73
Inspection et remplacement 75
Remontage 87

KA

CARACTERISTIQUES ET VALEURS DE REGLAGE (SDS) 92
Caractéristiques générales 92
Inspection et réglage 92

TD

Simpo PDF Merge and Split Unregistered Version - http://www.simpopdf.com

CARACTERISTIQUES ET VALEURS DE REGLAGE (SDS) 99
Caractéristiques générales 99
Inspection et réglage 99

Simpo PDF Merge and Split Unregistered Version - http://www.simpopdf.com

Pièces nécessitant un serrage angulaire

- Utiliser une clé angulaire pour le serrage final des pièces de moteur suivantes :
  (1) Boulons de culasse
  (2) Ecrous de chapeau de bielle pour moteurs à essence
- Ne pas utiliser une valeur de serrage pour le serrage final.
- La valeur de serrage de ces pièces est valable pour une étape préliminaire.
- S'assurer que le filetage et les surfaces d'assise sont propres et enduits d'une couche d'huile moteur.

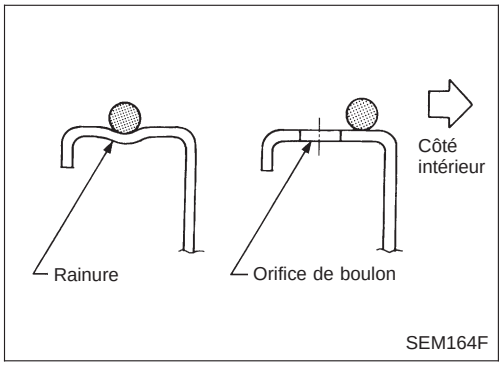

Procédé d'application du joint liquide

a. Utiliser un grattoir pour déposer toutes les traces de l'ancien joint liquide des surfaces de contact et des rainures. Nettoyer également toutes les taches d'huile présentes sur ces zones.

b. Appliquer une couche régulière de joint liquide sur les surfaces de contact (utiliser un joint liquide d'origine ou un produit équivalent).

- **Pour le carter d'huile, s'assurer que le diamètre du joint liquide est de 3,5 à 4,5 mm pour les moteurs à essence.**
- **Pour les parties autres que le carter d'huile, s'assurer que le diamètre du joint liquide est de 2 à 3 mm pour les moteurs à essence, et de 2,5 à 3,5 mm pour les moteurs diesel.**

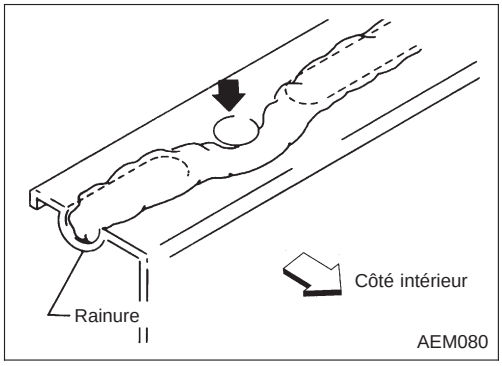

c. Appliquer du joint liquide autour des surfaces intérieures des orifices de boulons (sauf indication contraire).

d. Le montage doit être fait dans les 5 minutes qui suivent l'application du joint.

e. Attendre au moins 30 minutes avant de faire le plein d'huile moteur et de liquide de refroidissement.

Simpo PDF Merge and Split Unregistered Version - http://www.simpopdf.com

Outillage spécial

* : Outil spécial ou équivalent en vente dans le commerce

Numéro de l'outil Nom de l'outil	Description		Moteurs concernés	
			KA	TD
ST0501S000* Ensemble de support de moteur ① ST05011000 Support de moteur ② ST05012000 Base	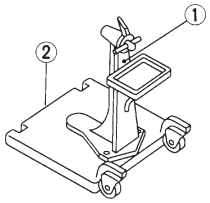 NT042	Démontage et remontage	X	X
KV10105001* Fixation de moteur	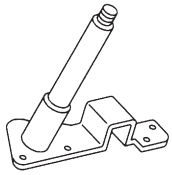 NT031		X	–
KV10106500* Fixation de moteur	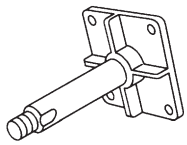 NT028		–	X
KV11103200* Fixation auxiliaire de moteur	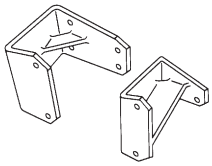 NT246		–	X
KV10111200* Adaptateur	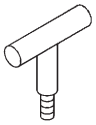 NT687	Démontage et remontage des composants de la soupape	–	X

Simpo PDF Merge and Split Unregistered Version - http://www.simpopdf.com

Numéro de l'outil Nom de l'outil	Description		Moteurs concernés	
			KA	TD
KV101092S0* Compresseur du ressort de soupape ① KV10109210 Compresseur ② KV10109220 Adaptateur	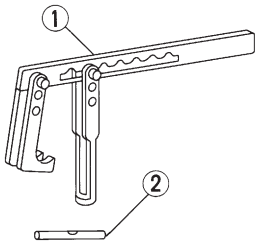 NT021	Démontage et remontage des composants de la soupape	X	X
KV109B0010 Chassoir de joint d'huile de soupape	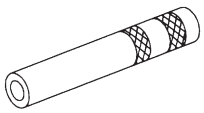 NT027	Repose du joint d'huile de soupape	X	–
KV11105300 Chassoir de joint d'huile de soupape	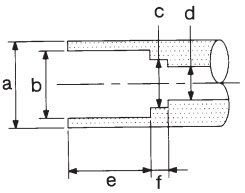 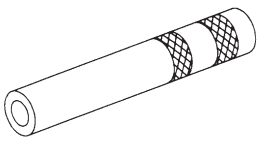 NT602	Repose du joint d'huile de soupape **a : 20**ϕ **b : 14,6**ϕ **c : 13,3**ϕ **d : 8,5**ϕ **e : 17,5** **f : 4,5** Unité : mm	–	X
KV11105400* Chassoir de guide de soupape	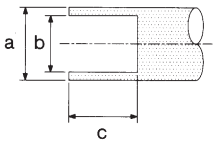 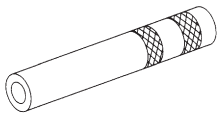 NT637	Repose du guide de soupape **a : 20**ϕ **b : 12,2**ϕ **c : 16** Unité : mm	–	X
EM03470000* Compresseur de segment de piston	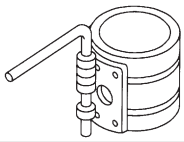 NT044	Repose du piston dans l'alésage du cylindre	X	X
ST16610001* Extracteur de bague pilote	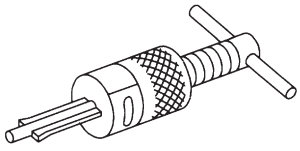 NT045	Dépose de la bague pilote de vilebrequin	X	X
KV10111100 Fraise pour joint	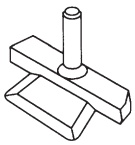 NT046	Dépose du carter d'huile	X	X

Simpo PDF Merge and Split Unregistered Version - http://www.simpopdf.com

Numéro de l'outil Nom de l'outil	Description		Moteurs concernés	
			KA	TD
WS39930000* Presse-tube	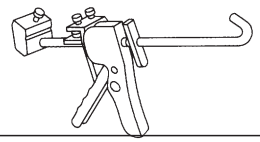 NT052	Pression du tube de joint liquide	X	X
KV10107902* Extracteur de joint d'huile de soupape ① KV10116100 Adaptateur d'extracteur de joint d'huile de soupape	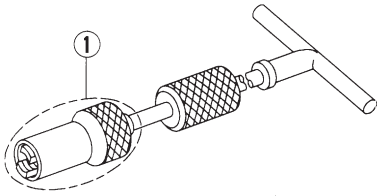 NT605	Démontage du joint d'huile de soupape	–	X
KV10110300 Ensemble de support de presse d'axe de piston ① KV10110310 Chapeau ② KV10110330 Entretoise ③ ST13030020 Support de presse ④ ST13030030 Ressort ⑤ KV10110340 Chassoir ⑥ KV10110320 Axe central	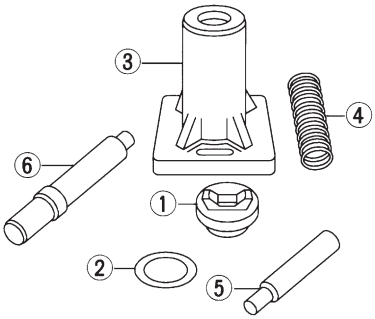 NT036	Démontage et remontage du piston avec la bielle	X	–
KV10112100 Clé angulaire	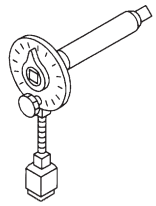 NT014	Serrage des boulons de chapeau de palier, de culasse, etc.	X	X
EG15060000 Indicateur de compression et adaptateur	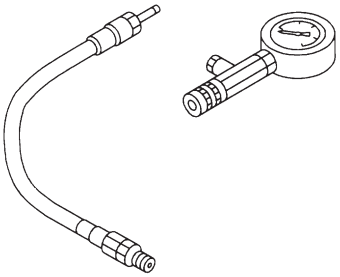 NT238		X	–

Simpo PDF Merge and Split Unregistered Version - http://www.simpopdf.com

Numéro de l'outil Nom de l'outil	Description		Moteurs concernés	
			KA	TD
① ED19601000 Indicateur de compression ② ED19600600 Adaptateur d'indicateur de compression (pour l'orifice de bougie de préchauffage) ③ ED19600700 Adaptateur d'indicateur de compression (pour l'orifice de l'injecteur) ④ ED19600800 Adaptateur d'indicateur de compression (inutile)	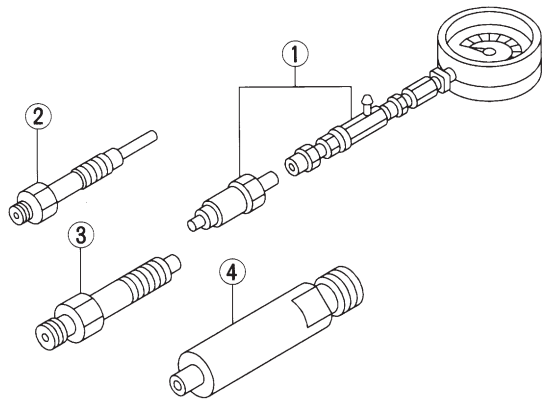 NT625	Vérification de la pression de compression	–	X
KV10106001* Clé pour filtre à huile	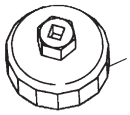 15 faces Pas intérieur : 92,5 mm (face au côté opposé) NT690	Dépose du filtre à huile	–	X
KV10105800* Butée de chaîne	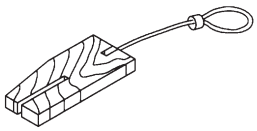 NT010		X	–
① KV11101110 Extracteur de siège de soupape ② KV11103610 Adaptateur (admission) ③ KV11103620 Adaptateur (échappement)	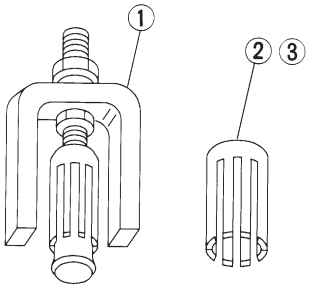 NT251A	Dépose du siège de soupape	–	X
① ST15243000 Chassoir du siège de soupape ② KV11103810 Adaptateur (admission) ③ KV11103820 Adaptateur (échappement)	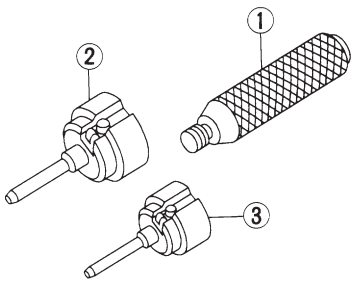 NT252A	Repose du siège de soupape	–	X

Simpo PDF Merge and Split Unregistered Version - http://www.simpopdf.com

Numéro de l'outil Nom de l'outil	Description	Moteurs concernés	
		KA	TD
① KV11104010 Outil pour chemise de cylindre ② KV11104110 Adaptateur pour la dépose ③ KV11104030 Adaptateur pour la repose	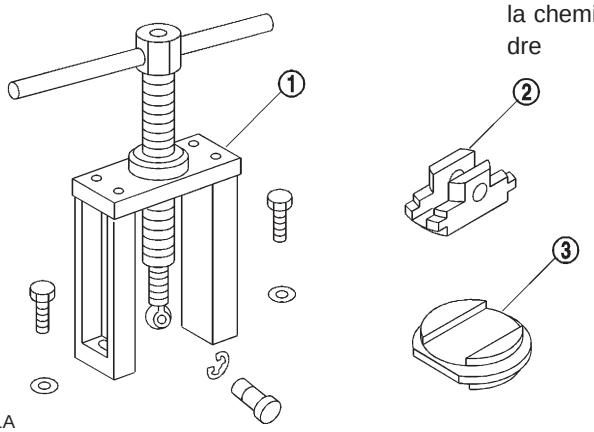 NT681A Dépose et repose de la chemise de cylindre	–	X
KV111033S0 Butée de moteur ① KV11103310 Plaque de butée ② KV10105630 Pignon d'arrêt	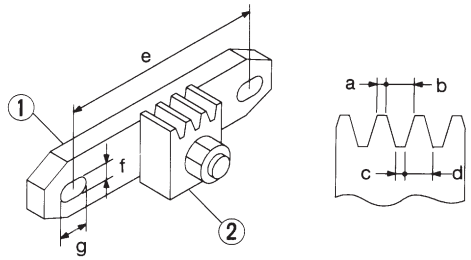 NT616 Pour embêcher le vilebrequin de tourner **a : 3** **b : 6,4** **c : 2,8** **d : 6,6** **e : 119** **f : 12** **g : 18** Unité : mm	–	X
KV111045S0 Jeu de remplacement de la bague de came ① KV11104510 Barre de remplacement ② KV11104520 Plaque de guide ③ KV11104530 Adaptateur (bague de 1ère) ④ ST15243000 Chassoir	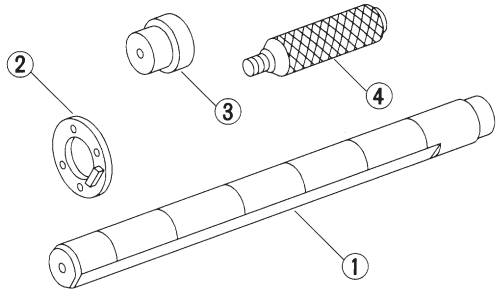 NT610 Dépose ou repose de la bague de came	–	X
KV10109300* Porte-poulie	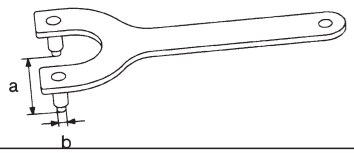 NT628 Pour empêcher le pignon d'entraînement de tourner **a : 68 mm** **b : 8 mm**ϕ	–	X
KV11103000* Extracteur de pignon d'entraînement de pompe à injection	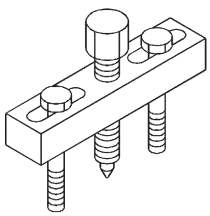 NT676 Dépose du pignon d'entraînement	–	X

Simpo PDF Merge and Split Unregistered Version - http://www.simpopdf.com

Outillage en vente dans le commerce

Nom de l'outil	Description		Moteurs concernés	
			KA	TD
Porte-poulie	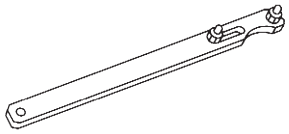 NT035	Immobilisation de la poulie d'arbre à cames pendant le serrage ou le desserrage du boulon d'arbre à cames	X	–
Jeu de fraises pour siège de soupape	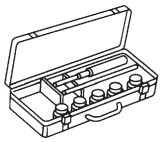 NT048	Finition aux cotes du siège de soupape	X	X
Pinces d'écartement de segment de piston	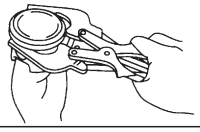 NT030	Dépose et repose du segment de piston	X	X
Réaléseur du guide de soupape	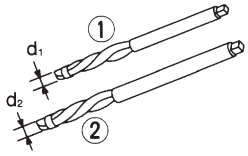	Réalésage de l'intérieur du guide de soupape ① ou de l'orifice pour un guide de soupape surdimensionné ② Diamètre (admission/ échappement) KA24E **d_1 : 7,000 - 7,018/ 8,000 - 8,018** **d_2 : 11,175 - 11,196/ 12,175 - 12,196** TD27 **d_1 : 8,000 - 8,015** **d_2 : –** Unité : mm	X	X
Chassoir de guide de soupape	NT016 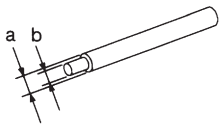 NT015	Dépose et repose du guide de soupape Diamètre (admission/ échappement) KA24E **a : 10,5 /11,5 b : 6,6 /7,6** TD25 **a : 11,5 b : 7,6** Unité : mm	X	X
Chassoir de joint d'huile arrière	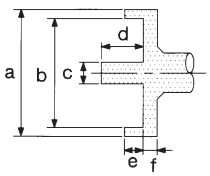 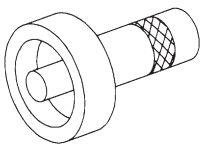 NT608	Repose du joint d'huile arrière **a : 98** ϕ **b : 86** ϕ **c : 15,9** ϕ **d : 33** **e : 14,5** **f : 10,5** Unité : mm	X	–

KA

Simpo PDF Merge and Split Unregistered Version - http://www.simpopdf.com

SEC. 120•140•147•150•163•164•210•220•221•230•231

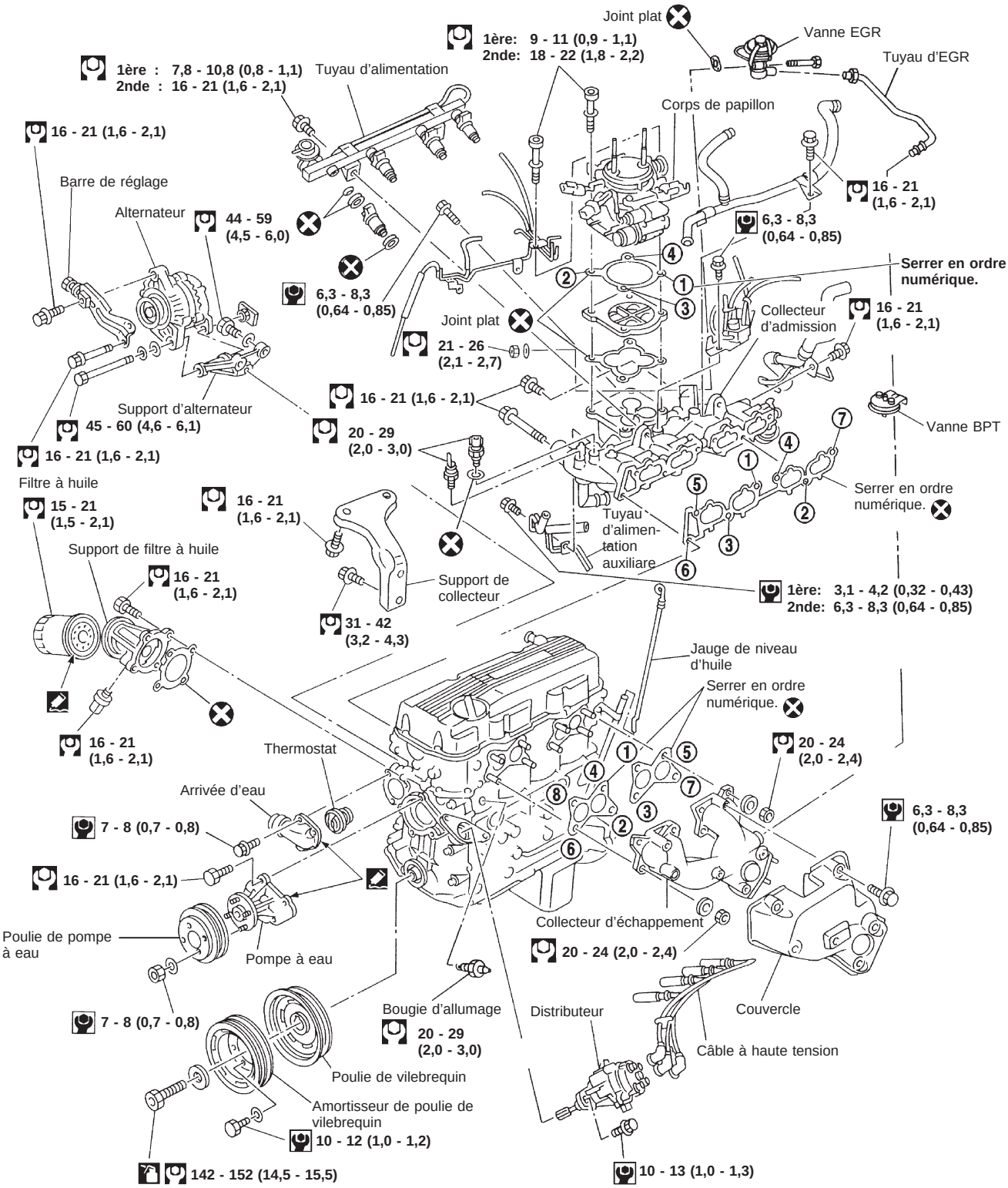

: N·m (kg-m)
: N·m (kg-m)
: Lubrifier avec de l'huile-moteur neuve.
: Appliquer du joint liquide.

SEM811F

Simpo PDF Merge and Split Unregistered Version - http://www.simpopdf.com

Mesure de la pression de compression

1. Faire chauffer le moteur.
2. Couper le contact.
3. Détendre la pression d'alimentation.
   Se reporter à la section EC (''Détente de la pression d'alimentation'', ''PROCEDURE D'ENTRETIEN DE BASE'').
4. Déposer toutes les bougies d'allumage.
5. Débrancher le câble central du distributeur.

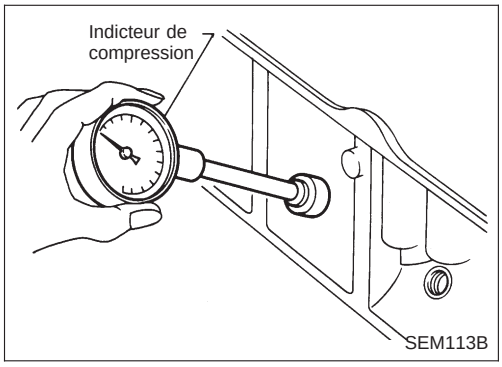

6. Monter un indicateur de compression sur le cylindre n° 1.
7. Enfoncer la pédale d'accélérateur jusqu'au plancher pour maintenir le papillon d'accélérateur ouvert à fond.
8. Lancer le moteur et noter la lecture maximum de l'indicateur de compression.
9. Répéter cette mesure sur chacun des cylindres en procédant de la même façon.

- **Toujours utiliser une batterie ayant sa pleine charge pour obtenir le régime moteur spécifié.**

Pression de compression :
kPa (bar, kg/cm^2)/tr/mn
Standard
1 324 (13,24, 13,5)/300
Minimum
981 (9,8, 10)/300
Limite de différence entre les cylindres
98 (0,98, 1,0)/300

10. Si la compression est basse dans un ou plusieurs cylindres :

a. verser une petite quantité d'huile moteur dans les cylindres par les trous de bougie d'allumage.
b. contrôler de nouveau la compression.

- **Si une adjonction d'huile facilite la compression, il se peut que les segments de piston soient usés ou endommagés. Dans ce cas, remplacer les segments de piston après avoir contrôlé le piston.**
- **Si la pression reste faible, une soupape peut être collée ou son siège déformé. Contrôler et réparer la soupape et le siège de soupape (consulter les SDS). Si la soupape ou le siège de soupape sont excessivement endommagés, les remplacer.**
- **Si la compression reste basse dans deux cylindres voisins :**

a. il peut s'agir d'une fuite du joint de culasse, ou
b. les composants des soupapes des deux cylindres peuvent être endommagés. Inspecter et réparer si nécessaire.

Simpo PDF Merge and Split Unregistered Version - http://www.simpopdf.com

SEC. 110

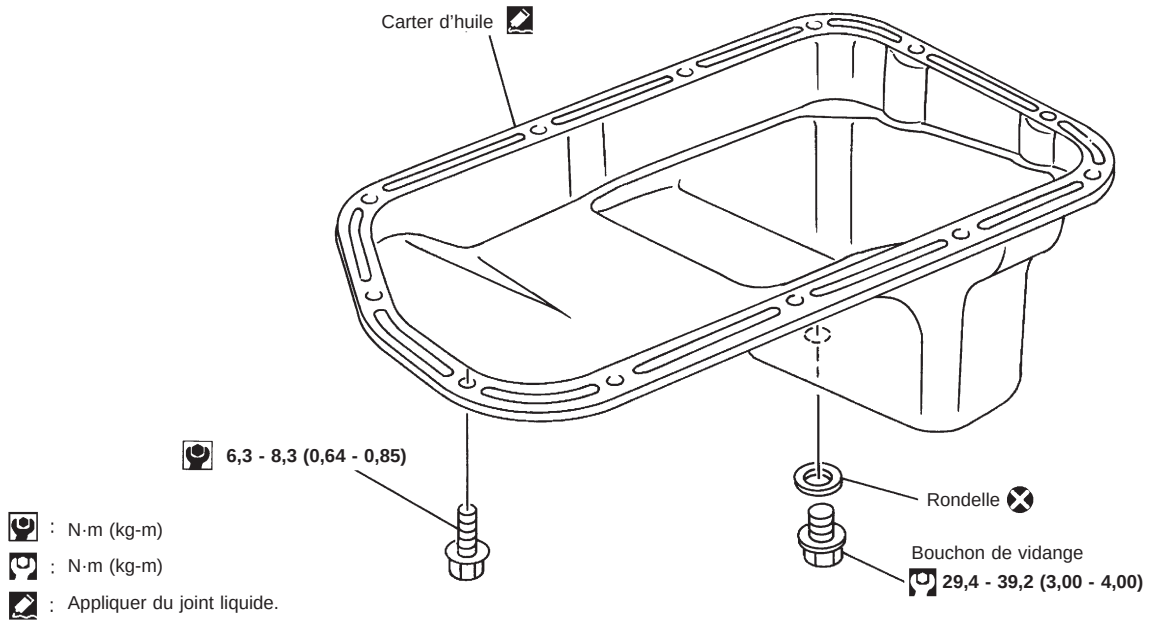

SEM566F

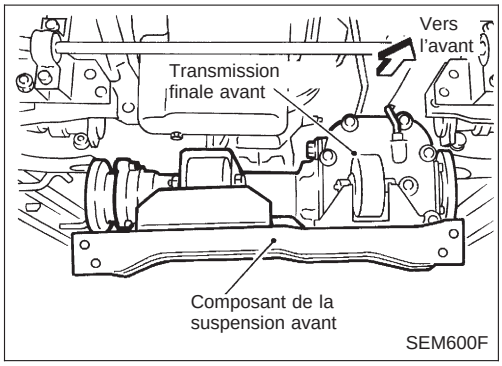

SEM600F

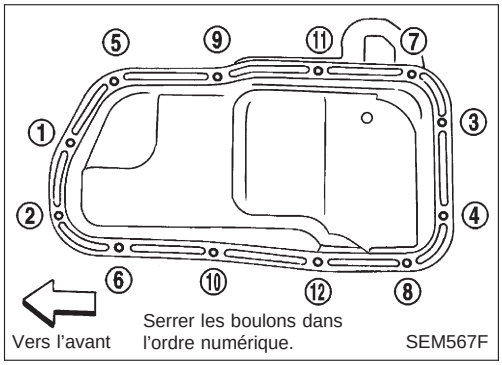

SEM567F

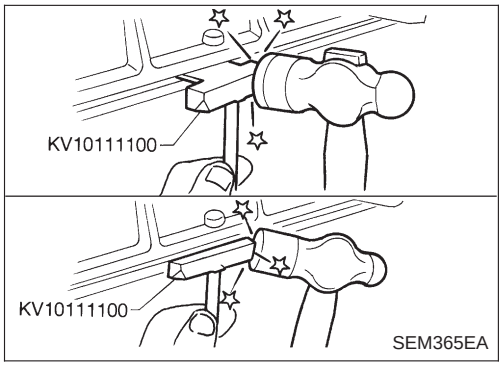

SEM365EA

Dépose

1. Soulever le véhicule et le laisser reposer sur des chandelles de sécurité.
2. Déposer la protection inférieure du moteur.
3. Vidanger l'huile moteur.
4. Déposer la transmission finale avant avec la traverse de suspension du différentiel. Se reporter à la section PD (''Dépose et repose'', ''Transmission finale avant'') – modèles 4X4 uniquement.
5. Déposer le boulon du composant de suspension avant (droit et gauche).
6. Déposer les boulons de carter d'huile.
7. Déposer le carter d'huile.

a. Introduire l'outil spécial entre le bloc-cylindres et le carter d'huile.

- **Veiller à ne pas détériorer les surfaces de contact en aluminium.**
- **Ne pas introduire de tournevis car cela endommagerait le flasque du carter d'huile.**

b. Faire glisser l'outil spécial en frappant sur son côté avec un marteau.

8. Retirer le carter d'huile par l'avant.

Simpo PDF Merge and Split Unregistered Version - http://www.simpopdf.com

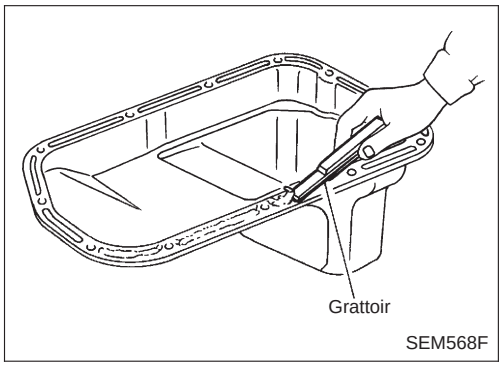

Repose

1. Utiliser un grattoir pour déposer le joint liquide ancien de la surface d'appui du carter d'huile.

- **Enlever également toute trace de joint liquide de la surface d'appui du bloc-cylindres.**

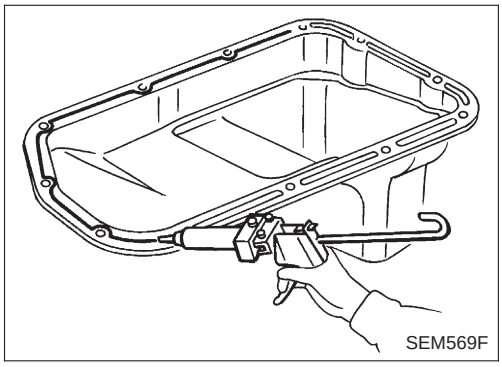

2. Enduire d'un cordon uniforme de joint liquide la surface d'appui du carter d'huile.

- **Utiliser le joint liquide d'origine ou un produit équivalent.**
- **Enduire la rainure de la surface d'appui.**
- **Tolérer un jeu de 7 mm autour de l'orifice du boulon.**

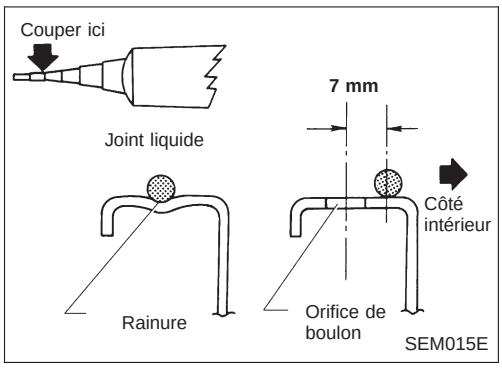

- **S'assurer que le diamètre du joint liquide est de 3,5 à 4,5 mm.**
- **L'assemblage doit être effectué dans les 5 minutes qui suivent l'application du joint.**

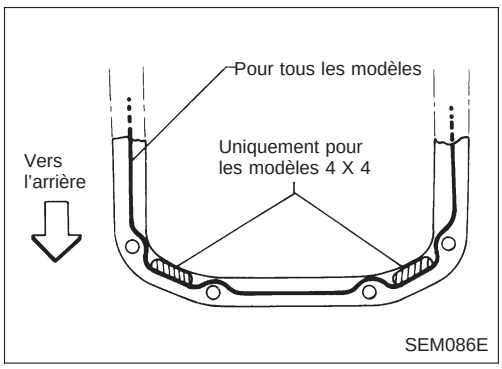

3. Reposer le carter d'huile.

- **Serrer les boulons de carter d'huile dans l'ordre numérique.**
  : 6,3 - 8,3 N·m (0,64 - 0,85 kg-m)
- **Attendre au moins 30 minutes avant de faire le plein d'huile moteur.**

4. Reposer les pièces dans l'ordre inverse de la dépose.

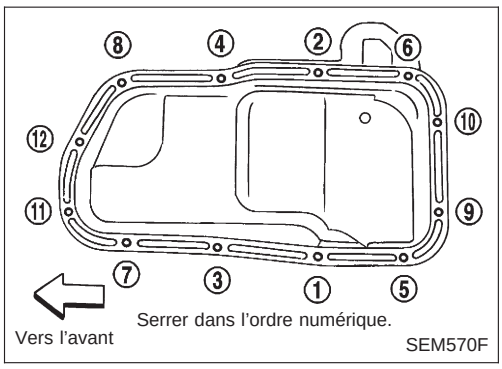

Simpo PDF Merge and Split Unregistered Version - http://www.simpopdf.com

SEC. 120•130•135

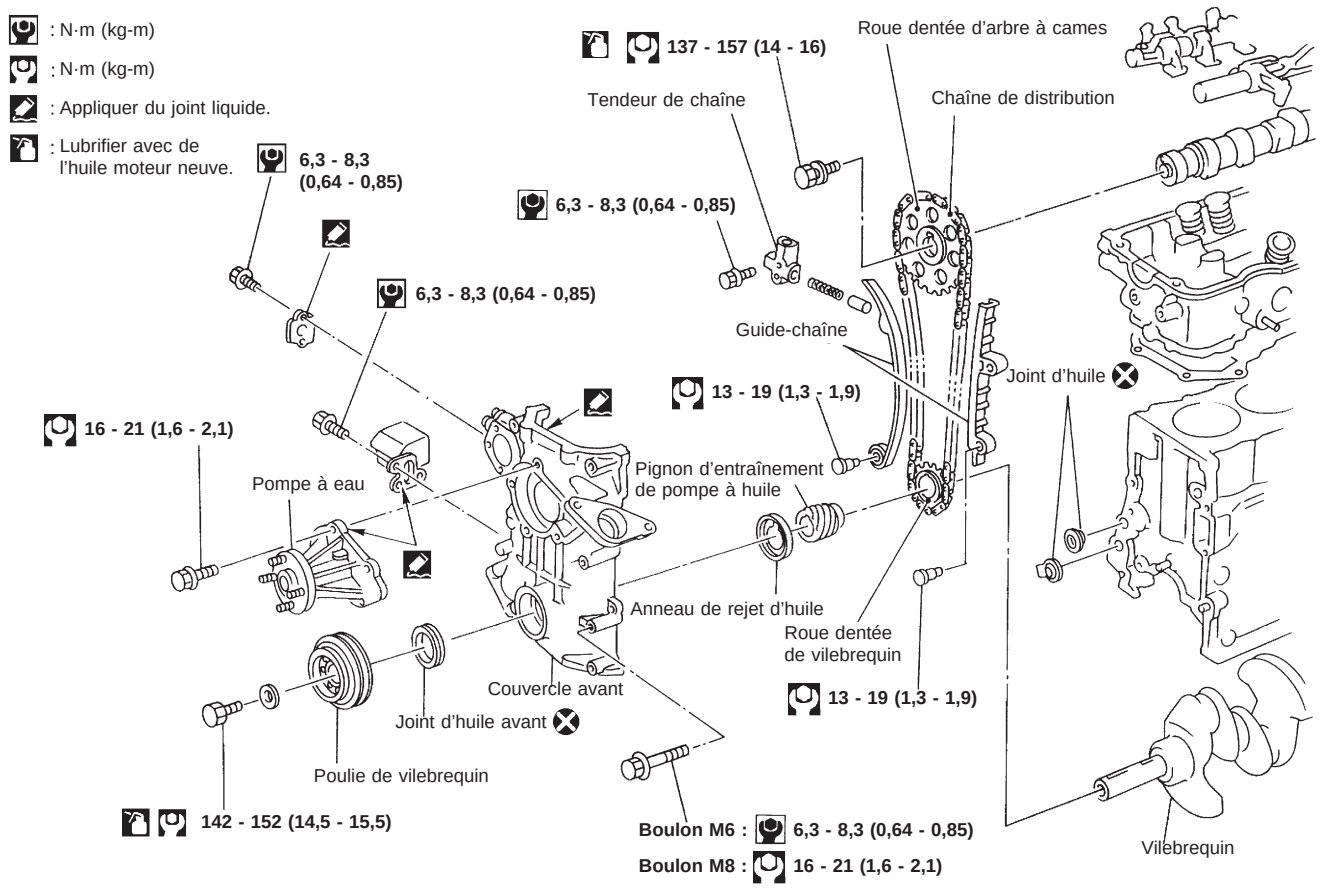

ATTENTION :

- **Après avoir déposé la chaîne de distribution, ne pas faire tourner séparément le vilebrequin et l'arbre à cames car les soupapes heurteraient les têtes de piston.**
- **Lors de la repose des culbuteurs, des arbres à cames, du tendeur de chaîne, des joints d'huile ou d'autres pièces coulissantes, lubrifier les surfaces de contact avec de l'huile moteur neuve.**
- **Lors de la repose de la culasse, des roues dentées d'arbre à cames, de la poulie de vilebrequin et des supports d'arbre à cames, enduire les filetages des boulons et les surfaces d'assise d'huile moteur neuve.**

Dépose

1. Débrancher la borne de batterie.
2. Déposer le filtre à air et le conduit d'entrée d'air.
3. Vidanger le liquide de refroidissement en déposant le bouchon de vidange du bloc-cylindres et le robinet de vidange du radiateur.
4. Déposer le flexible de chauffage et les flexibles de radiateur.
5. Déposer le radiateur, y compris le capot et le ventilateur de refroidissement.
6. Enlever les courroies suivantes.

Simpo PDF Merge and Split Unregistered Version - http://www.simpopdf.com

Dépose (Suite)

- Courroie d'entraînement de la direction assistée
- Courroie d'entraînement du compresseur
- Courroie d'entraînement d'alternateur

7. Déposer le câble de commande d'accélérateur.
8. Débrancher le collecteur d'échappement du tuyau avant d'échappement.
9. Déposer les flexibles PCV du cache-culbuteurs.
10. Déposer l'alternateur et le support.
11. Déposer la pompe à huile de direction assistée et son support du moteur.
12. Déposer les flexibles à dépression, les flexibles à carburant, les câbles, le faisceau, les connecteurs, etc.
13. Déposer tous les câbles à haute tension.

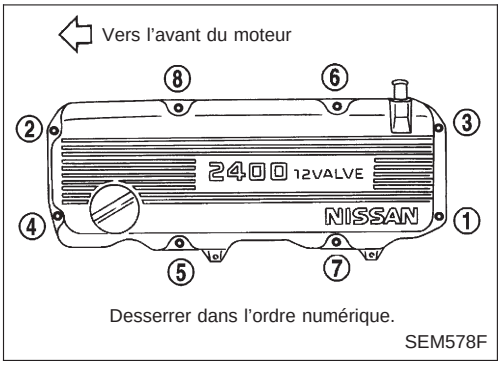

Desserrer dans l'ordre numérique.
SEM578F

14. Déposer le cache-culbuteurs.
- Desserrer les boulons dans l'ordre numérique comme illustré sur la figure.

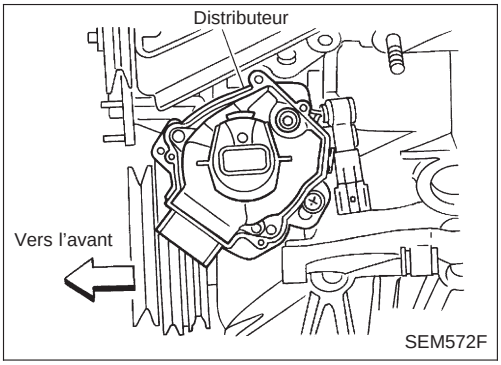

SEM572F

15. Déposer toutes les bougies d'allumage.
16. Placer le piston n° 1 à son P.M.H. dans sa course de compression.

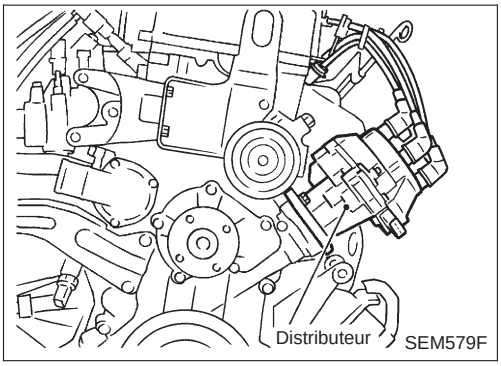

SEM579F

17. Déposer le distributeur.

Ne pas tourner le rotor lorsque le distributeur est déposé.

Simpo PDF Merge and Split Unregistered Version - http://www.simpopdf.com

Dépose (Suite)

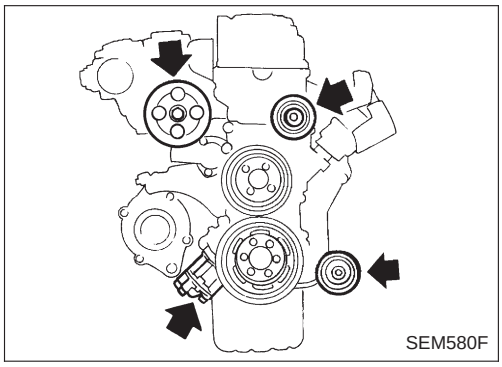
SEM580F

18. Déposer les pièces suivantes.
- Pompe de direction assistée, poulie intermédiaire et supports de pompe de direction assistée
- Poulie intermédiaire de compresseur
- Pompe à huile et arbre d'entraînement de pompe

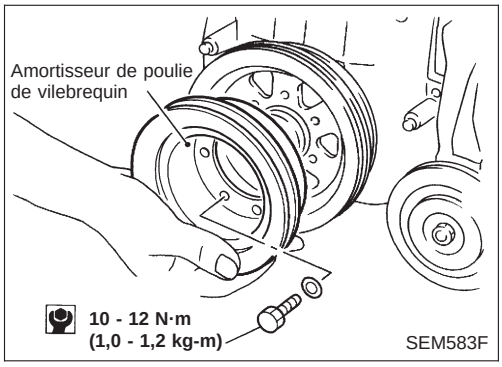

SEM583F

19. Déposer l'amortisseur de la poulie de vilebrequin.

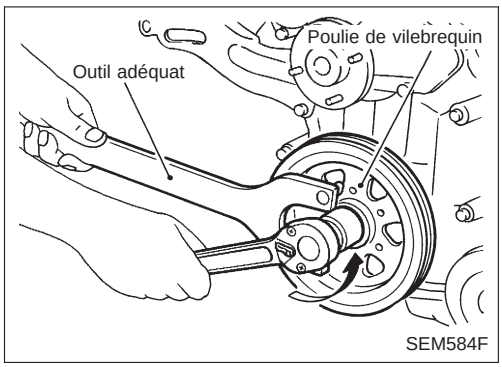

SEM584F

20. Desserrer le boulon de la poulie de vilebrequin.

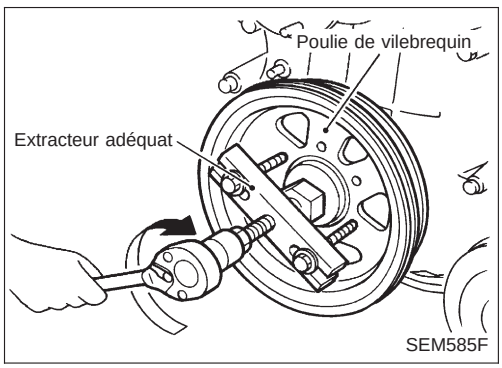

SEM585F

21. Déposer la poulie de vilebrequin à l'aide d'un extracteur adéquat.

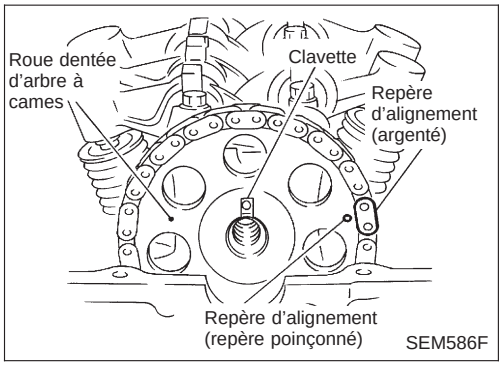

SEM586F

- **Faire tourner le vilebrequin jusqu'à ce que la clavette sur la roue dentée d'arbre à cames soit placée en haut.**

Simpo PDF Merge and Split Unregistered Version - http://www.simpopdf.com

Dépose (Suite)

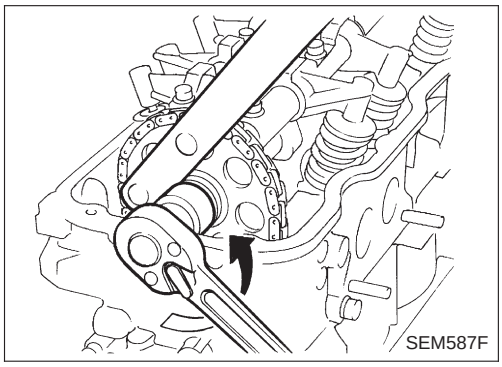
SEM587F

22. Déposer le boulon de la roue dentée d'arbre à cames.

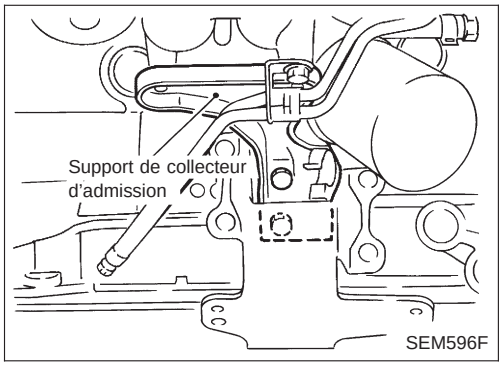

SEM596F

23. Déposer le boulon fixant le collecteur d'admission à son support.

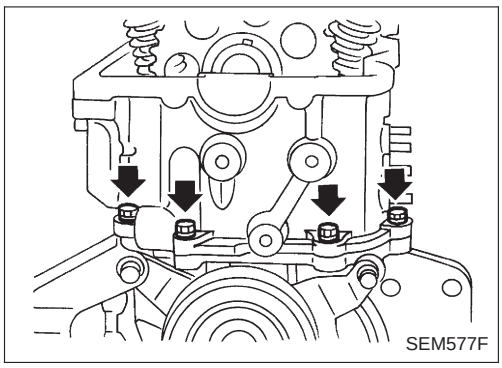
SEM577F

24. Déposer le couvercle de distribution avant des boulons de la culasse.

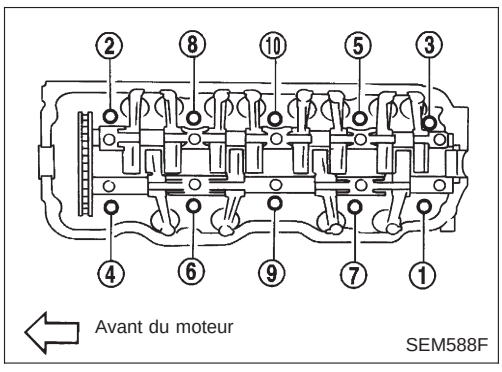

SEM588F

25. Déposer les boulons de culasse.
- **Desserrer en ordre numérique.**
- **Une dépose dans l'ordre incorrect peut entraîner une déformation ou une fêlure de la culasse.**
- **Desserrer les boulons de la culasse en deux ou trois étapes.**

26. Déposer la culasse avec les collecteurs d'admission et d'échappement.

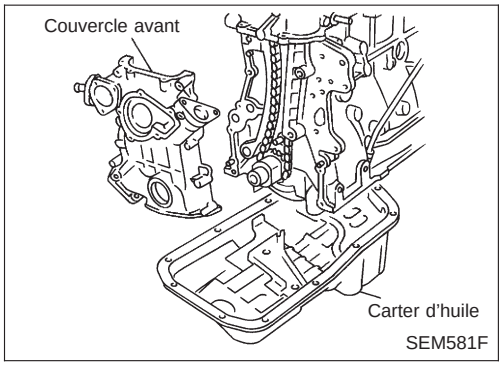

SEM581F

27. Déposer le carter d'huile (se reporter à CARTER D'HUILE, EM-10).
28. Déposer le couvercle avant.
- Rechercher les traces de fuites d'huile au niveau du joint d'huile avant. Remplacer le joint en cas de fuite.

Simpo PDF Merge and Split Unregistered Version - http://www.simpopdf.com

Dépose (Suite)

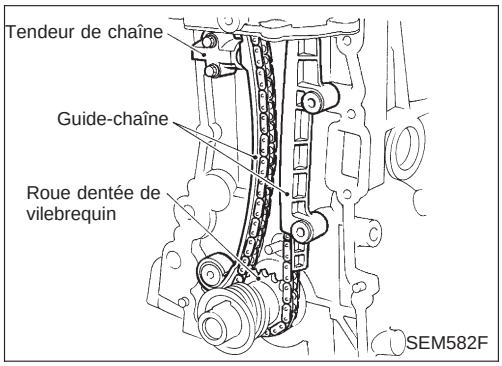

29. Déposer les pièces suivantes.
- Tendeur de chaîne
- Guide-chaînes
- Chaîne de distribution et roue dentée d'arbre à cames
- Anneau de rejet d'huile, pignon d'entraînement de pompe à huile et roue dentée de vilebrequin

Inspection

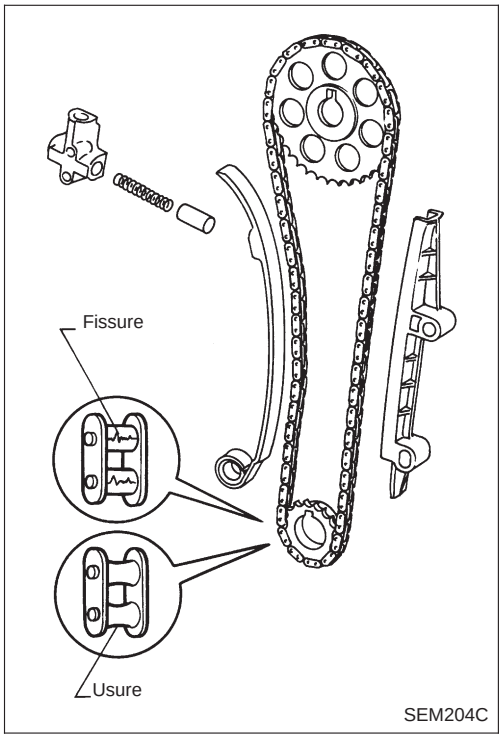

- **Contrôler la présence de fissures ou de signes d'usure excessive aux chaînons. Remplacer la chaîne si cela est nécessaire.**

Repose

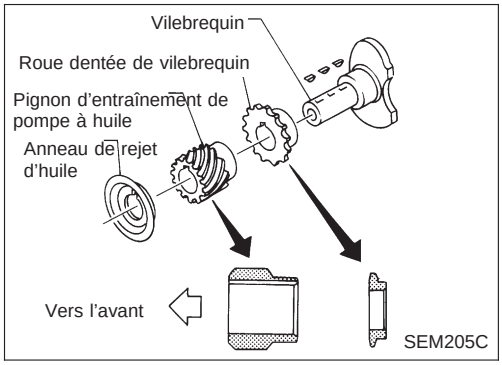

1. Reposer la roue dentée de vilebrequin, le pignon d'entraînement de pompe à huile et l'anneau de rejet d'huile.
- **S'assurer que les repères d'alignement de la roue de vilebrequin sont dirigés vers l'avant du moteur.**

Simpo PDF Merge and Split Unregistered Version - http://www.simpopdf.com

Repose (Suite)

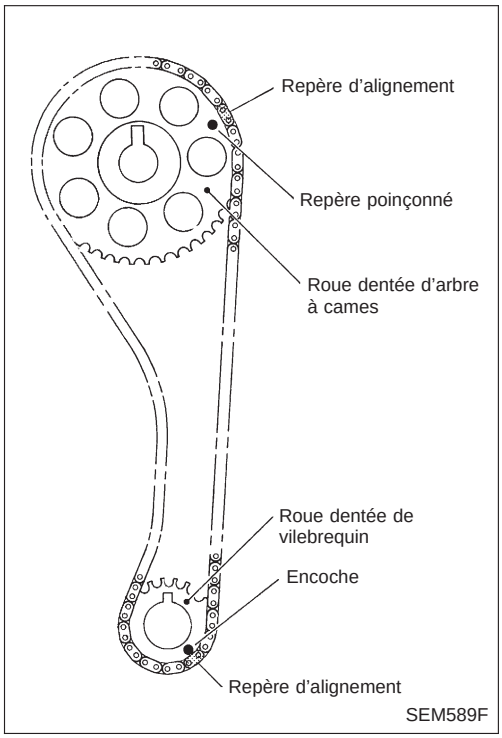

2. Positionner le vilebrequin de façon à ce que le piston n° 1 soit au P.M.H. (clavette à 12 heures). Monter la chaîne de distribution sur la roue dentée de vilebrequin de façon à ce que son repère d'alignement soit aligné avec le repère d'alignement sur la roue dentée de vilebrequin.
3. Reposer provisoirement la culasse avec un joint neuf. Positionner l'arbre à cames de telle sorte que la clavette soit à 12 heures.

- **Reposer la chaîne de distribution en alignant ses repères d'alignement sur ceux de la roue de vilebrequin et de la roue dentée d'arbre à cames.**

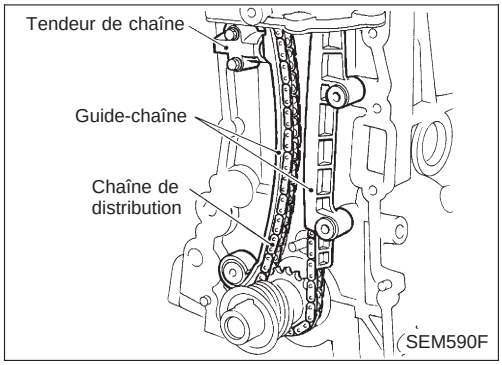

4. Reposer la chaîne de distribution, les guide-chaînes de distribution et le tendeur de chaîne.

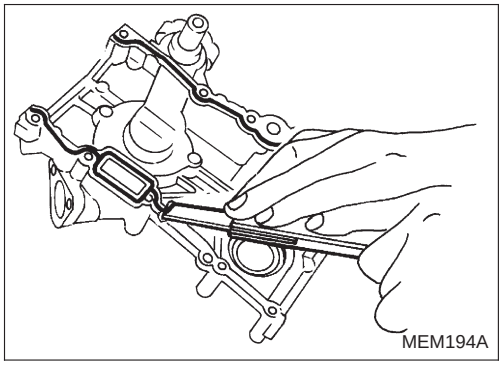

5. Avant de reposer le couvercle avant, enlever toute trace de joint liquide de la surface d'appui à l'aide d'un grattoir.

- **Enlever également toute trace de joint liquide de la surface d'appui du bloc-cylindres.**

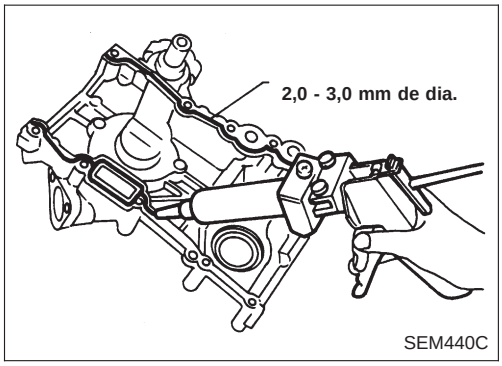

6. Appliquer un cordon uniforme de joint liquide sur le couvercle avant.

- **Utiliser le joint liquide d'origine ou un produit équivalent.**
- **Veiller à installer le joint d'huile avant neuf dans le bon sens. Se reporter à EM-21.**

7. Appliquer de la graisse à base de lithium sur la lèvre d'étanchéité du joint d'huile de vilebrequin.

Simpo PDF Merge and Split Unregistered Version - http://www.simpopdf.com

Repose (Suite)

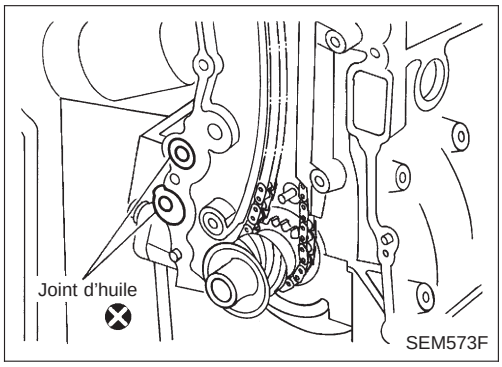

8. Reposer le couvercle avant.
- **Veiller à ne pas endommager le joint plat de la culasse.**
- **Veiller à ne pas endommager le joint d'huile avant lors de la repose du couvercle avant.**

9. Reposer le carter d'huile (se reporter à CARTER D'HUILE, EM-10).

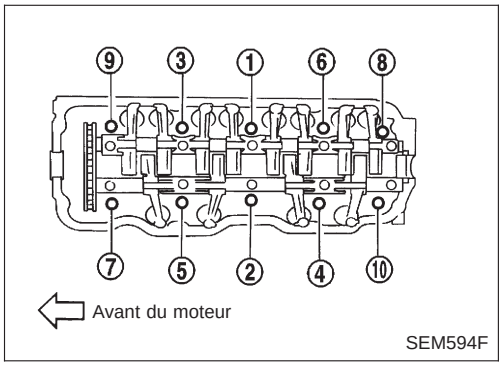

10. Serrer les boulons de la culasse.
- ⓐ **Serrer tous les boulons à un couple de 29 N·m (3 kg-m).**
- ⓑ **Serrer tous les boulons à un couple de 78 N·m (8 kg-m).**
- ⓒ **Desserrer entièrement tous les boulons.**
- ⓓ **Serrer tous les boulons à un couple de 25 à 34 N·m (2,5 à 3,5 kg-m).**

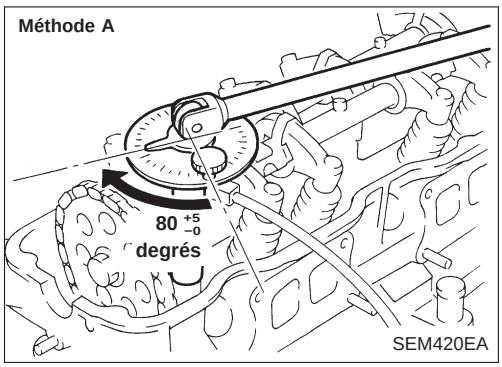

ⓔ **Méthode A : Tourner tous les boulons de 80 $^{+5}_{-0}$ degrés dans le sens des aiguilles d'une montre à l'aide d'une clé angulaire.**

Méthode B : Si l'on ne dispose pas d'une clé angulaire, serrer tous les boulons à un couple de 74 à 83 N·m (7,5 à 8,5 kg-m).

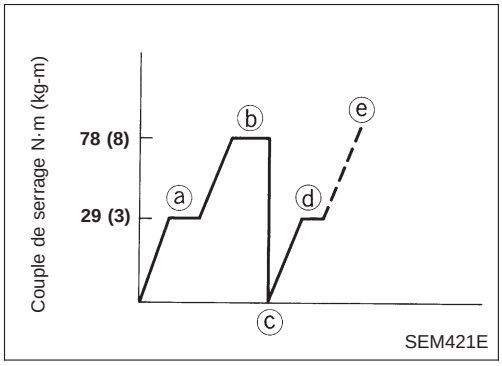

	Couple de serrage N·m (kg-m)
ⓐ	29 (3)
ⓑ	78 (8)
ⓒ	0 (0)
ⓓ	29 ± 5 (3 ± 0,5)
ⓔ	80 $^{+5}_{-0}$ degrés ou 78 ± 5 (8,0 ± 0,5)

11. Reposer les roues dentées d'arbre à cames.

Aligner le repère d'alignement de la chaîne de distribution sur le repère d'alignement de la roue dentée d'arbre à cames.

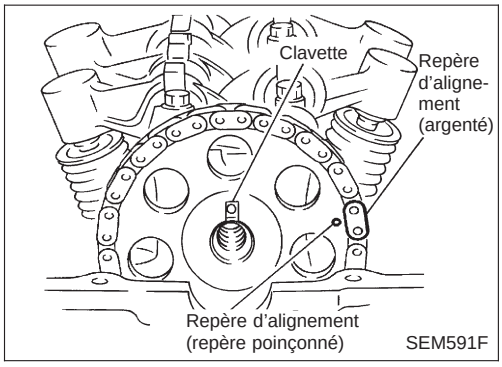

Simpo PDF Merge and Split Unregistered Version - http://www.simpopdf.com

Repose (Suite)

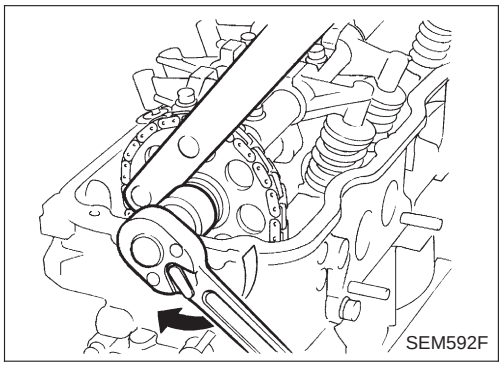
SEM592F

- Bloquer les arbres à cames comme indiqué ci-contre, et serrer au couple spécifié.
  : 137 - 157 N·m (14,0 - 16,0 kg-m)

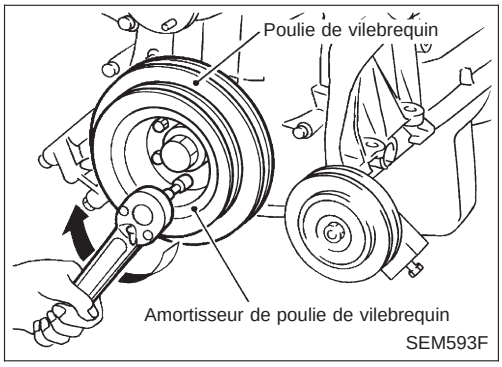

SEM593F

12. Reposer la poulie de vilebrequin et l'amortisseur de la poulie de vilebrequin.

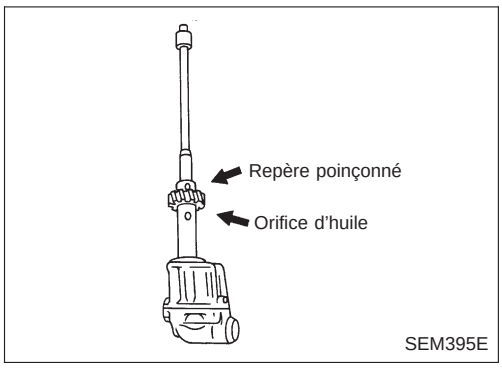

SEM395E

13. Reposer l'arbre d'entraînement du distributeur et la pompe à huile avec un joint plat neuf dans le couvercle avant.
a. Assembler la pompe à huile et l'arbre d'entraînement en alignant le repère poinçonné sur l'arbre de commande avec l'orifice d'huile.

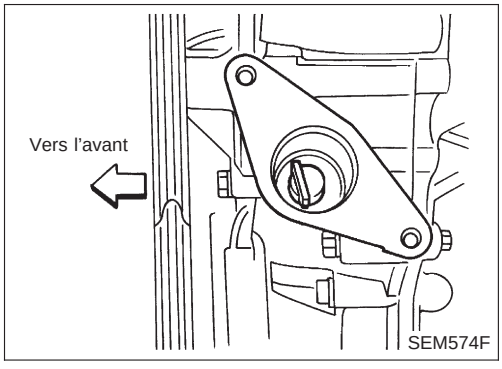

SEM574F

b. S'assurer que l'arbre d'entraînement est installé comme indiqué sur la figure.

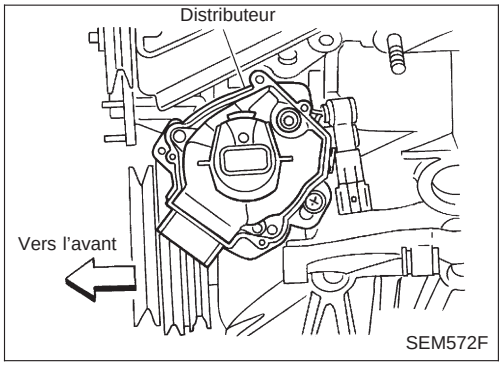

SEM572F

14. Reposer le distributeur.
15. S'assurer que le piston n° 1 est au P.M.H. et que le rotor de distributeur est sur la position d'étincelle du cylindre n° 1.

Simpo PDF Merge and Split Unregistered Version - http://www.simpopdf.com

Repose (Suite)

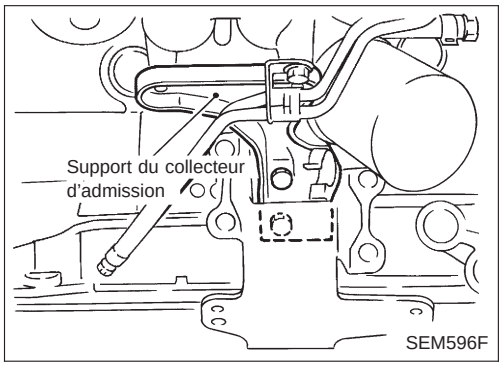

16. Reposer les boulons extérieurs de culasse.
17. Reposer le support du collecteur d'admission.

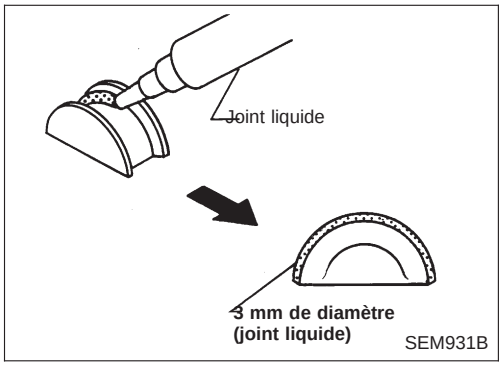

18. Reposer les bouchons en caoutchouc comme suit :
a. Enduire de joint liquide les bouchons en caoutchouc.
- **Remplacer les bouchons en caoutchouc par des pièces neuves.**
- **Les bouchons en caoutchouc doivent être reposés dans les 5 minutes qui suivent l'application du joint liquide.**

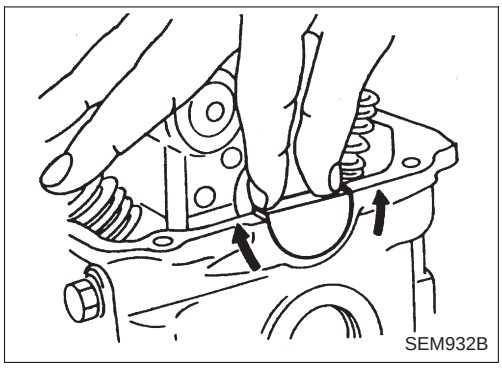

b. Reposer les bouchons en caoutchouc, puis les déplacer avec les doigts de façon à enduire uniformément de joint liquide la surface de la culasse.
- **Les bouchons en caoutchouc doivent arriver au ras de la surface.**
- **Ne pas mettre le moteur en marche dans les 30 minutes suivant la repose du cache-culbuteurs.**
- **Nettoyer l'excès de joint liquide de la tête de culasse.**

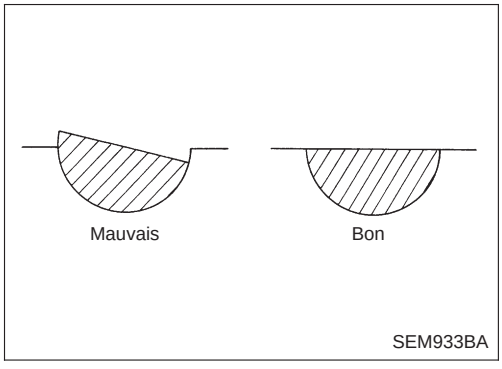

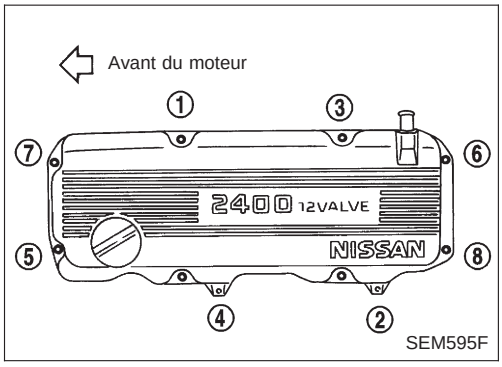

19. Reposer le cache-culbuteurs.
Méthode de serrage du cache-culbuteurs :
(1) Serrer les boulons ① - ② dans cet ordre à un couple de 3 N·m (0,3 kg-m).
(2) Serrer les écrous ④ - ③ - ② - ① - ⑧ - ⑦ - ⑥ - ⑤ - ④ - ③ - ② - ① dans cet ordre à un couple de 7 à 11 N·m (0,7 à 1,1 kg-m).
20. Reposer les pièces dans l'ordre inverse de la dépose.

Simpo PDF Merge and Split Unregistered Version - http://www.simpopdf.com

Joint d'huile de soupape

1. Déposer le cache-culbuteurs.
2. Déposer l'axe des culbuteurs (se reporter à ''Démontage'', au chapitre ''CULASSE'', page EM-26).
3. Déposer le ressort de soupape et le joint d'huile de soupape avec l'outil spécial ou un outil approprié.

● **Le piston concerné doit être réglé à son P.M.H. pour empêcher la soupape de tomber.**

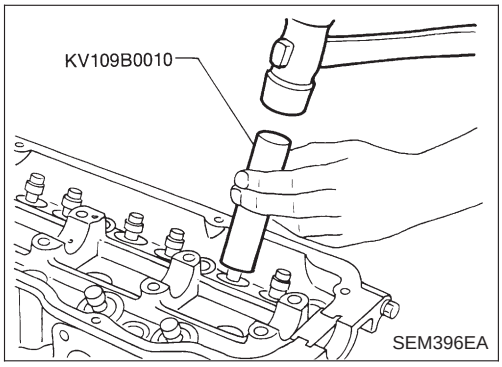

4. Enduire d'huile moteur un joint d'huile de soupape neuf et monter le joint à l'aide d'un outil spécial.

● **Avant de monter le joint d'huile de soupape, monter le siège de ressort de soupape.**

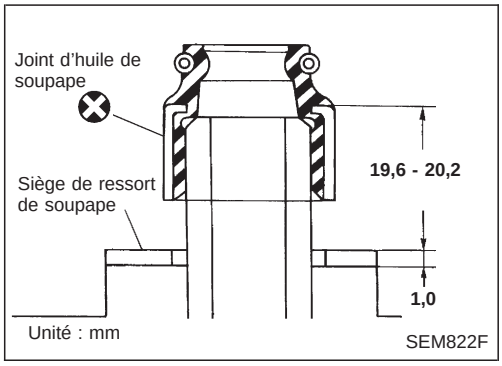

Joint d'huile avant

1. Déposer le capot de radiateur et la poulie de vilebrequin.
2. Déposer le joint d'huile avant.

● **Prendre garde à ne pas rayer le couvercle avant.**

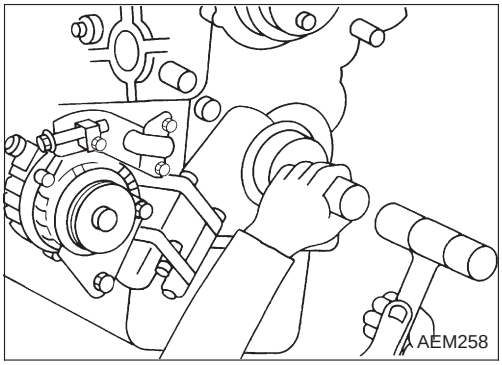

3. Enduire d'huile moteur le nouveau joint d'huile et monter le joint à l'aide d'un outil adéquat.

● **Reposer le joint d'huile neuf dans le sens indiqué.**

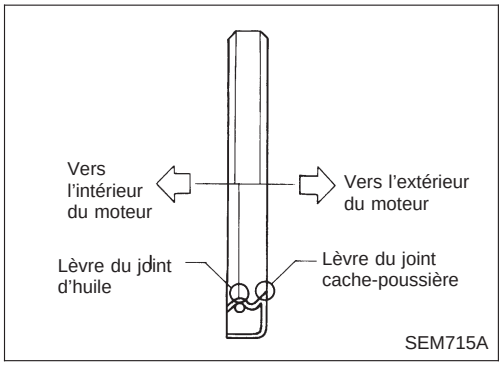

Simpo PDF Merge and Split Unregistered Version - http://www.simpopdf.com

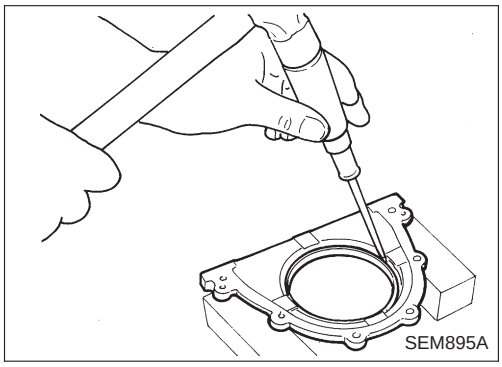
SEM895A

Joint d'huile arrière

1. Déposer le volant-moteur.
2. Déposer la retenue du joint d'huile arrière.
3. Séparer le joint d'huile arrière de la retenue.

- **Prendre garde à ne pas rayer la retenue du joint d'huile arrière.**

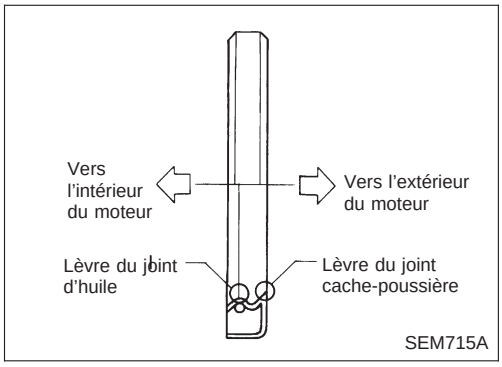

SEM715A

4. Enduire d'huile moteur le nouveau joint d'huile et monter le joint à l'aide d'un outil adéquat.

- **Reposer le joint d'huile neuf dans le sens indiqué.**

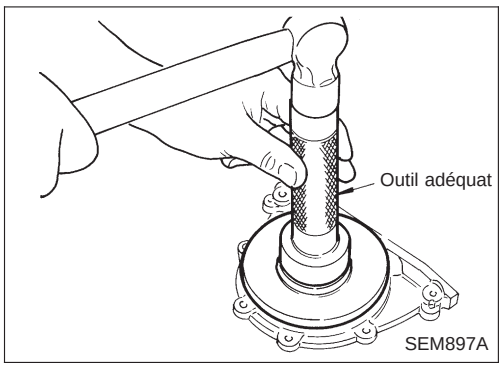

SEM897A

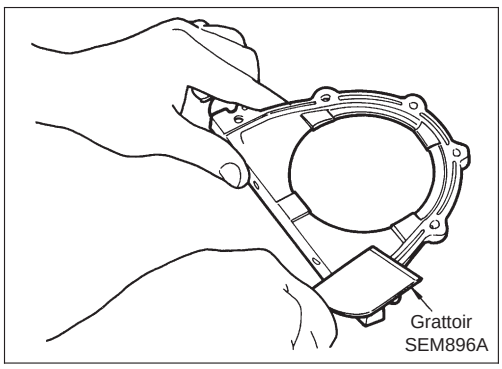

SEM896A

5. Reposer la retenue du joint d'huile arrière.

a. Avant de reposer la retenue de joint d'huile arrière, enlever toute trace de joint liquide de la surface d'appui à l'aide d'un grattoir.

- **Enlever également toute trace de joint liquide de la surface d'appui du bloc-cylindres.**

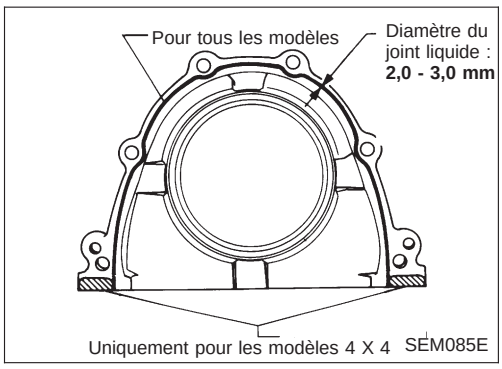

SEM085E

b. Appliquer un cordon uniforme de joint liquide sur la surface d'appui de la retenue du joint d'huile arrière.

- **Utiliser le joint liquide d'origine ou un produit équivalent.**
- **Appliquer le joint liquide sur la surface intérieure des trous de boulons.**

Simpo PDF Merge and Split Unregistered Version - http://www.simpopdf.com

SEC. 111•130

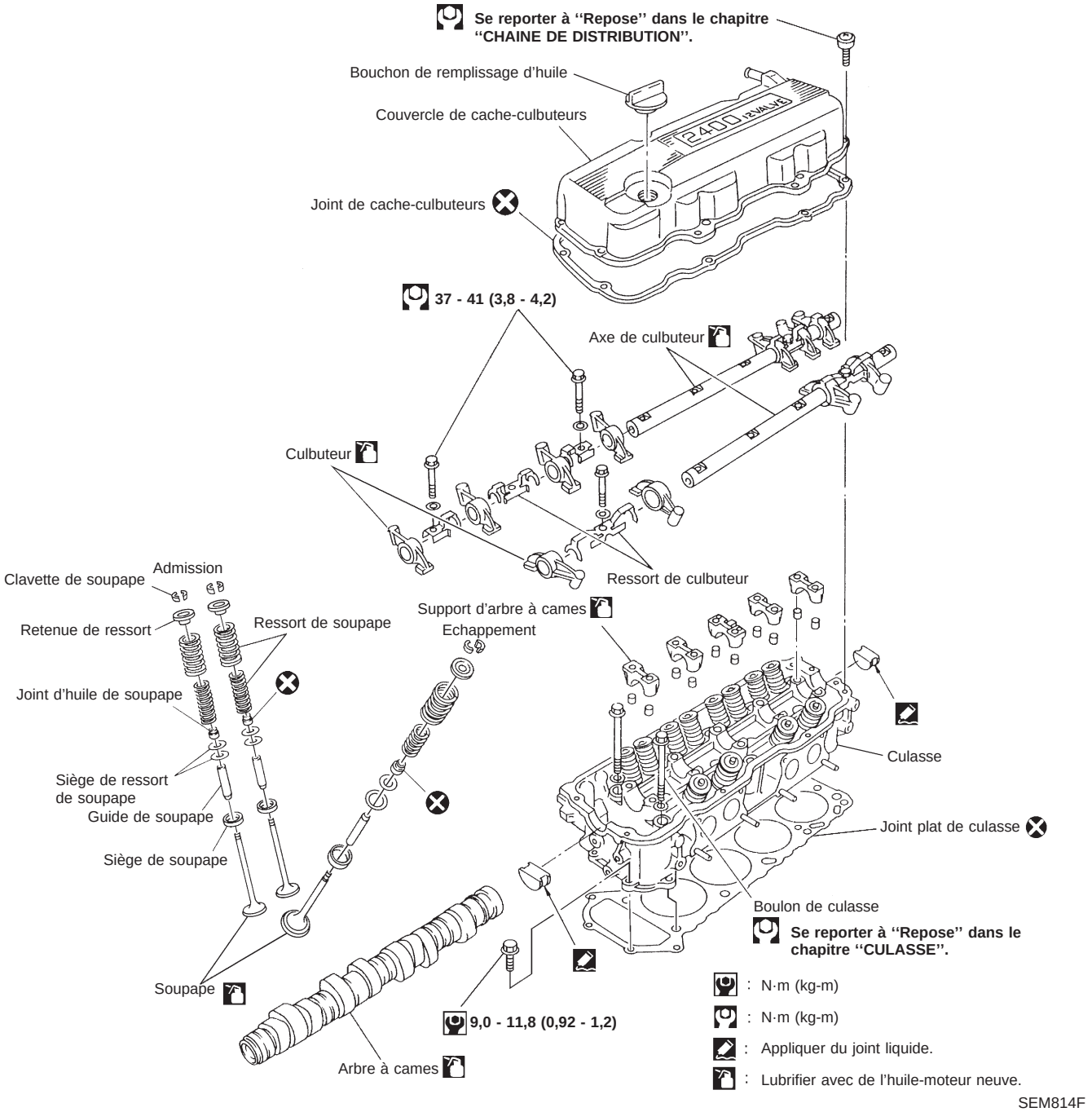

SEM814F

Simpo PDF Merge and Split Unregistered Version - http://www.simpopdf.com

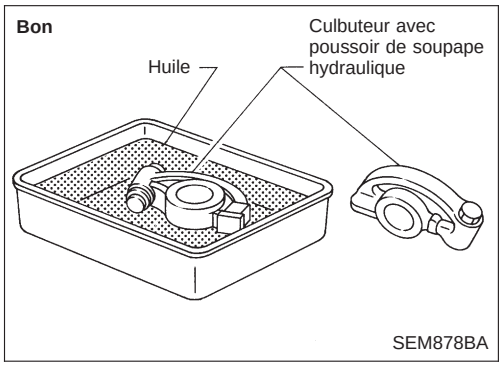

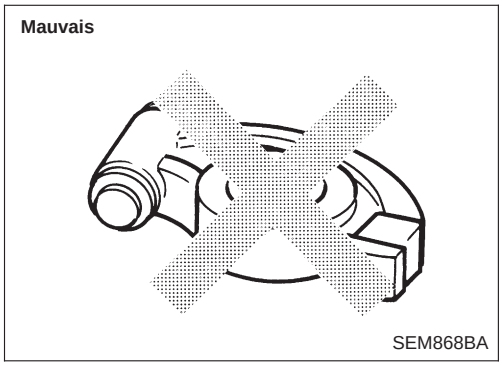

Joint d'huile arrière

ATTENTION :

- **Lors de la repose des culbuteurs, de l'arbre à cames et du joint d'huile, lubrifier les surfaces de contact avec de l'huile moteur neuve.**
- **Lors du serrage des boulons de culasse et des boulons d'axe de culbuteurs, lubrifier les filetages des boulons et les surfaces d'appui avec de l'huile moteur neuve.**
- **Des poussoirs de soupape hydraulique sont montés sur chaque culbuteur. Si le poussoir de soupape hydraulique est posé sur le côté, l'air risque de pénétrer à l'intérieur, même s'il est monté sur un culbuteur. Lors de la dépose des culbuteurs, les poser en position droite ou les plonger dans un bain d'huile moteur neuve.**
- **Ne pas démonter les poussoirs de soupape hydrauliques.**
- **Attacher des étiquettes sur les poussoirs de soupape afin de ne pas les mélanger par la suite.**

Dépose

1. Relâcher la pression d'alimentation. Se reporter à la section EC (''Décharge de la pression d'alimentation'').
2. Vidanger le liquide de refroidissement du radiateur et du bouchon de vidange du bloc-moteur.
3. Déposer les pièces suivantes.

- Courroie d'entraînement de la direction assistée
- Pompe de direction assistée, poulie intermédiaire et supports de direction assistée
- Flexibles de dépression de vanne de commande de tourbillon et d'électrovanne de commande de pression
- Support de câble d'accélérateur

4. Déposer les boulons fixant le collecteur primaire d'admission au collecteur d'admission.
5. Déposer les boulons fixant le collecteur d'admission à la culasse en levant le collecteur vers le haut.
6. Déposer le couvercle du collecteur d'échappement et le collecteur d'échappement.
7. Déposer le cache-culbuteurs.

- **Lors de la dépose du cache-culbuteurs, ne pas heurter celui-ci contre le culbuteur.**

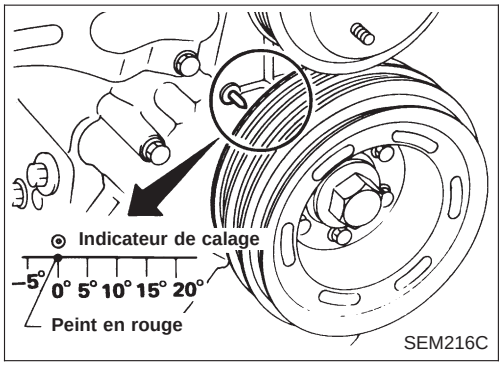

8. Placer le piston n° 1 à son P.M.H. dans sa course de compression.

Simpo PDF Merge and Split Unregistered Version - http://www.simpopdf.com

Dépose (Suite)

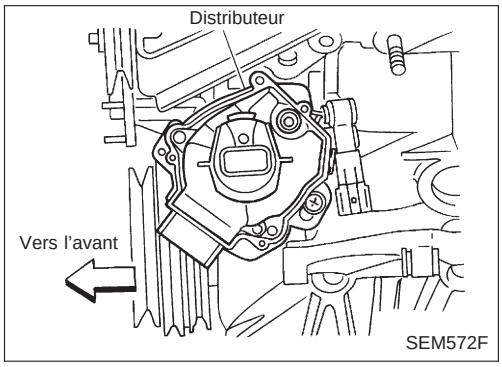

- S'assurer que le cylindre n° 1 est au P.M.H. en observant la position du rotor de distributeur.

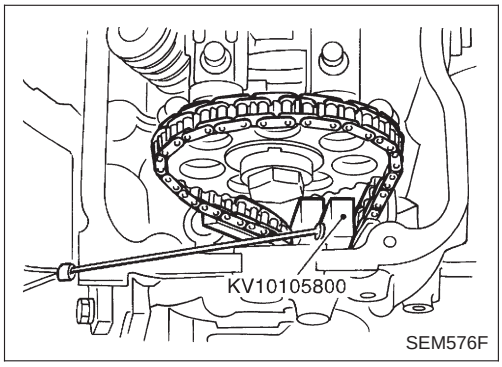

9. Desserrer le boulon de roue dentée d'arbre à cames.
- Maintenir la chaîne de distribution à l'aide d'un outil spécial comme indiqué sur la figure.

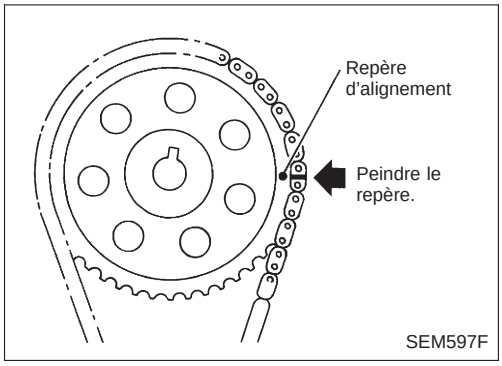

10. Tracer des repères à la peinture sur la chaîne de distribution correspondant aux repères d'alignement sur la roue dentée d'arbre à cames.

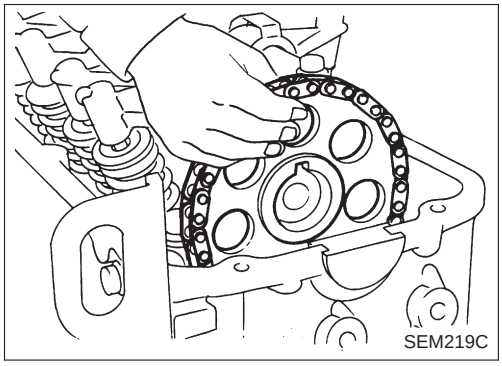

11. Déposer la roue dentée d'arbre à cames.

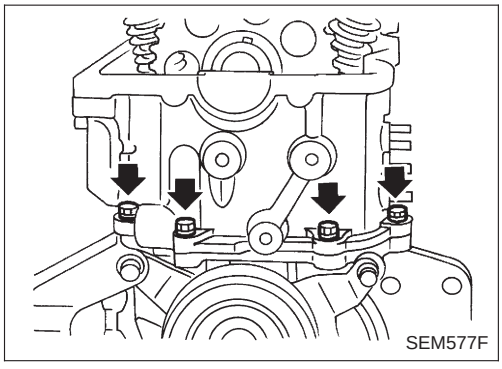

12. Déposer le couvercle de distribution avant des boulons de la culasse.

Simpo PDF Merge and Split Unregistered Version - http://www.simpopdf.com

Dépose (Suite)

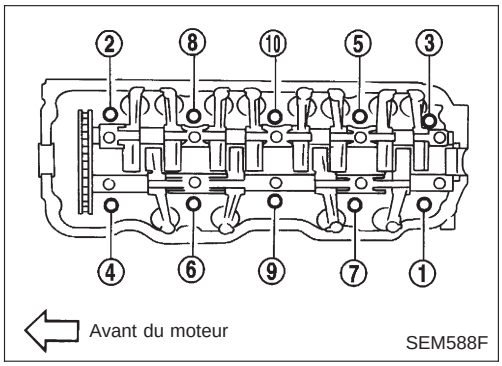

13. Déposer la culasse.
- **Desserrer en ordre numérique.**
- **Une dépose dans l'ordre incorrect peut entraîner une déformation ou une fêlure de la culasse.**
- **Desserrer les boulons de la culasse en deux ou trois étapes.**

Démontage

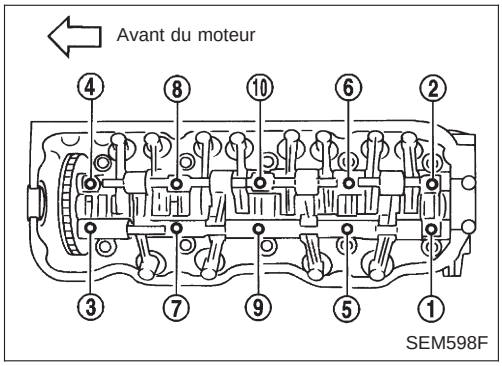

1. Déposer l'axe des culbuteurs.

a. Lors du desserrage des boulons, les desserrer de façon égale en partant de l'extérieur, et en séquence.

b. Les boulons doivent être desserrés en deux ou trois étapes.

2. Déposer l'arbre à cames.
- **Avant de déposer l'arbre à cames, mesurer son jeu axial (consulter ''Inspection'').**

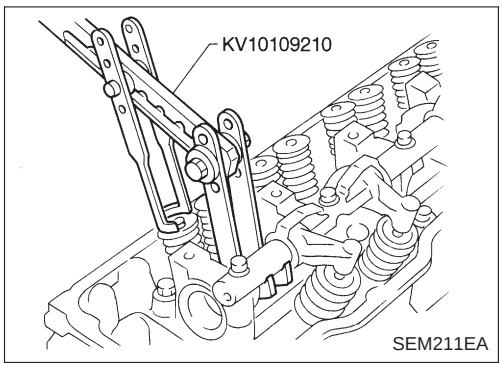

3. Déposer les composants de la soupape à l'aide de l'outil spécial.
4. Déposer les joints d'huile de soupape (se reporter à ''REMPLACEMENT DES JOINTS D'HUILE'', EM-21).

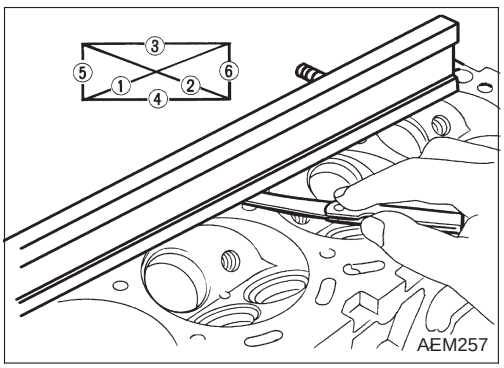

Inspection

DEFORMATION DE LA CULASSE

- Nettoyer la surface de la culasse.
- Utiliser une règle et une jauge d'épaisseur fiables pour contrôler la planéité de la surface de culasse.
- Effectuer le contrôle dans les six positions indiquées sur la figure.

Planéité de la surface de culasse : mm
Standard
Moins de 0,03
Limite
0,1

Si la culasse n'est pas plane, la remplacer ou la rectifier.

Limite de rectification :
La limite de rectification de la culasse est déterminée par celle du bloc-cylindres.
La quantité de rectification de la culasse est ''A''
La quantité de rectification du bloc-cylindres est ''B''
La limite maximum est la suivante :
A + B = 0,2 mm

Simpo PDF Merge and Split Unregistered Version - http://www.simpopdf.com

Inspection (Suite)

Après avoir rectifié la culasse, s'assurer que l'arbre à cames peut être tourné librement à la main. Si une résistance est ressentie, la culasse doit être remplacée.

Hauteur nominale de la culasse :
98,8 - 99,0 mm

VERIFICATION VISUELLE DE L'ARBRE A CAMES

Vérifier si l'arbre à cames ne présente pas des traces de rayures, de grippage et d'usure.

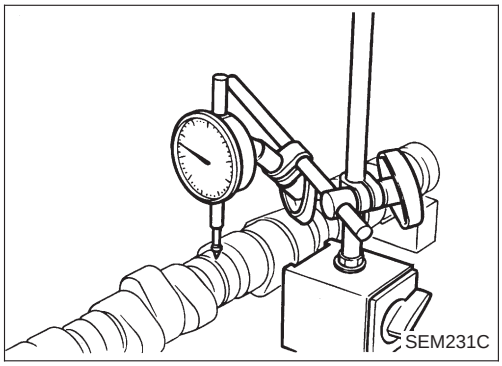
SEM231C

VOILE DE L'ARBRE A CAMES

1. Mesurer le voile de l'arbre à cames au tourillon central.
   Voile (indication totale du comparateur) :
   0 - 0,02 mm
2. Si la lecture excède la limite, remplacer l'arbre à cames.

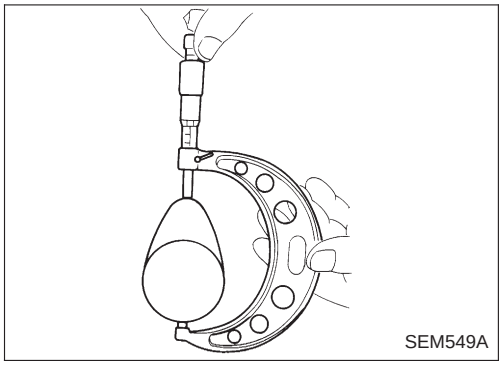
SEM549A

HAUTEUR DES CAMES DE L'ARBRE A CAMES

1. Mesurer la hauteur des cames de l'arbre à cames.
   Hauteur standard des cames :
   44,43 - 44,58 mm
   Limite d'usure de la hauteur de came :
   0,2 mm
2. Si l'usure dépasse la limite, remplacer l'arbre à cames.

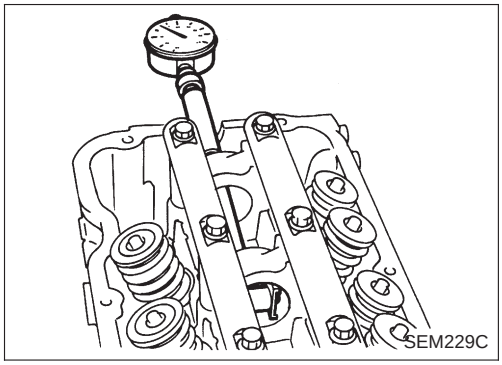
SEM229C

JEU DU TOURILLON D'ARBRE A CAMES

1. Reposer le support d'arbre à cames et l'axe des culbuteurs et serrer les boulons au couple spécifié.
2. Mesurer le diamètre intérieur du palier d'arbre à cames.
   Diamètre intérieur standard :
   33,000 - 33,025 mm

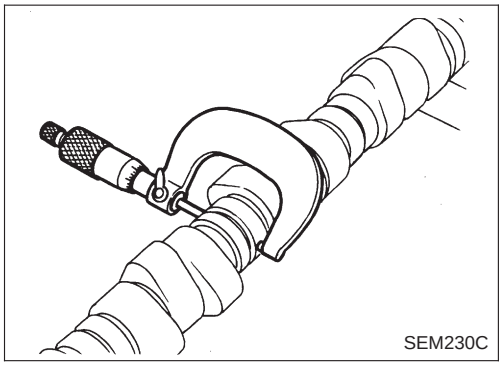
SEM230C

3. Mesurer le diamètre extérieur du tourillon d'arbre à cames.
   Diamètre extérieur standard :
   32,935 - 32,955 mm
4. Si le jeu dépasse la limite, remplacer l'arbre à cames et/ou la culasse.
   Jeu du tourillon d'arbre à cames : mm
   Standard
   0,045 - 0,090
   Limite
   0,12

Simpo PDF Merge and Split Unregistered Version - http://www.simpopdf.com

Inspection (Suite)

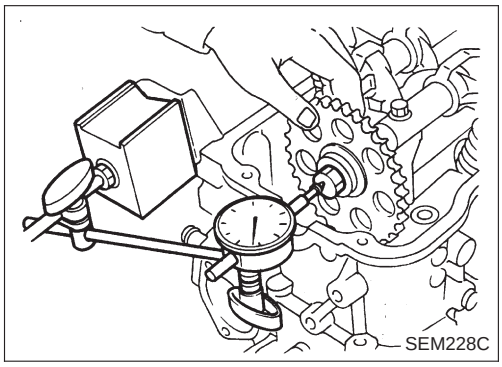

JEU AXIAL DE L'ARBRE A CAMES

1. Monter l'arbre à cames sur la culasse.
2. Mesurer le jeu axial de l'arbre à cames.
   Jeu axial de l'arbre à cames : mm
   Standard
   0,07 - 0,15
   Limite
   0,2
3. Si le jeu axial dépasse la limite, remplacer l'arbre à cames et remesurer son jeu axial.

- Si le jeu axial dépasse la limite après avoir remplacé l'arbre à cames, remplacer la culasse.

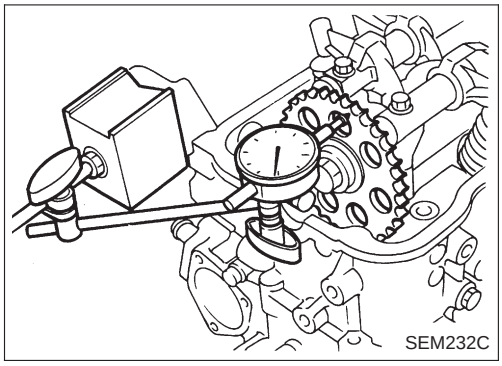

VOILE DE LA ROUE DENTEE D'ARBRE A CAMES

1. Monter la roue dentée sur l'arbre à cames.
2. Mesurer le voile de la roue dentée d'arbre à cames.
   Voile (indication totale du comparateur) :
   Limite 0,12 mm
3. Si la lecture excède la limite, remplacer la roue dentée d'arbre à cames.

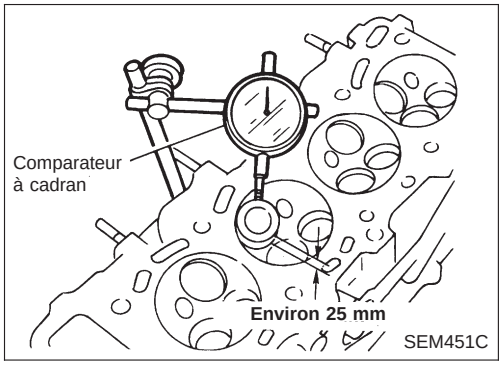

JEU DU GUIDE DE SOUPAPE

1. Mesurer la déflexion de la soupape comme indiqué sur la figure (l'usure de la soupape et du guide de soupape se produit surtout dans ce sens).
   Limite de déflexion de la soupape (indication du comparateur à cadran) :
   0,15 mm

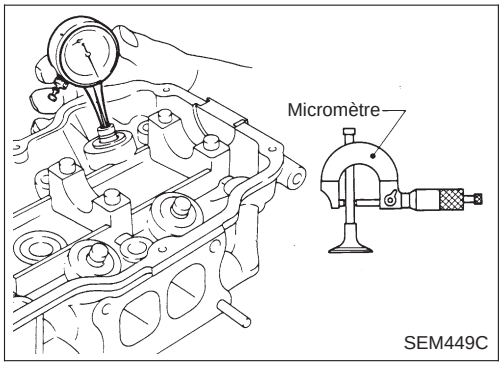

2. Si la lecture trouvée excède la limite, vérifier le jeu entre la soupape et le guide de soupape.

a. Mesurer le diamètre de la queue de soupape et le diamètre intérieur du guide de soupape.
b. Vérifier que le jeu mesuré est dans la fourchette de tolérance.
   Jeu entre la soupape et le guide de soupape = diamètre interne du guide de soupape − diamètre de queue de soupape : mm
   Standard
   Admission
   0,020 - 0,053

Simpo PDF Merge and Split Unregistered Version - http://www.simpopdf.com

Inspection (Suite)

Echappement
0,040 - 0,070
Limite 0,1

c. Si le jeu mesuré excède la limite, remplacer la soupape, puis remesurer le jeu.

- Si le jeu dépasse toujours la limite après avoir remplacé la soupape, remplacer le guide de soupape.

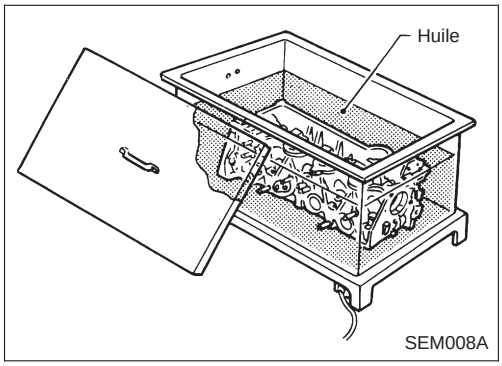

REMPLACEMENT DU GUIDE DE SOUPAPE

1. Pour déposer le guide de soupape, chauffer la culasse à une températures de 110 à 130°C.

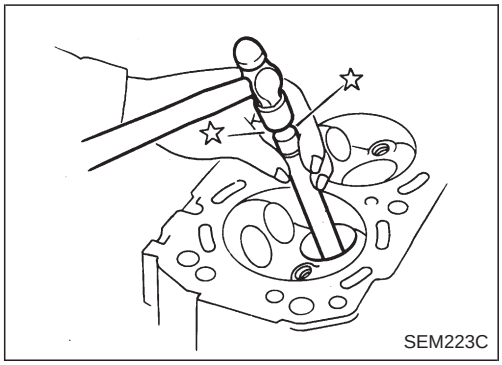

2. Chasser le guide de soupape à l'aide d'un maillet et d'un outil adéquat ou encore d'une presse [sous une pression de 20 kN (2 tonnes)].

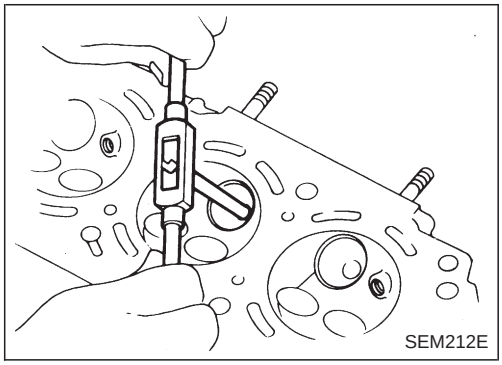

3. Réaléser le trou du guide de soupape dans la culasse.
Diamètre du trou de guide de soupape (pour pièces pour l'entretien) : mm
Admission
11,175 - 11,196
Echappement
12,175 - 12,196

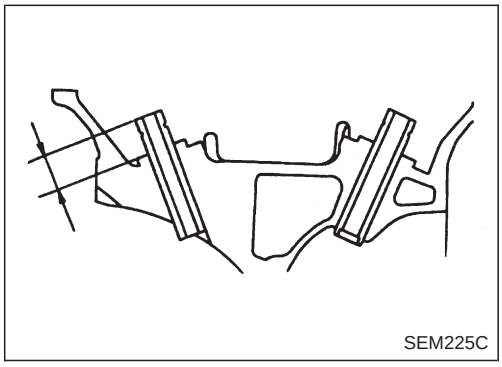

4. Chauffer la culasse à une température de 110 à 130°C et adapter à la presse le guide de soupape dans la culasse.
Partie en saillie "L" :
14,9 - 15,1 mm
5. Réaléser le guide de soupape.
Dimension de finition : mm
Admission
7,000 - 7,018
Echappement
8,000 - 8,018

Simpo PDF Merge and Split Unregistered Version - http://www.simpopdf.com

Inspection (Suite)

SIEGES DE SOUPAPE

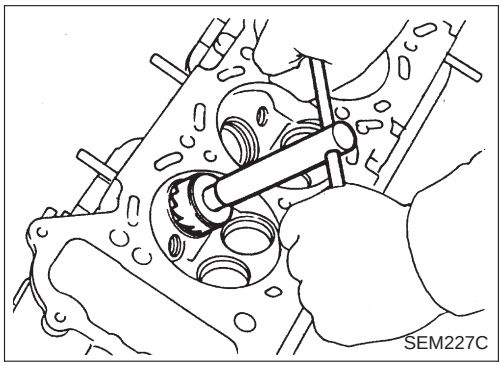
SEM227C

Inspecter les sièges de soupape pour détecter les traces de piqûres sur la surface de contact. Rectifier ou remplacer en cas d'usure excessive.

- **Avant de rectifier les sièges de soupape, vérifier l'usure des soupapes et des guides des soupapes. Si ces pièces sont usées, les remplacer. Puis rectifier le siège de soupape.**
- **Travailler à deux mains pour obtenir une surface rectifiée uniforme.**

REMPLACEMENT DU SIEGE DE SOUPAPE POUR PIECES D'ENTRETIEN

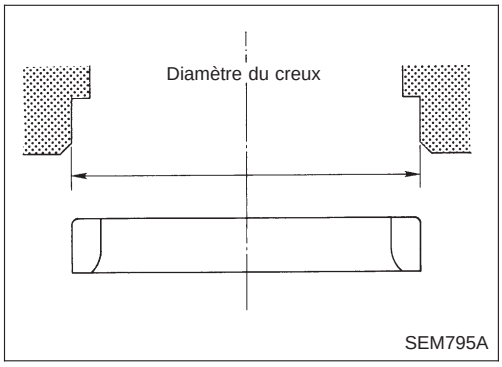

SEM795A

1. Les anciens sièges peuvent être déposés à l'aide d'une perceuse, jusqu'à ce qu'ils s'effritent. Régler la butée de profondeur de la machine de façon à ne pas aléser au delà du fond du creux de siège dans la culasse.
2. Réaléser le creux de la culasse.
   Dimension de réalésage du siège de soupape d'entretien
   Surdimensionné (0,5) : mm
   Admission 36,500 - 36,516
   Echappement 42,500 - 42,516

Utiliser le centre du guide de soupape lors du réalésage pour s'assurer que les sièges s'adapteront correctement.

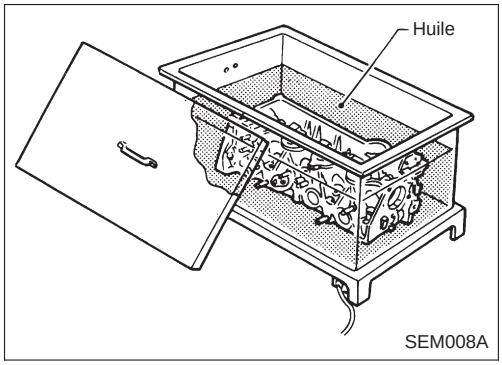

SEM008A

3. Chauffer la culasse à une température de 110 à 130°C.
4. A la presse, monter le siège de soupape jusqu'à ce qu'il soit bien calé dans le fond.

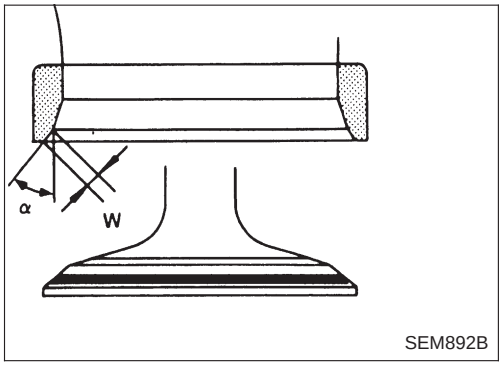

SEM892B

5. A l'aide d'un outil approprié, tailler ou fraiser le siège de soupape à la dimension requise indiquée dans les SDS, EM-94.
6. Après la taille, roder les sièges de soupape avec un composé de rodage.
7. Vérifier l'état des sièges de soupape.
   Angle d'assise "α" :
   45 deg.
   Largeur de contact "W" : mm
   Admission 1,6 - 1,7
   Echappement 1,7 - 2,1

Simpo PDF Merge and Split Unregistered Version - http://www.simpopdf.com

Inspection (Suite)

DIMENSIONS DES SOUPAPES

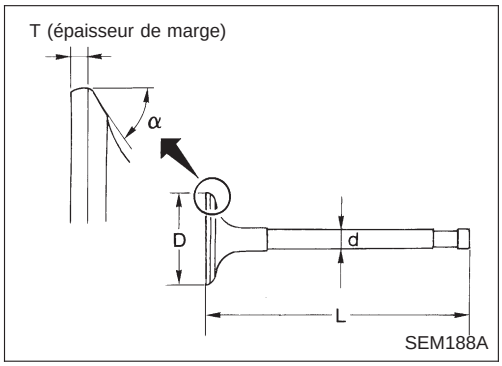

Vérifier les dimensions de chaque soupape. Se reporter aux SDS, EM-95.
Quand la tête de soupape est usée au-delà de la marge d'épaisseur de 0,5 mm, remplacer la soupape.
La tolérance de rectification de la queue de soupape est de 0,2 mm ou moins.

RESSORTS DE SOUPAPE

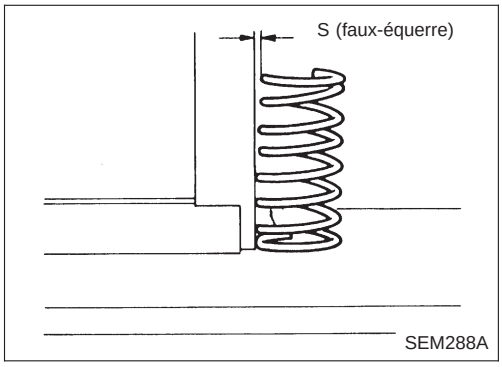

Equerrage

1. Mesurer la dimension ''S''.
   Faux-équerre ''S'' : mm
   Extérieur
   Admission: moins de 2,5
   Echappement: moins de 2,3
   Intérieur
   Admission: moins de 2,3
   Echappement: moins de 2,1
2. Si la limite est dépassée, remplacer les ressorts.

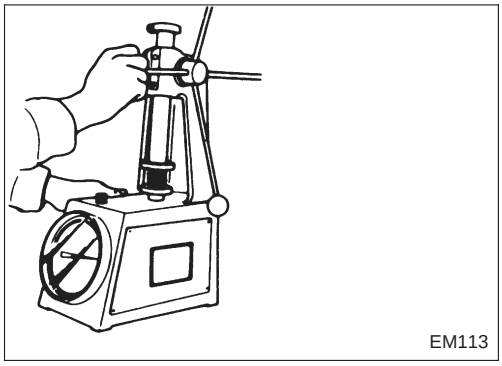

Pression

Vérifier la pression du ressort de soupape à la hauteur de ressort spécifiée.

Pression : N (kg) à une hauteur de mm
Standard
Extérieur
Admission 604,1 (61,6) à 37,6
Echappement 640,4 (65,3) à 34,1
Intérieur
Admission 284,4 (29,0) à 32,6
Echappement 328,5 (33,5) à 29,1
Limite
Extérieur
Admission 567,8 (57,9) à 37,6
Echappement 620,8 (63,3) à 34,1
Intérieur
Admission 266,8 (27,2) à 32,6
Echappement 318,7 (32,5) à 29,1

Si la limite est dépassée, remplacer les ressorts.

AXE DE CULBUTEUR ET CULBUTEUR

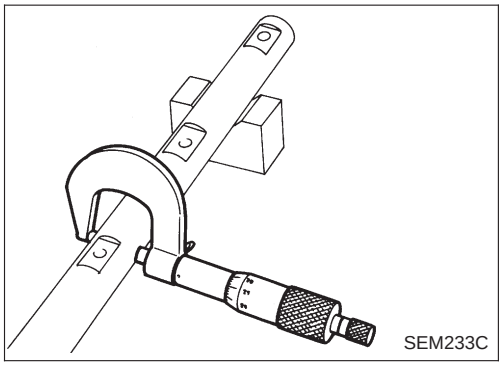

1. Vérifier si les axes de culbuteurs présentent des traces de rayures, de grippage et d'usure.
2. Vérifier le diamètre extérieur de l'axe de culbuteurs.
   Diamètre :
   21,979 - 22,000 mm

Simpo PDF Merge and Split Unregistered Version - http://www.simpopdf.com

Inspection (Suite)

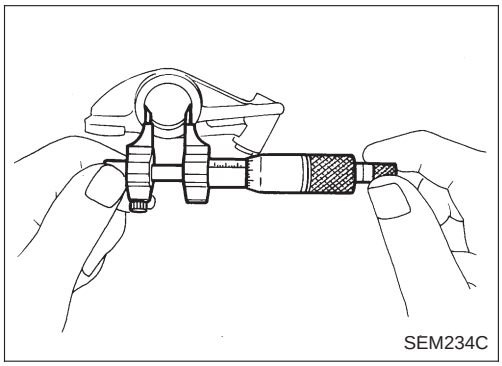
SEM234C

3. Contrôler le diamètre intérieur du culbuteur.
   Diamètre :
   22,012 - 22,029 mm
   Jeu entre culbuteur et axe :
   0,012 - 0,050 mm

- **Lors de la vérification, maintenir le culbuteur avec le poussoir de soupape hydraulique en position verticale pour empêcher l'air de pénétrer dans le poussoir de soupape hydraulique.**

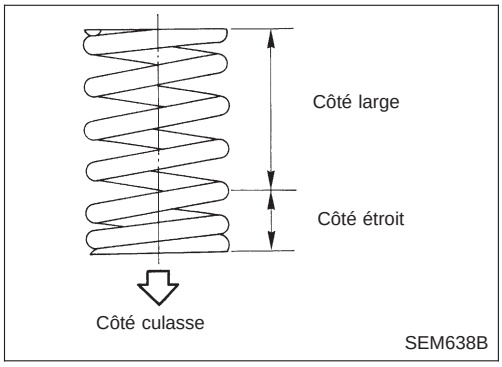

SEM638B

Remontage

1. Monter les composants de la soupape.

- **Toujours utiliser un joint d'huile de soupape neuf. Se reporter au titre ''REMPLACEMENT DU JOINT D'HUILE''.**
- **Avant de reposer le joint d'huile de soupape, reposer le siège de ressort intérieur de soupape.**
- **Reposer le ressort extérieur de soupape (à spires inégales), avec le côté étroit tourné vers la culasse.**
- **Après avoir assemblé les composants de la soupape, utiliser un maillet à tête plastique pour frapper légèrement l'extrémité de la queue de soupape afin d'assurer un montage correct.**

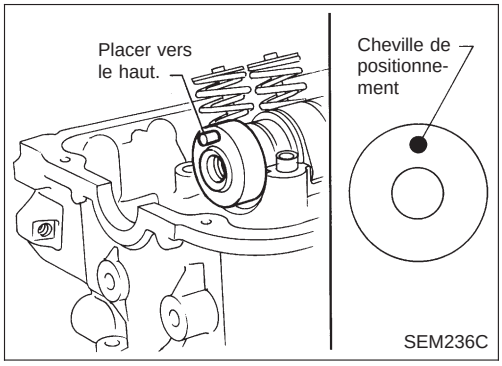

SEM236C

2. Reposer l'arbre à cames en dirigeant la cheville de positionnement vers l'avant du moteur et en la plaçant vers le haut.

- **Appliquer de l'huile moteur sur l'arbre à cames lors de son montage dans la culasse.**

Simpo PDF Merge and Split Unregistered Version - http://www.simpopdf.com

Remontage (Suite)

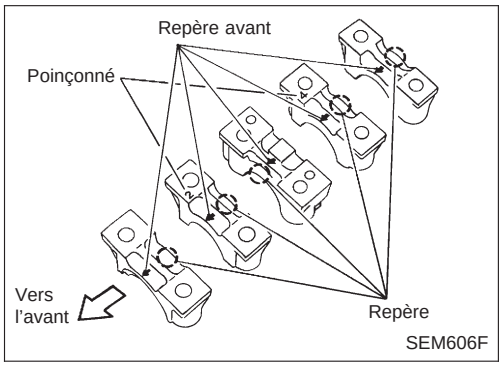

3. Reposer les supports d'arbre à cames.

- **Le repère avant est poinçonné sur le support d'arbre à cames.**

Emplacement (en partant de l'avant)	Identification	
	Repère	Poinçonné
N° 1	51	–
N° 2	52	2
N° 3	53	–
N° 4	52	4
N° 5	55	–

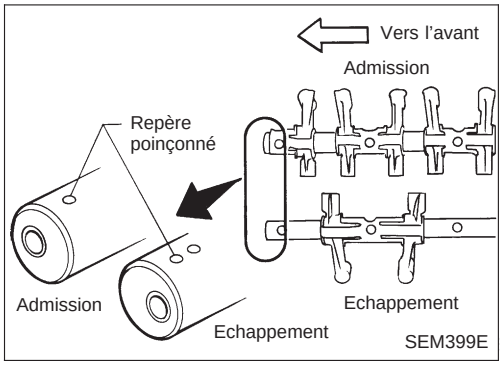

4. Reposer l'axe des culbuteurs avec les culbuteurs.

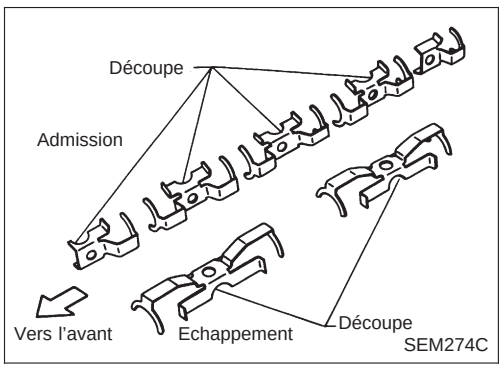

- Poser la retenue avec la découpe orientée dans la direction indiquée sur la figure ci-contre.

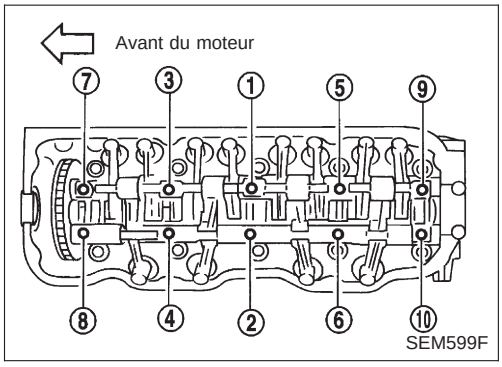

5. Serrer les boulons comme indiqué sur la figure ci-à gauche.

Simpo PDF Merge and Split Unregistered Version - http://www.simpopdf.com

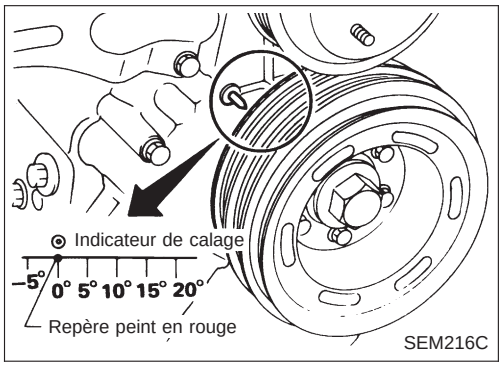

Repose

1. Mettre le piston n° 1 au P.M.H. de sa course de compression, de la manière suivante :

a. Aligner le repère de la poulie de vilebrequin sur la position ‘‘0°’’ et confirmer que la tête du rotor du distributeur est positionnée comme indiqué ci-contre.

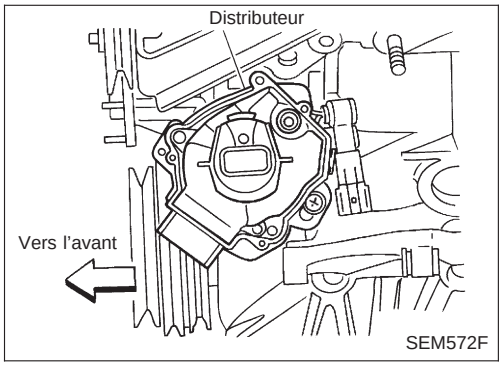

b. Vérifier que la cheville de positionnement de l’arbre à cames est placée vers le haut.

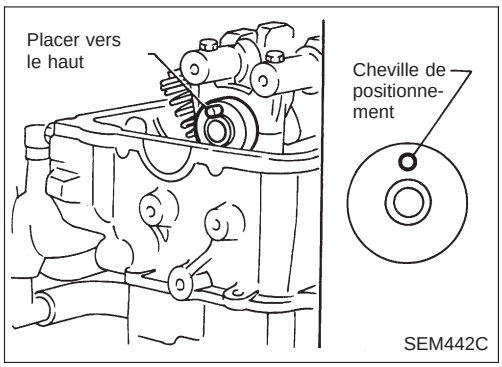

2. Reposer la culasse avec le joint plat neuf et serrer les boulons de culasse dans l’ordre numérique.

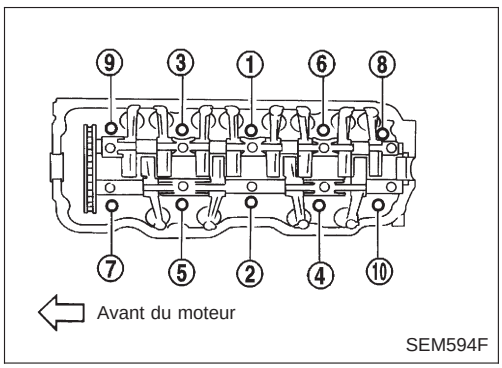

- **Ne pas faire tourner le vilebrequin et l’arbre à cames séparément, car les soupapes heurteraient les têtes de piston.**
- **Procédure de serrage**

a. Serrer tous les boulons à un couple de 29 N·m (3,0 kg-m).
b. Serrer tous les boulons à un couple de 78 N·m (8,0 kg-m).
c. Desserrer entièrement tous les boulons.
d. Serrer tous les boulons à un couple de 25 à 34 N·m (2,5 à 3,5 kg-m).
e. Tourner tous les boulons de 80^{+5}_{-0} degrés dans le sens des aiguilles d’une montre à l’aide d’une clé angulaire. Si l’on ne dispose pas d’une clé angulaire, serrer tous les boulons à un couple de 74 à 83 N·m (7,5 à 8,5 kg-m).

Simpo PDF Merge and Split Unregistered Version - http://www.simpopdf.com

Repose (Suite)

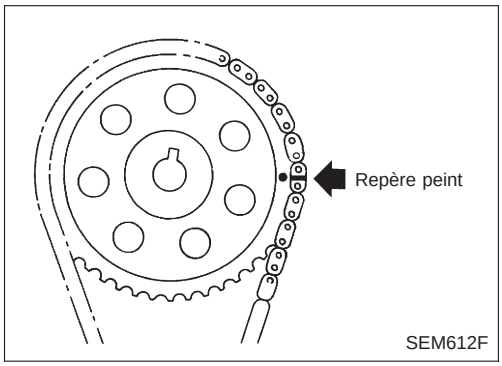

3. Monter la chaîne sur la roue dentée d'arbre à cames en alignant tous les repères. Puis reposer la roue dentée d'arbre à cames sur l'arbre à cames.

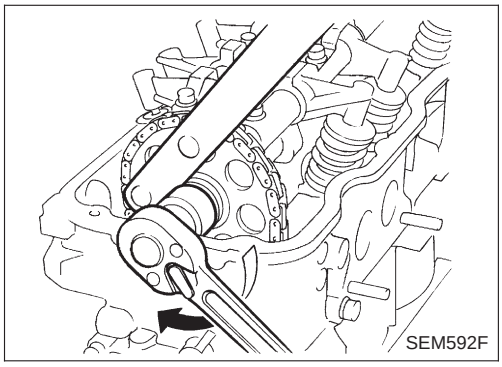

4. Serrer le boulon de roue dentée d'arbre à cames.

5. Reposer les bouchons en caoutchouc. Se reporter à CHAINE DE DISTRIBUTION, EM-20.

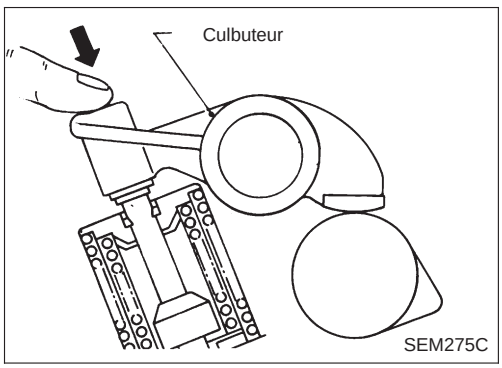

6. Vérifier le poussoir de soupape hydraulique.
a. Enfoncer le poussoir de soupape hydraulique avec les doigts.
- **S'assurer que la vérification s'effectue avec le culbuteur en position libre.**

b. Si le poussoir de soupape se déplace de plus d'1 mm, cela signifie que de l'air est à l'intérieur.
c. Purger l'air en faisant tourner le moteur à 1 000 tr/mn à vide pendant 20 minutes.
d. Si les poussoirs de soupape hydrauliques font encore du bruit, les remplacer et purger l'air en procédant comme indiqué à l'étape c.
7. Reposer le cache-culbuteurs. Se reporter à CHAINE DE DISTRIBUTION, EM-20.
- **S'assurer qu'il n'y a pas d'interférence entre le culbuteur et le cache-culbuteurs.**

8. Reposer les collecteurs d'admission et d'échappement. Se reporter à ''COMPOSANTS EXTERNES'', à la page EM-8.

Simpo PDF Merge and Split Unregistered Version - http://www.simpopdf.com

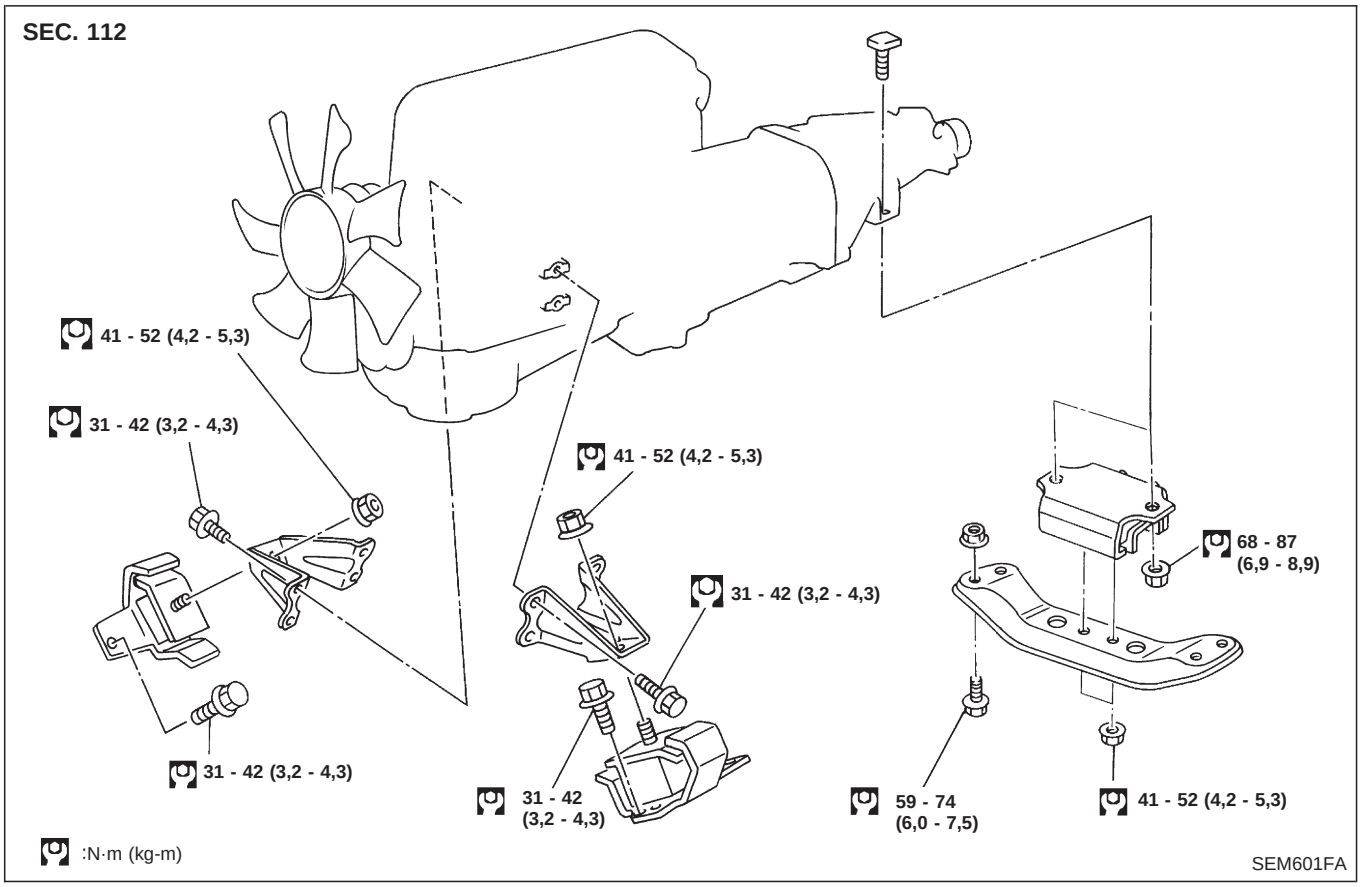

AVERTISSEMENT :

- **Garer le véhicule sur un sol plat et dur.**
- **Placer des cales à l'avant et à l'arrière des roues arrière.**
- **Ne pas déposer le moteur tant que le circuit d'échappement n'a pas complètement refroidi.**
  Faute de quoi, on risque de se brûler et/ou de provoquer un incendie dans la conduite de carburant.
- **Avant de déconnecter le flexible d'alimentation, détendre la pression d'alimentation. Se reporter à la section EC (''Détente de la pression d'alimentation'').**
- **Veiller à soulever le moteur et la boîte de vitesses en toute sécurité.**
- **Pour les moteurs qui ne sont pas équipés d'élingues de levage moteur, utiliser les élingues et les boulons de levage appropriés décrits dans le CATALOGUE DES PIECES DETACHEES.**

ATTENTION :

- **Lors du levage du moteur, veiller à ne pas heurter les pièces environnantes. Prendre particulièrement soin de la gaine du câble d'accélérateur, des conduites de frein et du maître-cylindre de frein.**
- **Lorsque l'on soulève le moteur, toujours utiliser les élingues en toute sécurité.**
- **Pour les modèles à 4 roues motrices, appliquer un joint d'étanchéité entre le moteur et la transmission. Se reporter à la section MT (''Dépose et repose'').**

Simpo PDF Merge and Split Unregistered Version - http://www.simpopdf.com

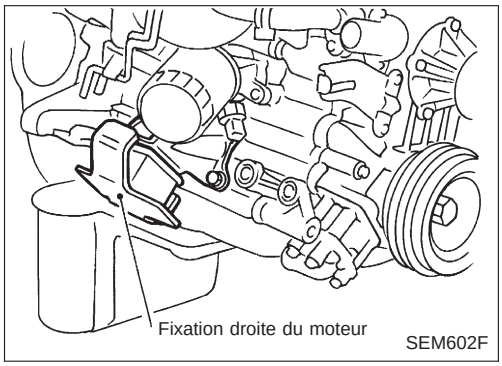

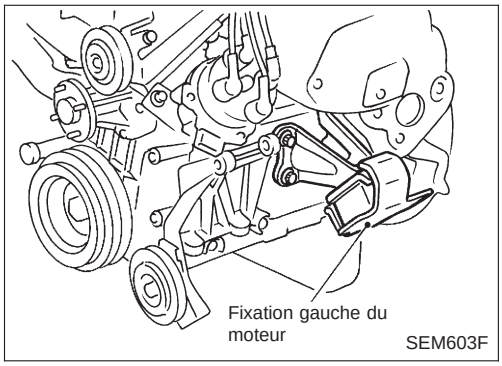

Dépose

1. Vidanger le liquide de refroidissement du bloc-moteur et du radiateur. Se reporter à la section MA (‘‘Remplacement du liquide de refroidissement moteur’’ au chapitre ‘‘ENTRETIEN DU MOTEUR’’).
2. Détendre la pression d’alimentation. Se reporter à la section EC (‘‘Détente de la pression d’alimentation’’).
3. Déposer le câble négatif de la batterie.
4. Déposer le capot. Se reporter à la section BT.
5. Déposer les courroies d’entraînement de direction assistée, d’alternateur et de compresseur de C/A.
6. Déposer le radiateur. Se reporter à la section LC (‘‘Radiateur’’, ‘‘CIRCUIT DE REFROIDISSEMENT DU MOTEUR’’).
7. Déposer le protecteur de chaleur du collecteur d’échappement.
8. Débrancher le circuit d’échappement du collecteur d’échappement.
9. Déverser le liquide de refroidissement. Se reporter à la section HA (‘‘Procédure d’entretien R-134a’’, ‘‘PROCEDURES D’ENTRETIEN’’).
10. Débrancher les conduites de liquide de refroidissement. Se reporter à la section HA (‘‘Canalisations de réfrigération’’, ‘‘PROCEDURES D’ENTRETIEN’’).
11. Débrancher le câble d’accélérateur, les flexibles à dépression, les connecteurs électriques, les flexibles de chauffage et le flexible de servo à dépression.
12. Déposer les quatre boulons de la pompe de direction assistée.
13. Déposer la boîte de vitesses. Se reporter à la section MT (‘‘Dépose’’ au chapitre ‘‘DEPOSE ET REPOSE’’).
14. Déposer les fixations du moteur gauche et droite.
15. Déposer le moteur.

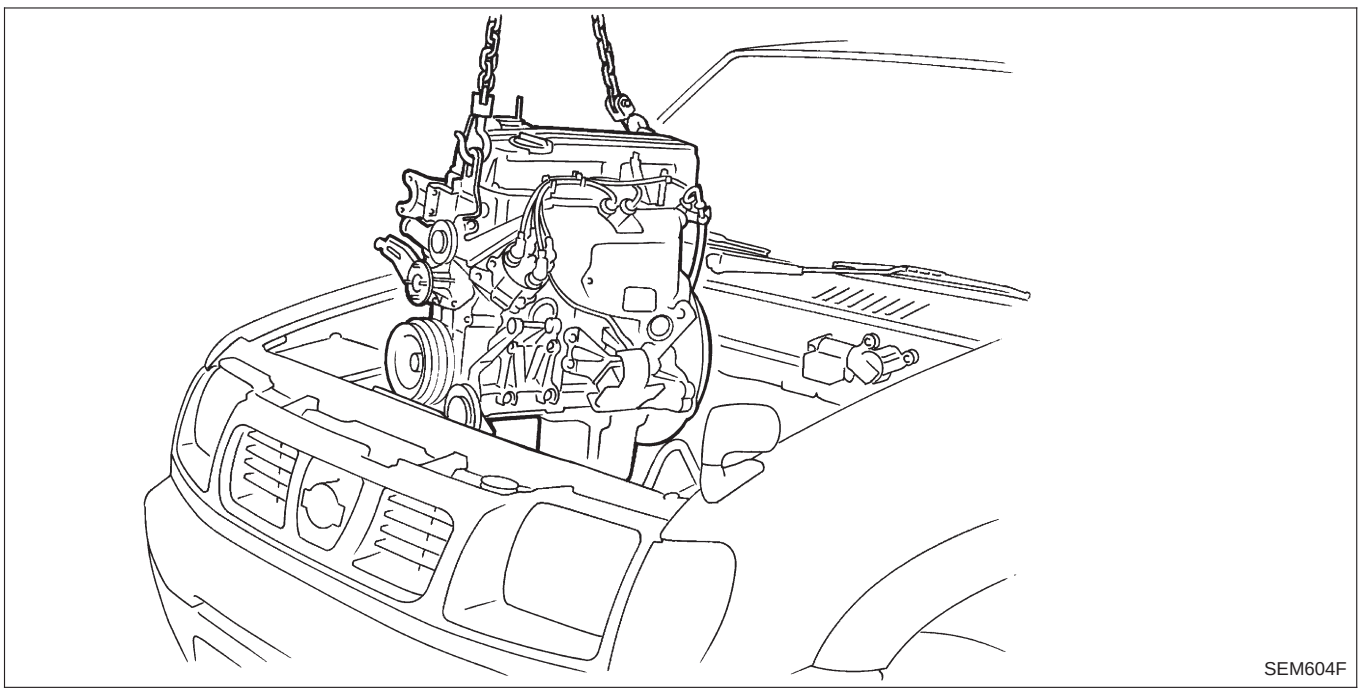

Repose

- Reposer dans l’ordre inverse de la dépose.

Simpo PDF Merge and Split Unregistered Version - http://www.simpopdf.com

SEC. 110•120•135•150•210

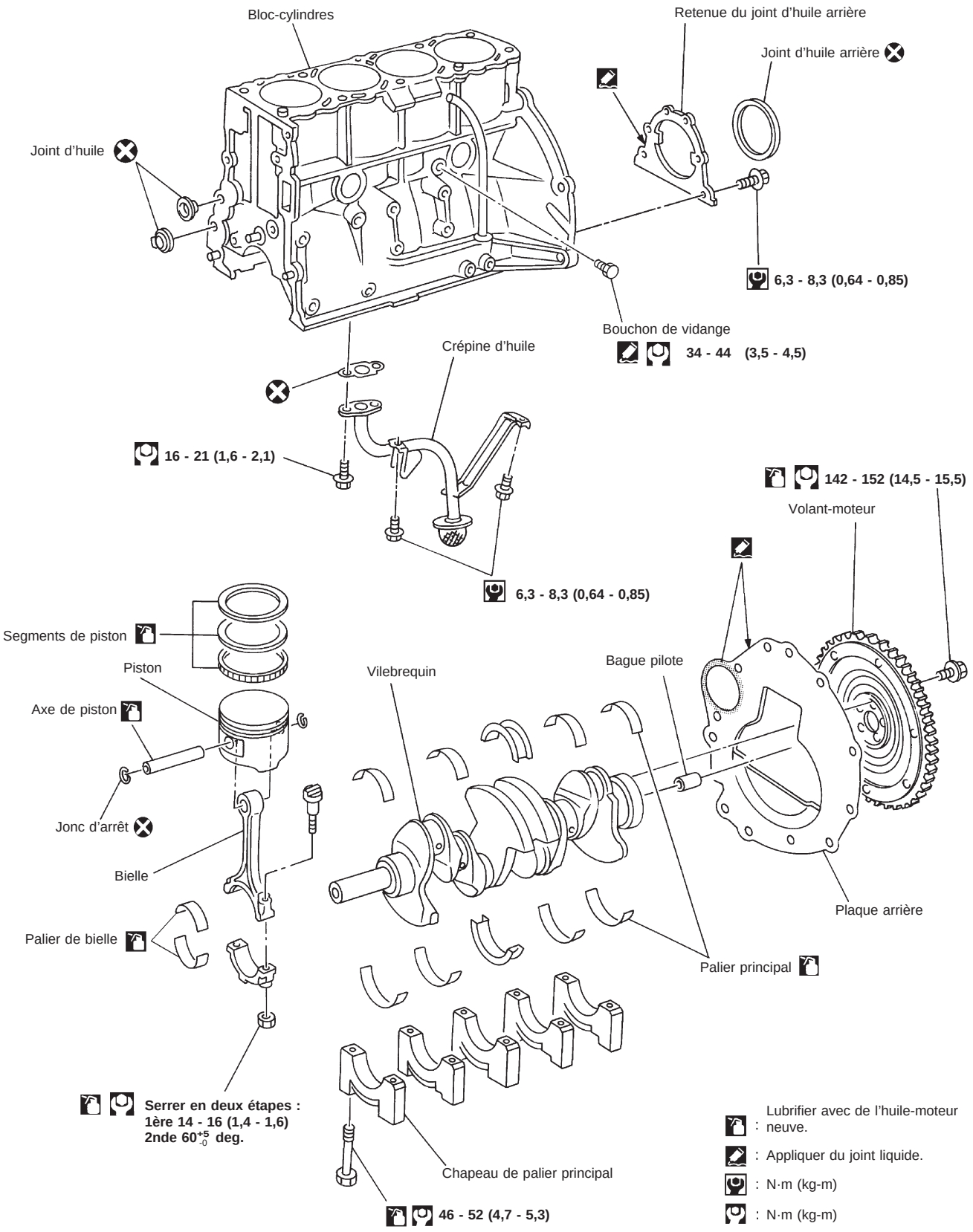

SEM812F

Simpo PDF Merge and Split Unregistered Version - http://www.simpopdf.com

ATTENTION :

- **Lors de la repose de pièces coulissantes (paliers, pistons, etc.), lubrifier les surfaces de contact avec de l'huile moteur neuve.**
- **Lors de la dépose des pièces telles que paliers et chapeaux de palier, ranger les pièces démontées dans l'ordre et le sens corrects.**
- **Lors de la repose des écrous de bielle et des boulons de chapeau de palier principal, appliquer de l'huile moteur neuve sur les filetages et surfaces d'assise.**
- **Ne laisser aucun matériau magnétique venir en contact avec les dents de la couronne du volant-moteur ou avec le plateau d'entraînement.**

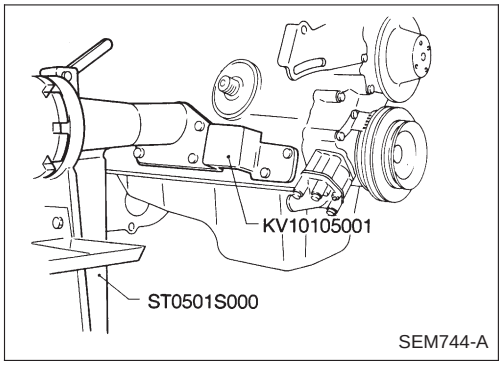

SEM744-A

Démontage

PISTON ET VILEBREQUIN

1. Déposer le collecteur d'admission.
2. Poser le moteur sur un plan de travail.
3. Vidanger le liquide de refroidissement et l'huile.
4. Déposer le carter d'huile.
5. Déposer la pompe à eau.
6. Déposer la chaîne de distribution.
7. Déposer la culasse.
8. Déposer les pistons avec la bielle.

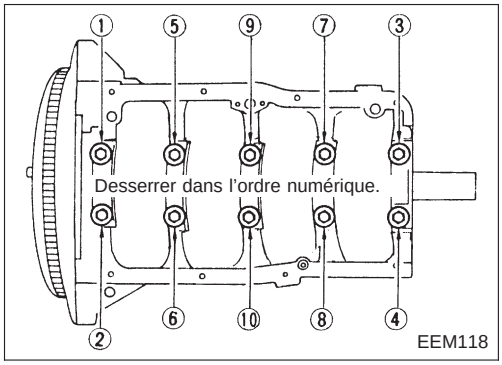

EEM118

9. Déposer les chapeaux de paliers et le vilebrequin.

- **Avant de déposer les chapeaux de paliers, mesurer le jeu axial du vilebrequin. Se reporter à EM-47.**
- **Les boulons doivent être desserrés en deux ou trois étapes.**

Inspection

JEU ENTRE LE PISTON ET L'AXE DE PISTON

1. Mesurer le diamètre intérieur du trou de l'axe de piston ''dp''.

Diamètre standard ''dp'' :
21,002 - 21,008 mm

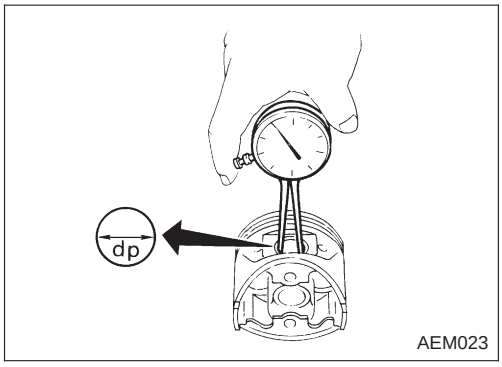

AEM023

Simpo PDF Merge and Split Unregistered Version - http://www.simpopdf.com

Inspection (Suite)

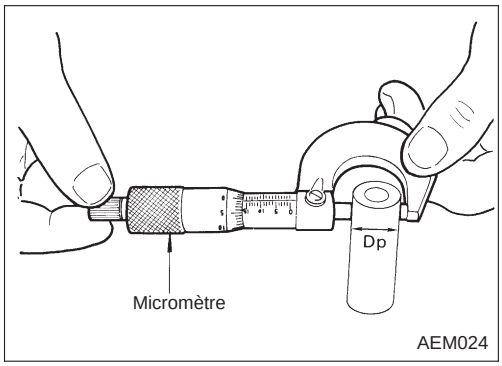

2. Mesurer le diamètre extérieur de l'axe de piston ''Dp''.
   Diamètre standard ''Dp'' :
   20,993 - 20,998 mm
3. Calculer le jeu de l'axe de piston.
   dp − Dp = 0,008 - 0,012 mm
   En cas de dépassement de ces valeurs, remplacer le piston avec l'axe.

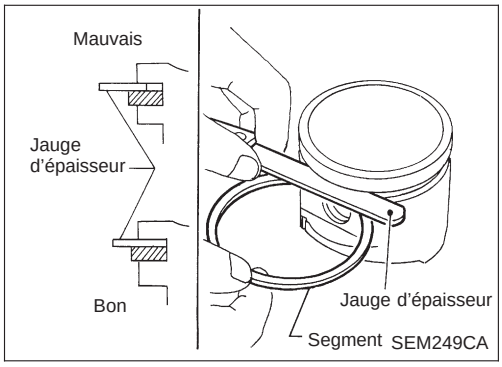

JEU LATERAL DU SEGMENT DE PISTON

Jeu latéral : mm
Segment de feu 0,01 - 0,03
Segment de compression 0,03 - 0,07
Segment racleur 0,085 - 0,115
Limite maximum de jeu latéral :
0,1 mm

Remplacer les segments si la valeur n'est pas conforme aux spécifications.
Si le jeu dépasse la limite maximum avec un segment neuf, remplacer le piston.

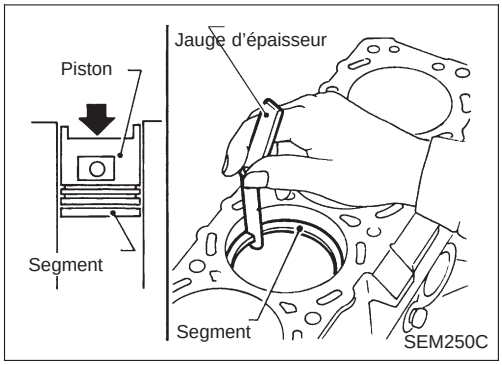

COUPE DE SEGMENT DE PISTON

Coupe de segment : mm
Segment de feu
0,28 - 0,43
Segment de compression
0,45 - 0,60
(R ou T est poinçonné sur le segment).
0,55 - 0,70
(N est poinçonné sur le segment).
Segment racleur
0,20 - 0,60
Limite maximum de coupe de segment :
0,5 mm

Remplacer les segments si la valeur n'est pas conforme aux spécifications. Si le jeu dépasse la limite maximum avec un segment neuf, réaléser le cylindre et utiliser un piston et des segments surdimensionnés. Se reporter aux SDS, EM-97.

- Lors du remplacement du piston, vérifier que la surface du bloc-cylindres ne présente pas de traces de griffures ou de grippage. Si des traces de griffures ou de grippage sont évidentes, poncer l'alésage de cylindre ou remplacer le bloc-cylindres.

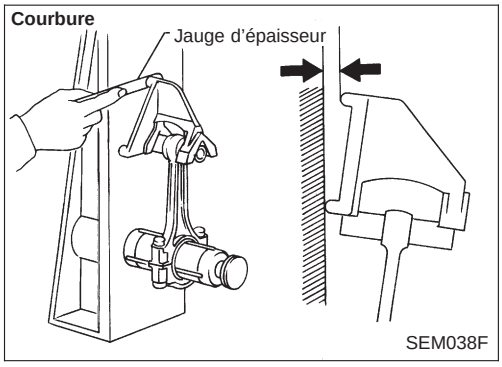

COURBURE ET TORSION DES BIELLES

Courbure : mm
Limite 0,15 par longueur de 100
Torsion : mm
Limite 0,3 par longueur de 100

En cas de dépassement de ces valeurs, remplacer l'ensemble de la bielle.

Simpo PDF Merge and Split Unregistered Version - http://www.simpopdf.com

Inspection (Suite)

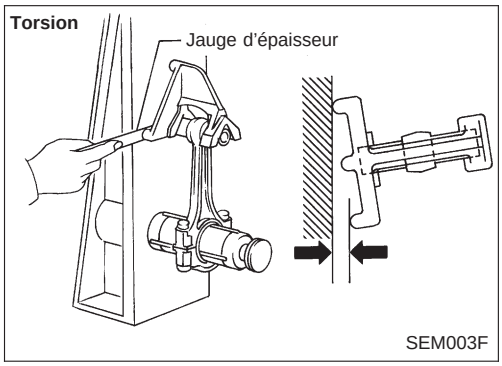

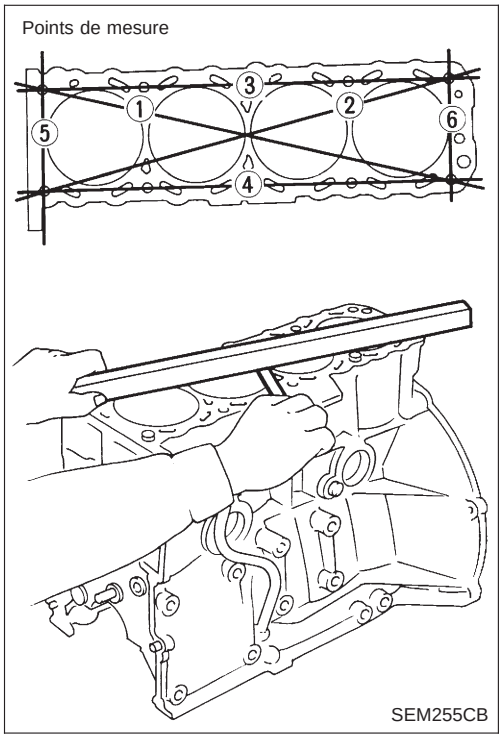

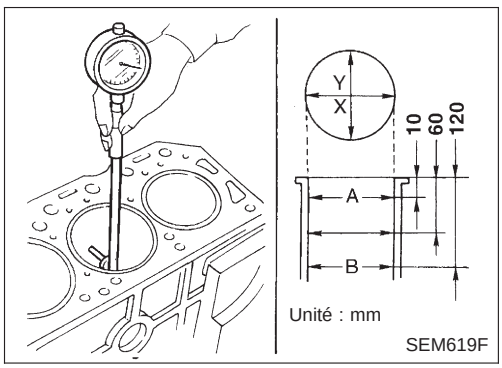

DEFORMATION ET USURE DU BLOC-CYLINDRES

1. Nettoyer la surface supérieure du bloc-cylindres.
   Utiliser une règle et une jauge d'épaisseur fiables pour contrôler la planéité de la surface du bloc-cylindres. Effectuer le contrôle dans les six positions indiquées sur la figure.
   Limite :
   0,1 mm
2. En cas de voilage excessif, rectifier.
   La limite de rectification du bloc-cylindres est déterminée par celle de la culasse.

La quantité de rectification de la culasse est "A"
La quantité de rectification du bloc-cylindres est "B"
La limite maximum est la suivante :
A + B = 0,2 mm
Hauteur nominale du bloc-cylindres depuis le centre du vilebrequin :
246,95 - 247,05 mm

3. En cas de besoin, remplacer le bloc-cylindres.

JEU ENTRE LE PISTON ET L'ALESAGE

1. A l'aide d'un comparateur à cadran, mesurer l'alésage du cylindre en recherchant usure, faux-rond ou conicité.
   Diamètre intérieur standard :
   Se reporter aux SDS, EM-93.
   Limite d'usure : 0,2 mm
   Faux-rond (X − Y) standard : 0,015 mm
   Conicité (A − B) standard : 0,010 mm
   Réaléser tous les cylindres quand la limite est dépassée. En cas de besoin, remplacer le bloc-cylindres.
2. Rechercher toutes traces de rayures et de grippage. Si l'on constate des traces de grippage, roder.

Simpo PDF Merge and Split Unregistered Version - http://www.simpopdf.com

Inspection (Suite)

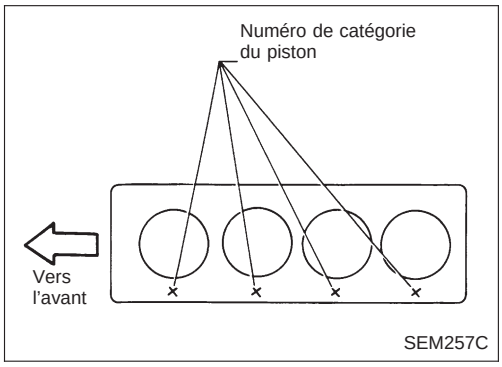

- **Si le bloc-cylindres et le piston doivent être remplacés, utiliser un piston dont le numéro de catégorie correspond à celui poinçonné sur la surface supérieure du bloc-cylindres.**

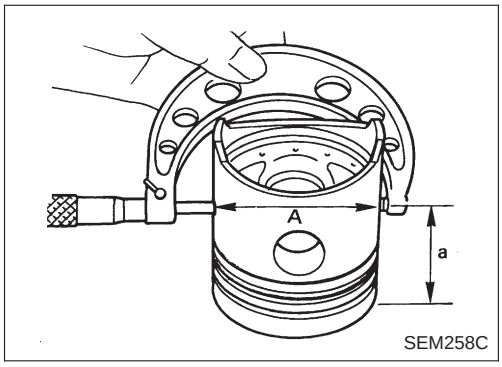

3. Mesurer le diamètre de jupe de piston.
   Diamètre de piston ''A'' :
   Se reporter aux SDS, EM-97.
   Point de mesure ''a'' (distance du fond) :
   Environ 52 mm
4. Vérifier que le jeu entre le piston et l'alésage est dans la fourchette de tolérance.
   Jeu entre le piston et l'alésage ''B'' :
   0,020 - 0,040 mm
5. Déterminer le piston surdimensionné en fonction de l'usure du cylindre.

Des pistons surdimensionnés sont disponibles pour l'entretien. Se reporter aux SDS, EM-97.

6. La dimension de l'alésage du cylindre est déterminée en ajoutant le jeu entre le piston et l'alésage au diamètre de piston ''A''.
   Calcul du réalésage :
   D = A + B − C où,
   D : Diamètre d'alésage
   A : Diamètre de piston mesuré
   B : Jeu entre piston et alésage
   C : Tolérance de finition 0,02 mm
7. Reposer les chapeaux de paliers principaux et serrer les boulons au couple spécifié. Cela empêchera la déformation des alésages de cylindre.
8. Aléser les cylindres.

- **Si un cylindre doit être réalésé, tous les cylindres doivent également être réalésés.**
- **Ne pas aléser trop profondément l'alésage du cylindre à chaque passe. Ne pas tailler plus de 0,05 mm par passe.**

9. Roder les cylindres pour obtenir le jeu entre le piston et l'alésage spécifié.
10. Mesurer l'alésage final du cylindre en recherchant s'il y a un faux-rond ou une conicité.

- **La mesure doit être prise une fois que l'alésage du cylindre est refroidi.**

Simpo PDF Merge and Split Unregistered Version - http://www.simpopdf.com

Inspection (Suite)

VILEBREQUIN

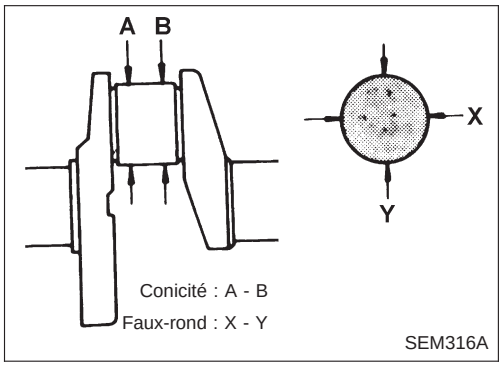

1. Vérifier si les tourillons principaux et manetons de vilebrequin ne sont pas rayés, usés ou fissurés.
2. Mesurer les tourillons avec un micromètre, pour rechercher conicité ou faux-rond.
   Faux-rond (X − Y) : mm
   Tourillon : moins de 0,01
   Maneton : moins de 0,005
   Conicité (A − B) : mm
   Tourillon : moins de 0,01
   Maneton : moins de 0,005

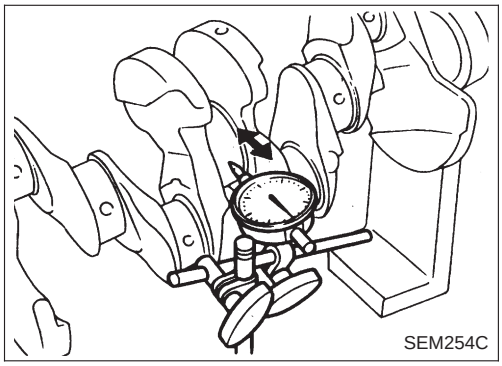

3. Mesurer le voile du vilebrequin.
   Voile (indication totale du comparateur) :
   Moins de 0,10 mm

JEU DES PALIERS

- Utiliser la méthode A ou la méthode B. La méthode A est conseillée car elle est plus précise.

Méthode A (avec une jauge d'alésage et un micromètre)

Palier principal

1. Mettre les paliers principaux à leur place sur le bloc-cylindres et sur le chapeau de palier principal.

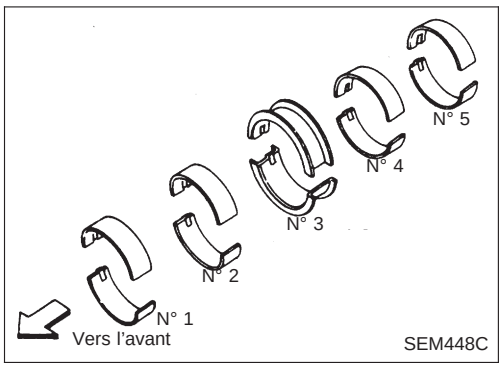

2. Monter le chapeau de palier principal sur le bloc-cylindres.
- **Serrer tous les boulons en 2 ou 3 étapes dans l'ordre correct.**
3. Mesurer le diamètre intérieur ''A'' de chaque palier principal.

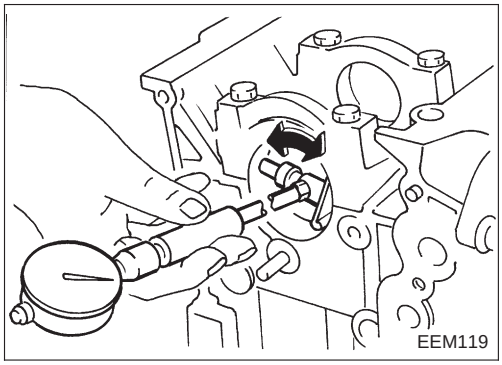

4. Mesurer le diamètre extérieur ''Dm'' de chaque tourillon principal du vilebrequin.
5. Calculer le jeu du palier principal.
   Jeu de palier principal = A − Dm
   Standard :
   0,020 - 0,047 mm
   Limite :
   0,1 mm

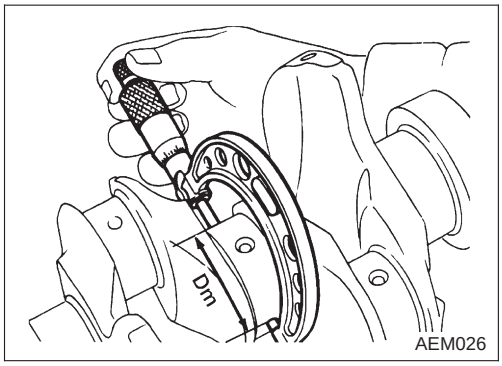

6. Remplacer le palier si les limites sont dépassées.
7. Si le jeu ne peut pas être réglé dans la fourchette standard de palier, réusiner le tourillon de vilebrequin et utiliser un palier sous-dimensionné.

Simpo PDF Merge and Split Unregistered Version - http://www.simpopdf.com

Inspection (Suite)

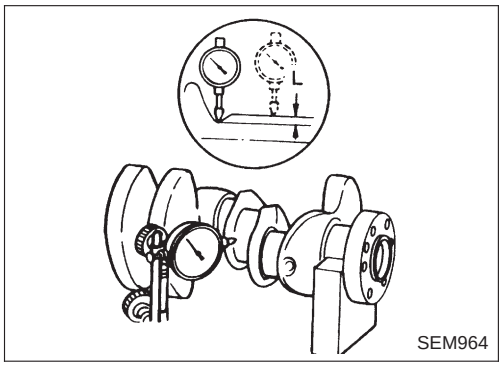

a. Lors du réusinage du tourillon de vilebrequin, confirmer que la dimension des filets ''L'' est supérieure à la limite spécifiée.
''L'' : 0,1 mm
b. Consulter les SDS pour rectifier le vilebrequin et connaître les pièces d'entretien disponibles.

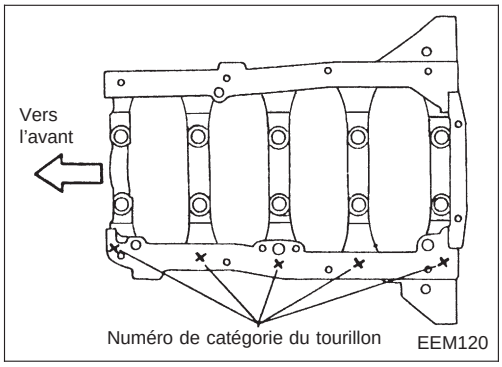

8. En cas de réutilisation du vilebrequin, mesurer le jeu et choisir l'épaisseur du palier principal.
Si le vilebrequin ou le bloc-cylindres est remplacé, choisir l'épaisseur des paliers principaux comme suit :

a. Le numéro de catégorie de chaque tourillon principal du bloc-cylindres est poinçonné sur le bloc-cylindres correspondant. Ces numéros de catégorie sont poinçonnés en chiffres arabes ou romains.

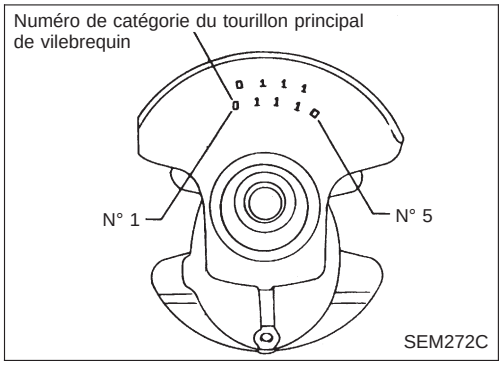

b. Le numéro de catégorie de chaque tourillon principal de vilebrequin est poinçonné sur le vilebrequin correspondant. Ces numéros de catégorie sont poinçonnés en chiffres arabes ou romains.

c. Choisir un palier principal d'épaisseur convenable en se reportant à l'exemple ou au tableau suivant.

Exemple :
Numéro de catégorie du tourillon principal : 1
Numéro de catégorie du tourillon de vilebrequin : 2
Numéro de catégorie du palier principal = 1 + 2
= 3 (jaune)

Numéro de catégorie du palier principal et couleur d'identification :

		Numéro de catégorie du tourillon principal		
		0	1	2
Numéro de catégorie du tourillon de vilebrequin	0	0 (Noir)	1 (Marron)	2 (Vert)
	1 ou I	1 (Marron)	2 (Vert)	3 (Jaune)
	2 ou II	2 (Vert)	3 (Jaune)	4 (Bleu)

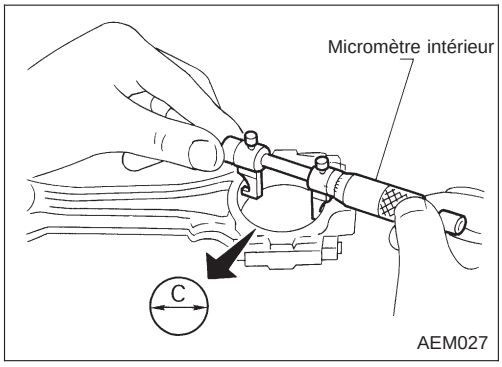

Palier de bielle (tête de bielle)

1. Monter le palier de bielle sur la bielle et le chapeau.
2. Monter le chapeau de bielle sur la bielle.
● **Serrer les boulons au couple spécifié.**
3. Mesurer le diamètre intérieur ''C'' de chaque palier.

Simpo PDF Merge and Split Unregistered Version - http://www.simpopdf.com

Inspection (Suite)

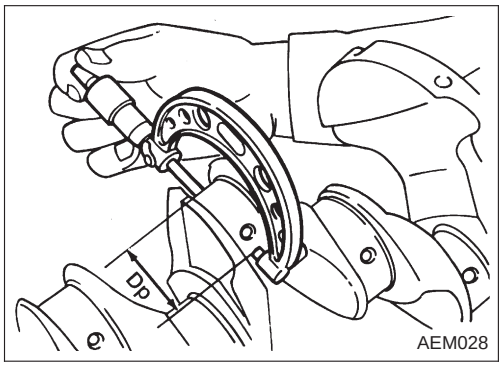

4. Mesurer le diamètre extérieur ‘‘Dp’’ de chaque maneton de vilebrequin.
5. Calculer le jeu du palier de bielle.
   Jeu du palier de bielle
   = C − Dp : mm
   Standard
   0,010 - 0,035
   Limite
   0,09
6. Remplacer le palier si les limites sont dépassées.
7. Si le jeu ne peut pas être réglé dans la fourchette standard de palier, réusiner le tourillon de vilebrequin et utiliser un palier sous-dimensionné. Se reporter à l’étape 7 du titre ‘‘JEU DES PALIERS – palier principal’’.

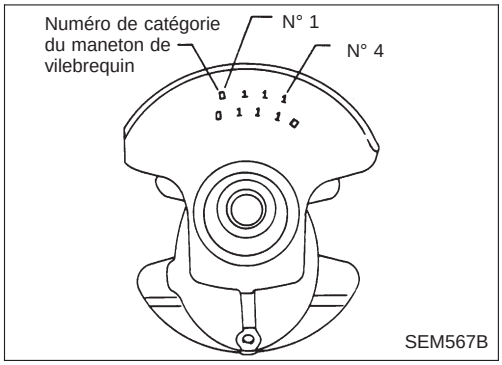

8. Si le vilebrequin doit être remplacé, choisir le palier de bielle selon le tableau suivant.

Numéro de catégorie des paliers de bielle :
Ces numéros de catégorie sont poinçonnés en chiffres arabes ou romains.

Numéro de catégorie du maneton	Numéro de catégorie du palier de bielle
0	0
1 ou I	1
2 ou II	2

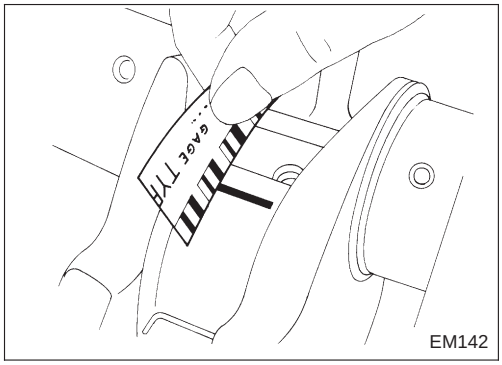

Méthode B (avec une jauge ‘‘plastigage’’)

ATTENTION :

- **Ne pas faire tourner le vilebrequin ni la bielle lorsque la jauge ‘‘plastigage’’ est introduite.**
- **Lorsque le jeu de palier dépasse la limite spécifiée, s’assurer que l’on a bien monté le palier adéquat. Puis, si l’on a un jeu excessif de palier, prendre un palier principal plus épais ou un palier sous-dimensionné de manière à obtenir le jeu de palier spécifié.**

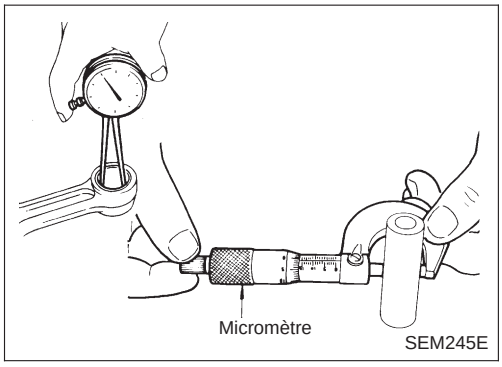

JEU DE LA BAGUE DE PALIER DE BIELLE (pied de bielle)

1. Mesurer le diamètre intérieur ‘‘C’’ de la bague.
2. Mesurer le diamètre extérieur ‘‘Dp’’ de l’axe de piston.
3. Calculer le jeu de la bague de palier de bielle.
   C − Dp =
   −0,015 à −0,033 mm (standard)
   Si hors spécifications, remplacer la bielle et/ou le jeu de piston avec l’axe.

Simpo PDF Merge and Split Unregistered Version - http://www.simpopdf.com

Inspection (Suite)

VOILE DU VOLANT-MOTEUR

Voile (indication totale du comparateur) :

Volant-moteur : moins de 0,1 mm

ATTENTION :

Ne laisser aucun matériau magnétique venir en contact avec les dents de la couronne.

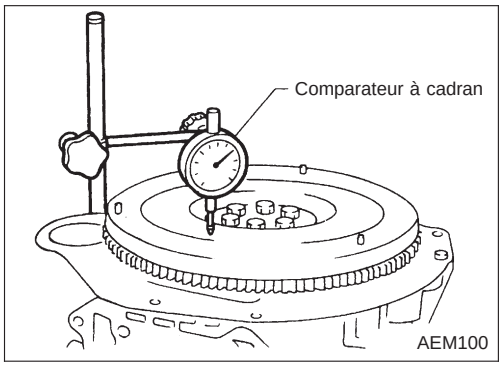

Remontage

PISTON

1. Réchauffer le piston à une température de 60 à 70°C et remonter le piston, l'axe de piston et la bielle.

- **Aligner les sens du piston et de la bielle.**
- **Les numéros qui sont matricés sur la bielle et le chapeau correspondent à chaque cylindre.**
- **Après remontage, s'assurer que la bielle bascule en douceur.**

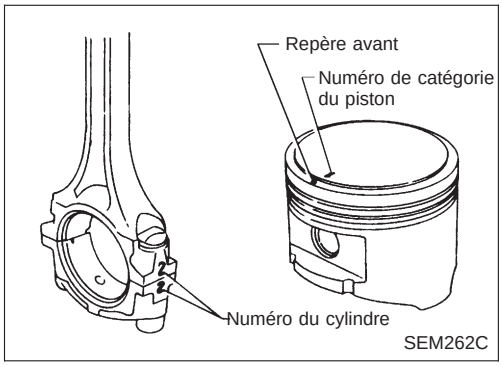

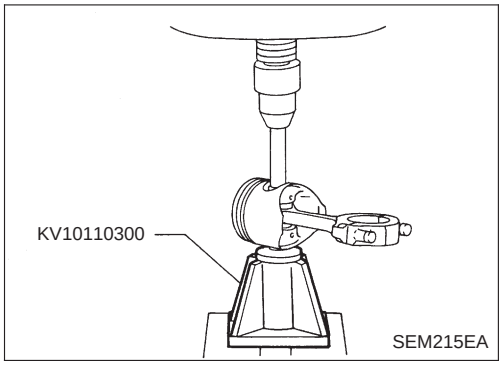

2. Reposer les segments de piston comme indiqué.

ATTENTION :

- **Lorsque les segments de piston ne sont pas remplacés, ils doivent être reposés dans leur position d'origine.**
- **Lorsque les segments de piston sont remplacés et qu'aucun repère poinçonné n'est visible, les segments de piston peuvent être montés indifféremment d'un côté ou de l'autre.**

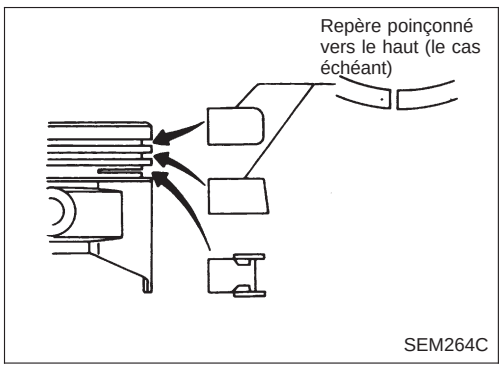

3. Aligner les segments de piston de façon à ce que les coupes soient positionnées comme indiqué.

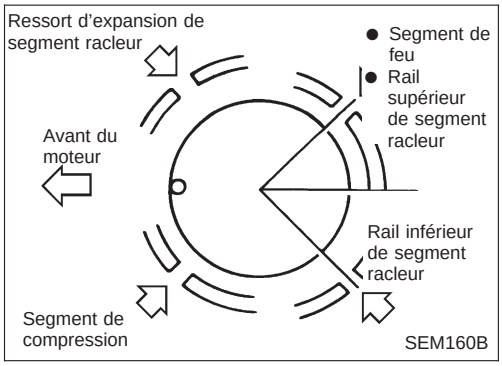

Simpo PDF Merge and Split Unregistered Version - http://www.simpopdf.com

Remontage (Suite)

VILEBREQUIN

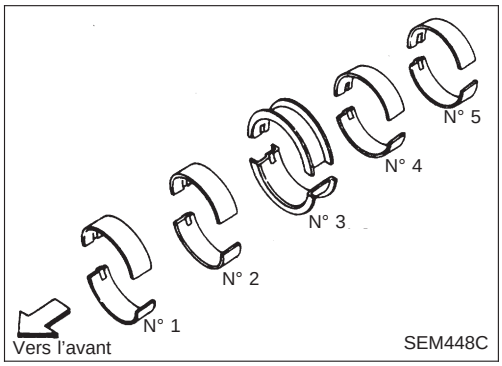

1. Mettre les paliers principaux à leur place sur le bloc-cylindres et sur les chapeaux de paliers principaux.

- **Vérifier que les paliers principaux sont de la taille qui convient. Se reporter à EM-43.**
- **Appliquer de l'huile moteur neuve sur les surfaces de palier.**

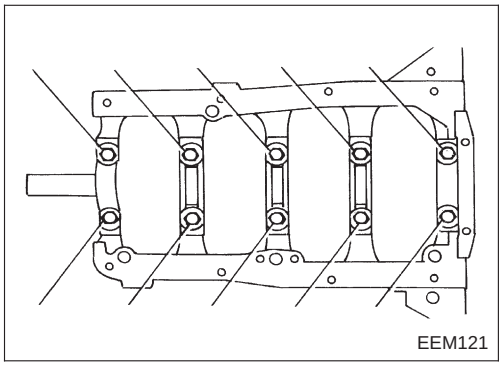

2. Monter le vilebrequin et les chapeaux de paliers principaux, et serrer les boulons au couple spécifié.

- **Appliquer de l'huile moteur neuve sur les filets et les épaulements des boulons.**
- **Avant de serrer les boulons de chapeaux de palier, mettre le chapeau de palier en place en déplaçant le vilebrequin dans le sens axial.**
- **Serrer progressivement les boulons de chapeaux de paliers, en 2 ou 3 étapes. Commencer par le palier central et progresser vers l'extérieur comme indiqué sur l'illustration.**
- **Après avoir serré les boulons des chapeaux de paliers, s'assurer que le vilebrequin tourne facilement à la main.**

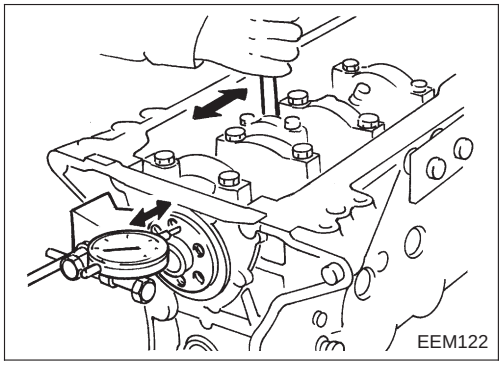

3. Mesurer le jeu axial du vilebrequin.

Jeu axial du vilebrequin : mm
Standard
0,05 - 0,18
Limite
0,3

Si la limite est dépassée, remplacer le palier par une pièce neuve.

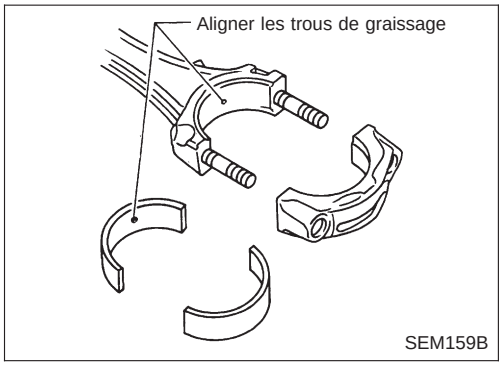

4. Reposer les paliers de bielle sur les bielles et les chapeaux de bielle.

- **Vérifier si la taille des paliers convient. Se reporter à EM-45.**
- **Remonter les paliers de sorte que le trou de graissage de la bielle soit aligné sur celui du palier.**
- **Appliquer de l'huile moteur neuve sur les surfaces des paliers, sur les filets et les épaulements des boulons.**

Simpo PDF Merge and Split Unregistered Version - http://www.simpopdf.com

Remontage (Suite)

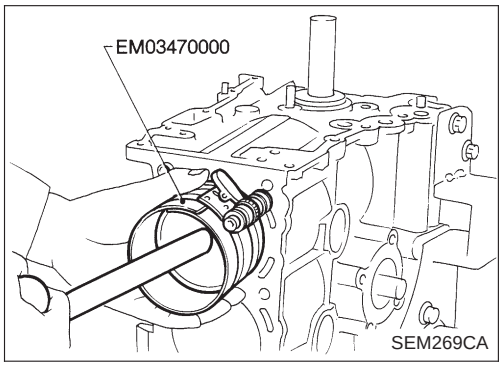

5. Monter les pistons avec les bielles.

a. Les monter dans les cylindres correspondants à l'aide de l'outil spécial.

- **Disposer les pièces de manière à ce que la marque de repère avant sur les têtes de piston soit tournée vers l'avant du moteur.**
- **S'assurer que la bielle ne raye pas la paroi de cylindre.**
- **S'assurer que les boulons de bielle ne rayent pas les tourillons de vilebrequin.**
- **Appliquer de l'huile moteur neuve aux segments et aux surfaces de coulissement du piston.**

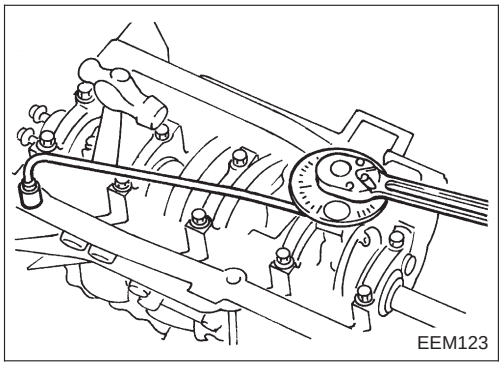

b. Monter les chapeaux de palier de bielle.
Serrer les écrous de chapeau de palier de bielle en suivant la procédure suivante.

Ecrou de palier de bielle :

(1) Serrer à un couple de 14 à 16 N·m (1,4 à 1,6 kg-m).

(2) Serrer les boulons à 60^{+5}_{0} degrés dans le sens des aiguilles d'une montre à l'aide d'une clé angulaire.

Si l'on ne dispose pas d'une clé angulaire, serrer tous les boulons à un couple de 38 à 44 N·m (3,9 à 4,5 kg-m).

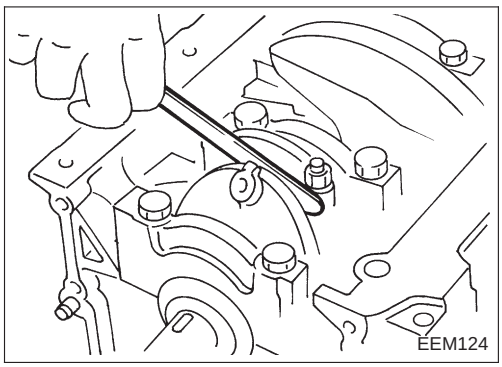

6. Mesurer le jeu latéral de bielle.

Jeu latéral de la bielle : mm

Standard

0,2 - 0,4

Limite

0,6

Si la limite est dépassée, remplacer la bielle et/ou le vilebrequin.

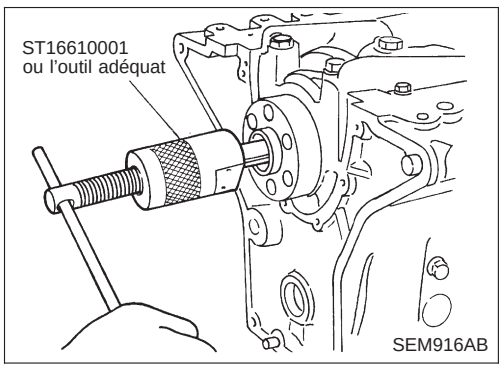

REMPLACEMENT DE LA BAGUE PILOTE

1. Déposer la bague pilote.

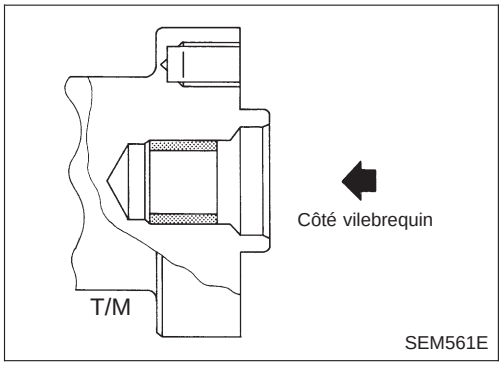

2. Reposer la bague pilote.
TD

Simpo PDF Merge and Split Unregistered Version - http://www.simpopdf.com

SEC. 135·150·238·236·273

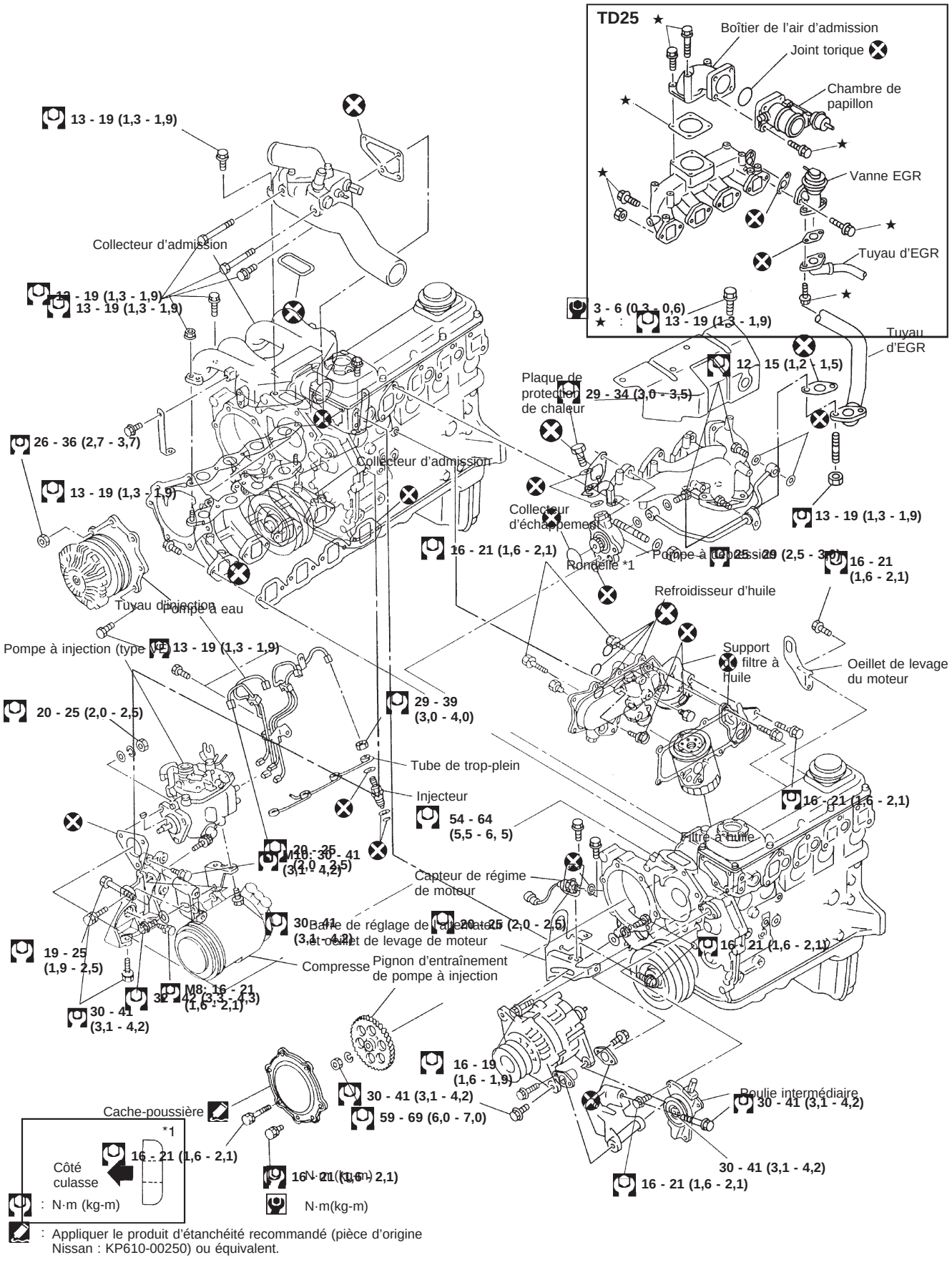

DEM105N

Simpo PDF Merge and Split Unregistered Version - http://www.simpopdf.com

Simpo PDF Merge and Split Unregistered Version - http://www.simpopdf.com

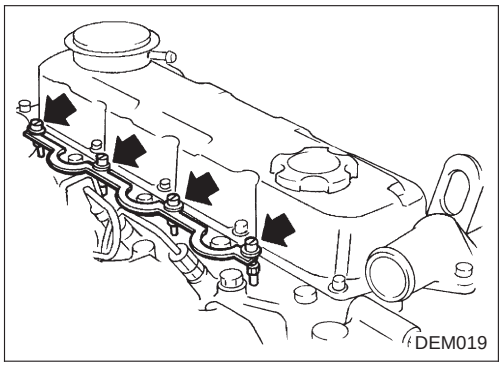

Mesure de la pression de compression

1. Faire chauffer le moteur.
2. Arrêter le moteur. Déposer la plaque et les bougies de préchauffage.

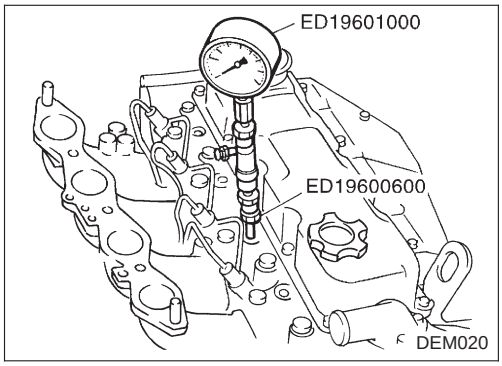

3. Fixer l'adaptateur d'indicateur de compression sur la culasse.
   Adaptateur d'indicateur de compression :
   : 15 - 20 N·m (1,5 - 2,0 kg-m)

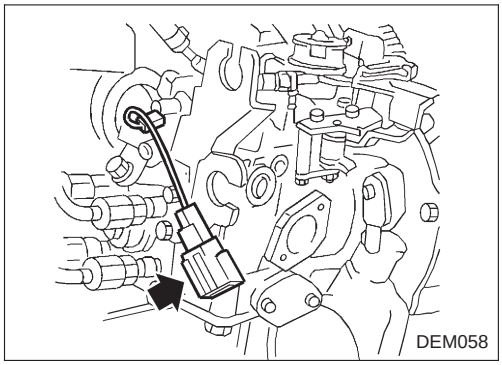

4. Débrancher le connecteur du câble de solénoïde de coupure d'alimentation.
5. Démarrer le moteur, puis relever les données du comparateur à cadran.

- **La mesure de la compression du moteur doit être effectuée le plus vite possible.**

Pression de compression :

Unité : kPa (bar, kg/cm^2)/200 tr/mn

Standard	2 942 (29,4, 30)
Minimum	2 452 (24,5, 25)
Limite de différence entre les cylindres	294 (2,9, 3)

6. Si la compression dans un ou plusieurs cylindres est faible, verser une petite quantité d'huile moteur dans les cylindres à travers les orifices de préchauffage, puis retester la compression.

- **Si une adjonction d'huile facilite la pression de compression, il y a de fortes chances pour que les segments de piston soient usés ou endommagés.**
- **Si la pression reste faible, une soupape peut être collée ou son siège déformé.**
- **Si l'on manque de compression dans deux cylindres voisins quelconques, et si l'adjonction d'huile ne modifie pas la compression, cela signifie que la surface du joint présente une fuite.**
  Ce problème peut entraîner la présence d'huile et d'eau dans les chambres de combustion.

Simpo PDF Merge and Split Unregistered Version - http://www.simpopdf.com

Dépose

	Ordre et points de dépose	Modèle concerné	
		2 roues motrices	4 roues motrices
1	Déposer la protection inférieure.	○	○
2	Vidanger l'huile moteur.	○	○
3	Déposer l'arbre de transmission avant du support de différentiel avant.	–	○
4	Déposer les boulons de fixation du semi-arbre avant (Dr. & Ga.).	–	○
5	Déposer la traverse de suspension avant.	○	○
6	Déposer les boulons de fixation avant du différentiel (Dr. & Ga.) et les boulons de fixation arrière.	–	○
7	Déposer le support de différentiel avant.	–	○

	Ordre et points de dépose	Modèle concerné	
		2 roues motrices	4 roues motrices
8	Déposer le support de fixation du support de différentiel avant.	–	○
9	Déposer la transmission des écrous de support de montage du moteur arrière (Dr. & Ga.).	○	○
10	Déposer les boulons ou écrous de fixation du moteur (Dr. & Ga.).	○	○
11	Soulever le moteur. Si nécessaire, débrancher le tuyau d'échappement.	○	○
12	Déposer le carter d'huile.	○	○

AVERTISSEMENT :
- **Placer le véhicule sur une surface plane et solide.**
- **Mettre des cales à l'avant et à l'arrière des roues arrière.**
- **Le carter d'huile ne doit pas être déposé avant le refroidissement complet des circuits d'échappement et de refroidissement.**
  Faute de quoi, on risque de se brûler et/ou de provoquer un incendie dans la conduite de carburant.
- **Lors de la dépose des boulons ou écrous de montage du moteur avant et/ou arrière, soulever légèrement le moteur pour un travail en toute sécurité.**

ATTENTION :
- **Lorsque l'on soulève le moteur, veiller à ne pas le cogner les pièces adjacentes, en particulier l'extrémité de la gaine du câble d'accélérateur, les conduites de frein et le maître-cylindre de frein.**
- **Pour le couple de serrage, se reporter à la page EM-72, et aux sections MT et PD.**

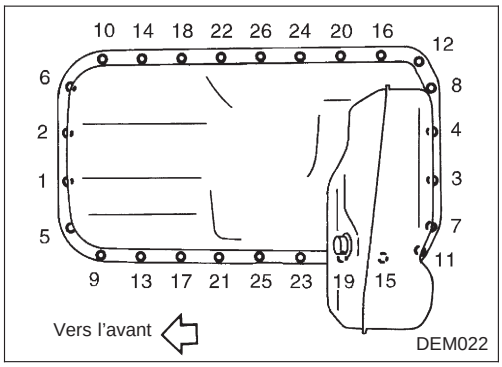

Déposer les boulons du carter d'huile dans l'ordre indiqué.

Simpo PDF Merge and Split Unregistered Version - http://www.simpopdf.com

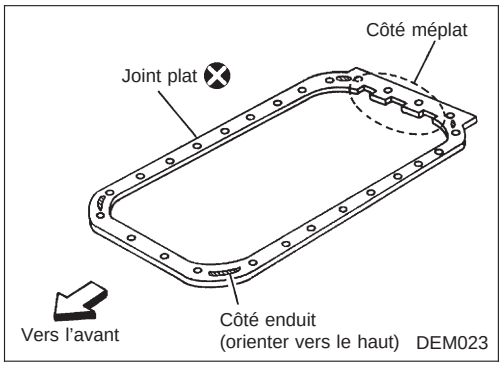

Repose

1. Reposer le joint plat de carter d'huile en orientant la surface enduite face au bloc-cylindres et l'encoche face à l'arrière du moteur.
2. Serrer tous les boulons dans l'ordre inverse de la dépose. Pour le couple de serrage du carter d'huile et la correction du sens d'installation de la rondelle du bouchon de vidange, se reporter à la page EM-72.

Simpo PDF Merge and Split Unregistered Version - http://www.simpopdf.com

SEC. 111•130•185•220

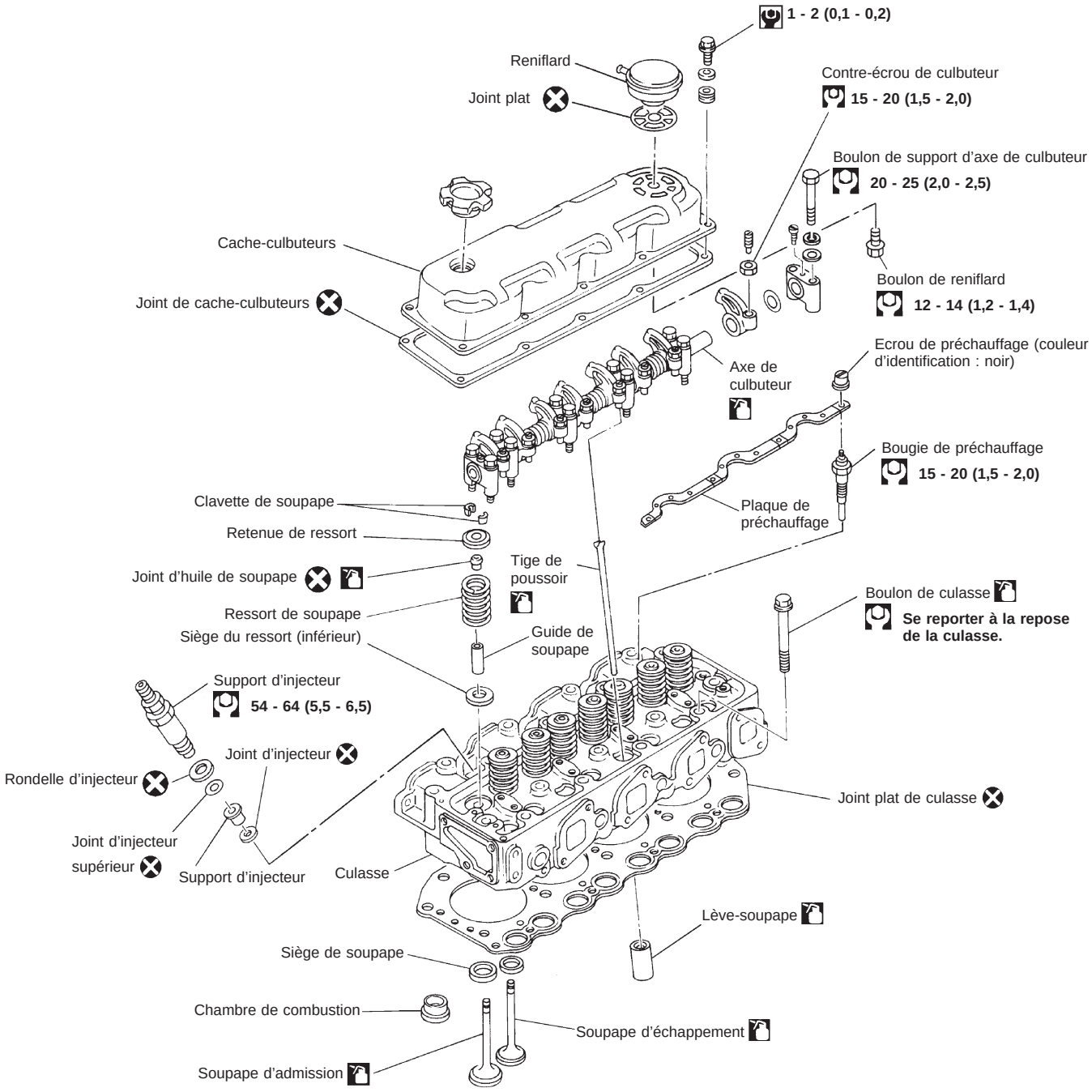

DEM110

Simpo PDF Merge and Split Unregistered Version - http://www.simpopdf.com

ATTENTION :

- **Lors du montage des pièces coulissantes telles que culbuteurs, arbre à cames et joint d'huile, veiller à appliquer une couche d'huile moteur neuve sur leurs surfaces de frottement.**
- **Lors du serrage des boulons de culasse et des boulons d'axe de culbuteurs, enduire d'huile moteur neuve les parties filetées et les faces d'assise des boulons.**

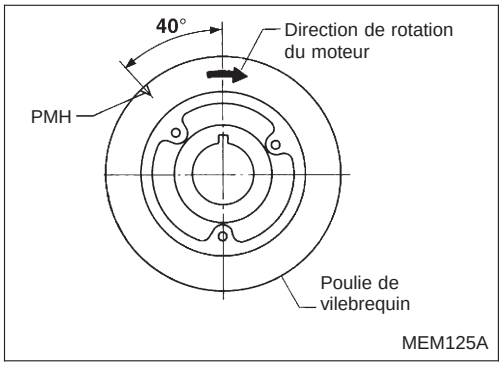

Dépose

1. Placer le cylindre n° 1 au P.M.H. (point mort haut) dans sa course de compression.
2. Vidanger le liquide de refroidissement à partir des bouchons de vidange situés sur le bloc-cylindres et le radiateur.
3. Déposer le filtre à air et/ou le conduit d'air.
4. Déposer le boulon de réglage de l'alternateur.
5. Débrancher le collecteur d'échappement du tuyau d'échappement avant.
6. Débrancher le flexible de sortie du radiateur et le flexible d'entrée d'eau du logement de thermostat.
7. Déposer le carter d'admission d'air.

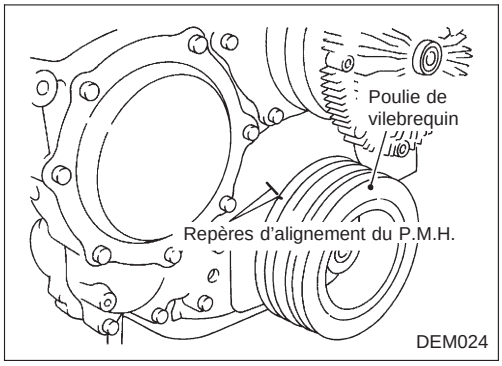

8. Déposer le tuyau d'injection de carburant et le tube de trop-plein.

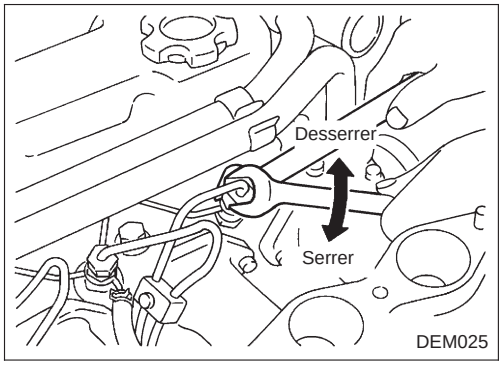

9. Déposer le porte-injecteur et le joint de l'injecteur supérieur à l'aide d'une douille de profondeur.

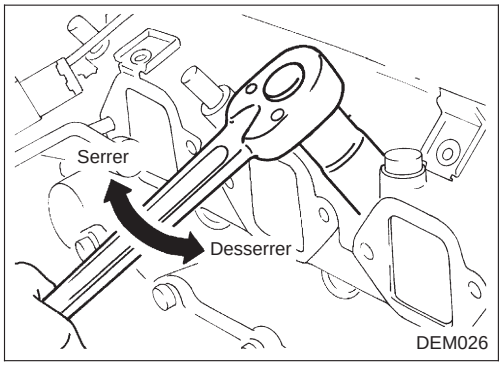

Simpo PDF Merge and Split Unregistered Version - http://www.simpopdf.com

Dépose (Suite)

10. Déposer le cache-culbuteurs.

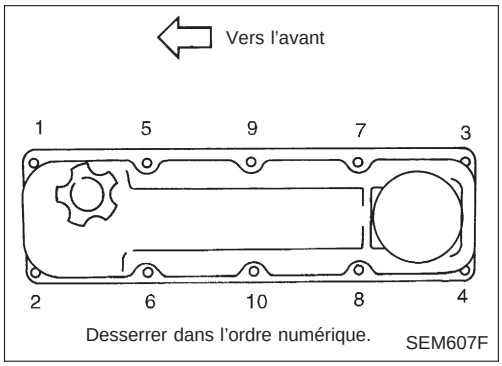

11. Déposer l'axe des culbuteurs avec les culbuteurs.
12. Déposer les tiges de poussoirs.

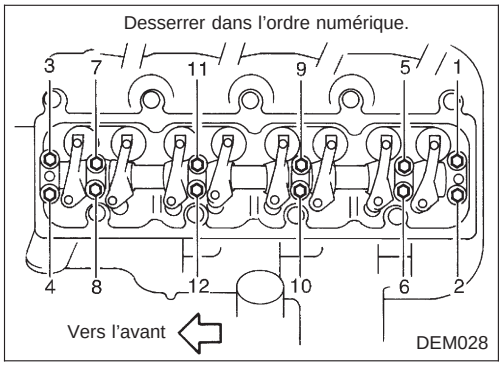

13. Déposer les boulons de culasse dans l'ordre numérique, puis déposer la culasse.

Une dépose dans l'ordre incorrect peut entraîner une déformation ou une fêlure de la culasse.

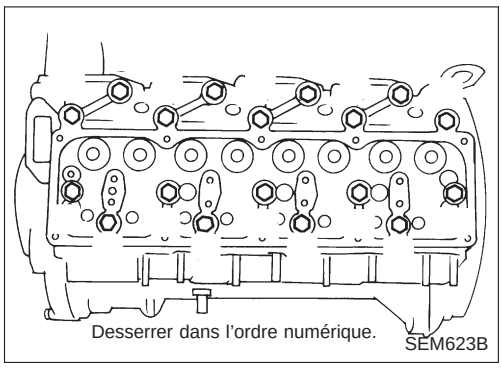

Démontage

1. Déposer les pièces suivantes :

a. Collecteur d'admission
b. Collecteur d'échappement
c. Logement de thermostat
d. Barre de réglage d'alternateur et œillet de levage du moteur
e. Plaque et bougies de préchauffage

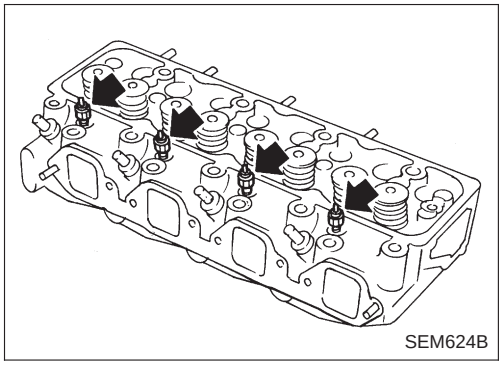

2. Déposer les composants de la soupape à l'aide de l'outil spécial.

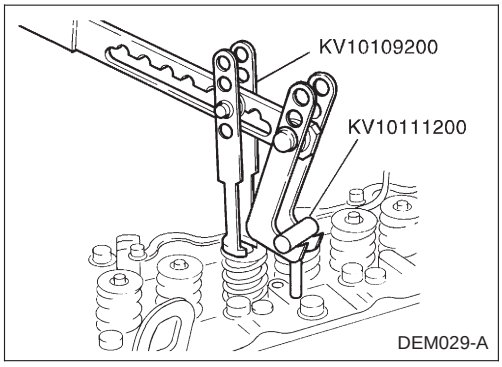

Simpo PDF Merge and Split Unregistered Version - http://www.simpopdf.com

Démontage (Suite)

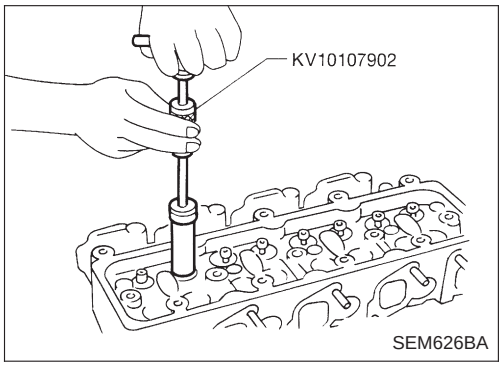

3. Déposer les joints d'huile de soupape à l'aide de l'outil spécial.

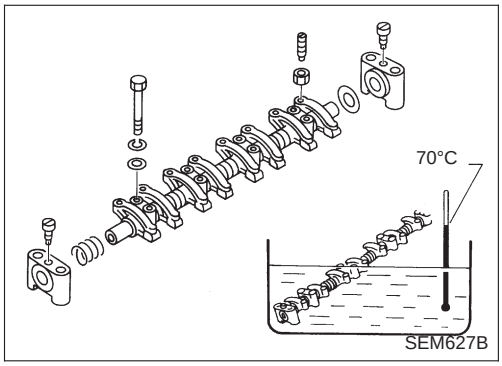

4. Démonter l'axe de culbuteur.
a. Déposer le boulon de serrage de l'axe de culbuteur.
b. Déposer le culbuteur et le support de l'axe de culbuteur.

S'il est difficile de déposer le support de l'axe de culbuteur, plonger l'axe de culbuteur dans de l'huile à une température de 70°C pendant quelques minutes, puis déposer le support.

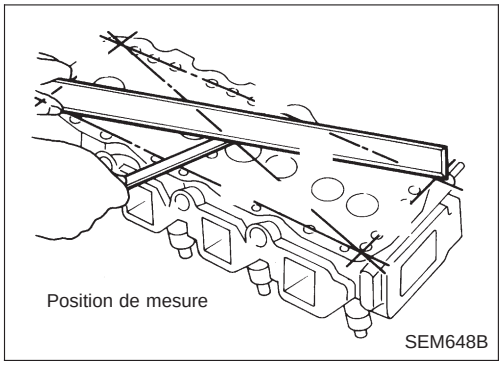

Inspection

DEFORMATION DE LA CULASSE

Déformation de la culasse : mm
Standard
Moins de 0,07
Limite
0,2

Si hors spécification, corriger à l'aide d'une meuleuse de surface. La hauteur de la culasse doit être supérieure à 89,7 mm une fois que la surface a été rectifiée.

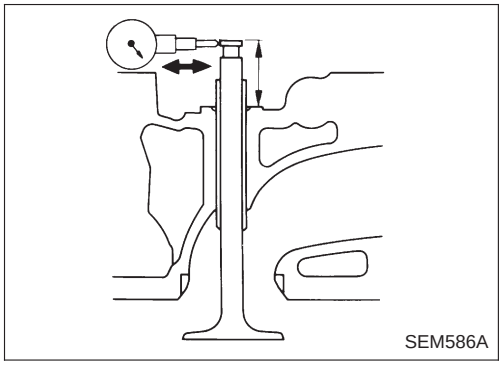

JEU DE GUIDE DE SOUPAPE

- **Mesurer le jeu de soupape dans le sens parallèle au culbuteur (l'usure se fait généralement surtout dans ce sens).**
  Jeu entre queue de soupape et guide : mm
  Limite
  Admission 0,15
  Echappement 0,20
  Déflexion admissible maximum
  (lecture du comparateur à cadran)
  Admission 0,30
  Echappement 0,40
- **Pour déterminer la pièce de rechange correcte, mesurer le diamètre de la queue de soupape et le diamètre intérieur du guide de soupape.**
  Diamètre de la queue de soupape : mm
  Standard
  Admission
  7,962 - 7,977
  Echappement
  7,945 - 7,960

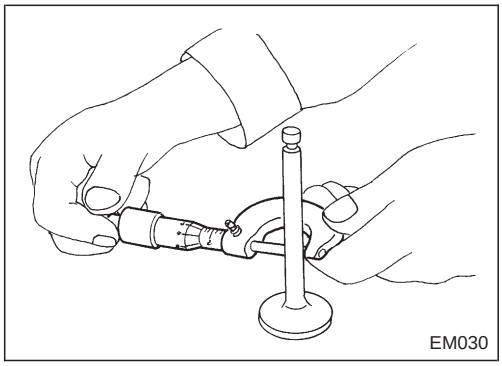

Simpo PDF Merge and Split Unregistered Version - http://www.simpopdf.com

Inspection (Suite)

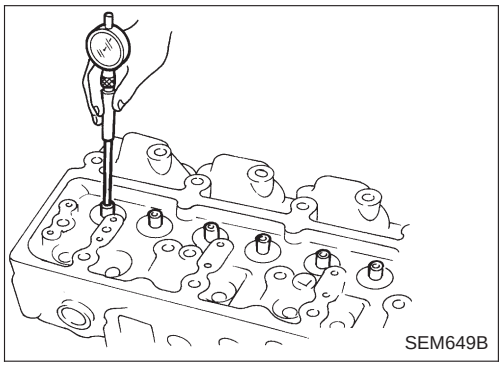
SEM649B

Diamètre intérieur du guide de soupape :
8,000 - 8,015 mm

REMPLACEMENT DU GUIDE DE SOUPAPE

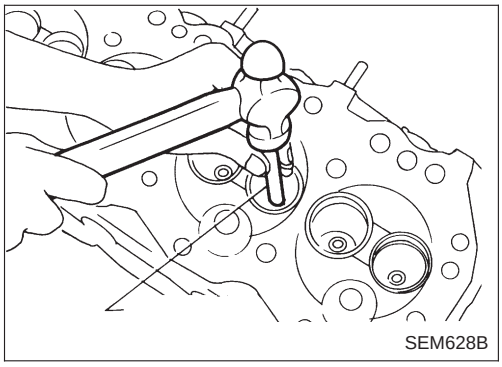
SEM628B

1. Chasser le guide de soupape avec une presse [sous une pression de 20 kN (2 tonnes)] ou encore avec un marteau et un outil adéquat.

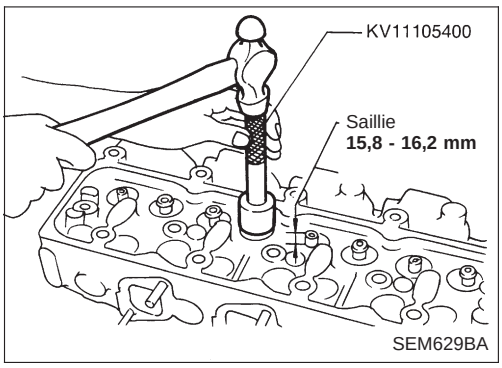

SEM629BA

2. Enfoncer le guide de soupape d'entretien dans la culasse à l'aide de l'outil adéquat jusqu'à ce que le guide dépasse de 15,8 à 16,2 mm.

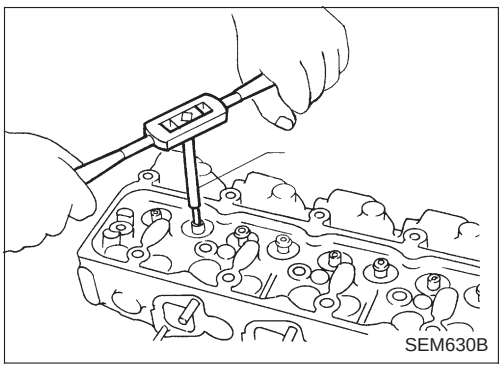
SEM630B

3. Réaléser le guide de soupape.
   Dimension de finition :
   8,000 - 8,015 mm

SIEGES DE SOUPAPE

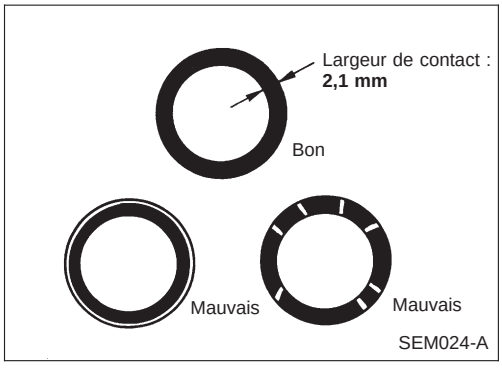

SEM024-A

Contrôler les sièges de soupape en recherchant des traces de piqûres sur la surface de contact de la soupape, et rectifier le siège ou le remplacer en cas d'usure excessive.

- **Avant de rectifier les sièges de soupape, vérifier l'état d'usure de la soupape et du guide de soupape. En cas d'usure, les remplacer. Puis rectifier le siège de soupape.**
- **Travailler à deux mains pour obtenir une surface rectifiée uniforme.**

Simpo PDF Merge and Split Unregistered Version - http://www.simpopdf.com

Inspection (Suite)

REMPLACEMENT DU SIEGE DE SOUPAPE POUR PIECES D'ENTRETIEN

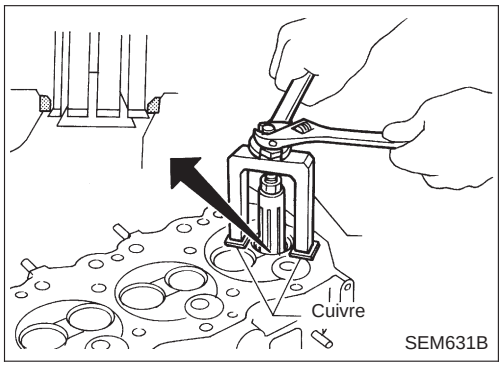

1. Les anciens sièges peuvent être déposés à l'aide d'une perceuse jusqu'à ce qu'ils s'effritent, ou les sièges de soupape peuvent être déposés à l'aide de l'outil spécial.

Placer un siège en cuivre entre la surface de contact de l'outil et la culasse.

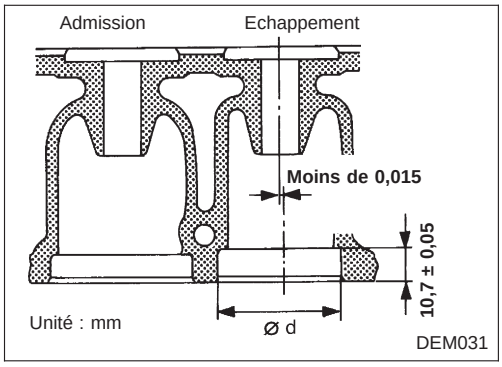

2. Si le siège de soupape du côté échappement est surdimensionné, aléser sa surface de contact (du côté de la culasse) selon les dimensions indiquées dans le tableau ci-dessous. Se reporter à l'illustration de gauche pour connaître les procédures d'usinage.

Unité : mm

Siège de soupape surdimensionné	Diamètre de l'alésage "d"
	TD25
0,2	38,695 - 38,710
0,4	38,895 - 38,910

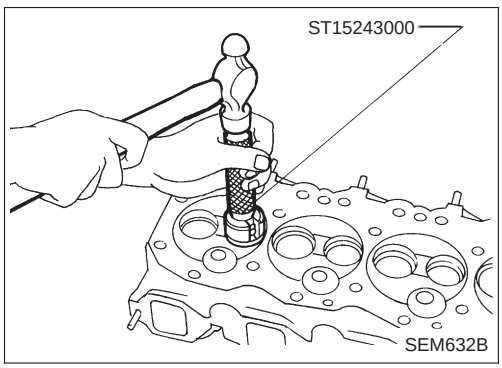

3. Placer des sièges de soupape neufs sur de la neige carbonique, puis les laisser refroidir pendant cinq minutes.

AVERTISSEMENT :
Ne pas toucher les sièges de soupape refroidis à main nue.

4. Chauffer la culasse à une température de 80°C.
5. Reposer les sièges de soupape refroidis sur la culasse à l'aide de l'outil.

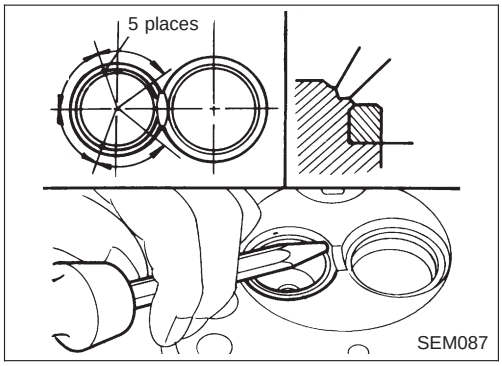

6. Poinçonner le siège de soupape d'échappement à cinq endroits.

Lors du poinçonnage du siège de soupape, choisir différents emplacements que ceux choisis auparavant.

Simpo PDF Merge and Split Unregistered Version - http://www.simpopdf.com

Inspection (Suite)

7. Tailler ou fraiser les sièges de soupape à l'aide de l'outil approprié, selon les dimensions spécifiées dans les SDS, EM-102.
8. Après la taille, roder les sièges de soupape avec un composé de rodage.
9. Vérifier la surface de contact des sièges de soupape.

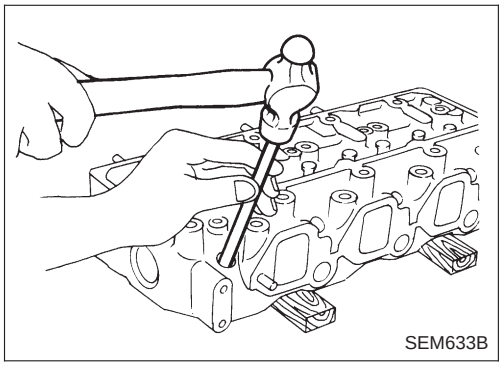
SEM633B

CHAMBRE DE COMBUSTION

Vérifier si la chambre de combustion ne présente pas de fissures ou autres dommages. En cas de besoin, la remplacer.

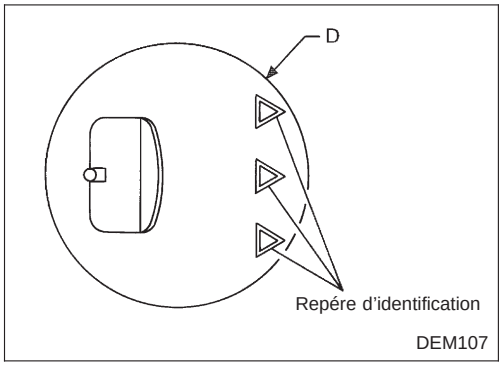

DEM107

REMPLACEMENT DE LA CHAMBRE DE COMBUSTION

En principe, il ne faut pas déposer la chambre de combustion.

1. Déposer la chambre de combustion de manière à ce que la culasse ne puisse pas être endommagée.

2. Reposer la chambre de combustion.

Identification des chambres de combustion

Repère d'identification (sur la chambre de combustion)	Diamètre extérieur "D" mm	Moteur
3 endroits	37	TD25

(1) Refroidir la chambre de combustion avec de la neige carbonique pendant environ 5 à 10 minutes.

AVERTISSEMENT :
Ne pas toucher la chambre de combustion refroidie à main nue.

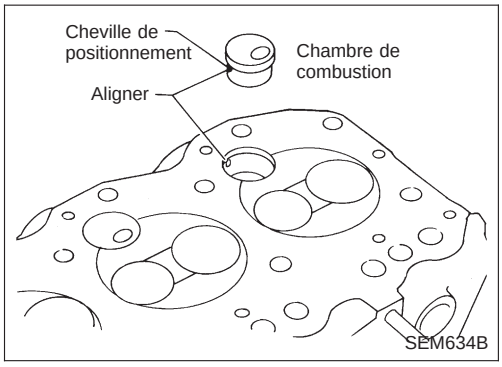

SEM634B

(2) Aligner la cheville de la chambre de combustion sur l'encoche de la culasse et monter la chambre de combustion à l'aide d'un maillet à tête souple.

3. Vérifier la mesure de la saillie de la chambre à combustion.
   Saillie :
   Standard
   −0,05 à 0,10 mm

Simpo PDF Merge and Split Unregistered Version - http://www.simpopdf.com

Inspection (Suite)

DIMENSIONS DES SOUPAPES

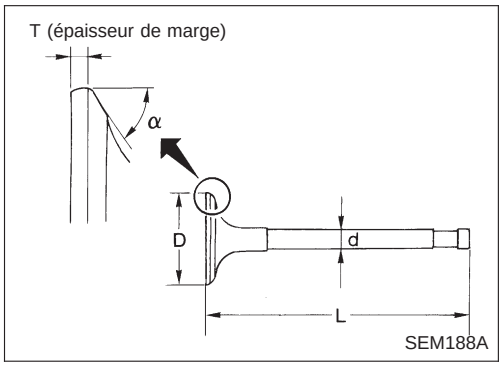

Vérifier les dimensions de chaque soupape. Pour les dimensions, consulter les SDS.

Quand la marge d'épaisseur de la tête de soupape est usée au-delà de 0,5 mm, remplacer la soupape.

La tolérance de rectification de la queue de soupape est de 0,2 mm ou moins.

EQUERRAGE DU RESSORT DE SOUPAPE

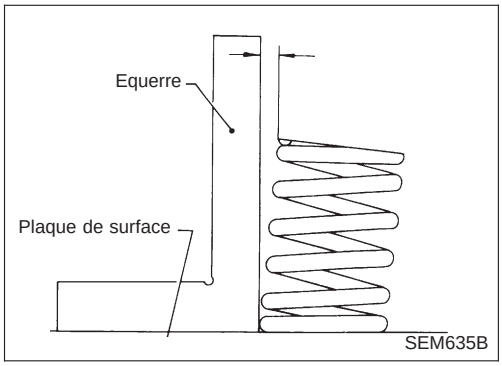

Disposer le ressort de soupape le long d'une équerre. Faire tourner le ressort pour mesurer tout écartement entre le haut du ressort et l'équerre.

Faux-équerre ''S'' :
Moins de 2,3 mm

CHARGE DE COMPRESSION DES RESSORTS DE SOUPAPE

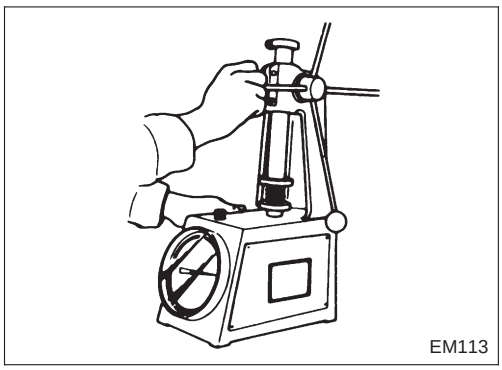

Se reporter aux SDS, EM-101.

POUSSOIR DE SOUPAPE ET TIGE DE POUSSOIR

Poussoir de soupape

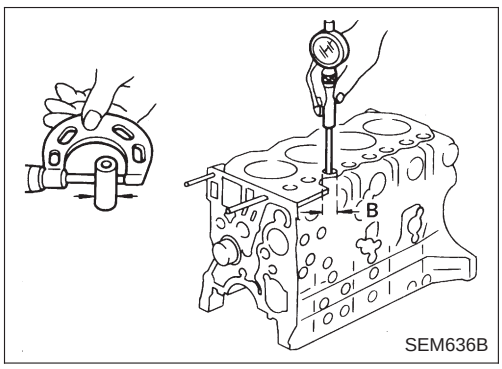

1. Vérifier si les surfaces des poussoirs de soupapes ne sont pas excessivement usées.
2. Les remplacer par des pièces neuves si trop usées.

a. L'extrémité du poussoir de soupape doit être régulière.

b. Jeu entre poussoir de soupape et orifice de poussoir : mm
Standard
0,030 - 0,073
Limite
Moins de 0,20
Diamètre extérieur du poussoir de soupape ''A'' :
Standard
25,960 - 25,970 mm
Diamètre ''B'' de l'orifice de poussoir de soupape du bloc-cylindres :
Standard
26,000 - 26,033 mm

Simpo PDF Merge and Split Unregistered Version - http://www.simpopdf.com

Inspection (Suite)

Tige de poussoir

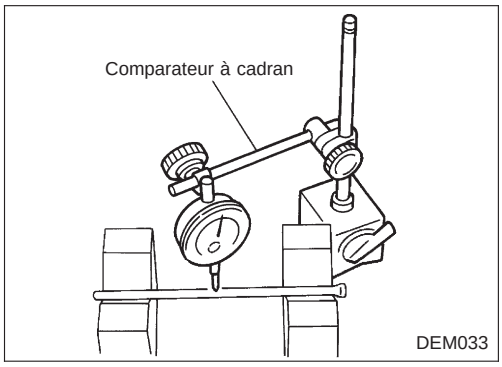

1. Vérifier si les surfaces des tiges de poussoirs ne sont pas excessivement usées.
2. Les remplacer si trop usées ou endommagées.
3. Vérifier que la tige de poussoir n'est pas courbée à l'aide d'un comparateur à cadran.
   Courbure maximum admissible
   (indication totale du comparateur) :
   Moins de 0,5 mm

AXE DE CULBUTEUR ET CULBUTEUR

1. Vérifier que les culbuteurs de soupape, les supports et les axes de culbuteurs ne présentent pas de rayures, d'usure ou de déformations. Remplacer si nécessaire.

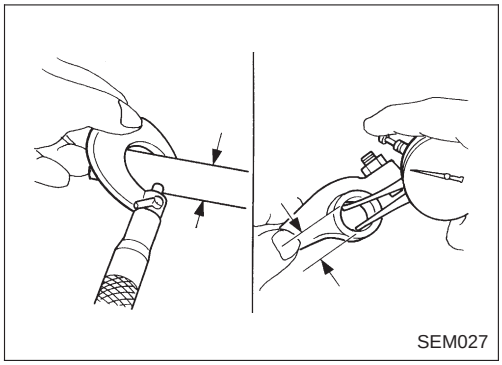

2. Vérifier le jeu entre les culbuteurs et l'axe de culbuteur. Si le jeu dépasse les limites spécifiées, remplacer les axes ou les culbuteurs concernés.
   Jeu spécifié : mm
   Standard
   0,014 - 0,056
   Limite
   Moins de 0,15
   Diamètre externe d'axe de culbuteur ''A'' :
   Standard
   19,979 - 20,000 mm
   Diamètre interne d'axe de culbuteur ''B'' :
   Standard
   20,014 - 20,035 mm

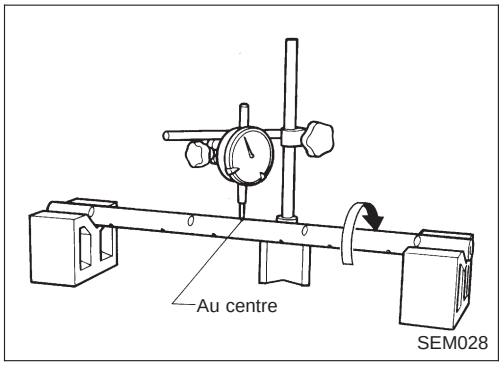

3. Vérifier la courbure de l'axe de culbuteur au centre. Si la courbure est dans les limites spécifiées, la redresser ; et si elle est supérieure à la norme, remplacer l'axe de culbuteur.
   Courbe de l'axe de culbuteur
   (indication totale du comparateur) :
   Limite
   Moins de 0,3 mm

Simpo PDF Merge and Split Unregistered Version - http://www.simpopdf.com

Inspection (Suite)

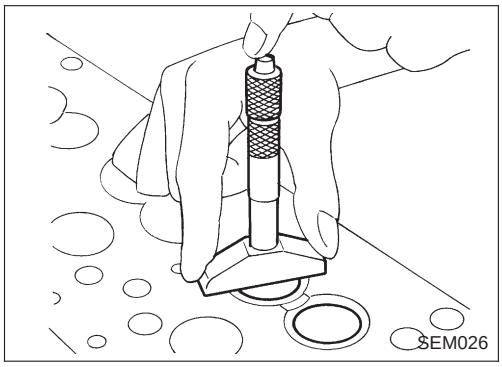

MESURE DE LA DISTANCE ENTRE LA CULASSE ET LA SOUPAPE

Mesurer la distance entre la surface de culasse et les soupapes d'admission et d'échappement. Si la distance spécifiée est dépassée, remplacer la(les) soupape(s) ou le(s) siège(s) de soupape(s).

Distance spécifiée : mm

Standard

Admission et échappement

0,7 - 1,3

Limite

Moins de 1,7 pour les soupapes d'admission et d'échappement

Simpo PDF Merge and Split Unregistered Version - http://www.simpopdf.com

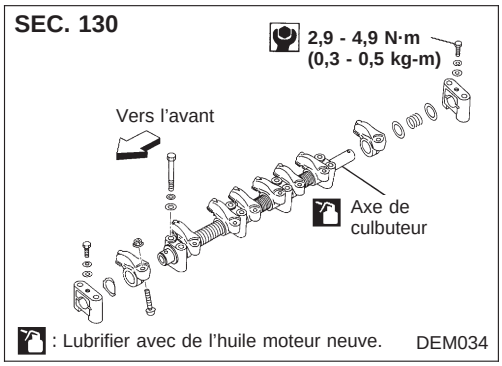

Remontage

1. Remonter les pièces des composants de l'axe culbuteur.

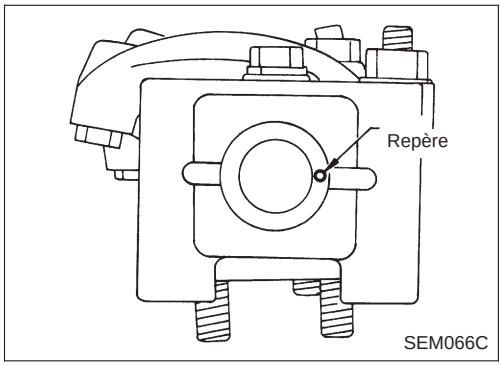

- **Placer les marques poinçonnées vers l'avant du moteur.**

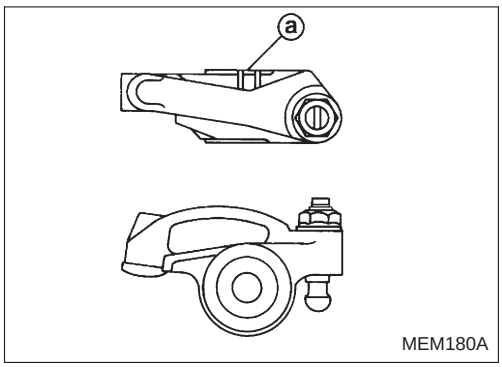

Identification des culbuteurs

Repère d'identification (à la surface ⓐ du culbuteur)	A utiliser avec
Deux lignes	Admission
Aucune ligne	Echappement

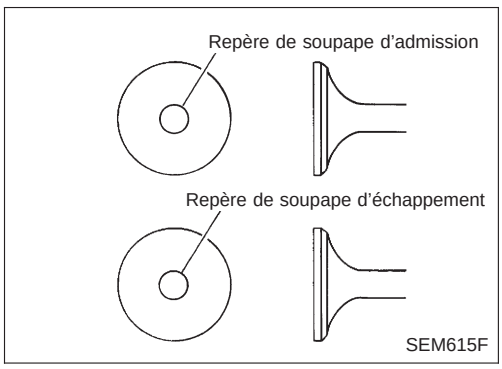

2. Monter les divers éléments de la soupape.

Identification des soupapes

Repère d'identification (sur la soupape d'admission et d'échappement)		Moteur
Soupape d'admission	Soupape d'échappement	
2	B	TD25

- **Toujours utiliser un joint d'huile de soupape neuf (se reporter à EM-69).**

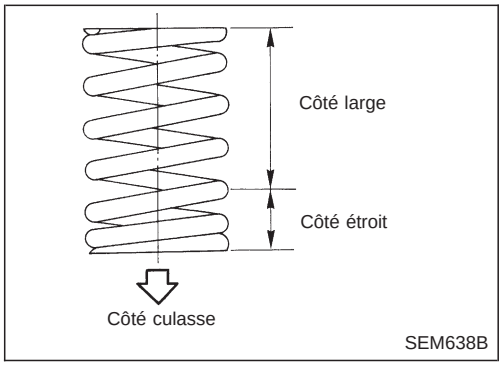

- **Reposer le ressort de soupape (à spires inégales), avec le côté étroit tourné vers la culasse.**

Simpo PDF Merge and Split Unregistered Version - http://www.simpopdf.com

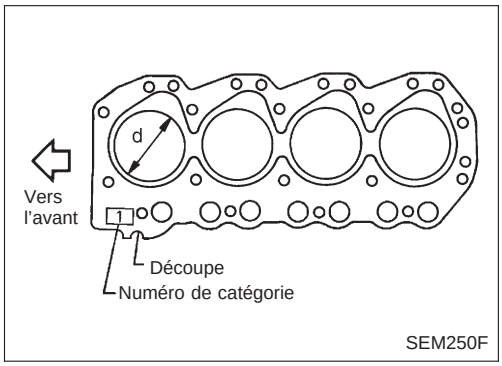

Repose

1. Reposer le joint de culasse.

Identification des joints de culasse

Identification de l'orifice de découpe (sur le joint de culasse)	Diamètre intérieur "d" mm	Moteur
2	94,4	TD25

a. Si le joint de culasse seul doit être remplacé, poser un joint de la même catégorie que celui déposé.

b. Lors du remplacement ou de la réparation du bloc-cylindres, de la culasse, du piston, de la bielle et du vilebrequin, sélectionner les joints plats comme suit :

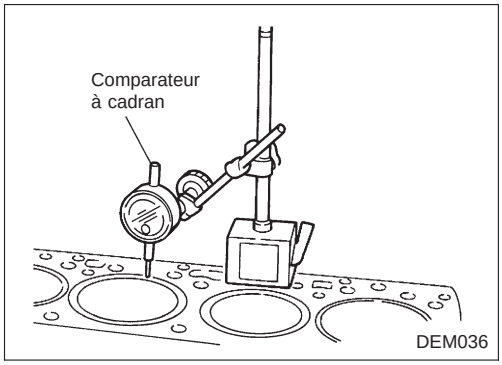

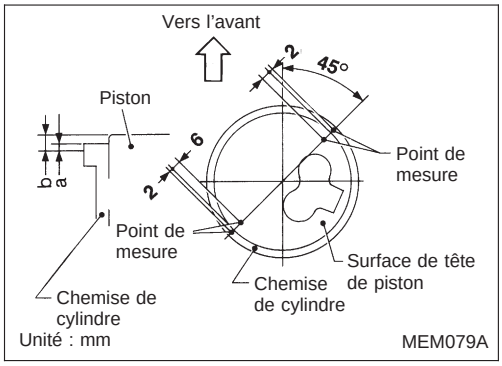

● **Choix de l'épaisseur de joint plat (moteur TD25)**

(1) Mesurer le dépassement du piston de la surface du bloc-cylindres.

a. Mesurer le dépassement a et a' (hauteur de la chemise de cylindre au dessus du bloc-cylindres) en deux points pour chaque cylindre.

b. Mesurer le dépassement b et b' (hauteur du piston au dessus du bloc-cylindres) en deux points, lorsque le piston est au point mort haut.

c. Calculer la hauteur de dépassement du piston au dessus de la chemise de cylindre b - a (b′ - a′).

d. Calculer la valeur moyenne des deux dépassements H_L pour chaque piston (hauteur du piston au dessus de la chemise de cylindre).

(2) Choisir le joint de culasse adéquat correspondant à la plus grande quantité de dépassement des quatre pistons.

Unité : mm

Valeurs moyennes des dépassements de piston H_L	Epaisseur du joint		Numéro de catégorie du joint
	Pièces neuves	Sous forme d'ensemble	
Moins de 0,168	1,35	1,20	2
0,168 - 0,218	1,40	1,25	3
Plus de 0,218	1,45	1,30	4

S'assurer que le piston n° 1 est au P.M.H. dans sa course de compression.

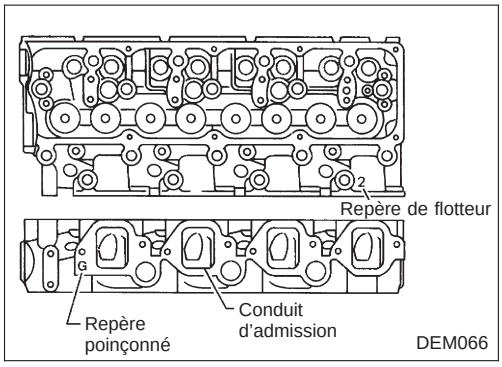

2. Reposer la culasse.

Repère d'identification de la culasse

Numéro d'identification (sur la culasse)		Moteur
Repère de flotteur	Repère poinçonné	
2	L	TD25

Simpo PDF Merge and Split Unregistered Version - http://www.simpopdf.com

Repose (Suite)

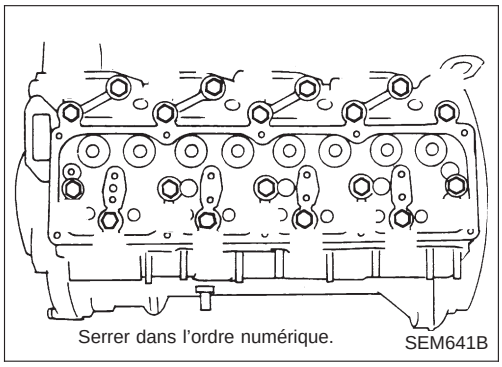

3. Appliquer de l'huile moteur sur les filets et les épaulements des boulons et serrer les boulons de culasse à l'aide de l'outil adéquat.

ATTENTION :

- **Procédure de serrage**
  1er : Serrer les boulons au couple de 39 - 44 N·m (4,0 - 4,5 kg-m).
  2nd : Serrer les boulons au couple de 59 - 64 N·m (6,0 - 4,5 kg-m).

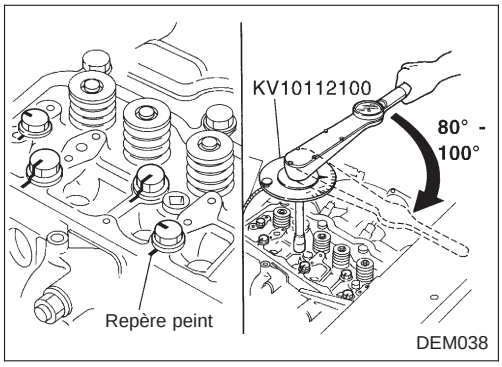

3ème :

(1) Tracer un repère à la peinture sur le côté échappement de la culasse et des boulons de culasse comme indiqué.
(2) Tourner tous les boulons de 90±10 degrés dans le sens des aiguilles d'une montre.
(3) Vérifier que le repère peint sur chaque boulon est face à l'avant du véhicule.

- **Toujours vérifier l'angle de serrage du boulon au moyen d'une clé angulaire ou d'un rapporteur. Ne pas contrôler visuellement.**

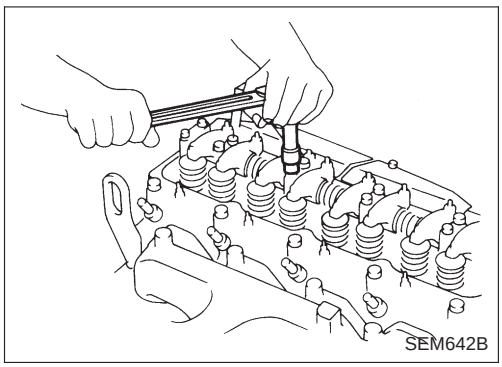

4. Appliquer de l'huile moteur et reposer les tiges de poussoirs.
5. Reposer l'axe de culbuteur.
   Régler provisoirement le jeu des soupapes d'admission et d'échappement.
   Se reporter à ''Réglage du jeu des soupapes d'admission et d'échappement'' au chapitre ''ENTRETIEN DU MOTEUR'' dans la section MA.

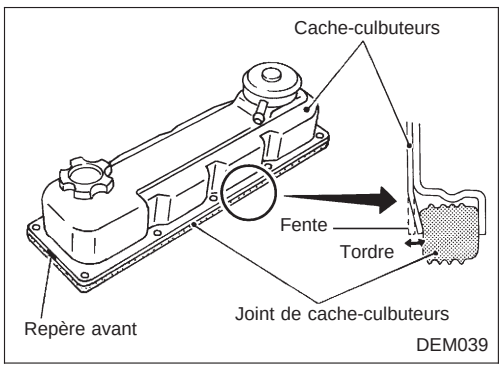

6. Reposer l'ensemble de cache-culbuteurs.

- S'assurer que le repère ''F'' sur la plaque du cache-culbuteurs est dirigé vers le haut et se trouve à l'extrémité avant.
- Lors du remplacement du joint de cache-culbuteurs, tordre légèrement la fente de la tôle chicane du cache-culbuteurs, afin de maintenir le joint. Ne pas tordre le joint.
- **Serrer les boulons dans l'ordre numérique et au couple prescrit (comme indiqué dans l'illustration ci-en haut).**

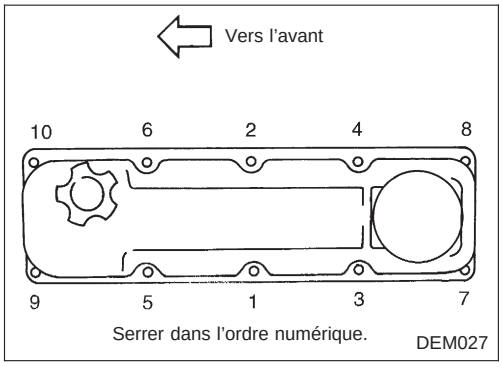

Simpo PDF Merge and Split Unregistered Version - http://www.simpopdf.com

Repose (Suite)

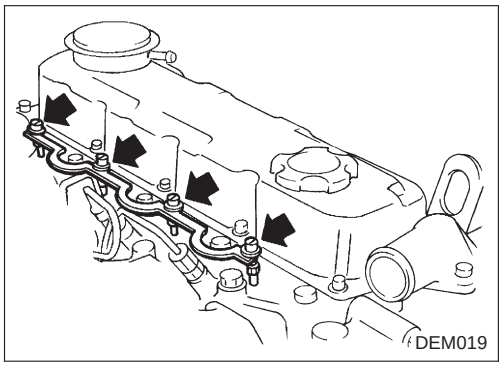

7. Reposer les bougies et la plaque de préchauffage.

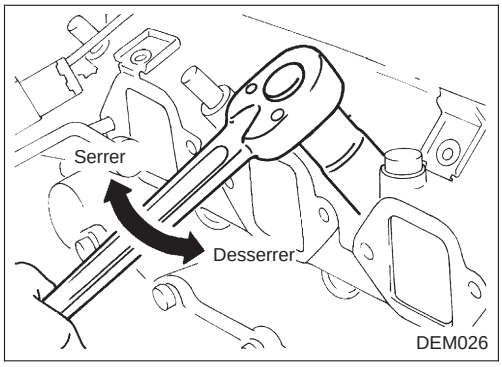

8. Reposer un joint d'injecteur supérieur neuf et l'injecteur.
- **Toujours remplacer le joint d'injecteur et la rondelle.**

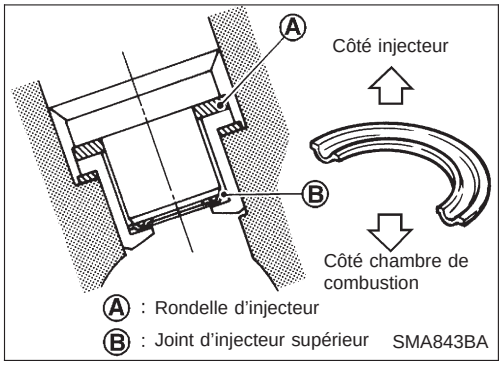

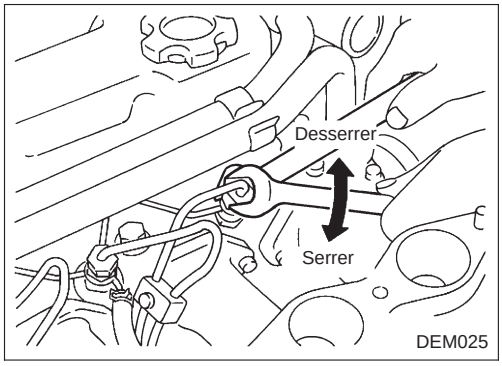

9. Reposer le tube de trop-plein et le tuyau d'injection.

10. Brancher le flexible d'entrée d'eau du logement de thermostat et le flexible du radiateur.
11. Après avoir remonté toutes les pièces démontées, remplir le radiateur et le moteur de liquide de refroidissement neuf par l'orifice de remplissage.

Simpo PDF Merge and Split Unregistered Version - http://www.simpopdf.com

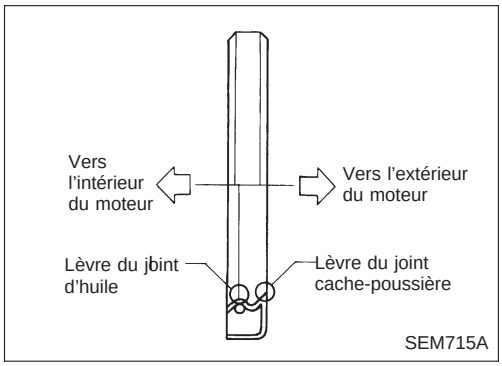

SENS DE REPOSE DU JOINT D'HUILE

- Lors de la repose d'un joint avant ou arrière neuf, s'assurer que son sens de montage est correcte.

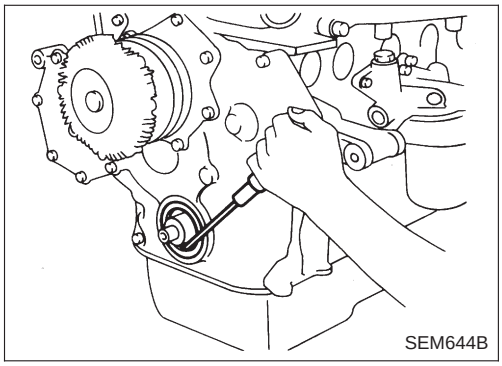

JOINT D'HUILE AVANT DE VILEBREQUIN

1. Déposer le capot de radiateur.
2. Déposer le ventilateur de refroidissement.
3. Déposer les courroies d'entraînement.
4. Déposer la poulie de vilebrequin.
5. Déposer le joint d'huile de vilebrequin.

- Veiller à ne pas endommager les surfaces d'étanchéité du vilebrequin.

6. Enduire d'huile moteur le joint d'huile neuf et le mettre en place.

- Enfoncer le joint d'huile jusqu'à ce qu'il entre en contact avec le couvercle avant.

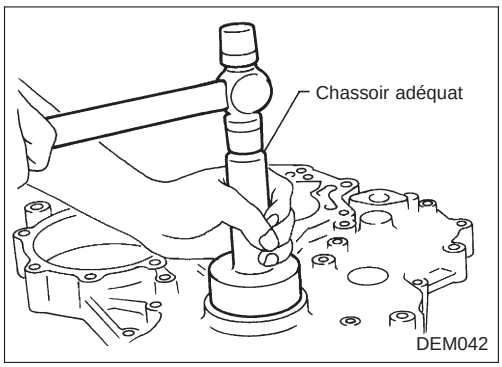

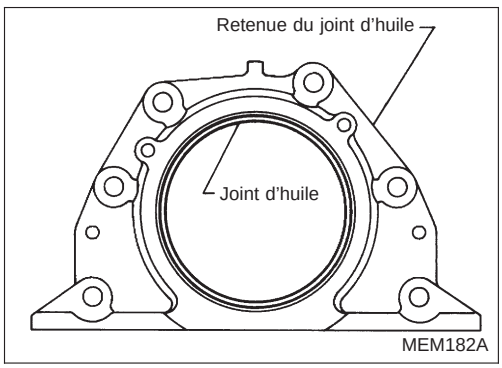

JOINT D'HUILE ARRIERE DE VILEBREQUIN

1. Démonter la boîte de vitesses.
2. Déposer l'ensemble de couvercle d'embrayage.
3. Déposer le volant et la plaque arrière.
4. Déposer le carter d'huile et le joint plat de carter d'huile.
5. Déposer l'ensemble de retenue de joint d'huile et le joint plat de retenue.

- **Remplacer le joint d'huile et l'ensemble de retenue comme un tout (type monobloc combiné avec un joint d'huile).**

6. Enduire d'huile moteur le joint d'huile et mettre en place une nouvelle pièce de retenue de joint d'huile.

Simpo PDF Merge and Split Unregistered Version - http://www.simpopdf.com

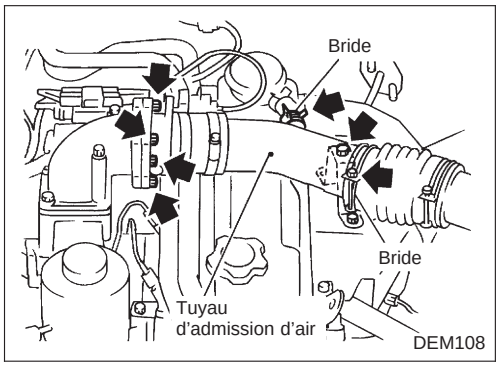

JOINT D'HUILE DE QUEUE DE SOUPAPE

1. Déposer les pièces suivantes.
- Chambre de papillon et tuyau d'admission d'air

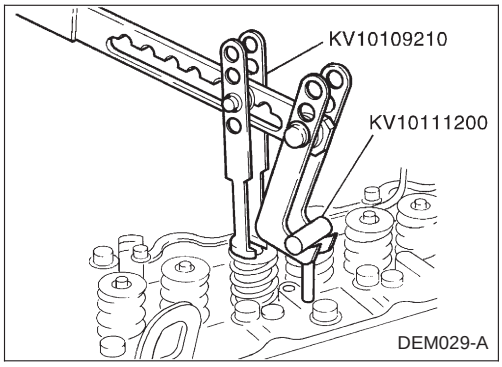

2. Déposer le cache-culbuteurs.
3. Déposer l'ensemble de l'axe des culbuteurs.
4. Déposer le ressort de soupape.

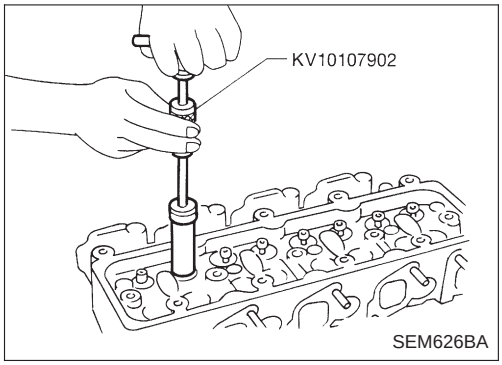

5. Déposer les joints d'huile de soupape.

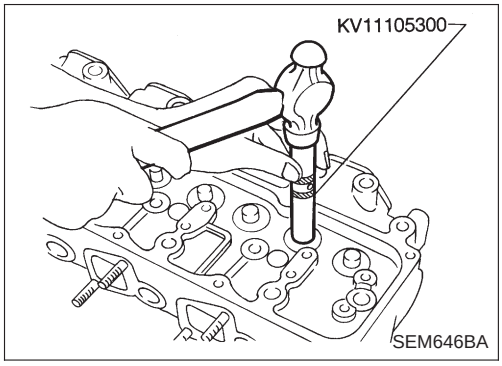

6. Appliquer de l'huile moteur sur le joint d'huile de soupape et le mettre en place.

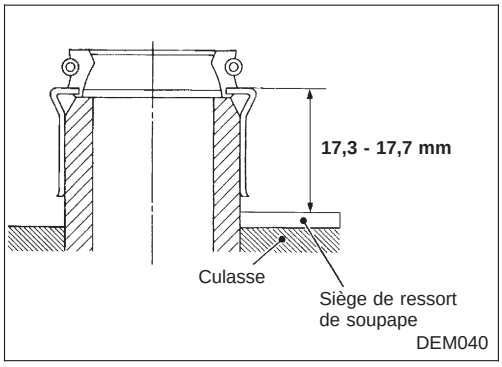

Simpo PDF Merge and Split Unregistered Version - http://www.simpopdf.com

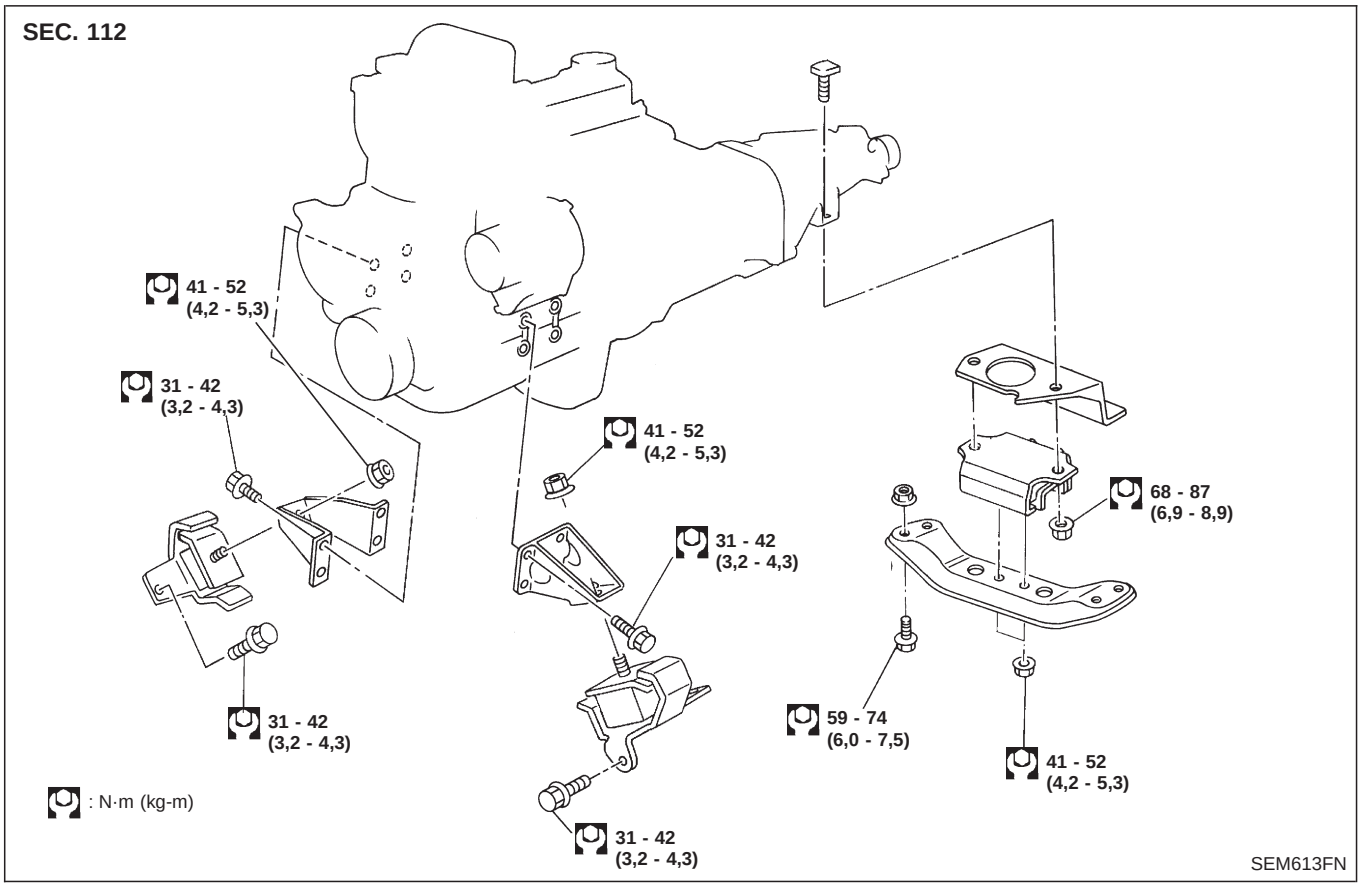

AVERTISSEMENT :

- **Garer le véhicule sur un sol plat et dur.**
- **Placer des cales à l'avant et à l'arrière des roues arrière.**
- **Ne pas déposer le moteur tant que le circuit d'échappement n'a pas complètement refroidi.**
  Faute de quoi, on risque de se brûler et/ou de provoquer un incendie dans la conduite de carburant.
- **Veiller à soulever le moteur et la boîte de vitesses en toute sécurité.**
- **Pour les moteurs qui ne sont pas équipés d'élingues de levage moteur, utiliser les élingues et les boulons de levage appropriés décrits dans le CATALOGUE DES PIECES DETACHEES.**

ATTENTION :

- **Lors du levage du moteur, veiller à ne pas heurter les pièces environnantes. Prendre particulièrement soin de la gaine du câble d'accélérateur, des conduites de frein et du maître-cylindre de frein.**
- **Lorsque l'on soulève le moteur, toujours utiliser les élingues en toute sécurité.**
- **Pour les modèles à 4 roues motrices, appliquer un joint d'étanchéité entre le moteur et la boîte de vitesses. Se reporter à la section MT (''Dépose et repose'').**

Simpo PDF Merge and Split Unregistered Version - http://www.simpopdf.com

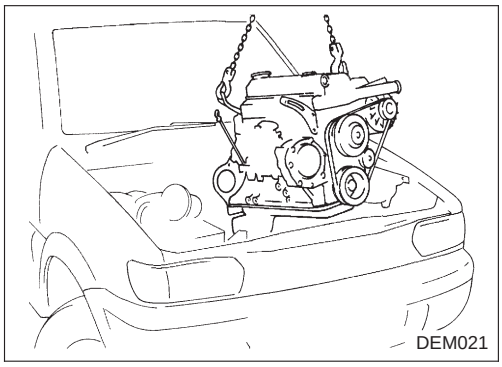

Dépose

1. Déposer la protection inférieure du moteur et le capot.
2. Vidanger le liquide de refroidissement.
3. Déposer les flexibles à dépression, les tuyaux de carburant, les câbles, les faisceaux, les connecteurs, etc.
4. Déposer le radiateur, son capot et le ventilateur de refroidissement.
5. Déposer les courroies d'entraînement.
6. Déposer la pompe à huile de direction assistée et le compresseur de climatiseur.
7. Déposer le tuyau d'échappement avant.
8. Déposer la boîte de vitesses du véhicule.

Se reporter à la section MT.

9. Installer les élingues de levage moteur.
10. Soulever le moteur au moyen des élingues de levage et déposer les boulons de fixation du moteur des deux côtés.
11. Déposer le moteur du véhicule.

Repose

- Reposer dans l'ordre inverse de la dépose.

Simpo PDF Merge and Split Unregistered Version - http://www.simpopdf.com

SEC. 110•120•130•135•150•313

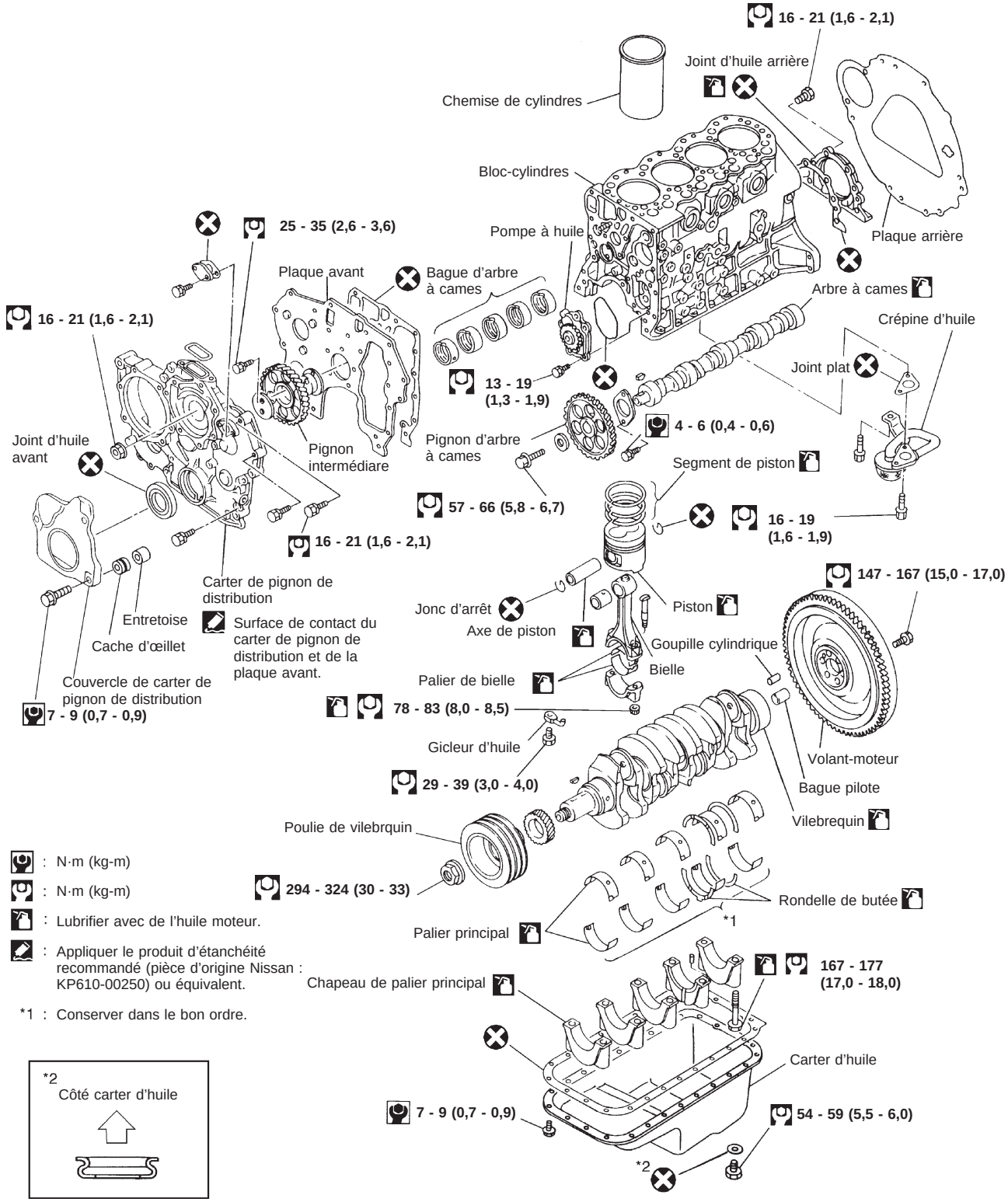

DEM065-A

Simpo PDF Merge and Split Unregistered Version - http://www.simpopdf.com

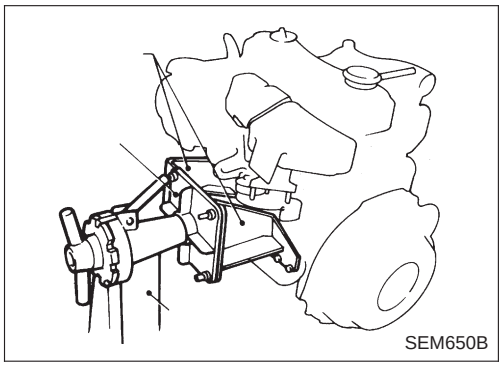
SEM650B

Démontage

PISTON ET VILEBREQUIN

1. Déposer le filtre à huile.
2. Poser le moteur sur un plan de travail.
3. Vidanger le liquide de refroidissement et l'huile.
4. Déposer les courroies d'entraînement.
5. Déposer la culasse.
6. Déposer le carter d'huile.

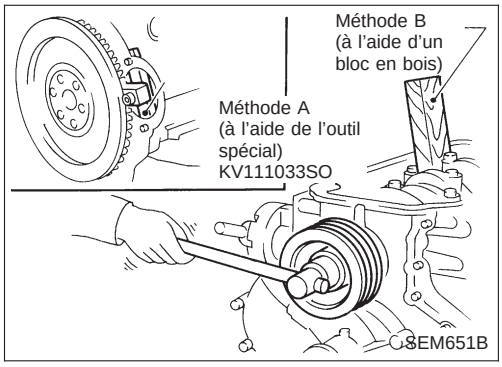

SEM651B

7. Déposer la poulie de vilebrequin.

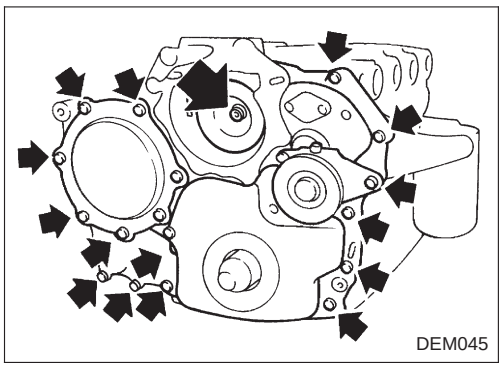
DEM045

8. Déposer la pompe à eau.
9. Déposer le carter de pignon de distribution.

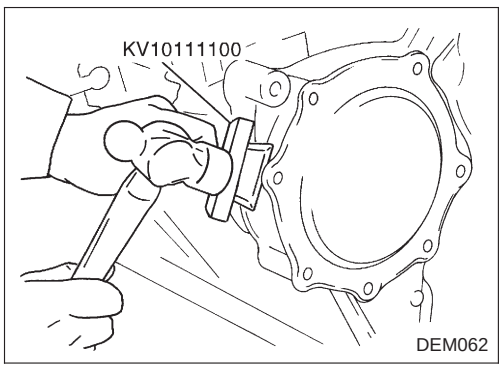

DEM062

- Déposer le cache-poussière à l'aide d'un couteau à joint.

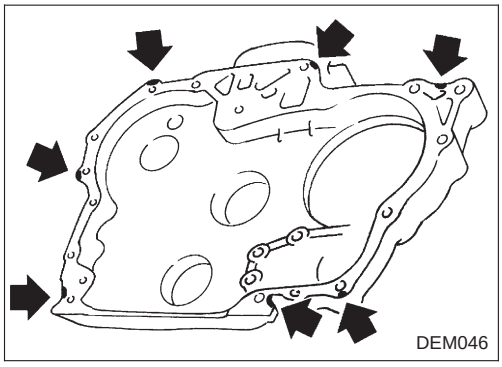
DEM046

- **Si le carter de pignon de distribution est difficile à déposer à cause du joint liquide, l'extraire au moyen d'un outil adéquat au niveau de la découpe.**

Simpo PDF Merge and Split Unregistered Version - http://www.simpopdf.com

Démontage (Suite)

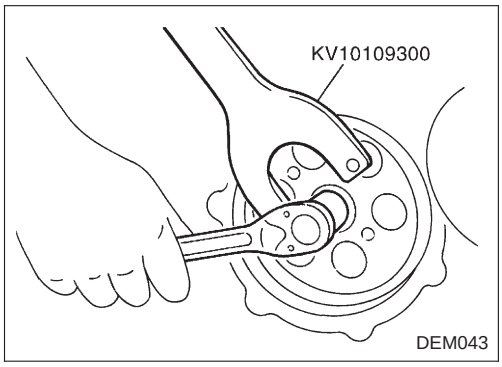

10. Déposer le pignon de la pompe à injection.
- Veiller à ne pas perdre la clavette fendue lors de la repose de la pompe à injection.

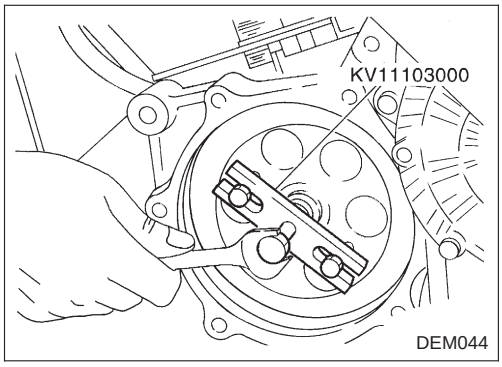

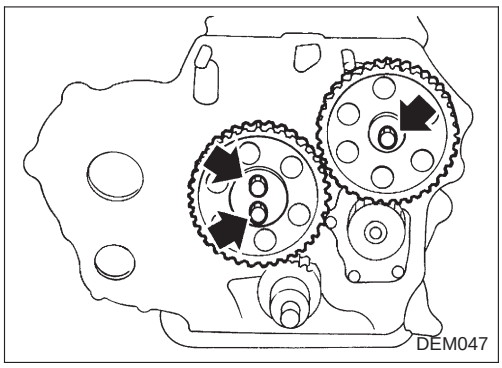

11. Déposer le pignon intermédiaire et l'arbre de pignon intermédiaire.
12. Déposer le pignon de l'arbre à cames, l'arbre à cames et les poussoirs de soupapes.

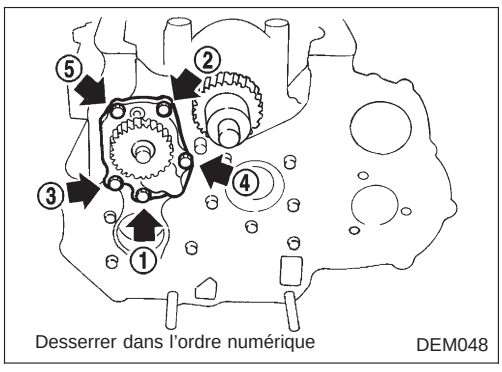

13. Déposer la pompe à huile.

14. Déposer le pignon de vilebrequin.
15. Déposer le volant-moteur et la plaque arrière.
16. Déposer les chapeaux de bielle.
17. Enlever les pistons.
- Déposer la bielle de telle manière qu'elle n'entre pas en contact avec le gicleur d'huile.

Simpo PDF Merge and Split Unregistered Version - http://www.simpopdf.com

Démontage (Suite)

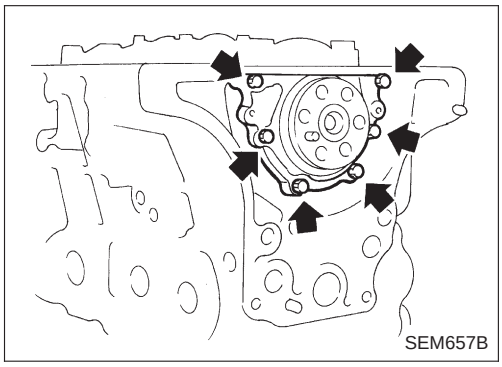
SEM657B

18. Déposer la retenue du joint d'huile arrière.

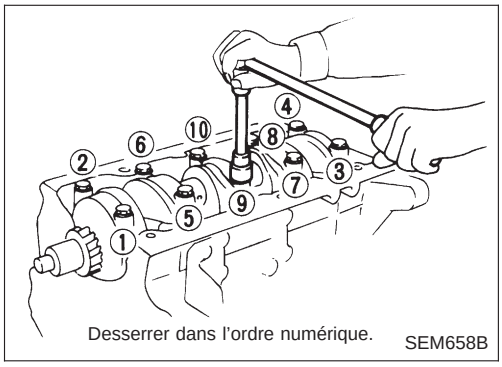

Desserrer dans l'ordre numérique.
SEM658B

19. Déposer le chapeau de palier et le vilebrequin.
Conserver les paliers et ses chapeaux dans l'ordre convenable.

Inspection et remplacement

DEFORMATION DU BLOC-CYLINDRES

Si hors spécification, le remplacer.

Déformation du bloc-cylindres : mm
Standard : moins de 0,05
Limite 0,2

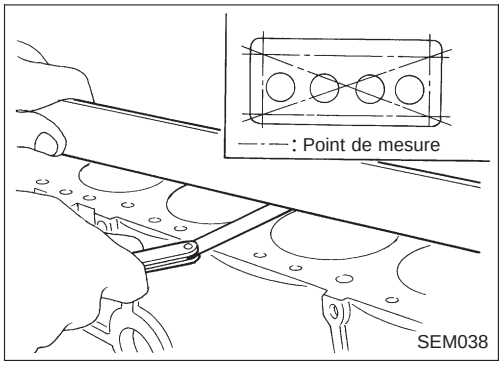

SEM038

- Eliminer toutes les traces de joint du bloc-cylindres. Lors de la dépose du joint, ne pas laisser des morceaux de ce dernier pénétrer dans les passages d'huile et d'eau de refroidissement.

USURE DE LA CHEMISE DE CYLINDRE

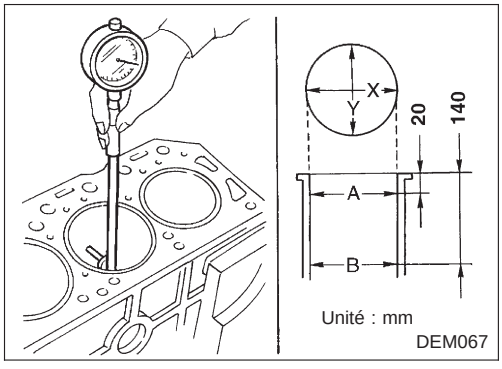

Unité : mm
DEM067

1. A l'aide d'une jauge d'alésage, mesurer l'alésage de la chemise de cylindre en recherchant s'il y a faux-rond et conicité. Si hors spécification, remplacer la chemise de cylindre.
   Diamètre interne standard :
   92,900 - 92,930 mm
   Se reporter aux SDS, EM-104.
   Limite d'usure :
   0,20 mm
   Faux-rond (X − Y) standard :
   0,020 mm
   Conicité (A − B) standard :
   0,020 mm
2. Rechercher des traces de rayures ou de grippage. Si l'on constate des traces de grippage, remplacer la chemise de cylindre.

Simpo PDF Merge and Split Unregistered Version - http://www.simpopdf.com

Inspection et remplacement (Suite)

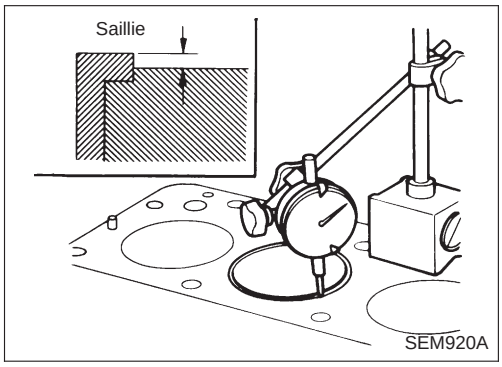

3. Vérifier la mesure du dépassement de la chemise de cylindre.
   Dépassement de la chemise de cylindre
   Standard
   0,02 - 0,09 mm
   Déviation de chaque cylindre :
   Moins de 0,05 mm

CHEMISE DE CYLINDRE

Remplacement

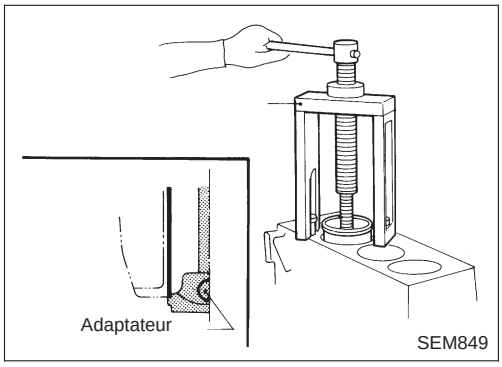

1. Déposer la chemise de cylindre à l'aide de l'outil spécial.

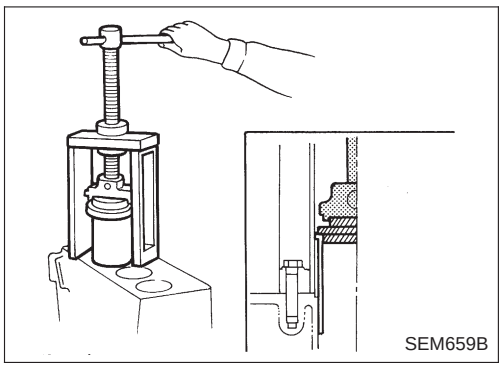

2. Reposer la chemise de cylindre à l'aide de l'outil spécial.
3. Vérifier la mesure du dépassement de la chemise de cylindre.

JEU ENTRE LE PISTON ET LA PAROI DU CYLINDRE

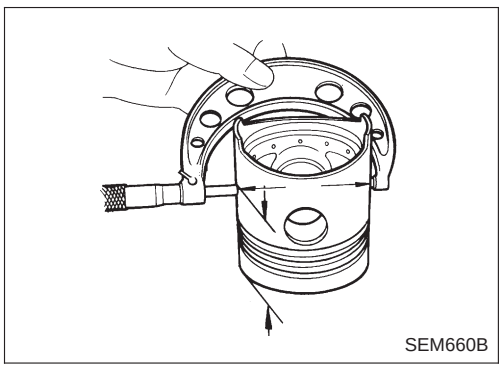

1. Mesurer le diamètre du piston et l'alésage des cylindres.
   Diamètre de piston ''A'' :
   Se reporter aux SDS, EM-105.
   Point de mesure ''a''
   (distance à partir du haut) : mm
   70
2. Vérifier si le jeu du piston est dans la gamme spécifiée.
   Jeu du piston :
   0,05 - 0,07 mm

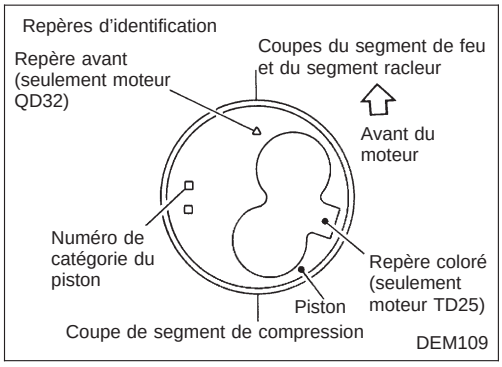

Combinaison du piston et de l'alésage du cylindre

Utiliser la même catégorie de pistons pour un même moteur.

Numéro de catégorie de l'alésage de cylindre	Numéro de catégorie du piston		
	1	2	3
1	Bon	Mauvais	Mauvais
2	Possible	Bon	Mauvais
3	Possible	Possible	Bon

Simpo PDF Merge and Split Unregistered Version - http://www.simpopdf.com

Inspection et remplacement (Suite)

Se reporter aux SDS, EM-104, pour trouver le numéro de catégorie de l'alésage du cylindre.

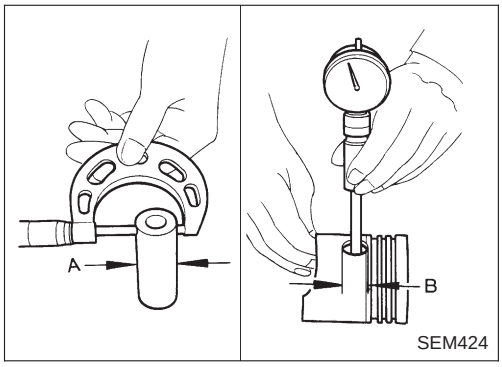

JEU ENTRE LE PISTON ET L'AXE DE PISTON

Vérifier le jeu entre les pistons et leurs axes.

Jeu (A − B) : mm
Standard
−0,003 à 0,012
Limite
Moins de 0,10

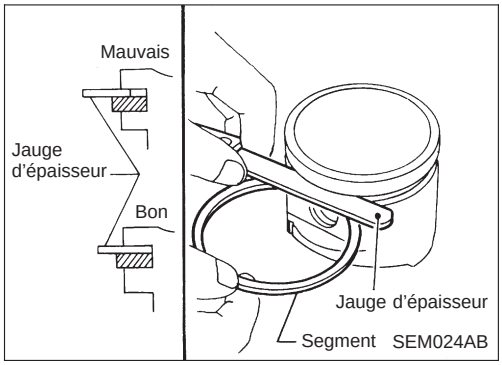

JEU LATERAL DU SEGMENT DE PISTON

Jeu latéral : mm
Segment de feu
0,06 - 0,10
Segment de compression
0,04 - 0,08
Segment racleur
0,02 - 0,06
Limite maximum de jeu latéral : mm
Segment de feu 0,50
Segment de compression 0,30
Segment racleur 0,15

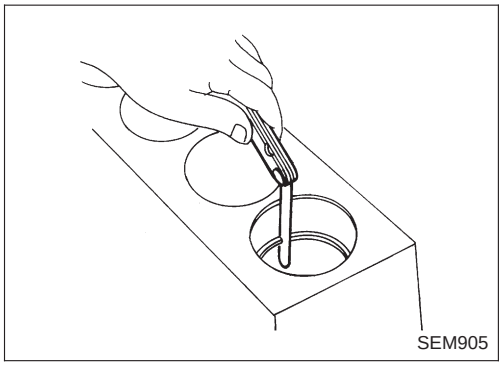

COUPE DE SEGMENT DE PISTON

Coupe de segment standard : mm
Segment de feu
0,30 - 0,45
Segment de compression
0,20 - 0,35
Segment racleur
0,15 - 0,35
Limite maximum de coupe de segment :
1,5 mm

Simpo PDF Merge and Split Unregistered Version - http://www.simpopdf.com

Inspection et remplacement (Suite)

JEU DU PALIER PRINCIPAL

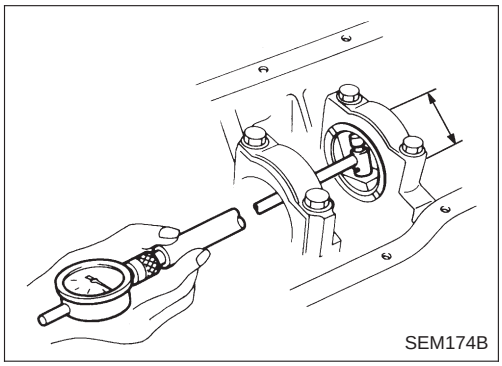
SEM174B

1. Monter les paliers principaux sur le bloc-cylindres et sur le chapeau de palier principal.
2. Monter le chapeau de palier principal sur le bloc-cylindres.

- **Appliquer de l'huile moteur sur la partie filetée et sur la surface d'appui des boulons.**
- **Serrer tous les boulons au couple spécifié, dans l'ordre prescrit et en deux ou trois étapes. Se reporter à EM-89.**

3. Mesurer le diamètre intérieur ''A'' de chaque palier principal.

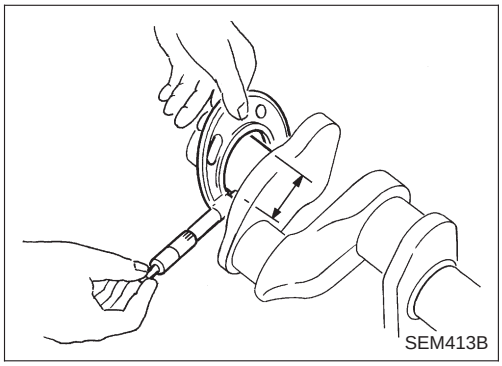
SEM413B

4. Mesurer le diamètre extérieur ''Dm'' du tourillon principal du vilebrequin.
5. Calculer le jeu du palier principal.
   Jeu de palier principal = A − Dm
   Standard :
   0,035 - 0,087 mm
   Limite :
   Moins de 0,15 mm

JEU DE PALIER DE BIELLE

1. Monter le palier de bielle sur la bielle et le chapeau.
2. Monter le chapeau de bielle sur la bielle, puis serrer au couple spécifié.

Appliquer de l'huile moteur sur la partie filetée des boulons et sur la surface d'assise des écrous.

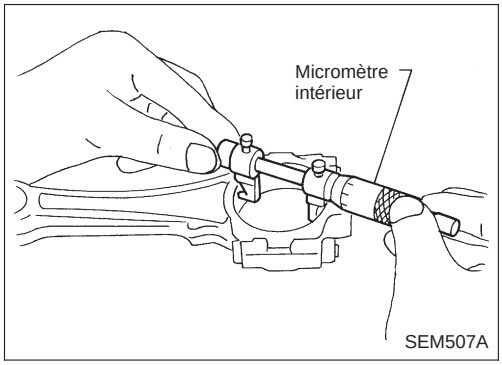

SEM507A

3. Mesurer le diamètre interne ''A'' du palier.
4. Mesurer le diamètre extérieur ''Dp'' du maneton de vilebrequin.
5. Calculer le jeu de palier de bielle.
   Jeu de palier de bielle = A − Dp
   Standard :
   0,035 - 0,081 mm
   Limite :
   Moins de 0,15 mm

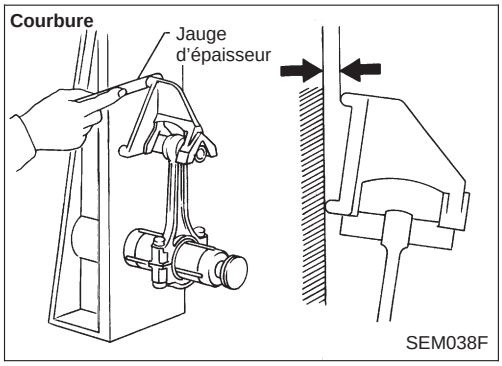

SEM038F

COURBURE ET TORSION DES BIELLES

Courbure et torsion : mm
Limite
0,075 par longueur de 100

Simpo PDF Merge and Split Unregistered Version - http://www.simpopdf.com

Inspection et remplacement (Suite)

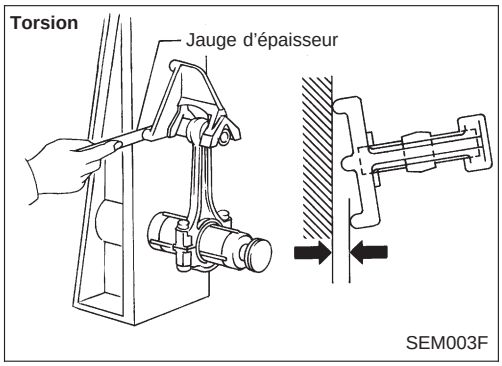

JEU DE LA BAGUE DE PIED DE BIELLE

1. Mesurer le diamètre interne ''A'' des bagues de pied de bielle.

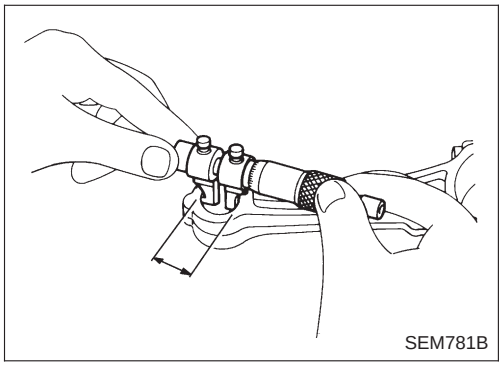

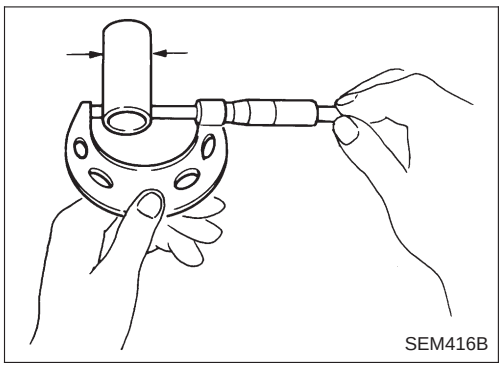

2. Mesurer le diamètre externe ''D'' de l'axe de piston.
3. Calculer le jeu de la bague de pied de bielle.
   Jeu de la bague de pied de bielle = A − D
   Standard :
   0,025 - 0,045 mm
   Limite :
   0,15 mm

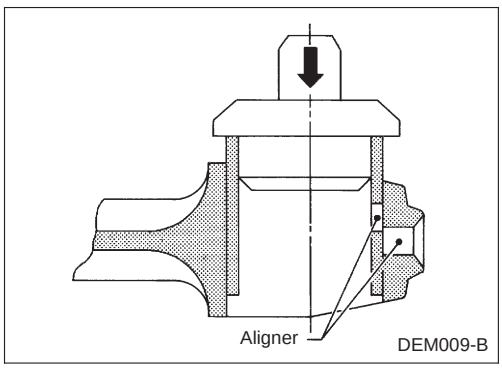

REMPLACEMENT DE LA BAGUE DE PIED DE BIELLE

1. Insérer la bague de pied de bielle jusqu'à ce qu'elle soit au même niveau que l'extrémité de la bielle.

Veiller à aligner correctement les orifices d'huile.

2. Lorsque la bague de pied de bielle est introduite, aléser la bague.
   Diamètre intérieur de la bague de pied de bielle : mm
   Taille finie
   TD25
   30,025 - 30,038
3. Usiner la bague de telle sorte qu'elle soit au niveau de la surface conique du pied de bielle.
4. Eliminer les bavures sur la bague usinée.

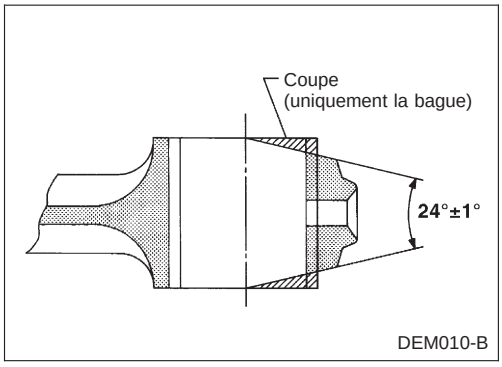

Simpo PDF Merge and Split Unregistered Version - http://www.simpopdf.com

Inspection et remplacement (Suite)

VILEBREQUIN

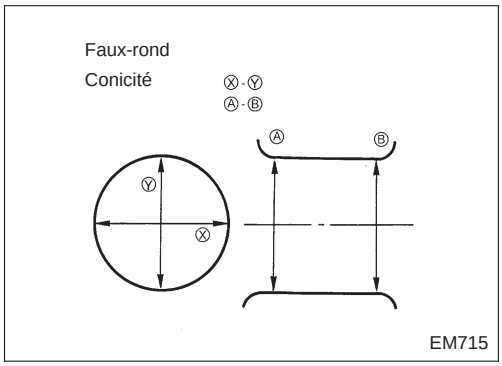

1. Vérifier si les tourillons et les manetons de vilebrequin ne sont pas rayés, usés en cône, usés ou fissurés. En cas de défaut mineur rectifier avec un tissu fin à polir.
2. Mesurer les tourillons et manetons avec un micromètre, pour rechercher conicité ou faux-rond.
   Faux-rond (X − Y) : mm
   Standard
   Moins de 0,01
   Limite
   0,02
   Conicité (A − B) : mm
   Standard
   Moins de 0,01
   Limite
   0,02

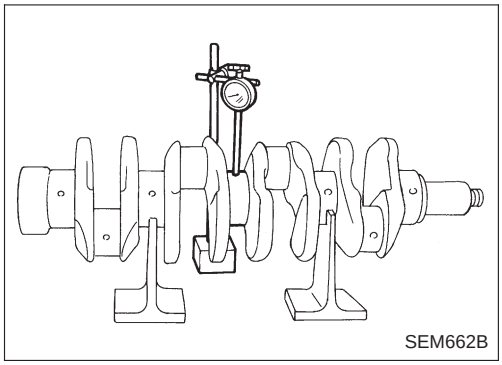

3. Vérifier le voile du vilebrequin.
   Voile [TIR (indication totale du comparateur)] : mm
   Standard
   0 - 0,03
   Limite
   0,10

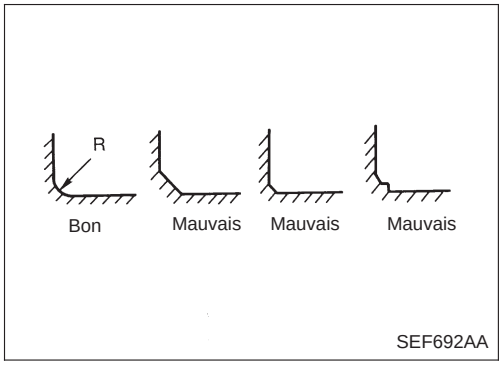

RECTIFICATION DU TOURILLON ET DU MANETON DE VILEBREQUIN

Lorsque l'on utilise des paliers principaux et des paliers de bielles sous-dimensionnés, la finition des tourillons et des manetons de vilebrequin doit correspondre aux paliers.

R : Tourillon de vilebrequin 3,0 mm
Maneton 3,5 mm

ATTENTION :

- **S'assurer par la même occasion que la largeur de la surface n'augmente pas.**
- **Ne pas tenter de rectifier le contrepoids du vilebrequin.**

BAGUE PILOTE DE VILEBREQUIN

Remplacement

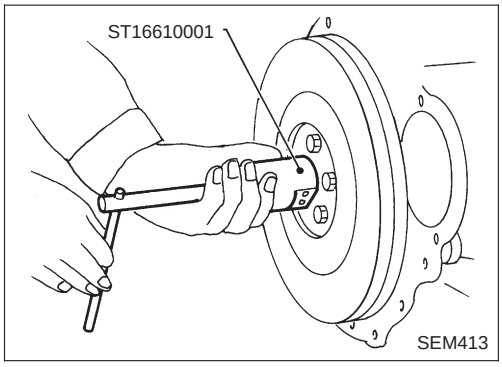

1. Extraire la bague au moyen de l'outil.

Simpo PDF Merge and Split Unregistered Version - http://www.simpopdf.com

Inspection et remplacement (Suite)

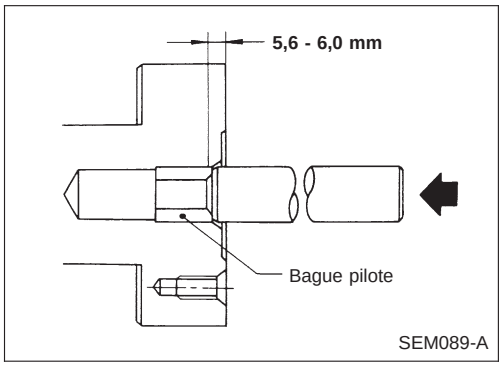

2. Insérer la bague pilote jusqu'à ce que la distance entre l'extrémité du flasque et la bague soit à la valeur spécifiée.
   Distance :
   Env. 5,6 - 6,0 mm

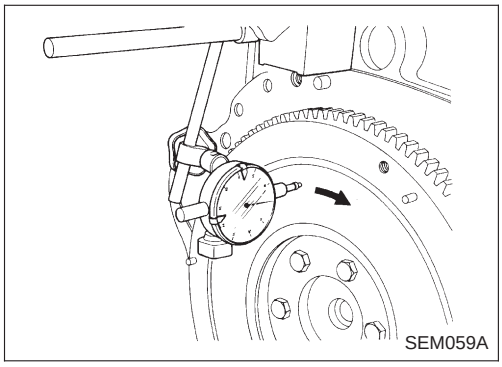

VOILE DU VOLANT-MOTEUR

Voile (indication totale du comparateur) :
Moins de 0,15 mm

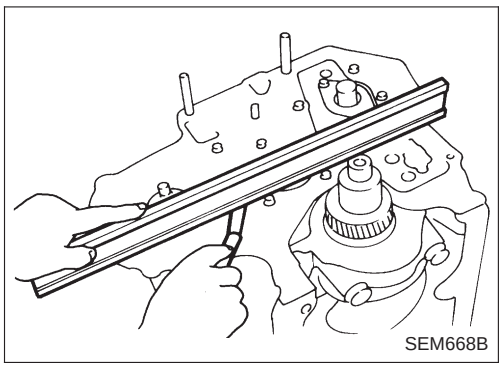

PLAQUE AVANT

Vérifier que la plaque avant ne présente pas de déformations. Si elle est hors spécifications, applatir ou remplacer la plaque avant.

Limite de déformation :
0,2 mm

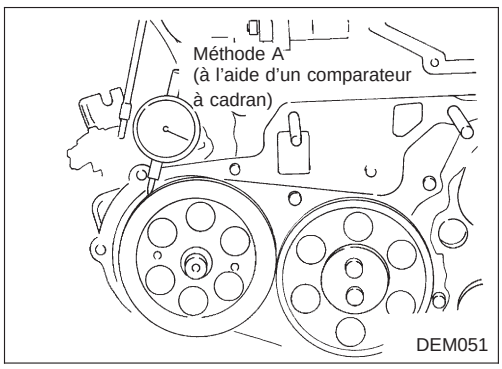

TRAIN DE PIGNONS

Pignon d'entraînement d'arbre à cames, pignon d'entraînement de pompe à injection, pignon de pompe à huile, pignon intermédiaire et pignon de vilebrequin

1. Si les dents et la clavette du pignon sont rayées ou excessivement endommagées, remplacer le pignon et la clavette.
2. Vérifier le jeu du train de pignons avant le démontage et après le remontage.
   Méthode A (à l'aide d'un comparateur à cadran)
   Méthode B (en utilisant un câble de fusible)
   Si hors spécification, remplacer le pignon.
   Battement : mm
   Standard
   0,07 - 0,11
   Limite
   0,20

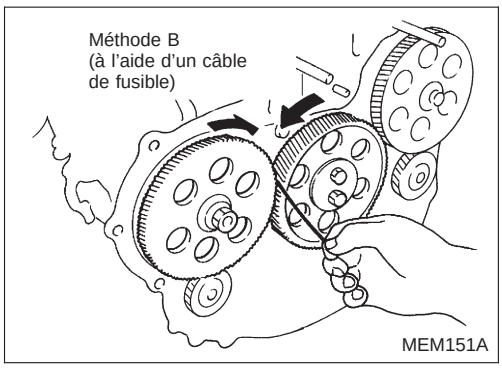

Simpo PDF Merge and Split Unregistered Version - http://www.simpopdf.com

Inspection et remplacement (Suite)

JEU DE LA BAGUE DE PIGNON INTERMEDIAIRE

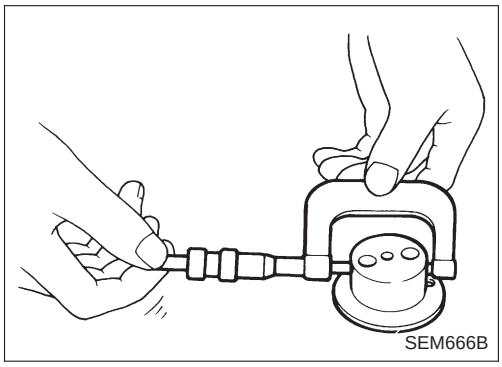
SEM666B

1. Mesurer le diamètre externe de l'arbre de pignon intermédiaire.

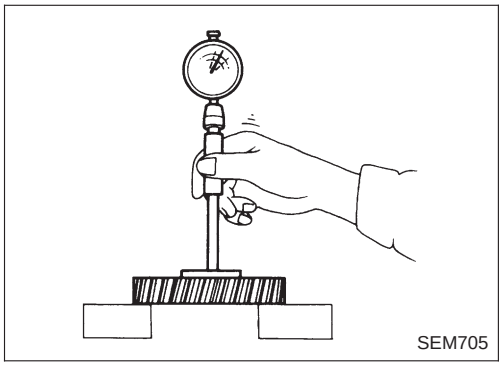
SEM705

2. Mesurer le diamètre interne de la bague de pignon intermédiaire.
3. Calculer le jeu de la bague de pignon intermédiaire.

Jeu de la bague : mm
Standard
0,025 - 0,061
Limite
0,20

JEU AXIAL DE PIGNON INTERMEDIAIRE

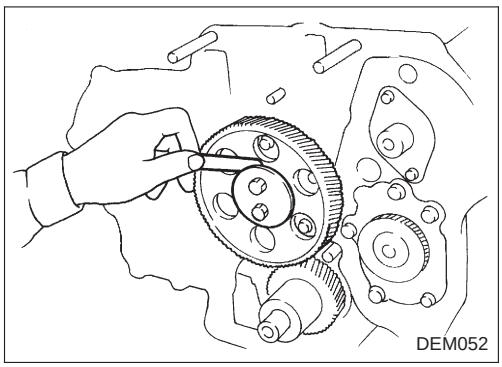
DEM052

Mesurer le jeu axial de pignon intermédiaire entre la plaque à engrenages et le pignon.

Jeu axial de pignon intermédiaire : mm
Standard
0,03 - 0,14
Limite
Moins de 0,3

REMPLACEMENT DE LA BAGUE DE PIGNON INTERMEDIAIRE

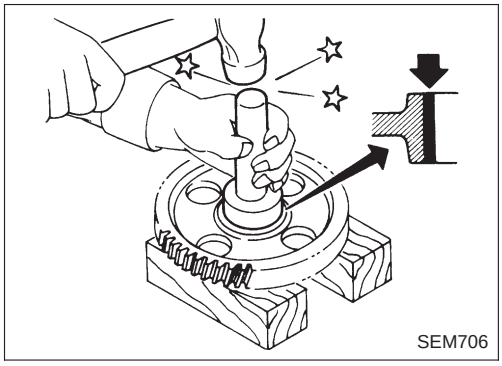
SEM706

1. Utiliser un outil adéquat pour remplacer la bague.
2. Aléser la bague de pignon intermédiaire.

Taille finie :
42,00 - 42,02 mm

Arbre de pignon intermédiaire

Reposer l'arbre de pignon intermédiaire de telle sorte que l'orifice d'huile de l'arbre soit dirigé vers le haut.

ARBRE A CAMES ET BAGUE D'ARBRE A CAMES

Jeu de la bague d'arbre à cames

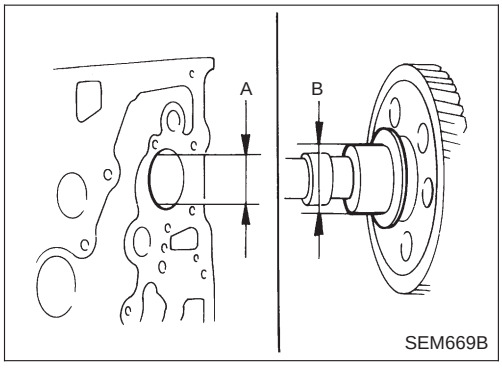

SEM669B

Mesurer le diamètre interne de la bague d'arbre à cames et le diamètre externe du tourillon d'arbre à cames à l'aide d'un comparateur adéquat.

Jeu entre l'arbre à cames et la bague (A − B) : mm
Standard
0,020 - 0,109
Limite
Moins de 0,15

Simpo PDF Merge and Split Unregistered Version - http://www.simpopdf.com

Inspection et remplacement (Suite)

REMPLACEMENT DE LA BAGUE D'ARBRE A CAMES

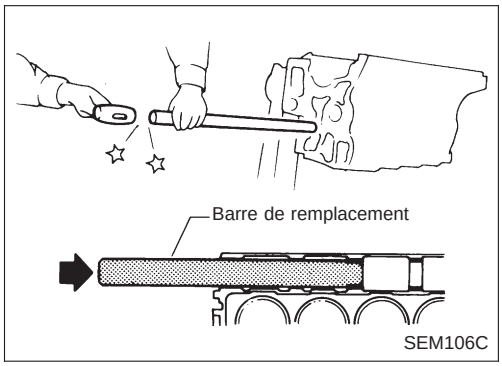

1. A l'aide de l'outil spécial, déposer les bagues d'arbre à cames du moteur. Certaines bagues doivent être cassées afin de pouvoir les déposer.

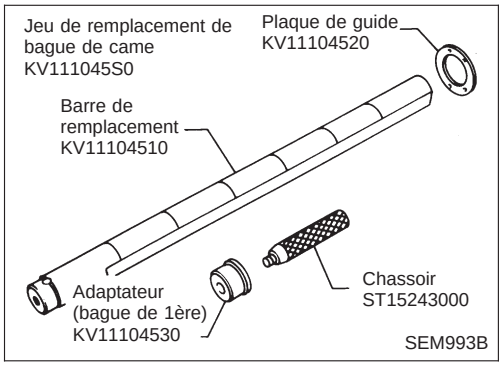

2. A l'aide de l'outil spécial, reposer les bagues d'arbre à cames comme suit :

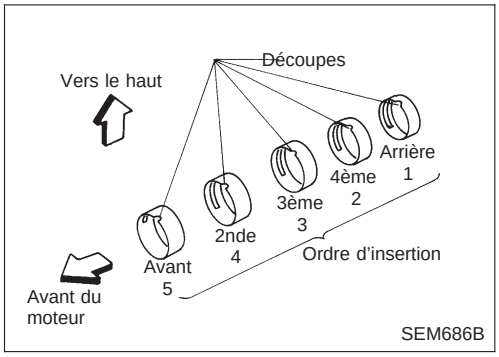

(1) Reposer les bagues d'arbre à cames dans l'ordre suivant : ''arrière'', ''4ème'', ''3ème'', ''2nde'' et ''avant''. Toutes les bagues doivent être reposées de l'avant.
(2) Orienter la découpe vers le haut et vers l'avant du moteur lors de la repose.

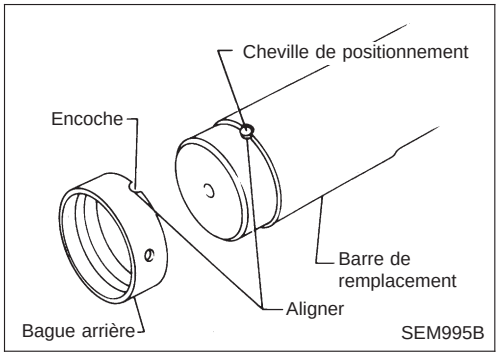

(3) Bague d'arbre à cames arrière
- Aligner l'encoche de la bague arrière sur la cheville de positionnement de la barre de remplacement avant la repose.

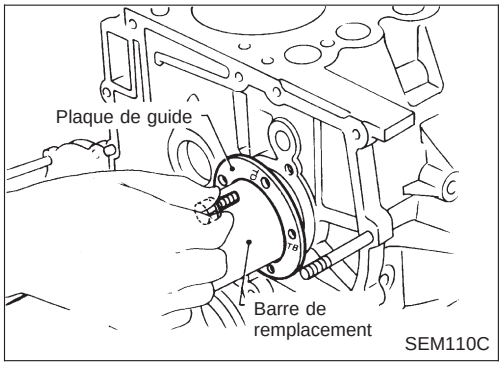

- Insérer la bague arrière avec la barre de remplacement dans le moteur.
  Reposer la plaque de guide avec les orifices de boulons (du côté du repère ''TD'') dirigés vers le haut du bloc-cylindres. Serrer les boulons.

Simpo PDF Merge and Split Unregistered Version - http://www.simpopdf.com

Inspection et remplacement (Suite)

- Insérer la barre de remplacement jusqu'à ce que son repère d'alignement soit aligné sur l'extrémité du guide de remplacement.
  Déposer le jeu de remplacement.
  Après la repose, vérifier que les orifices d'huile des bagues d'arbre à cames sont correctement alignés sur ceux du bloc-cylindres.

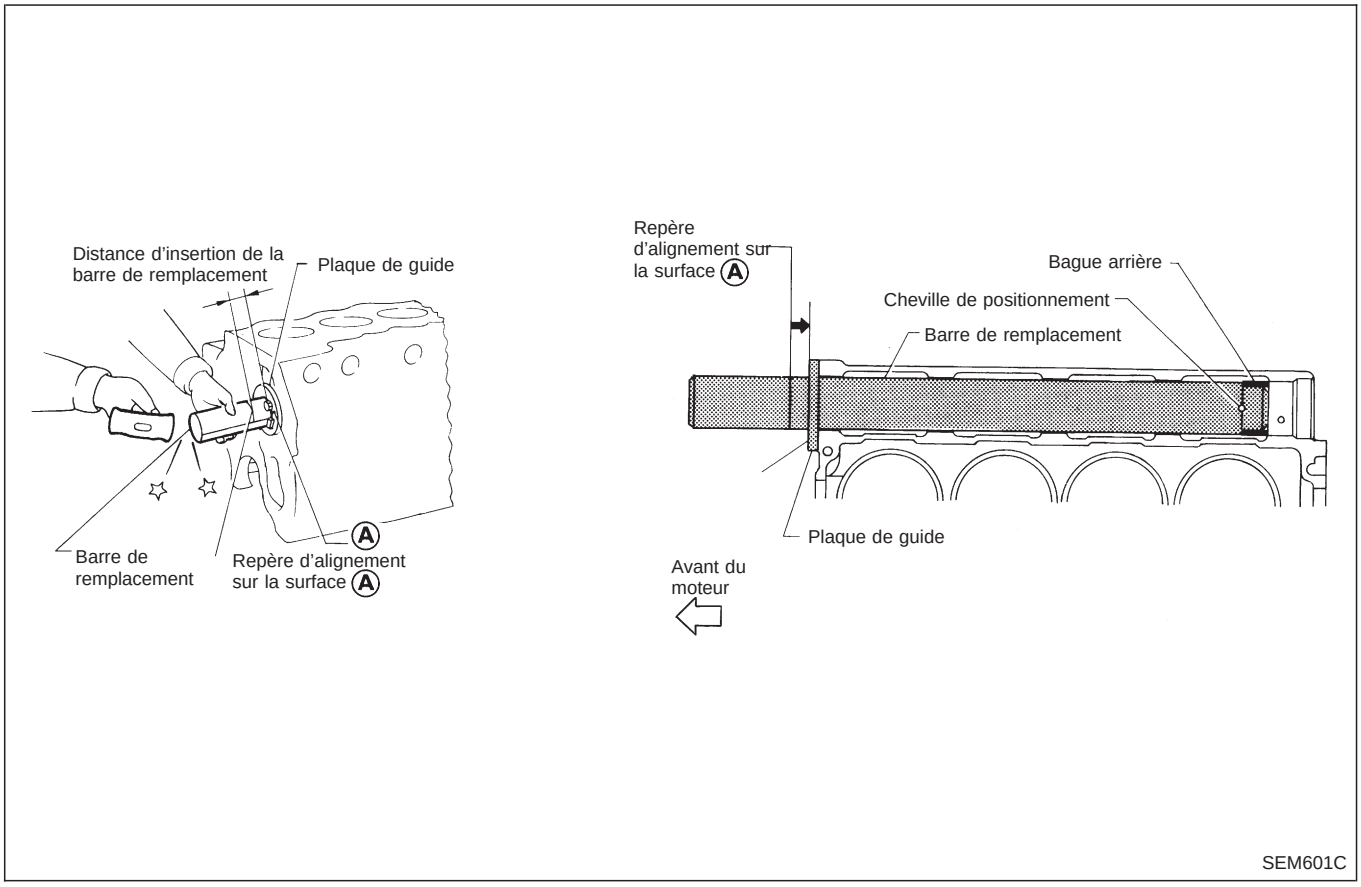

Simpo PDF Merge and Split Unregistered Version - http://www.simpopdf.com

Inspection et remplacement (Suite)

(4) Bagues d'arbre à cames de 4ème, 3ème et 2nde

- Reposer de la même manière que pour la bague d'arbre à cames arrière.

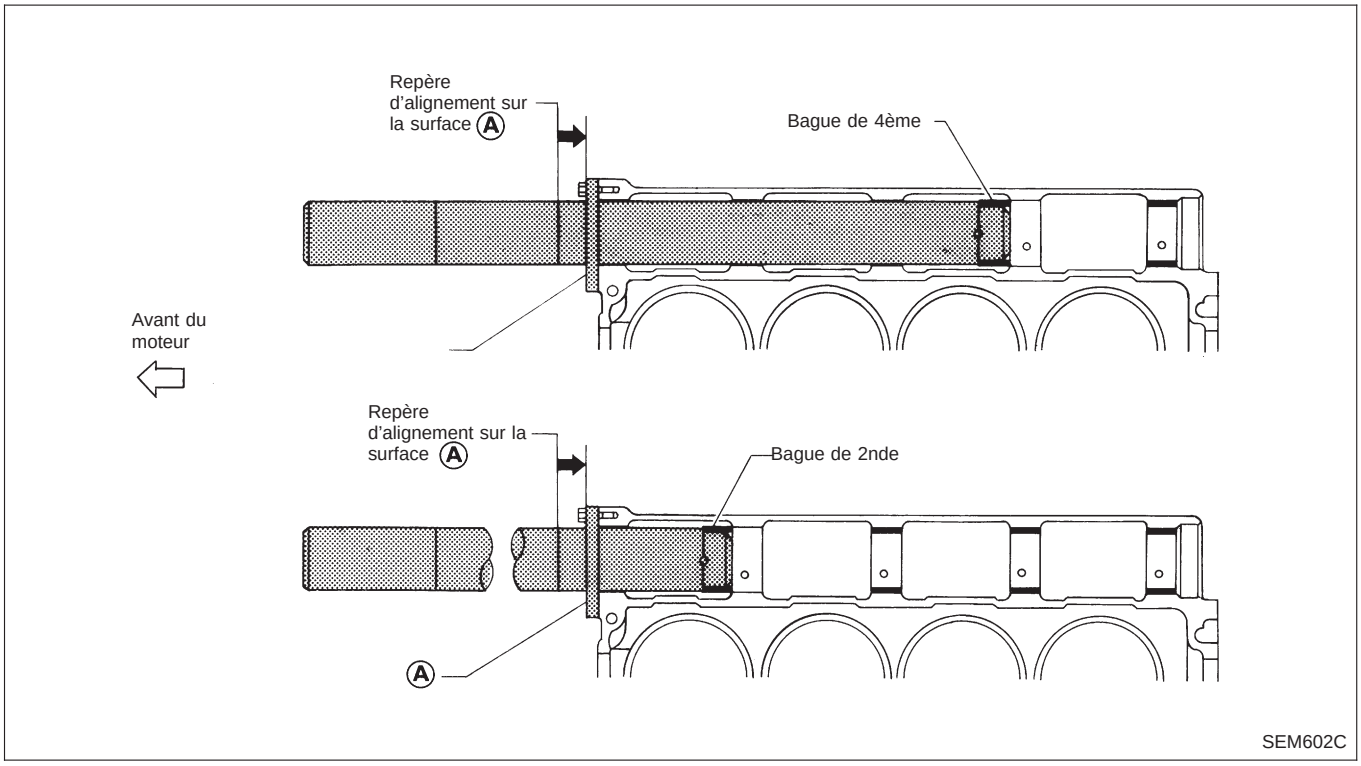

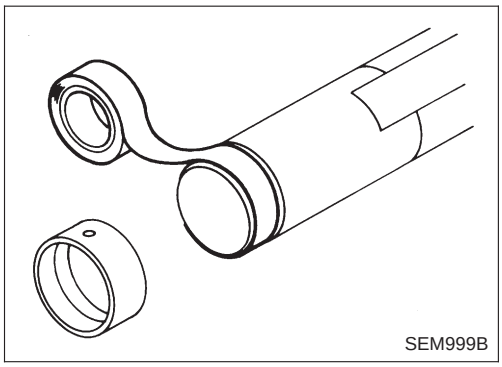

- Lors de l'installation des bagues de 4ème à 2nde sur la barre de remplacement, scotcher la barre afin d'empêcher tout mouvement.

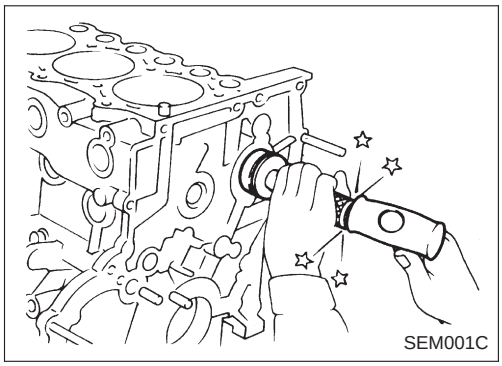

(5) Bague de l'arbre à cames avant

- A l'aide de l'adaptateur de bague de 1ère, placer la bague d'arbre à cames avant de telle sorte que l'orifice d'huile du bloc-cylindres soit aligné avec l'orifice d'huile de la bague.

Simpo PDF Merge and Split Unregistered Version - http://www.simpopdf.com

Inspection et remplacement (Suite)

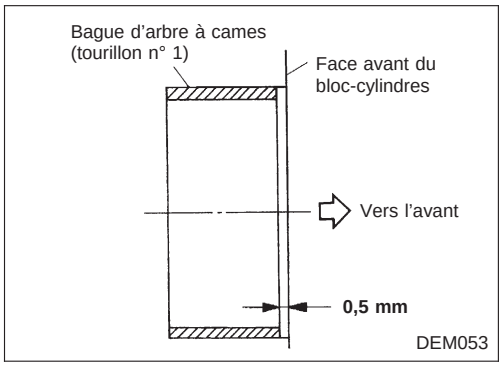

- Enfoncer la bague jusqu'à ce que son extrémité avant dépasse de 0,5 mm de la surface avant du bloc-cylindres.

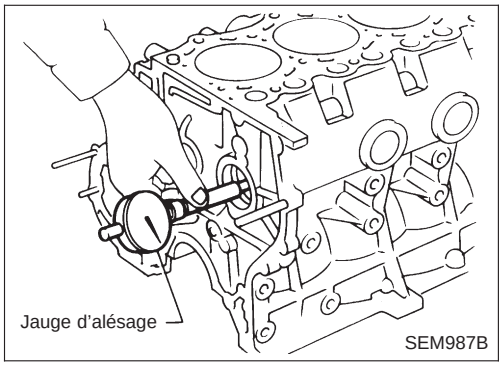

3. Vérifier le jeu de la bague d'arbre à cames.

Se reporter aux SDS, EM-103.

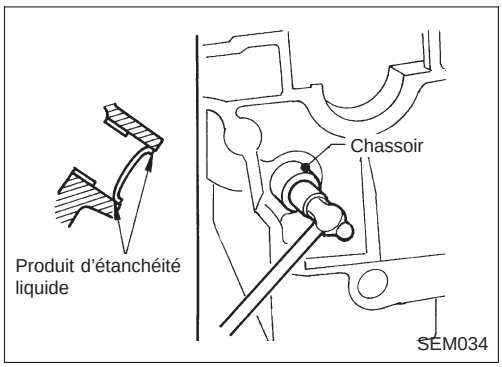

4. Reposer le bouchon aveugle neuf dans l'orifice de bague d'arbre à cames arrière à l'aide d'un chassoir.

Appliquer un joint d'étanchéité liquide.

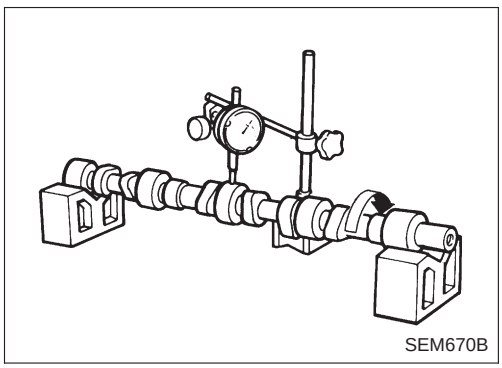

ALIGNEMENT DE L'ARBRE A CAMES

1. Vérifier si le tourillon d'arbre à cames et la surface de came ne présentent pas de courbures, d'usure ou de dommages.
   Si le défaut est hors spécification, remplacer.
2. Vérifier la courbure de l'arbre à cames au niveau du tourillon central.
   Si la courbure est supérieure à la limite spécifiée, réparer ou remplacer l'arbre à cames.

Courbure de l'arbre à cames
(indication totale du comparateur) : mm
Standard
Moins de 0,02
Limite
Moins de 0,06

Simpo PDF Merge and Split Unregistered Version - http://www.simpopdf.com

Inspection et remplacement (Suite)

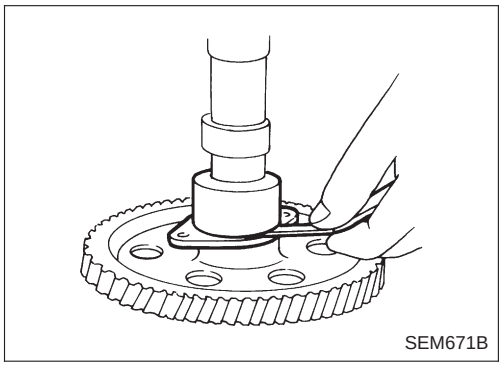
SEM671B

3. Mesurer le jeu axial d'arbre à cames entre la plaque de positionnement et le pignon. S'il est hors spécification, remplacer la plaque de positionnement de l'arbre à cames.
   Jeu axial d'arbre à cames : mm
   Standard
   0,08 - 0,28
   Limite
   Moins de 0,5

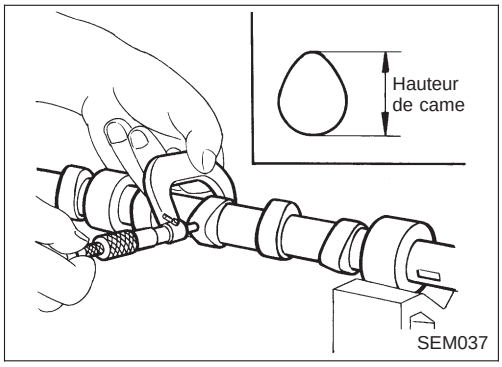

SEM037

4. Mesurer la hauteur des cames de l'arbre à cames. S'il est hors spécification, remplacer l'arbre à cames.
   Hauteur de came : mm
   Standard
   Admission
   41,88 - 41,92
   Echappement
   41,88 - 41,92
   Limite
   Admission
   Moins de 41,40
   Echappement
   Moins de 41,40

Remontage

PISTON

Remonter les pistons, les axes de piston, les joncs d'arrêt et les bielles.

a. Les numéros qui sont matricés sur la bielle et le chapeau correspondent à chaque cylindre. On doit faire attention de ne pas intervertir les divers éléments, y compris les paliers.

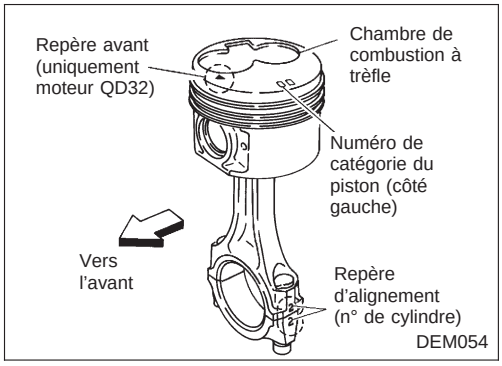

DEM054

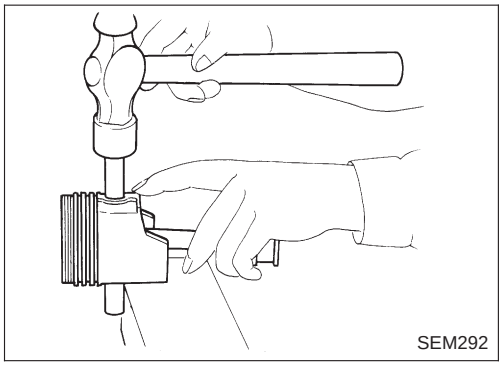
SEM292

b. Lors de l'introduction de l'axe de piston dans la bielle, chauffer le piston à l'aide d'un appareil de chauffage ou avec de l'eau chaude (environ 60 à 70°C), puis enduire d'huile moteur l'axe et le pied de bielle.

c. Après remontage, s'assurer que le piston bascule en douceur.

Simpo PDF Merge and Split Unregistered Version - http://www.simpopdf.com

Remontage (Suite)

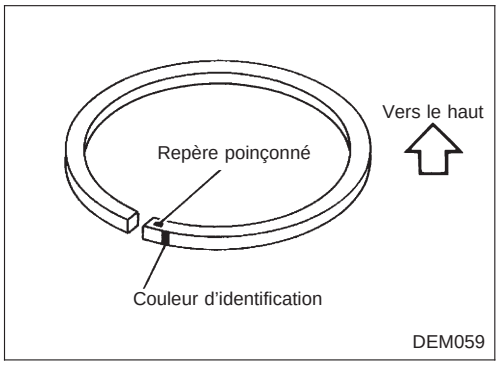

Reposer l'ensemble de pistons.

ATTENTION :

- **Tendre les segments de piston suffisamment pour qu'ils puissent s'adapter dans les rainures de piston.**
- **Toujours installer les segments de piston neufs en dirigeant leurs repères vers le haut.**

	Couleur d'identification
Segment de feu	Jaune
Segment de compression	Rouge

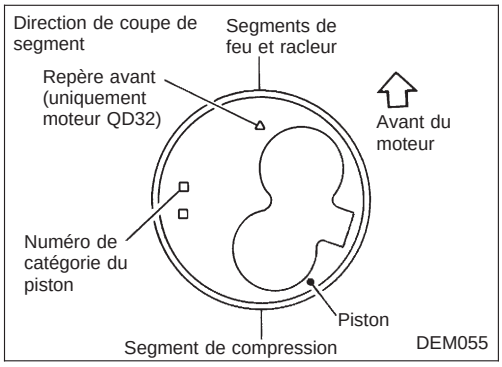

- **Reposer le segment de piston n° 1 de telle sorte que sa coupe soit orientée vers l'axe de piston ; puis reposer les segments de pistons de façon à ce que leurs coupes se trouvent à 180° les unes des autres.**

VILEBREQUIN

1. Reposer le vilebrequin.

(1) Poser les paliers principaux dans la position adéquate sur le bloc-cylindres.

a. Si le vilebrequin, le bloc-cylindres ou le palier principal est réutilisé, il est nécessaire de mesurer le jeu du palier principal.

b. Les paliers supérieurs sont dotés d'un orifice de passage d'huile et d'une rainure de graissage, ce qui n'est pas le cas pour les paliers inférieurs.

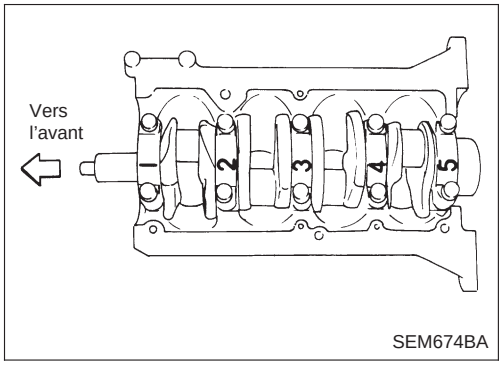

(2) Appliquer de l'huile moteur sur le tourillon et le maneton de vilebrequin, puis reposer le vilebrequin.

(3) Reposer les chapeaux de paliers principaux.

a. Reposer le chapeau de palier principal avec le numéro face à l'avant du véhicule.

b. Appliquer de l'huile moteur sur les surfaces de contact du chapeau de palier principal et du bloc-cylindres.

c. Reposer le joint d'huile arrière. Appliquer de l'huile moteur sur la surface de contact de l'extrémité arrière du joint d'huile et du vilebrequin.

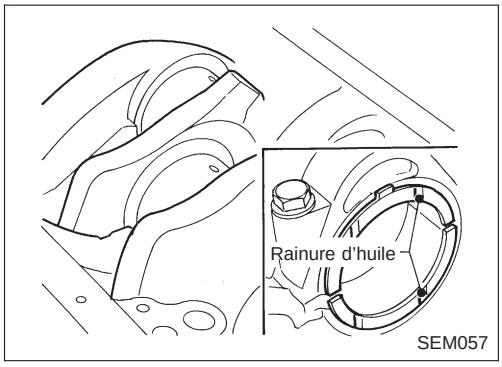

(4) Reposer la rondelle de butée du vilebrequin sur le 4ème tourillon en partant de l'avant.

Reposer la rondelle de butée de telle sorte que la rainure d'huile soit face au vilebrequin.

Simpo PDF Merge and Split Unregistered Version - http://www.simpopdf.com

Remontage (Suite)

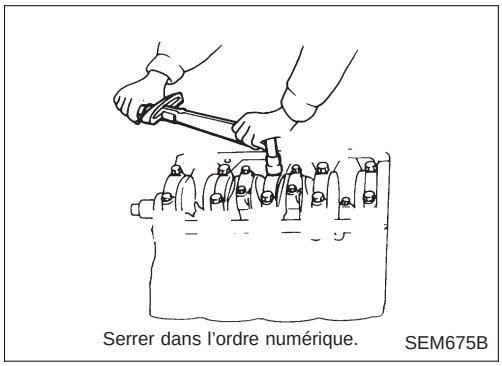
Serrer dans l'ordre numérique. SEM675B

(5) Serrer progressivement les boulons de chapeaux de paliers principaux par étape, en commençant par deux ou trois étapes distinctes du palier central, et en progressant vers l'extérieur et en séquence.

: 167 - 177 N·m (17,0 - 18,0 kg-m)

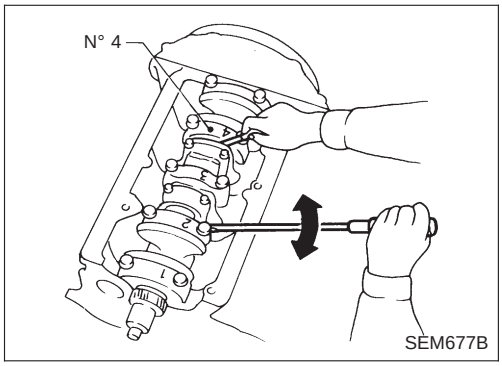

SEM677B

(6) Mesurer le jeu axial libre du vilebrequin au niveau du palier n° 4.

Jeu axial libre du vilebrequin : mm

Standard

0,055 - 0,140

Limite

0,40

Si hors spécification, remplacer la rondelle de butée du palier principal n° 4. Se reporter aux SDS, EM-108.

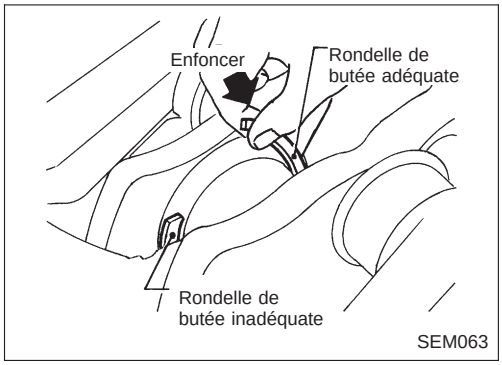

SEM063

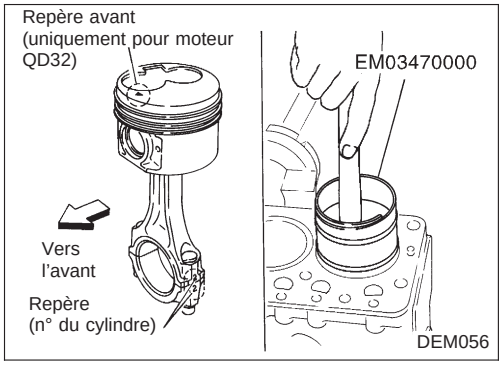

DEM056

2. Monter les pistons avec les bielles.

(1) Les monter dans les cylindres correspondants à l'aide de l'outil spécial.

- **Prendre garde de ne pas rayer la paroi du cylindre avec la bielle.**
- **Insérer la bielle. Veiller à ce que sa tête n'entre pas en contact avec le gicleur d'huile.**
- **Enduire d'huile moteur la paroi de cylindre, le piston et le palier.**
- **La chambre de combustion à trèfle sur la culasse doit se trouver du côté droit du moteur.**

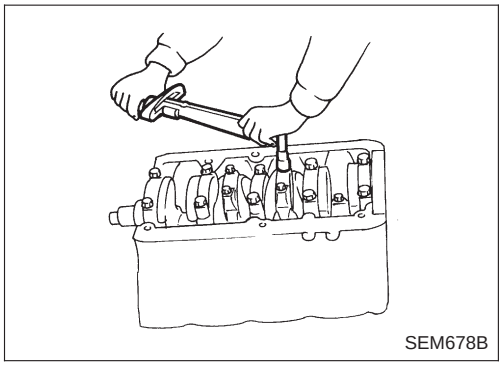
SEM678B

(2) Monter les chapeaux de palier de bielle.

Simpo PDF Merge and Split Unregistered Version - http://www.simpopdf.com

Remontage (Suite)

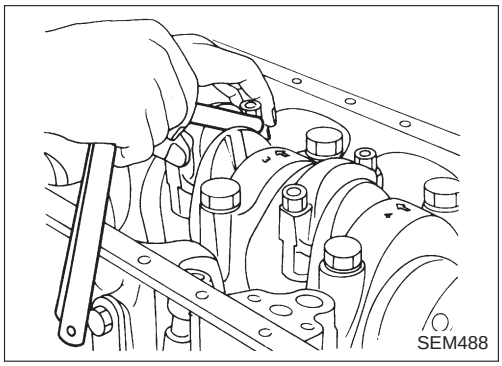
SEM488

3. Mesurer le jeu latéral de bielle.

Jeu latéral de la bielle : mm
Standard
0,10 - 0,22
Limite
0,22

Si la limite est dépassée, remplacer la bielle et/ou le vilebrequin.

TRAIN DE PISTONS

1. Placer le piston n° 1 à son P.M.H. durant sa course de compression.
2. Aligner chaque repère de pignon et reposer les pignons.

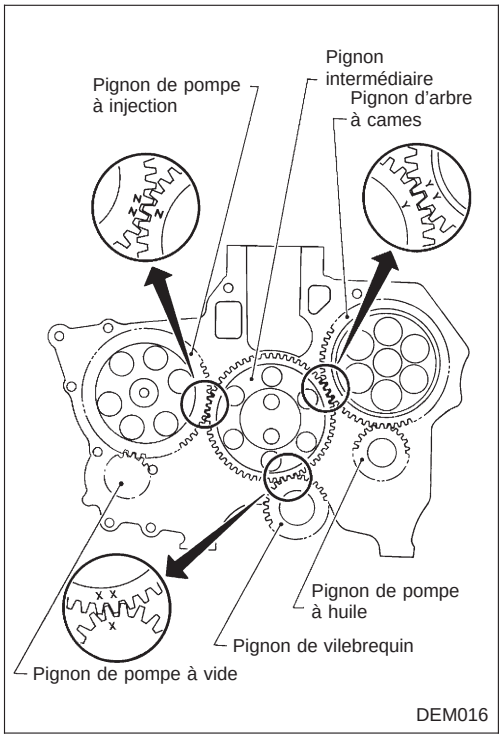

DEM016

CARTER DE PIGNON DE DISTRIBUTION

Repose

1. Avant de reposer le carter de pignon distribution, déposer toute trace de joint liquide de la surface de contact à l'aide d'un grattoir. Retirer également toute trace de joint liquide de la surface de contact de la plaque avant.

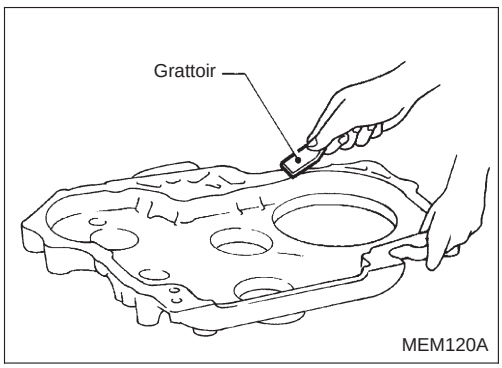

MEM120A

2. Appliquer un cordon uniforme de joint liquide sur la surface de contact du carter de distribution et du cache-poussière.

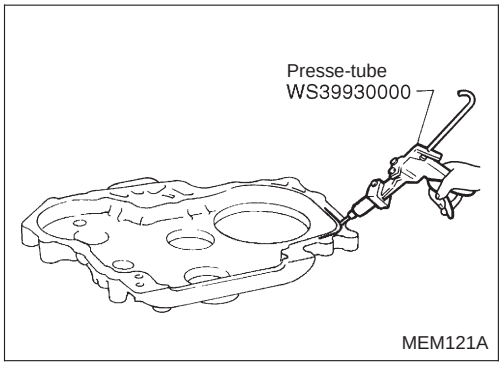

MEM121A

Simpo PDF Merge and Split Unregistered Version - http://www.simpopdf.com

Remontage (Suite)

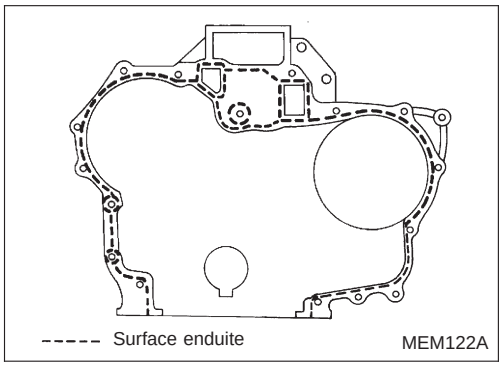

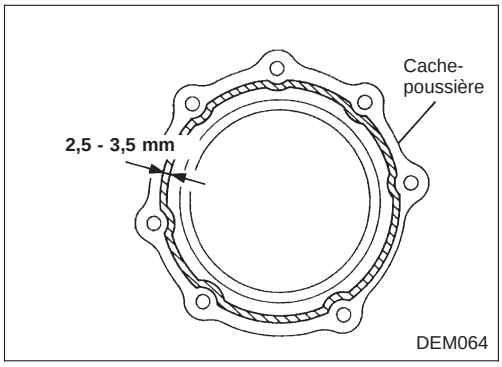

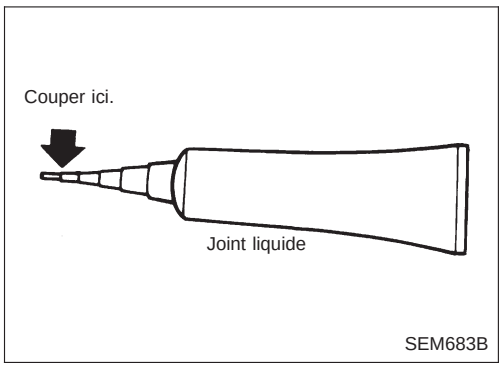

- **S'assurer que le diamètre du joint liquide est de 2,5 à 3,5 mm.**
- **Fixer le carter de distribution sur la plaque avant dans les 10 minutes suivant la pose du joint.**
- **Attendre au moins 30 minutes avant de remplir de liquide de refroidissement moteur ou de démarrer le moteur.**
- **Utiliser le joint liquide d'origine ou un produit équivalent.**

Simpo PDF Merge and Split Unregistered Version - http://www.simpopdf.com

Caractéristiques générales

Disposition des cylindres		4, en ligne
Cylindrée	cm^3	2 389
Alésage x course	mm	89 x 96
Disposition des soupapes		Arbre à cames en tête
Ordre d'allumage		1-3-4-2
Nombre de segments de piston		
Compression		2
Racleur		1
Nombre de paliers principaux		5
Rapport de compression		8,6

Unité : kPa (bar, kg/cm^2)/tr/mn

Pression de compression	
Standard	1 324 (13,24, 13,5)/300
Minimum	981 (9,8, 10)/300
Limite de différence entre les cylindres	98 (0,98, 1,0)/300

Inspection et réglage

BLOC-CYLINDRES

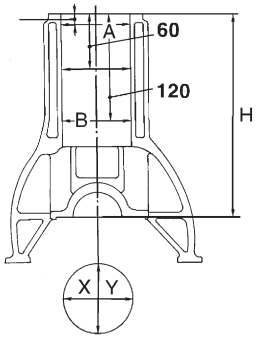

SEM618F

Unité : mm

			Standard	Limite
Déformation			–	0,1
Alésage de cylindre	Diamètre intérieur	Catégorie 1	89,000 - 89,010	0,2*
		Catégorie 2	89,010 - 89,020	
		Catégorie 3	89,020 - 89,030	
	Faux-rond (X − Y)		Moins de 0,015	–
	Conicité (A − B)		Moins de 0,010	–
Différence de diamètre interne entre les cylindres			Moins de 0,05	0,2
Jeu entre piston et cylindre			0,010 - 0,020	–
Hauteur du bloc-cylindres (du centre de vilebrequin)			246,95 - 247,05	0,2**

*Limite d'usure
**Rectifications totales de la culasse et du bloc-cylindres

CULASSE

Unité : mm

	Standard	Limite
Hauteur (H)	98,8 - 99,0	0,2*
Déformation de la surface	0,03	0,1

* Rectifications totales de la culasse et du bloc-cylindres

Simpo PDF Merge and Split Unregistered Version - http://www.simpopdf.com

Inspection et réglage (Suite)

GUIDE DE SOUPAPE

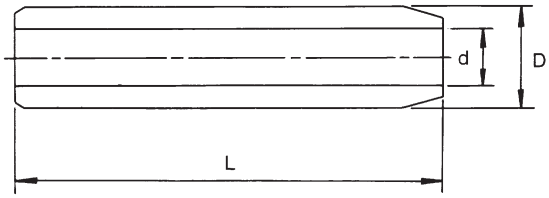

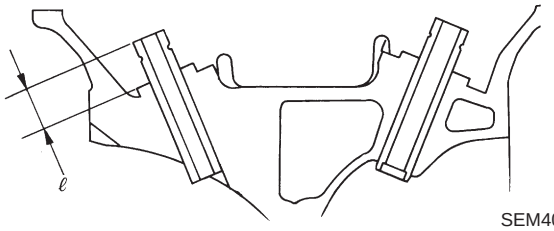

SEM401E

Unité : mm

	Standard		Entretien		Limite
	Admission	Echappement	Admission	Echappement	–
Longueur (L)	52,6	56,0	52,6	56,0	–
Diamètre extérieur (D)	11,023 - 11,034	12,023 - 12,034	11,223 - 11,234	12,223 - 12,234	–
Diamètre intérieur (d) (Dimension de finition)	7,000 - 7,018	8,000 - 8,018	7,000 - 7,018	8,000 - 8,018	–
Diamètre de l'orifice de culasse	10,975 - 10,996	11,975 - 11,996	11,175 - 11,196	12,175 - 12,196	–
Ajustement serré	0,027 - 0,059				–
Jeu entre queue de soupape et guide de soupape	0,020 - 0,053	0,040 - 0,070	0,020 - 0,053	0,040 - 0,070	0,1
Longueur de taraudage (ℓ)	14,9 - 15,1				

SIEGE DE SOUPAPE

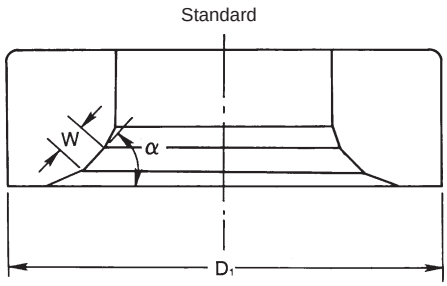

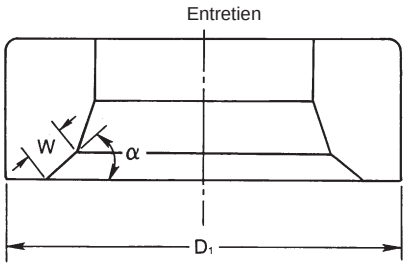

SEM402E

Unité : mm

	Standard		Entretien	
	Admission	Echappement	Admission	Echappement
Diamètre du fond du creux de siège de culasse	36,000 - 36,016	42,000 - 42,016	36,500 - 36,516	42,500 - 42,516
Diamètre externe de siège de soupape (D_1)	36,080 - 36,096	42,080 - 42,096	36,580 - 36,596	42,580 - 42,596
Angle de face (α)	45°	45°	45°	45°
Largeur de contact (W)	1,6 - 1,7	1,7 - 2,1	1,6 - 1,7	1,7 - 2,1

Simpo PDF Merge and Split Unregistered Version - http://www.simpopdf.com

Inspection et réglage (Suite)

SOUPAPE

T (épaisseur de marge)

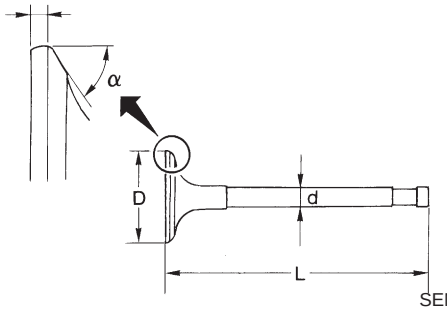

SEM188A

Unité : mm

		Standard	Limite
Diamètre de la tête de soupape (D)	Adm.	34,0 - 34,2	–
	Ech.	40,0 - 40,2	–
Longueur de la soupape (L)	Adm.	121,05 - 121,65	–
	Ech.	122,02 - 122,62	–
Diamètre de la queue de soupape (d)	Adm.	6,965 - 6,980	–
	Ech.	7,948 - 7,960	–
Angle de face de soupape (α)	Adm.	45°15′ - 45°45′	–
	Ech.	45°15′ - 45°45′	–
Marge de tête de soupape (T)	Adm.	1,15 - 1,45	0,5
	Ech.	1,35 - 1,65	
Jeu de soupape		0	

RESSORT DE SOUPAPE

Unité : mm

		Standard		Limite	
		Admission	Echappement	Admission	Echappement
Hauteur libre (H)	Extérieur	57,44	53,21	–	–
	Intérieur	53,34	47,95	–	–
Pression N (kg) à une hauteur de	Extérieur	604,1 à 37,6	640,4 à 34,1	567,8 à 37,6	620,8 à 34,1
	Intérieur	284,4 à 32,6	328,5 à 29,1	266,8 à 32,6	318,7 à 29,1
Faux-équerre	Extérieur	–	–	2,5	2,3
	Intérieur	–	–	2,3	2,1

Simpo PDF Merge and Split Unregistered Version - http://www.simpopdf.com

Inspection et réglage (Suite)

ARBRE A CAMES ET PALIER D'ARBRE A CAMES

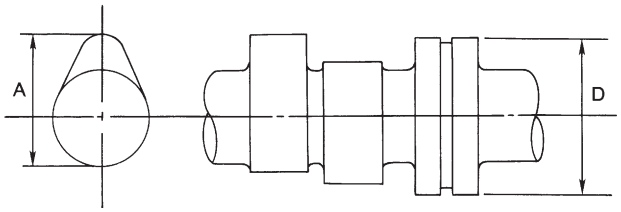

SEM568A

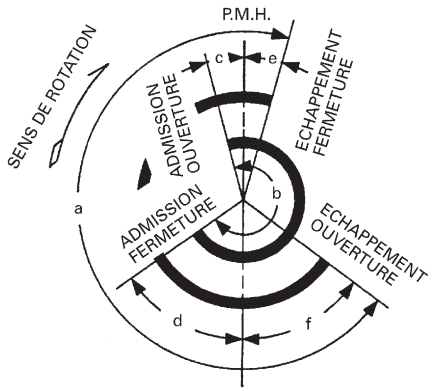

Avant P.M.H.

EM120

Unité : mm

		Standard	Limite
Hauteur de la came (A)		44,43 - 44,58	–
Levée de soupape (h)		9,7	–
Limite d'usure de hauteur de came		–	0,2
Jeu entre le tourillon d'arbre à cames et le palier		0,045 - 0,090	0,12
Diamètre intérieur du palier d'arbre à cames		33,000 - 33,025	–
Diamètre extérieur du tourillon d'arbre à cames (D)		32,935 - 32,955	–
Voile de l'arbre à cames		0 - 0,02	–
Jeu axial d'arbre à cames		0,07 - 0,15	0,2
Distribution des soupapes (degré sur le vilebrequin)	a	232	–
	b	232	–
	c	−5	–
	d	57	–
	e	11	–
	f	41	–

CULBUTEUR ET AXE DE CULBUTEUR

Unité : mm

Jeu entre le culbuteur et l'axe	0,012 - 0,050
Diamètre de l'axe de culbuteur	21,979 - 22,000
Diamètre de l'orifice de l'axe des culbuteurs	22,012 - 22,029

Simpo PDF Merge and Split Unregistered Version - http://www.simpopdf.com

Inspection et réglage (Suite)

PISTON, SEGMENT DE PISTON ET AXE DE PISTON

Piston

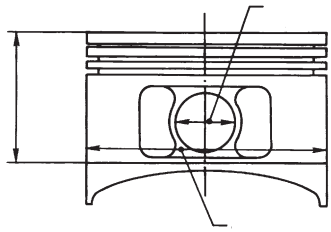

SEM444C

Unité : mm

Diamètre de la jupe de piston (A)	Standard	Catégorie n° 1	88,970 - 88,980
		Catégorie n° 2	88,980 - 88,990
		Catégorie n° 3	88,990 - 89,000
	Entretien (surdimension)	0,5	89,470 - 89,500
		1,0	89,970 - 90,000
Dimension (a)		Environ 52	
Diamètre de l'orifice de l'axe de piston (d)		21,002 - 21,008	
Jeu d'alésage entre le piston et le cylindre		0,020 - 0,040	

Axe de piston

Unité : mm

	Standard
Diamètre extérieur de l'axe de piston	20,993 - 20,998
Jeu entre le piston et l'orifice d'axe de piston	0,008 - 0,012
Jeu entre l'axe de piston et la bielle	−0,015 à −0,033

Segment de piston

Unité : mm

		Standard	Limite
Jeu latéral	Segment de feu	0,010 - 0,030	0,1
	Segment de compression	0,030 - 0,070	0,1
	Segment racleur	0,085 - 0,115*	0,1
Coupe de segment	Segment de feu	0,28 - 0,43	0,5
	Segment de compression	0,45 - 0,60	0,5
	Segment racleur (segment à rail)	0,20 - 0,60	0,5

*: Marque Riken

BIELLE

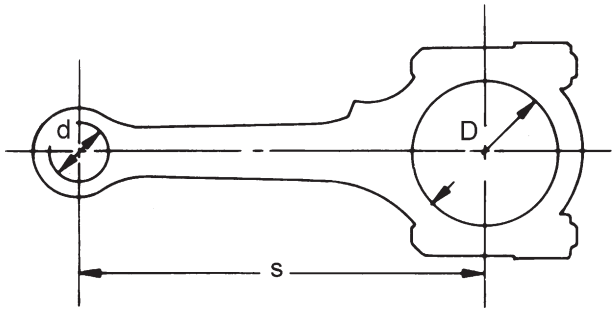

SEM216E

Unité : mm

	Standard	Limite
Distance de centre à centre (S)	164,95 - 165,05	–
Courbure (par 100 mm)	–	0,15
Torsion (par 100 mm)	–	0,3
Diamètre intérieur du pied de bielle (d)	20,965 - 20,978	–
Diamètre intérieur de la tête de bielle (D)	53,000 - 53,013	–
Jeu latéral	0,2 - 0,4	0,6

Simpo PDF Merge and Split Unregistered Version - http://www.simpopdf.com

Inspection et réglage (Suite)

VILEBREQUIN

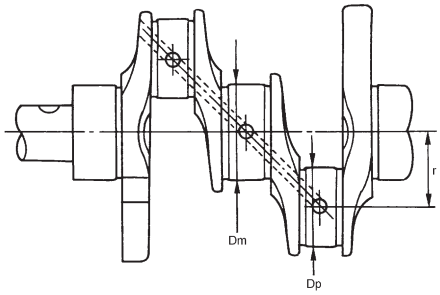

SEM394

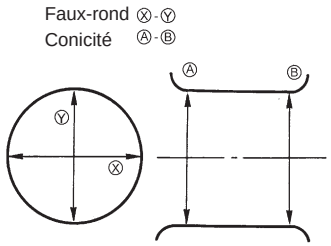

EM715

Unité : mm

Diamètre du tourillon principal (Dm)	Catégorie	N°0	59,967 - 59,975
		N°1	59,959 - 59,967
		N°2	59,951 - 59,959
Diamètre du maneton (Dp)	Catégorie	N°0	49,968 - 49,974
		N°1	49,962 - 49,968
		N°2	49,956 - 49,962
Distance de centre à centre (r)			47,95 - 48,05

		Standard	Limite
Conicité du tourillon et maneton [Ⓐ − Ⓑ]	Tourillon	–	0,01
	Maneton	–	0,005
Faux-rond du tourillon et du maneton [Ⓧ − Ⓨ]	Tourillon	–	0,01
	Maneton	–	0,005
Voile [TIR]*		–	0,10
Jeu axial		0,05 - 0,18	0,3
Galetage		Plus de 0,1	

*Indication totale du comparateur

JEU DES PALIERS

Unité : mm

	Standard	Limite
Jeu du palier principal	0,020 - 0,047	0,1
Jeu du palier de bielle	0,010 - 0,035	0,09

Simpo PDF Merge and Split Unregistered Version - http://www.simpopdf.com

Inspection et réglage (Suite)

PALIERS PRINCIPAUX DISPONIBLES

Standard

Numéro de catégorie	Epaisseur mm	Couleur d'identification
0	1,821 - 1,825	Noir
1	1,825 - 1,829	Marron
2	1,829 - 1,833	Vert
3	1,833 - 1,837	Jaune
4	1,837 - 1,841	Bleu

Sous-dimensionné (entretien)

Unité : mm

	Epaisseur	Diamètre du tourillon principal "Dm"
0,25	1,952 - 1,960	Meuler jusqu'à ce que le jeu du palier soit dans les tolérances spécifiées.

PALIERS DE BIELLE DISPONIBLES

Standard

Numéro de catégorie	Epaisseur mm	Couleur d'identification
0	1,505 - 1,508	–
1	1,508 - 1,511	Marron
2	1,511 - 1,514	Vert

Sous-dimensionné (entretien)

Unité : mm

	Epaisseur	Diamètre du maneton "Dp"
0,08	1,540 - 1,548	Meuler jusqu'à ce que le jeu du palier soit dans les tolérances spécifiées.
0,12	1,560 - 1,568	
0,25	1,625 - 1,633	

ELEMENTS DIVERS

Unité : mm

Voile de la roue d'arbre à cames [TIR]*	Moins de 0,12
Voile du volant [TIR]*	Moins de 0,1

*Indication totale du comparateur
TD

Simpo PDF Merge and Split Unregistered Version - http://www.simpopdf.com

Caractéristiques générales

Moteur		TD25
Disposition des cylindres		4
Nombre de cylindres		
Disposition des soupapes		Arbre à cames en tête
Alésage x course	mm	92,9 x 92,0
Cylindrée	cm^3	2 494
Ordre d'allumage		1-3-4-2
Nombre de segments de piston	Compression	2
	Racleur	1
Nombre de paliers principaux		5

Inspection et réglage

PRESSION DE COMPRESSION

Unité : kPa (bar, kg/cm^2)/tr/mn

Standard	2 942 (29,4, 30)/200
Minimum	2 452 (24,5, 25)/200
Limite de différence entre les cylindres	294 (2,9, 3)/200

CULASSE

Unité : mm

	Standard	Limite
Déformation de la surface de culasse	Moins de 0,07	0,2
Hauteur nominale de la culasse	89,9 - 90,1	

SOUPAPE

Unité : mm

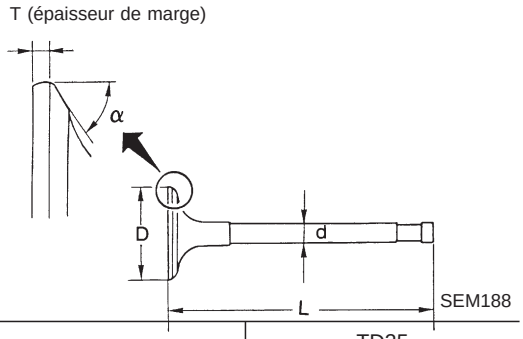

Moteur	TD25
Diamètre de la tête de soupape "D"	
Admission	41,4 - 41,6
Echappement	36,9 - 37,1
Longueur de la soupape "L"	
Admission	117
Echappement	
Diamètre de la queue de soupape "d"	
Admission	7,962 - 7,977
Echappement	7,945 - 7,960
Angle du siège de soupape "α"	
Admission	45° - 45°30'
Echappement	
Limite de marge de soupape "T"	0,5
Limite de meulage de la surface d'extrémité de la queue de soupape	0,2
Jeu de soupape (chaud)	
Admission	0,35
Echappement	

Simpo PDF Merge and Split Unregistered Version - http://www.simpopdf.com

Inspection et réglage (Suite)

Guide de soupape

Unité : mm

	Standard	Entretien
Diamètre extérieur du guide de soupape	12,033 - 12,044	–
Diamètre intérieur du guide de soupape (Dimension de finition)	8,000 - 8,015	
Diamètre de l'orifice de guide de soupape dans la culasse	12,00 - 12,011	–
Ajustement serré du guide de soupape	0,022 - 0,044	
	Standard	Tolérance maxi.
Jeu entre queue de soupape et guide de soupape		
Admission	0,023 - 0,053	0,15
Echappement	0,04 - 0,07	0,20
Limite de déflexion de soupape		
Admission	0,30	
Echappement	0,40	

Ressort de soupape

Longueur libre mm	
Peint en rouge	53,4
Hauteur comprimée mm/N (mm/kg)	
Peint en rouge	31,8/713,9 - 788,5 (31,8/72,8 - 80,4)
Hauteur assemblée mm/N (mm/kg)	
Standard	42,3/314,8 - 361,9 (42,3/32,1 - 36,9)
Limite	42,3/270,7 (42,3/27,6)
Faux-équerre mm	2,3

POUSSOIR DE SOUPAPE ET TIGE DE POUSSOIR

Unité : mm

	Standard	Limite
Diamètre extérieur du poussoir de soupape	25,960 - 25,970	–
Diamètre d'orifice de poussoir de soupape dans le bloc-cylindres	26,000 - 26,033	–
Jeu entre poussoir de soupape et orifice de poussoir	0,030 - 0,073	0,20
Courbure de la tige de poussoir (TIR)*	Moins de 0,3	0,5

* : Indication totale du comparateur

Axe de culbuteur et culbuteur

Unité : mm

	Standard	Limite
Axe de culbuteur		
Diamètre extérieur	19,979 - 20,00	–
Courbure de l'axe de culbuteur (TIR)	0 - 0,15	Moins de 0,30
Culbuteur		
Diamètre intérieur	20,014 - 20,035	–
Jeu entre culbuteur et axe de culbuteurs	0,014 - 0,056	0,15

DISTANCE DE LA CULASSE A LA SOUPAPE

Unité : mm

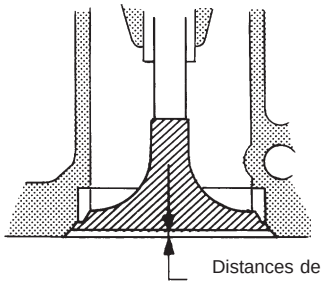

Distances de soupapes

SEM724C

	Standard	Limite
Admission	0,7 - 1,3	1,70
Echappement	0,7 - 1,3	1,70

Simpo PDF Merge and Split Unregistered Version - http://www.simpopdf.com

Siège de soupape

Unité : mm

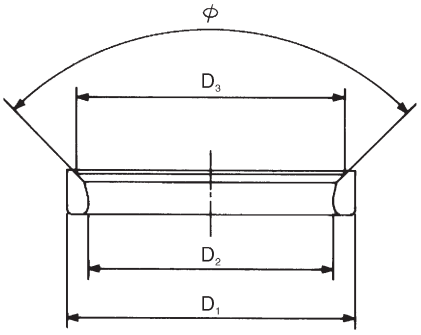

SEM258F

Admission		
	Diamètre extérieur "D_1"	42,535 - 42,545
	Diamètre intérieur "D_2"	35,9 - 36,1
	Diamètre du siège "D_3"	40,5
	Diamètre du siège de soupape de culasse	42,500 - 42,515
	Angle de face de siège de soupape "ϕ"	89° - 90°

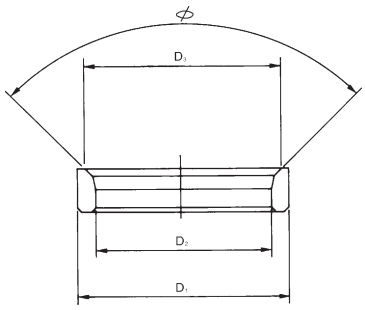

SEM953C

Echappement		
	Diamètre extérieur "D_1"	
	Standard	38,535 - 38,545
	0,2 Surdimensionné (entretien)	38,735 - 38,745
	0,4 Surdimensionné (entretien)	38,935 - 38,945
	Diamètre intérieur "D_2"	31,4 - 32,1
	Diamètre du siège "D_3"	36,0
	Diamètre du siège de soupape de culasse	
	Standard	38,495 - 38,510
	0,2 Surdimensionné	38,695 - 38,710
	0,4 Surdimensionné	38,895 - 38,910
	Angle de face de siège de soupape "ϕ"	89° - 90°

Simpo PDF Merge and Split Unregistered Version - http://www.simpopdf.com

ARBRE A CAMES ET PALIER D'ARBRE A CAMES

Unité : mm

	Standard	Limite
Jeu entre le tourillon d'arbre à cames et la bague [orifice de graissage]	0,020 - 0,109	0,15
Diamètre de tourillon d'arbre à cames		
Avant	50,721 - 50,740	–
2nde	50,521 - 50,540	–
3ème	50,321 - 50,340	–
4ème	50,121 - 50,140	–
Arrière	49,921 - 49,940	–
Courbure de l'arbre à cames (indication totale du comparateur)	Moins de 0,02	0,06
Jeu axial d'arbre à cames	0,08 - 0,28	0,50

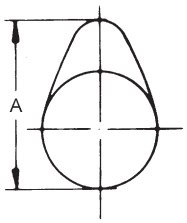

EM671

	Standard	Limite
Hauteur de la came "A"		
Admission et échappement	41,88 - 41,92	41,40

Simpo PDF Merge and Split Unregistered Version - http://www.simpopdf.com

BLOC-CYLINDRES ET CHEMISE DE CYLINDRE

Unité : mm

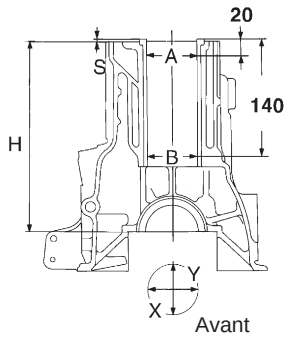

DEM057-N

Hauteur “H” nominale du bloc-cylindres (à partir du centre du vilebrequin)			252,95 - 253,05
Planéité de la surface (sans chemise de cylindre)			
Standard			Moins de 0,05
Limite			0,2
Alésage de cylindre (sans chemise de cylindre)			
Diamètre intérieur			
Standard			95,900 - 95,920
Alésage de cylindre			
Diamètre intérieur			
Standard			
		Catégorie n° 1	92,900 - 92,910
		Catégorie n° 2	92,910 - 92,920
		Catégorie n° 3	92,920 - 92,930
	Limite d’usure		0,20
	Faux-rond (X − Y) standard		Moins de 0,020
	Conicité (A − B) standard		Moins de 0,020
Dépassement “S”			0,02 - 0,09
Déviation de chaque cylindre “S”			Moins de 0,05
Ajustement serré de la chemise de cylindre sur le bloc			−0,01 à 0,03

Simpo PDF Merge and Split Unregistered Version - http://www.simpopdf.com

Inspection et réglage (Suite)

Unité : mm

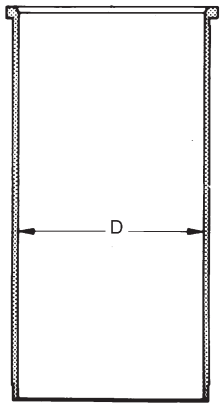

SEM427

Diamètre de chemise de cylindre “D” (entretien)*	92,950 - 92,970

* : Avant la repose du bloc-cylindres

PISTON, SEGMENT DE PISTON ET AXE DE PISTON

Piston disponible

Unité : mm

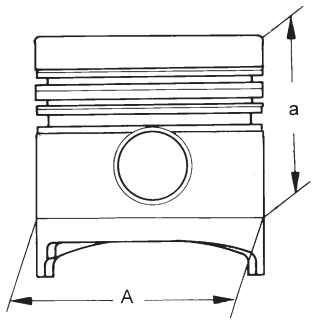

SEM778A

Diamètre de la jupe de piston “A”		
Standard		
	Catégorie n° 1	92,840 - 92,850
	Catégorie n° 2	92,850 - 92,860
	Catégorie n° 3*	92,860 - 92,870
Dimension “a”		70
Diamètre de l’orifice de l’axe de piston		29,997 - 30,005
Jeu entre le piston et la chemise de cylindre		0,05 - 0,07

* : Le piston de catégorie n° 3 n’est pas fourni en tant que pièce d’entretien.

Simpo PDF Merge and Split Unregistered Version - http://www.simpopdf.com

Segment de piston

Unité : mm

		Standard	Limite
Jeu latéral			
Segment de feu		0,06 - 0,10	0,50
Segment de compression		0,04 - 0,08	0,30
Segment racleur		0,02 - 0,06	0,15
Coupe de segment			1,5
Segment de feu		0,30 - 0,45	
Segment de compression			
	QD et TD27	0,50 - 0,65	
	TD25	0,20 - 0,35	
Segment racleur (segment à rail)			
	QD et TD27	0,30 - 0,50	
	TD25	0,15 - 0,35	

Axe de piston

Unité : mm

Diamètre extérieur de l'axe de piston	29,993 - 30,000
Jeu antre axe de piston et piston	
Standard	−0,003 à 0,012
Limite	0,10
Jeu entre l'axe de piston et la bielle	
Standard	0,025 - 0,045
Limite	0,15

BIELLE

Unité : mm

Distance de centre à centre	156,975 - 157,025
Courbure, torsion (par 100)	
Limite	0,075
Diamètre d'alésage de l'axe de piston	30,025 - 30,038
Jeu latéral	
Standard	0,10 - 0,22
Limite	0,22

Simpo PDF Merge and Split Unregistered Version - http://www.simpopdf.com

Inspection et réglage (Suite)

VILEBREQUIN

Unité : mm

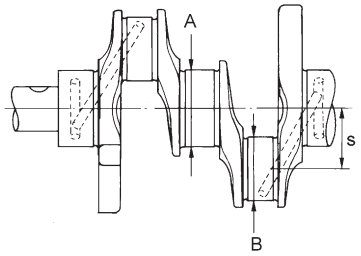

SEM100A

Diamètre du tourillon “A”	70,907 - 70,920
Diamètre du maneton “B”	56,913 - 56,926
Distance de centre à centre “S”	46,00

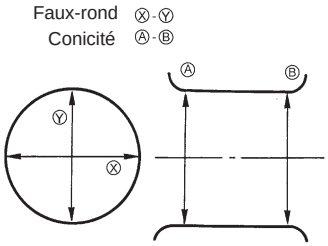

EM715

Conicité du tourillon et du maneton “A − B”	
Standard	0,01
Limite	0,02
Faux-rond du tourillon et du maneton “X − Y”	
Standard	0,01
Limite	0,02
Courbure du vilebrequin	
Standard	0 - 0,03
Limite	0,10
Jeu axial du vilebrequin	
Standard	0,055 - 0,14
Limite	0,40

PALIERS PRINCIPAUX DISPONIBLES

Jeu des paliers

Unité : mm

Jeu du palier principal	
Standard	0,035 - 0,087
Limite	0,15
Jeu du palier de bielle	
Standard	0,035 - 0,081
Limite	0,15

Sous-dimension du palier principal

Unité : mm

	Diamètre du tourillon
Standard	70,907 - 70,920
Sous-dimensionné	
0,25	70,657 - 70,670
0,50	70,407 - 70,420
0,75	70,157 - 70,170
1,00	69,907 - 69,920

PALIERS DE BIELLE DISPONIBLES

Palier de bielle sous-dimensionné

Unité : mm

	Diamètre du tourillon de l’axe de vilebrequin
Standard	56,913 - 56,926
Sous-dimensionné	
0,25	56,663 - 56,676
0,50	56,413 - 56,676
0,75	56,163 - 56,176
1,00	55,913 - 55,926

Simpo PDF Merge and Split Unregistered Version - http://www.simpopdf.com

Inspection et réglage (Suite)

RONDELLES DE BUTEE DISPONIBLES

Rondelles de butée sous-dimensionnées

Unité : mm

	Epaisseur de la rondelle de butée
Standard	
Repère poinçonné A	2,275 - 2,325
B	2,300 - 2,350
C	2,325 - 2,375
Surdimensionnée	
0,20	2,475 - 2,525
0,40	2,675 - 2,725

ELEMENTS DIVERS

Unité : mm

Train d'engrenages	
Battement de chaque pignon	0,07 - 0,11
Limite	0,20
Volant-moteur	
Voile (indication totale du comparateur)	Moins de 0,15
Plaque avant	
Limite de déformation	0,2

Simpo PDF Merge and Split Unregistered Version - http://www.simpopdf.com

ESSIEU ET SUSPENSION AVANT

SECTION FA

TABLE DES MATIERES

PRECAUTIONS ET PREPARATION 1
Précautions 1
Outillage spécial 1
Outils en vente dans le commerce 2
ESSIEU ET SUSPENSION AVANT 3
ENTRETIEN SUR LE VEHICULE 5
Pièces de l'essieu et de la suspension avant 5
Roulements des roues avant 5
Alignement des roues avant 8
Semi-arbre 13
ESSIEU AVANT 14
Moyeu débrayable manuel – 4 roues motrices – 16
Moyeu débrayable automatique – 4 roues motrices – 17
Repose 18
Moyeu de roue etdisque de rotor 18
Pivot de fusée 20
Semi-arbre – 4 roues motrices – 23
SUSPENSION AVANT 28
Amortisseur 30
Barre de torsion 30
Barre stabilisatrice 33
Bras supérieur 34
Barre de force 35
Bras inférieur 35
Joint à rotule supérieur et joint à rotule inférieur 37
CARACTERISTIQUES ET VALEURS DE REGLAGE (SDS) 38
Caractéristiques générales 38
Inspection et Réglage 38

Simpo PDF Merge and Split Unregistered Version - http://www.simpopdf.com

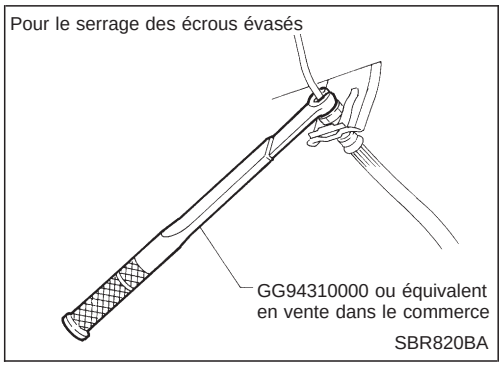

Précautions

- **Lors du montage des pièces en caoutchouc, le serrage final doit être effectué à vide*, les pneus reposant au sol.**
  *** Avec plein de carburant, de liquide de refroidissement et d'huile moteur. Pneu de secours, cric, outillage et tapis dans la position requise.**
- **Utiliser une clé à écrou évasé pour la dépose ou la repose des tuyaux de frein.**
- **Après remontage des pièces de suspension déposées, vérifier la géométrie des roues et la régler si nécessaire.**
- **Lors de l'installation, toujours serrer les canalisations de frein au couple spécifié.**

Outillage spécial

Numéro de l'outil Nom de l'outil	Description		Modèles concernés	
			2 roues motrices	4 roues motrices
ST29020001 Extracteur de bras de pignon	NT694 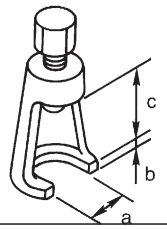	Dépose de la rotule du pivot de fusée **a : 34 mm** **b : 6,5 mm** **c : 61,5 mm**	X	X
HT72520000 Extracteur de rotule	NT546 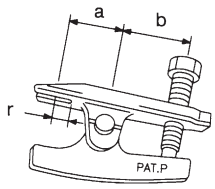	Dépose de la partie externe de la barre d'accouplement **a : 33 mm** **b : 50 mm** **r : R11,5 mm**	X	X
KV401021S0 Chassoir de cage de roulement	NT153 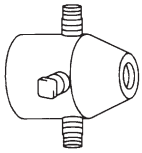	Repose de la cage extérieure du roulement de roue	X	X
KV40105400 Clé pour contre-écrou de roulement de roue	NT154 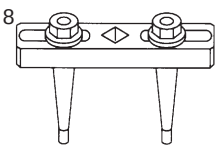	Dépose ou repose du contre-écrou de roulement de roue	–	X
GG94310000 Clef dynamométrique pour écrou évasé	NT406 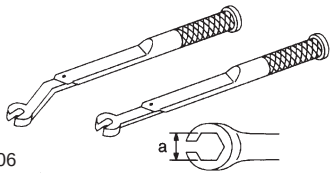	Dépose et repose des tuyaux de frein **a : 10 mm**	X	X

Simpo PDF Merge and Split Unregistered Version - http://www.simpopdf.com

Outillage spécial (Suite)

Numéro de l'outil Nom de l'outil	Description		Modèles concernés	
			2 roues motrices	4 roues motrices
KV40106800 Extracteur de bague de bras inférieur	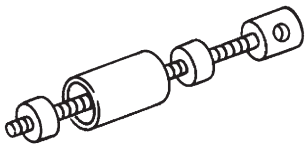 NT685	Dépose ou repose de la bague de bras inférieur	X	X
ST3127S000 ① GG91030000 Clé dynamométrique ② HT62940000 Adaptateur de douille ③ HT62900000 Adaptateur de douille	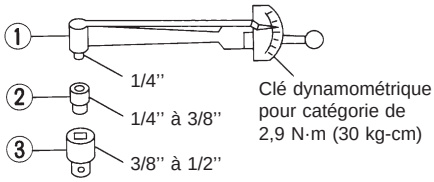 NT541	Mesure du couple de rotation	X	X

Outils en vente dans le commerce

Nom de l'outil	Description	
① Adaptateur pour écrou évasé ② Clé dynamométrique	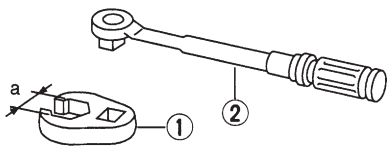 NT360	Dépose et repose de chaque tuyau de frein. **a : 10 mm**

Simpo PDF Merge and Split Unregistered Version - http://www.simpopdf.com

2 roues motrices

SEC. 400•401

Lors de la repose des pièces en caoutchouc, le serrage final doit être effectué à vide*
les roues reposant au sol.
*** Avec plein de carburant, de liquide de refroidissement et d'huile moteur. Avec pneu de secours, cric, outillage et tapis dans la position requise.**

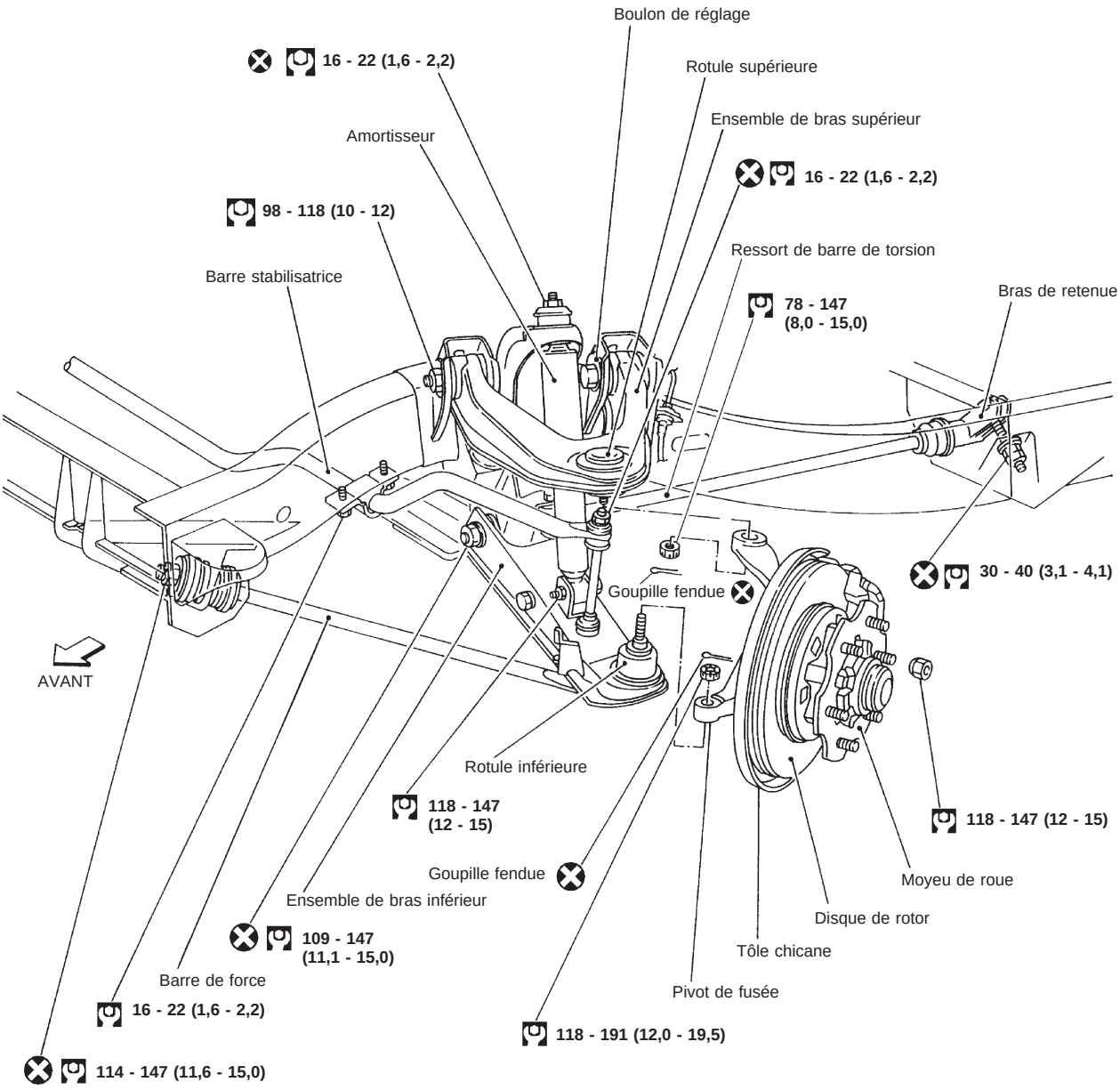

: N·m (kg-m)

SFA811B

Simpo PDF Merge and Split Unregistered Version - http://www.simpopdf.com

4 roues motrices

SEC.391•400•401

Lors de la repose des pièces en caoutchouc, le serrage final doit être effectué à vide* les roues reposant au sol.
*** Avec plein de carburant, de liquide de refroidissement et d'huile moteur. Avec pneu de secours, cric, outillage et tapis dans la position requise.**

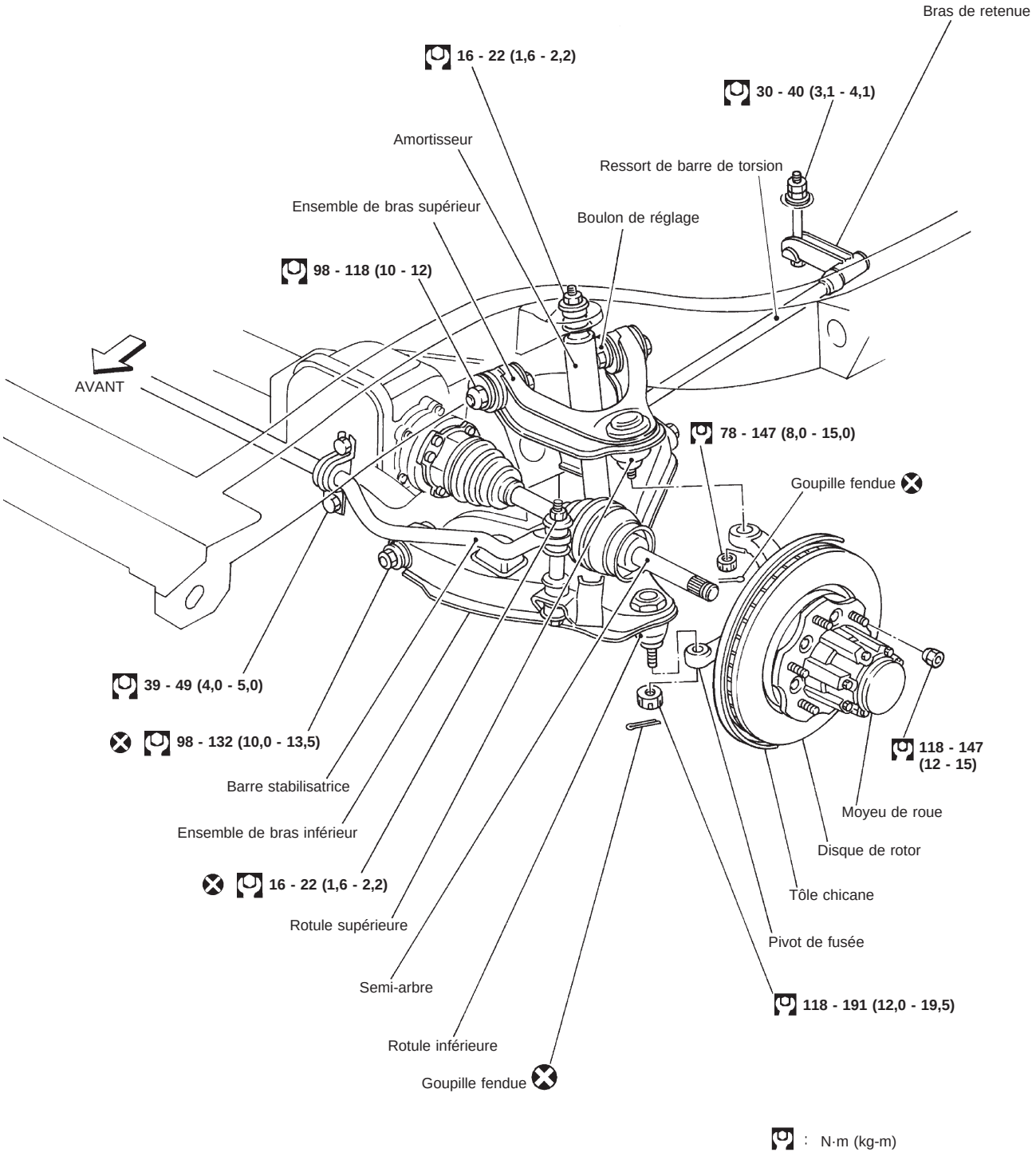

SFA812B

Simpo PDF Merge and Split Unregistered Version - http://www.simpopdf.com

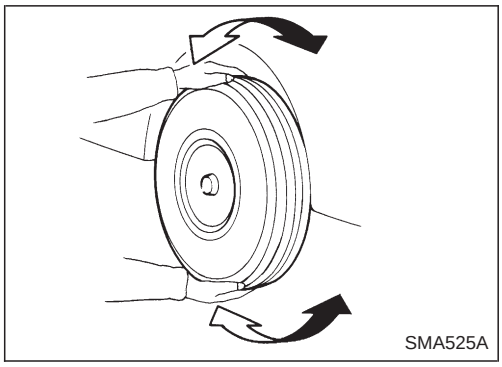
SMA525A

Pièces de l’essieu et de la suspension avant

Vérifier le jeu excessif, les fissures, l’usure ou l’état général des pièces de la suspension avant et de l’essieu avant.

- Secouer chacune des roues avant pour détecter tout jeu excessif.
  Si l’on relève un desserrage, régler le jeu axial du roulement de roue, puis contrôler le jeu axial de la rotule.
- S’assurer que la goupille fendue est correctement introduite.
- Resserrer tous les écrous et boulons au couple spécifié.
  : Se reporter à “SUSPENSION AVANT”, FA-28.
- Vérifier que l’essieu avant et les pièces de suspension avant ne présentent pas d’usure, de fissures ou d’autres dommages.

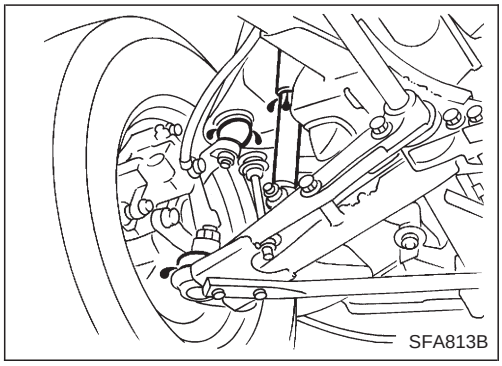
SFA813B

- Vérifier que l’amortisseur ne présente pas de fuites d’huile et d’autres dommages.
- Vérifier que la rotule de la suspension ne présente pas de fuites de graisse et que le cache-poussière de la rotule n’est ni fissuré, ni endommagé.

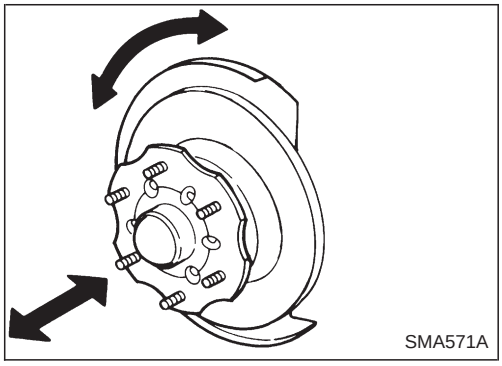
SMA571A

Roulements des roues avant

- Vérifier que les roulements de roues tournent librement.
- Vérifier le jeu axial.
  Jeu axial : 0 mm
- Régler la précharge du roulement de roue en cas de jeu axial ou si le roulement de roue ne tourne pas librement.

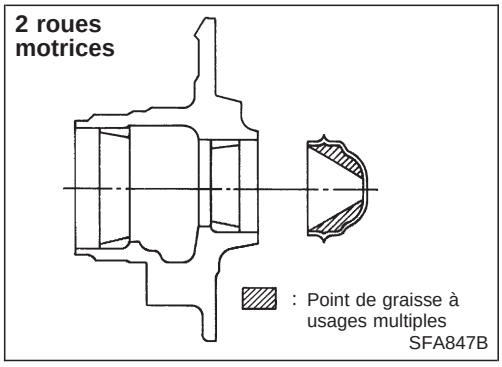

SFA847B

REGLAGE DE LA PRECHARGE (2 roues motrices)

Régler la précharge du roulement de roue après avoir remplacé le roulement de roue ou remonté l’essieu avant.

1. Avant le réglage, nettoyer minutieusement toutes les pièces pour empêcher la pénétration de poussières.
2. Enduire modérément de graisse à usages multiples les pièces suivantes :

- La surface de frottement du pivot
- La surface de contact entre la rondelle de verrouillage et le roulement de roue externe
- Le capuchon de moyeu (comme indiqué ci-contre)

Simpo PDF Merge and Split Unregistered Version - http://www.simpopdf.com

Roulements des roues avant (Suite)

- La lèvre de joint à graisse

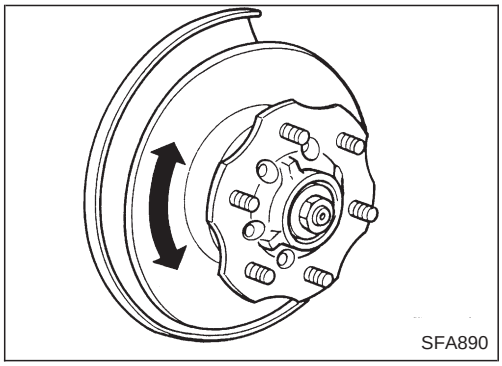
SFA890

3. Serrer le contre-écrou de roulement de roue au couple spécifié.
   : 34 - 39 N·m (3,5 - 4,0 kg-m)
4. Tourner le moyeu de roue plusieurs fois dans les deux sens afin d'assoir correctement le roulement de roue.
5. Serrer à nouveau le contre-écrou de roulement de roue au couple spécifié.
   : 34 - 39 N·m (3,5 - 4,0 kg-m)

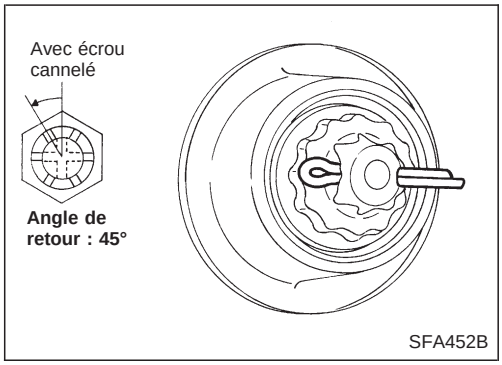

SFA452B

6. Tourner le contre-écrou du roulement de roue de 45 degrés dans le sens inverse des aiguilles d'une montre.
7. Monter le couvercle de réglage et la nouvelle goupille fendue. Aligner la fente de la goupille fendue en desserrant l'écrou de 15 degrés ou moins.

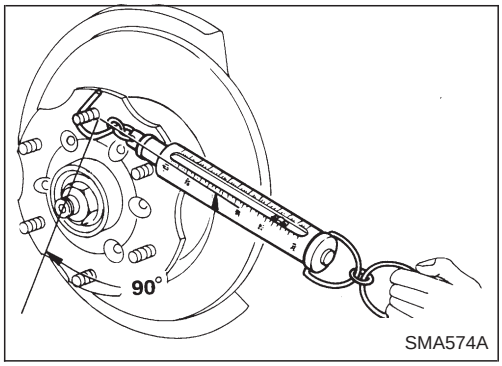

SMA574A

8. Mesurer la précharge de roulement de roue et le jeu axial.
   Jeu axial : 0 mm
   Précharge du roulement de roue
   (valeur mesurée au boulon de moyeu de roue) :
   Joint à graisse neuf
   9,8 - 28,4 N (1,0 - 2,9 kg)
   Joint à graisse usagé
   9,8 - 23,5 N (1,0 - 2,4 kg)

Répéter les procédures ci-dessus jusqu'à l'obtention d'une précharge de roulement correcte.

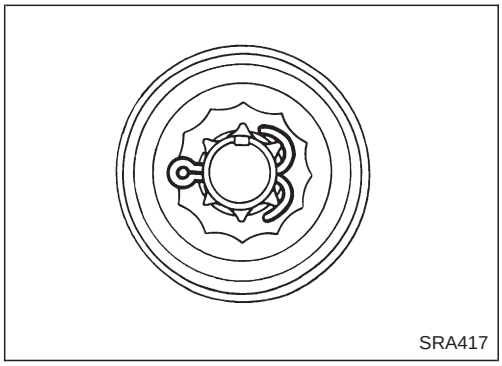
SRA417

9. Ecarter les goupilles fendue.
10. Monter le capuchon de moyeu.

REGLAGE DE LA PRECHARGE (4 roues motrices)

Régler la précharge du roulement de roue après avoir remplacé le roulement de roue ou remonté l'essieu avant.

Régler la précharge du roulement de roue comme suit :

1. Avant le réglage, nettoyer minutieusement toutes les pièces pour empêcher la pénétration de poussières.

Simpo PDF Merge and Split Unregistered Version - http://www.simpopdf.com

Roulements des roues avant (Suite)

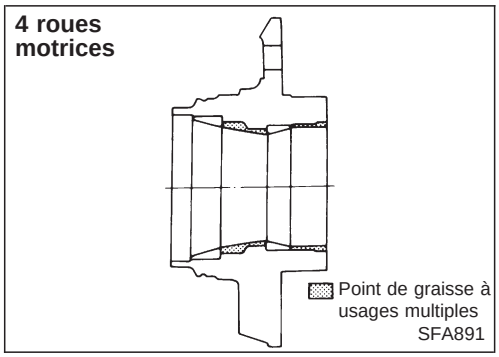

2. Enduire avec modération les pièces suivantes de graisse à usages multiples :
- La partie filetée du pivot
- La surface de contact entre la rondelle de roulement de roue et le roulement de roue externe
- La lèvre de joint à graisse
- Le moyeu de roue (comme indiqué ci-contre)

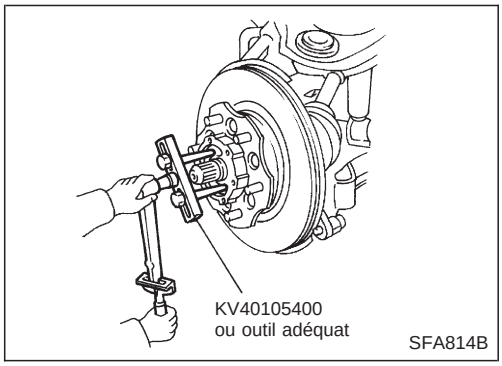

3. Serrer le contre-écrou du roulement de roue à l'aide de l'outil spécial.
   : 78 - 98 N·m (8 - 10 kg-m)
4. Tourner le moyeu de roue plusieurs fois dans les deux sens.
5. Desserrer le contre-écrou de roulement de roue de sorte que le couple devienne 0 N·m (0 kg-m).
6. Resserrer le contre-écrou de roulement de roue à l'aide de l'outil spécial.
   : 0,5 - 1,5 N·m (0,05 - 0,15 kg-m)

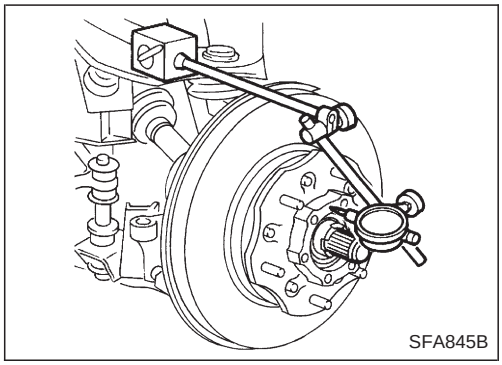

7. Tourner le moyeu de roue plusieurs fois dans les deux sens.
8. Resserrer le contre-écrou de roulement de roue à l'aide de l'outil spécial.
   : 0,5 - 1,5 N·m (0,05 - 0,15 kg-m)
9. Mesurer le jeu axial du roulement de roue.
   Jeu axial : 0 mm

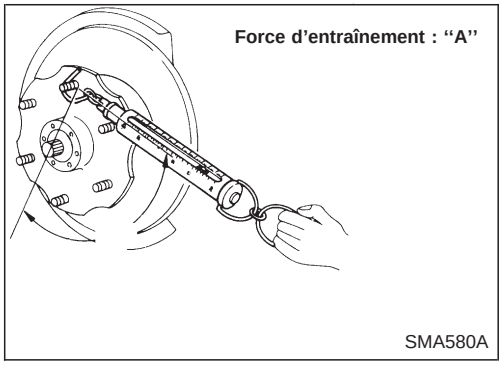

10. Mesurer la force d'entraînement "A" au boulon de moyeu de roue.

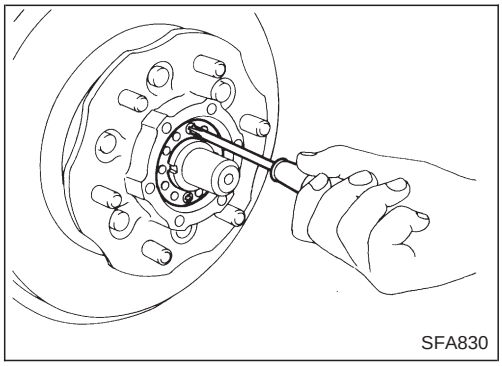

11. Reposer la rondelle de verrouillage en serrant le contre-écrou de 15 à 30 degrés.
12. Tourner le moyeu de roue plusieurs fois dans les deux sens afin d'asseoir correctement le roulement de roue.
13. Mesurer la force d'entraînement "B" au boulon de moyeu de roue. Se reporter à l'étape 10.
14. La précharge "C" du roulement de roue peut être calculée comme indiqué ci-après.

Simpo PDF Merge and Split Unregistered Version - http://www.simpopdf.com

Roulements des roues avant (Suite)

C = B − A

Précharge du roulement de roue "C" :
7,06 - 20,99 N

15. Répéter les étapes 3 à 14 jusqu'à l'obtention d'un jeu axial et d'une précharge de roulement de roue corrects.
16. Reposer le moyeu à roue libre.

Alignement des roues avant

Avant de vérifier l'alignement des roues avant, effectuer une inspection préliminaire (à vide*).

* : Avec plein de carburant, de liquide de refroidissement et d'huile moteur. Pneu de secours, cric, outillage et tapis dans la position requise.

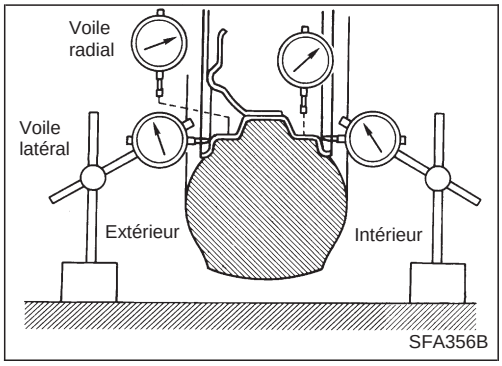

INSPECTION PRELIMINAIRE

1. Vérifier que les pneus ne présentent pas d'usure et ont une pression de gonflage correcte.
2. Vérifier le voile des roues externe et interne.
   Moyenne du voile des roues [(valeur du voile externe + valeur du voile interne) x 0,5] :
   Se reporter aux SDS, FA-38.
3. Vérifier le serrage des roulements de roues avant.
4. Vérifier le serrage de la suspension avant.
5. Vérifier le serrage de la timonerie de direction.
6. Vérifier que les amortisseurs avant fonctionnent correctement, en effectuant l'essai de rebond standard.

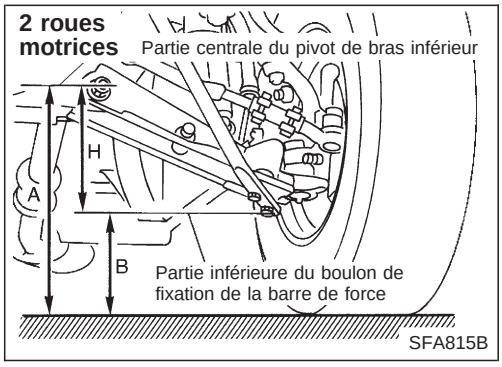

7. Mesurer la hauteur du véhicule (à vide) : H = A − B mm
   Se reporter aux SDS, FA-39.

a. Faire fonctionner la suspension avant en faisant balancer de haut en bas l'avant du véhicule 4 ou 5 fois pour s'assurer que le réglage en hauteur est neutre.
b. Mesurer l'alignement des roues.
   Se reporter aux SDS, FA-39.
c. Si l'alignement des roues n'est pas dans les normes, régler la position du véhicule.
   Se reporter aux SDS, FA-39.
d. Régler l'alignement des roues.
   Se reporter aux SDS, FA-39.

Simpo PDF Merge and Split Unregistered Version - http://www.simpopdf.com

Alignement des roues avant (Suite)

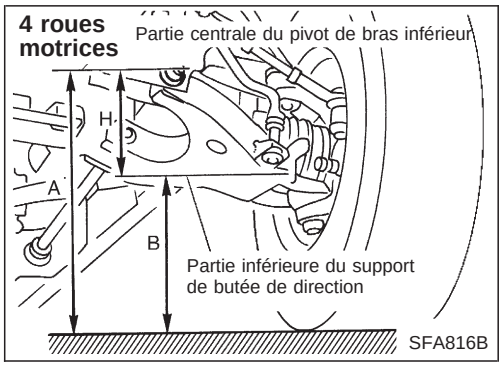

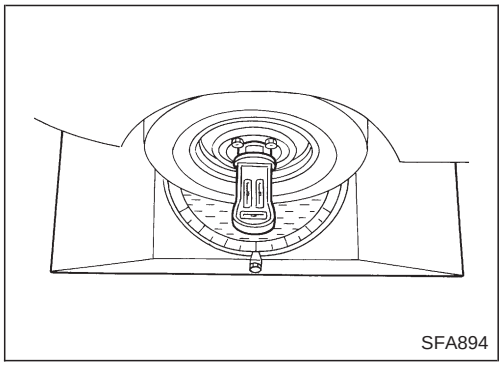

ANGLES DE CARROSSAGE, DE CHASSE ET D'INCLINAISON DU PIVOT DE FUSEE

Avant de procéder au contrôle des angles de carrossage, de chasse et d'inclinaison du pivot de fusée, faire balancer le véhicule de haut en bas sur une jauge d'angle de braquage afin de minimiser la friction. S'assurer que le véhicule est correctement positionné.

- Mesurer les angles de carrossage, de chasse et d'inclinaison du pivot de fusée des roues droite et gauche à l'aide d'une jauge d'alignement appropriée, et régler selon les procédures suivantes.

  Angles de carrossage, de chasse et d'inclinaison du pivot de fusée :

  Se reporter aux SDS, FA-39.

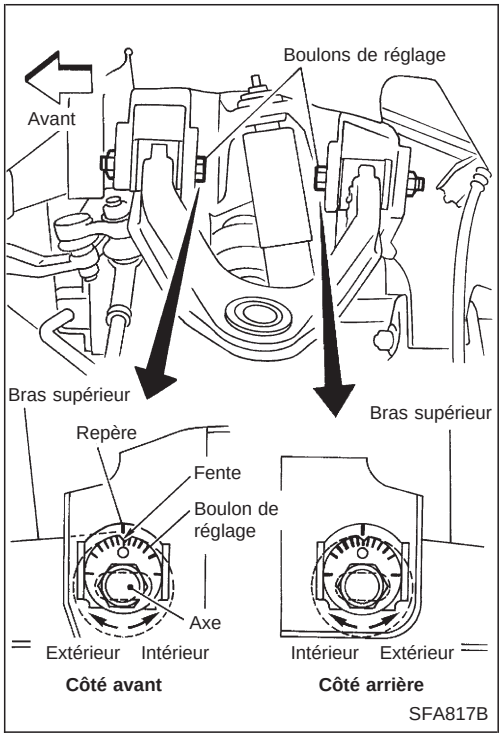

- Dans les deux cas suivants, serrer temporairement les boulons de réglage tout en alignant les repères sur les fentes comme indiqué sur l'illustration ci-à gauche, et mesurer les angles de carrossage, de chasse et d'inclinaison du pivot de fusée :
  (1) Lors du remplacement du bras supérieur ou d'autres pièces de la suspension par des neuves
  (2) Lorsque des repères à la peinture n'ont pas été faits sur les boulons de réglage avant les procédures de démontage de la suspension
- Si les repères sont déjà peints lors du démontage de la suspension, aligner ces derniers sur les fentes, puis serrer temporairement les boulons de réglage. Mesurer les angles de carrossage, de chasse et d'inclinaison du pivot de fusée.

Simpo PDF Merge and Split Unregistered Version - http://www.simpopdf.com

Alignement des roues avant (Suite)

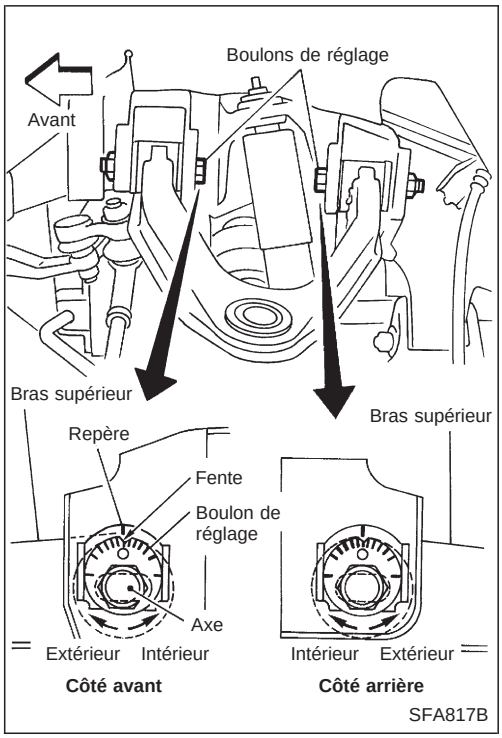

REGLAGE

1. Les angles de carrossage et de chasse se règlent en ajustant les boulons de réglage.

● Si l'inclinaison du pivot de fusée est hors spécifications, vérifier si les pièces de la suspension avant ne sont pas usées ou endommagées. Remplacer les pièces défectueuses par des neuves.

2. A partir de la valeur mesurée, relever les coordonnées (ou : graduations) au niveau du point d'intersection dans le graphique.

a. Si les coordonnées (ou : graduations) au point d'intersection sont positives, déplacer l'axe vers l'extérieur en tournant le boulon de réglage correspondant sur la graduation indiquée.

b. Si les coordonnées (ou : graduations) au point d'intersection sont négatives, déplacer l'axe vers l'intérieur en tournant le boulon de réglage correspondant sur la graduation indiquée.
Après avoir correctement déplacé le(s) axe(s), serrer les boulons de réglage avant et arrière aux couples prescrits.

3. Remesurer pour s'assurer que les angles de carrossage et de chasse sont dans les normes spécifiées.

[Exemple]

a. Les valeurs mesurées correspondent aux deux valeurs indiquées ci-dessous : (voir tableau pour les modèles 4 roues motrices).
Angle de carrossage : −0°06
Angle de chasse : 2°10

b. Rapporter les deux valeurs ci-dessus au graphique, et déterminer le point ''A''.

c. Les coordonnées (ou : graduations) indiquent que les boulons de réglage avant et arrière doivent être tournés vers l'extérieur de 3 graduations.
Tourner les boulons de réglage d'une valeur correspondant à 3 graduations.

Simpo PDF Merge and Split Unregistered Version - http://www.simpopdf.com

Alignement des roues avant (Suite)

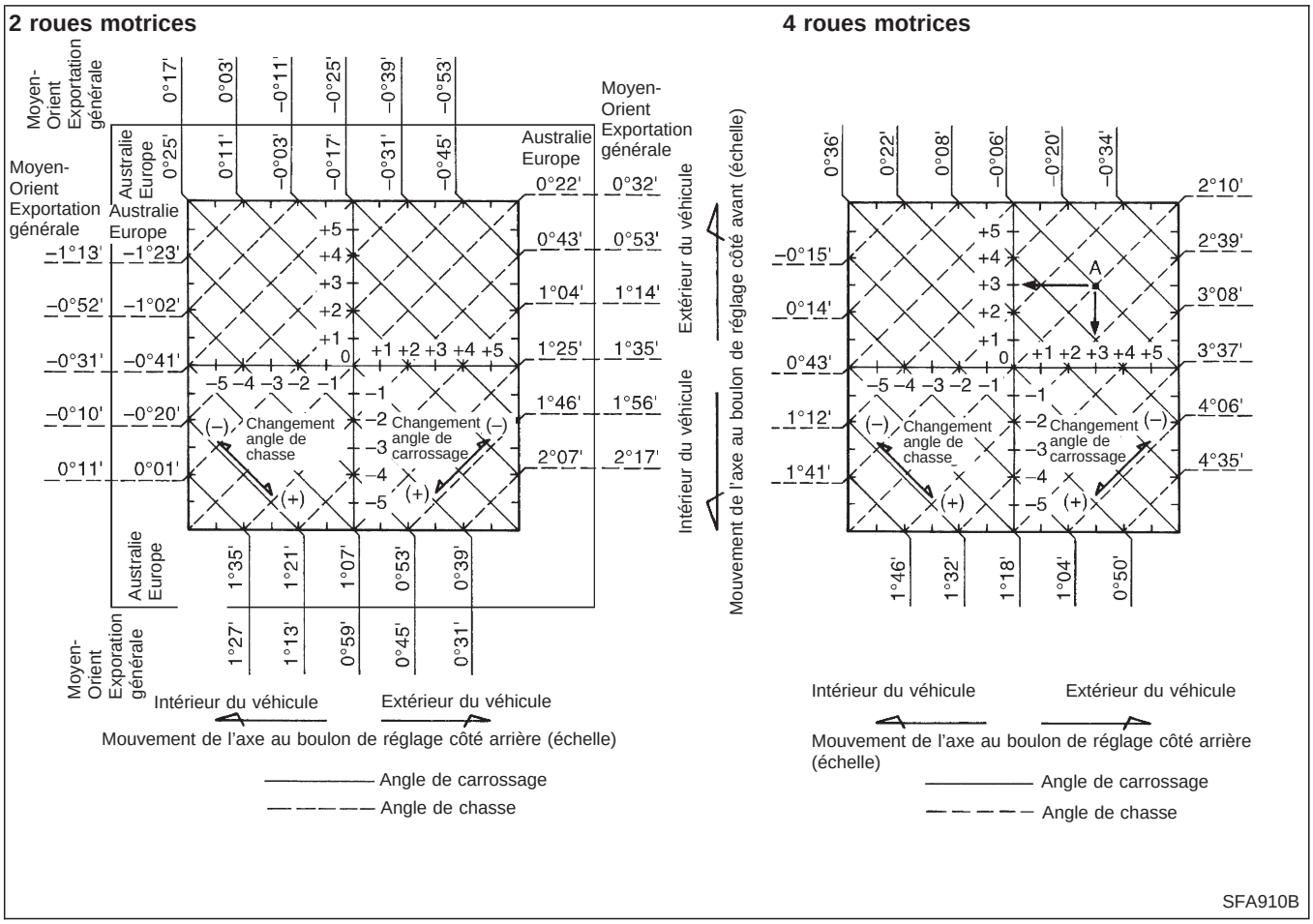

SFA910B

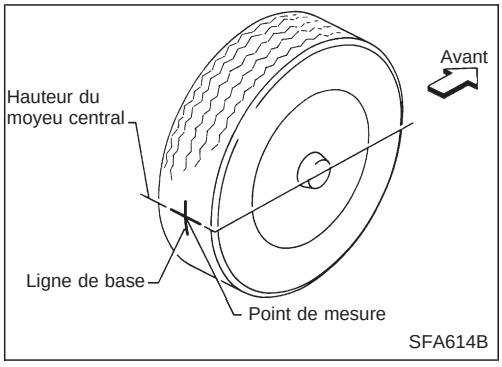

SFA614B

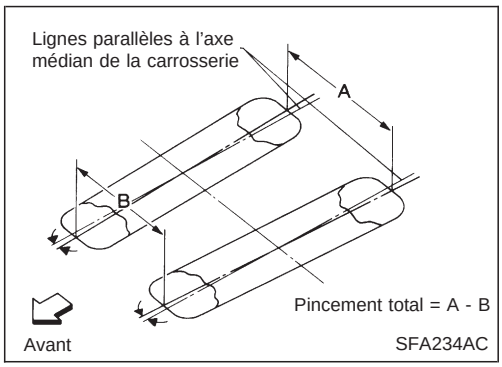

SFA234AC

PINCEMENT

Mesurer le pincement selon la procédure suivante.

AVERTISSEMENT :

- **Toujours réaliser la procédure suivante sur une surface plane.**
- **S'assurer que personne ne se trouve devant le véhicule avant de le pousser.**

1. Faire balancer de haut en bas l'avant du véhicule pour stabiliser l'assiette.
2. Pousser le véhicule vers l'avant sur environ 5 m.
3. Faire une marque sur la ligne de base de la bande de roulement (côté arrière) des deux pneus, à la même hauteur que l'axe central du moyeu. Ce repère est un point de mesure.
4. Mesurer la distance ''A'' (côté arrière).
5. Pousser lentement le véhicule vers l'avant de façon à faire tourner les roues de 180 degrés (1/2 tour).

- **Si les roues ont tourné de plus de 180 degrés (1/2 tour), recommencer la procédure décrite ci-dessus depuis le début. Ne jamais faire reculer le véhicule.**

6. Mesurer la distance ''B'' (côté avant).

Pincement total :

Se reporter aux SDS, FA-39.

Simpo PDF Merge and Split Unregistered Version - http://www.simpopdf.com

Alignement des roues avant (Suite)

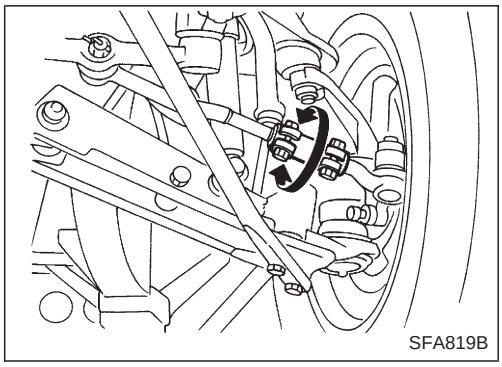
SFA819B

7. Régler le pincement en faisant varier la longueur des deux barres d'accouplement de direction.
a. Desserrer les boulons de fixation ou les contre-écrous.
b. Régler le pincement en tournant les tuyaux des barres d'accouplement gauche et droite de façon égale.

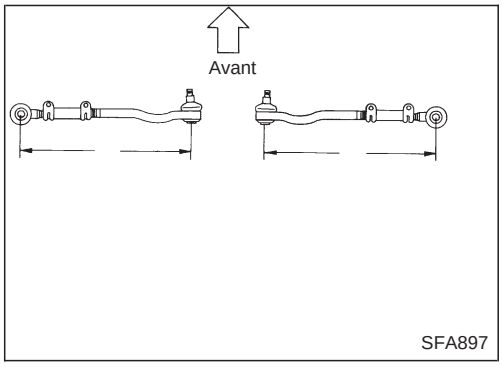

SFA897

S'assurer que les barres d'accouplement sont vissées de plus de 35 mm dans les tuyaux.
S'assurer que les barres d'accouplement ont la même longueur.

Longueur standard (A = B) :
2 roues motrices
343,9 mm
4 roues motrices
297,6 mm

c. Serrer les boulons de fixation ou les contre-écrous au couple spécifié.

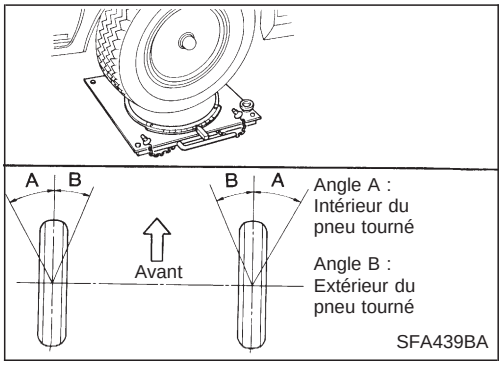

SFA439BA

ANGLE DE BRAQUAGE DES ROUES AVANT

1. Mettre les roues dans la position de marche en ligne droite. Puis pousser le véhicule vers l'avant jusqu'à ce que les roues avant reposent correctement sur la jauge d'angle de braquage.
2. Tourner le volant à bout de course vers la droite et vers la gauche et mesurer l'angle de braquage.

- Pour les modèles avec direction assistée, tourner le volant à la butée, et appliquer une force (à la circonférence du volant) de 98 à 147 N (10 à 15 kg), le moteur tournant au ralenti.
- **Ne pas maintenir le volant en butée pendant plus de 15 secondes.**

Angle de braquage de roue (braquage total) :
Se reporter aux SDS, FA-39.

3. Régler le boulon de butée si nécessaire.

Longueur standard "L_1" (2 roues motrices) :
20 mm
Contre-écrou du boulon de butée :
: 39-49 N·m (4,0 - 5,0 kg-m)

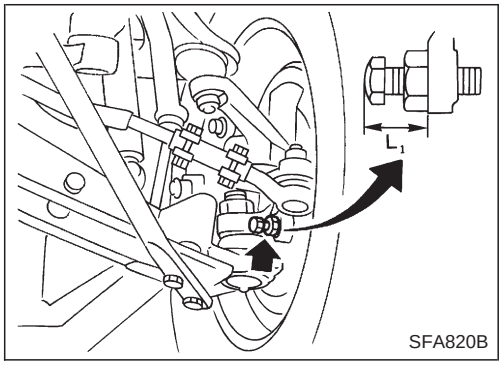

SFA820B

Simpo PDF Merge and Split Unregistered Version - http://www.simpopdf.com

Alignement des roues avant (Suite)

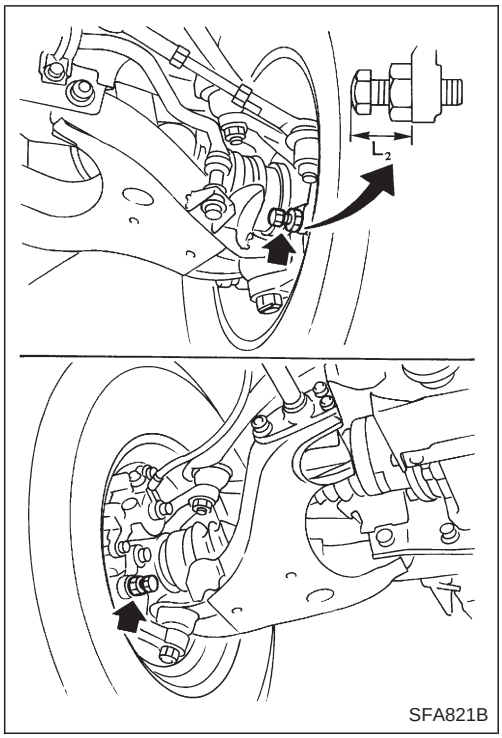

SFA821B

Longueur standard "L_2" (4 roues motrices) :
26,5 mm
Contre-écrou de boulon de butée :
: 76-98 N·m (7,8 - 10,0 kg-m)

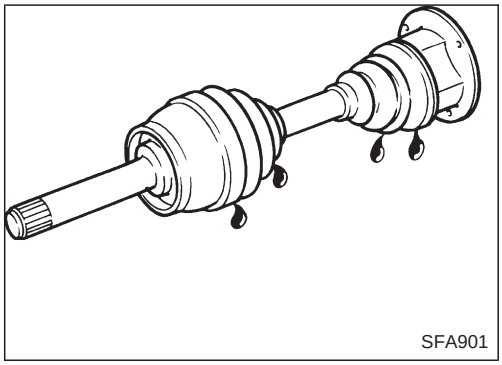
SFA901

Semi-arbre

- Vérifier qu'il n'y a pas de fuites de graisse et de dommages.

Simpo PDF Merge and Split Unregistered Version - http://www.simpopdf.com

2 roues motrices

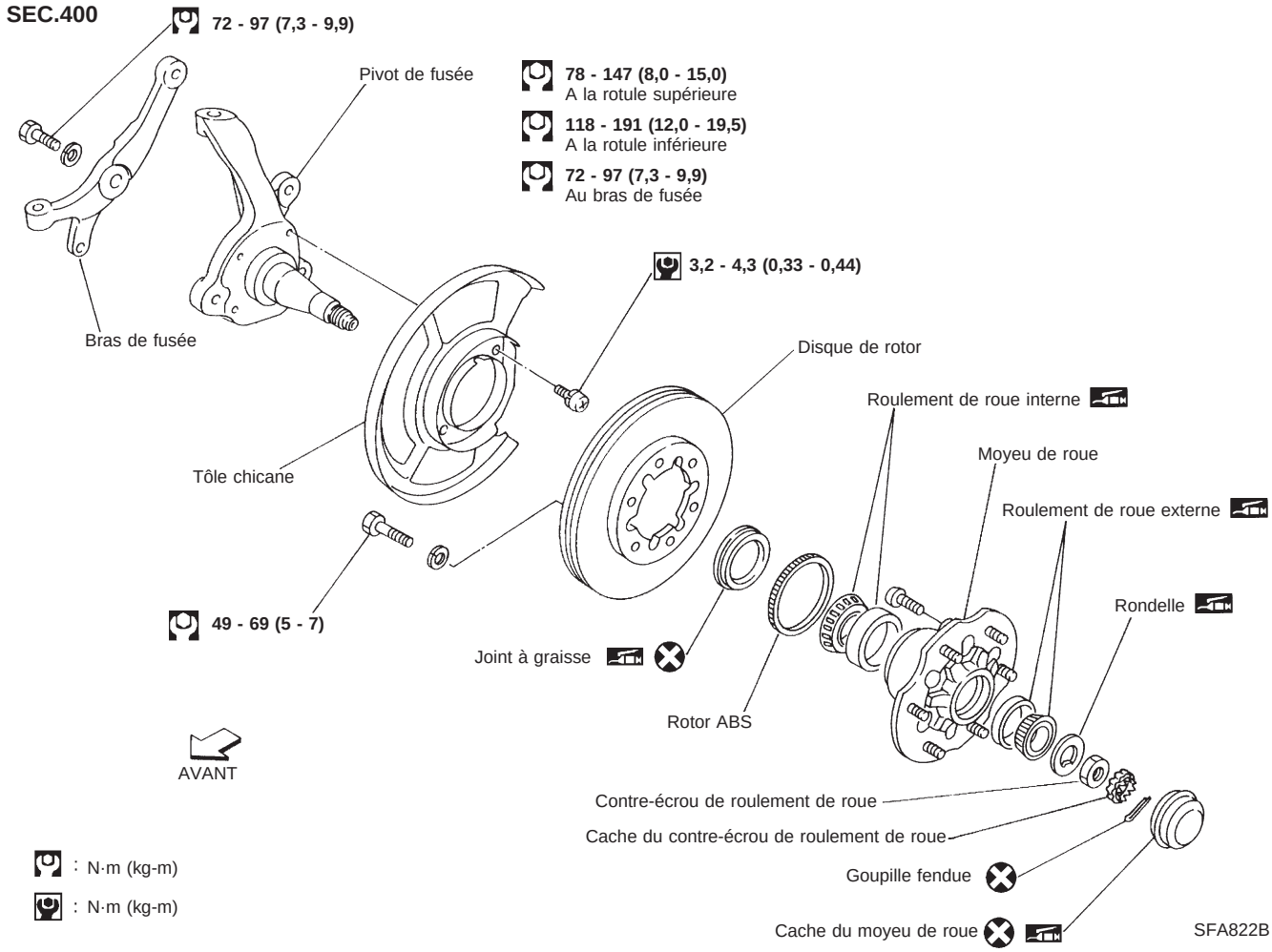

Simpo PDF Merge and Split Unregistered Version - http://www.simpopdf.com

4 roues motrices

SEC. 391•400

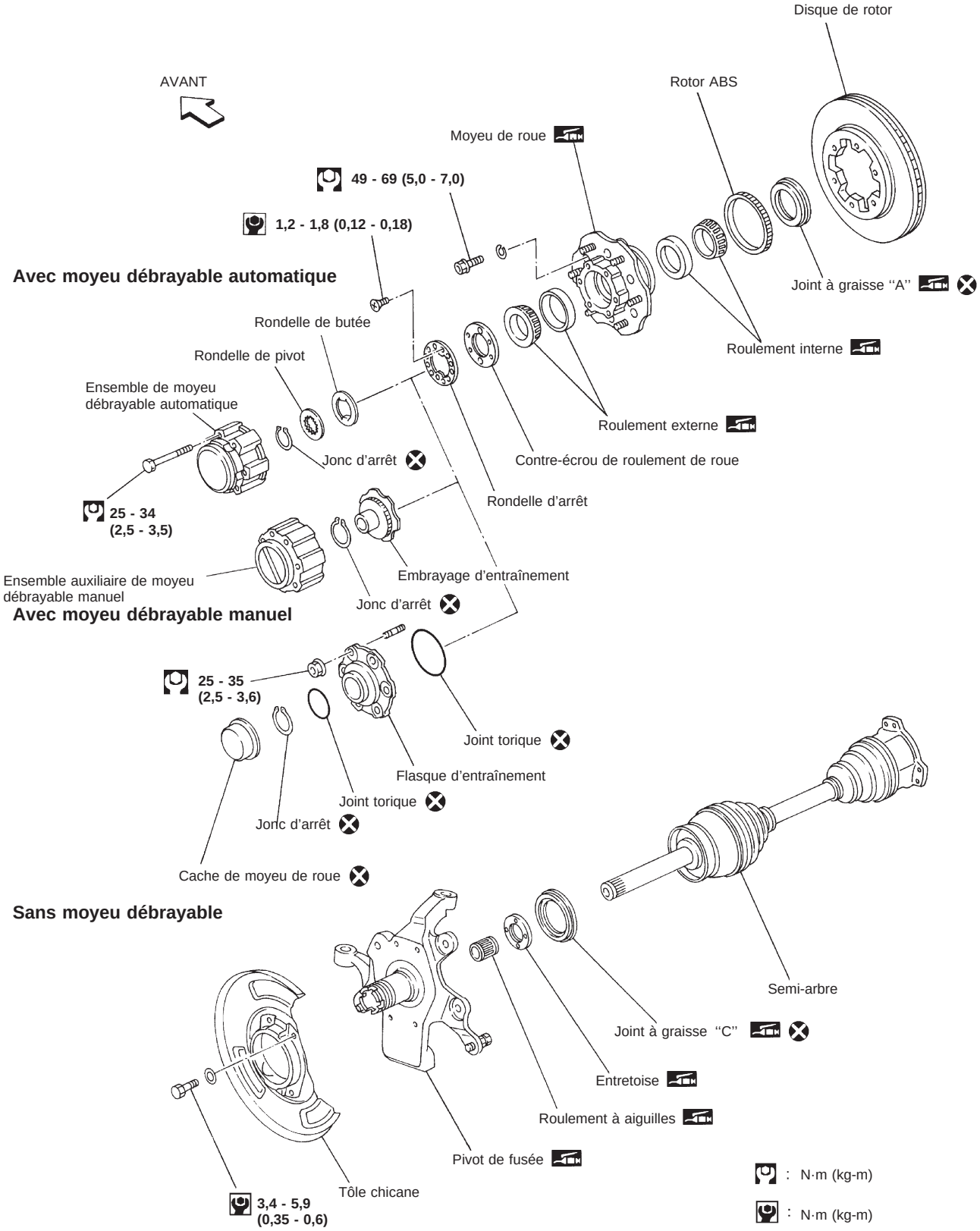

SFA919B

Simpo PDF Merge and Split Unregistered Version - http://www.simpopdf.com

Moyeu débrayable manuel – 4 roues motrices –

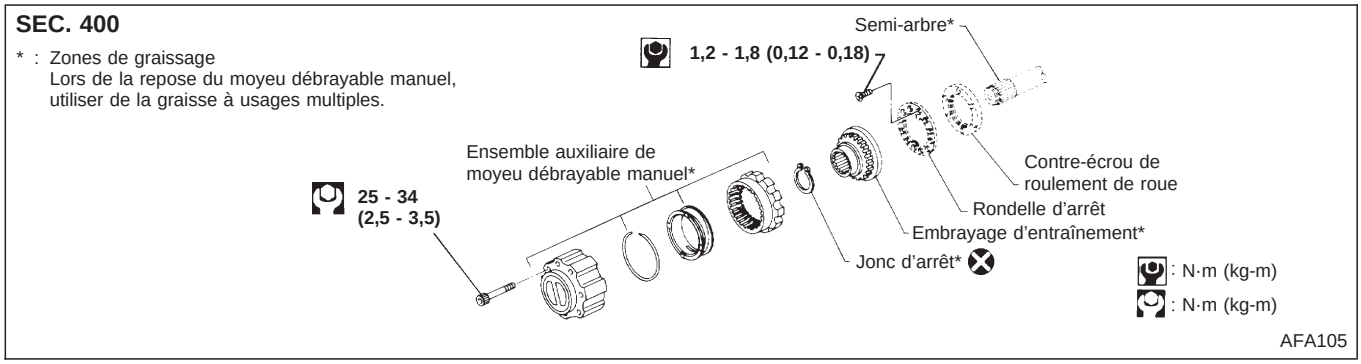

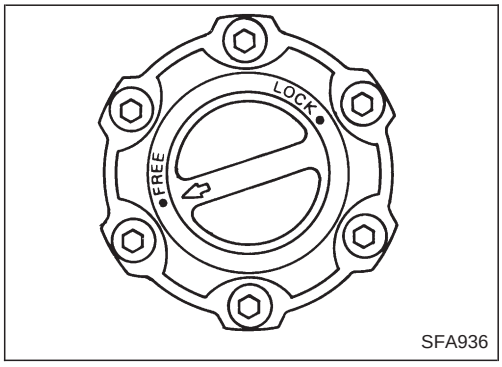

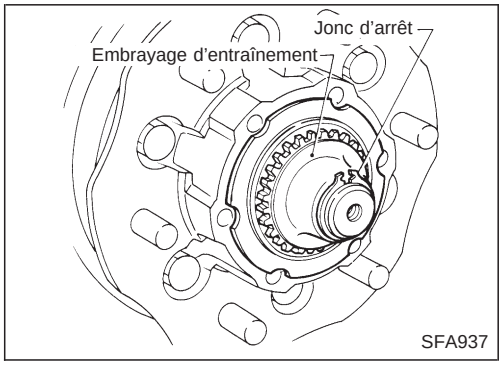

DEPOSE ET REPOSE

1. Tourner la poignée du moyeu débrayable manuel sur la position ''FREE''.
2. Déposer le moyeu débrayable manuel.
3. Déposer le jonc d'arrêt, puis extraire l'embrayage d'entraînement.
4. Lors de la repose du moyeu débrayable manuel, s'assurer que le moyeu est sur la position ''FREE''.

Enduire les pièces indiquées dans l'illustration ci-dessus de graisse à usages multiples.

5. Vérifier le fonctionnement du moyeu débrayable manuel après sa repose.

INSPECTION

- Vérifier que la poignée tourne correctement et librement.
- Vérifier que l'embrayage tourne correctement dans la carrosserie.

Simpo PDF Merge and Split Unregistered Version - http://www.simpopdf.com

Moyeu débrayable automatique – 4 roues motrices –

SEC. 400

*: Zones de lubrification
Lors de la repose du moyeu débrayable automatique, utiliser de la graisse NISSAN D'ORIGINE (KRC 19-00025) ou une graisse équivalente.

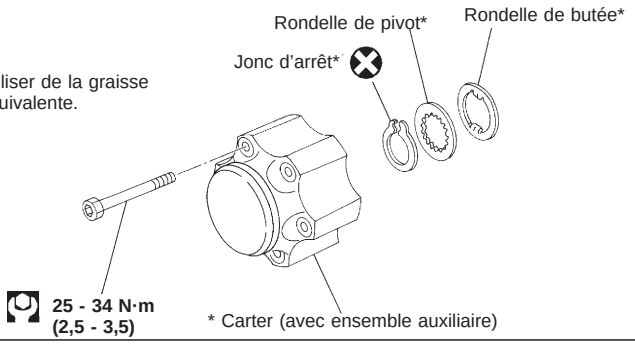

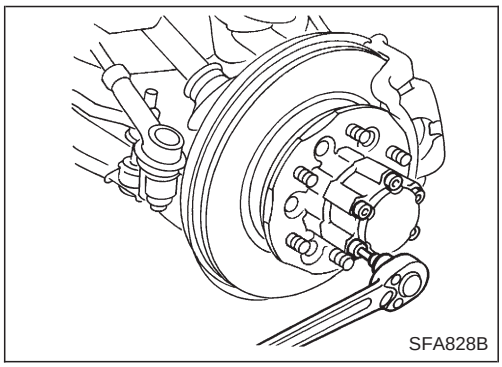
SFA828B

Dépose

1. Placer le moyeu débrayable automatique sur la position ''FREE''.
2. Déposer le moyeu débrayable automatique.

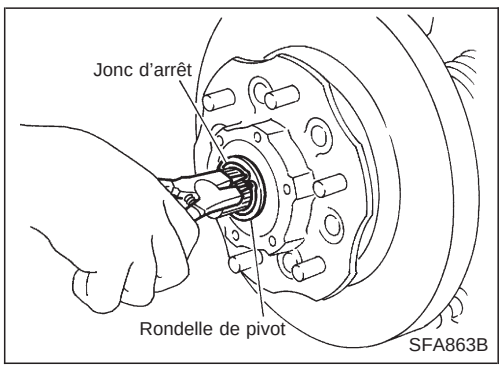

3. Déposer le jonc d'arrêt.
4. Déposer la rondelle de pivot et la rondelle de butée.
5. Après la repose du moyeu débrayable automatique, vérifier son fonctionnement.

Lors de sa repose, appliquer de la graisse recommandée sur les pièces indiquées dans l'illustration.

Simpo PDF Merge and Split Unregistered Version - http://www.simpopdf.com

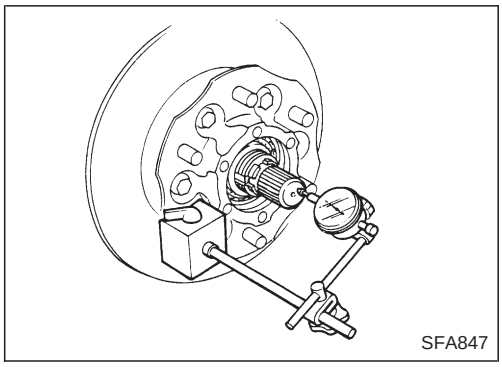
SFA847

Repose

1. Lors de la repose sur le semi-arbre des pièces enduites du moyeu (comme la rondelle de butée ou la rondelle de pivot), sélectionner le jonc d'arrêt adéquat de façon à ce que le jeu libre entre le semi-arbre et ses pièces enduites soit dans les limites spécifées.
   Jeu axial :
   0,45 mm ou moins
   Taille du jonc d'arrêt :
   Se reporter aux SDS.

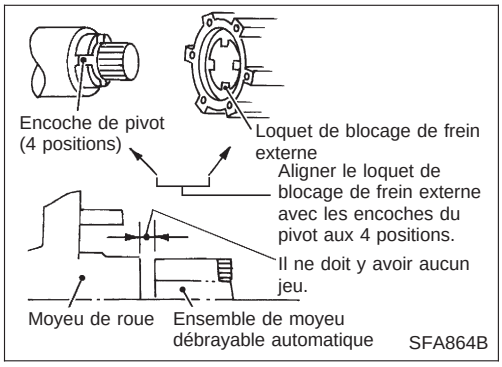

SFA864B

2. Reposer l'ensemble du moyeu débrayable automatique sur le moyeu de roue.

- Lors de la repose du moyeu débrayable automatique, veiller à aligner le loquet de blocage de frein externe avec l'encoche du pivot.
- Après avoir introduit l'ensemble de moyeu débrayable automatique dans l'alésage du moyeu de roue, s'assurer qu'il n'y a pas de jeu entre l'ensemble du moyeu débrayable automatique et le moyeu de roue.

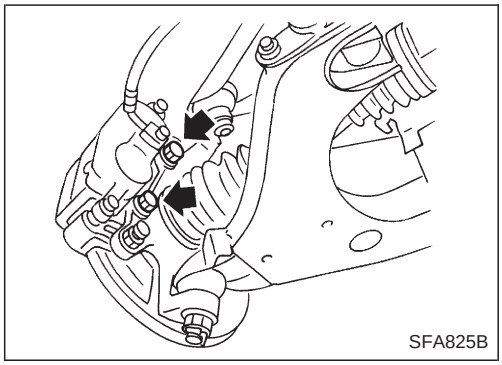
SFA825B

Moyeu de roue etdisque de rotor

DEPOSE ET REPOSE

1. Déposer l'ensemble de moyeu débrayable – 4 roues motrices –.
   Se reporter à ''Moyeu débrayable automatique – 4 roues motrices –'', FA-17, ou ''Moyeu débrayable manuel – 4 roues motrices –'', FA-16.
2. Déposer l'étrier de frein sans débrancher la ligne hydraulique.

Veiller à ne pas enfoncer la pédale de frein car le piston serait éjecté.
S'assurer que le flexible de frein n'est pas tordu.

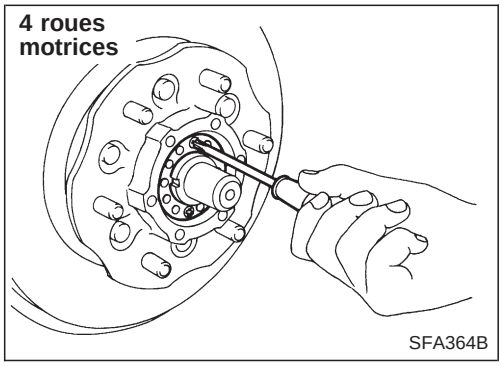

SFA364B

3. Déposer la rondelle de verrouillage – 4 roues motrices –.

Simpo PDF Merge and Split Unregistered Version - http://www.simpopdf.com

Moyeu de roue etdisque de rotor (Suite)

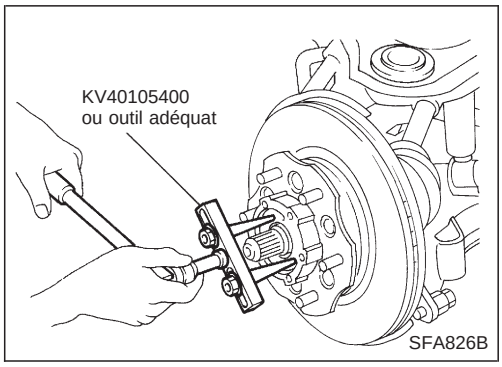

4. Déposer le contre-écrou de roulement de roue.
   2 roues motrices : avec l'outil adéquat
   4 roues motrices : avec l'outil spécial

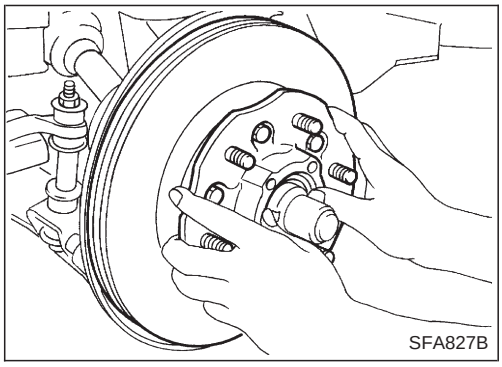

5. Déposer le moyeu de roue et le roulement de roue.

Veiller à ne pas laisser tomber le roulement externe.

6. Après la repose du moyeu de roue et du roulement de roue, régler la précharge du roulement de roue.
   Se reporter à ''REGLAGE DE LA PRECHARGE'', ''Roulements des roues avant'', ''ENTRETIEN SUR LE VEHICULE'', FA-5.

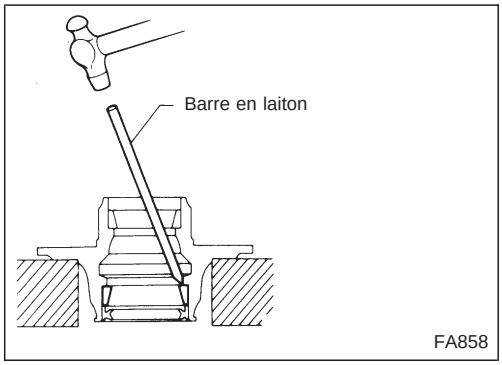

DEMONTAGE

- Déposer les cages extérieures de roulement à l'aide d'une barre en laiton appropriée.

INSPECTION

Nettoyer soigneusement les roulements de roue et le moyeu de roue.

Roulements de roues

- S'assurer que les roulements de roue tournent librement et sont exempts de bruits, de fissures, de corrosions et d'usure.

Moyeu de roue

- Vérifier que le moyeu de roue n'est pas fissuré en conduisant un essai magnétique ou un essai par ressuage.

Simpo PDF Merge and Split Unregistered Version - http://www.simpopdf.com

Moyeu de roue etdisque de rotor (Suite)

REMONTAGE

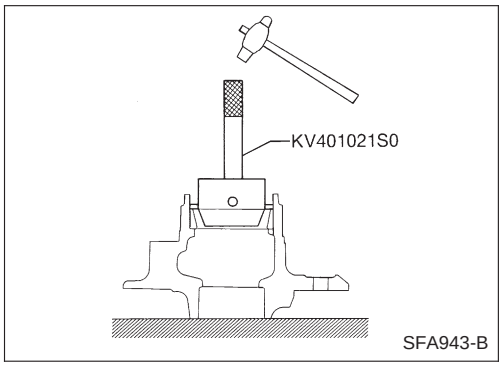

1. Reposer la cage extérieure de roulement à l'aide de l'outil spécial jusqu'à ce qu'elle ait une bonne assise dans le moyeu.

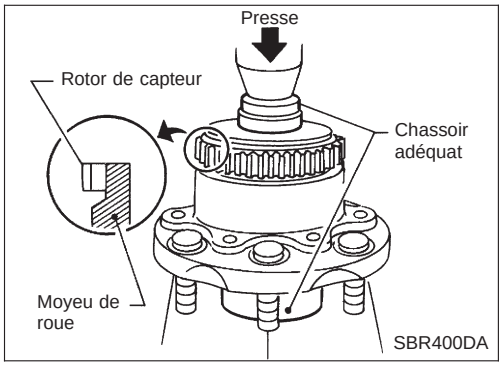

2. Reposer le rotor de capteur en utilisant un chassoir et une presse adéquats (modèles avec ABS).
   Remplacer toujours le rotor de capteur par un neuf.
   Veiller au sens du rotor de capteur avant comme indiqué sur l'illustration.

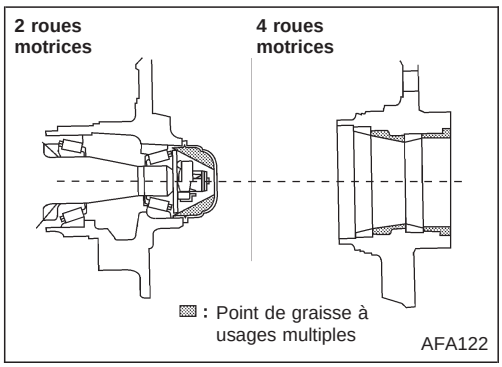

3. Enduire le moyeu de roue et le cache du moyeu de graisse à usages multiples.

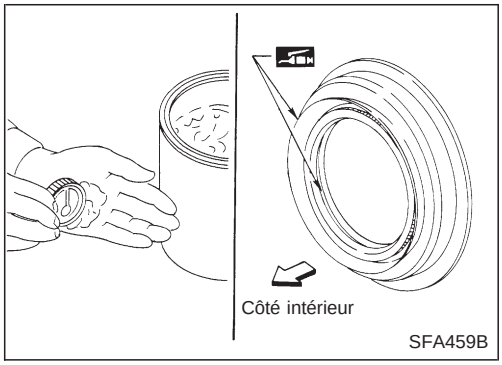

4. Enduire chaque cône de roulement de graisse à usages multiples.
5. Enduire la lèvre du joint à graisse de graisse à usages multiples, puis reposer le joint dans le moyeu de roue à l'aide d'un chassoir adéquat.

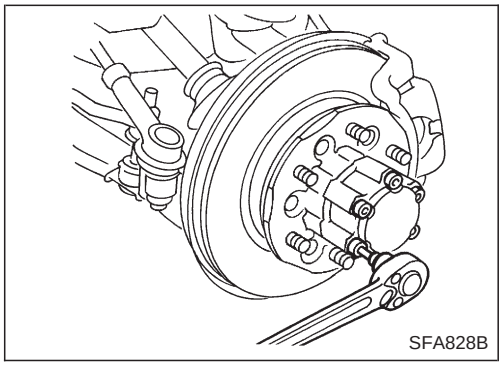

Pivot de fusée

DEPOSE

1. Déposer l'ensemble de moyeu débrayable. – 4 roues motrices –
   Se reporter à ''Moyeu débrayable automatique – 4 roues motrices –'', FA-17, ou ''Moyeu débrayable manuel – 4 roues motrices –'', FA-16.
2. Déposer le moyeu de roue et le disque de rotor.
   Se reporter à ''Moyeu de roue et disque de rotor'', FA-18.

Simpo PDF Merge and Split Unregistered Version - http://www.simpopdf.com

Pivot de fusée (Suite)

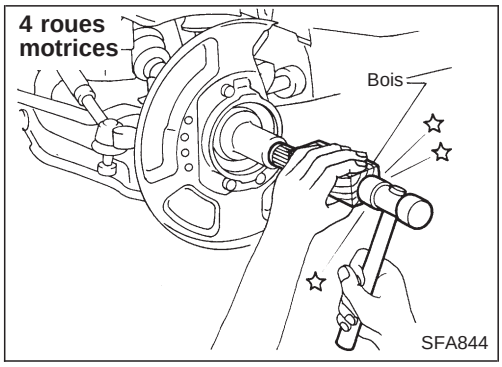

3. Séparer le semi-arbre du pivot de fusée en tappant légèrement sur l'extrémité du semi-arbre – 4 roues motrices –.

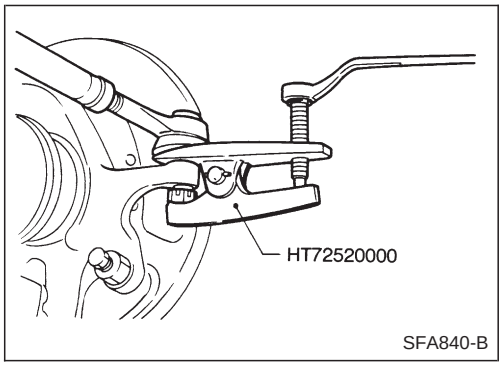

4. Séparer la barre d'accouplement du pivot de fusée à l'aide de l'outil spécial.

Reposer l'écrou à l'envers sur le goujon pour éviter d'endommager les filets du goujon.

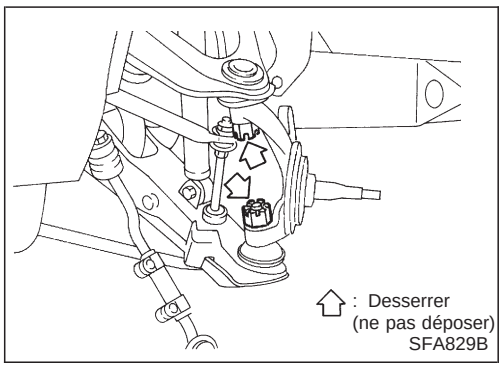

5. Séparer le pivot de fusée des rotules.

a. Desserrer (sans les déposer) les écrous de serrage des rotules supérieure et inférieure.

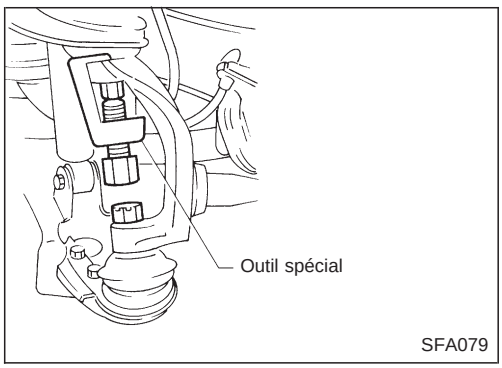

b. Séparer le pivot de fusée des goujons de rotules supérieure et inférieure à l'aide de l'outil spécial.

Durant l'intervention susmentionnée, ne jamais déposer les écrous de joint à rotule que l'on a desserrés à l'étape (a) ci-dessus.

Outil spécial :
2 roues motrices
ST29020001
4 roues motrices
HT72520000

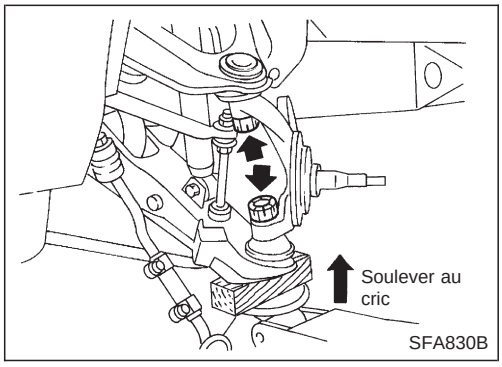

c. Déposer les écrous de serrage de la rotule.

Soutenir le bras inférieur avec un cric.

d. Déposer le pivot de fusée des bras supérieur et inférieur.

INSPECTION

Pivot de fusée

- Vérifier que le pivot de fusée ne présente pas de déformations, de fissures et d'autres dommages en conduisant un essai magnétique ou un essai par ressuage.

Simpo PDF Merge and Split Unregistered Version - http://www.simpopdf.com

Pivot de fusée (Suite)

Entretoise de roulement – 2 roues motrices –

- Vérifier si l'entretoise de roulement n'est pas endommagée.

Roulement à aiguilles – 4 roues motrices –

- Vérifier si le roulement à aiguilles ne présente pas d'usure, d'éraflures, de corrosion, de piqûres et de marques de brûlures.

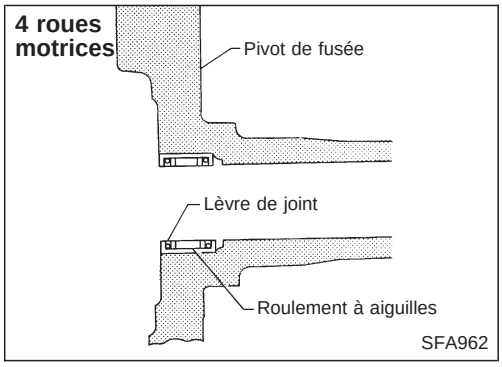

REPOSE

1. Reposer le roulement à aiguilles sur le pivot de fusée.
   – 4 roues motrices –

S'assurer que le roulement à aiguilles est correctement orienté.
Enduire de graisse à usages multiples.

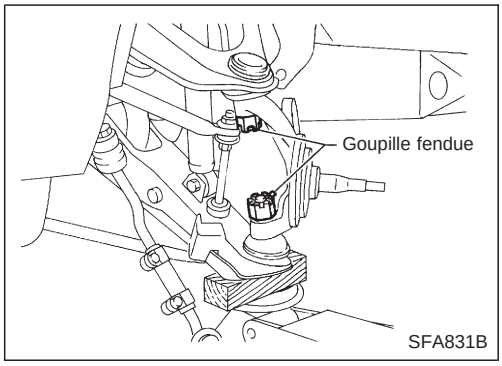

2. Reposer le pivot de fusée sur les rotules supérieure et inférieure avec le bras inférieur soulevé au cric.

ATTENTION :
S'assurer que de l'huile ou de la graisse n'entre pas en contact avec les parties coniques de la rotule, du pivot de fusée et avec les filetages de la rotule.

3. Attacher la barre d'accouplement au pivot de fusée.

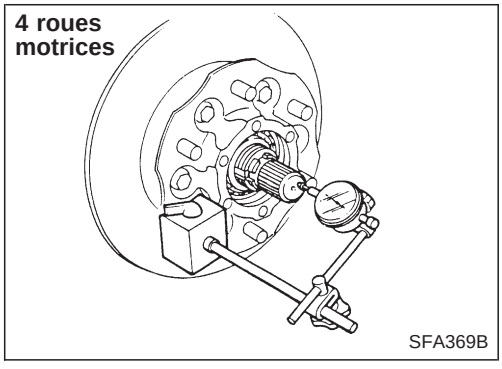

4. Après la repose du pivot de fusée, régler la précharge du roulement de roue. Se reporter à ''REGLAGE DE LA PRECHARGE'', ''Roulements des roues avant'', ''ENTRETIEN SUR LE VEHICULE'', FA-5.
5. Après la repose du semi-arbre, vérifier son jeu axial.

Ne pas réutiliser le jonc d'arrêt une fois déposé.

Se reporter à ''Semi-arbre – 4 roues motrices –'', FA-23.

Simpo PDF Merge and Split Unregistered Version - http://www.simpopdf.com

Semi-arbre – 4 roues motrices –

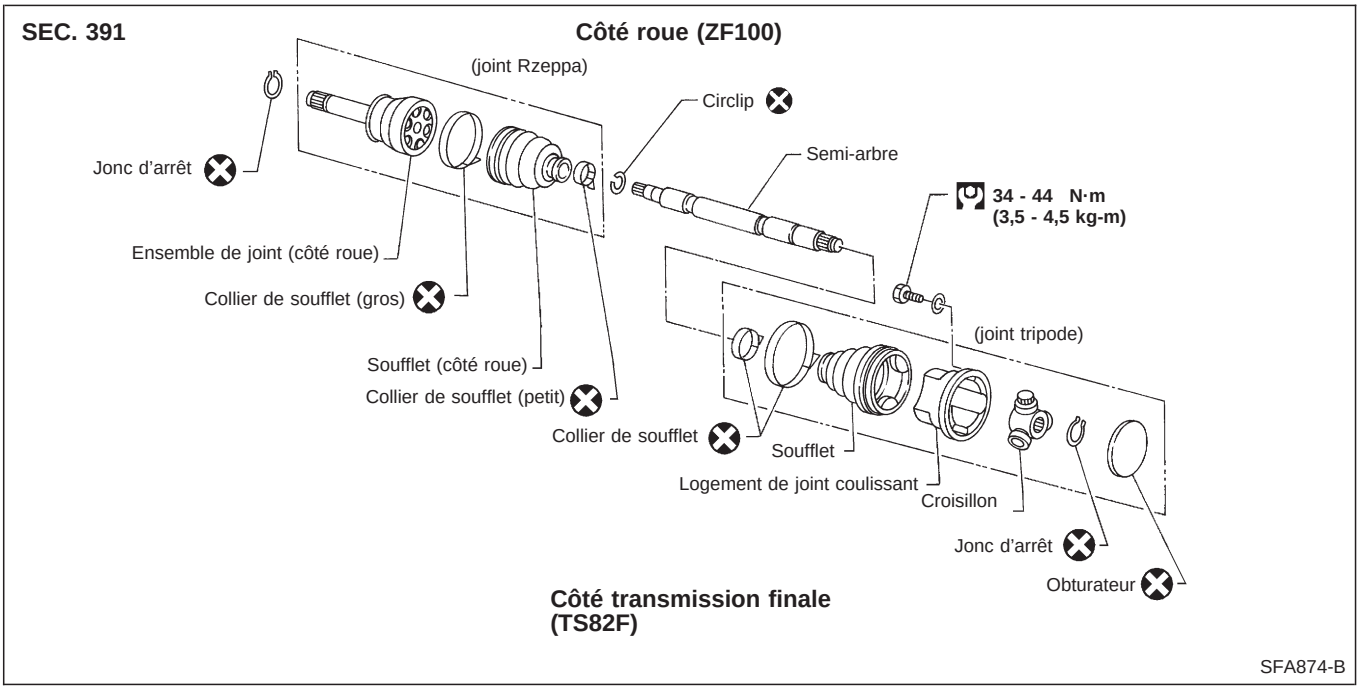

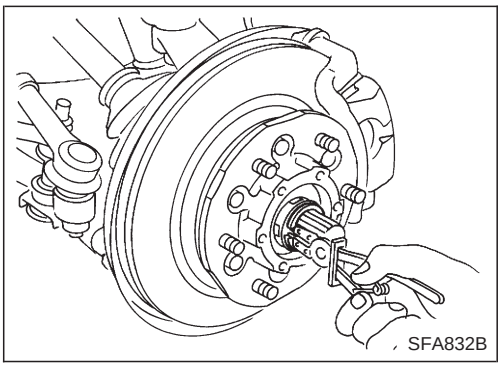

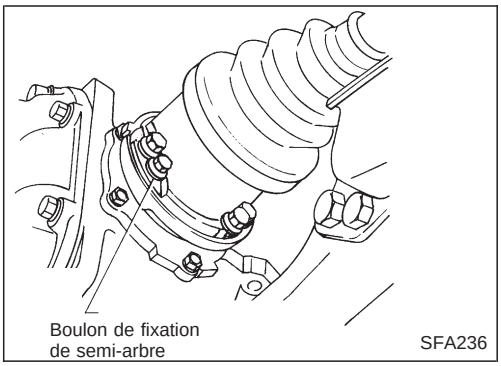

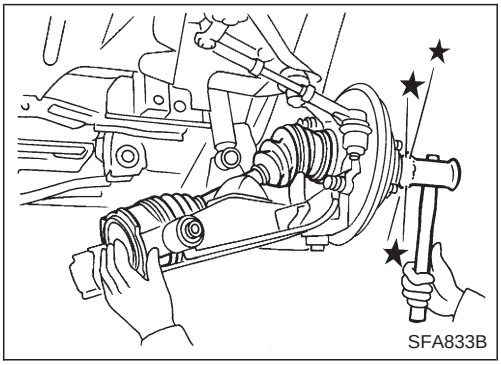

DEPOSE

1. Déposer le moyeu débrayable ou la bride d'entraînement et le jonc d'arrêt. Se reporter à ''Moyeu débrayable automatique – 4 roues motrices –'', FA-17, ou ''Moyeu débrayable manuel – 4 roues motrices –'', FA-16.
2. Déposer la barre de torsion. Se reporter à ''Barre de torsion'', ''SUSPENSION AVANT'', FA-30.
3. Déposer le boulon de fixation inférieur de l'amortisseur.
4. Déposer le bras inférieur, les boulons de fixation.

Soutenir le bras inférieur avec un cric.

5. Déposer les boulons qui fixent le semi-arbre à la transmission finale.

6. Déposer le semi-arbre du pivot de fusée en tappant légèrement sur l'extrémité du semi-arbre.

Simpo PDF Merge and Split Unregistered Version - http://www.simpopdf.com

Semi-arbre – 4 roues motrices – (Suite)

DEMONTAGE

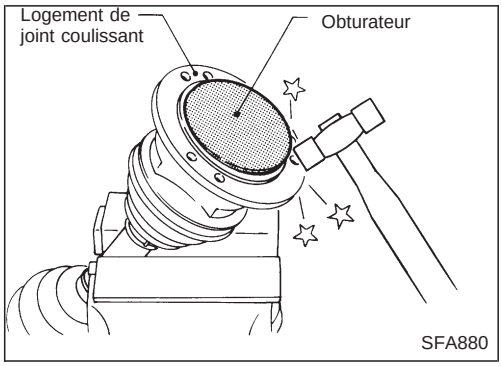

Côté transmission de l'essieu (TS82F)

1. Déposer l'obturateur du logement de joint coulissant en frappant légèrement autour du logement de joint coulissant.
2. Déposer les colliers de soufflet.

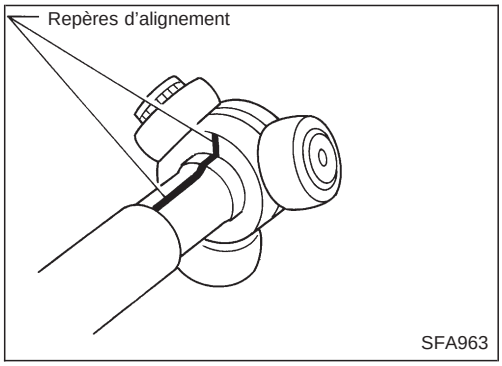

3. Déplacer le soufflet et le logement de joint coulissant vers le côté roue, et tracer des repères d'alignement.

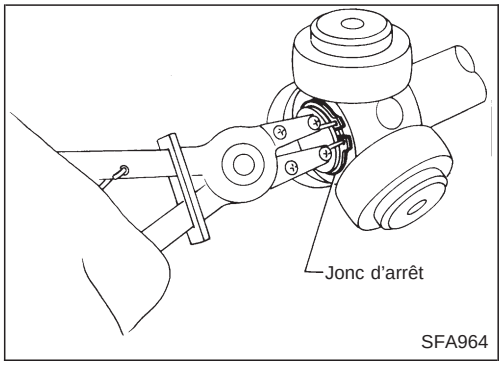

4. Déposer le jonc d'arrêt.

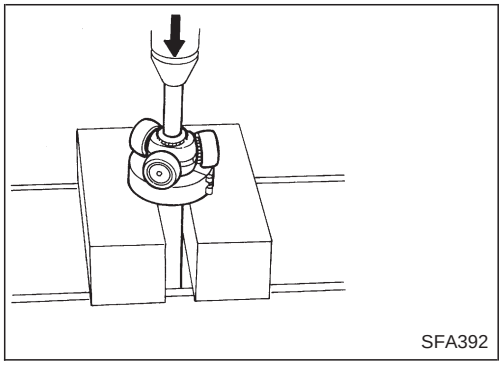

5. Détacher l'ensemble croisillon à la presse.

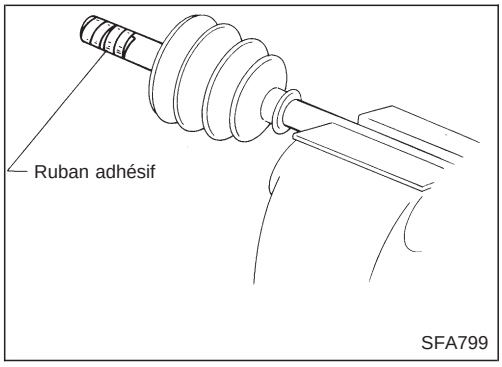

6. Retirer le soufflet.

Recouvrir les cannelures du semi-arbre avec du ruban adhésif afin de ne pas endommager le soufflet.

Simpo PDF Merge and Split Unregistered Version - http://www.simpopdf.com

Semi-arbre – 4 roues motrices – (Suite)

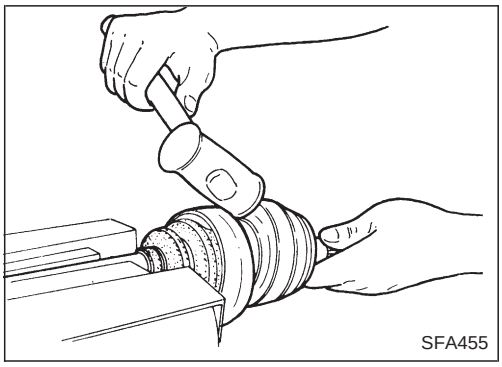
SFA455

Côté roue (ZF100)

ATTENTION :
Le joint du côté roue ne peut être démonté.

- Avant de séparer l'ensemble de joint, tracer des repères sur le semi-arbre et l'ensemble de joint.
- Séparer le joint à l'aide de l'outil adéquat.

Veiller à ne pas endommager les filetages du semi-arbre.

- Déposer les colliers de soufflet.

INSPECTION

Nettoyer soigneusement toutes les pièces dans du solvant et les sécher à l'air comprimé. Vérifier si les pièces ne sont pas déformées ou autrement endommagées.

Semi-arbre

Remplacer le semi-arbre s'il est tordu ou fêlé.

Soufflet

Vérifier que le soufflet ne présente pas de fatigue, de fissures et d'usure. Remplacer le soufflet avec des colliers neufs.

Ensemble de joint (côté transmission de l'essieu)

- Remplacer toute pièce du joint à double décalage qui présente des signes de rayures, de rouille, d'usure ou de jeu excessif.
- Vérifier que les cannelures ne sont pas déformées. Remplacer si nécessaire.
- Vérifier que le logement de joint coulissant n'est pas endommagé. Remplacer si nécessaire.

Ensemble joint (côté roue)

Remplacer l'ensemble joint s'il est déformé ou endommagé.

REMONTAGE

- **Après avoir remonté le semi-arbre, s'assurer qu'il coulisse sans difficulté dans toute sa course.**
- **Utiliser la GRAISSE D'ORIGINE NISSAN ou un équivalent après chaque révision.**

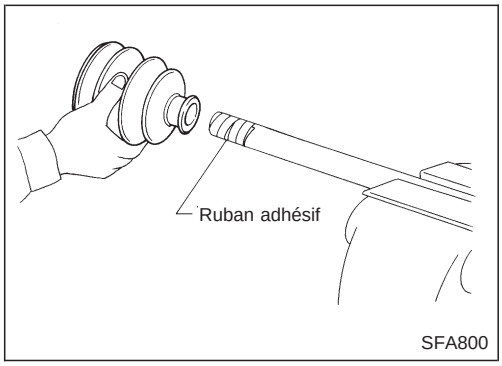

SFA800

Côté transmission de l'essieu (TS82F)

1. Reposer le nouveau petit collier de soufflet, le soufflet et le logement de joint coulissant sur le semi-arbre.

Recouvrir les cannelures du semi-arbre avec du ruban adhésif afin de ne pas endommager le soufflet lors de la repose.

Simpo PDF Merge and Split Unregistered Version - http://www.simpopdf.com

Semi-arbre – 4 roues motrices – (Suite)

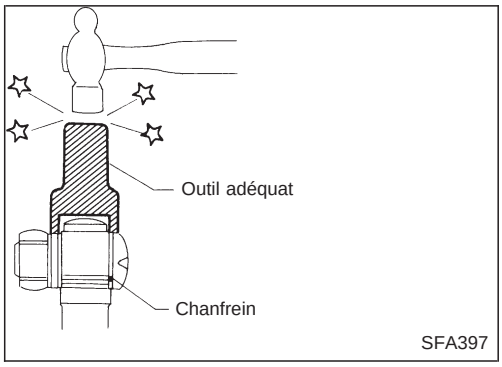

2. Reposer l'ensemble croisillon correctement, en s'assurant que les repères sont bien alignés.
- **Monter à la presse en s'assurant que le chanfrein des cannelures du croisillon est face à l'arbre.**
3. Reposer un jonc d'arrêt neuf.

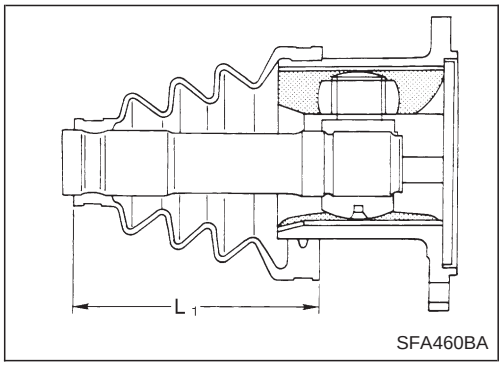

4. Enduire de graisse.
   Quantité de graisse spécifiée :
   95 à 105 g
5. S'assurer que le soufflet est correctement reposé sur la rainure du semi-arbre. Monter le soufflet de manière à ce qu'il ne gonfle pas ou ne se déforme pas une fois que sa longueur est égale à "L_1".
   Longueur "L_1" : 95 - 97 mm

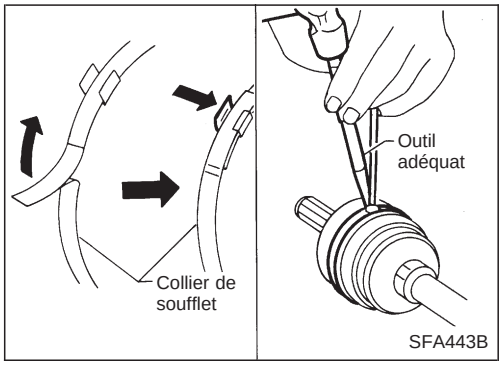

6. Serrer fermement le nouveau collier de soufflet large à l'aide d'un outil approprié, puis serrer le nouveau petit collier de soufflet.
7. Reposer un obturateur neuf sur le logement de joint coulissant en le frappant légèrement.

Enduire la surface d'appui de l'obturateur de produit d'étanchéité.

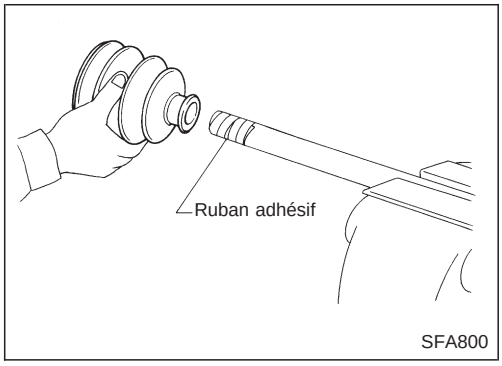

Côté roue (ZF100)

1. Reposer le nouveau petit collier de soufflet et le soufflet sur le semi-arbre.

Recouvrir les cannelures du semi-arbre avec du ruban adhésif afin de ne pas endommager le soufflet lors de la repose.

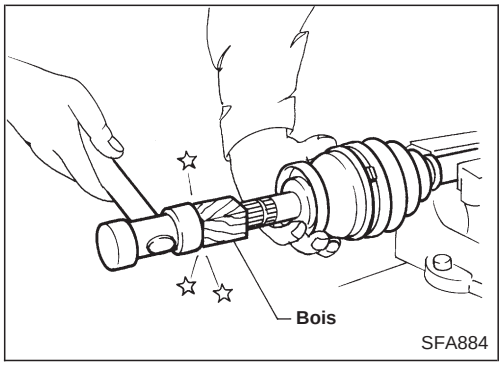

2. Monter l'ensemble joint sur le semi-arbre en le frappant légèrement.
   Fixer fermement l'ensemble joint, en s'assurant que les marques de repères faites lors du démontage sont correctement alignées.

Simpo PDF Merge and Split Unregistered Version - http://www.simpopdf.com

Semi-arbre – 4 roues motrices – (Suite)

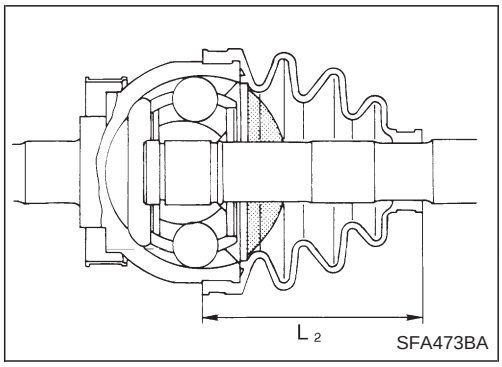

3. Enduire le semi-arbre de la quantité appropriée de graisse.
   Quantité de graisse spécifiée :
   135 à 145 g
4. S'assurer que le soufflet est correctement reposé sur la rainure du semi-arbre. Monter le soufflet de manière à ce qu'il ne gonfle pas ou ne se déforme pas une fois que sa longueur est égale à "L_2".
   Longueur "L_2" : 96 - 98 mm
5. Serrer fermement le nouveau collier de soufflet large à l'aide d'un outil approprié.
6. Serrer le nouveau petit collier de soufflet.

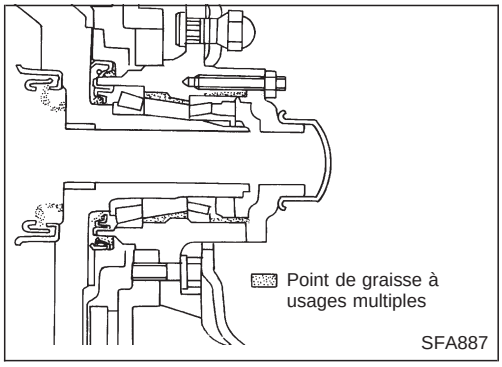

REPOSE

1. Enduire de graisse à usages multiples.

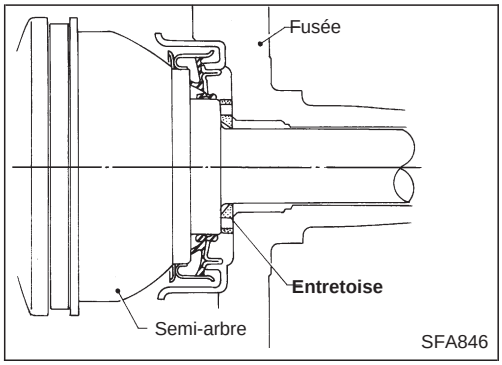

2. Reposer l'entretoise de roulement sur le semi-arbre.

S'assurer que l'entretoise de roulement est correctement orientée.

3. Après la repose du moyeu et du roulement de roue, régler la précharge du roulement de roue. Se reporter à "REGLAGE DE LA PRECHARGE", "Roulements des roues avant", "ENTRETIEN SUR LE VEHICULE", FA-6.

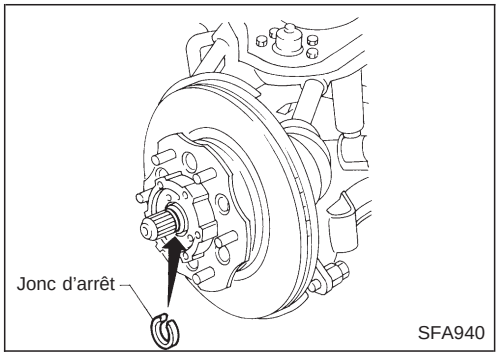

4. Lors de la repose du semi-arbre, régler son jeu axial en choisissant un jonc d'arrêt adéquat.

a. Reposer temporairement un jonc d'arrêt neuf sur le semi-arbre de même épaisseur que celui qui a été déposé.

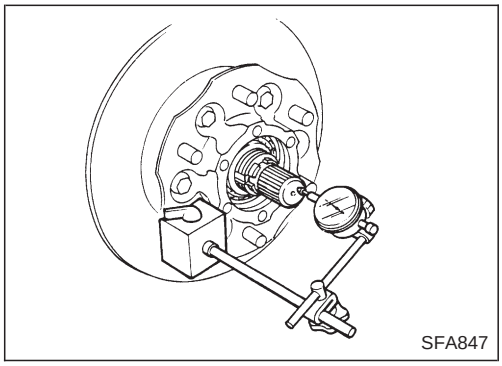

b. Placer le comparateur à cadran sur l'extrémité du semi-arbre.
c. Mesurer le jeu axial du semi-arbre.
   Jeu axial : 0,45 mm ou moins
d. Si le jeu axial n'est pas dans la limite spécifiée, choisir un autre jonc d'arrêt.

1,1 mm	**1,3 mm**
1,5 mm	**1,7 mm**
1,9 mm	**2,1 mm**
2,3 mm	

Simpo PDF Merge and Split Unregistered Version - http://www.simpopdf.com

2 roues motrices

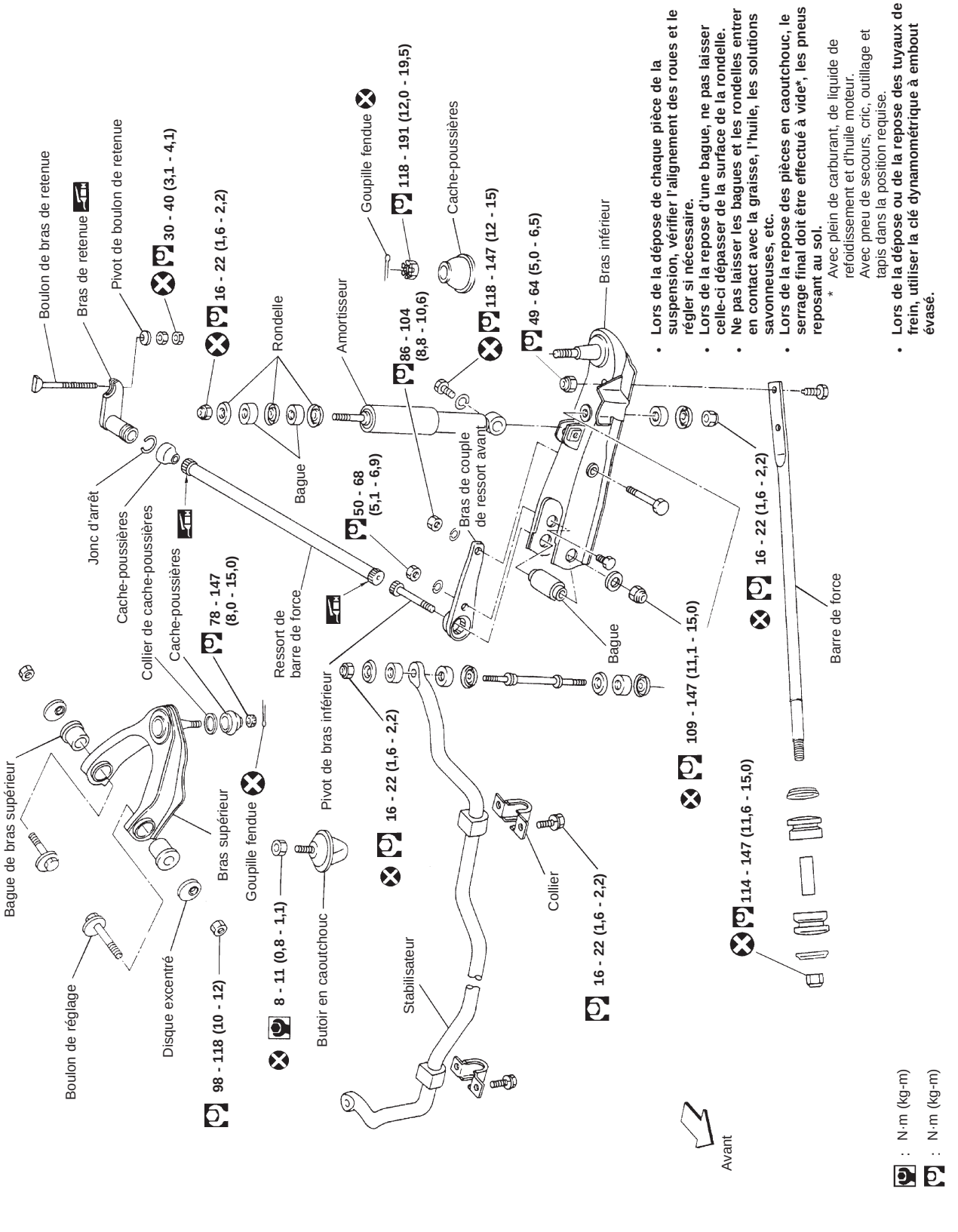

SEC. 400

SFA917B

Simpo PDF Merge and Split Unregistered Version - http://www.simpopdf.com

4 roues motrices

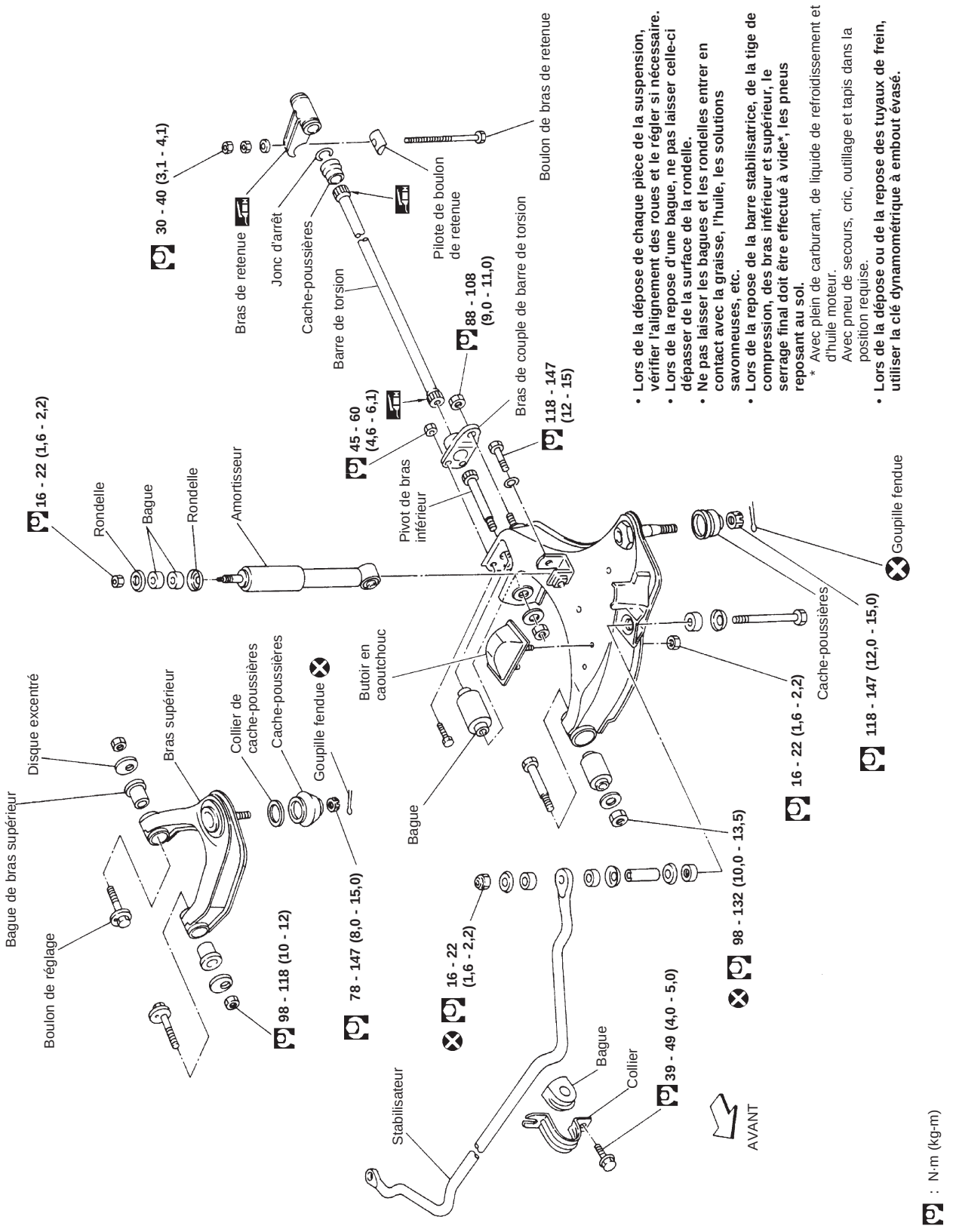

SEC. 401

SFA835BA

Simpo PDF Merge and Split Unregistered Version - http://www.simpopdf.com

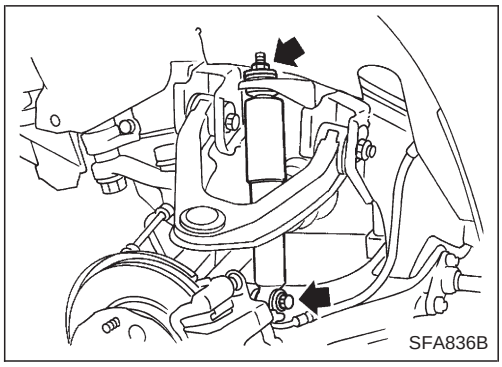
SFA836B

Amortisseur

DEPOSE ET REPOSE

1. Soutenir le bras inférieur avec un cric.
2. Déposer le boulon et l'écrou qui supportent l'amortisseur.

INSPECTION

Nettoyer toutes les pièces, à l'exception des pièces non métalliques, avec un solvant approprié, et les sécher à l'air comprimé.
Chasser la salissure et la poussière des pièces non métalliques à l'air comprimé.

- Vérifier qu'il n'y a pas de fuites d'huile et de fissures. Remplacer si nécessaire.
- Vérifier que la tige de piston ne présente pas de fissures, de déformation et d'autres dommages. Remplacer si nécessaire.
- Vérifier que les pièces en caoutchouc ne sont pas usées, fissurées, endommagées et déformées. Remplacer si nécessaire.

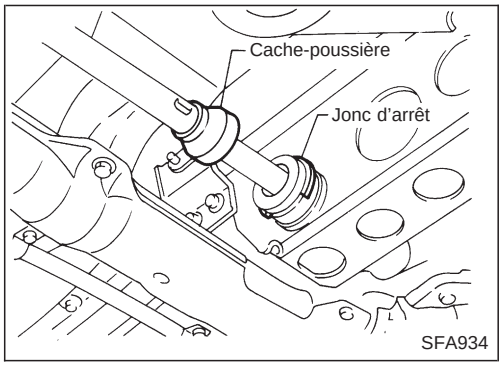

SFA934

Barre de torsion

DEPOSE

1. Déplacer le cache-poussière.
2. Tracer des repères d'alignement à la peinture sur la barre de torsion et son bras correspondant.

Toujours indiquer un repère à la peinture ; ne pas écrire sur les pièces concernées.

3. Mesurer la saillie ''L'' du boulon du bras de retenue, et déposer le contre-écrou et l'écrou de réglage.

Avant de déposer les écrous, s'assurer que la force de torsion est éliminée des barres de torsion.

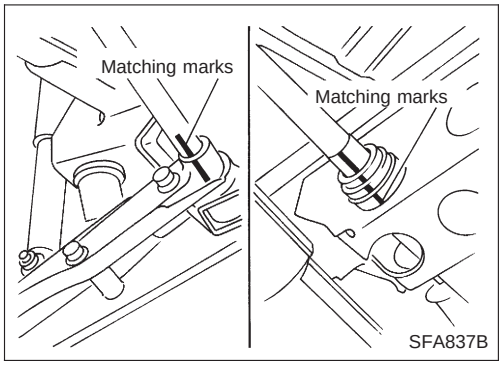

SFA837B

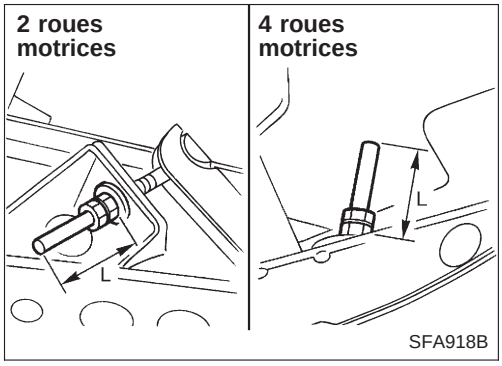

SFA918B

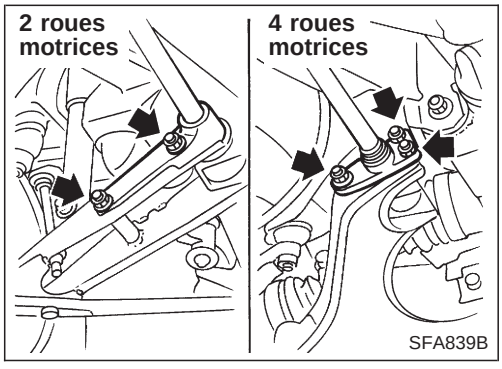

SFA839B

4. Détacher le jonc d'arrêt du bras de retenue.

- Extraire le bras de retenue par l'arrière, puis retirer la barre de torsion par l'arrière – 2 roues motrices –.
- Déposer le bras de couple – 2 roues motrices –.
- Déposer les écrous de fixation du bras de couple, puis retirer la barre de torsion par l'avant avec le bras de couple – 4 roues motrices –.

Simpo PDF Merge and Split Unregistered Version - http://www.simpopdf.com

Barre de torsion (Suite)

INSPECTION

- Vérifier que la barre de torsion n'est pas usée, tordue, courbée ou endommagée.
- Vérifier si les cannelures de chaque pièce ne sont pas fissurées, usées, tordues ou endommagées.
- Vérifier si le cache-poussière ne présente pas de fissures.

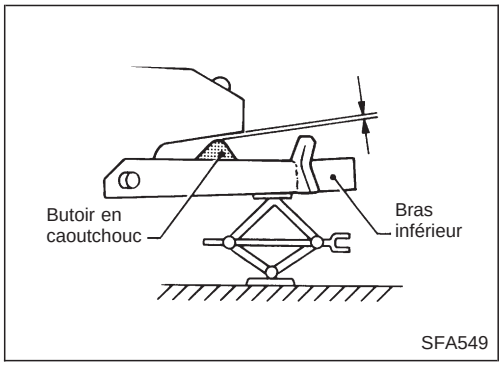

INSTALLATION ET REGLAGE

Le réglage de l'écrou de réglage du bras de retenue se fait uniquement dans le sens du serrage.
Ne pas régler en desserrant le boulon de réglage du bras de retenue.

1. Reposer le bras de couple sur le bras inférieur – 2 roues motrices –.
2. Enduire les cannelures de barre de torsion de graisse à usages multiples.
3. Placer le bras inférieur dans une position où le jeu du butoir en caoutchouc "C" est de 0.
   Jeu "C" : 0 mm

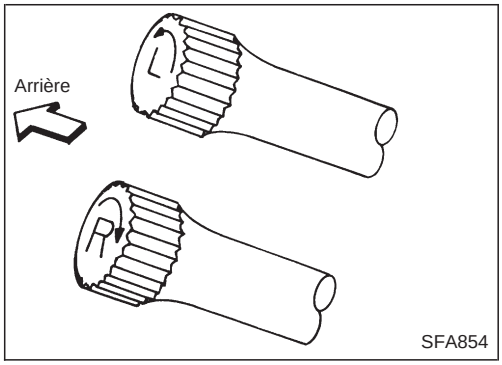

4. Reposer la barre de torsion – 2 roues motrices –.
   Reposer la barre de torsion, y compris le bras de couple – 4 roues motrices –.

Veiller à reposer correctement les barres de torsion droite et gauche.

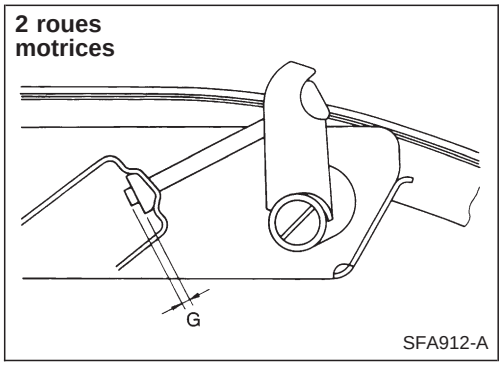

5. Tout en alignant le bras de retenue sur le repère, le reposer sur de la barre de torsion.
   Si une de barre de torsion ou un bras de retenue neufs sont reposés, régler la longueur du bras de retenue selon la dimension indiquée dans l'illustration ci-contre.
   Longueur standard "G" :
   2 roues motrices
   6 - 18 mm
   4 roues motrices
   22 - 36 mm

Simpo PDF Merge and Split Unregistered Version - http://www.simpopdf.com

Barre de torsion (Suite)

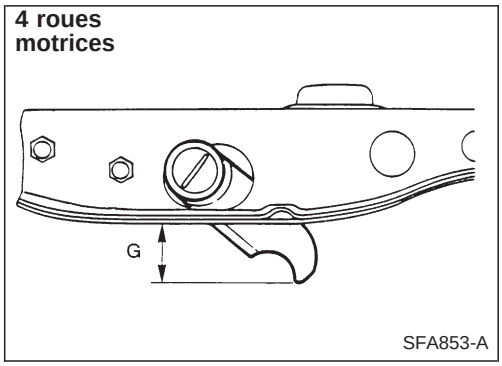

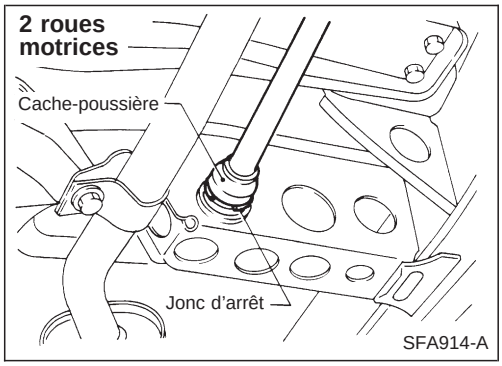

6. Reposer le jonc d'arrêt sur le bras de retenue et le cache-poussière.

– 2 roues motrices –

S'assurer que le jonc d'arrêt est correctement reposé sur la rainure du bras de retenue.

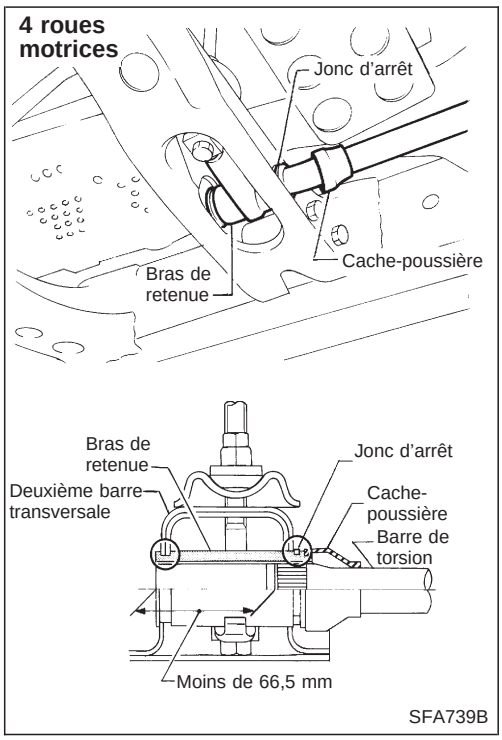

– 4 roues motrices –

S'assurer que le jonc d'arrêt et le bras de retenue sont correctement reposés.

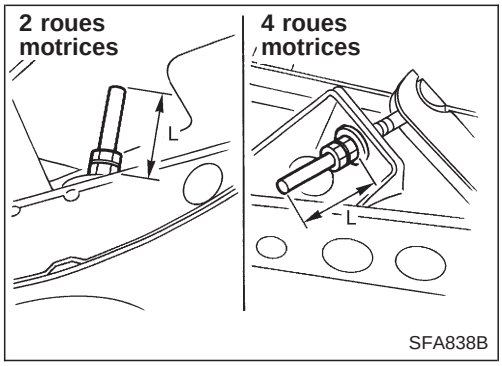

7. Serrer l'écrou de réglage de façon à ce que la longueur de la barre de torsion corresponde à la dimension "L" mesurée auparavant lors de sa dépose. Serrer le contre-écrou au couple spécifié.
   Si une barre de torsion ou un bras de retenue neufs sont reposés, serrer l'écrou de réglage à la dimension indiquée dans l'illustration ci-à gauche, puis serrer le contre-écrou au couple spécifié.

Simpo PDF Merge and Split Unregistered Version - http://www.simpopdf.com

Barre de torsion (Suite)

Longueur standard ‘‘L’’ :
2 roues motrices
46 mm
4 roues motrices
70 mm

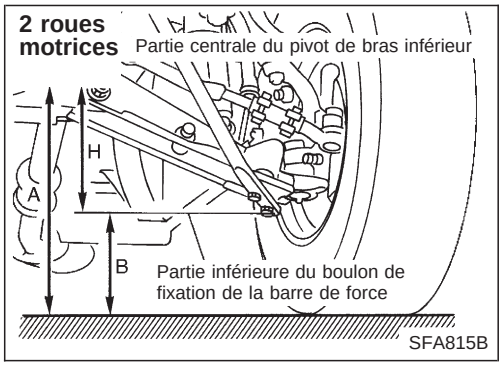

8. Faire balancer de haut en bas le véhicule avec les pneus au sol (à vide) pour éliminer la friction de la suspension.
9. Mesurer l’assiette ‘‘H’’ du véhicule.

a. Actionner la suspension avant en faisant balancer l’avant du véhicule 4 ou 5 fois de haut en bas pour s’assurer qu’il est à une hauteur neutre.
b. Mesurer l’assiette du véhicule . . . Cote ‘‘H’’.
H = A − B mm ‘‘à vide’’
Se reporter à ‘‘ALIGNEMENT DES ROUES (à vide)’’, ‘‘SDS’’, FA-39.

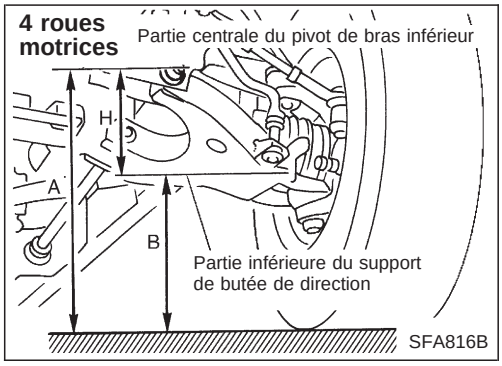

10. Si la hauteur au sol du véhicule n’est pas dans la limite admissible, régler l’assiette.
Se reporter à ‘‘ALIGNEMENT DES ROUES (à vide)’’, ‘‘SDS’’, FA-39.
11. Vérifier l’alignement des roues si nécessaire.
Se reporter à ‘‘ALIGNEMENT DES ROUES (à vide)’’, ‘‘SDS’’, FA-39.

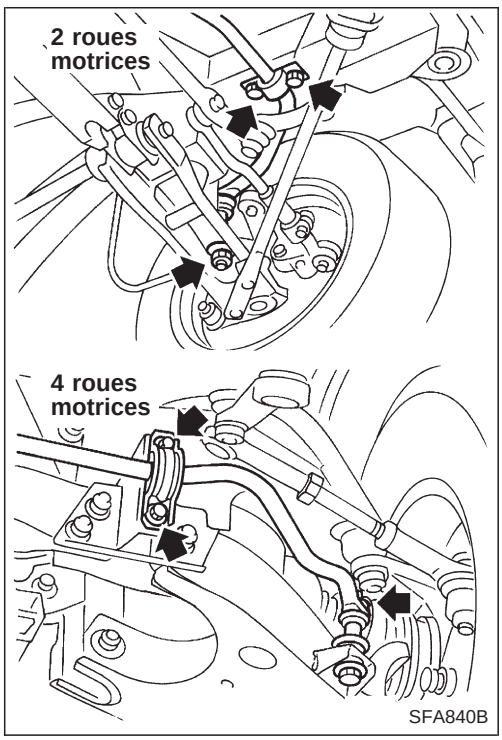

Barre stabilisatrice

DEPOSE

- Déposer les boulons de raccordement de la barre stabilisatrice et les boulons de collier.

INSPECTION

- Vérifier que la barre stabilisatrice n’est pas tordue et déformée.
  Remplacer si nécessaire.
- Vérifier que la bague en caoutchouc ne présente pas de fissures, d’usure et de détérioration.
  La remplacer si nécessaire.

Simpo PDF Merge and Split Unregistered Version - http://www.simpopdf.com

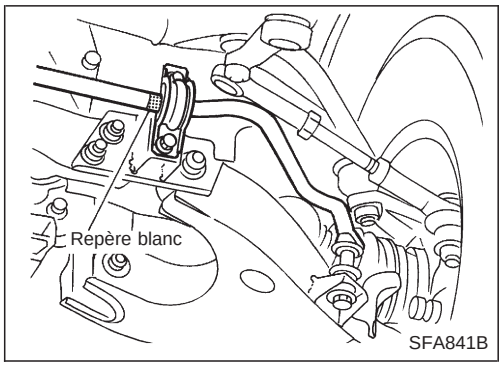

REPOSE

- Reposer la bague à côté du repère peint en blanc sur la barre stabilisatrice.

Bras supérieur

DEPOSE

1. Déposer l'amortisseur. Se reporter à ''Amortisseur'', FA-30.
2. Séparer le goujon de rotule supérieure du pivot de fusée.

Soutenir le bras inférieur avec un cric.

Se reporter à ''Pivot de fusée'', ''ESSIEU AVANT'', FA-20.

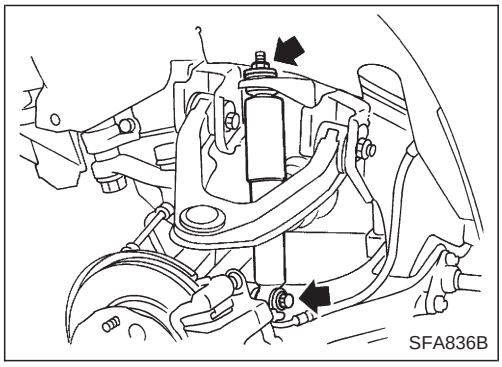

3. Tracer des marques de repères sur les boulons de réglage et les déposer.

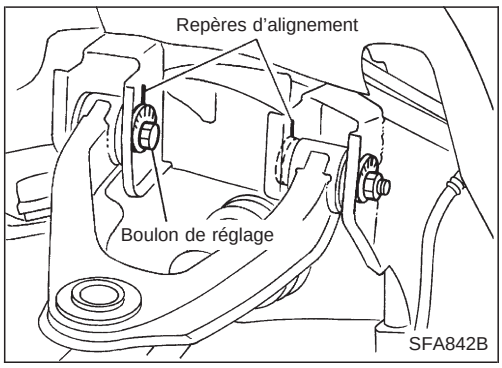

REPOSE

1. Tout en alignant les boulons de réglage sur les repères, reposer le bras supérieur.
   Si un bras supérieur neuf ou tout autre pièce de la suspension est installé, aligner le repère sur la fente comme indiqué dans l'illustration ci-contre, puis reposer le bras supérieur.
   Se reporter à ''Alignement des roues avant'', ''ENTRETIEN SUR LE VEHICULE'', FA-8.
2. Reposer l'amortisseur.
3. Serrer les boulons de réglage à vide, les pneus reposant au sol.
4. Après la repose, vérifier l'alignement des roues. Régler si nécessaire. Se reporter à FA-8.

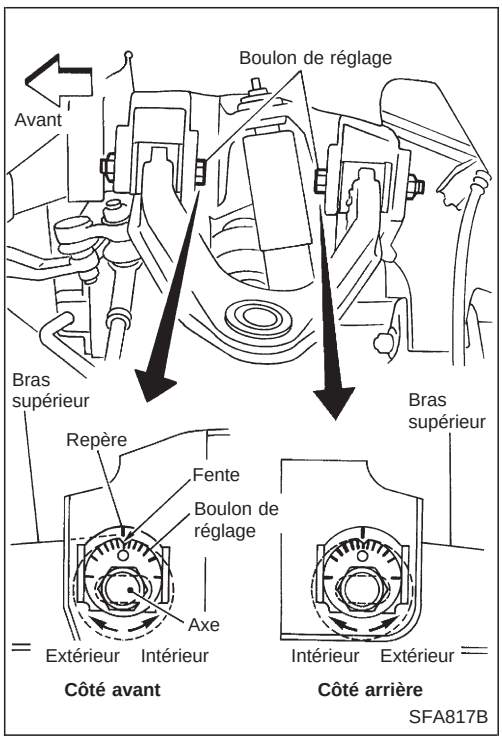

Simpo PDF Merge and Split Unregistered Version - http://www.simpopdf.com

Bras supérieur (Suite)

DEMONTAGE

- Démonter à la presse les bagues du bras supérieur.

INSPECTION

- Vérifier si les boulons de réglage et les bagues en caoutchouc ne sont pas endommagés. Remplacer si nécessaire.
- Vérifier si le bras supérieur ne présente pas de déformations et de fissures. Remplacer si nécessaire.

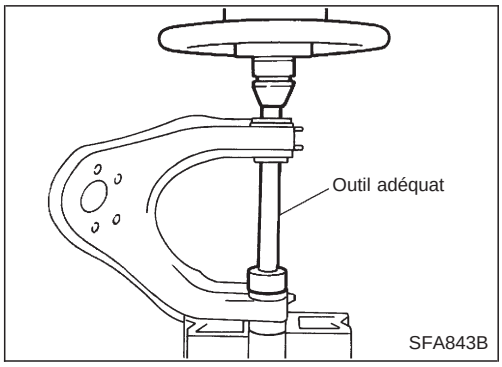

REMONTAGE

1. Appliquer de l'eau savonneuse sur la bague en caoutchouc.
2. Adapter à la presse la bague du bras supérieur.

Enfoncer la bague de sorte que sa bride entre bien en contact avec la surface du collier de bras supérieur.

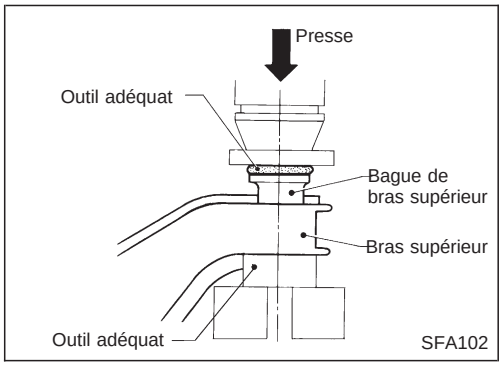

Barre de force

DEPOSE ET REPOSE

1. Déposer les écrous de fixation du bras inférieur et du châssis.

Soutenir le bras inférieur avec un cric.

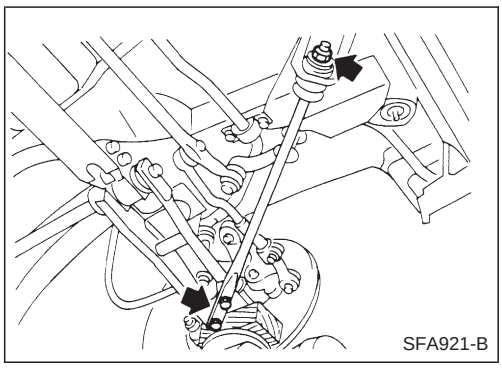

2. Reposer la barre de force.

S'assurer que les bagues et les rondelles sont correctement reposées.

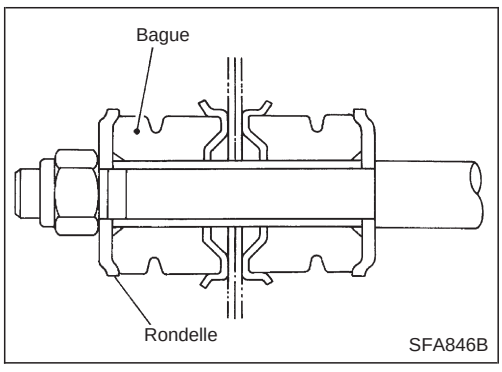

INSPECTION

- Vérifier si la barre de force ne présente pas de déformations ni de fissures. Remplacer si nécessaire.
- Vérifier si les bagues en caoutchouc ne sont pas endommagées. Remplacer si nécessaire.

Bras inférieur

DEPOSE ET REPOSE

1. Déposer la barre de torsion. Se reporter à ''DEPOSE'', ''Barre de torsion'', FA-30.

Tracer des repères et mesurer la dimension ''L'' lors du desserrage de l'écrou de réglage jusqu'à ce qu'il n'y ait plus de tension dans la barre de torsion.

2. Déposer le boulon de fixation inférieur de l'amortisseur.
3. Déposer le boulon de raccordement de la barre stabilisatrice.

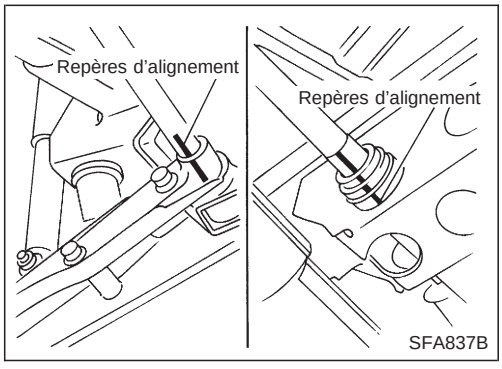

Simpo PDF Merge and Split Unregistered Version - http://www.simpopdf.com

Bras inférieur (Suite)

4. Déposer le semi-arbre – 4 roues motrices –.
   Se reporter à ‘‘Semi-arbre – 4 roues motrices –’’, ‘‘ESSIEU AVANT’’, FA-23.

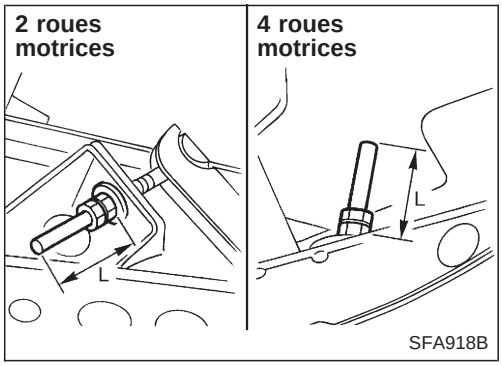

5. Séparer la rotule du bras inférieur du pivot de fusée.
   Se reporter à ‘‘Pivot de fusée’’, ‘‘ESSIEU AVANT’’, FA-20.

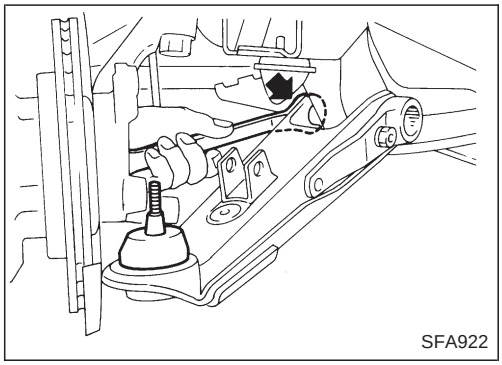

6. Déposer l’écrou de fixation du bras inférieur avant.

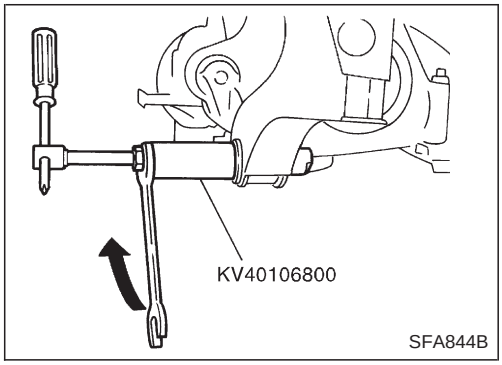

7. Déposer la bague du pivot de bras inférieur du châssis à l’aide d’un outil spécial.
8. Après la repose du bras inférieur, régler l’alignement des roues et la hauteur du véhicule. Se reporter à ‘‘Alignement des roues avant’’, ‘‘ENTRETIEN SUR LE VEHICULE’’, FA-8.

INSPECTION

Bras inférieur et pivot de bras inférieur

- Vérifier s’ils ne sont pas déformés et fissurés. Remplacer si nécessaire.

Bague de bras inférieur

- Vérifier la présence de déformations et de dommages. Remplacer si nécessaire.

Simpo PDF Merge and Split Unregistered Version - http://www.simpopdf.com

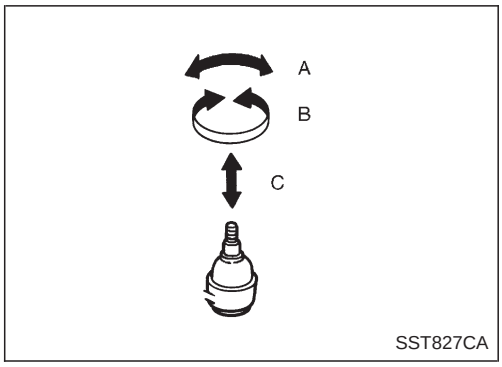

Joint à rotule supérieur et joint à rotule inférieur

DEPOSE ET REPOSE

- Séparer le pivot de fusée des bras supérieur et inférieur. Se reporter à ‘‘Pivot de fusée’’, ‘‘ESSIEU AVANT’’, FA-20.

INSPECTION

- Vérifier le jeu des joints. Si la rotule est usée et le jeu axial excessif, ou si le joint est difficile à basculer, remplacer le bras supérieur ou inférieur.

Force de basculement (point de mesure : orifice de la goupille) ‘‘A’’ :
Bras supérieur
16,7 - 79,4 N (1,7 - 8,1 kg)
Bras inférieur
2 roues motrices 13,7 - 166,7 N (1,4 - 17 kg)
4 roues motrices 0 - 67,7 N (0 - 6,9 kg)
Couple de rotation ‘‘B’’ :
Bras supérieur
1,0 - 4,9 N·m (10 - 50 kg-cm)
Bras inférieur
2 roues motrices 1,0 - 3,9 N·m (10 - 40 kg-cm)
4 roues motrices 0 - 4,9 N·m (0 - 50 kg-cm)
Jeu axial ‘‘C’’ :
Bras supérieur
0 mm
Bras inférieur
2 roues motrices 0,1 - 1,0 mm
4 roues motrices 0,2 mm ou moins

- Vérifier si le soufflet n’est pas endommagé. Remplacer le cache-poussière et sa bride, si nécessaire.

Simpo PDF Merge and Split Unregistered Version - http://www.simpopdf.com

Caractéristiques générales

Type de suspension	Ressort de barre de torsion de liaison transversale double indépendante
Type d'amortisseur	Hydraulique à double effet
Stabilisateur	Equipement standard ou en option

Inspection et Réglage

ROULEMENT DE ROUE

2 roues motrices

Jeu axial du roulement de roue mm	0
Contre-écrou de roulement de roue	
Couple de serrage N·m (kg-m)	34 - 39 (3,5 - 4,0)
Angle de retour degré	45° - 60°
Couple de démarrage du roulement de roue	
Au boulon de moyeu de roue Avec un joint à graisse neuf N (kg)	9,8 - 28,4 (1,0 - 2,9)
Avec un joint à graisse usagé N (kg)	9,8 - 23,5 (1,0 - 2,4)

4 roues motrices

Contre-écrou de roulement de roue	
Couple de serrage N·m (kg-m)	78 - 98 (8 - 10)
Resserrage du couple après desserrage du contre-écrou de roulement de roue N·m (kg-m)	0,5 - 1,5 (0,05 - 0,15)
Jeu axial mm	0
Force au démarrage du boulon de moyeu de roue N (kg)	A
Angle de braquage degré	15° - 30°
Force au démarrage au boulon de moyeu de roue N (kg)	B
Précharge du roulement de roue au boulon de moyeu de roue N (kg)	
B − A	7,06 - 20,99 (0,72 - 2,14)

MOYENNE DE VOILE DES ROUES*

Type de roue	Acier		
	5J-14	5,5K-15	6J-16
Limite de voile radial mm	0,5	0,8	1,2
Limite de voile latéral mm	0,8	0,8	1,2

* Moyenne de voile des roues = (valeur du voile externe + valeur du voile interne) x 0,5

ROTULE SUPERIEURE

Force de basculement "A" (point de mesure : orifice de la goupille fendue dans le goujon de rotule) N (kg)	16,7 - 79,4 (1,7 - 8,1)
Couple de rotation "B" N·m (kg-cm)	1,0 - 4,9 (10 - 50)
Jeu vertical "C" mm	0

ROTULE INFERIEURE

Modèle concerné	2 roues motrices	4 roues motrices
Force de basculement "A" (point de mesure : orifice de la goupille fendue dans le goujon de rotule) N (kg)	13,7 - 166,7 (1,4 - 17)	0 - 67,7 (0 - 6,9)
Couple de rotation "B" N·m (kg-cm)	1,0 - 3,9 (10 - 40)	0 - 4,9 (0 - 50)
Jeu vertical "C" mm	0,1 - 1,0	0,2 ou moins

Simpo PDF Merge and Split Unregistered Version - http://www.simpopdf.com

Inspection et Réglage (Suite)

ALIGNEMENT DES ROUES (à vide*1)

2 roues motrices

Carrossage		Minimum		−0°05′ (−0,08°)
		Nominal		0°25′ (0,42°)
		Maximum		0°55′ (0,92°)
	Degré minute (Degré décimal)	Différence à gauche et à droite		45′ (0,75°) ou moins
Chasse		Minimum		0°08′ (0,13°)
		Nominal		0°22′ (0,37°)
		Maximum		0°52′ (0,87°)
	Degré minute (Degré décimal)	Différence à gauche et à droite		45′ (0,75°) ou moins
Inclinaison du pivot de fusée		Minimum		8°35′ (8,58°)
	Degré minute (Degré décimal)	Nominal		9°05′ (9,08°)
		Maximum		9°35′ (9,58°)
Pincement total		Pneu radial	Minimum	2 (0.08)
			Nominal	3 (0.12)
			Maximum	4 (0.16)
Distance (A - B)	mm	Pneu diagonal	Minimum	4 (0.16)
			Nominal	5 (0.20)
			Maximum	6 (0.240
Angle (gauche plus droite)		Pneu radial	Minimum	10′ (0,17°)
			Nominal	15′ (0,25°)
			Maximum	20′ (0,33°)
		Pneu diagonal	Minimum	20′ (0,33°)
	Degré minute (Degré décimal)		Nominal	25′ (0,42°)
			Maximum	30′ (0,50°)
Angle de braquage des roues			Minimum	36°00′ (36,00°)
Braquage total*2	Intérieur		Nominal	38°00′ (38,00°)
	Degré minute (Degré décimal)		Maximum	38°00′ (38,00°)
	Extérieur		Minimum	32°36′ (32,60°)
	Degré minute (Degré décimal)		Nominal	34°36′ (34,60°)
			Maximum	34°36′ (34,60°)
Position du véhicule				
Hauteur du pivot de bras inférieur (H)	mm			111 - 115

2 roues motrices

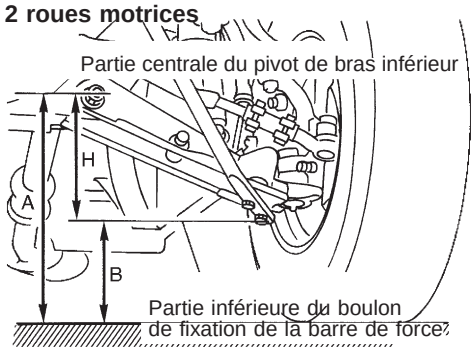

SFA815B

*1 : Avec plein de carburant, de liquide de refroidissement et d'huile moteur. Pneu de secours, cric, outillage et tapis dans la position requise.

*2 : Sur les modèles à direction assistée, la force de rotation du volant (à la circonférence du volant) est de 98 à 147 N (10 à 15 kg), le moteur tournant au ralenti.

Simpo PDF Merge and Split Unregistered Version - http://www.simpopdf.com

Inspection et Réglage (Suite)

4 roues motrices

Carrossage		Minimum		0°06′ (0,10°)
		Nominal		0°36′ (0,60°)
		Maximum		1°06′ (1,10°)
	Degré minute (Degré décimal)	Différence à gauche et à droite		45′ (0,75°) ou moins
Chasse		Minimum		1°40′ (1,67°)
		Nominal		2°10′ (2,17°)
		Maximum		2°40′ (2,67°)
	Degré minute (Degré décimal)	Différence à gauche et à droite		45′ (0,75°) ou moins
Inclinaison du pivot de fusée		Minimum		10°18′ (10,30°)
	Degré minute (Degré décimal)	Nominal		10°48′ (10,80°)
		Maximum		11°18′ (11,30°)
Pincement total		Pneu radial	Minimum	3
			Nominal	4
			Maximum	5
Distance (A - B)	mm	Pneu diagonal	Minimum	4
			Nominal	5
			Maximum	6
Angle (gauche plus droite)		Pneu radial	Minimum	15′ (0,25°)
			Nominal	20′ (0,33°)
			Maximum	25′ (0,42°)
		Pneu diagonal	Minimum	20′ (0,33°)
	Degré minute (Degré décimal)		Nominal	25′ (0,42°)
			Maximum	30′ (0,50°)
Angle de braquage des roues			Minimum	33°06′ (33,10°)
Braquage total*2	Intérieur		Nominal	35°06′ (35,10°)
	Degré minute (Degré décimal)		Maximum	35°06′ (35,10°)
	Extérieur		Minimum	31°12′ (31,20°)
	Degré minute (Degré décimal)		Nominal	33°12′ (33,20°)
			Maximum	33°12′ (33,20°)
Position du véhicule				45,5 - 49,5
Hauteur du pivot de bras inférieur (H)	mm			

4 roues motrices

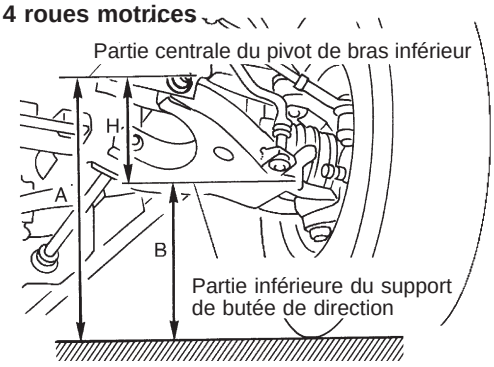

SFA816B

*2 : Pour les modèles avec direction assistée, la force de rotation du volant (à la circonférence du volant) est de 98 à 147 N (10 à 15 kg), le moteur tournant au ralenti.

Simpo PDF Merge and Split Unregistered Version - http://www.simpopdf.com

Inspection et Réglage (Suite)

SEMI-ARBRE (4 roues motrices)

Type de joint de semi-arbre	
Côté transmission finale	TS82F
Côté roue	ZF100
Limite de jeu axial de joint fixe mm	1
Diamètre mm	
Côté roue (D_1)	29,0
Graisse	
Qualité	Graisse d'origine Nissan ou équivalent
Contenance g	
Côté transmission finale	95 - 105
Côté roue	135 - 145
Longueur de soufflet mm	
Côté transmission de l'essieu (L_1)	95 - 97
Côté roue (L_2)	96 - 98

Côté transmission de l'essieu

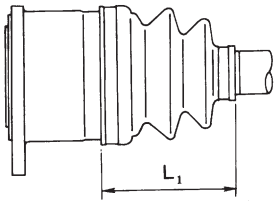

Côté roue

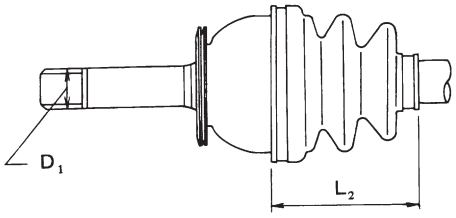

SFA877A

Jeu axial du semi-arbre

Jeu axial du semi-arbre mm	0,45 ou moins

Jonc d'arrêt d'extrémité de semi-arbre

Epaisseur mm	Pièce n°
1,1	39253-88G10
1,3	39253-88G11
1,5	39253-88G12
1,7	39253-88G13
1,9	39253-88G14
2,1	39253-88G15
2,3	39253-88G16

Simpo PDF Merge and Split Unregistered Version - http://www.simpopdf.com

SYSTEMES DE COMMANDE D'ACCELERATEUR, D'ALIMENTATION ET D'ECHAPPEMENT

SECTION FE

TABLE DES MATIERES

PREPARATION/SYSTEME DE COMMANDE D'ACCELERATEUR 1
Outillage spécial 1
Système de commande d'accélérateur 1
Réglage du câble d'accélérateur 2
SYSTEME D'ALIMENTATION 3
SYSTEME D'ECHAPPEMENT 6

Simpo PDF Merge and Split Unregistered Version - http://www.simpopdf.com

Outillage spécial

Numéro de l'outil Nom de l'outil	Description
KV10114400 Clé pour sonde à oxygène chauffée	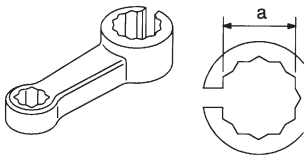 NT636 Desserrage ou serrage de la sonde à oxygène chauffée **a = 22 mm**

Système de commande d'accélérateur

ATTENTION :

- **Lors de la dépose du câble d'accélérateur, repérer la position initiale du contre-écrou.**
- **Contrôler que le papillon s'ouvre complètement lorsque la pédale d'accélérateur est enfoncée à fond. Vérifier également qu'il revient à la position de ralenti lorsque la pédale est relâchée.**
- **S'assurer que les pièces de la commande d'accélérateur n'entrent pas en contact avec des pièces voisines.**
- **Lors du branchement du câble d'accélérateur, veiller à ne pas tordre ou effilocher le câble.**

SEC. 180

Conduite à gauche

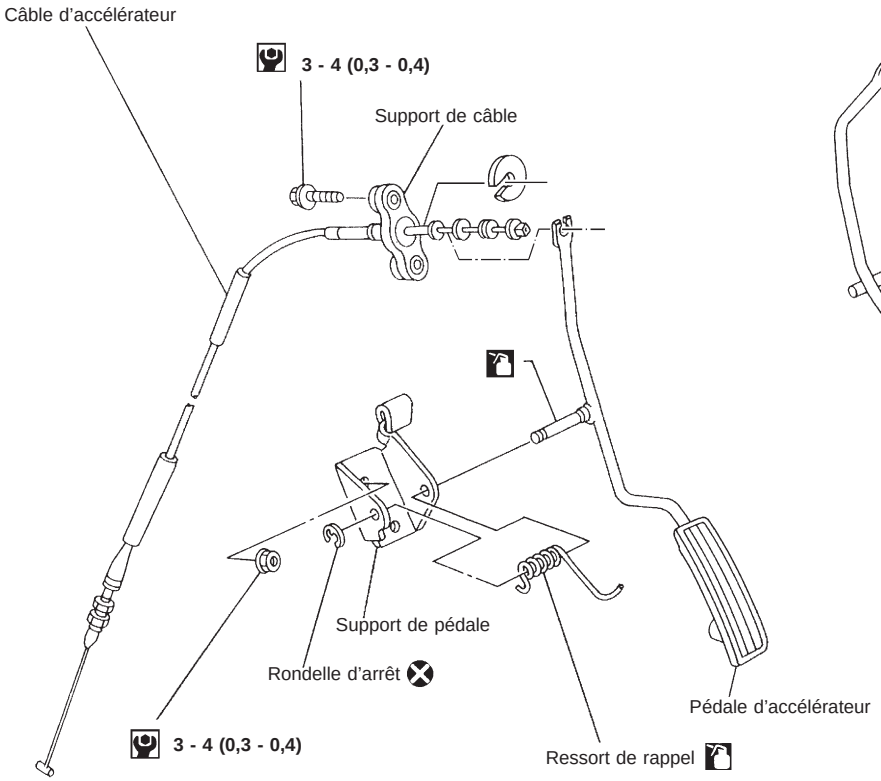

Conduite à droite

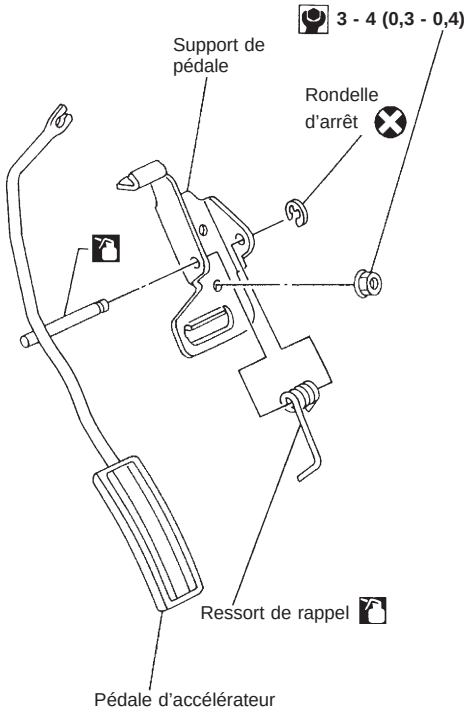

: Lubrifier avec de la graisse
: N·m (kg-m)

SFE454A

Simpo PDF Merge and Split Unregistered Version - http://www.simpopdf.com

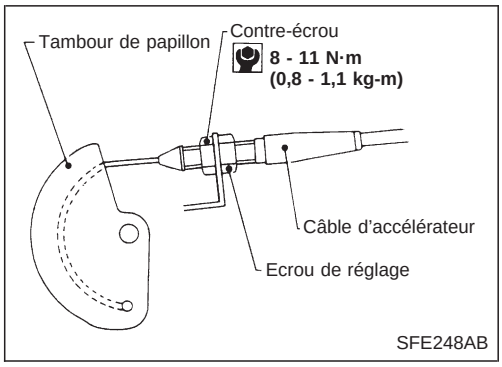

Réglage du câble d'accélérateur

1. Desserrer le contre-écrou, puis agir sur l'écrou de réglage jusqu'à ce que le tambour de papillon commence à se déplacer.
2. A partir de cette position, desserrer l'écrou de réglage de 1,5 à 2 tours, puis le bloquer avec le contre-écrou.

Simpo PDF Merge and Split Unregistered Version - http://www.simpopdf.com

AVERTISSEMENT :

Lors du remplacement des pièces de canalisation d'alimentation, veiller à observer les règles suivantes :

- **Accrocher dans l'atelier une pancarte : ''ATTENTION : RISQUE D'INCENDIE''.**
- **Ne pas fumer lors d'une intervention sur le circuit d'alimentation. Ne pas approcher de flammes ni d'étincelles de la zone de travail.**
- **S'assurer que l'on a débranché le câble de masse de la batterie avant de procéder aux opérations.**
- **S'assurer que l'on dispose dans l'atelier d'un extincteur au CO_2.**
- **Vidanger le réservoir à carburant, verser le carburant vidangé dans un récipient anti-déflagration et serrer fermement le couvercle.**

ATTENTION :

- **Avant de débrancher le flexible d'alimentation des modèles avec moteur ECCS, relâcher la pression d'alimentation dans la canalisation de carburant. Consulter le titre ''Remplacement du filtre à carburant'' à la section MA.**
- **Ne débrancher aucune canalisation d'alimentation sauf en cas de nécessité absolue.**
- **Boucher les ouvertures de flexibles et de tuyauterie pour empêcher la pénétration de poussières ou de saletés.**
- **Toujours remplacer les joints toriques et les colliers par des pièces neuves.**
- **Ne pas plier ou tordre le flexible et le tuyau lors de leur installation.**
- **Ne pas serrer excessivement les colliers de serrage des flexibles afin de ne pas endommager ces derniers.**
- **Lors de la repose du clapet anti-retour de carburant, respecter le sens de la flèche (consulter le titre ''SYSTEME DE CONTROLE DES EMISSIONS EVAPORATIVES'' à la section EC).**
- **Serrer les boulons au couple spécifié.**
- **Après la repose, faire tourner le moteur et vérifier qu'il n'y a pas de fuites de carburant au niveau des raccords.**

Simpo PDF Merge and Split Unregistered Version - http://www.simpopdf.com

Moteur à essence
SEC. 172

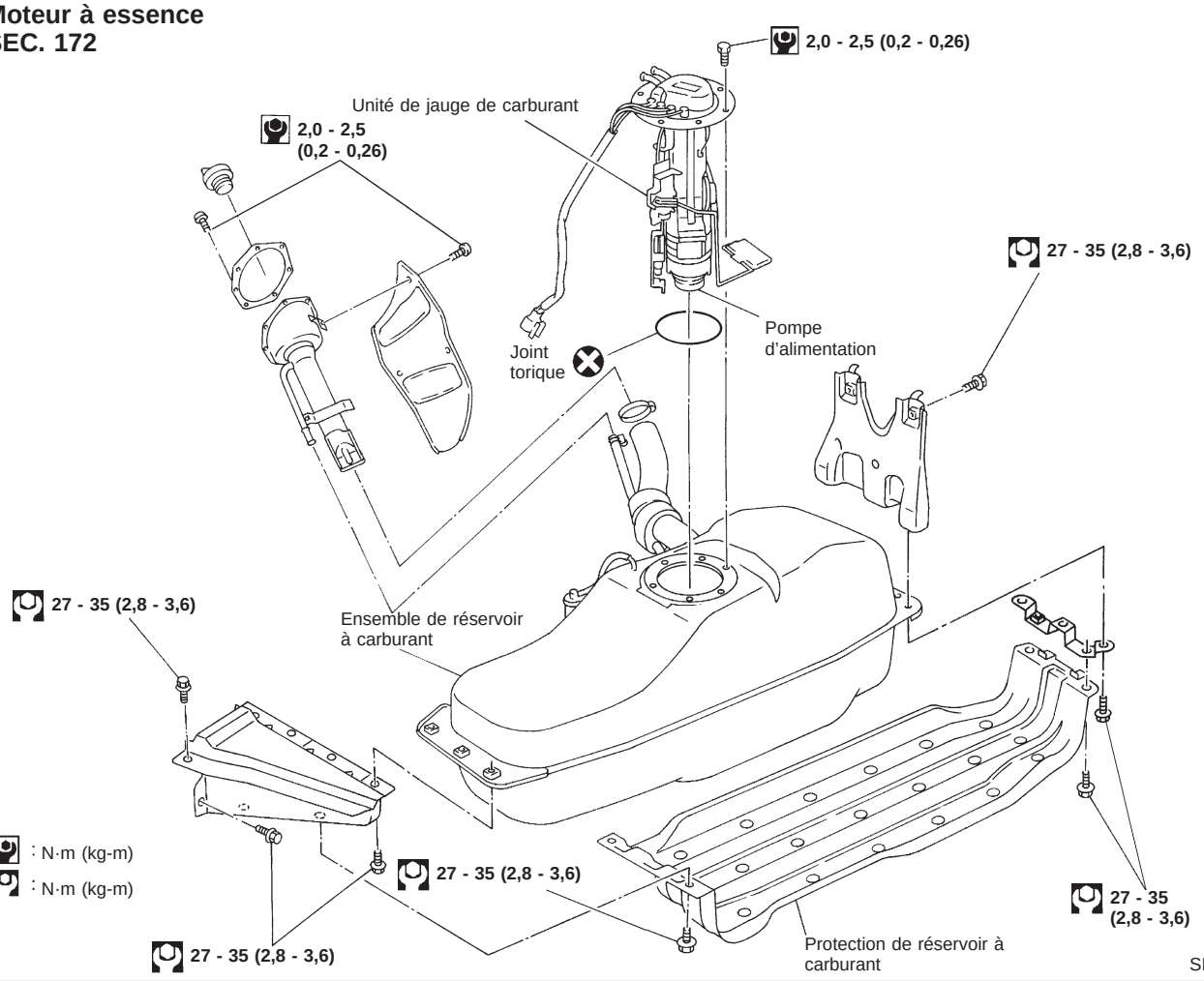

Simpo PDF Merge and Split Unregistered Version - http://www.simpopdf.com

Moteur diesel
SEC. 172

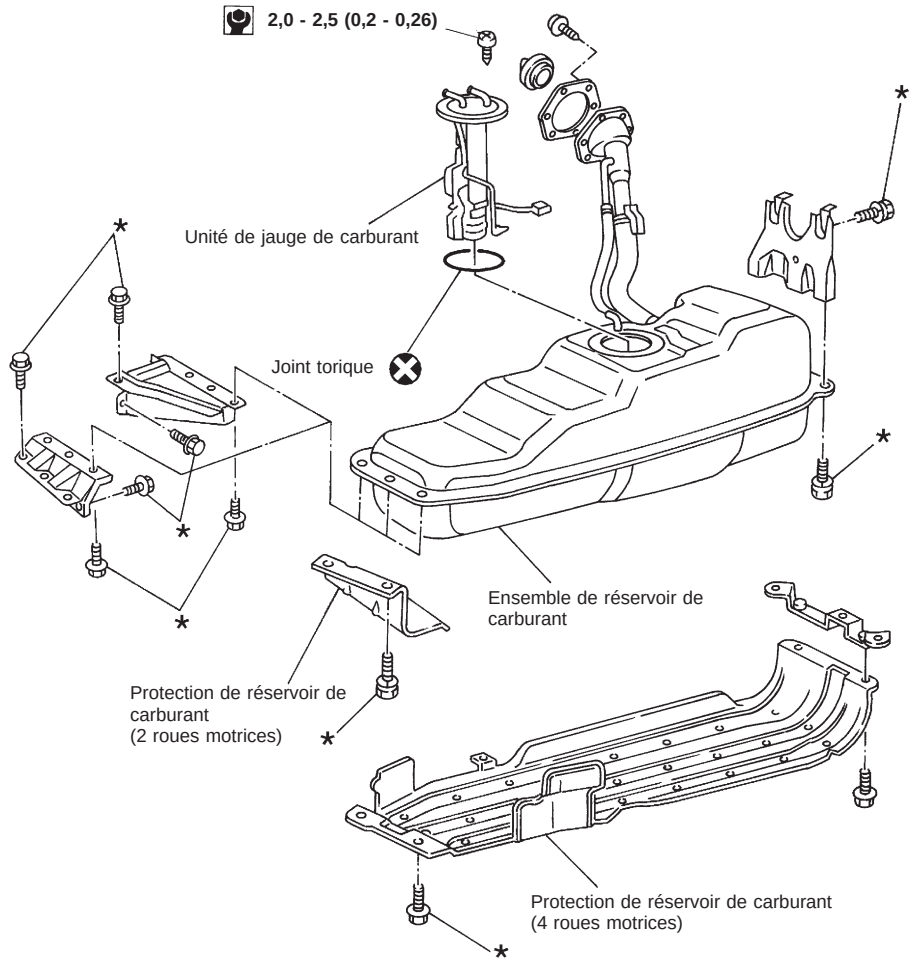

* : 27 - 35 (2,8 - 3,6)

: N·m (kg-m)

: N·m (kg-m)

SFE524A

Simpo PDF Merge and Split Unregistered Version - http://www.simpopdf.com

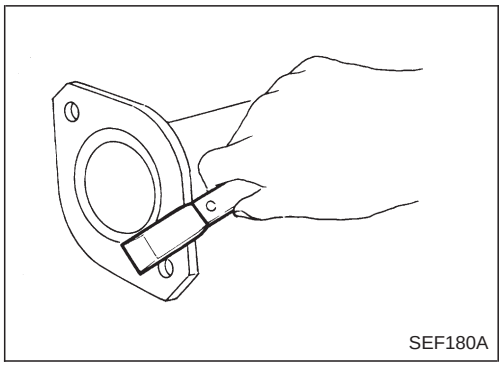
SEF180A

ATTENTION :

- **Lors du remontage, toujours remplacer les joints d'échappement par des joints neufs. Si du joint colle à la surface du flasque, gratter entièrement la surface comme indiqué sur la figure.**
- **Faire tourner le moteur et rechercher la présence de fuites de gaz d'échappement aux raccords des tuyaux, puis contrôler tout le système pour voir s'il ne présente pas de bruits anormaux.**
- **S'assurer que les supports de fixation et les isolants de montage sont correctement montés et ne sont pas soumis à des contraintes anormales. Un montage incorrect provoquerait des bruits et vibrations excessifs.**
- **Mettre au rebut toute sonde à oxygène chauffée qui serait tombée d'une hauteur de plus de 0,5 m sur une surface dure telle qu'un sol en béton ; utiliser une sonde neuve.**

MOTEUR KA24E (2 ROUES MOTRICES)

Sans catalyseur
SEC. 200

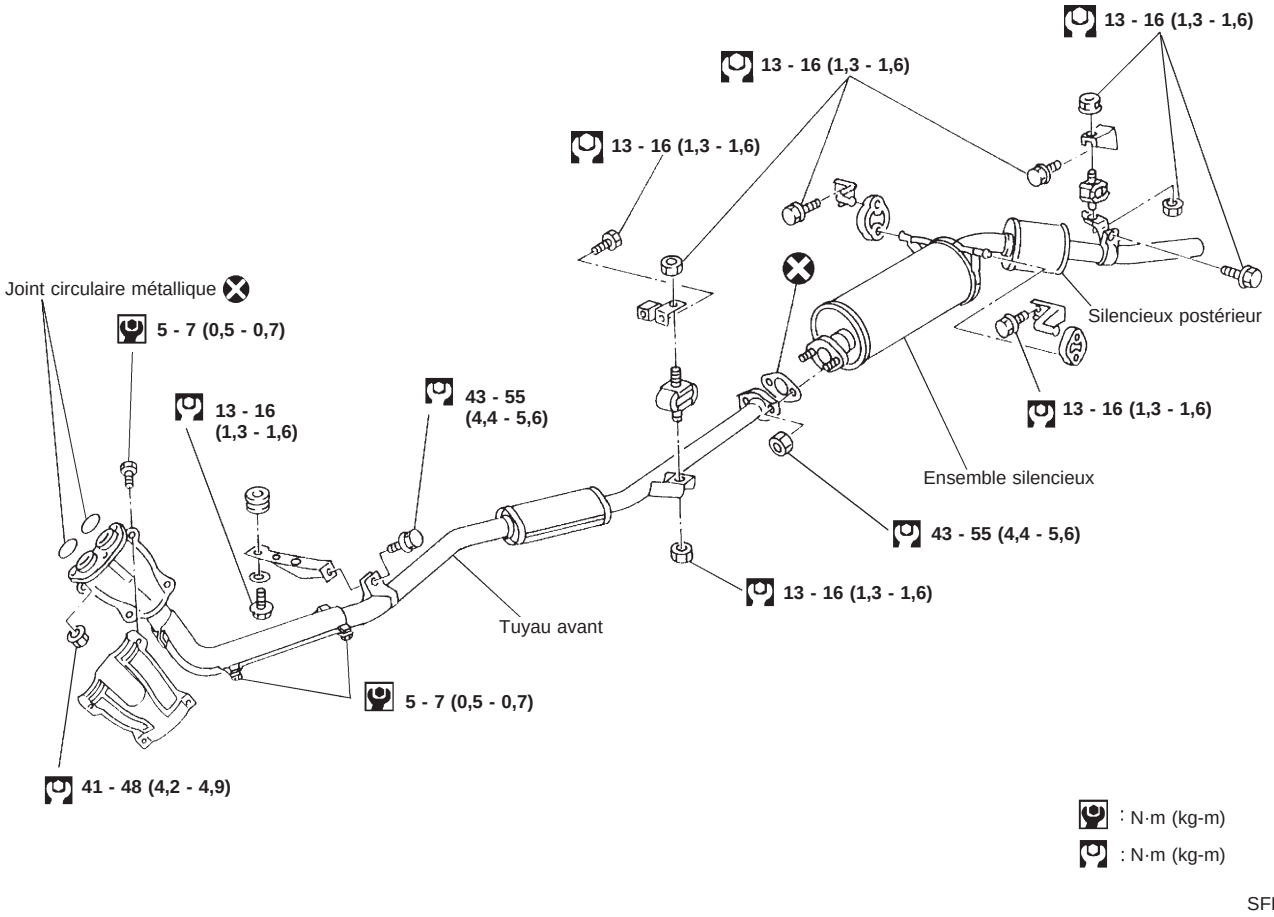

SFE456A

Simpo PDF Merge and Split Unregistered Version - http://www.simpopdf.com

MOTEUR KA24E (2 ROUES MOTRICES)

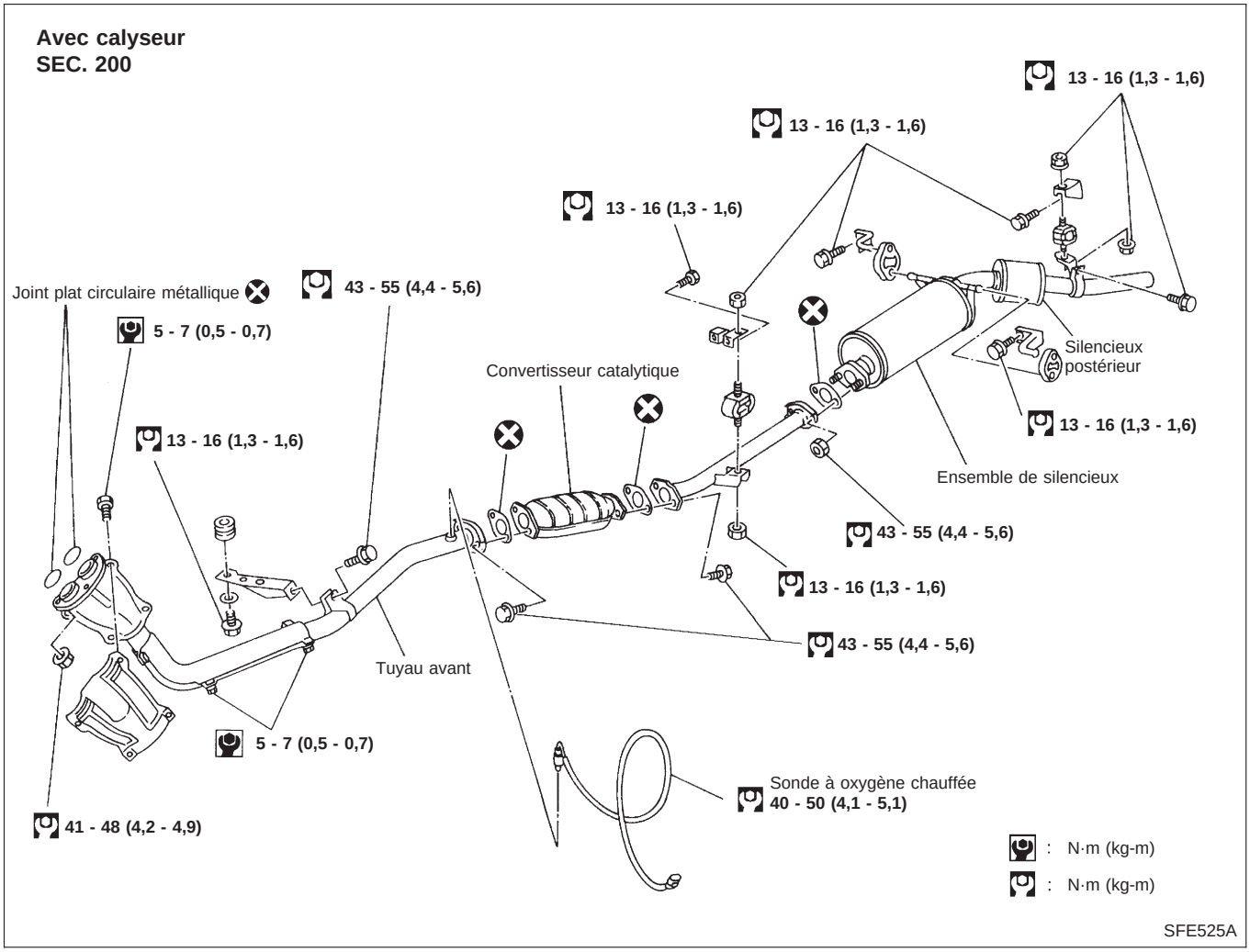

Simpo PDF Merge and Split Unregistered Version - http://www.simpopdf.com

Avec catalyseur
SEC. 200

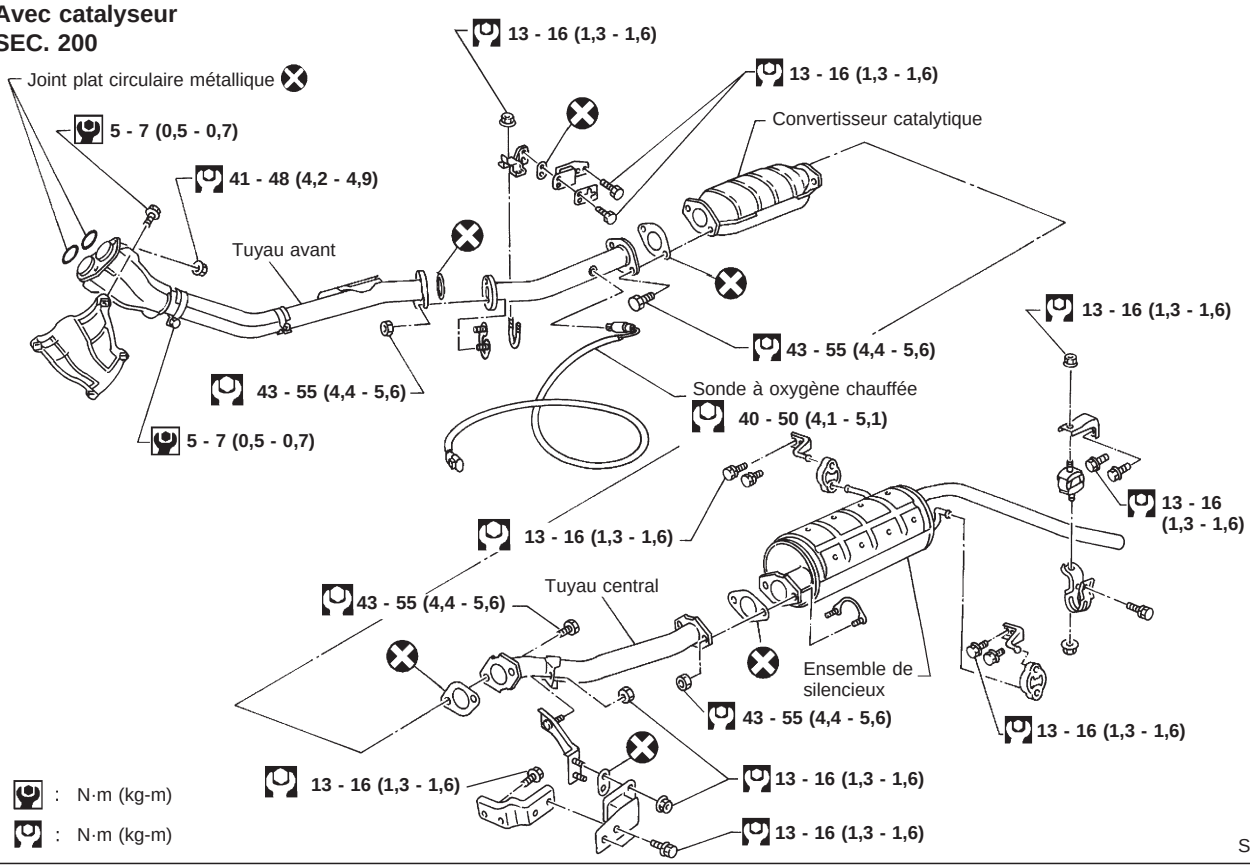

SFE523A

Sans catalyseur
SEC. 200

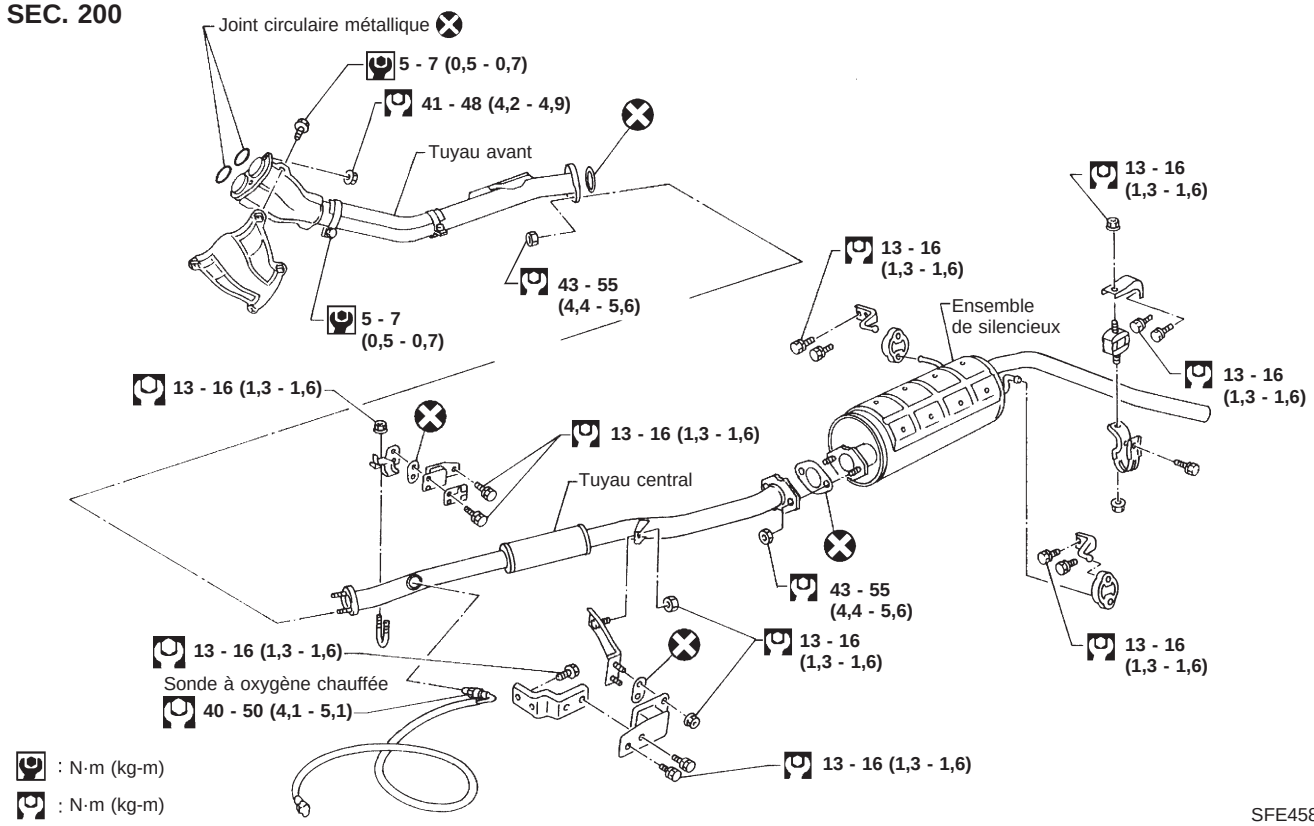

SFE458A

Simpo PDF Merge and Split Unregistered Version - http://www.simpopdf.com

MOTEUR DIESEL

SEC. 200
Modèle à 4 roues motrices

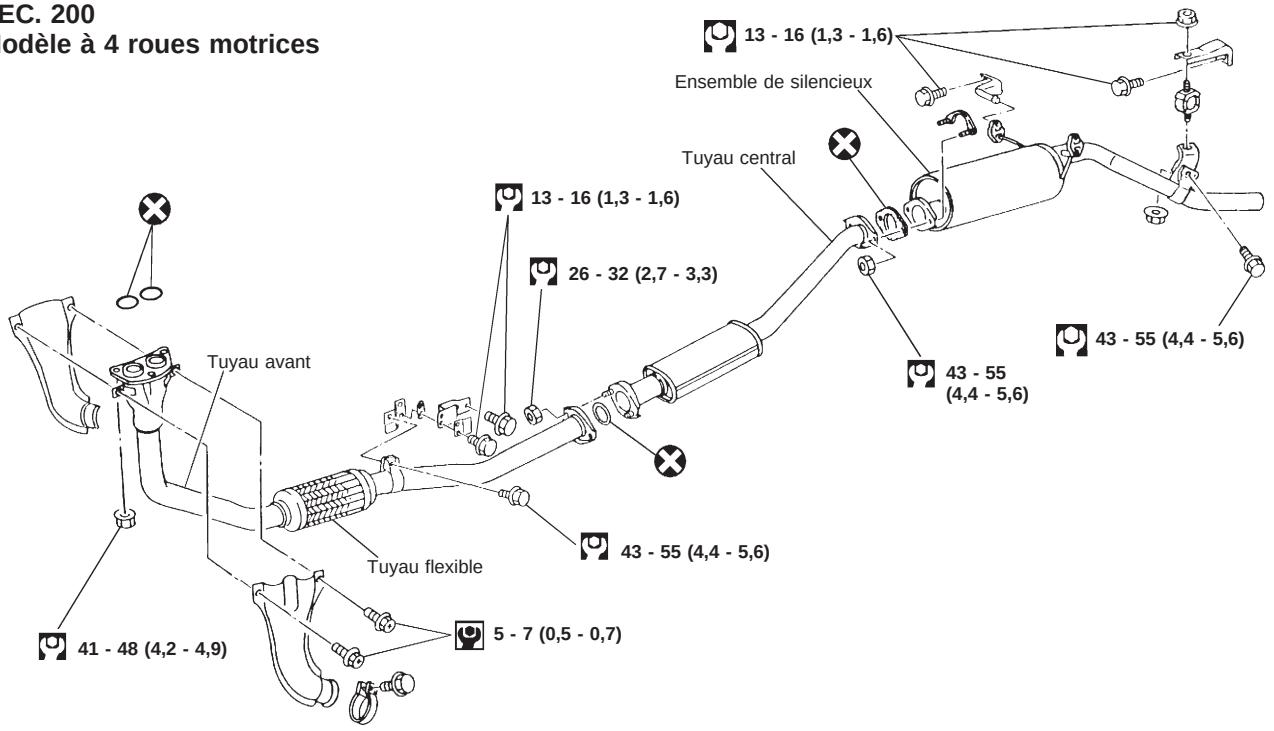

Modèle à 2 roues motrices

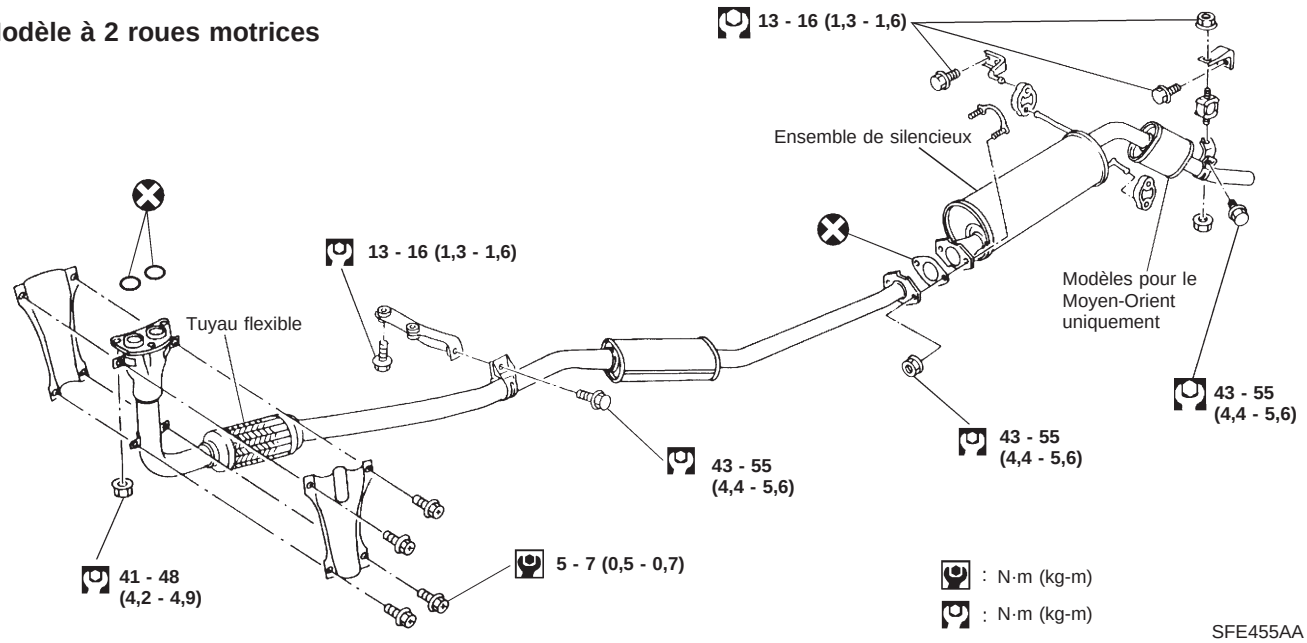

Simpo PDF Merge and Split Unregistered Version - http://www.simpopdf.com

AIDEZ-NOUS À AMÉLIORER CE MANUEL DE REPARATION SUR CD-ROM. MERCI!

Vos commentaires sont importants pour Nissan et nous aideront à améliorer la publication de nos Manuels de Réparation sur CD-ROM. Utilisez ce formulaire pour faire part de vos questions et commentaires concernant la publication des Manuels de Réparation.
Prière d'imprimer ce formulaire et d'y taper ou d'écrire vos commentaires ci-dessous. Vous pouvez l'envoyer par fax ou par E-mail à :

NISSAN EUROPE S.A.S.
S320 Service Engineering
2, Avenue de Denis Papin
ZIPEC - F92350 Le Plessis Robinson
France
Fax: + 33 (0) 1 41 07 16 81

MANUEL DE REPARATION: **Modèle:** _____ **Langue:** _____

Numéro de publication _____

Prière de décrire vos questions et problèmes en détails :

Numéro(s) de page : _____ *Note: Prière d'inclure une photocopie de chaque page, annotée de vos commentaires.*

_____

_____

_____

L'organisation du manuel est-elle claire et facile à suivre?
(entourez votre réponse) **OUI** **NON**

Vos commentaires : _____

_____

_____

_____

_____

Quelle(s) autre(s) information(s) devrai(en)t être inclue(s) aux Manuels de Réparation NISSAN afin de mieux vous guider dans l'entretien et la réparation du véhicule d'un client? _____

_____

_____

_____

Date : _____

Votre nom : _____ **Position :** _____

Concessionnaire : _____ **N° du concessionnaire :** _____

Adresse : _____

Ville : _____ **Pays :** _____

Téléphone : _____

Fax : _____

E-mail : _____

Simpo PDF Merge and Split Unregistered Version - http://www.simpopdf.com

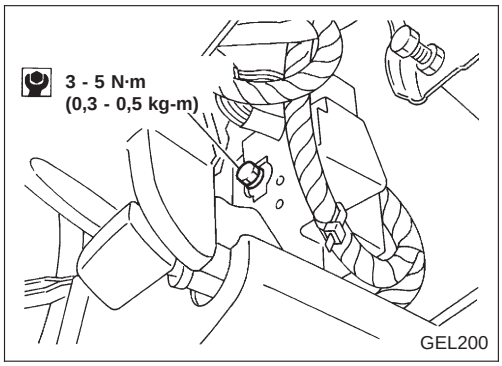

REPOSE

Pour remonter le super raccord multiple, serrer les boulons ‘‘à fond’’ jusqu’à ce que le repère orange apparaisse, puis resserrer au couple spécifié selon les besoins.

: 3 - 5 N·m (0,3 - 0,5 kg-m)

ATTENTION :

Ne pas trop serrer les boulons au risque de les endommager.

Simpo PDF Merge and Split Unregistered Version - http://www.simpopdf.com

Disposition des bornes

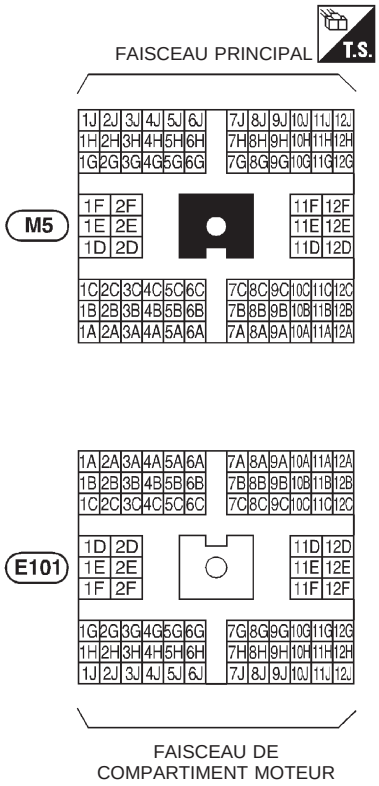

Simpo PDF Merge and Split Unregistered Version - http://www.simpopdf.com

Disposition des bornes

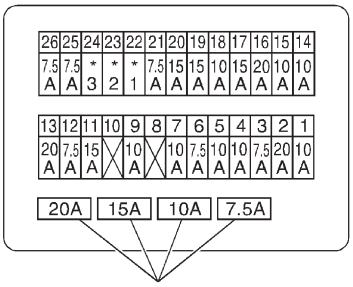

BOITIER A FUSIBLES

HAUT

Fusible de rechange

*1: 3A .... Modèles à 2 roues motrices avec coussin gonflable
10A .... Modèles à 4 roues motrices avec coussin gonflable

*2: 10A .... Modèles équipés des moteurs KA, TD et QD
15A .... Modèles équipés des moteurs NA et Z

*3: 10A .... Modèles équipés des moteurs NA et Z
15A .... Modèle équipé du moteur KA

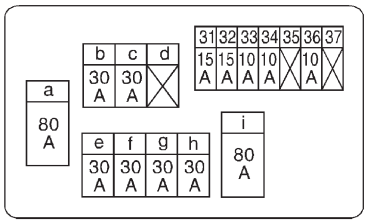

RACCORD A FUSIBLE ET BOITIER A FUSIBLES

AVANT

N° 31 - 37 : Fusible a - i : Raccord à fusible

Simpo PDF Merge and Split Unregistered Version - http://www.simpopdf.com

Disposition des bornes

ECM (Boîtier de contrôle de l'ECCS) M32 (conduite à gauche), F51 (conduite à droite)

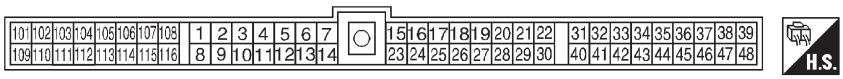

Ensemble d'actionneur ABS E4

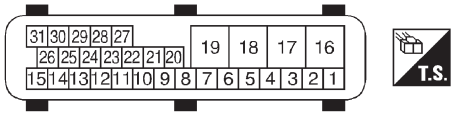

Connecteur de raccord

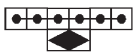

M31 (Conduite à gauche)

F53 (Conduite à droite)

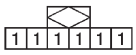

(Gris)

Simpo PDF Merge and Split Unregistered Version - http://www.simpopdf.com

NISSAN

PICKUP

SERIE DES MODELES D22

TABLE DE REFERENCE RAPIDE

GENERALITES	GI
ENTRETIEN	MA
ELEMENTS DU MOTEUR	EM
CIRCUIT DE LUBRIFICATION DU MOTEUR ET CIRCUIT DE REFROIDISSEMENT	LC
SYSTEME DE GESTION MOTEUR	EC
SYSTEMES DE COMMANDE D'ACCELERATEUR, D'ALIMENTATION ET D'ECHAPPEMENT	FE
EMBRAYAGE	CL
BOITE DE VITESSES MANUELLE	MT
BOITE DE TRANSFERT	TF
ARBRE DE TRANSMISSION ET DIFFERENTIEL	PD
ESSIEU ET SUSPENSION AVANT	FA
ESSIEU ET SUSPENSION ARRIERE	RA
SYSTEME DE FREINAGE	BR
DIRECTION	ST
SYSTEME DE RETENUE	RS
CARROSSERIE ET GARNITURE	BT
CHAUFFAGE ET CLIMATISEUR	HA
EQUIPEMENT ELECTRIQUE	EL
TABLE ALPHABETIQUE	IDX

Edition: Février 1998
Imprimé: Juillet 1998 (01)
Numéro de Publication: SM8F-0D22E0E

NISSAN EUROPE S.A.S.

© 1998 NISSAN EUROPE S.A.S. Imprimé aux Pays-Bas
Cette publication ne peut être reproduite, que ce soit en tout ou en partie, sans la permission préalable écrite de Nissan Europe S.A.S, Paris, France.

Simpo PDF Merge and Split Unregistered Version - http://www.simpopdf.com

AVANT-PROPOS

Ce manuel contient les travaux d'entretien et de réparation concernant les véhicules NISSAN PICKUP, série des modèles D22.

A des fins de sécurité et pour que le rendement des véhicules concernés soit optimal, prière de lire ce manuel complètement. Avant de commencer à entreprendre des travaux, il est particulièrement important d'avoir parfaitement assimilé les PRECAUTIONS signalées dans la section GI.

Toutes les informations contenues dans ce manuel sont basées sur les données de production les plus récentes au moment de la réalisation du manuel. Nous nous réservons le droit de modifier les caractéristiques et les méthodes de travail à n'importe quel moment et sans avis préalable.

NOTE IMPORTANTE DE SECURITE

Un entretien correctement effectué est essentiel, aussi bien pour la sécurité des mécaniciens que pour le fonctionnement adéquat du moteur. Les méthodes d'entretien reprises dans ce manuel de réparation sont décrites de telle manière que le travail puisse être effectué en sécurité et avec précision. Les entretiens varient selon les procédures, les connaissances du technicien et l'outillage, ainsi que les pièces disponibles. Dès lors, toute personne utilisant les procédures d'entretien, un outillage ou des pièces qui ne sont pas spécifiquement recommandées par NISSAN doit auparavant être absolument certain que ceci n'entraîne de danger ni pour sa propre sécurité, ni pour celle du moteur.

NISSAN EUROPE S.A.S.

Service Engineering Section

Paris, France

Simpo PDF Merge and Split Unregistered Version - http://www.simpopdf.com

SECTION GI

TABLE DES MATIERES

PRECAUTIONS 1
Précautions pour le système de retenue supplémentaire (SRS) ‘‘COUSSIN GONFLABLE’’ (modèles avec 4 roues motrices) 1
Précautions pour le système de retenue supplémentaire (SRS) ‘‘COUSSIN GONFLABLE’’ (modèles avec 2 roues motrices) 1
Précautions pour le système NATS 2
Précautions générales 3
Précautions pour le système d’injection de carburant multipoint ou pour le moteur commandé par l’ECCS 5
Précautions pour le catalyseur à trois voies (selon modèles) 5
Précautions pour les huiles moteur 6
Précautions pour le carburant 7
Précautions pour la climatisation 7
COMMENT UTILISER CE MANUEL 8
COMMENT LIRE LES SCHEMAS DE CABLAGE 10
Exemple/Schéma de câblage – EXAMPL – 10
Description 12
COMMENT VERIFIER LES BORNES 19
Comment vérifier les connecteurs à l’aide d’une sonde 19
Comment vérifier si les ressorts de contact des bornes sont élargis 20
Inspection des connecteurs étanches 21
Inspection du verrouillage de borne 21
COMMENT ACCOMPLIR UN DIAGNOSTIC EFFICACE EN CAS D’INCIDENT ELECTRIQUE 22
Procédure de travail 22
Essais de simulation des problèmes 23
Inspection du circuit 26
COMMENT LIRE LES ORGANIGRAMMES DANS LES DIAGNOSTICS DES DEFAUTS 33
Comment lire cet organigramme 34
SYSTEME DE VERIFICATION CONSULT 36
Application de la fonction et du système 36
Remplacement de la pile au lithium 36
Equipement de vérification 37
Procédure de charge 38
Circuit de connecteur de liaison de données (DLC) pour CONSULT 38
IDENTIFICATIONS 39
Variantes de modèles 39
Numéro d’identification 42
Dimensions 46
Roues et pneus 48
POINTS DE LEVAGE ET DE REMORQUAGE PAR UNE DEPANNEUSE 49
Cric pantographe 49
Cric mécanique 50
Cric rouleur et chandelles de sécurité 51
Elévateur à 2 colonnes 52
Remorquage par une dépanneuse 53
Points de remorquage 55
COUPLE DE SERRAGE DES BOULONS STANDARD 56
LISTE DE TERMINOLOGIE SAE J1930 57
Liste de terminologie SAE J1930 57

Simpo PDF Merge and Split Unregistered Version - http://www.simpopdf.com

Pour que l'entretien puisse être exécuté en toute sécurité et de manière correcte, il importe que les précautions suivantes soient rigoureusement respectées. Ces précautions ne sont pas indiquées dans chaque section.


SGI646

Précautions pour le système de retenue supplémentaire (SRS) ''COUSSIN GONFLABLE'' (modèles avec 4 roues motrices)

Utilisé avec une ceinture de sécurité, le coussin gonflable du système de retenue supplémentaire contribue à réduire les risques et la gravité des blessures subies par le conducteur en cas de collision frontale. Le système de retenue supplémentaire se compose d'un module de coussin gonflable (situé dans le moyeu du volant), d'un boîtier de capteurs de diagnostic, d'un témoin avertisseur, d'un faisceau de câblage et d'un câble spiralé. Les informations nécessaires à l'entretien sans danger du système se trouvent à la **section RS** de ce manuel de réparation.

AVERTISSEMENT :

- **Pour ne pas affecter le fonctionnement du SRS, ce qui augmenterait les risques de blessures graves ou mortelles en cas de collision entraînant le déploiement du coussin gonflable (air bag), toutes les opérations d'entretien doivent être effectuées par un concessionnaire NISSAN agréé.**
- **Un entretien incorrect, y compris une mauvaise dépose ou repose du SRS, pourra entraîner des risques de blessures dues au déploiement accidentel du système.**
- **Ne pas utiliser d'équipement d'essai électrique sur les circuits connexes du SRS sauf sur indication de ce manuel de réparation. Les faisceaux de câblage électrique du SRS sont équipés d'une gaine d'isolation jaune soit juste devant les connecteurs de faisceau, soit sur le faisceau tout entier pour une identification plus rapide.**

Précautions pour le système de retenue supplémentaire (SRS) ''COUSSIN GONFLABLE'' (modèles avec 2 roues motrices)

Utilisé avec une ceinture de sécurité, le coussin gonflable (air bag) du système de retenue supplémentaire contribue à réduire les risques ou la gravité des blessures subies par le conducteur en cas de collision frontale. Le système de retenue supplémentaire se compose d'un module de coussin gonflable (situé dans le moyeu du volant), d'un boîtier de capteurs de diagnostic, d'un témoin avertisseur et d'un câble spiralé. Les informations nécessaires à l'entretien sans danger du système se trouvent à la **section RS** de ce manuel de réparation.

Simpo PDF Merge and Split Unregistered Version - http://www.simpopdf.com

Précautions pour le système de retenue supplémentaire (SRS) ‘‘COUSSIN GONFLABLE’’ (modèles avec 2 roues motrices) (Suite)

AVERTISSEMENT :

- **Pour ne pas affecter le fonctionnement du SRS, ce qui augmenterait les risques de blessures graves ou mortelles en cas de collision entraînant le déploiement du coussin gonflable (air bag), toutes les opérations d’entretien doivent être effectuées par un concessionnaire NISSAN agréé.**
- **Un entretien incorrect, y compris une mauvaise dépose ou repose du SRS, pourra entraîner des risques de blessures dues au déploiement accidentel du système.**
- **Ne pas utiliser d’équipement d’essai électrique sur les circuits connexes du SRS.**



SGI916

Précautions pour le système NATS

Système NATS (système antivol NISSAN)

Le système NATS immobilisera le moteur si quelqu’un tente de le démarrer sans utiliser une clé NATS enregistrée.
Les codes d’identification des deux clés de contact d’origine ont été enregistrés pour le système NATS.
Le témoin de sécurité NATS est situé sur le tableau de bord. Le témoin clignote lorsque le contact d’allumage est placé sur ‘‘OFF’’ ou ‘‘Acc’’. De cette façon, le système NATS indique à toute personne extérieure que le véhicule est équipé d’un système antivol.

- Moteur à essence :
  Lorsque le système NATS détecte une panne, le témoin de défaut (MIL) clignote.
  Ce clignotement indique que le système antivol ne fonctionne pas ; une réparation rapide s’impose alors.
- Moteur diesel :
  Lorsque le système NATS détecte une panne alors que le moteur est en marche ou que le contact d’allumage est sur ‘‘ON’’, le témoin NATS s’allume.
  Ce clignotement indique que le système antivol ne fonctionne pas ; une réparatin rapide s’impose alors.
- Le matériel CONSULT et le logiciel CONSULT NATS sont nécessaires à l’entretien du systène NATS (diagnostics des défauts, initialisation du système et enregistrement de numéros d’identification de clés NATS supplémentaires).
  Pour les procédures d’initialisation du NATS et d’enregistrement du numéro d’identification de la clé de contact NATS, consulter le Manuel d’utilisation CONSULT NATS.

Le logiciel CONSULT NATS (carte programme et manuel d’utilisation) doit donc être gardé strictement confidentiel de façon à maintenir l’intégrité de la fonction antivol.

- Lors de la réparation d’une panne du système NATS (diagnostics des défauts, initialisation du système ou enregistre-

Simpo PDF Merge and Split Unregistered Version - http://www.simpopdf.com

ment d'autres numéros d'identification de clés de contact NATS), il peut s'avérer nécessaire de réenregistrer le numéro d'identification de la clé originale.
Un maximum de quatre codes d'identification de clés peut être enregistré dans le système NATS.

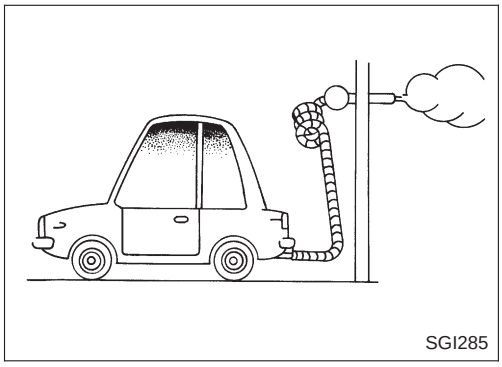
SGI285

Précautions générales

- Ne pas faire tourner le moteur pendant une période prolongée sans une bonne ventilation des gaz d'échappement.
  La zone de l'atelier doit être bien ventilée et ne pas comporter de matériaux inflammables. Manipuler avec précaution les produits inflammables ou toxiques tels que l'essence, le gaz réfrigérant, etc. Lorsqu'on travaille dans une fosse ou dans une zone close, bien aérer la zone avant de travailler avec des matériaux dangereux.
  Ne pas fumer pendant que l'on travaille sur le véhicule.

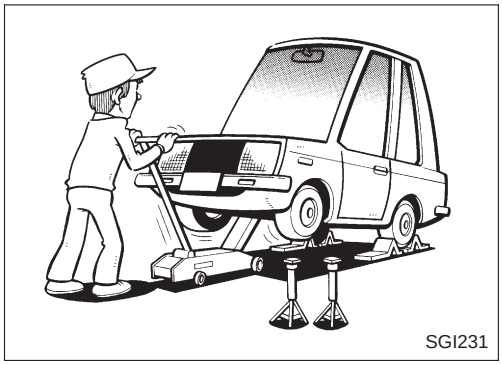
SGI231

- Avant de mettre le véhicule sur cric, mettre des cales ou d'autres pièces de blocage au niveau des roues pour empêcher le déplacement du véhicule. Après levage avec un cric, caler le véhicule avec des chandelles de sécurité aux endroits adéquats désignés pour le levage avant de travailler sur le véhicule.
  Toutes ces opérations doivent se faire sur une surface horizontale.
- Lors de la dépose d'un composant lourd, comme le moteur ou l'ensemble boîte-pont/boîte de vitesses, prendre garde de ne pas perdre l'équilibre et de ne pas les laisser tomber. Veiller également à ce qu'ils ne viennent pas heurter les pièces voisines et tout particulièrement les tuyaux de freinage et le maître-cylindre.

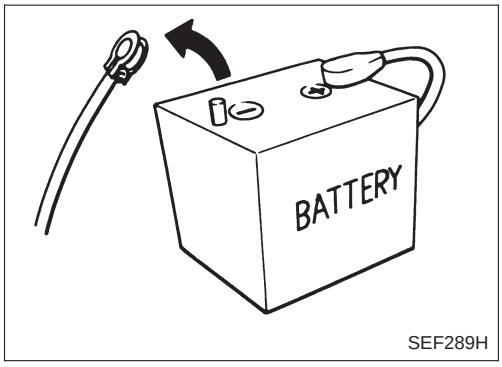

SEF289H

- Avant de commencer des réparations qui ne nécessitent pas d'alimentation de la batterie :
  Couper le contact.
  Débrancher la borne négative de la batterie.

Simpo PDF Merge and Split Unregistered Version - http://www.simpopdf.com

Précautions générales (Suite)

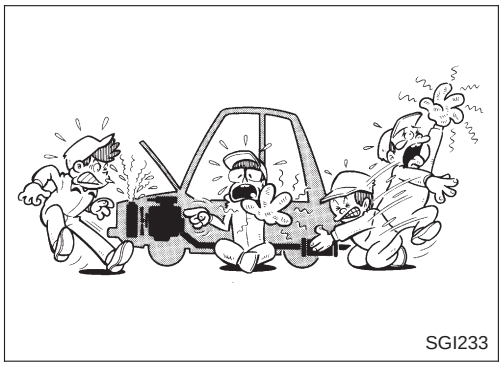
SGI233

- Pour éviter de graves brûlures :
  Eviter tout contact avec les pièces métalliques chaudes.
  Ne pas enlever le bouchon du radiateur lorsque le moteur est chaud.

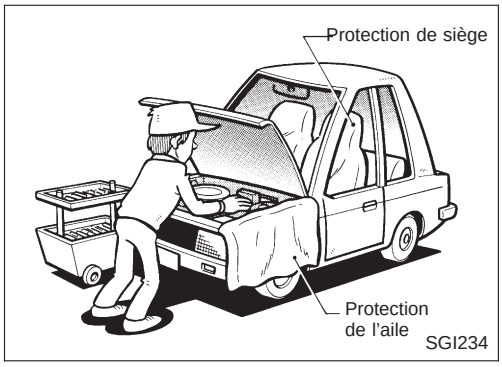

SGI234

- Avant l'entretien du véhicule :
  Protéger les ailes, les rembourrages et le tapis de sol au moyen de recouvrements appropriés.
  Veiller à ne pas érafler la peinture avec des clés, boucles ou boutons.
- Avant inspection ou montage, nettoyer toutes les pièces démontées à l'aide du liquide ou du solvant indiqué.
- Remplacer par des pièces neuves les joints d'étanchéité, les joints plats, les garnitures, les joints toriques, les rondelles de bloquage, les goupilles fendues, les écrous autobloquants, etc.
- Remplacer les cuvettes interne et externe des roulements à rouleaux coniques et des roulements à aiguilles sous forme d'ensemble.
- Disposer les pièces démontées en fonction de leur emplacement et de leur ordre de montage.
- Ne pas toucher les bornes des composants électriques qui contiennent des micro-ordinateurs (tels que les ECM).
  L'électricité statique pourrait endommager les composants électroniques internes.
- Après avoir débranché les flexibles de dépression ou d'air, fixer une étiquette pour y indiquer les bons raccordements.
- N'utiliser que les liquides et lubrifiants spécifiés dans ce manuel.
- Le cas échéant, utiliser des adhésifs et des enduits d'étanchéité approuvés, ou des produits équivalents.
- Utiliser les outils et l'outillage spécial conseillés, quand ils sont spécifiés pour effectuer des réparations correctes, sûres et efficaces.
- Lors de réparations des circuits d'alimentation, d'huile, d'eau, de dépression ou d'échappement, vérifier l'absence de fuites sur les canalisations en question.
- Evacuer de la manière appropriée l'huile ou le solvant vidangé qui a été utilisé pour nettoyer les pièces.

AVERTISSEMENT :
Pour empêcher l'ECM d'enregistrer les codes de défaut de diagnostic, ne pas débrancher par inadvertance les connecteurs de faisceau qui dépendent des systèmes ECCS et TCM (module de commande de la transmission). Les

Simpo PDF Merge and Split Unregistered Version - http://www.simpopdf.com

connecteurs doivent être débranchés uniquement lorsque l'on travaille dans la PROCEDURE DE TRAVAIL des DIAGNOSTICS DES DEFAUTS à la section EC.



Précautions pour le système d'injection de carburant multipoint ou pour le moteur commandé par l'ECCS

- Avant de brancher ou de débrancher un connecteur de faisceau du système d'injection de carburant multipoint ou de l'ECM (boîtier de contrôle de l'ECCS) :
  Mettre le contact d'allumage sur la position ''OFF''.
  Débrancher la borne négative de la batterie.
  L'ECM risquerait sinon d'être endommagé.
- Avant de débrancher la canalisation sous pression de carburant entre la pompe d'alimentation et les injecteurs, s'assurer que l'on a dépressurisé.
- Veiller à ne pas heurter de composants tels que l'ECM et le débitmètre d'air.

Précautions pour le catalyseur à trois voies (selon modèles)

Si une grande quantité d'essence non brûlée passe dans le catalyseur, la température du catalyseur sera excessive. Pour empêcher ceci, suivre les instructions ci-dessous :

- Utiliser seulement de l'essence sans plomb. Le carburant au plomb endommagera sérieusement le catalyseur à trois voies.
- Lorsqu'on contrôle l'étincelle d'allumage ou que l'on mesure le taux de compression du moteur, les essais doivent être effectués rapidement et en cas de besoin seulement.
- Ne pas faire tourner le moteur lorsque le niveau du carburant dans le réservoir est bas ; sinon le moteur pourrait avoir des ratés d'allumage et le catalyseur risquerait d'être endommagé.

Ne pas placer le véhicule sur un matériau inflammable. Conserver les matériaux inflammables à l'écart du tuyau d'échappement et du catalyseur à trois voies.

Simpo PDF Merge and Split Unregistered Version - http://www.simpopdf.com

Précautions pour les huiles moteur

Un contact prolongé et répété avec des huiles moteur usagées peut entraîner un cancer de la peau. Eviter tout contact direct entre l'huile usagée et la peau.
En cas de contact avec la peau, laver soigneusement avec du savon ou un produit de nettoyage pour les mains le plus rapidement possible.

PRECAUTIONS POUR LA PROTECTION DE LA SANTE

- Eviter les contacts prolongés et répétés avec les huiles et tout particulièrement les huiles moteur usagées.
- Porter des vêtements de protection, y compris des gants imperméables chaque fois que possible.
- Ne pas mettre de chiffons graisseux dans ses poches.
- Eviter de tacher les vêtements, plus particulièrement les sous-vêtements, avec de l'huile.
- Ne pas porter de vêtements très tachés ou de chaussures imprégnées d'huile. Les bleus de travail doivent être lavés régulièrement.
- Soigner immédiatement les coupures et les plaies ouvertes.
- Appliquer des crèmes de protection avant le début de chaque période de travail pour faciliter le nettoyage de la peau.
- Nettoyer à l'eau savonneuse pour s'assurer que toute l'huile est enlevée (l'emploi de produits de nettoyage spéciaux et de brosses à ongles est conseillé). Les préparations contenant de la lanoline remplacent les agents gras naturels qui ont été supprimés.
- Ne pas nettoyer la peau à l'aide d'essence, de kérosène, de diesel, de gasoil, de diluants ou de solvants.
- Si des troubles de la peau se manifestent, consulter un médecin immédiatement.
- Chaque fois que possible, dégraisser les pièces avant de les manipuler.
- Chaque fois qu'il y a un risque de contact avec les yeux, porter une protection oculaire comme par exemple des lunettes de chimie ou des protections faciales. De plus, l'atelier doit comporter des installations permettant le nettoyage des yeux.

PRECAUTIONS POUR LA PROTECTION DE L'ENVIRONNEMENT

La combustion de l'huile moteur usagée dans des petits radiateurs ou chaudières n'est recommandée que pour les unités de conception approuvées. Le système de chauffage doit être conforme aux réglementations en vigueur sur la pollution des petits brûleurs de moins de 0,4 MW. En cas de doute, vérifier auprès du service responsable et/ou du fabricant de l'appareil agréé.
Se débarrasser des huiles et des filtres à huile usagés auprès des sites agréés d'élimination des déchets ou auprès de l'organisme de récupération des déchets pétroliers par le circuit des sociétés agréées d'élimination des déchets. En cas de doute, demander conseil aux autorités locales quant aux moyens d'élimination.
Il est illégal de verser les huiles usagées sur le sol, dans les égouts ou dans les cours d'eau.
Les réglementations sur la pollution de l'environnement varient selon les pays.

Simpo PDF Merge and Split Unregistered Version - http://www.simpopdf.com

Précautions pour le carburant

MOTEUR A ESSENCE :

Modèles avec catalyseur à trois voies ... essence sans plomb ayant un indice d'octane supérieur à 91 (RON)

ATTENTION :

Ne pas utiliser d'essence contenant du plomb. Ne jamais utiliser de carburant contenant du plomb pour ne pas endommager le catalyseur à trois voies.

Sauf modèles ci-dessus ... essence sans plomb ou plombée ayant un indice d'octane supérieur à 88 (RON)

Utiliser du carburant sans plomb si cela est indiqué sur le volet du bouchon du réservoir.

MOTEUR DIESEL* :

Pour l'Europe : Carburant diesel ayant un indice de cétane supérieur à 50

Sauf pour l'Europe : Carburant diesel ayant un indice de cétane supérieur à 45

* Si deux types de carburant diesel sont disponibles, utiliser le plus approprié, été ou hiver, en fonction des conditions atmosphériques suivantes.

- Au-dessus de −7°C ... carburant diesel de type été.
- En dessous de −7°C ... carburant diesel de type hiver.

ATTENTION :

- **Ne pas utiliser de carburant domestique, essence ou autres carburants dans un moteur diesel. De tels carburants pourraient endommager le moteur.**
- **Ne pas utiliser de carburant d'été à des températures inférieures à −7°C. De la cire peut se former dans le carburant par temps froid, empêchant alors le moteur de bien tourner.**
- **Ne pas ajouter d'essence ou d'autres carburants au carburant diesel.**

Précautions pour la climatisation

Utiliser un matériel agréé de récupération du liquide de refroidissement chaque fois que le système de climatisation doit être vidangé. Consulter la section HA (''Procédure d'entretien du HFC-134a (R-134a)'', ''PROCEDURES D'ENTRETIEN'') pour des instructions plus spécifiques.

Simpo PDF Merge and Split Unregistered Version - http://www.simpopdf.com

- Un **INDEX** est fourni à la fin de ce Manuel afin de pouvoir trouver rapidement le sujet et la page que l'on recherche.
- La première page comporte une **TABLE DE REFERENCE RAPIDE** avec plusieurs carrés noirs (ex. BR). Pour trouver rapidement la première page de la section souhaitée, rechercher le carré correspondant.
- Les **TABLES DES MATIERES** sont indiquées en première page de chaque section.
- Le **TITRE** se trouve en haut de chaque page ; il indique soit une pièce, soit un système particulier.
- Le **NUMERO DE PAGE** de chaque section se compose de deux lettres indiquant la section suivies d'un numéro (ex ''BR-5'').
- Les **GRANDES ILLUSTRATIONS** sont des vues éclatées (voir ci-dessous) contenant les couples de serrage, les points de graissage, le numéro de section du **CATALOGUE DES PIECES DETACHEES** (ex. SEC. 440) ainsi que d'autres informations nécessaires pour des réparations éventuelles.
  Les illustrations ne doivent être utilisées qu'à titre de référence pour la réalisation d'opérations d'entretien. Pour commander des pièces, consulter le **CATALOGUE DES PIECES DETACHEES** approprié.

''Exemple''
SEC. 440

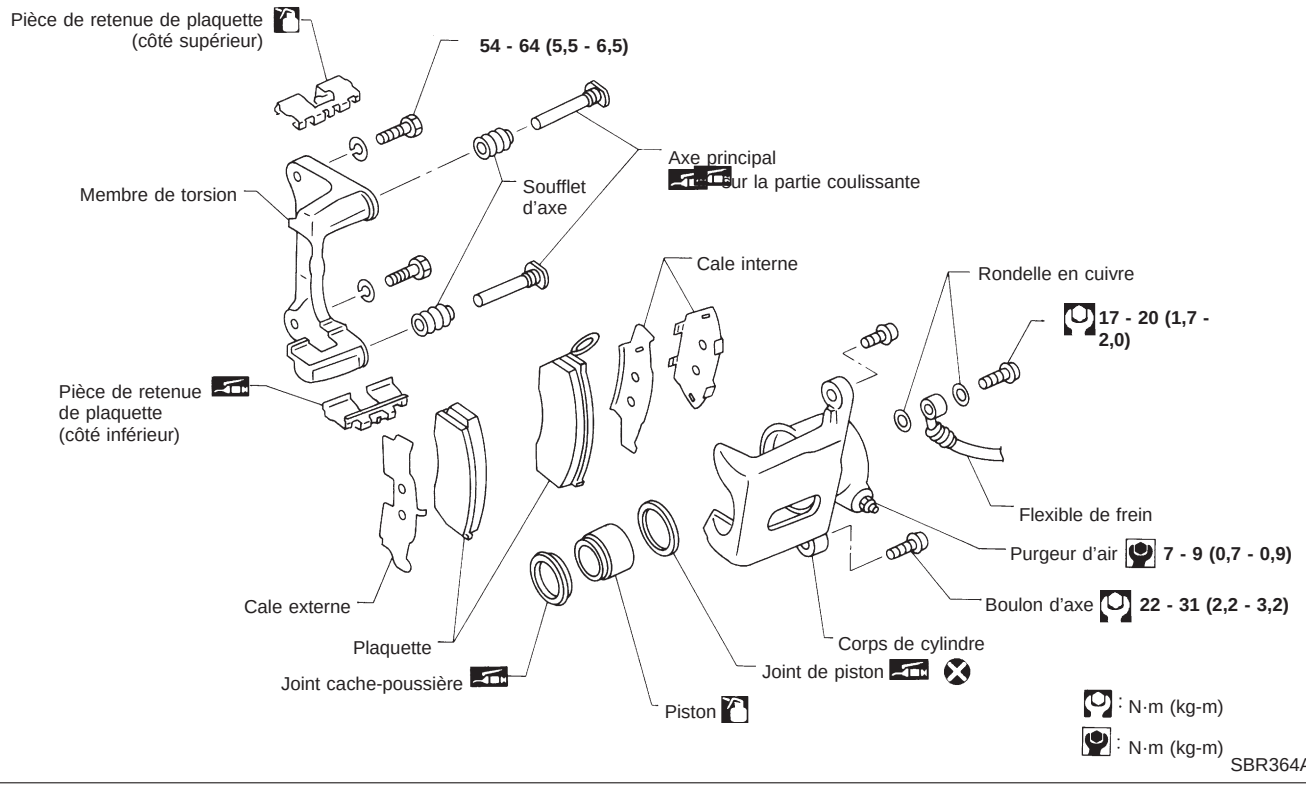

- Les **PETITES ILLUSTRATIONS** montrent des points importants tels que le contrôle, l'emploi d'outils spéciaux, un tour de main particulier, une étape difficile ou délicate qui n'est pas montrée dans les grandes illustrations précédentes.
  Le remontage, le contrôle et les réglages des organes de construction complexes tels que la boîte/pont ou boîte de vitesses automatique, etc. sont, au besoin, détaillés étape par étape.

Simpo PDF Merge and Split Unregistered Version - http://www.simpopdf.com

- Les **SYMBOLES ET ABREVIATIONS** suivants sont employés :

,	:	Couple de serrage
	:	Enduire de graisse. Utiliser la graisse à usages multiples recommandée, sauf indication contraire.
	:	Enduire d'huile.
	:	Appliquer du produit d'étanchéité.
	:	Contrôler.
	:	Toujours remplacer après chaque démontage.
Ⓟ	:	Mettre de la vaseline.
ATF	:	Enduire d'huile pour boîte automatique.
★	:	Sélectionner l'épaisseur adéquate.
☆	:	Réglage nécessaire.
SDS	:	Caractéristiques et valeurs de réglage
LH, RH	:	Gauche, Droite
FR, RR	:	Avant, arrière
T/M	:	Boîte-pont/boîte de vitesses manuelle
T/A	:	Boîte-pont/boîte de vitesses automatique
4x4,		
4WD	:	4 roues motrices
2WD	:	2 roues motrices
C/A	:	Climatiseur
P/S	:	Direction assistée
SST	:	Outillage spécial
SAE	:	Society of Automotive Engineers, Inc.
ATF	:	Huile pour boîte automatique
D_1	:	Position D, première vitesse
D_2	:	Position D, deuxième vitesse
D_3	:	Position D, troisième vitesse
D_4	:	Position D, quatrième vitesse
OD	:	Surmultipliée
2_2	:	Position 2, deuxième vitesse
2_1	:	Position 2, première vitesse
1_2	:	Position 1, deuxième vitesse
1_1	:	Position 1, première vitesse

- Les **MESURES** données dans ce Manuel sont d'abord exprimées en UNITES SI (système d'unité international) et elles sont ensuite exprimées dans le système métrique.
  ''Exemple''
  Couple de serrage :
  59 - 78 N·m (6,0 - 8,0 kg-m)
- Les **DIAGNOSTICS DES DEFAUTS** se trouvent dans les sections traitant des composants et systèmes complexes.
- Les **CARACTERISTIQUES ET VALEURS DE REGLAGE** se trouvent à la fin de chaque section, pour retrouver rapidement les données.
- Les instructions **AVERTISSEMENT** et **ATTENTION** vous indiquent les opérations à faire pour éviter des dommages corporels ou matériels.
  AVERTISSEMENT indique un risque de dommages corporels si les instructions ne sont pas respectées.
  ATTENTION indique un risque de dégâts matériels si les instructions ne sont pas respectées.
  Les **INSTRUCTIONS EN CARACTERES GRAS** autres que **AVERTISSEMENT** et **ATTENTION** fournissent des renseignements utiles.

Simpo PDF Merge and Split Unregistered Version - http://www.simpopdf.com

Exemple/Schéma de câblage – EXAMPL –

- Voir la ‘‘Description’’ à la page GI-12.

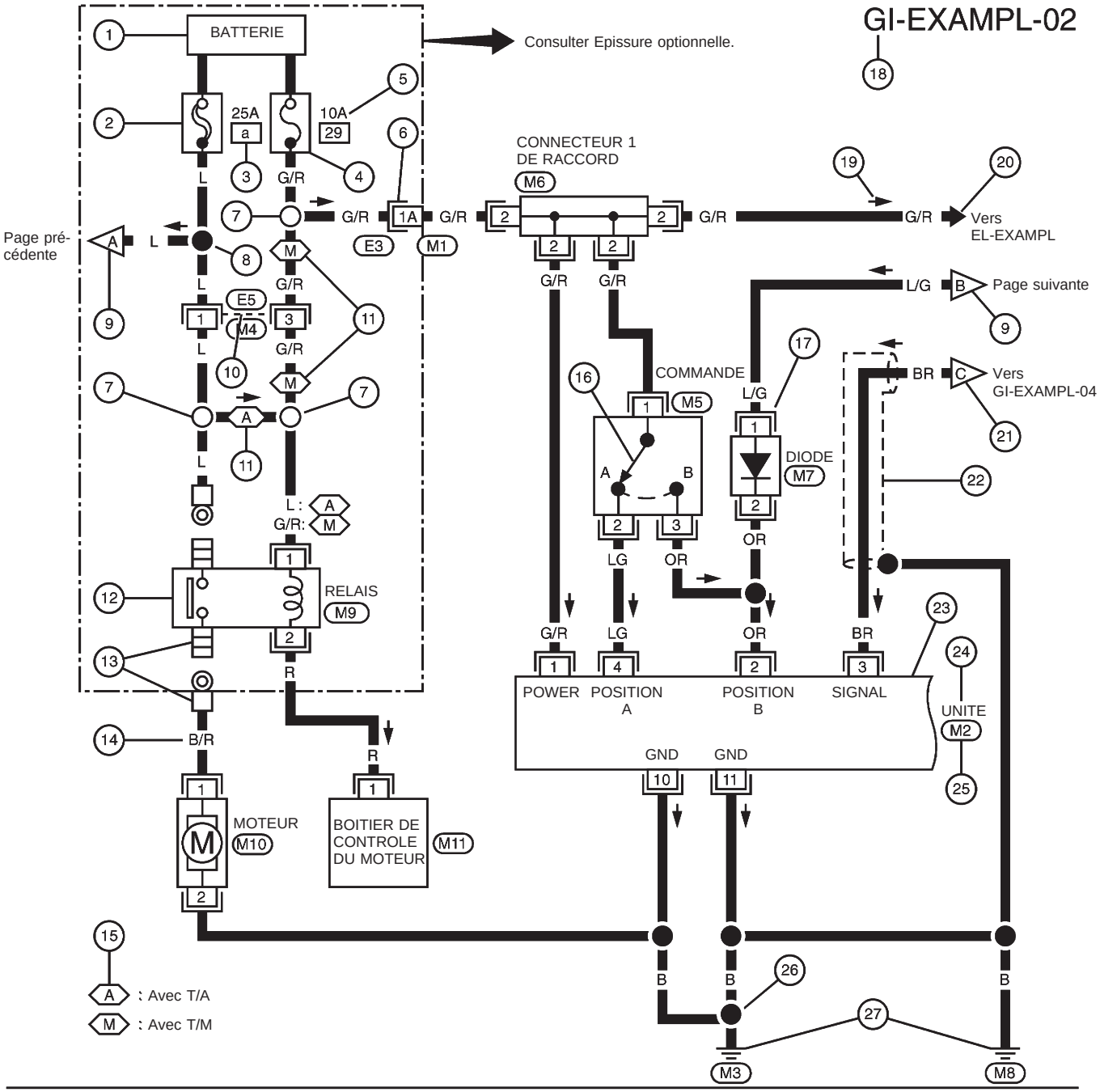

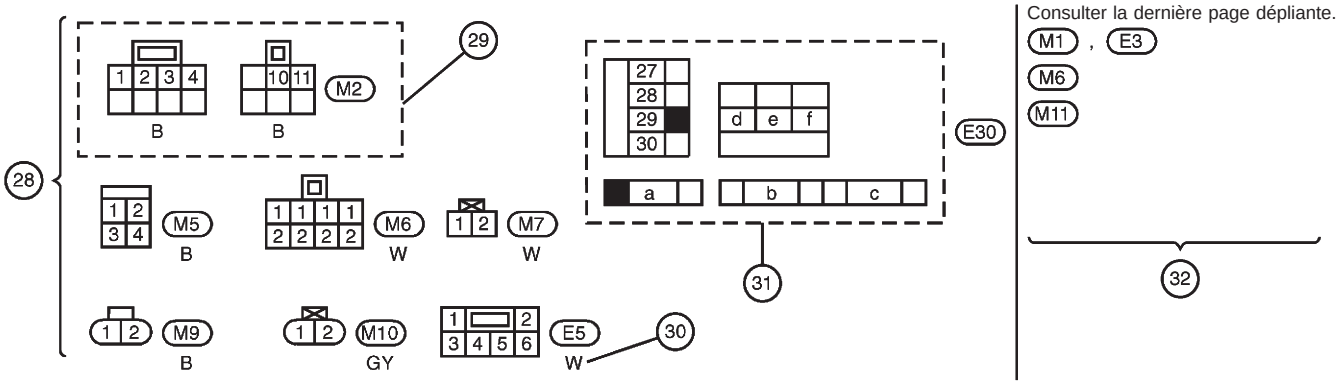

YGI001

Simpo PDF Merge and Split Unregistered Version - http://www.simpopdf.com

Exemple/Schéma de câblage – EXAMPL – (Suite)

EPISSURE OPTIONNELLE

Epissure optionnelle

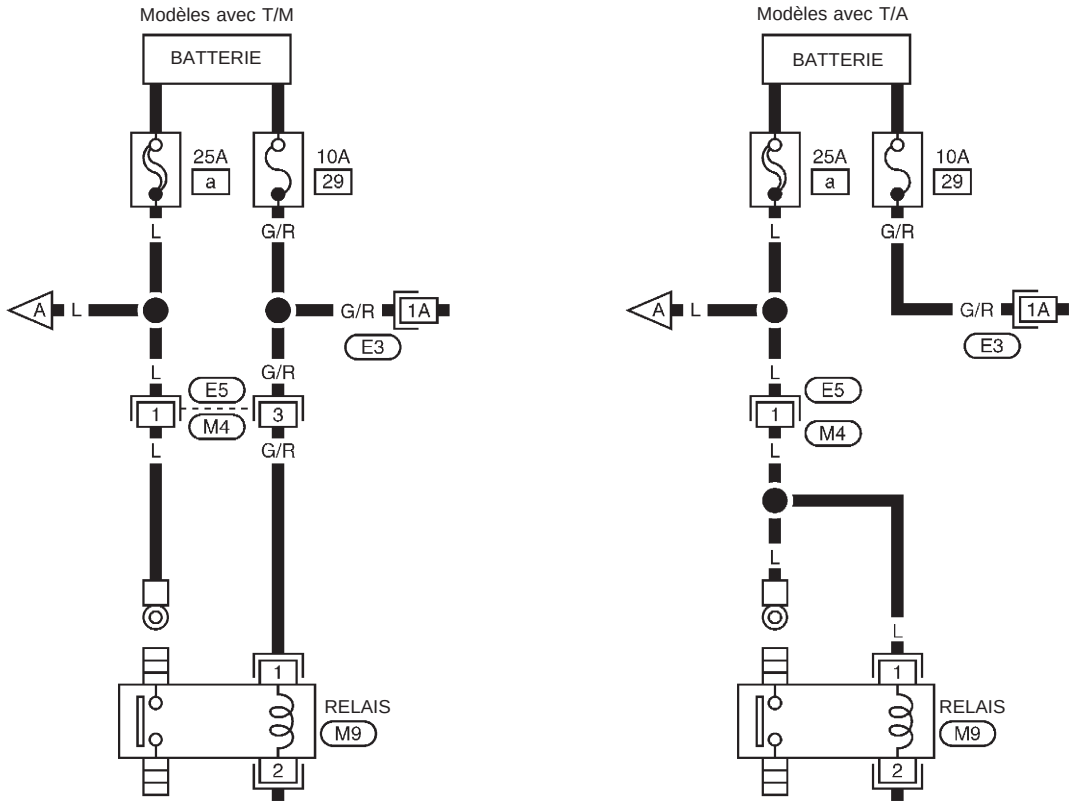

SGI942

Simpo PDF Merge and Split Unregistered Version - http://www.simpopdf.com

Description

Numéro	Elément	Description
①	Condition d'alimentation électrique	● Ceci indique la condition où le circuit reçoit une tension de batterie positive (peut être opéré).
②	Raccord à fusible	● La ligne double indique qu'il s'agit d'un raccord à fusible. ● Le cercle non hachuré indique l'arrivée de courant, et le cercle hachuré la sortie de courant.
③	Emplacement du fusible/ raccord à fusible	● Ceci indique l'emplacement du raccord à fusible ou du fusible dans le raccord à fusible ou la boîte à fusibles. Pour connaître la disposition, consulter la section EL (''DISPOSITION DE L'ALIMENTATION ELECTRIQUE'').
④	Fusible	● La ligne simple indique qu'il s'agit d'un fusible. ● Le cercle non hachuré indique l'arrivée de courant, et le cercle hachuré la sortie de courant.
⑤	Ampérage	● Ceci indique l'ampérage du raccord à fusible ou du fusible.
⑥	Connecteurs	● Ceci indique que le connecteur (E3) est femelle et que le connecteur (M1) est mâle. ● Le fil G/R est situé dans la borne A1 des deux connecteurs. ● Les numéros de bornes comportant une référence alphanumérique (1A, 5B, etc.) indiquent la présence de connecteurs de type super raccord multiple (SMJ). Consulter la page GI-18.
⑦	Epissure optionnelle	● Le cercle non hachuré indique que l'épissure est optionnelle et dépend de l'application du véhicule.
⑧	Epissure	● Le cercle hachuré indique que l'épissure figure en permanence sur le véhicule.
⑨	Page adjacente	● Cette flèche indique que le circuit continue sur la page adjacente. ● Le A correspondra au A de la page précédente ou suivante.
⑩	Connecteur commun	● Les lignes en pointillé reliant les bornes indiquent que ces bornes font partie du même connecteur.
⑪	Abréviation d'option	● Indique que le circuit est optionnel, et dépend de l'application du véhicule.
⑫	Relais	● Montre une représentation interne du relais. Pour plus de détails, consulter la section EL (''RELAIS NORMALISES'').
⑬	Connecteurs	● Indique que le connecteur est relié à la carrosserie ou à une borne par un boulon ou un écrou.
⑭	Couleur du câble	● Ceci indique le code de couleur du câble. B = Noir — BR = Marron W = Blanc — OR = Orange R = Rouge — P = Rose G = Vert — PU = Violet L = Bleu — GY = Gris Y = Jaune — SB = Bleu ciel LG = Vert clair — CH = Marron foncé DG = Vert foncé Dans le cas d'un fil de couleur rayé, la couleur de base est indiquée d'abord, suivi de la couleur de la rayure : Exemple : L/W = Bleu à rayures blanches
⑮	Description d'option	● Ceci fournit une description de l'abréviation d'option utilisée sur la page.
⑯	Interrupteur	● Indique qu'il y a continuité entre les bornes 1 et 2 lorsque l'interrupteur est sur la position A. Il y a continuité entre les bornes 1 et 3 lorsque l'interrupteur est sur la position B.
⑰	Composants d'un ensemble	● La borne du connecteur dans le composant indique qu'il s'agit d'un ensemble incorporé à un faisceau.

Simpo PDF Merge and Split Unregistered Version - http://www.simpopdf.com

Description (Suite)

Numéro	Elément	Description
⑱	Code de cellule	● Ainsi, chaque page du schéma de câblage peut être identifiée par section, système et numéro de page du schéma de câblage.
⑲	Flèche de trajet du courant	● La flèche représente le trajet du courant électrique surtout lorsque le sens de trajet normal (verticalement vers le bas ou horizontalement de gauche à droite) est difficile à suivre. ● Une flèche double ‘‘◀▶’’ indique que le courant peut circuler dans les deux sens selon le fonctionnement du circuit.
⑳	Branchement du système	● Ceci indique que le circuit est relié à un autre système identifié par un code de cellule (section et circuit).
㉑	Page adjacente	● Cette flèche indique que le circuit se poursuit sur une autre page identifiée par un code de cellule. ● Le C correspondra au C d’une autre page à l’intérieur du système, autre que la page précédente ou suivante.
㉒	Ligne blindée	● La ligne entourée d’un cercle en pointillé indique un fil blindé.
㉓	Case de composant entourée d’une ligne ondulée	● Indique qu’une autre partie du composant est également montrée sur une autre page (indiquée par une ligne ondulée) du système.
㉔	Nom du composant	● Ceci indique le nom d’un composant.
㉕	Numéro de connecteur	● Ceci indique le numéro du connecteur. ● La lettre indique le faisceau dans lequel se situe le connecteur. Exemple : **M** : faisceau principal. Pour plus de détails et pour localiser le connecteur, consulter la section EL (‘‘Faisceau principal’’, ‘‘DISPOSITION DES FAISCEAUX’’). Une grille de coordonnées est fournie pour faciliter l’identification des connecteurs dans le cas de faisceaux complexes.
㉖	Masse (GND)	● La ligne épissée et mise à la masse sous la couleur du câble, indique que la ligne de masse est épissée au connecteur de masse.
㉗	Masse (GND)	● Ceci indique la mise à la masse.
㉘	Vues de connecteurs	● Cette zone montre les faces des composants côté connecteur dans le schéma de câblage.
㉙	Composant commun	● Les connecteurs entourés d’une ligne brisée indiquent qu’ils appartiennent au même composant.
㉚	Couleur de connecteur	● Ceci indique le code de couleur du connecteur. Pour la signification du code, se référer aux codes de couleur des fils, au numéro ⑭ de ce tableau.
㉛	Boîte à fusibles et de raccords à fusibles	● Ceci indique la disposition du/des raccord(s) à fusible(s) et du/des fusible(s), utilisée pour identifier les connecteurs au chapitre ‘‘DISPOSITION DE L’ALIMENTATION ELECTRIQUE’’ à la section EL. Le carré non hachuré montre l’arrivée de courant, et le carré hachuré la sortie de courant.
㉜	Zone de référence	● Ceci indique qu’il existe de plus amples informations sur le super raccord multiple (SMJ) et les connecteurs de raccord (J/C) à la page dépliante. Consulter la page GI-18 pour plus de détails.

Simpo PDF Merge and Split Unregistered Version - http://www.simpopdf.com

Description (Suite)

SYMBOLES DE CONNECTEURS

La plupart des symboles de connecteurs figurant sur les schémas de câblage sont représentés du côté borne.

- Les symboles des connecteurs représentés côté borne sont entourés d'un trait simple et suivis d'une flèche indiquant le sens 

.
- Les symboles des connecteurs représentés côté faisceau sont entourés d'une double ligne et suivis d'une flèche indiquant le sens 

.

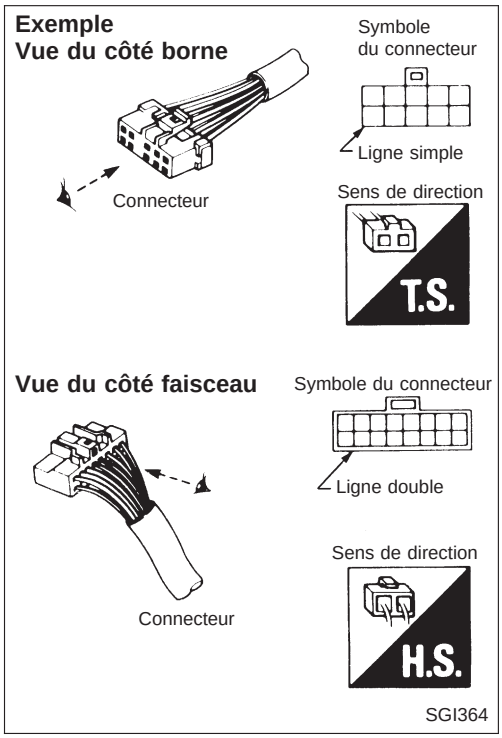

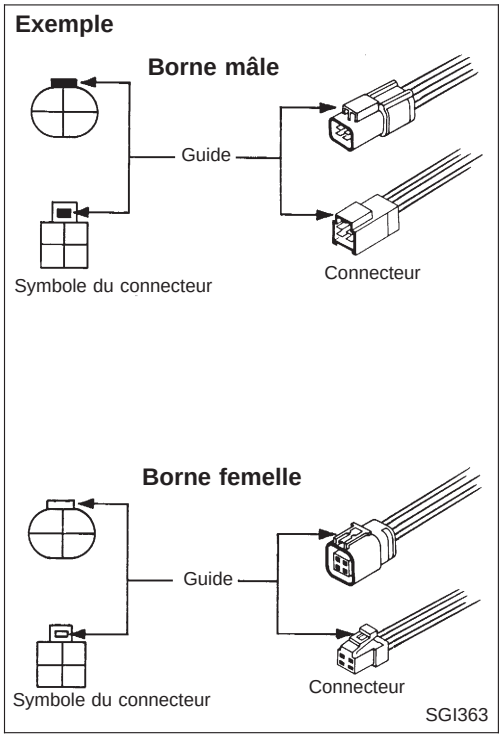

- Bornes mâles et femelles
  Les guides de connecteurs pour les bornes mâles sont représentés en noir sur les schémas de câblage ; les guides de connecteurs pour les bornes femelles sont en blanc.

Simpo PDF Merge and Split Unregistered Version - http://www.simpopdf.com

Description (Suite)

Indication du faisceau

- Les lettres figurant à côté de la sonde de l'appareil d'essai renvoient à la couleur du câble (connecteur) de faisceau.
- Les numéros de connecteurs entourés d'une simple ligne (M33) renvoient aux connecteurs de faisceau.

Indication des composants

- Les numéros de connecteur entourés d'une double ligne (F211) renvoient aux connecteurs des composants.

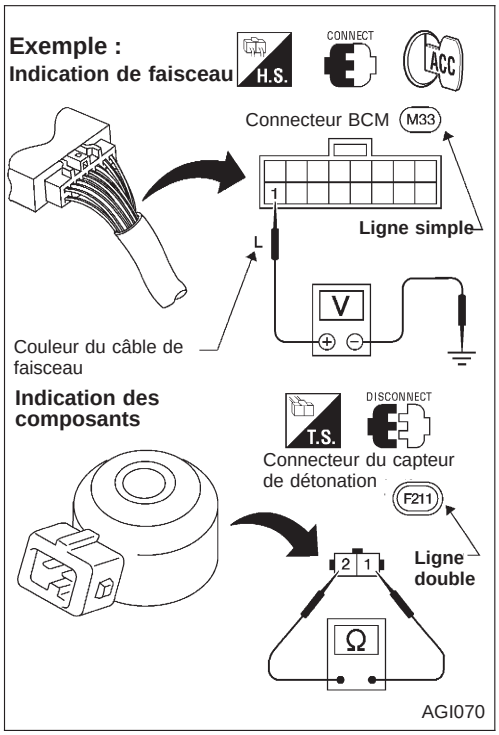

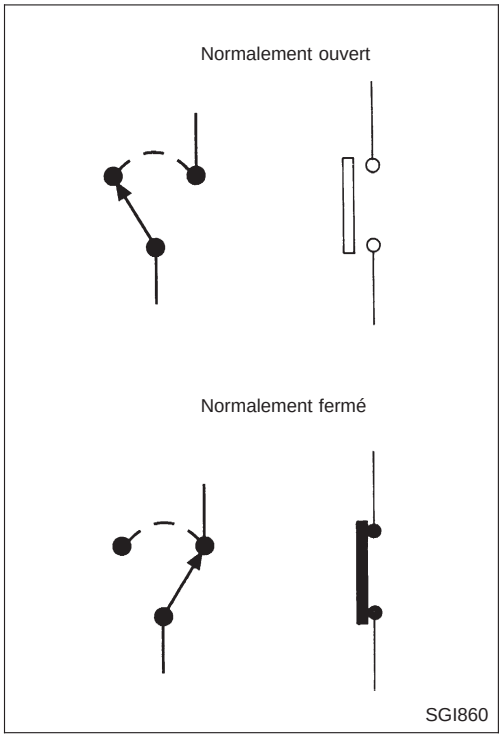

POSITIONS DES INTERRUPTEURS

Les interrupteurs représentés dans les schémas de câblage correspondent à un véhicule en condition ''normale''.
Un véhicule est en condition ''normale'' lorsque :

- le contact d'allumage est sur ''OFF'',
- les portes, capot, capot du coffre/hayon sont fermées,
- les pédales ne sont pas enfoncées, et
- le frein à main est desserré.

Simpo PDF Merge and Split Unregistered Version - http://www.simpopdf.com

Description (Suite)

LIGNES DETECTABLES ET NON DETECTABLES

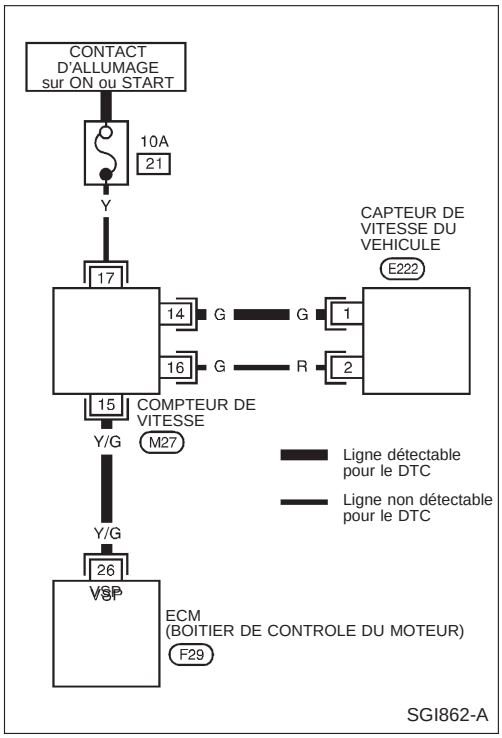

Certains schémas de câblage utilisent deux types de lignes d'épaisseur différente représentant des fils.

- Une ligne régulière (plus épaisse) représente une ''ligne détectable pour le DTC (code de défaut de diagnostic)''. Une ''ligne détectable pour le DTC'' est un circuit dans lequel l'ECM (boîtier de contrôle du moteur) peut détecter les défauts grâce au système de l'autodiagnostic.
- Une ligne moins épaisse représente une ''ligne non-détectable pour le DTC''. Une ''ligne non-détectable pour le DTC'' est un circuit dans lequel l'ECM ne peut pas détecter les défauts grâce au système de l'autodiagnostic.

Simpo PDF Merge and Split Unregistered Version - http://www.simpopdf.com

Description (Suite)

COMMUTATEUR MULTIPLE

La continuité du commutateur multiple est décrite des deux façons indiquées ci-dessous.

- L'organigramme est utilisé dans les diagrammes schématiques.
- Le diagramme est utilisé dans les schémas de câblage.

Exemple

(ORGANIGRAMME DE COMMUTATEUR)

COMMUTATEUR D'ESSUIE-GLACE

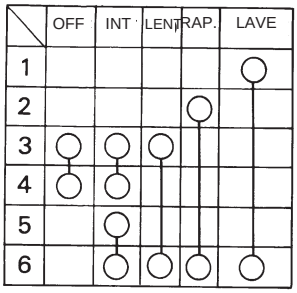

(DIAGRAMME DE COMMUTATEUR)

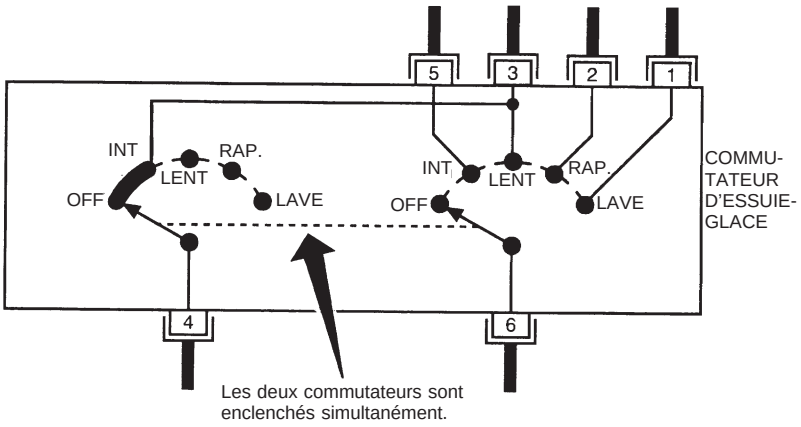

Continuité du circuit du commutateur d'essuie-glace

POSITION DU COMMUTATEUR	CONTINUITE DU CIRCUIT
OFF	3 – 4
INT	3 – 4, 5 – 6
LENT	3 – 6
RAP.	2 – 6
LAVE	1 – 6

SGI875

Simpo PDF Merge and Split Unregistered Version - http://www.simpopdf.com

Description (Suite)

PAGE DEPLIANTE

La page dépliante doit être ouverte lors de la lecture des schémas de câblage.

Super raccord multiple (SMJ)

Dans les schémas de câblage, les connecteurs sous forme de bornes ayant des numéros de borne indiqués par un code alphanumérique (1B, 0D etc.) sont des connecteurs de type SMJ.
Si les numéros des connecteurs apparaissent dans la zone de référence, ces mêmes symboles ne figurent pas dans la zone des connecteurs. Pour la disposition des bornes de ces connecteurs, se reporter à la page dépliante située à la fin de ce manuel.

Connecteur de raccord

Les symboles de connecteurs de raccords sont indiqués dans la zone des connecteurs du schéma de câblage concerné. La page dépliante contient également la disposition du câblage interne de même que les symboles de connecteurs de raccords.

Exemple

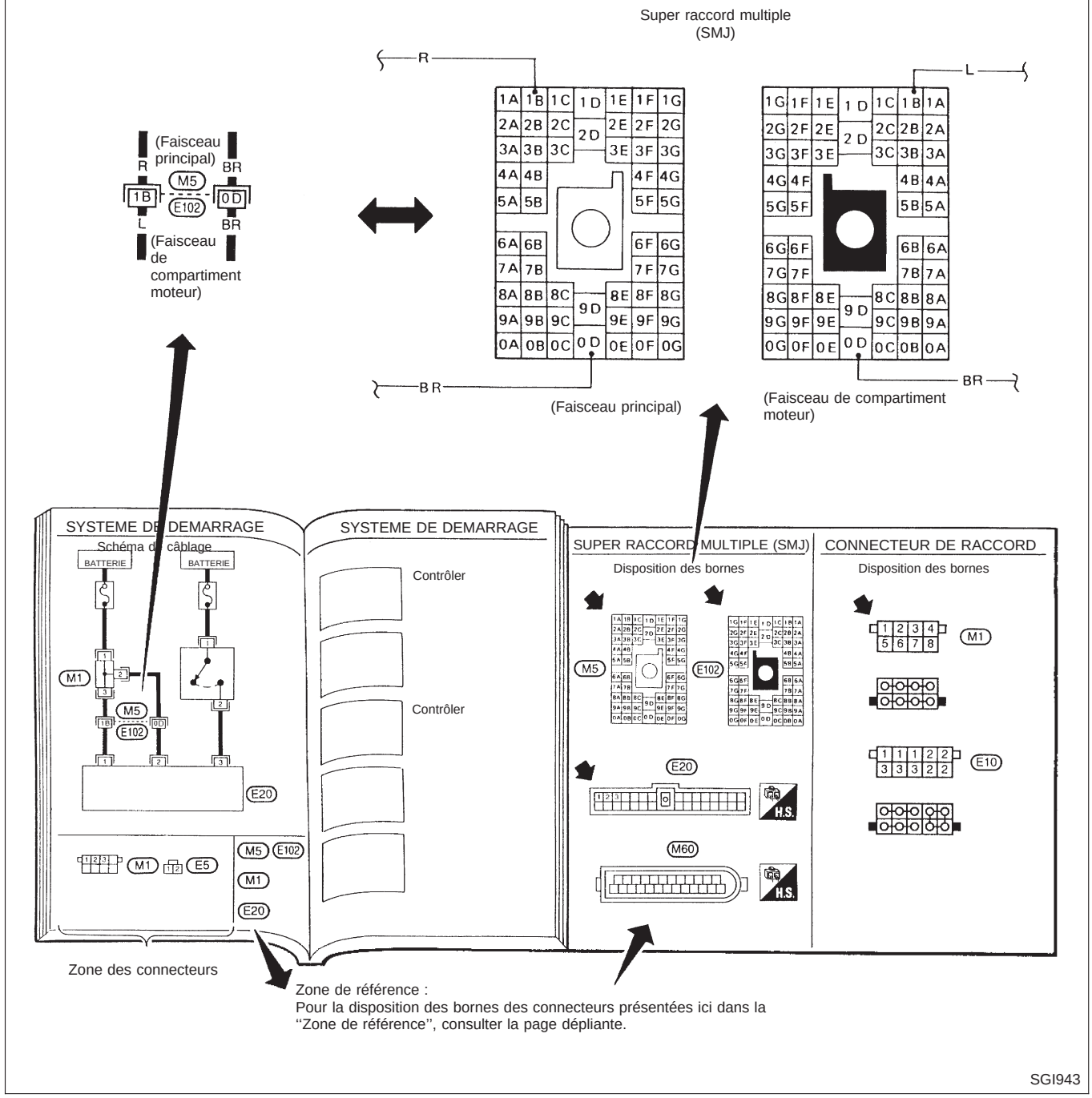

SGI943

Simpo PDF Merge and Split Unregistered Version - http://www.simpopdf.com

Comment vérifier les connecteurs à l'aide d'une sonde

Une mauvaise introduction de la sonde dans le connecteur lors des contrôles du circuit pourra endommager le connecteur et entraîner un faux contact.
La sonde d'un multimètre numérique (DMM) peut ne pas s'adapter correctement à la cavité du connecteur. Pour sonder correctement le conneceur, suivre les procédures suivantes à l'aide d'une goupille ''T''. Pour un contact optimal, tenir la goupille en ''T'' à l'aide d'une pince crocodile.

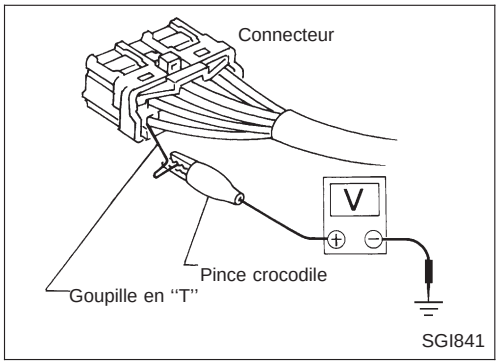

INTRODUIRE LA SONDE DU COTE FAISCEAU

Pour les connecteurs de type standard (pas de type étanche), la sonde devra être introduite du côté faisceau avec la goupille en ''T''.

- **Si le connecteur est muni d'un couvercle arrière, tel un connecteur de l'ECM, déposer le couvercle arrière avant de sonder la borne.**
- **Ne pas sonder un connecteur étanche du côté faisceau. Le joint séparant le câble du connecteur risquerait d'être endommagé.**

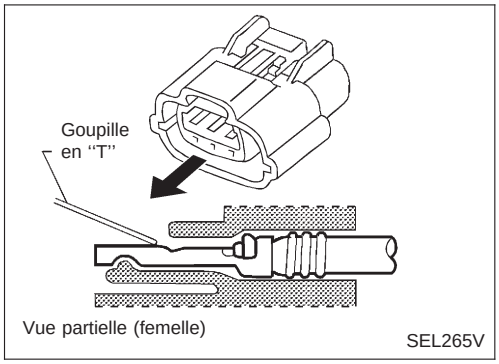

INTRODUIRE LA SONDE DU COTE BORNE

Borne femelle

- Il y a une petite encoche sur chaque borne femelle. Sonder chaque borne à l'aide de la goupille en ''T'' à travers l'encoche.

Ne pas introduire d'objet autre qu'une borne mâle de même type dans une borne femelle.

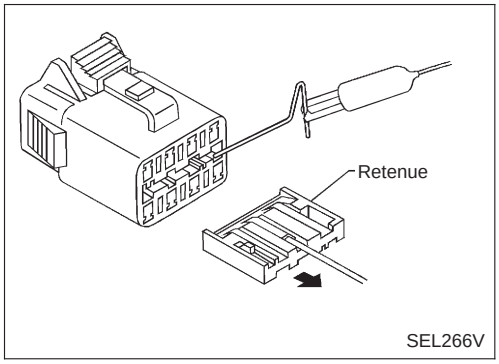

- Certains connecteurs ne comportent pas d'encoche au-dessus de chaque borne. Pour sonder chaque borne, déposer la retenue du connecteur afin de pouvoir introduire la sonde.

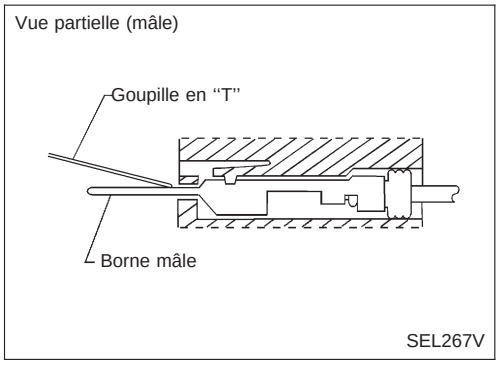

Borne mâle

Sonder avec précaution la surface de contact de chaque borne à l'aide de la goupille en ''T''.
Ne pas plier la borne.

Simpo PDF Merge and Split Unregistered Version - http://www.simpopdf.com

Comment vérifier si les ressorts de contact des bornes sont élargis

Un ressort de contact élargi pourra entraîner des signaux intermittents dans le circuit.
Si un circuit s'ouvre de manière intermittente, suivre la procédure suivante afin de rechercher la présence de câbles ouverts et de vérifier si le ressort de contact de borne femelle est élargi.

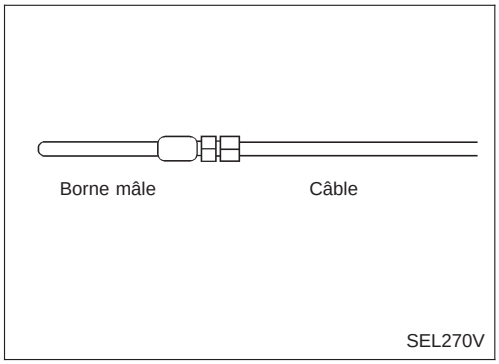

1. Assembler une borne mâle et une longueur de câble d'environ 10 cm. **Utiliser une borne mâle adaptée à la borne femelle.**
2. Débrancher le connecteur défectueux et le maintenir, le côté de la borne vers le haut.

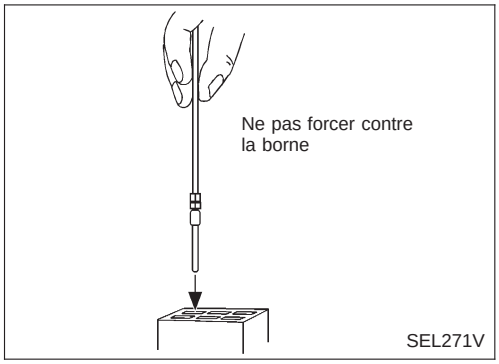

3. Tout en tenant le câble de la borne mâle, essayer d'insérer la borne mâle dans la borne femelle.

Ne pas forcer la borne mâle dans la borne femelle avec les mains.

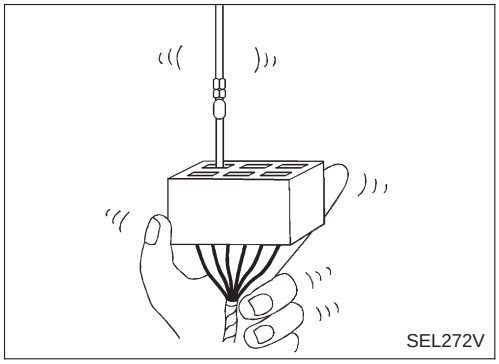

4. Tout en bougeant le connecteur, vérifier si la borne mâle peut être insérée facilement ou non.

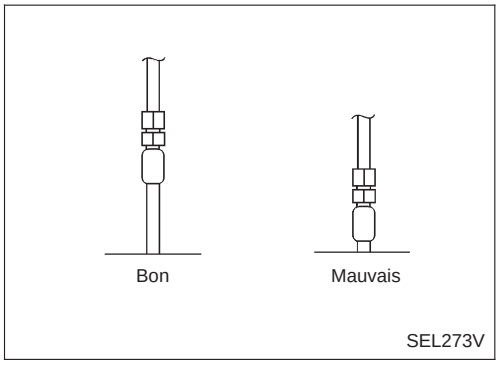

- Si la borne mâle peut être facilement insérée dans la borne femelle, remplacer la borne femelle.

Simpo PDF Merge and Split Unregistered Version - http://www.simpopdf.com

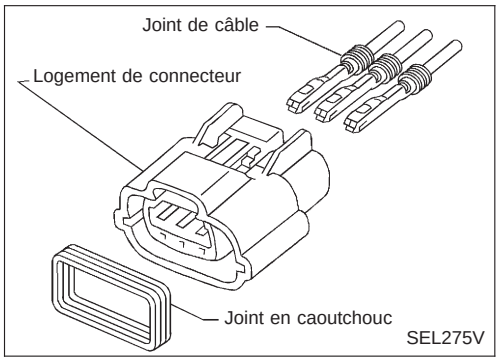

Inspection des connecteurs étanches

Une infiltration d'eau dans le connecteur peut court-circuiter les circuits internes. Cela pourrait entraîner des problèmes intermittents.
Vérifier les points suivants pour préserver les caractéristiques d'étanchéité.

INSPECTION DU JOINT EN CAOUTCHOUC

- La plupart des connecteurs étanches sont équipés d'un joint en caoutchouc entre les connecteurs mâles et femelles. Si le joint manque, les performances d'étanchéité pourront ne pas répondre aux spécifications.
- Le joint en caoutchouc peut se détacher lorsque l'on débranche les connecteurs. A chaque fois que les connecteurs sont rebranchés, s'assurer que le joint en caoutchouc est correctement installé de part et d'autre du connecteur mâle ou femelle.

INSPECTION DU JOINT DE CABLE

Le joint de câble doit être installé dans la zone d'insertion du câble d'un connecteur étanche. S'assurer que le joint est correctement installé.

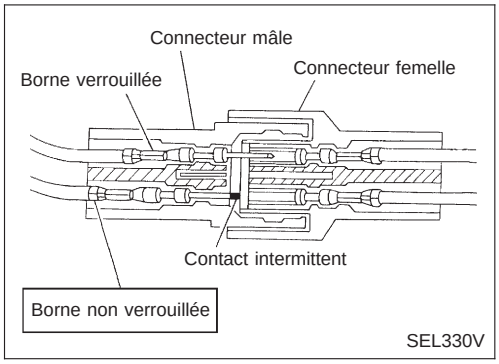

Inspection du verrouillage de borne

Rechercher les bornes desserrées en tirant sur le câble à l'extrémité du connecteur. Une borne desserrée peut entraîner des signaux intermittents dans le circuit.

Simpo PDF Merge and Split Unregistered Version - http://www.simpopdf.com

Procédure de travail

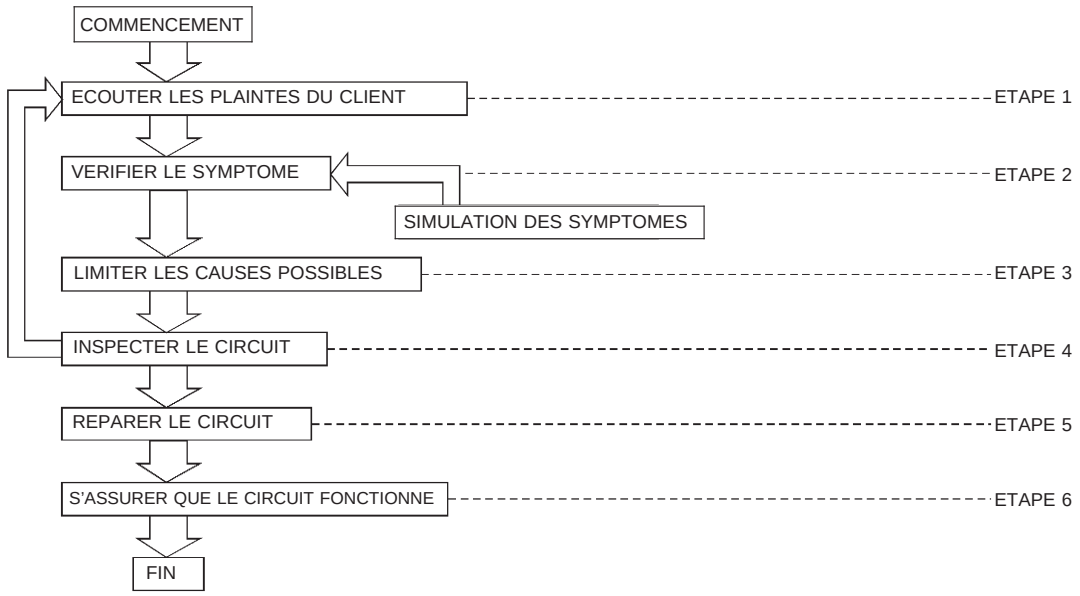

ETAPE	DESCRIPTION
ETAPE 1	Recueillir des informations détaillées sur les conditions et les circonstances accompagnant le problème. Les renseignements suivants sont essentiels pour permettre une bonne analyse : **QUOI** Modèle du véhicule, moteur, transmission et circuit (par ex. radio). **QUAND** Date, heure du jour, conditions atmosphériques, fréquence. **OU** Etat de la route, altitude et type de circulation. **COMMENT** Symptômes du système, conditions de fonctionnement (interaction avec d'autres composants). Régularité des révisions et si des accessoires ont été ajoutés.
ETAPE 2	Faire fonctionner le système, effectuer un essai de conduite si nécessaire. Vérifier les paramètres du problème. Si le problème ne se répète pas, se reporter au chapitre ''Essais de simulation de problèmes'' à la page suivante.
ETAPE 3	S'équiper des outils de diagnostic adéquats, y compris : LA DISPOSITION DE L'ALIMENTATION ELECTRIQUE Les descriptions du fonctionnement du système Les sections du Manuel de Réparation correspondantes. Vérifier s'il existe un Bulletin d'Entretien. Décider par où commencer le diagnostic en se basant sur sa propre connaissance du système et les observations du client.
ETAPE 4	Inspecter le système pour vérifier qu'aucune pièce ne coince et que les connecteurs ne sont pas desserrés ou que le câblage n'est pas endommagé. Déterminer quels sont les circuits et composants concernés et établir un diagnostic à l'aide des schémas de disposition de l'alimentation électrique et de disposition des faisceaux.
ETAPE 5	Réparer ou remplacer le circuit ou le composant à l'origine de l'incident.
ETAPE 6	Faire fonctionner le circuit dans tous les modes. Vérifier que le système fonctionne correctement sous toutes les conditions. S'assurer que l'on n'a pas créé de nouveaux problèmes par inadvertance au cours des différentes étapes du diagnostic ou de la réparation.

Simpo PDF Merge and Split Unregistered Version - http://www.simpopdf.com

Essais de simulation des problèmes

INTRODUCTION

Il arrive que le problème ne se manifeste pas lorsque la voiture est amenée au garage. Si possible, recréer les conditions présentes au moment de l'incident. Ceci permettra d'éviter d'obtenir un diagnostic de type ''aucun défaut indiqué''. La section suivante décrit certaines techniques permettant de simuler les conditions et circonstances pendant lesquelles le client a rencontré des problèmes d'origine électrique.

Cette section est articulée autour des six parties suivantes :
- Vibrations du véhicule
- Sensibilité à la chaleur
- Gel
- Infiltration d'eau
- Charge électrique
- Démarrage à froid ou à chaud

Obtenir une description précise du problème auprès du client. Ces renseignements sont essentiels pour simuler les circonstances accompagnant le problème.

VIBRATIONS DU VEHICULE

Le problème peut se produire ou s'aggraver lorsque l'on conduit sur une route accidentée ou lorsque le moteur vibre (ralenti, climatisation en marche). Dans ce cas, rechercher un problème lié aux vibrations. Se reporter à l'illustration ci-dessous.

Connecteurs et faisceau

Identifier les connecteurs et le faisceau de câblage qui pourraient affecter le circuit électrique que l'on inspecte. Secouer **doucement** chaque connecteur et faisceau tout en observant le système pour voir si le problème se reproduit. Cet essai peut indiquer la présence d'un mauvais branchement ou d'un branchement desserré.

Conseil

Les connecteurs peuvent être exposés à l'humidité. Il est possible qu'une fine couche de corrosion se soit formée sur les bornes du connecteur. Ce problème ne pourra être révélé par une inspection visuelle si le connecteur n'est pas débranché. Un problème, qui se produit de façon intermittente, peut être dû à la corrosion. Il est recommandé de débrancher, d'inspecter et de nettoyer les bornes des connecteurs connexes du circuit.

Capteurs et relais

Exercer **délicatement** une légère vibration sur les capteurs et les relais du circuit inspectés.
Cet essai peut indiquer la présence d'un capteur ou d'un relais mal fixé ou desserré.

Essai de vibration

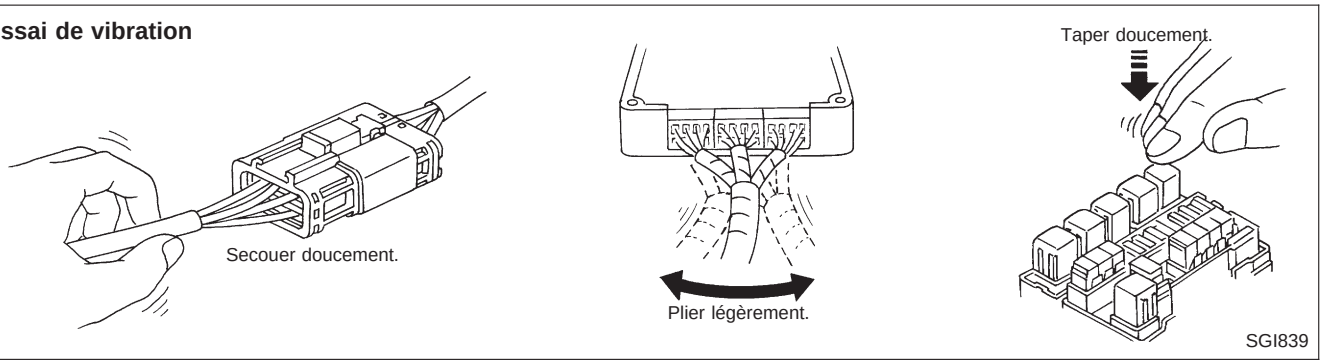

Simpo PDF Merge and Split Unregistered Version - http://www.simpopdf.com

Essais de simulation des problèmes (Suite)

Compartiment moteur

Les vibrations du véhicule ou du moteur peuvent être la cause de multiples problèmes électriques. Contrôler les points suivants :

- Connecteurs mal fixés.
- Faisceau de câblage trop court et tendu ou secoué par les vibrations du moteur.
- Câbles passant sur des supports ou des composants mobiles.
- Câbles de masse desserrés, sales ou corrodés.
- Câbles disposés trop près des composants chauds.

Lorsque l'on inspecte les composants sous le capot, commencer par vérifier l'intégrité des connexions de mise à la masse (consulter l'''INSPECTION DE LA MASSE'' décrite ci-après). Vérifier tout d'abord si le système est correctement mis à la masse. Vérifier ensuite qu'il n'y a pas de connexions desserrés en **secouant doucement** les câbles ou les composants comme décrit précédemment. Vérifier la continuité du câblage à l'aide des schémas de câblage.

Derrière le tableau de bord

Un faisceau mal disposé ou mal fixé peut se coincer lors de l'installation des accessoires. Un faisceau disposé le long d'un support ou à proximité d'une vis peut être affecté par les vibrations du véhicule.

Sous les sièges

Un faisceau mal fixé ou desserré peut entraîner le coincement du câblage dans les composants des sièges (tels que les glissières de sièges) lorsque le véhicule vibre. Si le câblage passe sous les sièges, vérifier qu'il n'est pas endommagé ou coincé.

Test de chaleur

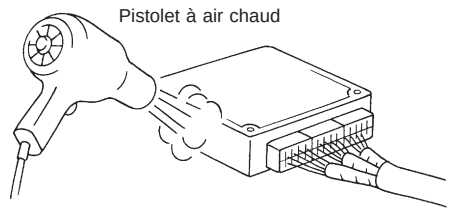

Ne pas faire chauffer à plus de 60°C

SGI842

SENSIBILITE A LA CHALEUR

Le problème peut se produire lorsque la température est élevée ou après que le véhicule a été garé pendant un court instant. Dans ces cas là, le problème sera probablement lié à une sensibilité à la chaleur.
Pour déterminer si un composant est sensible à la chaleur, le chauffer à l'aide d'un pistolet à air chaud ou de tout appareil équivalent.
Ne pas chauffer les composants à plus de 60°C. Si le problème se produit lorsque l'on chauffe l'unité, remplacer ou isoler correctement le composant.

Simpo PDF Merge and Split Unregistered Version - http://www.simpopdf.com

Essais de simulation des problèmes (Suite)

GEL

Test de gel

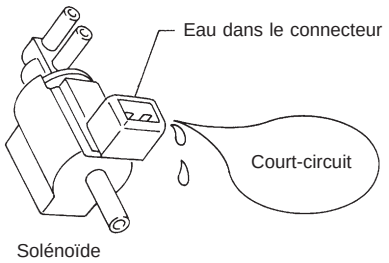

SGI843

Le client peut mentionner que le problème disparaît lorsque la voiture se réchauffe (en hiver). Il se peut que le problème soit dû à la présence d'eau qui gèlerait quelque part dans le système de câblage/électrique.
Il existe deux méthodes permettant de vérifier cette hypothèse. La première nécessite que le client laisse sa voiture au garage pour la nuit. S'assurer que la température soit assez basse pour que le problème puisse ainsi se manifester. Laisser la voiture garée à l'extérieur pour la nuit. Le matin, effectuer un diagnostic rapide et complet des composants électriques qui pourraient être affectés.
La seconde méthode consiste à placer le composant que l'on suppose être défectueux dans un congélateur et de l'y laisser assez longtemps pour permettre à l'eau de geler. Reposer le composant sur le véhicule et vérifier si le problème se reproduit. Si c'est le cas, réparer ou remplacer le composant.

INFILTRATION D'EAU

Test d'infiltration d'eau



SGI844

Le problème ne peut se produire que lorsque le temps est humide, qu'il pleut ou qu'il neige. Dans ces cas là, il se peut que le problème soit dû à l'infiltration d'eau dans un composant électrique. Cette condition peut être simulée en aspergeant la voiture ou en la faisant passer au lavage automatique.
Ne pas verser de l'eau directement sur les composants électriques.

CHARGE ELECTRIQUE

Test de charge électrique

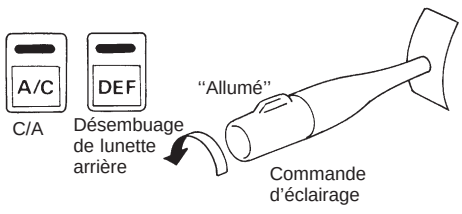

SGI845

Le problème peut être lié à une sensibilité aux charges électriques. Effectuer un diagnostic avec tous les accessoires allumés (y compris climatisation, désembuage de lunette arrière, radio, feux antibrouillard).

DEMARRAGE A FROID OU A CHAUD

Il est possible que parfois un problème électrique se produise uniquement lors d'un démarrage à froid. Il peut également se produire lorsque la voiture est redémarrée à chaud, quelques instants après avoir coupé le contact. Dans ces deux cas, il sera peut-être nécessaire de conserver la voiture pendant la nuit pour effectuer un diagnostic correct.

Simpo PDF Merge and Split Unregistered Version - http://www.simpopdf.com

Inspection du circuit

INTRODUCTION

En règle générale, tester des circuits électriques ne présente pas de difficultés si l'on procède de façon logique et organisée. Avant de commencer, il est indispensable de se munir de toutes les informations disponibles sur le système que l'on veut inspecter. Se familiariser également avec le fonctionnement du circuit. Cela permettra d'utiliser l'équipement approprié et de suivre les procédures de tests correctes.
S'il est nécessaire de simuler les vibrations d'un véhicule lorsque l'on teste les composants électriques, **secouer doucement** le faisceau de câblage ou le composant électrique.

CIRCUIT OUVERT — Un circuit est ouvert lorsqu'il n'y a pas continuité dans une section de ce circuit.

COURT-CIRCUIT — Il existe deux types de courts-circuits.

- COURT-CIRCUIT — Lorsqu'un circuit entre en contact avec un autre circuit et entraîne une modification de la résistance normale.
- COURT-CIRCUIT DE MASSE — Lorsqu'un circuit entre en contact avec une source ayant un contact à la masse et qu'il est mis à la masse.

RECHERCHE ''D'OUVERTURES'' DANS LE CIRCUIT

Avant de commencer à diagnostiquer et à tester le circuit, tracer un croquis schématique du circuit. Ceci permettra d'effectuer logiquement les différentes étapes du diagnostic. Le fait de tracer le croquis permettra également de se familiariser avec le circuit.

Inspection des circuits ouverts

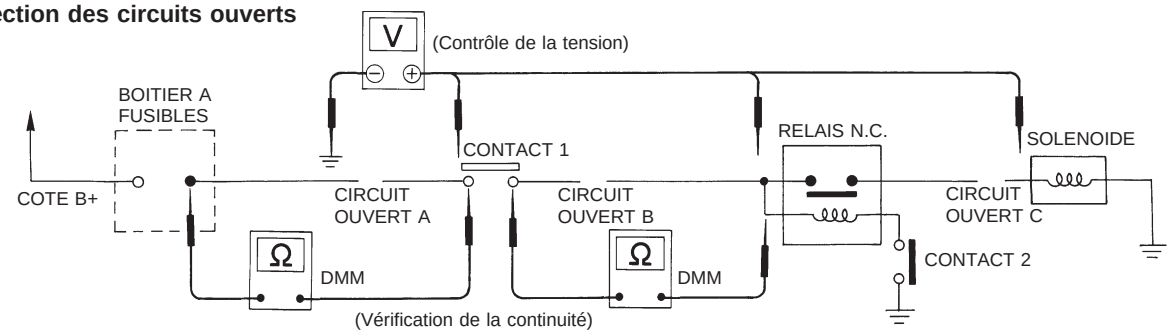

Méthode de vérification de la continuité

Cette méthode permet d'identifier une ouverture dans le circuit. Le multimètre numérique (DMM) réglé sur la fonction de résistance indiquera qu'un circuit est ouvert et supérieur à la limite (pas de signal sonore ou d'ohms). S'assurer que l'on commence toujours avec le multimètre numérique réglé sur le niveau de résistance maximum.
Afin de bien comprendre le diagnostic des circuits ouverts, se reporter au schéma ci-dessus.

1. Débrancher le câble négatif de la batterie.
2. Progresser d'une extrémité du circuit à l'autre (dans ce cas à la boîte de fusibles).
3. Brancher l'une des sondes du multimètre numérique à la borne du boîtier à fusibles, côté charge.
4. Brancher l'autre sonde sur le côté boîtier à fusibles (alimentation) du contact 1. Une résistance nulle ou minimum indiquera qu'il y a une bonne continuité dans une partie du circuit. Si le circuit était ouvert, le multimètre numérique indiquerait une condition de résistance infinie ou supérieure à la limite (point A).
5. Brancher les sondes entre le contact 1 et le relais. Une résistance nulle ou minimum indiquera qu'il y a une bonne continuité dans une partie du circuit. Si le circuit était ouvert, le multimètre numérique indiquerait une condition de résistance infinie ou supérieure à la limite (point B).
6. Brancher les sondes entre le relais et le solénoïde. Une résistance nulle ou minimum indiquera qu'il y a une bonne continuité dans une partie du circuit. Si le circuit était ouvert, le multimètre numérique indiquerait une condition de résistance infinie ou supérieure à la limite (point C).

La méthode décrite dans l'exemple précédent permet de diagnostiquer n'importe quel circuit.

Simpo PDF Merge and Split Unregistered Version - http://www.simpopdf.com

Inspection du circuit (Suite)

Méthode de vérification de la tension

Afin de bien comprendre le diagnostic des circuits ouverts, se reporter au schéma précédent.
Cette méthode permet d'identifier si un circuit sous tension est ouvert en recherchant méthodiquement la présence d'une tension. Pour ce faire, régler le multimètre numérique sur la fonction tension.

1. Brancher l'une des sondes du multimètre sur une masse correcte.
2. Effectuer le test en progressant d'une extrémité du circuit à l'autre.
3. Le contact 1 étant ouvert, vérifier la tension au contact 1 à l'aide de la sonde.
   Il y a tension ; le circuit est ouvert en aval du contact 1.
   Il n'y a pas de tension ; le circuit est ouvert entre le boîtier à fusibles et le contact 1 (point A).
4. Fermer le contact 1 et tester le relais.
   Il y a tension ; le circuit est ouvert en aval du relais.
   Il n'y a pas de tension ; le circuit est ouvert entre le contact 1 et le relais (point B).
5. Fermer le relais et tester au solénoïde.
   Il y a tension ; le circuit est ouvert en aval du solénoïde.
   Il n'y a pas de tension ; le circuit est ouvert entre le relais et le solénoïde (point C).

Cette méthode permet de diagnostiquer n'importe quel circuit alimenté.

RECHERCHE DE ''COURTS-CIRCUITS'' DANS LE CIRCUIT

Pour simplifier le problème des courts-circuits dans le circuit, se référer au schéma ci-dessous.

Inspection des courts-circuits

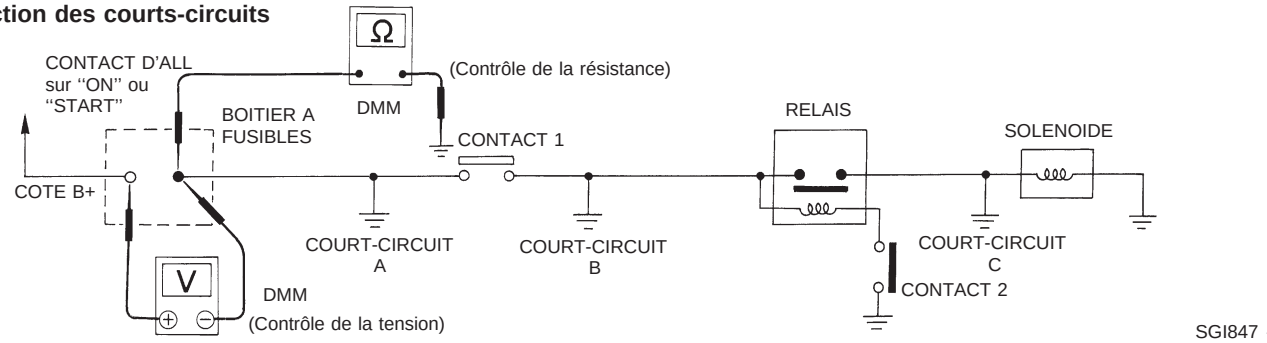

Méthode de vérification de la résistance

1. Débrancher le câble négatif de la batterie et retirer le fusible grillé.
2. Débrancher toutes les charges (contact 1 ouvert, relais et solénoïde déconnectés) alimentées par le fusible.
3. Débrancher l'une des sondes de l'ohmmètre sur le côté charge de la borne du fusible. Connecter l'autre sonde à une masse que l'on sait être bonne.
4. Le contact 1 étant ouvert, vérifier la continuité.
   Il y a continuité ; le court-circuit est entre la borne du fusible et le contact 1 (point A).
   Il n'y a pas continuité ; le court-circuit est en aval du contact 1.
5. Fermer le contact 1 et déconnecter le relais. Placer des sondes sur le côté charge de la borne du fusibles et sur une masse que l'on sait être bonne. Vérifier ensuite la continuité.
   Il y a continuité ; le court-circuit est entre le contact 1 et le relais (point B).
   Il n'y a pas continuité ; le court-circuit est en aval du relais.
6. Fermer le contact 1 et connecter provisoirement les contacts de relais à l'aide d'un câble volant. Placer des sondes sur le côté charge de la borne du fusible et sur une masse que l'on sait être bonne. Vérifier ensuite la continuité.
   Il y a continuité ; le court-circuit est entre le relais et le solénoïde (point C).
   Il n'y a pas continuité ; vérifier le solénoïde étape par étape.

Simpo PDF Merge and Split Unregistered Version - http://www.simpopdf.com

Inspection du circuit (Suite)

Méthode de vérification de la tension

1. Déposer le fusible grillé et déconnecter toutes les charges (par ex. contact 1 ouvert, relais et solénoïde déconnectés) alimentées par le fusible.
2. Tourner la clé de contact sur ''ON'' ou ''START''. Vérifier la tension de la batterie du côté B + de la borne du fusible (un câble relié au côté B+ de la borne du boîtier à fusibles et un câble relié à une masse testée).
3. Le contact 1 étant ouvert et les câbles du multimètre étant connectés aux deux bornes du fusible, vérifier la tension.
   Il y a tension ; le court-circuit est entre le boîtier à fusibles et le contact 1 (point A).
   Il n'y a pas de tension ; le court-circuit est en aval du contact 1.
4. Le contact 1 étant fermé, le relais et le solénoïde déconnectés et les câbles du multimètre connectés aux deux bornes du fusible, vérifier la tension.
   Il y a tension ; le court-circuit est entre le contact 1 et le relais (point B).
   Il n'y a pas de tension ; le court-circuit est en aval du relais.
5. Le contact 1 étant fermé, relayer les contacts connectés provisoirement avec le câble volant. Vérifier la tension.
   Il y a tension ; le court-circuit est en aval du relais ou entre le relais et le solénoïde déconnecté (point C).
   Il n'y a pas de tension ; vérifier l'alimentation du boîtier à fusibles étape par étape.

Simpo PDF Merge and Split Unregistered Version - http://www.simpopdf.com

Inspection du circuit (Suite)

INSPECTION DE LA MASSE

Les connexions de masse sont très importantes pour le bon fonctionnement des circuits électriques et électroniques. Les connexions de masse sont souvent exposées à l'humidité, la saleté et autres éléments de corrosion. La corrosion (rouille) peut se transformer en résistance non voulue. Cette résistance non voulue peut affecter le fonctionnement d'un circuit.

Les circuits électroniques sont très sensibles à une mise à la masse correcte. Une masse desserrée ou corrodée peut radicalement affecter un circuit électronique contrôlé. Une mauvaise mise à la masse ou une masse corrodée peuvent facilement affecter les circuits. Même lorsque la connexion de masse semble être propre, elle peut être recouverte d'un mince film de rouille sur sa surface.

Respecter les indications suivantes lors de l'inspection d'une mise à la masse :

1. Déposer le boulon, la vis ou l'attache de masse.
2. Inspecter les surfaces de contact pour voir si elles ne sont pas ternies, sales, rouillées, etc.
3. Nettoyer selon les besoins pour assurer un bon contact.
4. Reposer correctement le boulon ou la vis.
5. Vérifier si la présence d'accessoires supplémentaires ne gêne pas le fonctionnement du circuit de masse.
6. Si plusieurs fils sont sertis dans un seul oeillet, vérifier que les sertissages sont corrects. S'assurer que tous les fils sont propres, correctement fixés et qu'ils assurent une bonne trajectoire de masse. Si des fils multiples passent par un seul oeillet, s'assurer qu'aucun des fils de masse ne présente une isolation excessive.

Inspection de la masse

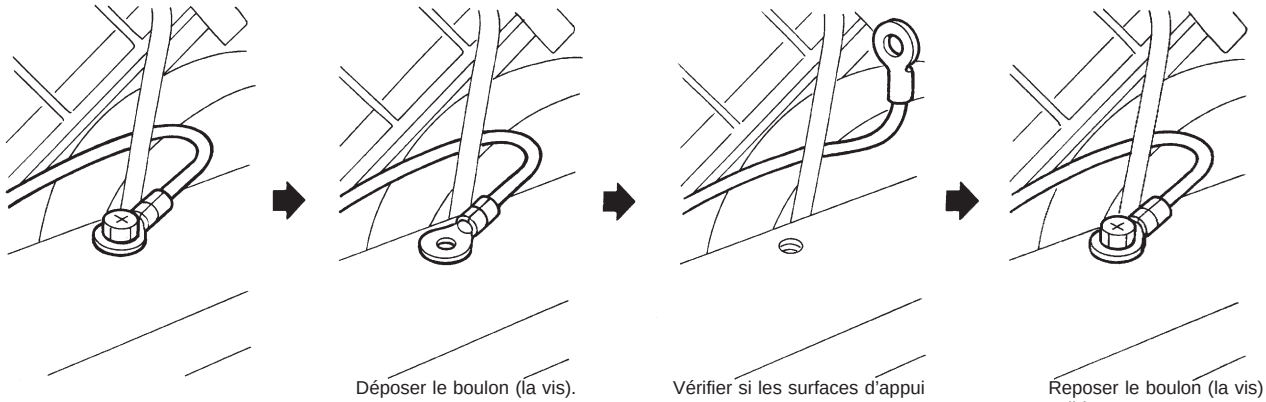

SGI853

Simpo PDF Merge and Split Unregistered Version - http://www.simpopdf.com

Inspection du circuit (Suite)

TEST DE CHUTES DE TENSION

Les tests de chutes de tension servent souvent à identifier les composants ou les circuits possédant une résistance excessive. Une chute de tension dans un circuit est causée par une résistance **lorsque le circuit est activé.**

Vérifier le câble de l'illustration. Lorsqu'on mesure la résistance à l'aide d'un ohmmètre, un contact établi à l'aide d'un seul toron de fil donnera une lecture de 0 ohm. Ceci indique que le circuit est bon. Lorsque le circuit est sous tension, un seul toron de fil n'est pas capable de porter le courant. Ce toron unique possède une résistance élevée au courant. Ceci sera identifié comme une chute de tension légère.

Les situations suivantes peuvent être à l'origine d'une résistance non voulue :

- Câblage insuffisant (un seul toron pour exemple)
- Des contacts de commutateurs corrodés
- Connexions ou épissures desserrées

S'il est nécessaire d'effectuer des réparations, utiliser toujours un appareil de mesure similaire ou plus gros.

Mesurer une chute de tension - méthode accumulée

1. Brancher le voltmètre au connecteur ou à la partie du circuit que l'on veut tester. Le câble positif du voltmètre doit être plus proche de l'alimentation et le câble négatif plus proche de la masse.
2. Mettre le circuit sous tension.
3. Le voltmètre indiquera combien de volts sont nécessaires pour ''pousser'' le courant à travers cette partie du circuit.

On remarquera dans l'illustration qu'il existe une chute de tension excessive de 4,1 volts entre la batterie et l'ampoule.

Symptôme : l'ampoule éclaire faiblement ou n'éclaire pas

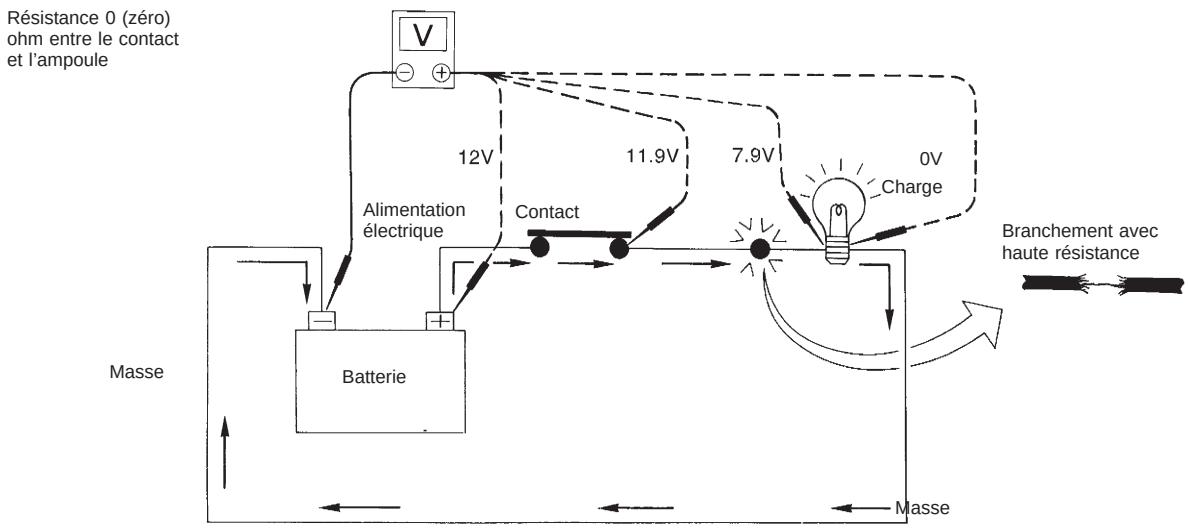

SGI974

Simpo PDF Merge and Split Unregistered Version - http://www.simpopdf.com

Inspection du circuit (Suite)

Mesurer une chute de tension - étape par étape

La méthode par étapes est extrêmement utile pour isoler les chutes excessives dans les systèmes de basse tension (comme celles des ‘‘Systèmes commandés par ordinateur’’).
Les circuits des ‘‘systèmes commandés par ordinateur’’ fonctionnent avec une intensité de courant très basse.
Le fonctionnement du système (commandé par ordinateur) peut être affecté par une variation de la résistance dans le système. Une telle variation de la résistance peut être due à une mauvaise connexion, une mauvaise installation, un diamètre de fil incorrect ou à la corrosion.
Le test de chute de tension par étapes permet d'identifier un composant ou un câble dont la résistance est trop élevée.

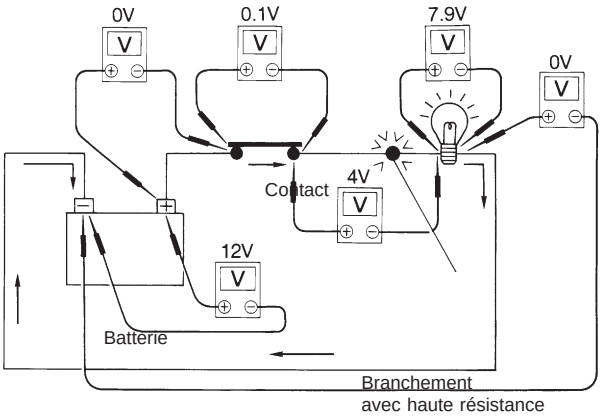

1. Brancher le voltmètre comme indiqué, en commençant à la batterie et en effectuant un tour autour du circuit.
2. Une chute de tension excessive indiquera qu'un composant ou un fil doit être réparé. Comme l'indique l'illustration, un branchement incorrect cause une chute de 4 volts de tension.

L'organigramme suivant indique quelques chutes de tension maximum admissibles. Ces valeurs sont données à titre d'exemple, la valeur exacte pour chaque composant pouvant varier.

COMPOSANT	CHUTE DE TENSION
Câble	Négligeable <,001 volts
Connexions de masse	Environ 0,1 volts
Contacts entre le contact	Environ 0,3 volts

SGI854

Simpo PDF Merge and Split Unregistered Version - http://www.simpopdf.com

Inspection du circuit (Suite)

CONTROLE DU CIRCUIT DE BOITIER DE CONTROLE

Description du système : lorsque le contact est mis, le boîtier de contrôle actionne l'éclairage.

Cas 1

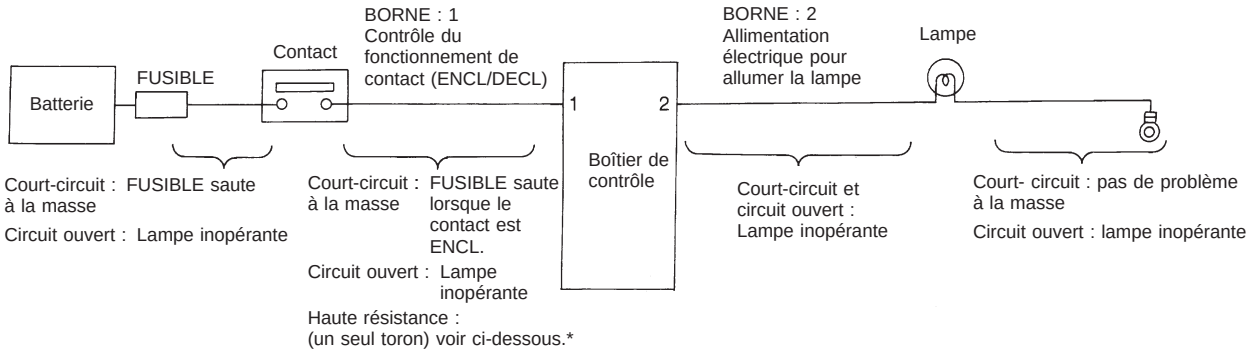

Organigramme des tensions entrée/sortie

N° de broche	Elément	Position	Valeur tension [V]	Dans le cas d'une haute résistance tel un seul toron [V] *
1	Contact	Contact ENCLEN.	Tension batterie	Inf. à la tension de la batterie Environ 8 (exemple)
		DECLEN.	Environ 0	Environ 0
2	Lampe	Contact ENCLEN.	Tension batterie	Environ 0 (lampe inopérante)
		DECLEN.	Environ 0	Environ 0

La valeur de la tension est basée sur la masse de carrosserie.

* : Si une haute résistance existe dans le circuit à côté du contact (causée par un seul toron), la borne 1 ne détecte pas la tension de la batterie. L'ECM ne détecte pas le contact même s'il est mis sur la position ''ON''. Par conséquent, l'ECM ne fournit pas d'alimentation électrique pour éclairer la lampe.

Cas 2

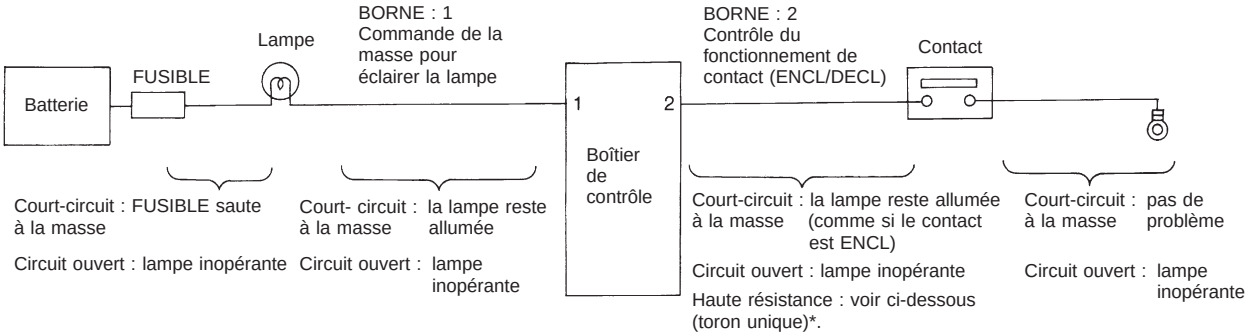

Organigramme des tensions entrée/sortie

N° de broche	Elément	Position	Valeur tension [V]	Dans le cas d'une haute résistance tel un seul toron [V] *
1	Lampe	Contact ENCLEN.	Environ 0	Tension de la batterie (lampe inopérante)
		DECLEN.	Tension de la batterie	Tension de la batterie
2	Contact	Contact ENCLEN.	Environ 0	Sup. à 0 Environ 4 (exemple)
		DECLEN.	Environ 5	Environ 5

La valeur de la tension est basée sur la masse de carrosserie.

* : Si une haute résistance existe dans le circuit à côté du contact (causée par un seul toron), la borne 2 ne détecte pas environ 0V. L'ECM ne détecte pas le contact même s'il est mis sur la position ''ON''. Par conséquent, l'ECM ne commande pas la masse pour éclairer la lampe.

AGI059

Simpo PDF Merge and Split Unregistered Version - http://www.simpopdf.com

NOTE :

L'organigramme indique les procédures à suivre pour diagnostiquer correctement les défauts. Observer les instructions suivantes avant de procéder au diagnostic.

1) **Utiliser le tableau ci-dessous après avoir localisé les causes probables du défaut en appliquant une ''Vérification préliminaire'', un ''Tableau des symptômes'' ou une ''Procédure de travail''.**
2) **Après les réparations, contrôler que le défaut a bien été totalement éliminé.**
3) **Se reporter à l'emplacement des composants et du connecteur de faisceau des systèmes décrits dans chaque section pour identifier/localiser les composants et connecteurs de faisceau.**
4) **Se reporter au schéma de circuit pour effectuer un contrôle ponctuel.**
   Si l'on doit vérifier, de manière plus détaillée, la continuité du circuit entre les connecteurs de faisceau ; comme par exemple lorsqu'un faisceau auxiliaire est utilisé, il faut se reporter au ''schéma de câblage'' de chaque section et à la ''disposition du faisceau'' dans la section EL pour l'identification des connecteurs de faisceau.
5) **Lors de la vérification de la continuité des circuits, le contact d'allumage doit être coupé (''OFF'').**
6) **Avant de vérifier la tension aux connecteurs, vérifier la tension de la batterie.**
7) **Après avoir effectué les Procédures de diagnostic et l'Inspection des composants électriques, toujours s'assurer que tous les connecteurs de faisceau sont rebranchés correctement.**

Exemple

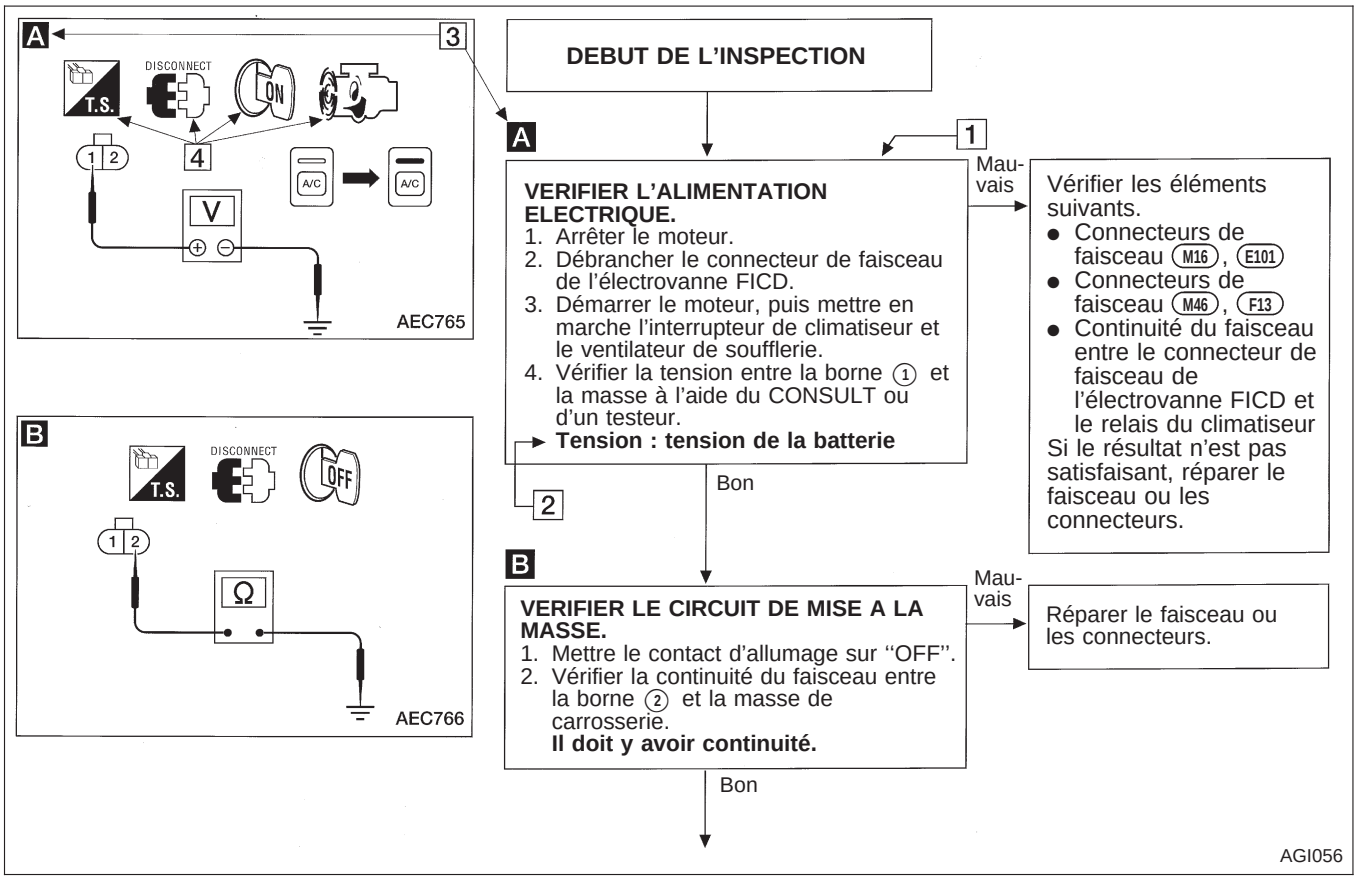

Simpo PDF Merge and Split Unregistered Version - http://www.simpopdf.com

Comment lire cet organigramme

1 Marche à suivre et procédure de diagnostic

Commencer par diagnostiquer le défaut en appliquant les procédures encadrées, telles qu'indiquées dans l'exemple ci-dessous.

A

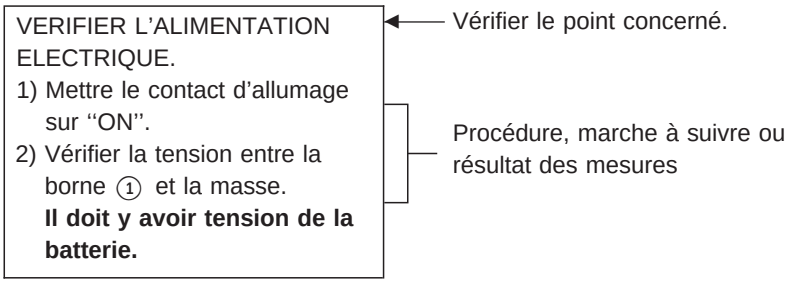

2 Résultats des mesures

Les résultats requis sont indiqués en caractères gras dans l'encadré correspondant, comme indiqué ci-dessous :
Leurs significations sont les suivantes :

Tension de la batterie → 11 à 14V ou environ 12V
Tension : environ 0V → inférieure à 1V

3 Correspondance des renvois et symboles apparaissant dans le texte et les illustrations

Les illustrations sont fournies en tant qu'aide visuelle pour les procédures d'intervention. Par exemple, le symbole A apparaissant dans la partie supérieure gauche de chaque illustration correspond au même symbole sur l'organigramme de procédures pour faciliter l'identification. De façon plus précise, la procédure correspondant à la rubrique ''VERIFIER L'ALIMENTATION ELECTRIQUE'' est indiquée par l'illustration A .

4 Symboles utilisés dans les illustrations

Les symboles utilisés dans les illustrations font référence à des mesures ou procédures. Avant de procéder au diagnostic d'un défaut, se familiariser avec chaque symbole utilisé.

MARQUE DE DIRECTION

Se reporter aux ''SYMBOLES DE CONNECTEURS'' à la page GI-14.

Simpo PDF Merge and Split Unregistered Version - http://www.simpopdf.com

Comment lire cet organigramme (Suite)

LEGENDE DES SYMBOLES UTILISES POUR REPRESENTER LES MESURES OU PROCEDURES

Symbole	Explication du symbole	Symbole	Explication du symbole
	Vérifier après avoir débranché le connecteur à mesurer.		Procédure avec CONSULT.
	Vérifier après avoir branché le connecteur à mesurer.		Procédure sans CONSULT.
	Introduire la clé dans le contact d'allumage.		Interrupteur de climatiseur à l'arrêt.
	Retirer la clé du contact d'allumage.		Interrupteur de climatiseur en marche.
	Mettre le contact d'allumage sur la position ''OFF''.	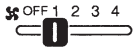	Interrupteur de ventilateur en marche (sur toute position autre que arrêt).
	Mettre le contact d'allumage sur la position ''ON''.	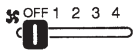	Interrupteur de ventilateur à l'arrêt.
	Mettre le contact d'allumage sur la position ''START''.		Appliquer une tension positive de la batterie en plaçant le fusible directement sur les commposants.
	Amener le contact d'allumage de la position ''OFF'' sur ''Acc''.		Conduire le véhicule.
	Amener le contact d'allumage de la position ''Acc'' sur ''OFF''.		Déconnecter le câble négatif de la batterie.
	Amener le contact d'allumage de la position ''OFF'' sur ''ON''.		Enfoncer la pédale de frein.
	Amener le contact d'allumage de la position ''ON'' sur ''OFF''.		Relâcher la pédale de frein.
	Ne pas démarrer le moteur, ou vérifier avec le moteur à l'arrêt.		Enfoncer la pédale d'accélérateur.
	Démarrer le moteur, ou vérifier avec le moteur en marche.		Relâcher la pédale d'accélérateur.
	Serrer le frein de stationnement.	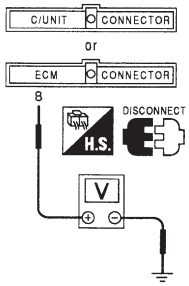	Contrôle des bornes à broches des connecteurs de type super raccord multiple de l'ECM et du boîtier de contrôle T/A. **Pour les détails concernant la disposition des bornes, se référer à la page dépliante.** 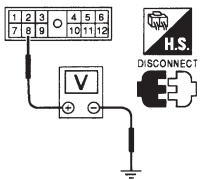
	Desserrer le frein de stationnement.		
	Vérifier une fois que le moteur est suffisamment chaud.		
	Mesurer la tension à l'aide d'un voltmètre.		
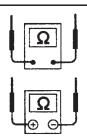	Mesurer la résistance du circuit à l'aide d'un ohmmètre.		
	Mesurer l'intensité du courant à l'aide d'un ampèremètre.		

Simpo PDF Merge and Split Unregistered Version - http://www.simpopdf.com

Application de la fonction et du système

Mode de diagnostic	Fonction	ECCS	Air bag*1	ABS*2	NATS*3
Support de travail	Ce mode permet au technicien de régler certains éléments plus rapidement et plus précisément en suivant les indications de CONSULT.	x	—	—	—
Résultats d'autodiagnostic	Les résultats de l'autodiagnostic peuvent être rapidement lus et effacés.	x	x	x	x
Enregistrement de diagnostic de défaut	Les résultats de l'autodiagnostic en cours et les données de diagnostic de défaut enregistrées précédemment peuvent être lus.	–	x	—	—
N° d'identification du boîtier de contrôle électrique	Il est possible de lire le numéro de classification d'un ECM de rechange pour éviter qu'un ECM inadapté soit reposé.	–	x	—	—
Contrôle des données	Les données d'entrée/de sortie de l'ECM peuvent être lues.	x	—	x	—
Test actif	Mode d'essai de diagnostic dans lequel CONSULT sépare certains actionneurs des ECM et décale aussi certains paramètres dans une gamme spécifiée.	x	—	x	—
Numéro de pièce du boîtier de contrôle	Le numéro de pièce du boîtier de contrôle peut être lu.	x	—	—	—
Test de fonction	Mené par CONSULT à la place d'un technicien pour déterminer si chaque système est bon ou mauvais.	x	—	—	—
Initialisation du boîtier de contrôle	Tous les codes d'identification des clés d'allumage des composants du NATS peuvent être initialisés et de nouveaux codes peuvent être enregistrés.	—	—	—	x
Fonction auto-test	L'ECM vérific sa propre interface de communication NATS.	—	—	—	x

x : Applicable

*1 : Modèles à 4 roues motrices pour l'Europe de l'Est

*2 : Pour l'Europe de l'Est (la carte programme EF960 ne s'applique à l'ABS. Utiliser le système de diagnostic de bord avec le témoin ABS jusqu'à ce que la carte de programme suivante soit introduite.)

*3 : NATS (Système d'antivol Nissan)

Remplacement de la pile au lithium

Le CONSULT contient une pile au lithium. Lors du remplacement de la pile, observer les indications suivantes :

AVERTISSEMENT :

Remplacer la pile au lithium uniquement par une de type SANYO Electric Co. , Ltd, CR2032. L'utilisation d'une autre pile peut entraîner un risque d'incendie ou d'explosion. Un mauvais traitement de la batterie peut également entraîner un risque d'incendie ou de brûlure chimique. Ne pas recharger, démonter ou jeter au feu.

Conserver la pile hors de portée des enfants et mettre les piles usées au rebut conformément aux réglementations locales.

Simpo PDF Merge and Split Unregistered Version - http://www.simpopdf.com

Equipement de vérification

Pour commander l'équipement ci-dessous, contacter un distributeur NISSAN.

Nom de l'outil	Description
CONSULT NISSAN ① Boîtier CONSULT avec ses accessoires ② Carte programme ● EF960 ● NATS-F940* pour NATS	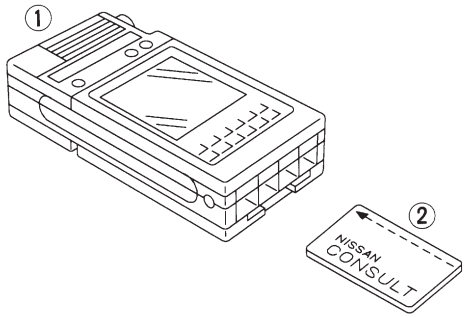 NT004

* : Pour commander la carte programme NATS, envoyer un bon de commande à NISSAN EUROPE N.V. uniquement.

Simpo PDF Merge and Split Unregistered Version - http://www.simpopdf.com

Procédure de charge

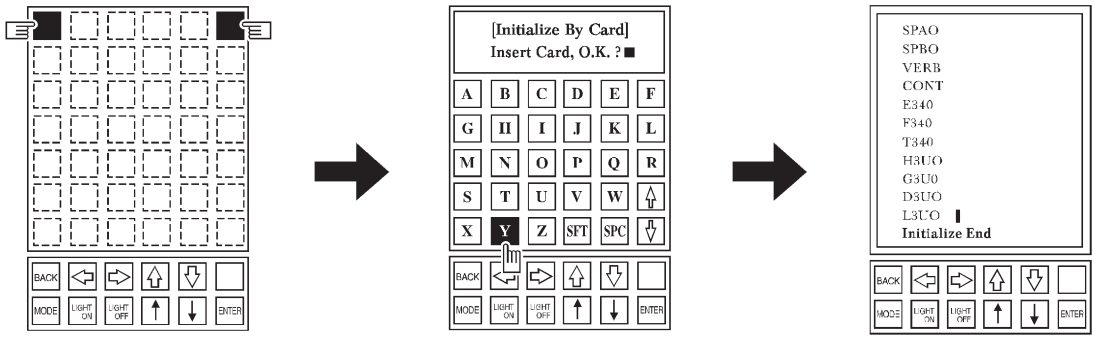

1. Tout en appuyant sur les touches en haut à gauche et en haut à droite du tableau à contact CONSULT, presser sinmultanément le contact ''ON''. Tout en pressant le contact ''ON'', continuer d'appuyer sur les deux touches de coin jusqu'à ce que l'image suivante apparaisse.
2. Si l'initialisation a été faite correctement, le message suivant apparaîtra en haut de l'écran d'afficahge : (Initialisation par carte. Insérer la carte, Bon ?)
3. Insérer la carte programme dans le lecteur de carte programme CONSULT.
4. Appuyer sur la touche ''Y'' sur le tableau de contact.
5. Maintenant le chargement du programme commence.
6. Quand le message ''Initialisation terminée'' apparaît, toucher le contact ''OFF''.

SGI983

Circuit de connecteur de liaison de données (DLC) pour CONSULT

Exemple

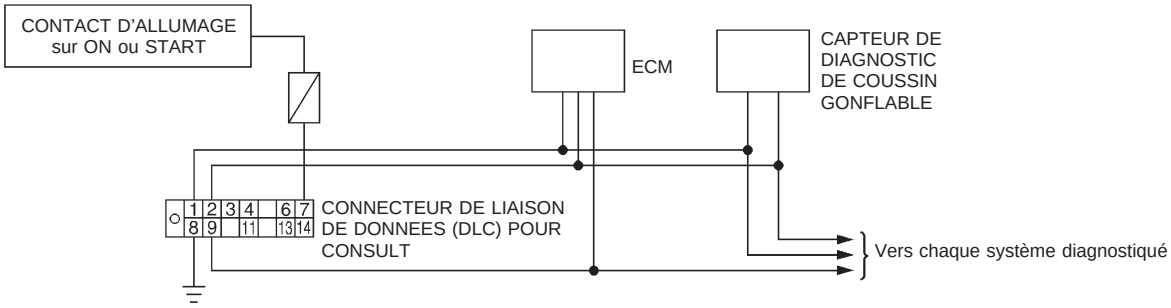

SGFI984

PROCEDURE D'INSPECTION

Si CONSULT ne peut pas effectuer un dignostic correct du système, vérifier les points suivants.

Symptôme	Points à vérifier
CONSULT ne peut accéder à aucun système.	● Circuit d'alimentation électrique (borne 7) et circuit de mise à la masse (borne 8). (Pour plus de détails sur le circuit, se reporter au ''Schéma de câblage des connecteurs MIL et de liaison de données'' à la section EC). ● Câble CONSULT DDL
CONSULT ne peut pas accéder à un système individuel (mais peut accéder à d'autres systèmes).	● Carte de programme de CONSULT (vérifier la carte de programme CONSULT corespondant au système. Se reporter à GI-0.) ● Alimentation électrique et circuit de mise à la masse de l'unité de commande du système (Pour le détail du circuit, se reporter au schéma de câblage de chaque système). ● Circuit ouvert ou court-circuit entre le système et le connecteur de liaison de données pour CONSULT (Pour le détail du circuit, se reporter au schéma de câblage de chaque système).

PICKUP (2 roues motrices)

Destination	Catégorie			Modèle		Moteur	Transmission	Porte-différentiel
	Empattement	Cabine	Catégorie	Conduite à gauche	Conduite à droite			
Zones générales (sauf pour l'Australie, le Moyen-Orient et l'Europe)	Standard	Cabine simple	STD	ABKALCFD22SWL	–	NA20S	FS5W71C	C200
	Long	Cabine simple	STD	ABKGLCFD22SWL	ABKGRCFD22SWL	NA20S		
				AVPGLCFD22NWL	AVPGRCFD22NWL	TD27		
		Cabine double	STD	CBKGLCFD22SWL	CBKGRCFD22SWL	NA20S		
			ST	CBKGLEFD22SWL	–			
			STD	CVPGLCFD22NWL	CVPGRCFD22NWL	TD27		
Australie	Long	Cabine simple	STD	–	ABFGRCFD22EML	KA24E		
			DX	–	ABFGRDFD22EML			
				–	AVPGRDFD22NML	TD27		
		Cabine double	DX	–	CBFGRDFD22EML	KA24E		
			ST	–	CBFGREFD22EML			
			DX	–	CVPGRDFD22NML	TD27		
Moyen-Orient	Standard	Cabine simple	DX	ABEALDFD22SKL	–	Z24S		
			ST	ABEALEFD22SKL	–			
			DX	AVPALDFD22NKL	–	TD27		
	Long		STD	ABEGLCFD22SKL	–	Z24S		
		Cabine double	DX	CBEGLDFD22SKL	–	Z24S		
			ST	CBEGLEFD22SKL	–			
			SE	CBEGLFFD22SKL	–			
			DX	CVPGLDFD22NKL	–	TD27		
Europe	Long	Cabine simple	STD	AVNGLCFD22NQL	AVNGRCFD22NQL	TD25		
			DX	AVNGLDFD22NQL	AVNGRDFD22NQL			
		Cabine double	DX	BVNGLDFD22NQN	BVNGRDFD22NQN			
				BBFGLDFD22EQN	–	KA24E		
		Grande cabine	DX	CVNGLDFD22NQL	–	TD25		

Simpo PDF Merge and Split Unregistered Version - http://www.simpopdf.com

Simpo PDF Merge and Split Unregistered Version - http://www.simpopdf.com

PICKUP (4 roues motrices)

Destination	Catégorie			Modèle		Moteur	Transmission	Porte-différentiel		Boîte de transfert
	Empattement	Cabine	Catégorie	Conduite à gauche	Conduite à droite			Avant	Arrière	
Zones générales (sauf pour l'Australie, le Moyen-Orient et l'Europe)	Long	Cabine simple	STD	ABEULCFD22SWL	ABEURCFD22SWL	Z24S	FS5W71C	R180A	H233B	TX10A
				AVRULCFD22NWL	AVRURCFD22NWL	QD32	FS5R30A		H233B	
		Cabine double	STD	CBEULCFD22SWN	CBEURCFD22SWN	Z24S	FS5W71C		H233B	
				–	CVRURCFD22NWN	QD32	FS5R30A		H233B	
				CBFULCFD22EWN	–	KA24E	FS5W71C		C200	
				CVRULCFD22NWN	–	QD32	FS5R30A		H233B	
			SE	CBFULFFD22EWN	–	KA24E	FS5W71C		C200	
				CVRULFFD22NWN	–	QD32	FS5R30A		H233B	
Australie		Cabine simple	DX	–	ABFURDFD22EML	KA24E	FS5W71C		C200	
			STD	–	AVRURCFD22NML	QD32	FS5R30A		H233B	
			DX	–	AVRURDFD22NML					
		Cabine double	DX	–	CBFURDFD22EMN	KA24E	FS5W71C		C200	
			DX	–	CVRURDFD22NMN	QD32	FS5R30A		H233B	
			ST	–	CVRUREFD22NMN					
Moyen-Orient		Cabine simple	DX	–	ABEULDFD22SKL	Z24S	FS5W71C		H233B	
		Cabine double		–	CBEULDFD22SKN					
Europe	Long	Grande cabine	DX	BBFULDFD22EQN	–	KA24E	FS5W71C		C200	
		Cabine double	DX	CBFULDFD22EQN	–	KA24E	FS5W71C		C200	

Simpo PDF Merge and Split Unregistered Version - http://www.simpopdf.com

Variantes de modèles (Suite)

Significations des préfixes et des suffixes (Pickup)

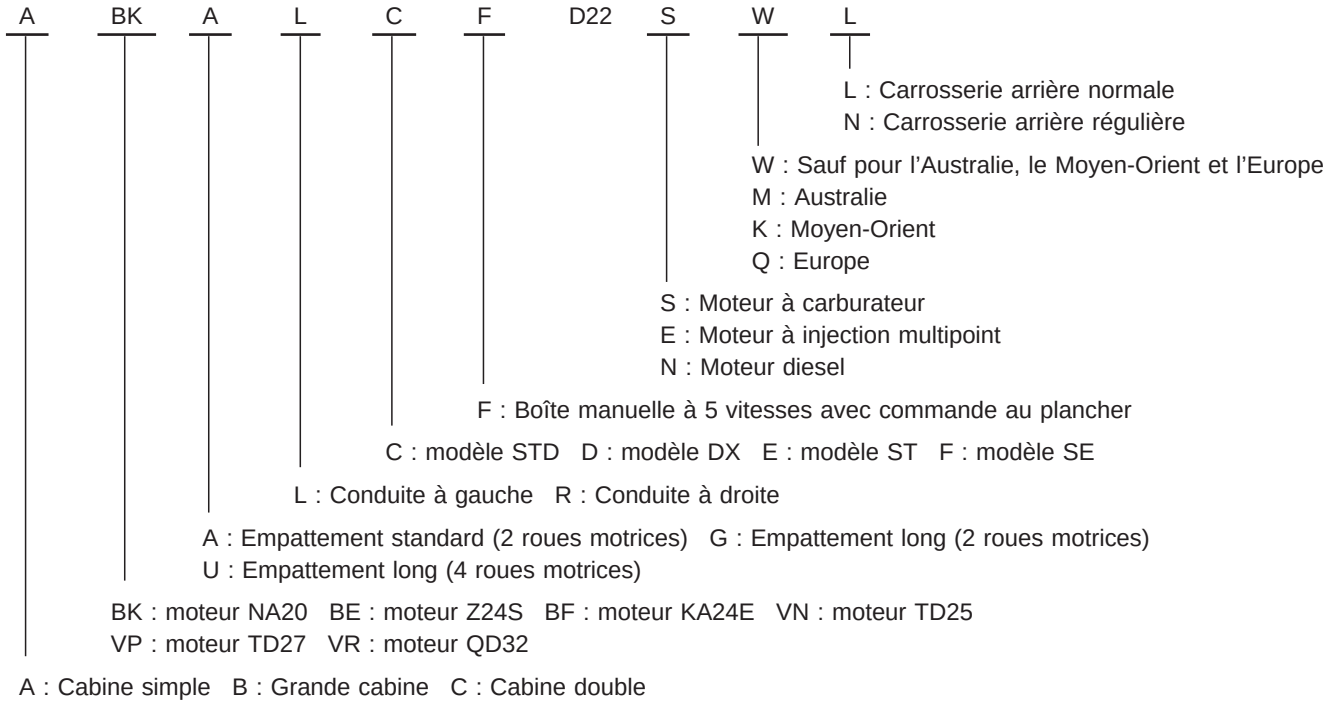

Simpo PDF Merge and Split Unregistered Version - http://www.simpopdf.com

Numéro d’identification

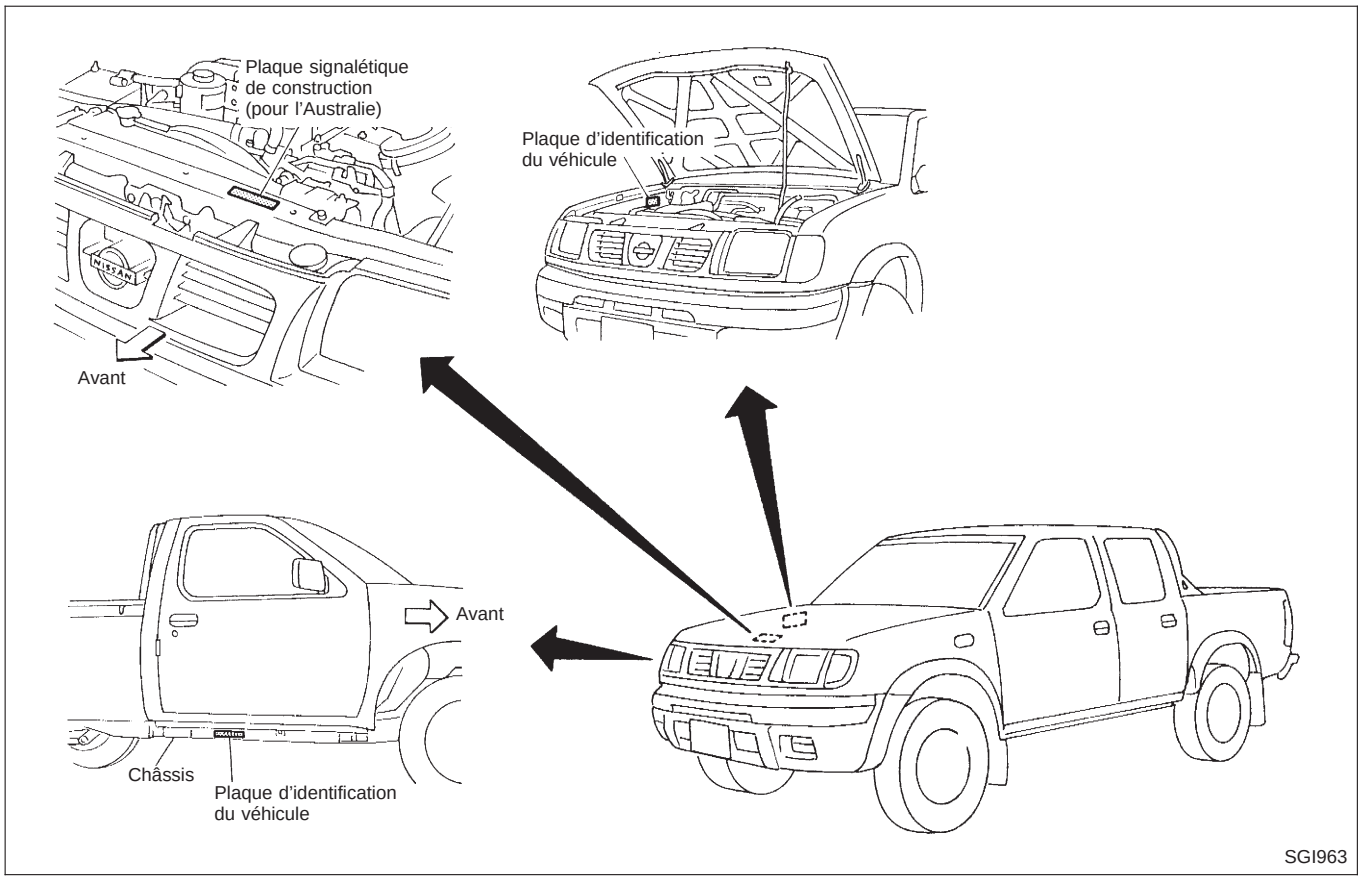

NUMERO D’IDENTIFICATION DU VEHICULE (numéro du châssis)

Significations des préfixes et des suffixes

Sauf pour l’Australie, le Brésil, l’Europe et l’Israël

JN1 A B A D22 Z 0 XXXXXX

- XXXXXX : Numéro de série du véhicule
- 0 : Bouche-trou (pas de signification)
- Z : Sauf pour l’Australie, le Brésil, l’Europe et l’Israël
- D22 : Modèle
- A : Empattement standard (2 roues motrices) G : Empattement long (2 roues motrices) U : Empattement long (4 roues motrices)
- B : moteur Z24S C : moteur KA24E E : moteur NA20S H : moteur TD27 J : moteur QD32
- A : Cabine simple C : Cabine double
- JN1 : Véhicule produit au Japon

Simpo PDF Merge and Split Unregistered Version - http://www.simpopdf.com

Numéro d'identification (Suite)

Pour l'Australie

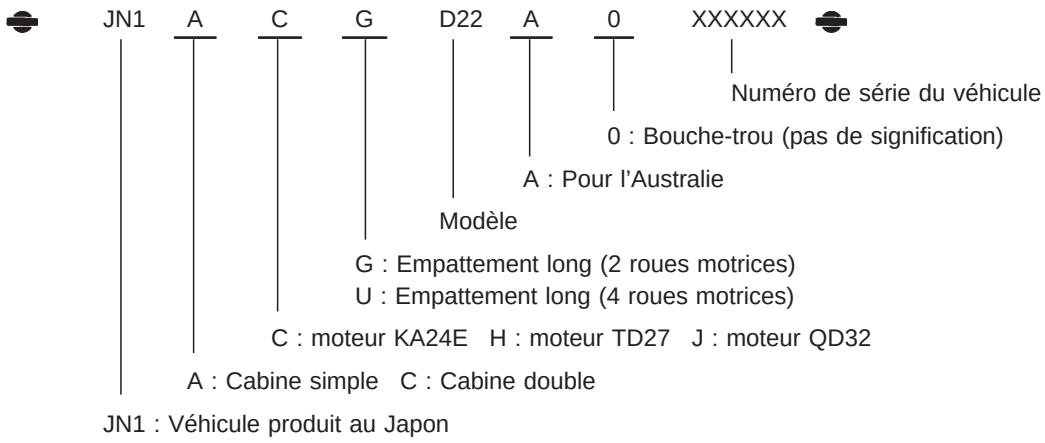

Pour le Brésil

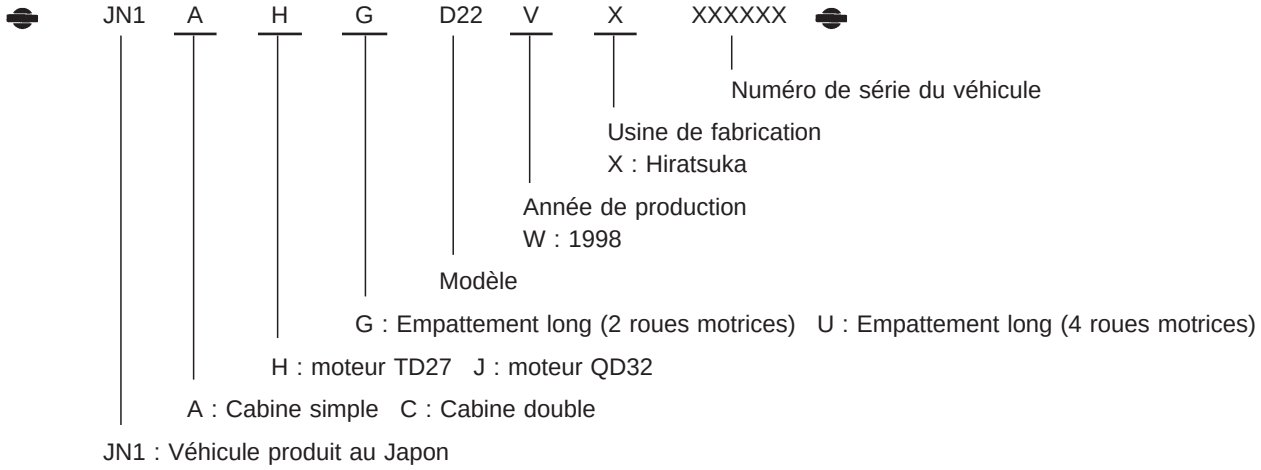

Pour l'Europe

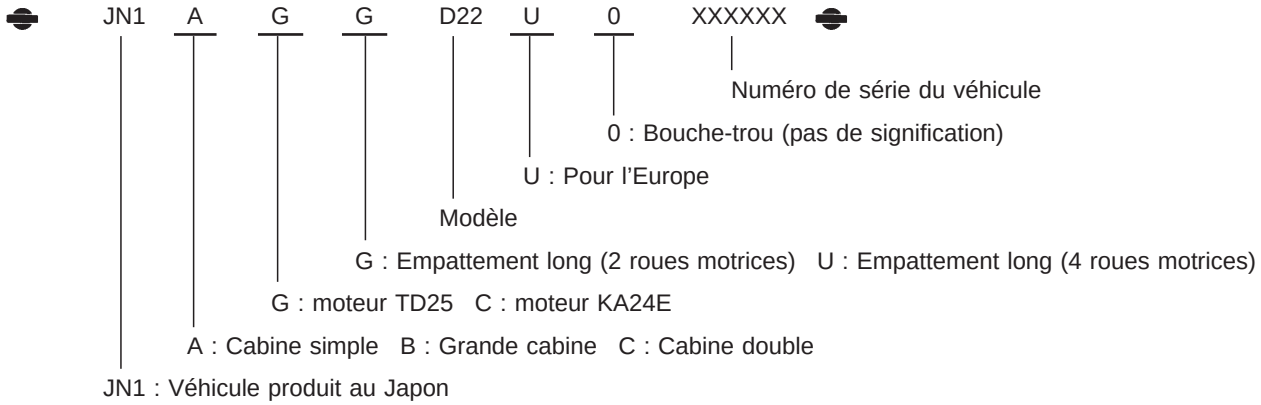

Simpo PDF Merge and Split Unregistered Version - http://www.simpopdf.com

Numéro d'identification (Suite)

Pour l'Israël

JN1 A G G D22 X X XXXXXX

- XXXXXX : Numéro de série du véhicule
- X : Usine de fabrication : Hiratuka
- X : Année de fabrication : 1999
- D22 : Modèle
- G : Empattement long (2 roues motrices) U : Empattement long (4 roues motrices)
- G : moteur TD25
- A : Cabine simple C : Cabine double
- JN1 : Véhicule produit au Japon

PLAQUE D'IDENTIFICATION

Pour la Chine

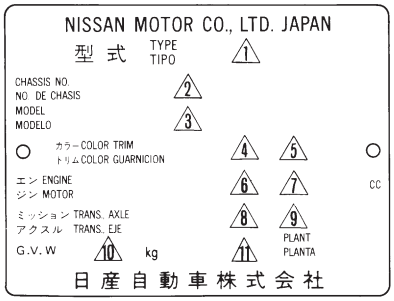

Sauf pour la Chine

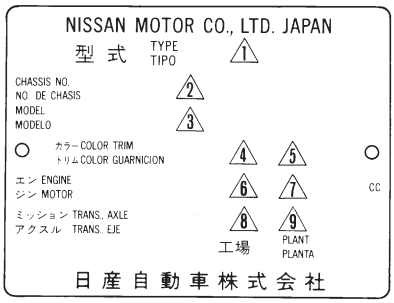

1 Numéro d'approbation du type
2 Numéro d'identification du véhicule (numéro de Châssis)
3 Modèle
4 Code de couleur de la carrosserie
5 Code de couleur des garnitures
6 Modèle de moteur
7 Cylindrée du moteur
8 Modèle de boîte-pont
9 Modèle d'essieu
10 Poids total du véhicule en charge
11 Date de production mois, année

SGI851

Simpo PDF Merge and Split Unregistered Version - http://www.simpopdf.com

Numéro d'identification (Suite)

Moteur TD

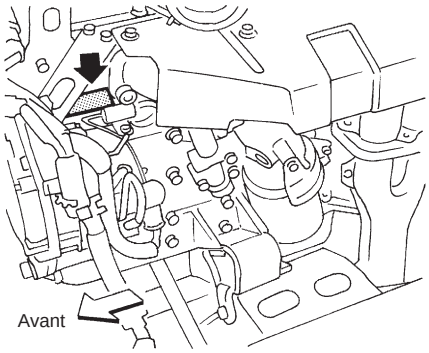

SGI966

Moteur KA

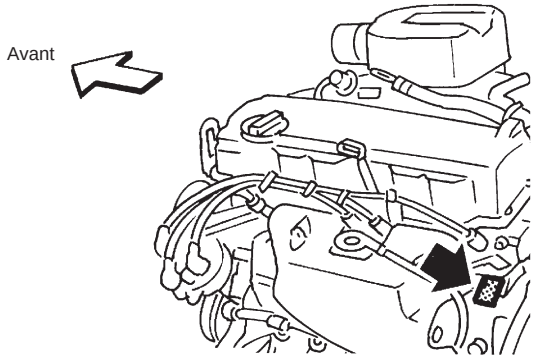

SGI965

NUMERO DE SERIE DU TRANSFERT

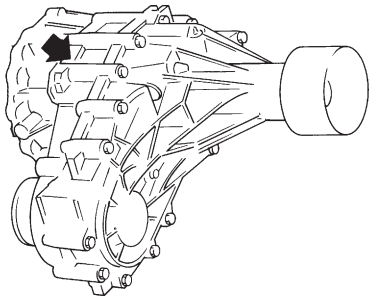

SGI761-A

NUMERO DE SERIE DE LA BOITE DE VITESSE

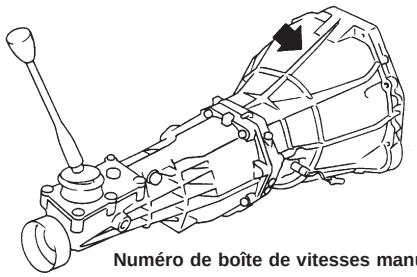

Numéro de boîte de vitesses manuelle

SGI758-A

Simpo PDF Merge and Split Unregistered Version - http://www.simpopdf.com

Dimensions

Destination			Sauf pour l'Australie, le Moyen-Orient et l'Europe				
Type de véhicule			Modèle à 2 roues motrices			Modèle à 4 roues motrices	
Empattement			Standard	Long		Long	
Type à cabine complète ou plateau			Cabine simple	Cabine simple	Cabine double	Cabine simple	Cabine double
Longueur hors tout*1		mm	4 675	4 975	4 885	4 975	4 885
Largeur hors tout		mm	1 690	1 690	1 690	1 820	1 820
Hauteur hors tout		mm	1 630	1 625	1 640 1 615*2	1 700	1 715 1 705*3
Empattement		mm	2 650	2 950	2 950	2 950	2 950
Voie	Avant	mm	1 395	1 395	1 395	1 525	1 525
	Arrière	mm	1 390	1 390	1 390	1 505	1 505
Garde au sol		mm	210	210	210 185*2	Z24S : 225 QD32 : 210	Z24S : 225 KA24E : 215 QD32 : 210 200*3

*1 : Sur les modèles équipés de pare-chocs/marchepied, le pare-chocs ajoute 155 mm à la longueur hors tout donnée ci-dessus.
*2 : Modèle ST
*3 : Modèle SE

Destination			Australia			
Type de véhicule			Modèle à 2 roues motrices		Modèles à 4 roues motrices	
Empattement			Long		Long	
Type à cabine complète ou plateau			Cabine simple	Cabine double	Cabine simple	Cabine double
Longueur hors tout*		mm	4 975	4 885	4 975	4 885
Largeur hors tout		mm	1 690	1 690	1 820	1 820
Hauteur hors tout		mm	1 615	1 625	1 690	1 705
Empattement		mm	2 950	2 950	2 950	2 950
Voie	Avant	mm	1 395	1 395	1 525	1 525
	Arrière	mm	1 390	1 390	1 505	1 505
Garde au sol		mm	200	200	KA24: 230 QD32: 215	KA24: 230 QD32: 215

* : Sur les modèles équipés de pare-chocs/marchepied, le pare-chocs ajoute 155 mm à la longueur hors tout donnée ci-dessus.

Simpo PDF Merge and Split Unregistered Version - http://www.simpopdf.com

Dimensions (Suite)

Destination			Moyen-Orient				
Type de véhicule			Modèle à 2 roues motrices			Modèle à 4 roues motrices	
Empattement			Standard	Long		Long	
Type à cabine complète ou plateau			Cabine simple	Cabine simple	Cabine double	Cabine simple	Cabine double
Longueur hors tout*		mm	4 855	5 185	5 095	5 185	5 095
Largeur hors tout		mm	1 690	1 690	1 690	1 820	1 820
Hauteur hors tout		mm	Z24S: 1 610 TD27: 1 630	1 605	Z24S: 1 615 TD27: 1 640	1 695	1 715
Empattement		mm	2 650	2 950	2 950	2 950	2 950
Voie	Avant	mm	1 395	1 395	1 395	1 525	1 525
	Arrière	mm	1 390	1 390	1 390	1 505	1 505
Garde au sol		mm	Z24S: 190 TD27: 210	190	Z24S: 185 TD27: 215	225	225

* : Les dimensions ci-dessous comprennent la longueur de la butée de pare-chocs et le pare-chocs/marchepied arrière, si applicable.

Destination			Europe				
Type de véhicule			Modèle à 2 roues motrices			Modèle à 4 roues motrices	
Empattement			Long			Long	
Type à cabine complète ou plateau			Cabine simple	Cabine simple	Cabine double	Grande cabine	Cabine double
Longueur hors tout*1		mm	4 975	4 975	4 885	4 975	4 885
Largeur hors tout		mm	1 690	1 690	1 690	1 820	1 820
Hauteur hors tout		mm	1 600	1 620 *2	1 610	1 700	1 720
Empattement		mm	2 950	2 950	2 950	2 950	2 950
Voie	Avant	mm	1 395	1 395	1 395	1 525	1 525
	Arrière	mm	1 390	1 390	1 390	1 505	1 505
Garde au sol		mm	190 *3	200	190 *3	230	230

*1 : Sur les modèles équipés de pare-chocs/marchepied, le pare-chocs ajoute 155 mm à la longueur hors tout donnée ci-dessus.
*2, *3 : Pour les modèles équipés des pneus 195R14C, ajouter 10mm à la longueur hors tout en garde au sol minimun

Simpo PDF Merge and Split Unregistered Version - http://www.simpopdf.com

Roues et pneus

PICKUP (2 roues motrices)

Pneu	Roue	Modèle								
		Sauf pour l'Australie, le Moyen-Orient et l'Europe		Australie		Moyen-Orient		Europe		
		Cabine simple	Cabine double	Cabine simple	Cabine double	Modèle avec moteur TD27	Modèle avec moteur Z24 engine model	Cabine simple	Grande cabine	Cabine double
6,00/6,50-14-6/8*1	5J-14	X	X	—	—	X	—	—	—	—
6.50-14-8/8	5J-14	X*2	X*2	—	—	X*2	—	—	—	—
185R14C-8/8	5J-14	X*2	X	—	—	X*2	X	X	X	X
195R14C-8/8	5J-14	—	—	X	X	—	—	X*2	X	—

X : Applicable
— : Pas applicable
*1 : 6,00-14-6 pour l'avant/6,50-14-8 pour l'arrière
*2 : Option

PICKUP (4 roues motrices)

Pneu	Roue	Modèle			
		Sauf pour l'Australie, le Moyen-Orient et l'Europe	Australie	Moyen-Orient	Europe
6,50-15-6/8*1	5-1/2K-15	X	—	X	—
215R15-8/8	5-1/2K-15	X	—	X*2	—
205/R16C-8/8	6J-16	—	—	—	X
205/75R16C	6J-16	—	X	—	—
255/70R15C	7JJ-15	—	—	—	X*2

X : Applicable
— : Pas applicable
*1 : 6-plis pour l'avant/8-plis pour l'arrière
*2 : Option

Simpo PDF Merge and Split Unregistered Version - http://www.simpopdf.com

AVERTISSEMENT :

- **Ne jamais se glisser sous un véhicule soutenu uniquement par un cric. Toujours faire reposer le châssis sur des chandelles de sécurité lorsque l'on est amené à travailler sous le véhicule.**
- **Placer des cales à l'avant et à l'arrière des roues sur le sol.**

Cric pantographe

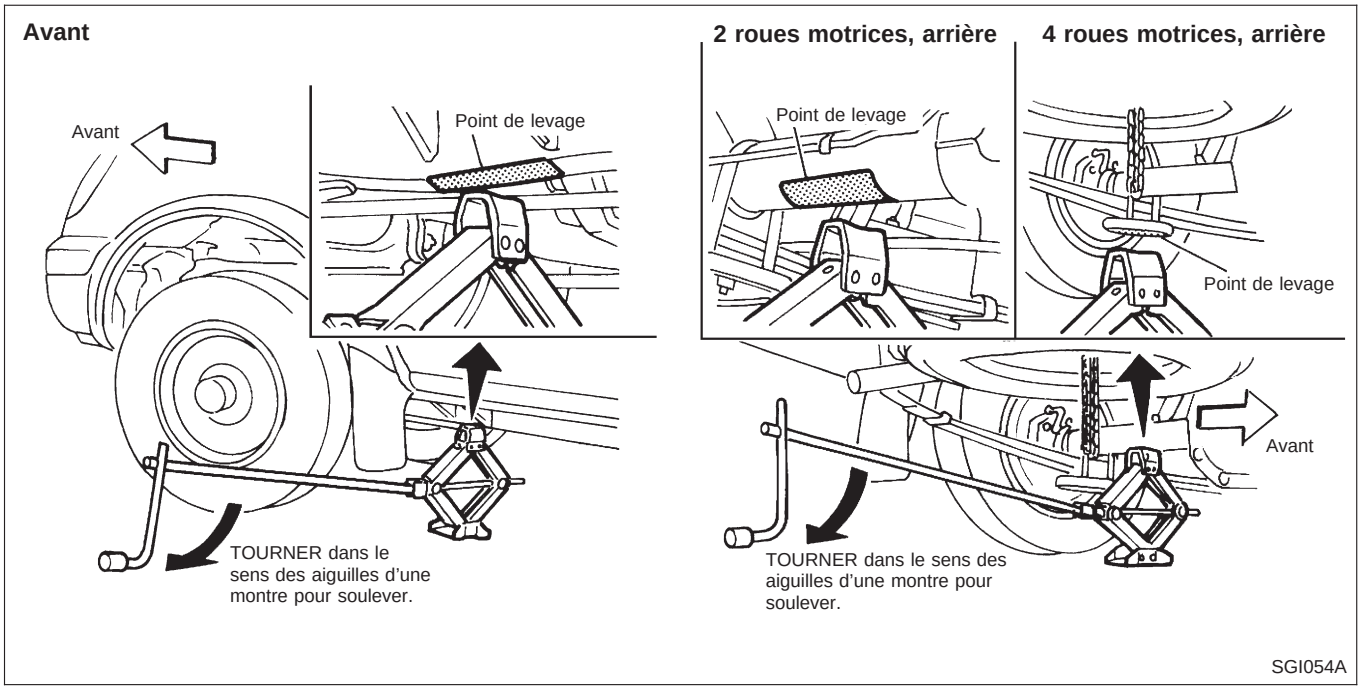

Simpo PDF Merge and Split Unregistered Version - http://www.simpopdf.com

Cric mécanique

Avant, 2 roues motrices

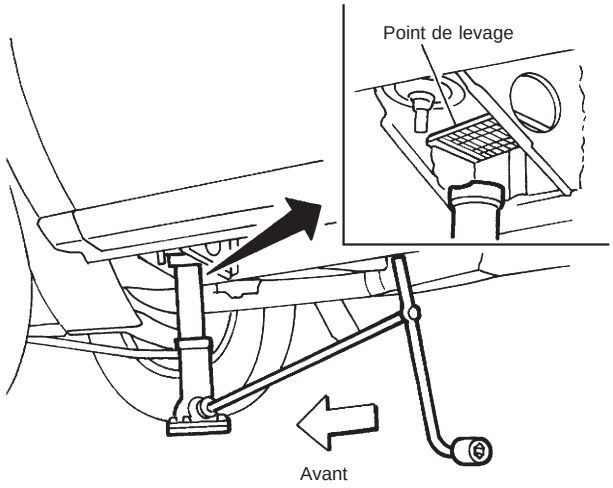

Avant, 4 roues motrices

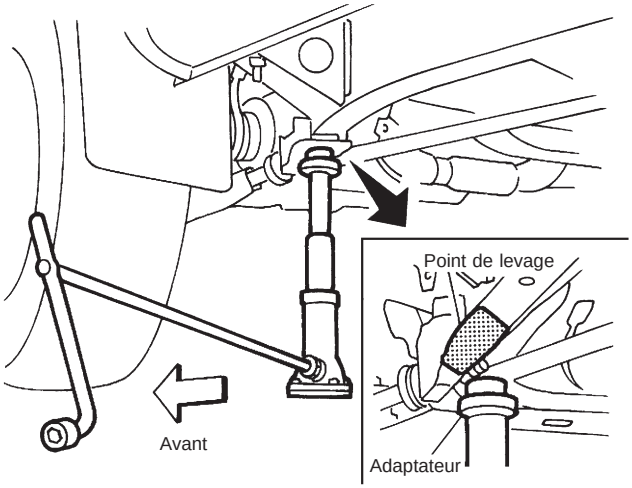

Arrière, 2 roues motrices

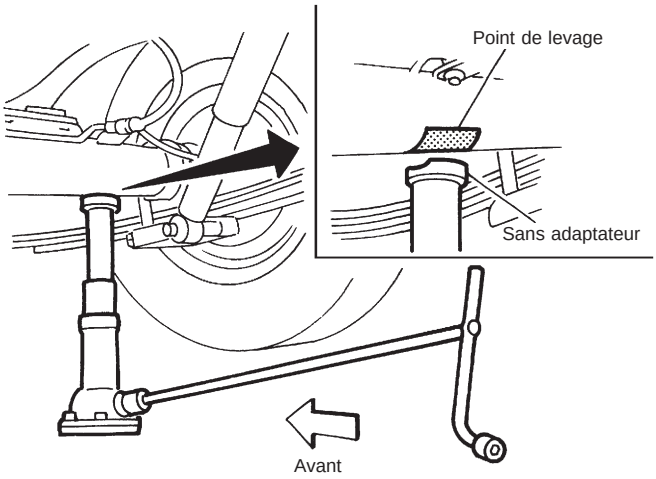

Arrière, 4 roues motrices

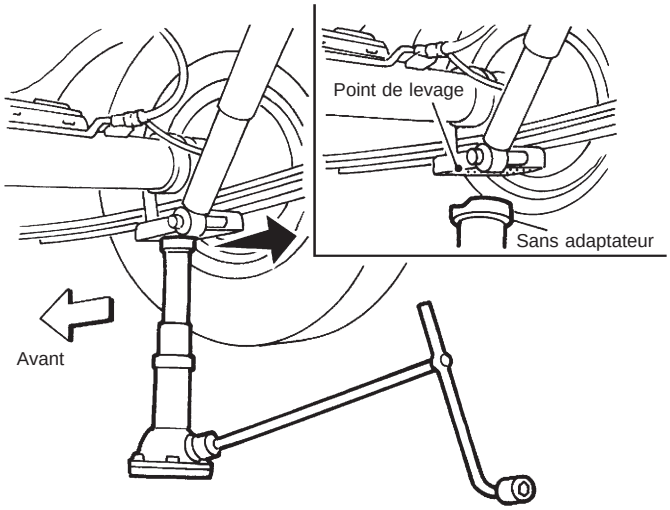

SGI055A

Simpo PDF Merge and Split Unregistered Version - http://www.simpopdf.com

Cric rouleur et chandelles de sécurité

ATTENTION :
Placer un bloc de bois ou de caoutchouc entre les chandelles de sécurité et la carrosserie du véhicule lorsque le support est plat.

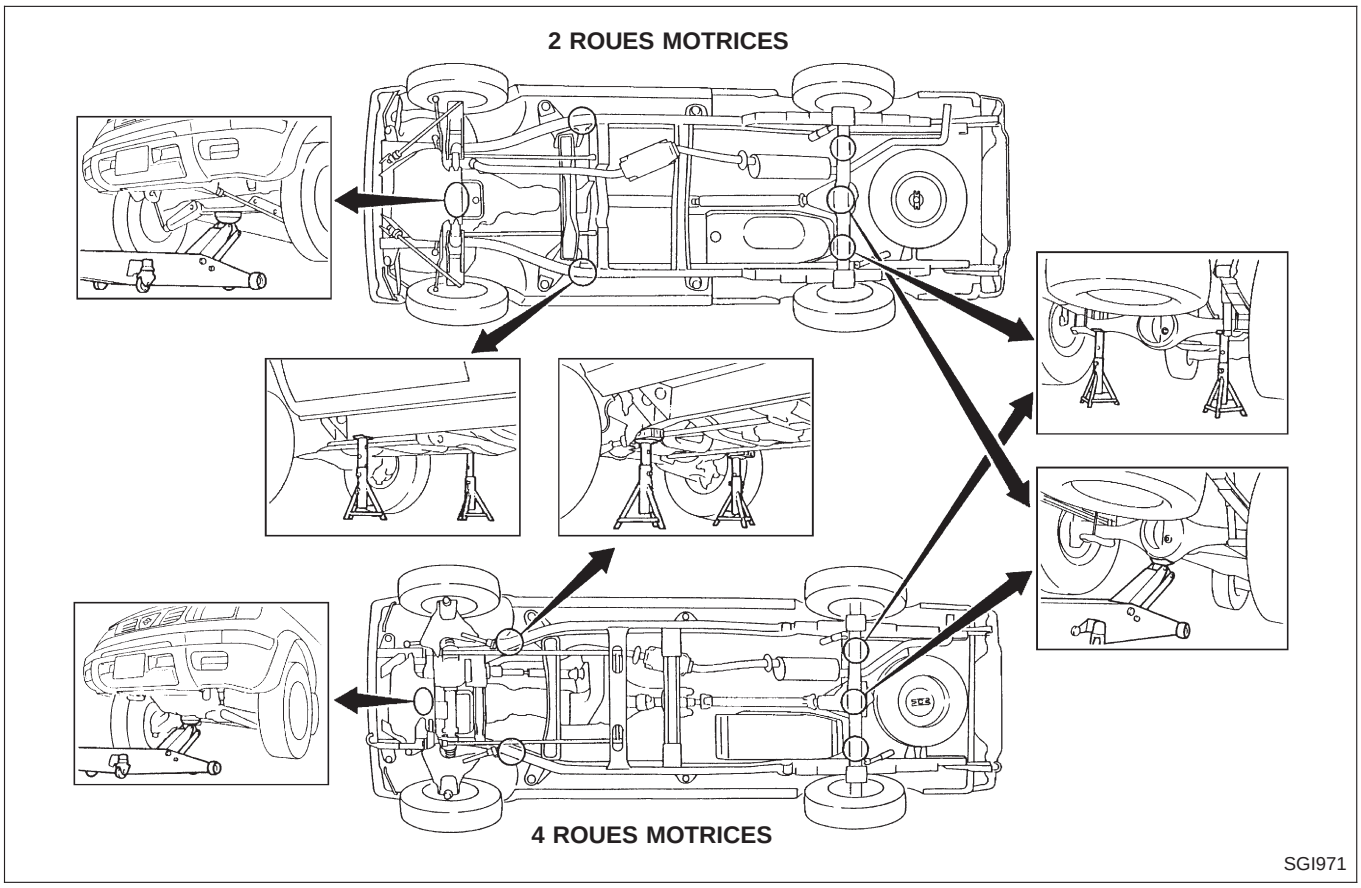

Simpo PDF Merge and Split Unregistered Version - http://www.simpopdf.com

Elévateur à 2 colonnes

AVERTISSEMENT :
Lors du levage du véhicule, écarter les bras de levage le plus possible afin que l'avant et l'arrière du véhicule soient convenablement équilibrés.
En disposant le bras de levage, veiller à ce qu'il n'entre pas en contact avec les tuyaux de frein, les câbles de frein et les canalisations d'alimentation.

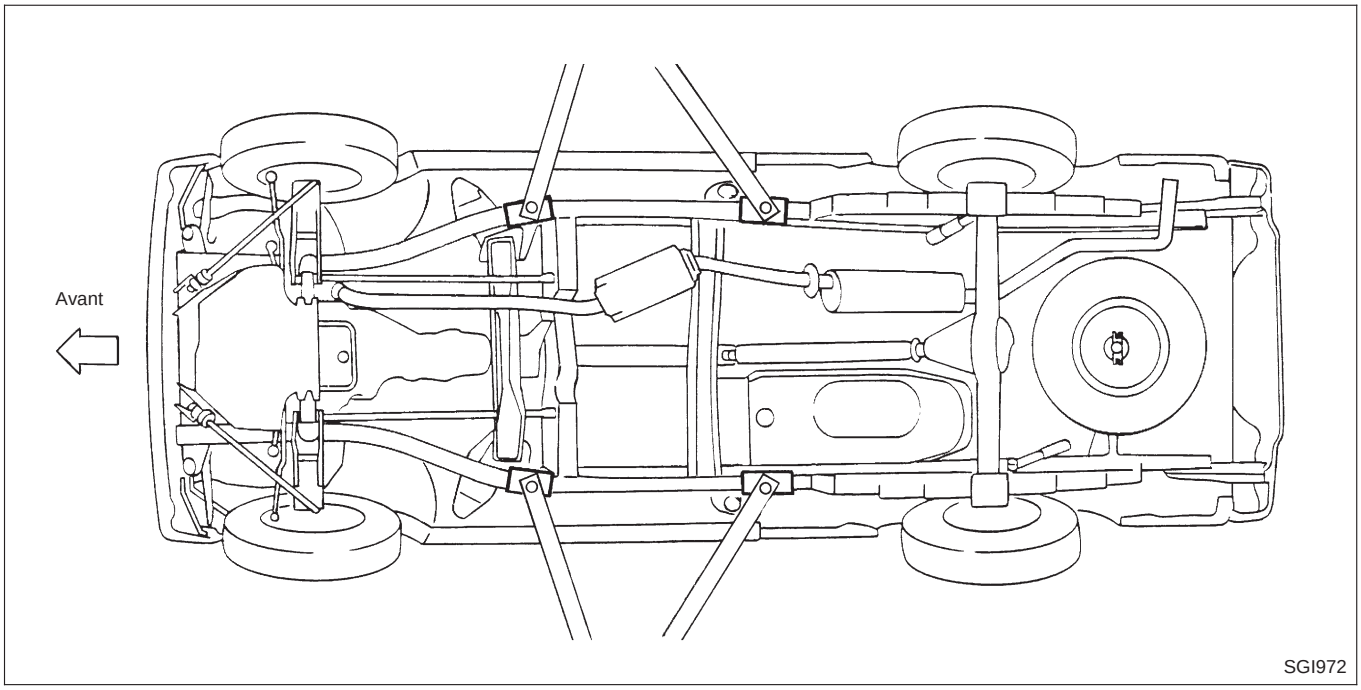

Simpo PDF Merge and Split Unregistered Version - http://www.simpopdf.com

Remorquage par une dépanneuse

ATTENTION :

- **Respecter toute réglementation locale en vigueur concernant le remorquage.**
- **Il est nécessaire d'utiliser un équipement de remorquage adéquat afin d'éviter d'endommager le véhicule lors du remorquage.**
- **Pour tout remorquage, attacher des chaînes de sécurité.**
- **Lors du remorquage, s'assurer que la transmission, la direction et la chaîne cinématique sont en bon état. Si l'un des ensembles est endommagé, utiliser un chariot de garage.**
- **Lors d'un remorquage avec les roues avant au sol :**
  Tourner la clé de contact sur la position ''OFF'' et bloquer le volant de direction en position droite à l'aide d'une corde ou d'un dispositif équivalent. Ne jamais mettre la clé de contact sur la position ''LOCK''. Cela pourrait endommager le mécanisme de verrouillage de la direction.
- **Lors d'un remorquage avec les roues arrière au sol, desserrer le frein de stationnement et placer le levier de changement de vitesses au point mort (position ''N'').**
- **Ne jamais remorquer de véhicule par l'arrière (en marche arrière) avec les quatre roues au sol, car cela pourrait entraîner des dommages graves à la boîte de vitesses, nécessitant des réparations onéreuses.**
- **Pour modèle à 4 roues motrices :**
  Mettre les moyeux de roue libre en position de roue libre. Déplacer le levier de passage de boîte de transfert sur la position ''2H'' et le levier de passage de boîte de vitesses sur la position de point mort (''N'').

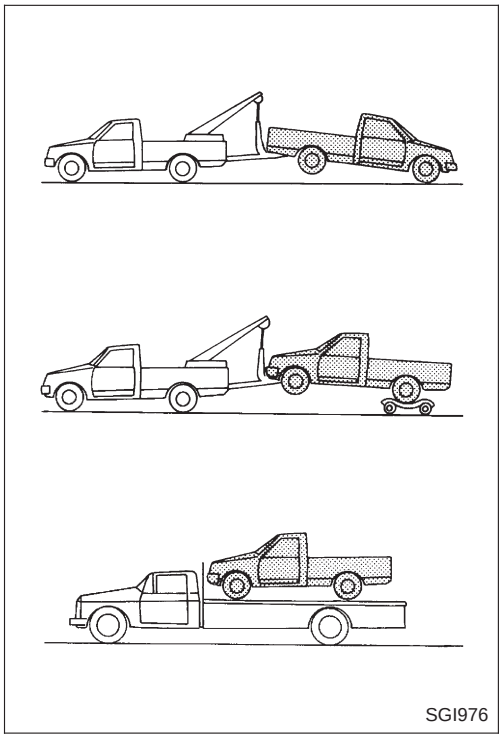

MODELES A 2 ROUES MOTRICES

NISSAN recommande que le véhicule soit remorqué avec les roues motrices (arrière) décollées du sol, comme indiqué sur l'illustration.

Remorquage avec les quatres roues au sol ou avec les roues arrière au sol

Respecter les limitations de vitesse et de distance suivantes imposées pour le remorquage.

Vitesse : moins de 95 km/h
Distance : moins de 800 km

Si les données de vitesse ou de distance s'avèrent plus importantes, déposer au préalable l'arbre de transmission pour éviter d'endommager la boîte de vitesses.

Simpo PDF Merge and Split Unregistered Version - http://www.simpopdf.com

Remorquage par une dépanneuse (Suite)

MODELES A 4 ROUES MOTRICES

NISSAN recommande l'utilisation d'un chariot de garage pour le remorquage des modèles à quatre roues motrices, comme indiqué dans l'illustration.

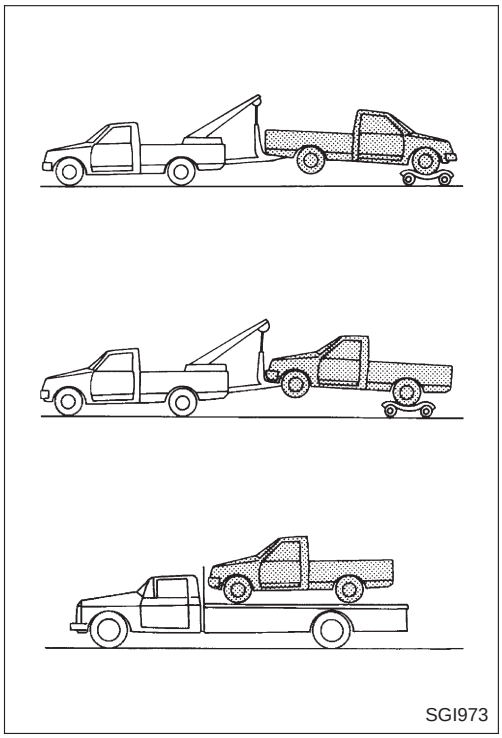
SGI973

Remorquage avec les quatres roues au sol ou avec les roues avant ou arrière au sol

Respecter les limitations de vitesse et de distance suivantes imposées pour le remorquage.

Vitesse : moins de 95 km/h
Distance : moins de 800 km

Si les données de vitesse ou de distance s'avèrent plus importantes, déposer au préalable les arbres de transmission avant et arrière pour éviter d'endommager la boîte de vitesses.

Simpo PDF Merge and Split Unregistered Version - http://www.simpopdf.com

Points de remorquage

Ne jamais remorquer un véhicule en utilisant uniquement les points de remorquage. Pour ne pas risquer d'endommager le véhicule pendant le remorquage, il est nécessaire d'utiliser un équipement de remorquage approprié.

Avant

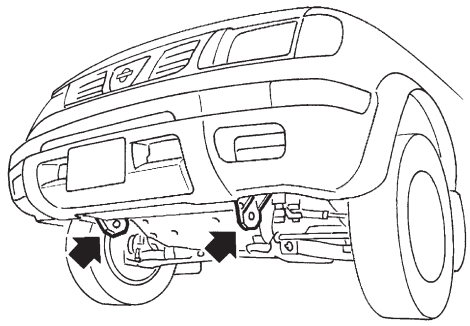

SGI968

Arrière

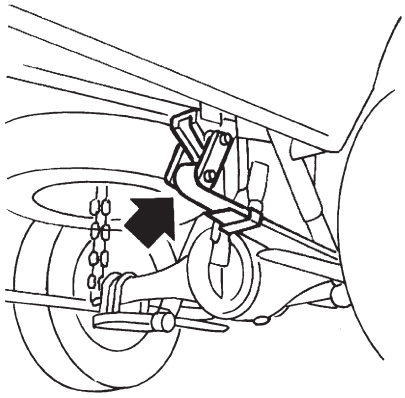

SGI926

Arrière (selon modèles)

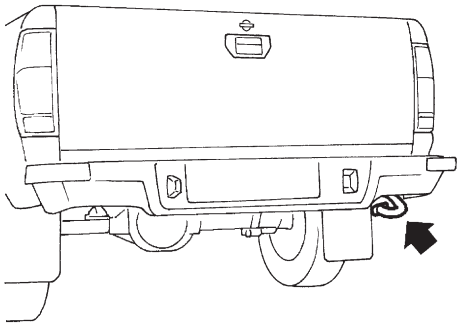

SGI969

DEPANNAGE DU VEHICULE (dégager un véhicule embourbé)

- Les dispositifs de remorquage doivent être orientés de façon à ne toucher aucun élément des systèmes de suspension, direction, freinage ou refroidissement.
- Toujours tirer le câble de remorquage en ligne droite, dans l'axe avant ou arrière du véhicule. Ne pas soumettre le véhicule à un effort latéral.
- Les dispositifs de traction tels que cordes et sangles en matière textile ne sont pas recommandés pour le remorquage ou le dépannage du véhicule.

Simpo PDF Merge and Split Unregistered Version - http://www.simpopdf.com

COUPLE DE SERRAGE DES BOULONS STANDARD

Catégorie	Format de boulon	Diamètre de boulon* mm	Pas mm	Couple de serrage (sans lubrifiant)			
				Boulon à tête hexagonale		Boulon hexagonal à épaulement	
				N·m	kg-m	N·m	kg-m
4T	M6	6,0	1,0	5,1	0,52	6,1	0,62
	M8	8,0	1,25	13	1,3	15	1,5
			1,0	13	1,3	16	1,6
	M10	10,0	1,5	25	2,5	29	3,0
			1,25	25	2,6	30	3,1
	M12	12,0	1,75	42	4,3	51	5,2
			1,25	46	4,7	56	5,7
	M14	14,0	1,5	74	7,5	88	9,0
7T	M6	6,0	1,0	8,4	0,86	10	1,0
	M8	8,0	1,25	21	2,1	25	2,5
			1,0	22	2,2	26	2,7
	M10	10,0	1,5	41	4,2	48	4,9
			1,25	43	4,4	51	5,2
	M12	12,0	1,75	71	7,2	84	8,6
			1,25	77	7,9	92	9,4
	M14	14,0	1,5	127	13,0	147	15,0
9T	M6	6,0	1,0	12	1,2	15	1,5
	M8	8,0	1,25	29	3,0	35	3,6
			1,0	31	3,2	37	3,8
	M10	10,0	1,5	59	6,0	70	7,1
			1,25	62	6,3	74	7,5
	M12	12,0	1,75	98	10,0	118	12,0
			1,25	108	11,0	137	14,0
	M14	14,0	1,5	177	18,0	206	21,0

1. Les pièces spéciales ne sont pas comprises.
2. Ces couples de serrage sont valables pour les boulons dont la tête porte l'une des inscriptions suivantes.

* : Diamètre nominal

Catégorie	Repère
4T	4
7T	7
9T	9

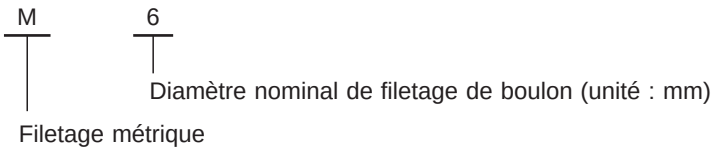

Simpo PDF Merge and Split Unregistered Version - http://www.simpopdf.com

Liste de terminologie SAE J1930

Tous les termes en rapport avec le système des gaz d'échappement, utilisés dans cette publication conformément à la liste de terminologie SAE J1930, sont listés. En conséquence, les acronymes/abréviations ainsi que les termes sont indiqués dans ce tableau.

*** : Pas applicable

ACRONYME/ ABREVIATION	TERME
ACL	Filtre à air
BARO	Pression barométrique
BAROS-BCDD	Capteur de pression barométrique BCDD
CMP	Angle d'arbre à cames
CMPS	Capteur d'angle d'arbre à cames
CARB	Carburateur
CAC	Refroidisseur d'air de suralimentation
CL	Boucle fermée
Contact CTP	Contact de ralenti
Contact CPP	Contact d'embrayage
Système CFI	Système d'injection continue
Système CTOX	Séparateur périodique à oxydation continue
CKP	Angle de vilebrequin
CKPS	Capteur d'angle de vilebrequin
DLC	Connecteur de liaison des données
DLC pour CONSULT	Connecteur de diagnostic pour CONSULT
DTM	Mode de diagnostic
Sélecteur DTM	Sélecteur de mode d'essai de diagnostic
DTM I	Mode I
DTM II	Mode II
DTC	Code de défaut
Système DFI	Système d'injection directe
Système DI	Commande de calage d'allumage
Système EC	Controle de l'ECCS
Réchauffeur de mélange EFE	Réchauffeur de mélange
Système EFE	Commande de réchauffeur de mélange
EEPROM	Mémoire morte programmable effaçable électriquement
Cartouche EVAP	Cartouche d'évaporation des émissions
Système EI	Commande de calage d'allumage
ECM	Boîtier de contrôle de l'ECCS
ECT	Température du moteur
ECTS	Capteur de temp. moteur
EM	Modification du moteur
RPM	Régime moteur
EPROM	Mémoire morte programmable effaçable
Système EVAP	Système d'évaporation des émissions
Vanne EGR	Vanne EGR
Vanne EGRC-BPT	Vanne de transduction de contre-pression (BPT)
Electrovanne EGRC	Electrovanne de commande EGR

Simpo PDF Merge and Split Unregistered Version - http://www.simpopdf.com

Liste de terminologie SAE J1930 (Suite)

ACRONYME/ ABREVIATION	TERME
Capteur de temp. EGRT	Capteur de température des gaz d'échappement
FEEPROM	Mémoire morte programmable effaçable électriquement
FEPROM	Mémoire morte programmable effaçable
FFS	Capteur de flexible d'alimentation
Système FF	Système de flexible d'alimentation
Système FT	Répartiteur de carburant
HO2S	Sonde à oxygène chauffée
Système IAC	Commande de régime de ralenti
Régulateur d'air-IACV	Régulateur d'air
Vanne IACV-AAC	Vanne de commande d'air auxiliaire (AAC)
Electrovanne IACV-FICD	Electrovanne FICD
Electrovanne de montée en ralenti-IACV	Electrovanne de commande de montée en ralenti
ISC-FI pot	Pot FI de commande du régime ralenti
Système ISC	Système de commande du régime ralenti
IC	Commande d'allumage
ICM	Module de commande d'allumage
Système IFI	Système d'injection indirecte
IA	Air d'admission
IATS	Sonde de température d'air d'admission
KS	Capteur de détonation
MIL	Témoin CHECK ENGINE
MAP	Pression absolue du collecteur
MAPS	Capteur de pression absolue du collecteur
MDP	Pression différentielle du collecteur
MDPS	Capteur de pression différentielle du collecteur
MST	Température de la surface de collecteur
MSTS	Capteur de température de la surface de collecteur
MVZ	Partie à dépression du collecteur
MVZS	Capteur de partie à dépression du collecteur
MAFS	Débitmètre d'air
Electrovanne MC	Electrovanne de commande de richesse de mélange air/carburant
Système MFI	Commande d'injection multipoint
NVRAM	Mémoire à accès sélectif non inconstant
Système OBD	Autodiagnostic
OL	Boucle ouverte
OC	Catalyseur à oxydation
Système OC	Système de catalyseur à oxydation
O2S	Sonde à oxygène
Contact PNP	Contact de stationnement/point-mort
Système PTOX	Séparateur périodique à oxydation
PCV	Ventilation du carter moteur
PCV valve	Soupape de ventilation du carter moteur
PCM	Module de commande du groupe motopropulseur
PROM	Mémoire morte programmable

Simpo PDF Merge and Split Unregistered Version - http://www.simpopdf.com

Liste de terminologie SAE J1930 (Suite)

ACRONYME/ ABREVIATION	TERME
Electrovanne PAIRC	Electrovanne de commande d'injection d'air secondaire pulsé
Système PAIR	Système d'injection d'air secondaire pulsé
Vanne PAIR	Vanne d'injection d'air secondaire pulsé
RAM	Mémoire à accès sélectif
ROM	Mémoire morte
ST	Outil de balayage
Pompe AIR	Pompe à injection d'air secondaire
Système AIR	Système d'injection d'air secondaire
Système SFI	Système d'injection multi-point séquentielle
SRI	Indicateur de rappel d'entretien
Système SPL	Système du limiteur de fumée
SC	Suralimentation
SCB	Dérivation de suralimentation
SRT	Contrôle fonctionnel du système
TVV	Vanne thermique à dépression
TWC	Catalyseur trois voies
Système TWC	Système de catalyseur trois voies
TWC + OC	Catalyseur trois voies + oxydation
Système TWC + OC	Système catalyseur trois voies + oxydation
TB	Boîtier de papillon
Système TBI	Système d'injection à boîtier de papillon
TP	Position de papillon
TPS	Capteur de position de papillon
Contact TP	Contact de position de papillon
Electrovanne TCC	Electrovanne d'embrayage de convertisseur de couple
TCM	Module de commande de transmission
TC	Turbocompresseur
VSS	Capteur de vitesse du véhicule
VAFS	Débitmètre d'air
WU-OC	Catalyseur à oxydation d'échauffement
Système WU-OC	Système de catalyseur à oxydation d'échauffement
WU-TWC	Catalyseur trois voies d'échauffement
Système WU-TWC	Système de catalyseur trois voies d'échauffement
Contact WOTP	Contact de papillon grand ouvert

Simpo PDF Merge and Split Unregistered Version - http://www.simpopdf.com

CHAUFFAGE ET CLIMATISEUR

SECTION HA

TABLE DES MATIERES

PRECAUTIONS ET PREPARATION 1
Système de retenue supplémentaire (SRS) ‘‘COUSSIN GONFLABLE’’ (modèles à 4 roues motrices) 1
Système de retenue supplémentaire (SRS) ‘‘COUSSIN GONFLABLE’’ (modèles à 2 roues motrices) 1
PRECAUTIONS ET PREPARATION 2
Précautions d’emploi du HFC-134a (R-134a) 2
Précautions générales pour l’emploi du réfrigérant 2
Précautions pour les raccords de réfrigérant 2
Précautions pour l’entretien sur le compresseur 7
Outillage spécial 7
Outillage et équipement d’entretien du HFC-134a (R-134a) 9
Précautions pour l’équipement d’entretien 11
DESCRIPTION 14
Cycle de réfrigération 14
Disposition des composants 15
Débit d’air de décharge 16
Fonctionnement des commandes 18
DIAGNOSTICS DES DEFAUTS 19
Comment effectuer un diagnostic des défauts permettant une réparation rapide et efficace 19
Vérification du fonctionnement 20
Tableau des symptômes 22
Vérification préliminaire 23
Diagnostics de l’essai de rendement 26
Tableau de rendement 28
Diagnostics des défauts en cas de pression anormale 29
Emplacement des composants 32
Schéma de câblage – HEATER – 33
Schéma de circuit – Climatiseur 34
Schéma de câblage – A/C – 35
Vérification de l’alimentation électrique principale et du circuit de mise à la masse 38
Procédure de diagnostic 1 39
Procédure de diagnostic 2 41
Inspection des composants électriques 45
Réglage de la timonerie de commande 47
PROCEDURES D’ENTRETIEN 50
Procédure d’entretien du HFC-134a (R-134a) 50
Contrôle de la quantité de lubrifiant dans le compresseur 52
Canalisations de réfrigération 54
Vérification des fuites de réfrigérant 58
Fixation du compresseur 61
Compresseur – Modèle DKV-14C (marque ZEXEL) 62
Embrayage de compresseur – Modèle DKV-14C (marque ZEXEL) 62
Protecteur thermique – Modèle DKV-14C (marque ZEXEL) 65
Compresseur – Modèle DKS-17CH (marque ZEXEL) 66
Embrayage de compresseur – Modèle DKS-17CH (marque ZEXEL) 66
CARACTERISTIQUES ET VALEURS DE REGLAGE (SDS) 70
Caractéristiques générales 70
Inspection et réglage 70

Simpo PDF Merge and Split Unregistered Version - http://www.simpopdf.com

Lecture des schémas de câblage :

- **Lire la section GI : ‘‘COMMENT LIRE LES SCHEMAS DE CABLAGE’’.**
- **Voir la section EL, ‘‘DISPOSITION DE L’ALIMENTATION ELECTRIQUE’’ pour connaître les circuits de distribution de l’alimentation électrique.**

Se reporter aux chapitres ‘‘COMMENT LIRE LES ORGANIGRAMMES DANS LES DIAGNOSTICS DES DEFAUTS’’ et ‘‘COMMENT EFFECTUER UN DIAGNOSTIC EFFICACE EN CAS D’INCIDENT ELECTRIQUE’’ à la section GI pour effectuer les diagnostics des défauts.

Simpo PDF Merge and Split Unregistered Version - http://www.simpopdf.com

Système de retenue supplémentaire (SRS) ‘‘COUSSIN GONFLABLE’’ (modèles à 4 roues motrices)

Utilisé avec une ceinture de sécurité, le coussin gonflable du système de retenue supplémentaire contribue à réduire les risques et la gravité des blessures subies par le conducteur en cas de collision frontale. Le système de retenue supplémentaire se compose d’un module de coussin gonflable (situé dans le moyeu du volant), d’un boîtier de capteurs de diagnostic, d’un témoin avertisseur, d’un faisceau de câblage et d’un câble spiralé. Les informations nécessaires à l’entretien sans danger du système se trouvent à la **section RS** de ce manuel de réparation.

AVERTISSEMENT :

- **Pour ne pas affecter le fonctionnement du SRS, ce qui augmenterait les risques de blessures graves ou mortelles en cas de collision entraînant le déploiement du coussin gonflable (air bag), toutes les opérations d’entretien doivent être effectuées par un concessionnaire NISSAN agréé.**
- **Un entretien incorrect, y compris une mauvaise dépose ou repose du SRS, pourra entraîner des risques de blessures dues au déploiement accidentel du système.**
- **Ne pas utiliser d’équipement d’essai électrique sur les circuits connexes du SRS sauf sur indication de ce manuel de réparation. Les faisceaux de câblage électrique du SRS sont équipés d’une gaine d’isolation jaune soit juste devant les connecteurs de faisceau, soit sur le faisceau tout entier pour une identification plus rapide.**

Système de retenue supplémentaire (SRS) ‘‘COUSSIN GONFLABLE’’ (modèles à 2 roues motrices)

Utilisé avec une ceinture de sécurité, le coussin gonflable (air bag) du système de retenue supplémentaire contribue à réduire les risques ou la gravité des blessures subies par le conducteur en cas de collision frontale. Le système de retenue supplémentaire se compose d’un module de coussin gonflable (situé dans le moyeu du volant), d’un boîtier de capteurs de diagnostic, d’un témoin avertisseur et d’un câble spiralé. Les informations nécessaires à l’entretien sans danger du système se trouvent à la **section RS** de ce manuel de réparation.

AVERTISSEMENT :

- **Pour ne pas affecter le fonctionnement du SRS, ce qui augmenterait les risques de blessures graves ou mortelles en cas de collision entraînant le déploiement du coussin gonflable (air bag), toutes les opérations d’entretien doivent être effectuées par un concessionnaire NISSAN agréé.**
- **Un entretien incorrect, y compris une mauvaise dépose ou repose du SRS, pourra entraîner des risques de blessures dues au déploiement accidentel du système.**
- **Ne pas utiliser d’équipement d’essai électrique sur les circuits connexes du SRS.**

Simpo PDF Merge and Split Unregistered Version - http://www.simpopdf.com

Précautions d'emploi du HFC-134a (R-134a)

AVERTISSEMENT :

- **Les réfrigérants CFC-12 (R-12) et HFC-134a (R-134a) ne sont pas compatibles. Ces réfrigérants ne doivent jamais être mélangés, même en très petites quantités. Si les réfrigérants sont mélangés, il est probable que le compresseur tombera en panne.**
- **N'utiliser que le lubrifiant spécifié pour le système de climatisation HFC-134a (R-134a) et les composants HFC-134a (R-134a). Si un lubrifiant différent est utilisé, il est probable que le compresseur tombera en panne.**
- **Le lubrifiant spécifié pour HFC-134a (R-134a) absorbe rapidement l'humidité contenue dans l'atmosphère. Les précautions de manipulation suivantes doivent être observées :**
  - **a : Lors de la dépose des composants de réfrigération d'un véhicule, poser immédiatement sur ces composants des bouchons (d'étanchéité) de façon à minimiser la pénétration d'humidité contenue dans l'atmosphère.**
  - **b : Lors de l'installation sur un véhicule des composants de réfrigération, ne déposer les bouchons d'étanchéité que juste avant de connecter les composants. Brancher tous les composants du circuit de réfrigérant aussi vite que possible afin de minimiser la pénétration d'humidité dans le système.**
  - **c : N'utiliser que le lubrifiant spécifié conservé dans une bouteille hermétique. Refermer immédiatement et hermétiquement toutes les bouteilles de lubrifiant. Si les récipients ne sont pas hermétiques, le lubrifiant sera saturé d'humidité et ne pourra pas être utilisé.**
  - **d : Eviter d'inhaler du réfrigérant C/A, ou des vapeurs ou brouillard de lubrifiant. L'exposition peut irriter les yeux, le nez et la gorge. N'utiliser que l'équipement de récupération/ recyclage agréé pour effectuer le délestage du réfrigérant HFC-134a (R-134a). En cas de délestage accidentel, ventiler la zone de travail avant de reprendre l'opération d'entretien. Il est possible d'obtenir de plus amples informations sur la santé et la sécurité auprès des fabricants de réfrigérants et de lubrifiants.**
  - **e : Ne pas laisser le lubrifiant (huile de circuit de climatisation Nissan, type S) entrer en contact avec des pièces en polystyrène expansé. Cela pourrait provoquer des dommages.**

Précautions générales pour l'emploi du réfrigérant

AVERTISSEMENT :

- **Ne pas décharger de réfrigérant dans l'air. Utiliser un équipement de récupération/recyclage agréé pour récupérer le réfrigérant chaque fois que l'on procède à un délestage du système de climatisation.**
- **Toujours porter des lunettes et des gants de protection lorsque l'on travaille avec du réfrigérant ou sur un système de climatisation.**
- **Ne pas conserver ou chauffer les bouteilles de réfrigérant à plus de 52°C.**
- **Ne pas chauffer une bouteille de réfrigérant avec une flamme nue ; si un chauffage de la bouteille est nécessaire, placer le bas de la bouteille dans un seau d'eau chaude.**
- **Ne pas laisser tomber, percer ou incinérer intentionnellement les bouteilles de réfrigérant.**
- **Garder le réfrigérant à l'écart de toute flamme nue : la combustion du réfrigérant produit des gaz toxiques.**
- **Le réfrigérant prendra la place de l'oxygène, il faut alors veiller à travailler dans une zone de travail correctement ventilée, de façon à éviter les risques d'asphyxie.**
- **Ne pas introduire d'air comprimé dans une bouteille de réfrigérant ou dans des composants de réfrigérant.**

Précautions pour les raccords de réfrigérant

Un nouveau type de raccord de réfrigérant a été introduit pour chaque conduit de réfrigération sauf pour les parties suivantes.

- Vanne d'expansion à unité de refroidissement
- Condenseur au réservoir de liquide

Simpo PDF Merge and Split Unregistered Version - http://www.simpopdf.com

Précautions pour les raccords de réfrigérant (Suite)

CARACTERISTIQUES DU NOUVEAU TYPE DE RACCORD DE REFRIGERANT

- Le joint torique a été déplacé. Il est désormais fourni avec une rainure pour une repose adéquate. Ceci élimine les risques de voir le joint torique être coincé ou endommagé dans la partie de raccordement. Le sens d'étanchéité du joint torique est maintenant positionné à la verticale, en relation avec la surface de contact de la partie de raccordement, de façon à améliorer les caractéristiques de l'étanchéité.
- La force de réaction du joint torique n'apparaîtra pas dans le sens qui entraîne l'extraction du joint, facilitant ainsi les raccords de tuyauterie.

Simpo PDF Merge and Split Unregistered Version - http://www.simpopdf.com

Précautions pour les raccords de réfrigérant (Suite)

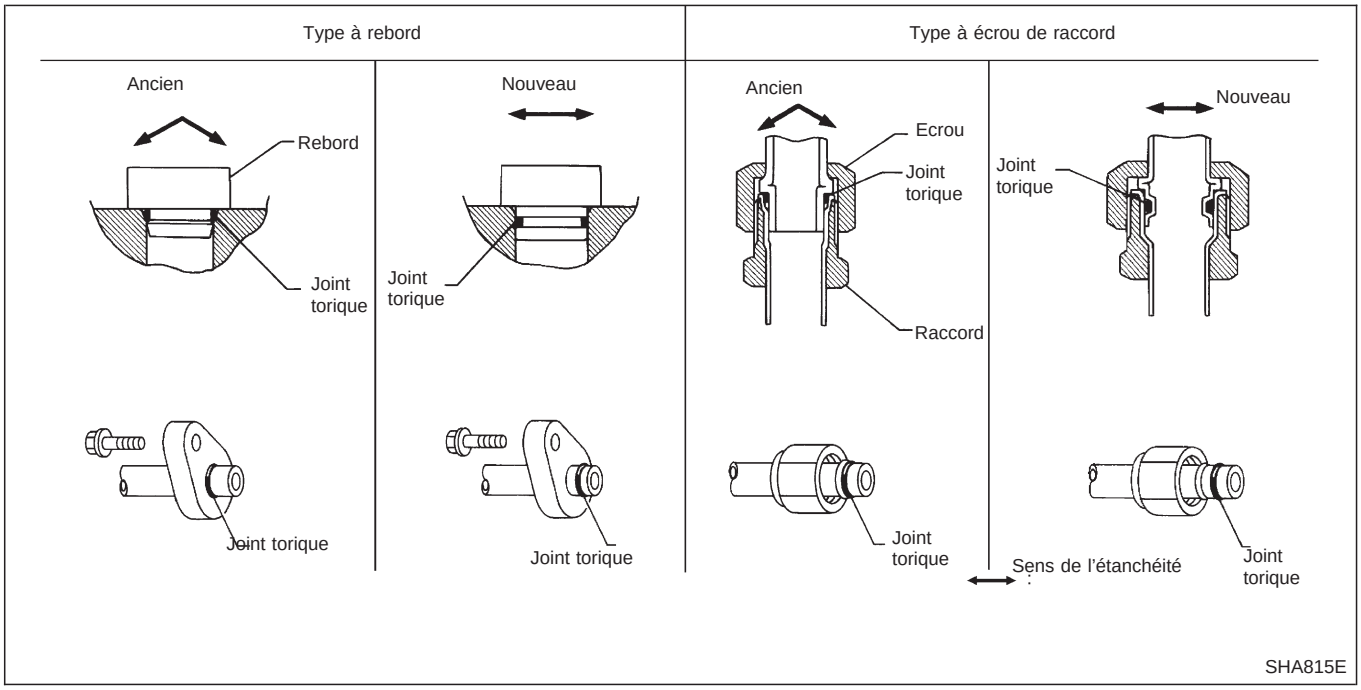

ATTENTION :
Les nouveaux et les anciens raccords de réfrigérant utilisent des configurations de joint torique différentes. Ne pas mélanger les joints toriques car ils ne sont pas interchangeables. Si un joint torique inadéquat est installé, le réfrigérant fuira au niveau ou autour du raccord.

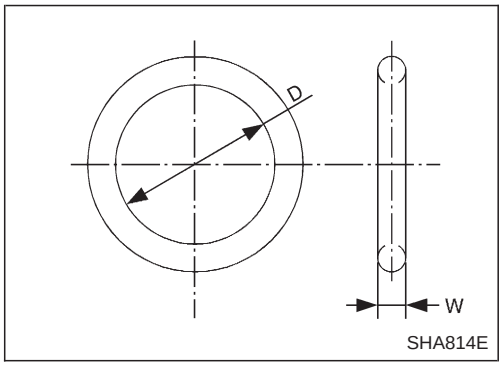

Numéros et caractéristiques des pièces de joint torique

Type de raccord	Taille de joint torique	Numéro de pièce	D mm	W mm
Nouveau	8	92471 N8210	6,8	1,87
Ancien		92470 N8200	6,07	1,78
Nouveau	12	92472 N8210	10,9	2,43
Ancien		92475 71L00	11,0	2,4
Nouveau	16	92473 N8210	13,6	2,43
Ancien		92475 72L00	14,3	2,3
Nouveau	19	92474 N8210	16,5	2,43
Ancien		92477 N8200	17,12	1,78

Simpo PDF Merge and Split Unregistered Version - http://www.simpopdf.com

Précautions pour les raccords de réfrigérant (Suite)

JOINT TORIQUE ET RACCORD DE REFRIGERANT

Conduite à gauche

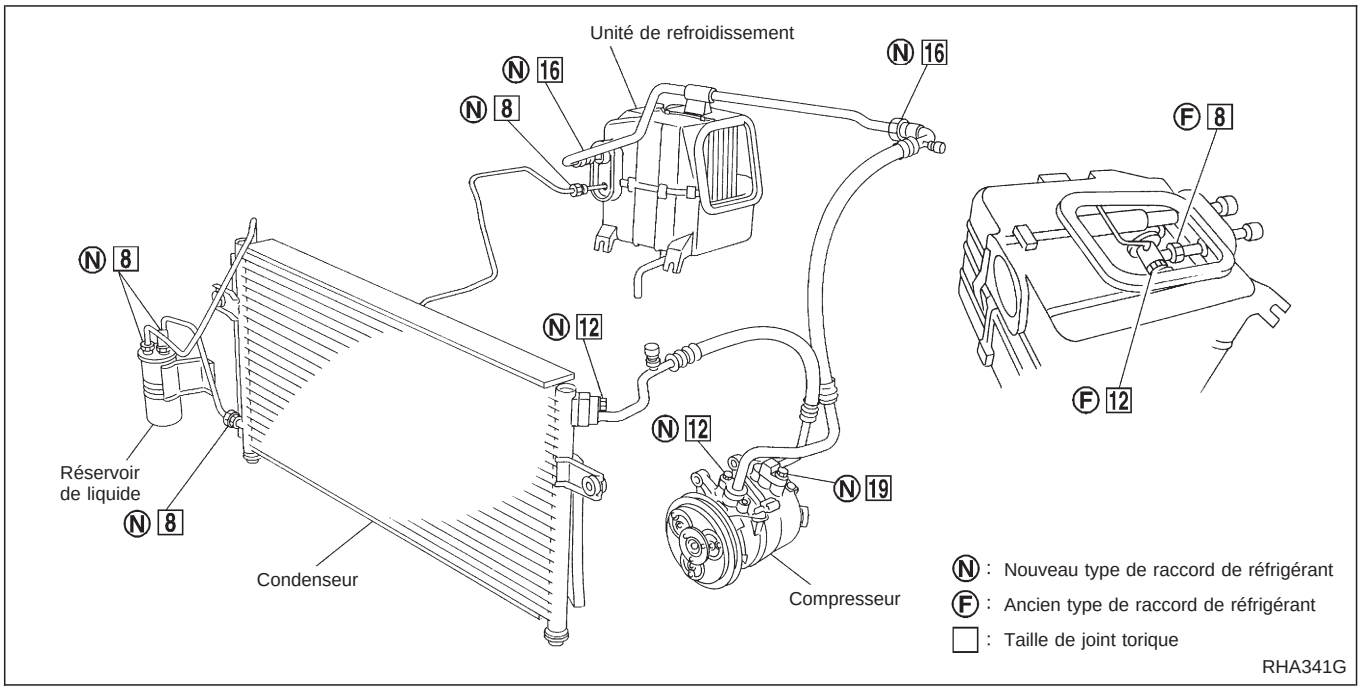

Conduite à droite

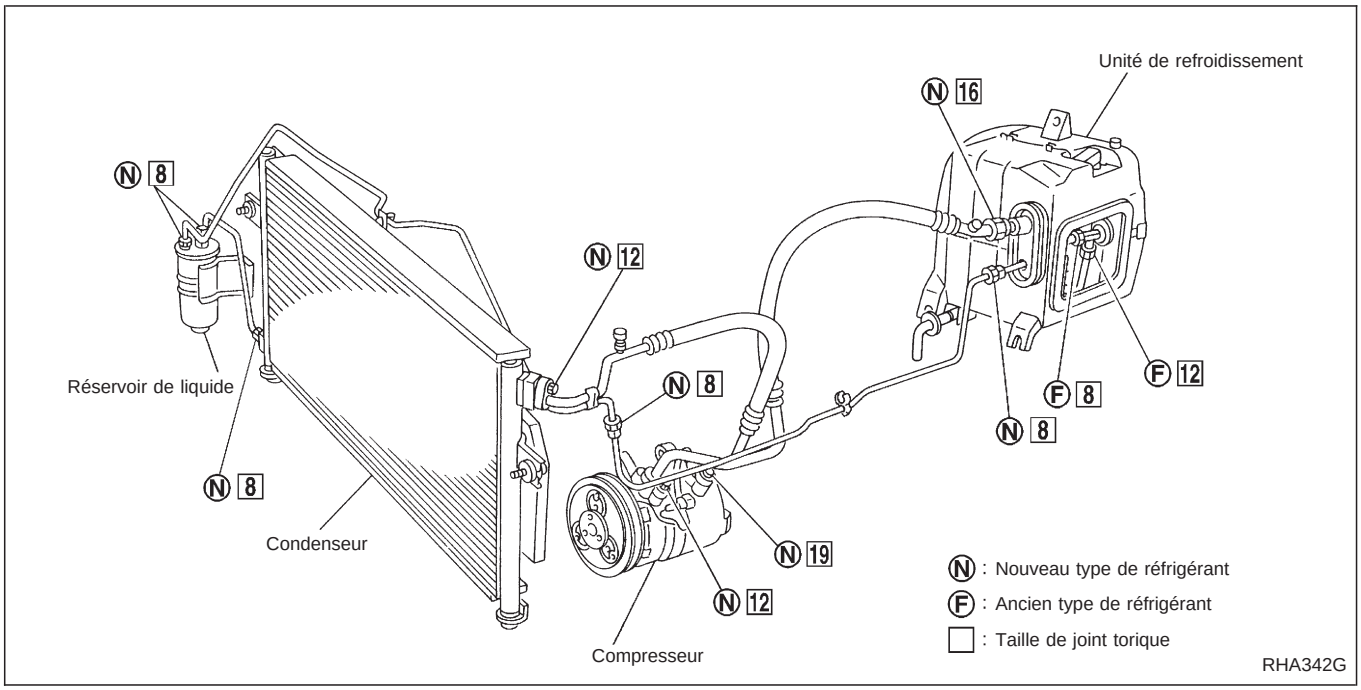

Simpo PDF Merge and Split Unregistered Version - http://www.simpopdf.com

Précautions pour les raccords de réfrigérant (Suite)

AVERTISSEMENT :
S'assurer que tout le réfrigérant est délesté dans l'équipement de recyclage et que la pression du circuit est inférieure à la pression atmosphérique. Ensuite, desserrer progressivement le raccord du flexible latéral de délestage et le déposer.
ATTENTION :
Prendre garde aux points suivants en ce qui concerne le remplacement ou le nettoyage des pièces constitutives du circuit de réfrigération.

- **Entreposer le compresseur une fois déposé dans la position qu'il occupait lorsqu'il était monté sur la voiture. Faute de quoi le lubrifiant s'écoulera dans la chambre de basse pression.**
- **Lors du branchement des canalisations, toujours utiliser une clé dynamométrique et une clé d'immobilisation.**
- **Après avoir déconnecté les canalisations, boucher immédiatement tous les orifices pour empêcher la pénétration de saletés et d'humidité.**
- **Lors de l'installation d'un climatiseur dans le véhicule, connecter les canalisations en dernier lieu. Ne pas déposer les capuchons d'étanchéité des canalisations et des autres composants jusqu'au moment du branchement.**
- **Laisser les composants entreposés dans des locaux plus froids se réchauffer à la température ambiante de la zone de travail avant de déposer les capuchons d'étanchéité. Ceci préviendra la formation de condensation dans les composants du circuit de climatisation.**
- **Eliminer soigneusement l'humidité du circuit de réfrigération avant de charger le réfrigérant.**
- **Toujours remplacer les joints toriques usagés.**
- **Lors du branchement des canalisations, enduire de lubrifiant les parties indiquées dans l'illustration. Veiller à ne pas enduire les filetages de lubrifiant.**
  Nom du lubrifiant : Huile du système de climatisation Nissan de type R (sauf pour le Moyen-Orient)
  Huile du système de climatisation Nissan de type S (pour le Moyen-Orient)
  Numéro de pièce : KLH00-PAGR0 (sauf pour le Moyen-Orient)
  KLH00-PAGS0 (pour le Moyen-Orient)
- **Les joints toriques doivent être parfaitement attachés au renflement des tuyaux.**
- **Serrer l'écrou au couple spécifié après avoir enfoncé le tube concerné dans le raccord jusqu'à ce que le joint torique disparaisse.**
- **Après un branchement de conduite, procéder à un essai de fuite et veiller à ce qu'il n'y ait aucune fuite au niveau des raccords. En cas de fuite de gaz, débrancher la conduite en question et remplacer son joint torique. Puis serrer le raccordement du siège d'étanchéité au couple spécifié.**

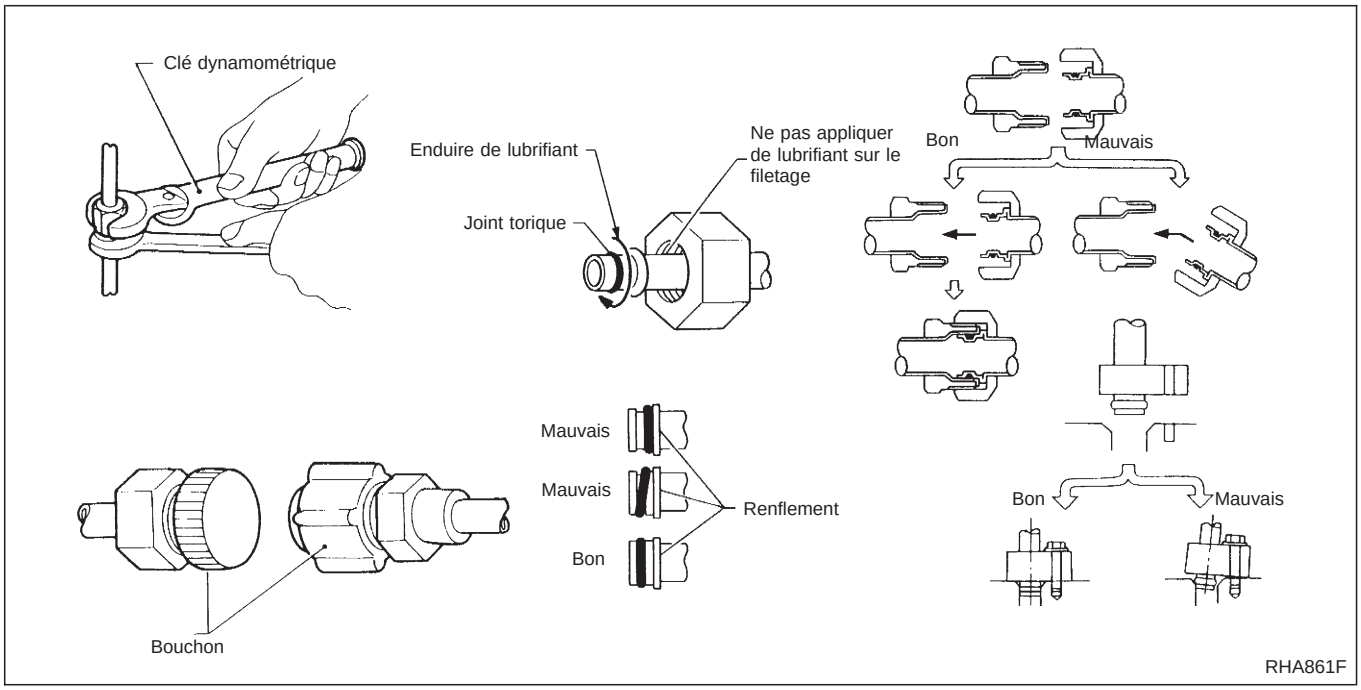

Simpo PDF Merge and Split Unregistered Version - http://www.simpopdf.com

Précautions pour l'entretien sur le compresseur

- **Boucher toutes les ouvertures pour empêcher la pénétration d'humidité et de substances étrangères.**
- **Entreposer le compresseur une fois déposé dans la position qu'il occupait lorsqu'il était monté dans la voiture.**
- **Lors du remplacement ou de la réparation du compresseur, suivre à la lettre les instructions fournies au chapitre ''Contrôle de la quantité de lubrifiant dans le compresseur''. Se reporter à HA-52.**
- **Veiller à ce que les surfaces de friction entre l'embrayage et la poulie soient propres. Si la surface est contaminée par du lubrifiant, l'essuyer à l'aide d'un chiffon propre humidifié avec du diluant.**
- **Après avoir effectué l'entretien du compresseur, tourner l'arbre de compresseur à la main de plus de cinq tours dans les deux sens. Cela permettra une répartition égale du lubrifiant dans le compresseur. Après avoir installé le compresseur, faire tourner le moteur au ralenti afin que le compresseur fonctionne pendant une heure.**
- **Après avoir remplacé l'embrayage magnétique du compresseur, appliquer une tension sur l'embrayage neuf et vérifier son fonctionnement.**

Outillage spécial

POUR LE COMPRESSEUR DKV-14C

Numéro de l'outil Nom de l'outil	Description	
KV99231260 Clé de disque d'embrayage	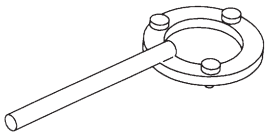 NT204	Dépose de l'écrou d'arbre et du disque d'embrayage
KV99232340 Extracteur de disque d'embrayage	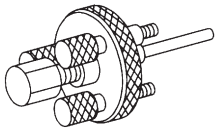 NT206	Dépose du disque d'embrayage
KV99234330 Outil de repose de poulie	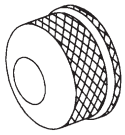 NT207	Repose de la poulie
KV99233130 Extracteur de poulie centrale	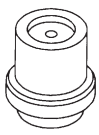 NT208	Dépose de la poulie

Simpo PDF Merge and Split Unregistered Version - http://www.simpopdf.com

Outillage spécial (Suite)

POUR LE COMPRESSEUR DKS-17CH

Numéro de l'outil Nom de l'outil	Description	
KV99231260 Clé de disque d'embrayage	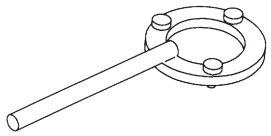 NT204	Dépose de l'écrou d'arbre et du disque d'embrayage
KV992T0001 Extracteur de disque d'embrayage	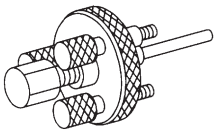 NT206	Dépose du disque d'embrayage
KV992T0002 Outil de repose de poulie	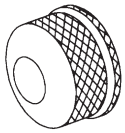 NT207	Installation de la poulie

Simpo PDF Merge and Split Unregistered Version - http://www.simpopdf.com

Outillage et équipement d'entretien du HFC-134a (R-134a)

Ne jamais mélanger de réfrigérant HFC-134a et/ou son lubrifiant spécifié avec du réfrigérant CFC-12 (R-12) et/ou son lubrifiant.
Des équipements d'entretien séparés et non interchangeables doivent être utilisés pour chaque type de réfrigérant/lubrifiant.
Les raccords des bouteilles de réfrigérant, des flexibles d'entretien et de l'équipement d'entretien (équipement pour manipulation de réfrigérant et/ou lubrifiant) diffèrent entre les systèmes CFC-12 (R12) et HFC-134a (R-134a). Cela vise à prévenir le mélange de réfrigérants et de lubrifiants différents.
Ne jamais utiliser d'adaptateurs entre des raccords de tailles différentes : cela entraînera la contamination du réfrigérant/lubrifiant provoquant une panne du compresseur.

Nom de l'outil	Description	Note
Réfrigérant HFC-134a (R-134a)	NT196 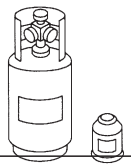	Couleur de la bouteille : bleu clair Repère de la bouteille : HFC-134a (R-134a) Taille du raccord : filetage ● Grande bouteille 1/2″-16 ACME
Huile du système de climatisation Nissan de type R		Type : huile à base de glycol polyalcalin, type R Application : compresseurs rotatifs à ailettes HFC134a (R-134a) (Nissan uniquement) Pouvoir lubrifiant : 40 mℓ
Huile du système de climatisation Nissan de type S		Type : huile Poly alkyle glycol (PAG), type S Application : compresseurs (piston) de plateau oscillant HFC-134a (R-134a) (Nissan uniquement) Pouvoir lubrifiant : 40mℓ
Equipement de récupération/ recyclage/ chargement	NT197 NT195 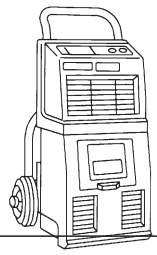	Fonction : récupération, recyclage et chargement du réfrigérant
Détecteur électronique de fuites	NT198 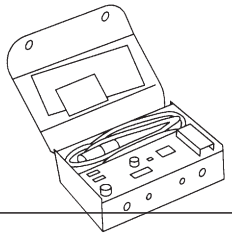	Alimentation électrique : ● CC 12 V (allume-cigare)
Rampe manométrique (avec flexibles et embouts)	NT199 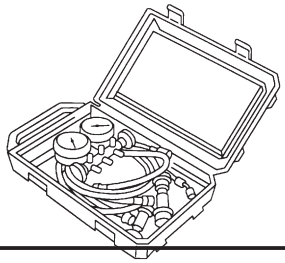	Identification : ● L'avant du manomètre indique R-134a. Taille du raccord : filetage ● 1/2″-16 ACME

Simpo PDF Merge and Split Unregistered Version - http://www.simpopdf.com

Outillage et équipement d'entretien du HFC-134a (R-134a) (Suite)

Nom de l'outil	Description	Note
Flexibles d'entretien ● Flexible haute pression ● Flexible basse pression ● Flexible universel	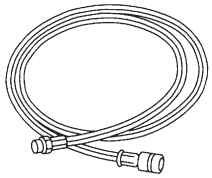 NT201	Couleur de flexible : ● Flexible basse pression : bleu avec une bande noire ● Flexible haute pression : rouge avec une bande noire ● Flexible universel : jaune avec une bande noire ou vert avec une bande noire Raccord de flexible au manomètre : ● 1/2″-16 ACME
Raccords d'entretien ● Raccord haute pression ● Raccord basse pression	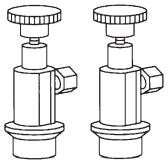 NT202	Raccord de flexible au flexible d'entretien : ● Le raccord de M14 x 1,5 est optionnel ou attaché en permanence.
Balance de réfrigérant	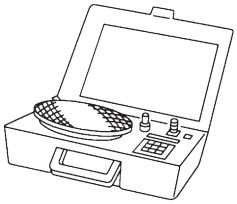 NT200	Pour mesurer le réfrigérant Taille du raccord : filetage ● 1/2″-16 ACME
Pompe à vide (y compris la vanne de coupure)	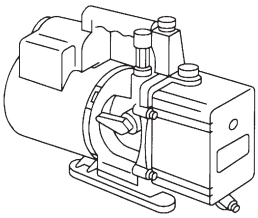 NT203	Capacité : ● Volume d'air déplacé : 4 CFM ● Calibre en microns : 20 microns ● Contenance en huile : 482 g Taille du raccord : filetage ● 1/2″-16 ACME

Simpo PDF Merge and Split Unregistered Version - http://www.simpopdf.com

Précautions pour l'équipement d'entretien

EQUIPEMENT DE RECUPERATION/RECYCLAGE

Veiller à suivre les instructions du fabricant en ce qui concerne le fonctionnement et l'entretien des machines. Ne jamais introduire dans la machine un réfrigérant autre que celui qui est préconisé.

DETECTEUR ELECTRONIQUE DE FUITES

Veiller à suivre les instructions du fabricant en ce qui concerne le fonctionnement et l'entretien des appareils de contrôle.

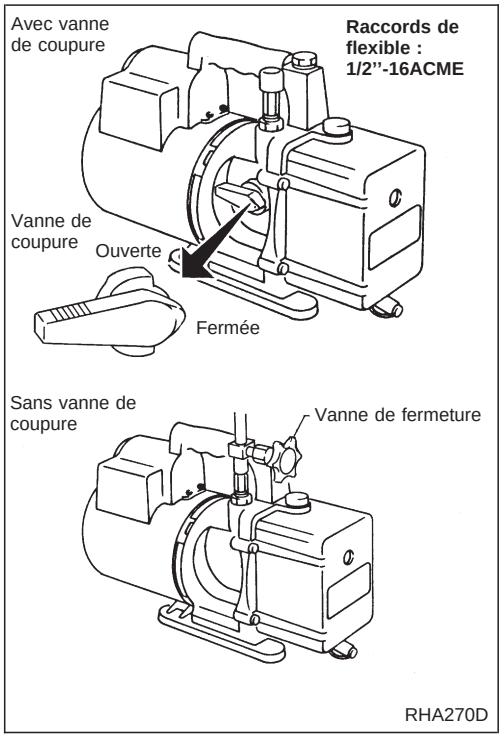

POMPE A VIDE

Le lubrifiant contenu dans la pompe à dépression n'est pas compatible avec le lubrifiant spécifié pour les systèmes de climatisation à réfrigérant HFC-134a (R-134a). Le côté évent de la pompe à dépression est exposé à la pression atmosphérique. Le lubrifiant contenu dans la pompe à dépression peut donc passer de la pompe au flexible d'entretien lorsque la pompe est coupée après l'évacuation (mise sous vide) et qu'elle est connectée au flexible.

Pour empêcher ce flux, utiliser la vanne manuelle située près de la connexion entre le flexible et la pompe en procédant de la manière suivante :

- Les pompes à dépression sont normalement équipées d'une vanne de coupure manuelle qui fait partie intégrante de la pompe. Fermer cette vanne pour isoler le flexible d'entretien de la pompe.
- Pour les pompes qui ne sont pas équipées d'une vanne de coupure, utiliser un flexible équipé d'une vanne à fermeture manuelle située près de l'extrémité de la pompe. Fermer la vanne pour isoler le flexible de la pompe.
- Si le flexible est équipé d'une vanne à fermeture automatique, déconnecter le flexible de la pompe. Tant que le flexible est connecté, la vanne reste ouverte et le lubrifiant peut passer.

Certaines vannes unidirectionnelles s'ouvrent lorsqu'une dépression est appliquée et se ferment lorsqu'il n'y a pas de dépression. Ces vannes peuvent limiter la capacité de la pompe à créer un vide important et sont déconseillées.

Simpo PDF Merge and Split Unregistered Version - http://www.simpopdf.com

Précautions pour l'équipement d'entretien (Suite)

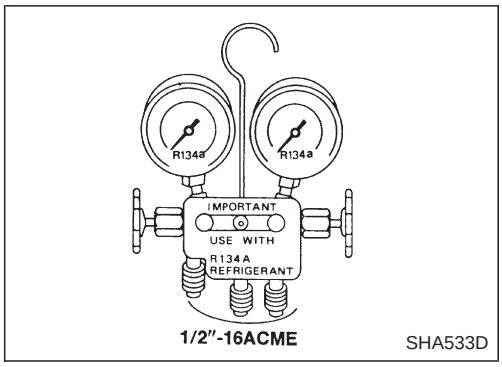

SHA533D

JEU DE RAMPE MANOMETRIQUE

S'assurer que l'avant du manomètre indique bien R-134a ou 134a. S'assurer que la rampe manométrique est équipée de raccords filetés de 1/2″-16 ACME pour les flexibles d'entretien. S'assurer que le jeu de manomètre n'a été utilisé que pour le réfrigérant HFC-134a (R-134a) et les lubrifiants spécifiés.

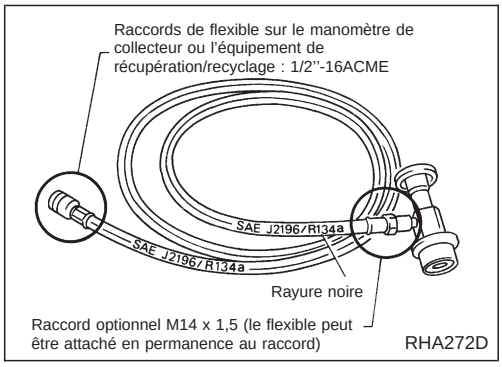

RHA272D

FLEXIBLES D'ENTRETIEN

S'assurer que les flexibles d'entretien comportent les inscriptions décrites (flexible de couleur avec une bande noire). Tous les flexibles doivent être équipés d'un dispositif de coupure positif (manuel ou automatique) situé près de l'extrémité des flexibles opposée au manomètre.

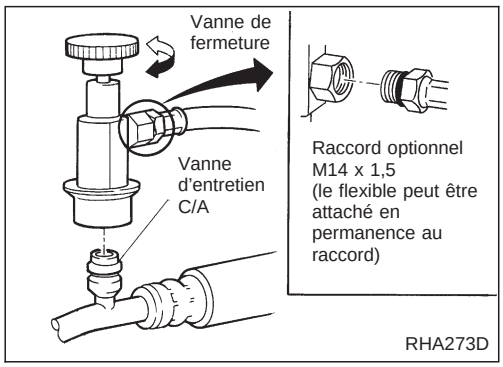

RHA273D

RACCORDS D'ENTRETIEN

Ne jamais tenter de connecter des raccords d'entretien du HFC-134a (R-134a) à un système de climatisation CFC-12 (R-12). Les raccords HFC-134a (R-134a) ne permettent pas d'établir une connexion correcte avec le système CFC-12 (R-12). Une connexion incorrecte aurait pour conséquence un déchargement et une contamination.

Rotation de la vanne à fermeture	Vanne d'entretien de climatiseur
Dans le sens des aiguilles d'une montre	Ouverte
Dans le sens contraire des aiguilles d'une montre	Fermée

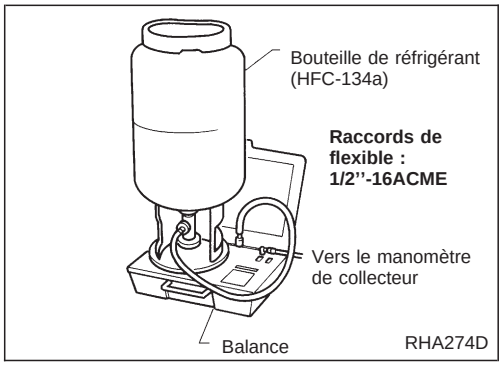

RHA274D

BALANCE DE REFRIGERANT

Vérifier que la balance n'a pas été utilisée avec un réfrigérant autre que le réfrigérant HFC-134a (R-134a) et les lubrifiants spécifiés. Si la balance contrôle électroniquement le débit du réfrigérant, le raccord du flexible doit être de 1/2″-16 ACME.

Simpo PDF Merge and Split Unregistered Version - http://www.simpopdf.com

Précautions pour l’équipement d’entretien (Suite)

BOUTEILLE DE CHARGE

L’utilisation d’une bouteille de charge est déconseillée. Du réfrigérant pourrait se décharger dans l’atmosphère par la vanne supérieure de la bouteille lorsqu’on remplit la bouteille de réfrigérant. Par ailleurs, la précision d’une bouteille de charge est généralement inférieure à celle d’une balance électronique ou d’un bon équipement de recyclage et de recharge.

Simpo PDF Merge and Split Unregistered Version - http://www.simpopdf.com

Cycle de réfrigération

CIRCULATION DU REFRIGERANT

La circulation du réfrigérant obéit à un schéma standard. Le réfrigérant passe par le compresseur, le condenseur, le réservoir de liquide, l'évaporateur et retourne dans le compresseur.
L'évaporation du réfrigérant par le serpentin de l'évaporateur est commandée par une soupape d'expansion égalisée à l'extérieur et placée à l'intérieur de l'enceinte de l'évaporateur.

PROTECTION CONTRE LE GEL

Le compresseur fonctionne selon un cycle de marche/arrêt pour maintenir la température de l'évaporateur dans une gamme spécifiée. Lorsque la température du serpentin de l'évaporateur chute au-dessous d'un certain point, l'amplificateur de commande thermique interrompt le fonctionnement du compresseur. Lorsque la température du serpentin de l'évaporateur dépasse la température spécifiée, l'amplificateur de commande thermique met le compresseur en marche.

PROTECTION DU SYSTEME DE REFRIGERANT

Manocontact triple

Le manocontact triple est situé sur le réservoir de liquide. Si la pression du système dépasse ou est inférieure aux spécifications, le manocontact s'ouvre pour interrompre le fonctionnement de l'embrayage de compresseur.

Bouchon fusible

Le bouchon s'ouvre lorsque la température dépasse 105°C, permettant ainsi la décharge du réfrigérant dans l'atmosphère. Si ce bouchon est fondu et ouvert, contrôler la canalisation de réfrigérant et remplacer le réservoir de liquide.

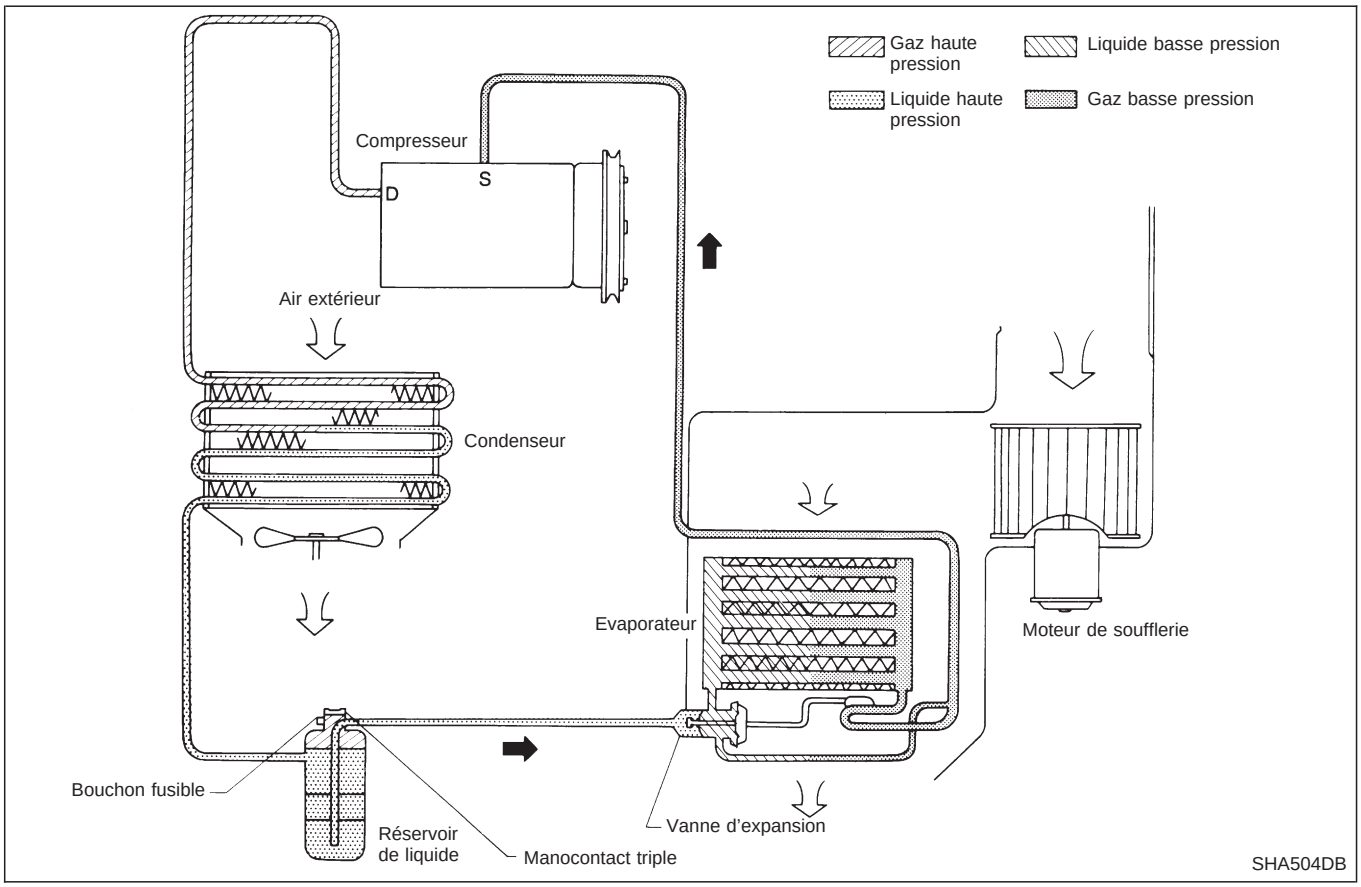

Simpo PDF Merge and Split Unregistered Version - http://www.simpopdf.com

Disposition des composants

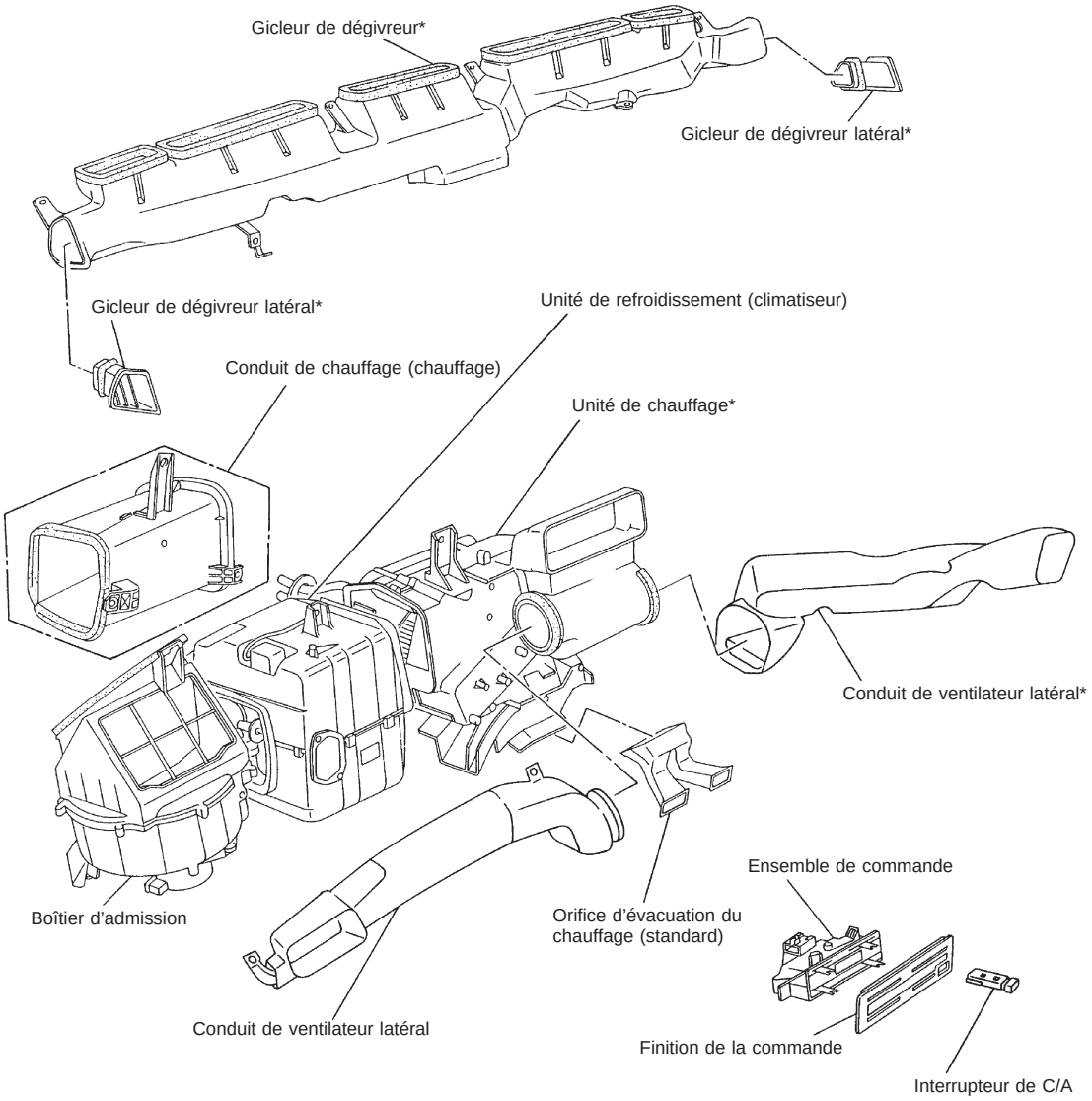

* : Pour la dépose, il est nécessaire de déposer l'ensemble des instruments de bord.

Cette illustration concerne les modèles avec conduite à droite.
La disposition pour les modèles avec conduite à gauche est symétriquement opposée.

RHA343G

Simpo PDF Merge and Split Unregistered Version - http://www.simpopdf.com

Débit d'air de décharge

CONDUITE A GAUCHE

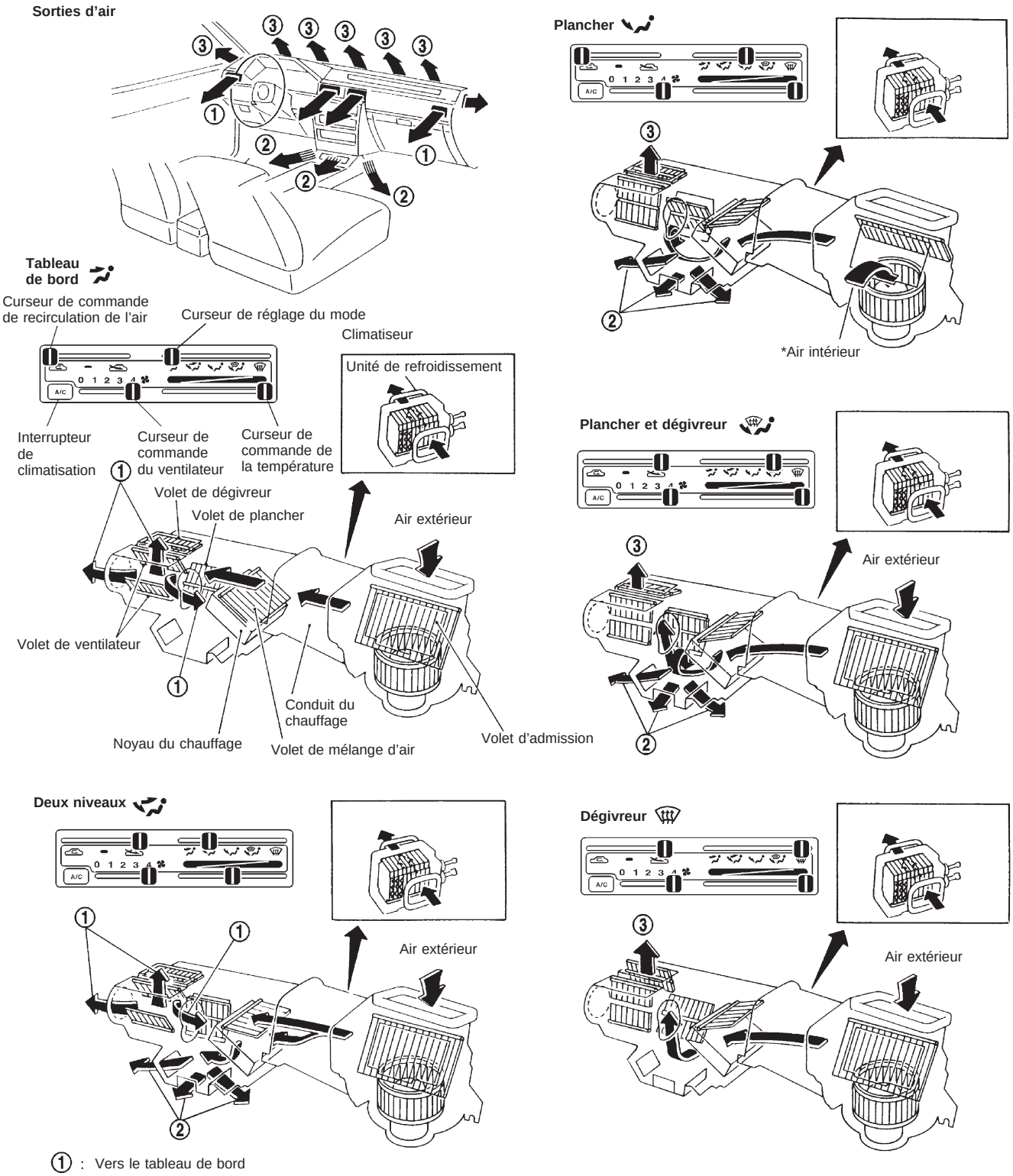

① : Vers le tableau de bord
② : Vers le plancher
③ : Vers le dégivreur
* : Réglé sur la position REC

RHA344G

Simpo PDF Merge and Split Unregistered Version - http://www.simpopdf.com

Débit d'air de décharge (Suite)

CONDUITE A DROITE

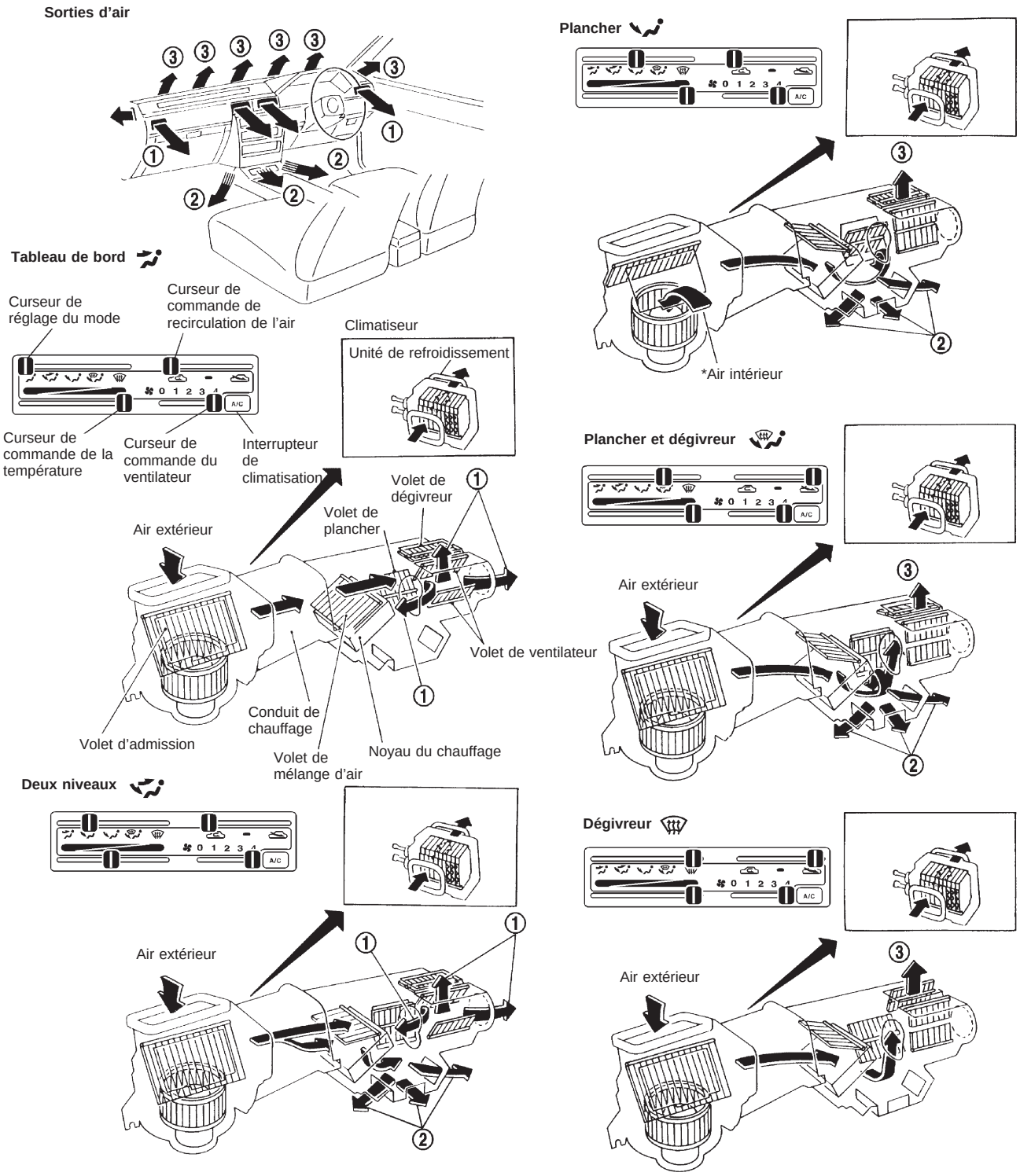

① : Vers le tableau de bord
② : Vers le plancher
③ : Vers le dégivreur
* : Réglé sur la position REC

RHA358G

Simpo PDF Merge and Split Unregistered Version - http://www.simpopdf.com

Fonctionnement des commandes

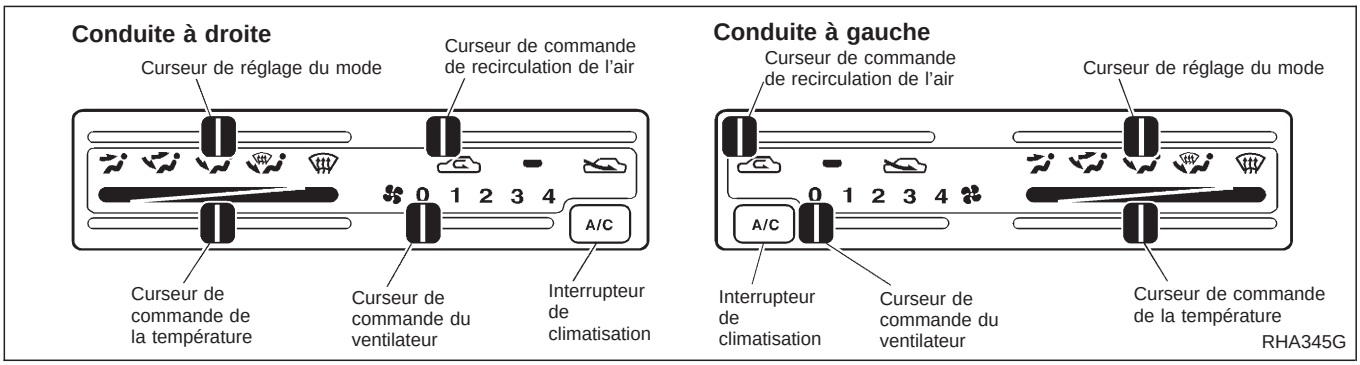

CURSEUR DE COMMANDE DU VENTILATEUR

Ce curseur allume et éteint le ventilateur, et contrôle sa vitesse.

CURSEUR DE REGLAGE DU MODE

Ce curseur permet de sélectionner l'ouïe par laquelle l'air va sortir.

CURSEUR DE COMMANDE DE LA TEMPERATURE

Ce curseur permet de régler la température de l'air dans l'habitacle.

CURSEUR DE COMMANDE DE RECIRCULATION DE L'AIR

Position AIR FRAIS :
L'air extérieur est aspiré à l'intérieur du compartiment passager.
Position recirculation (REC) :
L'air intérieur circule à nouveau dans le véhicule.

INTERRUPTEUR DE CLIMATISATION

Cette touche commande le système de climatisation. Si la touche est enfoncée alors que le ventilateur est en marche, le compresseur sera activé. Le témoin s'allumera également.

La fonction de refroidissement d'air du climatiseur n'est effective que lorsque le moteur tourne.

Simpo PDF Merge and Split Unregistered Version - http://www.simpopdf.com

Comment effectuer un diagnostic des défauts permettant une réparation rapide et efficace

SCHEMA DE PRINCIPE

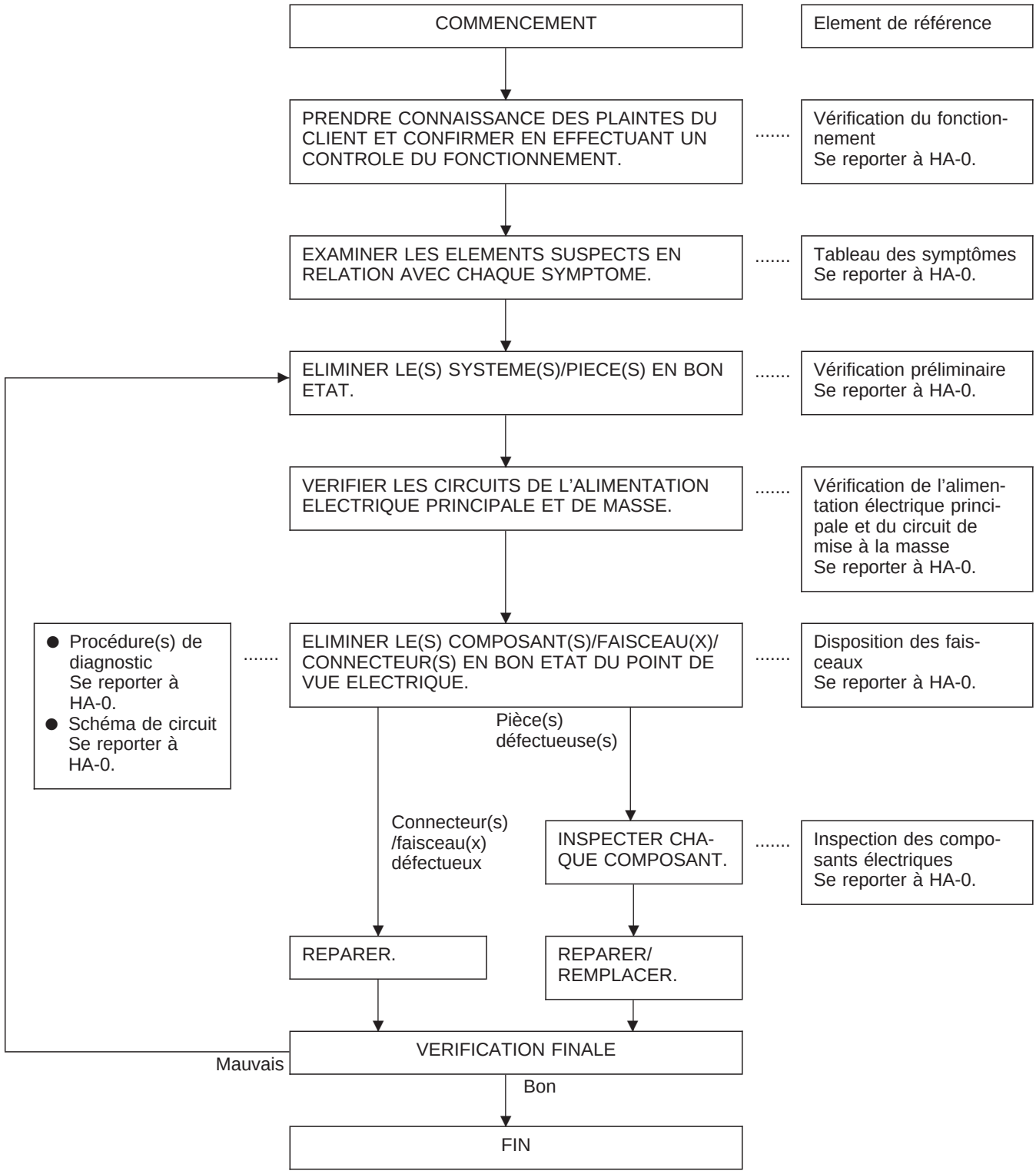

Simpo PDF Merge and Split Unregistered Version - http://www.simpopdf.com

Vérification du fonctionnement

L'objet du contrôle de fonctionnement est de confirmer que le système fonctionne correctement.

CONDITIONS :

- **Moteur en marche à une température normale de fonctionnement.**

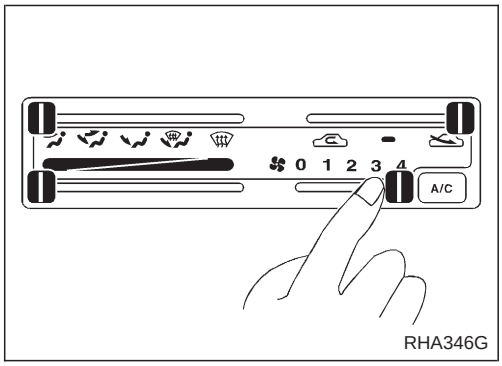

RHA346G

PROCEDURE :

1. Vérifier la soufflerie.

a. Amener le curseur de commande du ventilateur sur la 1ère vitesse.
   La soufflerie doit fonctionner en vitesse 1.
b. Amener le curseur de commande du ventilateur sur la 2ème vitesse et continuer de vérifier la vitesse de soufflerie jusqu'à ce que les quatre vitesses aient été vérifiées.
c. Laisser la soufflerie en vitesse 4.

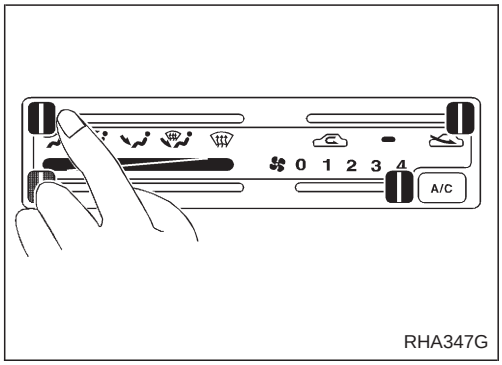

RHA347G

2. Vérifier l'alimentation en air.

a. Amener le curseur de réglage du mode sur la position .
b. S'assurer que tout l'air alimenté sort par les ouïes au tableau de bord.
c. Amener le curseur de réglage du mode sur la position .
d. S'assurer que l'air alimenté sort par les ouïes au tableau de bord et au plancher.
e. Amener le curseur de réglage du mode sur la position .
f. S'assurer que l'air alimenté sort par les ouïes au plancher, avec un peu d'air s'échappant des ouïes du dégivreur.
g. Amener le curseur de réglage du mode sur la position .
h. S'assurer que l'air alimenté sort par les ouïes du plancher avec un peu d'air s'échappant des ouïes du dégivreur.
i. Amener le curseur de réglage du mode sur la position .
j. S'assurer que tout l'air alimenté sort par les ouïes du dégivreur.

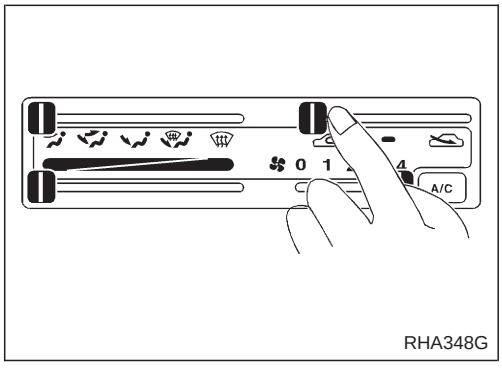

RHA348G

3. Vérifier la recirculation de l'air

a. Amener le curseur de commande de recirculation sur la position REC .
b. Etre attentif au changement de position du volet d'admission d'air (le bruit de la soufflerie doit se modifier légèrement).

Simpo PDF Merge and Split Unregistered Version - http://www.simpopdf.com

Vérification du fonctionnement (Suite)

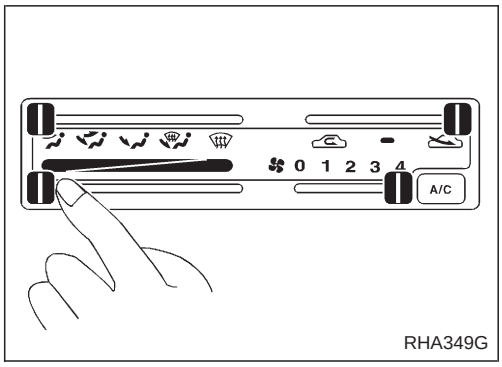

RHA349G

4. Vérifier la diminution de la température.

a. Amener le curseur de commande de la température sur la position froid maxi.
b. Vérifier la présence d'air froid aux ouïes de sortie d'air.

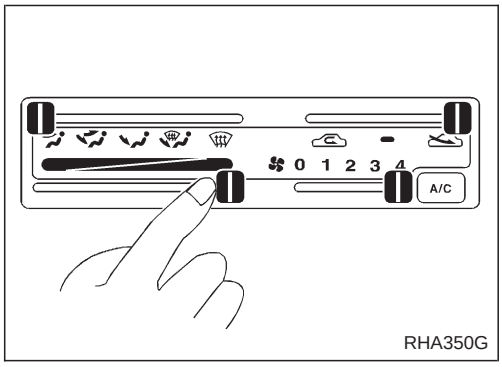

RHA350G

5. Vérifier l'augmentation de la température.

a. Amener le curseur de commande de la température sur la position chaud maxi.
b. Vérifier la présence d'air chaud aux ouïes de sortie d'air.

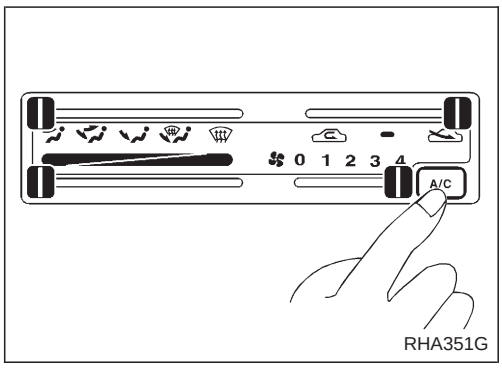

RHA351G

6. Vérifier l'interrupteur de climatisation.

Régler le curseur de commande du ventilateur sur la position désirée (1 à 4) et appuyer sur la touche de climatisation pour mettre en marche le climatiseur.
Le témoin s'allumera lorsque le climatiseur se met en marche.

Simpo PDF Merge and Split Unregistered Version - http://www.simpopdf.com

Tableau des symptômes

TABLE DES DIAGNOSTICS

PROCEDURE	Vérification préliminaire			Procédure de diagnostic		Vérification de l'alimentation électrique principale et du circuit de mise à la masse		Inspection des composants électriques									
PAGE DE REFERENCE	HA-0	HA-0	HA-0	HA-0	HA-42	HA-0		HA-0	HA-0	HA-0	HA-0	HA-0	HA-0	HA-0	HA-0	HA-0	–
SYMPTOME	Vérification préliminaire 1	Vérification préliminaire 2	Vérification préliminaire 3	Procédure de diagnostic 1	Procédure de diagnostic 2	Fusibles de 15A (n° 19 et 20)	Fusible de 7,5A (n° 21)	Moteur de soufflerie	Résistance de soufflerie	Interrupteur de climatiseur	Commutateur de ventilateur	Ampli. de commande thermique	Relais de climatiseur	Manocontact triple	Compresseur: Embrayage magnétique	Compresseur: Protecteur thermique	Faisceau
Le climatiseur ne souffle pas d'air froid.	❶			○		○	○	○	○	○	○	○	○	○	○	○	○
Le moteur de soufflerie ne tourne pas.	❶			❷		○		○	○		○	○					○
L'embrayage magnétique ne s'enclenche pas lorsque les interrupteurs de climatiseur et de ventilateur sont enclenchés.	❶				❷		○			○	○	○	○	○	○	○	○
Bruit.		❶															
Chauffage insuffisant.			❶	○													○

❶, ❷ : Ce numéro fait référence à l'ordre de vérification.
○ : L'ordre de vérification dépend du défaut présenté dans l'organigramme.

Simpo PDF Merge and Split Unregistered Version - http://www.simpopdf.com

Vérification préliminaire

VERIFICATION PRELIMINAIRE 1

Le climatiseur ne souffle pas d'air froid.

EST-CE QUE DE L'AIR SORT DES BOUCHES DE VENTILATION ?
Condition :
- Moteur en marche à température de fonctionnement.
- Le contact d'allumage, l'interrupteur de climatiseur et l'interrupteur de ventilateur sont sur MARCHE.
- Le curseur de réglage du mode est en position ''tableau de bord'' et le curseur de commande de la température est à la position de froid maxi.

Non → EST-CE QUE LE MOTEUR DE SOUFFLERIE FONCTIONNE NORMALEMENT ?

Oui → VERIFIER LA PRESENCE DE GEL SUR LE SERPENTIN DE L'EVAPORATEUR.
Déposer l'unité d'admission. Vérifier si l'évaporateur gèle.

Mauvais (Gel). → VERIFIER LE FONCTIONNEMENT DE L'AMPLI. DE COMMANDE THERMIQUE.
Se reporter à ''Inspection des composants électriques'', HA-0.

Bon (Pas de gel). → VERIFIER LE CONDUIT DE VENTILATION POUR DECELER TOUTE FUITE D'AIR.

Non → VERIFIER LE FONCTIONNEMENT DE LA SOUFFLERIE.
Passer à la **Procédure de diagnostic 1**, HA-0.

Oui → VERIFIER LE FONCTIONNEMENT DU COMPRESSEUR.

Mauvais → VERIFIER LA TENSION DE LA COURROIE DE COMPRESSEUR.
Se reporter à la section MA (''Vérification des courroies d'entraînement'', ''ENTRETIEN DU MOTEUR'').

Mauvais → Régler ou remplacer la courroie de compresseur.

Bon → VERIFIER LE REFRIGERANT.
Brancher le manomètre du collecteur, puis vérifier la pression du système.
Se reporter au ''Tableau de rendement'', HA-0.

Bon → Passer à la **Procédure de diagnostic 2,** HA-0.

Mauvais → RECHERCHER LES FUITES DE REFRIGERANT.

Bon → VERIFIER LA PRESSION DU CYCLE DE REFRIGERATION AVEC LE MANOMETRE A COLLECTEUR CONNECTE.
Se reporter au Tableau de rendement, HA-0.

Mauvais → Passer aux **Diagnostics de l'essai de rendement**, HA-0.

Bon → VERIFIER LE FONCTIONNEMENT DU ROBINET D'EAU.
Sauf pour les modèles avec conduite à droite
Chauffer le moteur avant vérification.
Se reporter à ''Réglage de la timonerie de commande'', HA-0.

Mauvais → Régler ou remplacer le robinet d'eau.

Bon → VERIFIER LE CABLE DE COMMANDE DE LA TEMPERATURE.
Se reporter à ''Réglage de la timonerie de commande'', HA-0.

Mauvais → Régler le câble de commande de la température.

Bon → INSPECTER VISUELLEMENT LE VOLET DE MELANGE D'AIR.
L'accès se fait en déposant le tableau de bord.

Mauvais → Remplacer le volet de mélange d'air.

Bon → VERIFIER LE FONCTIONNEMENT DE L'AMPLI. DE COMMANDE THERMIQUE.
Se reporter à ''Inspection des composants électriques'', HA-0.

Simpo PDF Merge and Split Unregistered Version - http://www.simpopdf.com

VERIFICATION PRELIMINAIRE 2

Bruit

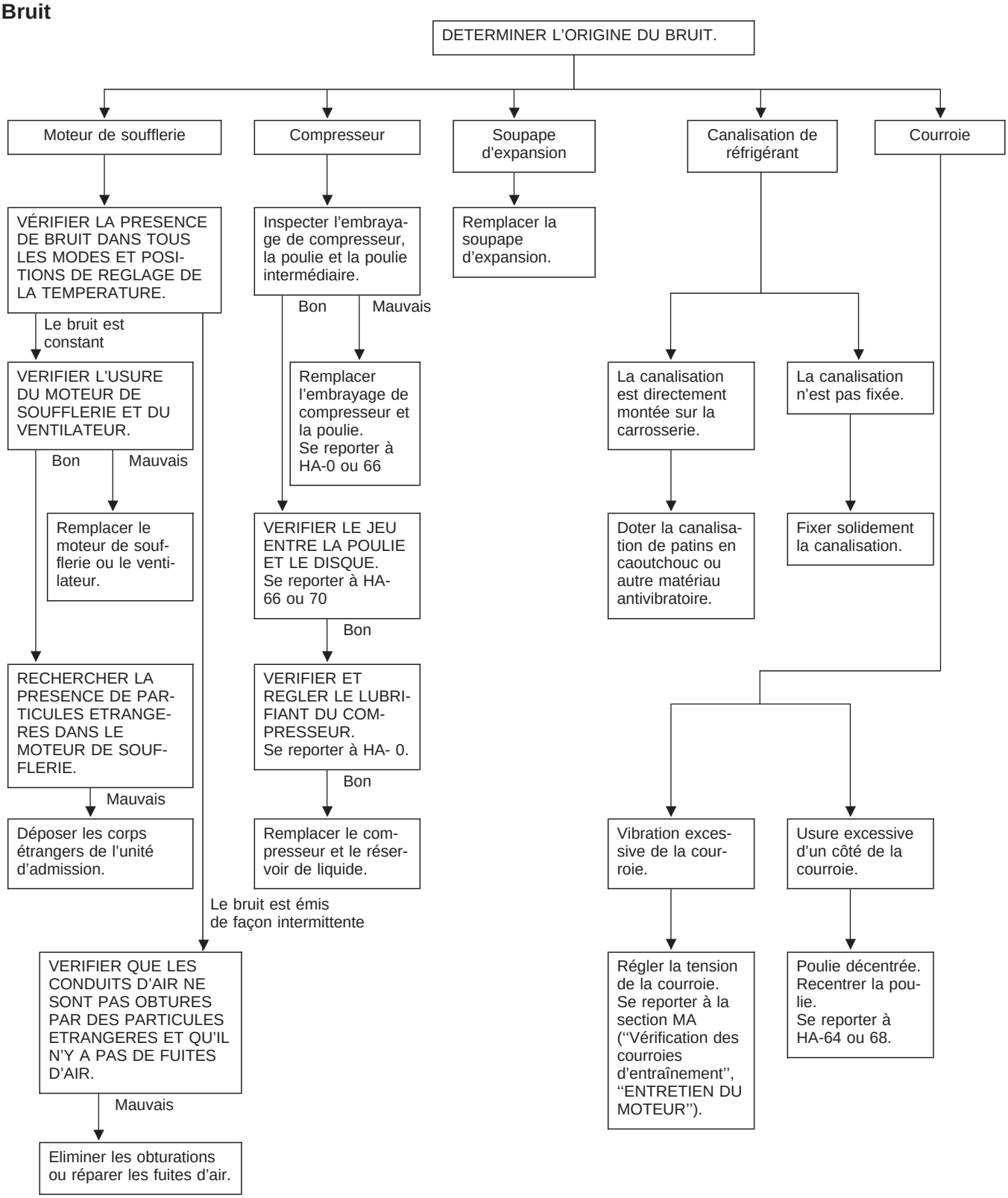

Simpo PDF Merge and Split Unregistered Version - http://www.simpopdf.com

Vérification préliminaire (Suite)

VERIFICATION PRELIMINAIRE 3

Chauffage insuffisant

L'AIR SORT-IL DES AERATEURS DU PLANCHER ?
Condition :
- Véhicule à température de fonctionnement.
- Le contact d'allumage et l'interrupteur de ventilateur sont mis sur ''ON''.
- Le curseur de réglage du mode est sur ''plancher'' et le curseur de commande de la température est sur la position de chaud maxi.

Non → VERIFIER LE FONCTIONNEMENT DU MOTEUR DE SOUFFLERIE. Passer à la **Procédure de diagnostic 1**, HA-0.

Oui ↓

Vérifier les points suivants :
- Niveau de réfrigérant. Se reporter à la section MA.
- Présence de fuites ou de noeuds sur les flexibles.
- Bouchon de radiateur. Se reporter à la section LC (''CIRCUIT DE REFROIDISSEMENT DU MOTEUR'').
- Air dans le système de refroidissement.

Mauvais → Réparer ou remplacer si nécessaire.

Bon ↓

VERIFIER LE FONCTIONNEMENT DU ROBINET D'EAU.
Sauf pour les modèles avec conduite à droite
Chauffer le moteur avant la vérification.
Se reporter à ''Réglage de la timonerie de commande'', HA-0.

Mauvais → Régler ou remplacer le robinet d'eau.

Bon ↓

VERIFIER LE CABLE DE COMMANDE DE LA TEMPERATURE.
Se reporter à ''Réglage de la timonerie de commande'', HA-0.

Mauvais → Régler le câble de commande de la température.

Bon ↓

INSPECTER VISUELLEMENT LE VOLET DE MELANGE D'AIR.
L'accès se fait en déposant le tableau de bord.

Mauvais → Remplacer le volet de mélange d'air.

Bon ↓

VERIFIER AU TOUCHER LES FLEXIBLES D'ENTREE ET DE SORTIE DU CHAUFFAGE.

- Les deux flexibles sont froids → VERIFIER L'INSTALLATION DU THERMOSTAT.
  - Bon → Remplacer le thermostat. Se reporter à la section LC (''Thermostat'', ''CIRCUIT DE REFROIDISSEMENT DU MOTEUR'').
- Les deux flexibles sont chauds → VERIFIER QUE LES FLEXIBLES DE CHAUFFAGE SONT CORRECTEMENT INSTALLES.
  - Bon → Purger le noyau de chauffage, vidanger et remplir avec du réfrigérant. Effectuer un nouvel essai.
    - Entrée très chaude, Sortie chaude → Le système est BON
    - Les deux flexibles sont chauds → Remplacer le noyau du chauffage.

Simpo PDF Merge and Split Unregistered Version - http://www.simpopdf.com

Diagnostics de l'essai de rendement

REFROIDISSEMENT INSUFFISANT

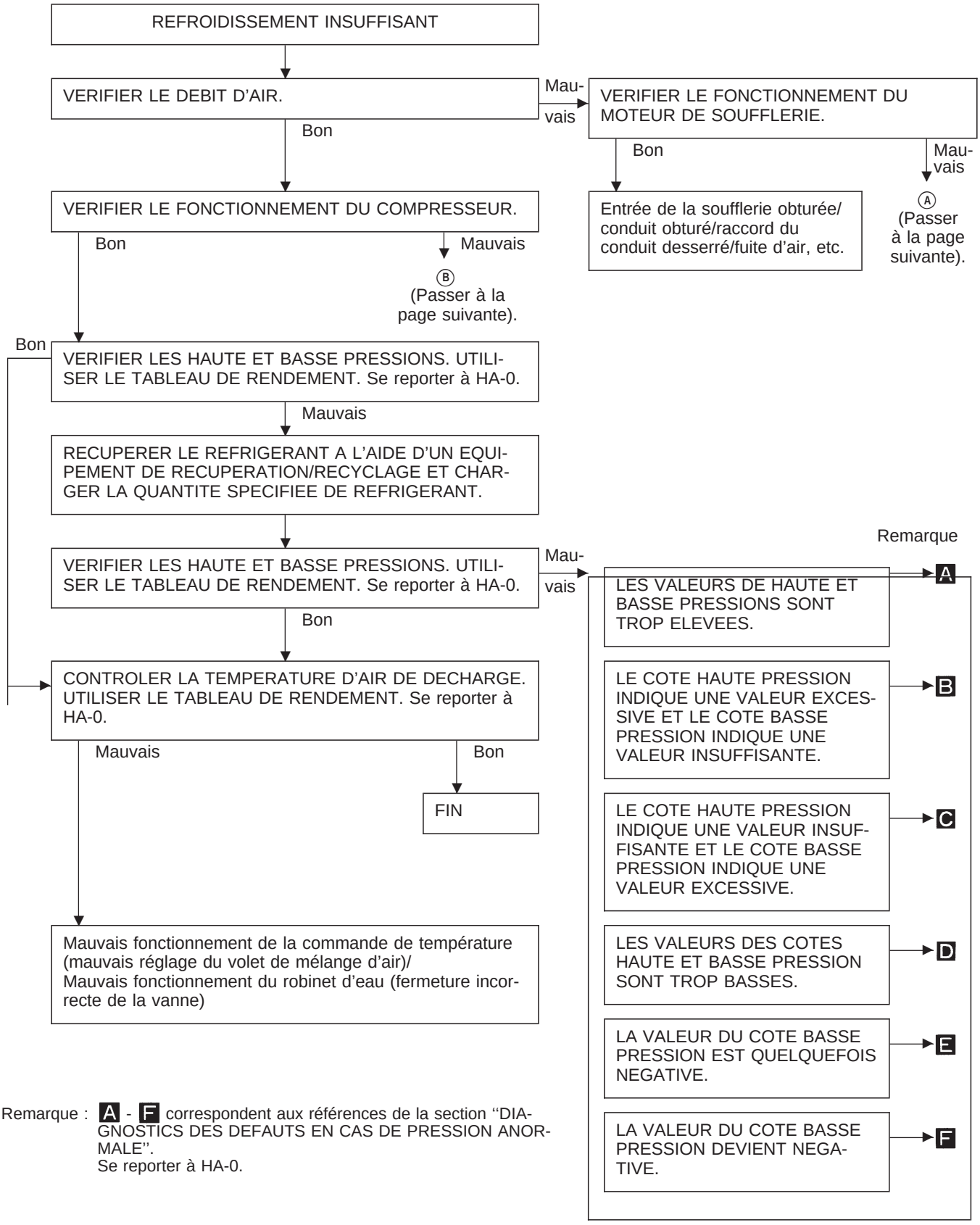

Remarque : A - F correspondent aux références de la section ''DIAGNOSTICS DES DEFAUTS EN CAS DE PRESSION ANORMALE''.
Se reporter à HA-0.

Simpo PDF Merge and Split Unregistered Version - http://www.simpopdf.com

Ⓐ

- Ventilateur de moteur de soufflerie défectueux
  - Ventilateur desserré/ventilateur et carter mal connectés/ventilateur déformé.
- Circuit électrique défectueux.
  - Câblage ou circuits des composants rompus, ou mauvaise connexion/défaut de résistance ou d'amplificateur, etc. /Fusible grillé ou tension faible de la batterie.
- Circuit interne du moteur de soufflerie défectueux.

Ⓑ

- L'embrayage magnétique ne s'enclenche pas.
  - VERIFIER L'EMBRAYAGE MAGNETIQUE.
    Inspecter le circuit de la bobine et le jeu entre le disque et la poulie.
  - VERIFIER LE CIRCUIT ELECTRIQUE.
    Inspecter le circuit de câblage et des composants.
  - VERIFIER L'ACTIVATION DES DISPOSITIFS DE SECURITE/ PROTECTION. Inspecter les dispositifs tels que le manocontact etc.
- Glissement de l'embrayage magnétique.
  - Mauvais fonctionnement des pièces internes de l'embrayage, du compresseur.
  - Présence de particules extérieures sur la surface de frottement de l'embrayage ou jeu excessif au disque.
  - Circuit électrique défectueux (mauvaise connexion, tension insuffisante de la batterie, etc.).
- Glissement de la courroie.
  - CONTROLER LA COURROIE DE COMPRESSEUR ET SA TENSION. Se reporter à la section MA (''Vérification des courroies d'entraînement'', ''ENTRETIEN DU MOTEUR'').

Simpo PDF Merge and Split Unregistered Version - http://www.simpopdf.com

Tableau de rendement

CONDITION D'ESSAI

L'essai doit être effectué comme suit :

Emplacement du véhicule : A l'intérieur ou à l'ombre (dans un local bien aéré)
Portes : Fermées
Vitres de porte : Ouvertes
Capot : Ouvert
Réglage de la TEMP. : FROID maxi.
Alimentation en air : OUIE DE TABLEAU DE BORD
Position du levier d'ADMISSION : (Recyclage)
Vitesse du VENTILATEUR : 4ème vitesse
Régime du moteur : 1 500 tr/mn

Faire fonctionner le système de climatisation pendant 10 minutes avant d'effectuer les mesures.

INTERPRETATION DES RESULTATS DE L'ESSAI

Tableau des températures d'air de recirculation et d'air débité

Air intérieur (air de recirculation) à l'entrée de l'ensemble de soufflerie		Température d'air débité par l'ouïe d'aération centrale °C
Humidité relative %	Température d'air °C	
50 - 60	20	6,6 - 9,4
	25	9,6 - 11,8
	30	13,5 - 16,5
	35	17,5 - 21,2
	40	21,4 - 25,9
60 - 70	20	9,4 - 11,2
	25	11,8 - 14,1
	30	16,5 - 19,5
	35	21,2 - 24,9
	40	25,9 - 30,3

Tableau des pressions de fonctionnement par rapport aux températures d'air ambiant.

Air ambiant		Haute pression (côté décharge) kPa (bar, kg/cm^2)	Basse pression (côté aspiration) kPa (bar, kg/cm^2)
Humidité relative %	Température d'air °C		
50 - 70	20	971 - 1 187 (9,71 - 11,87, 9,9 - 12,1)	59 - 69 (0,59 - 0,69, 0,6 - 0,7)
	25	991 - 1 206 (9,91 - 12,06, 10,1 - 12,3)	69 - 78 (0,69 - 0,78, 0,7 - 0,8)
	30	1 187 - 1 442 (11,87 - 14,42, 12,1 - 14,7)	88 - 108 (0,88 - 1,08, 0,9 - 1,1)
	35	1 402 - 1 716 (14,02 - 17,16, 14,3 - 17,5)	108 - 127 (1,08 - 1,27, 1,1 - 1,3)
	40	1 628 - 1 981 (16,28 - 19,81, 16,6 - 20,2)	127 - 157 (1,27 - 1,57, 1,3 - 1,6)

Simpo PDF Merge and Split Unregistered Version - http://www.simpopdf.com

Diagnostics des défauts en cas de pression anormale

Lorsque la pression du côté haute ou basse pression du circuit est anormale, effectuer un diagnostic à l'aide d'une rampe manométrique. La marque située au dessus de la graduation de la rampe dans le tableau suivant indique la pression standard (normale). Toutefois, comme la pression standard (normale) varie d'un véhicule à l'autre, se reporter à la page HA-28 (tableau des pressions de fonctionnement par rapport aux températures d'air ambiant).

Indication du manomètre	Cycle du réfrigérant	Cause probable	Mesure à prendre
Les valeurs des haute et basse pressions sont trop élevées. A 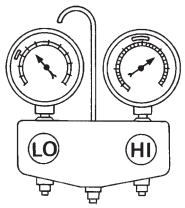 AC359A	● La pression baisse immédiatement après que de l'eau est projetée sur le condenseur.	Charge excessive de réfrigérant dans le cycle de réfrigération.	Réduire la quantité de réfrigérant jusqu'à obtention de la pression spécifiée.
	L'aspiration d'air par le ventilateur de refroidissement est insuffisante.	Fonction de refroidissement insuffisante du condenseur. ↓ ① Les ailettes du condenseur sont obstruées. ② Mauvaise rotation du ventilateur de refroidissement.	● Nettoyer le condenseur. ● Vérifier et réparer le ventilateur de refroidissement si nécessaire.
	● Le tuyau basse pression n'est pas froid. ● Lorsque le compresseur est arrêté, la haute pression diminue jusqu'à une valeur d'environ 196 kPa (2,0 bar, 2 kg/cm^2). Après quoi elle descend progressivement.	Mauvais échange de chaleur dans le condenseur. (après l'arrêt du compresseur, la haute pression baisse trop lentement). ↓ Air dans le circuit de réfrigération.	Purger et recharger le système à plusieurs reprises.
	Le moteur tend à surchauffer.	Défaut des systèmes de refroidissement du moteur.	Vérifier et réparer chaque système de refroidissement du moteur.
	● Une section du tuyau basse pression est plus froide que les sections proches de la sortie de l'évaporateur. ● Les plateaux sont parfois recouverts de givre.	● Trop de réfrigérant liquide du côté basse pression ● Débit de délestage de réfrigérant trop important. ● La soupape d'expansion s'ouvre à peine comparé à la spécification. ↓ ① Installation incorrecte de la vanne thermique. ② Mauvais réglage de la soupape d'expansion.	Remplacer la soupape d'expansion.
Le côté haute pression indique une valeur excessive et le côté basse pression indique une valeur insuffisante. B 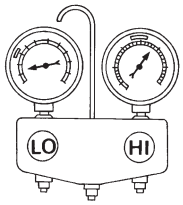 AC360A	La partie supérieure du condenseur et le côté haute pression sont chauds alors que le réservoir de liquide n'est pas aussi chaud.	Le tube haute pression ou les pièces situées entre le compresseur et le condenseur sont colmatés ou écrasés.	● Vérifier et réparer ou remplacer les pièces défectueuses. ● Vérifier que le lubrifiant n'est pas contaminé.

Simpo PDF Merge and Split Unregistered Version - http://www.simpopdf.com

Diagnostics des défauts en cas de pression anormale (Suite)

Indication du manomètre	Cycle du réfrigérant	Cause probable	Mesure à prendre
Le côté haute pression indique une valeur insuffisante et le côté basse pression indique une valeur excessive. C 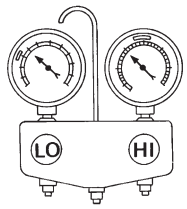 AC356A	Les côtés haute et basse pression s'égalisent peu après l'arrêt du compresseur.	Le fonctionnement de la pression du compresseur est mauvais. ↓ Dommages à l'intérieur de la garniture de compresseur.	Remplacer le compresseur.
	Pas de différence de température entre les côtés haute et basse pression.	Le fonctionnement de la pression du compresseur est mauvais. ↓ Dommages à l'intérieur de la garniture de compresseur.	Remplacer le compresseur.
Les valeurs des côtés haute et basse pression sont trop basses. D 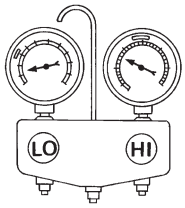 AC353A	● Il y a une grande différence de température entre la sortie et l'admission du récepteur-séchoir. La température de sortie est extrêmement basse. ● L'admission du réservoir de liquide et la soupape d'expansion sont givrées.	L'intérieur du réservoir de liquide est partiellement colmaté.	● Remplacer le réservoir de liquide. ● Vérifier que le lubrifiant n'est pas contaminé.
	● La température à l'admission de la soupape d'expansion est extrêmement basse en comparaison avec les zones à proximité du réservoir de liquide. ● L'entrée de la soupape d'expansion peut être givrée. ● Des différences de température se produisent quelque part du côté haute pression.	Le tuyau haute pression situé entre le réservoir de liquide et la soupape d'expansion est bouché.	● Vérifier et réparer les pièces défectueuses. ● Vérifier que le lubrifiant n'est pas contaminé.
	● La soupape d'expansion et le réservoir de liquide sont chauds ou juste refroidis lorsqu'on les touche.	Charge de réfrigérant basse. ↓ Fuite des raccords ou composants.	Vérifier que le réfrigérant ne présente pas de fuites. Se reporter à ''Vérification des fuites de réfrigérant'', HA-0.
	Il y a une grande différence de température entre l'admission et la sortie de la soupape d'expansion alors que la soupape elle-même est givrée.	La soupape d'expansion se ferme à peine, comparé à la spécification. ↓ ① Mauvais réglage de la soupape d'expansion. ② Mauvais fonctionnement de la vanne thermique ③ La sortie et l'admission peuvent être bouchées.	● Retirer les corps étrangers à l'air comprimé. ● Vérifier que le lubrifiant n'est pas contaminé.
	Une section du tuyau basse pression est plus froide que les sections proches de la sortie de l'évaporateur.	Le tuyau basse pression est bouché ou écrasé.	● Vérifier et réparer les pièces défectueuses. ● Vérifier que le lubrifiant n'est pas contaminé.
	Le débit d'air est insuffisant ou trop faible.	Le fonctionnement de la pression du compresseur est mauvais.	Remplacer le compresseur.

Simpo PDF Merge and Split Unregistered Version - http://www.simpopdf.com

Diagnostics des défauts en cas de pression anormale (Suite)

Indication du manomètre	Cycle du réfrigérant	Cause probable	Mesure à prendre
La valeur du côté basse pression est quelquefois négative. E 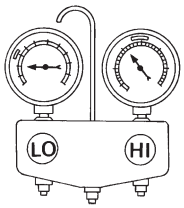 AC354A	● Le système de climatiseur ne fonctionne pas et ne refroidit pas l'air du compartiment de façon cyclique. ● Le système fonctionne de façon continue pendant un certain laps de temps après l'arrêt et le redémarrage du compresseur.	Le réfrigérant n'est pas délesté périodiquement. ↓ L'humidité a givré l'entrée et la sortie de la soupape d'expansion. ↓ De l'eau est mélangée au réfrigérant.	● Purger l'eau du réfrigérant ou remplacer le réfrigérant. ● Remplacer le réservoir de liquide.
La valeur du côté basse pression devient négative. F 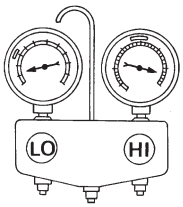 AC362A	Le réservoir de liquide ou l'avant/l'arrière du tuyau de la soupape d'expansion est gelé ou couvert de buée.	Le côté haute pression est fermé et le réfrigérant ne circule pas. ↓ La soupape d'expansion ou le réservoir de liquide a givré.	Laisser le système reposer. Le mettre à nouveau en marche pour vérifier si le problème est lié à la présence d'eau ou de particules étrangères. ● Si le problème est dû à l'eau, le refroidissement initial s'effectue correctement. L'eau gèle ensuite et bloque le tuyau. Purger l'eau du réfrigérant ou remplacer le réfrigérant. ● Si le problème est dû à la présence de particules étrangères, déposer la soupape d'expansion et retirer les particules à l'air comprimé sec. ● Si aucune des méthodes indiquées ci-dessus ne résout le problème, remplacer la soupape d'expansion. ● Remplacer le réservoir de liquide. ● Vérifier que le lubrifiant n'est pas contaminé.

Simpo PDF Merge and Split Unregistered Version - http://www.simpopdf.com

Emplacement des composants

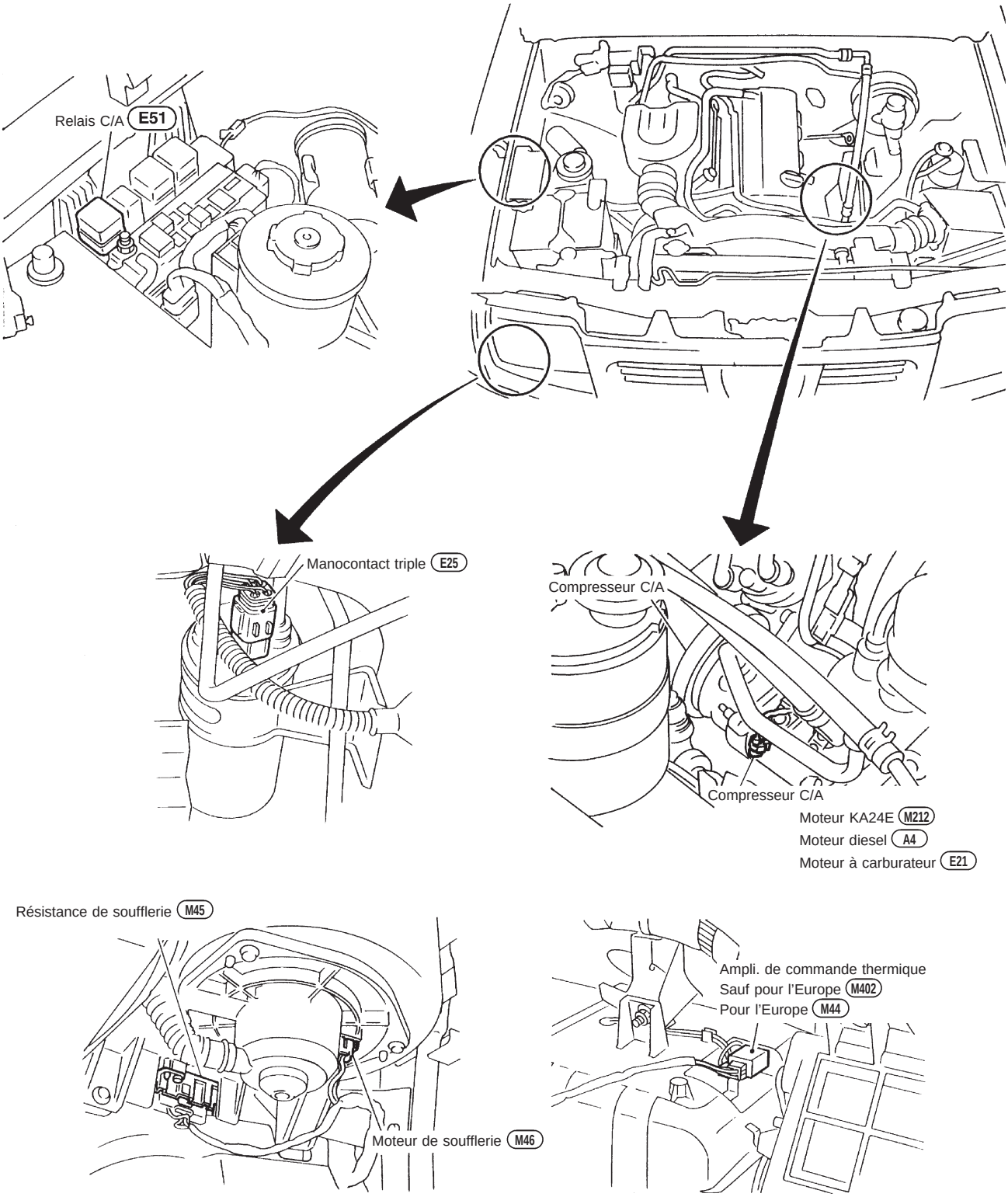

Cette illustration est valable pour les modèles avec conduite à gauche.

RHA371GA

Simpo PDF Merge and Split Unregistered Version - http://www.simpopdf.com

Schéma de câblage – HEATER –

HA–HEATER–01

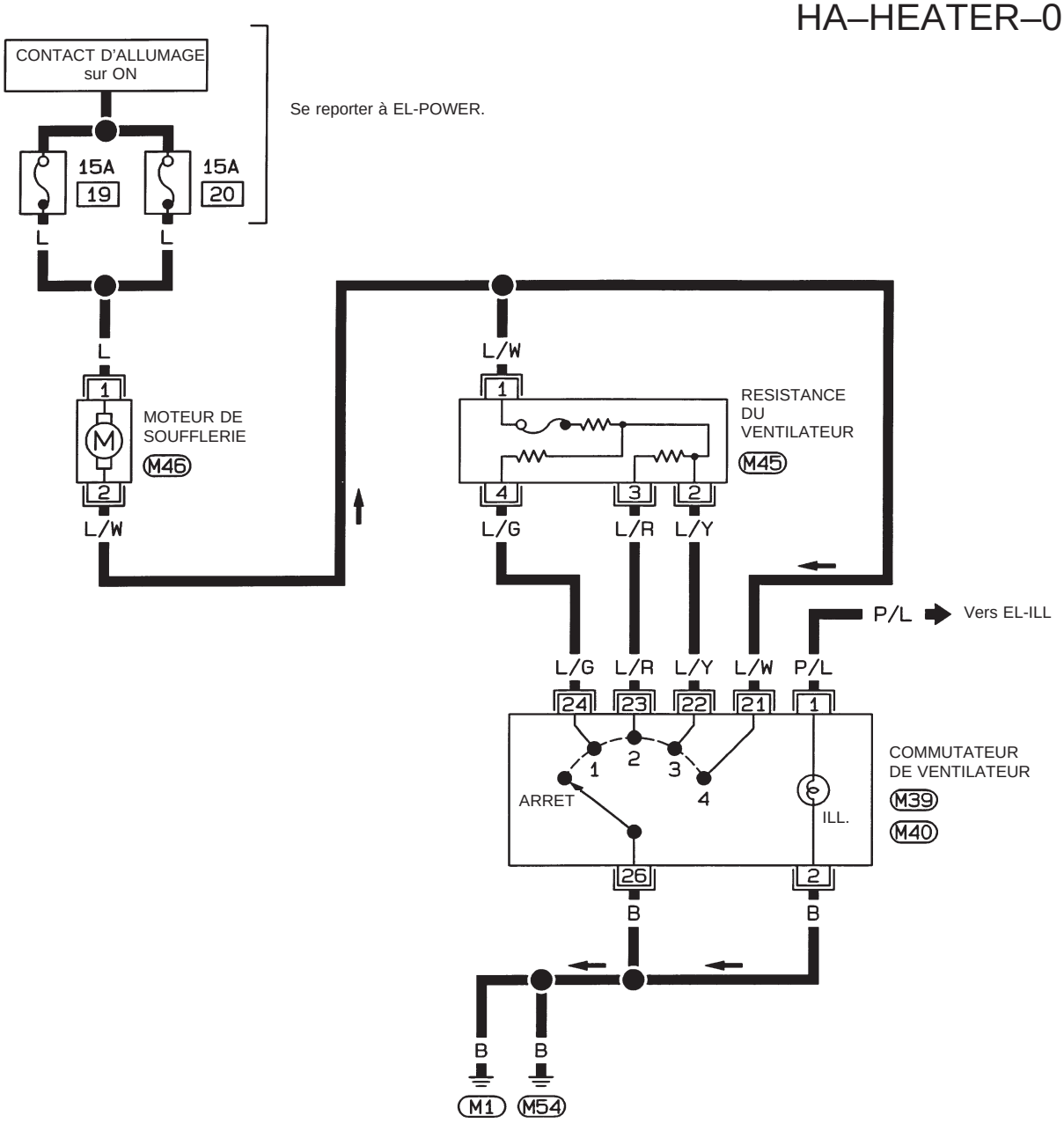



HHA100

Simpo PDF Merge and Split Unregistered Version - http://www.simpopdf.com

Schéma de circuit – Climatiseur

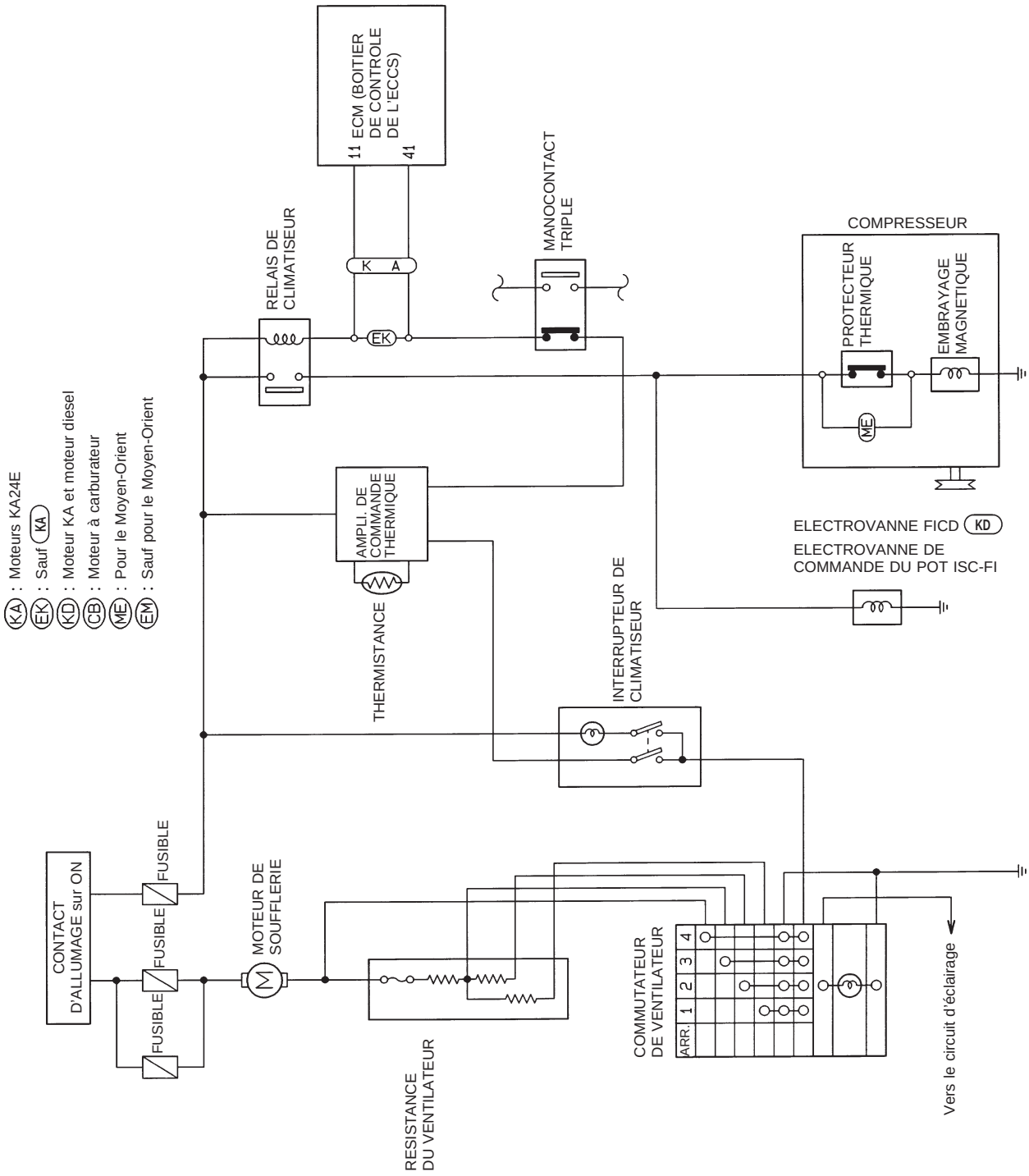

HHA129

Simpo PDF Merge and Split Unregistered Version - http://www.simpopdf.com

Schéma de câblage – A/C –

HA–A/C, M–01

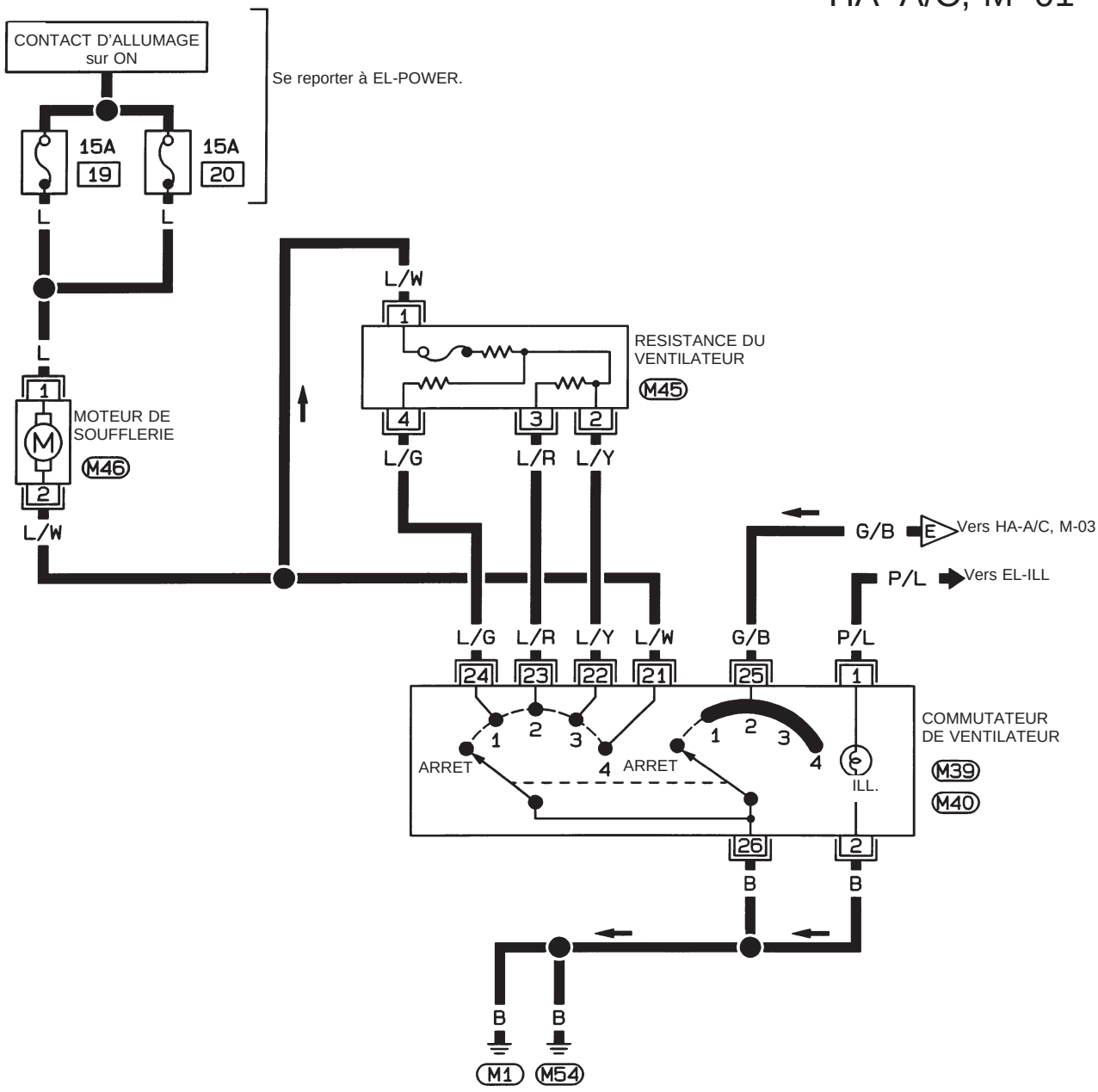



HHA133

Simpo PDF Merge and Split Unregistered Version - http://www.simpopdf.com

Schéma de câblage – A/C – (Suite)

HA–A/C–02

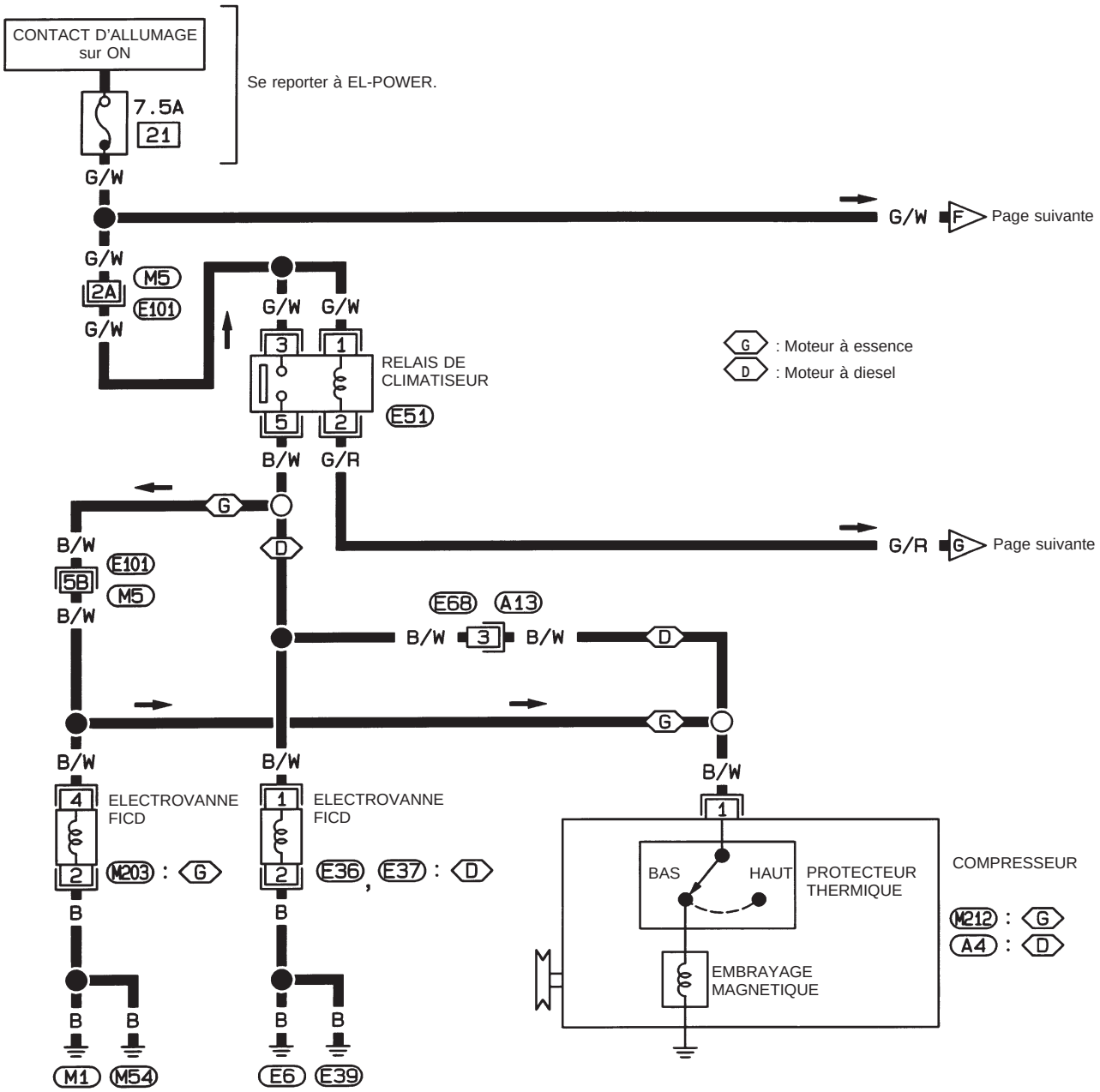

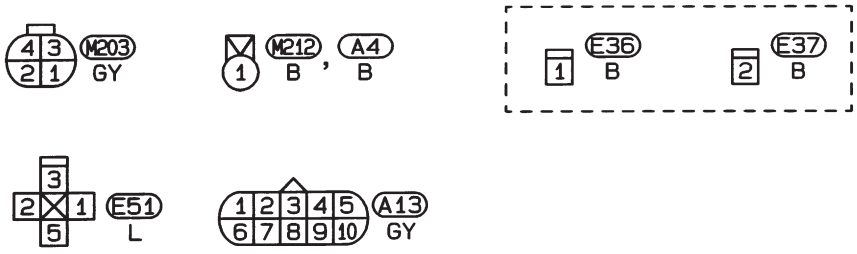

Consulter la dernière page dépliante.
M5, E101

HHA134

Simpo PDF Merge and Split Unregistered Version - http://www.simpopdf.com

Schéma de câblage – A/C – (Suite)

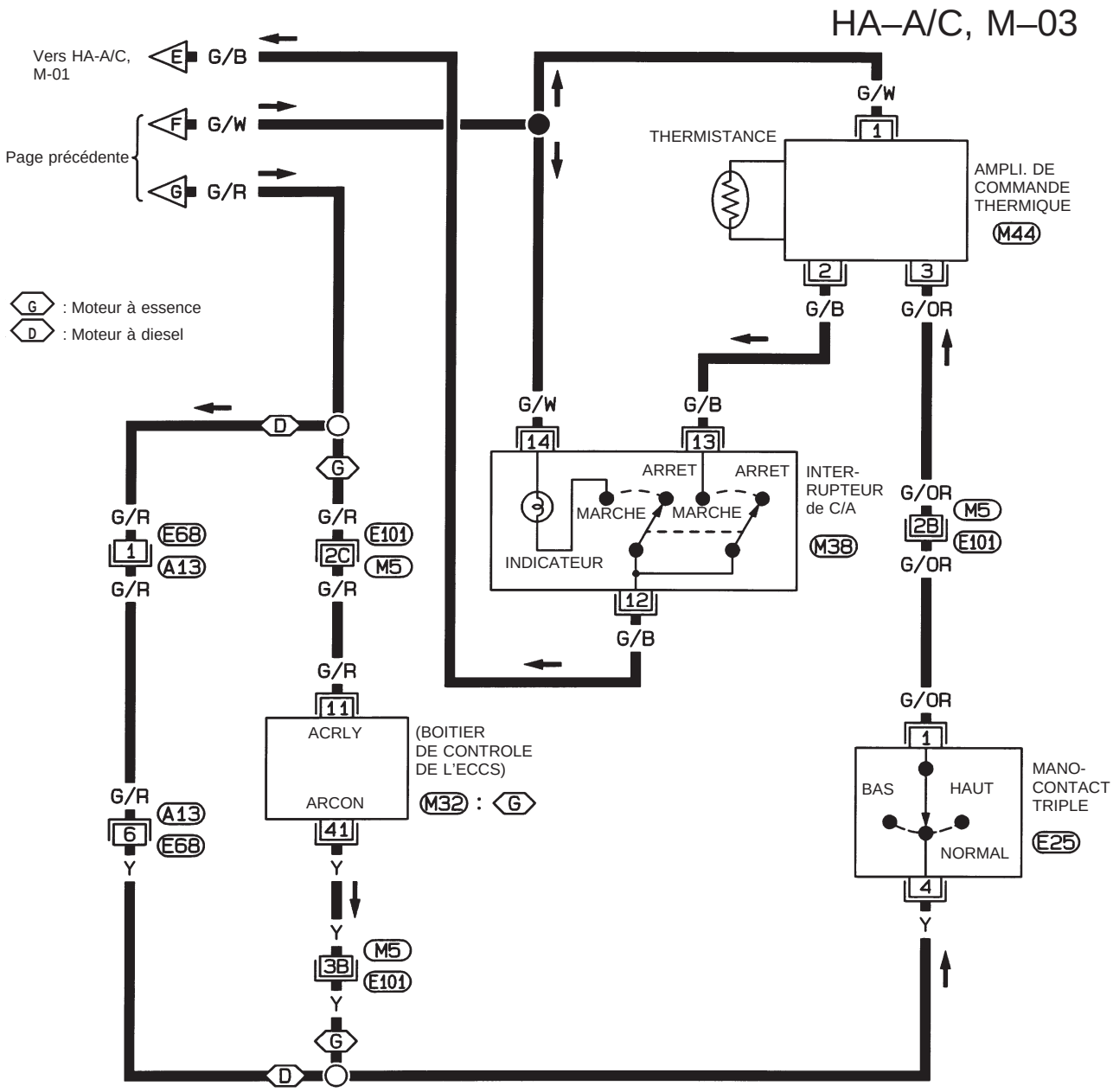



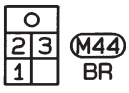

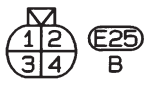



Consulter la dernière page dépliante.
M5 , E101
M32

HHA135

Simpo PDF Merge and Split Unregistered Version - http://www.simpopdf.com

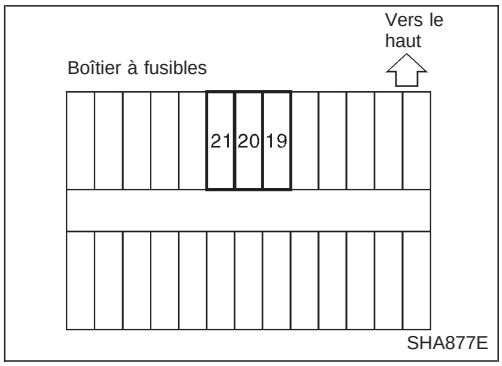

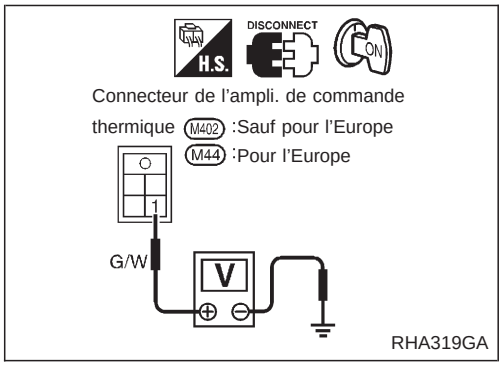

Vérification de l'alimentation électrique principale et du circuit de mise à la masse

VERIFICATION DU FUSIBLE DE L'ALIMENTATION ELECTRIQUE DU SYSTEME DE C/A

Vérifier les fusibles suivants.

- Fusible de 15A (n° 19 et 20) du moteur de soufflerie.
- Fusible de 7,5A (n° 21) de l'ampli. de commande thermique.

Pour de plus amples détails sur le circuit, se reporter au ''Schéma de câblage''.

VERIFICATION DE L'AMPLI. DE COMMANDE THERMIQUE

Vérification du circuit d'alimentation électrique

Vérifier le circuit d'alimentation électrique de l'ampli. de commande thermique lorsque le contact d'allumage est sur ''ON''.

1. Débrancher le connecteur de faisceau de l'ampli. de commande thermique.
2. Brancher le voltmètre du côté faisceau.
3. Mesurer la tension à travers la borne ① et la masse de carrosserie.

Borne du voltmètre		Tension
⊕	⊖	
①	Masse de carrosserie	Environ 12V

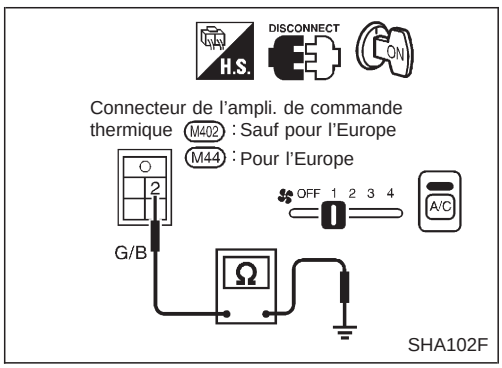

Vérification du circuit de mise à la masse

Vérifier le circuit de mise à la masse de la carrosserie de l'ampli. de commande thermique avec le contact d'allumage sur ''ON'' et les interrupteurs de climatiseur et de ventilateur sur MARCHE.

1. Débrancher le connecteur de faisceau de l'ampli. de commande thermique.
2. Brancher l'ohmmètre du côté faisceau.
3. Vérifier la continuité entre la borne ② et la masse de carrosserie.

Borne d'ohmmètre		Continuité
⊕	⊖	
②	Masse de carrosserie	Oui

Si le circuit de mise à la masse ne fonctionne pas correctement, vérifier les points suivants.

- Interrupteur de climatiseur (se reporter à HA-0).
- Commutateur de ventilateur (se reporter à HA-0).
- Faisceau ouvert ou court-circuit entre l'ampli. de commande thermique et l'interrupteur de climatiseur
- Faisceau ouvert ou court-circuit entre les interrupteurs de climatiseur et de ventilateur
- Circuit de mise à la masse de l'interrupteur de ventilateur

Simpo PDF Merge and Split Unregistered Version - http://www.simpopdf.com

	PANNE	N° d'organigramme
1	Le ventilateur ne tourne pas.	1
2	Le ventilateur ne tourne pas en 1ère vitesse.	2
3	Le ventilateur ne tourne pas en 2nde vitesse.	3
4	Le ventilateur ne tourne pas en 3ème vitesse.	4
5	Le ventilateur ne tourne pas en 4ème vitesse.	5

A

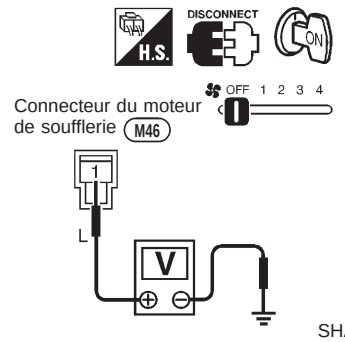

SHA872E

B

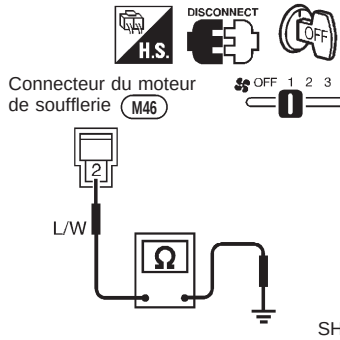

SHA873E

C

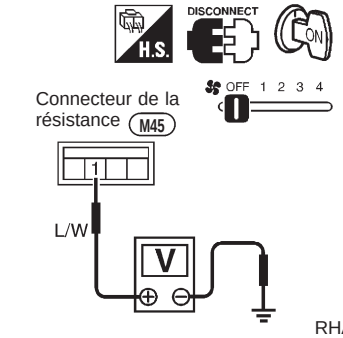

RHA320G

D

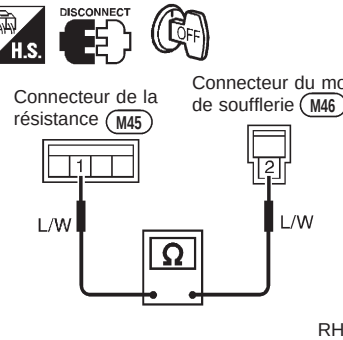

RHA321G

Procédure de diagnostic 1

SYMPTOME : le moteur de soufflerie ne tourne pas.

- **Effectuer la VERIFICATION PRELIMINAIRE 1 avant de se reporter à l'organigramme suivant.**

Vérifier si le moteur de soufflerie tourne correctement à chaque vitesse du ventilateur.
Effectuer les vérifications dans l'ordre indiqué à gauche.

5 → Ⓔ
4 → Ⓓ
3 → Ⓒ
2 → Ⓑ

(Passer à la page suivante).

A — 1

VERIFIER L'ALIMENTATION ELECTRIQUE DU MOTEUR DE SOUFFLERIE.
Débrancher le connecteur de faisceau du moteur de soufflerie.
Y a-t-il une tension d'environ 12 V entre la borne ① du faisceau de moteur de soufflerie et la masse de carrosserie ?

Non → Vérifier les fusibles de 15A (n° 19 et n° 20, situés dans le boîtier à fusibles). (se reporter à "DISPOSITION DE L'ALIMENTATION ELECTRIQUE" dans la section EL et à son schéma de câblage).

Oui ↓

B

1. Déplacer le curseur de commande du ventilateur sur n'importe quelle position exceptée la position ARRET.
2. Vérifier la continuité du circuit entre la borne ② du faisceau de moteur de soufflerie et la masse de carrosserie.
   Il doit y avoir continuité.

Mauvais → Rebrancher le connecteur de faisceau du moteur de soufflerie.

Bon ↓

VERIFIER LE MOTEUR DE SOUFFLERIE.
(Se reporter à Inspection des composants électriques) (HA-45).

Mauvais ↓

Remplacer le moteur de soufflerie.

C

VERIFIER LE CIRCUIT DU MOTEUR DE SOUFFLERIE ENTRE LE MOTEUR DE SOUFFLERIE ET LA RESISTANCE.
Y a-t-il une tension d'environ 12 V entre la borne ① du faisceau de la résistance et la masse de carrosserie ?

Non → Débrancher les connecteurs de faisceau du moteur de soufflerie et de la résistance.

Oui ↓

Débrancher le connecteur de faisceau de l'interrupteur de ventilateur.

Ⓐ
(Passer à la page suivante).

D — Note

Vérifier la continuité du circuit entre la borne ② du faisceau de moteur de soufflerie et la borne ① du faisceau de résistance.
Il doit y avoir continuité.
Si le résultat est satisfaisant, vérifier que le faisceau n'est pas court-circuité.

Note :
Si le résultat est mauvais après vérification de la continuité du circuit, réparer le faisceau ou le connecteur.

Simpo PDF Merge and Split Unregistered Version - http://www.simpopdf.com

Procédure de diagnostic 1 (Suite)

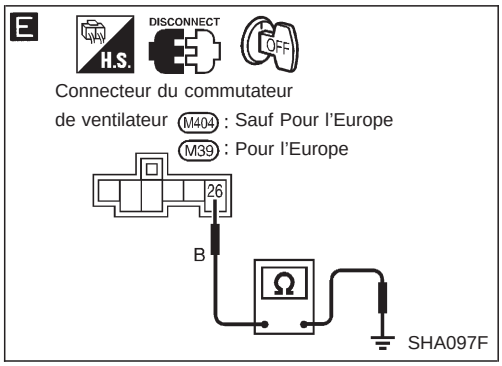

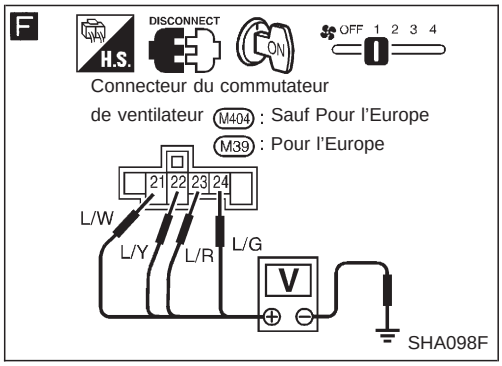

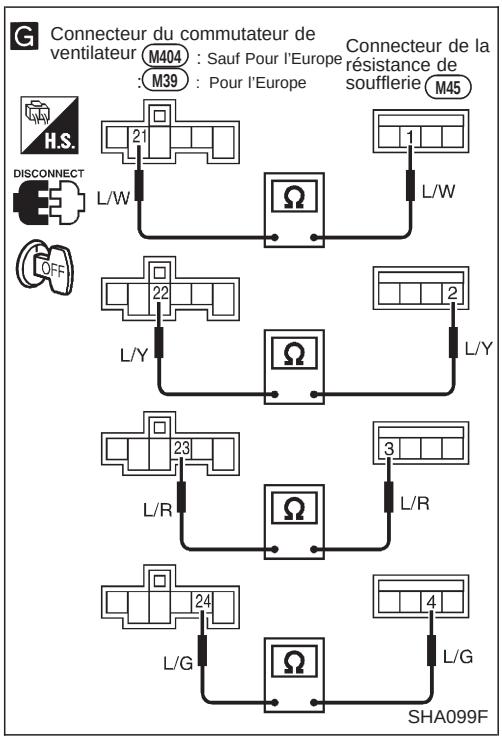

Ⓐ

E

Note

VERIFIER LE CIRCUIT DE MASSE DE L'INTERRUPTEUR DE VENTILATEUR.
Vérifier la continuité du circuit entre la borne Ⓐ26 du faisceau de commutateur de ventilateur et la masse de carrosserie.

Bon

VERIFIER LA RESISTANCE DE SOUFFLERIE APRES L'AVOIR DEBRANCHEE.
(Se reporter à Inspection des composants électriques) (HA-0).

2 → Ⓑ
3 → Ⓒ
4 → Ⓓ

Bon

Mauvais

Remplacer la résistance.

Ⓔ

Rebrancher le connecteur de faisceau de la résistance.

1 2 3 4 5

F

VERIFIER LE CIRCUIT DE L'INTERRUPTEUR DE VENTILATEUR.
Y a-t-il une tension d'environ 12 V entre chaque borne du faisceau de commutateur de ventilateur et la masse de carrosserie ?

N° d'organigramme	N° de borne (+)	N° de borne (-)	Tension
2	Ⓐ24	Masse de carrosserie	Environ 12V
3	Ⓐ23		
4	Ⓐ22		
5	Ⓐ21		

Oui

Non

G

Note

Vérifier la continuité du circuit entre la borne du faisceau de commutateur de ventilateur et la borne du faisceau de résistance.

N° de borne		Continuité
Commutateur de ventilateur	Résistance	
Ⓐ21	Ⓑ1	Oui
Ⓐ22	Ⓑ2	
Ⓐ23	Ⓑ3	
Ⓐ24	Ⓑ4	

Si le résultat est satisfaisant, vérifier que le faisceau n'est pas court-circuité.

DEBRANCHER LE COMMUTATEUR DE VENTILATEUR ET LE VERIFIER.
(Se reporter à Inspection des composants électriques) (HA-0).

Mauvais → Remplacer le commutateur de ventilateur.

Remarque :
Si le résultat est mauvais après vérification de la continuité du circuit, réparer le faisceau ou le connecteur.

Simpo PDF Merge and Split Unregistered Version - http://www.simpopdf.com

A

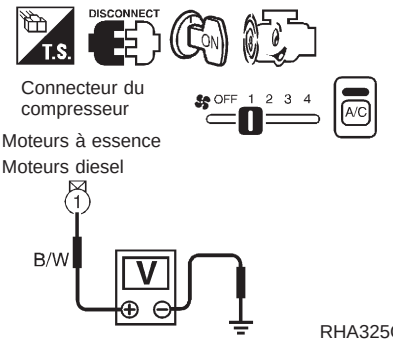

RHA325G

B

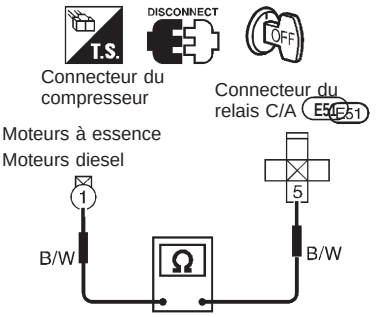

RHA748FD

C

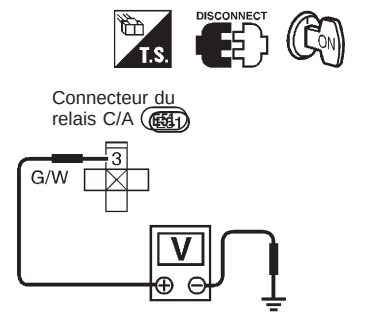

RHA359G

D

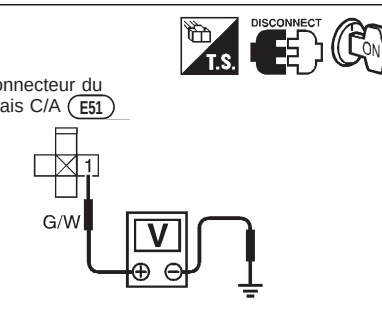

RHA375G

E

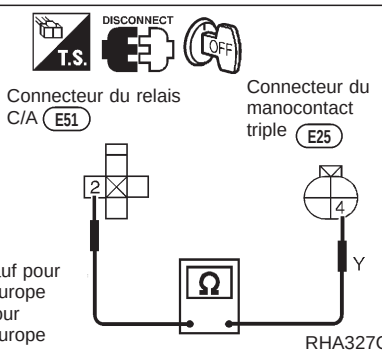

RHA327GA

Procédure de diagnostic 2

SAUF POUR LES MOTEURS KA

SYMPTOME : L'embrayage magnétique ne s'enclenche pas lorsque l'interrupteurs de climatiseur et le commutateur de ventilateur sont enclenchés.

- **Effectuer la VERIFICATION PRELIMINAIRE 1 avant de se reporter à l'organigramme suivant.**

A

VERIFIER L'ALIMENTATION ELECTRIQUE DU COMPRESSEUR.
Débrancher le connecteur de faisceau du compresseur.
Y a-t-il une tension d'environ 12 V entre la borne (1) du faisceau de compresseur et la masse de carrosserie ?

Oui → Vérifier les points suivants.
- Bobine d'embrayage magnétique
- Protecteur thermique (sauf pour le Moyen-Orient)

Mauvais → Remplacer l'embrayage magnétique. Se reporter à HA-0.

Non ↓

B Note

Vérifier la continuité du circuit entre la borne (5) du faisceau de relais de climatiseur et la borne (1) du faisceau de compresseur.
Il doit y avoir continuité.
Si le résultat est satisfaisant, vérifier que le faisceau n'est pas court-circuité.

Bon ↓

C

VERIFIER L'ALIMENTATION ELECTRIQUE DU RELAIS DE CLIMATISEUR.
Y a-t-il une tension d'environ 12 V entre la borne (3) du faisceau de relais de climatiseur et la masse de carrosserie ?

Non → Vérifier le circuit de l'alimentation électrique et le fusible de 7,5A (n° 21, situé dans le boîtier à fusibles). (se reporter à "DISPOSITION DE L'ALIMENTATION ELECTRIQUE" dans la section EL et à son schéma de câblage).

Oui ↓

D

VERIFIER L'ALIMENTATION ELECTRIQUE DU RELAIS DE CLIMATISEUR.
Y a-t-il une tension d'environ 12 V entre la borne (1) du faisceau de relais de climatiseur et la masse de carrosserie ?

Oui → Vérifier le circuit de l'alimentation électrique et le fusible de 7,5A (n° 21, situé dans le boîtier à fusibles). (se reporter à "DISPOSITION DE L'ALIMENTATION ELECTRIQUE" dans la section EL et à son schéma de câblage).

Non ↓

VERIFIER LE RELAIS DE CLIMATISEUR APRES L'AVOIR DEBRANCHE.
Se reporter à HA-0.

Mauvais → Remplacer le relais de climatiseur.

Bon ↓

Rebrancher le relais de climatiseur.

E Note

Vérifier la continuité du circuit entre la borne (2) du faisceau de relais C/A et la borne (4) du faisceau de manocontact triple.
Il doit y avoir continuité.
Si le résultat est satisfaisant, vérifier que le faisceau n'est pas court-circuité.

Bon ↓

(A) (Passer à la page suivante).

Remarque :
Si le résultat est mauvais après vérification de la continuité du circuit, réparer le faisceau ou le connecteur.

Simpo PDF Merge and Split Unregistered Version - http://www.simpopdf.com

Procédure de diagnostic 2 (Suite)

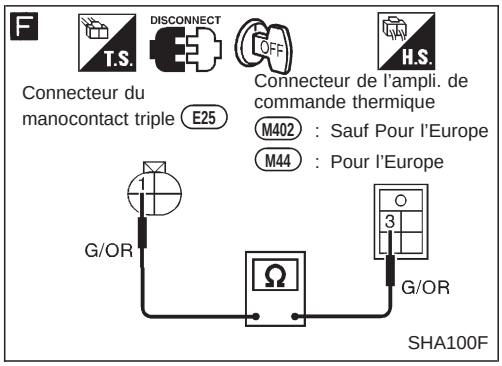

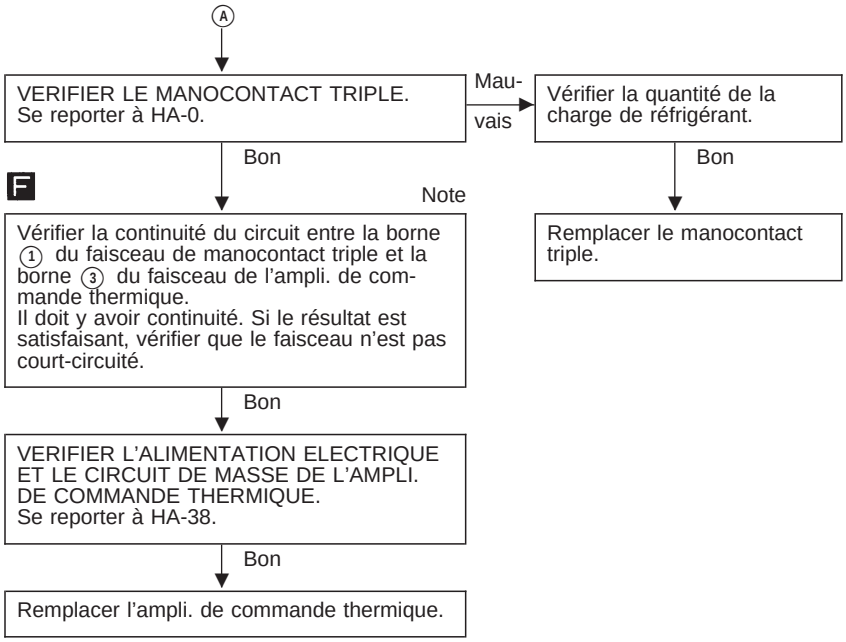

Remarque :
Si le résultat est mauvais après vérification de la continuité du circuit, réparer le faisceau ou le connecteur.

Simpo PDF Merge and Split Unregistered Version - http://www.simpopdf.com

Procédure de diagnostic 2 (Suite)

POUR LES MOTEURS KA

SYMPTOME : L'embrayage magnétique ne s'enclenche pas lorsque l'interrupteurs de climatiseur et le commutateur de ventilateur sont enclenchés.

- **Effectuer la VERIFICATION PRELIMINAIRE 1 avant de se reporter à l'organigramme suivant.**

A

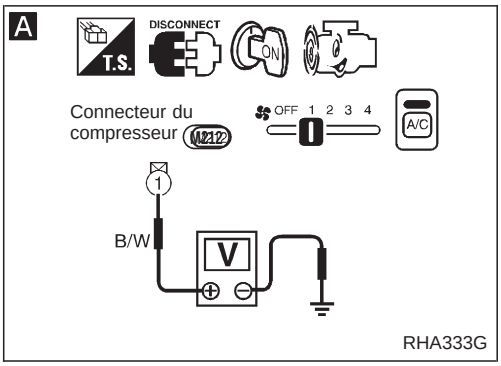

B

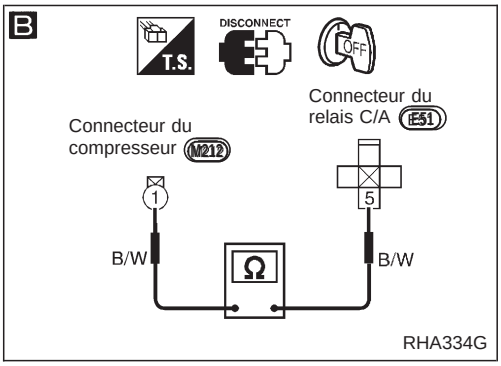

C

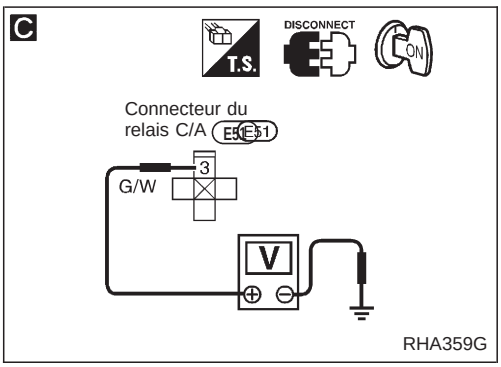

D

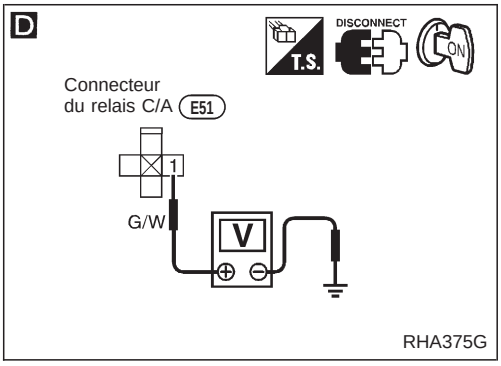

A

VERIFIER L'ALIMENTATION ELECTRIQUE DU COMPRESSEUR.
Débrancher le connecteur de faisceau du compresseur.
Y a-t-il une tension d'environ 12 V entre la borne (1) du faisceau de compresseur et la masse de carrosserie ?

Oui → Vérifier les points suivants.
- Bobine d'embrayage magnétique
- Protecteur thermique

Mauvais → Remplacer l'embrayage magnétique. Se reporter à HA-0.

Non ↓

B

Vérifier la continuité du circuit entre la borne (5) du faisceau de relais de climatiseur et la borne (1) du faisceau de compresseur.
Il doit y avoir continuité.
Si le résultat est satisfaisant, vérifier que le faisceau n'est pas court-circuité.

Note

Bon ↓

C

VERIFIER L'ALIMENTATION ELECTRIQUE DU RELAIS DE CLIMATISEUR.
Y a-t-il une tension d'environ 12 V entre la borne (3) du faisceau de relais de climatiseur et la masse de carrosserie ?

Non → Vérifier le circuit de l'alimentation électrique et le fusible de 7,5A (n° 21, situé dans le boîtier à fusibles).
(se reporter à "DISPOSITION DE L'ALIMENTATION ELECTRIQUE" dans la section EL et à son schéma de câblage).

Oui ↓

D

VERIFIER L'ALIMENTATION ELECTRIQUE DU RELAIS DE CLIMATISEUR.
Y a-t-il une tension d'environ 12 V entre la borne (1) du faisceau de relais de climatiseur et la masse de carrosserie ?

Non → Vérifier le circuit de l'alimentation électrique et le fusible de 7,5A (n° 21, situé dans le boîtier à fusibles).
(se reporter à "DISPOSITION DE L'ALIMENTATION ELECTRIQUE" dans la section EL et à son schéma de câblage).

Oui ↓

VERIFIER LE RELAIS DE CLIMATISEUR APRES L'AVOIR DECONNECTE.
Se reporter à HA-0.

Mauvais → Remplacer le relais de climatiseur.

Bon ↓

Reconnecter le relais de climatiseur.

↓

(A)
(Passer à la page suivante).

Remarque :
Si le résultat est mauvais après vérification de la continuité du circuit, réparer le faisceau ou le connecteur.

Simpo PDF Merge and Split Unregistered Version - http://www.simpopdf.com

Procédure de diagnostic 2 (Suite)

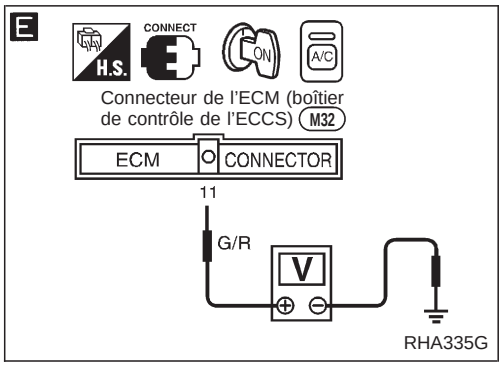

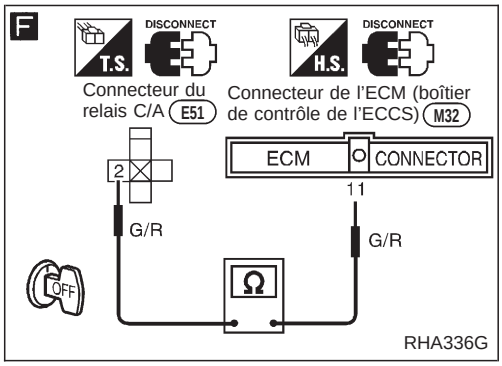

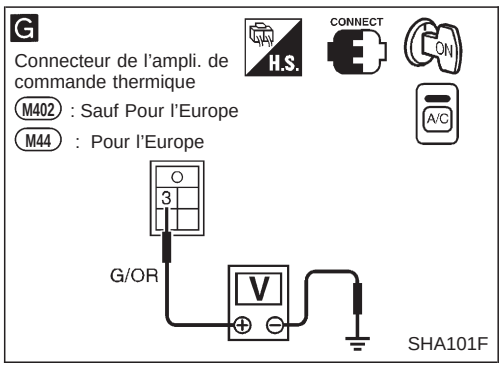

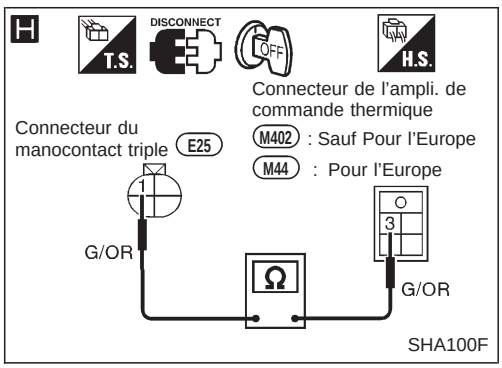

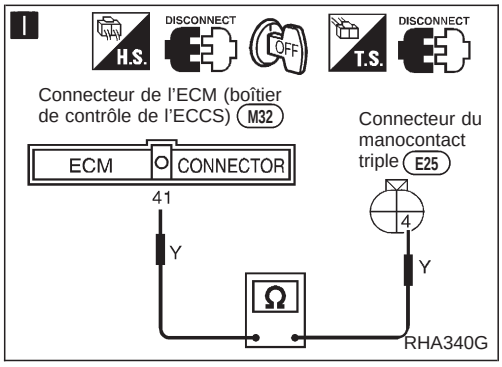

Ⓐ

E

VERIFIER LE CIRCUIT COTE BOBINE DU RELAIS DE CLIMATISEUR.
Déconnecter le connecteur de faisceau de l'ECM (boîtier de contrôle de l'ECCS).
Y a-t-il une tension d'environ 12 V entre la borne ⑪ du faisceau de l'ECM (boîtier de contrôle de l'ECCS) et la masse de carrosserie ?

Non → **F** Note
Vérifier la continuité du circuit entre la borne ② du faisceau de relais de climatiseur et la borne ⑪ du faisceau de l'ECM (boîtier de contrôle de l'ECCS).
Il doit y avoir continuité.
Si le résultat est satisfaisant, vérifier que le faisceau n'est pas court-circuité.

Oui

Reconnecter le connecteur de faisceau de l'ECM (boîtier de contrôle de l'ECCS).

VERIFIER L'ALIMENTATION ELECTRIQUE ET LE CIRCUIT DE MASSE DE L'AMPLI. DE COMMANDE THERMIQUE.
Se reporter à HA-38.

Bon

G

VERIFIER LA TENSION DE L'AMPLI. DE COMMANDE THERMIQUE.
Y a-t-il une tension d'environ 5 V entre la borne ③ du faisceau de l'ampli. de commande thermique et la masse de carrosserie ?

Oui → Remplacer l'ampli. de commande thermique.

Non

H

Vérifier la continuité du circuit entre la borne ③ du faisceau de l'ampli. de commande thermique et la borne ① du faisceau de manocontact triple.
Il doit y avoir continuité.
Si le résultat est satisfaisant, vérifier que le faisceau n'est pas court-circuité.

Bon

VERIFIER LE MANOCONTACT TRIPLE.
Se reporter à HA-0.

Mauvais → Remplacer le manocontact triple.

Bon

I Note
Vérifier la continuité du circuit entre la borne ㊶ du faisceau de l'ECM (boîtier de contrôle de l'ECCS) et la borne ④ du faisceau de manocontact triple.
Il doit y avoir continuité.
Si le résultat est satisfaisant, vérifier que le faisceau n'est pas court-circuité.

Bon

VERIFIER LE BOITIER DE CONTROLE DE L'ECCS.
Se reporter à la section EC.

Note :
Si le résultat est mauvais après vérification de la continuité du circuit, réparer le faisceau ou le connecteur.

Simpo PDF Merge and Split Unregistered Version - http://www.simpopdf.com

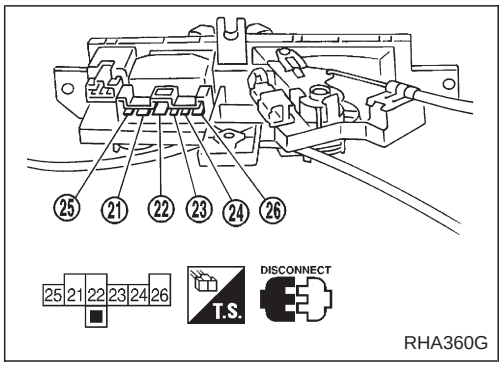

RHA360G

Inspection des composants électriques

COMMUTATEUR DE VENTILATEUR

Vérifier la continuité entre les bornes à chaque position de la commande.

Position du curseur	Continuité entre les bornes
Arrêt	
1	㉔ — ㉖ — ㉕
2	㉓ — ㉖ — ㉕
3	㉒ — ㉖ — ㉕
4	㉑ — ㉖ — ㉕

MOTEUR DE SOUFFLERIE

S'assurer que le moteur de soufflerie tourne librement.

- S'assurer que l'intérieur de l'unité d'admission ne contient aucune particule étrangère.

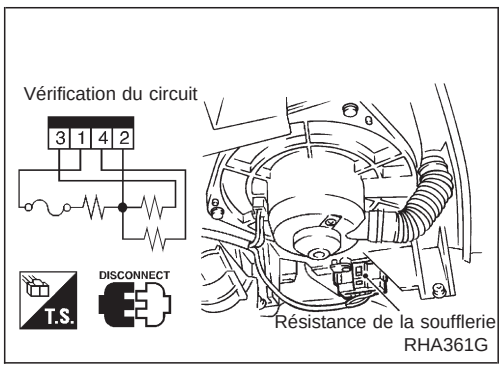

RHA361G

RESISTANCE DE SOUFFLERIE

Vérifier la résistance entre les bornes.

N° de borne		Résistance
⊕	⊖	
③	①	Environ 1,4 - 1,6Ω
④		Environ 2,5 - 2,8Ω
②		Environ 0,5 - 0,6Ω

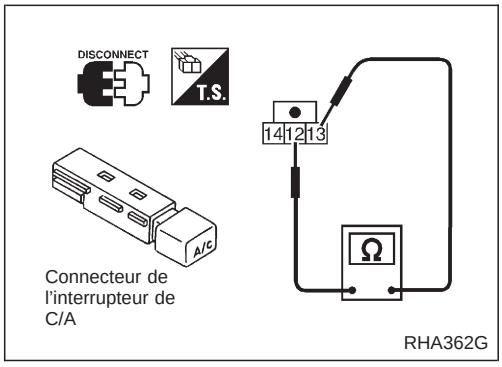

RHA362G

INTERRUPTEUR DE CLIMATISEUR

Vérifier la continuité entre les bornes à chaque position de la commande.

Condition de l'interrupteur	N° de borne		Continuité
C/A	⊕	⊖	
Marche	⑬	⑫	Oui
Arrêt			Non

Simpo PDF Merge and Split Unregistered Version - http://www.simpopdf.com

Inspection des composants électriques (Suite)

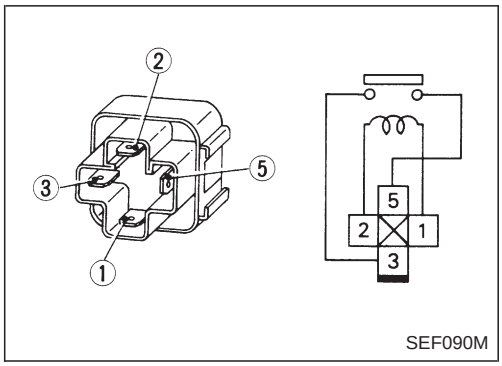

SEF090M

RELAIS DE CLIMATISEUR

Vérifier la continuité entre les bornes ③ et ⑤.

Conditions	Continuité
Alimentation en courant continu de 12 volts entre les bornes ① et ②	Oui
Pas d'alimentation	Non

Si le résultat n'est pas satisfaisant, remplacer le relais.

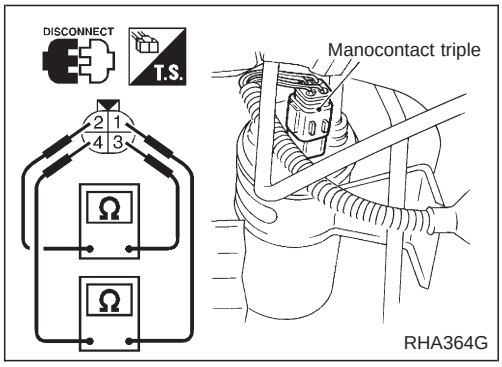

RHA364G

MANOCONTACT TRIPLE

	Bornes	Pression de la canalisation côté haute pression kPa (bar, kg/cm²)	Fonctionnement	Continuité
Côté basse pression	① - ④	Augmentant jusqu'à 152,0 - 201,0 (1,520 - 2,010, 1,55 - 2,05)	Marche	Existe.
		Diminuant jusqu'à 152,0 - 201,0 (1,520 - 2,010, 1,55 - 2,05)	Arrêt	N'existe pas.
Côté pression moyenne*	② - ③	Augmentant jusqu'à 1 422 - 1 618 (14,22 - 16,18, 14,5 - 16,5)	Marche	Existe.
		Diminuant jusqu'à 1 128 - 1 422 (11,28 - 14,22, 11,5 - 14,5)	Arrêt	N'existe pas.
Côté haute pression	① - ④	Diminuant jusqu'à 2 059 - 2 256 (20,6 - 22,6, 21 - 23)	Marche	Existe.
		Augmentant jusqu'à 2 648 - 2 844 (26,5 - 28,4, 27 - 29)	Arrêt	N'existe pas.

*Pour le fonctionnement du moteur de ventilateur de refroidissement

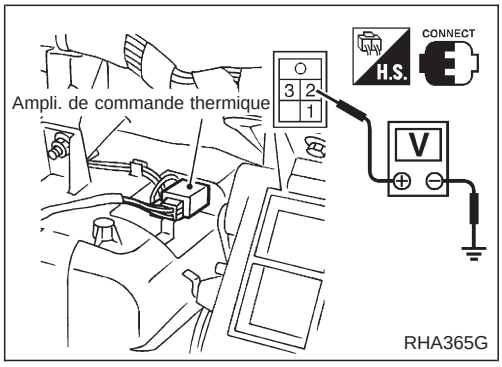

RHA365G

AMPLI. DE COMMANDE THERMIQUE

Température de l'air de sortie de l'évaporateur °C	Fonctionnement de l'ampli. thermique	Vérificateur
Diminuant jusqu'à 0,1 à 0,9	Mettre sur ARRET	Environ 12V
Augmentant jusqu'à 2,5 à 3,5	Mettre sur MARCHE	Environ 0V

Simpo PDF Merge and Split Unregistered Version - http://www.simpopdf.com

Inspection des composants électriques (Suite)

PROTECTEUR THERMIQUE (pour DKV-14C)

Température du compresseur °C	Fonctionnement
Augmentant jusqu'à 145 - 155 environ	Mettre sur ARRET
Diminuant jusqu'à 130 - 140 environ	Mettre sur MARCHE

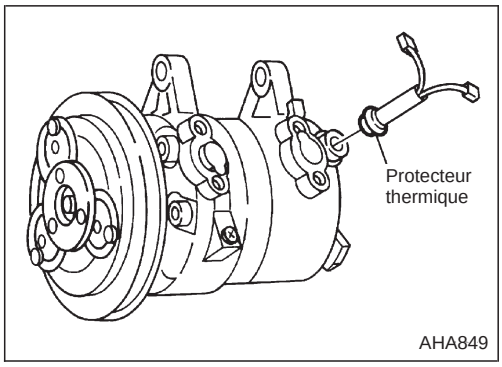

Réglage de la timonerie de commande

TIGE DE COMMANDE DU VOLET DE VENTILATEUR

- **Lors du réglage de la tige de commande du volet, débrancher tout d'abord le câble de commande du mode de la tringle latérale.**
  Rebrancher et réajuster le câble de commande du mode.

1. Déplacer la tringle latérale dans le sens de la flèche.
2. Tout en maintenant les leviers des volets inférieur et supérieur de ventilateur dans le sens de la flèche, connecter les tiges ① et ② aux leviers de volets de ventilateur correspondants, dans cet ordre.

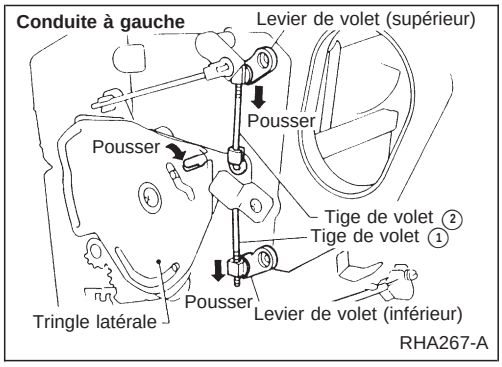

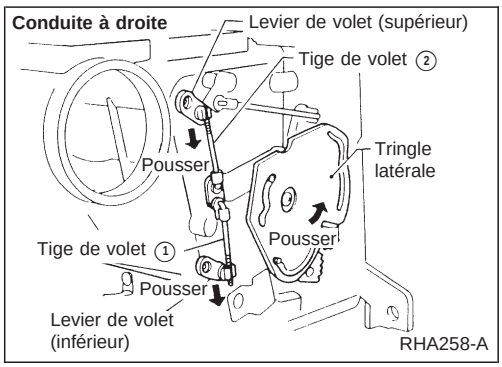

TIGE DE COMMANDE DU VOLET DE DEGIVREUR

- **Lors du réglage de la tige de commande du volet, débrancher tout d'abord le câble de commande du mode de la tringle latérale.**
  Rebrancher et réajuster le câble de commande du mode.

1. Déplacer la tringle latérale dans le sens de la flèche.
2. Brancher la tige sur la tringle latérale tout en poussant le levier du volet de dégivreur dans le sens de la flèche.

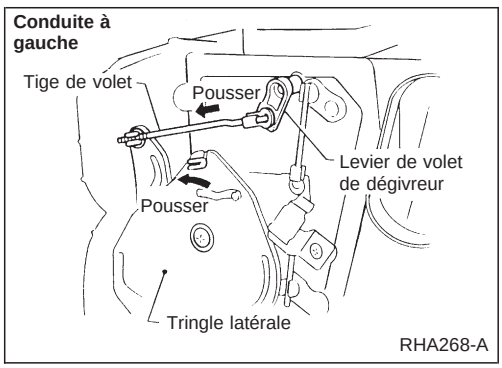

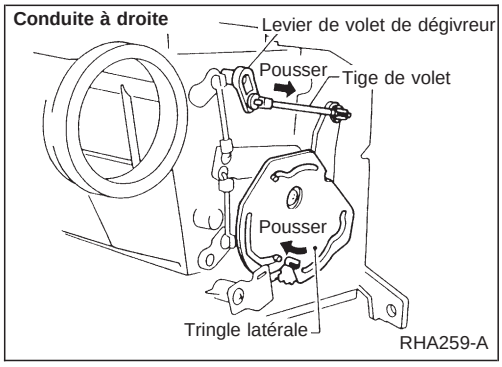

Simpo PDF Merge and Split Unregistered Version - http://www.simpopdf.com

Réglage de la timonerie de commande (Suite)

CABLE DE COMMANDE DE MODE

Conduite à gauche

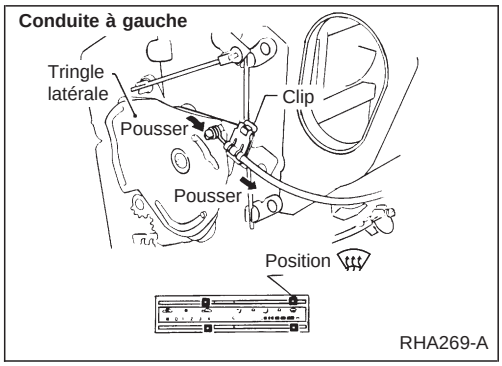

- Placer le curseur de réglage du mode sur la position . Régler la tringle latérale sur le mode dégivrage. (DEF)
  Tirer le câble externe dans le sens de la flèche, puis le serrer.
- **Après la repose du câble de commande de mode, vérifier qu'il fonctionne correctement.**

Conduite à droite

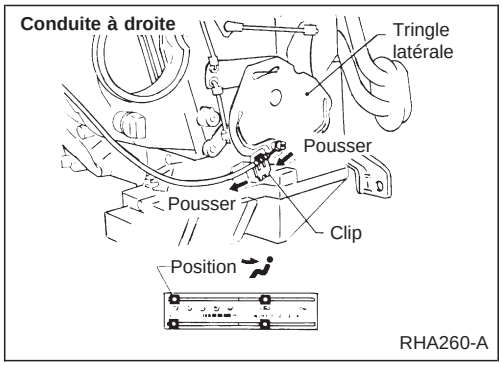

- Placer le curseur de réglage du mode sur la position . Régler la tringle latérale sur le mode aération au tableau de bord.
  Tirer le câble externe dans le sens de la flèche, puis le serrer.
- **Après la repose du câble de commande de mode, vérifier qu'il fonctionne correctement.**

TIGE DE COMMANDE DE ROBINET D'EAU

Conduite à gauche et pour le Moyen-Orient

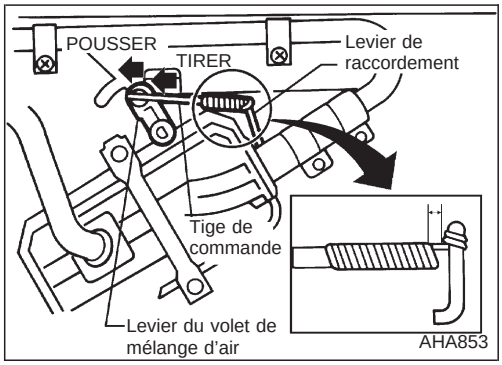

- **Lors du réglage de la tige de commande du robinet d'eau, débrancher tout d'abord le câble de commande de la température du levier du volet de mélange d'air, puis régler la tige de commande. Rebrancher le câble de commande de la température et le réajuster (se reporter à l'élément suivant).**

1. Pousser le levier de volet de mélange d'air dans le sens de la flèche.
2. Tirer la tige de commande du robinet d'eau dans le sens de la flèche de façon à créer un jeu d'environ 2 mm entre les extrémités de la tige et le levier de raccordement ; puis connecter la tige au levier de volet.

- **Après avoir connecté la tige de commande du robinet d'eau, vérifier qu'elle fonctionne correctement.**

Simpo PDF Merge and Split Unregistered Version - http://www.simpopdf.com

Réglage de la timonerie de commande (Suite)

CABLE DE COMMANDE DE LA TEMPERATURE

Conduite à gauche

- Placer le curseur de commande de la température sur la position de FROID maxi. Positionner le levier de mélange d'air en mode de froid maxi. Tirer le câble externe dans le sens de la flèche, puis le serrer.
- **Après la repose du câble de commande de température, vérifier qu'il fonctionne correctement.**

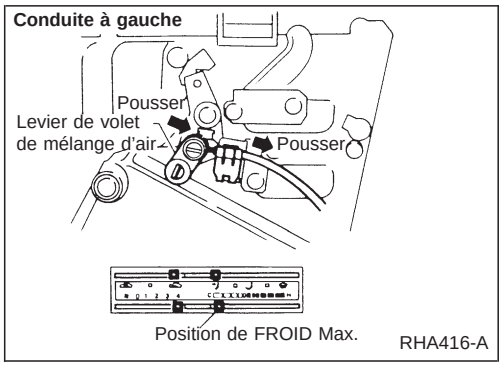

Conduite à droite

- Placer le curseur de commande de la température sur la position de CHAUD maxi.
  Régler le levier de volet de mélange d'air sur la position de chaud maxi. Tirer le câble externe dans le sens de la flèche, puis le serrer.
- **Après la repose du câble de commande de température, vérifier qu'il fonctionne correctement.**

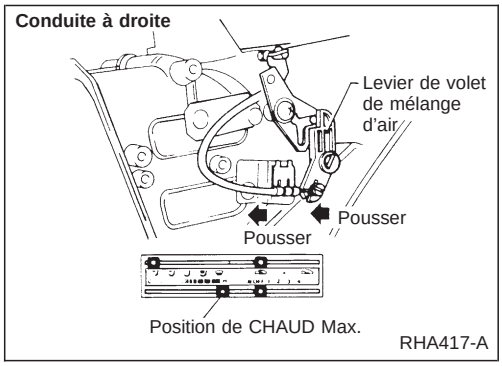

CABLE DE COMMANDE DE VOLET D'ADMISSION

- Placer le curseur de recyclage sur la position .
  Régler le levier de recyclage sur le mode REC.
  Tirer le câble externe dans le sens de la flèche, puis le serrer.
- **Après la repose du câble de commande de volet d'admission, vérifier qu'il fonctionne correctement.**

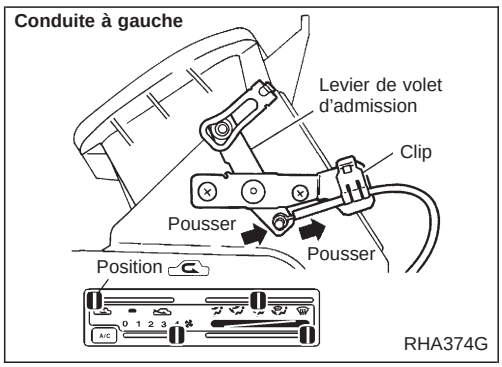

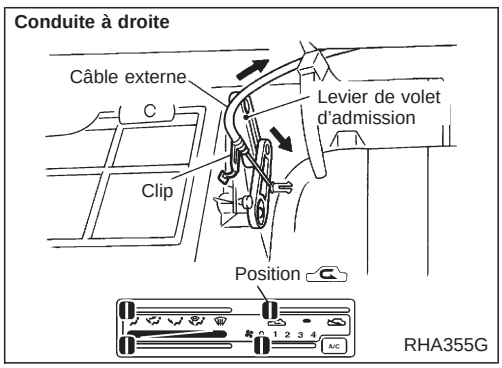

Simpo PDF Merge and Split Unregistered Version - http://www.simpopdf.com

Procédure d'entretien du HFC-134a (R-134a)

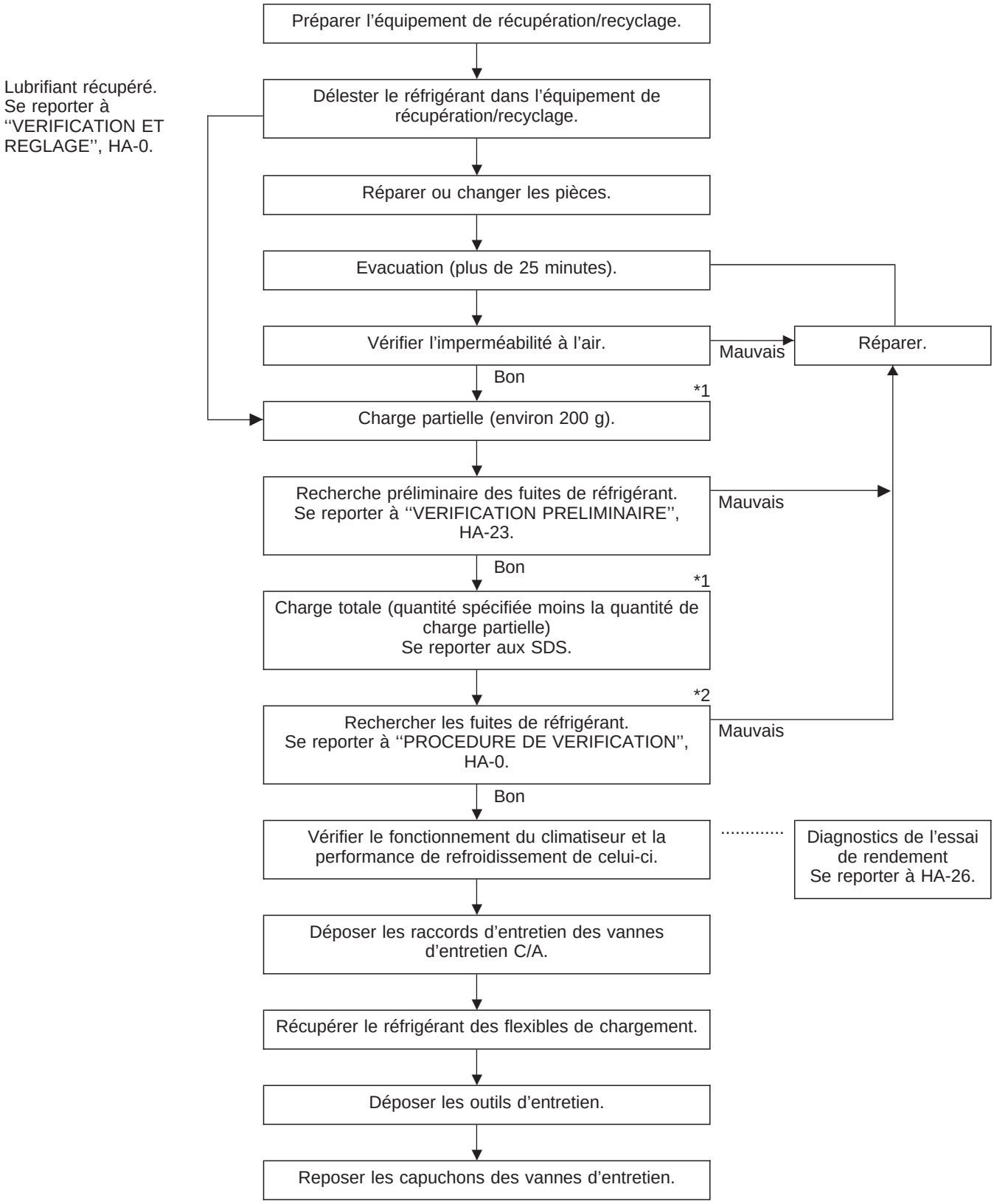

Note : *1 Avant de remplir de réfrigérant, s'assurer que le moteur ne tourne pas.
*2 Avant de contrôler la présence éventuelle de fuites de réfrigérant, démarrer le moteur pour mettre en route le climatiseur, puis arrêter le moteur.
Les capuchons des vannes d'entretien doivent être reposés pour prévenir les fuites.

Simpo PDF Merge and Split Unregistered Version - http://www.simpopdf.com

Procédure d’entretien du HFC-134a (R-134a) (Suite)

INSTALLATION DES OUTILS ET DE L’EQUIPEMENT D’ENTRETIEN

DELESTAGE DU REFRIGERANT

AVERTISSEMENT :

Eviter d’inhaler du réfrigérant C/A, ou des vapeurs ou brouillard de lubrifiant. L’exposition peut irriter les yeux, le nez et la gorge. Evacuer le réfrigérant HFC-134a (R-134a) du système de climatisation à l’aide d’un équipement d’entretien agréé répondant aux normes de l’équipement de recyclage HFC-134a (R-134a), ou de l’équipement de récupération HFC-134a (R-134a). En cas de délestage accidentel, ventiler la zone de travail avant de reprendre l’opération d’entretien. Il est possible d’obtenir de plus amples informations sur la santé et la sécurité auprès des fabricants de réfrigérants et de lubrifiants.

Exemple

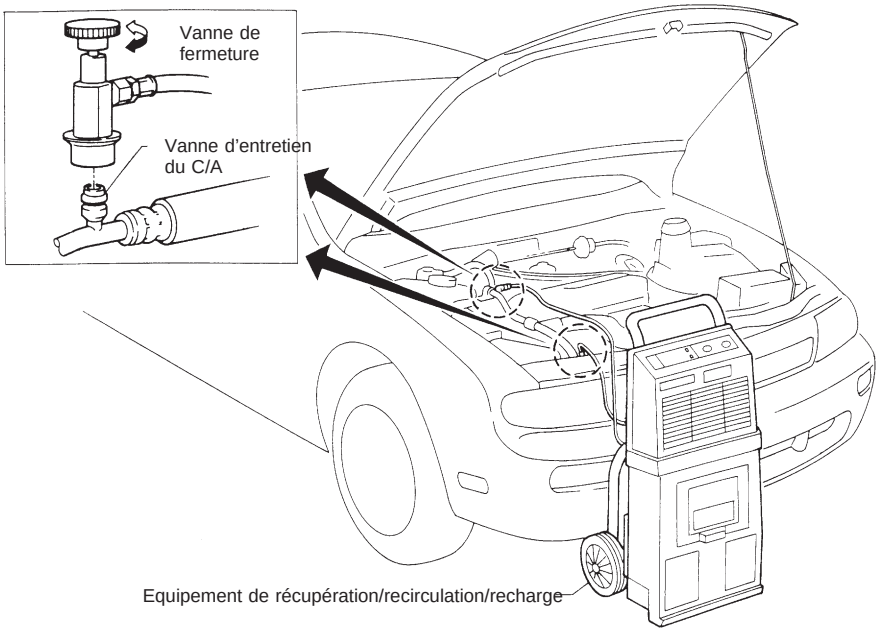

SHA539DC

SYSTEME D’EVACUATION ET CHARGE DU REFRIGERANT

Exemple

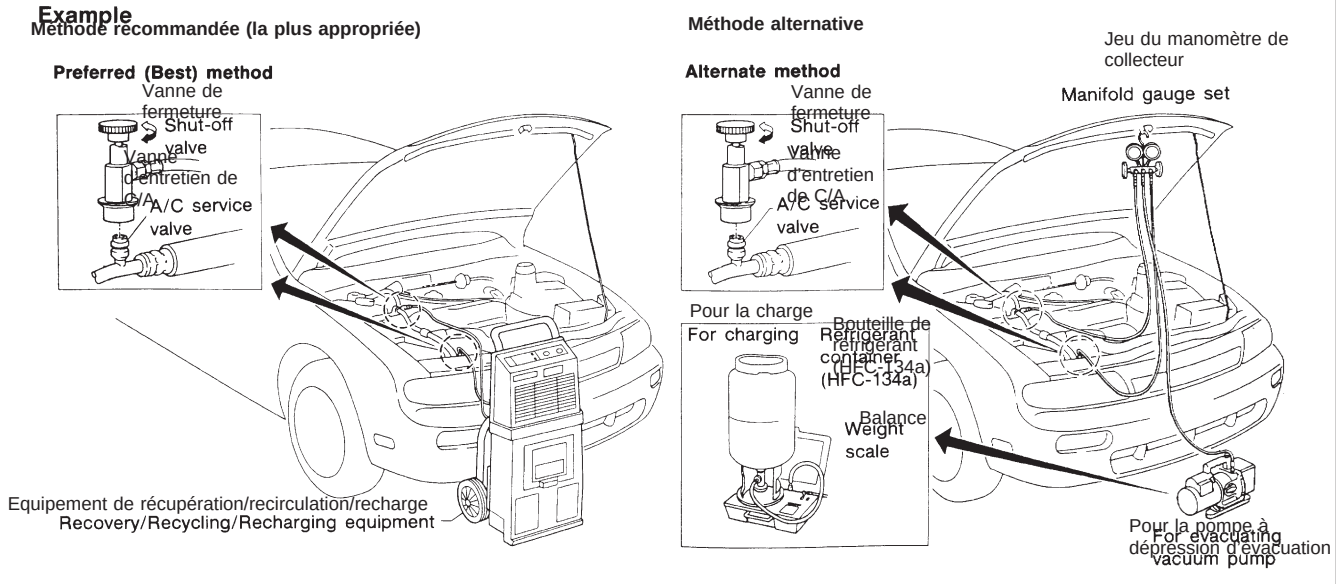

SHA540DC

Simpo PDF Merge and Split Unregistered Version - http://www.simpopdf.com

Contrôle de la quantité de lubrifiant dans le compresseur

Le lubrifiant utilisé pour la lubrification du compresseur circule dans le système en même temps que le réfrigérant. Ajouter du lubrifiant au compresseur chaque fois que l'on remplace un composant quelconque ou qu'il se produit une fuite de gaz importante. Il est important de maintenir la quantité spécifiée.
Si la quantité de lubrifiant n'est pas maintenue à un niveau correct, les pannes suivantes risquent de se produire :

- Niveau de lubrifiant insuffisant : peut entraîner le grippage du compresseur.
- Quantité excessive de lubrifiant : refroidissement insuffisant (interférence avec l'échange thermique).

LUBRIFIANT

Nom : Huile du système de climatisation Nissan de type R
Numéro de pièce : KLH00-PAGR0

VERIFICATION ET REGLAGE

Faire l'appoint de lubrifiant en fonction du tableau ci-dessous.

DEMARRAGE

Est-ce que l'opération de retour de lubrifiant peut être effectuée ?
- Le climatiseur fonctionne correctement.
- Aucune fuite de lubrifiant importante n'est visible.

Oui → Effectuer l'opération de retour de lubrifiant en procédant comme suit :

1. Démarrer le moteur, et régler aux conditions suivantes :
   - **Condition d'essai**
     Régime du moteur : ralenti à 1 200 tr/mn
     Interrupteur C/A ou AUTO : MARCHE
     Vitesse de soufflerie : en position maxi.
     Commande de la temp. : optionnelle (régler de manière à ce que la température de l'air d'admission soit comprise entre 25 à 30°C)
2. **La rubrique suivante concerne les compresseurs V-5 et V-6. Brancher le manomètre du collecteur, et vérifier que la pression du côté haute pression est de 588 kPa (5,9 bar, 6 kg/cm^2) ou supérieure.**
   Si la pression est inférieure au niveau de référence, fixer un couvercle à l'avant du condenseur afin de faire monter la pression.
3. Effectuer l'opération de retour de lubrifiant pendant environ 10 minutes.
4. Arrêter le moteur.

ATTENTION :
Si l'on constate une fuite de lubrifiant excessive, ne pas effectuer l'opération de retour de lubrifiant.

Non

Le compresseur doit-il être remplacé ?

Non

Oui

Ⓐ (Passer à la page suivante).

Une pièce doit-elle être changée ? (Evaporateur, condenseur, réservoir de liquide ou en cas de fuite importante de lubrifiant manifeste).

Oui → Après avoir remplacé une ou plusieurs pièces principales, rajouter la quantité de lubrifiant correcte dans le circuit.

Quantité de lubrifiant à ajouter

Pièce remplacée	Lubrifiant à ajouter au système Quantité de lubrifiant mℓ	Remarques
Evaporateur	75	–
Condenseur	75	–
Réservoir de liquide	5	En ajouter si le compresseur n'est pas remplacé. *1
En cas de fuite de réfrigérant	30	Fuite importante
	–	Fuite légère *2

*1 : Si l'on remplace le compresseur, l'appoint de lubrifiant est inclus dans le tableau de procédure.
*2 : Si la fuite de liquide réfrigérant est mineure, il n'est pas nécessaire d'ajouter de lubrifiant.

Non

Effectuer le test de performance du climatiseur.

Simpo PDF Merge and Split Unregistered Version - http://www.simpopdf.com

Contrôle de la quantité de lubrifiant dans le compresseur (Suite)

Ⓐ

1. Délester le réfrigérant dans l'équipement de récupération/recyclage. Mesurer le lubrifiant délesté dans l'équipement de récupération/recyclage.
2. Déposer le bouchon de vidange du compresseur ''ancien'' (déposé) (seulement pour les compresseurs V-5, V-6 ou DKS-16H). Vidanger le lubrifiant dans un récipient gradué et enregistrer la quantité de lubrifiant vidangée.
3. Déposer le bouchon de vidange et vidanger le lubrifiant du ''nouveau'' compresseur dans un autre récipient propre.
4. Mesurer une quantité de lubrifiant neuf égale à la quantité vidangée de ''l'ancien'' compresseur. Ajouter ce lubrifiant au ''nouveau'' compresseur à travers l'orifice d'aspiration.
5. Mesurer une quantité de lubrifiant neuf égale à la quantité collectée pendant le délestage. Ajouter ce lubrifiant au ''nouveau'' compresseur à travers l'orifice d'aspiration.
6. Serrer le bouchon de vidange.
   Compresseur V-5 ou V-6 : 18 - 19 N·m (1,8 - 1,9 kg-m)
   Compresseur DKS-16H : 14 - 16 N·m (1,4 - 1,6 kg-m)
7. **Si le réservoir doit également être remplacé, ajouter 5 mℓ de lubrifiant supplémentaire à ce moment-là.**
   Ne pas ajouter ces 5 mℓ supplémentaires de lubrifiant si l'on ne remplace que le compresseur.

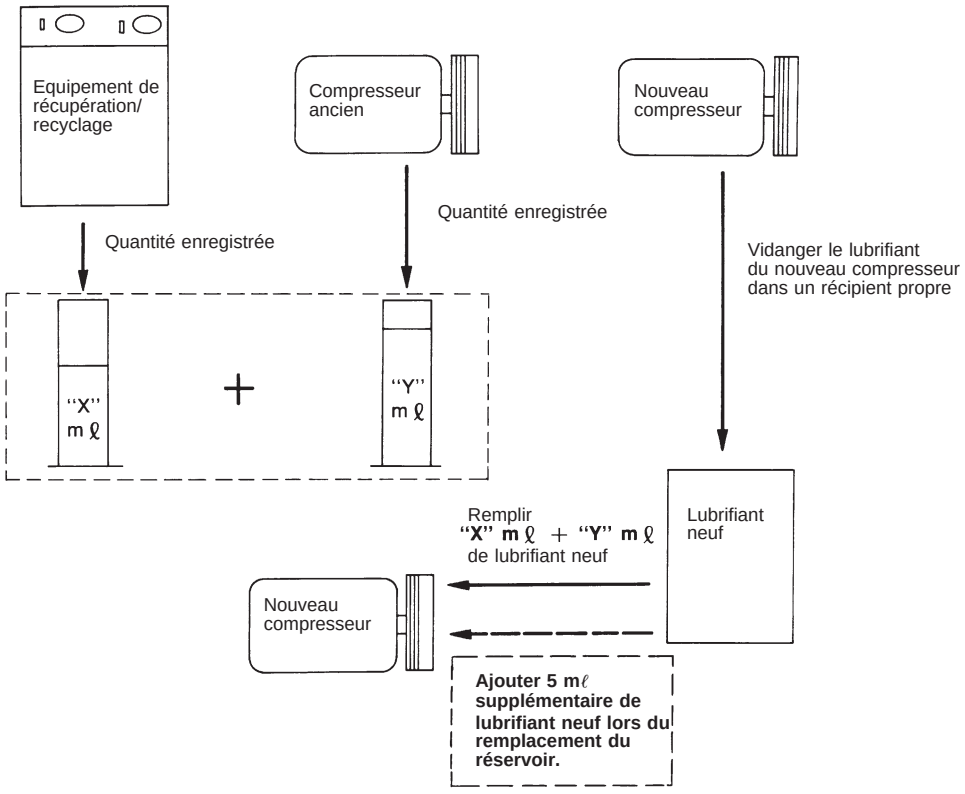

RHA065DE

Simpo PDF Merge and Split Unregistered Version - http://www.simpopdf.com

Canalisations de réfrigération

- Se reporter à la page HA-2 en ce qui concerne les ''Précautions pour les raccords de réfrigérant''.

MOTEUR DIESEL AVEC CONDUITE A DROITE

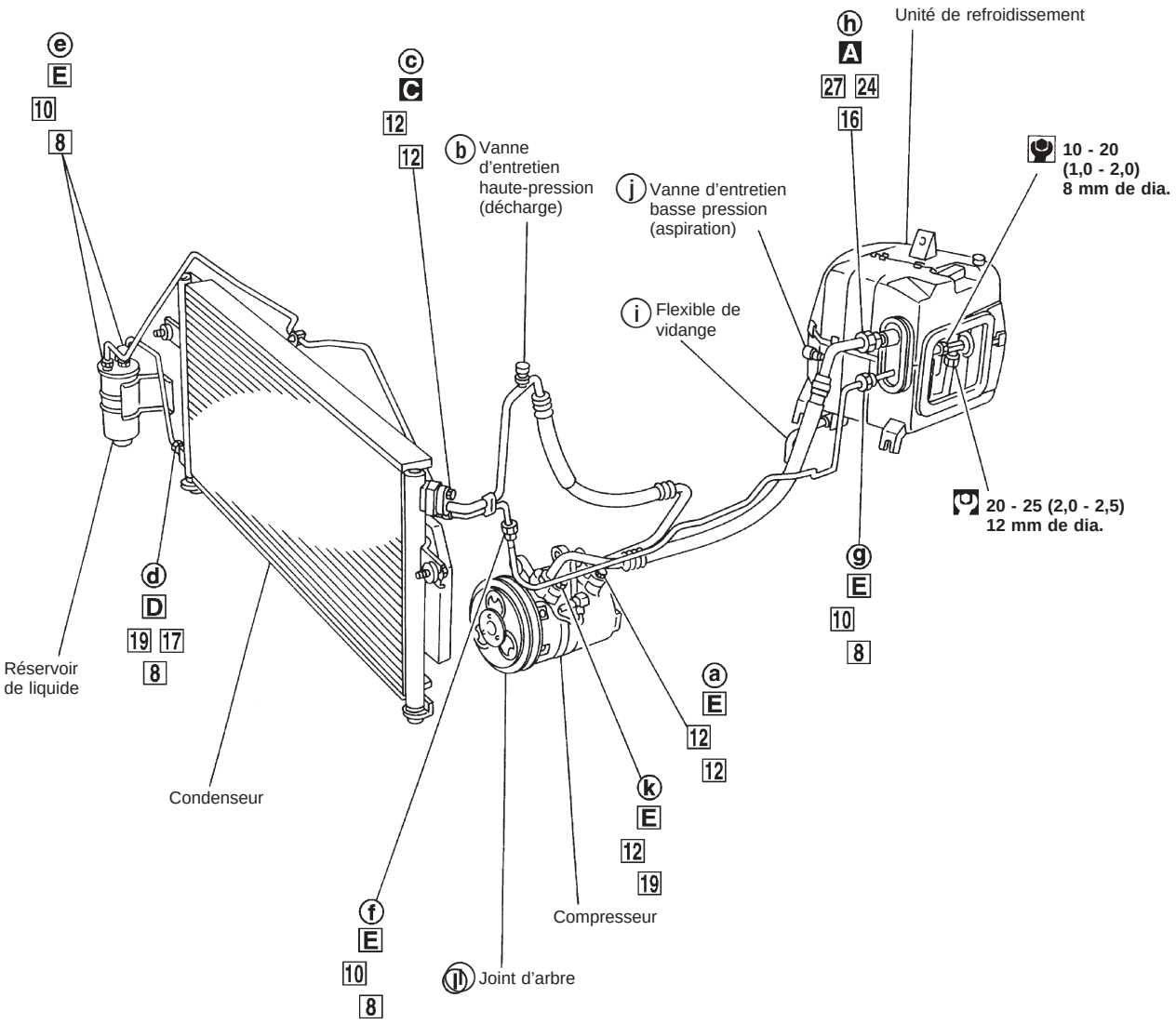

◯ : Ordre de vérification des fuites de réfrigérant
□ : (Couple de serrage)
□ □ : (Taille de clé)
□ : (Taille de joint torique)
: N·m (kg-m)
A : **20 - 29 (2,0 - 3,0)**
C : **14 - 18 (1,4 - 1,8)**
: N·m (kg-m)
D : **10 - 20 (1,0 - 2,0)**
E : **8 - 11 (0,8 - 1,1)**

RHA352G

Simpo PDF Merge and Split Unregistered Version - http://www.simpopdf.com

Canalisations de réfrigération (Suite)

- Se reporter à la page HA-2 en ce qui concerne les ''Précautions pour les raccords de réfrigérant''.

MOTEUR KA24 AVEC CONDUITE A DROITE

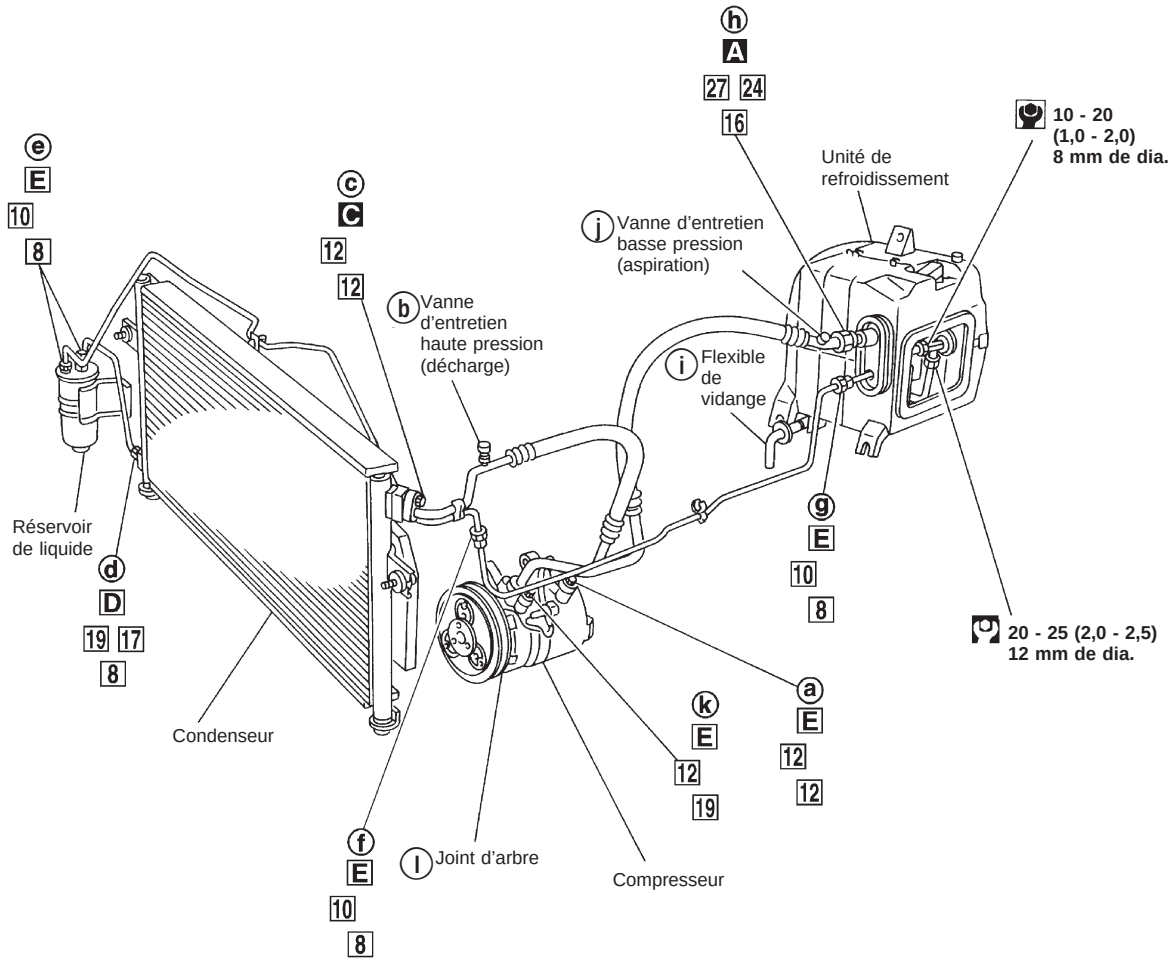

◯ : Ordre de vérification des fuites de réfrigérant
□ : (Couple de serrage)
□ □ : (Taille de clé)
□ : (Taille de joint torique)
: N·m (kg-m)
A : **20 - 29 (2,0 - 3,0)**
C : **14 - 18 (1,4 - 1,8)**
: N·m (kg-m)
D : **10 - 20 (1,0 - 2,0)**
E : **8 - 11 (0,8 - 1,1)**

RHA353G

Simpo PDF Merge and Split Unregistered Version - http://www.simpopdf.com

Canalisations de réfrigération (Suite)

- Se reporter à la page HA-2 en ce qui concerne les ''Précautions pour les raccords de réfrigérant''.

MOTEUR DIESEL AVEC CONDUITE A GAUCHE

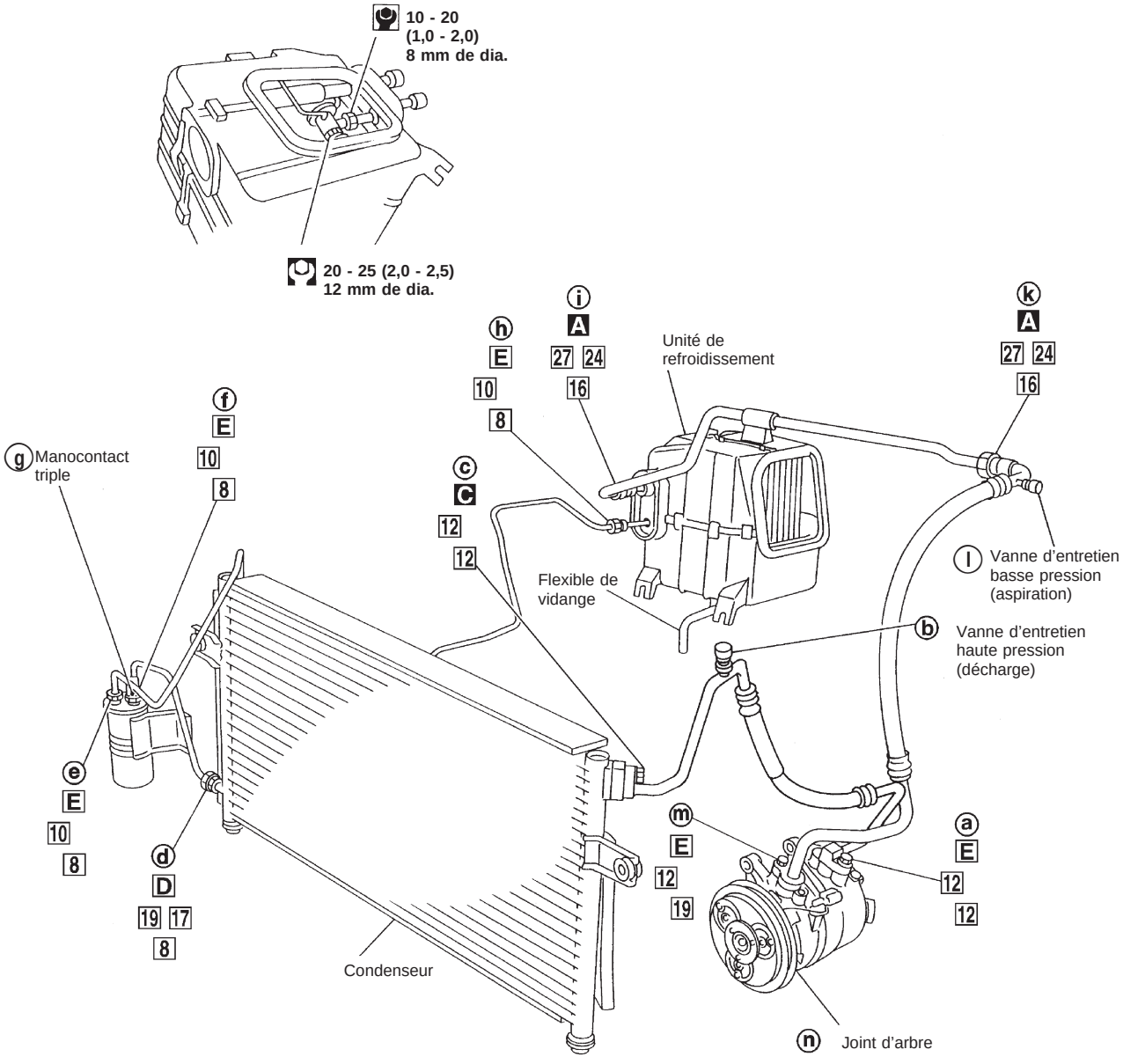

○ : Ordre de vérification des fuites de réfrigérant
□ : (Couple de serrage)
□ □ : (Taille de clé)
□ : (Taille de joint torique)
: N·m (kg-m)
A : **20 - 29 (2,0 - 3,0)**
C : **14 - 18 (1,4 - 1,8)**
: N·m (kg-m)
D : **10 - 20 (1,0 - 2,0)**
E : **8 - 11 (0,8 - 1,1)**

RHA372GA

Simpo PDF Merge and Split Unregistered Version - http://www.simpopdf.com

Canalisations de réfrigération (Suite)

- Se reporter à la page HA-2 en ce qui concerne les ''Précautions pour les raccords de réfrigérant''.

MOTEUR A ESSENCE AVEC CONDUITE A GAUCHE

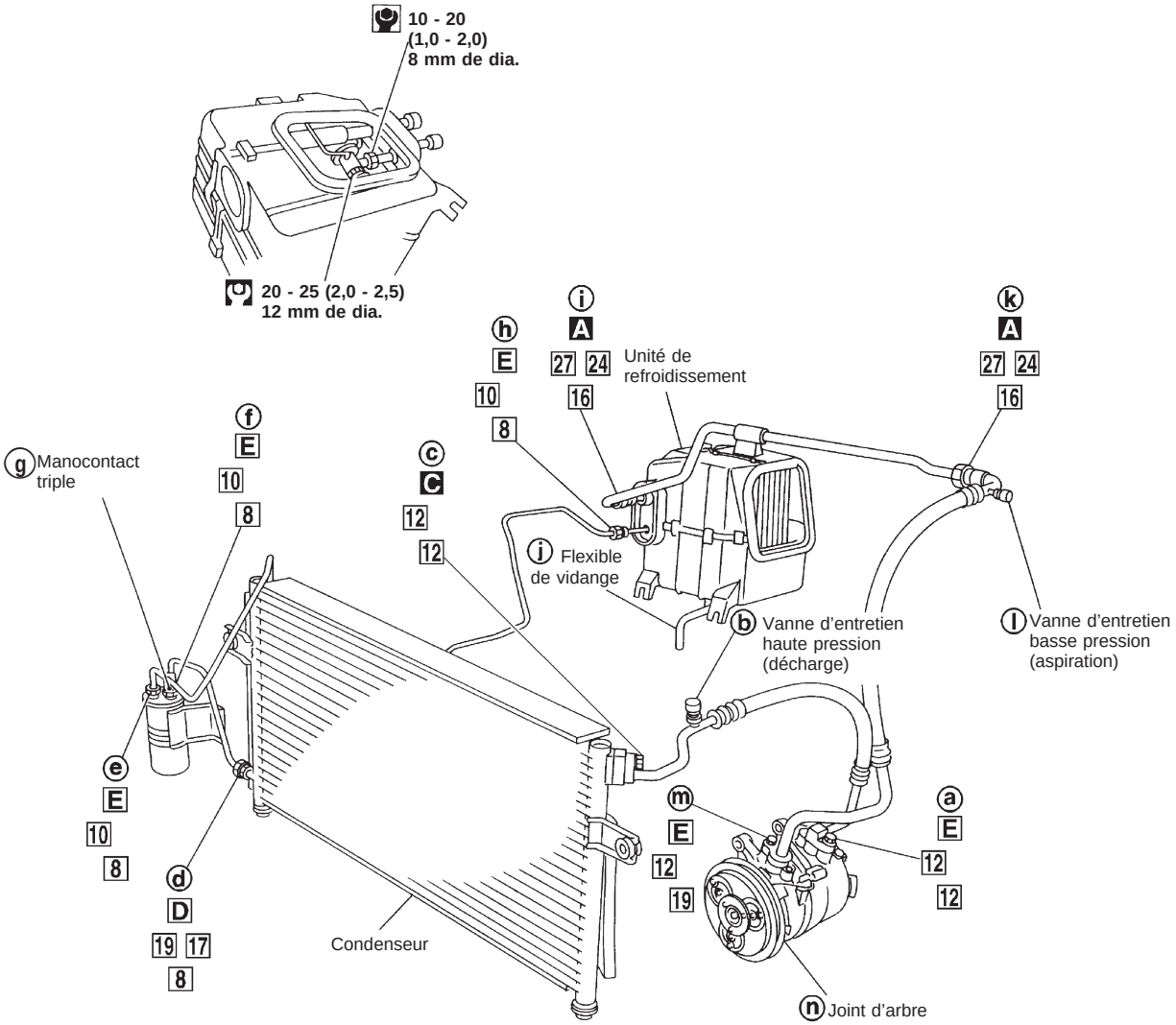

○ : Ordre de vérification des fuites de réfrigérant
□ : (Couple de serrage)
□ □ : (Taille de clé)
□ : (Taille de joint torique)
: N·m (kg-m)
A : **20 - 29 (2,0 - 3,0)**
C : **14 - 18 (1,4 - 1,8)**
: N·m (kg-m)
D : **10 - 20 (1,0 - 2,0)**
E : **8 - 11 (0,8 - 1,1)**

RHA356GA

Simpo PDF Merge and Split Unregistered Version - http://www.simpopdf.com

Vérification des fuites de réfrigérant

VERIFICATION PRELIMINAIRE

Effectuer une inspection visuelle de toutes les pièces de réfrigération, des raccords, des flexibles et des composants, pour voir s'ils ne présentent pas de fuites de lubrifiant de climatiseur, de dommage et de corrosion.

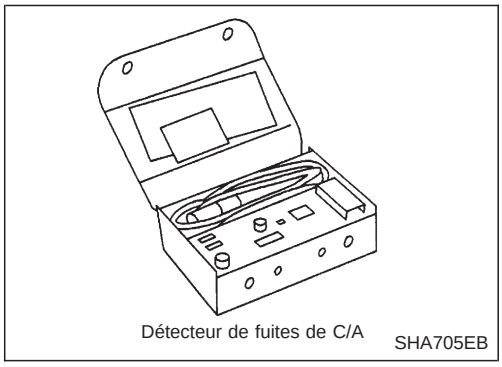
Détecteur de fuites de C/A
SHA705EB

PRECAUTIONS POUR LA MANIPULATION DU DETECTEUR DE FUITES

Pour la recherche des fuites de réfrigérant, utiliser un détecteur de fuites pour climatiseur ou un outil équivalent. S'assurer que l'instrument est calibré et qu'il est positionné selon les instructions de fonctionnement.
Le détecteur de fuites est un dispositif fragile. Pour l'utiliser correctement, lire les instructions de fonctionnement et effectuer tout entretien spécifié.
D'autres gaz dans la zone de travail ou substances sur les composants du climatiseur tels que antigel, lave-glace de pare-brise, dissolvants et produits de nettoyage peuvent fausser le déclenchement du détecteur de fuites. S'assurer que les surfaces à contrôler sont propres. Ne pas laisser la pointe du capteur du détecteur entrer en contact avec avec n'importe quelle substance. Ceci peut également entraîner une mauvaise interprétation et endommager le détecteur.

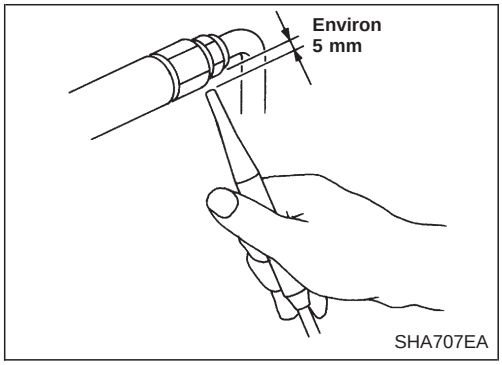

SHA707EA

1. Positionner la sonde à environ 5 mm du point à contrôler.

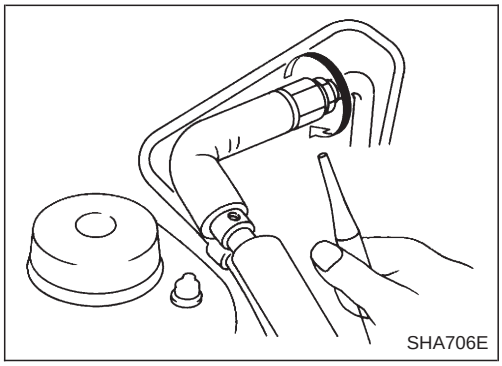
SHA706E

2. Lors du contrôle, déplacer la sonde tout autour de chaque raccord.

Simpo PDF Merge and Split Unregistered Version - http://www.simpopdf.com

Vérification des fuites de réfrigérant (Suite)

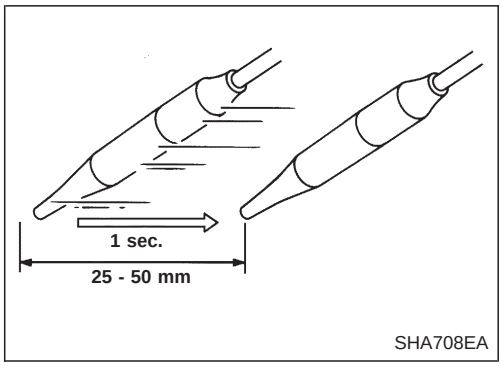

3. Déplacer la sonde le long du composant à une vitesse d'environ 25 à 50 mm/sec.

PROCEDURE DE VERIFICATION

Pour éviter une lecture imprécise ou fausse, s'assurer qu'il n'y a aucune vapeur de réfrigérant ou fumée de cigarette à proximité du véhicule. Effectuer la recherche de fuites dans une zone calme (à l'abri des mouvements d'air/vent) de sorte que le réfrigérant qui fuit ne se disperse pas.

1. Arrêter le moteur.
2. Brancher un jeu de manomètre de collecteur de C/A adéquat sur les orifices d'entretien.
3. Vérifier si la pression du réfrigérant de climatiseur est au moins de 345 kPa (3,452 bar, 3,52 kg/cm^2) à une température supérieure à 16°C. Si elle se trouve en dessous des normes, purger le circuit et le recharger avec la quantité spécifiée de réfrigérant.
   REMARQUE : A des températures inférieures à 16°C, les fuites peuvent ne pas être détectées car le système n'atteint pas 345 kPa (3 452 bar, 3,52 kg/cm^2).
4. Effectuer la recherche de fuites de haut en bas, du point ⓐ au point ⓝ. Se reporter à HA-54.

Effectuer avec précaution une recherche de fuites éventuelles dans les zones suivantes. Nettoyer le composant à contrôler et déplacer la sonde du détecteur de fuites tout autour du raccord/composant.

- **Compresseur**
  Vérifier les raccordements des flexibles de haute et basse pression, du limiteur de pression et du joint d'arbre.
- **Réservoir de liquide**
  Vérifier le manocontact, le raccordement du tube, les joints de soudure et les fixations des bougies de fusibles.
- **Soupapes d'entretien**
  Vérifier tout autour des soupapes d'entretien. S'assurer que les couvercles de soupapes d'entretien sont bien fixés sur les soupapes (pour éviter les fuites).
  REMARQUE : Après avoir déposé le jeu de manomètre de collecteur de C/A des vannes d'entretien, essuyer toute trace de résidus sur les soupapes afin d'éviter une lecture fausse due à une fuite dans le détecteur.
- **Unité de refroidissement (évaporateur)**
  Mettre le ventilateur de soufflerie en position rapide pendant au moins 15 secondes pour évacuer toute trace de réfrigérant de l'unité de refroidissement. Introduire la sonde du détecteur de fuites dans le flexible de vidange aussitôt après avoir coupé le contact (laisser la sonde à l'intérieur pendant au moins 10 secondes).

Simpo PDF Merge and Split Unregistered Version - http://www.simpopdf.com

Vérification des fuites de réfrigérant (Suite)

5. Si le détecteur détecte une fuite, vérifier au moins une fois en soufflant de l'air comprimé dans la zone de fuite suspectée avant de recommencer la vérification.
6. Ne pas arrêter lorsqu'une fuite est trouvée. Continuer de vérifier qu'il n'existe pas d'autres fuites dans tous les composants du système.
7. Démarrer le moteur.
8. Régler la commande de C/A du chauffage comme suit :
    a. Interrupteur de climatiseur sur MARCHE
    b. Mode facial
    c. Touche de recyclage sur MARCHE
    d. Température de froid maxi.
    e. Vitesse élevée du ventilateur
9. Faire tourner le moteur à un régime de 1 500 tr/mn pendant au moins 2 minutes.
10. Arrêter le moteur et effectuer une recherche de fuites éventuelles en répétant les étapes 4 à 6 décrites ci-dessus.

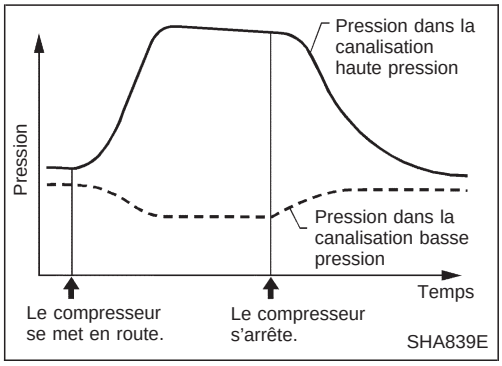

Les fuites de réfrigérant doivent être contrôlées immédiatement après l'arrêt du moteur. Commencer par détecter les fuites sur les canalisations haute pression. La pression dans la canalisation haute pression chutera progressivement après que la circulation du réfrigérant s'est arrêtée, et la pression dans la canalisation basse pression augmentera progressivement comme décrit sur la courbe. Il est plus facile de détecter les fuites lorsque la pression est élevée.

11. Délester le système C/A en utilisant un équipement de récupération de réfrigérant approuvé. Réparer les raccords ou composants qui comporteraient des fuites.
12. Purger et recharger le système C/A, puis procéder à un essai de fuite pour vérifier qu'il n'y a pas de fuites de réfrigérant.
13. Effectuer le test de performance du C/A pour s'assurer que le système fonctionne correctement.

Simpo PDF Merge and Split Unregistered Version - http://www.simpopdf.com

Fixation du compresseur

Moteurs KA
SEC. 274•275

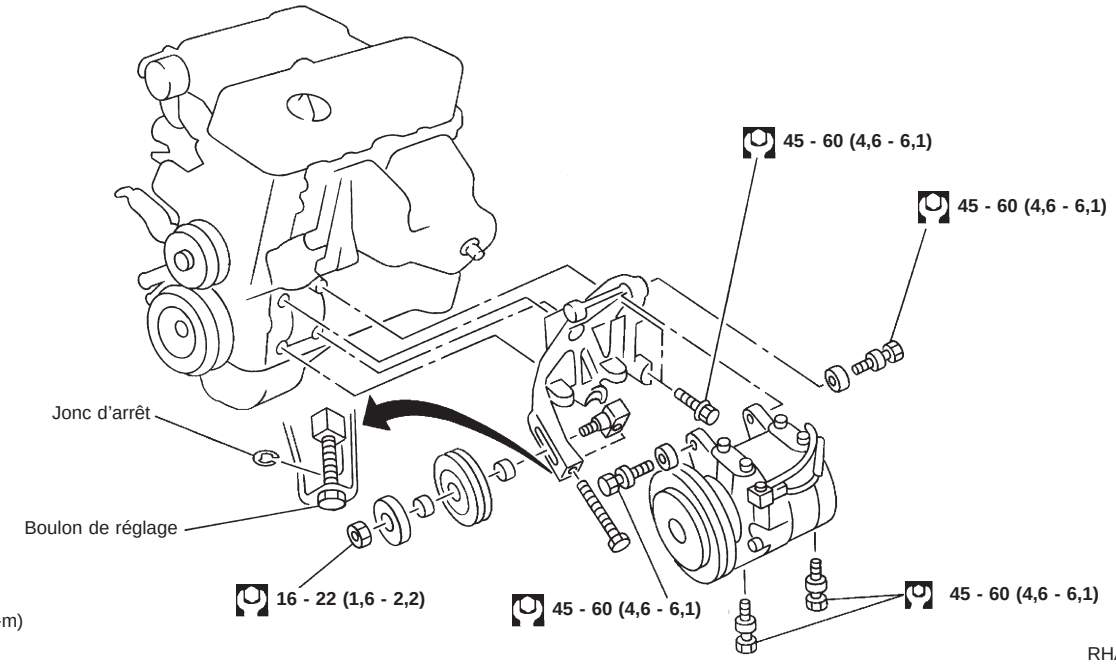

: N·m (kg-m)

RHA376G

Moteurs TD

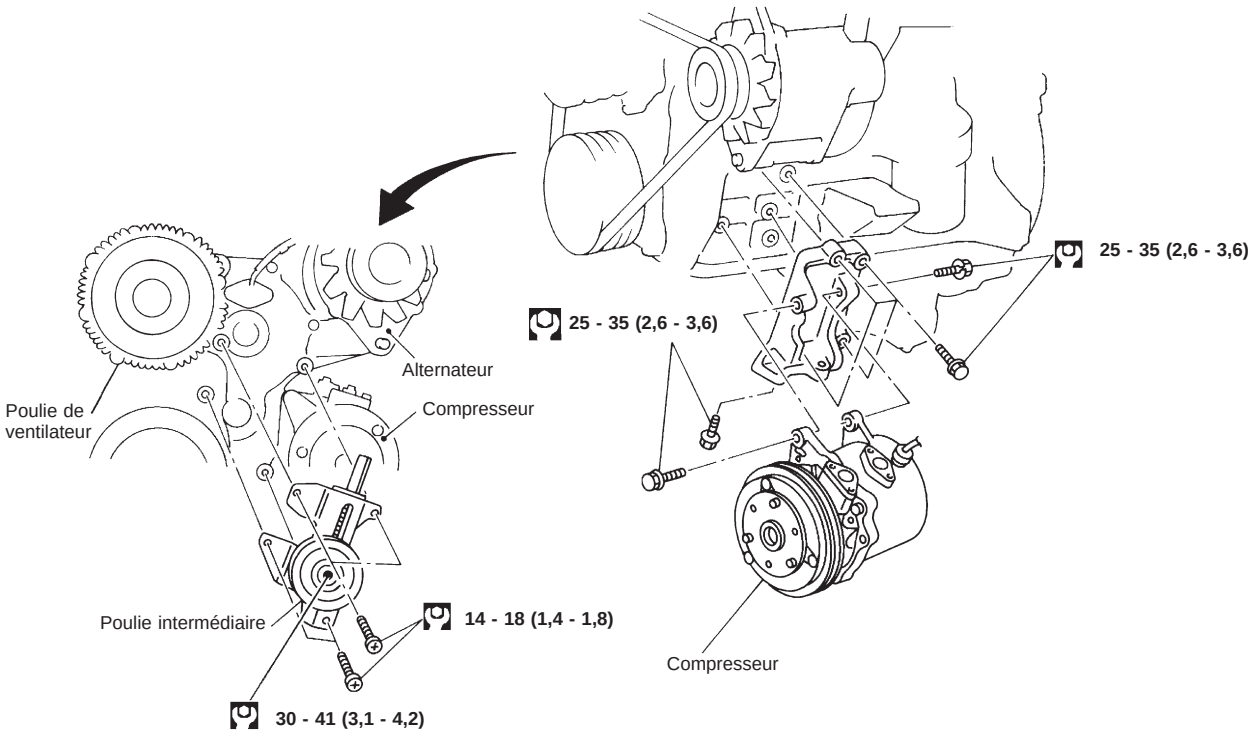

: N·m (kg-m)

RHA378G

Simpo PDF Merge and Split Unregistered Version - http://www.simpopdf.com

Compresseur – Modèle DKV-14C (marque ZEXEL)

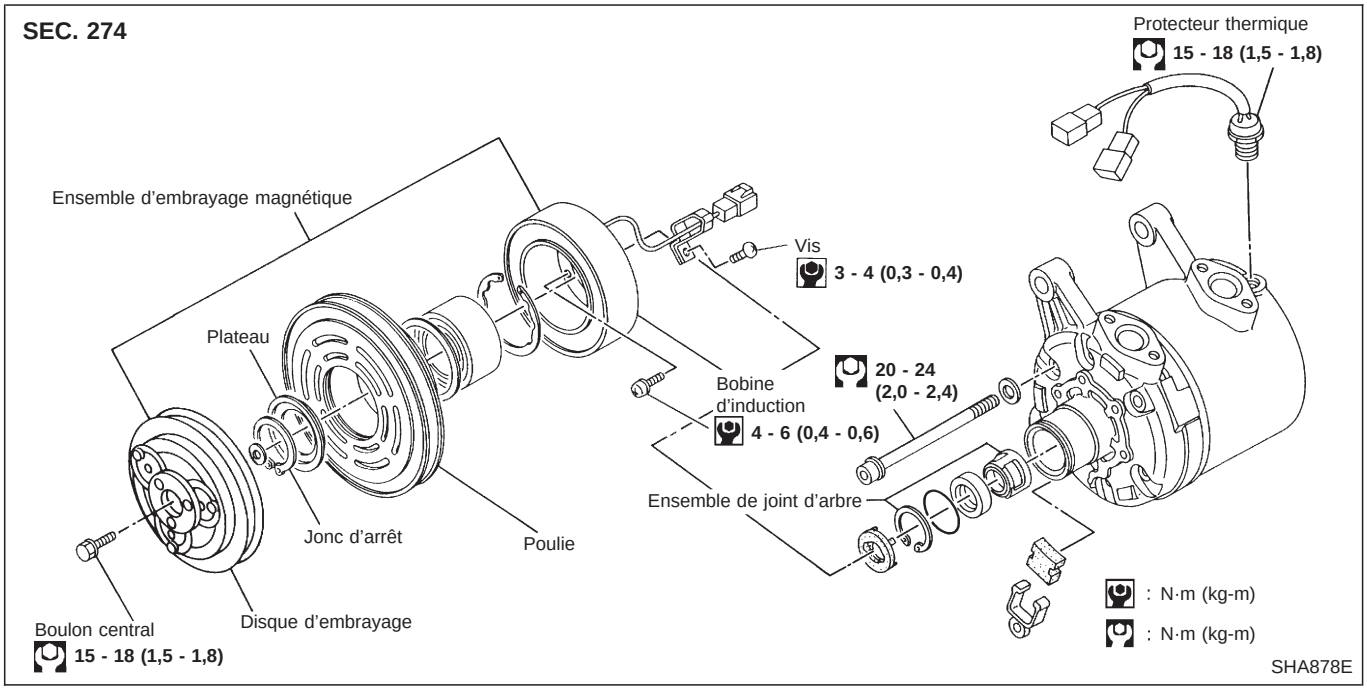

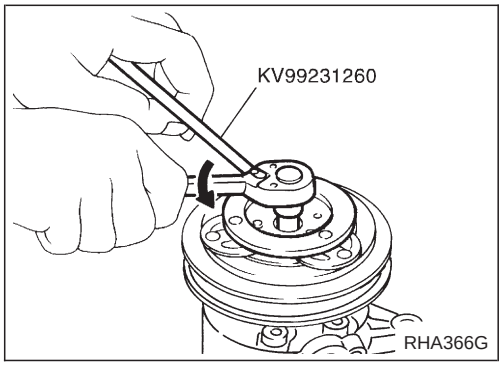

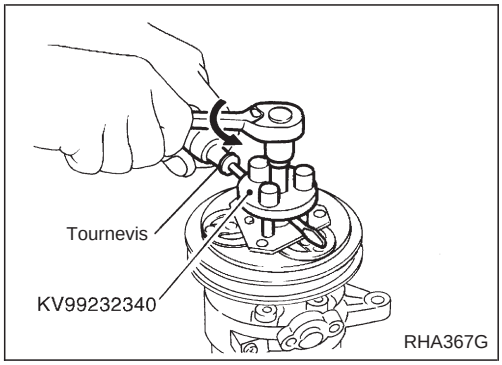

Embrayage de compresseur – Modèle DKV-14C (marque ZEXEL)

DEPOSE

- Lors de la dépose du boulon central, immobiliser le disque d'embrayage avec une clé pour disque d'embrayage.

- Déposer le disque d'embrayage à l'aide de l'outil spécial KV99232340.
  Introduire les trois ergots de l'outil d'immobilisation dans le disque d'embrayage. Tourner l'outil dans le sens des aiguilles d'une montre afin de l'accrocher au plateau. Ensuite, serrer le boulon central pour déposer le disque d'embrayage.
  Lors du serrage du boulon central, introduire un tournevis à tige ronde entre deux des ergots (comme décrit sur l'illustration ci-à gauche) afin d'empêcher le disque d'embrayage de tourner. Après avoir déposé le disque d'embrayage, retirer les cales du semi-arbre ou du disque d'embrayage.

Simpo PDF Merge and Split Unregistered Version - http://www.simpopdf.com

Embrayage de compresseur – Modèle DKV-14C (marque ZEXEL) (Suite)

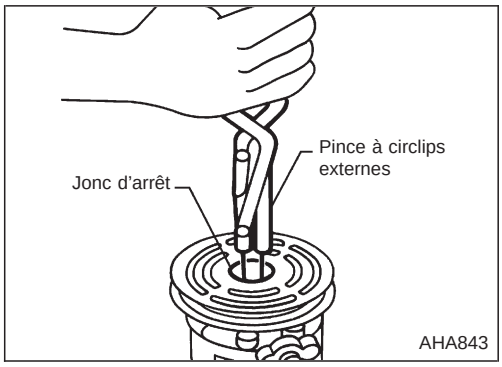

- Retirer le jonc d'arrêt à l'aide d'une pince à circlips externes.

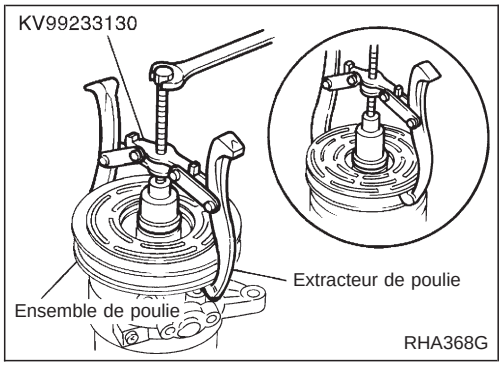

- Dépose de la poulie
  Utiliser n'importe quel extracteur de poulie en vente dans le commerce. Positionner son centre à l'extrémité du semi-arbre, puis déposer la poulie.
  Pour les poulies montées à la presse :
  Afin d'éviter de déformer la gorge de la poulie, placer les mâchoires de l'extracteur sous la gorge de la poulie (et non dans la gorge).
  Pour les poulies adaptées à la machine :
  Aligner la gorge de l'extracteur sur la gorge de la poulie, puis déposer la poulie.

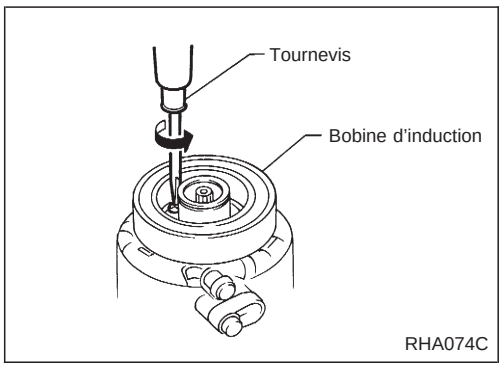

- Déposer la bride du faisceau de la bobine d'induction à l'aide d'un tournevis.
- Retirer les trois vis de fixation de la bobine d'induction et la déposer.

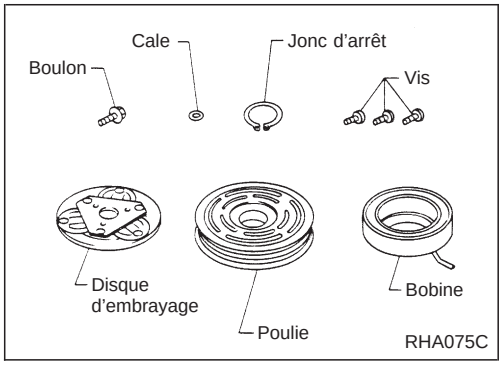

INSPECTION

Disque d'embrayage

Si la surface de friction montre des signes de dommages causés par un échauffement excessif, remplacer le disque d'embrayage et la poulie.

Poulie

Vérifier l'apparence de la poulie. Si la surface de contact de la poulie comporte des rayures excessives, la poulie et le disque d'embrayage doivent être remplacés. Les surfaces de contact de l'ensemble de poulie doivent être nettoyées avec un dissolvant approprié avant la repose.

Bobine

Vérifier que la bobine ne présente pas de raccords desserrés ou d'isolation fissurée.

Simpo PDF Merge and Split Unregistered Version - http://www.simpopdf.com

Embrayage de compresseur – Modèle DKV-14C (marque ZEXEL) (Suite)

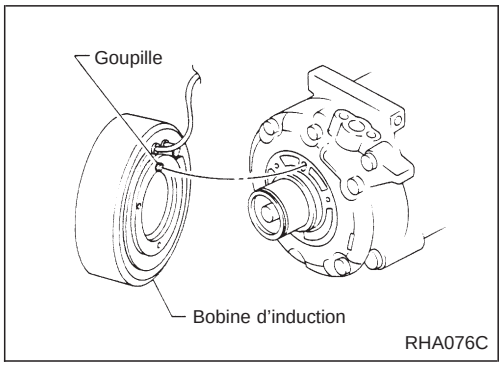

REPOSE

- Reposer la bobine d'induction.
- **Veiller à aligner la goupille de la bobine avec l'orifice de la culasse avant du compresseur.**
- Reposer la bride du faisceau de la bobine d'induction à l'aide d'un tournevis.

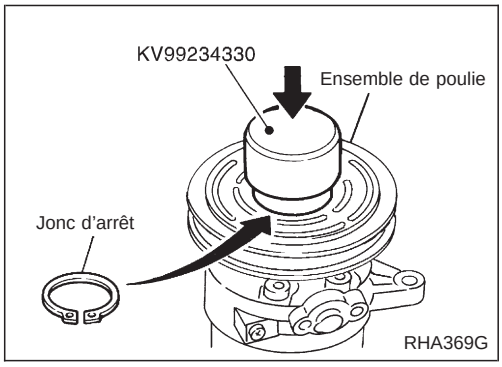

- Reposer l'ensemble de poulie à l'aide de l'outil de repose et d'une presse manuelle, puis reposer le jonc d'arrêt à l'aide d'une pince à circlips.

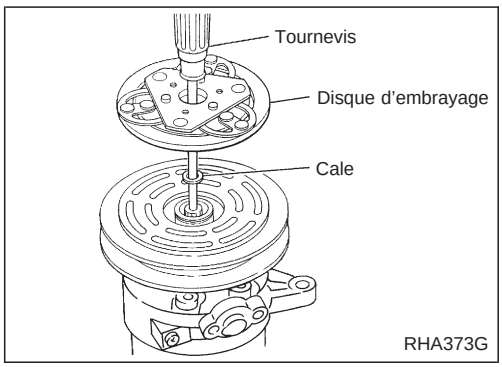

- Reposer le disque d'embrayage sur le semi-arbre avec la ou les cales d'origine. Appuyer sur le disque d'embrayage à la main.

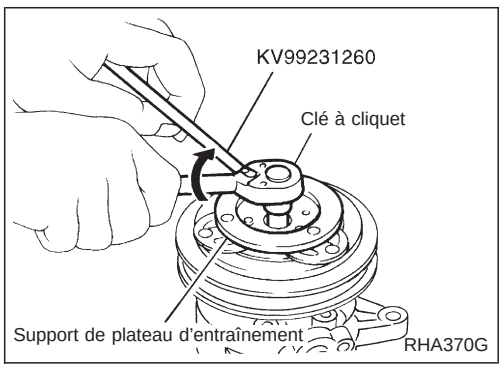

- Tout en empêchant le plateau d'entraînement de tourner à l'aide de l'outil d'immobilisation, serrer le boulon à un couple de 12 à 15 N·m (1,2 à 1,5 kg-m).
- **Après avoir serré le boulon, contrôler que la poulie tourne librement.**

Simpo PDF Merge and Split Unregistered Version - http://www.simpopdf.com

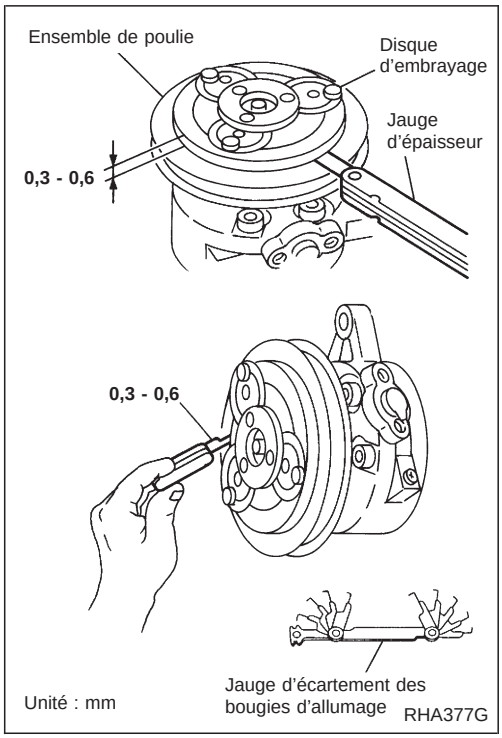

Embrayage de compresseur – Modèle DKV-14C (marque ZEXEL) (Suite)

- Vérifier le jeu tout autour de la périphérie du disque d'embrayage.
  Jeu entre le disque et la poulie :
  0,3 - 0,6 mm
  Si le jeu spécifié n'est pas obtenu, remplacer l'entretoise de réglage et régler à nouveau.

RODAGE

Toujours effectuer un rodage lorsque l'on remplace l'embrayage de compresseur. Pour ce faire, enfoncer et relâcher la pédale d'embrayage une trentaine de fois environ. Le rodage augmente le couple transmis.

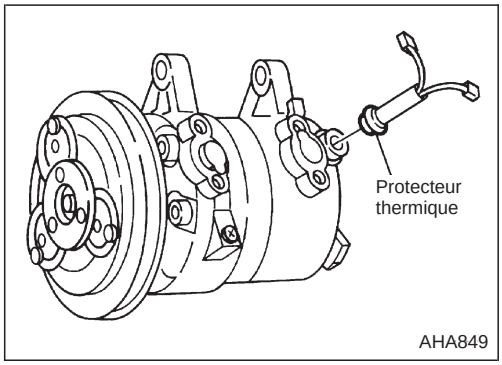

Protecteur thermique – Modèle DKV-14C (marque ZEXEL)

INSPECTION

- Lors de l'entretien, empêcher la pénétration de substances étrangères dans le compresseur.
- Vérifier la continuité entre les deux bornes.

Simpo PDF Merge and Split Unregistered Version - http://www.simpopdf.com

Compresseur – Modèle DKS-17CH (marque ZEXEL)

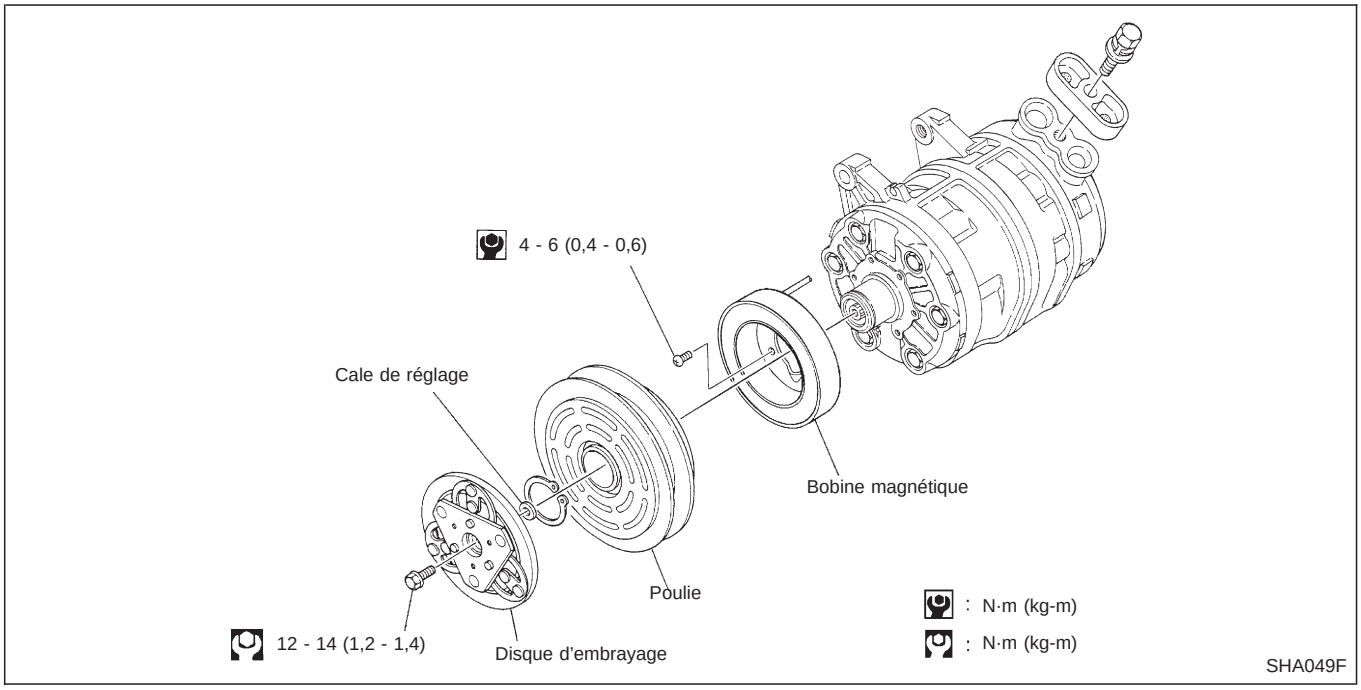

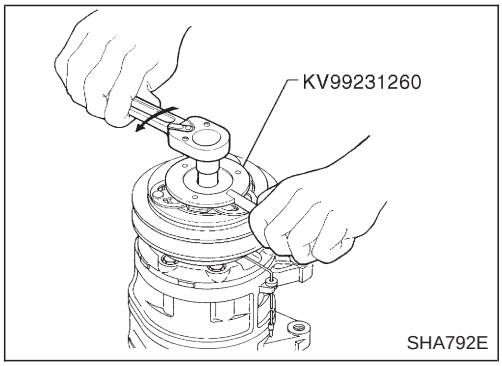

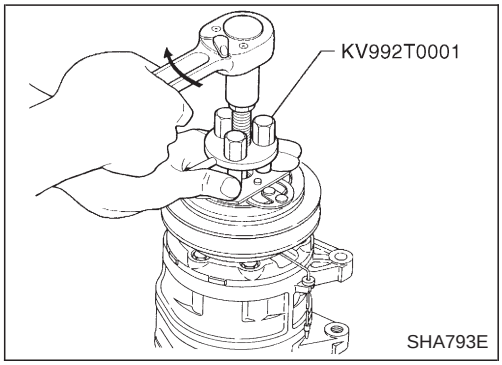

Embrayage de compresseur – Modèle DKS-17CH (marque ZEXEL)

DEPOSE

- Lors de la dépose du boulon central, immobiliser le disque d'embrayage avec une clé pour disque d'embrayage.

- Déposer le plateau d'entraînement à l'aide de l'outil spécial. Introduire les trois axes de l'outil d'immobilisation dans le plateau d'entraînement. Tourner l'outil dans le sens des aiguilles d'une montre afin de l'accrocher au plateau. Ensuite, serrer le boulon central pour déposer le plateau d'entraînement.
  Après avoir déposé le plateau d'entraînement, déposer les cales de l'arbre de transmission ou du plateau d'entraînement.

Simpo PDF Merge and Split Unregistered Version - http://www.simpopdf.com

Embrayage de compresseur – Modèle DKS-17CH (marque ZEXEL) (Suite)

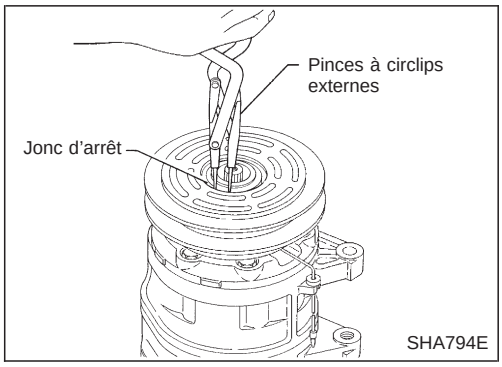

- Retirer le jonc d'arrêt à l'aide d'une pince à circlips externes.

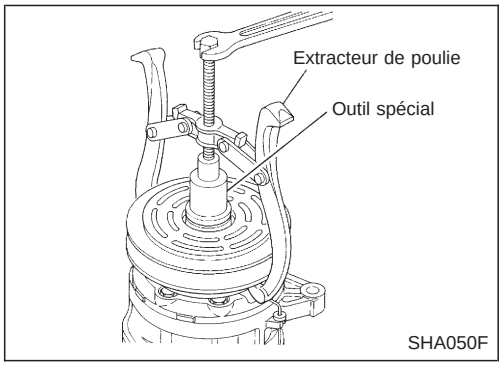

- Dépose de la poulie
  Positionner son centre à l'extrémité de l'outil spécial, puis déposer la poulie.Utiliser n'importe quel extracteur de poulie ou outil spécial en vente dans le commerce. Positionner son centre à l'extrémité de l'outil spécial, puis déposer la poulie.
  Pour les poulies montées à la presse
  Afin d'éviter de déformer la rainure de la poulie, placer l'extracteur de poulie dans (et non sur) la rainure de la poulie.
  Pour les poulies attachées à la machine
  Aligner la rainure de l'extracteur sur la rainure de la poulie, puis déposer la poulie.

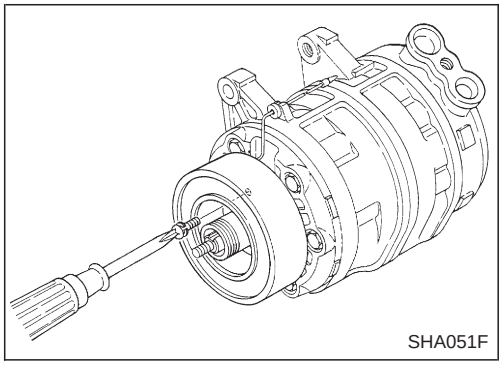

- Retirer les trois vis de fixation de la bobine d'induction et la déposer.

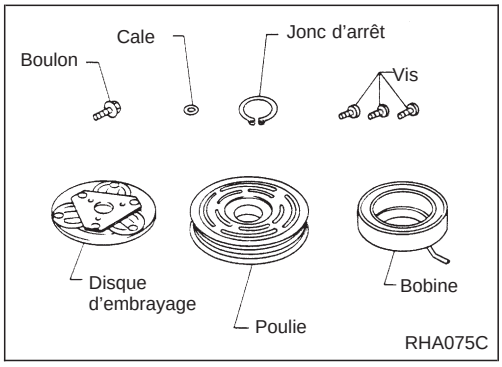

INSPECTION

Disque d'embrayage : Si la surface de friction montre des signes de dommages causés par un échauffement excessif, remplacer le disque d'embrayage et la poulie.
Poulie : vérifier l'apparence de l'ensemble de la poulie. Vérifier si la surface de contact de la poulie comporte des signes de rayures excessives causées par le patinage. Si c'est le cas, remplacer la poulie et le disque d'embrayage. Les surfaces de contact de l'ensemble de poulie doivent être nettoyées avec un dissolvant approprié avant la repose.

Simpo PDF Merge and Split Unregistered Version - http://www.simpopdf.com

Embrayage de compresseur – Modèle DKS-17CH (marque ZEXEL) (Suite)

Bobine : vérifier que la bobine ne présente pas de raccords desserrés ou d'isolation fissurée.

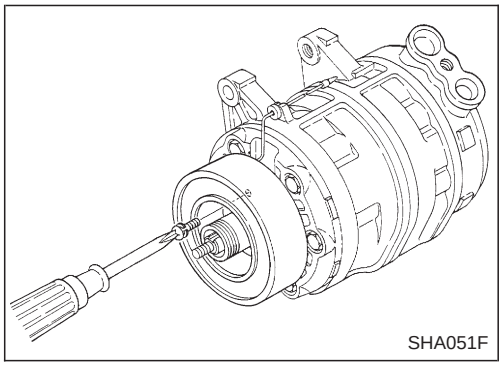
SHA051F

REPOSE

- Reposer la bobine d'induction.

Veiller à aligner la goupille de la bobine avec le trou avant du compresseur.

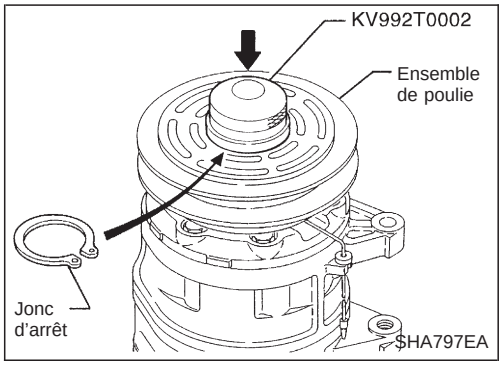

- Reposer l'ensemble de poulie à l'aide de l'outil de repose et d'une presse manuelle, puis reposer le jonc d'arrêt à l'aide d'une pince à circlips.

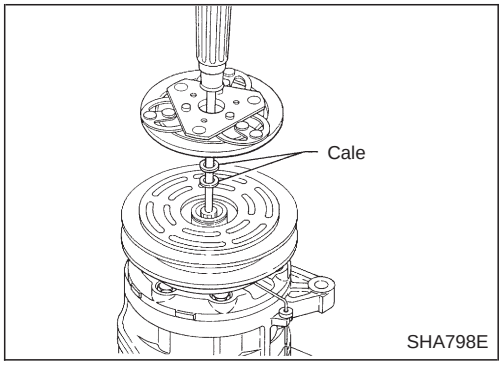

- Reposer le plateau d'entraînement sur le semi-arbre, avec la(les) cale(s) d'origine. Enfoncer le plateau d'entraînement à la main.

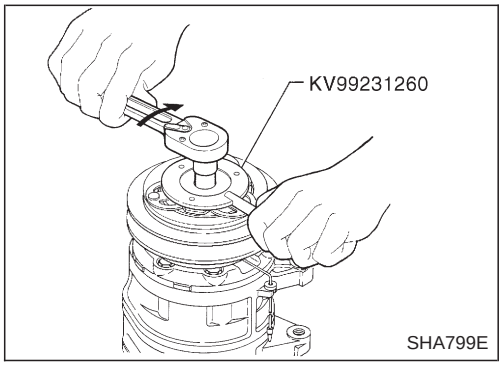

- En utilisant le support pour empêcher le plateau d'entraînement de tourner, serrer le boulon à un couple de 12 à 14 N.m (1,2 à 1,4 kg-m).

Après avoir serré le boulon, contrôler que la poulie tourne librement.

Simpo PDF Merge and Split Unregistered Version - http://www.simpopdf.com

Embrayage de compresseur – Modèle DKS-17CH (marque ZEXEL) (Suite)

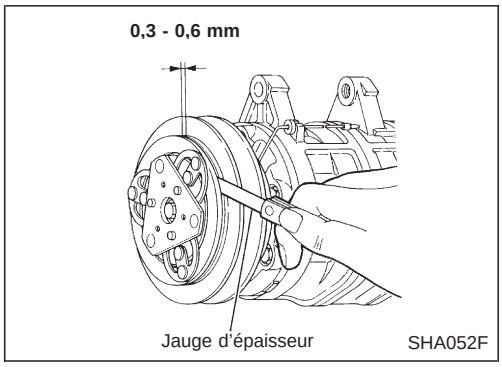

- Vérifier le jeu tout autour de la périphérie du disque d'embrayage.
  Jeu entre disque et poulie :
  0,3 - 0,6 mm
  Si le jeu spécifié n'est pas obtenu, remplacer la cale de réglage et régler à nouveau.

RODAGE

Toujours effectuer un rodage lorsque l'on remplace l'embrayage de compresseur. Pour ce faire, enfoncer et relâcher la pédale d'embrayage une trentaine de fois environ. Le rodage augmente le couple transmis.

Simpo PDF Merge and Split Unregistered Version - http://www.simpopdf.com

Caractéristiques générales

COMPRESSEUR

Modèle	Marque ZEXEL DKV-14C
Type	Ailette rotative
Cylindrée cm^3/tr/mn.	140
Alésage du cylindre x course mm	–
Sens de rotation	Dans le sens des aiguilles d'une montre (vue de l'extrémité d'entraînement)
Courroie d'entraînement	Type A

LUBRIFIANT

Modèle	Marque ZEXEL DKV-14C
Type	KLH00-PAGR0
Contenance mℓ	
Totale dans le circuit	200
Quantité de la charge du compresseur (pièces d'entretien)	200

Inspection et réglage

REFRIGERANT

Type	HFC-134a (R-134a)
Contenance kg	0,60 - 0,70

REGIME DE RALENTI DU MOTEUR (lorsque le climatiseur est enclenché).

- **Se reporter à la section EC.**

TENSION DE LA COURROIE

- **Se reporter à la section MA (''Vérification des courroies d'entraînement'', ''ENTRETIEN DU MOTEUR'').**

COMPRESSEUR

Modèle	DKS-17CH	DKV-14C
Jeu entre disque d'embrayage et poulie mm	0,3 - 0,6	0,3 - 0,6

Simpo PDF Merge and Split Unregistered Version - http://www.simpopdf.com

TABLE ALPHABETIQUE

SECTION IDX

Simpo PDF Merge and Split Unregistered Version - http://www.simpopdf.com

A

Alignement de la carrosserie BT-42
Alignement des roues (avant) FA-8
Allume-cigare EL-134
Alternateur EL-42
Amortisseur (arrière) RA-12
Amortisseur (avant) FA-30
Ampli. de commande thermique HA-46
Anneau de synchro (T/M) (FS5R30A) MT-36
Anneau de synchro (T/M) (FS5W71C) MT-15
Antenne EL-148
Application du joint liquide EM-1
Application du serrage angulaire EM-1
Arbre de transmission PD-6
Arbre de transmission, entretien sur le véhicule PD-8
Arbre secondaire (Transfert) TF-9
Arbre secondaire (T/M) (FS5R30A) MT-36
Arbre secondaire (T/M) (FS5W71C) MT-15
Arbre secondaire de marche arrière T/M (FS5R30A) MT-36
Arbre secondaire de marche arrière T/M (FS5W71C) MT-15
Assistance de frein BR-15
Audio EL-140
Avertisseur sonore EL-133
Axe de fourchette (T/M) (FS5R30A) MT-38
Axe de fourchette (T/M) (FS5W71C) MT-17
Axe de piston - Voir Inspection de l'axe de piston EM-39

B

Barre d'accouplement ST-38
Barre de force (avant) FA-35
Barre de torsion FA-30
Barre stabilisatrice (avant) FA-33
Batterie EL-19
Bielle (moteur KA24) EM-40
Bielle (moteur TD25) EM-78
Bloc-cylindres (moteur KA24) EM-38
Bloc-cylindres (moteur TD25) EM-75
Bobine d'allumage EC-109
Boîte de transfert TF-9
Boîtier à fusibles .....Page dépliante
Boîtier de capteurs de diagnostic RS-10
Boîtier de contrôle (disposition des bornes) .....Page dépliante
Boîtier de contrôle de l'ECCS (ECM) EC-6
Boîtier de direction assistée (PB48S) ST-21
Boîtier de direction assistée (PB59K) ST-28
Boîtier de direction manuelle ST-13
Bougie de préchauffage EC-214
Bourrelet - Voir Extérieur BT-24
Bras supérieur (suspension avant) FA-34
Butée de débrayage - Voir Mécanisme de débrayage CL-10

C

Câble spiralé RS-11
Calage de l'allumage EC-26
Canalisation hydraulique de frein BR-5
Canalisations de réfrigération HA-54
Capot BT-5
Capteur d'angle d'arbre à cames (CMPS) EC-86
Capteur d'angle de vilebrequin (POS) EC-86
Capteur d'angle de vilebrequin (REF) EC-86
Capteur d'angle de vilebrequin intégré dans le distributeur - Voir Capteur d'angle d'arbre à cames EC-86
Capteur de position de papillon (TPS) EC-119
Capteur de roue (ABS) BR-35
Capteur de température d'air d'admission EC-109
Capteur de température du moteur (ECTS) (moteur KA24) EC-99
Capteur de température du moteur (ECTS) (moteur TD25) EC-215
Capteur de vitesse du véhicule (VSS) EC-124
Caractéristiques des ampoules EL-254
Carrosserie arrière BT-39
Carrosserie de la cabine BT-39
Carter avant (Transfert) TF-8
Carter arrière (Transfert) TF-8
Carter central (Transfert) TF-8
Carter d'huile (moteur KA24) EM-10
Carter d'huile (moteur TD25) EM-52
Carter de distribution (moteurs QD & TD) EM-183
Carter de transmission (T/M) (FS5R30A) MT-35
Carter de transmission (T/M) (FS5W71C) MT-14
Cartouche - Voir Cartouche EVAP EC-19
Cartouche EVAP EC-19
Ceinture de sécurité arrière RS-4
Ceinture de sécurité avant RS-3
Chaîne d'entraînement (Transfert) TF-9
Chaîne de distribution (moteur KA24) EM-12
Charge d'évacuation de décharge de réfrigérant HA-51
Chauffage de sonde à oxygène chauffée EC-133
Chemise de cylindre EM-75
Circuit de charge EL-35
Circuit de démarrage EL-27
Circuit de lubrification du moteur (moteur KA24) LC-4
Circuit de lubrification du moteur (moteur TD25) LC-13
Circuit de refroidissement du moteur (moteur KA24) LC-7

Simpo PDF Merge and Split Unregistered Version - http://www.simpopdf.com

Circuit de refroidissement du moteur (moteur TD25) LC-20
Clapet anti-retour de carburant EC-20
Clignotant.....EL-75
Code de défaut de diagnostic (DTC) du système d'autodiagnostic de l'ECCS.....EC-37
Collecteur d'admission EM-9
Commande combinée EL-43
Commande de coupure d'alimentation (à vide et à régime du moteur élevé) (moteur KA24).....EC-18
Commande de coupure de climatisation.....EC-18
Commande de frein de stationnement BR-30
Commande de réglage des faisceaux EL-64
Commande des vitesses (Transfert).....TF-10
Commande EGR (EGRC) - Electrovanne EC-223
Comment effacer le DTC du système de diagnostic de bord de l'ECCS EC-38
Commutateur de ventilateur HA-45
Compartiment moteur.....BT-43
Composants de la boîte (T/M) (FS5R30A) MT-36
Composants de la boîte (FS5W71C) MT-15
Composants de la commande de passage des vitesses T/M (FS5R30A).....MT-38
Composants de la commande de passage des vitesses T/M (FS5W71C).....MT-17
Composants externes du moteur (moteur KA24) EM-8
Composants externes du moteur (moteur TD25) EM-49
Connecteur de faisceau EL-2
Connecteur de liaison des données pour Consult.....EC-46
Connecteur du témoin (MIL) et de liaison des données EC-179
CONSULT pour l'ECCS.....EC-46
Contact de feux de recul (T/M) MT-9
Contact de point mort EC-142
Contact de point mort (T/M) MT-14
Contact entre les dents (R180A).....PD-28
Contact entre les dents (C200) PD-52
Contact entre les dents (H233B).....PD-73
Contrôle de la pression d'alimentation..... EC-22
Contrôle du circuit de préchauffage EC-209
Contrôle du niveau de liquide de frein et des canalisations de freinage BR-3
Corps de papillon EM-9
Couple de serrage de la culasse EM-66
Couple de serrage des boulons standard.....GI-56
Couple de serrage des collecteurs (admission/échappement).....MA-23
Coussin gonflable RS-6
Couvercle d'embrayage CL-13
Cric mécanique GI-50
Cric pantographe.....GI-49
Cric rouleur et chandelles de sécurité GI-51
Culasse (moteur KA24).....EM-23
Culasse (moteur TD25).....EM-54
Cycle de réfrigération.....HA-14
Cylindre récepteur d'embrayage CL-8

D

Débitmètre - Voir Débitmètre d'air.....EC-93
Débitmètre d'air (MAFS).....EC-93
Débitmètre d'air C/A HA-16
Dégagement d'un véhicule (dégager un véhicule embourbé).....GI-46
Démarreur.....EL-34
Démontage du différentiel (C200) PD-37
Démontage du différentiel (H233B).....PD-61
Démontage du différentiel à mouvement limité (C200).....PD-43
Démontage du différentiel à mouvement limité (H233B) PD-64
Démontage du pont (C200).....PD-37
Démontage du pont (H233B).....PD-59
Démontage du pont avant (4x4).....PD-18
Démontage du roulement central (arbre de transmission).....PD-9
Démontage du roulement de croisillon (arbre de transmission).....PD-10
Dépannage du véhicule GI-55
Dépose du moteur (moteur KA24).....EM-36
Dépose du moteur (moteur TD25).....EM-70
Dépose et repose de l'embrayage de compresseur de C/A HA-62
Dépose et repose de l'injecteur.....EC-24
Dépose et repose des instruments combinés - Voir Tableau de bord.....BT-12
Dépose et repose du feu combiné arrière BT-26
Dépose et repose du feu combiné avant.....BT-6
Dépose et repose du pont.....PD-16
Dépose et repose du pont avant (4x4) PD-15
Dépose et repose du système audio et de la commande C/A - Voir Tableau de bord.....BT-11
Dépose et repose du transfert TF-6
Dépose et repose T/M.....MT-11
Désembuage de lunette arrière.....EL-136
Dessous de la carrosserie BR-45
Détente de la pression d'alimentation EC-22
Diagnostic de collision (2x2).....RS-22
Diagnostic de collision (4x4).....RS-44
Diagnostics de l'essai de rendement de C/A HA-26
Diagnostics des défauts du C/A (C/A manuel) HA-19
Diagnostic des défauts du SRS (2x2) RS-17

Simpo PDF Merge and Split Unregistered Version - http://www.simpopdf.com

Diagnostic des défauts du SRS (4x4) RS-23
Diagnostics électriques GI-22
Dimensions.....GI-46
Disposition de l'alimentation électrique EL-5
Disposition des composants du C/A.....HA-15
Disposition des faisceaux.....EL-222
Disque d'embrayage CL-12
Disque de rotor (avant) FA-18
Distribution de la masse.....EL-14

E

Eclairage.....EL-82
Eclairage de plaque minéralogique.....EL-67
Electrovanne de commande de purge de cartouche EVAP.....EC-146
Electrovanne de contrôle de vanne de commande de tourbillon EC-167
Electrovanne EGR EC-223
Electrovanne FICD (moteur KA24).....EC-174
Electrovanne FICD (moteur TD25).....EC-237
Elévateur à deux colonnes GI-52
Empattement (dimensions) GI-46
Emplacement des composants de l'ECCS.....EC-10
Emplacement des dispositifs électriques.....EL-219
Entretien du châssis et de la carrosserie MA-35
Entretien du moteur (moteur KA24) MA-15
Entretien du moteur (moteur TD25) MA-23
Entretien périodique MA-5
Equilibrage des roues.....MA-38
Espace moteur - Voir Compartiment moteur.....BT-43
Essieu arrière.....RA-5
Essieu avant.....FA-14
Essieu avant de rotule FA-36
Essuie-glace avant EL-121
Extérieur BT-23

F

Feu antibrouillard arrière EL-73
Feu arrière EL-67
Feu de recul EL-61
Feu de stationnement.....EL-67
Feux de détresse.....EL-75
Fixation de la carrosserie..... BT-40
Flexible à dépression (système de frein) BR-17
Fonctionnement des commandes C/A (C/A manuel) HA-18
Force de rotation du volant de direction ST-6
Fourchette de passage (T/M) (FS5R30A) MT-38
Fourchette de passage (T/M) (FS5W71C) MT-17
Frein arrière à tambour.....BR-26
Frein avant à disque BR-21
Fusible EL-13

G

Garde au sol minimum.....GI-46
Garniture.....BT-14
Garniture de plancher BT-14
Garniture de porte BT-17
Garniture de toit BT-20
Garniture latérale.....BT-14
Gicleur d'huile.....LC-18
Graissage de l'arbre de transmission MA-37
Graissage du système de fermeture du capot, des serrures et des charnières MA-43
Graisse MA-12
Guide de soupape (moteur KA24) EM-29
Guide de soupape (moteur TD25) EM-57

H

Hauteur (dimensions).....GI-46
Hauteur du pignon d'attaque (R180A).....PD-25
Hauteur du pignon d'attaque (C200) PD-50
Hauteur du pignon d'attaque (H233B).....PD-70

I

Identification des joints de culasse EM-65
Indice de viscosité (SAE) MA-13
Informations générales pour CONSULT GI-36
Injecteur (moteur KA24) EC-150, 154
Injecteur (moteur TD25).....EC-192
Inspection avant livraison MA-3
Inspection de base de l'ECCS EC-60
Inspection de l'arbre à cames (moteur KA24) EM-28
Inspection de l'arbre à cames (moteur TD25) EM-86
Inspection de l'arbre de transmission MA-36
Inspection de l'axe de piston (moteur KA24) EM-39
Inspection de l'axe de piston (moteur TD25) EM-77
Inspection de l'injecteur..... MA-31
Inspection de la sonde à oxygène chauffée MA-23
Inspection des câbles d'allumage MA-21
Inspection des canalisations d'alimentation (moteur KA24) MA-18
Inspection des canalisations d'alimentation (moteur TD25) MA-30

Simpo PDF Merge and Split Unregistered Version - http://www.simpopdf.com

Inspection des canalisations de freinage et des câbles de freins MA-39
Inspection des canalisations de vapeur EVAP MA-22
Inspection des ceintures de sécurité.....MA-44
Inspection des connecteurs GI-21
Inspection des connecteurs de faisceau GI-18
Inspection des freins MA-39
Inspection du boîtier et de la timonerie de direction MA-41
Inspection du différentiel à mouvement limité (C200).....PD-43
Inspection du différentiel à mouvement limité (H233B) PD-65
Inspection du différentiel de couronne (C200) PD-41
Inspection du différentiel de couronne (H233B) PD-63
Inspection du différentiel de pignon d'attaque (C200) PD-41
Inspection du différentiel de pignon d'attaque (H233B) PD-63
Inspection du poussoir de soupape hydraulique (moteur KA24).....EM-38
Inspection du régime de ralenti..... MA-32
Inspection du segment de piston (moteur KA24) EM-40
Inspection du segment de piston (moteur TD25) EM-77
Inspection du système d'échappement MA-35
Inspection du système de PCV.....MA-22
Inspection et réglage de la came de ralenti accéléré (FIC) EC-25
Intérieur BT-14
Interrupteur de climatiseur.....HA-16, 45
Intervention majeure T/M (FS5R30A) MT-35
Intervention majeure (FS5W71C).....MT-14

J

Jeu de la bague de bielle (moteur KA24) EM-45
Jeu de la bague de bielle (moteur TD25) EM-79
Jeu de palier de bielle (moteur KA24) EM-45
Jeu de palier de bielle (moteur TD25) EM-78
Jeu de soupape.....EM-31
Jeu du volant de direction.....ST-7
Jeu entre le piston et l'alésage (moteur KA24) EM-41
Jeu entre le piston et l'alésage (moteur TD25) EM-76
Joint - Voir Extérieur BT-24
Joints à rotule de barre d'accouplement.....ST-38
Joint d'étanchéité - Voir Extérieur.....BT-24

L

Largeur (dimensions) GI-46
Lave-glace avant EL-121
Lave-phares.....EL-131
Lève-glace électrique EL-156
Levier de commande (T/M) (FS5R30A) MT-38
Levier de commande (T/M) (FS5W71C) MT-17
Levier de débrayage d'embrayage CL-9
Liquides MA-12
Liste de terminologie SAE J1930 .....GI-57
Liste des schémas de câblage (codes de cellules).....EL-255
Logement d'essieu (arrière).....RA-5
Longueur (dimensions) GI-46
LSV (compensateur asservi) BR-7
Lubrifiant de C/A (R-134a).....HA-52
Lubrifiants MA-12
Lunette arrière BT-26

M

Maître-cylindre (embrayage) CL-6
Maître-cylindre (frein).....BR-12
Maître-cylindre d'embrayage.....CL-6
Maître-cylindre de frein BR-12
Manchon d'accouplement (T/M) (FS5R30A) MT-36
Manchon d'accouplement (T/M) (FS5W71C) MT-15
Manocontact d'huile de direction assistée EC-163
Manocontact triple HA-14, 46
Mécanisme de débrayage.....CL-9
Mise au rebut du coussin gonflable.....RS-14
Montre.....EL-135
Moteur de soufflerie HA-45
Moulure - Voir Extérieur BT-24
Moyeu de roue (avant).....FA-18
Moyeu débrayable automatique.....FA-17
Moyeu débrayable manuel.....FA-16

N

NATS (Système antivol NISSAN) EL-185
Niveau d'huile du boîtier de direction.....MA-42
Niveau du liquide d'embrayage.....MA-35
Niveau du liquide de direction assistée.....MA-41, ST-4
Niveau du liquide de frein MA-38
Numéro d'identification du véhicule GI-42
Numéro de série de la boîte de vitesses manuelle.....GI-45
Numéro de série du moteur.....GI-45
Numéro de série du transfert.....GI-45

Simpo PDF Merge and Split Unregistered Version - http://www.simpopdf.com

Numéro de transmission manuelle GI-45

O

Organigrammes.....GI-33
Outillage spécial pour le compresseur HA-7
Outillage spécial pour le compresseur de C/A HA-7
Outillage spécial pour le système HFC-134a (R-134a) HA-9
Outillage spécial pour le système HFC-134a (R-134a) de C/A HA-9

P

Palier de débrayage CL-9
Pare-brise BT-36
Pare-chocs avant BT-5
Pare-chocs arrière BT-7
PCV (ventilation positive de carter)..... EC-199
Pédale d'embrayage CL-4
Pédale de frein.....BR-10
Permutation des pneus MA-38
Phares EL-45
Pignon auxiliaire (T/M) (FS5R30A) MT-36
Pignon auxiliaire (T/M) (FS5W71C) MT-15
Pignon d'entraînement avant (Transfert) TF-9
Pignon d'entraînement principal (T/M) (FS5R30A) MT-36
Pignon d'entraînement principal (T/M) (FS5W71C) MT-15
Pignon de distribution.....EM-90
Pignon de marche arrière (T/M) (FS5R30A) MT-36
Pignon de marche arrière (T/M) (FS5W71C) MT-15
Pignon de renvoi (T/M) (FS5R30A).....MT-36
Pignon de renvoi (T/M) (FS5W71C).....MT-15
Pignon de renvoi (Transfert) TF-9
Piston (moteur KA24) EM-46
Piston (moteur TD25) EM-87
Piston surdimensionné EM-96
Pivot de fusée FA-21
Plafonnier.....EL-86
Plaque d'identification GI-42
Plateau de pression - Voir Couvercle d'embrayage CL-13
Points de levage GI-52
Points de remorquage.....GI-55
Points de support pour le cric.....GI-41
Pompe à dépression.....BR-19
Pompe à eau (moteur KA24) LC-8
Pompe à eau (moteur TD25) LC-22
Pompe à huile de direction assistée.....ST-35
Pompe à huile (moteur KA24) LC-5
Pompe à huile (moteur TD25) LC-15
Pompe d'alimentation EC-157
Pompe d'amorçage..... EC-198
Porte arrière BT-10
Porte avant.....BT-9
Poussoir de soupape.....EM-60
Précautions d'emploi du HFC-134a (R-134a) HA-2
Précautions d'emploi pour le compresseur de C/A HA-7
Précautions d'emploi pour le compresseur de C/A HA-7
Précautions d'emploi pour les raccords de réfrigérant.....HA-2
Précautions générales GI-3
Précautions générales pour l'emploi du réfrigérant.....HA-2
Précautions pour l'équipement d'entretien du système HFC-134a HA-11
Précautions pour l'équipement d'entretien du système HFC-134a de C/A HA-11
Précautions pour l'huile moteur GI-6
Précautions pour l'injection de carburant multipoint.....GI-4
Précautions pour le carburant.....GI-7
Précautions pour le catalyseur à trois voies GI-5
Précautions pour le coussin gonflable.....GI-1
Précautions pour le système NATS.....GI-2
Précharge de roulement latéral (R180A) PD-24
Précharge de roulement latéral de différentiel (C200).....PD-48
Pré-inspection du pont (C200).....PD-37
Pré-inspection du pont (H233B) PD-59
Pré-inspection du pont avant (4x4) PD-18
Pression de compression (moteur KA24) EM-9
Pression de compression (moteur TD25) EM-51
Pression d'huile (moteur KA24) LC-5
Pression d'huile (moteur TD25) LC-14
Pression hydraulique de direction assistée.....ST-9
Procédure d'entretien du système HFC-134a (R-134a) de C/A HA-50
Procédure de travail de diagnostic de C/A (C/A manuel).....HA-19
Protecteur thermique HA-47
Purge d'air (embrayage hydraulique).....CL-5
Purge du circuit de freinage BR-4
Purge du système de direction assistée.....ST-5

R

Raccord à fusible.....EL-13
Radiateur (moteur KA24) LC-10
Radiateur (moteur TD25) LC-25

Simpo PDF Merge and Split Unregistered Version - http://www.simpopdf.com

Réalésage du bloc-cylindres (moteur KA24) EM-42
Réalésage du bloc-cylindres (moteur TD25) EM-167
Réalésage/rodage du bloc-cylindres (moteur KA24) EM-42
Refroidisseur d'huile..... LC-18
Régime de ralenti.....EC-26
Réglage de la tige de commande de robinet d'eau HA-48
Réglage de la tige de commande de volet de dégivreur HA-47
Réglage de la tige de commande de volet de ventilateur.....HA-47
Réglage de la timonerie de commande C/A (C/A manuel).....HA-47
Réglage de la timonerie de commande du clapet de mode HA-48
Réglage de la timonerie de commande du volet d'admission HA-49
Réglage de la timonerie et du câble de contrôle de la température.....HA-49
Réglage du câble d'accélérateur FE-2
Réglage du différentiel à mouvement limité (C200).....PD-45
Réglage du différentiel à mouvement limité (H233B) PD-67
Réglage du jeu des soupapes MA-24
Régulateur de pression d'alimentation (moteur KA24).....EC-23
Relais de C/A.....HA-45
Relais de l'ECCS EC-75
Relais de pompe d'alimentation EC-161
Relais de préchauffage..... EC-215
Relais standardisé EL-3
Remontage du logement de différentiel (R180A) PD-29
Remontage du logement de différentiel (C200).....PD-53
Remontage du logement de différentiel (H233B) PD-74
Remontage du différentiel à mouvement limité (C200).....PD-46
Remontage du différentiel à mouvement limité (H233B) PD-67
Remontage du roulement central (arbre de transmission) PD-11
Remontage du roulement de croisillon (arbre de transmission) PD-12
Remorquage par une dépanneuse GI-49
Remplacement de la bague pilote (moteur KA24) EM-48
Remplacement de la bague pilote (moteur TD25) EM-79
Remplacement de la chambre de combustion.....EM-60
Remplacement de la garniture de couvercle arrière de différentiel PD-14
Remplacement de l'huile moteur (moteur KA24) MA-19
Remplacement de l'huile moteur (moteur TD25) MA-25
Remplacement de l'huile du différentiel MA-37
Remplacement des bougies d'allumage.....MA-20
Remplacement du filtre à air (moteur KA24) MA-19
Remplacement du filtre à air (moteur TD25) MA-31
Remplacement du filtre à carburant (moteur KA24) MA-18
Remplacement du filtre à carburant (moteur TD25) MA-29
Remplacement du filtre à huile (moteur KA24) MA-20
Remplacement du filtre à huile (moteur TD25) MA-26
Remplacement du filtre de ventilation positive du carter (PCV) MA-22
Remplacement du joint d'huile (avant du pont).....PD-14
Remplacement du joint d'huile (moteur KA24) EM-21
Remplacement du joint d'huile (moteur TD25) EM-68
Résistance EC-110
Résistance de soufflerie HA-45
Ressort à lames (arrière).....RA-12
Ressort de barre de torsion FA-30
Ressort de soupape (moteur KA24) EM-31
Ressort de soupape (moteur TD25) EM-61
Rétroviseur de porte.....BT-38
Rétroviseur électrique de porte EL-152
Rétroviseur extérieur BT-38
Révision majeure (Transfert).....TF-8
Richesse de mélange de ralenti..... EC-26
Richesse de mélange du liquide de refroidissement antigel.....MA-14
Rotules de barre d'accouplement ST-39
Roues et pneus.....GI-48
Roulement de roue (arrière) RA-5
Roulement de roue (essieu avant).....FA-5
Rupteur EL-14

S

Schémas de câblage GI-10
Schéma de câblage - AAC/V - EC-139
Schéma de câblage - A/C - HA-35
Schéma de câblage - ABS - BR-42
Schéma de câblage - AUDIO - EL-140
Schéma de câblage - BUZZER - EL-118
Schéma de câblage - CHARGE - EL-35
Schéma de câblage - CIGAR - EL-134
Schéma de câblage - CMPS - EC-89
Schéma de câblage - DEF - EL-136
Schéma de câblage - D/LOCK - EL-169
Schéma de câblage - DTRL - EL-55

Simpo PDF Merge and Split Unregistered Version - http://www.simpopdf.com

Schéma de câblage - ECTS - EC-100
Schéma de câblage - EGRC/V - EC-219
Schéma de câblage - FCUT - EC-231
Schéma de câblage - FICD - (moteur KA24).....EC-174
Schéma de câblage - FICD - (moteur TD25).....EC-236
Schéma de câblage - F/PUMP - EC-159
Schéma de câblage - GLOW - EC-203
Schéma de câblage - HEATER - HA-33
Schéma de câblage - H/AIM -.....EL-65
Schéma de câblage - H/LAMP - EL-45
Schéma de câblage - HLC - EL-131
Schéma de câblage - H/SEAT -.....EL-154
Schéma de câblage - HO2S - EC-130
Schéma de câblage - HORN -.....EL-133
Schéma de câblage - IATS -.....EC-116
Schéma de câblage - IGN/SG - EC-105
Schéma de câblage - ILL -.....EL-82
Schéma de câblage - INJECT - EC-150
Schéma de câblage - INT/L -.....EL-86
Schéma de câblage - MAFS -.....EC-95
Schéma de câblage - MAIN -.....EC-79
Schéma de câblage - METER -.....EL-91
Schéma de câblage - MIRROR -.....EL-152
Schéma de câblage - MONTRE -.....EL-135
Schéma de câblage - MULTI -.....EL-177
Schéma de câblage - NATS -.....EL-187
Schéma de câblage - P/ANT -.....EL-149
Schéma de câblage - PGC/V -.....EC-147
Schéma de câblage - PLA - EC-228
Schéma de câblage - PNP/SW -.....EC-143
Schéma de câblage - POWER -.....EL-6
Schéma de câblage - PST/SW - EC-163
Schéma de câblage - R/FOG.....EL-73
Schéma de câblage - S/SIG - EC-155
Schéma de câblage - START -.....EL-27
Schéma de câblage - STOP/L -.....EL-71
Schéma de câblage - SWL/V -.....EC-163
Schéma de câblage - TAIL/L -.....EL-67
Schéma de câblage - TPS -.....EC-121
Schéma de câblage - TURN -.....EL-76
Schéma de câblage - VSS -.....EC-125
Schéma de câblage - WARN -.....EL-107
Schéma de câblage - WINDOW -.....EL-159
Schéma de câblage - WIPER -.....EL-123
Schéma des flexibles à dépression (ECCS) EC-12
Schéma de circuit de l'ECCS EC-8
Schéma du système de l'ECCS EC-9
Semi-arbre (avant) FA-23
Siège arrière.....BT-32
Siège avant BT-29
Siège chauffant BT-31
Siège chauffant.....EL-154
Siège de soupape (moteur KA24).....EM-30
Siège de soupape (moteur TD25).....EM-58
Signal de démarrage EC-155
SMJ (Super raccord multiple).....Page dépliante
Sonde à oxygène chauffée (HO2S) EC-129
Soupape de décharge de pression d'huile (moteur KA24).....LC-6
Soupape de décharge de pression d'huile (moteur TD25).....LC-17
Soupape régulatrice de pompe à huile (moteur KA24) LC-6
Soupape régulatrice de pompe à huile (moteur TD25) LC-18
Spot de lecture EL-86
SRS - Voir système de retenue supplémentaire.....RS-6
Strapontin BT-33
Suspension arrière.....RA-11
Suspension avant.....FA-33
Symboles et abréviations.....GI-8
Synchronisateur (T/M) (FS5R30A) MT-36
Synchronisateur (T/M) (FS5W71C) MT-15
Système anti-enrayeur de freins.....BR-32
Système anti-enrayeur de freins - Schéma de câblage BR-42
Système d'alimentation FE-3
Système d'allumage à distributeur (DI) EC-17
Système d'échappement.....FE-6
Système d'éclairage de jour.....EL-52
Système de commande d'accélérateur FE-1
Système d'injection de carburant multipoint (MFI) EC-14
Système de commande du ventilateur de refroidissement..... LC-27
Système de contrôle des émissions de carter - Voir Ventilation positive de carter EC-21
Système de contrôle des émissions évaporatives EC-19
Système de diagnostic de bord de l'ECCS.....EC-37
Système de mise en veilleuse des codes EL-59
Système de multi-télécommande EL-175
Système de purge de direction assistée.....ST-6
Système de retenue supplémentaire.....RS-6
Système de retenue supplémentaire - Schéma de câblage (2x2).....RS-19
Système de retenue supplémentaire - Schéma de câblage (4x4).....RS-27
Système de ventilation de carter - Voir Ventilation positive de carter EC-21
Système hydraulique de direction assistée.....ST-8

T

Tableau de bord BT-11
Tableau de rendement du C/A HA-28
Tableau des caractéristiques des symptômes de l'ECCS..... EC-63

Simpo PDF Merge and Split Unregistered Version - http://www.simpopdf.com

Tableau de sécurité de l'ECCS EC-63
Tableau des symptômes du C/A (C/A manuel) HA-22
Taille de pneu GI-48
Taille de roue GI-48
Témoin de défaut (MIL) EC-39
Témoins lumineux EL-106
Thermostat (moteur KA24).....LC-9
Thermostat (moteur TD25).....LC-24
Tige de passage des vitesses (T/M) (FS5R30A) MT-38
Tige de passage des vitesses (T/M) (FS5W71C) MT-17
Tige de poussoir (moteurs (QD & TD) EM-151
Timonerie de direction.....ST-38
Toit ouvrant BT-34
Transistor de puissance et bobine d'allumage EC-109
Turbocompresseur EM-162

V

Vanne de commande d'air auxiliaire (AAC) EC-137
Vanne IACV-AAC EC-137, 141
Variantes de modèles GI-39
Ventilateur de refroidissement (moteur KA24) LC-11
Ventilateur de refroidissement (moteur TD25) LC-22, 27
Vérification des courroies d'entraînement (moteur KA24) MA-15
Vérification des courroies d'entraînement (moteur TD25) MA-24
Vérification opérationnelle du C/A HA-18
Vérification ponctuelle de l'usure des garnitures MA-40
Verrouillage de porte.....BT-10
Verrouillage électrique de porte EL-168
Vibration de l'arbre de transmission PD-8
Vidange de l'huile (contenance).....MA-12
Vidange de l'huile (intervalle) MA-5
Vidange de l'huile de boîte de vitesses manuelle MA-35
Vidange de l'huile de la boîte de transfert.....MA-36
Vidange du liquide de frein.....BR-3
Vidange du liquide de refroidissement (moteur KA24) MA-16
Vidange du liquide de refroidissement (moteur TD25) MA-26
Vilebrequin (moteur KA24) EM-43
Vilebrequin (moteur TD25) EM-80
Vitre BT-10
Vitre de porte.....BT-10
Vitre latérale BT-37
Voie-Av Dr & Ar Dr (dimensions).....GI-46
Voile de volant-moteur (moteur KA24).....EM-46
Voile de volant-moteur (moteur TD25).....EM-81
Volant et colonne de direction ST-9
Volant-moteur (embrayage) CL-12

Simpo PDF Merge and Split Unregistered Version - http://www.simpopdf.com

CIRCUIT DE LUBRIFICATION DU MOTEUR ET CIRCUIT DE REFROIDISSEMENT

SECTION **LC**

TABLE DES MATIERES

PRECAUTIONS ET PREPARATION 1
Procédure d'application du joint liquide 1
Outillage spécial 2

KA

CIRCUIT DE LUBRIFICATION DU MOTEUR 4
Circuit de lubrification 4
Vérification de la pression d'huile 5
Pompe à huile 5
CIRCUIT DE REFROIDISSEMENT DU MOTEUR 7
Circuit de refroidissement 7
Vérification du circuit 7
Pompe à eau 8
Thermostat 9
Radiateur 10
Ventilateur de refroidissement (entraîné par vilebrequin) 11

TD

CIRCUIT DE LUBRIFICATION DU MOTEUR 13
Circuit de lubrification 13
Vérification de la pression d'huile (entretien sur véhicule) 14
Pompe à huile 15
Support de filtre à huile 17
Refroidisseur d'huile 18
Gicleur d'huile 19
CIRCUIT DE REFROIDISSEMENT DU MOTEUR 20
Circuit de refroidissement 20
Vérification du circuit de refroidissement 21
Pompe à eau et ventilateur de refroidissement (entraîné par arbre à cames) 22
Thermostat 24
Radiateur 25
Remplissage de liquide de refroidissement du moteur 25
CIRCUIT ELECTRIQUE DU MOTEUR DE VENTILATEUR 26
Schéma de câblage 26
Ventilateur de refroidissement (entraîné par moteur) 27
Inspection des composants électriques 27
CIRCUIT DE REFROIDISSEMENT DU MOTEUR 29
Radiateur (de type aluminium) 29
Analyse des causes de surchauffe 33
CARACTERISTIQUES ET VALEURS DE REGLAGE (SDS) 35
Circuit de lubrification du moteur (KA) 35
Circuit de refroidissement du moteur (KA) 35
Circuit de lubrification du moteur (TD) 35
Circuit de refroidissement du moteur (TD) 35

Simpo PDF Merge and Split Unregistered Version - http://www.simpopdf.com

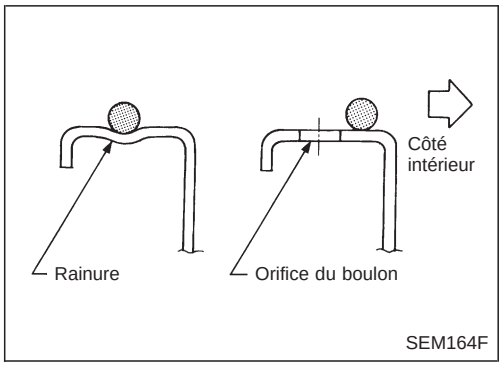

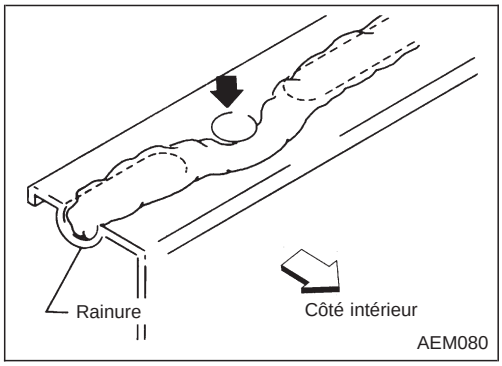

Procédure d’application du joint liquide

a. A l’aide d’un grattoir, retirer toutes les traces de l’ancien joint liquide des surfaces d’appui et des rainures. Eliminer également toutes les traces d’huile de ces surfaces.
b. Appliquer un cordon uniforme de joint liquide sur les surfaces d’appui (utiliser le joint liquide d’origine ou un équivalent).
   - Pour le carter d’huile, s’assurer que le diamètre du joint liquide est de 3,5 à 4,5 mm pour les moteurs à essence.
   - Pour les parties autres que le carter d’huile, s’assurer que le diamètre du joint liquide est de 2 à 3 mm pour les moteurs à essence, et de 2,5 à 3,5 mm pour les moteurs diesel.
c. Appliquer du joint liquide autour des surfaces intérieures des orifices de boulons (sauf indication contraire).
d. Procéder à l’assemblage dans les 5 minutes qui suivent l’application.
e. Attendre au moins 30 minutes avant de remplir le moteur d’huile et de réfrigérant.

Simpo PDF Merge and Split Unregistered Version - http://www.simpopdf.com

Outillage spécial

* : Outil spécial ou équivalent en vente dans le commerce

Numéro de l'outil Nom de l'outil	Description		Moteurs concernés	
			KA	TD
ST25051001* Manomètre d'huile	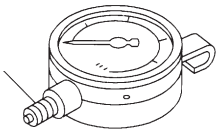 NT558	Mesure de la pression d'huile **Gamme de mesure maximale : 2 452 kPa (24,5 bar, 25 kg/cm^2)**	X	X
ST25052000* Flexible	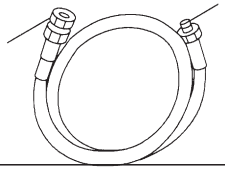 NT559	Branchement du manomètre d'huile sur le bloc-cylindres	X	X
EG17650301 Adaptateur de vérificateur de bouchon de radiateur	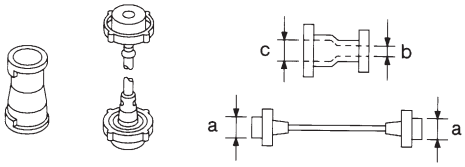 NT564	Adaptation du vérificateur de bouchon de radiateur au goulot de remplissage du radiateur **a : 28** ϕ **b : 31,4** ϕ **c : 41,3** ϕ Unité : mm	X	X
KV99103510 Pinces A à plaque de radiateur	 NT224	Repose des réservoirs supérieur et inférieur de radiateur	X	X
KV99103520 Pinces B à plaque de radiateur	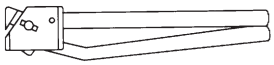 NT225	Dépose des réservoirs supérieur et inférieur de radiateur	X	X
WS39930000 Presse-tube	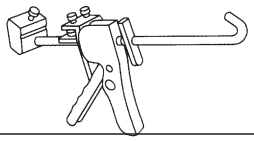 NT052	Pour presser le tube de joint liquide	X	X
KV10105901 Clé à bouchon de filtre à huile	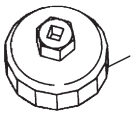 15 faces, Pas intérieur : 80 mm (Face au côté opposé) NT689	Dépose du filtre à huile	X	–

Simpo PDF Merge and Split Unregistered Version - http://www.simpopdf.com

Outillage spécial (Suite)

Numéro de l'outil Nom de l'outil	Description	Moteurs concernés	
		KA	TD
KV10106001 Clé à filtre à huile	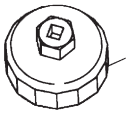 NT690 15 faces, Pas intérieur : 92,5 mm (Face au côté opposé) Remplacement du filtre à huile	–	X

Simpo PDF Merge and Split Unregistered Version - http://www.simpopdf.com

Circuit de lubrification

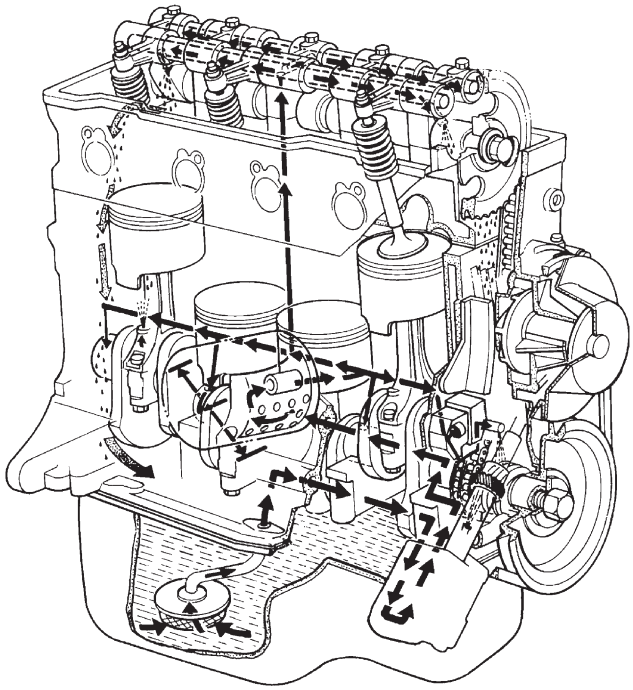

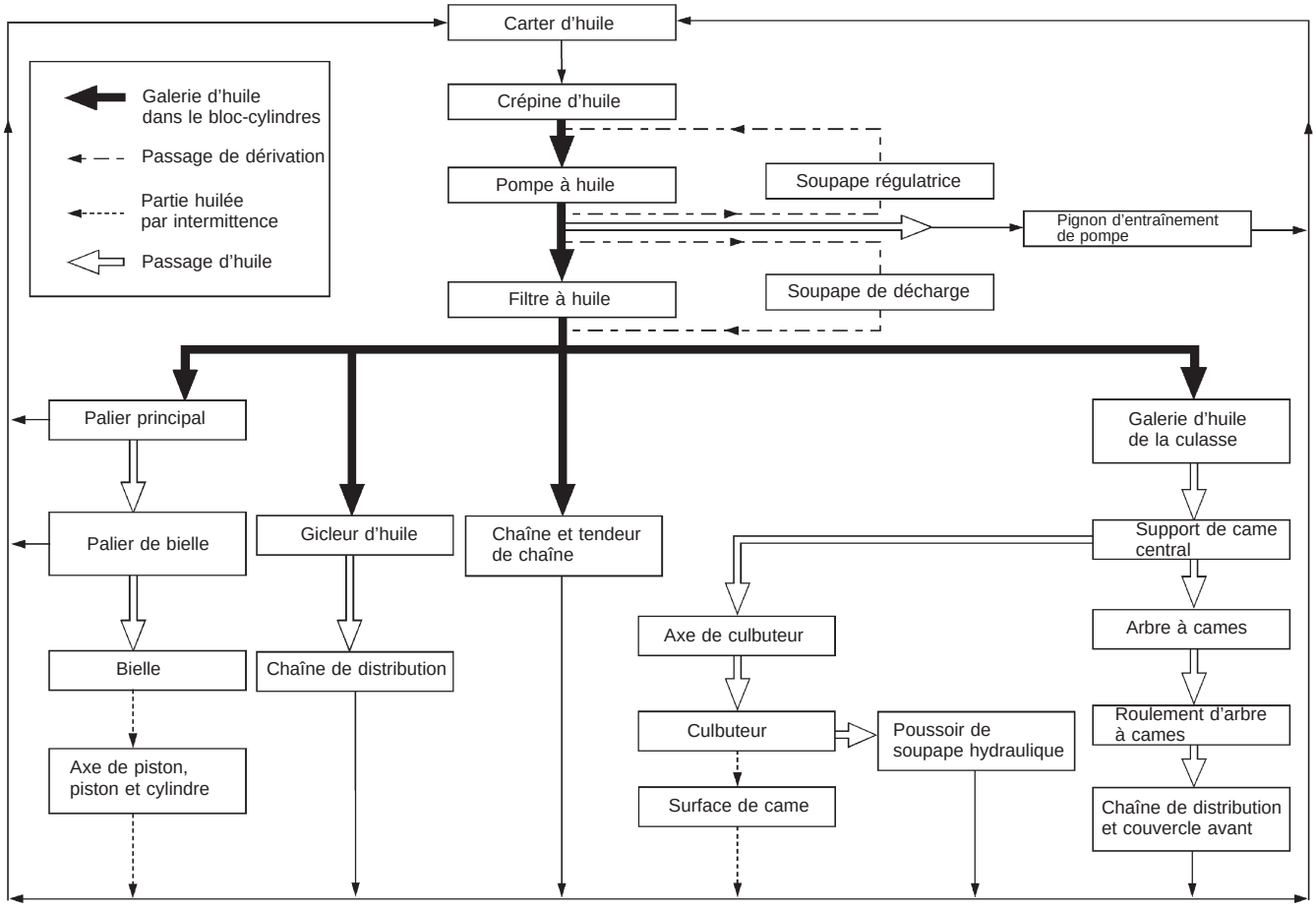

SLC150B

Simpo PDF Merge and Split Unregistered Version - http://www.simpopdf.com

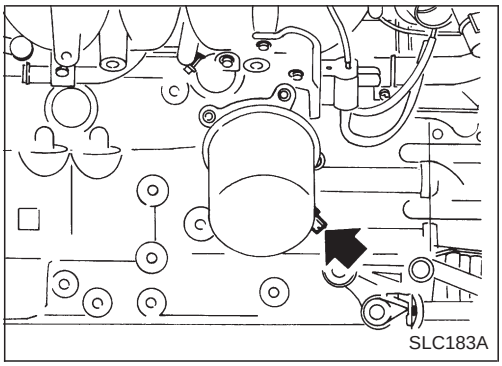
SLC183A

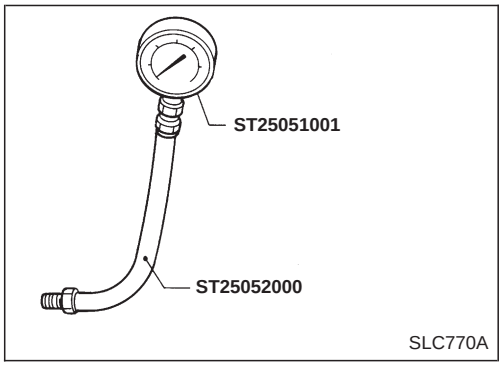

SLC770A

Vérification de la pression d'huile

AVERTISSEMENT :

- **Veiller à ne pas se brûler, car le moteur et l'huile risquent d'être très chauds.**
- **Placer le levier de vitesses en position neutre N.**

1. Vérifier le niveau d'huile.
2. Déposer le manocontact d'huile.
3. Brancher un manomètre.
4. Démarrer le moteur et le faire chauffer à la température de fonctionnement normale.
5. Vérifier la pression d'huile sans imposer de charge au moteur.

Régime du moteur tr/mn	Pression approximative de débit kPa (bar, kg/cm^2)
Régime de ralenti	Plus de 78 (0,78, 0,8)
3 000	412 - 481 (4,12 - 4,81, 4,2 - 4,9)

- **Si la différence est trop grande, vérifier les fuites éventuelles des passages d'huile et de la pompe à huile.**

6. Reposer le manocontact d'huile à l'aide de produit d'étanchéité.

Pompe à huile

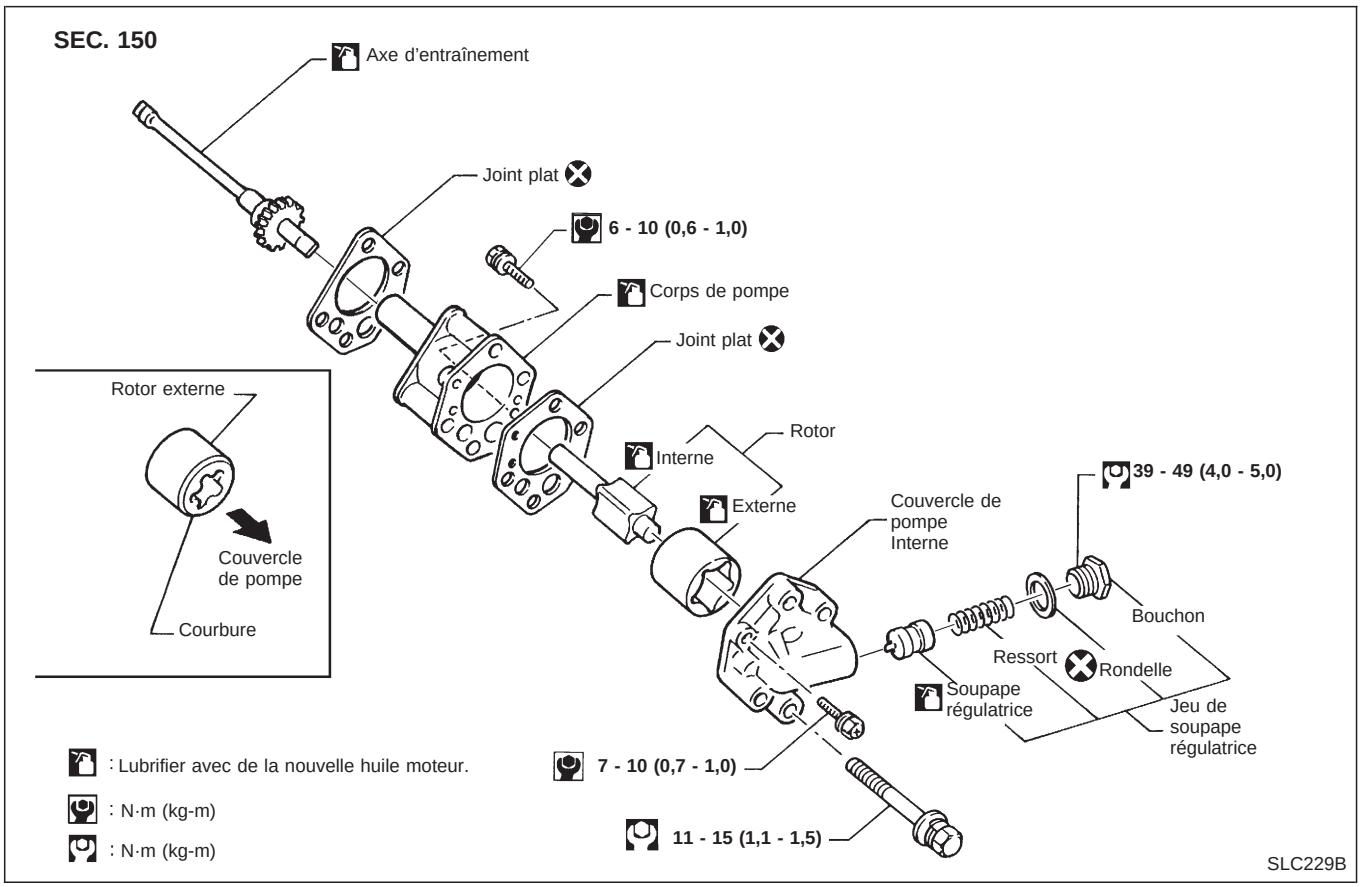

SLC229B

Simpo PDF Merge and Split Unregistered Version - http://www.simpopdf.com

Pompe à huile (Suite)

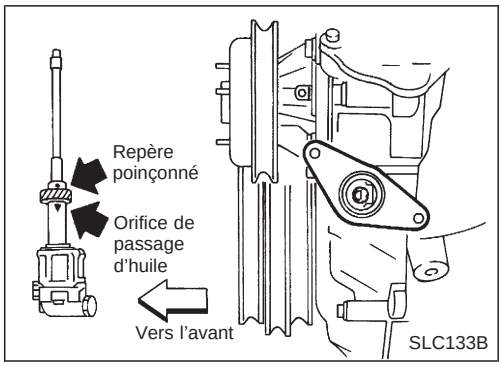

- **Toujours remplacer le joint d'huile et le joint plat par des pièces neuves.**
- **Lors de la dépose de la pompe à huile, tourner le vilebrequin de sorte que le piston n° 1 se trouve au PMH dans sa course de compression.**
- **Lors de l'installation de la pompe à huile, enduire les pignons d'huile moteur, et aligner le repère poinçonné du pivot d'entraînement avec l'orifice de passage d'huile de la pompe à huile.**

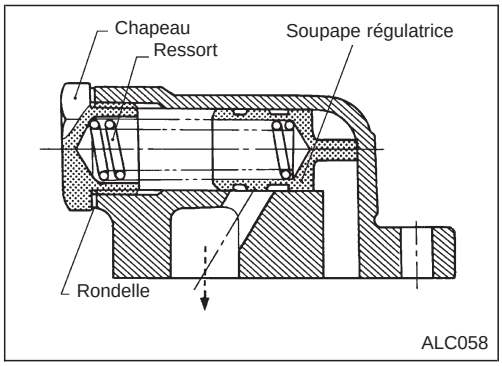

INSPECTION DE LA SOUPAPE REGULATRICE

1. Vérifier visuellement si les pièces ne sont pas usées ou endommagées.
2. Vérifier la surface de glissement de la soupape régulatrice de pression d'huile et le ressort de soupape.
3. Enduire la soupape régulatrice d'huile moteur. Vérifier qu'elle chute en douceur dans l'orifice de soupape sous l'effet de son propre poids.

- **Remplacer le jeu de soupape régulatrice ou la pompe à huile, si endommagé.**

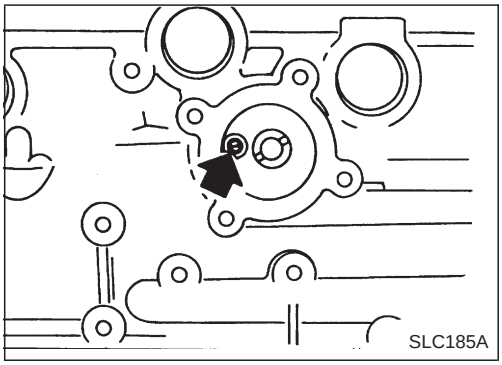

INSPECTION DE LA SOUPAPE DE DECHARGE DE PRESSION D'HUILE

Vérifier si la soupape de décharge de pression d'huile ne présente pas de mouvement, de fissures ou de cassures en poussant la bille. Si un remplacement est nécessaire, déposer la soupape en faisant levier à l'aide d'un outil adéquat.
Mettre la nouvelle soupape en place en lui donnant de petits coups.

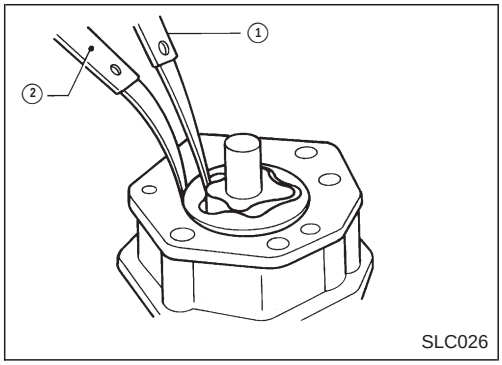

INSPECTION DE LA POMPE A HUILE

A l'aide d'un calibre d'épaisseur, vérifier les jeux suivants.

Jeu standard :

Unité : mm

Jeu à l'arête du rotor ①	Moins de 0,12
Jeu radial entre corps et rotor externe ②	0,15 - 0,21
Jeu latéral (avec joint plat) ③	0,04 - 0,08

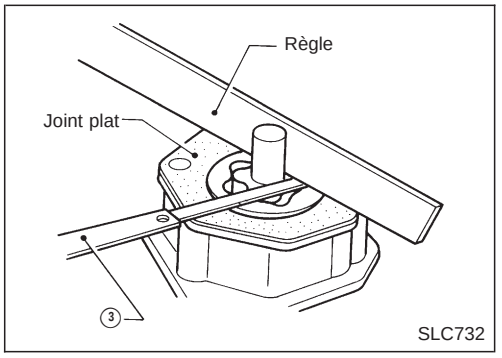

- **Si le jeu à l'arête (①) dépasse la limite spécifiée, remplacer l'ensemble de rotor.**
- **Si les jeux entre le corps et le rotor (②, ③) dépassent la limite, remplacer l'ensemble de la pompe à huile.**

Simpo PDF Merge and Split Unregistered Version - http://www.simpopdf.com

Circuit de refroidissement

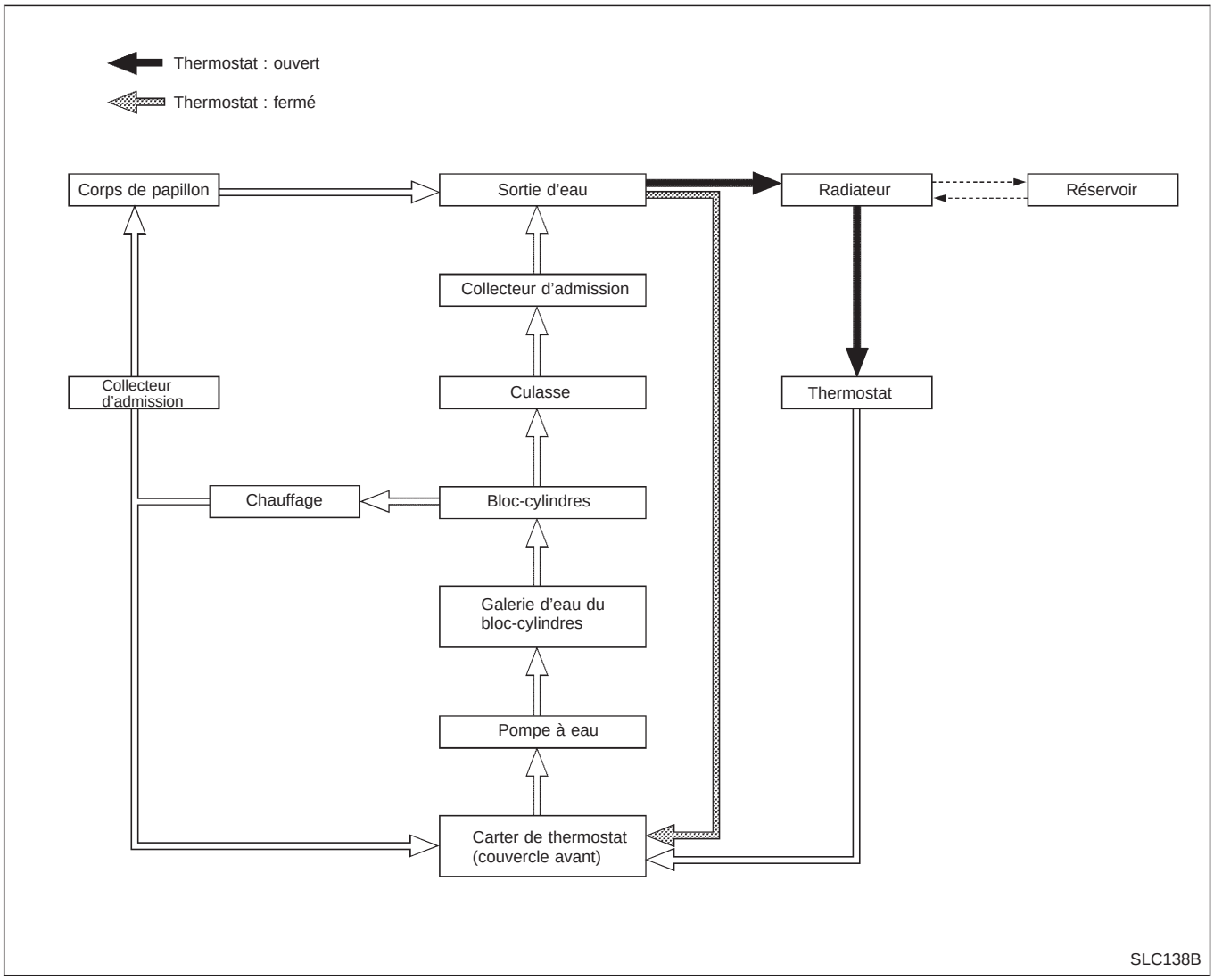

Vérification du circuit

AVERTISSEMENT :
Ne jamais déposer le bouchon de radiateur lorsque le moteur est chaud. Ceci peut entraîner des brûlures graves provoquées par le réfrigérant sous haute pression s'échappant du radiateur.
Enrouler un chiffon épais autour du bouchon. Le tourner lentement d'un quart de tour de façon à laisser la pression s'échapper. Déposer prudemment le bouchon en le tournant complètement.

VERIFICATION DES FLEXIBLES DU CIRCUIT DE REFROIDISSEMENT

Vérifier si les flexibles présentent les défauts suivants :

- Fixation incorrecte
- Fuites
- Fissures
- Endommagements
- Eraflures
- Détériorations

Simpo PDF Merge and Split Unregistered Version - http://www.simpopdf.com

Vérification du circuit (Suite)

VERIFICATION DE L'ETANCHEITE DU CIRCUIT DE REFROIDISSEMENT

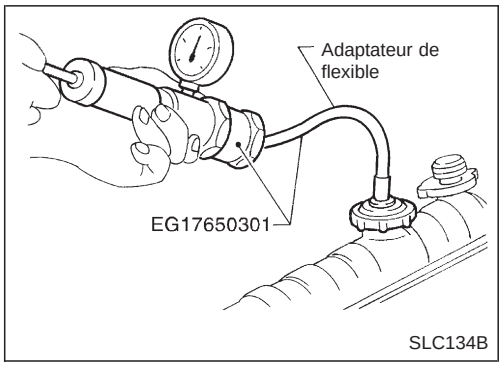

Vérifier s'il n'y a pas de fuites en exerçant une pression sur le circuit de refroidissement à l'aide d'un vérificateur.

Pression d'essai :
157 kPa (1,57 bar, 1,6 kg/cm^2)

ATTENTION :
Une pression supérieure à celle spécifiée peut abîmer le radiateur.

VERIFICATION DU BOUCHON DE RADIATEUR

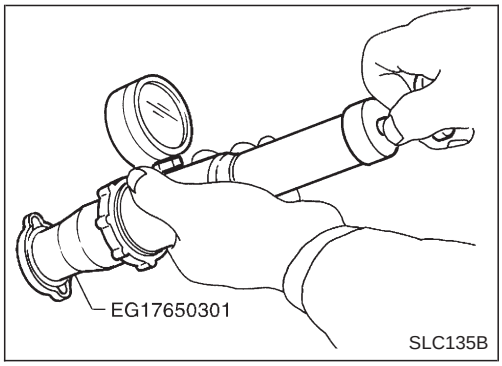

Exercer une pression sur le bouchon de radiateur à l'aide d'un vérificateur afin de s'assurer que son fonctionnement est convenable.

Pression d'ouverture du bouchon de radiateur :
Standard
78 - 98 kPa (0,78 - 0,98 bar, 0,8 - 1,0 kg/cm^2)
Limite
59 - 98 kPa (0,59 - 0,98 bar, 0,6 - 1,0 kg/cm^2)

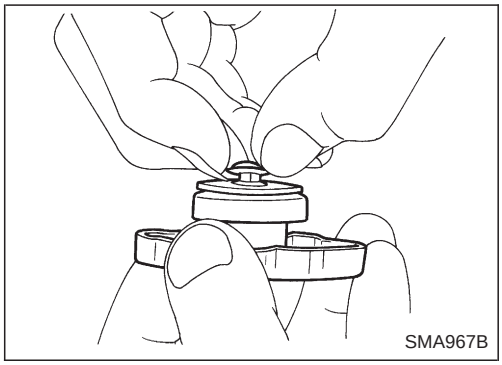

Tirer sur la soupape à dépression pour l'ouvrir.
Vérifier qu'elle se referme totalement une fois relâchée.

Pompe à eau

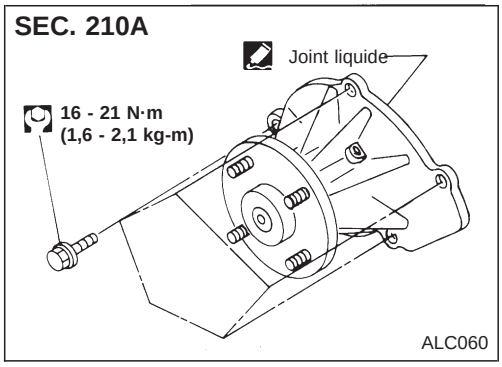

ATTENTION :

- **Lors de la dépose de la pompe à eau, veiller à ne pas renverser de liquide de refroidissement sur les courroies d'entraînement.**
- **La pompe à eau ne peut être démontée et doit être remplacée dans sa totalité.**
- **Après avoir reposé la pompe à eau, rebrancher le flexible et le fixer avec un collier, puis vérifier s'il n'y a pas de fuites à l'aide d'un vérificateur de bouchon de radiateur.**

DEPOSE

1. Vidanger le liquide de refroidissement du radiateur et du bloc-cylindres.
   Se reporter à la section MA (''Remplacement du liquide de refroidissement moteur'' au chapitre ''ENTRETIEN DU MOTEUR'').
2. Déposer les courroies d'entraînement de la pompe de direction assistée, du générateur et du compresseur de climatiseur.
3. Déposer l'accouplement de ventilateur avec le ventilateur.
4. Déposer la pompe à eau.

Simpo PDF Merge and Split Unregistered Version - http://www.simpopdf.com

Pompe à eau (Suite)

INSPECTION

- Vérifier s'il n'y a pas de parties rouillées ou corrodées dans l'ensemble de corps.
- Vérifier si le fonctionnement n'est pas irrégulier par suite d'un jeu excessif.

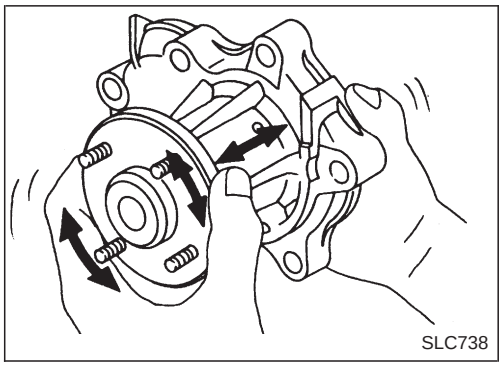
SLC738

REPOSE

1. Retirer le joint liquide de la pompe à eau à l'aide d'un grattoir.
- **Eliminer également toute trace de joint liquide de la surface d'appui du bloc-cylindres.**

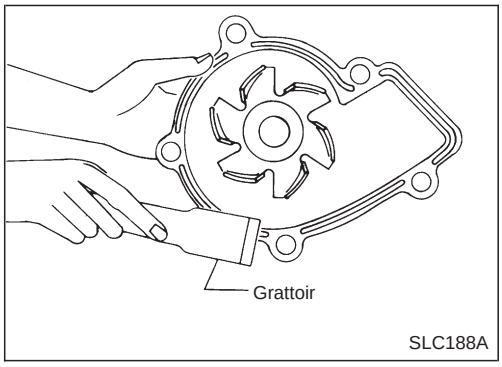

SLC188A

2. Appliquer un cordon uniforme de joint liquide sur les surfaces de contact de la pompe à eau.
- **Utiliser le joint liquide d'origine ou un produit équivalent.**

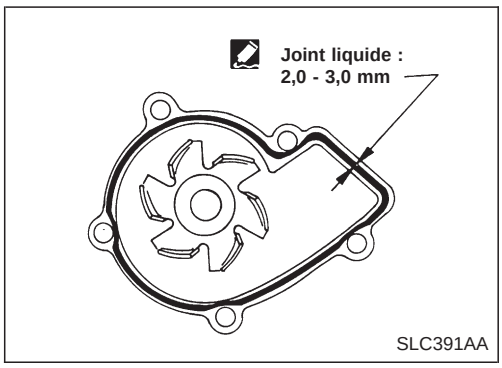

SLC391AA

Pour le remplissage du liquide de refroidissement dans le radiateur, se reporter à la section MA (''Remplacement du liquide de refroidissement moteur'', ''ENTRETIEN DU MOTEUR'').
Lors de la mise en place des courroies d'entraînement, se reporter à la section MA (''Vérification des courroies d'entraînement'').

Thermostat

- **Veiller à ne pas renverser de liquide de refroidissement sur le compartiment moteur.**
  Placer un chiffon pour absorber le liquide de refroidissement.

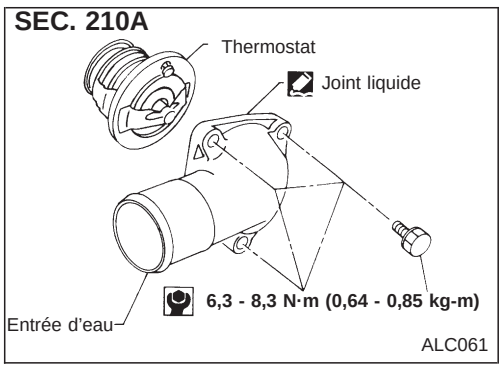

ALC061

DEPOSE

1. Vidanger le liquide de refroidissement du moteur. Se reporter à la section MA (''Remplacement du liquide de refroidissement moteur'' au chapitre ''ENTRETIEN DU MOTEUR'').
2. Déposer le filtre à air et l'ensemble du conduit d'air.
3. Déposer le flexible d'eau du carter d'entrée d'eau.
4. Déposer le carter d'entrée d'eau, puis retirer le thermostat.

Simpo PDF Merge and Split Unregistered Version - http://www.simpopdf.com

Thermostat (Suite)

INSPECTION

1. Vérifier l'état du siège de soupape aux températures ambiantes ordinaires. Il doit avoir une bonne assise.
2. Vérifier la température d'ouverture de la soupape et le levage de cette dernière.

Température d'ouverture de la soupape	°C	76,5
Levage de la soupape	mm/°C	Plus de 8/90

3. Vérifier ensuite si la soupape se ferme à 5°C en dessous de la température d'ouverture de soupape.

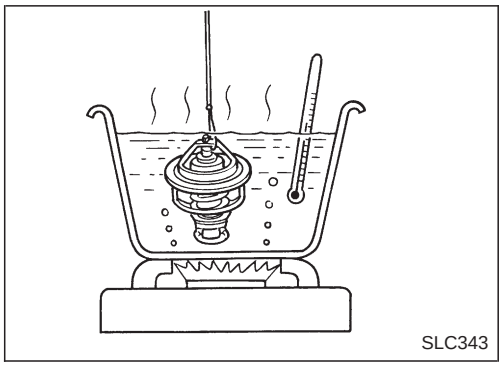
SLC343

REPOSE

1. A l'aide d'un grattoir, enlever toute trace de l'ancien joint liquide de l'entrée d'eau.

- **Eliminer les traces de joint liquide de la surface de contact du couvercle avant.**

2. Appliquer un cordon uniforme de joint liquide sur les surfaces de contact de l'entrée d'eau.

- **Utiliser le joint liquide d'origine ou un produit équivalent.**

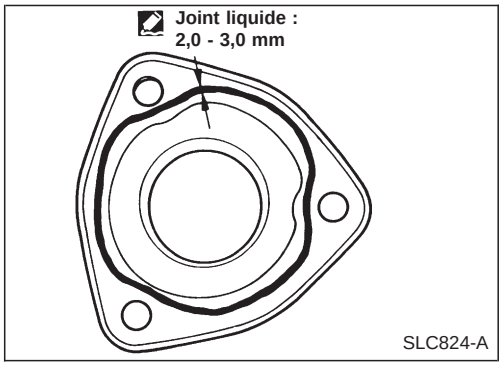

SLC824-A

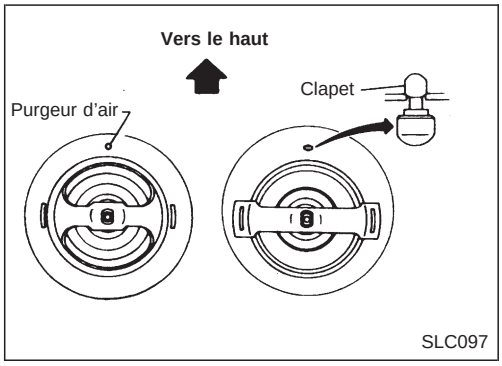

SLC097

3. Monter le thermostat en plaçant le clapet ou le purgeur d'air vers le haut.
4. Reposer le carter d'entrée d'eau.
5. Reposer le flexible d'eau sur le carter d'entrée d'eau.
6. Reposer le filtre à air et l'ensemble de conduit d'air.
7. Faire le plein de liquide de refroidissement moteur. Se reporter à la section MA (''Remplacement du liquide de refroidissement moteur'' au chapitre ''ENTRETIEN DU MOTEUR'').

- **Après la repose, faire tourner le moteur pendant quelques minutes et vérifier qu'il n'y a pas de fuites.**

Radiateur

DEPOSE ET REPOSE

1. Vidanger le liquide de refroidissement du radiateur. Se reporter à la section MA (''Remplacement du liquide de refroidissement monteur'' au chapitre ''ENTRETIEN DU MOTEUR'').
2. Débrancher les flexibles inférieur et supérieur du radiateur.
3. Déposer le filtre à air et l'ensemble de conduit d'air.
4. Déposer la protection inférieure du radiateur.
5. Déposer le bouclier du radiateur.
6. Débrancher le flexible du réservoir de réfrigérant.
7. Déposer le radiateur.
8. Après le remplacement du radiateur, reposer toutes les pièces dans l'ordre inverse de la dépose.
9. Faire le plein de liquide de refroidissement. Se reporter à la section MA (''Remplacement du liquide de refroidissement moteur'' au chapitre ''ENTRETIEN DU MOTEUR'').

- **Après la repose, faire tourner le moteur pendant quelques minutes et vérifier qu'il n'y a pas de fuites.**

Simpo PDF Merge and Split Unregistered Version - http://www.simpopdf.com

Radiateur (Suite)

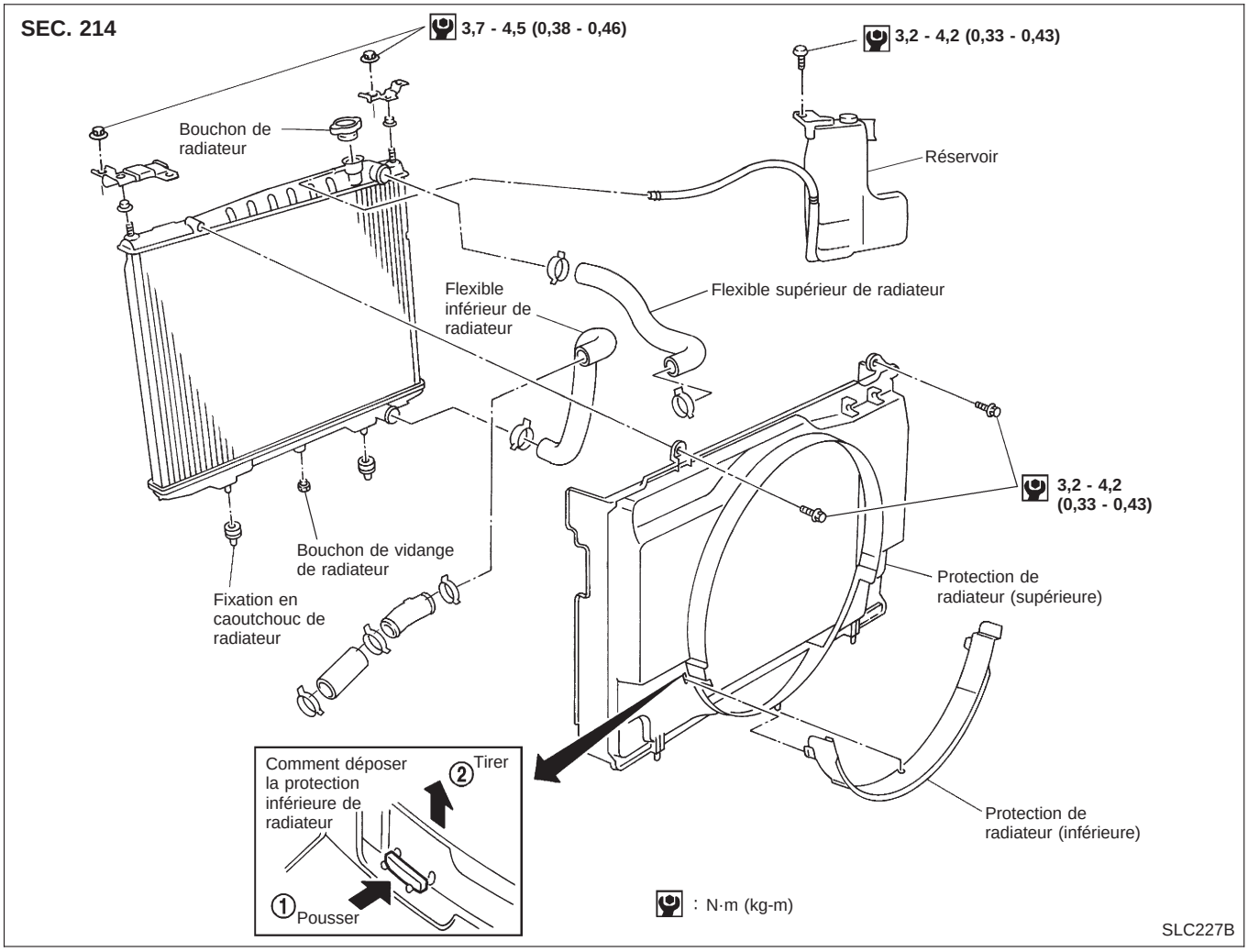

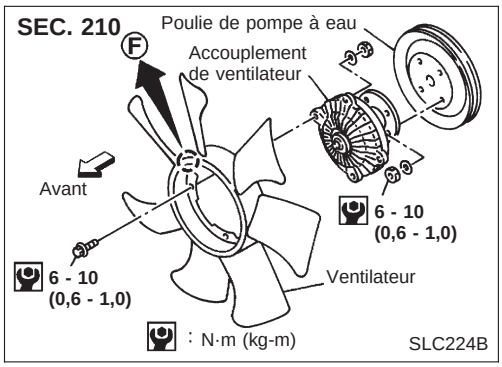

Ventilateur de refroidissement (entraîné par vilebrequin)

DEPOSE ET REPOSE

- Ne pas relâcher la tension de la courroie d'entraînement lors de la dépose du ventilateur/de la poulie de pompe à eau.
- L'accouplement de ventilateur ne peut pas être démonté et devra être remplacé comme un ensemble. Si le repère avant Ⓕ existe, reposer le ventilateur de façon à ce que le côté indiqué par le repère Ⓕ soit disposé face à l'avant.
- Ne reposer la courroie d'entraînement qu'une fois que les boulons/écrous du flasque de la pompe à eau ont été correctement serrés sur le ventilateur et l'accouplement de ventilateur.
- Un alignement correct de ces composants est indispensable. Un alignement incorrect provoquera une oscillation de ces derniers et pourra éventuellement déclencher un détachement du ventilateur de la pompe à eau, créant ainsi des dégâts importants.

Simpo PDF Merge and Split Unregistered Version - http://www.simpopdf.com

Ventilateur de refroidissement (entraîné par vilebrequin) (Suite)

INSPECTION

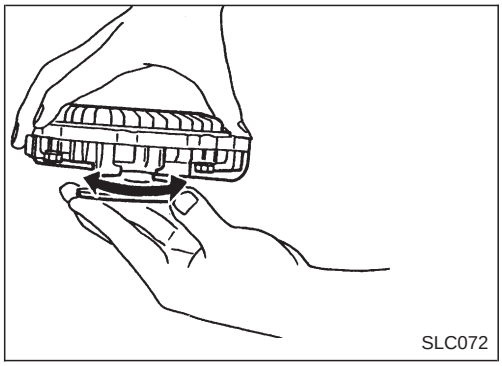
SLC072

Vérifier que l'accouplement de ventilateur fonctionne correctement, qu'il ne présente pas d'oscillations, de fuites d'huile ou que le bimétal n'est pas tordu.

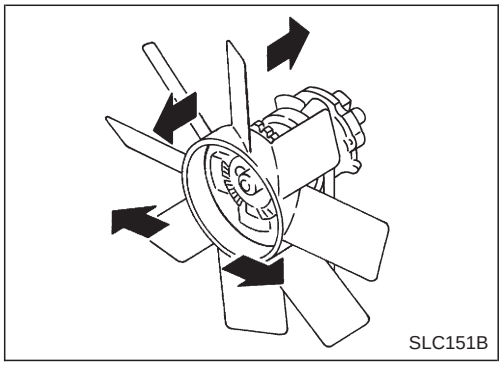
SLC151B

Après le montage, vérifier que le ventilateur n'oscille pas et ne claque pas lorsque le moteur tourne.

AVERTISSEMENT :

- **Lorsque le moteur tourne, veiller à garder ses mains et ses vêtements à distance des pièces qui tournent telles que les courroies d'entraînement et le ventilateur.**

Remplissage du circuit de refroidissement

Pour de plus amples détails concernant le remplissage du liquide de refroidissement du moteur, se reporter à la section MA (''Remplacement du liquide de refroidissement moteur'', ''ENTRETIEN DU MOTEUR'').

Simpo PDF Merge and Split Unregistered Version - http://www.simpopdf.com

Circuit de lubrification

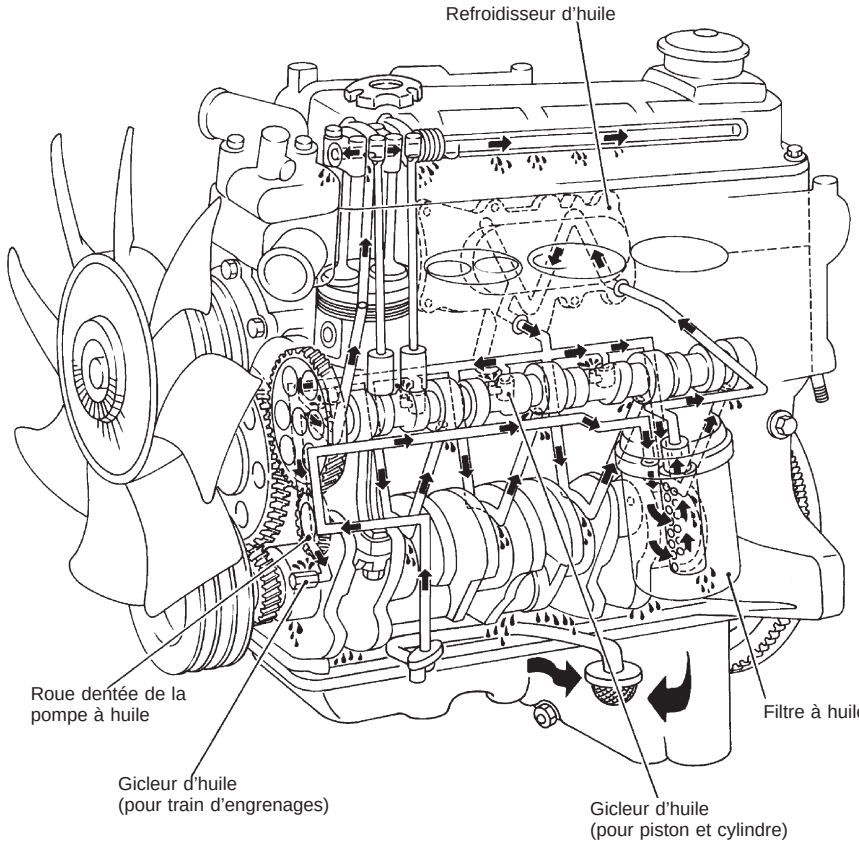

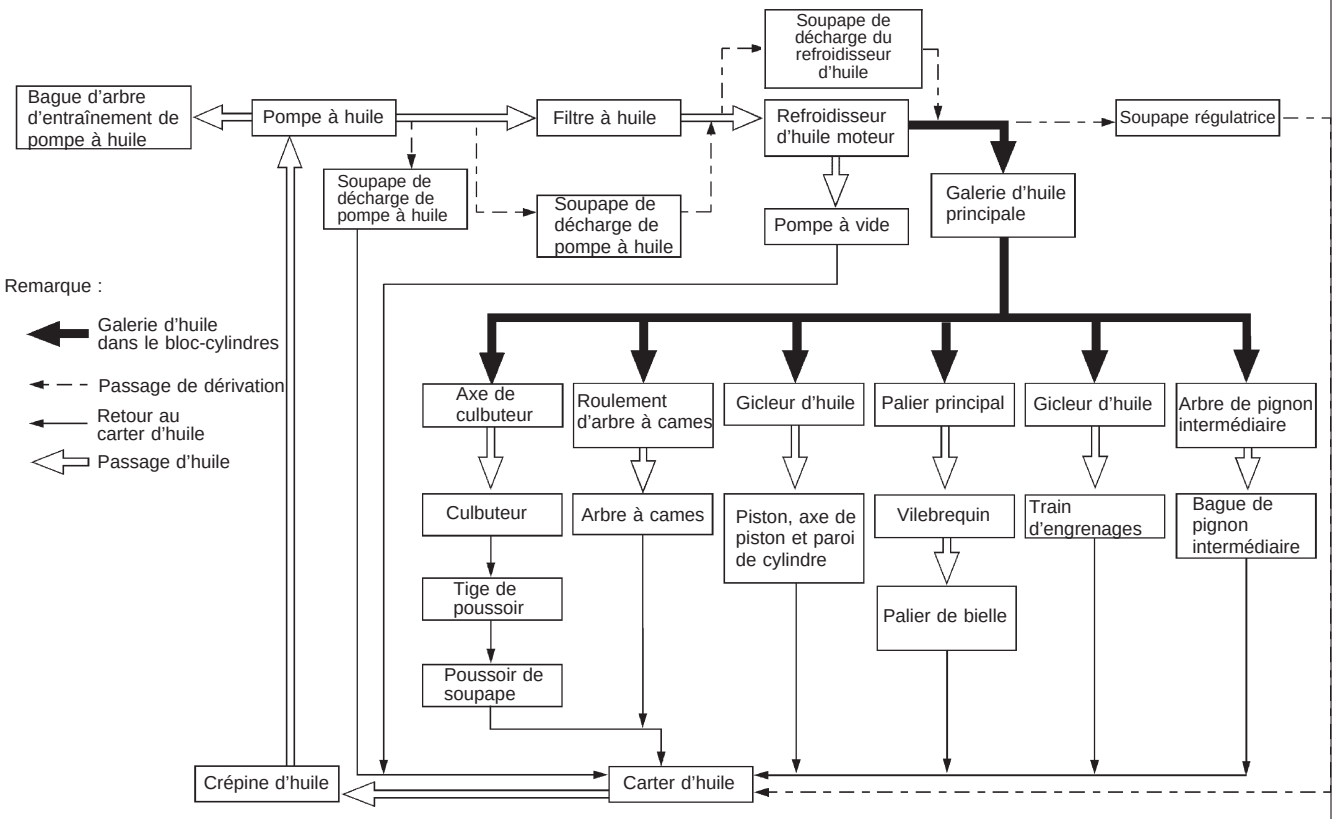

DLC014

Simpo PDF Merge and Split Unregistered Version - http://www.simpopdf.com

Vérification de la pression d'huile (entretien sur véhicule)

AVERTISSEMENT :

- **Veiller à ne pas se brûler, car le moteur et l'huile risquent d'être très chauds.**
- **La vérification de la pression d'huile doit être effectuée en position de point mort.**

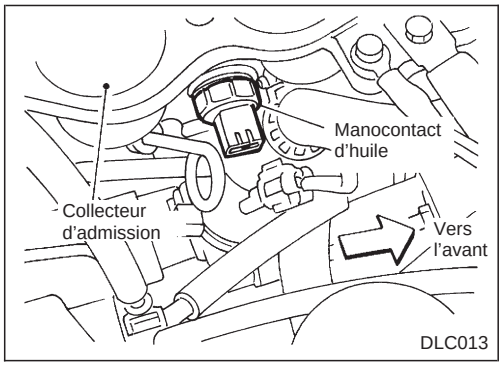

1. Vérifier le niveau d'huile.
2. Débrancher le connecteur de faisceau du manocontact d'huile.
3. Déposer le manocontact d'huile.

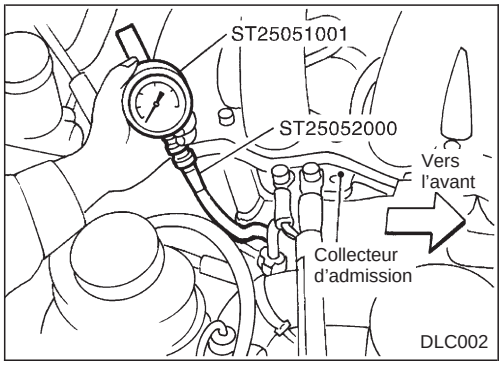

4. Monter un manomètre et un flexible.
5. Démarrer le moteur et le faire chauffer à la température de fonctionnement normale.
6. Vérifier la pression d'huile sans imposer de charge au moteur.

Régime du moteur tr/mn	Pression approximative de débit kPa (bar, kg/cm^2)
Régime de ralenti	Plus de 78 (0,78, 0,8)
3 000	294 - 392 (2,94 - 3,92, 3,0 - 4,0)

Si la différence est trop grande, vérifier les fuites éventuelles des passages d'huile et de la pompe à huile.

7. Reposer le manocontact d'huile à l'aide de produit d'étanchéité.
   Manocontact d'huile :
   : 10 - 13 N·m (1,0 - 1,3 kg-m)

Simpo PDF Merge and Split Unregistered Version - http://www.simpopdf.com

Pompe à huile

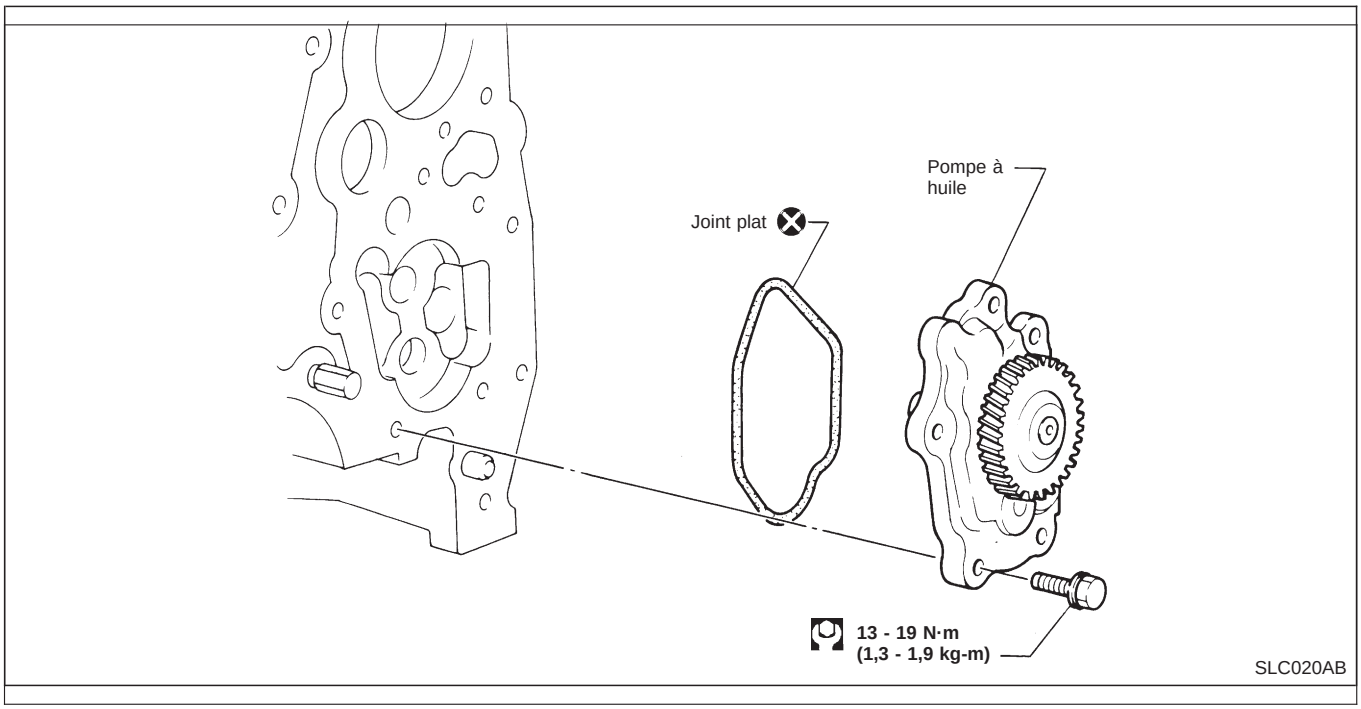

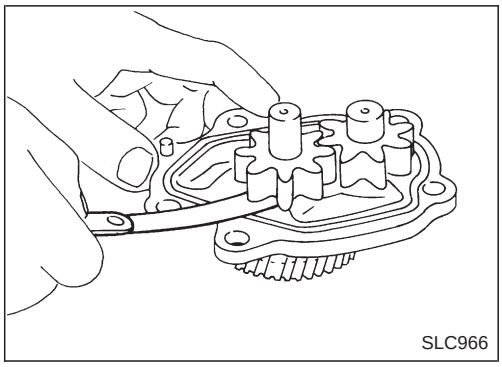
SLC966

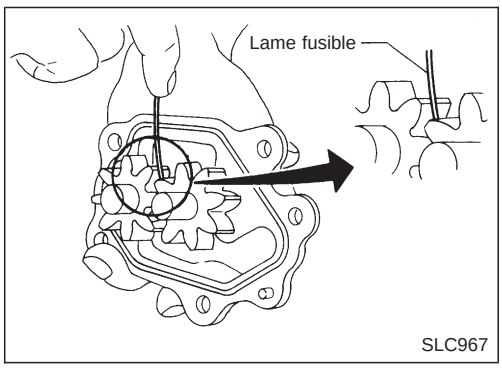

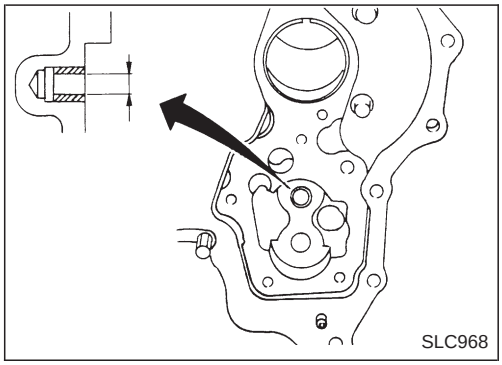
SLC968

INSPECTION DE LA POMPE A HUILE

1. Inspecter le corps de pompe, les pignons et l'arbre d'entraînement pour voir s'ils sont usés ou endommagés.
2. En utilisant un calibre d'épaisseur et une lame fusible, vérifier les jeux suivants.

Jeu latéral de pignon :
Moins de 0,13 mm

Battement de pignon :
Moins de 0,43 mm

3. Mesurer le diamètre intérieur ''A'' de la bague.

A : 13,012 - 13,106 mm

Simpo PDF Merge and Split Unregistered Version - http://www.simpopdf.com

Pompe à huile (Suite)

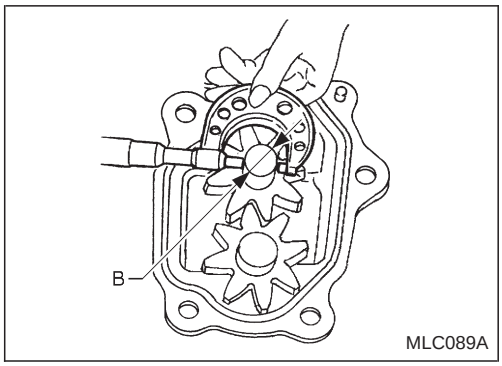

4. Mesurer le diamètre extérieur ‘‘B’’ de l’arbre de pignon d’entraînement.
   B : 12,974 - 12,992 mm
5. Calculer le jeu de la bague de la pompe à huile.
   Jeu de la bague de pompe à huile : A − B
   Moins de 0,15 mm

Si le jeu dépasse la limite, remplacer la bague ou la pompe à huile complète.

- **Lors de la repose de la pompe à huile, les boulons doivent être serrés en deux ou trois étapes dans l’ordre numérique.**
- **Après la repose, vérifier à la main que la pompe à huile tourne correctement.**

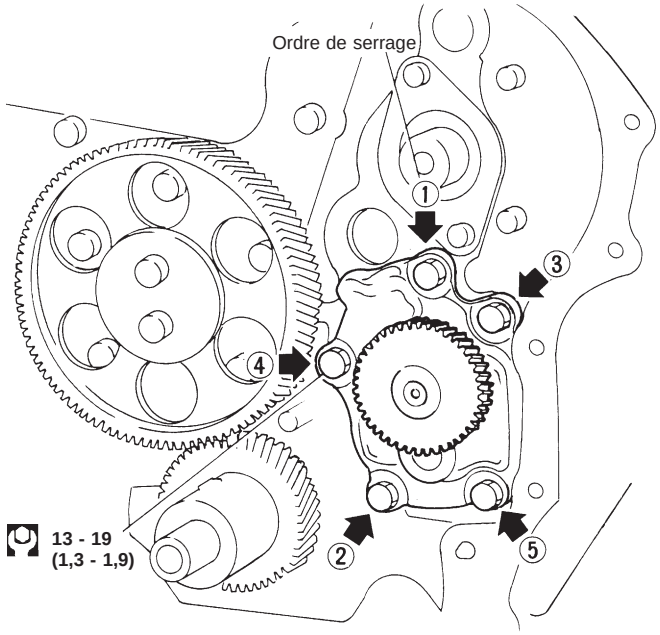

Pour l’installation du carter de distribution, se reporter à la section EM (aux chapitres ‘‘CARTER DU PIGNON DE DISTRIBUTION’’, ‘‘Remontage’’, ‘‘REVISION DU MOTEUR’’).

Simpo PDF Merge and Split Unregistered Version - http://www.simpopdf.com

Support de filtre à huile

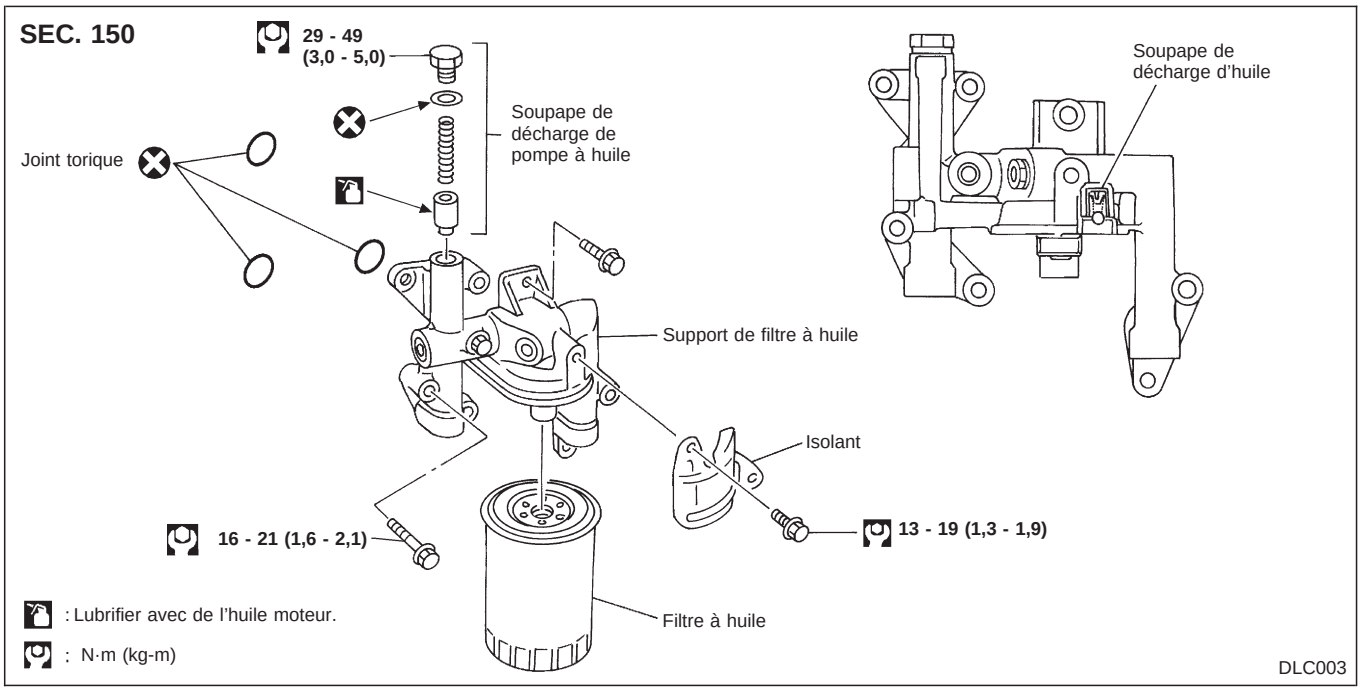

INSPECTION DE LA SOUPAPE DE DECHARGE DE POMPE A HUILE

1. Vérifier visuellement si les pièces ne sont pas usées ou endommagées.
2. Enduire la soupape de décharge d'huile moteur et s'assurer qu'elle chute en douceur dans l'orifice de soupape sous l'effet de son propre poids.

En cas de dommage, remplacer le jeu de soupape de décharge de pompe à huile.

INSPECTION DE LA SOUPAPE DE DECHARGE DU FILTRE A HUILE

Vérifier que la soupape de décharge du filtre à huile se déplace en douceur et qu'elle n'est pas endommagée en poussant la bille.

Si la pièce est abîmée, remplacer l'ensemble du support de filtre à huile.

Simpo PDF Merge and Split Unregistered Version - http://www.simpopdf.com

Refroidisseur d'huile

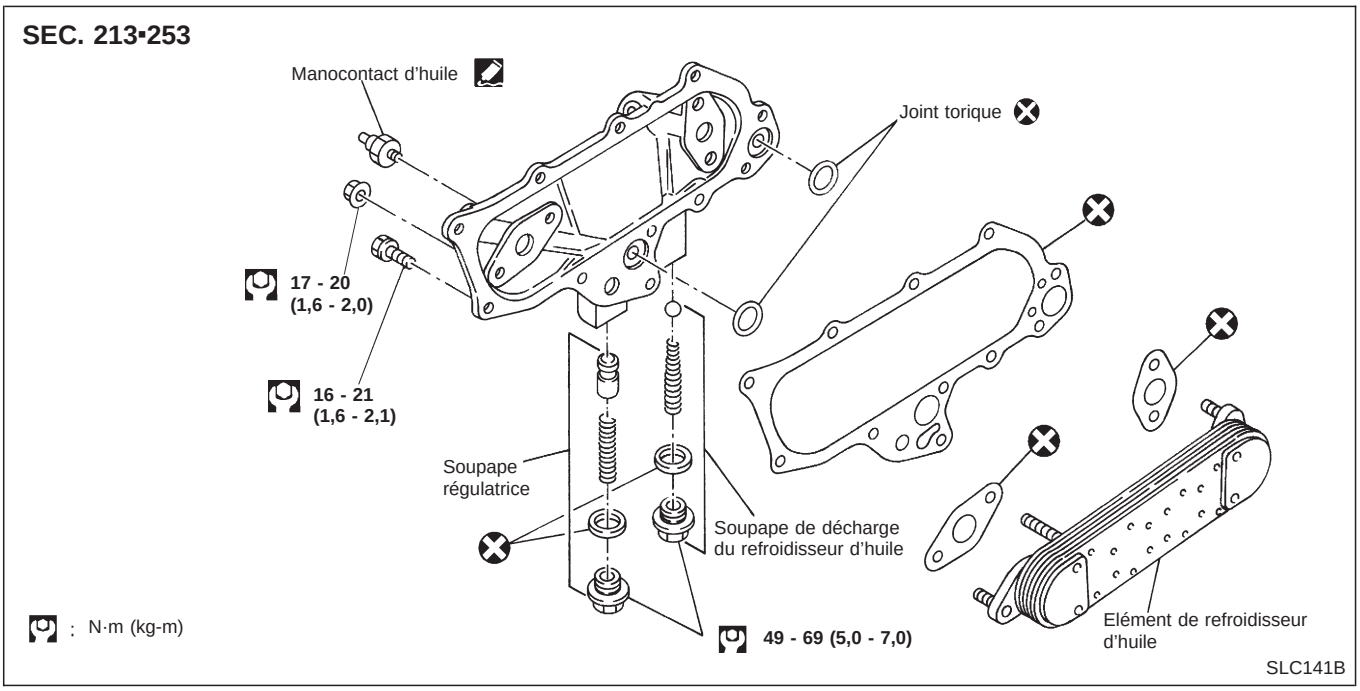

INSPECTION DE LA SOUPAPE DE DECHARGE DU REFROIDISSEUR D'HUILE

Vérifier si la soupape de décharge du refroidisseur ne présente pas de mouvements, de fissures et de cassures en poussant la bille.
En cas de dommage, remplacer le jeu de soupape de décharge du refroidisseur d'huile.

INSPECTION DE LA SOUPAPE REGULATRICE

1. Vérifier visuellement si les composants ne sont pas usés ou endommagés.
2. Enduire la soupape régulatrice d'huile moteur et s'assurer qu'elle chute en douceur dans l'orifice de soupape sous l'effet de son propre poids.

En cas de dommage, remplacer le jeu de soupape régulatrice.

Simpo PDF Merge and Split Unregistered Version - http://www.simpopdf.com

Gicleur d'huile

INSPECTION (pour train d'engrenages)

Vérifier que les orifices ne sont pas obstrués. Les nettoyer avec un fil si nécessaire.

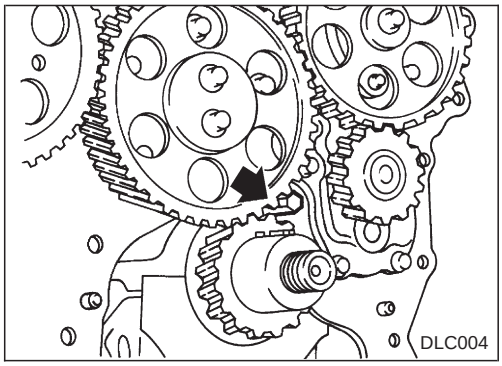

Le gicleur d'huile doit être monté avec l'orifice de passage d'huile face au pignon de vilebrequin et au pignon intermédiaire.

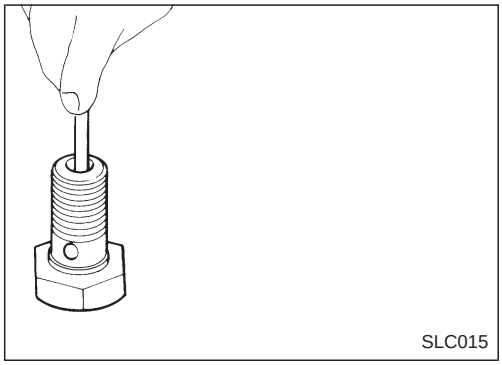

INSPECTION (pour piston)

1. Pousser la soupape de coupure du boulon de gicleur d'huile avec une tige en résine ou en cuivre propre afin de vérifier que la soupape de coupure bouge sans heurts et présente la force répulsive nécessaire.
2. S'assurer que le passage du gicleur d'huile n'est pas obturé. Nettoyer avec un fil si nécessaire.

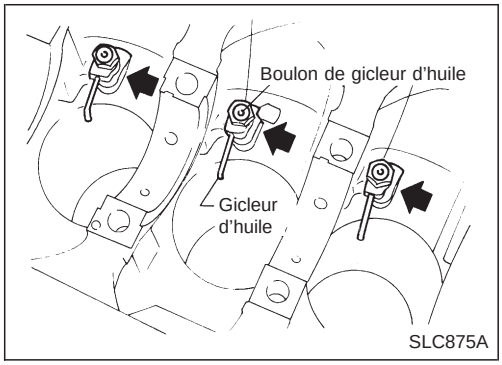

Lors de la mise en place du gicleur d'huile, veiller à ce que son bossage soit aligné sur l'orifice du bloc-cylindres.

Boulon de gicleur d'huile :

: 29 - 39 N·m (3,0 - 4,0 kg-m)

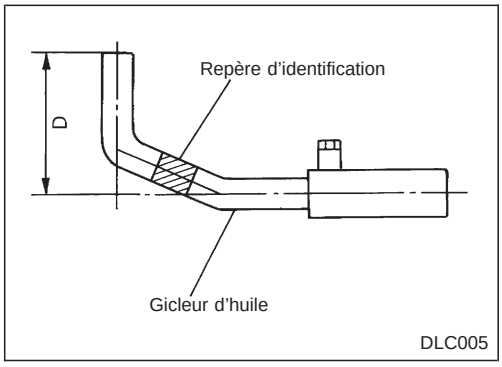

		TD25
Dimension "D" mm	Type I	–
	Type II	12
Couleur d'identification		–

Simpo PDF Merge and Split Unregistered Version - http://www.simpopdf.com

Circuit de refroidissement

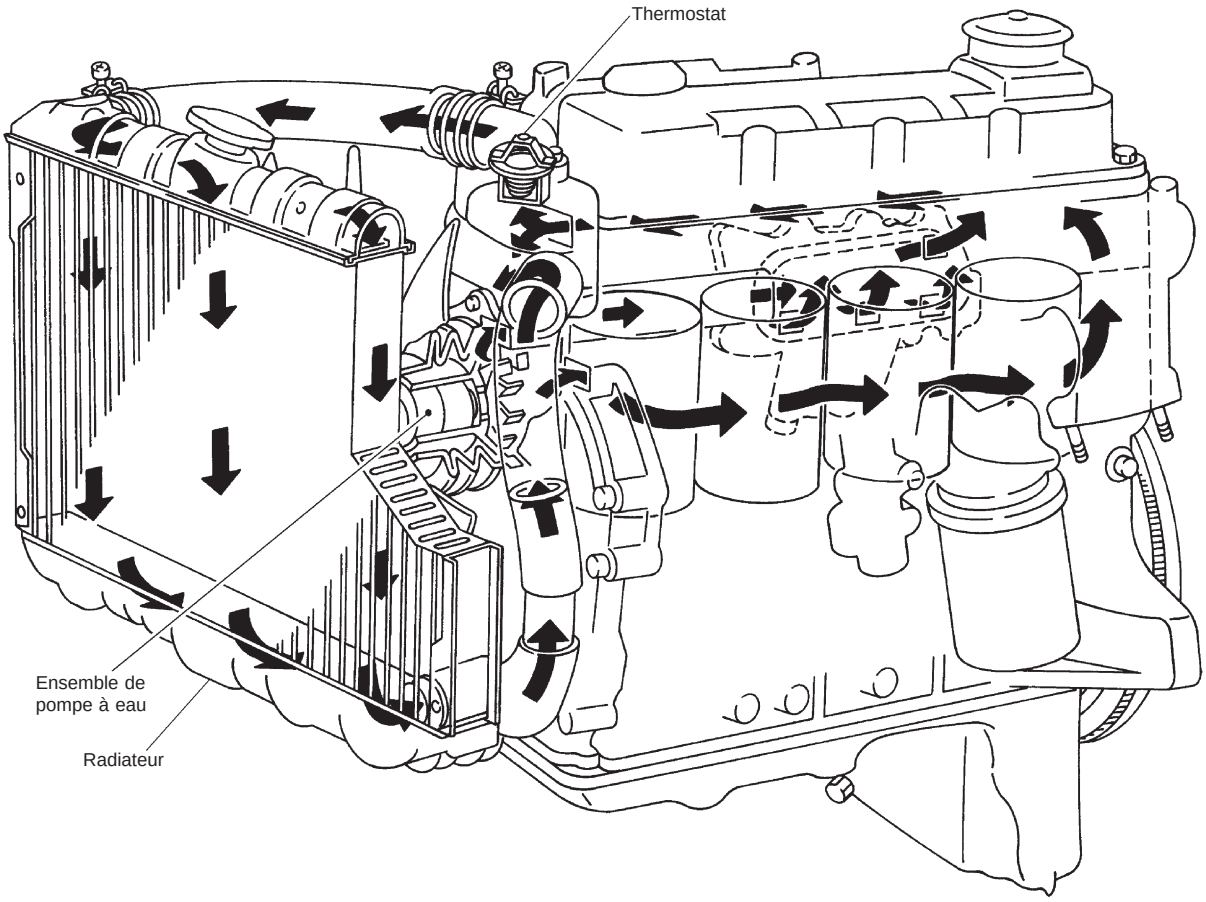

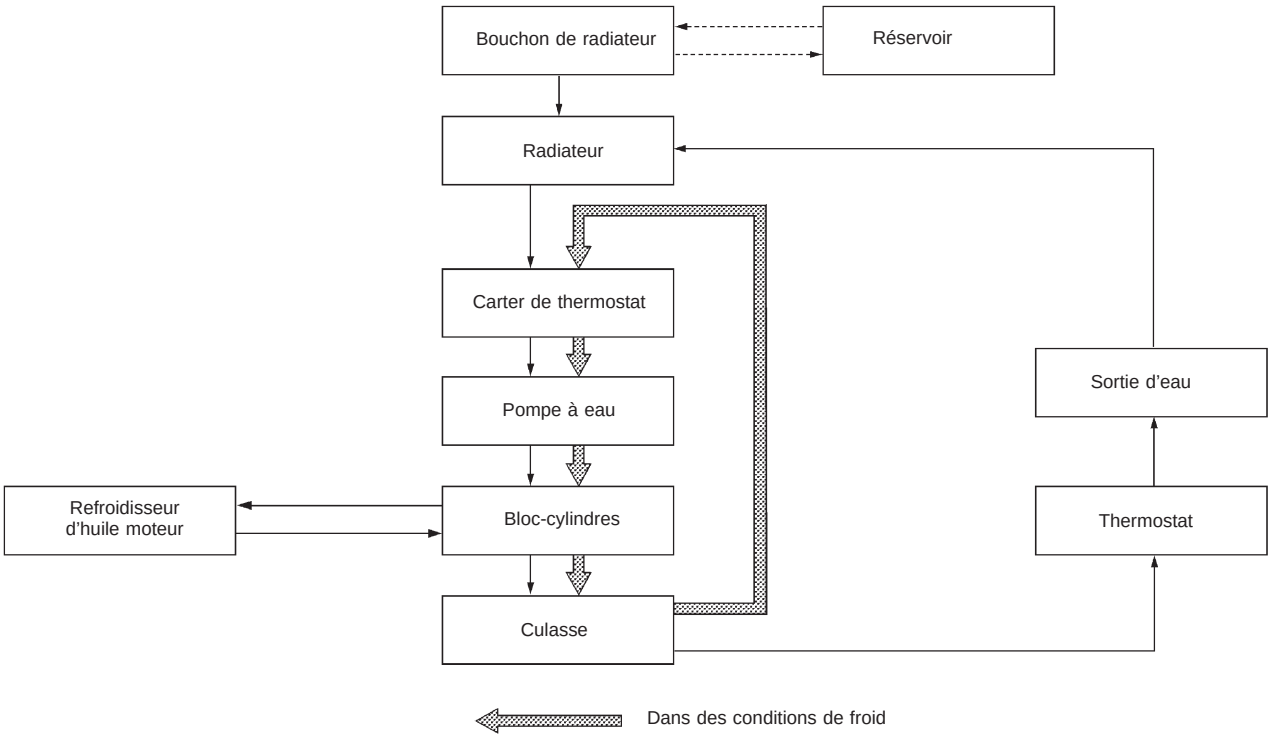

DLC006

Simpo PDF Merge and Split Unregistered Version - http://www.simpopdf.com

Vérification du circuit de refroidissement

AVERTISSEMENT :
Ne jamais déposer le bouchon de radiateur lorsque le moteur est chaud. Ceci peut entraîner des brûlures graves provoquées par le liquide sous haute pression s'échappant du radiateur.
Entourer le bouchon d'un chiffon épais et le desserrer avec précaution d'un quart de tour pour laisser la pression s'échapper. Puis retirer complètement le bouchon.

VERIFICATION DES FLEXIBLES

Vérifier que les flexibles ne présentent pas de mauvaise fixation, de fuites, de fissures, de dommages, de raccords desserrés, d'éraflures ni de détériorations.

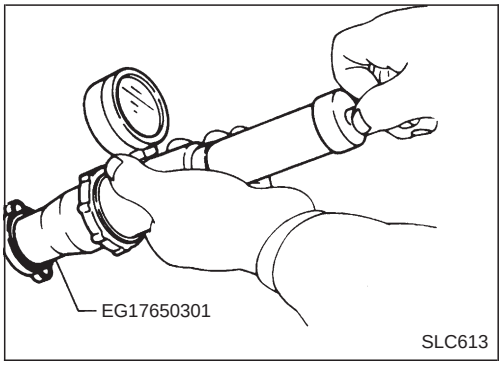

VERIFICATION DU BOUCHON DE RADIATEUR

Exercer une pression sur le bouchon de radiateur au moyen d'un vérificateur de bouchon afin de s'assurer que son fonctionnement est convenable.

Pression d'ouverture du bouchon de radiateur :
78 - 98 kPa (0,78 - 0,98 bar, 0,8 - 1,0 kg/cm^2)

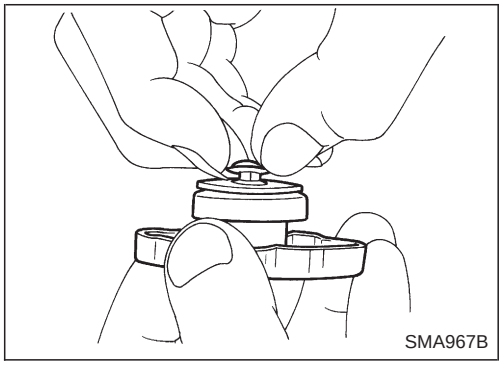

Tirer sur la soupape à dépression pour l'ouvrir. Vérifier qu'elle se referme totalement une fois relâchée.

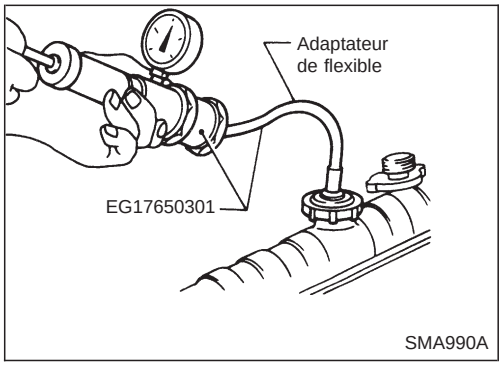

VERIFICATION DE L'ETANCHEITE DU CIRCUIT DE REFROIDISSEMENT

Exercer une pression sur le circuit de refroidissement au moyen d'un vérificateur pour s'assurer qu'il ne présente pas de fuites.

Pression d'essai :
157 kPa (1,57 bar, 1,6 kg/cm^2)

ATTENTION :
Une pression supérieure à celle spécifiée peut endommager le radiateur.

Simpo PDF Merge and Split Unregistered Version - http://www.simpopdf.com

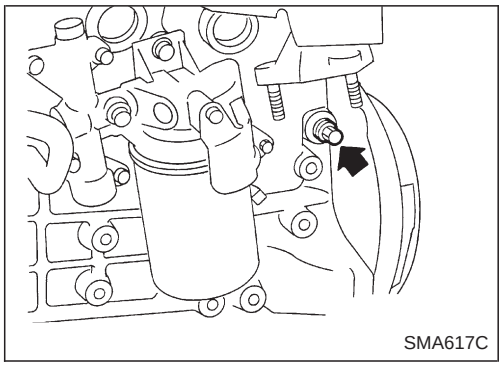
SMA617C

Pompe à eau et ventilateur de refroidissement (entraîné par arbre à cames)

DEPOSE ET REPOSE

Vidanger le liquide de refroidissement par les bouchons de vidange du bloc-cylindres et du radiateur.

Bouchon de vidange du bloc-cylindres (utiliser du produit d'étanchéité adéquat) :
: 20 - 29 N·m (2,0 - 3,0 kg-m)

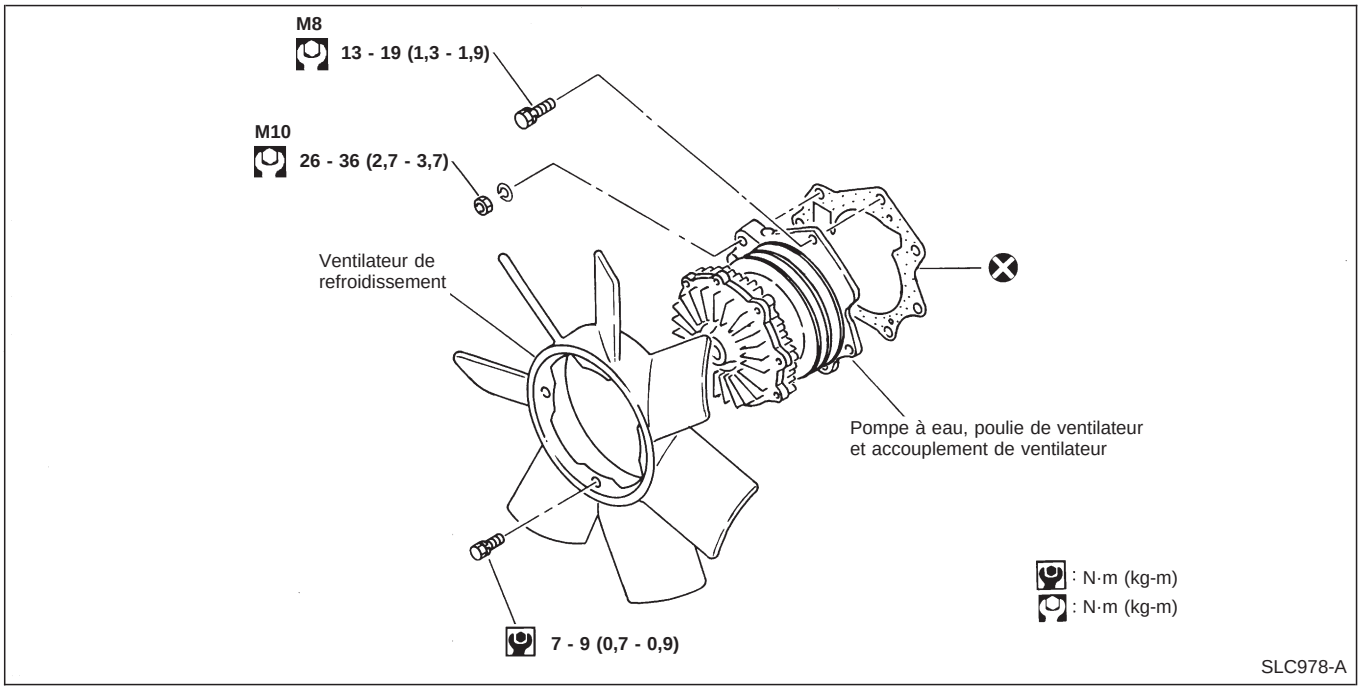

SLC978-A

ATTENTION :
- **Lors de la dépose de l'ensemble de pompe à eau, veiller à ne pas renverser de liquide de refroidissement sur la courroie d'entraînement.**
- **La pompe à eau ne peut pas être démontée et doit être remplacée dans sa totalité.**
- **Toujours remplacer le joint plat par une pièce neuve.**
- **Après le montage, vérifier que le ventilateur n'oscille pas et ne bat pas lorsque le moteur tourne.**
- **Après avoir reposé la pompe à eau, rebrancher le flexible et le fixer avec un collier, puis vérifier s'il n'y a pas de fuites à l'aide d'un vérificateur de bouchon de radiateur.**

AVERTISSEMENT :
Lorsque le moteur tourne, veiller à garder ses mains et ses vêtements à distance des pièces qui tournent telles que les courroies d'entraînement et le ventilateur.

Simpo PDF Merge and Split Unregistered Version - http://www.simpopdf.com

Pompe à eau et ventilateur de refroidissement (entraîné par arbre à cames) (Suite)

INSPECTION

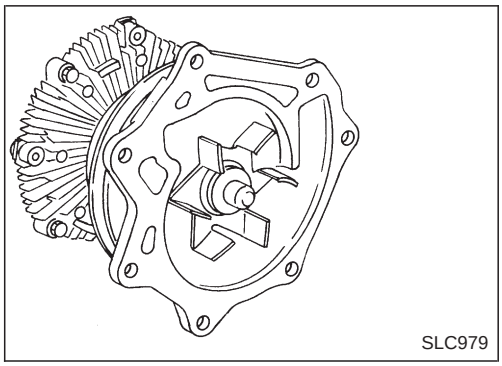
SLC979

1. Vérifier s'il n'y a pas de parties fortement rouillées ou corrodées dans l'ensemble de corps et sur les ailettes.

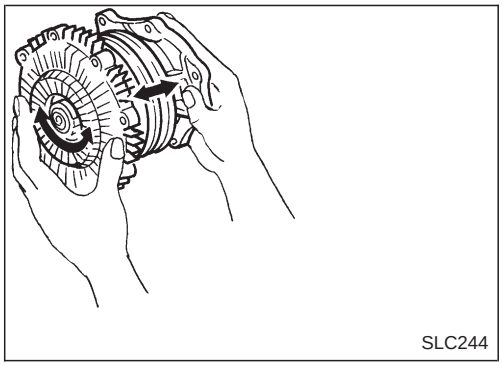
SLC244

2. Vérifier si le fonctionnement n'est pas irrégulier par suite d'un jeu excessif.

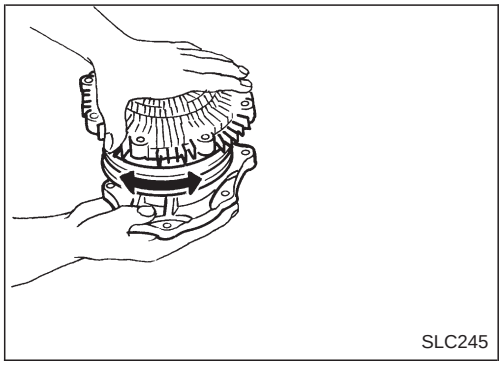
SLC245

3. Vérifier que l'accouplement de ventilateur fonctionne correctement, qu'il ne présente pas d'oscillations, de fuites d'huile ou que le bimétal n'est pas tordu.

La pompe à eau et l'accouplement de ventilateur ne peuvent pas être démontés et doivent être remplacés comme un ensemble.

Simpo PDF Merge and Split Unregistered Version - http://www.simpopdf.com

Thermostat

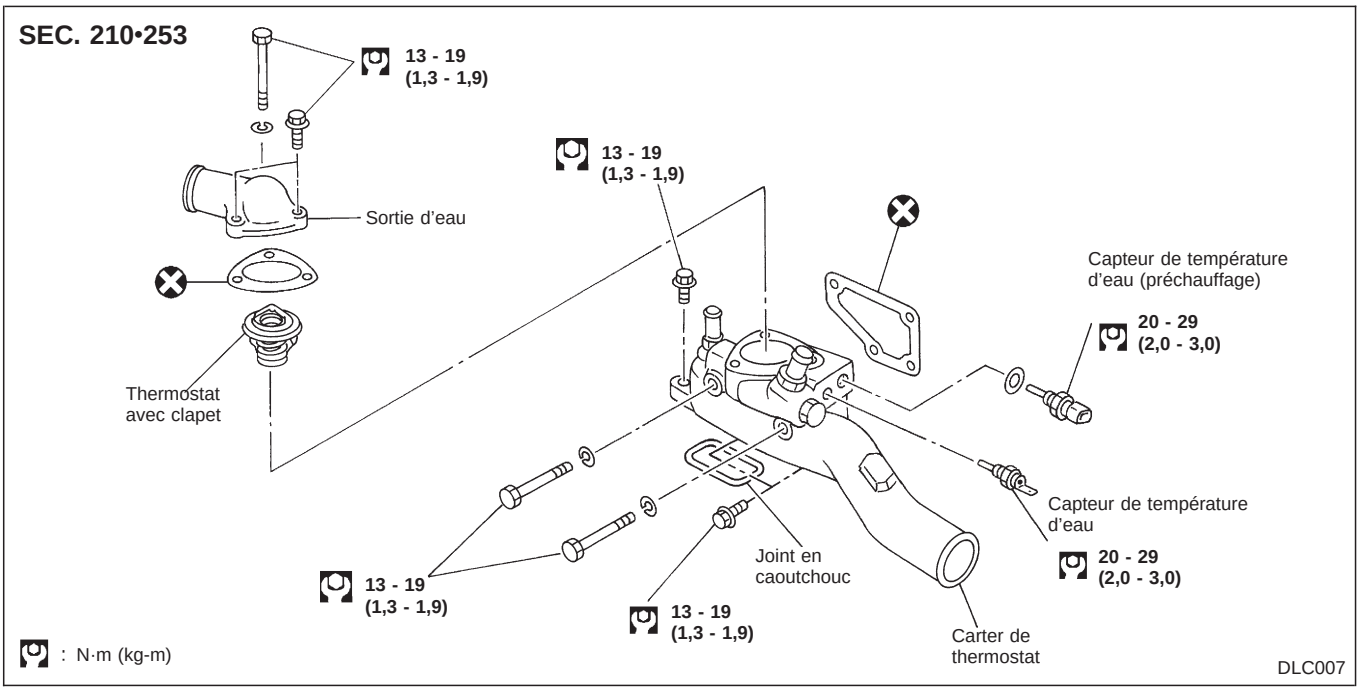

- **Après la repose, faire tourner le moteur pendant quelques minutes et vérifier qu'il n'y a pas de fuites.**
- **Veiller à ne pas renverser de liquide de refroidissement sur le compartiment moteur. Placer un chiffon pour absorber le liquide de refroidissement.**

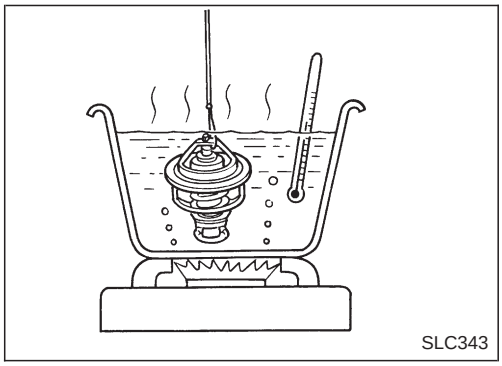

INSPECTION

1. Vérifier l'assise de la soupape aux températures habituelles. Il doit avoir une bonne assise.
2. Vérifier la température d'ouverture de la soupape et le levage de cette dernière.

	Type pour pays tropicaux	Type standard
Température d'ouverture de la soupape °C	76,5	82
Levage de la soupape mm/°C	Plus de 8/90	Plus de 8/95

3. Vérifier ensuite si la soupape se ferme à 5°C en dessous de la température d'ouverture de la soupape.

Simpo PDF Merge and Split Unregistered Version - http://www.simpopdf.com

Radiateur

DEPOSE ET REPOSE

1. Déposer le couvercle inférieur.
2. Vidanger le liquide de refroidissement par le bouchon de vidange.
3. Débrancher les flexibles inférieur et supérieur du radiateur.
4. Déposer la protection inférieure du radiateur.
5. Débrancher le flexible du réservoir.
6. Déposer le radiateur.
7. Après avoir réparé ou remplacé le radiateur, reposer toutes les pièces déposées dans l'ordre inverse de leur dépose.

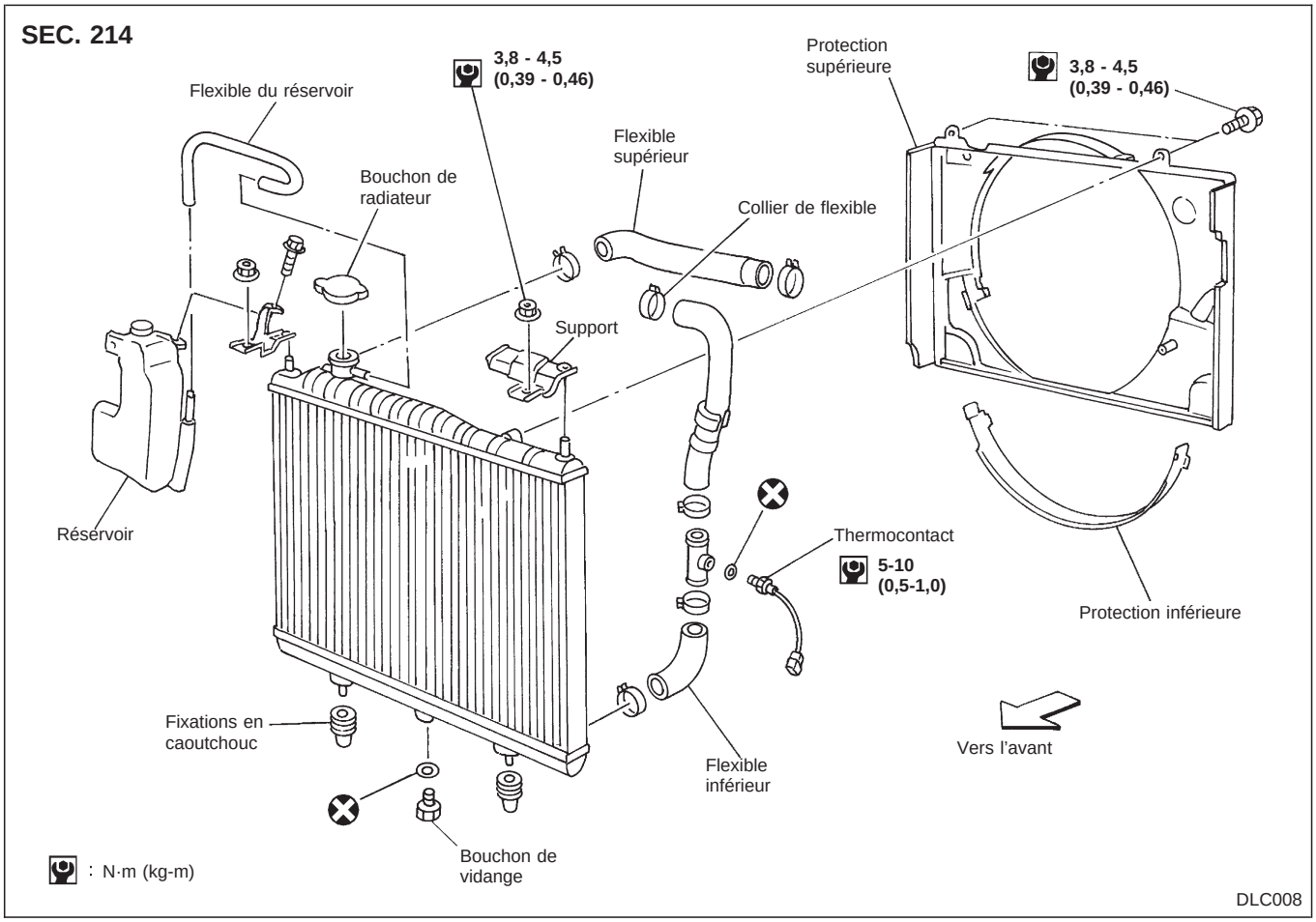

Remplissage de liquide de refroidissement du moteur

Pour de plus amples détails concernant le remplissage du liquide de refroidissement du moteur, se reporter à la section MA (''REMPLISSAGE DU LIQUIDE DE REFROIDISSEMENT MOTEUR'' au chapitre ''Remplacement du liquide de refroidissement moteur'').

Simpo PDF Merge and Split Unregistered Version - http://www.simpopdf.com

Schéma de câblage

LC-COOL/F-01

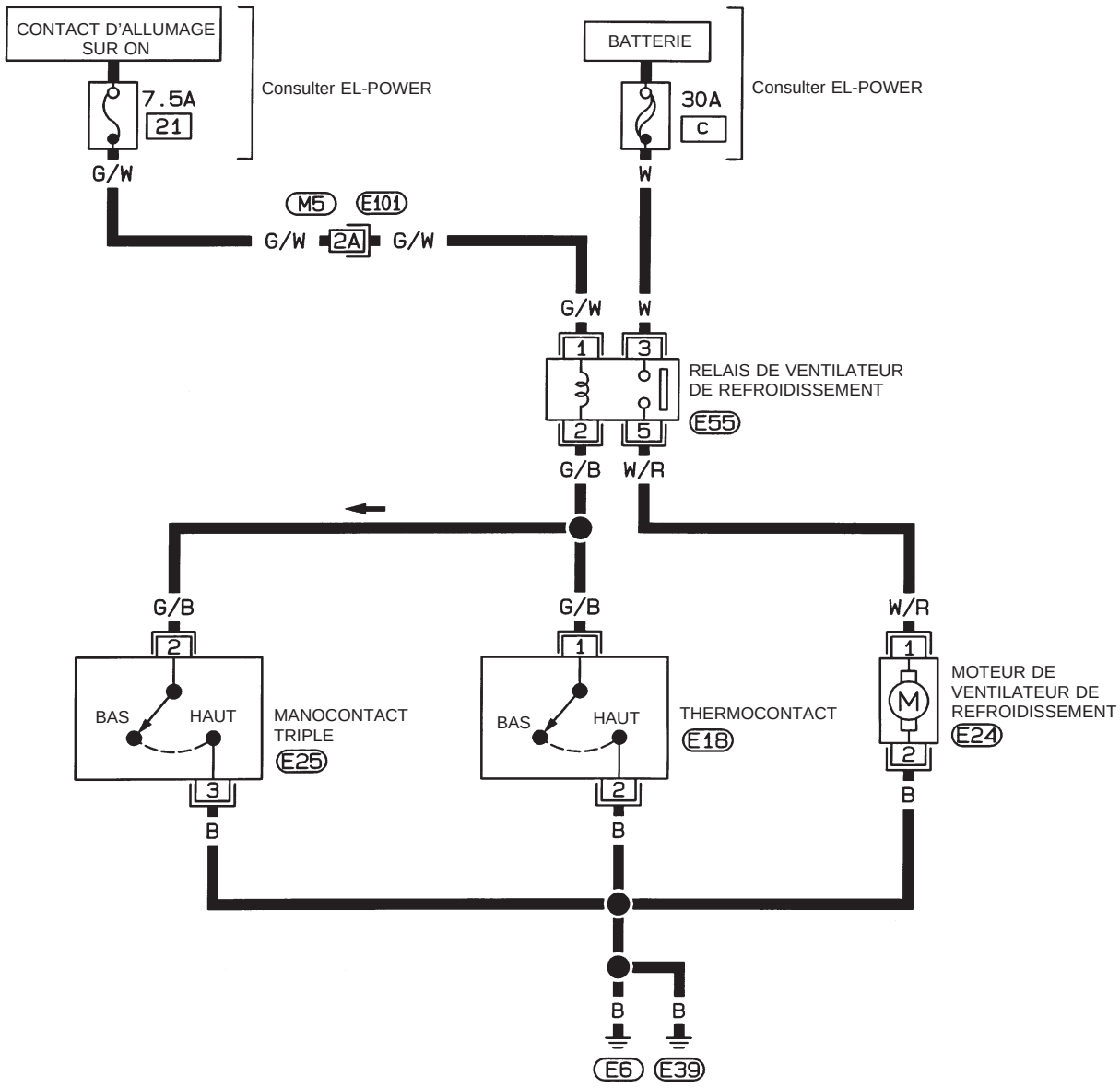

E18 GY, E24 GY

E25 B

E55 L

Consulter la dernière page dépliante.

M5, E101

HLC005

Simpo PDF Merge and Split Unregistered Version - http://www.simpopdf.com

Ventilateur de refroidissement (entraîné par moteur)

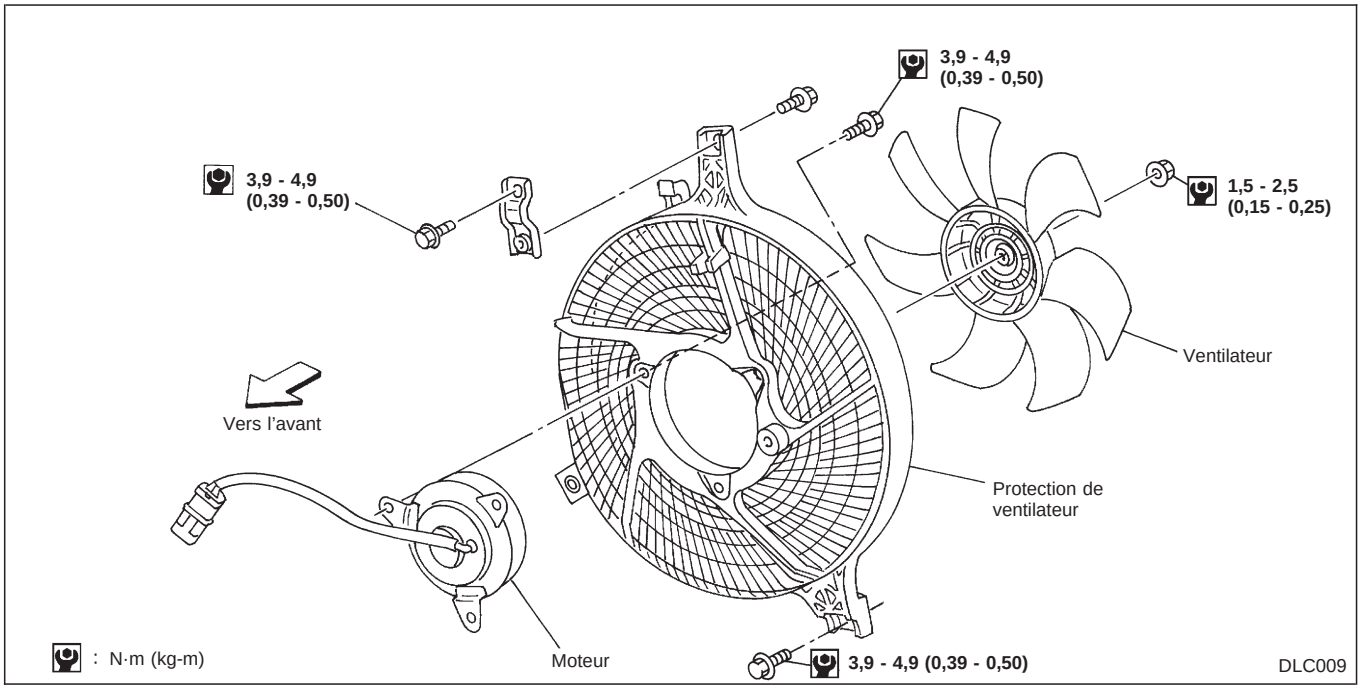

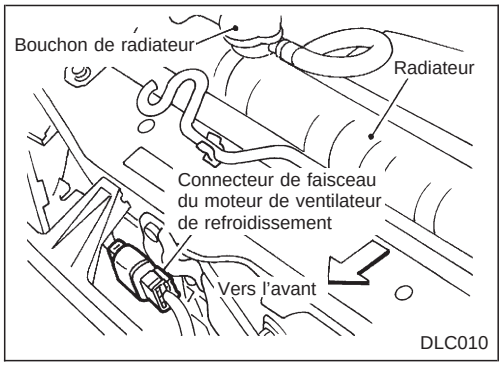

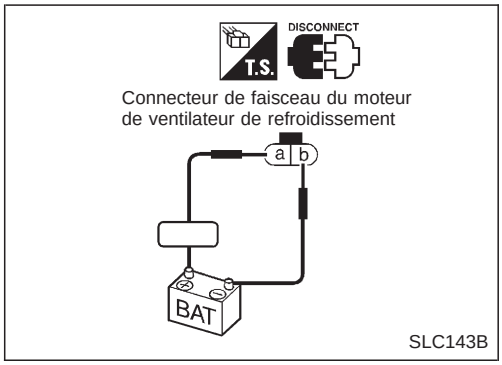

Inspection des composants électriques

MOTEUR DE VENTILATEUR DE REFROIDISSEMENT

1. Débrancher le connecteur de faisceau du moteur de ventilateur de refroidissement.

2. Fournir de la tension de batterie aux bornes du moteur de ventilateur de refroidissement et vérifier son bon fonctionnement.
   Le moteur de ventilateur de refroidissement doit fonctionner.
   Si le résultat n'est pas satisfaisant, remplacer le moteur de ventilateur de refroidissement.

Simpo PDF Merge and Split Unregistered Version - http://www.simpopdf.com

Inspection des composants électriques (Suite)

RELAIS DE VENTILATEUR DE REFROIDISSEMENT

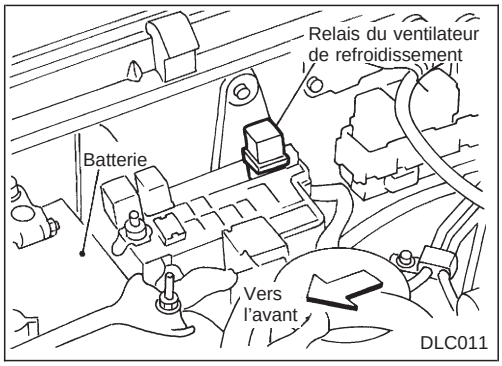

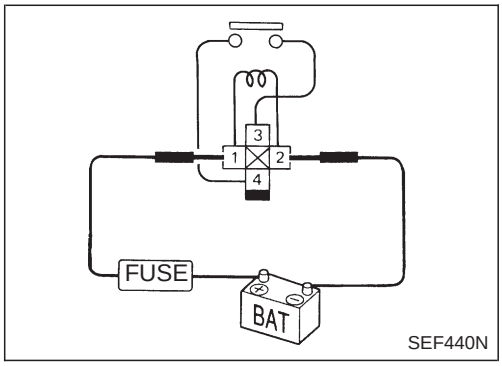

Vérifier la continuité entre les bornes ③ et ④.

Conditions	Continuité
Courant continu de 12V entre les bornes ① et ②	Oui
Aucune alimentation électrique	Non

Si le résultat n'est pas satisfaisant, remplacer le relais.

THERMOCONTACT

1. Débrancher le connecteur de faisceau du thermocontact.

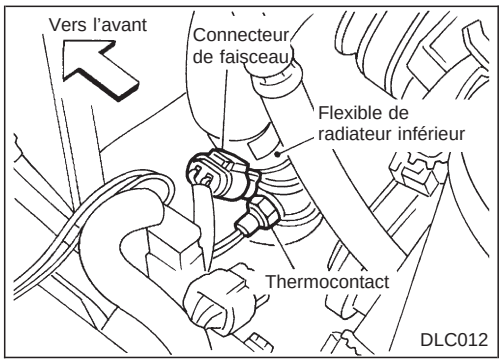

2. Vérifier le fonctionnement comme indiqué sur la figure.

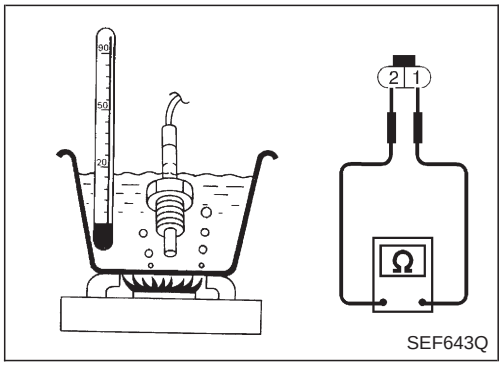

Température du réfrigérant °C	Fonctionnement	Continuité
Supérieure à 92 - 98	ARRET → MARCHE	MARCHE : existe.
Inférieure à 87 - 93	MARCHE → ARRET	ARRET : n'existe pas.

MANOCONTACT TRIPLE

Pour l'inspection de ce contact, se reporter à la section HA (''MANOCONTACT TRIPLE'' au chapitre ''Inspection des composants électriques'').

Simpo PDF Merge and Split Unregistered Version - http://www.simpopdf.com

Radiateur (de type aluminium)

SEC. 214

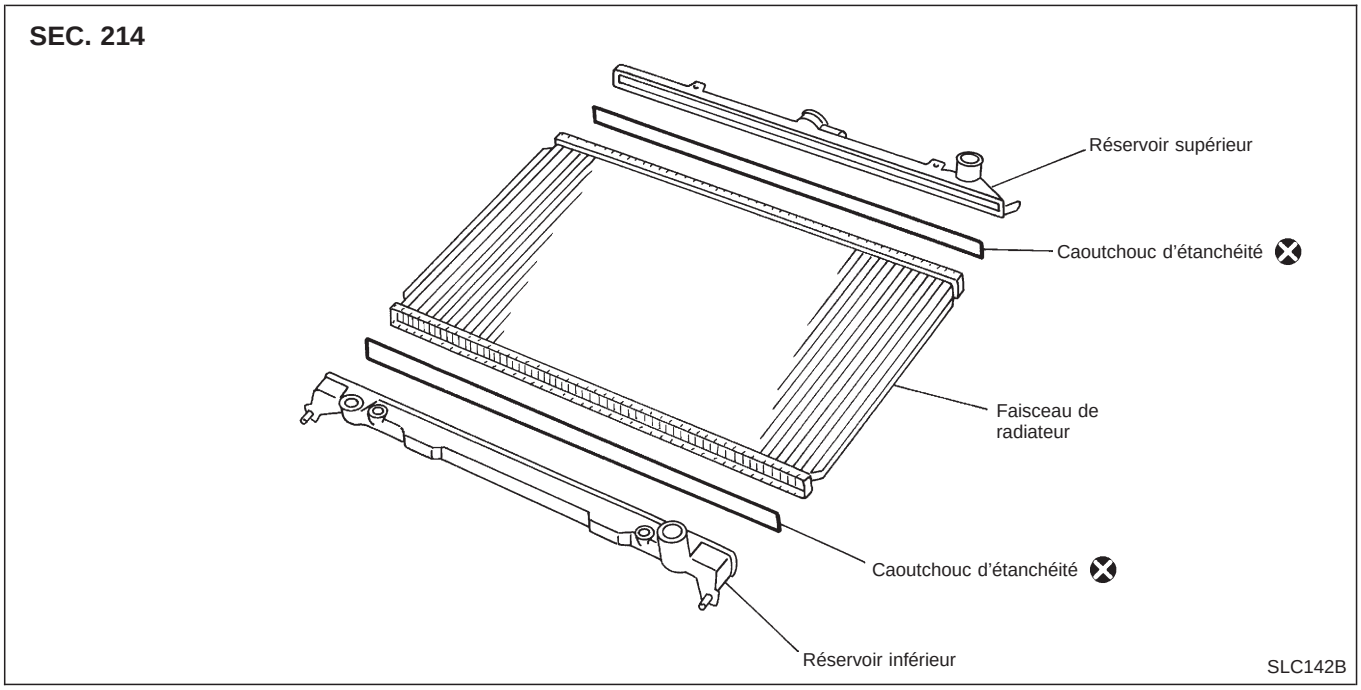

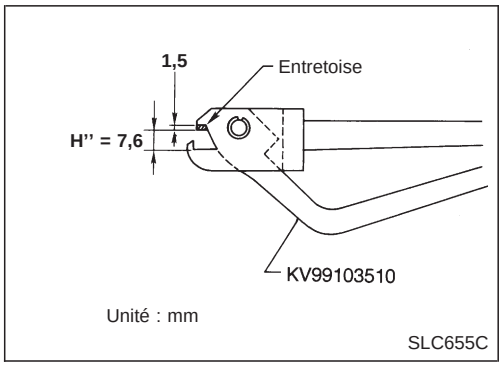

PREPARATION

1. Fixer une entretoise au bout des pinces A à plaque de radiateur.
   Caractéristiques de l'entretoise : 1,5 mm épaisseur x 18 mm largeur x 8,5 mm longeur.
2. S'assurer que lorsque les pinces A à plaque de radiateur sont fermées, la cote H″ est d'environ 7,6 mm.
3. Si nécessaire, régler la dimension H″ à l'aide de l'entretoise.

- **Si les bords du faisceau de radiateur ne peuvent pas être rabattus comme indiqué, les pinces A de la plaque de radiateur doivent être adaptées. Se reporter au Bulletin Technique LC 91-001.**

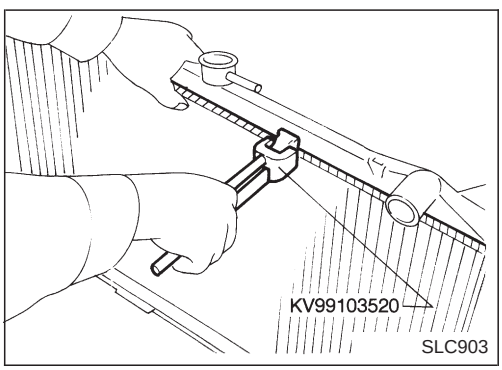

DEMONTAGE

1. Déposer le réservoir à l'aide de l'outil.

Simpo PDF Merge and Split Unregistered Version - http://www.simpopdf.com

Radiateur (de type aluminium) (Suite)

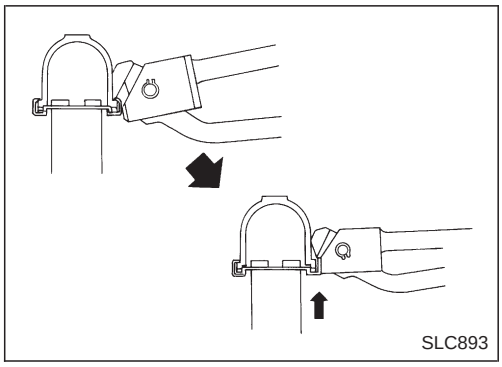
SLC893

- Serrer le bord rabattu et le plier vers le haut de sorte que l'outil glisse et sorte.

Ne pas trop plier.

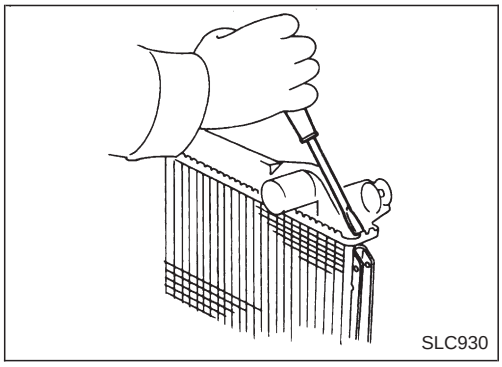
SLC930

- Dans les zones où l'outil ne peut pas être utilisé, se servir d'un tournevis pour plier le bord vers le haut.

Prendre garde de ne pas endommager le réservoir.

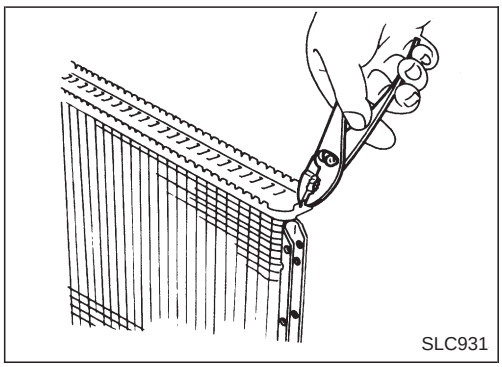
SLC931

2. S'assurer que le rebord est dressé à la verticale.

REMONTAGE

1. Nettoyer la partie de contact du réservoir.

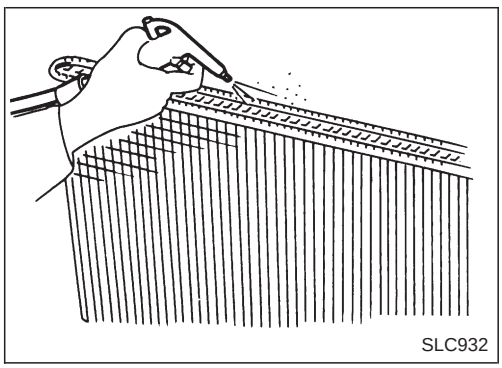
SLC932

2. Installer un joint en caoutchouc.

L'enfoncer avec les doigts.
Prendre garde de ne pas tordre le joint en caoutchouc.

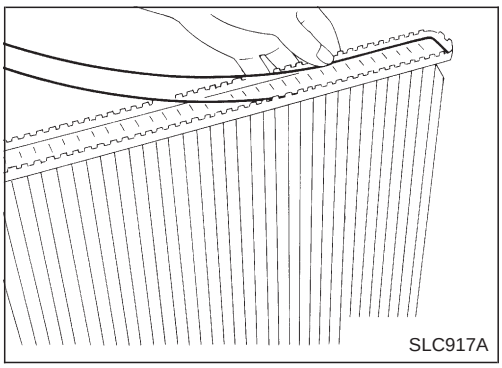
SLC917A

Simpo PDF Merge and Split Unregistered Version - http://www.simpopdf.com

Radiateur (de type aluminium) (Suite)

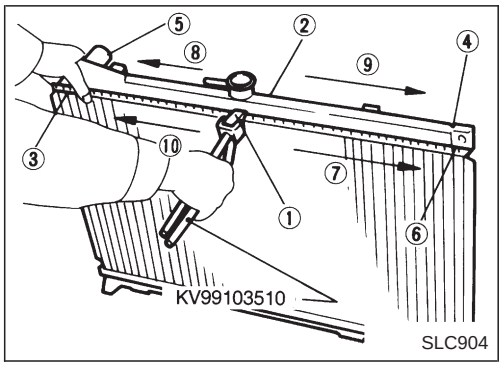

3. Mater le réservoir à l'aide de l'outil dans l'ordre indiqué.

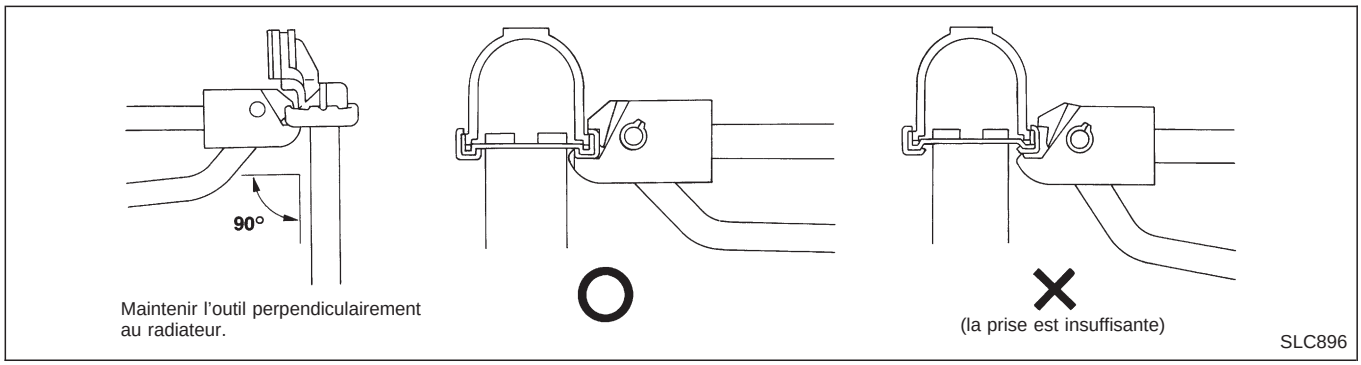

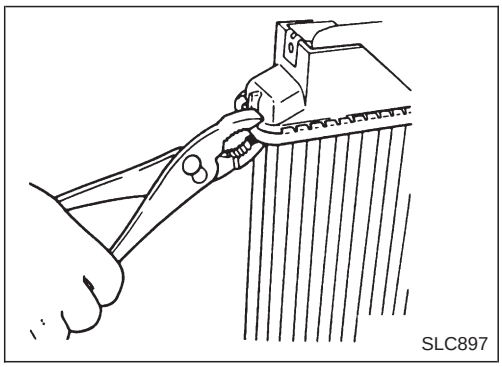

- Utiliser des pinces aux endroits où l'outil n'est pas utilisable.

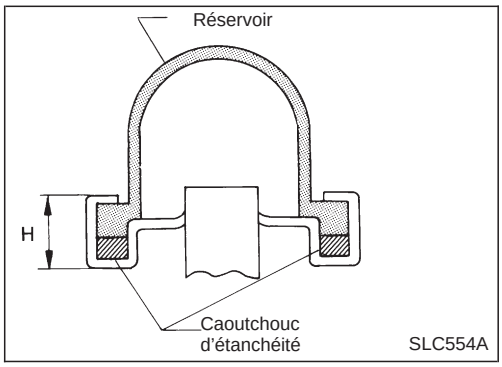

4. S'assurer que le bord est entièrement rabattu vers le bas.
   Hauteur standard "H" :
   8,0 - 8,4 mm
5. S'assurer qu'il n'y a pas de fuites.

Se reporter à "Inspection".

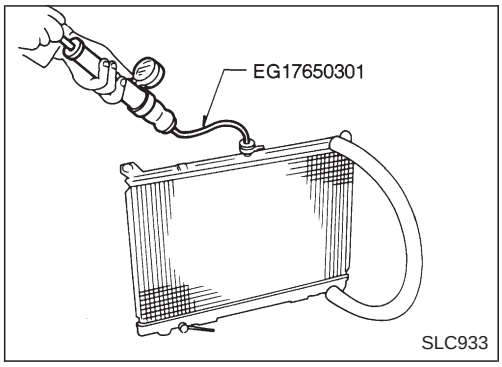

INSPECTION

1. Appliquer une pression avec l'outil.
   Valeur de pression spécifiée :
   157 kPa (1,57 bar, 1,6 kg/cm^2)

AVERTISSEMENT :
Pour éviter que le flexible ne se défasse pendant qu'il est sous pression, le fixer solidement avec un collier.

Simpo PDF Merge and Split Unregistered Version - http://www.simpopdf.com

Radiateur (de type aluminium) (Suite)

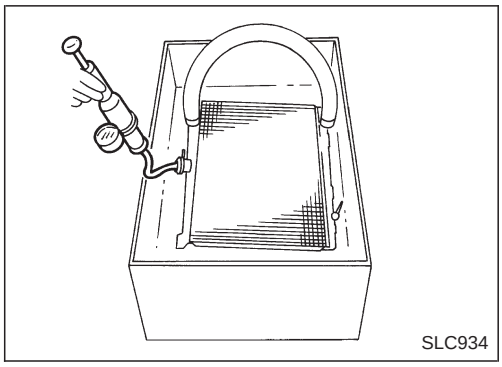

2. Vérifier qu'il n'y a pas de fuites.

Simpo PDF Merge and Split Unregistered Version - http://www.simpopdf.com

Analyse des causes de surchauffe

	Symptôme		Eléments à vérifier	
Pièces défectueuses du circuit de refroidissement	Transfert de chauffage de pauvre qualité	Défaut de la pompe à eau	Courroie d'entraînement usée ou desserrée	–
		Thermostat bloqué sur la position de fermeture	–	
		Ailettes endommagées	Obstruction par poussière ou papier	
			Dommage mécanique	
		Obturation du tuyau de refroidissement du radiateur	Excès de particules étrangères (rouille, saleté, sable, etc.)	
	Débit d'air réduit	Le ventilateur de refroidissement ne fonctionne pas	–	–
		L'accouplement de ventilateur ne fonctionne pas		
		Résistance élevée à la rotation de ventilateur		
		Ailettes de ventilateur endommagées		
	Protection de radiateur endommagée	–	–	–
	Richesse de mélange du liquide de refroidissement inadéquate	–	–	–
	Qualité insuffisante de liquide de refroidissement	–	–	–
	Liquide de refroidissement insuffisant	Fuites de liquide de refroidissement	Flexible de refroidissement	Collier détendu
				Flexible fissuré
			Pompe à eau	Mauvaise étanchéité
			Bouchon de radiateur	Desserré
				Mauvaise étanchéité
			Radiateur	Dommage, détérioration ou mauvaise fixation du joint torique
				Réservoir de radiateur fissuré
				Faisceau de radiateur fissuré
			Réservoir	Réservoir fissuré
		Trop-plein de réservoir	Fuites de gaz d'échappement dans le circuit de refroidissement	Détérioration de culasse
				Détérioration du joint de culasse

Simpo PDF Merge and Split Unregistered Version - http://www.simpopdf.com

Analyse des causes de surchauffe (Suite)

	Symptôme		Eléments à vérifier	
Sauf pièces défectueuses du circuit de refroidissement	–	Surcharge du moteur	Conduite forcée	Régime moteur élevé sans charge
				Conduite en première vitesse pendant une durée prolongée
				Conduite à vitesse très rapide
			Défaut du système de transmission	–
			Repose de roues et pneus de taille incorrecte	
			Grippage des freins	
			Calage de l'allumage inadéquat	
	Débit d'air bloqué ou restreint	Amortisseur bloqué	–	–
		Grille de radiateur bloquée	Installation du bouclier de radiateur du véhicule	
			Obstruction par boue ou papier	
		Radiateur bloqué	–	
		Condenseur bloqué	–	
		Repose d'un feu antibrouillard large		

Simpo PDF Merge and Split Unregistered Version - http://www.simpopdf.com

Circuit de lubrification du moteur (KA)

Vérification de la pression d'huile

Régime du moteur tr/mn	Pression approximative de débit kPa (bar, kg/cm^2)
Régime de ralenti	Plus de 78 (0,78, 0,8)
3 000	412 - 481 (4,12 - 4,81, 4,2 - 4,9)

Inspection de la pompe à huile

Unité : mm

Jeu à l'arête de rotor	Moins de 0,12
Jeu radial entre corps et rotor externe	0,15 - 0,21
Jeu latéral (avec joint plat)	0,04 - 0,08

Circuit de refroidissement du moteur (KA)

Thermostat

Température d'ouverture de la soupape	°C	76,5
Levage de la soupape	mm/°C	Plus de 8/90

Radiateur

Unité : kPa (bar, kg/cm^2)

Pression de décharge du bouchon	Standard	78 - 98 (0,78 - 0,98, 0,8 - 1,0)
	Limite	59 - 98 (0,59 - 0,98, 0,6 - 1,0)
Pression d'essai de fuite		157 (1,57, 1,6)

Circuit de lubrification du moteur (TD)

Contrôle de la pression d'huile

Régime du moteur tr/mn	Pression approximative de débit kPa (bar, kg/cm^2)
Régime de ralenti	Plus de 78 (0,78, 0,8)
3 000	294 - 392 (2,94 - 3,92, 3,0 - 4,0)

Inspection de la pompe à huile

Unité : mm

Jeu latéral de pignon	Moins de 0,13
Battement de pignon	Moins de 0,43
Jeu de bague de pompe à huile	Moins de 0,15
Diamètre intérieur de bague de pompe à huile	13,012 - 13,106
Diamètre extérieur d'arbre de pignon d'entraînement	12,974 - 12,992

Circuit de refroidissement du moteur (TD)

Radiateur

Unité : kPa (bar, kg/cm^2)

Pression de décharge du bouchon	78 - 98 (0,78 - 0,98, 0,8 - 1,0)
Pression d'essai de fuite	157 (1,57, 1,6)

Thermostat

	Type pour pays tropicaux	Type standard
Température d'ouverture de la soupape °C	76,5	82
Levage de la soupape mm/°C	Plus de 8/90	Plus de 8/95

Simpo PDF Merge and Split Unregistered Version - http://www.simpopdf.com

SECTION MA

TABLE DES MATIERES

PRECAUTIONS ET PREPARATION 1
Système de retenue supplémentaire (SRS) ''COUSSIN GONFLABLE'' (modèles à 4 roues motrices) 1
Système de retenue supplementaire (SRS) ''COUSSIN GONFLABLE'' (modèles à 2 roues motrices) 1
Outillage spécial 2
Outillage en vente dans le commerce 2
ELEMENTS D'INSPECTION AVANT LIVRAISON 3
ENTRETIEN GENERAL 4
ENTRETIEN PERIODIQUE 5
Entretien courant pour les modèles avec moteur à essence 5
Entretien courant pour les modèles avec moteur diesel 8
Entretien dans des conditions de conduite sévères 10
LIQUIDES ET LUBRIFIANTS CONSEILLES 12
Liquides et lubrifiants 12
Indice de viscosité SAE 13
Richesse de mélange du liquide de refroidissement antigel 14

KA

ENTRETIEN DU MOTEUR 15
Vérification des courroies d'entraînement 15
Remplacement du liquide de refroidissement du moteur 16
Vérification du circuit de refroidissement 17
Vérification des canalisations d'alimentation 18
Remplacement du filtre à carburant 18
Remplacement du filtre à air (type à papier visqueux) 19
Remplacement de l'huile moteur 19
Remplacement du filtre à huile 20
Vérification et remplacement des bougies d'allumage 20
Vérification des câbles d'allumage 21
Vérification du système de ventilation positive du carter (PCV) 22
Remplacement du filtre de ventilation positive du carter (PCV) 22
Vérification des flexibles et des raccords à dépression 22
Vérification des canalisations de vapeur 22
Vérification de la sonde à oxygène chauffée 23

TD

ENTRETIEN DU MOTEUR 24
Vérification des couples de serrage du collecteur 24
Réglage du jeu des soupapes d'admission et d'échappement 24
Vérification des courroies d'entraînement 24
Remplacement de l'huile moteur 25
Remplacement du filtre à huile moteur 26
Remplacement du liquide de refroidissement du moteur 26
Vérification du circuit de refroidissement 28
Vérification et remplacement du filtre à carburant et vidange de l'eau 28

Simpo PDF Merge and Split Unregistered Version - http://www.simpopdf.com

Vérification des canalisations d'alimentation 30
Nettoyage et remplacement du filtre à air 31
Vérificationde l'injecteur 31
Vérification du régime de ralenti 32
ENTRETIEN DU CHASSIS ET DE LA CARROSSERIE 35
Vérification du système d'échappement 35
Vérification du niveau de liquide d'embrayage et de l'étanchéité 35
Vérification du circuit d'embrayage 35
Vérification de l'huile de la boîte de vitesses manuelle 35
Remplacement de l'huile de la boîte de vitesses manuelle 35
Vérification de l'entrée d'eau – Pour modèles à 4 roues motrices 36
Vérification de l'huile de la boîte de transfert 36
Remplacement de l'huile de la boîte de transfert 36
Vérification de l'arbre de transmission 36
Graissage de l'arbre de transmission 37
Vérification de l'huile du différentiel 37
Remplacement de l'huile du différentiel 37
Equilibrage des roues 38
Permutation des pneus 38
Vérification du niveau de liquide de frein et de l'étanchéité 38
Vérification du circuit de freinage 38
Remplacement du liquide de frein 39
Vérification de l'assistance de frein, des flexibles à dépression, des raccords et du clapet sens unique 39
Vérification des freins à disque 39
Vérification des freins à tambour 40
Vérification du boîtier et de la timonerie de direction 41
Vérification du liquide et des canalisations de direction assistée 41
Vérification du niveau d'huile du boîtier de direction et de l'étanchéité 42
Graissage du système de fermeture du capot, des serrures et des charnières 43
Vérification des ceintures de sécurité, des boucles, des enrouleurs, des ancrages et des tendeurs 44
Contrôle de la corrosion de la carrosserie 45
CARACTERISTIQUES ET VALEURS DE REGLAGE (SDS) 46
Entretien du moteur (KA) 46
Entretien du moteur (TD) 46
Entretien du châssis et de la carrosserie 46

Simpo PDF Merge and Split Unregistered Version - http://www.simpopdf.com

Système de retenue supplémentaire (SRS) ‘‘COUSSIN GONFLABLE’’ (modèles à 4 roues motrices)

Utilisé avec une ceinture de sécurité, le coussin gonflable du système de retenue supplémentaire contribue à réduire les risques et la gravité des blessures subies par le conducteur en cas de collision frontale. Le système de retenue supplémentaire se compose d’un module de coussin gonflable (air bag) (situé dans le moyeu du volant), d’un boîtier de capteurs de diagnostic, d’un témoin avertisseur, d’un faisceau de câblage et d’un câble spiralé. Les informations nécessaires à l’entretien sans danger du système se trouvent à la **section RS** de ce manuel de réparation.

AVERTISSEMENT :

- **Pour ne pas affecter le fonctionnement du SRS, ce qui augmenterait les risques de blessures graves ou mortelles en cas de collision entraînant le déploiement du coussin gonflable (air bag), toutes les opérations d’entretien doivent être effectuées par un concessionnaire NISSAN agréé.**
- **Un entretien incorrect, y compris une mauvaise dépose ou repose du SRS, pourra entraîner des risques de blessures dues au déploiement accidentel du système.**
- **Ne pas utiliser d’équipement d’essai électrique sur les circuits connexes du SRS sauf sur indication de ce manuel de réparation. Les faisceaux de câblage électrique du SRS sont équipés d’une gaine d’isolation jaune soit juste devant les connecteurs de faisceau, soit sur le faisceau tout entier pour une identification plus rapide.**

Système de retenue supplementaire (SRS) ‘‘COUSSIN GONFLABLE’’ (modèles à 2 roues motrices)

Utilisé avec une ceinture de sécurité, le coussin gonflable du système de retenue supplémentaire contribue à réduire les risques et la gravité des blessures subies par le conducteur en cas de collision frontale. Le système de retenue supplémentaire se compose d’un module de coussin gonflable (air bag) (situé dans le moyeu du volant), d’un boîtier de capteurs de diagnostic, d’un témoin avertisseur, d’un faisceau de câblage et d’un câble spiralé. Les informations nécessaires à l’entretien sans danger du système se trouvent à la **section RS** de ce manuel de réparation.

AVERTISSEMENT :

- **Pour ne pas affecter le fonctionnement du SRS, ce qui augmenterait les risques de blessures graves ou mortelles en cas de collision entraînant le déploiement du coussin gonflable (air bag), toutes les opérations d’entretien doivent être effectuées par un concessionnaire NISSAN agréé.**
- **Un entretien incorrect, y compris une mauvaise dépose ou repose du SRS, pourra entraîner des risques de blessures dues au déploiement accidentel du système.**
- **Ne pas utiliser d’équipement d’essai électrique sur les circuits connexes du SRS.**

Simpo PDF Merge and Split Unregistered Version - http://www.simpopdf.com

Outillage spécial

Numéro de l'outil Nom de l'outil	Description		Moteurs concernés	
			KA	TD
KV10106001 Clé de filtre à huile	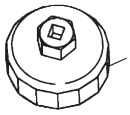 15 faces, Pas intérieur : 92,5 mm (Face au côté opposé) NT690	Dépose du filtre à huile	–	X
KV10105901 Clé de bouchon de filtre à huile	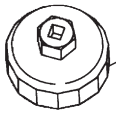 15 faces, Pas intérieur : 80 mm (Face au côté opposé) NT689		X	–
EG17650301 Adaptateur du vérificateur de bouchon de radiateur	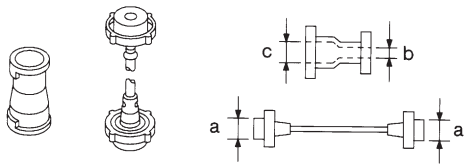 NT564	**a : 28** ϕ **b : 31,4** ϕ **c : 41,3** ϕ Unité : mm	X	X
KV10113600 Clé de filtre à carburant	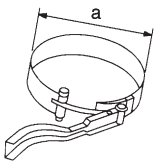 NT553	Dépose du filtre à carburant **a : Max. 100 mm** ϕ	–	X

Outillage en vente dans le commerce

Nom de l'outil	Description		Moteurs concernés	
			KA	TD
Clé à bougies d'allumage	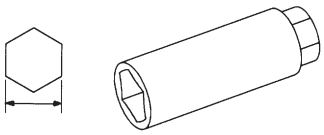 NT047	Clé aimantée pour maintenir la bougie d'allumage	X	–

Simpo PDF Merge and Split Unregistered Version - http://www.simpopdf.com

La liste ci-dessous est celle des points à vérifier avant de remettre un véhicule neuf à son acquéreur. Nous conseillons l'ajout des autres éléments nécessaires non mentionnés ici, en veillant bien aux conditions particulières à chaque pays.

Effectuer les interventions qui s'appliquent à chaque modèle. Prière de consulter le texte de cette section pour connaître les caractéristiques et valeurs de réglage.

SOUS LE CAPOT – moteur à l'arrêt

- ☐ Niveau du liquide de refroidissement dans le radiateur et fuites éventuelles aux branchements de conduites
- ☐ Niveau et densité de l'électrolyte de batterie et état des bornes de batterie
- ☐ Tension des courroies d'entraînement
- ☐ Présence éventuelle d'eau ou de poussière dans le filtre à carburant, et fuites éventuelles aux conduites d'alimentation et raccords
- ☐ Niveau d'huile moteur et fuites éventuelles
- ☐ Niveau du liquide de frein et d'embrayage dans le réservoir et fuites éventuelles des conduites hydrauliques
- ☐ Niveau du liquide dans les réservoirs de lave-glace de pare-brise, de lunette arrière et de lave-phare
- ☐ Niveau du liquide dans le réservoir de direction assistée et fuites éventuelles aux branchements de conduites

A L'INTERIEUR ET A L'EXTERIEUR

- ☐ Dépose du ressort avant/de l'entretoise d'amortisseur (le cas échéant)
- ☐ Fonctionnement de tous les instruments de bord, jauges, témoins et accessoires
- ☐ Fonctionnement du (des) avertisseur(s) sonore(s), des essuie-glaces et des lave-glaces
- ☐ Fonctionnement de l'antivol de direction
- ☐ Fuites de gaz éventuelles du climatiseur
- ☐ Fonctionnement des sièges avant, de la banquette arrière et des ceintures de sécurité
- ☐ Ajustage et alignement des moulures, garnitures et accouplements
- ☐ Fonctionnement et alignement de toutes les fenêtres
- ☐ Ajustage et alignement du capot-moteur, du couvercle du coffre à bagages et des panneaux de portières
- ☐ Fonctionnement des loquets, serrures et clés
- ☐ Adhérence et ajustage des bourrelets
- ☐ Orientation des faisceaux de phare
- ☐ Serrage des écrous de roue (y compris les écrous internes si applicable)
- ☐ Pression de gonflage des pneus (y compris les roues de secours)
- ☐ Contrôle du pincement des roues avant
- ☐ Repose du fusible de montre/de voltmètre/de plafonnier (le cas échéant)

SOUS LA CARROSSERIE

- ☐ Niveau d'huile de la boîte de vitesses/boîte/pont manuelle, de la boîte de transfert et du différentiel
- ☐ Fuites des canalisations de frein et d'alimentation et des réservoirs d'huile/liquide
- ☐ Serrage des boulons et écrous de la timonerie de direction, de la boîte de vitesses, de la suspension, des arbres de transmission et des semi-arbres

ESSAI SUR ROUTE

- ☐ Fonctionnement de l'embrayage
- ☐ Fonctionnement du frein de stationnement
- ☐ Fonctionnement des freins de conduite
- ☐ Commande et retour en ligne droite de la direction
- ☐ Rendement du moteur
- ☐ Grincements et cliquetis

FONCTIONNEMENT DU MOTEUR A CHAUD

- ☐ Réglage du mélange et du régime de ralenti (ainsi que du calage de l'allumage*1)
- ☐ Fonctionnement du bouton de commande de ralenti et d'arrêt du moteur (seulement pour moteur diesel)

VERIFICATION FINALE

- ☐ Mise en place des accessoires nécessaires (rétroviseur extérieur, enjoliveurs de roues, ceintures de sécurité, tapis de sol ou pare-boue)
- ☐ Inspection de l'état des parties métalliques et de la peinture à l'intérieur et à l'extérieur
- ☐ Contrôle de la présence de la roue de secours, du cric, des outils (cales de roue comprises) et de la documentation
- ☐ Lavage, nettoyage de l'intérieur et l'extérieur

*1 : Non requis sur les modèles dotés d'un système d'allumage direct

Simpo PDF Merge and Split Unregistered Version - http://www.simpopdf.com

L'entretien général concerne les éléments du véhicule qui doivent faire l'objet de contrôles réguliers en fonctionnement normal. Ces éléments sont indispensables pour assurer le bon fonctionnement continu du véhicule. Les possesseurs d'un véhicule peuvent effectuer eux-mêmes ces contrôles et vérifications ou en charger leur concessionnaire NISSAN.

Elément	Pages de référence
EXTERIEUR DU VEHICULE Sauf indication contraire, les éléments indiqués ci-dessous doivent faire l'objet d'un contrôle périodique.	
Pneus Vérifier régulièrement, lors des arrêts dans une station-service, la pression des pneus au moyen d'un manomètre, sans oublier la roue de secours, et la régler si elle ne correspond pas à la pression spécifiée. Vérifier attentivement toute trace de dommages, de coupures ou d'usure excessive.	–
Balais d'essuie-glaces de pare-brise Vérifier qu'ils ne sont pas abîmés ou usagés lorsqu'ils n'essuient pas correctement le pare-brise.	–
Portes et capot Vérifier le bon fonctionnement des portes, du capot, du couvercle de coffre et du hayon. S'assurer également que toutes les serrures fonctionnent correctement. Lubrifier les charnières, loquets, galets et articulations si nécessaire. S'assurer que le loquet secondaire maintient le capot fermé lorsque le loquet principal est desserré. Lors de la conduite sur des chaussées recouvertes de sel ou autres matériaux corrosifs, effectuer de fréquents contrôles de graissage.	MA-43
Permutation des pneus La permutation des pneus doit être effectuée tous les 10 000 km pour les modèles à 2 roues motrices et tous les 5 000 km pour les modèles à 4 roues motrices.	MA-38
INTERIEUR DU VEHICULE Vérifier régulièrement les éléments ci-dessous, notamment lors d'une révision, d'un nettoyage, etc.	
Feux Vérifier le bon fonctionnement des phares, des feux stop, des feux arrière, des clignotants et des autres feux, et contrôler la sécurité de leur installation. Contrôler également la portée des feux de route.	–
Témoins et carillons Vérifier le bon fonctionnement de tous les témoins et carillons.	–
Volant Effectuer un contrôle en cas de changements dans la direction, tels qu'un jeu excessif, une direction trop dure ou des bruits étranges. **Jeu libre : moins de 35 mm**	–
Ceintures de sécurité Vérifier le bon fonctionnement et le montage correct des pièces du système de ceintures de sécurité (par exemple, les boucles, le dispositif d'ancrage, le dispositif de réglage et les enrouleurs). Vérifier si la ceinture n'est pas endommagée, usée, effilochée ou n'a pas de traces de coupure.	MA-44
SOUS LE CAPOT ET SOUS LE VEHICULE Les éléments ci-dessous doivent faire l'objet d'un contrôle régulier, par exemple à chaque plein ou à chaque vérification de l'huile moteur.	
Liquide de lave-glace de pare-brise Vérifier qu'il reste une quantité suffisante dans le réservoir.	–
Niveau du liquide de refroidissement du moteur Vérifier le niveau du liquide de refroidissement quand le moteur est froid.	MA-16, 26
Niveau d'huile moteur Vérifier le niveau de l'huile après avoir garé le véhicule sur un terrain plat et avoir arrêté le moteur.	MA-19, 25
Niveau de liquide de frein et d'embrayage S'assurer que les niveaux des liquides de frein et d'embrayage se trouvent bien entre les repères ''MAX'' et ''MIN'' sur le réservoir.	MA-35, 38
Batterie Vérifier le niveau du liquide de chaque élément. Il doit être compris entre les repères ''MAX'' et ''MIN''.	–

Simpo PDF Merge and Split Unregistered Version - http://www.simpopdf.com

Les tableaux suivants présentent le programme normal d'entretien. En fonction des conditions climatiques et atmosphériques, des types de revêtements de chaussée, des habitudes individuelles de conduite et de l'utilisation faite du véhicule, des opérations d'entretien supplémentaires ou plus fréquentes peuvent être requises, comme indiqué dans ''Entretien dans des conditions de conduite sévères''.

L'entretien périodique dépassant la dernière fréquence d'entretien indiquée dans les tableaux est du même ordre que l'entretien spécifié pour cette dernière.

Entretien courant pour les modèles avec moteur à essence

Entretien du moteur pour les véhicules dont le kilométrage est inférieur à 30 000km/an

Abréviations : R= Remplacer, I = Vérifier et corriger ou remplacer si nécessaire.

OPERATIONS D'ENTRETIEN		FREQUENCE D'ENTRETIEN						Page
Effectuer l'entretien sur la base du kilométrage ou bien à intervalle mensuel selon la première éventualité.	km x 1 000	15	30	45	60	75	90	de référence
	Mois	**12**	**24**	**36**	**48**	**60**	**72**	
Huile moteur (Utiliser l'huile API SG ou SH)*		R	R	R	R	R	R	MA-19
Filtre à huile moteur*		R	R	R	R	R	R	MA-20
Courroies d'entraînement		I	I	I	I	I	I	MA-15
Liquide de refroidissement antigel moteur (à base d'éthylène glycol)	Voir NOTE (1)							MA-16
Circuit de refroidissement		I	I	I	I	I	I	MA-17
Filtre à air (type à papier visqueux)*					R			MA-19
Canalisations d'alimentation			I		I		I	MA-18
Filtre à carburant*							R	MA-18
Canalisations de vapeur			I		I		I	MA-22
Bougies d'allumage (Type conventionnel)			R		R		R	MA-20
Câbles d'allumage				I			I	MA-21
Sonde à oxygène chauffée (capteur des gaz d'échappement)			I		I		I	MA-23
Filtre PCV*			R		R		R	MA-22

REMARQUE : (1) Remplacer aux premiers 90 000 km ou 60 mois, puis tous les 60 000 km ou 48 mois selon la première éventualité.

* Les points d'entretien portant une ''*'' doivent faire l'objet d'un entretien plus fréquent en suivant les indications données sous ''Entretien dans des conditions de conduite sévères''.

Simpo PDF Merge and Split Unregistered Version - http://www.simpopdf.com

Entretien courant pour les modèles avec moteur à essence (Suite)

Entretien du châssis et de la carrosserie pour les véhicules dont le kilométrage est inférieur à 30 000 km/an

Abréviations: R= Remplacer, I = Vérifier et corriger ou remplacer si nécessaire, L = Lubrifier, T = Serrer. [ ] = Seulement à la distance spécifiée.

OPERATIONS D'ENTRETIEN Effectuer l'entretien sur la base du kilométrage ou bien à intervalle mensuel selon la première éventualité.		FREQUENCE D'ENTRETIEN km x 1 000	15	30	45	60	75	90	Page de référence
		Mois	**12**	**24**	**36**	**48**	**60**	**72**	
Orientation des faisceaux de phare			I	I	I	I	I	I	NOTE (3)
Alignement des roues (si nécessaire, faire tourner et équilibrer les roues)			I	I	I	I	I	I	MA-38, NOTE (4)
Plaquettes de freins, disques et autres pièces de freins*			I	I	I	I	I	I	MA-39
Garnitures de freins, tambours et autres organes de freins*			I	I	I	I	I	I	MA-39
Frein à pied, frein à main et embrayage (jeu libre, course et fonctionnement)			I	I	I	I	I	I	NOTE (5)
Assistance de frein, flexibles à dépression, raccords et clapet sens unique				I		I		I	MA-39
Circuits de freinage et d'embrayage			I	I	I	I	I	I	MA-35, 38
Liquide de frein et d'embrayage (pour niveau et fuites)			I	I	I	I	I	I	MA-35, 38
Liquide de frein*				R		R		R	MA-38
Liquide et canalisations de direction assistée (pour niveau et fuites)			I	I	I	I	I	I	MA-41
Huile de levier de direction manuelle (pour niveau et fuites)			I	I	I	I	I	I	MA-42
Système de coussin gonflable	Voir NOTE (1)								NOTE (6)
Huile de boîte de vitesses manuelle (vérifier les fuites ou remplacer)			I	I	I	I	I	[R]	MA-35
Huile de boîte de transfert et d'engrenage de différentiel standard (fuites)*			I	I	I	R	I	I	MA-36, 37
Huile pour différentiel à glissement limité (LSD) (niveau et fuites)*			I	I	I	R	I	I	MA-37
Levier de direction, timonerie, essieu, pièces de suspension et arbre de transmission*			I	I	I	I	I	I	MA-36, 41
Point de graissage de la timonerie de direction, de l'arbre de transmission et de la suspension*	Voir NOTE (2)		L	L	L	L	L	L	MA-37
Système d'échappement*			I	I	I	I	I	I	MA-35
Semi-arbres*			I	I	I	I	I	I	NOTE (7)
Graisse pour roulement de roue avant (2 roues motrices)				I		I		I	NOTE (8)
Graisse pour roulement de roue avant (4 roues motrices)*			I	R	I	R	I	R	NOTE (8)
Graisse pour moyeu de roue libre (4 roues motrices)*			I	I	I	I	I	I	NOTE (9)
Montage de la carrosserie			T	T	T	T	T	T	NOTE (10)
Corrosion de la carrosserie					Annuellement				MA-45

REMARQUE : (1) Vérifierer après les premiers 10 ans, puis tous les 2 ans.
(2) L'arbre de transmission doit être graissé de nouveau chaque jour s'il a été immergé dans l'eau.
(3) ''Réglage des faisceaux'' dans la section EL
(4) ''Alignement des roues avant'' dans la section FA
(5) ''Pédale de frein et support'' dans la section BR, ''Réglage de la pédale d'embrayage'' dans la section CL
(6) ''Points d'entretien'' dans la section RS
(7) ''ESSIEU AVANT – Semi-arbre'' dans la section FA
(8) ''Roulement des roues avant'' dans la section FA
(9) ''Moyeu débrayable manuel – 4 roues motrices'' et ''Moyeu débrayable automatique – 4 roues motrices'' dans la section FA
(10) ''CABINE ET CARROSSERIE ARRIERE'' dans la section BT

* Les points d'entretien portant une ''*'' doivent faire l'objet d'un entretien plus fréquent en suivant les indications données sous ''Entretien dans des conditions de conduite sévères''.

Simpo PDF Merge and Split Unregistered Version - http://www.simpopdf.com

Entretien courant pour les modèles avec moteur à essence (Suite)

Entretien du moteur pour les véhicules dont le kilométrage est supérieur à 30 000km/an

Abréviations : R= Remplacer, I = Vérifier et corriger ou remplacer si nécessaire.

OPERATIONS D'ENTRETIEN		FREQUENCE D'ENTRETIEN								Page de référence
Effectuer l'entretien sur la base du kilométrage.	km x 1 000	15	30	45	60	75	90	105	120	
Huile moteur (Utiliser l'huile API SG ou SH)*		R	R	R	R	R	R	R	R	MA-19
Filtre à huile moteur*		R	R	R	R	R	R	R	R	MA-20
Courroies d'entraînement		I	I	I	I	I	I	I	I	MA-15
Liquide de refroidissement antigel moteur (à base d'éthylène glycol)	Voir NOTE (1)						R			MA-16
Circuit de refroidissement			I		I		I		I	MA-17
Filtre à air (type à papier visqueux)*					R				R	MA-19
Canalisations d'alimentation					I				I	MA-18
Filtre à carburant*							R			MA-18
Canalisations de vapeur					I				I	MA-22
Bougies d'allumage (Type conventionnel)			R		R		R		R	MA-20
Câbles d'allumage							I			MA-21
Sonde à oxygène chauffée (capteur des gaz d'échappement)					I				I	MA-23
Filtre PCV*					R				R	MA-22

REMARQUE : (1) Remplacer aux premiers 90 000 km ou 60 mois, puis tous les 60 000 km.

* Les points d'entretien portant une ''*'' doivent faire l'objet d'un entretien plus fréquent en suivant les indications données sous ''Entretien dans des conditions de conduite sévères''.

Entretien du châssis et de la carrosserie pour les véhicules dont le kilométrage est supérieur à 30 000km/an

Abréviations: R= Remplacer, I = Vérifier et corriger ou remplacer si nécessaire, L = Lubrifier, T = Serrer.

OPERATIONS D'ENTRETIEN		FREQUENCE D'ENTRETIEN								Page de référence
Effectuer l'entretien sur la base du kilométrage.	km x 1 000	15	30	45	60	75	90	105	120	
Orientation des faisceaux de phare			I		I		I		I	NOTE (3)
Alignement des roues (si nécessaire, faire tourner et équilibrer les roues)			I		I		I		I	MA-38, NOTE (4)
Plaquettes de freins, disques et autres composants*			I		I		I		I	MA-39
Garnitures de freins, tambours et autres organes de freins*			I		I		I		I	MA-39
Frein à pied, frein à main et embrayage (jeu libre, course et fonctionnement)			I		I		I		I	NOTE (5)
Assistance de frein, flexibles à dépression, raccords et clapet sens unique					I				I	MA-39
Circuits de freinage et d'embrayage			I		I		I		I	MA-35, 38
Liquide de frein et d'embrayage (pour niveau et fuites)			I		I		I		I	MA-35, 38
Liquide de frein*					R				R	MA-38
Liquide et canalisations de direction assistée (pour niveau et fuites)			I		I		I		I	MA-41
Huile de levier de direction manuelle (pour niveau et fuites)			I		I		I		I	MA-42
Système de coussin gonflable	Voir NOTE (1)									NOTE (6)
Huile de boîte de vitesses manuelle (Vérifier for leaks or replace)			I		I		R		I	MA-35
Huile de boîte de transfert et d'engrenage de différentiel standard (niveau et fuites)*			I		R		I		R	MA-36, 41
Huile pour différentiel à glissement limité (LSD)(Pour niveau et fuites)*			I		R		I		R	MA-37
Levier de direction et timonerie, essieu, pièces de suspension et arbre de transmission*			I		I		I		I	MA-36, 41
Point de graissage de la timonerie de direction, de l'arbre de transmission et de la suspension*	Voir NOTE (2)		L		L		L		L	MA-37
Système d'échappement*			I		I		I		I	MA-35
Semi-arbres*			I		I		I		I	NOTE (7)
Graisse pour roulement de roue avant (2 roues motrices)					I				I	NOTE (8)
Graisse pour roulement de roue avant (4 roues motrices)*			I		R		I		R	NOTE (8)
Graisse pour moyeu de roue libre (4 roues motrices)*			I		I		I		I	NOTE (9)
Montage de la carrosserie			T		T		T		T	NOTE (10)
Corrosion de la carrosserie					Annuellement					MA-45

REMARQUE : (1) Vérifierer après 10 ans puis tous les deux ans.
(2) L'arbre de transmission doit être graissé de nouveau chaque jour s'il a été immergé dans l'eau.
(3) ''Réglage des faisceaux'' dans la section EL
(4) ''Alignement des roues avant'' dans la section FA
(5) ''Pédale de frein et support'' dans la section BR, ''Réglage de la pédale d'embrayage'' dans la section CL
(6) ''Points d'entretien'' dans la section RS
(7) ''ESSIEU AVANT – Semi-arbre'' dans la section FA
(8) ''Roulement des roues avant'' dans la section FA
(9) ''Moyeu débrayable manuel – 4 roues motrices'' et ''Moyeu débrayable automatique – 4 roues motrices'' dans la section FA
(10) ''CABINE ET CARROSSERIE ARRIERE'' dans la section BT

* Les points d'entretien portant une ''*'' doivent faire l'objet d'un entretien plus fréquent en suivant les indications données sous ''Entretien dans des conditions de conduite sévères''.

Simpo PDF Merge and Split Unregistered Version - http://www.simpopdf.com

Entretien courant pour les modèles avec moteur diesel

Entretien du moteur pour les véhicules dont le kilométrage est inférieur à 30 000km/an

Abréviations : R= Remplacer, I = Vérifier et corriger ou remplacer si nécessaire. [ ] = Seulement à la distance spécifiée.

OPERATIONS D'ENTRETIEN		FREQUENCE D'ENTRETIEN												Page de référence
Effectuer l'entretien sur la base du kilométrage ou bien à intervalle mensuel selon la première éventualité.	km x 1 000	5	15	22,5	30	37,5	45	52,5	60	67,5	75	82,5	90	
	Mois	**6**	**12**	**18**	**24**	**30**	**36**	**42**	**48**	**54**	**60**	**66**	**72**	
Huile moteur (Utiliser l'huile recommandée)*		R	R	R	R	R	R	R	R	R	r	r	r	MA-25
Filtre à huile moteur*		R	R	R	R	R	R	R	R	R	R	R	R	MA-25
Courroies d'entraînement			I		I		I		I		I		I	MA-24
Liquide de refroidissement antigel moteur (à base d'éthylène glycol)	Voir NOTE (1)										R			MA-26
Système de refroidissement			I		I		I		I		I		I	MA-28
Filtre à air (type à papier visqueux)*							R						R	MA-31
Jeu des soupapes d'admission et d'échappement					I				I				I	MA-4
Canalisations d'alimentation					I				I				I	MA-30
Filtre à carburant*					R				R				R	MA-29
Injecteurs	Voir NOTE (2)													MA-31

REMARQUE : (1) Remplacer tous les 75 000 km ou 60 mois, puis tous les 45 000 km ou 36 mois, selon la première éventualité.
(2) Si la puissance du moteur diminue, si les gaz d'échappement sont noirs ou si le bruit du moteur augmente, contrôler la pression de démarrage des injecteurs et le jet d'injection et, si nécessaire, les régler.
* Les points d'entretien portant une ''*'' doivent faire l'objet d'un entretien plus fréquent en suivant les indications données sous ''Entretien dans des conditions de conduite sévères''.

Entretien du châssis et de la carrosserie pour les véhicules dont le kilométrage est inférieur à 30 000km/an

Abréviations: R= Remplacer, I = Vérifier et corriger ou remplacer si nécessaire, L = Lubrifier, T = Serrer. [ ] = Seulement à la distance spécifiée.

OPERATIONS D'ENTRETIEN		FREQUENCE D'ENTRETIEN						Page de référence
Effectuer l'entretien sur la base du kilométrage ou bien à intervalle mensuel selon la première éventualité.	km x 1 000	15	30	45	60	75	90	
	Mois	**12**	**24**	**36**	**48**	60	72	
Orientation des faisceaux de phare		I	I	I	I	I	I	NOTE (3)
Alignement des roues (si nécessaire, équilibrer et faire tourner les roues)		I	I	I	I	I	I	MA-38, NOTE (4)
Plaquettes de freins, disques et autres composants		I	I	I	I	I	I	MA-39
Garnitures de freins, tambours et autres organes de freins*		I	I	I	I	I	I	MA-39
Frein à pied, frein à main et embrayage (jeu libre, course et fonctionnement)		I	I	I	I	I	I	NOTE (5)
Assistance de frein, flexibles à dépression, raccords et clapet sens unique			I		I		I	MA-39
Circuits de freinage et d'embrayage		I	I	I	I	I	I	MA-35, 38
Liquide de frein et d'embrayage (pour niveau et fuites)		I	I	I	I	I	I	MA-35, 38
Liquide de frein*			R		R		R	MA-38
Liquide et canalisations de direction assistée (pour niveau et fuites)		I	I	I	I	I	I	MA-41
Huile de levier de direction manuelle (pour niveau et fuites)		I	I	I	I	I	I	MA-42
Système de coussin gonflable	Voir NOTE (1)							NOTE (6)
Huile de boîte de vitesses manuelle (Vérifier pour les fuites ou remplacer)		I	I	I			[R]	MA-35
Huile de boîte de transfert et d'engrenage de différentiel standard (fuites)*		I	I	I	R	I	I	MA-36, 37
Huile pour différentiel à glissement limité (LSD) (pour niveaux et fuites)*		I	I	I	R	I	I	MA-37
Levier de direction et timonerie, essieu, pièces de suspension et arbre de transmission*		I	I	I	I	I	I	MA-36, 41
Point de graissage de la timonerie de direction, de l'arbre de transmission et de la suspension*	Voir NOTE (2)	L	L	L	L	L	L	MA-37
Système d'échappement*		I	I	I	I	I	I	MA-35
Semi-arbres*		I	I	I	I	I	I	NOTE (7)
Graisse pour roulement de roue avant (2 roues motrices)			I		I		I	NOTE (8)
Graisse pour roulement de roue avant (4 roues motrices)*		I	R	I	R	I	R	NOTE (8)
Graisse pour moyeu de roue libre (4 roues motrices)*		I	I	I	I	I	I	NOTE (9)
Montage de la carrosserie		T	T	T	T	T	T	NOTE (10)
Corrosion de la carrosserie				Annuellement				MA-45

REMARQUE : (1) Vérifierer après 10 ans puis tous les deux ans.
(2) L'arbre de transmission doit être graissé de nouveau chaque jour s'il a été immergé dans l'eau.
(3) ''Réglage des faisceaux'' dans la section EL
(4) ''Alignement des roues avant'' dans la section FA
(5) ''Pédale de frein et support'' dans la section BR, ''Réglage de la pédale d'embrayage'' dans la section CL
(6) ''Points d'entretien'' dans la section RS
(7) ''ESSIEU AVANT – Semi-arbre'' dans la section FA
(8) ''Roulement des roues avant'' dans la section FA
(9) ''Moyeu débrayable manuel – 4 roues motrices'' et ''Moyeu débrayable automatique – 4 roues motrices'' dans la section FA
(10) ''CABINE ET CARROSSERIE ARRIERE'' dans la section BT
* Elément d'entretien with ''*'' should be performed more frequently according to ''Maintenance Under Severe Driving Conditions''.

Simpo PDF Merge and Split Unregistered Version - http://www.simpopdf.com

Entretien courant pour les modèles avec moteur diesel (Suite)

Entretien du moteur pour les véhicules dont le kilométrage est supérieur à 30 000 km/an

Abréviations : R= Remplacer, I = Vérifier et corriger ou remplacer si nécessaire.

OPERATIONS D'ENTRETIEN		FREQUENCE D'ENTRETIEN												Page
Effectuer l'entretien sur la base du kilométrage.	km x 1 000	7,5	15	22,5	30	37,5	45	52,5	60	67,5	75	82,5	90	de référence
Huile moteur (Utiliser l'huile recommandée)*		R	R	R	R	R	R	R	R	R	R	R	R	MA-25
Filtre àhuile moteur*			R		R		R		R		R		R	MA-25
Courroies d'entraînement			I		I		I		I		I		I	MA-24
Liquide de refroidissement antigel moteur (à base d'éthylène glycol)	Voir NOTE (1)												R	MA-26
Système de refroidissement					I				I				I	MA-28
Filtre à air (type à papier visqueux)*									R					MA-31
Jeu des soupapes d'admission et d'échappement					I				I				I	MA-24
Canalisations d'alimentation									I					MA-30
Filtre à carburant*									R					MA-29
Injecteurs	Voir NOTE (2)													MA-31

REMARQUE : (1) Remplacer tous les 90 000 km, puis tous les 60 000 km.
(2) Si la puissance du moteur diminue, si les gaz d'échappement sont noirs ou si le bruit du moteur augmente, contrôler la pression de démarrage des injecteurs et le jet d'injection et, si nécessaire, les régler.
* Les points d'entretien portant une ''*'' doivent faire l'objet d'un entretien plus fréquent en suivant les indications données sous ''Entretien dans des conditions de conduite sévères''.

Entretien du châssis et de la carrosserie pour les véhicules dont le kilométrage est supérieur à 30 000km/an

Abréviations: R = Remplacer, I = Vérifier et corriger ou remplacer si nécessaire, L = Lubrifier, T = Serrer.

OPERATIONS D'ENTRETIEN		FREQUENCE D'ENTRETIEN				Page
Effectuer l'entretien sur la base du kilométrage.	km x 1 000	30	60	90	120	de référence
Orientation des faisceaux de phare		I	I	I	I	NOTE (3)
Alignement des roues (si nécessaire, équilibrer et permuter les roues)		I	I	I	I	MA-38, NOTE (4)
Plaquettes de freins, disques et autres composants*		I	I	I	I	MA-39
Garnitures de freins, tambours et autres composants de freins*		I	I	I	I	MA-39
Frein à pied, frein à main et embrayage (jeu libre, course et fonctionnement)		I	I	I	I	NOTE (5)
Assistance de frein, flexibles à dépression, raccords et clapet sens unique			I		I	MA-39
Circuits de freinage et d'embrayage		I	I	I	I	MA-35, 38
Liquide de frein et d'embrayage (pour niveau et fuites)		I	I	I	I	MA-35, 38
Liquide de frein*			R		R	MA-38
Liquide et canalisations de direction assistée (pour niveau et fuites)		I	I	I	I	MA-41
Huile de levier de direction manuelle (pour niveau et fuites)		I	I	I	I	MA-42
Système de coussin gonflable	Voir NOTE (1)					NOTE (6)
Huile de levier de vitesses manuelle (Vérifier pour fuites ou remplacer)		I	I	R	I	MA-35
Huile de boîte de transfert et d'engrenage de différentiel standard (fuites)*		I	R	I	R	MA-36, 37
Huile pour différentiel à glissement limité (LSD) (niveau et fuites)*		I	R	I	R	MA-37
Levier de direction et timonerie, pièces d'essieu et de suspension et arbre de transmission*		I	I	I	I	MA-36, 41
Point de graissage de la timonerie de direction, de l'arbre de transmission et de la suspension*	Voir NOTE (2)	L	L	L	L	MA-37
Système d'échappement*		I	I	I	I	MA-35
Semi-arbres*		I	I	I	I	NOTE (7)
Graisse pour roulement de roue avant (2 roues motrices)			I		I	NOTE (8)
Graisse pour roulement de roue avant (4 roues motrices)*		I	R	I	R	NOTE (8)
Graisse pour moyeu de roue libre (4 roues motrices)*		I	I	I	I	NOTE (9)
Montage de la carrosserie		T	T	T	T	NOTE (10)
Corrosion de la carrosserie			Annuellement			MA-45

REMARQUE : (1) Vérifierer après 10 ans puis tous les deux ans.
(2) L'arbre de transmission doit être graissé de nouveau chaque jour s'il a été immergé dans l'eau.
(3) ''Réglage des faisceaux'' dans la section EL
(4) ''Alignement des roues avant'' dans la section FA
(5) ''Pédale de frein et support'' dans la section BR, ''Réglage de la pédale d'embrayage'' dans la section CL
(6) ''Points d'entretien'' dans la section RS
(7) ''ESSIEU AVANT – Semi-arbre'' dans la section FA
(8) ''Roulement des roues avant'' dans la section FA
(9) ''Moyeu débrayable manuel – 4 roues motrices'' et ''Moyeu débrayable automatique – 4 roues motrices'' dans la section FA
(10) ''CABINE ET CARROSSERIE ARRIERE'' dans la section BT
* Les points d'entretien portant une ''*'' doivent faire l'objet d'un entretien plus fréquent en suivant les indications données sous ''Entretien dans des conditions de conduite sévères''.

Simpo PDF Merge and Split Unregistered Version - http://www.simpopdf.com

Entretien dans des conditions de conduite sévères

Les intervalles d'entretien indiqués aux pages précédentes sont donnés pour des conditions d'utilisation normales. Si le véhicule est principalement utilisé dans les conditions de conduite sévères suivantes, il est nécessaire d'augmenter la fréquence d'entretien comme indiquée dans le tableau.

Conditions de conduite sévères

A – Conduite dans un environnement poussiéreux
B – Conduite répétée sur de courtes distances
C – Tirage d'une remorque ou d'une caravane
D – Ralenti excessif
E – Conduite dans des conditions climatiques extrêmement difficiles ou dans des endroits où les températures ambiantes sont soit extrêmement basses, soit extrêmement élevées
F – Conduite dans des régions très humides ou montagneuses
G – Conduite sur des chaussées recouvertes de sel ou d'autres matériaux corrosifs
H – Conduite sur des routes inégales et/ou boueuses ou dans le désert
I – Conduite avec usage fréquent des freins ou dans des régions montagneuses
J – Conduite fréquente sur des surfaces inondées

Pour modèles avec moteur à essence

Opérations d'entretien : Vérifier = Vérifier et corriger ou remplacer si nécessaire

Condition de conduite	Elément d'entretien	Opération d'entretien	Intervalle d'entretien		Page de référence
			Kilométrage annuel		
			Moins de 30 000 km	Plus de 30 000 km	
A B C D	Huile moteur	Remplacer	Tous les 7 500 km ou 6 mois	Tous les 7 500 km	MA-19
	Filtre à huile moteur				
A	Filtre à air (type à papier visqueux)	Remplacer	Tous les 30 000 km ou 24 mois	Tous les 30 000 km	MA-19
	Filtre PCV	Remplacer	Tous les 15 000 km ou 12 mois	Tous les 30 000 km	MA-22
A . . . E	Filtre à carburant	Remplacer	Tous les 45 000 km ou 36 mois	Tous les 45 000 km	MA-18
A . C . . . G H I .	Plaquettes de freins, disques et autres composants de freins	Vérifier	Tous les 7 500 km ou 6 mois	Tous les 15 000 km	MA-39
	Garnitures de freins, tambours et autres organes de freins				MA-40
. . . . . F	Liquide de frein	Remplacer	Tous les 15 000 km ou 12 mois	Tous les 30 000 km	MA-39
. . C . . . . H . .	Huile de boîte de transfert et d'engrenage de différentiel standard	Remplacer	Tous les 30 000 km ou 24 mois	Tous les 30 000 km	MA-36, 37
	Huile pour différentiel à glissement limité (LSD)*1	Remplacer			MA-37
	Semi-arbres	Vérifier	Tous les 7 500 km ou 6 mois	Tous les 15 000 km	*2
. . . . . G H . .	Levier de direction et timonerie, essieu, pièces de suspension et arbre de transmission	Vérifier			MA-41, 36
	Système d'échappement	Vérifier			MA-35
. . . . . G H . J	Points de graissage de la timonerie de direction, des arbres de transmission et de la suspension	Lubrifier			MA-37
. . . . . J	Graisse pour roulement des roues avant	Vérifier			*3
	Graisse pour moyeu de roue libre	Vérifier			

*1 : Y compris le pignon de différentiel avec le verrouillage différentiel
*2 : ''ESSIEU AVANT – Semi-arbre'' dans la section FA
*3 : ''Roulement des roues avant'',''Moyeu débrayables manuel – 4 roues motrices'' et ''Moyeu débrayables automatique – 4 roues motrices'' dans la section FA

Simpo PDF Merge and Split Unregistered Version - http://www.simpopdf.com

Entretien dans des conditions de conduite sévères (Suite)

Pour modèles avec moteur diesel

Opérations d'entretien : Vérifier = Vérifier et corriger ou remplacer si nécessaire

Condition de conduite	Elément d'entretien	Opération d'entretien	Intervalle d'entretien – Kilométrage annuel – Moins de 30 000 km	Intervalle d'entretien – Kilométrage annuel – Plus de 30 000 km	Page de référence
A B C D	Huile moteur	Remplacer	Tous les 3 750 km ou 3 mois	Tous les 3 750 km	MA-25
	Filtre à huile moteur				
A	Filtre à air (type à papier visqueux)	Remplacer	Tous les 22 500 km ou 18 mois	Tous les 30 000 km	MA-31
A . . . E	Filtre à carburant	Remplacer	Tous les 15 000 km ou 12 mois	Tous les 30 000 km	MA-29
A . C . . . G H I .	Plaquettes de freins, disques et autres composants	Vérifier	Tous les 7 500 km ou 6 mois	Tous les 15 000 km	MA-40
	Garnitures de freins, tambours et autres organes de freins				MA-40
. . . . . F	Liquide de frein	Remplacer	Tous les 15 000 km ou 12 mois	Tous les 30 000 km	MA-39
. . C . . . . H . .	Huile de boîte de transfert et de différentiel standard	Remplacer	Tous les 30 000 km ou 24 mois	Tous les 30 000 km	MA-36, 37
	Huile pour différentiel à glissement limité (LSD)*	Remplacer			MA-37
	Semi-arbres	Vérifier	Tous les 7 500 km ou 6 mois	Tous les 15 000 km	*2
. . . . . G H . .	Pignon de direction et timonerie, pièces d'essieu et de suspension et arbres de transmission	Vérifier			MA-41, 36
	Système d'échappement	Vérifier			MA-35
. . . . . G H . J	Point de graissage de la timonerie de direction, des arbres de transmission et de la suspension	Lubrifier			MA-37
. . . . . J	Graisse pour roulement des roues avant	Vérifier			*3
	Graisse pour moyeu de roue libre	Vérifier			

*1 : Y compris le pignon de différentiel avec le verrouillage différentiel
*2 : ''ESSIEU AVANT – Semi-arbre'' dans la section FA
*3 : ''Roulement des roues avant'',''Moyeu débrayable manuel – 4 roues motrices'' et ''Moyeu débrayable automatique – 4 roues motrices'' dans la section FA

Entretien en cas de conduite tout-terrain (4x4 uniquement)

En cas de conduite sur des chaussées recouvertes de sable, de boue ou d'eau aussi profondes que le moyeu de roue, des entretiens plus fréquents peuvent être requis pour les pièces suivantes :

- ▲ Plaquettes et disques de freins
- ▲ Garniture et tambours de freins
- ▲ Canalisations et flexibles de freins
- ▲ Graisse pour roulement de roue et graisse pour moyeu de roue libre
- ▲ Graisse pour moyeu de roue libre
- ▲ Huile de boîte de différentiel, de boîte de vitesses et de boîte de transfert
- ▲ Timonerie de la direction
- ▲ Arbres de transmission et semi-arbres avant
- ▲ Filtre à air
- ▲ Carter d'embrayage (voir si l'eau pénètre. Se reporter à MA-36).

Simpo PDF Merge and Split Unregistered Version - http://www.simpopdf.com

Liquides et lubrifiants

		Contenance (approximative) Litre	Liquides et lubrifiants recommandés
Huile moteur (remplissage)			
Avec filtre à huile	KA24E	2 roues motrices 3,9 4 roues motrices 4,1	Moteur à essence : API SG ou SH*1 Moteur diesel : API CD*1
	TD25	7,2	
Sans filtre à huile	KA24E	2 roues motrices 3,5 4 roues motrices 3,7	
	TD25	6,5	
Circuit de refroidissement (avec réservoir)			
	KA24E	6,7	Liquide de refroidissement antigel (à base d'éthylène glycol) ou eau douce
	TD25	9,5	
Huile de boîte de vitesses manuelle			
	FS5R30A	4 roues motrices 5,1	API GL-4*1
	FS5W71C	2 roues motrices 2,0 4 roues motrices 4,9	
Huile de boîte de transfert	TX10A	2,2	Matic ''D'' Nissan ou huile pour boîte de vitesses automatique équivalent*2 ou API GL-4*1
Huile de boîte de différentiel			
Avant :	R180A	1,3	Différentiel standard : API GL-5*1 Pignon de différentiel à glissement limité (LSD) : huile pour engrenages hypoïdes LSD (N° de pièce : KLD31-14002) ou équivalent*3
Arrière :	H233B	2,8	
	C200	1,3	
Liquide de direction assistée		–	Type DEXRON™ IIE, DEXTRON™ III ou équivalent
Liquide de frein et d'embrayage		–	Pour l'Europe : DOT 3 ou DOT 4 (US FMVSS N° 116)*5 Sauf pour l'Europe : DOT 3 (US FMVSS N° 116)
Graisse pour arbre de transmission		–	NLGI N° 2 (à base de savon de lithium comprenant du bisulfure de molybdène)
Graisse à usage multiple		–	NLGI N° 2 (à base de savon lithium)

*1 : Pour de plus amples détails, se reporter à ''Indice de viscosité SAE''.
*2 : Pour plus de détails sur les huiles appropriées, y compris les huiles recommandées de type huile pour boîte de vitesses automatique DEXRON™ III/MERCON™, contacter un concessionnaire Nissan.
*3 : API GL-5, SAE 140 et 10% de volume du modificateur de friction LSD (n° de pièce : 38469-C6000) sont des équivalents.
*4 : Ne jamais mélanger DOT 3 et DOT 4 (DOT 3 est rempli en atelier).

Simpo PDF Merge and Split Unregistered Version - http://www.simpopdf.com

Indice de viscosité SAE

Température ambiante extérieure attendue avant prochaine vidange

HUILE POUR MOTEUR A ESSENCE

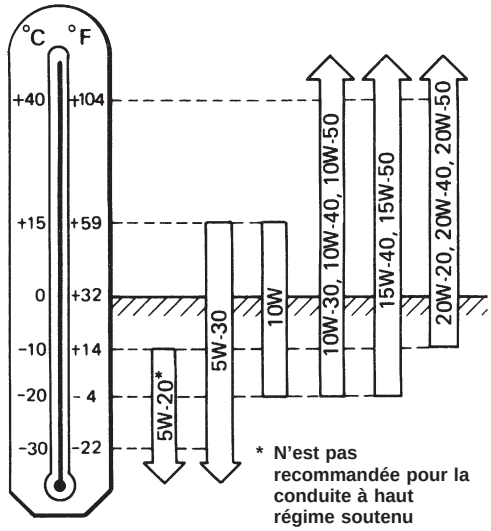

* N'est pas recommandée pour la conduite à haut régime soutenu

TI0005

- **Pour les régions tempérées et froides : l'huile 10W-30 convient, avec une température ambiante supérieure à −20°C.**
- **Pour les régions chaudes : les huiles 20W-20, 20W-40 et 20W-50 conviennent.**

Température ambiante extérieure attendue avant prochaine vidange

HUILE POUR MOTEUR DIESEL

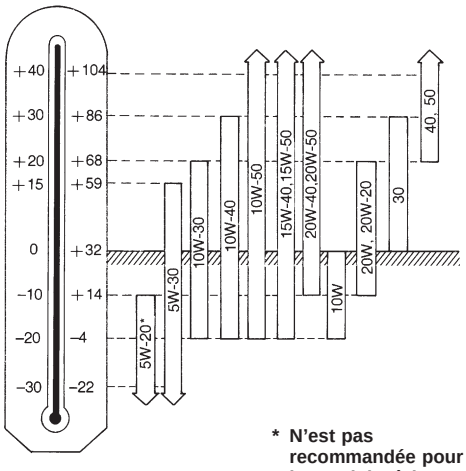

* N'est pas recommandée pour la conduite à haut régime soutenu

TI0006

- **Pour les régions froides : l'huile 10W-30 est préférable.**
- **Pour les régions tempérées et chaudes : les huiles 20W-40 et 20W-50 conviennent.**

Température ambiante extérieure attendue avant prochaine vidange

HUILE A ENGRENAGES

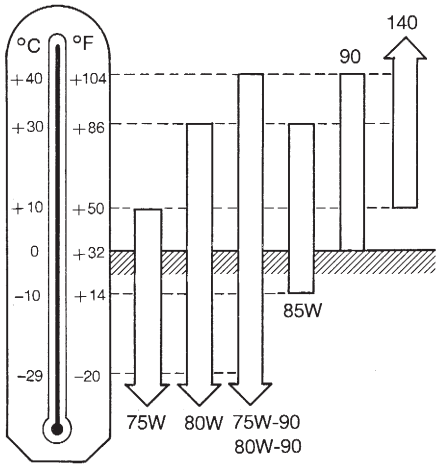

TI0003

- **Pour les régions tempérées et froides : l'huile 75W-90 pour la boîte de transfert et l'huile 80W-90 pour le différentiel conviennent.**
- **Pour les régions chaudes : l'huile 90 convient à une température ambiante inférieure à 40°C.**
- **Pour tout type de régions : l'huile 75W-90 pour la boîte de vitesses est préférable.**

Simpo PDF Merge and Split Unregistered Version - http://www.simpopdf.com

Richesse de mélange du liquide de refroidissement antigel

Le circuit de refroidissement du moteur est rempli en atelier avec une solution de liquide de refroidissement antigel de haute qualité et d'une durée d'un an. La solution antigel contient des agents inhibiteurs contre la corrosion et la rouille. Il est donc inutile de rajouter des additifs au circuit de refroidissement.

ATTENTION :

Lors de l'ajout ou du remplacement du liquide de refroidissement, veiller à n'utiliser que de l'antigel contenant de l'éthylène glycol avec la richesse de mélange adéquate. Voir les exemples suivants :

Température extérieure jusqu'à	Antigel	Eau douce
°C		
−15	30%	70%
−35	50%	50%

L'utilisation d'autres types de solutions de liquide de refroidissement peut endommager le circuit de refroidissement.

Simpo PDF Merge and Split Unregistered Version - http://www.simpopdf.com

Vérification des courroies d'entraînement

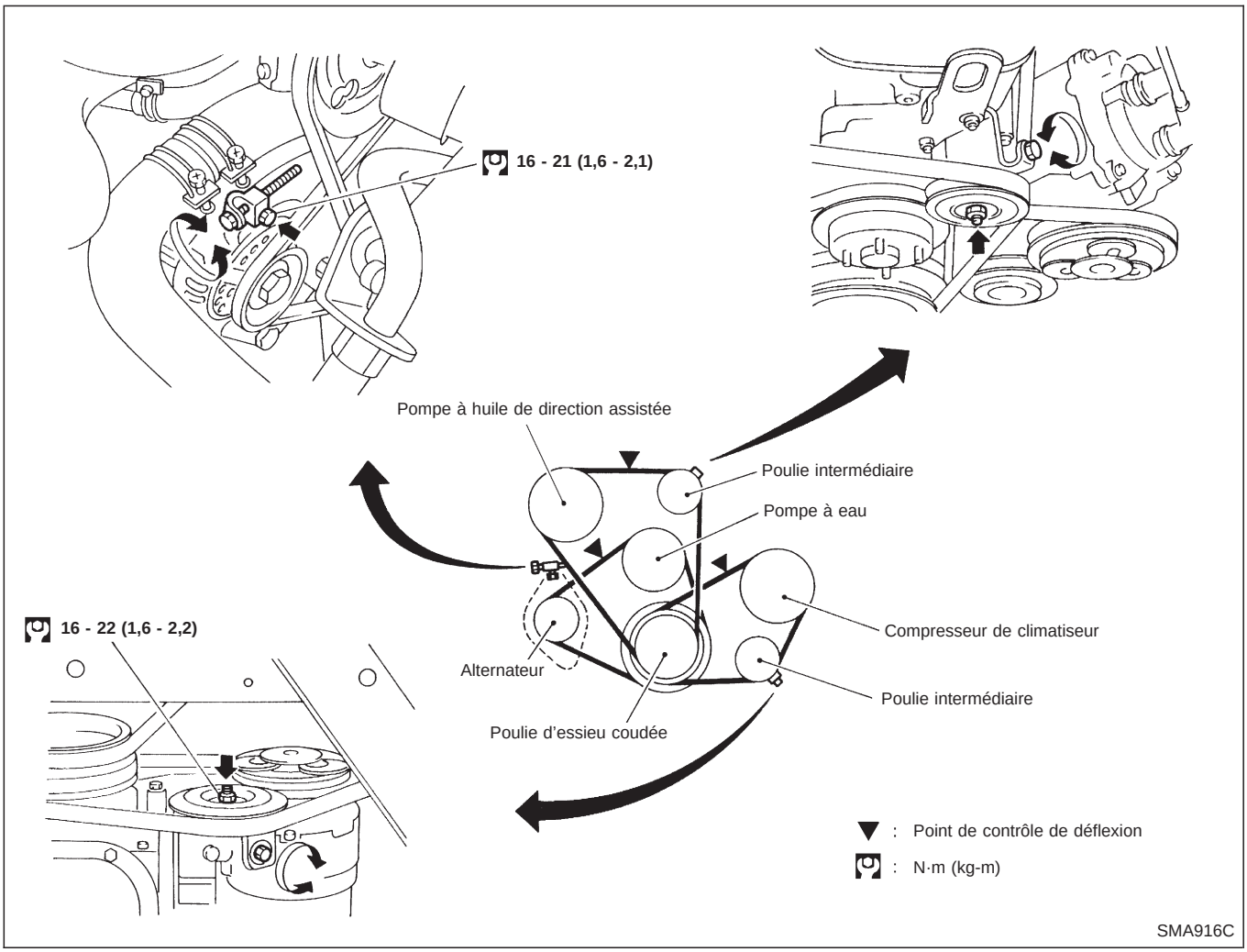

1. Rechercher des traces de fissures, d'effilochages, d'usure ou d'huile. En cas de besoin, remplacer la courroie par une neuve.
2. Vérifier les déflexions des courroies d'entraînement en appuyant à mi-chemin entre les poulies.

Régler si les déflexions des courroies sont excessives.

Déflexion des courroies :

Unité : mm

	Déflexion d'une courroie usagée		Déflexion d'une courroie neuve
	Limite	Déflexion après réglage	
Alternateur	17	10 - 12	8 - 10
Compresseur de climatiseur	16	10 - 12	8 - 10
Pompe à huile de direction assistée	15	9 - 11	7 - 9
Force de poussée	98 N (10 kg)		

Contrôler les déflexions des courroies d'entraînement lorsque le moteur est froid.

Simpo PDF Merge and Split Unregistered Version - http://www.simpopdf.com

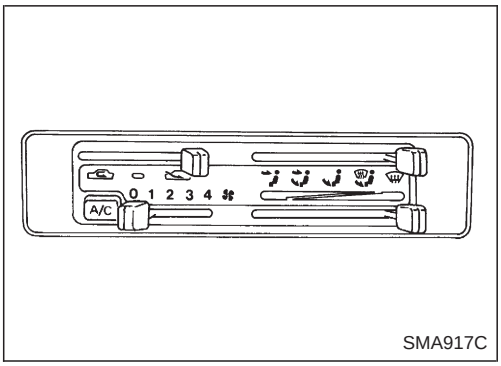

SMA917C

Remplacement du liquide de refroidissement du moteur

AVERTISSEMENT :
Pour éviter de se brûler, ne jamais changer le liquide de refroidissement lorsque le moteur est chaud.

– VIDANGE DU LIQUIDE DE REFROIDISSEMENT –

1. Déplacer le curseur de réglage de la température complètement jusqu'à la position ''CHAUD''.

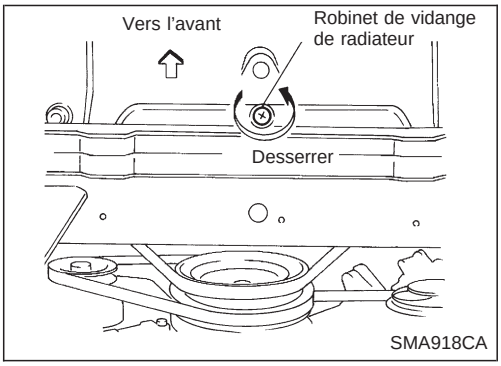

SMA918CA

2. Ouvrir le robinet de vidange se trouvant en bas du radiateur et enlever le bouchon du radiateur.
3. Déposer le réservoir, vidanger le liquide de refroidissement, puis nettoyer le réservoir. Le reposer temporairement.

Veiller à ce que le liquide de refroidissement ne coule pas sur les courroies d'entraînement.

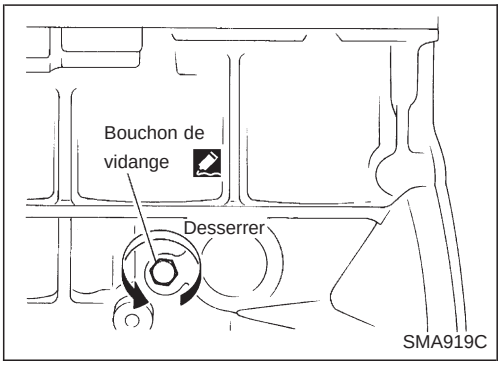

SMA919C

4. Retirer le bouchon de vidange du bloc-cylindres.

– RINÇAGE DU CIRCUIT DE REFROIDISSEMENT –

5. Reposer et fermer le robinet de vidange et bien serrer le bouchon de vidange.
6. Ouvrir le bouchon de décharge d'air.
7. Remplir le radiateur d'eau et fermer le bouchon de décharge d'air et le bouchon du radiateur.
8. Faire tourner le moteur et le laisser chauffer suffisamment.
9. Lancer le moteur deux ou trois fois à vide.
10. Arrêter le moteur et attendre qu'il refroidisse.
11. Répéter les opérations des étapes 2 à 10 jusqu'à ce que de l'eau propre commence à s'écouler du radiateur.
12. Vidanger l'eau.

– REMPLISSAGE DE LIQUIDE DE REFROIDISSEMENT –

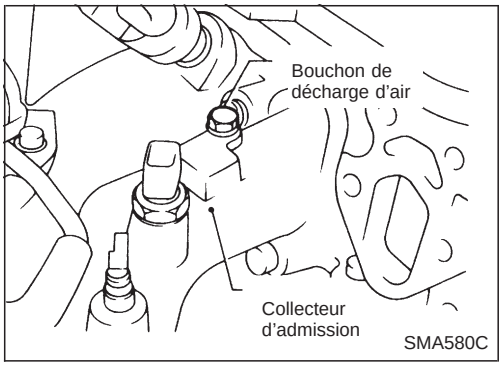

SMA580C

- **Appliquer du produit d'étanchéité sur le filetage du bouchon de vidange.**
  : 34 - 44 N·m
  (3,5 - 4,5 kg-m)

Simpo PDF Merge and Split Unregistered Version - http://www.simpopdf.com

Remplacement du liquide de refroidissement du moteur (Suite)

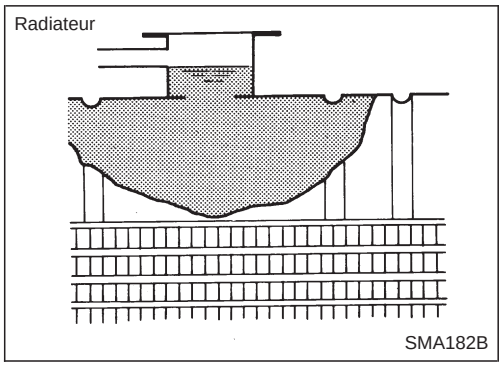

13. Ouvrir le bouchon du radiateur et le bouchon de décharge d'air.
14. Remplir le radiateur de liquide de refroidissement jusqu'au niveau spécifié.
    Se conformer aux instructions prévues sur le récipient d'antigel pour déterminer le rapport de mélange eau/antigel.

Pour la richesse de mélange du liquide de refroidissement, se reporter à MA-14.

Unité : ℓ

	Contenance en liquide de refroidissement :	
	2 roues motrices	4 roues motrices
Sans réservoir	6,1	
Réservoir	0,6	

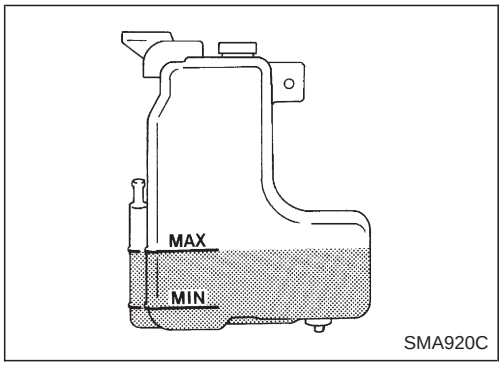

Verser lentement le liquide de refroidissement dans le goulot de remplissage afin que l'air puisse s'échapper.

15. Fermer le bouchon de décharge d'air.
16. Déposer le réservoir, vidanger le liquide de refroidissement, puis nettoyer le réservoir.
17. Reposer le réservoir et le remplir de réfrigérant jusqu'au niveau ''MAX'', puis reposer le bouchon du radiateur.
18. Faire tourner le moteur et le laisser chauffer suffisamment.
19. Lancer le moteur deux ou trois fois à vide.
20. Arrêter le moteur et le laisser refroidir, puis ajouter la quantité de liquide de refroidissement nécessaire.

Vérification du circuit de refroidissement

CONTROLE DES FLEXIBLES

Vérifier l'état général des flexibles et voir s'il n'y a pas de fuites, de fissures, d'effilochages ni de raccords desserrés.

VERIFICATION DU BOUCHON DE RADIATEUR

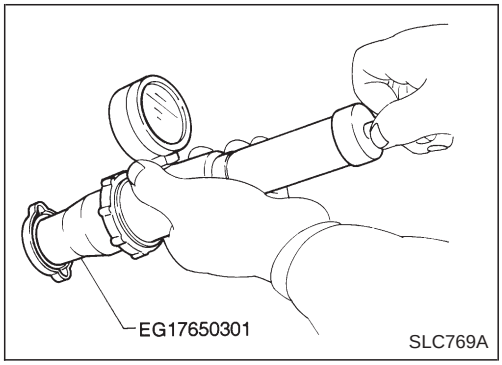

Exercer une pression sur le bouchon du radiateur à l'aide d'un vérificateur de bouchon afin de vérifier si son fonctionnement est convenable.

Pression de décharge du bouchon de radiateur :
Standard
78 - 98 kPa (0,78 - 0,98 bar, 0,8 - 1,0 kg/cm^2)
Limite
59 - 98 kPa (0,59 - 0,98 bar, 0,6 - 1,0 kg/cm^2)

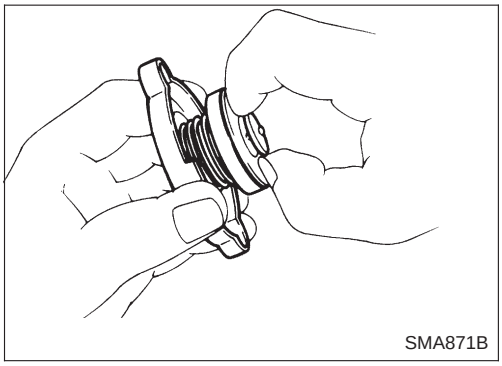

Tirer sur la soupape à dépression pour l'ouvrir. Vérifier si elle se ferme totalement une fois relâchée.

Simpo PDF Merge and Split Unregistered Version - http://www.simpopdf.com

Vérification du circuit de refroidissement (Suite)

VERIFICATION DE FUITES DE LIQUIDE DE REFROIDISSEMENT

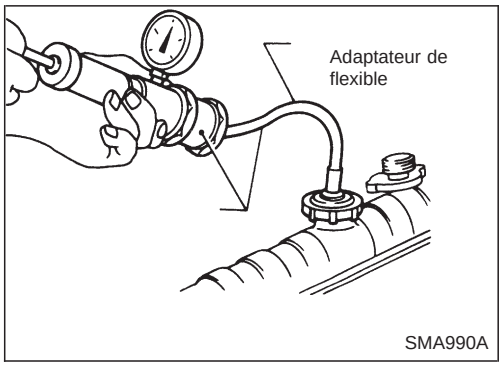

Vérifier s'il n'y a pas de fuites en exerçant une pression sur le circuit de refroidissement à l'aide du vérificateur de bouchon.

Pression d'essai :
157 kPa (1,57 bar, 1,6 kg/cm^2)

ATTENTION :
Une pression supérieure à la pression spécifiée peut abîmer le radiateur.

Vérification des canalisations d'alimentation

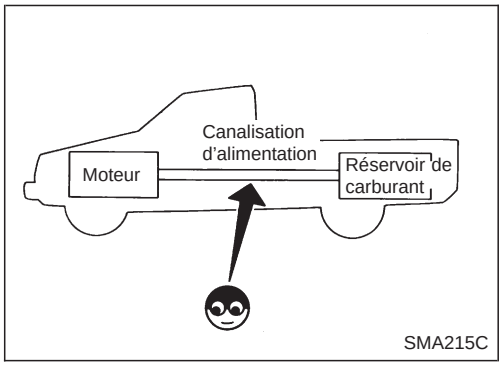

Vérifier les canalisations d'alimentation et le réservoir qui doivent être bien fixés, n'avoir ni fuites, ni fissures, ni dommages, ni raccords desserrés, ni usure, ni détériorations.
Si nécessaire, réparer ou remplacer les pièces défectueuses.

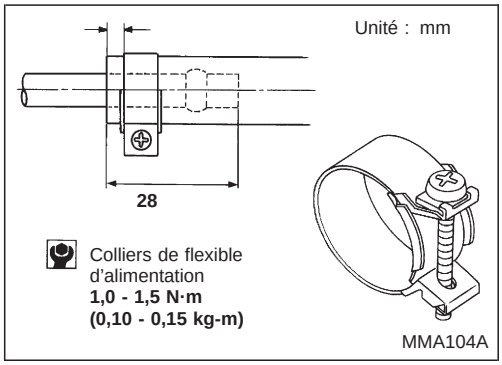

ATTENTION :
Serrer le collier du flexible en caoutchouc haute pression de manière à ce que son extrémité se trouve à 3 mm du bout du flexible.
Les couples de serrage spécifiés sont les mêmes que pour tous les colliers de flexible en caoutchouc.
S'assurer que la vis n'entre pas en contact avec des pièces voisines.

Remplacement du filtre à carburant

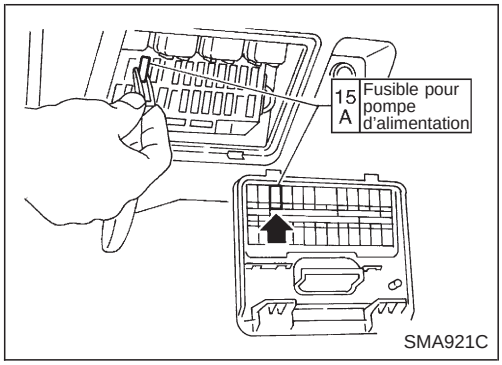

AVERTISSEMENT :
Avant de déposer le filtre à carburant, décharger la pression de la canalisation d'alimentation.

1. Déposer le fusible de la pompe d'alimentation.
2. Démarrer le moteur.
3. Après calage du moteur, faire démarrer le moteur deux ou trois fois pour s'assurer que la pression est relâchée.
4. Mettre le contact d'allumage sur ''OFF'' et reposer le fusible de pompe d'alimentation.

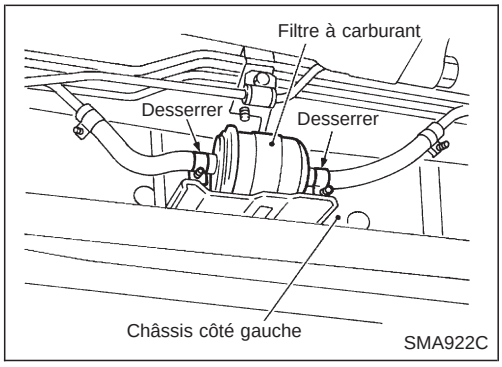

5. Desserrer les colliers du flexible d'alimentation.
6. Remplacer le filtre à carburant.

- **Prendre garde de ne pas renverser de carburant dans le compartiment moteur. Placer un chiffon pour absorber le trop-plein de carburant.**
- **Utiliser un filtre à carburant du type haute pression. Ne pas utiliser un filtre à carburant en résine synthétique.**
- **Lors du serrage des colliers du flexible d'alimentation, se reporter au titre ''Vérification des canalisations d'alimentation'', ci-dessus.**

Simpo PDF Merge and Split Unregistered Version - http://www.simpopdf.com

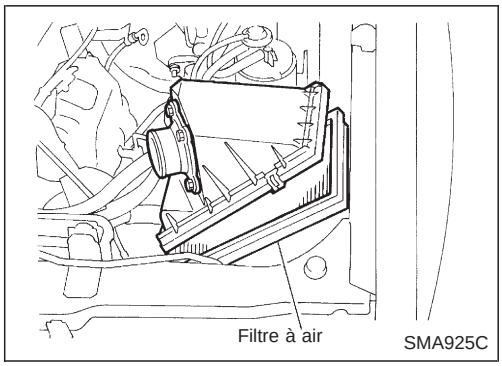

Remplacement du filtre à air (type à papier visqueux)

Les filtres à papier visqueux ne nécessitent pas de nettoyage entre deux changements.

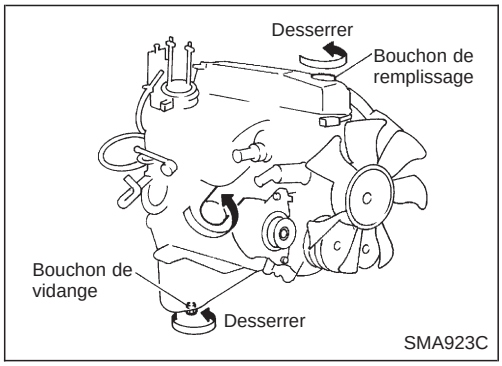

Remplacement de l'huile moteur

AVERTISSEMENT :

- **Prendre garde de ne pas se brûler car l'huile moteur est très chaude.**
- **Les contacts prolongés et répétés avec les huiles moteur usagées peuvent provoquer des cancers de la peau ; éviter tout contact direct avec les huiles moteur usagées. En cas de contact avec la peau, laver soigneusement avec du savon ou un produit de nettoyage pour les mains aussi rapidement que possible.**

1. Chauffer le moteur, et vérifier si les composants du moteur ne présentent pas de fuites d'huile.
2. Déposer le bouchon de vidange et le bouchon de remplissage d'huile.
3. Vidanger l'huile et faire le plein d'huile moteur neuve.

Catégorie d'huile : API, SG ou SH
Viscosité : se reporter à ''LIQUIDES ET LUBRIFIANTS CONSEILLES'', MA-12.
Contenance en huile de remplissage (environ) :

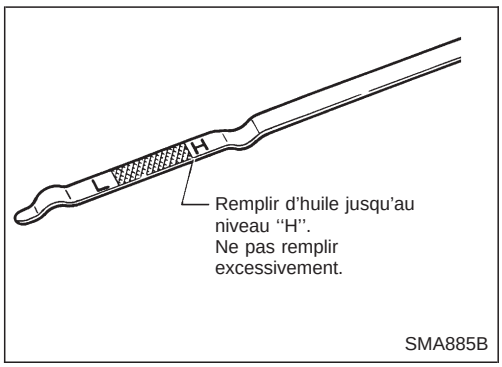

Unité : ℓ

	2 roues motrices	4 roues motrices
Avec remplacement du filtre à huile	3,9	4,1
Sans remplacement du filtre à huile	3,5	3,7

ATTENTION :

- **Veiller à nettoyer le bouchon de vidange et le reposer avec une rondelle neuve.**
  Bouchon de vidange :
  : 29 - 39 N·m (3,0 - 4,0 kg-m)
- **Utiliser de l'huile moteur recommandée.**
- **La capacité de remplissage varie selon la température de l'huile et le temps de vidange ; utiliser ces valeurs en tant que références et veiller à contrôler le niveau de la jauge lors du changement de l'huile.**

4. Contrôler le niveau d'huile.
5. Démarrer le moteur et vérifier s'il n'y a pas de fuites d'huile autour du bouchon de vidange et du filtre à huile.
6. Faire tourner le moteur pendant quelques minutes, puis couper le contact. Attendre quelques minutes et vérifier le niveau de l'huile.

Simpo PDF Merge and Split Unregistered Version - http://www.simpopdf.com

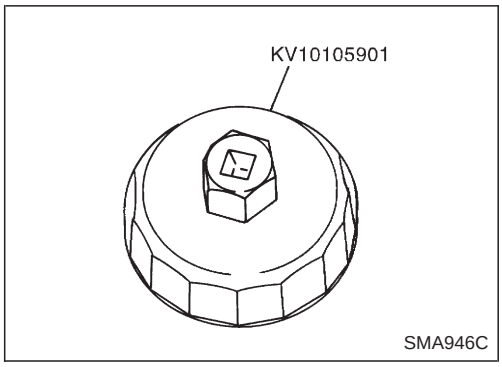

Remplacement du filtre à huile

1. Déposer le filtre à huile avec l'outil adéquat.

AVERTISSEMENT :
Prendre garde à ne pas se brûler car le moteur et l'huile moteur sont très chauds.

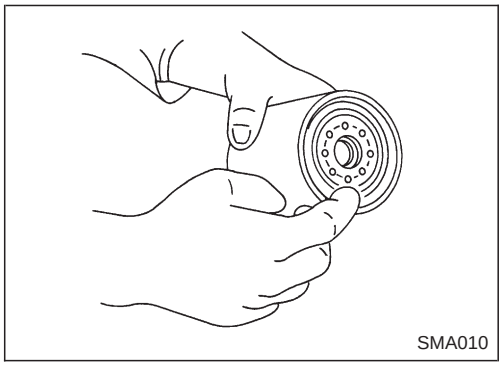

2. Avant d'adapter un filtre à huile neuf, nettoyer la surface de contact du filtre sur le bloc-cylindres, et enduire le joint en caoutchouc du filtre à huile d'un peu d'huile moteur.

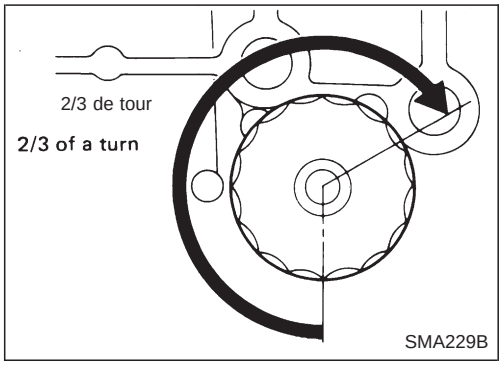

3. Visser le filtre à huile jusqu'à ce qu'une légère résistance soit ressentie, puis le serrer de plus de 2/3 de tour supplémentaire.
4. Ajouter de l'huile moteur.

Se reporter à ''Remplacement de l'huile moteur'', MA-19.

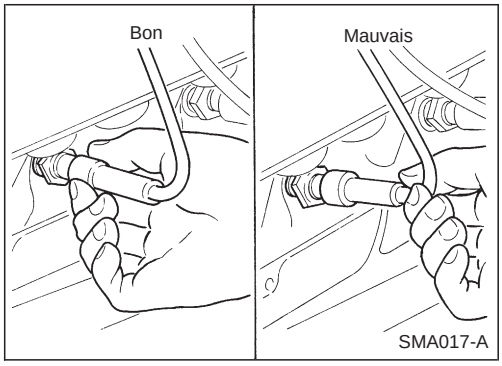

Vérification et remplacement des bougies d'allumage

1. Débrancher les câbles d'allumage des bougies d'allumage à hauteur du soufflet.
   Ne pas tirer sur le câble.

Simpo PDF Merge and Split Unregistered Version - http://www.simpopdf.com

Vérification et remplacement des bougies d'allumage (Suite)

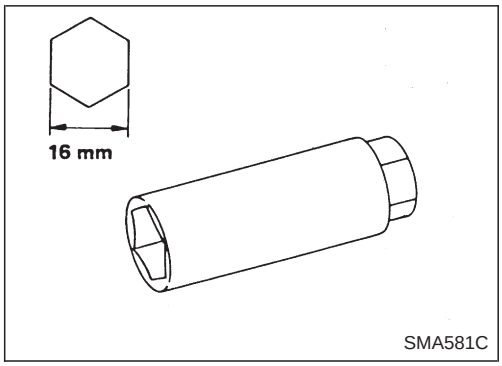

SMA581C

2. Déposer les bougies d'allumage à l'aide d'une clé à bougie.
3. Nettoyer les bougies à l'aide d'un appareil de sablage sous pression.
4. Vérifier si les isolants ne sont ni fissurés ni ébréchés, observer l'état général des joints et contrôler le degré d'usure des électrodes ainsi que leur état de brûlure éventuel. En cas d'usure excessive, procéder au remplacement des bougies d'allumage.

Bougie d'allumage :

Fabricant	NGK
Type standard	ZFR5E-11
Type chaud	ZFR4E-11
Type froid	ZFR6E-11

Utiliser des bougies d'allumage de type standard pour des conditions normales.

Les bougies d'allumage de type chaud sont adéquates en cas d'encrassement avec des bougies standard dans les conditions suivantes :

- démarrages fréquents du moteur
- températures ambiantes basses

Les bougies d'allumage de type froid sont adéquates en cas de cognement des bougies de type standard dans les conditions suivantes :

- longs trajets sur autoroutes
- régime du moteur fréquemment élevé

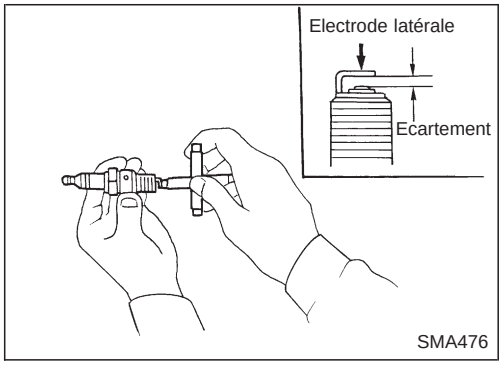

SMA476

5. Vérifier l'écartement des électrodes des bougies d'allumage.
   Ecartement : 1,0 à 1,1 mm
6. Reposer les bougies. Rebrancher les câbles d'allumage en veillant à faire correspondre leurs numéros respectifs.
   Bougie d'allumage :
   : 20 - 29 N·m
   (2,0 - 3,0 kg-m)

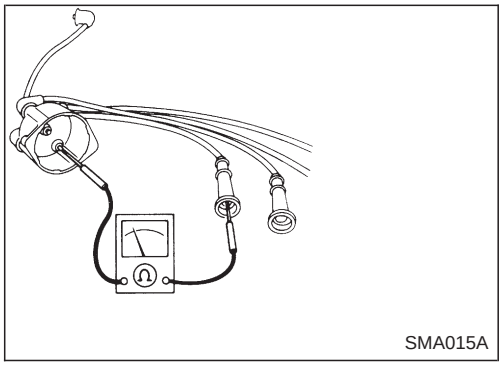
SMA015A

Vérification des câbles d'allumage

1. Vérifier l'état des câbles à haute tension, voir s'ils ne sont pas fissurés, endommagés, et contrôler si les bornes ne sont pas brûlées et si le raccordement des cosses est correct.
2. Mesurer la résistance des câbles haute tension, en les secouant et en contrôlant les coupures intermittentes.
   Résistance : inférieure à 12,2 kΩ/m

Simpo PDF Merge and Split Unregistered Version - http://www.simpopdf.com

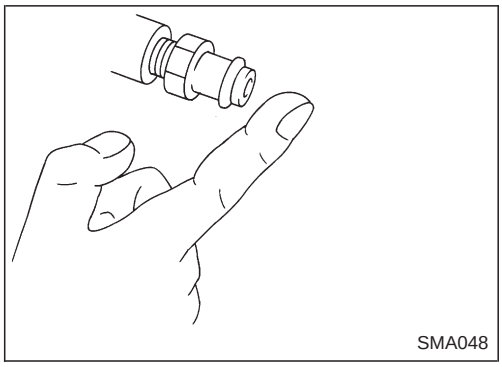
SMA048

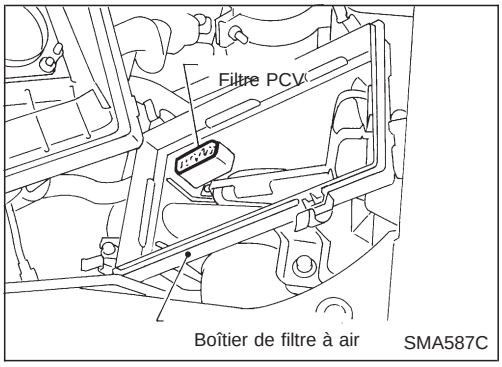

SMA587C

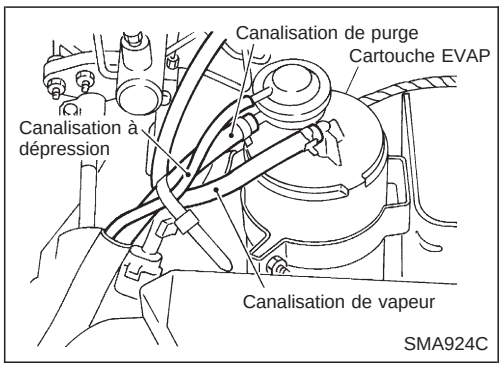

SMA924C

Vérification du système de ventilation positive du carter (PCV)

VERIFICATION DE LA VANNE PCV

Lorsque le moteur tourne au ralenti, déposer le flexible de ventilation de la vanne PCV ; si la vanne fonctionne correctement, un sifflement sera audible lorsque l'air passe à travers de celle-ci, et une forte dépression se fera ressentir immédiatement lorsque l'on place un doigt sur l'entrée de la vanne.

VERIFICATION DES FLEXIBLES DE VENTILATION

1. Rechercher la présence de fuites au niveau des flexibles et des raccords.
2. Débrancher tous les flexibles et les nettoyer à l'air comprimé. Remplacer tous les flexibles qui ne peuvent pas être débouchés à l'air comprimé.

Remplacement du filtre de ventilation positive du carter (PCV)

Déposer le couvercle du filtre à air, puis retirer le filtre PCV situé à l'intérieur de ce dernier. Reposer un filtre PCV neuf.

Vérification des flexibles et des raccords à dépression

Vérifier la fixation des flexibles à dépression, voir s'il n'y a pas de fuites, de fissures, de dommages, de raccords desserrés, d'éraflures ni de détériorations.

Se reporter à Schéma des flexibles à dépression sous SYSTEME ENTIER DE COMMANDE DU MOTEUR ET DE CONTROLE ANTIPOLLUTION à la section EC.

Vérification des canalisations de vapeur

1. Vérifier visuellement la fixation des canalisations de vapeur et voir s'il n'y a pas de fissures, de dommages, de raccords desserrés, d'effilochages et de détériorations.
2. Vérifier si la soupape de décharge à dépression se trouvant sur le bouchon de remplissage du réservoir de carburant n'est pas bouchée, collée, etc.

Se reporter au chapitre ''SYSTEME DE CONTROLE DES EMISSIONS EVAPORATIVES'' à la section EC.

Simpo PDF Merge and Split Unregistered Version - http://www.simpopdf.com

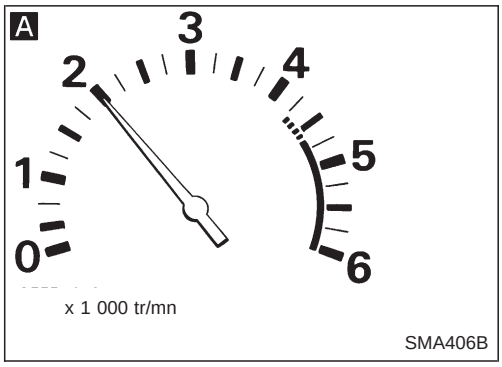

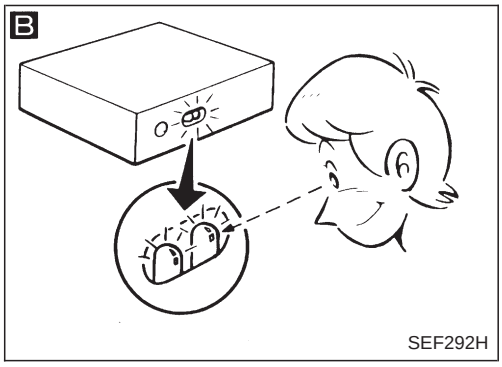

Vérification de la sonde à oxygène chauffée

Procédure de vérification

DEBUT DE L'INSPECTION

↓

Démarrer le moteur et le faire chauffer jusqu'à ce que l'indicateur de température du moteur atteigne le milieu du cadran.

↓

A

Faire tourner le moteur à environ 2 000 tr/mn pendant environ 2 minutes à vide.

↓

B

*S'assurer que la lampe d'inspection (DEL verte) de l'ECM s'allume et s'éteint plus de 5 fois pendant 10 secondes à 2 000 tr/mn à vide.

Bon → FIN DE L'INSPECTION

Mauvais → Les contrôles et réglages doivent être effectués d'après les instructions du paragraphe intitulé REGLAGE DU REGIME DE RALENTI / CALAGE D'ALLUMAGE / RICHESSE DE MELANGE DE RALENTI à la section EC. → Démarrer le moteur et le faire chauffer jusqu'à ce que l'indicateur de température du moteur atteigne le milieu du cadran.

FIN DE L'INSPECTION

* ● S'assurer que le mode de diagnostic est en mode I ou II.
● S'assurer que le sélecteur de mode de diagnostic est tourné complètement dans le sens inverse des aiguilles d'une montre.
Se reporter à Autodiagnostic dans la section EC.

Simpo PDF Merge and Split Unregistered Version - http://www.simpopdf.com

Vérification des couples de serrage du collecteur

La vérification doit être effectuée lorsque le moteur est froid (environ 20°C).

Boulons et écrous de collecteurs :

Admission

: 13 - 19 N·m (1,3 - 1,9 kg-m)

Echappement

: 25 - 29 N·m (2,5 - 3,0 kg-m)

Ecrous de tuyau d'échappement :

: 41,2 - 48,0 N·m (4,2 - 4,9 kg-m)

Réglage du jeu des soupapes d'admission et d'échappement

Le réglage doit être effectué alors que le moteur est chaud mais qu'il ne tourne pas.

1. Placer le cylindre n° 1 au point mort haut sur sa course de compression et régler le jeu des soupapes ①, ②, ③ et ⑥.
2. Placer le cylindre n° 4 au point mort haut sur sa course de compression et régler le jeu des soupapes ④, ⑤, ⑦ et ⑧.

Jeu des soupapes :

Admission ①, ③, ⑤ et ⑦

0,30 - 0,40 mm

Echappement ②, ④, ⑥ et ⑧

0,30 - 0,40 mm

Contre-écrous des vis de réglage :

: 15 - 20 N·m (1,5 - 2,0 kg-m)

- Serrer les contre-écrous en fixant les vis de réglage au moyen d'un petit tournevis.

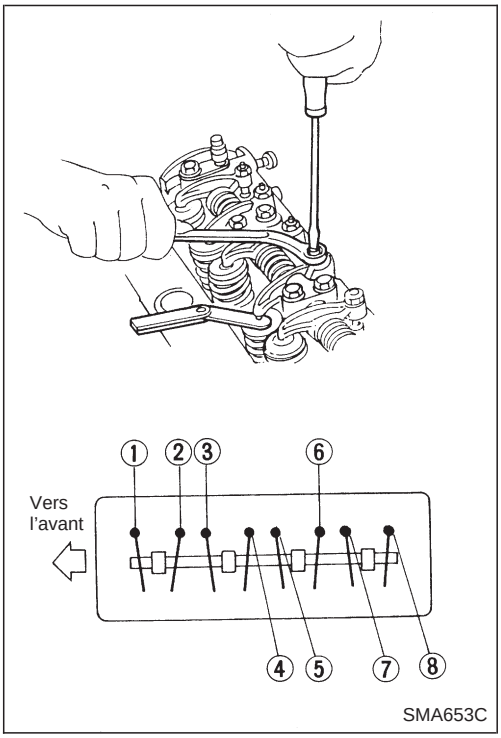

SMA653C

Vérification des courroies d'entraînement

1. Rechercher des traces de fissures, d'effilochages, d'usure et d'huile. Remplacer si nécessaire.

Les courroies ne doivent pas toucher le fond de la rainure de la poulie.

2. Vérifier la déflexion de la courroie d'entraînement en appuyant à mi-chemin entre les poulies.

Régler si les déflexions des courroies sont excessives.

Unité : mm

	Déflexion d'une courroie usagée		Déflexion d'une courroie neuve
	Limite	Déflexion après le réglage	
Alternateur	20	11 - 13	9 - 11
Compresseur de climatiseur	12	6 - 7,5	5 - 6,5
Pompe à huile de direction assistée	15	8 - 9,5	7 - 8,5
Force de poussée	98 N (10 kg)		

Vérifier les déflexions des courroies d'entraînement lorsque le moteur est froid.

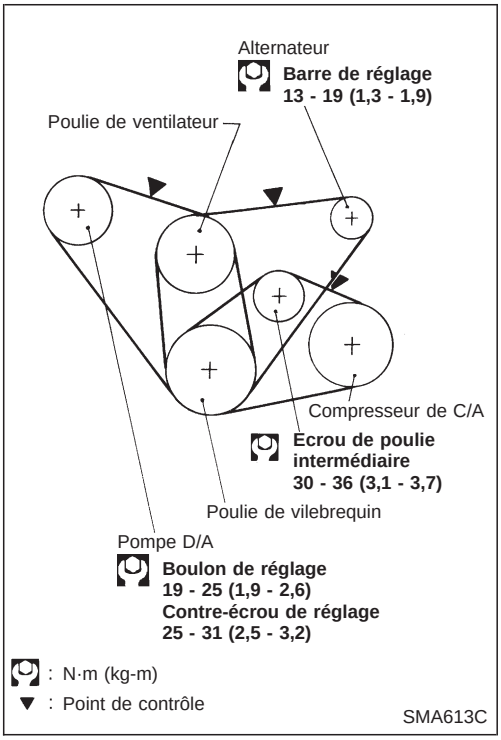

SMA613C

Simpo PDF Merge and Split Unregistered Version - http://www.simpopdf.com

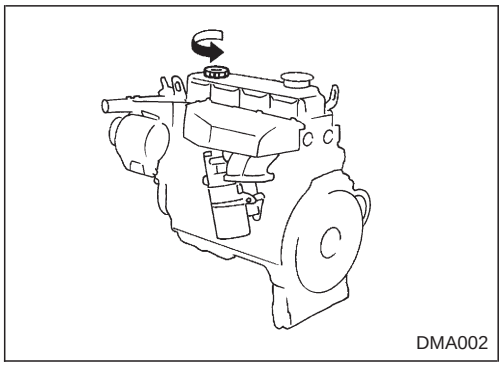
DMA002

Remplacement de l’huile moteur

AVERTISSEMENT :

- **Prendre garde de ne pas se brûler car l’huile moteur est très chaude.**
- **Les contacts prolongés et répétés avec les huiles moteur usagées peuvent provoquer des cancers de la peau ; éviter tout contact direct avec les huiles moteur usagées. En cas de contact avec la peau, laver soigneusement avec du savon ou un produit de nettoyage pour les mains aussi rapidement que possible.**

1. Réchauffer le moteur, et vérifier si les composants du moteur ne présentent pas de fuites d’huile.
2. Déposer le bouchon de remplissage d’huile et le bouchon de vidange.
3. Vidanger l’huile et faire le plein d’huile moteur neuve.

Catégorie d’huile : API CC ou CD sauf pour l’Europe
API, CD pour l’Europe
Viscosité :
Voir ‘‘LIQUIDES ET LUBRIFIANTS CONSEILLES’’, MA-12.
Contenance en huile de remplissage (environ) :
Sans remplacement du filtre à huile
TD25 6,5 ℓ
Avec remplacement du filtre à huile
TD25 7,2 ℓ

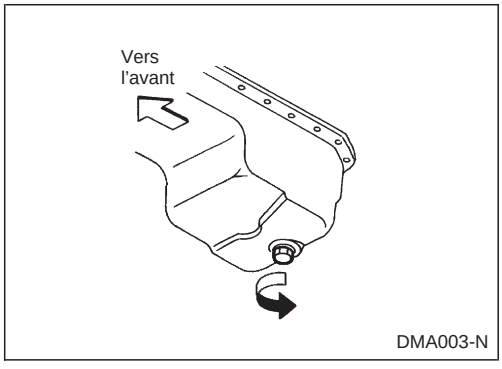

DMA003-N

ATTENTION :

- **Veiller à nettoyer et à reposer le bouchon de vidange du carter d’huile avec la rondelle.**
  Bouchon de vidange :
  : 54 - 59 N·m (5,5 - 6,0 kg-m)
- **La capacité de remplissage varie selon la température de l’huile et le temps de vidange, utiliser ces valeurs en tant que références et veiller à contrôler le niveau de la jauge lors du changement de l’huile.**

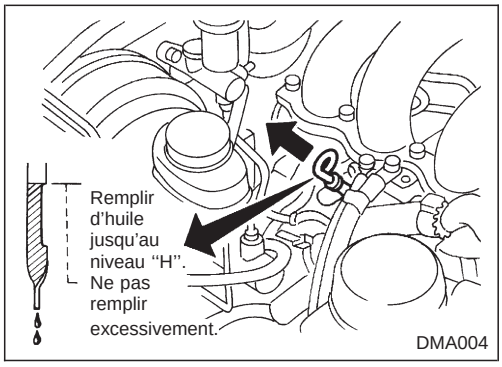

DMA004

4. Contrôler le niveau d’huile.
5. Démarrer le moteur. Vérifier s’il n’y a pas de fuites d’huile autour du bouchon de vidange et du filtre à huile.
6. Faire tourner le moteur pendant quelques minutes, puis couper le contact. Attendre quelques minutes et vérifier le niveau de l’huile.

Simpo PDF Merge and Split Unregistered Version - http://www.simpopdf.com

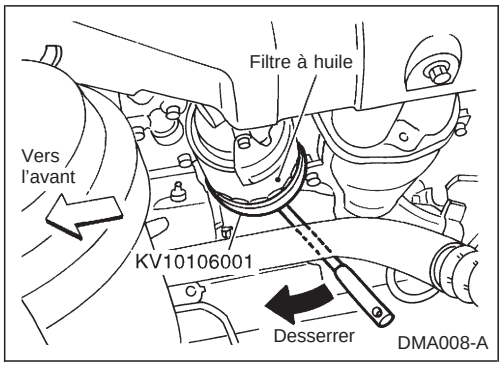

Remplacement du filtre à huile moteur

1. Déposer le filtre à huile avec l'outil spécial.

AVERTISSEMENT :
Prendre garde à ne pas se brûler car le moteur et l'huile moteur sont très chauds.

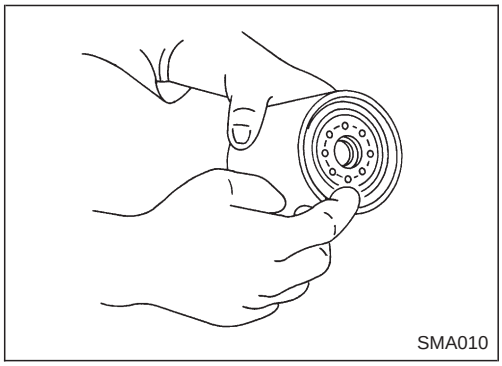

2. Nettoyer la surface de montage du filtre à huile sur le bloc-cylindres. Enduire le joint d'huile en caoutchouc du nouveau filtre à huile avec de l'huile moteur.
3. Visser le filtre à huile jusqu'à ce qu'une légère résistance soit ressentie, puis le serrer de plus de 2/3 de tour supplémentaire.
4. Ajouter de l'huile moteur.

Se reporter à ''Remplacement de l'huile moteur''.

- **Nettoyer l'excédent d'huile moteur.**

Remplacement du liquide de refroidissement du moteur

AVERTISSEMENT :
Pour éviter de se brûler, ne jamais changer le liquide de refroidissement lorsque le moteur est chaud.

– VIDANGE DU LIQUIDE DE REFROIDISSEMENT –

1. Déplacer le curseur de réglage de la température complètement jusqu'à la position ''CHAUD''.
2. Ouvrir le bouchon de vidange situé en bas du radiateur.

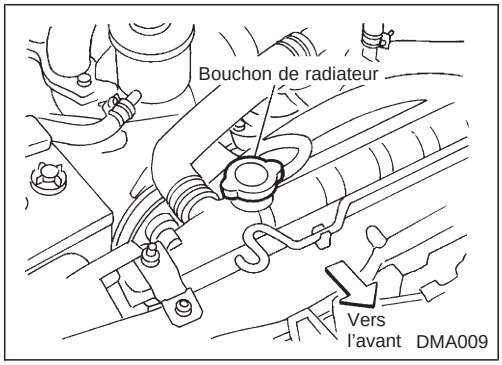

3. Déposer le bouchon de remplissage du radiateur.
   Déposer le réservoir, vidanger le liquide de refroidissement, puis nettoyer le réservoir.
   Le reposer temporairement.

- **Veiller à ce que le liquide de refroidissement ne coule pas sur les courroies d'entraînement.**

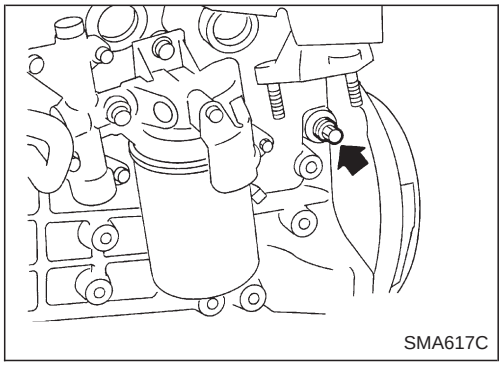

4. Déposer le bouchon de vidange du bloc-cylindres situé à l'arrière gauche du bloc-cylindres.
5. Vidanger le liquide de refroidissement et installer les bouchons de vidange du bloc-cylindres et du radiateur.
6. Remplir le radiateur d'eau et réchauffer le moteur.
7. Arrêter le moteur et attendre qu'il refroidisse.
8. Répéter les étapes 2 à 7 à deux ou trois reprises.
9. Vidanger l'eau.

Simpo PDF Merge and Split Unregistered Version - http://www.simpopdf.com

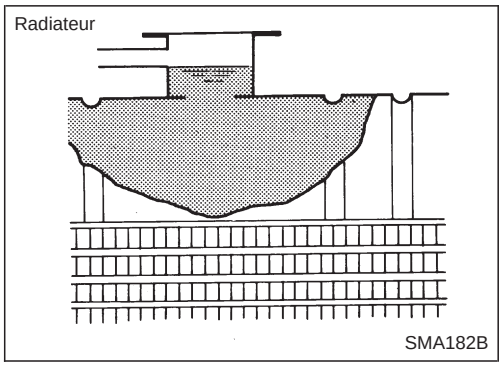

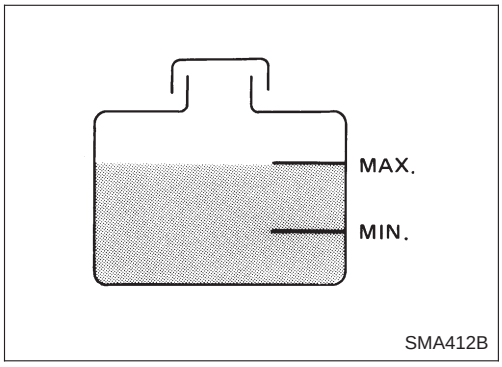

Remplacement du liquide de refroidissement du moteur (Suite)

– REMPLISSAGE DE LIQUIDE DE REFROIDISSEMENT –

10. Reposer le réservoir, le bouchon de vidange du radiateur, et les bouchons de vidange du bloc-cylindres.

- **Appliquer du produit d'étanchéité sur le filetage du bouchon de vidange du bloc-cylindres.**

Bouchon de vidange du bloc-cylindres :
: 54 - 64 N·m (5,5 - 6,5 kg-m)

11. Remplir le radiateur et le réservoir de réfrigérant jusqu'au niveau MAX. et reposer le bouchon de radiateur.

Pour la richesse de mélange du liquide de refroidissement antigel, consulter MA-14.

Contenance en liquide de refroidissement (avec réservoir) :
TD25 9,5 ℓ
Contenance du réservoir (pour niveau MAX) :
0,6 ℓ

Verser lentement le liquide de refroidissement dans le goulot de remplissage afin que l'air puisse s'échapper.

12. Réchauffer le moteur jusqu'à la température de fonctionnement normale.
13. Emballer le moteur à 2 000 tr/mn pendant 10 secondes puis retourner à la vitesse de ralenti.

- Répéter les opérations 2 ou 3 fois.

Surveiller la jauge de température du liquide de refroidissement pour éviter que le moteur ne surchauffe.

14. Arrêter le moteur et le laisser refroidir.

- Refroidir à l'aide d'un ventilateur pour réduire le temps de refroidissement.

15. Déposer le bouchon de remplissage du radiateur et vérifier le niveau du liquide de refroidissement.

- Si nécessaire, remplir le radiateur jusqu'au goulot de remplissage avec du liquide de refroidissement.

16. Remplir le réservoir de liquide de refroidissement jusqu'au niveau ''MAX'.
17. Répéter les étapes 12 à 16 deux fois ou plus.
18. Réchauffer le moteur, et vérifier le bruit d'écoulement du liquide de refroidissement tout en emballant le moteur du ralenti à 2 000 tours, et en réglant la commande de température sur différentes positions entre ''FROID'' et ''CHAUD''.

- Le robinet d'eau du chauffage doit émettre des bruits.

19. Si un bruit se fait entendre, purger l'air du circuit de refroidissement en répétant les étapes 12 à 16 jusqu'à ce que le niveau du liquide de refroidissement ne baisse plus.

- **Nettoyer l'excédent de réfrigérant du moteur.**

Simpo PDF Merge and Split Unregistered Version - http://www.simpopdf.com

Vérification du circuit de refroidissement

VERIFICATION DES FLEXIBLES ET DES COLLIERS

Vérifier l'état général des flexibles et des colliers et voir s'il n'y a pas de fuites, de fissures, d'effilochages ni de raccords desserrés.

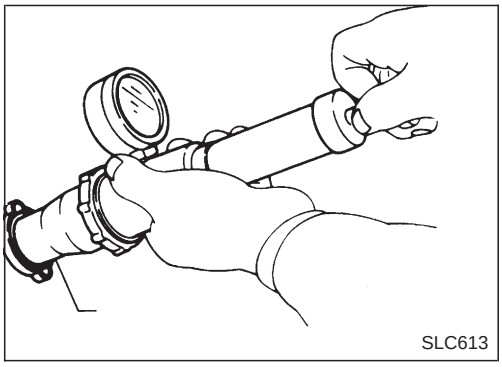
SLC613

VERIFICATION DU BOUCHON DE RADIATEUR

Exercer une pression sur le bouchon du radiateur à l'aide du vérificateur de bouchon afin de vérifier si son fonctionnement est convenable.

Pression d'ouverture du bouchon de radiateur :
78 - 98 kPa
(0,78 - 0,98 bar, 0,8 - 1,0 kg/cm^2)

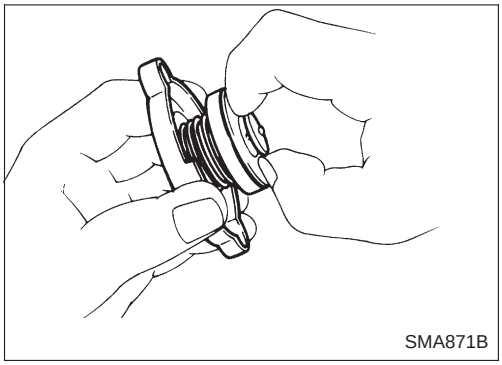
SMA871B

Tirer sur la soupape à dépression pour l'ouvrir. Vérifier qu'elle se referme totalement une fois relâchée.

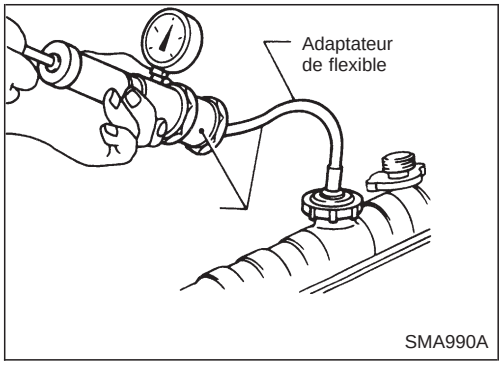

SMA990A

VERIFICATION DE FUITES DE LIQUIDE DE REFROIDISSEMENT

Vérifier s'il n'y a pas de fuites en exerçant une pression sur le circuit de refroidissement à l'aide du vérificateur de bouchon.

Pression d'essai :
157 kPa (1,57 bar, 1,6 kg/cm^2)

ATTENTION :
Une pression supérieure à la pression spécifiée peut abîmer le radiateur.

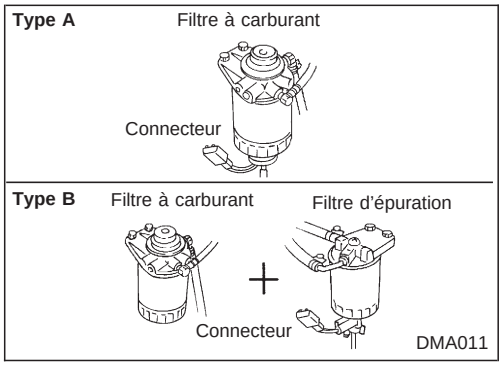

DMA011

Vérification et remplacement du filtre à carburant et vidange de l'eau

Prendre garde de ne pas renverser de carburant dans le compartiment moteur. Placer un chiffon pour absorber le trop-plein de carburant.

VERIFICATION DU FILTRE A CARBURANT

Contrôler le filtre à carburant et vérifier s'il n'y a pas de fuites de carburant, de dommages et d'autres anomalies.

Simpo PDF Merge and Split Unregistered Version - http://www.simpopdf.com

Vérification et remplacement du filtre à carburant et vidange de l'eau (Suite)

REMPLACEMENT DU FILTRE A CARBURANT

1. Débrancher le connecteur de faisceau et vidanger le carburant.

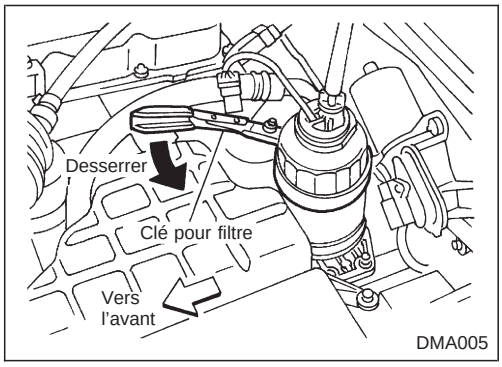

2. Déposer les deux boulons fixant le support du filtre à carburant, puis déposer le support avec le filtre à carburant. Ne pas déposer le flexible à carburant.
3. Reposer le filtre à carburant à l'envers en utilisant les orifices des boulons fixant le support du filtre à carburant.
4. Déposer le filtre à carburant à l'aide d'une clé pour filtre à bandes.
   Type A
   Déposer le filtre à carburant et son capteur.
   Type B
   Desserrer le filtre à carburant autant que possible sans renverser de carburant, replacer le filtre à carburant dans sa position d'origine, puis le déposer.

ATTENTION :
Déposer le filtre à carburant sans renverser de carburant. Si du liquide a été renversé, nettoyer immédiatement. Faire encore plus attention à ne pas renverser de carburant sur l'isolant de montage du moteur.

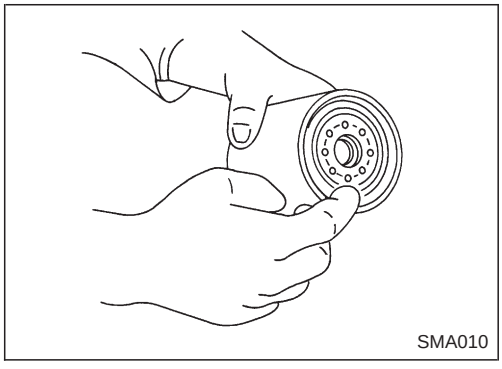

5. Bien nettoyer la surface de montage du filtre à carburant entrant en contact avec le support du filtre à carburant, et mettre un peu de carburant sur le joint en caoutchouc du filtre à carburant.
6. Visser le filtre à carburant jusqu'à ce qu'une légère résistance soit ressentie, puis le serrer de 2/3 de tour supplémentaire.
7. Reposer le capteur du filtre à carburant sur le filtre à carburant neuf. (Type A)
8. Purger l'air de la canalisation d'alimentation.

Se reporter à Système de purge de carburant dans la section EC.

9. Démarrer le moteur et rechercher la présence de fuites.

Simpo PDF Merge and Split Unregistered Version - http://www.simpopdf.com

Vérification et remplacement du filtre à carburant et vidange de l'eau (Suite)

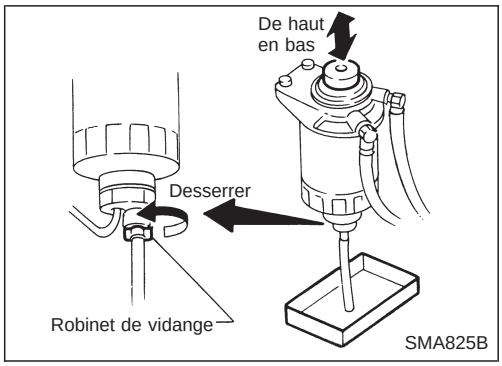

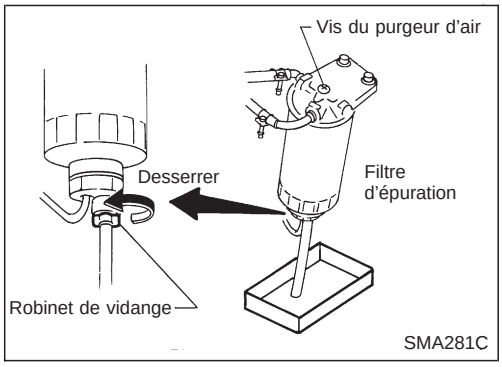

VIDANGE DE L'EAU

1. Vidanger l'eau comme suit.

Type A

Desserrer le robinet de vidange et vidanger l'eau.

En desserrant le robinet de vidange de 4 à 5 tours, l'eau commence à se vidanger. Ne pas déposer le robinet de vidange en le desserrant excessivement.

Si l'eau n'est pas vidangée correctement, déplacer la pompe d'amorçage de haut en bas.

Type B

Desserrer la vis du purgeur d'air du couvercle de filtre d'épuration, puis desserrer le robinet de vidange et vidanger l'eau.

En desserrant le robinet de vidange de 4 à 5 tours, l'eau commence à se vidanger. Ne pas déposer le robinet de vidange en le desserrant excessivement.

2. Purger l'air.

Se reporter à Système de purge de carburant dans la section EC.

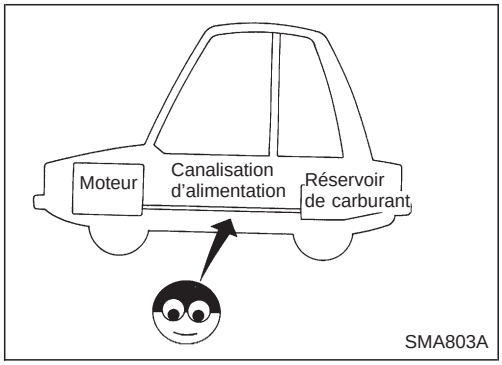

Vérification des canalisations d'alimentation

Vérifier les canalisations d'alimentation et le réservoir qui doivent être bien fixés, et s'assurer qu'elles n'ont ni fuites, ni fissures, ni dommages, ni raccords desserrés, ni usure, ni détériorations.

ATTENTION :

Conserver les pièces propres en utilisant de l'air comprimé lors du remontage.

Simpo PDF Merge and Split Unregistered Version - http://www.simpopdf.com

Nettoyage et remplacement du filtre à air

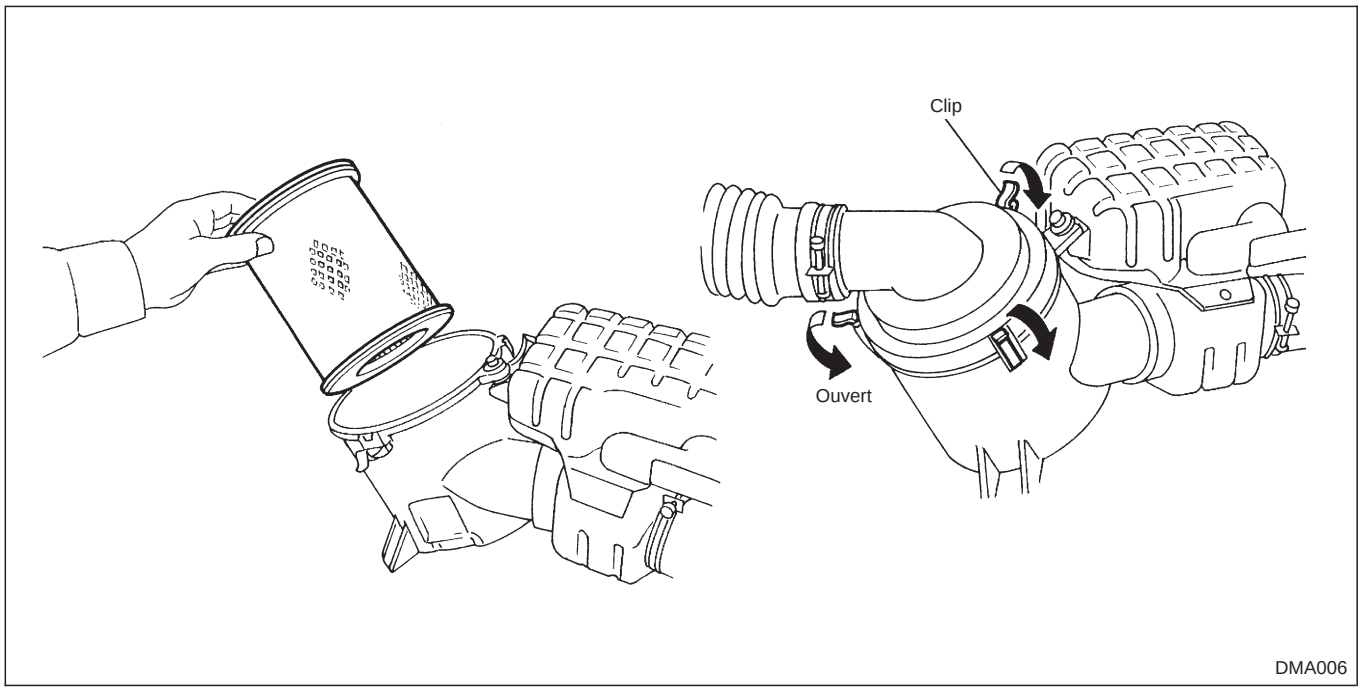

TYPE A PAPIER VISQUEUX

Le filtre à air à papier visqueux ne nécessite pas de nettoyage entre deux changements.

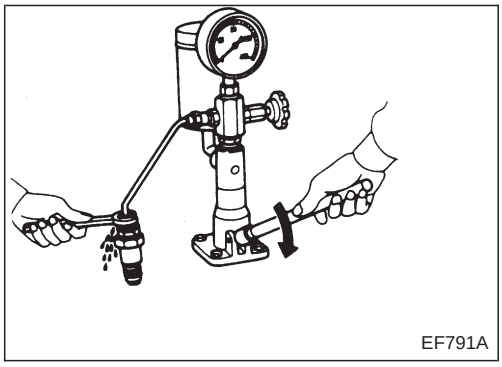

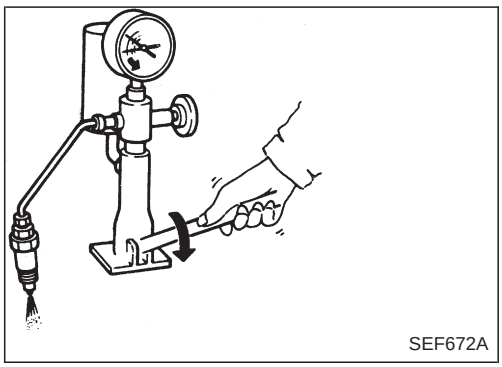

Vérificationde l'injecteur

AVERTISSEMENT :

Lors de l'utilisation de l'appareil d'essai pour injecteurs, faire attention à ce que le carburant diesel qui s'écoule de l'injecteur n'entre pas en contact avec les mains ou tout autre partie du corps et veiller à porter des lunettes de protection.

1. Monter l'injecteur sur un appareil d'essai et purger l'air par l'écrou évasé.
2. Vérifier la pression d'injection initiale en pompant la poignée de l'appareil d'essai (un battement par seconde).

Pression initiale de l'injection :

Injecteur usagé

9 807 - 10 297 kPa

(98,1 - 103,0 bar, 100 - 105 kg/cm^2)

Injecteur neuf

10 297 - 11 278 kPa

(103,0 - 112,8 bar, 105 - 115 kg/cm^2)

- **Toujours contrôler la pression d'injection initiale avant d'installer un nouvel injecteur.**

Simpo PDF Merge and Split Unregistered Version - http://www.simpopdf.com

Vérificationde l’injecteur (Suite)

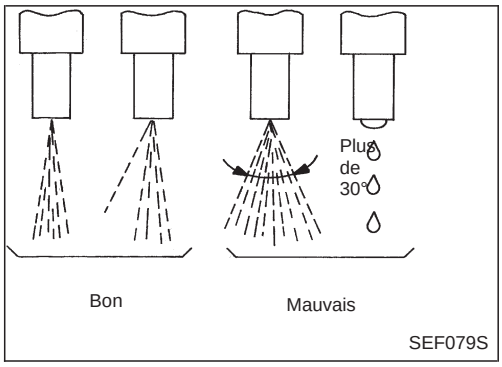

3. Contrôler la forme du jet en pompant la poignée de l’appareil d’essai à fond une fois par seconde.

a. Si l’angle du jet principal est compris dans les 30 degrés comme indiqué, cela signifie que l’injecteur est en bon état.

b. Le fonctionnement reste correct même si un mince filet du jet dévie du filet principal (modèle B).

4. Si la pression d’injection initiale n’est pas normale ou si l’injecteur est défectueux, régler ou nettoyer l’injecteur.
5. Tester à nouveau. Si le défaut n’est pas réglé, remplacer l’injecteur.

Se reporter à la section EC pour le réglage de la pression d’injection, le nettoyage et le remplacement.

6. Monter tous les injecteurs à l’aide de l’outil spécial et brancher correctement les tubes de trop-plein de carburant et de refoulement.
7. Purger l’air du circuit d’alimentation et rechercher des fuites de carburant lorsque le moteur tourne.

De l’injecteur à la culasse :
: 54 - 64 N·m (5,5 - 6,5 kg-m)
Ecrou du tube de trop-plein :
: 29 - 39 N·m (3,0 - 4,0 kg-m)
Tuyau d’injection :
: 20 - 25 N·m (2,0 - 2,5 kg-m)

Vérification du régime de ralenti

Préparation

1. S’assurer que le calage d’injection est correct.
2. Veiller à ce que les injecteurs soient en bon état.
3. S’assurer que les pièces suivantes sont en bon état.

- Obturation du filtre à air
- Circuit de préchauffage
- Niveau d’huile moteur et de réfrigérant
- Jeu des soupapes
- Système d’admission d’air (bouchon de remplissage d’huile, jauge de niveau d’huile, etc.)

4. Placer le levier de vitesses sur la position ‘‘point mort’’. Serrer le frein de stationnement et bloquer les roues avant et arrière avec des cales.
5. Eteindre le climatiseur, les lumières et accessoires.
6. S’assurer que le bouton de commande du ralenti est relâché à fond et que la vis de réglage du ralenti entre en contact avec le levier de commande de l’accélérateur.

Simpo PDF Merge and Split Unregistered Version - http://www.simpopdf.com

Vérification du régime de ralenti (Suite)

A

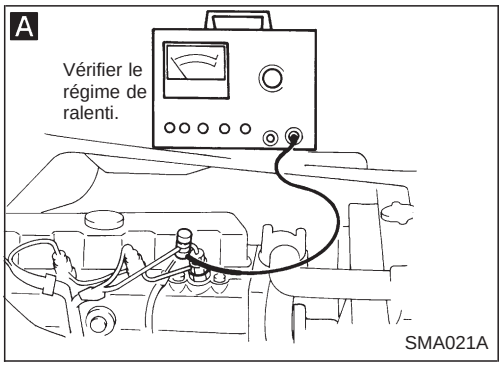

B

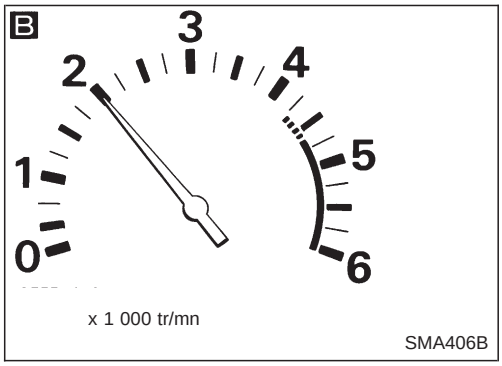

C

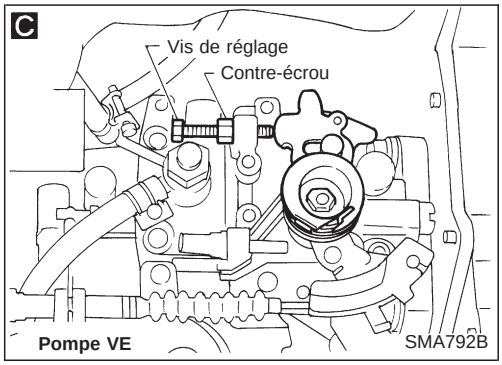

A

- Réchauffer le moteur jusqu'à ce que l'indicateur de température moteur atteigne le milieu du cadran.
- Attacher le pick-up du compte-tours au tuyau n° 1 d'injection.

Pour faire une lecture précise du régime moteur, déposer les colliers qui fixent le tuyau n° 1 d'injection.

↓

Démarrer le moteur.

↓

B

Faire tourner le moteur à environ 2 000 tr/mn pendant environ deux minutes à vide.

↓

Faire tourner le moteur pendant une minute au régime de ralenti.

↓

Contrôler le régime de ralenti.

Régime de ralenti :
TD25 700±50 tr/mn

Mauvais → C Régler le régime de ralenti en tournant la vis de réglage. → B

Bon ↓

FIN

- **Emballer le moteur deux ou trois fois, puis le laisser retourner au régime de ralenti. Si le régime de ralenti n'est pas compris dans les limites spécifiées, vérifier si la timonerie d'accélération n'est pas coincée, et la corriger si nécessaire.**

Simpo PDF Merge and Split Unregistered Version - http://www.simpopdf.com

Vérification du régime de ralenti (Suite)

MODELE EQUIPE D'UN CLIMATISEUR

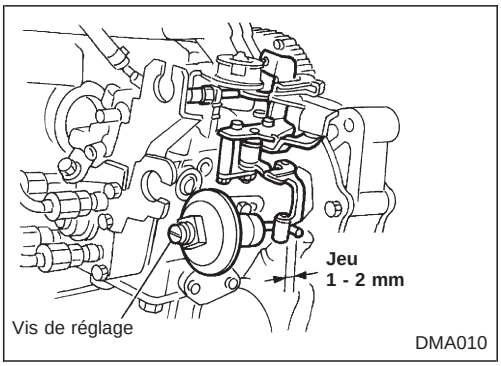

1. S'assurer que le jeu entre l'axe du levier de commande d'actionneur de ralenti et le levier de commande de la pompe à injection se trouve dans les limites spécifiées.
   Jeu : 1 - 2 mm
2. Régler le régime de ralenti à la valeur spécifiée sans déclencher le climatiseur.
3. Puis vérifier le régime de ralenti avec le climatiseur en marche, et contrôler que le réglage est bon.

Unité : tr/mn

Moteur	TD25
Régime de ralenti (climatiseur en marche)	850±50

Si tel n'est pas le cas, le régler en tournant la vis de réglage de la course d'actionneur FICD.

Simpo PDF Merge and Split Unregistered Version - http://www.simpopdf.com

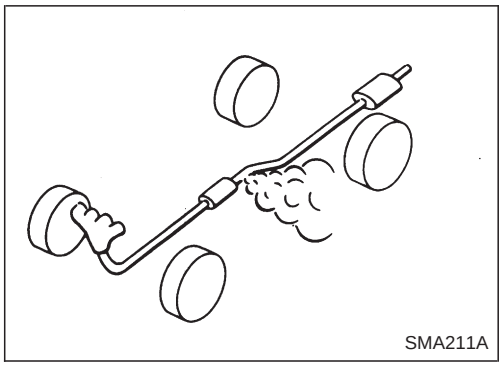
SMA211A

Vérification du système d'échappement

Vérifier l'état général, l'accouplement et le branchement des tuyaux d'échappement, du silencieux et de leurs accouplements et voir s'il n'y a ni fuites, ni fissures, ni rayures profondes.

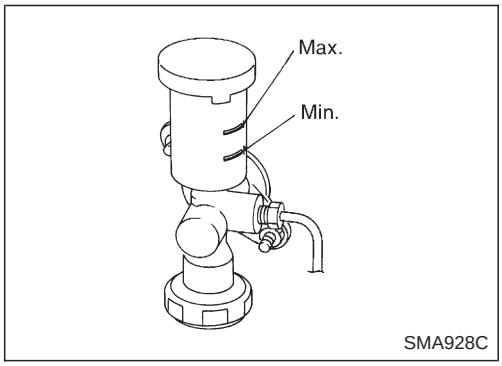

SMA928C

Vérification du niveau de liquide d'embrayage et de l'étanchéité

Si le niveau du liquide est extrêmement bas, vérifier si le circuit d'embrayage ne fuit pas.

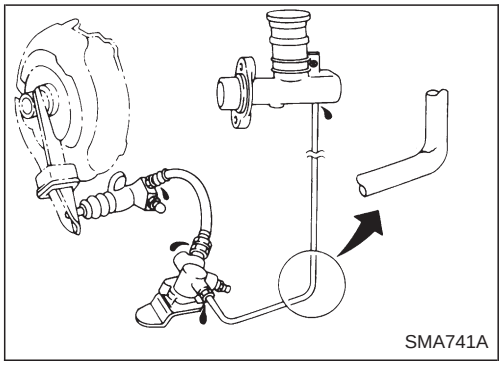
SMA741A

Vérification du circuit d'embrayage

Vérifier les canalisations de liquide, le cylindre récepteur et leurs fixations, et voir notamment s'il n'y a pas de fissures, de dommages, de raccords desserrés, de déformations ou d'autres détériorations.

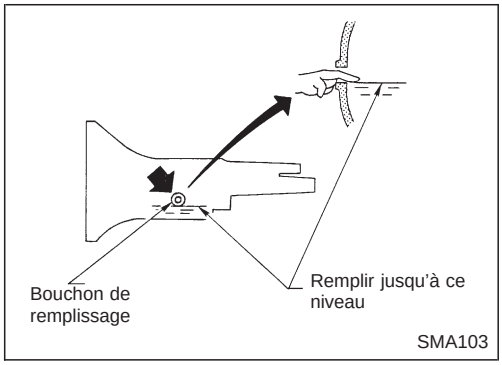

SMA103

Vérification de l'huile de la boîte de vitesses manuelle

Vérifier s'il n'y a pas de fuites d'huile et contrôler le niveau d'huile.

Ne jamais mettre le moteur en marche pendant que l'on vérifie le niveau d'huile.

Bouchon de remplissage :

: 25 - 34 N·m (2,5 - 3,5 kg-m)

Remplacement de l'huile de la boîte de vitesses manuelle

1. Vidanger l'huile par le bouchon de vidange et faire le plein d'huile pour pignon neuve.
2. Contrôler le niveau d'huile.

Catégorie d'huile et viscosité :

API GL-4. Se reporter à ''LIQUIDES ET LUBRIFIANTS CONSEILLES'', MA-12.

Contenance en huile :

FS5W71C

2 roues motrices 2,0ℓ

4 roues motrices 4,9ℓ

Simpo PDF Merge and Split Unregistered Version - http://www.simpopdf.com

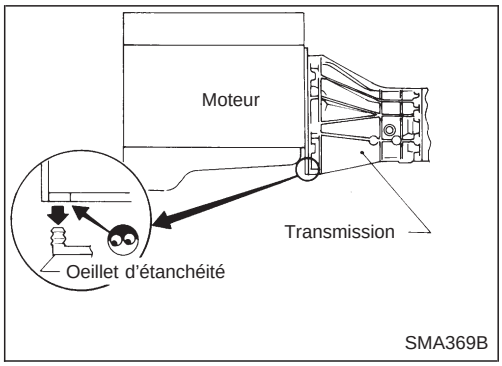

FS5R30A

4 roues motrices 5,1ℓ

Bouchon de vidange :

: 25 - 34 N·m (2,5 - 3,5 kg-m)

Vérification de l'entrée d'eau – Pour modèles à 4 roues motrices

Après avoir roulé dans de l'eau profonde ou dans de la boue, vérifier si de l'eau n'a pas pénétré dans le carter d'embrayage en retirant l'œillet d'étanchéité.

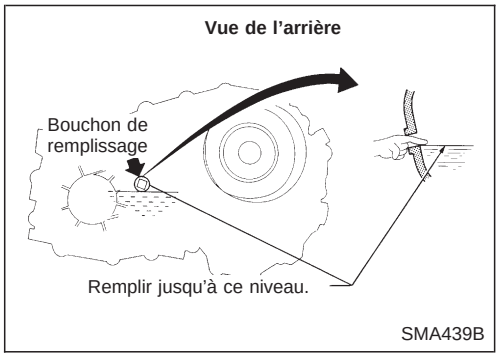

Vérification de l'huile de la boîte de transfert

Vérifier s'il n'y a pas de fuites d'huile et contrôler le niveau d'huile.

Du liquide ATF est employé pour la boîte de transfert dans l'atelier.

Ne jamais mettre le moteur en marche pendant que l'on vérifie le niveau d'huile.

Bouchon de remplissage :

: 25 - 34 N·m (2,5 - 3,5 kg-m)

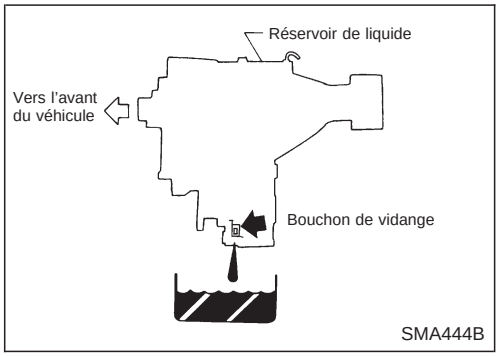

Remplacement de l'huile de la boîte de transfert

Lors du changement complet de l'huile de boîte de transfert, utiliser l'huile suivante.

Catégorie d'huile :

Matic "D" Nissan ou huile de boîte de vitesses automatique équivalente ou API GL-4. Se reporter à "LIQUIDES ET LUBRIFIANTS CONSEILLES", MA-12.

Contenance en huile :

2,2ℓ

Bouchon de vidange :

: 25 - 34 N·m (2,5 - 3,5 kg-m)

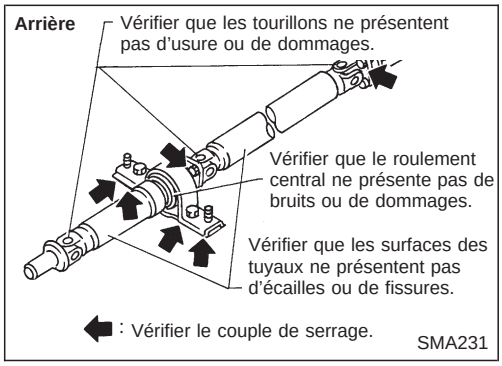

Vérification de l'arbre de transmission

Vérifier si l'arbre de transmission est endommagé, desserré et contrôler la présence de fuites de graisse éventuelles.

Couple de serrage : se reporter à la section PD.

Simpo PDF Merge and Split Unregistered Version - http://www.simpopdf.com

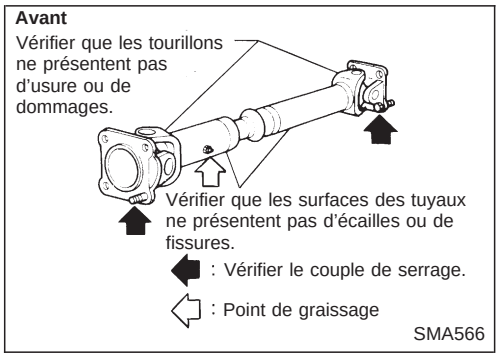

Graissage de l'arbre de transmission

Enduire de graisse recommandée les graisseurs de l'arbre de transmission.

Type de graisse :

Se reporter à ''LIQUIDES ET LUBRIFIANTS CONSEILLES'', MA-12.

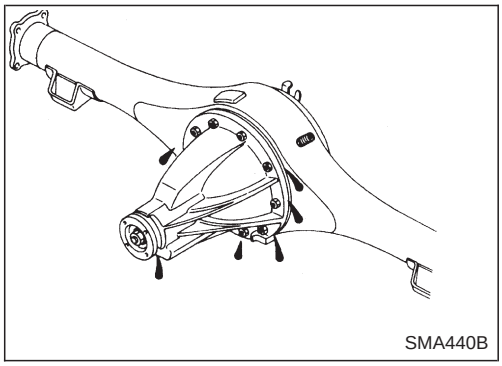

Vérification de l'huile du différentiel

Vérifier s'il n'y a pas de fuites d'huile et contrôler le niveau d'huile.

Bouchon de remplissage :

Avant

: 59 - 98 N·m (6 - 10 kg-m)

Arrière

: 59 - 98 N·m (6 - 10 kg-m)

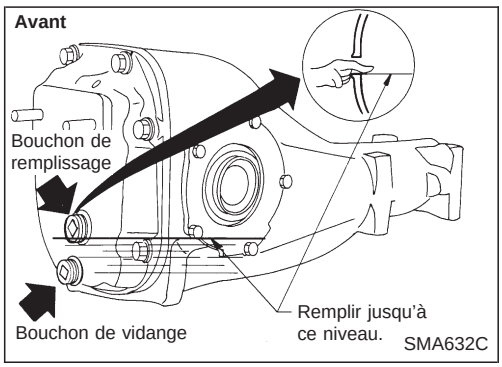

Remplacement de l'huile du différentiel

1. Vidanger l'huile par le bouchon de vidange et faire le plein d'huile pour pignon neuve.
2. Contrôler le niveau d'huile.

Catégorie d'huile et viscosité :

Se reporter à ''LIQUIDES ET LUBRIFIANTS CONSEILLES'', MA-12.

Contenance en huile :

Avant

1,3ℓ

Arrière

C200

1,3ℓ

H233B

2,8ℓ

Bouchon de vidange :

Avant

: 59 - 98 N·m (6 - 10 kg-m)

Arrière

: 59 - 98 N·m (6 - 10 kg-m)

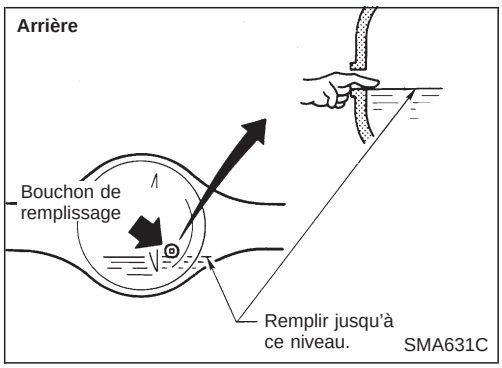

Pignon de différentiel à glissement limité

- N'utiliser que l'huile pour pignon de différentiel à glissement limité approuvée.
- Identification du différentiel à glissement limité.

(1) Soulever du sol les deux roues arrière.
(2) Tourner une roue arrière à la main.
(3) Si les deux roues arrière tournent simultanément dans le même sens, cela signifie que le véhicule est équipé d'un différentiel à glissement limité.

Simpo PDF Merge and Split Unregistered Version - http://www.simpopdf.com

Equilibrage des roues

Régler l'équilibrage des roues au moyen d'une équilibreuse de roues.

Equilibrage des roues (déséquilibre maximum admissible) :

Se reporter aux SDS, MA-46.

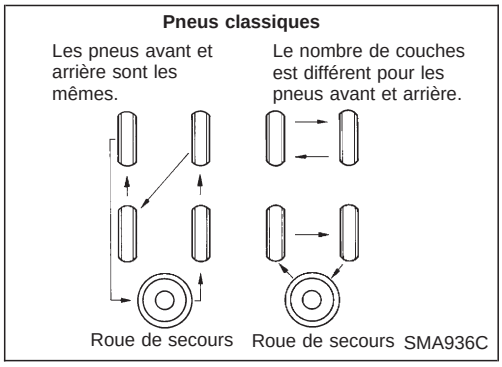

Permutation des pneus

- **Après avoir tourné les roues, régler la pression des pneus.**
- **Resserrer les écrous des roues après que la roue en aluminium a effectué les premiers 1 000 km ou si un pneu crève.**

Ecrous de roue :

: 118 - 147 N·m (12 - 15 kg-m)

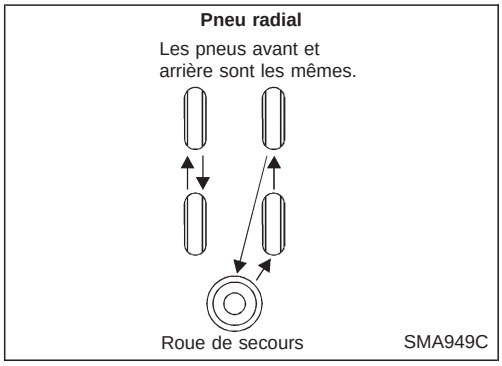

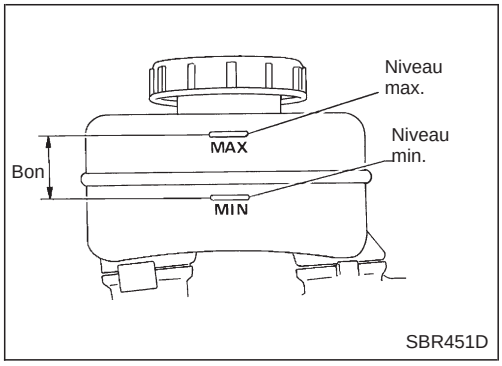

Vérification du niveau de liquide de frein et de l'étanchéité

Si le niveau du liquide de frein est très bas, vérifier l'étanchéité du circuit de freinage.

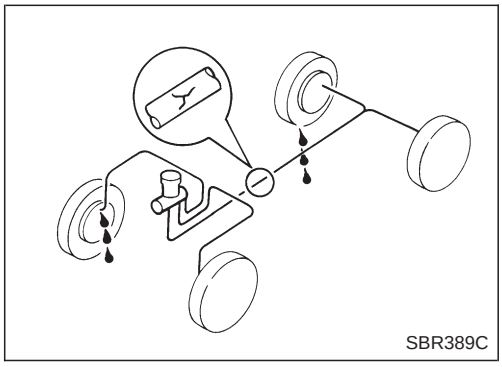

Vérification du circuit de freinage

Vérifier si les canalisations de frein et les câbles de frein de stationnement sont correctement montés, et s'il n'y a pas de fuites, d'usure, d'abrasion, de détérioration, etc.

Simpo PDF Merge and Split Unregistered Version - http://www.simpopdf.com

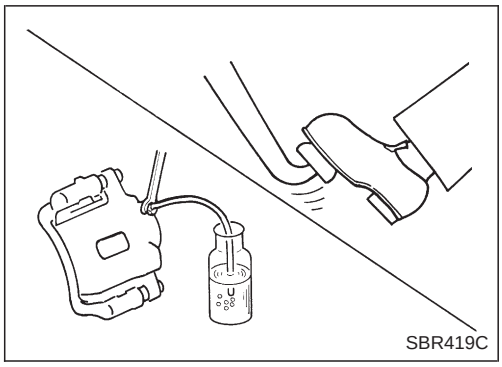
SBR419C

Remplacement du liquide de frein

1. Vidanger le liquide de frein à hauteur de chaque vanne de purge d'air.
2. Verser du liquide de frein neuf jusqu'à ce qu'il sorte par les purgeurs d'air. Pour le plein de liquide de frein, procéder comme lors de la purge du circuit hydraulique. Se reporter à la section BR.

- **Remplir avec du liquide de frein recommandé (DOT 3 ou DOT 4). Se reporter à ''LIQUIDES ET LUBRIFIANTS CONSEILLES'', MA-12.**
- **Ne pas réutiliser le liquide de frein vidangé.**
- **Faire attention à ne pas renverser du liquide de frein sur la peinture.**

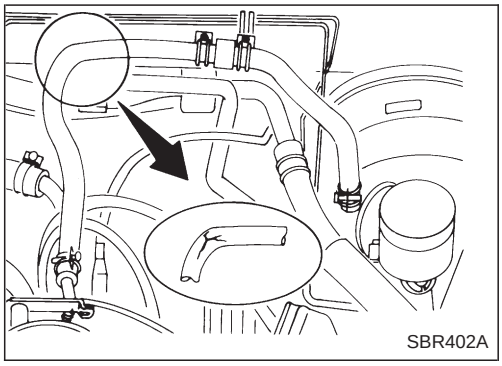
SBR402A

Vérification de l'assistance de frein, des flexibles à dépression, des raccords et du clapet sens unique

Vérifier si les conduites à dépression, les raccords et le clapet sens unique sont correctement fixés, et s'il n'y a pas de fuites, d'usure ou de détérioration.

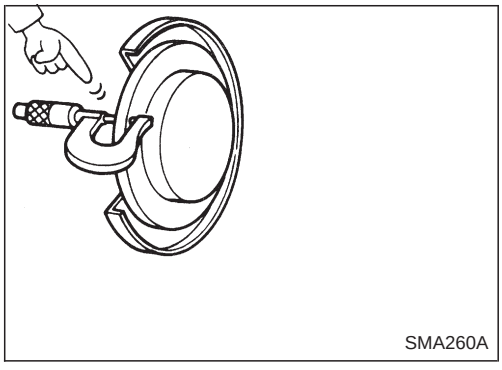
SMA260A

Vérification des freins à disque

ROTOR

Vérifier l'état général et l'épaisseur.

Epaisseur minimum :

CL28VA	**20 mm**
CL28VD	**24 mm**

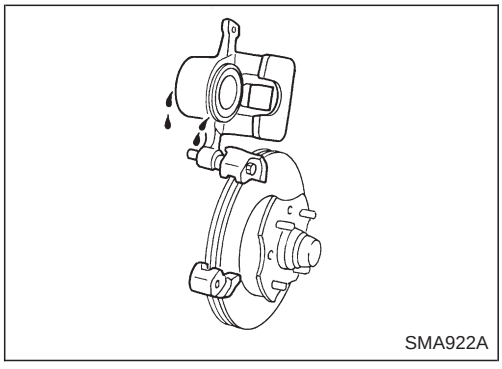
SMA922A

ETRIER

Vérifier s'il n'y a pas de fuites.

Simpo PDF Merge and Split Unregistered Version - http://www.simpopdf.com

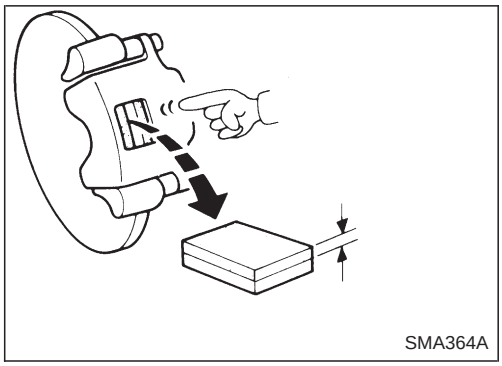
SMA364A

PLAQUETTE

Vérifier l'usure ou tout dommage.

Epaisseur minimum : 2 mm

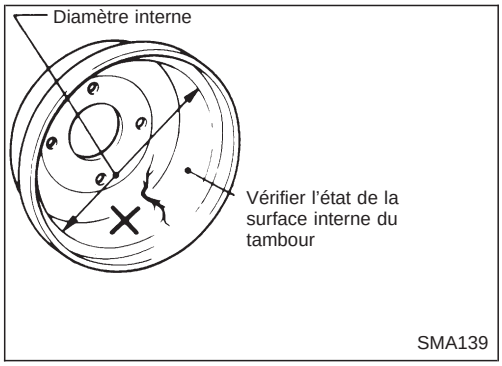

SMA139

Vérification des freins à tambour

CYLINDRE DE ROUE

Vérifier s'il n'y a pas de fuites.

TAMBOUR

Vérifier l'état général et la surface intérieure.

Limite de réparation du tambour (diamètre interne maximum) :

LT26B	**261,5 mm**
LT30A	**296,5 mm**

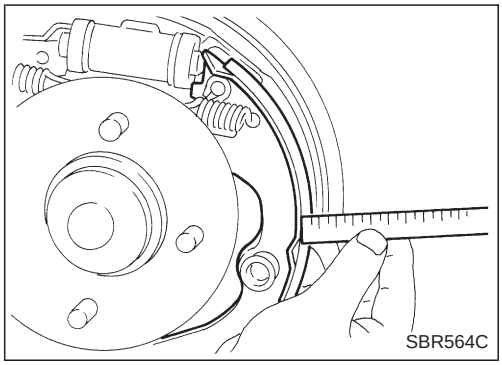
SBR564C

GARNITURES

Vérifier l'usure ou tout dommage.

Limite de rectification des garnitures (épaisseur minimum) :

1,5 mm

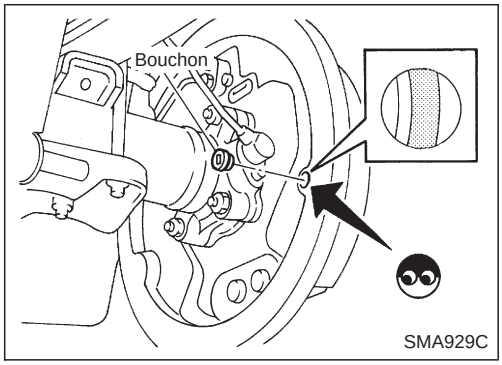

SMA929C

VERIFICATION PONCTUELLE DE L'USURE DES GARNITURES

Déposer le bouchon de l'orifice d'inspection et vérifier l'usure des garnitures.

Simpo PDF Merge and Split Unregistered Version - http://www.simpopdf.com

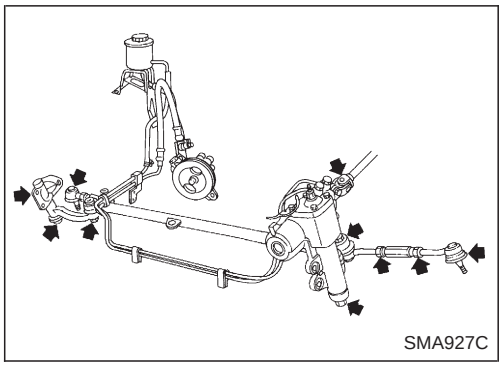
SMA927C

Vérification du boîtier et de la timonerie de direction

BOITIER DE DIRECTION

- Vérifier si le boîtier de direction et les soufflets ne présentent pas d'éléments desserrés, endommagés, ou des fuites de graisse.
- Vérifier si le raccordement avec la colonne de direction n'est pas desserré.

TIMONERIE DE DIRECTION

- Vérifier la rotule, le cache-poussière et les autres composants, en recherchant des pièces desserrées, de l'usure, des dommages ou des fuites de graisse.

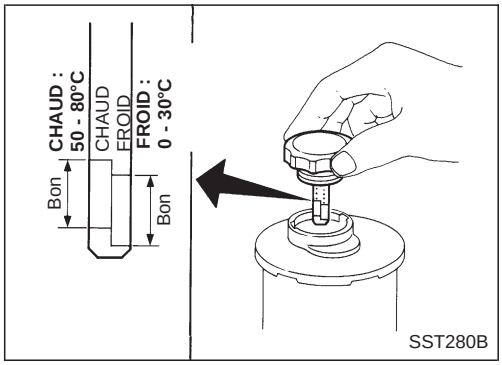

SST280B

Vérification du liquide et des canalisations de direction assistée

- Vérifier le niveau d'huile, le moteur étant à l'arrêt.
- Vérifier le niveau de l'huile avec la jauge sur le bouchon du réservoir. Utiliser le repère ''CHAUD'' lorsque la température de l'huile est comprise entre 50 et 80°C. Utiliser le repère ''FROID'' lorsque la température de l'huile est comprise entre 0 et 30°C.

ATTENTION :

- **Ne pas remplir excessivement.**
- **Le liquide préconisé est celui pour boîte automatique ''DEXRON™ IIE'', ''DEXRON™ III'' ou type équivalent.**

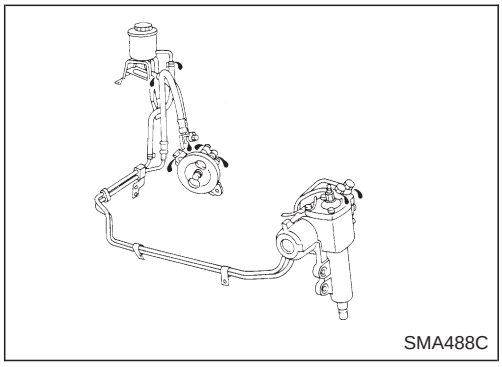
SMA488C

- Vérifier si les canalisations sont correctement fixées et voir s'il n'y a pas de fuites, de fissures, de dommages, d'effilochages ou de détériorations.

Simpo PDF Merge and Split Unregistered Version - http://www.simpopdf.com

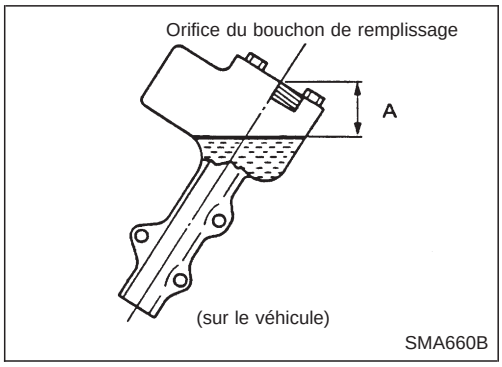

Vérification du niveau d’huile du boîtier de direction et de l’étanchéité

- Vérifier s’il n’y a pas de fuites d’huile et contrôler le niveau d’huile du boîtier de direction.
- Contrôler le niveau d’huile.

Niveau d’huile :
Distance “A”
20 mm ou moins

Veiller à ce que l’huile à engrenages ne déborde pas lors du remplissage.

Simpo PDF Merge and Split Unregistered Version - http://www.simpopdf.com

Graissage du système de fermeture du capot, des serrures et des charnières

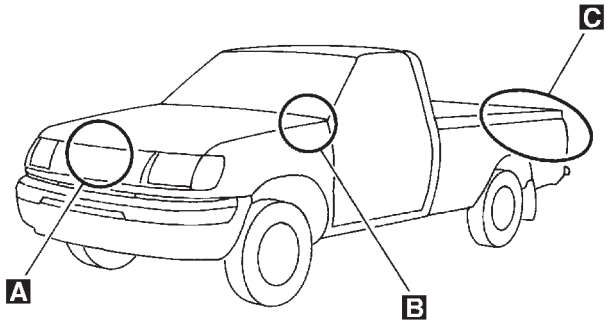

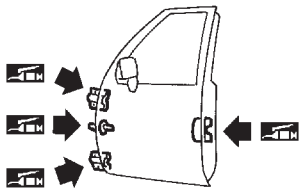

: Points de graissage

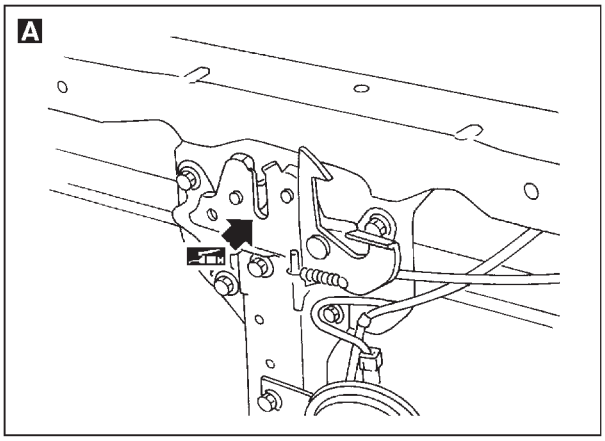

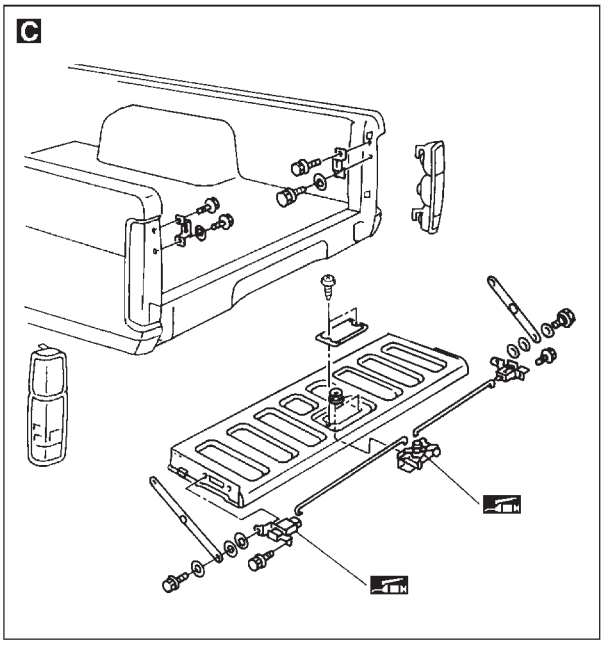

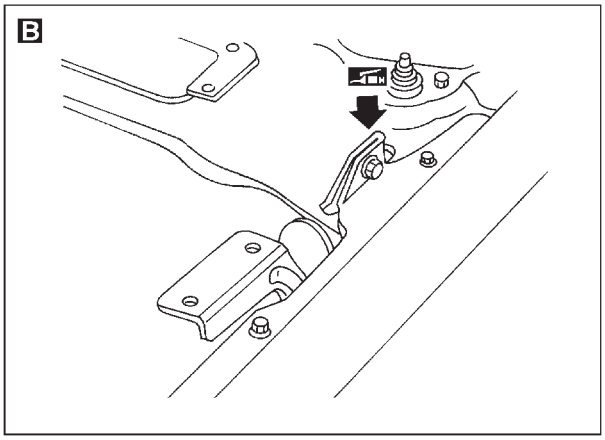

SMA944C

Simpo PDF Merge and Split Unregistered Version - http://www.simpopdf.com

Vérification des ceintures de sécurité, des boucles, des enrouleurs, des ancrages et des tendeurs

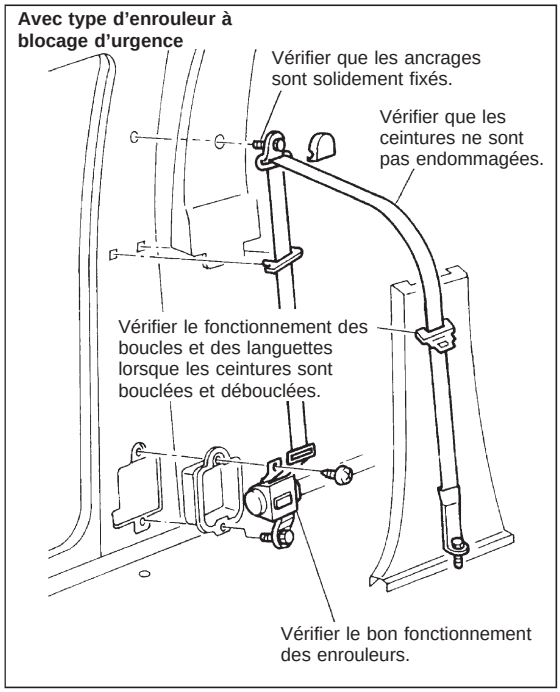

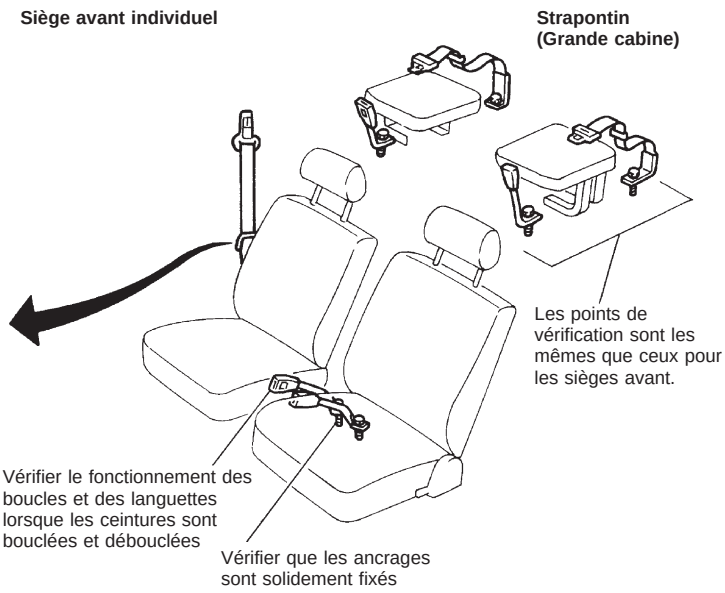

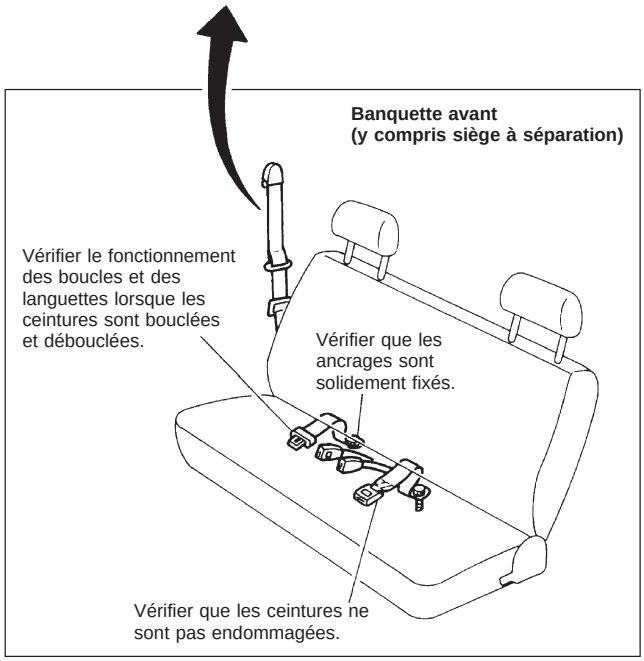

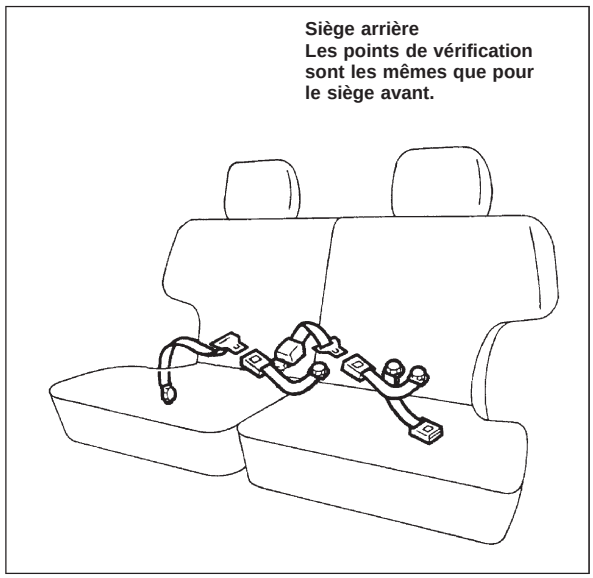

ATTENTION :

1. **Si le véhicule a subi une collision ou s'est retourné, remplacer tous les ensembles de ceinture de sécurité, quelle que soit la nature de l'accident.**
2. **Si l'état d'une pièce de la ceinture de sécurité est douteux, ne pas réparer mais remplacer la ceinture dans son ensemble.**
3. **Remplacer la ceinture de sécurité si sa trame est coupée, effilochée ou endommagée d'une manière quelconque.**
4. **Ne pas renverser de boissons, d'huile, etc. sur les boucles de ceintures ventrales. Ne jamais huiler les languettes et les boucles.**
5. **Utiliser des ceintures de sécurité d'origine NISSAN.**

Boulon d'ancrage :

: 43 - 55 N·m (4,4 - 5,6 kg-m)

SMA016D

Simpo PDF Merge and Split Unregistered Version - http://www.simpopdf.com

Contrôle de la corrosion de la carrosserie

Vérifier visuellement si la tôle de carrosserie n'est pas corrodée, si la peinture n'est pas endommagée (rayures, écaillage, frottement etc.) ou si les matières anti-corrosion ne sont pas endommagées. Vérifier en particulier les endroits suivants.

Partie ''ourlée''

Extrémité avant du capot, bas de porte, extrémité arrière du capot du coffre, etc.

Raccord de panneau

Bas de marche d'aile arrière et de montant central, logement de roue arrière d'aile arrière, pourtour d'amortisseur dans le compartiment moteur, etc.

Bord de panneau

Ouverture du couvercle de coffre, ouverture du toit ouvrant, bride de passage de roue, bride du couvercle du bouchon de remplissage de carburant, pourtour des orifices dans les panneaux, etc.

Contact des pièces

Moulure de ceinture, moulure de pare-brise, pare-chocs, etc.

Protecteurs

Dommages ou état du garde-boue, du protecteur d'aile, du protecteur contre l'écaillement, etc.

Matières anti-corrosion

Dommages ou séparation des matières anti-corrosion sous la carrosserie.

Orifices de vidange

Condition des orifices de vidange à la porte et au bas de marche.
Lors de l'entretien des zones corrodées, se reporter au manuel d'entretien contre la corrosion.

Simpo PDF Merge and Split Unregistered Version - http://www.simpopdf.com

Entretien du moteur (KA)

INSPECTION ET REGLAGE

Déflexion des courroies d'entraînement

Unité : mm

	Déflexion d'une courroie usagée		Déflexion d'une courroie neuve
	Limite	Déflexion après le réglage	
Alternateur	17	10 - 12	8 - 10
Compresseur de climatiseur	16	10 - 12	8 - 10
Pompe à huile de direction assistée	15	9 - 11	7 - 9
Force de poussée	98 N (10 kg)		

Bougie d'allumage

Type standard		ZFR5E-11
Type chaud		ZFR4E-11
Type froid		ZFR6E-11
Ecartement des électrodes	mm	1,0 - 1,1

Câble d'allumage

Résistance	kΩ/m	Inférieure à 12,2

Entretien du moteur (TD)

INSPECTION ET REGLAGE

Déflexion des courroies d'entraînement

Unité : mm

	Déflexion d'une courroie usagée		Déflexion d'une courroie neuve
	Limite	Déflexion après le réglage	
Alternateur	20	11 - 13	9 - 11
Compresseur de climatiseur	12	6 - 7,5	5 - 6,5
Pompe à huile de direction assistée	15	8 - 9,5	7 - 8,5
Force de poussée	98 N (10 kg)		

Contrôler les déflexions des courroies d'entraînement lorsque le moteur est froid.

Jeu de soupape (chaud)

Admission et échappement	mm	0,30 - 0,40

Injecteur

Pression de l'injection kPa (bar, kg/cm^2)	
Injecteur usagé	9 807 - 10 297 (98,1 - 103,0, 100 - 105)
Injecteur neuf	10 297 - 11 278 (103,0 - 112,8, 105 - 115)

Régime de ralenti

		FICD sur ARRET	FICD sur MARCHE
Régime de ralenti	tr/mn		
TD25		700±50	850±50

Entretien du châssis et de la carrosserie

INSPECTION ET REGLAGE

Equilibrage des roues

Déséquilibre maximum admissible	Dynamique (au rebord de jante) g	10 (un côté)
	Statique g	20

Simpo PDF Merge and Split Unregistered Version - http://www.simpopdf.com

BOITE DE VITESSES MANUELLE

SECTION MT

TABLE DES MATIERES

PREPARATION 1
Outillage spécial 1
Outillage en vente dans le commerce 3

FS5R30A

PREPARATION 4
Outillage spécial 4
Outillage en vente dans le commerce 5

FS5W71C

DESCRIPTION 6
Vue en coupe transversale - Modèles à 2 roues motrices 6
Vue en coupe transversale - Modèles à 4 roues motrices 7

FS5R30A

DESCRIPTION 8
Vue en coupe transversale - Modèles à 4 roues motrices 8

FS5W71C

ENTRETIEN SUR LE VEHICULE 9
Remplacement du joint d'huile arrière - Modèles à 2 roues motrices 9
Contrôle des contacts de position 9

FS5R30A

ENTRETIEN SUR LE VEHICULE 10
Contrôle des contacts de position - Modèles à 4 roues motrices 10

FS5W71C & FS5R30A

DEPOSE ET REPOSE 11
Dépose 11
Repose 12

FS5W71C

INTERVENTION MAJEURE 14
Composants du carter 14
Composants de la boîte - Modèles à 2 roues motrices 15
Composants de la boîte - Modèles à 4 roues motrices 16
Composants de la commande de passage des vitesses - Modèles à 2 roues motrices 17
Composants de la commande de passage des vitesses - Modèles à 4 roues motrices 18
DEMONTAGE 19
Composants du carter 19
Composants de la commande de passage des vitesses 20
Composants de la boîte 20
INSPECTION 23
Composants de la commande de passage des vitesses 23
Composants de la boîte 23

FS5W71C

REMONTAGE 25

Simpo PDF Merge and Split Unregistered Version - http://www.simpopdf.com

Composants de la boîte 25
Composants de la commande de passage des vitesses 31
Composants du carter 32

FS5R30A

INTERVENTION MAJEURE 35
Composants du carter 35
Composants de la boîte 36
Composants de la commande de passage des vitesses 38
DEMONTAGE 39
Composants du carter 39
Composants de la commande de passage des vitesses 40
Composants de la boîte 41
INSPECTION 45
Composants de la commande de passage des vitesses 45
Composants de la boîte 45
REMONTAGE 47
Composants de la boîte 47
Composants de la commande de passage des vitesses 55
Composants du carter 55

FS5W71C & FS5R30A

CARACTERISTIQUES ET VALEURS DE REGLAGE (SDS) 58
Caractéristiques générales 58

FS5W71C

CARACTERISTIQUES ET VALEURS DE REGLAGE (SDS) 59
Inspection et réglage 59

FS5R30A

CARACTERISTIQUES ET VALEURS DE REGLAGE (SDS) 61
Inspection et réglage 61

Simpo PDF Merge and Split Unregistered Version - http://www.simpopdf.com

Outillage spécial

Numéro de l'outil Nom de l'outil	Description	
ST23810001 Plaque adaptatrice de montage	NT407 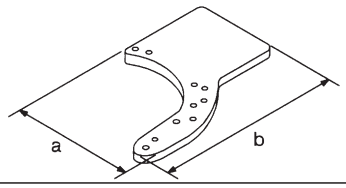	Fixation de la plaque adaptatrice à l'ensemble de pignon **a : 166 mm b : 270 mm**
KV32101330 Extracteur	NT408 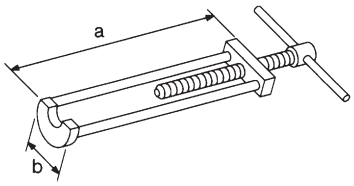	Dépose du roulement d'arbre secondaire de surmultipliée **a : 447 mm b : 100 mm**
KV31100401 Support de presse pour la boîte de vitesses	NT068 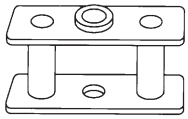	Montage à la presse du pignon de renvoi et de l'arbre secondaire
ST22520000 Clé	NT409 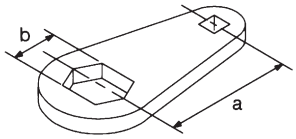	Serrage du contre-écrou d'arbre secondaire **a : 100 mm b : 41 mm**
ST23540000 Chasse goupille	NT442 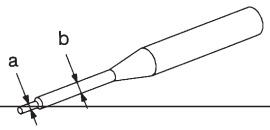	Dépose et repose de la goupille de retenue de l'axe de fourchette **a : ∅ 2,3 mm b : ∅ 4 mm**
ST30031000 Extracteur	NT411 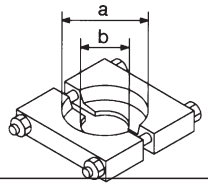	Dépose et repose de la bague de pignon de 1ère Dépose du roulement de pignon d'entraînement principal **a : ∅ 90 mm b : ∅ 50 mm**
ST23860000 Chassoir	NT065 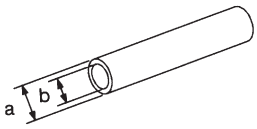	Repose du pignon d'entraînement de renvoi **a : ∅ 38 mm b : ∅ 33 mm**
ST22360002 Chassoir	NT065 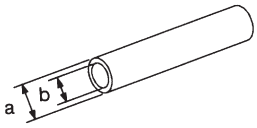	Repose des roulements d'extrémité avant et arrière du pignon de renvoi **a : ∅ 29 mm b : ∅ 23 mm**
ST22350000 Chassoir	NT065 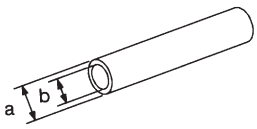	Repose de la bague de pignon de surmultipliée **a : ∅ 34 mm b : ∅ 28 mm**

Simpo PDF Merge and Split Unregistered Version - http://www.simpopdf.com

Outillage spécial (Suite)

Numéro de l'outil Nom de l'outil	Description	
ST23800000 Chassoir	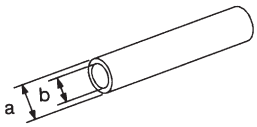 NT065	Repose du joint d'huile de couvercle avant **a : ∅ 44 mm b : ∅ 31 mm**
ST33400001 Chassoir	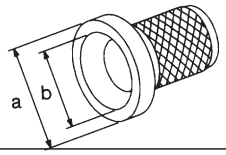 NT086	Repose du joint d'huile arrière **a : ∅ 60 mm b : ∅ 47 mm**
ST33290001 Extracteur	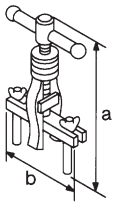 NT414	Dépose du joint d'huile arrière **a: 250 mm b : 160 mm**
ST30720000 Chassoir	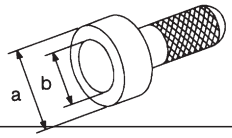 NT115	Repose du roulement à billes d'arbre secondaire **a : ∅ 77 mm b : ∅ 55,5 mm**
ST30613000 Chassoir	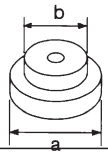 NT073	Repose du roulement de pignon d'arbre d'entraînement **a : ∅ 71,5 mm b : ∅ 47,5 mm**
ST33200000 Chassoir	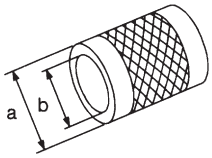 NT091	Repose du roulement arrière de renvoi **a : ∅ 60 mm b : ∅ 44,5**

Simpo PDF Merge and Split Unregistered Version - http://www.simpopdf.com

Outillage en vente dans le commerce

Nom de l'outil	Description	
Extracteur	NT077 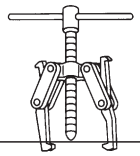	Dépose des roulements de renvoi, des pignons d'entraînement de renvoi et de surmultipliée
Chassoir	NT074 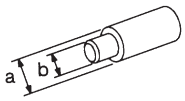	Repose du diamètre de roulement d'extrémité arrière du pignon de renvoi (modèles à 4 roues motrices) **a : ∅ 40 mm b : ∅ 30 mm**

Simpo PDF Merge and Split Unregistered Version - http://www.simpopdf.com

Outillage spécial

Numéro de l'outil Nom de l'outil	Description	
ST23540000 Chasse goupille	NT442 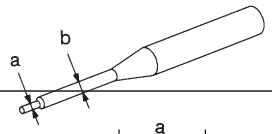	Dépose et repose de la goupille de retenue **a : ∅ 2,3 mm b : ∅ 4 mm**
ST30031000 Extracteur	NT411 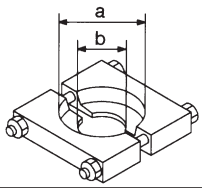	Dépose de l'ensemble de synchro. de 1ère et 2nde Dépose du roulement de butée arrière du pignon de renvoi Dépose du roulement d'arbre primaire **a : ∅ 90 mm b : ∅ 50 mm**
ST33230000 Chassoir	NT084 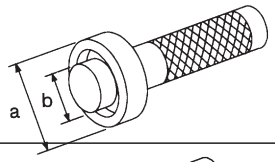	Dépose de l'arbre secondaire et des pignons de renvoi **a : ∅ 51 mm b : ∅ 28,5 mm**
ST22350000 Chassoir	NT065 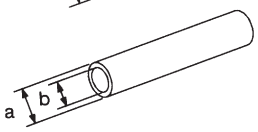	Dépose du roulement avant de pignon de renvoi (à utiliser avec KV38100300) **a : ∅ 34 mm b : ∅ 28 mm**
KV38100300 Chassoir	NT065 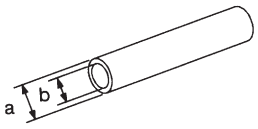	Dépose du roulement avant de pignon de renvoi (à utiliser avec ST22350000) Repose du roulement arrière de pignon de renvoi **a : ∅ 54 mm b : ∅ 32 mm**
ST30720000 Chassoir	NT115 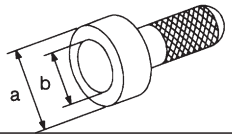	Dépose du roulement avant d'arbre secondaire Repose du roulement avant d'arbre secondaire **a : ∅ 77 mm b : ∅ 55,5 mm**
ST33210000 Chassoir	NT084 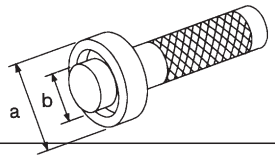	Repose du roulement avant de pignon de renvoi Repose du joint d'huile de couvercle avant **a : ∅ 44 mm b : ∅ 24,5 mm**
ST30613000 Chassoir	NT073 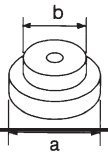	Repose du roulement de pignon d'arbre d'entraînement **a : ∅ 72 mm b : ∅ 48 mm**

Simpo PDF Merge and Split Unregistered Version - http://www.simpopdf.com

Outillage spécial (Suite)

Numéro de l'outil Nom de l'outil	Description	
ST37750000 Chassoir	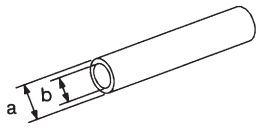 NT065	Dépose du roulement arrière de pignon de renvoi Repose de la bague de pignon de surmultipliée Dépose et repose du roulement arrière d'arbre secondaire Repose du cône de marche arrière Repose du pignon de renvoi de marche arrière Repose du roulement d'extrémité arrière de pignon de renvoi **a : ∅ 40 mm b : ∅ 31 mm**
ST22452000 Chassoir	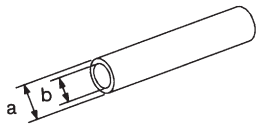 NT065	Repose du moyeu de marche arrière **a : ∅ 45 mm b : ∅ 36 mm**
ST33220000 Chassoir	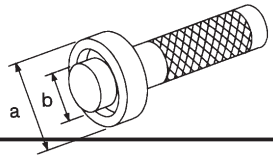 NT084	Repose du roulement arrière d'arbre secondaire **a : ∅ 37 mm b : ∅ 22 mm**

Outillage en vente dans le commerce

Nom de l'outil	Description	
Extracteur	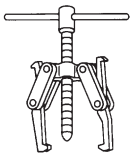 NT077	Dépose du roulement d'extrémité arrière de pignon de renvoi Dépose du moyeu de synchro. de marche arrière Dépose du pignon de renvoi de marche arrière

Simpo PDF Merge and Split Unregistered Version - http://www.simpopdf.com

Vue en coupe transversale — Modèles à 2 roues motrices

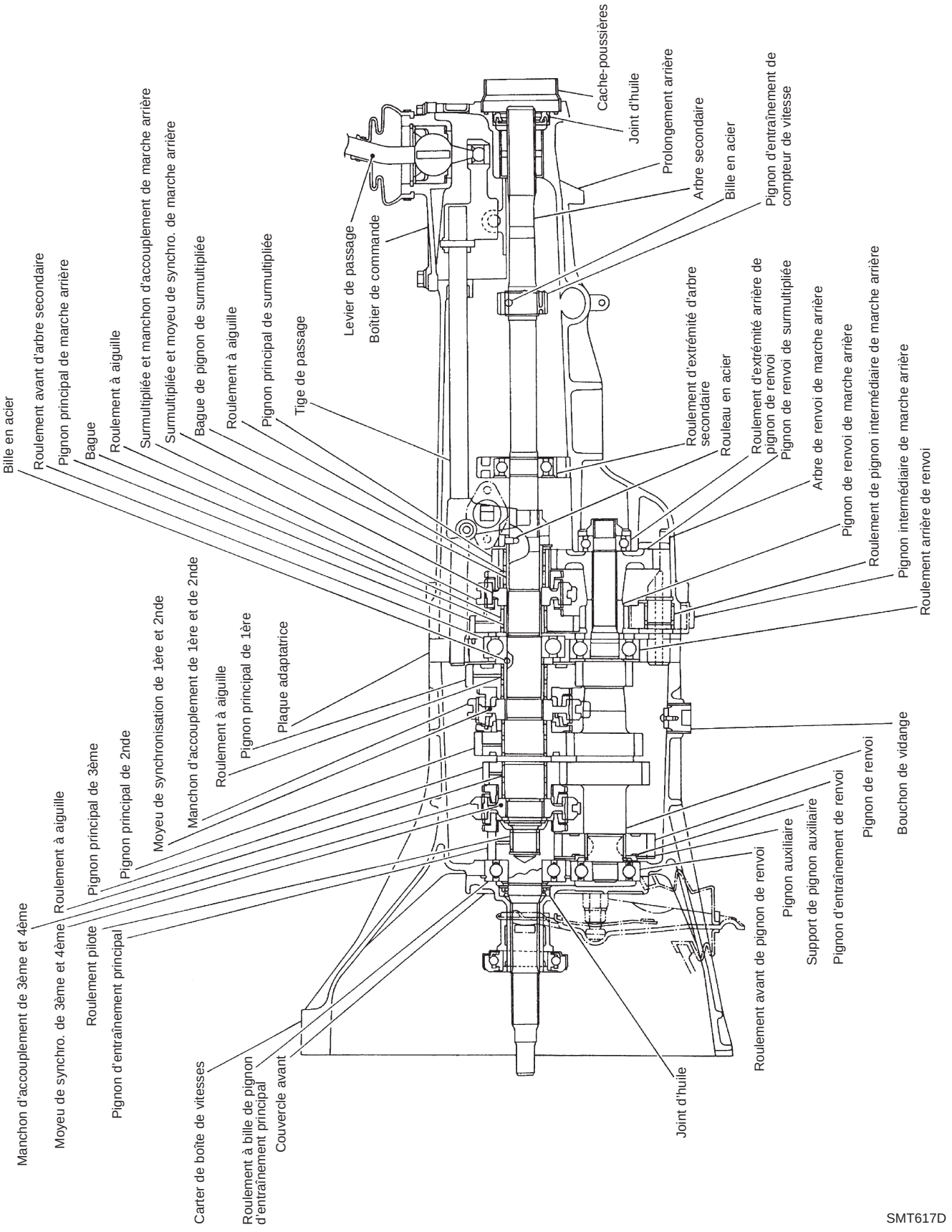

Simpo PDF Merge and Split Unregistered Version - http://www.simpopdf.com

Vue en coupe transversale — Modèles à 4 roues motrices

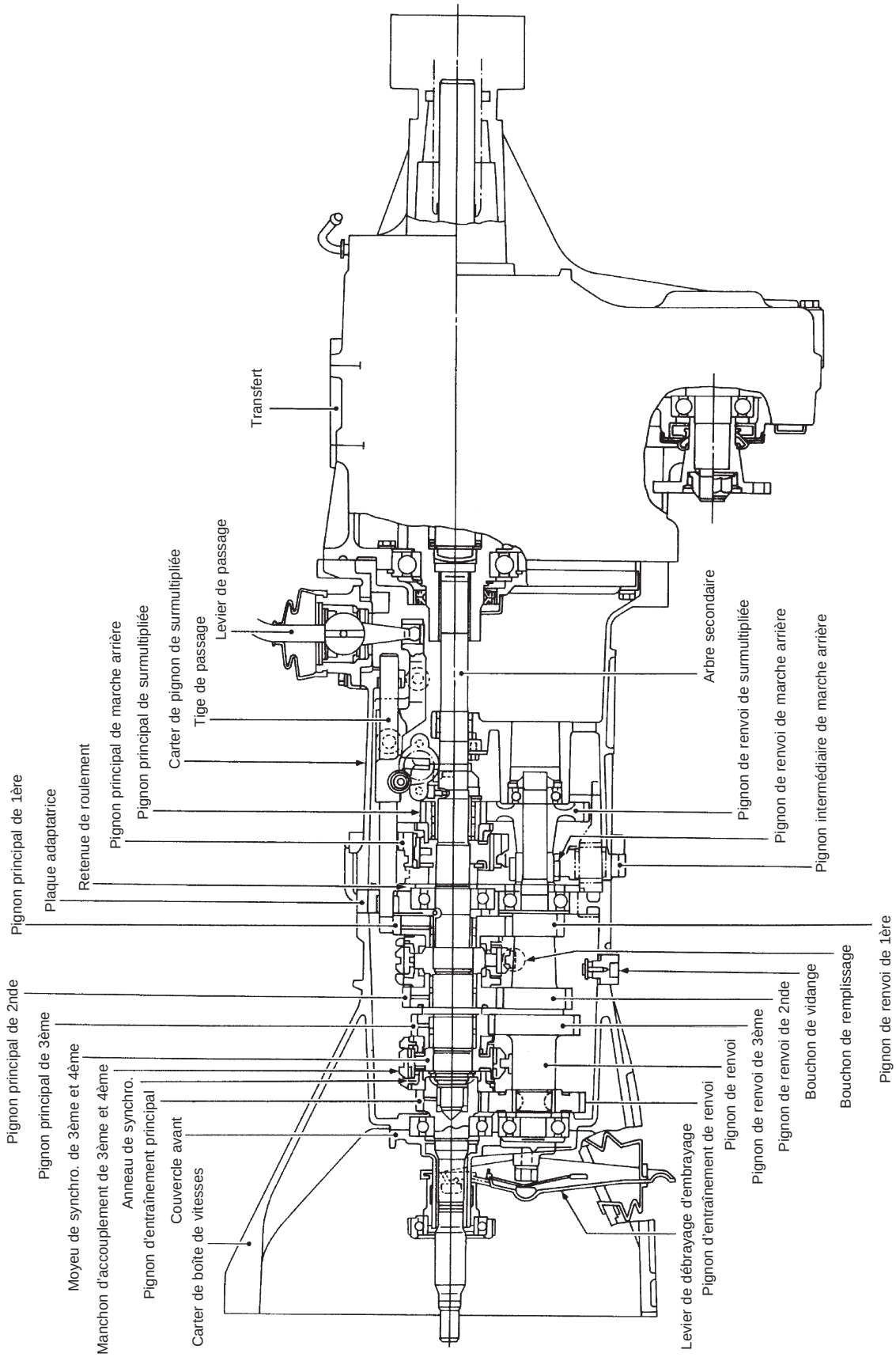

SMT154DA

Simpo PDF Merge and Split Unregistered Version - http://www.simpopdf.com

Vue en coupe transversale — Modèles à 4 roues motrices

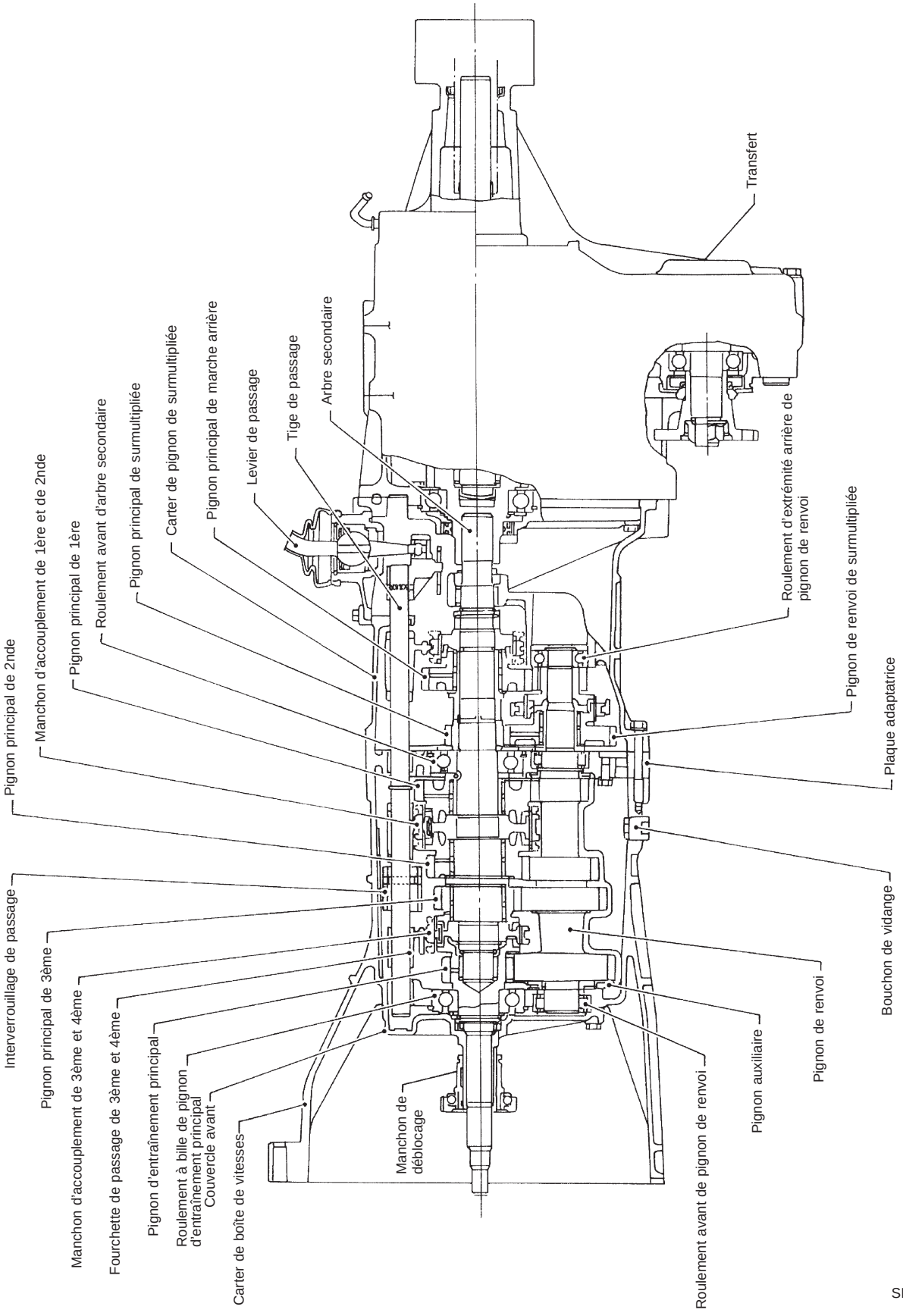

SMT870CB

Simpo PDF Merge and Split Unregistered Version - http://www.simpopdf.com

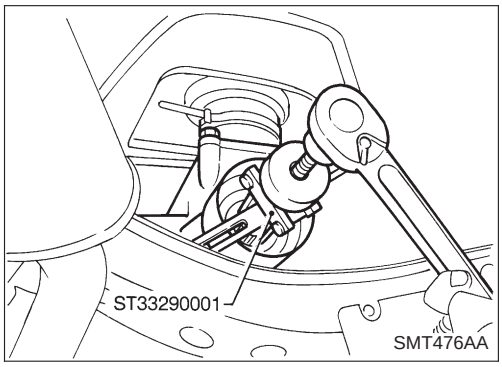

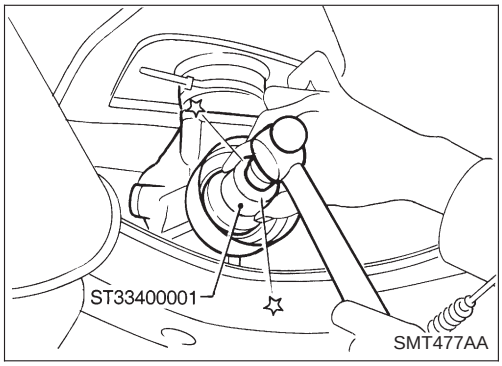

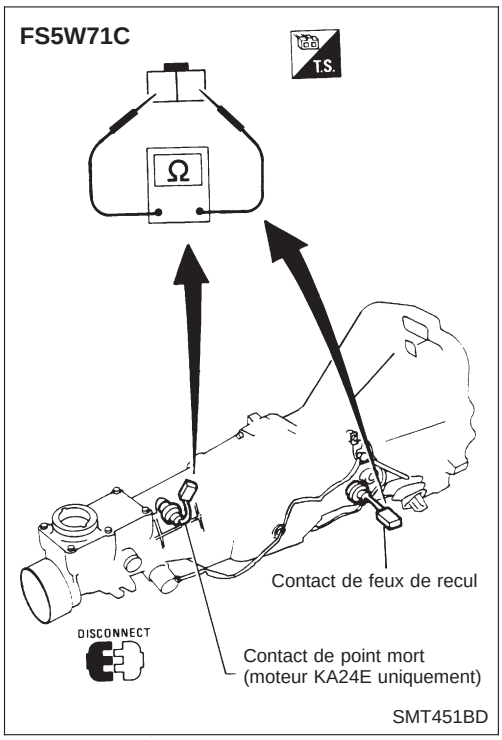

Remplacement du joint d'huile arrière — Modèles à 2 roues motrices

DEPOSE

1. Déposer l'arbre de transmission. Consulter la section PD (''Dépose et repose'', ''ARBRE DE TRANSMISSION'').
2. Déposer le joint d'huile arrière à l'aide de l'outil spécial.

- **Toujours remplacer le joint avec une pièce neuve après la dépose.**

REPOSE

1. Installer le nouveau joint d'huile jusqu'à ce qu'il s'arrête.

- **Appliquer de la graisse à usages multiples sur la lèvre d'étanchéité du joint d'huile avant la repose.**

2. Remonter toutes les pièces déposées.

Contrôle des contacts de position

- Vérifier la continuité.

Contact	Rapport	Continuité
Contact de feux de recul	Marche arrière	Oui
	Sauf marche arrière	Non
Contact de point mort (moteur KA24E uniquement)	Point mort	Oui
	Sauf point mort	Non

Simpo PDF Merge and Split Unregistered Version - http://www.simpopdf.com

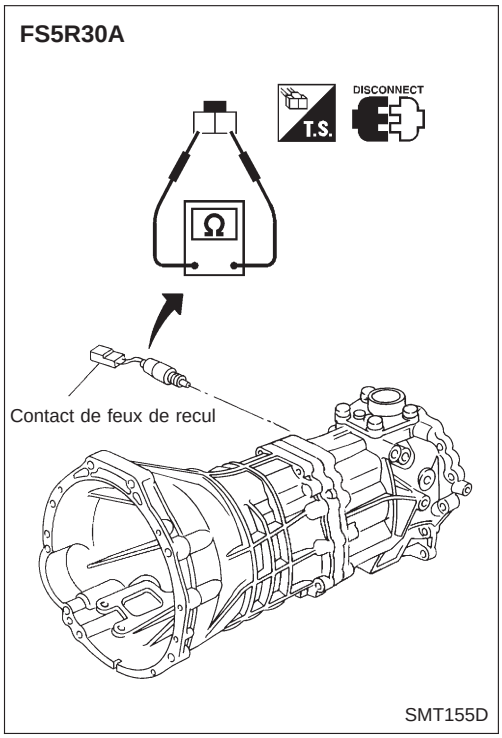

Contrôle des contacts de position — Modèles à 4 roues motrices

Contact	Rapport	Continuité
Contact de feux de recul	Marche arrière	Oui
	Sauf marche arrière	Non

Simpo PDF Merge and Split Unregistered Version - http://www.simpopdf.com

Dépose

MODELE A DEUX ROUES MOTRICES

1. Déposer la borne négative de la batterie et le moteur de démarreur. Consulter la section EL (‘‘Dépose et repose’’, ‘‘CIRCUIT DE DEMARRAGE’’).
2. Déposer le bouton de passage de boîte de vitesses, le soufflet pare-poussière, le couvercle d’orifice et le levier de passage de boîte de vitesses.
3. Déposer l’arbre de transmission. Consulter la section PD (‘‘Dépose et repose’’, ‘‘ARBRE DE TRANSMISSION’’).
4. Déposer le tuyau d’échappement.
5. Déposer le contact de feux de recul et les connecteurs de faisceau du contact de point mort.
6. Déposer le cylindre récepteur d’embrayage de la boîte de vitesses. Consulter la section CL (‘‘Cylindre récepteur’’, ‘‘COMMANDE D’EMBRAYAGE HYDRAULIQUE’’).

- **Introduire un bouchon dans le joint d’huile arrière après la dépose de l’arbre de transmission.**
- **Lors de la dépose de l’arbre de transmission, faire attention à ne pas endommager les cannelures, la chape à manchon et le joint d’huile arrière.**

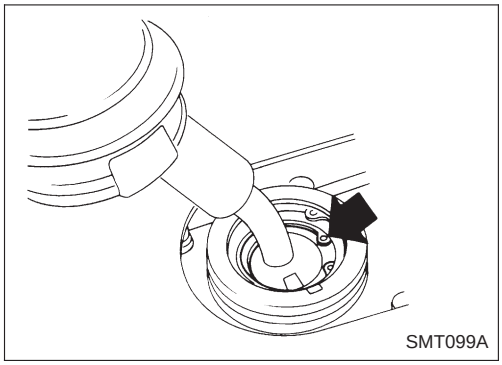
SMT099A

7. Soutenir le moteur en plaçant un cric sous le carter d’huile et sous la boîte de vitesse, puis la traverse centrale.

- **Ne pas placer le cric sous le bouchon de vidange du carter d’huile.**

8. Séparer la boîte de vitesses du moteur.

AVERTISSEMENT :
Soutenir la boîte de vitesses manuelle pendant la dépose.

9. Boîte de vitesses inférieure.

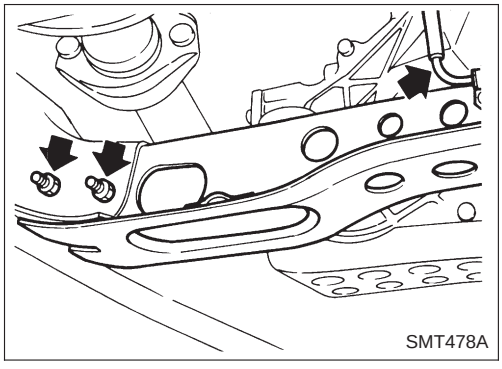
SMT478A

MODELE A QUATRE ROUES MOTRICES

1. Déposer la borne négative de la batterie et le moteur de démarreur. Consulter la section EL (‘‘Dépose et repose’’, ‘‘CIRCUIT DE DEMARRAGE’’).
2. Déposer le bouton de commande de transfert, le soufflet pare-poussière, le couvercle d’orifice, le levier de passage de boîte de vitesses et le levier de commande de transfert.
3. Déposer les arbres de transmission avant et arrière. Consulter la section PD (‘‘Dépose et repose’’, ‘‘ARBRE DE TRANSMISSION’’).
4. Déposer le tuyau d’échappement.
5. Déposer les ressorts de barre de torsion. Consulter la section FA (‘‘Barre de torsion’’, ‘‘SUSPENSION AVANT’’). Puis déposer la seconde barre transversale.
6. Déposer le cylindre récepteur d’embrayage de la boîte de vitesses. Consulter la section CL (‘‘Cylindre récepteur’’, ‘‘COMMANDE D’EMBRAYAGE HYDRAULIQUE’’).
7. Déposer le contact de feux de recul et le connecteur de faisceau du contact de point mort.

- **Introduire un bouchon dans les joints d’huile avant et arrière du transfert après avoir déposé les arbres de transmission.**
- **Veiller à ne pas endommager les cannelures, les chapes**

Simpo PDF Merge and Split Unregistered Version - http://www.simpopdf.com

Dépose (Suite)

à manchon, et les joints d'huile avant et arrière du transfert lors de la dépose de l'arbre de transmission.

8. Déposer le gousset du moteur (modèle FS5R30A uniquement).
9. Soutenir le transfert et déposer la traverse centrale.
10. Soutenir la boîte de vitesses et déposer la traverse arrière du moteur.
11. Séparer la boîte de vitesses et le transfert du moteur.
12. Abaisser la boîte de vitesses et le transfert.

Repose

- Appliquer du produit d'étanchéité sur les zones indiquées ci-dessous : — Modèles à 4 roues motrices

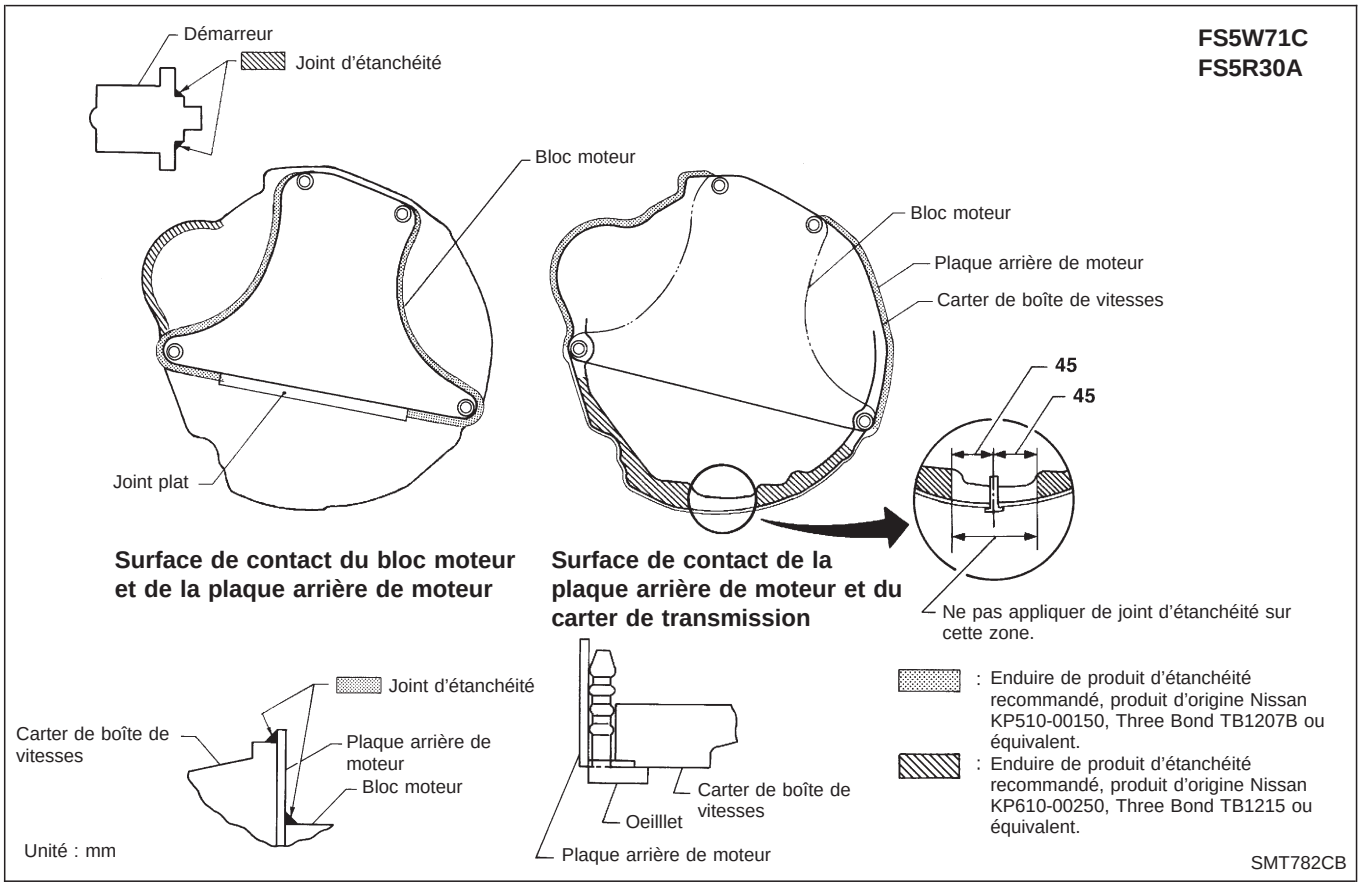

Simpo PDF Merge and Split Unregistered Version - http://www.simpopdf.com

Repose (Suite)

FS5W71C

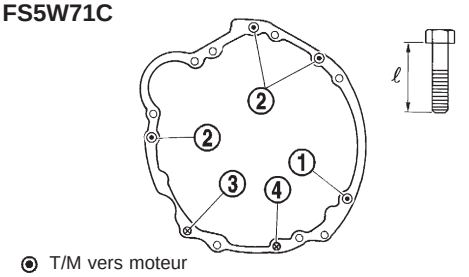

⊙ T/M vers moteur
⊗ Plaque arrière de moteur vers T/M

SMT305CA

- Serrer le boulon fixant la boîte de vitesses.
- **Moteur KA24E**

N° de boulon	Couple de serrage N·m (kg-m)	ℓ mm
①	39 - 49 (4,0 - 5,0)	65
②	39 - 49 (4,0 - 5,0)	58
③ *	16 - 22 (1,6 - 2,2)	25
④	16 - 22 (1,6 - 2,2)	16

*: Avec écrou

FS5W71C

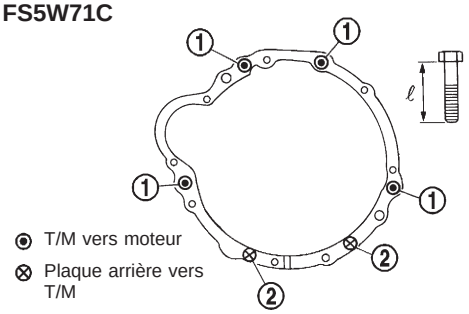

⊙ T/M vers moteur
⊗ Plaque arrière vers T/M

SMT204DA

- **Moteur TD25**

N° de boulon	Couple de serrage N·m (kg-m)	ℓ mm
①	39 - 49 (4,0 - 5,0)	58
②	18 - 22 (1,8 - 2,2)	16

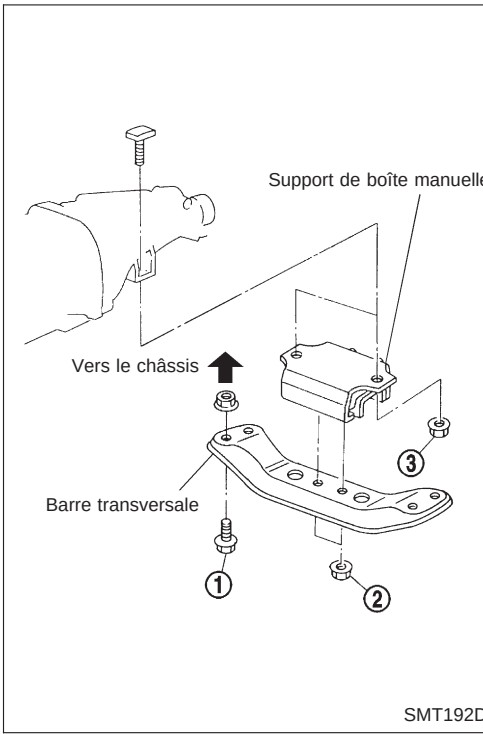

SMT192D

- Serrer les boulons avec le support de boîte de vitesses manuelle, la barre transversale et le châssis.

Unité : N.m (kg-m)

N° de boulon	2 roues motrices et 4 roues motrices	Remarque
①	59 - 69 (6,0 - 7,0)	Traverse à châssis
②	41 - 52 (4,2 - 5,3)	Support de boîte manuelle à barre transversale
③	68 - 87 (6,9 - 8,9)	Boîte manuelle à support de boîte manuelle

Simpo PDF Merge and Split Unregistered Version - http://www.simpopdf.com

Composants du carter

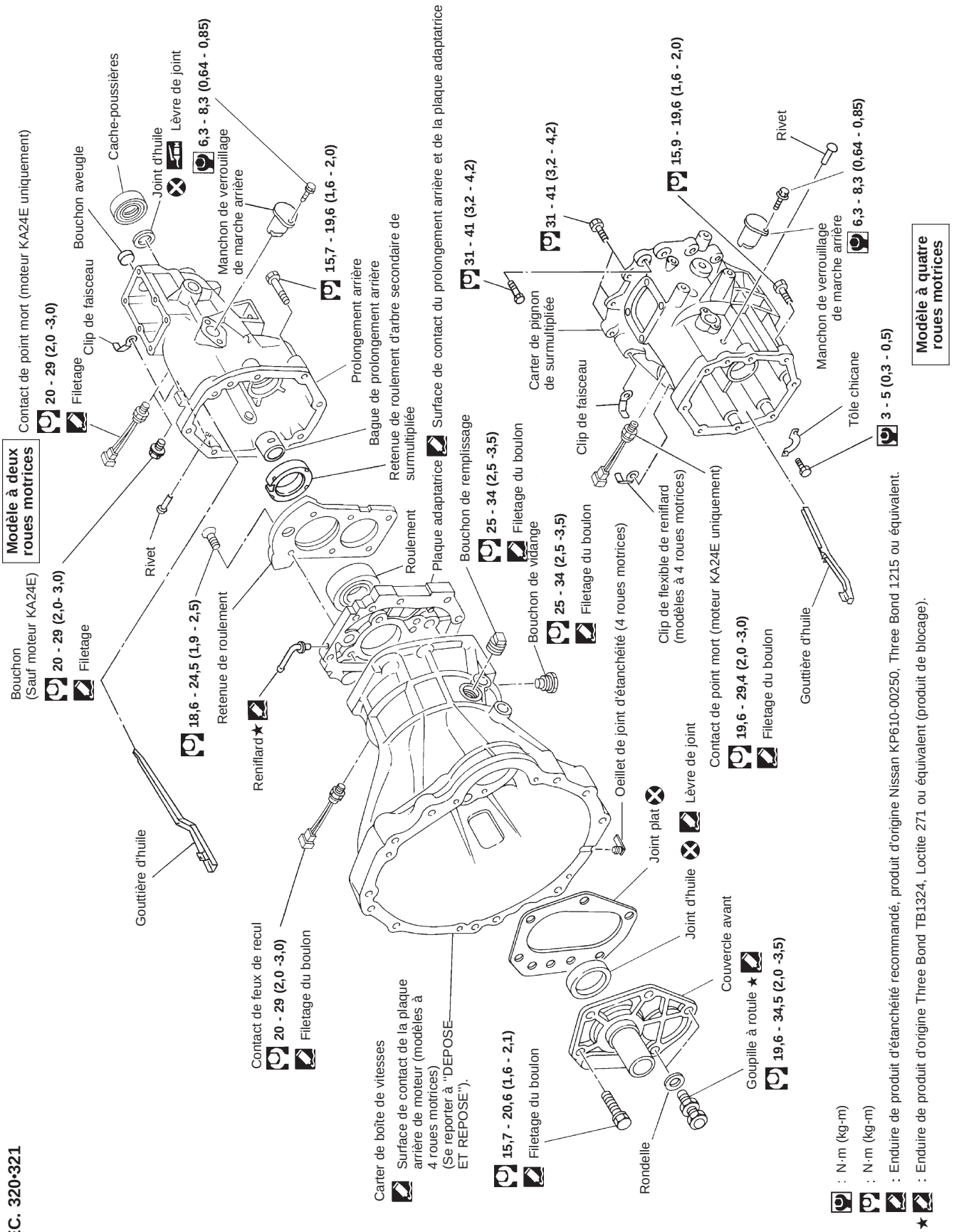

SEC. 320·321

SMT602D

Simpo PDF Merge and Split Unregistered Version - http://www.simpopdf.com

Composants de la boîte — Modèles à 2 roues motrices

SEC. 322



Appliquer de l'huile à engrenages sur les pignons, les arbres, les synchroniseurs et les roulements lors du montage.

★ : Sélectionner l'épaisseur appropriée.

☆ : Prêter attention au sens de montage.

: N·m (kg-m)

: Doit être lubrifié avec de la graisse.

▲ : Moteur KA24E uniquement

SMT603D

Simpo PDF Merge and Split Unregistered Version - http://www.simpopdf.com

Composants de la boîte — Modèles à 4 roues motrices

SEC. 322

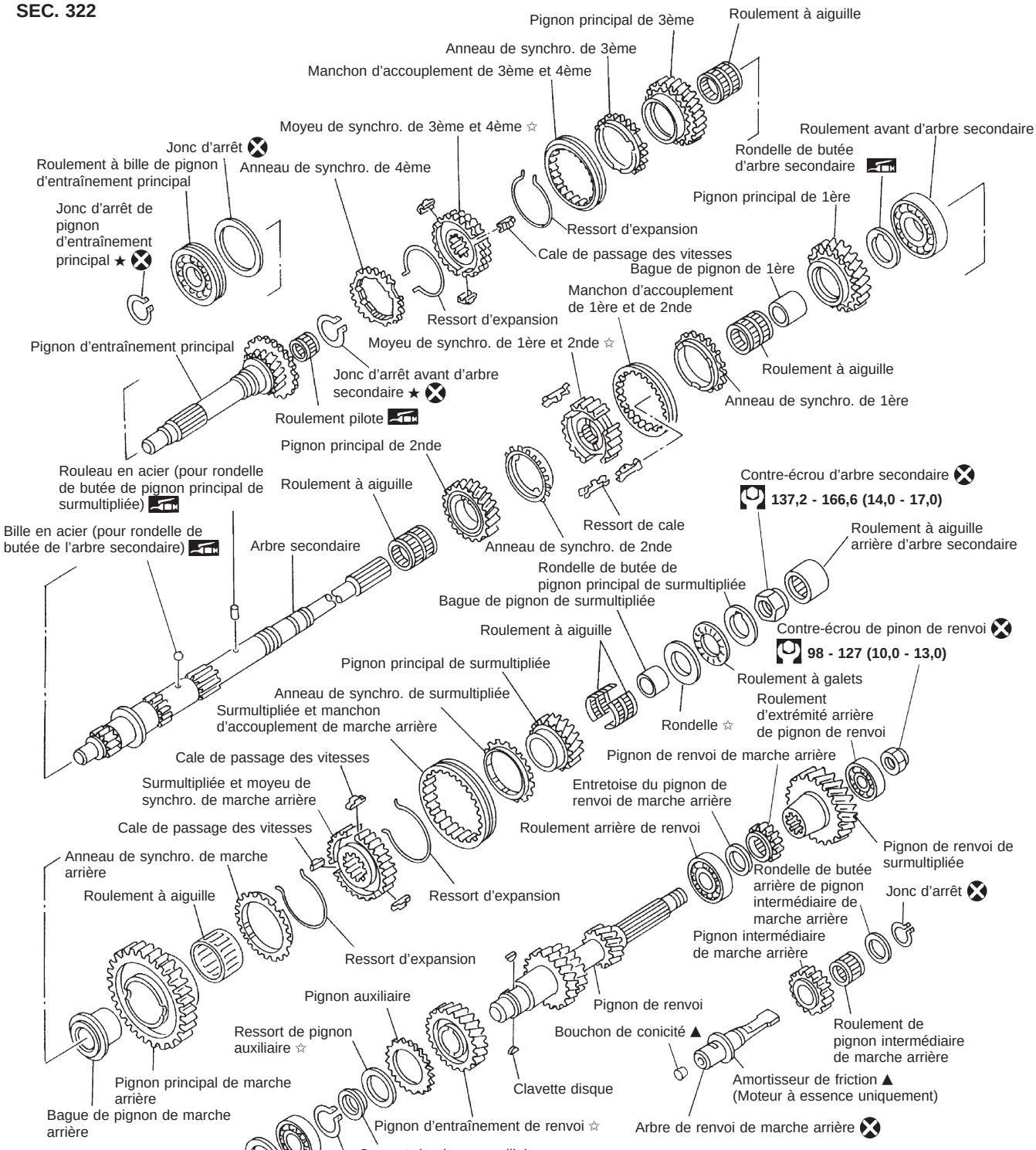

Appliquer de l'huile à engrenages sur les pignons, les arbres, les synchroniseurs et les roulements lors du montage.

★ : Sélectionner l'épaisseur appropriée.

☆ : Prêter attention au sens de montage.

: N·m (kg-m)

: Doit être lubrifié avec de la graisse.

▲ : Moteur KA24E uniquement

SMT604D

Simpo PDF Merge and Split Unregistered Version - http://www.simpopdf.com

Composants de la commande de passage des vitesses — Modèles à 2 roues motrices

ATTENTION :
Pour éviter tout dommage lors du remplacement du pommeau du levier, déposer le levier de passage avec le pommeau, comme un ensemble.

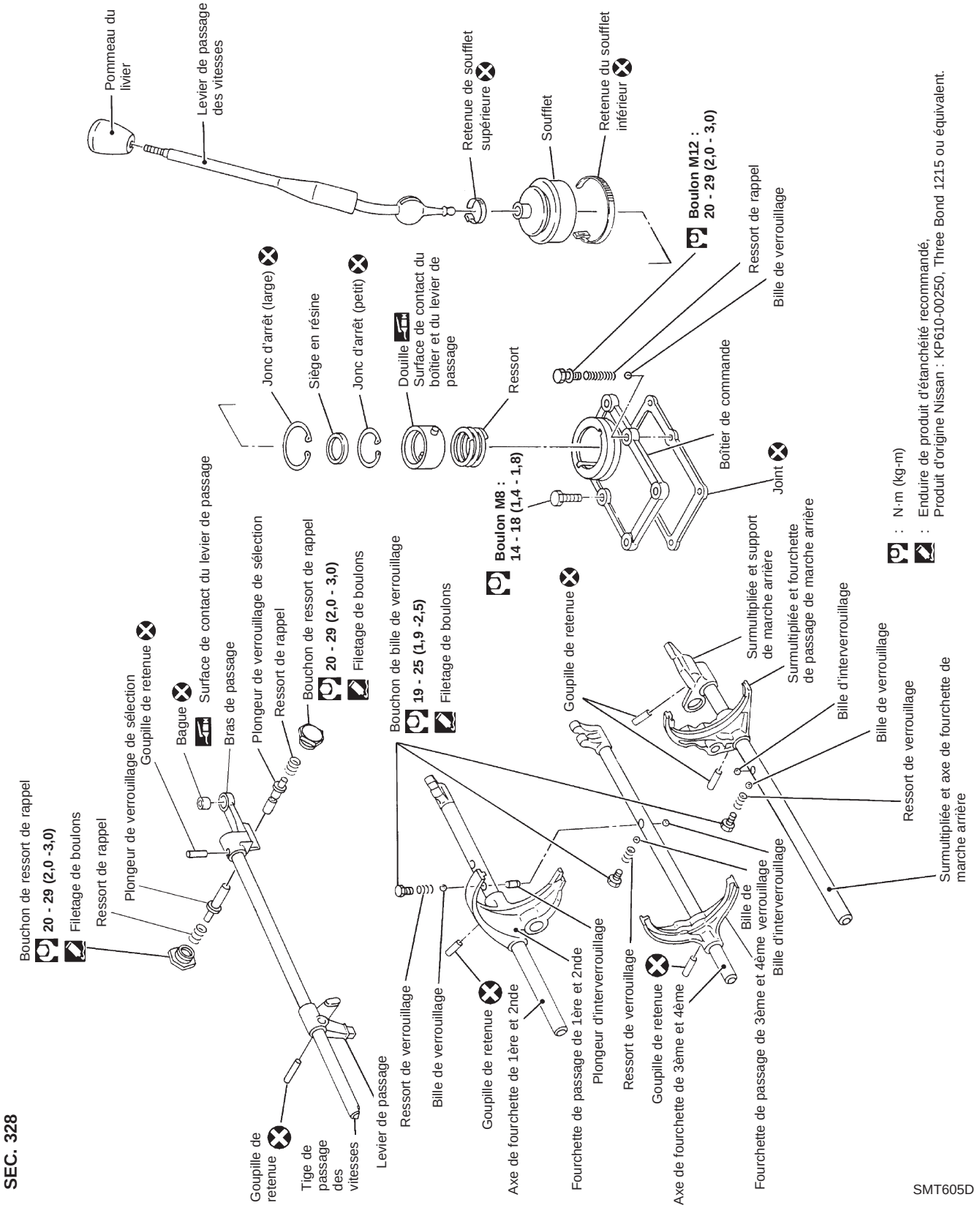

SEC. 328

Simpo PDF Merge and Split Unregistered Version - http://www.simpopdf.com

Composants de la commande de passage des vitesses — Modèles à 4 roues motrices

ATTENTION :
Pour éviter tout dommage lors du remplacement du pommeau de livier de passage, déposer le levier de passage avec le pommeau, comme un ensemble.

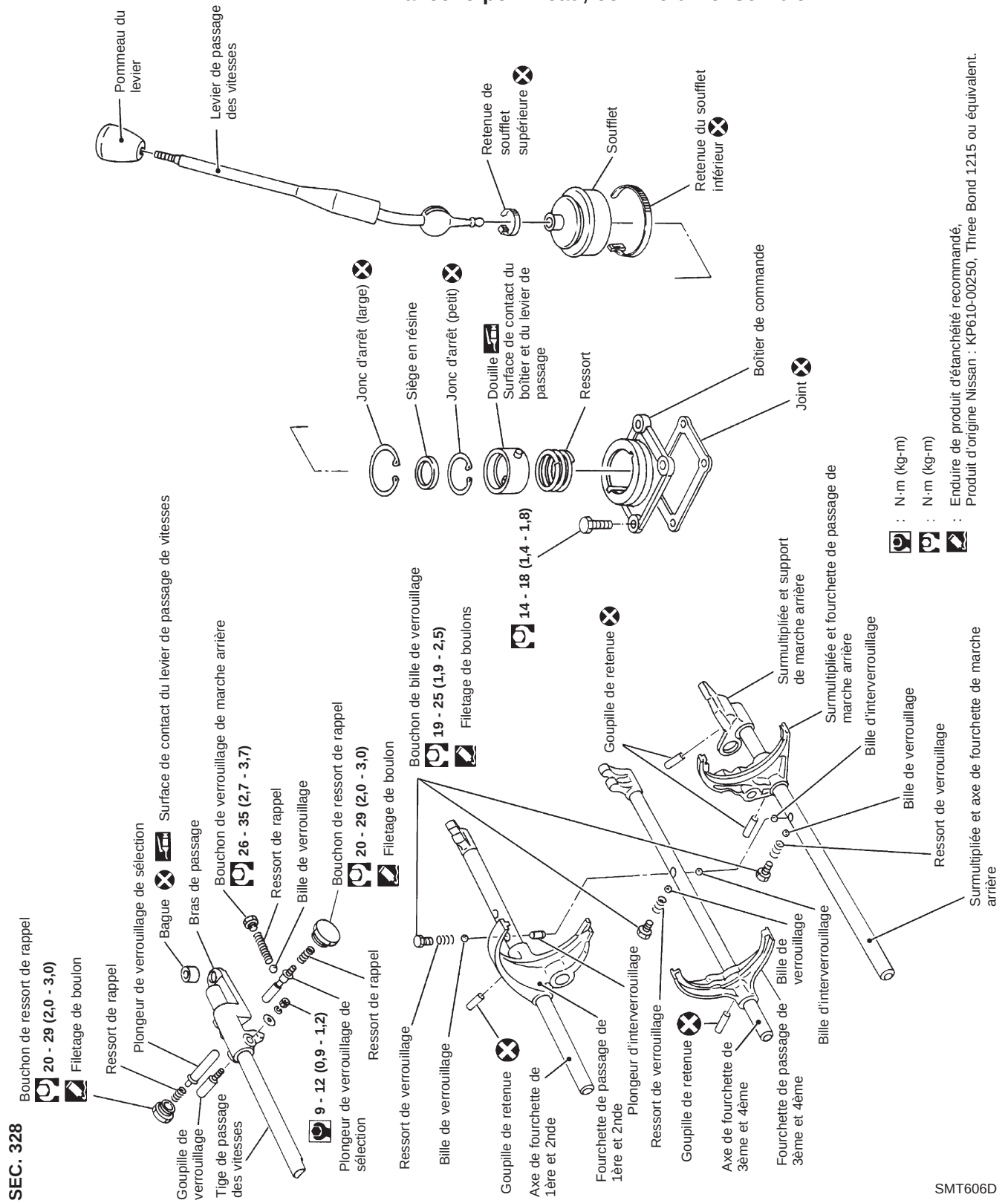

Simpo PDF Merge and Split Unregistered Version - http://www.simpopdf.com

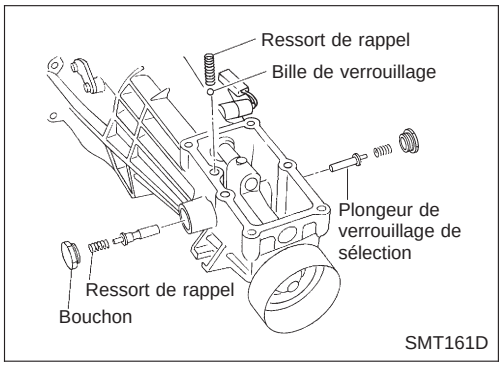

Composants du carter

1. Déposer le prolongement arrière.

a. Déposer le boîtier de commande de vitesses, la bille de verrouillage, le ressort de rappel, le bouchon, et choisir le plongeur de verrouillage et les ressorts de rappel.

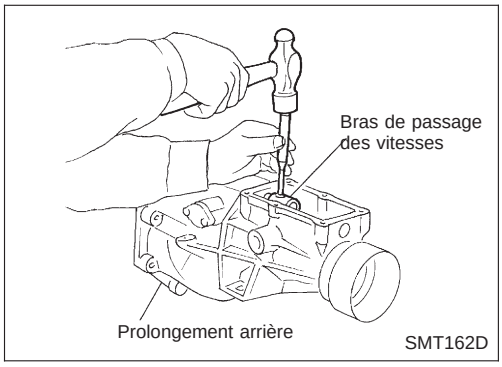

b. Chasser la goupille de retenue du bras de passage des vitesses.

c. Déposer le bras de passage de l'axe de passage.

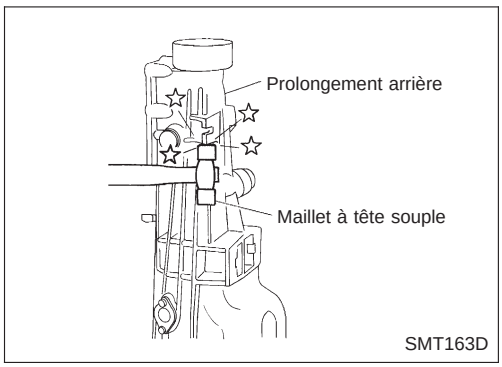

d. Déposer le prolongement arrière en le tapant légèrement.

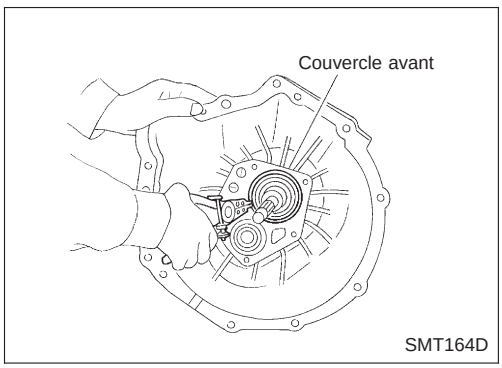

2. Déposer le couvercle avant, le joint plat, la cale de roulement avant d'arbre de renvoi, et le jonc d'arrêt du roulement à billes de pignon d'entraînement principal.

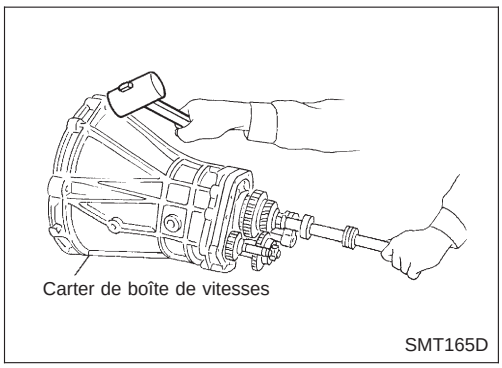

3. Déposer le carter de transmission en le frappant légèrement. Puis séparer le carter de boîte de vitesses de la plaque adaptatrice avant.

Simpo PDF Merge and Split Unregistered Version - http://www.simpopdf.com

Composants du carter (Suite)

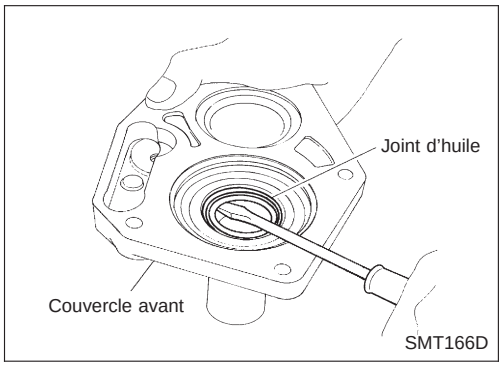

4. Déposer le joint d'huile de couvercle avant.

- **Veiller à ne pas endommager la surface de contact du couvercle avant.**

Composants de la commande de passage des vitesses

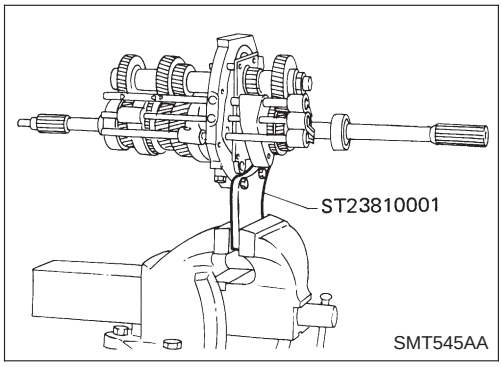

1. Monter l'outil spécial sur la plaque adaptatrice.
2. Déposer la tige de passage des vitesses de la plaque adaptatrice.
3. Déposer les bouchons de bille de verrouillage, les ressorts de verrouillage et les billes de verrouillage.

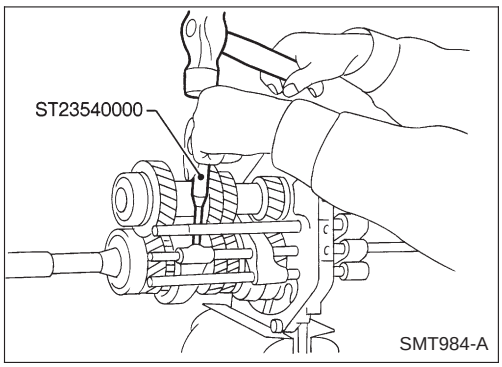

4. Chasser les goupilles de retenue. Sortir ensuite les axes de fourchette et déposer les billes d'interverrouillage.

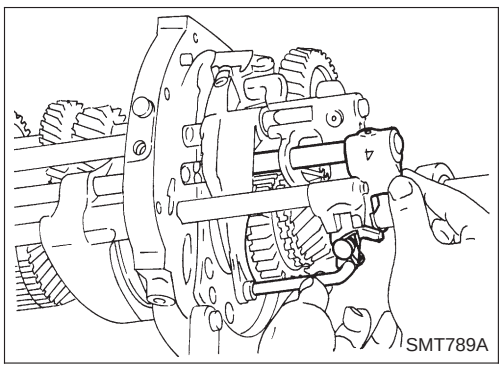

5. Sortir les axes de fourchette de 3ème-4ème ainsi que de surmultipliée et de marche arrière.

Composants de la boîte

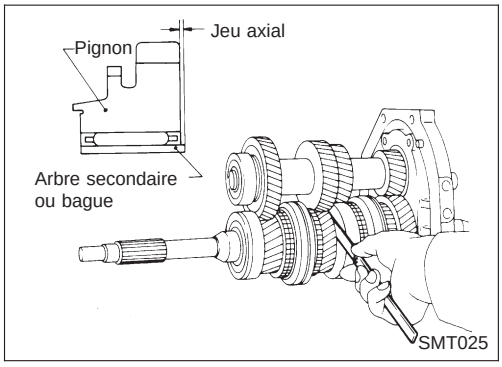

1. Mesurer le jeu axial de chaque pignon avant de déposer les pignons et les arbres.
   Jeu axial des pignons :
   Consulter les SDS, MT-59.
   Si le jeu axial n'est pas dans les limites spécifiées, démonter et vérifier la surface de contact du pignon avec le moyeu, la rondelle, la bague, le roulement à aiguilles et l'arbre.

Simpo PDF Merge and Split Unregistered Version - http://www.simpopdf.com

Composants de la boîte (Suite)

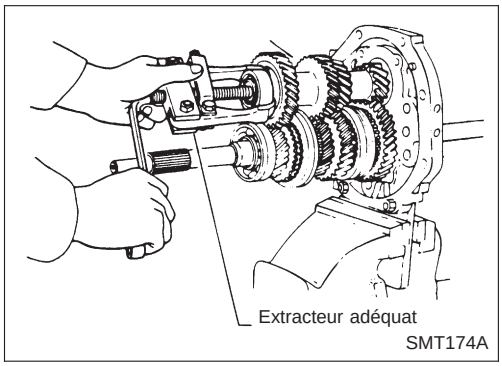

2. Engrener les pignons de 2nde et de marche arrière, puis retirer le roulement avant de pignon de renvoi à l'aide d'un extracteur adéquat.
3. Déposer le jonc d'arrêt, puis déposer le support de pignon auxiliaire, le ressort de pignon auxiliaire et le pignon auxiliaire.

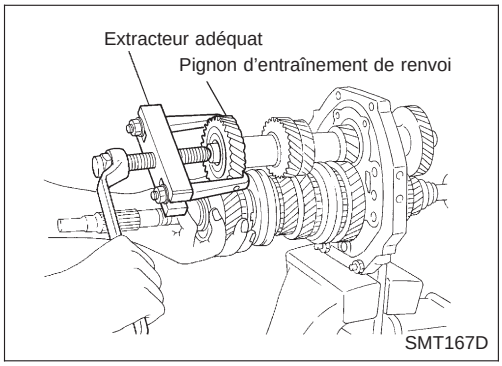

4. Sortir le pignon d'entraînement de renvoi avec l'ensemble de pignon d'entraînement principal à l'aide d'un extracteur adéquat.

- **Lors de l'extraction du pignon d'entraînement principal, veiller à ne pas laisser tomber le roulement pilote et l'anneau de synchro.**

5. Déposer le jonc d'arrêt et extraire le synchroniseur de 3ème et 4ème ainsi que le pignon de 3ème.

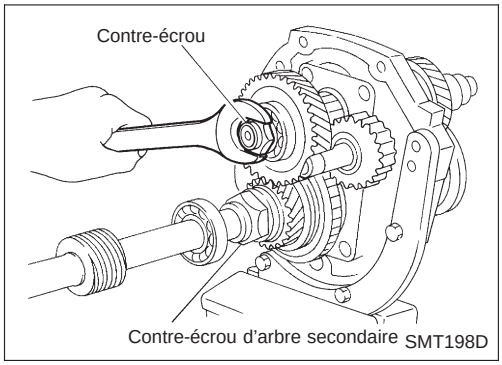

6. Déposer les composants arrière de l'arbre secondaire et du pignon de renvoi de la manière suivante.

a. Débloquer le contre-écrou d'arbre de renvoi et le contre-écrou d'arbre secondaire, puis desserrer les écrous.

- **Contre-écrou d'arbre secondaire : filetage à gauche**

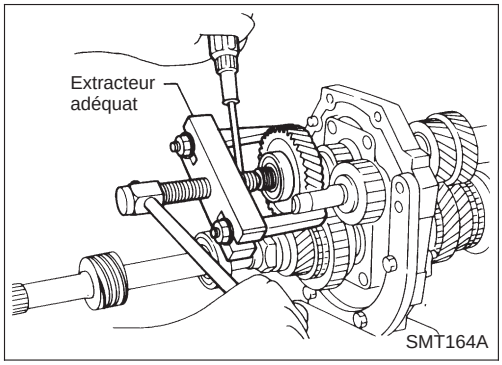

b. Extraire le pignon de renvoi de surmultipliée avec le roulement d'extrémité arrière du pignon de renvoi à l'aide d'un extracteur approprié.
c. Extraire le pignon de renvoi de marche arrière et son entretoise.
d. Déposer les joncs d'arrêt de l'arbre de renvoi de marche arrière et extraire les rondelles de butée du pignon intermédiaire de marche arrière, le pignon intermédiaire de marche arrière et le roulement de pignon intermédiaire de marche arrière.
e. Déposer le pignon d'entraînement de compteur de vitesse et la bille d'acier (modèle à 2 roues motrices uniquement).
f. Déposer le jonc d'arrêt et extraire le roulement d'arbre secondaire de surmultipliée, puis déposer le jonc d'arrêt.
g. Déposer le contre-écrou d'arbre secondaire.
h. Déposer le rouleau d'acier et la rondelle de butée.
i. Déposer le roulement à rouleaux et la rondelle.
j. Déposer le pignon principal de surmultipliée, le roulement à aiguilles et l'anneau de synchro. de surmultipliée.
k. Déposer le manchon d'accouplement de surmultipliée (4 roues motrices) et les cales de passage des vitesses.
l. Déposer le pignon primaire de marche arrière (2 roues motrices) et les cales de passage des vitesses.

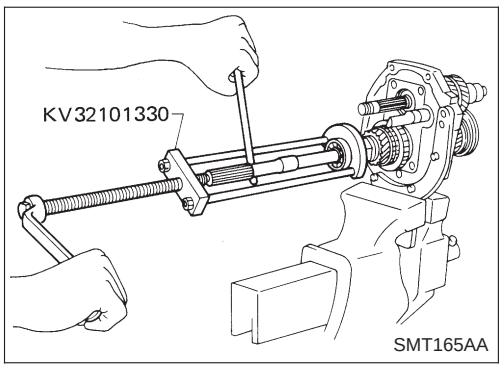

Simpo PDF Merge and Split Unregistered Version - http://www.simpopdf.com

Composants de la boîte (Suite)

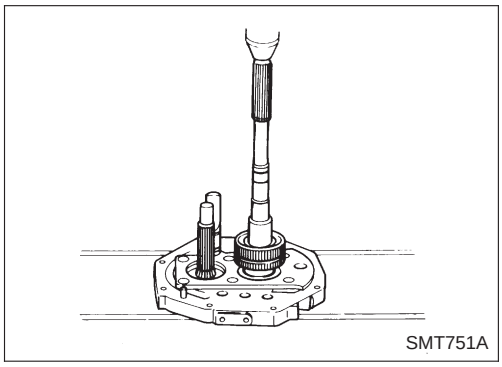
SMT751A

m. Chasser alternativement l'arbre secondaire et le pignon de renvoi.

- **Enfoncer alternativement et avec soin l'arbre secondaire et le pignon de renvoi. Veiller à ce que les pignons de l'arbre secondaire et du pignon de renvoi situés sous la plaque adaptatrice ne se cognent pas.**

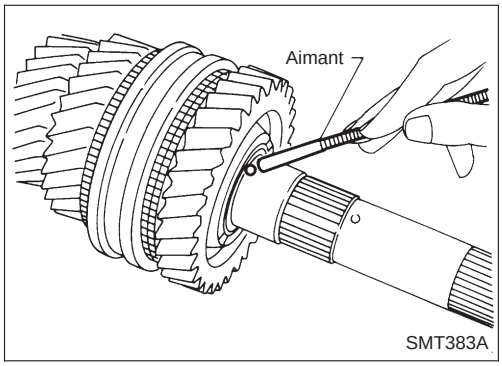

SMT383A

7. Déposer les composants avant de l'arbre secondaire.
a. Déposer la rondelle de butée de l'arbre secondaire et la bille d'acier.
b. Déposer le pignon principal de 1ère ainsi que le roulement à aiguilles de pignon de 1ère.

- **Faire attention de ne pas égarer la bille d'acier.**

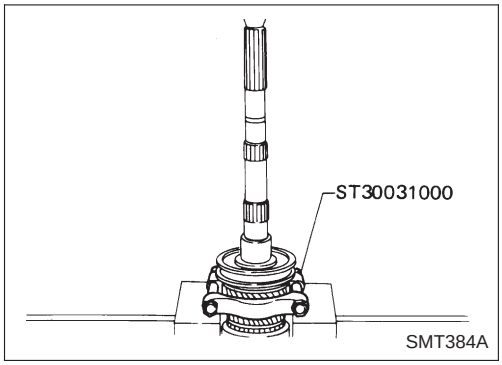

SMT384A

c. Chasser le pignon principal de 2nde avec la bague de pignon de 1ère et l'ensemble de synchro. de 1ère et 2nde.
d. Déposer le jonc d'arrêt avant de l'arbre secondaire.

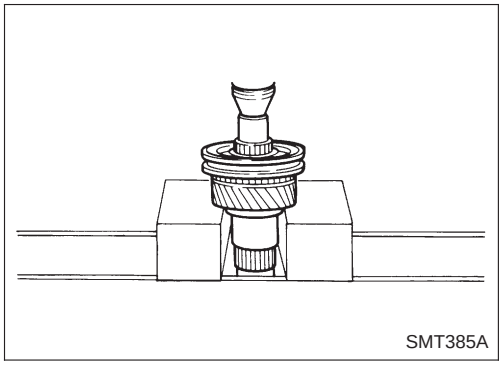
SMT385A

e. Chasser le pignon principal de 3ème avec l'ensemble de synchro. de 3ème et 4ème et le roulement à aiguilles de pignon de 3ème.

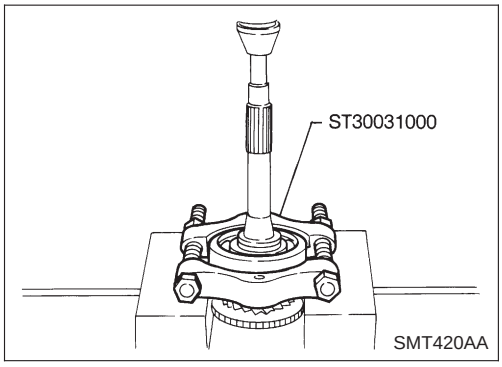

SMT420AA

8. Déposer le roulement du pignon d'entraînement principal.
a. Déposer le jonc d'arrêt du pignon d'entraînement principal ainsi que l'entretoise.
b. Chasser le roulement du pignon d'entraînement principal.

Simpo PDF Merge and Split Unregistered Version - http://www.simpopdf.com

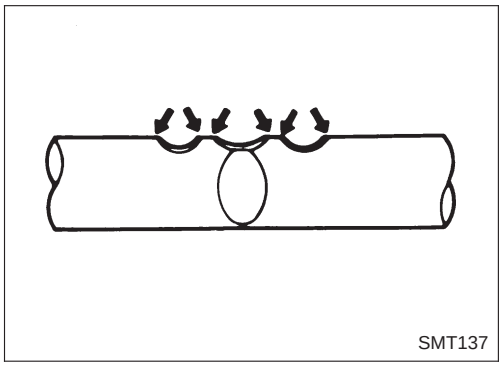
SMT137

Composants de la commande de passage des vitesses

- Contrôler la surface de contact et la surface de glissement pour voir si elles ne sont pas usées ou rayées et si elles ne présentent pas des aspérités ou autres défauts.

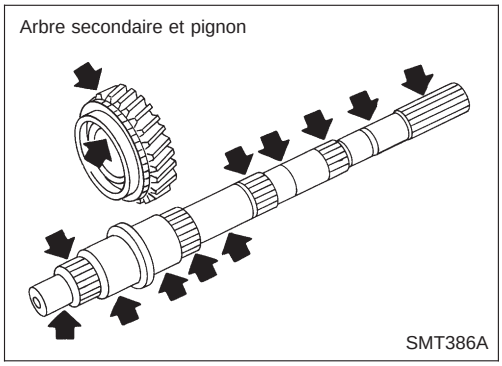

SMT386A

Composants de la boîte

PIGNON ET ARBRE

- Contrôler les arbres pour voir s'ils ne sont pas fêlés, usés ou pliés.
- Contrôler que les pignons ne sont pas excessivement usés, ébréchés ou fêlés.

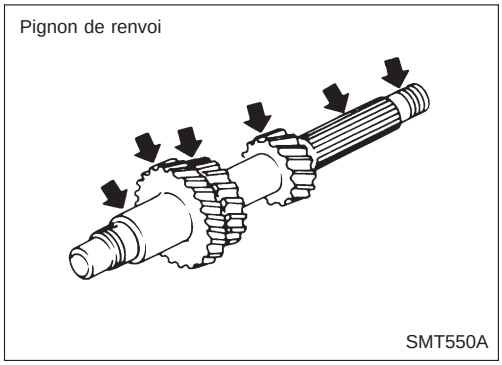

SMT550A

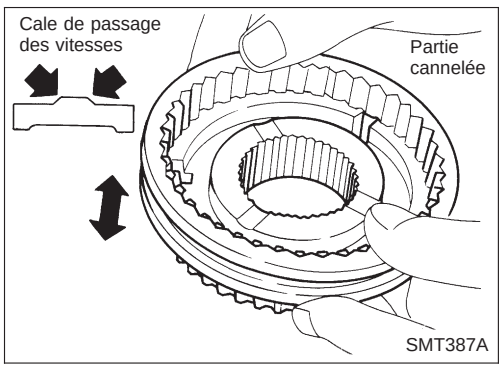

SMT387A

ENSEMBLES DE SYNCHRONISEUR

- Vérifier la partie cannelée des manchons d'accouplement, des moyeux et des pignons pour voir si elle n'est pas usée ou fêlée.
- Contrôler les cales de passage des vitesses pour voir si elles ne sont pas usées ou déformées.
- Vérifier pour s'assurer que le ressort d'expansion ne présente pas de déformation.

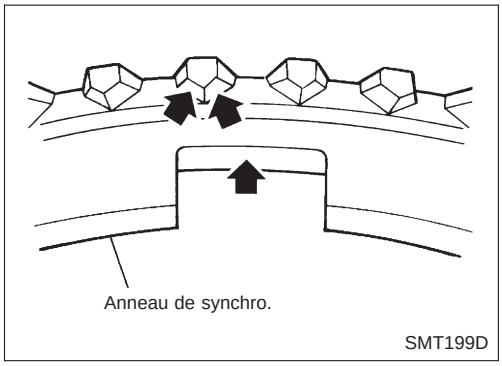

SMT199D

- Contrôler que les anneaux de synchro. ne sont pas fêlés ou déformés.

Simpo PDF Merge and Split Unregistered Version - http://www.simpopdf.com

Composants de la boîte (Suite)

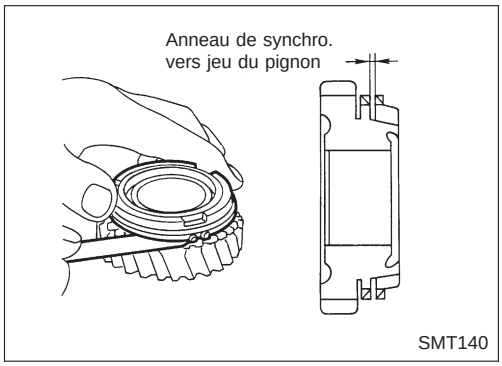

- Mesurer l'usure de anneau de synchro.

a. Mesurer le jeu entre l'anneau de synchro. et le pignon.
Jeu entre les anneaux de synchro. et les pignons :
Consulter les SDS, MT-59.

- Si le jeu est inférieur à la limite d'usure, remplacer l'anneau de synchro.

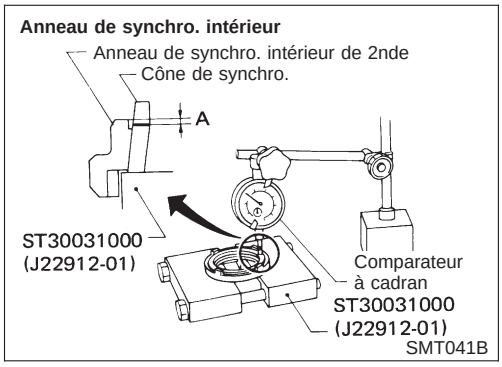

- Mesurer l'usure des anneaux de synchro. de 2nde et 3ème — Moteur TD25 seulement.

a. Positionner les anneaux de synchro. sur le cône de synchro.

b. Mesurer les dimensions ''A'' et ''B'' tout en poussant à fond les anneaux de synchro. contre le cône de synchro.
Standard :
Interne ''A'' : 0,7 - 0,9 mm
Externe ''B'' : 0,6 - 1,1 mm
Limite d'usure :
0,2 mm

- **Si la dimension ''A'' ou ''B'' est inférieure à la limite d'usure, remplacer l'anneau extérieur de synchro., l'anneau intérieur de synchro. et le cône de synchro. comme un ensemble.**

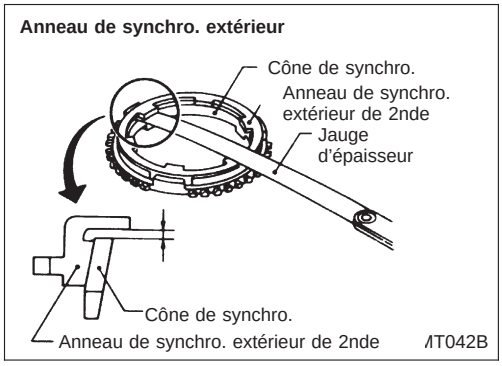

ROULEMENTS

- S'assurer que tous les roulements tournent librement, qu'ils n'émettent pas de bruits et qu'ils ne sont ni fêlés, ni piqués, ni usés.

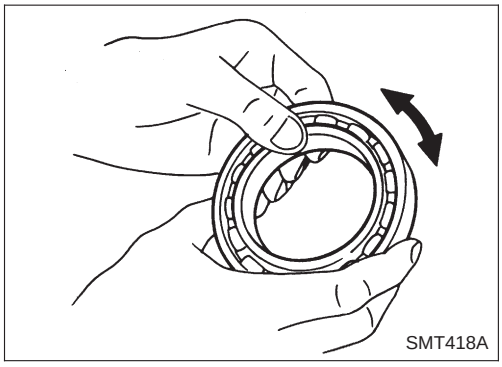

Simpo PDF Merge and Split Unregistered Version - http://www.simpopdf.com

Composants de la boîte

1. Reposer les roulements dans les composants du carter.

Roulement avant d'arbre secondaire dans la plaque adaptatrice

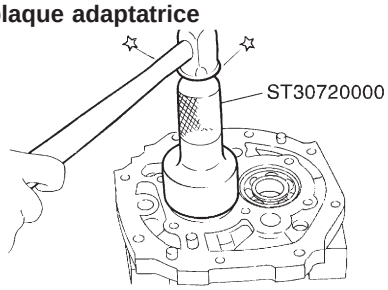

Roulement arrière de renvoi dans la plaque adaptatrice

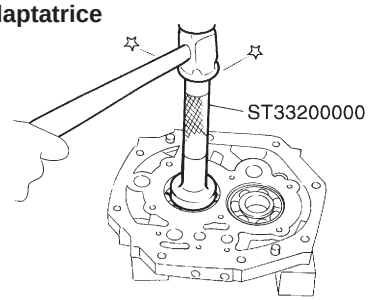

Roulement d'extrémité arrière de pignon de renvoi dans le carter de pignon de surmultipliée (modèles à 4 roues motrices)

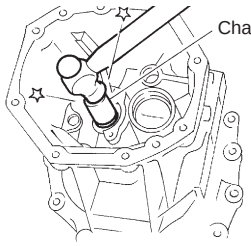

Doit être au ras de la surface avant du carter de pignon de surmultipliée.

SMT168D

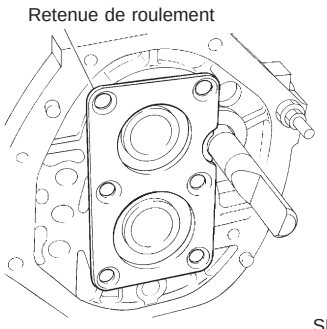

SMT175D

2. Assembler les pièces de la plaque adaptatrice.

● Reposer la retenue de roulement.

a. Insérer l'arbre intermédiaire de marche arrière, puis reposer la retenue de roulement.

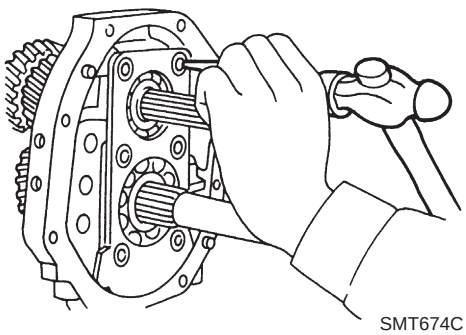

SMT674C

b. Serrer chaque vis, puis les marquer en deux points différents.

Simpo PDF Merge and Split Unregistered Version - http://www.simpopdf.com

Composants de la boîte (Suite)

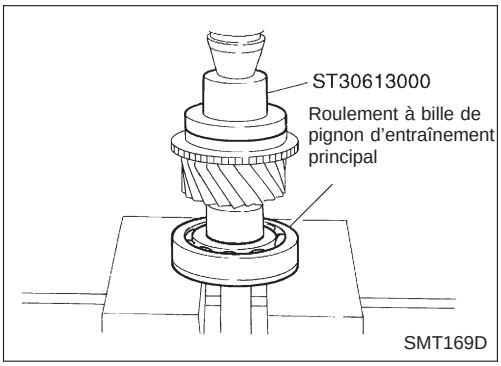

3. Reposer le roulement à billes du pignon d'entraînement principal.
a. Enfoncer à la presse le roulement à billes du pignon d'entraînement principal.

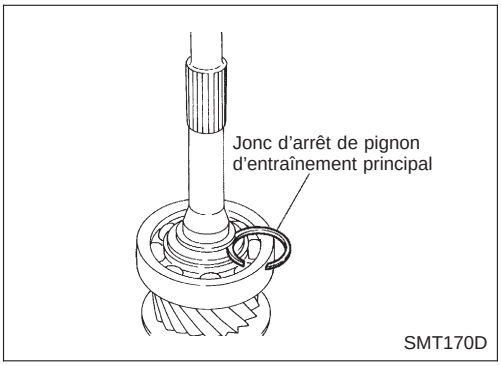

b. Sélectionner le jonc d'arrêt du roulement de pignon d'entraînement principal adéquat pour minimiser le jeu dans la rainure.
Tolérance de jeu dans la rainure :
0 - 0,13 mm
Jonc d'arrêt du roulement de pignon d'entraînement principal :
Consulter les SDS, MT-59.
c. Reposer le jonc d'arrêt choisi sur le pignon d'entraînement principal.

Synchro. de 1ère et 2nde (ou 3ème et 4ème)

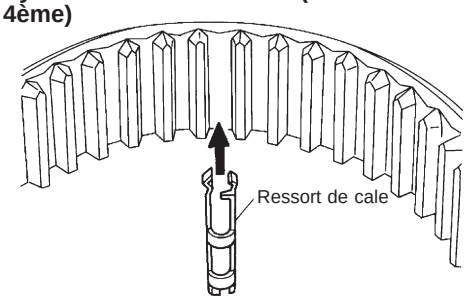

4. Assembler les synchroniseurs.
- Synchroniseur de 1ère et 2nde
- (Synchroniseur de 3ème et 4ème pour moteur TD25)

Synchroniseur de 3ème et 4ème

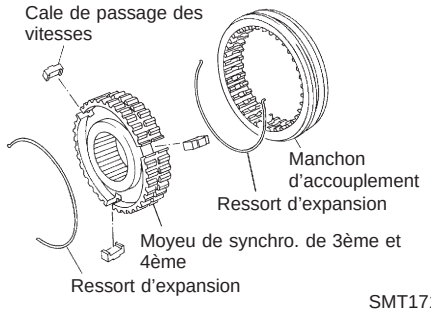

- Synchroniseur de 3ème et 4ème

Synchroniseur de surmultipliée et de marche arrière

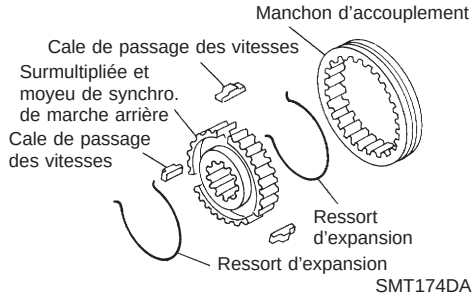

- Synchroniseur de surmultipliée et marche arrière

Simpo PDF Merge and Split Unregistered Version - http://www.simpopdf.com

Composants de la boîte (Suite)

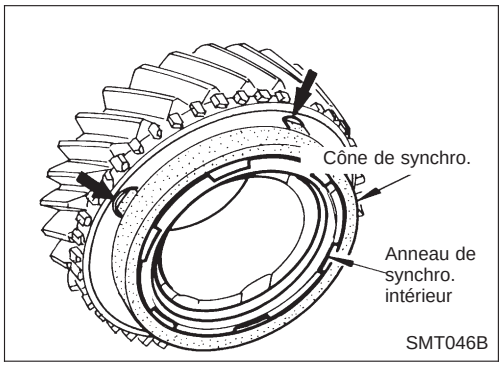

- Synchro. de type anneau de synchro. double de 1ère et 2nde (moteur TD25 seulement)

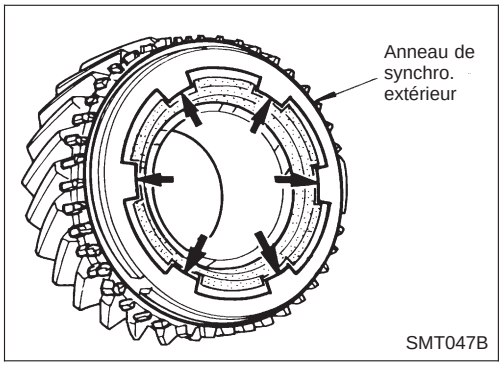

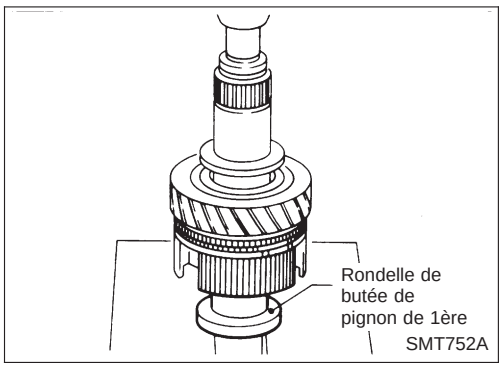

5. Assembler les composants avant sur l'arbre secondaire.

a. Reposer le pignon principal de 2nde, le roulement à aiguilles et le synchroniseur de 1ère et 2nde puis adapter à la presse la bague de pignon de 1ère sur l'arbre secondaire.

b. Reposer le pignon principal de 1ère.

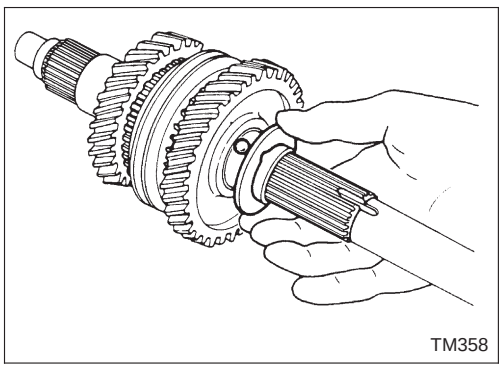

c. Reposer la bille d'acier ainsi que la rondelle de pignon de 1ère.

- **Avant la repose, enduire la bille d'acier et les deux côtés de la rondelle de butée de graisse à usages multiples.**

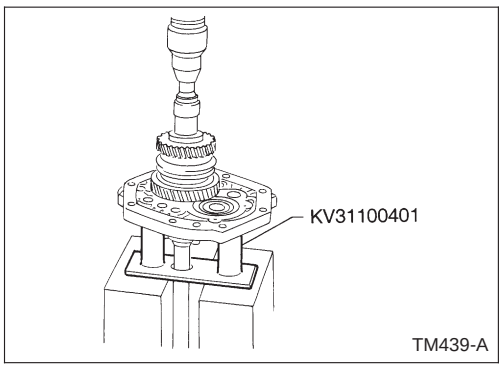

6. Reposer l'arbre secondaire et le pignon de renvoi sur la plaque adaptatrice et le pignon d'entraînement principal sur l'arbre secondaire comme suit :

a. Monter à la presse l'ensemble d'arbre secondaire sur la plaque adaptatrice à l'aide de l'outil spécial.

Simpo PDF Merge and Split Unregistered Version - http://www.simpopdf.com

Composants de la boîte (Suite)

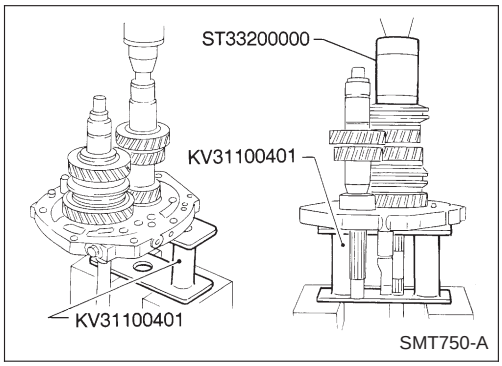

b. Enfoncer à la presse le pignon de renvoi dans la plaque adaptatrice à l'aide de l'outil spécial.
c. Monter le pignon principal de 3ème et le roulement à aiguilles, puis adapter à la presse l'ensemble synchroniseur de 3ème et 4ème sur l'arbre secondaire.

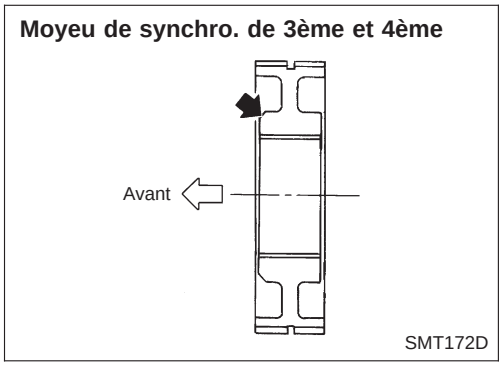

- **Faire attention au sens de montage du moyeu de synchro. de 3ème et de 4ème.**

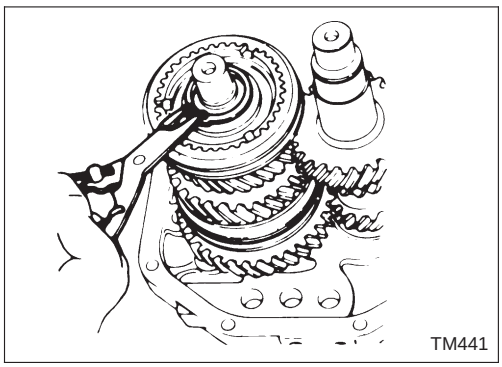

7. Reposer la rondelle de butée sur l'arbre secondaire et la bloquer à l'aide d'un jonc d'arrêt avant d'arbre secondaire.
- **Sélectionner le jonc d'arrêt adéquat pour minimiser le jeu de la rainure de l'arbre secondaire.**
  Tolérance de jeu dans la rainure :
  0 - 0,18 mm
  Jonc d'arrêt avant d'arbre secondaire :
  Consulter les SDS, MT-59.
8. Appliquer de l'huile à engrenages sur le roulement pilote d'arbre secondaire et le reposer sur l'arbre secondaire.

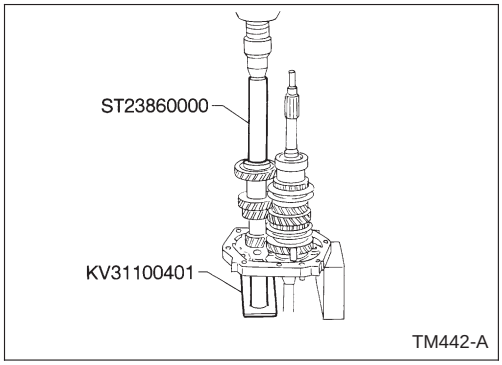

9. Monter à la presse le pignon d'entraînement de renvoi sur le pignon d'arbre primaire à l'aide de l'outil spécial.

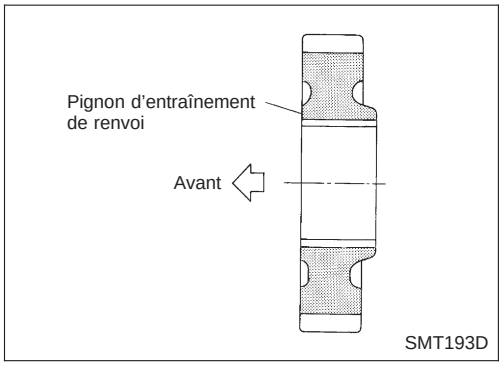

- **Faire attention au sens de montage du pignon d'entraînement de renvoi.**

Simpo PDF Merge and Split Unregistered Version - http://www.simpopdf.com

Composants de la boîte (Suite)

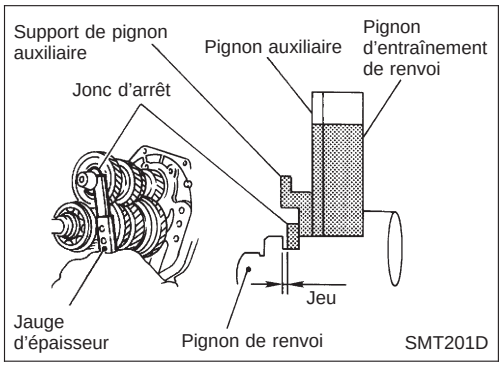

10. Reposer les composants du pignon auxiliaire.
a. Reposer le pignon auxiliaire et le support de pignon auxiliaire sur le pignon de commande de renvoi puis choisir un jonc d'arrêt adéquat qui réduira le jeu de la rainure du pignon de renvoi.

- **Ne pas encore monter le ressort de pignon auxiliaire.**
  Tolérance de jeu dans la rainure :
  0 - 0,18 mm
  Jonc d'arrêt du pignon d'entraînement de renvoi :
  Consulter les SDS, MT-59.

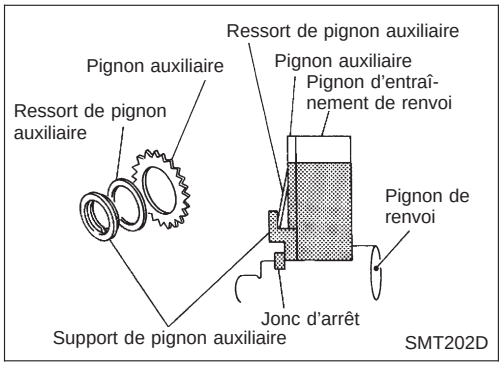

b. Déposer le jonc d'arrêt, le support de pignon auxiliaire et le pignon auxiliaire du pignon de renvoi.
c. Reposer le pignon auxiliaire, son ressort et son support.

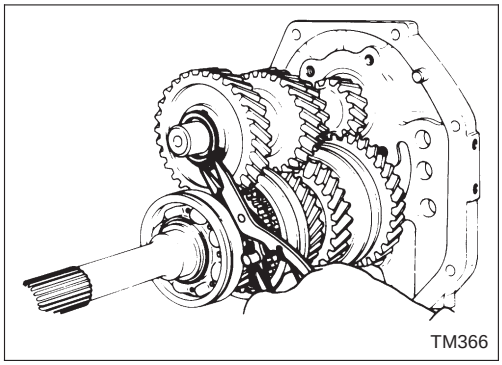

11. Reposer le jonc d'arrêt de pignon d'entraînement de renvoi préalablement sélectionné.

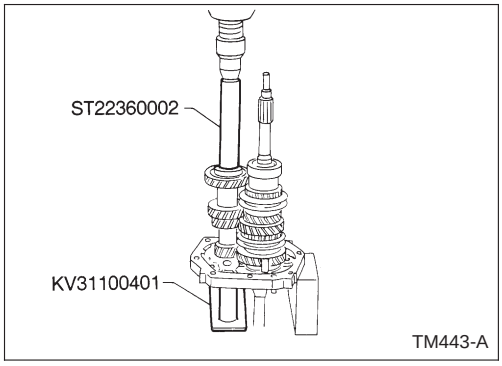

12. Enfoncer le roulement avant de pignon de renvoi dans le pignon de renvoi.

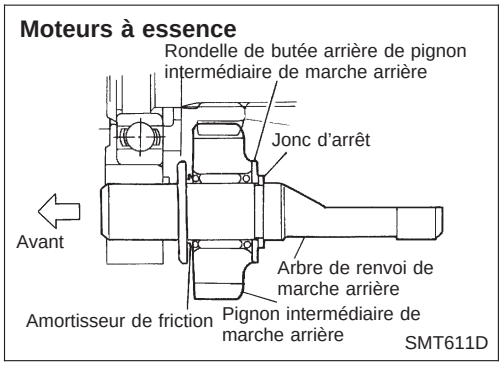

13. Assembler les pièces à l'arrière de la plaque adaptatrice comme suit :
a. Poser le pignon intermédiaire de marche arrière sur l'arbre de renvoi de marche arrière avec les rondelles de butée de pignon intermédiaire de marche arrière, les joncs d'arrêt et le roulement à aiguilles.

Simpo PDF Merge and Split Unregistered Version - http://www.simpopdf.com

Composants de la boîte (Suite)

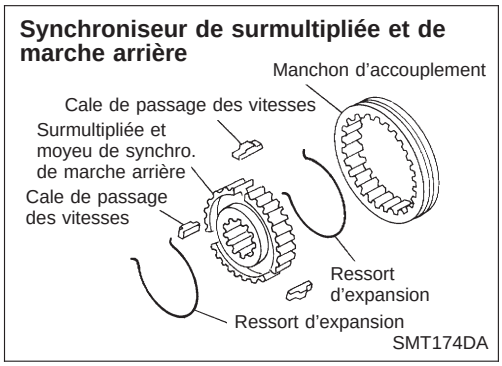

b. Reposer la retenue de passage de vitesses et le synchroniseur de surmultipliée et de marche arrière sur l'arbre secondaire.
- **Faire attention au sens de montage du moyeu.**

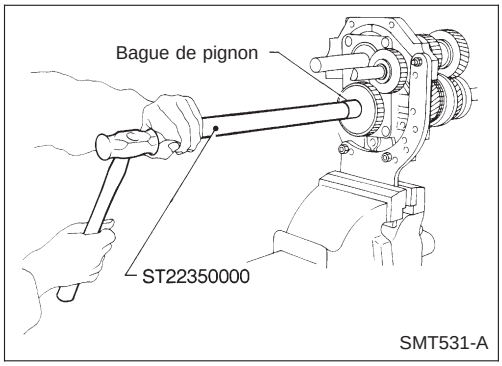

c. Reposer la bague de pignon de surmultipliée à l'aide d'un outil spécial.
d. Reposer le pignon principal de surmultipliée, le roulement à aiguilles.
e. Reposer l'entretoise du pignon de renvoi de marche arrière, le pignon de renvoi de marche arrière et le pignon de renvoi de surmultipliée.
- **Le pignon principal de surmultipliée et le pignon de renvoi de surmultipliée doivent être appariés.**

f. Reposer la rondelle, le roulement à galets, le rouleau d'acier, la rondelle de butée, la bille d'acier et le pignon d'entraînement du compteur de vitesses (2 roues motrices).
g. Serrer provisoirement le contre-écrou d'arbre secondaire.
- **Toujours utiliser un contre-écrou neuf.**

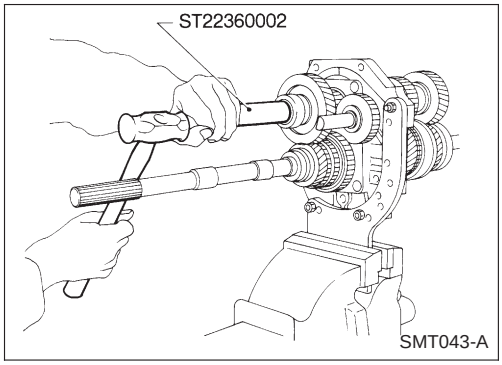

h. Remonter le roulement d'extrémité arrière du pignon de renvoi avec l'outil spécial.

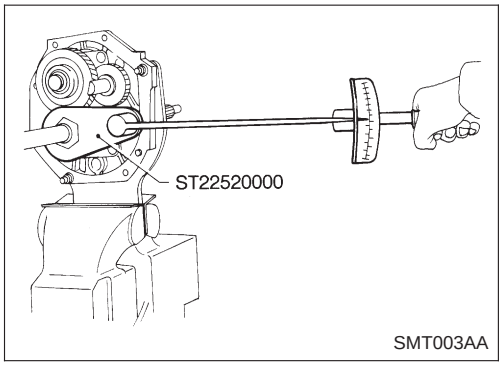

14. Engrener les pignons de 2nde et de marche arrière, puis serrer le contre-écrou d'arbre secondaire à l'aide de l'outil spécial.
- **Il y a un décalage entre la valeur indiquée par la clé dynamométrique et la valeur réelle du couple de serrage. Calculer la valeur du couple convertie en tenant compte de la longueur de la clé dynamométrique.**

Simpo PDF Merge and Split Unregistered Version - http://www.simpopdf.com

Composants de la boîte (Suite)

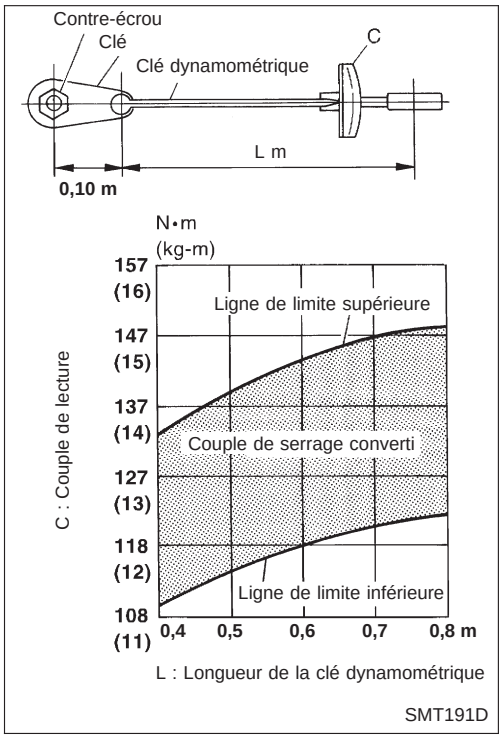

- Consulter la figure de gauche pour déterminer la valeur du couple de serrage convertie.

Référence : formule pour convertir la mesure du couple de serrage donnée par la clé dynamométrique en mesure réelle :

$$T = \frac{0{,}1\ m + L}{L} \times C$$

Si le couple de serrage spécifié est T kg-m, la valeur C indiquée par la clé dynamométrique sera déterminée par la formule suivante.

$$C = \frac{T \times L}{0{,}1\ m + L}$$

15. Serrer le contre-écrou de pignon de renvoi.
- **Toujours utiliser un contre-écrou neuf.**

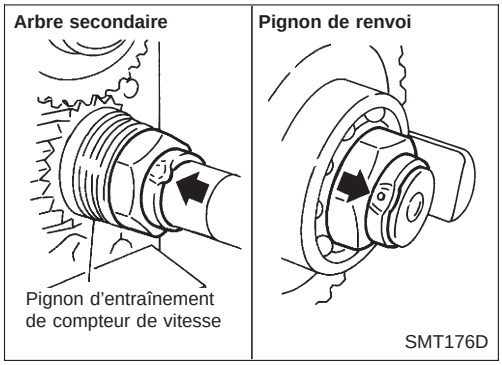

16. Mater le contre-écrou d'arbre secondaire et le contre-écrou d'arbre de renvoi à l'aide d'un poinçon.
17. Mesurer le jeu axial des pignons.
    Jeu axial des pignons :
    Consulter les SDS, MT-59.

18. Installer le jonc d'arrêt et le roulement d'arbre secondaire de surmultipliée, puis le jonc d'arrêt (modèles à 2 roues motrices).
    Jeu toléré :
    0 - 0,14
    Jonc d'arrêt de roulement d'arbre secondaire de surmultipliée (modèles à 2 roues motrices) :
    Consulter les SDS, MT-59.

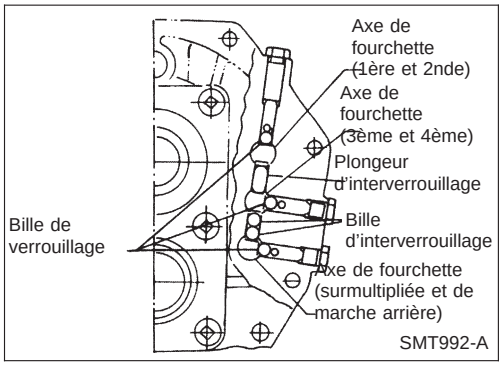

Composants de la commande de passage des vitesses

1. Remonter les axes de fourchette, le plongeur d'interverrouillage, les billes d'interverrouillage et les billes de verrouillage.

Simpo PDF Merge and Split Unregistered Version - http://www.simpopdf.com

Composants de la commande de passage des vitesses (Suite)

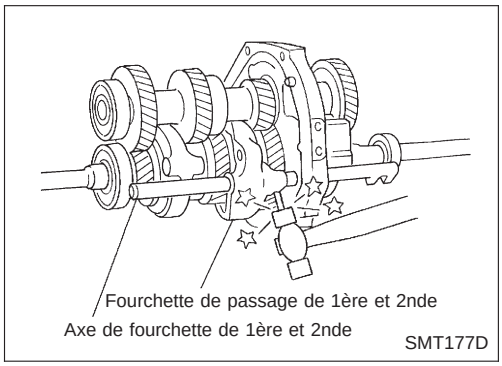

2. Monter les fourchettes de passage de 1ère et 2nde, puis enfoncer la goupille de retenue.

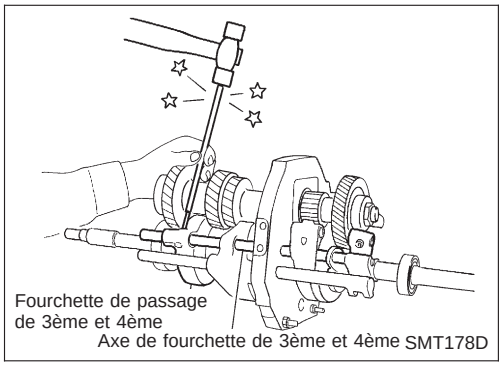

3. Monter les fourchettes de passage de 3ème et 4ème, puis enfoncer la goupille de retenue.

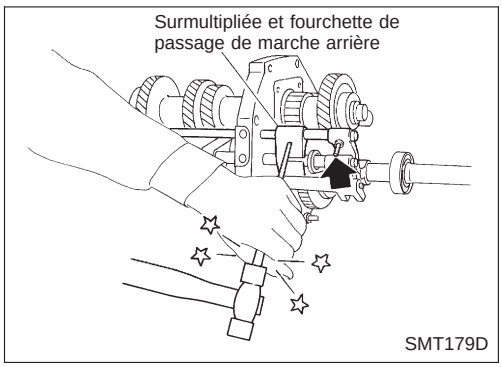

4. Monter la fourchette de passage de surmultipliée et de marche arrière, puis enfoncer la goupille de retenue.

Composants du carter

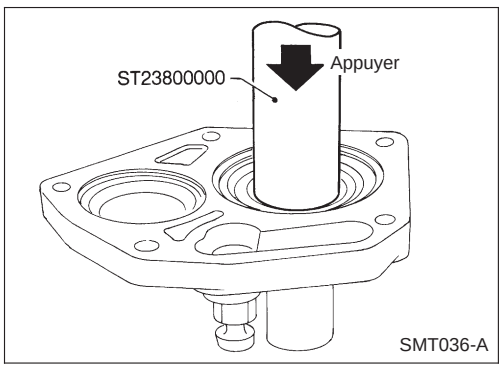

1. Reposer le joint d'huile de couvercle avant à l'aide de l'outil spécial.

- **Enduire la lèvre du joint de graisse à usages multiples.**

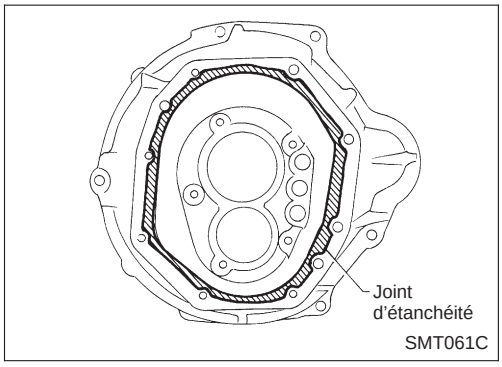

2. Enduire de produit d'étanchéité la surface de contact du carter de boîte de vitesses.

Simpo PDF Merge and Split Unregistered Version - http://www.simpopdf.com

Composants du carter (Suite)

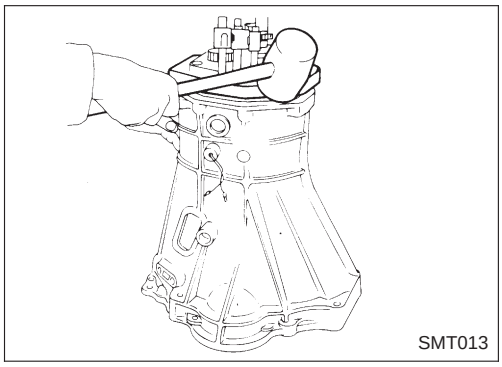
SMT013

3. Reposer l'ensemble de pignons avec la plaque adaptatrice sur le carter de transmission en donnant de légers coups de maillet à tête élastique.

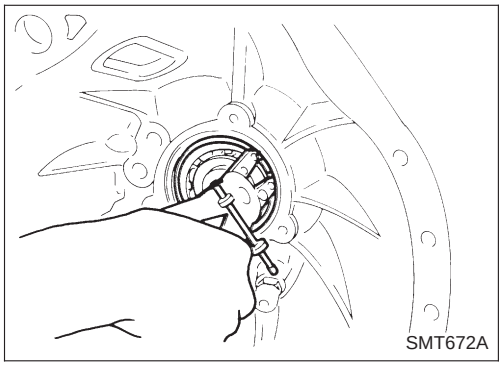
SMT672A

4. Reposer le jonc d'arrêt du roulement à billes du pignon d'entraînement principal.

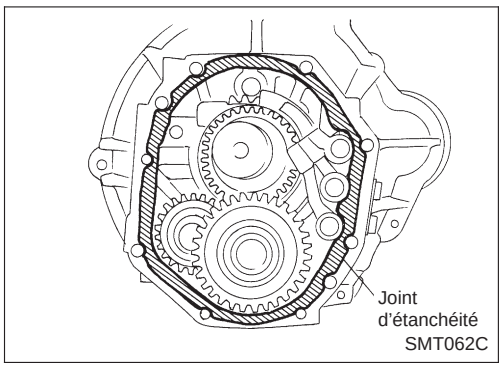

SMT062C

5. Enduire de produit d'étanchéité la surface d'assemblage de la plaque adaptatrice.

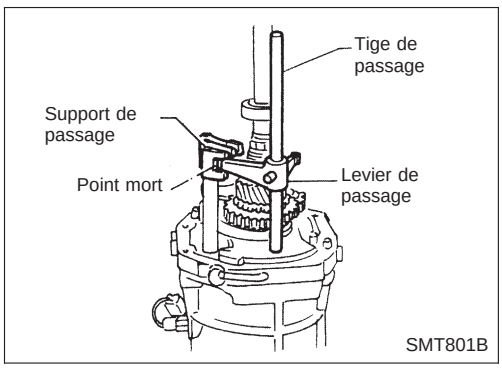

SMT801B

6. Amener les fourchettes de passage à la position point mort.
7. Reposer le levier de passage et la tige sur la plaque adaptatrice, et aligner le levier de passage sur les supports de passage.

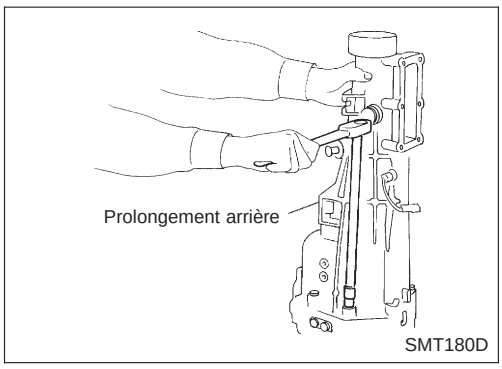

SMT180D

8. Reposer le prolongement arrière.

- **Serrer les boulons de montage diagonalement avec la même force.**

Simpo PDF Merge and Split Unregistered Version - http://www.simpopdf.com

Composants du carter (Suite)

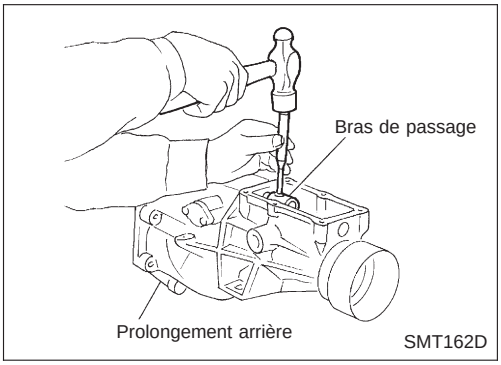

9. Installer la goupille de verrouillage du bras de passage.

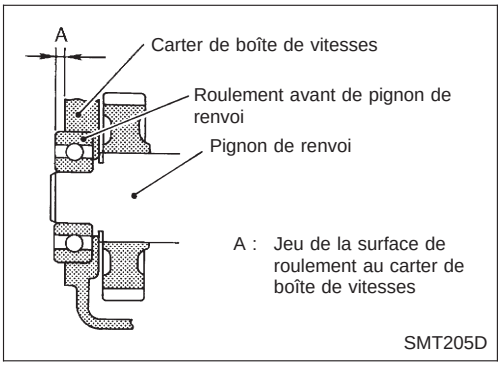

10. Sélectionner une cale de roulement avant de pignon de renvoi.
    Jeu admissible (A) entre la surface de roulement et le carter de boîte :
    0 - 0,16 mm
    Cale de roulement avant du pignon de renvoi :
    Consulter les SDS, MT-59.
11. Reposer le joint plat et le couvercle avant.

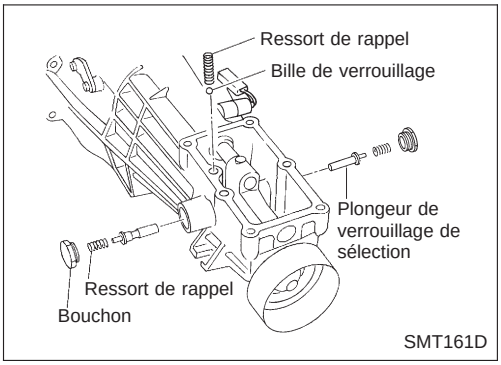

12. Reposer les bouchons de ressort de rappel, la bille de verrouillage, les ressorts de rappel et choisir les plongeurs de verrouillage.
13. Reposer le boîtier de commande de vitesses et le joint plat.

Simpo PDF Merge and Split Unregistered Version - http://www.simpopdf.com

Composants du carter

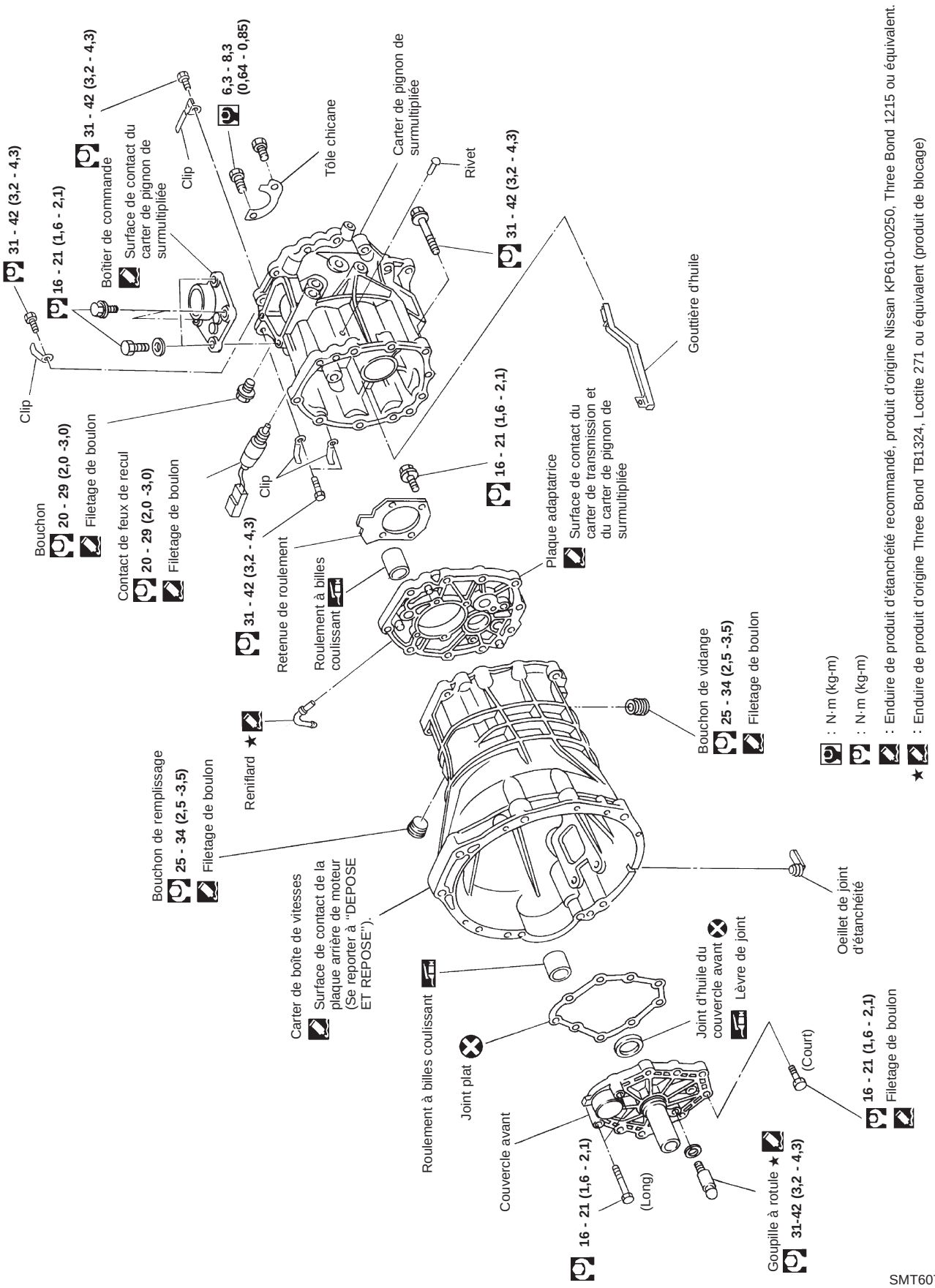

SMT607D

Simpo PDF Merge and Split Unregistered Version - http://www.simpopdf.com

Composants de la boîte

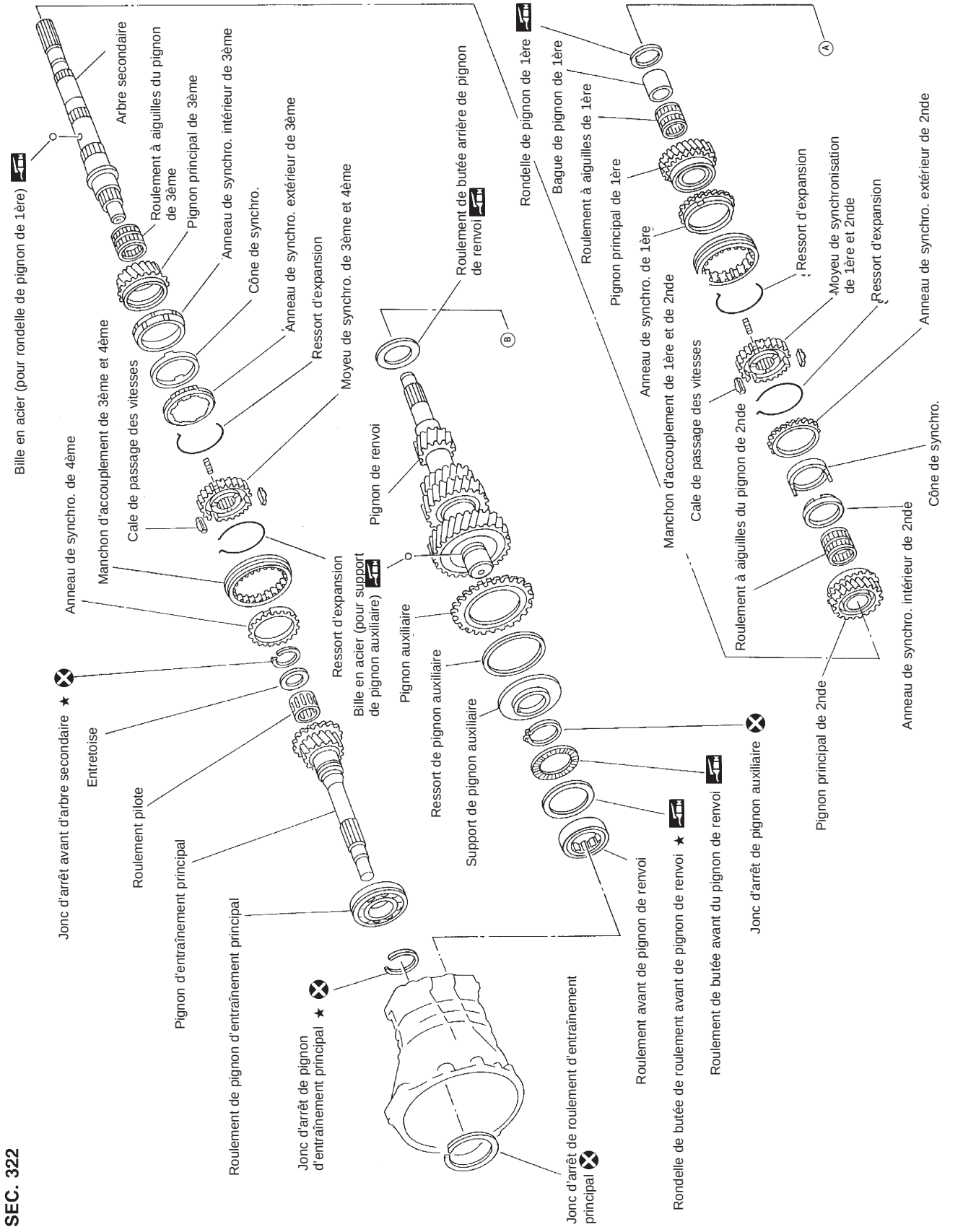

SEC. 322

SMT608D

Simpo PDF Merge and Split Unregistered Version - http://www.simpopdf.com

Composants de la boîte (Suite)

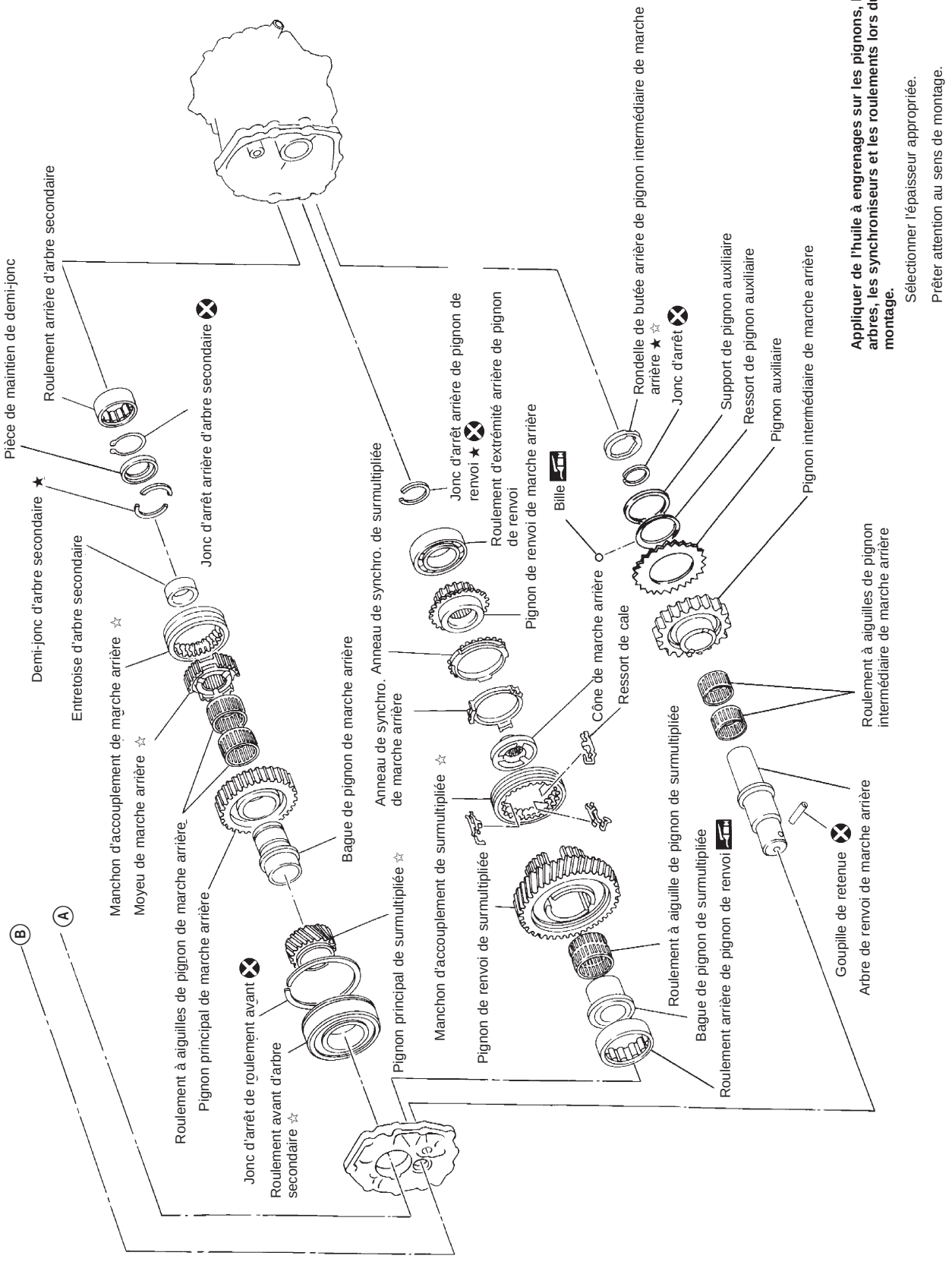

SEC. 322

SMT609D

Simpo PDF Merge and Split Unregistered Version - http://www.simpopdf.com

Composants de la commande de passage des vitesses

ATTENTION :
Pour éviter tout dommage lors du remplacement du pommeau de levier de passage, déposer le levier de passage avec le pommeau, comme un ensemble.

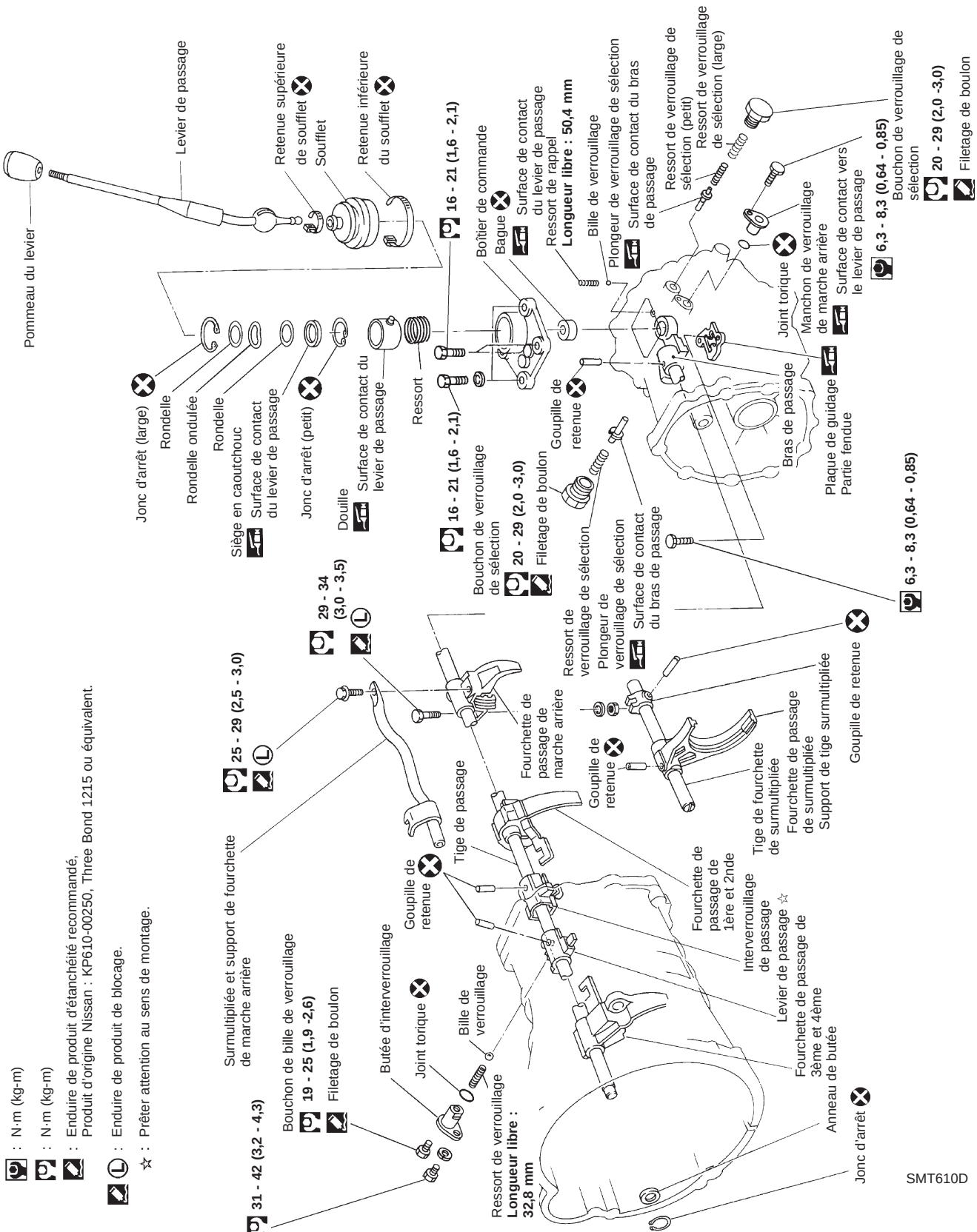

Simpo PDF Merge and Split Unregistered Version - http://www.simpopdf.com

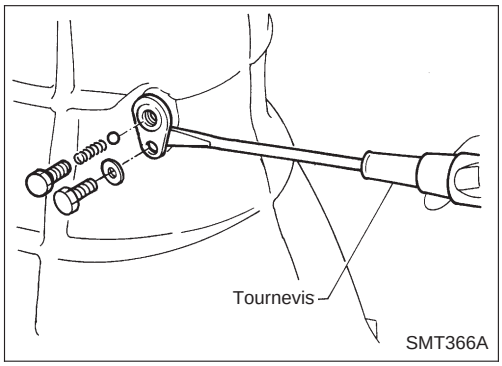

Composants du carter

1. Déposer le bouchon de bille de verrouillage, le ressort de verrouillage, ainsi que la bille de verrouillage. Déposer ensuite la butée d'interverrouillage.

- **La bille de verrouillage risque de tomber dans le carter de boîte si l'ensemble d'interverrouillage est déposé en une fois.**
- **Veiller à ne pas perdre la bille de verrouillage.**

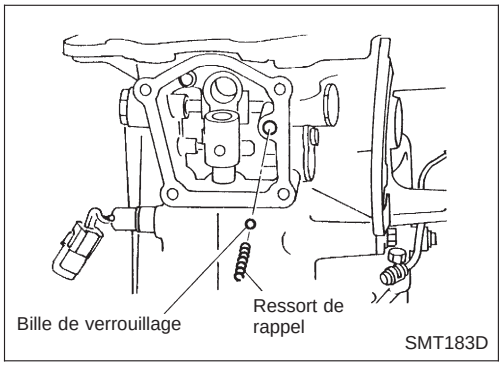

2. Déposer le boîtier de commande, le ressort de rappel et la bille de verrouillage.

- **Veiller à ne pas perdre la bille de verrouillage.**

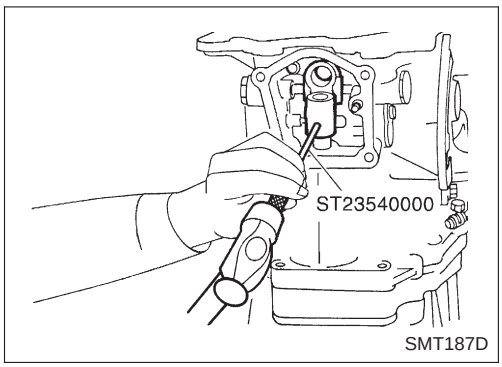

3. Chasser la goupille de retenue du bras de passage.

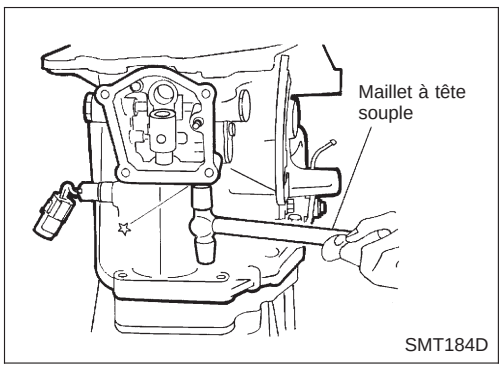

4. Déposer le carter de pignon de surmultipliée et le bras de passage des vitesses en les frappant légèrement.

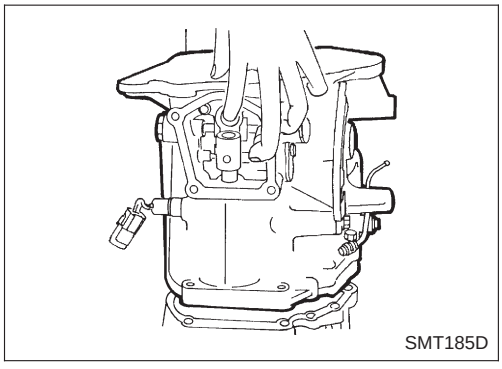

Simpo PDF Merge and Split Unregistered Version - http://www.simpopdf.com

Composants du carter (Suite)

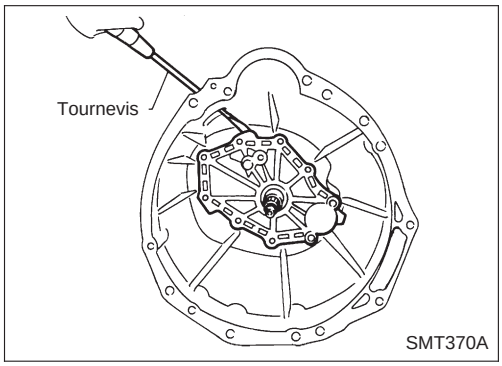

5. Déposer le couvercle avant ainsi que le joint plat.

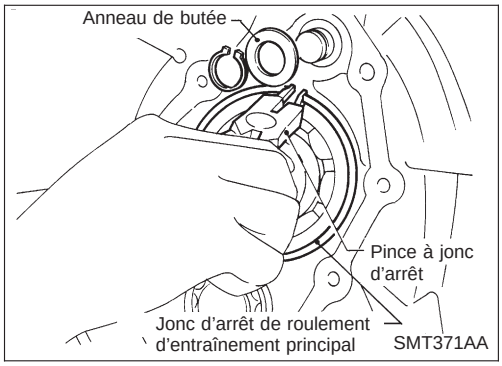

6. Déposer l'anneau de butée ainsi que le jonc d'arrêt de roulement d'entraînement principal.

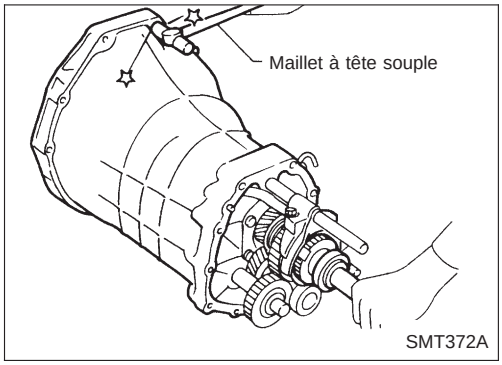

7. Déposer le carter de transmission en le frappant légèrement.

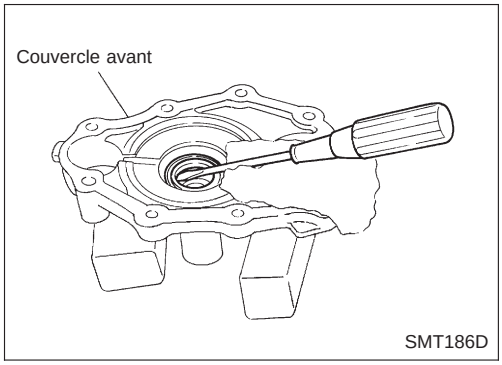

8. Déposer le joint d'huile de couvercle avant.

Composants de la commande de passage des vitesses

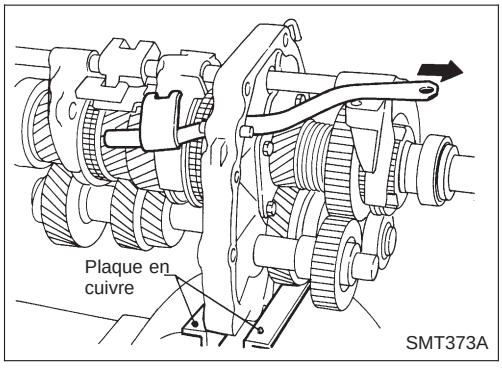

1. Monter la plaque adaptatrice dans un étau.
2. Déposer l'axe de fourchette de surmultipliée et de marche arrière.

Simpo PDF Merge and Split Unregistered Version - http://www.simpopdf.com

Composants de la commande de passage des vitesses (Suite)

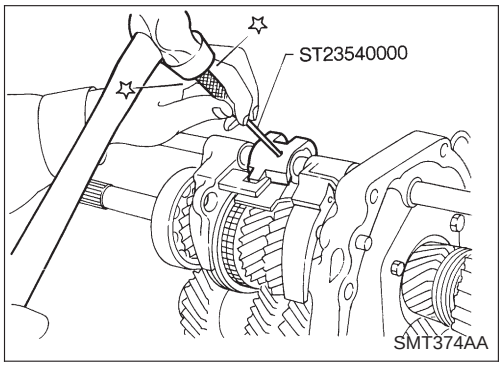

3. Chasser la goupille de retenue du levier de passage.
4. Déposer le levier de passage ainsi que l'interverrouillage de passage tout en extrayant la tige de passage. Puis déposer la fourchette de passage de 1ère et 2nde, de 3ème et 4ème et de marche arrière.

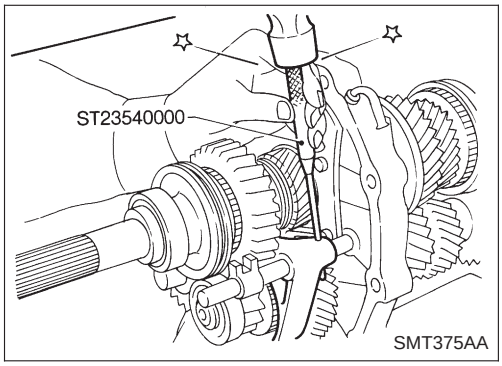

5. Chasser la goupille de retenue de la fourchette de passage de surmultipliée.
6. Extraire l'axe de fourchette de surmultipliée puis déposer la fourchette de passage de surmultipliée.

Composants de la boîte

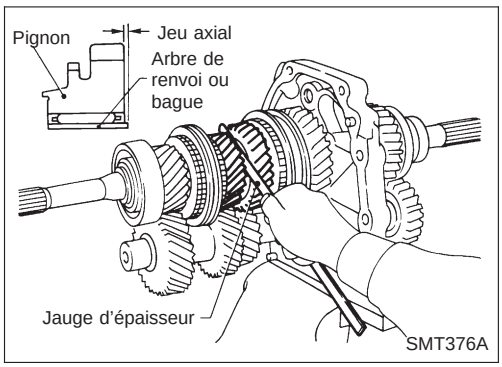

1. Mesurer le jeu axial de chaque pignon avant de déposer les pignons et les arbres.
   Jeu axial des pignons :
   Consulter les SDS, MT-61.

- Si le jeu axial n'est pas dans les limites spécifiées, démonter et vérifier la surface de contact du pignon avec le moyeu, la rondelle, la bague, le roulement à aiguilles et l'arbre.

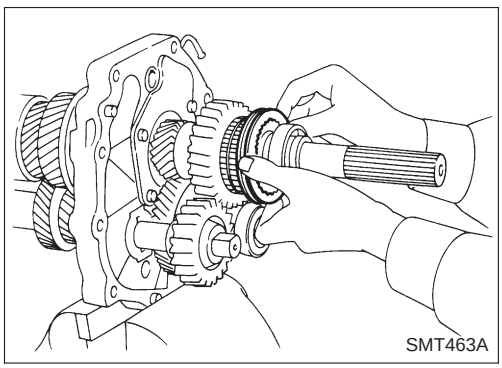

2. Déposer les composants arrière de l'arbre secondaire et du pignon de renvoi.

a. Déposer le manchon d'accouplement de marche arrière.

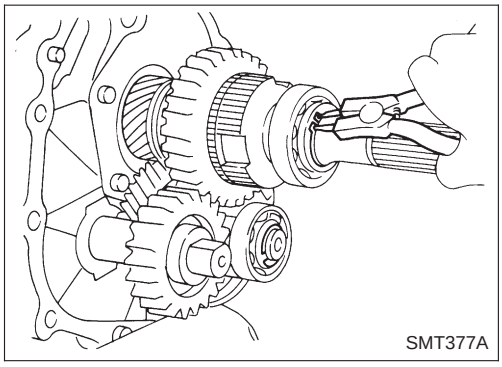

b. Déposer le jonc d'arrêt arrière de l'arbre secondaire et le jonc d'arrêt arrière du pignon de renvoi.

c. Déposer le porteur de demi-jonc et les demi-joncs de l'arbre secondaire. Chasser les demi-joncs à l'aide d'un poinçon et d'un marteau.

Simpo PDF Merge and Split Unregistered Version - http://www.simpopdf.com

Composants de la boîte (Suite)

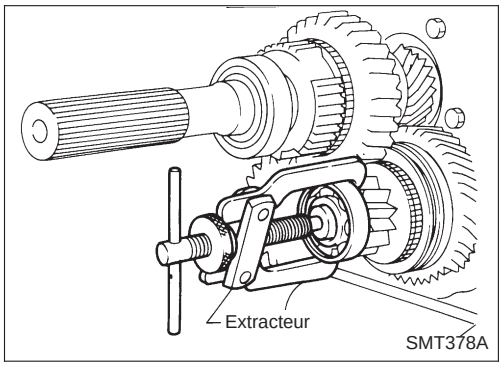

d. Extraire le roulement d'extrémité arrière du pignon de renvoi.
e. Déposer le pignon intermédiaire de marche arrière ainsi que les rondelles de butée de pignon intermédiaire de marche arrière.

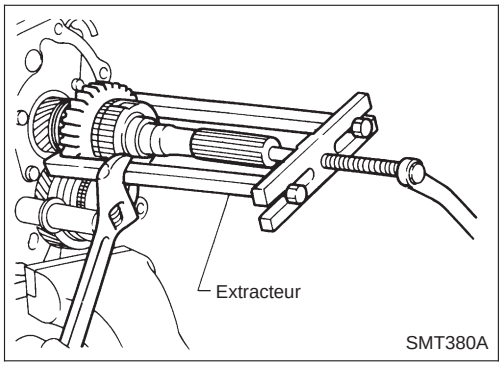

f. Extraire le pignon principal de marche arrière avec l'entretoise d'arbre secondaire et le moyeu de synchro. de marche arrière. Puis déposer les roulements à aiguilles de pignon de marche arrière.

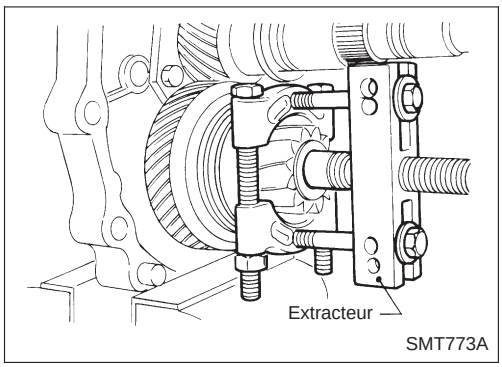

g. Extraire le pignon de renvoi de marche arrière.
h. Déposer le manchon d'accouplement de surmultipliée avec l'anneau de synchro. de surmultipliée, l'anneau de synchro. de marche arrière et les ressorts de cale.

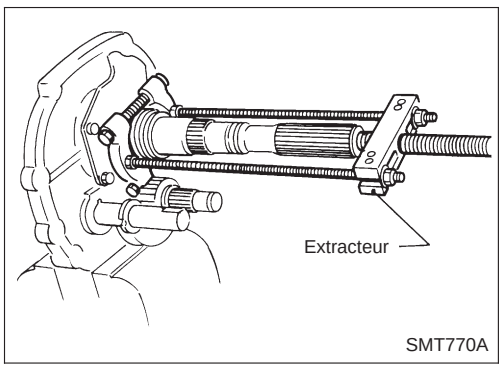

i. Extraire la bague de pignon de marche arrière.

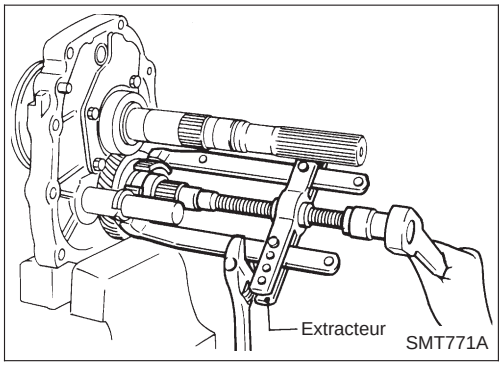

j. Extraire le pignon de renvoi de surmultipliée avec le cône de marche arrière.

Simpo PDF Merge and Split Unregistered Version - http://www.simpopdf.com

Composants de la boîte (Suite)

3. Chasser alternativement l'arbre secondaire et le pignon de renvoi.

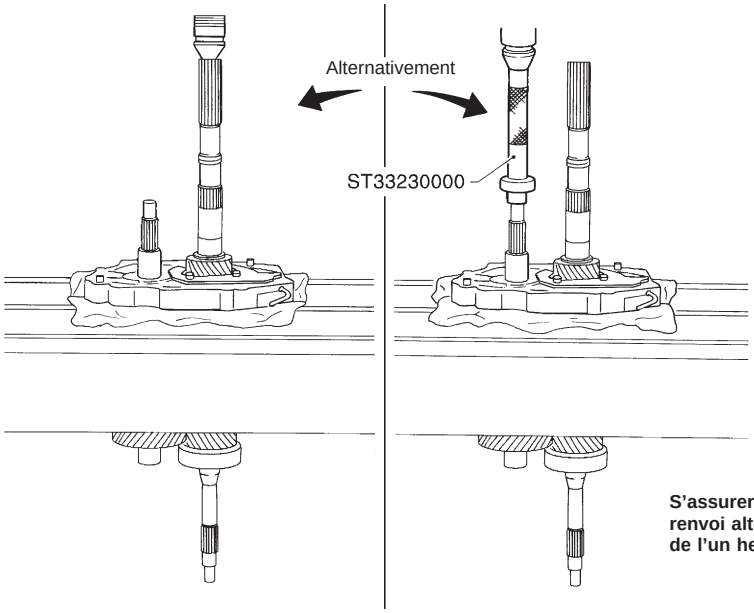

S'assurer de bien chasser l'arbre secondaire et le pignon de renvoi alternativement afin de ne pas laisser la surface avant de l'un heurter la surface arrière de l'autre.

SMT772AB

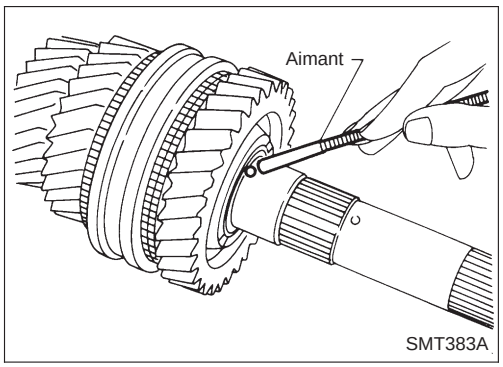

SMT383A

4. Déposer les composants avant de l'arbre secondaire.

a. Déposer la rondelle de pignon de 1ère ainsi que la bille d'acier.

b. Déposer le pignon principal de 1ère ainsi que le roulement à aiguilles de pignon de 1ère.

- **Faire attention de ne pas égarer la bille d'acier.**

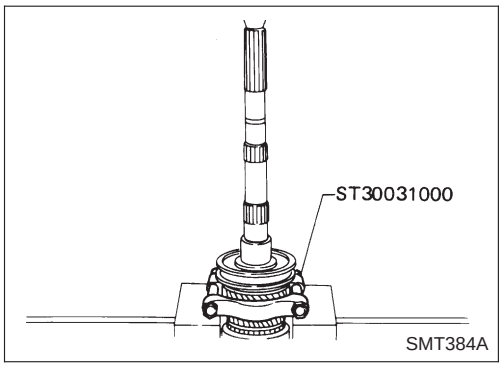

SMT384A

c. Chasser le pignon principal de 2nde avec la bague de pignon de 1ère et l'ensemble de synchro. de 1ère et 2nde.

d. Déposer le jonc d'arrêt avant de l'arbre secondaire.

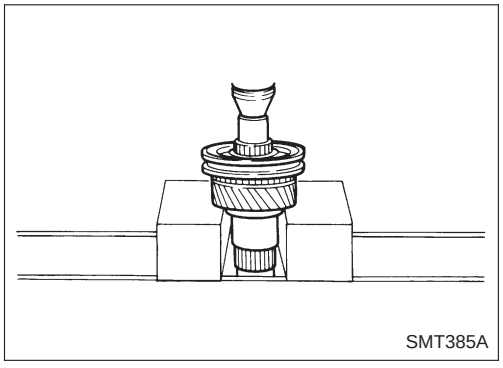

SMT385A

e. Chasser le pignon principal de 3ème avec l'ensemble de synchro. de 3ème et 4ème et le roulement à aiguilles de pignon de 3ème.

Simpo PDF Merge and Split Unregistered Version - http://www.simpopdf.com

Composants de la boîte (Suite)

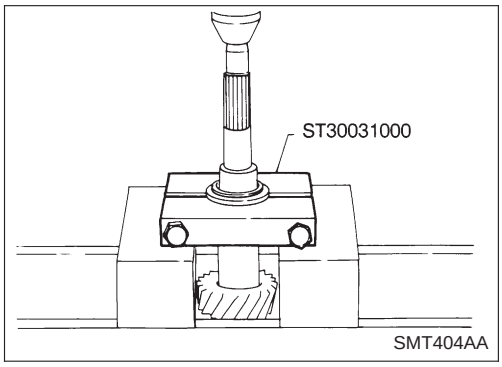

5. Déposer les composants avant du pignon de renvoi.
a. Déposer le roulement de butée arrière du pignon de renvoi.

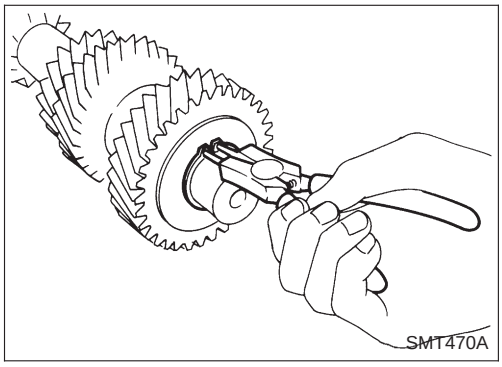

b. Déposer les composants du pignon auxiliaire.

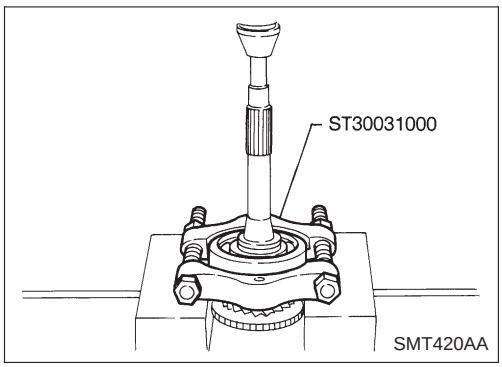

6. Déposer le roulement du pignon d'entraînement principal.
a. Déposer le jonc d'arrêt du pignon d'entraînement principal ainsi que l'entretoise.
b. Chasser le roulement du pignon d'entraînement principal.

7. Déposer les roulements des composants du carter de boîte.

Roulement avant de pignon de renvoi dans le carter de transmission

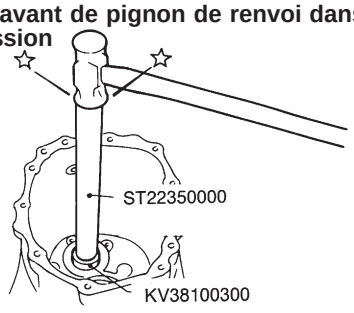

Roulement avant d'arbre secondaire dans la plaque adaptatrice

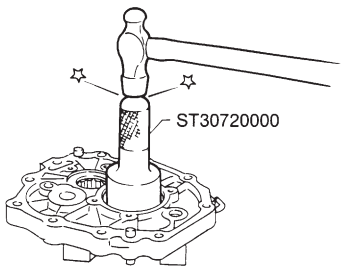

Roulement d'extrémité arrière de pignon de renvoi dans le carter de pignon de surmultipliée

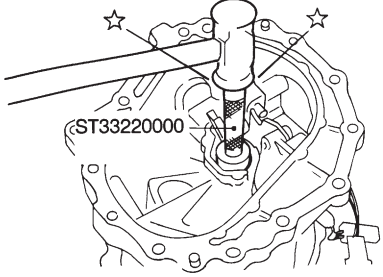

Roulement arrière de pignon de renvoi dans la plaque adaptatrice

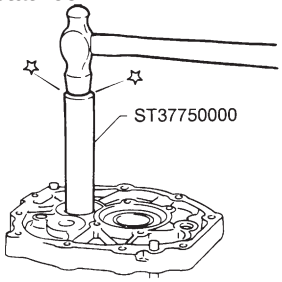

SMT063CB

Simpo PDF Merge and Split Unregistered Version - http://www.simpopdf.com

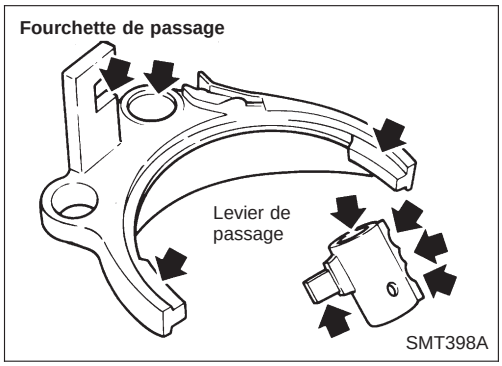

Composants de la commande de passage des vitesses

- Contrôler la surface de contact et la surface de glissement pour voir si elles ne sont pas usées ou rayées et si elles ne présentent pas des aspérités ou autres défauts.

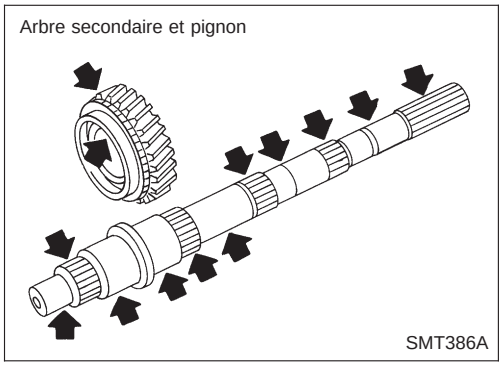

Composants de la boîte

PIGNONS ET ARBRES

- Contrôler les arbres pour voir s'ils ne sont pas fêlés, usés ou pliés.
- S'assurer que les pignons ne sont pas excessivement usés, ébréchés ou fêlés.

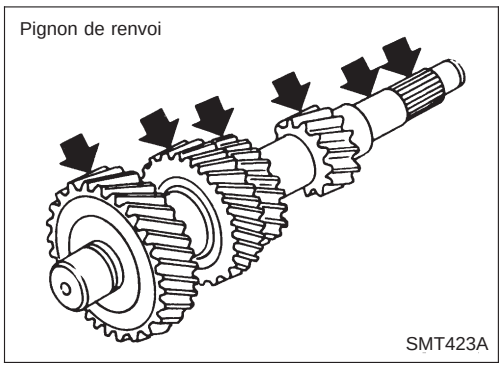

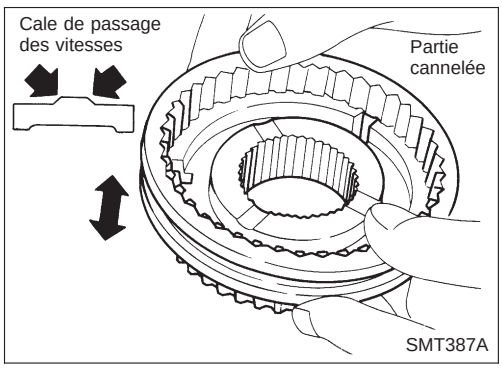

ENSEMBLES DE SYNCHRONISEUR

- Vérifier la partie cannelée des manchons d'accouplement, des moyeux et des pignons pour voir si elle n'est pas usée ou fêlée.
- S'assurer que les anneaux de synchro. ne sont pas fêlés ou déformés.
- Contrôler les cales de passage des vitesses pour voir si elles ne sont pas usées ou déformées.
- Contrôler les ressorts de cales pour voir s'ils ne sont pas déformés.

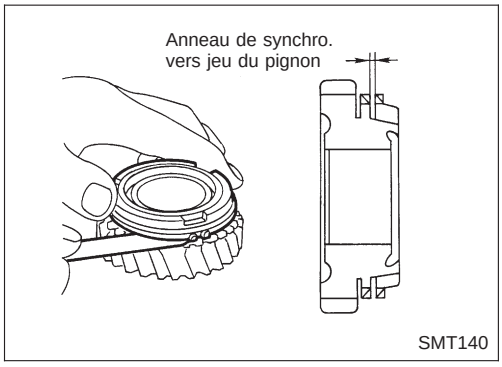

Jeu entre les anneaux de synchro. et les pignons :
Consulter les SDS, MT-61.

- **Remplacer l'anneau de synchro. si le jeu est inférieur à la limite d'usure.**

Simpo PDF Merge and Split Unregistered Version - http://www.simpopdf.com

Composants de la boîte (Suite)

Anneau de synchro. intérieur

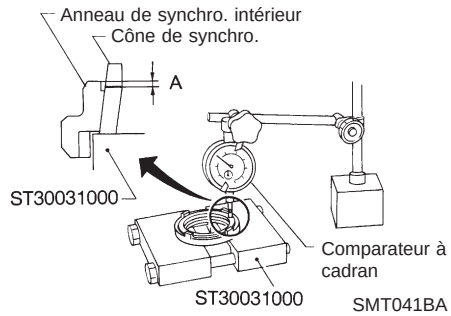

- Mesurer l'usure des anneaux de synchro. des pignons de 2nde et de 3ème.

a. Positionner les anneaux de synchro. sur le cône de synchro.
b. Mesurer les dimensions ''A'' et ''B'' tout en poussant à fond les anneaux de synchro. contre le cône de synchro.

Dimensions ''A'' et ''B'' :

Consulter les SDS, MT-61.

- **Si la dimension ''A'' ou ''B'' est inférieure à la limite d'usure, remplacer l'anneau extérieur de synchro., l'anneau intérieur de synchro. et le cône de synchro. comme un ensemble.**

Anneau de synchro. extérieur

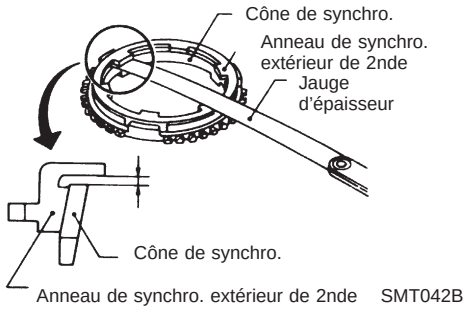

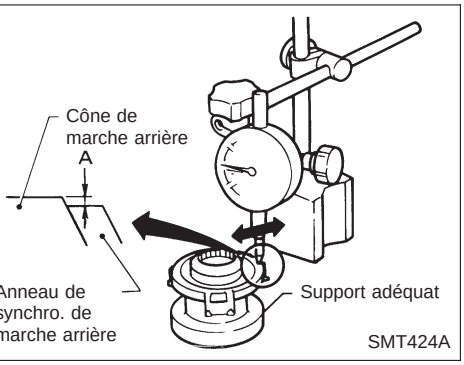

- Mesurer l'usure de l'anneau de synchro. de marche arrière.

a. Mettre l'anneau de synchro. à sa place sur le cône de marche arrière.
b. Enfoncer l'anneau de synchro. contre le cône de marche arrière en le poussant autant que possible et mesurer la dimension ''A'' à l'aide d'un comparateur à cadran.

Dimension ''A'' :

Consulter les SDS, MT-61.

c. Remplacer l'anneau de synchro. si la dimension ''A'' est supérieure à la limite d'usure.

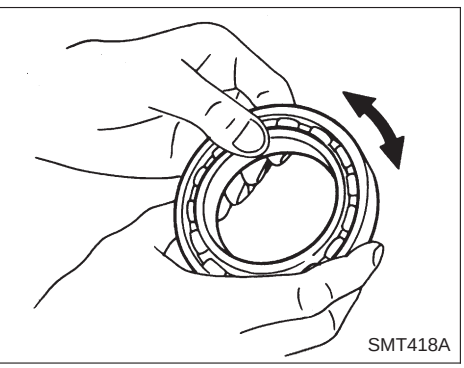

ROULEMENTS

- S'assurer que les roulements tournent librement, qu'ils n'émettent pas de bruits et qu'ils ne sont ni fêlés, piqués ou usés.

Simpo PDF Merge and Split Unregistered Version - http://www.simpopdf.com

Composants de la boîte

1. Reposer les roulements dans les composants du carter.

Roulement avant de pignon de renvoi dans le carter de transmission

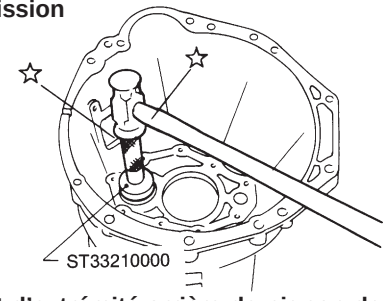

SMT389A

Roulement d'extrémité arrière de pignon de renvoi dans le carter de pignon de surmultipliée

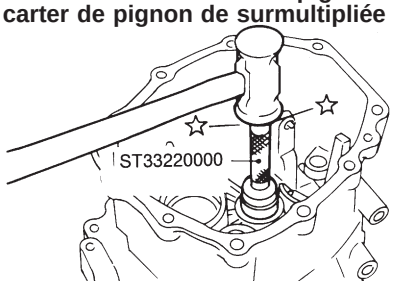

Doit être au ras de la surface avant du carter de pignon de surmultipliée.

SMT391A

Roulement avant d'arbre secondaire dans la plaque adaptatrice

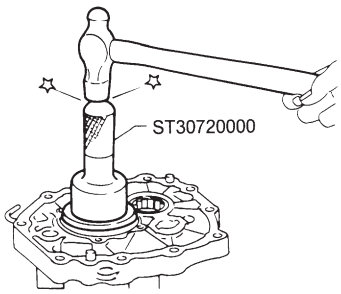

SMT397A

Roulement arrière de pignon de renvoi dans la plaque adaptatrice

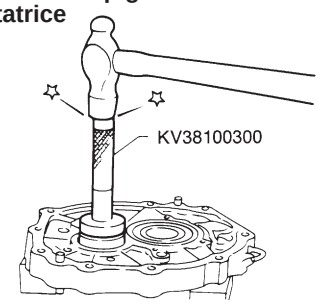

SMT484CD

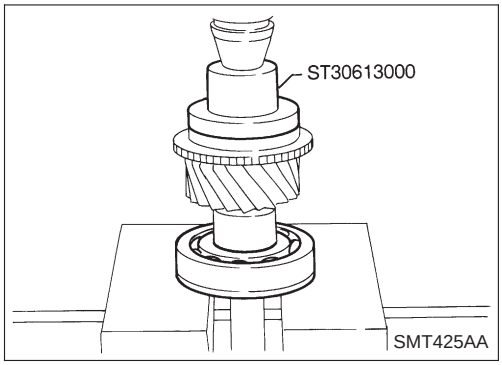

SMT425AA

2. Reposer le roulement du pignon d'entraînement.
a. Enfoncer à la presse le roulement de pignon d'entraînement principal.
b. Reposer l'entretoise du pignon d'entraînement principal.

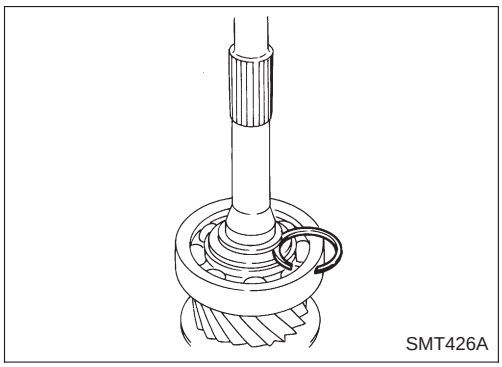

SMT426A

c. Choisir un jonc d'arrêt approprié de pignon d'entraînement principal pour minimiser le jeu de la rainure.
   Tolérance de jeu dans la rainure :
   0 - 0,1 mm
   Jonc d'arrêt de pignon d'entraînement principal :
   Consulter les SDS, MT-61.
d. Reposer le jonc d'arrêt choisi sur le pignon d'entraînement principal.

Simpo PDF Merge and Split Unregistered Version - http://www.simpopdf.com

Composants de la boîte (Suite)

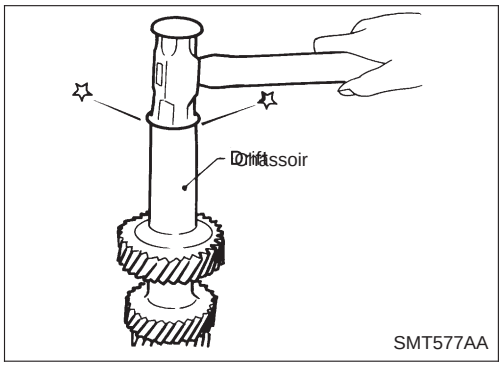

3. Reposer les composants sur le pignon de renvoi.
a. Reposer les composants du pignon auxiliaire.

- **Lors de la repose du jonc d'arrêt de pignon auxiliaire, le frapper doucement pour le placer sur le pignon de renvoi.**

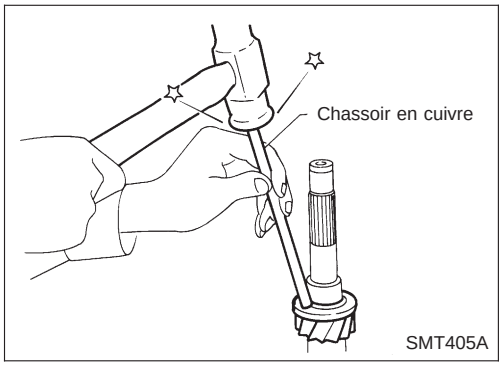

b. Reposer le roulement de butée arrière de pignon de renvoi.

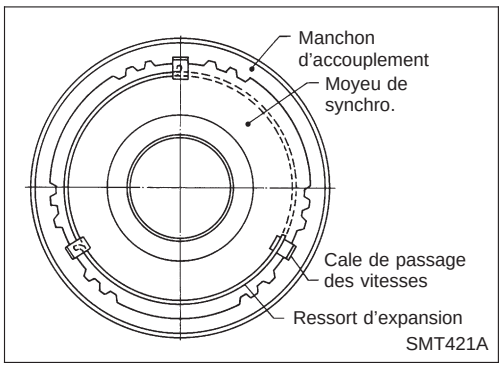

4. Reposer les composants avant de l'arbre secondaire.
a. Monter l'ensemble de synchro. de 1ère et 2nde.

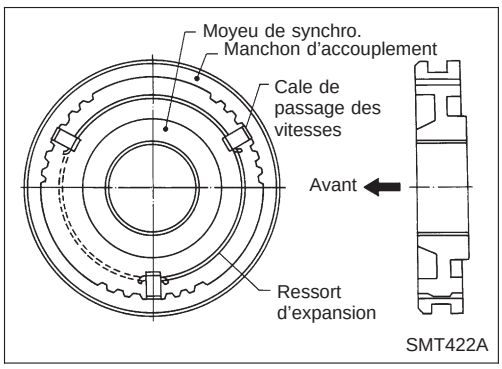

b. Monter l'ensemble de synchro. de 3ème et 4ème.

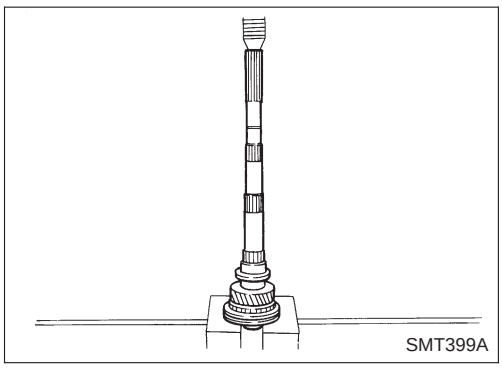

c. Enfoncer à la presse l'ensemble de synchro. de 3ème et 4ème avec le pignon principal de 3ème et le roulement à aiguilles de pignon de 3ème.

- **Faire attention au sens de montage de l'ensemble de synchro.**

Simpo PDF Merge and Split Unregistered Version - http://www.simpopdf.com

Composants de la boîte (Suite)

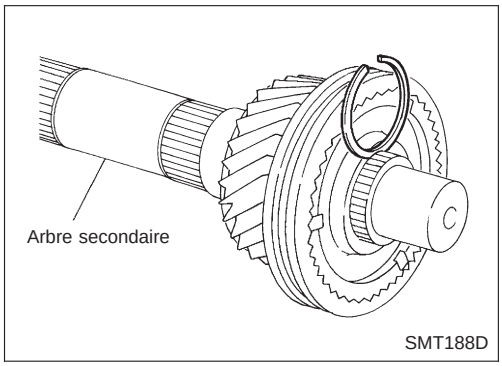

d. Choisir un jonc d'arrêt approprié pour minimiser le jeu de la rainure.
   Tolérance de jeu dans la rainure :
   0 - 0,1 mm
   Jonc d'arrêt avant d'arbre secondaire :
   Consulter les SDS, MT-61.
e. Reposer le jonc d'arrêt choisi sur l'arbre secondaire.

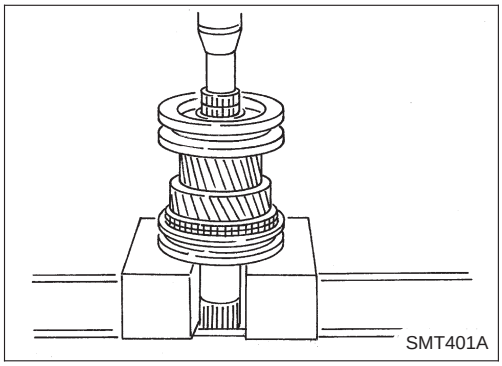

f. Enfoncer à la presse l'ensemble de synchro. de 1ère et 2nde avec le pignon principal de 2nde et le roulement à aiguilles de pignon de 2nde.

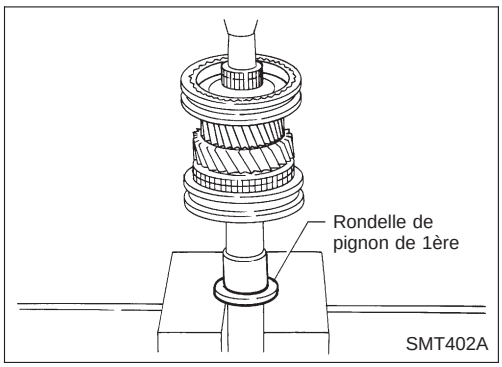

g. Enfoncer à la presse la bague de pignon de 1ère à l'aide de la rondelle de pignon de 1ère.
h. Reposer le pignon principal de 1ère ainsi que son roulement à aiguilles.

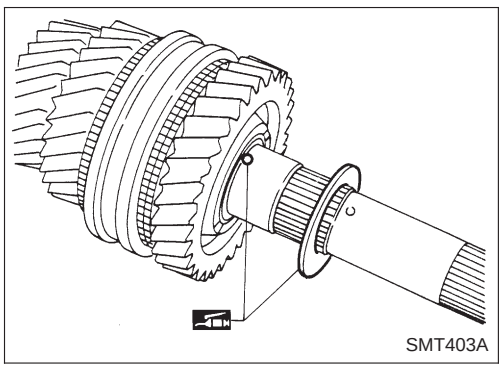

i. Reposer la bille d'acier ainsi que la rondelle de pignon de 1ère.

- **Enduire la bille d'acier et la rondelle de pignon de 1ère de graisse à usages multiples avant la repose.**

Simpo PDF Merge and Split Unregistered Version - http://www.simpopdf.com

Composants de la boîte (Suite)

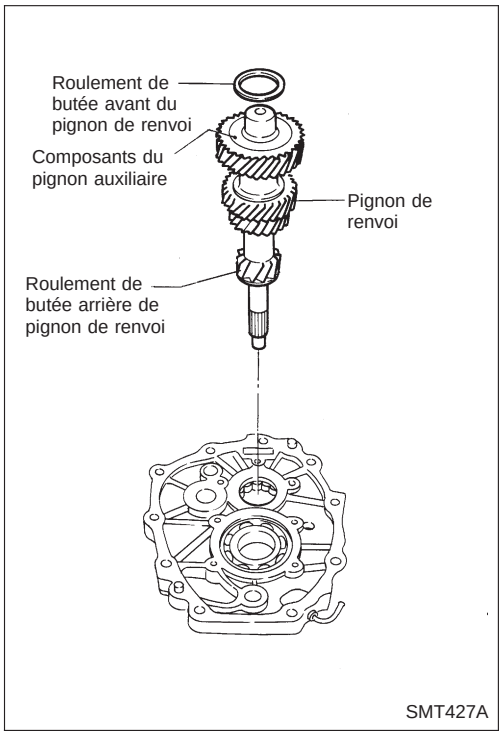

5. Lors du remplacement du carter de boîte de vitesses, du pignon de renvoi, du roulement de butée avant ou arrière du pignon de renvoi ou des composants du pignon auxiliaire, choisir une cale de roulement avant de pignon de renvoi appropriée.

a. Reposer le pignon de renvoi avec les composants du pignon auxiliaire et les roulements de butée avant et arrière de pignon de renvoi sur la plaque adaptatrice.

- **Ne pas déjà monter la cale de roulement avant le pignon de renvoi.**

b. Disposer la plaque adaptatrice ainsi que l'ensemble de pignon de renvoi dans le carter de transmission (tourné à l'envers).

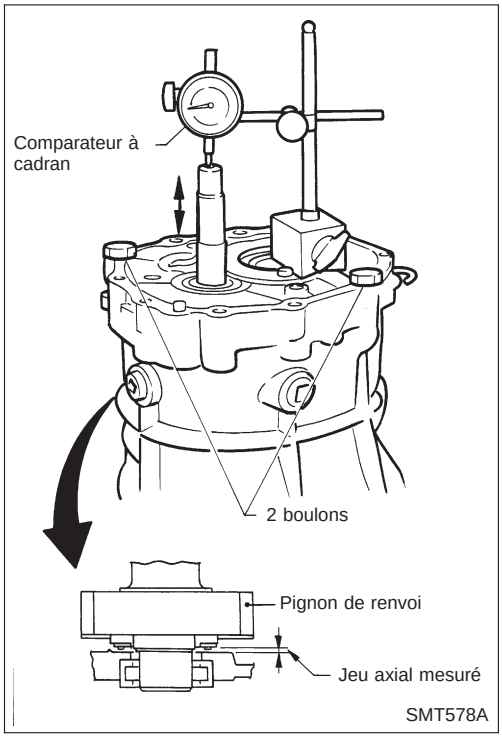

c. Serrer la plaque adaptatrice sur le carter de transmission à l'aide de deux boulons.

d. Monter un comparateur à cadran sur l'extrémité arrière du pignon de renvoi.

e. Faire jouer le pignon de renvoi verticalement et relever l'indication du comparateur à cadran.

f. Choisir la cale appropriée à l'aide des indications du tableau ci-dessous.

Jeu axial du pignon de renvoi admissible :
0,10 - 0,26 mm
Tableau de sélection d'une cale de roulement avant de pignon de renvoi appropriée :
Consulter les SDS, MT-62.

Simpo PDF Merge and Split Unregistered Version - http://www.simpopdf.com

Composants de la boîte (Suite)

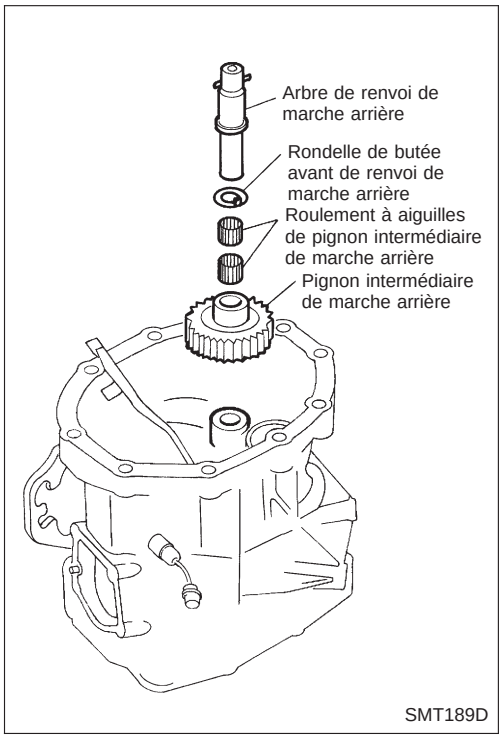

6. Choisir une rondelle de butée arrière appropriée de pignon intermédiaire de marche arrière lorsqu'on remplace le carter de pignon de surmultipliée, le pignon d'arbre de renvoi de marche arrière ou la rondelle de butée avant de renvoi de marche arrière.

a. Installer le pignon auxiliaire, le ressort de pignon auxiliaire, le support de pignon auxiliaire, le jonc d'arrêt et la bille sur le pignon intermédiaire de marche arrière.

Se reporter aux composants de la boîte, MT-36.

b. Reposer le pignon intermédiaire de marche arrière, les roulements à aiguilles de pignon intermédiaire de marche arrière, l'arbre de renvoi de marche arrière dans le carter de pignon de surmultipliée.

- **Ne pas déjà monter la rondelle de butée arrière de pignon intermédiaire de marche arrière.**

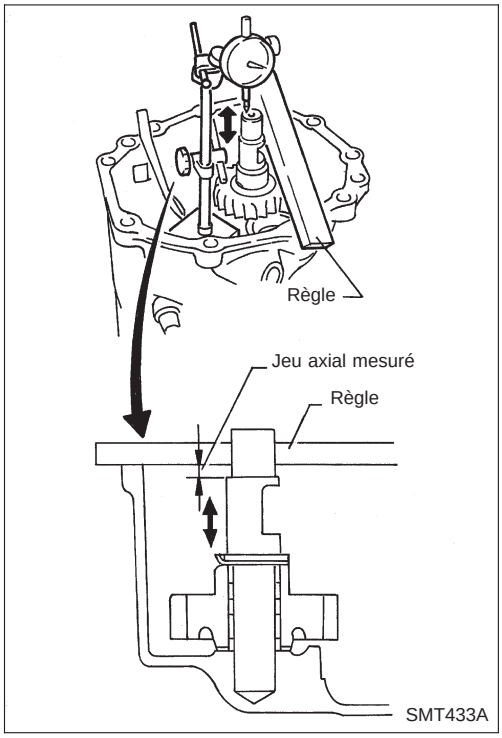

c. Placer un comparateur à cadran sur l'extrémité avant de l'arbre de renvoi de marche arrière.

d. Placer une règle sur la surface avant du carter de pignon de surmultipliée. Cette règle fait fonction de butée de l'arbre de renvoi de marche arrière.

e. Faire jouer l'arbre de renvoi de marche arrière verticalement et mesurer le jeu axial du pignon intermédiaire de marche arrière.

Jeu axial de pignon intermédiaire de marche arrière :
0,30 - 0,53 mm

f. Si le jeu n'est pas dans les limites spécifiées, remplacer la rondelle de butée arrière de pignon intermédiaire de marche arrière par l'une des pièces A ou B et vérifier de nouveau.

Rondelle de butée arrière de pignon intermédiaire de marche arrière :
Consulter les SDS, MT-62.

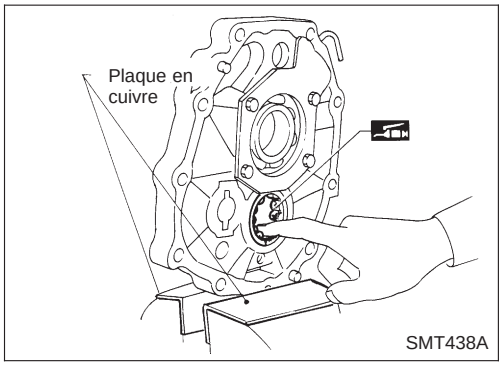

7. Reposer l'arbre secondaire ainsi que le pignon de renvoi sur la plaque adaptatrice et le pignon principal d'entraînement sur l'arbre secondaire.

a. Monter la plaque adaptatrice dans un étau et enduire le roulement arrière de pignon de renvoi de graisse à usages multiples.

Simpo PDF Merge and Split Unregistered Version - http://www.simpopdf.com

Composants de la boîte (Suite)

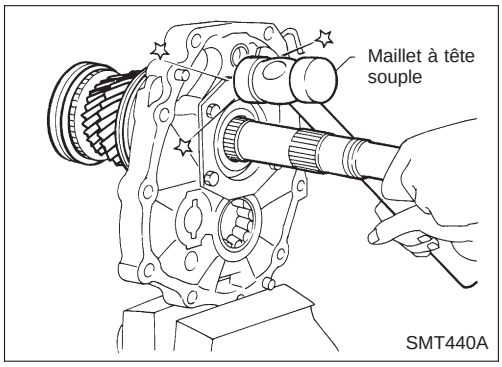

b. Enfoncer légèrement l'arbre secondaire sur son roulement avant.

- **Ne pas enfoncer complètement l'arbre secondaire afin de permettre la repose du pignon de renvoi.**

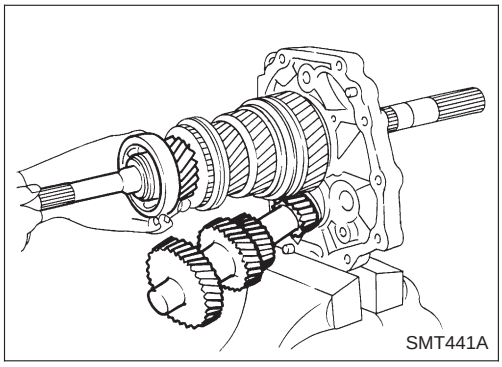

c. Reposer le pignon de renvoi sur son roulement arrière et reposer l'arbre principal d'entraînement, le roulement pilote et l'entretoise sur l'arbre secondaire.

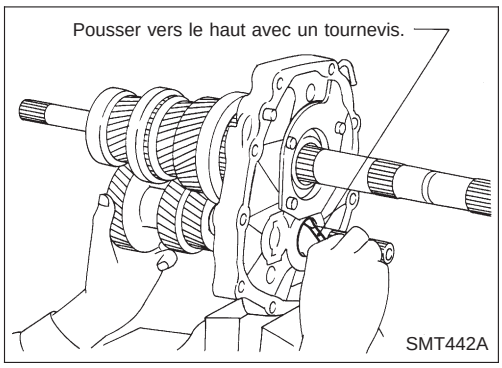

- **Lors de l'introduction du pignon de renvoi dans son roulement arrière, relever légèrement le galet supérieur du roulement arrière de pignon de renvoi à l'aide d'un tournevis.**

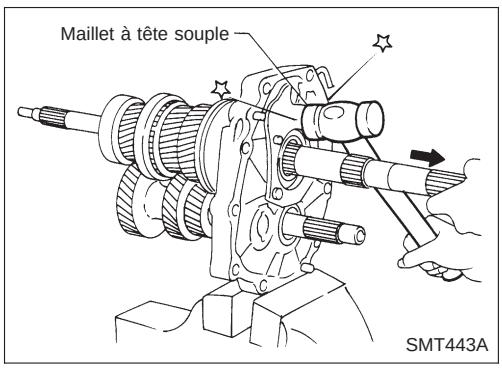

d. Monter complètement l'arbre secondaire ainsi que le pignon de renvoi en frappant l'arrière de la plaque adaptatrice et en tirant sur l'arbre secondaire.

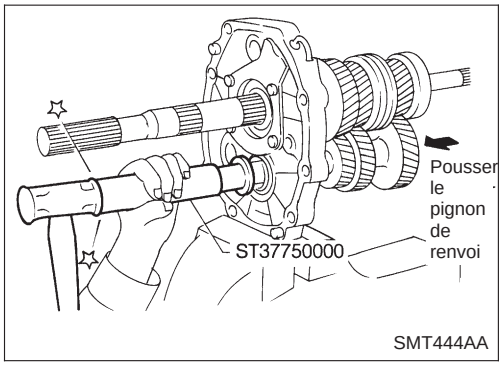

8. Reposer les composants arrière sur l'arbre secondaire et le pignon de renvoi.

a. Reposer la bague de pignon de surmultipliée tout en appuyant sur l'avant du pignon de renvoi.

Simpo PDF Merge and Split Unregistered Version - http://www.simpopdf.com

Composants de la boîte (Suite)

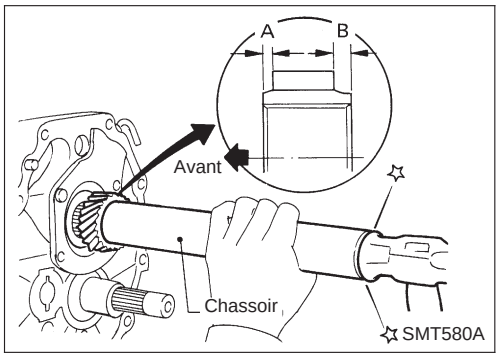

b. Reposer le pignon principal de surmultipliée.
- **Prêter attention au sens du pignon principal de surmultipliée (B est plus large que A, comme indiqué sur la figure ci-contre).**

c. Reposer la plaque adaptatrice avec l'ensemble de pignon sur le carter de transmission.
d. Reposer le roulement à aiguilles du pignon de surmultipliée puis reposer le pignon de renvoi de surmultipliée ainsi que l'arbre de renvoi de marche arrière.

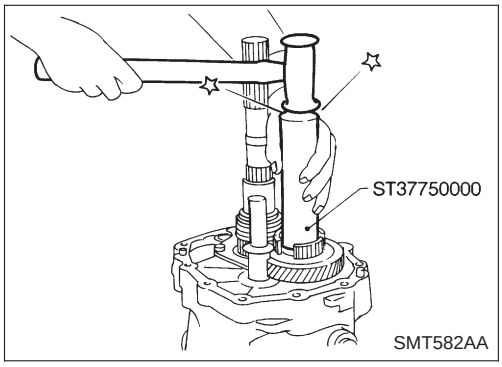

e. Reposer le cône de marche arrière.

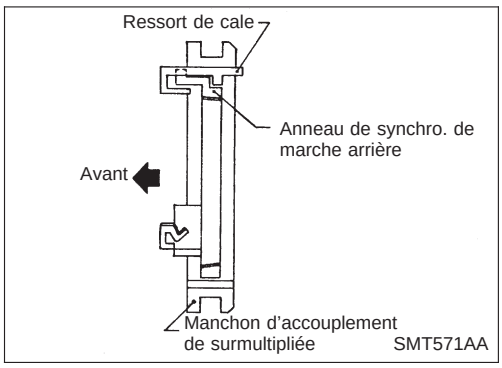

f. Reposer les ressorts de cale de synchro. ainsi que l'anneau de synchro. de marche arrière sur le manchon d'accouplement de surmultipliée. Puis reposer ces pièces et l'anneau de synchro. de surmultipliée sur le pignon de renvoi de surmultipliée.
- **Prêter attention au sens du manchon d'accouplement de surmultipliée.**

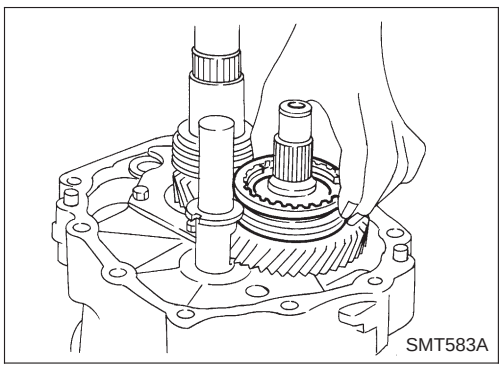

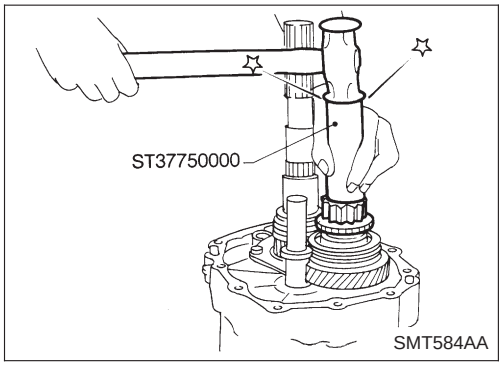

g. Reposer le pignon de renvoi de marche arrière.
h. Reposer le roulement à aiguilles de pignon de marche arrière puis reposer le pignon principal de marche arrière, le pignon intermédiaire de marche arrière ainsi que les rondelles de butée de pignon intermédiaire de marche arrière.

Simpo PDF Merge and Split Unregistered Version - http://www.simpopdf.com

Composants de la boîte (Suite)

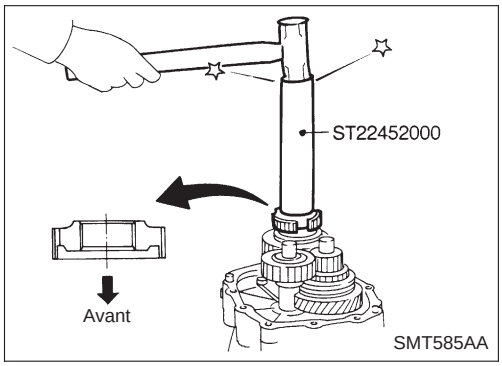

i. Reposer le moyeu de marche arrière.
- **Prêter attention au sens du moyeu.**

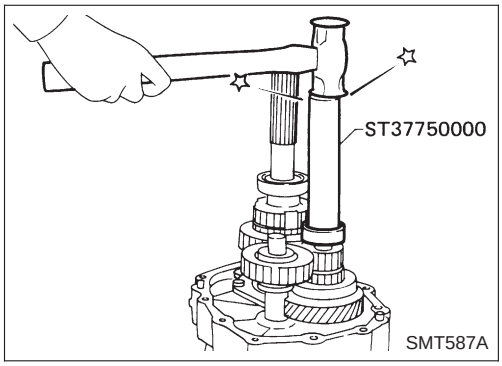

j. Reposer le roulement d'extrémité arrière de pignon de renvoi.
k. Séparer la plaque d'adaptateur du carter de transmission et monter à nouveau la plaque d'adaptateur sur l'étau.

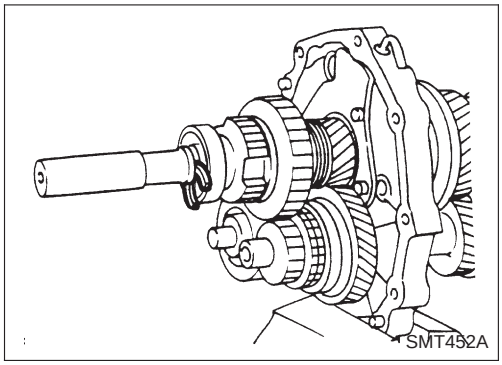

l. Choisir un demi-jonc approprié d'arbre secondaire pour minimiser le jeu de la rainure.
Tolérance de jeu dans la rainure :
0 - 0,1 mm
Demi-jonc d'arbre secondaire :
Consulter les SDS, MT-62.

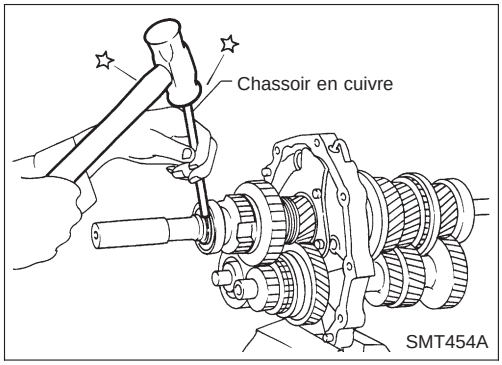

m. Reposer le demi-jonc choisi, le porte demi-jonc ainsi que le jonc d'arrêt arrière d'arbre secondaire.

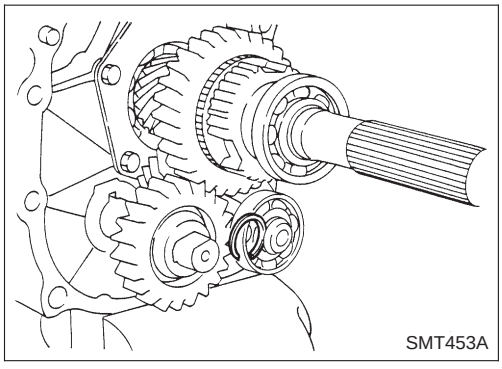

Simpo PDF Merge and Split Unregistered Version - http://www.simpopdf.com

Composants de la boîte (Suite)

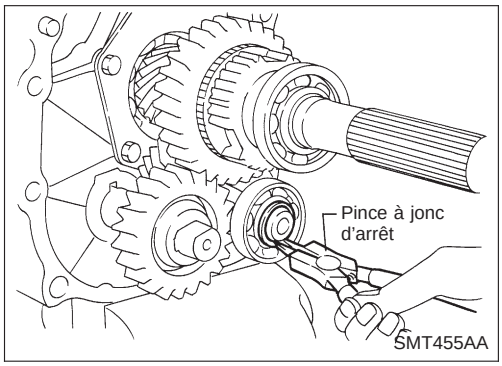

n. Reposer l'entretoise et choisir un jonc d'arrêt arrière approprié de pignon de renvoi pour minimiser le jeu de la rainure.
Tolérance de jeu dans la rainure :
0 - 0,1 mm
Jonc d'arrêt arrière de pignon de renvoi :
Consulter les SDS, MT-62.
o. Reposer le jonc d'arrêt arrière choisi de pignon de renvoi.

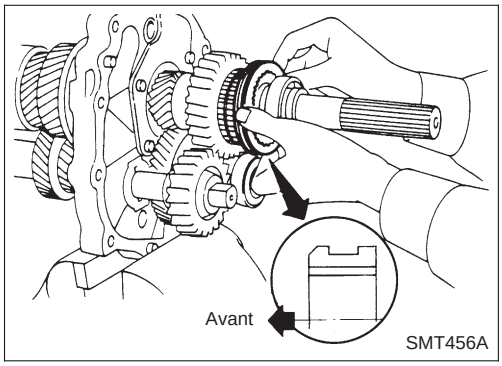

p. Reposer le manchon d'accouplement de marche arrière.
- **Prêter attention au sens du montage.**

q. Mesurer pour finir chaque jeu axial des pignons. Consulter les SDS, MT-61.

Composants de la commande de passage des vitesses

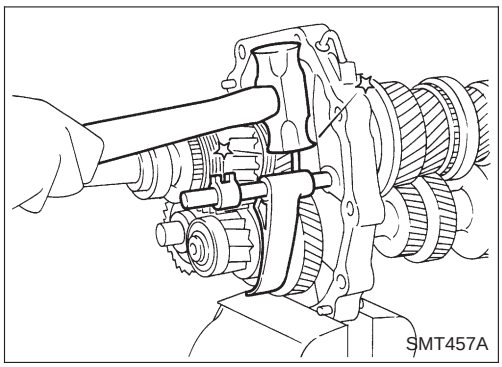

1. Reposer l'axe de fourchette de surmultipliée ainsi que la fourchette de passage de surmultipliée. Puis installer la goupille de retenue dans la fourchette de passage de surmultipliée.
2. Installer la fourchette de passage de 1ère et de 2nde, de 3ème et de 4ème et de marche arrière sur le manchon d'accouplement.

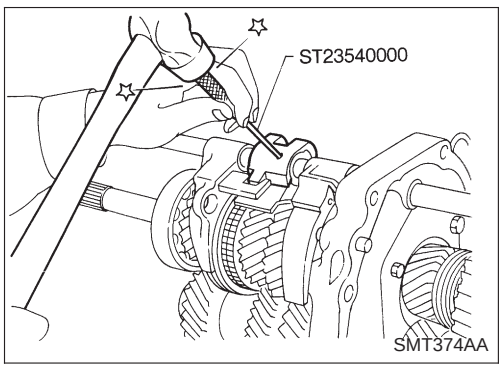

3. Remonter la tige de passage dans l'orifice des fourchettes, du levier de passage et de l'interverrouillage puis reposer la goupille de retenue dans le levier de passage.
- **S'assurer que la tige de passage est parfaitement mobile.**

Composants du carter

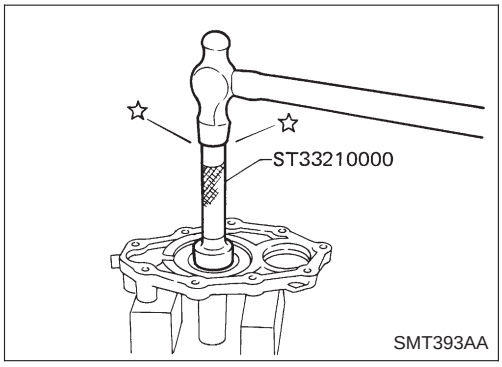

1. Reposer le joint d'huile de couvercle avant.
- **Enduire la lèvre du joint de graisse à usages multiples.**

2. Reposer la cale choisie de roulement avant de pignon de renvoi dans le carter de boîte.
- **Enduire de graisse à usages multiples.**

3. Enduire de produit d'étanchéité la surface de contact du carter de boîte de vitesses.

Simpo PDF Merge and Split Unregistered Version - http://www.simpopdf.com

Composants du carter (Suite)

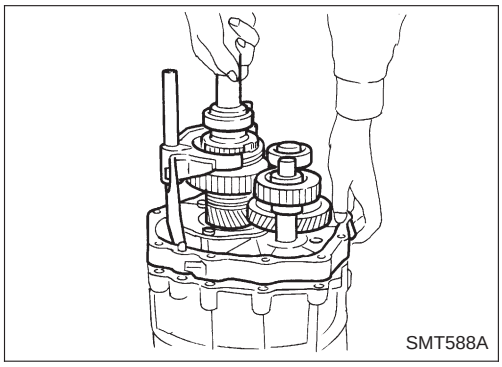
SMT588A

4. Reposer l'ensemble de pignon dan le carter de boîte.
5. Reposer le ressort de verrouillage ainsi que la bille de verrouillage dans la butée d'interverrouillage.

- **Enduire la bille de verrouillage de graisse à usages multiples.**

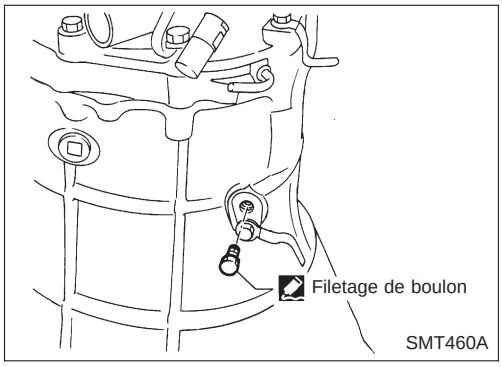

SMT460A

6. Reposer l'ensemble de butée d'interverrouillage puis serrer le bouchon de bille de contrôle.

- **Enduire de produit d'étanchéité la partie filetée du bouchon de bille de verrouillage.**

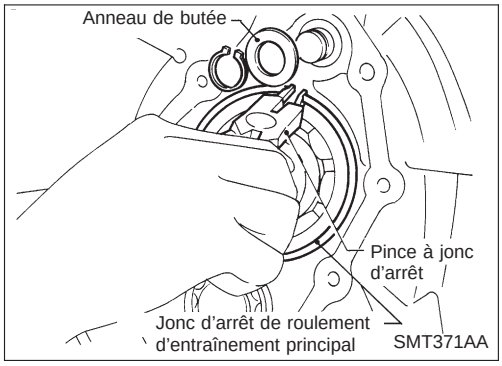

SMT371AA

7. Reposer l'anneau de butée ainsi que le jonc d'arrêt de roulement d'entraînement principal.

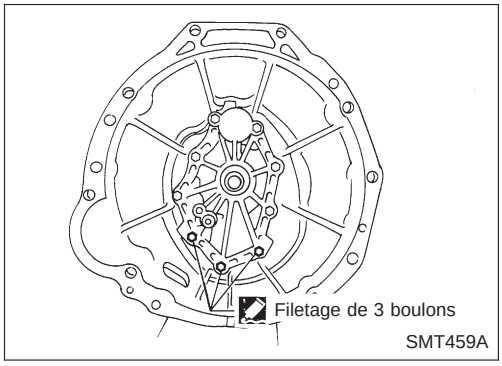

SMT459A

8. Reposer le couvercle avant et le joint plat.

- **Enduire de produit d'étanchéité le filetage des 3 boulons indiqués ci-contre.**

9. Enduire de produit d'étanchéité la surface d'assemblage de la plaque adaptatrice.

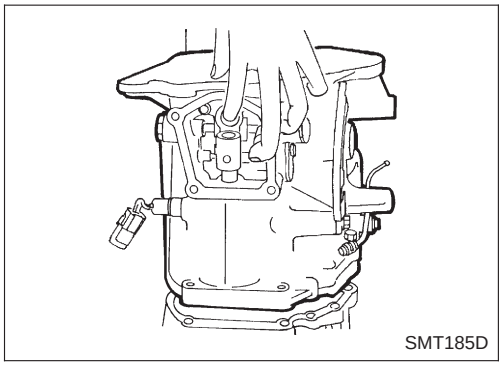
SMT185D

10. Installer le carter de pignon de surmultipliée avec le bras de passage des vitesses.

Simpo PDF Merge and Split Unregistered Version - http://www.simpopdf.com

Composants du carter (Suite)

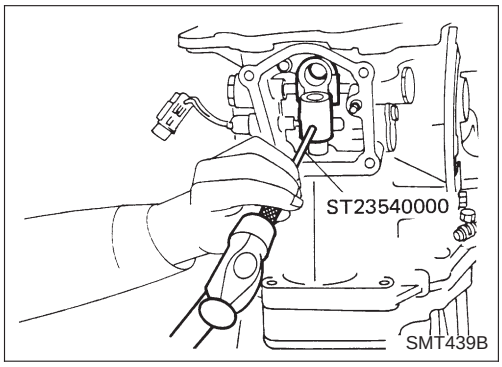

11. Reposer la goupille de retenue dans le bras de passage.

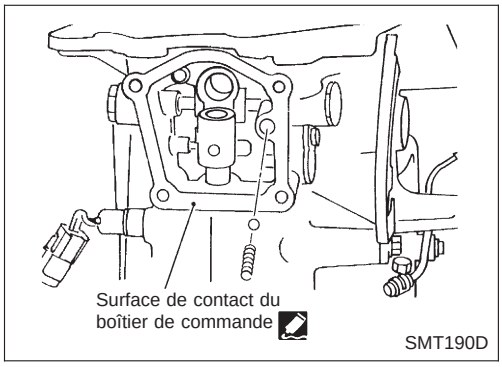

12. Reposer le ressort de rappel ainsi que la bille de verrouillage puis reposer le boîtier de commande.
- **Enduire la surface d'appui du carter de pignon de sur-multipliée de produit d'étanchéité.**

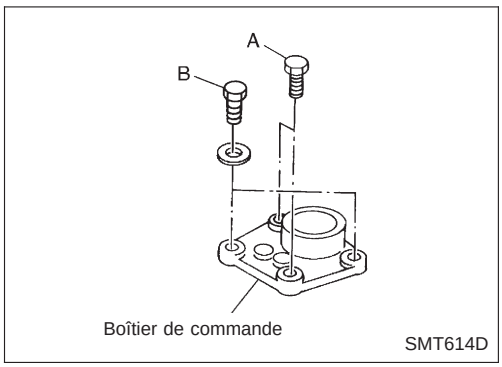

13. Serrer les boulons du logement de commande.
Dimension de la tête de boulon :
Boulons A 12 mm
Boulons B 13 mm
Couple de serrage :
Se reporter aux composants de la commande de passage des vitesses, MT-38.

Simpo PDF Merge and Split Unregistered Version - http://www.simpopdf.com

Caractéristiques générales

Destination	Australie et Europe	Europe	Australie, Europe et zones générales
Modèle concerné	2 roues motrices		4 roues motrices
	KA24E	TD25	KA24E
Boîte de vitesses	FS5W71C		
Nombre de vitesses	5		
Disposition des vitesses			
Type de synchronisation	Warner		
Rapport des vitesses			
1ère	3,592	3,985	3,592
2nde	2,246	2,246	2,246
3ème	1,415	1,415	1,415
4ème	1,000	1,000	1,000
Surmultipliée	0,821	0,821	0,821
Marche arrière	3,657	3,657	3,657
Nombre de dents			
Arbre secondaire			
Conduite	21	21	21
1ère	33	34	33
2nde	28	28	28
3ème	26	26	26
Surmultipliée	21	21	21
Marche arrière	36	36	36
Arbre de renvoi			
Conduite	32	32	32
1ère	14	13	14
2nde	19	19	19
3ème	28	28	28
Surmultipliée	39	39	39
Marche arrière	15	15	15
Pignon intermédiaire de marche arrière	21		21
Contenance en huile ℓ	2,0		4,9
Remarques	Synchro. de marche arrière Synchro. de type anneau de synchro. double de 2nde et 3ème (moteur TD25)		

Simpo PDF Merge and Split Unregistered Version - http://www.simpopdf.com

Inspection et réglage

JEU AXIAL DES PIGNONS

Unité : mm

Pignon de 1ère	0,31 - 0,41
Pignon de 2nde	0,11 - 0,21
Pignon de 3ème	0,11 - 0,21
Pignon de surmultipliée	0,24 - 0,41

JEU ENTRE LES ANNEAUX DE SYNCHRO ET LES PIGNONS

Unité : mm

Standard	
1ère et 2nde (2 roues motrices)	1,20 - 1,60
3ème et entraînement principal	1,20 - 1,60
Surmultipliée	1,20 - 1,60
Marche arrière	1,10 - 1,55
Limite d'usure	
1ère et 2nde (2 roues motrices)	0,80
3ème et entraînement principal	0,80
Surmultipliée	0,80
Marche arrière	0,70

JONC D'ARRET DISPONIBLE

Jonc d'arrêt du roulement de pignon d'entraînement principal

Jeu admissible	0 - 0,13 mm
Epaisseur mm	Numéro de pièce
1,87	32204-78001
1,94	32204-78002
2,01	32204-78003

Jonc d'arrêt avant d'arbre secondaire

Jeu admissible	0 - 0,18 mm
Epaisseur mm	Numéro de pièce
2,4	32263-V5200
2,5	32263-V5201

Jonc d'arrêt du pignon d'entraînement de renvoi

Jeu admissible	0 - 0,18 mm
Epaisseur mm	Numéro de pièce
1,4	32215-E9000
1,5	32215-E9001
1,6	32215-E9002

Jonc d'arrêt du roulement d'arbre secondaire de surmultipliée (modèles à 2 roues motrices)

Jeu admissible	0 - 0,14 mm
Epaisseur mm	Numéro de pièce
1,1	32228-20100
1,2	32228-20101
1,3	32228-20102
1,4	32228-20103

CALE DISPONIBLE

Cale de roulement avant du pignon de renvoi

Unité : mm

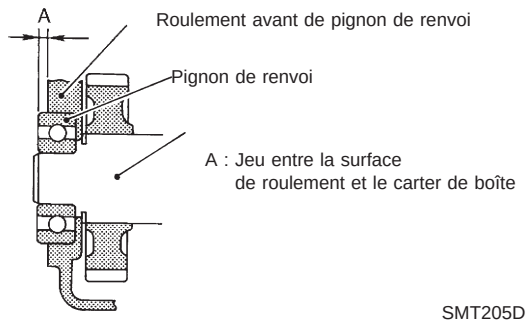

Jeu admissible	0 - 0,16	
"A"	Epaisseur de cale	Numéro de pièce
4,52 - 4,71	Pas nécessaire	
4,42 - 4,51	0,1	32218-V5000
4,32 - 4,41	0,2	32218-V5001
4,22 - 4,31	0,3	32218-V5002
4,12 - 4,21	0,4	32218-V5003
4,02 - 4,11	0,5	32218-V5004
3,92 - 4,01	0,6	32218-V5005

Simpo PDF Merge and Split Unregistered Version - http://www.simpopdf.com

Inspection et réglage (Suite)

Anneaux de synchro. de 2ème et de 3ème (moteur TD25)

Unité : mm

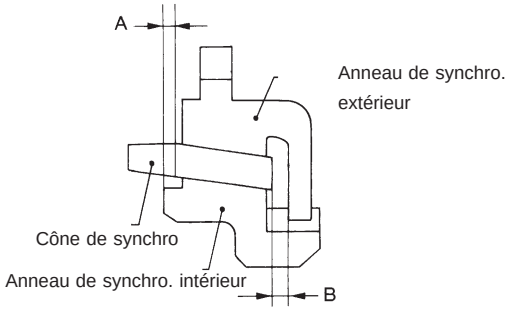

SMT733C

Dimension	Standard	Limite d'usure
A	0,7 - 0,9	0,2
B	0,6 - 1,1	

Simpo PDF Merge and Split Unregistered Version - http://www.simpopdf.com

Inspection et réglage

JEU AXIAL DES PIGNONS

Pignon	Jeu axial mm
Pignon principal de 1ère	0,23 - 0,33
Pignon principal de 2nde	0,23 - 0,33
Pignon principal de 3ème	0,06 - 0,16
Pignon de renvoi de surmultipliée	0,23 - 0,33
Pignon principal de marche arrière	0,33 - 0,43
Pignon de renvoi	0,10 - 0,25
Pignon intermédiaire de marche arrière	0,30 - 0,53

JEU ENTRE LES ANNEAUX DE SYNCHRO ET LES PIGNONS

Unité : mm

	Standard	Limite d'usure
1ère	1,05 - 1,3	0,7
Entraînement principal	1,05 - 1,3	
Surmultipliée	1,05 - 1,3	

Anneaux de synchro. de 2ème et de 3ème

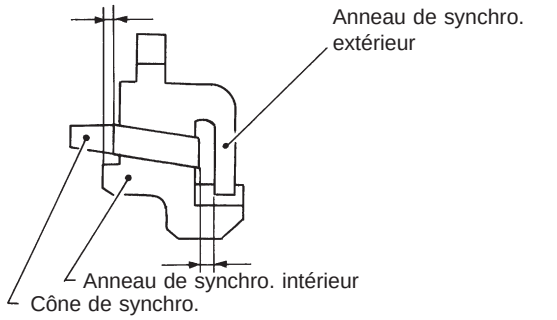

SMT742C

Unité : mm

Dimension	Standard	Limite d'usure
"A"	0,7 - 0,9	0,2
"B"	0,6 - 1,1	

DISTANCE ENTRE LA SURFACE ARRIERE DU CONE DE MARCHE ARRIERE ET L'ANNEAU DE SYNCHRO DE MARCHE ARRIERE

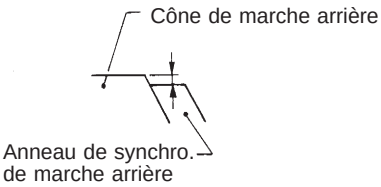

smt428c

Unité : mm

	Standard	Limite d'usure
Dimension "A"	−0,1 à 0,35	0,7

JONC D'ARRET DISPONIBLE

Jonc d'arrêt de pignon d'entraînement principal

Jeu admissible	0 - 0,1 mm
Epaisseur mm	Numéro de pièce
1,89	32204-01G60
1,95	32204-01G61
1,99	32204-01G62
2,03	32204-01G63
2,07	32204-01G64
2,11	32204-01G65

Jonc d'arrêt avant d'arbre secondaire

Jeu admissible	0 - 0,1 mm
Epaisseur mm	Numéro de pièce
1,99	32204-01G62
2,03	32204-01G63
2,07	32204-01G64
2,11	32204-01G65
2,15	32204-01G66
2,19	32204-01G67

Simpo PDF Merge and Split Unregistered Version - http://www.simpopdf.com

Inspection et réglage (Suite)

Jonc d'arrêt arrière de pignon de renvoi

Jeu admissible	0 - 0,1 mm
Epaisseur mm	Numéro de pièce
1,32	32236-01G00
1,38	32236-01G01
1,44	32236-01G02
1,50	32236-01G03
1,56	32236-01G04
1,62	32236-01G05
1,68	32236-01G06
1,74	32236-01G07

CALE D'EPAISSEUR ET RONDELLE DISPONIBLES

Tableau de sélection d'une cale de roulement avant de pignon de renvoi appropriée

Jeu axial admissible	0,10 - 0,26 mm	
Déviation du comparateur à cadran mm	Epaisseur de rondelle appropriée mm	Numéro de pièce
0,93 - 1,02	0,80	32218-01G00
1,01 - 1,10	0,88	32218-01G11
1,09 - 1,18	0,96	32218-01G12
1,17 - 1,26	1,04	32218-01G13
1,25 - 1,34	1,12	32218-01G14
1,33 - 1,42	1,20	32218-01G04
1,41 - 1,50	1,28	32218-01G15
1,49 - 1,58	1,36	32218-01G16
1,57 - 1,66	1,44	32218-01G17

Rondelle de butée arrière de pignon intermédiaire de marche arrière

Jeu axial admissible		0,30 - 0,53 mm
	Epaisseur mm	Numéro de pièce
A	1,97	32284-01G10
B	2,07	32284-01G11

DEMI-JONC DISPONIBLE

Demi-jonc d'arbre secondaire

Jeu admissible	0 - 0,1 mm
Epaisseur mm	Numéro de pièce
2,63	32348-01G15
2,70	32348-01G00
2,77	32348-01G01
2,84	32348-01G02
2,91	32348-01G03
2,98	32348-01G04
3,05	32348-01G05
3,12	32348-01G06
3,19	32348-01G07
3,26	32348-01G08
3,33	32348-01G09
3,40	32348-01G10
3,47	32348-01G11
3,54	32348-01G12
3,61	32348-01G13
3,68	32348-01G14

Simpo PDF Merge and Split Unregistered Version - http://www.simpopdf.com

ARBRE DE TRANSMISSION ET DIFFERENTIEL

SECTION **PD**

TABLE DES MATIERES

PREPARATION 1
Outillage spécial 1

Arbre de transmission

ARBRE DE TRANSMISSION 6
Entretien sur véhicule 8
Dépose et repose 8
Inspection 9
Démontage 9
Remontage 11

Pont

ENTRETIEN SUR VEHICULE 13
Remplacement du joint d'huile avant (pont avant : modèle R180A) 13
Remplacement du joint d'huile avant (pont arrière : modèle H233B) 13
Remplacement du joint plat du couvercle arrière (pont arrière : modèle C200) 14
DEPOSE ET REPOSE (pont avant) 15
Dépose 15
Repose 15
DEPOSE ET REPOSE (pont arrière) 16
Dépose 16
Repose 16

R180A

PONT AVANT 17
DEMONTAGE 18
Inspection préalable 18
Carter de pont 18
Logement de différentiel 20
Tube de rallonge et arbre latéral de différentiel 21
INSPECTION 23
Couronne et pignon d'attaque 23
Ensemble de logement de différentiel 23
Roulements 23
REGLAGE 24
Précharge de roulement latéral 24
Hauteur de pignon d'attaque 25
Contact entre les dents 28
REMONTAGE 29
Tube de rallonge et arbre latéral de différentiel 29
Logement de différentiel 29
Carter de pont 30

C200

PONT ARRIERE 35
DEMONTAGE 37
Inspection préalable 37
Boîtier de différentiel 37
Logement de différentiel 40
INSPECTION 41
Couronne et pignon d'attaque 41
Ensemble de logement de différentiel 41
Roulements 41
DIFFERENTIEL A GLISSEMENT LIMITE 42
Préparation pour démontage 42
Démontage 43
Inspection 43
Réglage 44

Simpo PDF Merge and Split Unregistered Version - http://www.simpopdf.com

Remontage....46
REGLAGE....48
Précharge de roulement latéral....48
Hauteur de pignon d'attaque....50
Contact entre les dents....52
REMONTAGE....53
Logement de différentiel....53
Boîtier de différentiel....54

H233B

PONT ARRIERE....58
DEMONTAGE....59
Inspection préalable....59
Boîtier de différentiel....59
Logement de différentiel....61
INSPECTION....63
Couronne et pignon d'attaque....63
Ensemble de logement de différentiel....63
Roulements....63
DIFFERENTIEL A GLISSEMENT LIMITE....64
Préparation pour démontage....64
Démontage....64
Inspection....65
Réglage....66
Remontage....67
REGLAGE....70
Hauteur de pignon d'attaque....70
Contact entre les dents....73
REMONTAGE....74
Logement de différentiel....74
Boîtier de différentiel....75
CARACTERISTIQUES ET VALEURS DE REGLAGE (SDS)....79
Arbre de transmission....79
Pont....81

Simpo PDF Merge and Split Unregistered Version - http://www.simpopdf.com

Outillage spécial

Numéro de l'outil Nom de l'outil	Description		Modèle concerné		
			R180A	C200	H233B
ST3127S000 Jauge de précharge ① GG91030000 Clé dynamométrique ② HT62940000 Adaptateur à douille ③ HT62900000 Adaptateur à douille	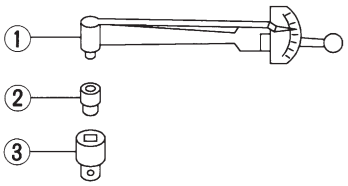 NT124	Mesure de la précharge de roulement du pignon d'attaque et de la précharge totale	X	X	X
KV38100800 Fixation de différentiel	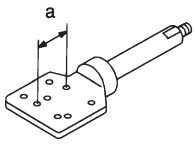 NT119	Montage du pont (pour l'utilisation, faire un nouveau trou). **a : 152 mm**	X	–	–
ST06340000 Fixation de différentiel	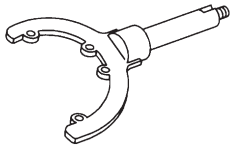 NT140	Montage du pont	–	–	X
ST32580000 Clé pour écrou de réglage du roulement latéral de différentiel	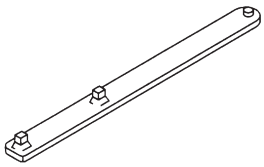 NT141	Réglage de la précharge du roulement latéral et du battement (entre couronne et pignon d'attaque)	–	–	X
ST33290001 Extracteur de cuvette externe du roulement latéral	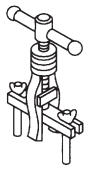 NT076	Dépose de la cuvette externe du roulement latéral et du joint d'huile latéral	X	–	–
ST38060002 Clé pour flasque de pignon d'attaque	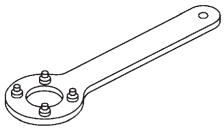 NT113	Dépose et repose du contre-écrou d'arbre de transmission et du contre-écrou de pignon d'attaque	X	X	–
KV38104700 Clé pour flasque de pignon d'attaque	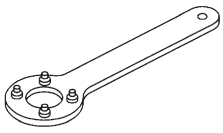 NT113	Dépose et repose du contre-écrou d'arbre de transmission et du contre-écrou de pignon d'attaque	–	–	X

Simpo PDF Merge and Split Unregistered Version - http://www.simpopdf.com

Outillage spécial (Suite)

Numéro de l'outil Nom de l'outil	Description		Modèle concerné		
			R180A	C200	H233B
ST3090S000 Jeu d'extracteur de cuvette interne arrière de pignon d'attaque ① ST30031000 Extracteur ② ST30901000 Base	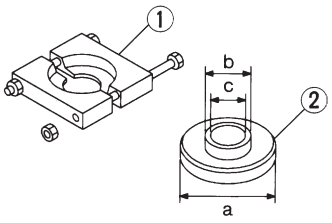 NT527	Dépose et repose du cône interne arrière de pignon d'attaque (tous) Dépose du rotor de capteur de roue arrière (C200) **a : 79 mm** ϕ **b : 45 mm** ϕ **c : 35 mm** ϕ	X	X	X
ST3306S001 Jeu d'extracteur de roulement latéral de différentiel ① ST33051001 Corps ② ST33061000 Adaptateur	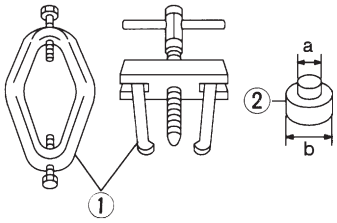 NT072	Dépose et repose du cône interne de roulement latéral de différentiel (tous) Dépose du rotor de capteur de roue arrière (C200) **a : 28,5 mm** ϕ **b : 38 mm** ϕ	X	X	X
ST33230000 Chassoir de roulement latéral de différentiel	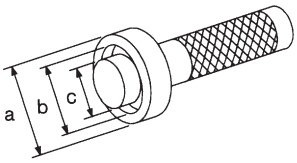 NT085	Repose du cône interne de roulement latéral **a : 51 mm** ϕ **b : 41 mm** ϕ **c : 28,5 mm** ϕ	X	X	–
ST33190000 Chassoir de roulement latéral de différentiel	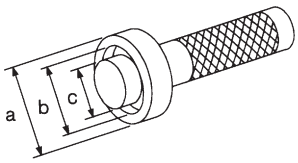 NT085	Repose du cône interne de roulement latéral **a : 52 mm** ϕ **b : 45,5 mm** ϕ **c : 34 mm** ϕ	–	–	X
ST33081000 Adapteur d'extracteur de roulement latéral	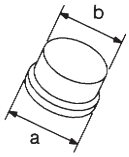 NT431	Repose du cône interne de roulement latéral **a : 43 mm** ϕ **b : 33,5 mm** ϕ	–	X	X
KV38100600 Chassoir d'entretoise de roulement latéral	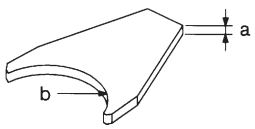 NT528	Repose de l'entretoise de roulement latéral **a : 8 mm** **b : R42,5 mm**	–	X	–

Simpo PDF Merge and Split Unregistered Version - http://www.simpopdf.com

Outillage spécial (Suite)

Numéro de l'outil Nom de l'outil	Description	Modèle concerné		
		R180A	C200	H233B
ST30611000 Chassoir	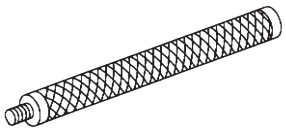 NT090 Repose de la cuvette externe de roulement arrière de pignon	X	X	X
ST30621000 Chassoir	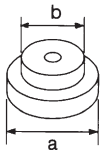 NT073 Repose de la cuvette externe de roulement arrière de pignon **a : 79 mm** ϕ **b : 59 mm** ϕ	X	X	X
ST30701000 Chassoir	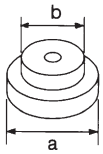 NT073 Repose de la cuvette externe de roulement avant de pignon **a : 61,5 mm** ϕ **b : 41 mm** ϕ	X	–	–
ST30613000 Chassoir	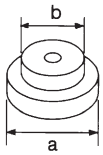 NT073 Repose de la cuvette externe de roulement avant de pignon **a : 72 mm** ϕ **b : 48 mm** ϕ	–	X	X
KV381025S0 Outil de montage de joint d'huile ① ST30720000 Tête de chassoir ② KV38102510 Chassoir	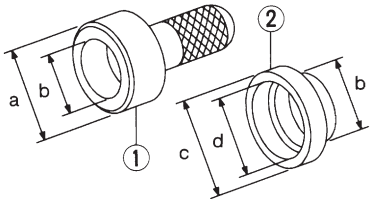 NT525 Repose du joint d'huile avant (R180A, H233B) Repose du rotor du capteur de roue arrière (C200) **a : 77 mm** ϕ **b : 55 mm** ϕ **c : 71 mm** ϕ **d : 65 mm** ϕ	X	X	X
KV38100500 Chassoir de joint d'huile de carter de pont	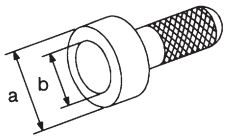 NT115 Repose du joint d'huile avant **a : 85 mm** ϕ **b : 60 mm** ϕ	X	X	–
ST15310000 Chassoir	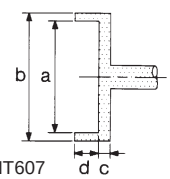 NT607 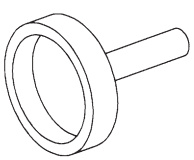 Repose du joint d'huile avant **a : 84 mm** ϕ **b : 96 mm** ϕ **c : 8 mm** ϕ **d : 20 mm** ϕ	–	–	X

Simpo PDF Merge and Split Unregistered Version - http://www.simpopdf.com

Outillage spécial (Suite)

Numéro de l'outil Nom de l'outil	Description		Modèle concerné		
			R180A	C200	H233B
KV40104710 Chassoir	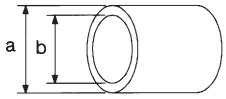 NT474	Repose du joint d'huile avant **a : 76,3 mm** ϕ **b : 67,9 mm** ϕ	–	–	X
ST33720000 Guide de pièce de retenue latérale de différentiel	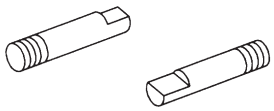 NT138	Repose de la pièce de retenue latérale	X	–	–
ST33270000 Chassoir du joint d'huile latéral	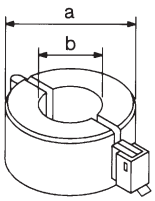 NT526	Repose du joint d'huile latéral **a : 62 mm** ϕ **b : 28 mm** ϕ	X	–	–
KV381001S0 Jeu de jauge de réglage de la hauteur du pignon d'attaque ① KV38100110 Faux-arbre ② KV38100120 Jauge de hauteur ③ KV38100130 Collier ④ KV38100140 Butée	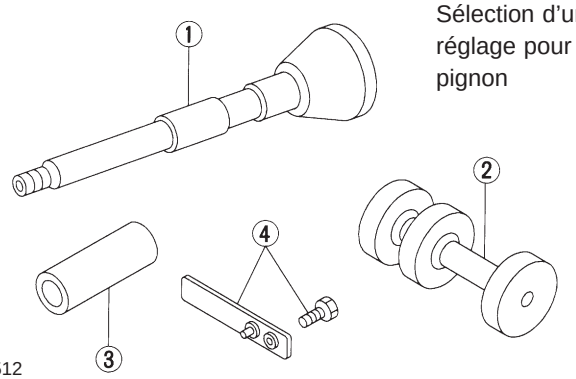 NT512	Sélection d'une rondelle de réglage pour la hauteur du pignon	X	–	–
KV381039S0 Jauge de repose de pignon d'attaque ① KV38103910 Faux-arbre ② KV38100120 Jauge de hauteur ③ KV38100140 Butée	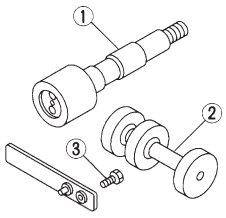 NT226	Sélection d'une rondelle de réglage pour la hauteur du pignon	–	X	–
ST3125S000 Jeu de jauge de réglage de la hauteur du pignon d'attaque ① ST31251000 Jauge de hauteur ② ST31181001 Faux-arbre	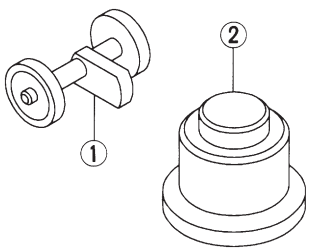 NT524	Sélection d'une rondelle de réglage pour la hauteur du pignon	–	–	X

Simpo PDF Merge and Split Unregistered Version - http://www.simpopdf.com

Outillage spécial (Suite)

Numéro de l'outil Nom de l'outil	Description		Modèle concerné		
			R180A	C200	H233B
Dynamomètre	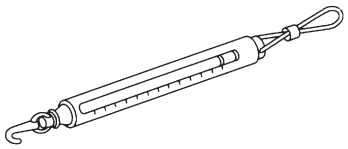 NT127	Mesure du couple de rotation du carter de pont	X	X	X
Chassoir de joint d'huile latéral de carter de pont	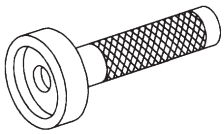 NT120	Repose du joint d'huile latéral	X	–	–
KV381051S0 Faux-arbre d'essieu arrière ① KV38105110 Côté clé dynamométrique ② KV38105120 Côté étau	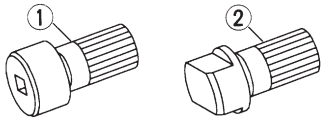 NT142	Vérification du couple de différentiel sur le différentiel à glissement limité	–	X	–
KV381052S0 Faux-arbre d'essieu arrière ① KV38105210 Côté clé dynamométrique ② KV38105220 Côté étau	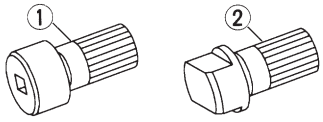 NT142	Vérification du couple de différentiel sur le différentiel à glissement limité	–	–	X

Simpo PDF Merge and Split Unregistered Version - http://www.simpopdf.com

Arbre de transmission avant (modèle 2F71H)

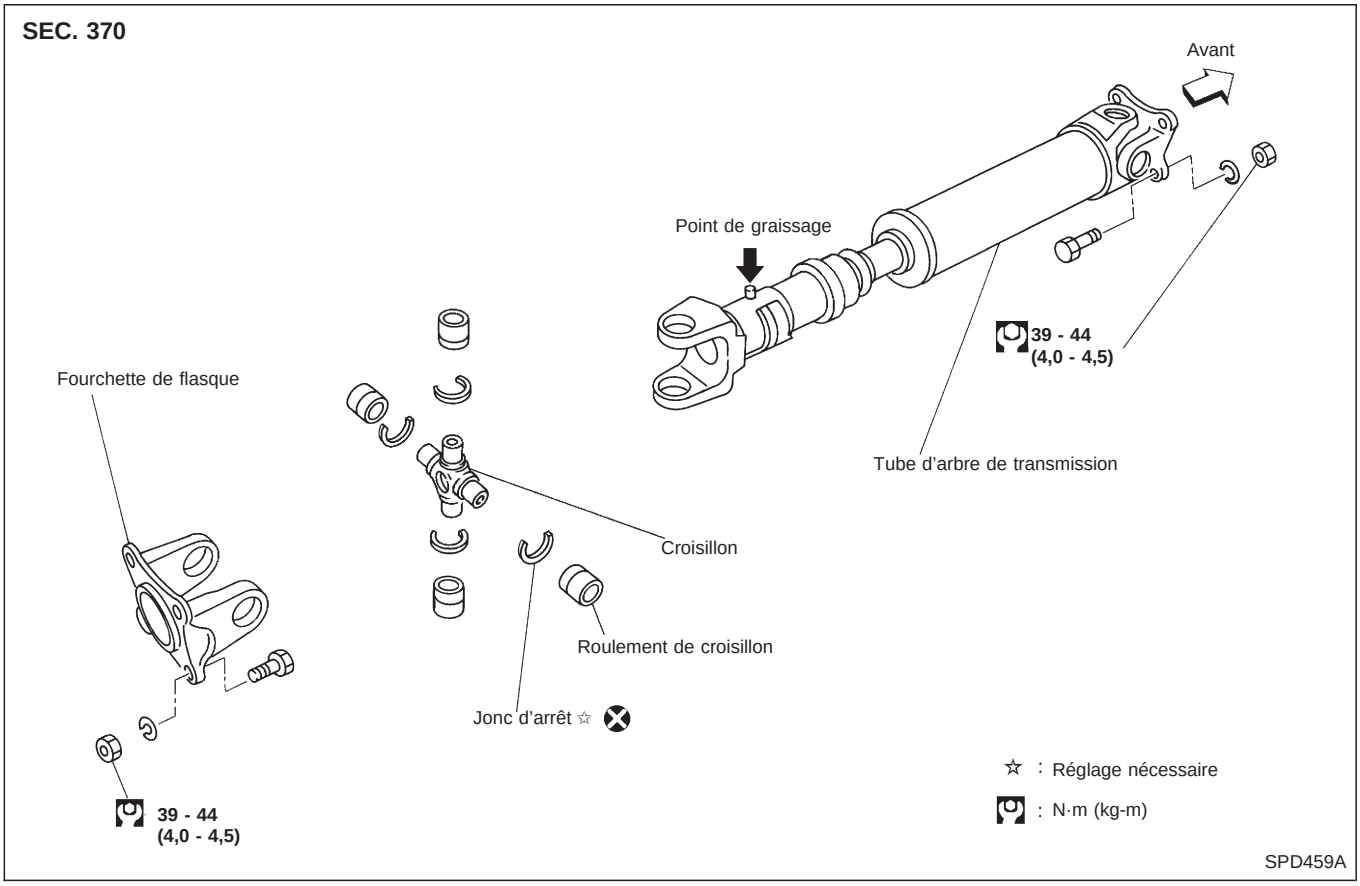

Arbre de transmission arrière (modèles à deux roues motrices)

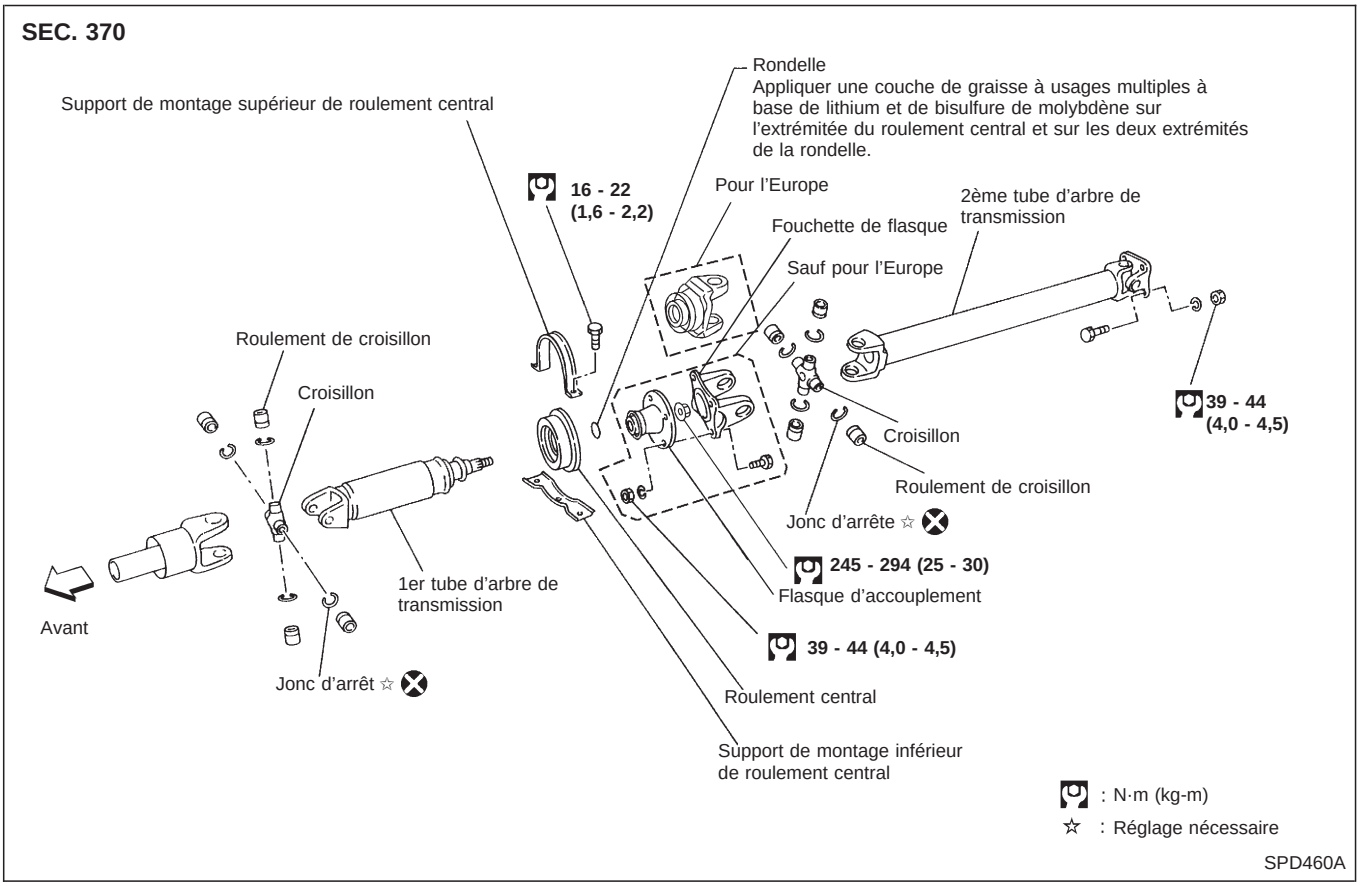

Simpo PDF Merge and Split Unregistered Version - http://www.simpopdf.com

Arbre de transmission arrière (modèles à quatre roues motrices)

SEC. 370

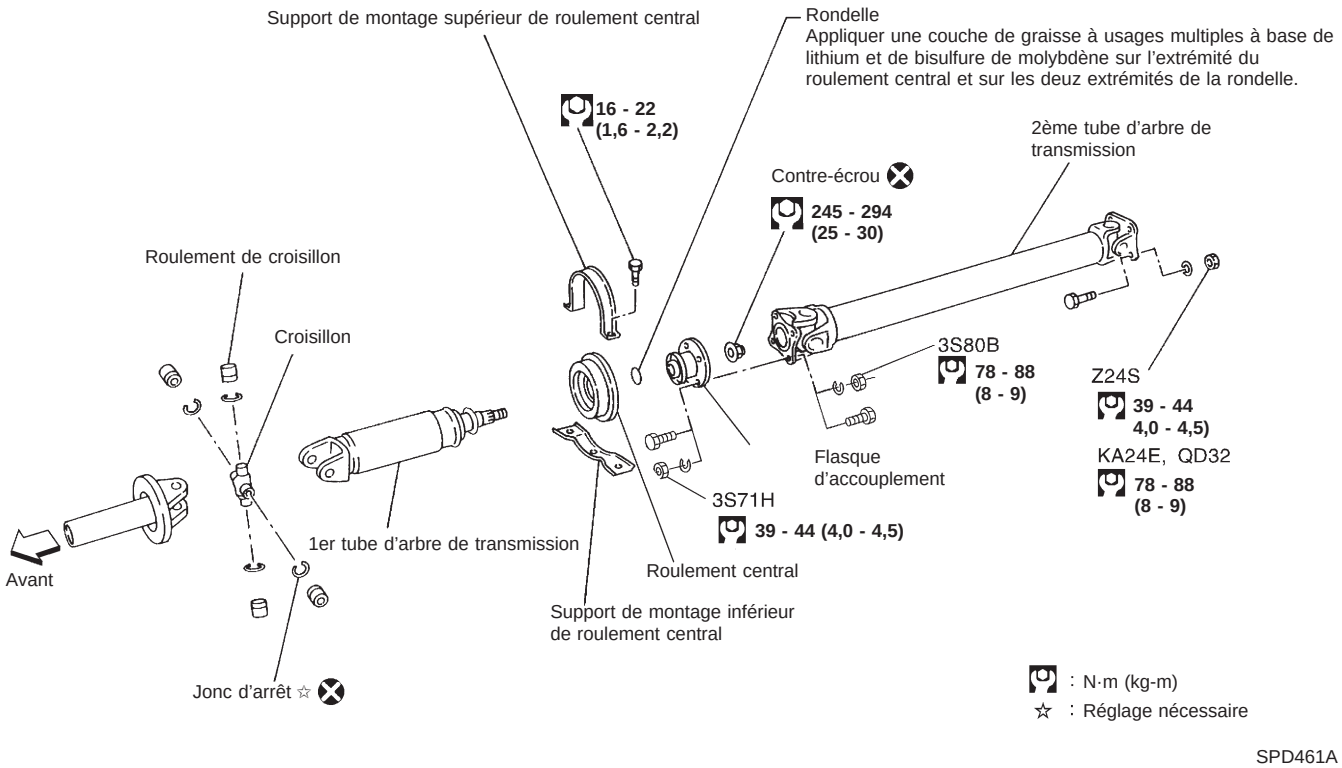

Simpo PDF Merge and Split Unregistered Version - http://www.simopdf.com

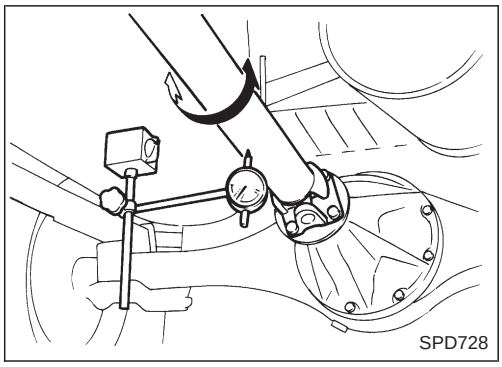
SPD728

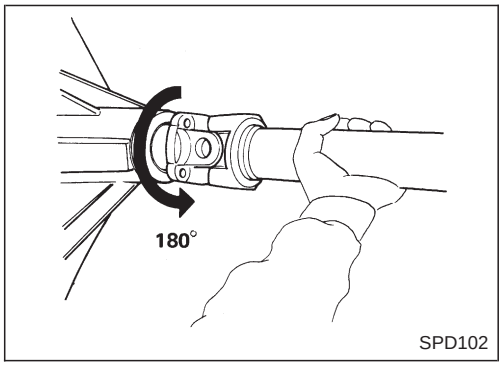

SPD102

Entretien sur véhicule

VIBRATIONS DE L'ARBRE DE TRANSMISSION

Si l'on constate des vibrations à grande vitesse, contrôler tout d'abord le voile de l'arbre de transmission.

1. Soulever l'extrémité arrière du véhicule jusqu'à ce que les roues décollent du sol.
2. Mesurer le voile de l'arbre de transmission en plusieurs endroits le long de l'arbre en faisant tourner à la main le flasque d'accouplement du pont.
3. Si le voile dépasse les valeurs spécifiées, désaccoupler l'arbre de transmission à hauteur du flasque d'accouplement du pont. Faire tourner le flasque d'accouplement de 180 degrés, puis réaccoupler l'arbre de transmission.
   Limite de voile : 0,6 mm
4. Contrôler à nouveau le voile. Si le voile dépasse encore la limite, remplacer l'ensemble de l'arbre de transmission.
5. Effectuer un essai sur route.

CONTROLE DE L'ASPECT

- Vérifier si la surface des tubes de l'arbre de transmission ne présente pas de bosses ou de fissures, et les remplacer si nécessaire.
- Vérifier si le roulement central est bruyant ou endommagé et le remplacer si nécessaire.

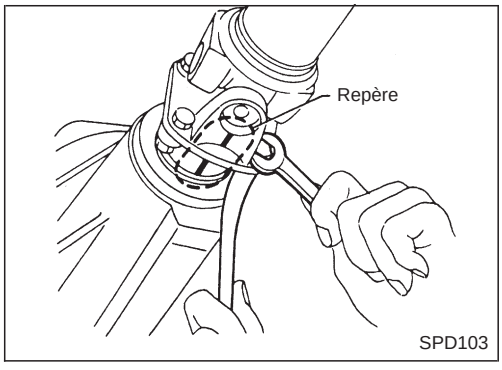

SPD103

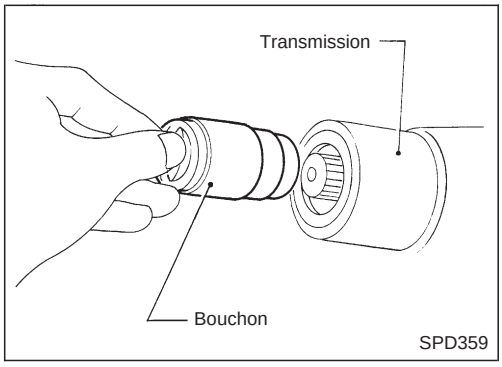

SPD359

Dépose et repose

1. Tracer des marques de repère sur les flasques, puis séparer l'arbre de transmission du pont.

2. Déposer l'arbre de transmission.
- **Insérer le bouchon dans le joint d'huile arrière après avoir déposé l'arbre de transmission arrière.**

Simpo PDF Merge and Split Unregistered Version - http://www.simopdf.com

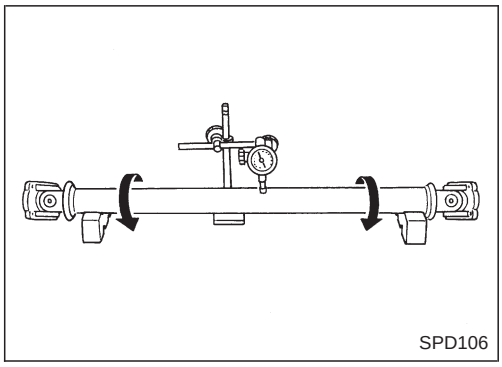
SPD106

Inspection

- Vérifier le voile de l'arbre de transmission. Si le voile dépasse la limite, remplacer l'ensemble de l'arbre de transmission.
  Limite de voile : 0,6 mm

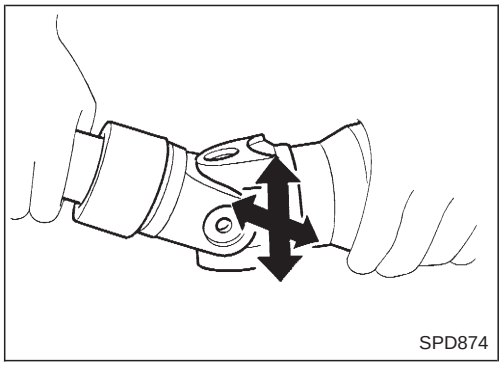
SPD874

- Vérifier le jeu axial du croisillon.
  Si la limite est dépassée, remplacer l'ensemble de l'arbre de transmission.
  Jeu axial de croisillon :
  0,02 mm ou moins

Démontage

ROULEMENT CENTRAL

1. Tracer des marques de repère sur les flasques, puis séparer le second tube du premier tube.

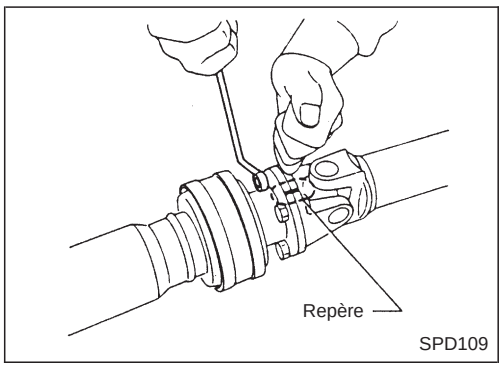

SPD109

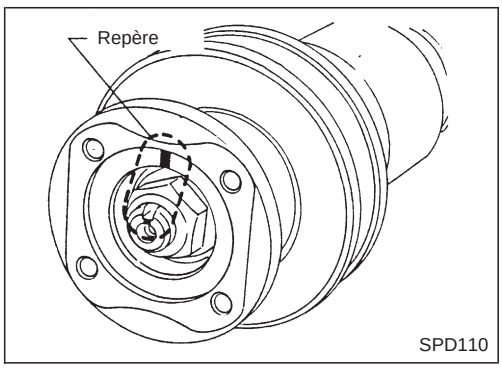

SPD110

2. Tracer des marques de repère sur le flasque et l'arbre.

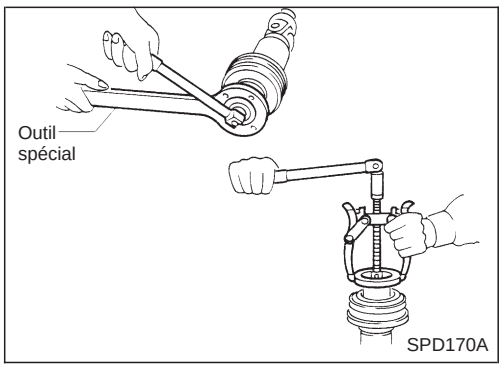

SPD170A

3. Déposer l'écrou d'arrêt avec l'outil spécial.
   Numéros d'outils :
   R180A, C200
   ST38060002
   H233B
   KV38104700
4. Déposer le flasque d'accouplement à l'aide d'un extracteur.

Simpo PDF Merge and Split Unregistered Version - http://www.simopdf.com

Démontage (Suite)

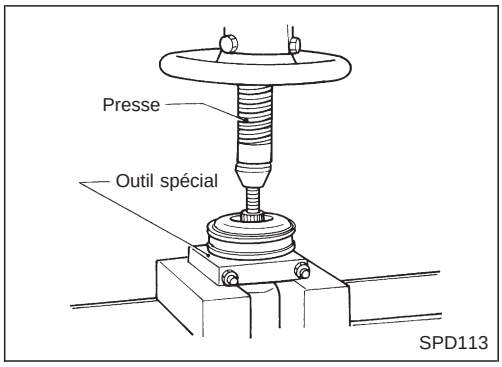

5. Déposer le roulement central à l'aide d'un outil spécial et d'une presse.
   Numéro de l'outil : ST30031000

CROISILLON

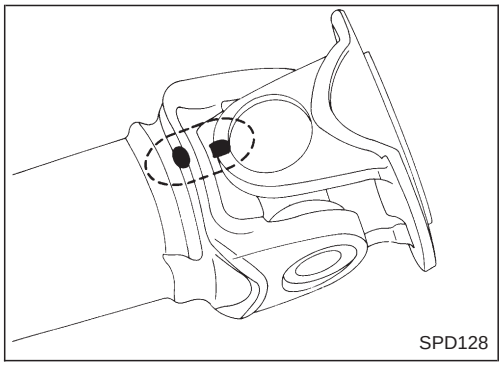

1. Tracer des marques de repère sur l'arbre de transmission et sur le flasque ou la chape.

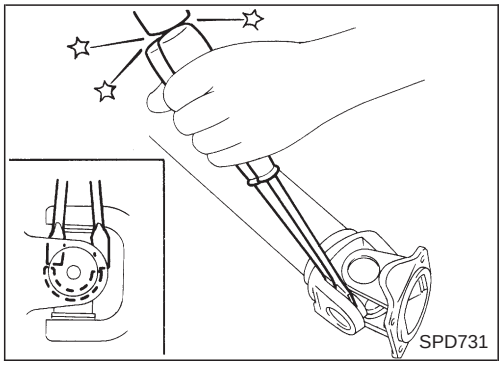

2. Déposer le jonc d'arrêt.

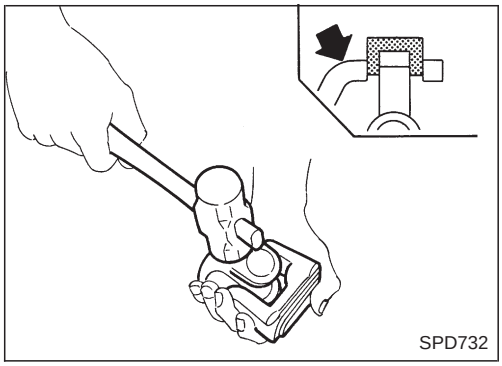

3. Déposer le roulement de croisillon repoussé en frappant légèrement sur la chape avec un marteau, en prenant garde de ne pas endommager le croisillon et l'orifice de chape.

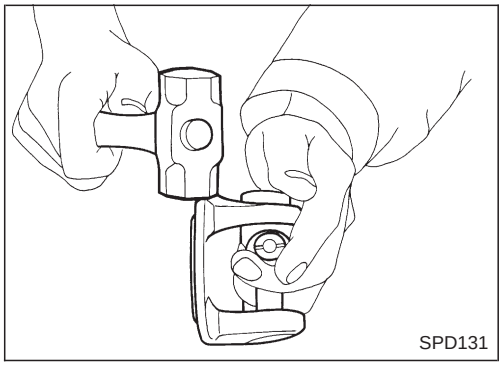

4. Déposer le roulement opposé de la même manière.

Tracer des repères sur les pièces démontées de façon à pouvoir les replacer dans leur position d'origine.

Simpo PDF Merge and Split Unregistered Version - http://www.simopdf.com

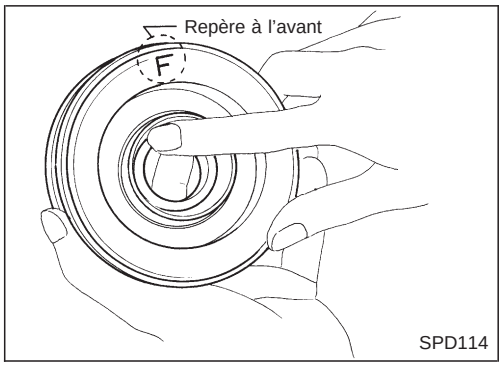

Remontage

ROULEMENT CENTRAL

- Lors de la repose du roulement central, disposer la marque "F" située au centre du roulement vers l'avant du véhicule.
- **Enduire d'une couche de graisse au lithium (à usages multiples contenant du bisulfure de molybdène) l'extrémité du roulement central et les deux côtés de la rondelle.**

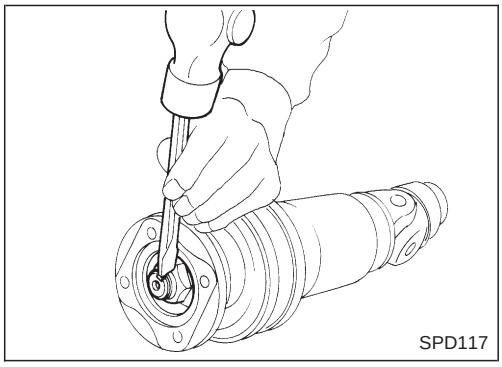

- Estamper l'écrou. Toujours utiliser un écrou neuf.
- Aligner les marques de repère lorsqu'on remonte les tubes.

CROISILLON

1. Remonter le roulement de croisillon. Enduire la surface interne du roulement de graisse à usages multiples recommandée.

Lors du remontage, veiller à ne pas laisser tomber le roulement à aiguilles.

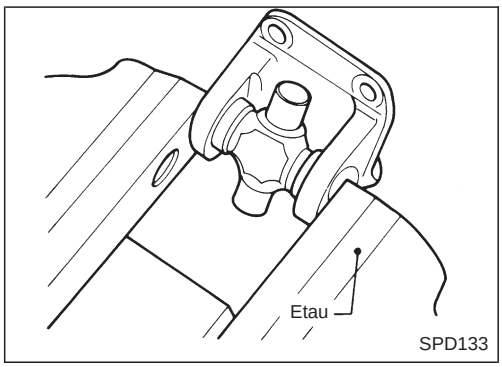

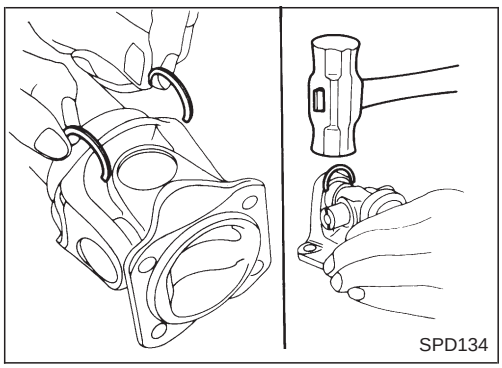

2. Sélectionner un jonc d'arrêt qui permettra d'obtenir le jeu axial de croisillon spécifié, et le monter.
   Consulter les SDS, PD-80.

Choisir pour les deux côtés des joncs d'arrêt dont la différence d'épaisseur ne dépasse pas 0,06 mm.

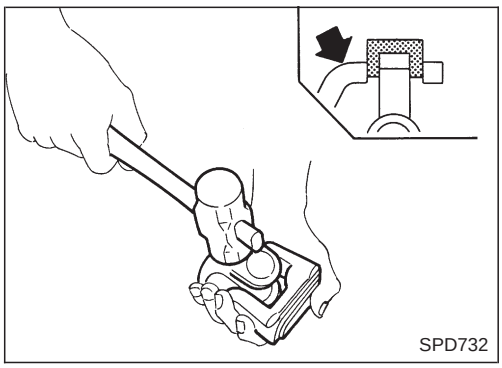

3. Régler le jeu entre le roulement et le jonc d'arrêt à une valeur nulle (zéro) en frappant sur la chape.

Simpo PDF Merge and Split Unregistered Version - http://www.simopdf.com

Remontage (Suite)

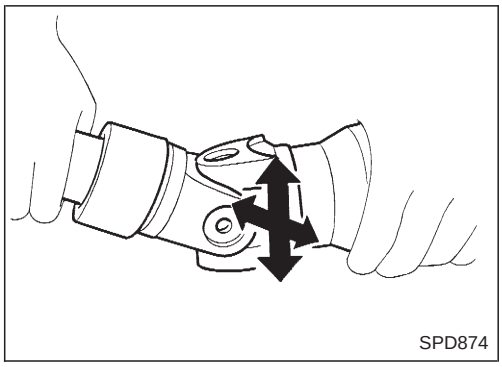

4. S'assurer que le croisillon se déplace librement et vérifier le jeu axial.
   Jeu axial : 0,02 mm ou moins

Simpo PDF Merge and Split Unregistered Version - http://www.simpopdf.com

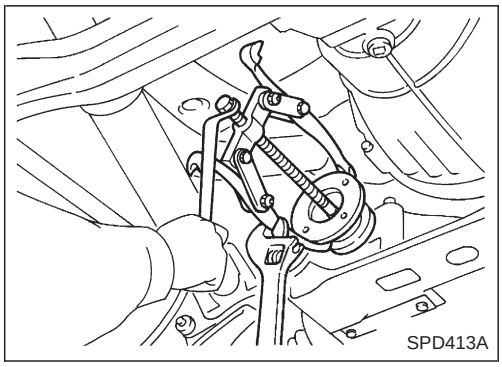
SPD413A

Remplacement du joint d'huile avant (pont avant : modèle R180A)

1. Déposer l'arbre de transmission avant.
2. Desserrer l'écrou de pignon d'attaque.
3. Déposer le flasque d'accouplement à l'aide d'un extracteur.
4. Déposer le joint d'huile avant.

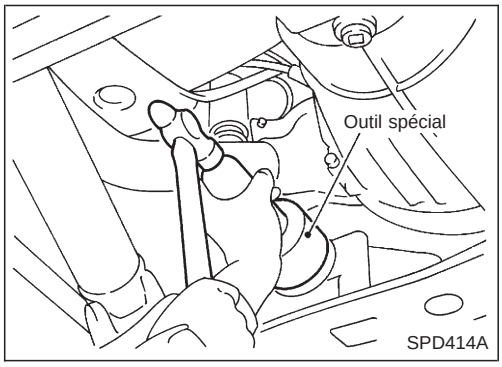

SPD414A

5. Remplir de graisse à usages multiples le creux entre les lèvres du joint d'huile. Enfoncer le joint d'huile avant dans le carter de pont.
   Numéro de l'outil : KV38100500
6. Reposer le flasque d'accouplement et l'écrou de pignon d'attaque.
7. Reposer l'arbre de transmission.

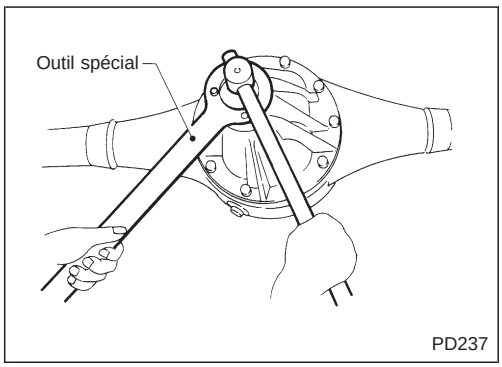

PD237

Remplacement du joint d'huile avant (pont arrière : modèle H233B)

ATTENTION :
Dans le cas des modèles de pont dotés d'une entretoise escamotable (C200), la précharge du roulement doit être réglée après chaque dépose du flasque d'accouplement. Par conséquent, une révision complète du pont est nécessaire.

1. Déposer l'arbre de transmission.
2. Desserrer l'écrou de pignon d'attaque.
   Numéro de l'outil : KV38104700

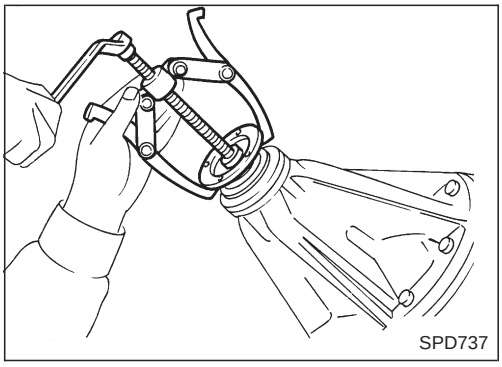
SPD737

3. Déposer le flasque d'accouplement.

Simpo PDF Merge and Split Unregistered Version - http://www.simpopdf.com

Remplacement du joint d'huile avant (pont arrière : modèle H233B) (Suite)

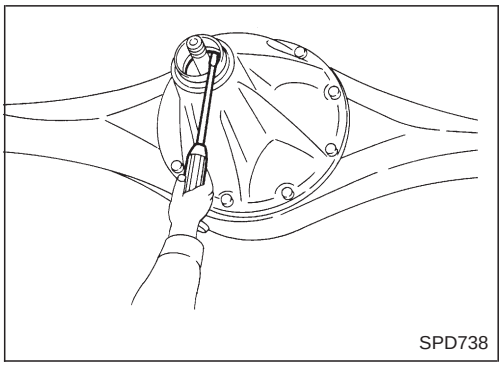
SPD738

4. Déposer le joint d'huile avant.

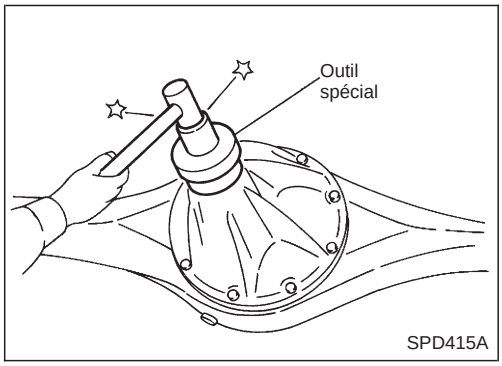

SPD415A

5. Remplir de graisse à usages multiples le creux entre les lèvres du joint d'huile. Enfoncer le joint d'huile avant dans le carter de pont.
   Numéros d'outils : ST15310000
   KV40104710
6. Reposer le flasque d'accouplement et l'écrou de pignon d'attaque.
7. Reposer l'arbre de transmission arrière.

Remplacement du joint plat du couvercle arrière (pont arrière : modèle C200)

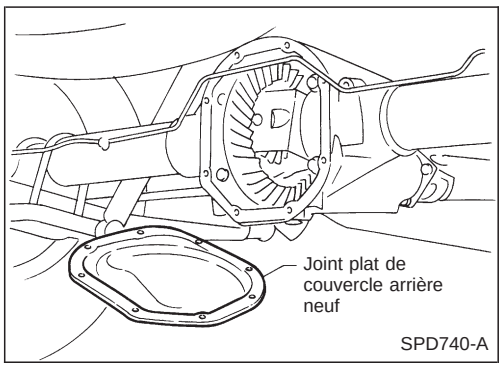

SPD740-A

1. Vidanger l'huile pour engrenages.
2. Déposer le couvercle arrière et le joint plat du couvercle arrière.
3. Reposer un joint plat de couvercle arrière neuf ainsi que le couvercle arrière.
4. Remplir le pont d'huile pour engrenages recommandée.

Simpo PDF Merge and Split Unregistered Version - http://www.simpopdf.com

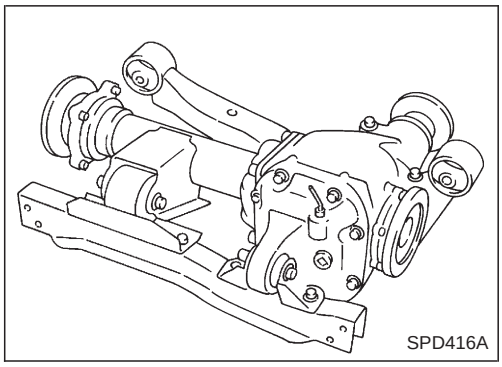
SPD416A

Dépose

1. Déposer l'arbre de transmission avant.
2. Déposer le semi-arbre. Consulter la section FA ["Semi-arbre", "ESSIEU AVANT — 4 roues motrices —"].
3. Déposer les boulons de montage du moteur et soulever le moteur.
4. Déposer le pont avant avec la traverse de montage du différentiel.

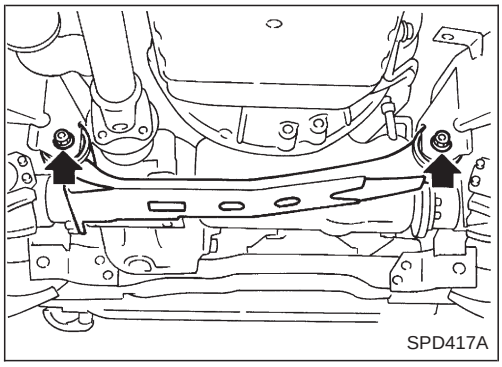
SPD417A

Repose

1. Reposer l'ensemble pont avant avec la traverse de montage du différentiel.

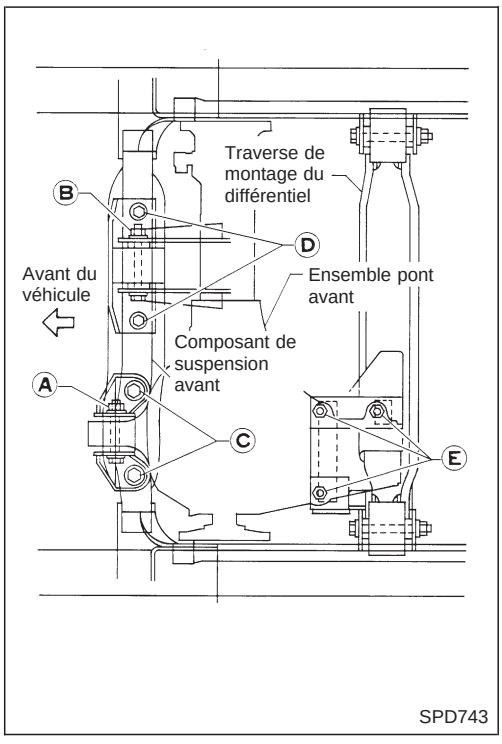

SPD743

2. Serrer les écrous et boulons de fixation du pont avant en suivant la procédure suivante pour éviter toute vibration de la transmission.

a. Serrer provisoirement l'écrou Ⓐ.
b. Serrer provisoirement l'écrou Ⓑ.
c. Serrer le boulon Ⓒ à un couple de 68 à 87 N·m (6,9 à 8,9 kg-m).
d. Serrer le boulon Ⓓ à un couple de 68 à 87 N·m (6,9 à 8,9 kg-m).
e. Serrer l'écrou Ⓐ à un couple de 68 à 87 N·m (6,9 à 8,9 kg-m).
f. Serrer l'écrou Ⓑ à un couple de 68 à 87 N·m (6,9 à 8,9 kg-m).
g. Serrer l'écrou Ⓔ à un couple de 68 à 87 N·m (6,9 à 8,9 kg-m).

3. Reposer le semi-arbre. Consulter la section FA ["Semi-arbre", "ESSIEU AVANT — 4 roues motrices —"].
4. Reposer l'arbre de transmission avant.

Simpo PDF Merge and Split Unregistered Version - http://www.simpopdf.com

Dépose

- Déposer l'arbre de transmission.

Boucher l'extrémité avant du transfert.

- Déposer l'arbre d'essieu.
  Consulter la section RA (''ESSIEU ARRIERE'').

ATTENTION :

- **Veiller à ne pas endommager les cannelures, la chape à manchon coulissant et le joint d'huile avant lors de la dépose de l'arbre de transmission.**
- **Avant de déposer le pont ou l'essieu arrière, débrancher le connecteur de faisceau du capteur ABS de l'ensemble et éloigner de la zone de pont/d'essieu arrière. Le non respect de cette instruction risque de provoquer l'endommagement des câbles de capteur et l'inefficacité du capteur.**

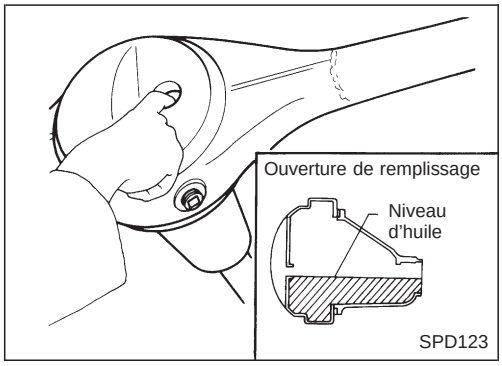

Repose

- Remplir le pont d'huile pour engrenages recommandée.

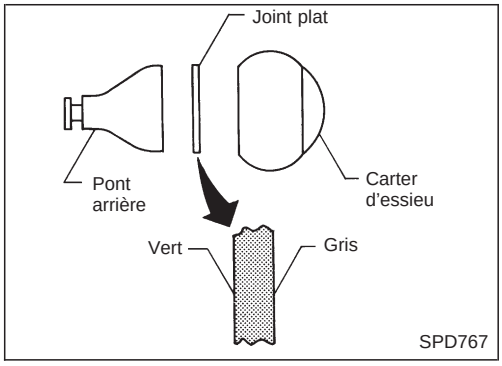

- Prêter attention au sens du joint (H233B uniquement).

Simpo PDF Merge and Split Unregistered Version - http://www.simpopdf.com

SEC. 381

☆ : Réglage nécessaire
★ : Utiliser un produit de blocage [Locktite (Frein de vis) ou équivalent]
: N·m (kg-m)
: N·m (kg-m)
: Enduire de produit d'étanchéité recommandé (pièce d'origine Nissan : KP610-00250) ou équivalent.

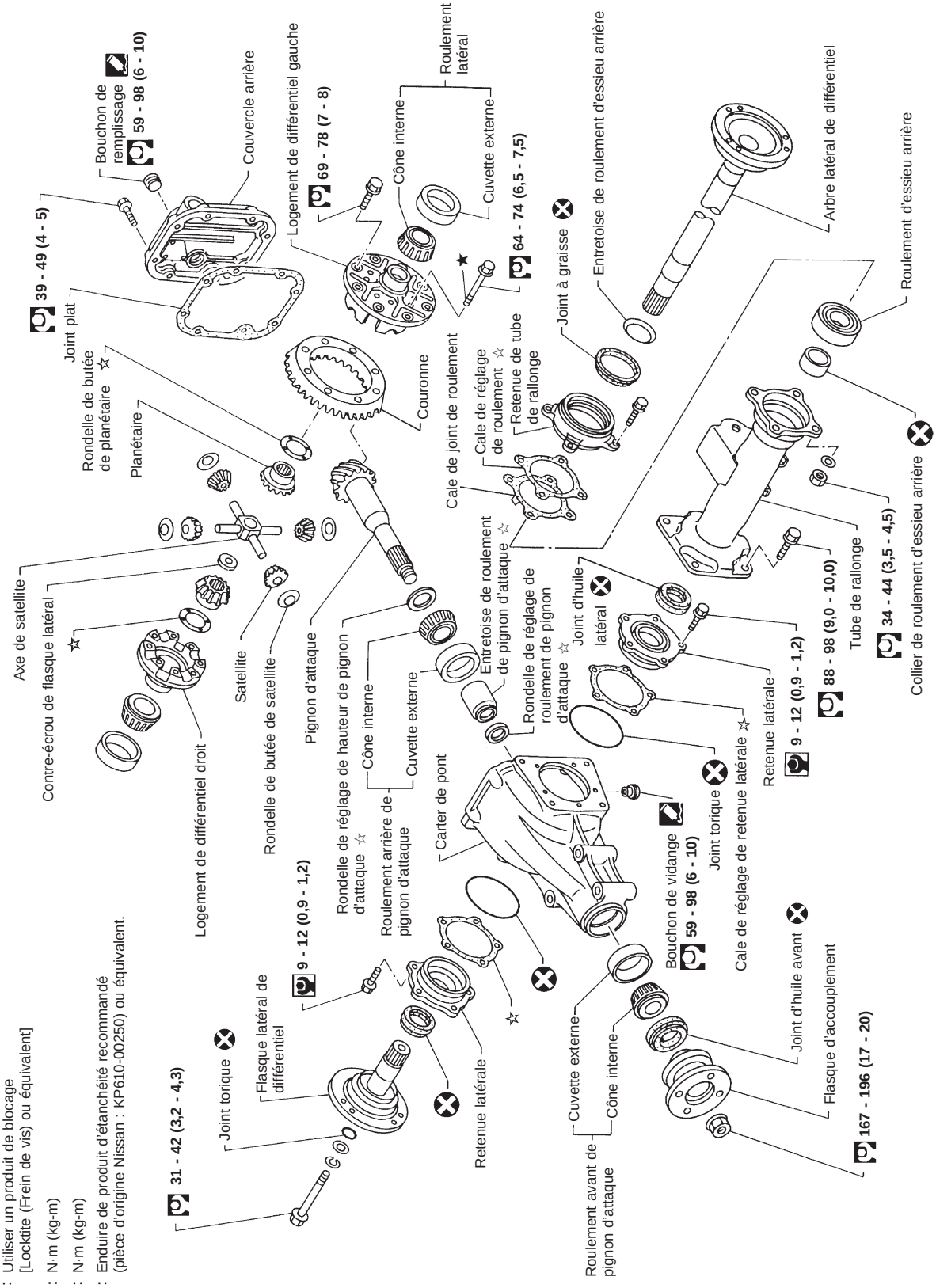

SPD429A

Simpo PDF Merge and Split Unregistered Version - http://www.simpopdf.com

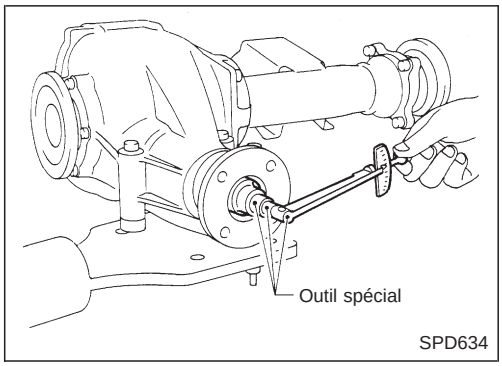

Inspection préalable

Avant de démonter le pont, effectuer l'inspection suivante.

- Précharge totale

a. Tourner le pignon d'attaque de plusieurs tours dans les deux sens pour asseoir les rouleaux de roulement.
b. Contrôler la précharge totale à l'aide de l'outil spécial.
   Numéro de l'outil : ST3127S000
   Précharge totale:
   1,2 - 2,3 N·m
   (12 - 23 kg-cm)

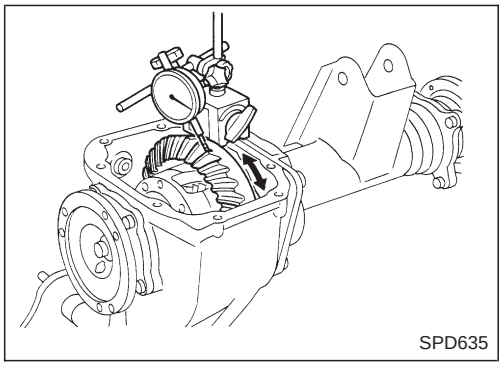

- Battement entre la couronne et le pignon d'attaque
  Vérifier le battement de la couronne à l'aide d'un comparateur à cadran, à plusieurs endroits.
  Battement entre la couronne et le pignon d'attaque :
  0,13 - 0,18 mm

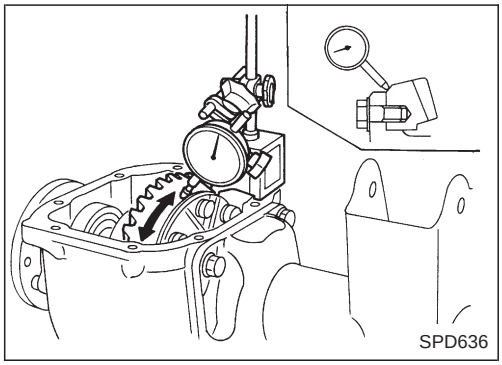

- Voile de la couronne
  Contrôler le voile de la couronne à l'aide d'un comparateur à cadran.
  Limite de voile :
  0,05 mm
- Contact entre les dents
  Contrôler le contact entre les dents. Consulter le titre ''REGLAGE'', PD-28.

Carter de pont

1. Monter l'ensemble de pont sur l'outil spécial en utilisant trois entretoises (20 mm).
   Numéro de l'outil : KV38100800

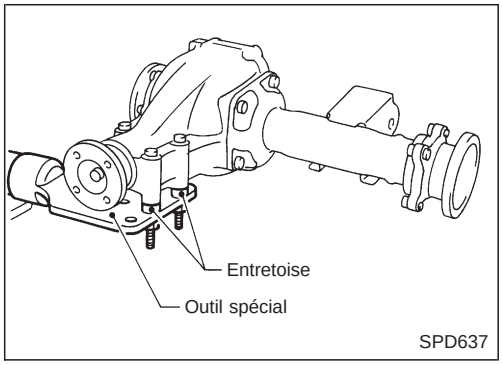

2. Déposer le tube de rallonge et l'ensemble d'arbre latéral de différentiel.

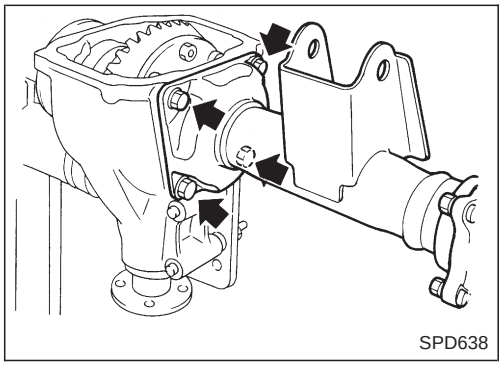

Simpo PDF Merge and Split Unregistered Version - http://www.simpopdf.com

Carter de pont (Suite)

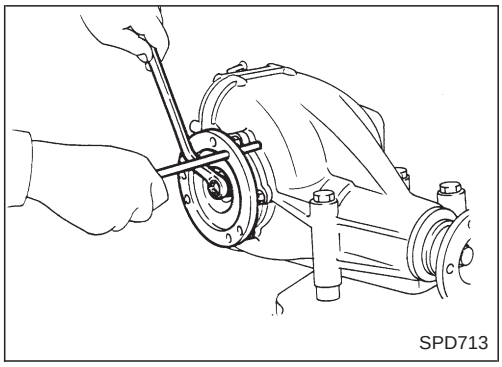
SPD713

3. Déposer le flasque latéral de différentiel.

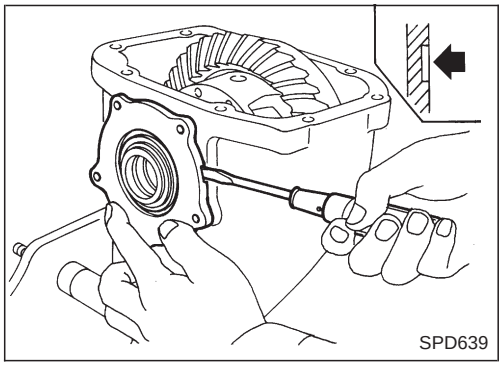
SPD639

4. Tracer des marques de repère sur les pièces de retenue latérales. Déposer les pièces de retenue latérales.

Veiller à ne pas confondre les pièces de retenue et les cales d'épaisseur gauche et droite.

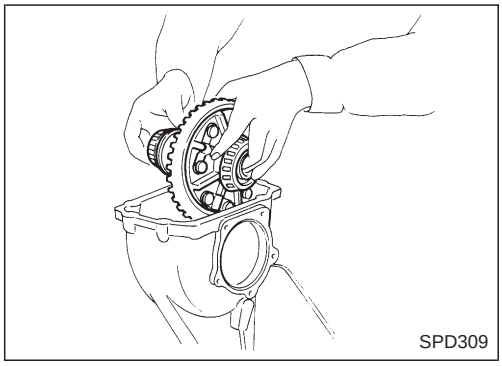
SPD309

5. Extraire le logement de différentiel du carter de pont.

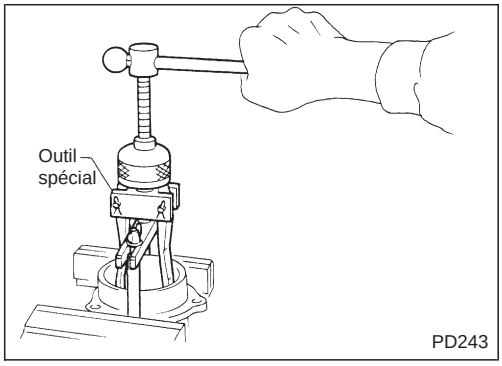

PD243

6. Déposer les cuvettes externes latérales.
   Numéro de l'outil : ST33290001

Conserver les cuvettes externes de roulements latéraux avec leurs cônes internes respectifs – ne jamais les intervertir.

7. Déposer le joint d'huile latéral.

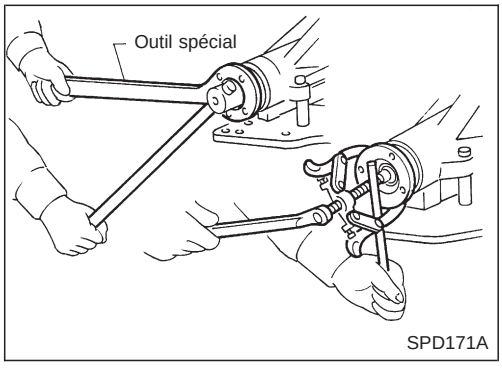

SPD171A

8. Desserrer l'écrou de pignon d'attaque.
   Numéro de l'outil : ST38060002
9. Déposer le flasque d'accouplement avec un extracteur.

Simpo PDF Merge and Split Unregistered Version - http://www.simpopdf.com

Carter de pont (Suite)

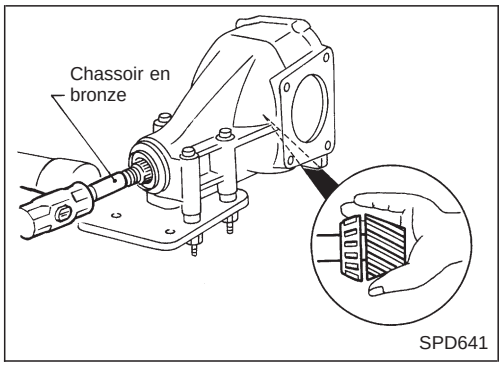

10. Sortir le pignon d'attaque avec le cône interne de roulement arrière de pignon d'attaque, l'entretoise de roulement de pignon d'attaque et la rondelle de réglage de roulement de pignon d'attaque.
11. Déposer le joint d'huile avant et le cône interne du roulement avant de pignon.

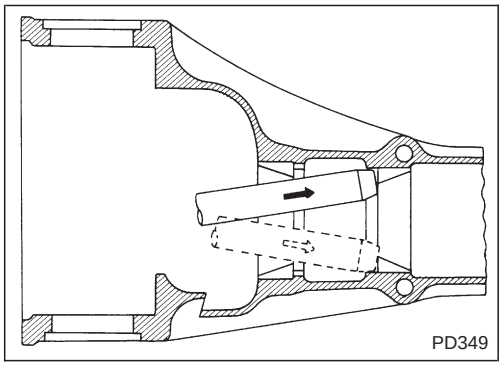

12. Déposer les cuvettes externes des roulements avant et arrière du pignon avec un chassoir en bronze.

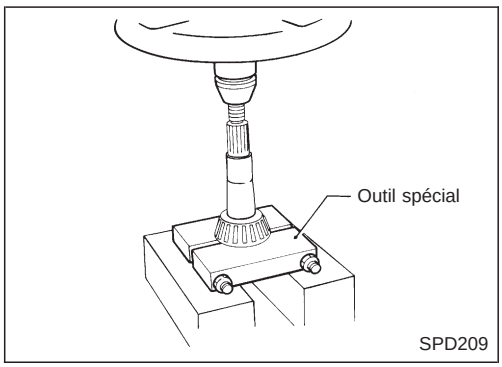

13. Déposer le cône interne de roulement arrière du pignon et la rondelle de réglage du pignon d'attaque.
    Numéro de l'outil : ST30031000

Logement de différentiel

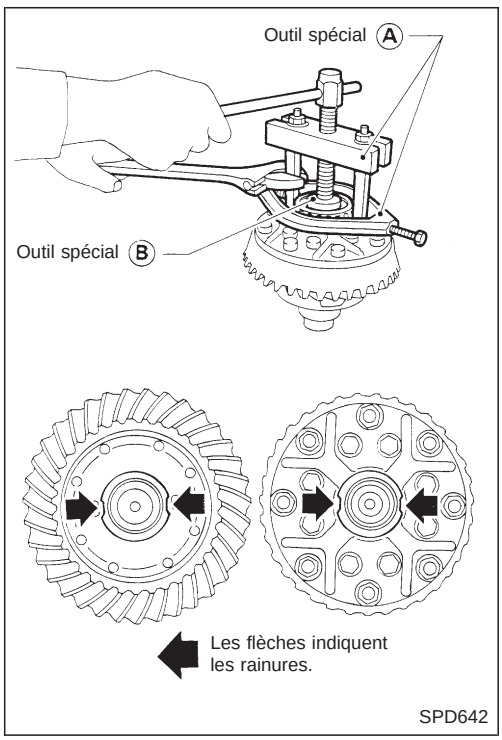

1. Déposer les cônes internes de roulements latéraux.

Pour éviter d'endommager les roulements, introduire les griffes de l'extracteur dans les rainures.

Numéros d'outils :
- Ⓐ **ST33051001**
- Ⓑ **ST33061000**

Simpo PDF Merge and Split Unregistered Version - http://www.simpopdf.com

Logement de différentiel (Suite)

Veiller à ne pas confondre les pièces gauche et droite.

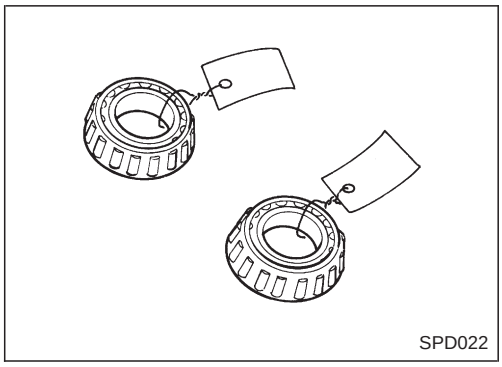
SPD022

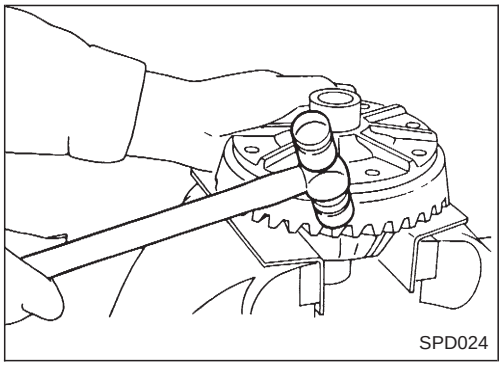
SPD024

2. Desserrer en diagonale les boulons de la couronne.
3. Frapper la couronne avec un marteau à tête élastique pour la détacher du différentiel.

Frapper de manière régulière sur toute la périphérie, afin d'éviter que la couronne ne se voile.

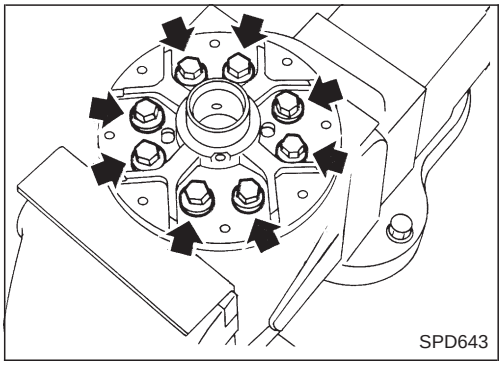
SPD643

4. Séparer les logements de différentiel gauche et droit.

Tracer des marques de repère sur les côtés gauche et droit du logement de différentiel avant de les séparer.

Tube de rallonge et arbre latéral de différentiel

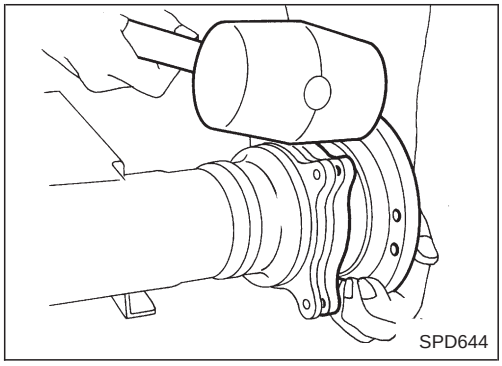
SPD644

1. Déposer l'ensemble d'arbre latéral de différentiel du tube de rallonge.

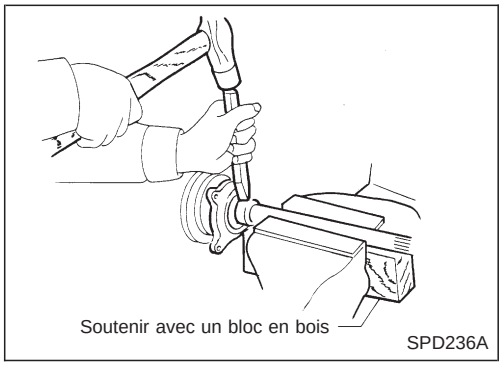

SPD236A

2. Couper le collier du roulement d'essieu arrière avec un ciseau à froid. Veiller à ne pas endommager l'arbre latéral de différentiel.

Simpo PDF Merge and Split Unregistered Version - http://www.simpopdf.com

Tube de rallonge et arbre latéral de différentiel (Suite)

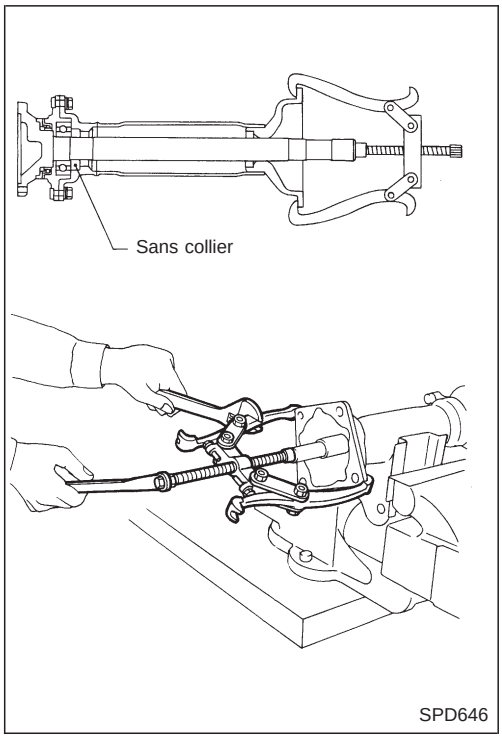

3. Remonter l'arbre latéral de différentiel dans le tube de rallonge et le fixer avec des boulons. Déposer le roulement d'essieu arrière en chassant l'arbre latéral de différentiel du roulement d'essieu arrière avec un extracteur.

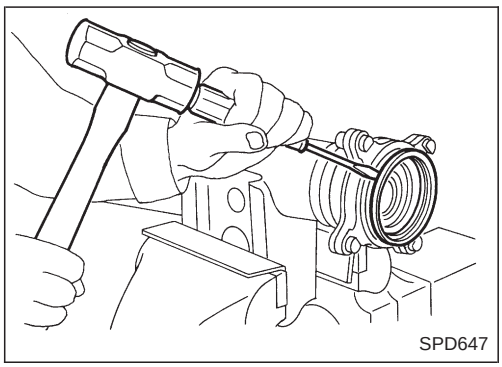

4. Déposer le joint à graisse.

Simpo PDF Merge and Split Unregistered Version - http://www.simpopdf.com

Couronne et pignon d'attaque

Contrôler les dents de la couronne pour voir si elles ne sont pas ébréchées, fêlées ou rayées.
Si l'on découvre une détérioration quelconque, remplacer la couronne et le pignon d'attaque comme un ensemble (jeu de pignons hypoïdes).

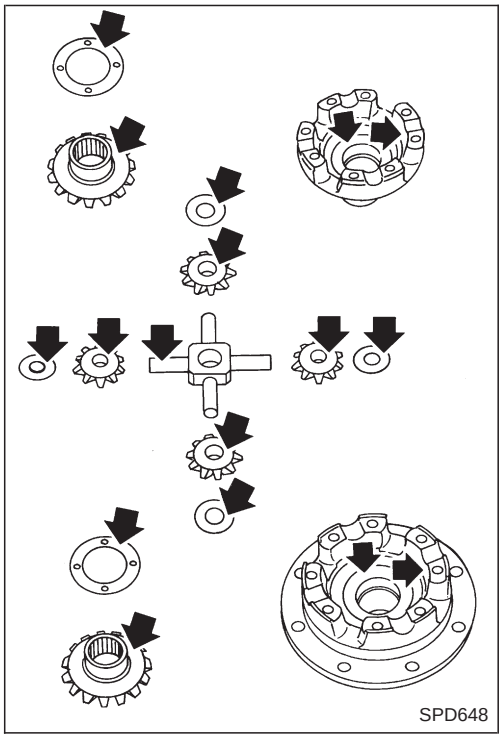
SPD648

Ensemble de logement de différentiel

Contrôler les surfaces d'appui du logement de différentiel, des planétaires, des satellites, de l'axe de satellite et des rondelles de butée.

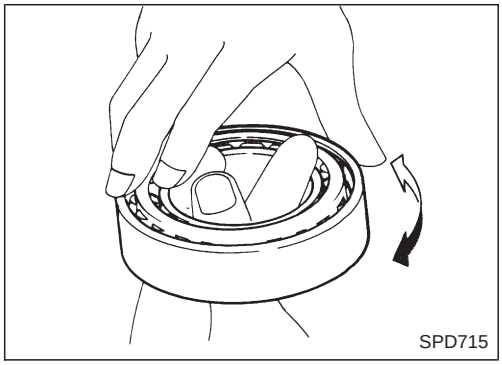
SPD715

Roulements

1. Nettoyer soigneusement les roulements.
2. Vérifier si les roulements ne sont pas usés, rayés, piqués ou ébréchés.
   Vérifier si les roulements à rouleaux coniques tournent librement. S'ils sont endommagés, remplacer comme un ensemble la cuvette externe et le cône interne.

Simpo PDF Merge and Split Unregistered Version - http://www.simpopdf.com

Pour que le pont fonctionne de façon silencieuse et fiable, les cinq réglages ci-dessous doivent être exécutés correctement :
1. Précharge de roulement latéral.
2. Hauteur du pignon d'attaque.
3. Précharge de roulement du pignon.
4. Battement entre la couronne et le pignon. Consulter ''REMONTAGE'', PD-33.
5. Jeu d'entre-dents de la couronne et du pignon.

Précharge de roulement latéral

Une sélection de cales de réglage de retenue latérale de support de différentiel est utile pour mener à bien cette procédure.

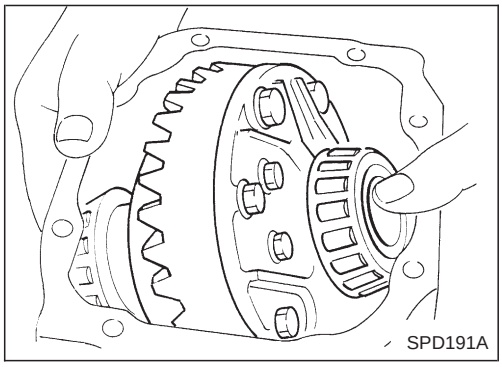
SPD191A

1. S'assurer que toutes les pièces sont propres. S'assurer également que les roulements ont bien été lubrifiés avec de l'huile fluide ou de l'huile pour boîte automatique de type ''DEXRON™''.
2. Reposer le boîtier de différentiel et l'ensemble des roulements latéraux dans le carter de pont.

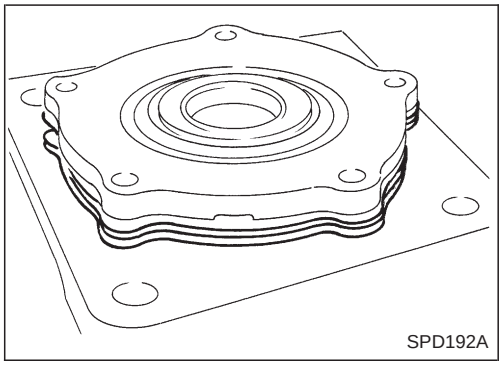
SPD192A

3. Placer toutes les cales de reglage originales de retenue latérale sur la retenue de roulement latérale disposée à l'extrémité de la couronne du carter de pont.

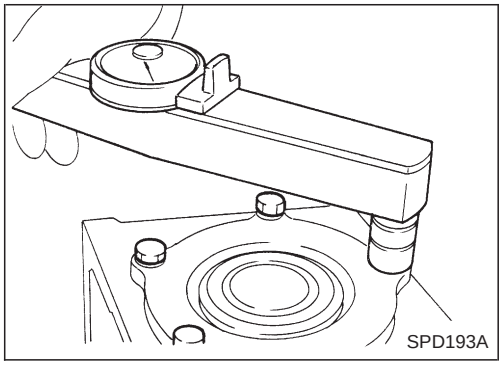
SPD193A

4. Installer les deux pièces de retenue de roulement sur le carter de pont et serrer les boulons de retenue.
   Couple de serrage du boulon :
   : 9 - 12 N·m (0,9 - 1,2 kg-m)

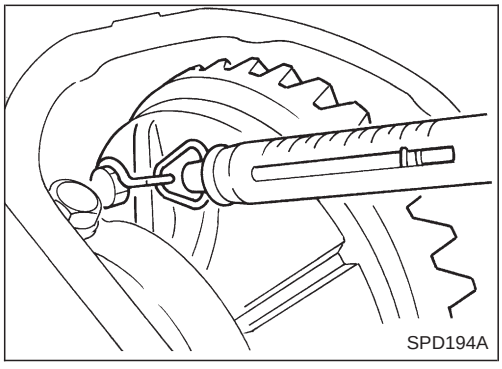
SPD194A

5. Tourner le support de différentiel plusieurs fois pour asseoir les roulements.
6. Mesurer le couple de rotation du support de différentiel avec un dynamomètre au niveau du boulon de serrage de la couronne.
   Spécification du couple de rotation :
   34,3 - 39,2 N (3,5 - 4,0 kg) de force de traction au boulon de couronne

Simpo PDF Merge and Split Unregistered Version - http://www.simpopdf.com

Précharge de roulement latéral (Suite)

7. Si le couple de rotation mesuré est incorrect, établir la précharge de roulement correcte en ajoutant ou retirant de l'épaisseur de cale de l'épaisseur totale.
- Augmenter l'épaisseur de la cale pour diminuer le couple de rotation du support de différentiel.
- Diminuer l'épaisseur de la cale pour augmenter le couple de rotation du support de différentiel.

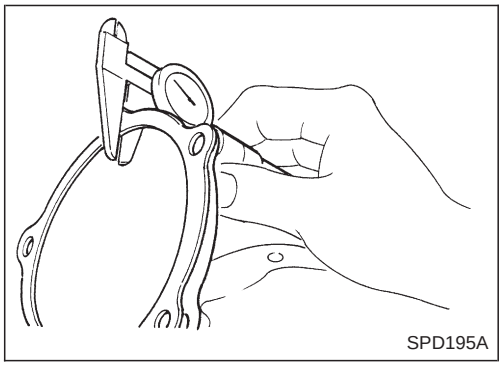
SPD195A

8. Noter l'épaisseur totale correcte des cales de réglage de retenue latérales, et déposer le support de différentiel et les roulements du carter de pont. Conserver les cales pour un usage ultérieur.

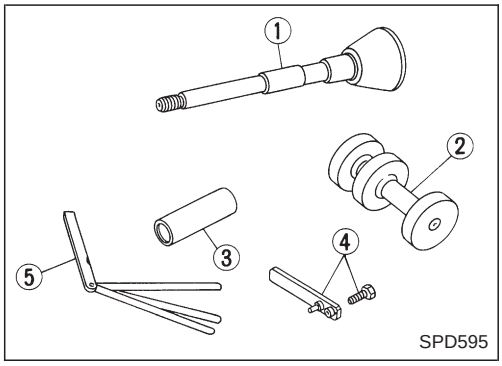

SPD595

Hauteur de pignon d'attaque

1. Préparer d'abord les outils permettant le réglage de la hauteur de pignon.
   ① Faux-arbre (KV38100110)
   ② Jauge de hauteur (KV38100120)
   ③ Collier (KV38100130)
   ④ Arrêt (KV38100140)
   ⑤ Jauge d'épaisseur
2. Pour faciliter le travail, préparer un tableau, comme celui ci-dessous, pour organiser les calculs.

LETTRES	CENTIEMES DE MILLIMETRE
H : Numéro de tête du pignon	
D′ : Chiffre indiqué sur le faux-arbre	
N : Mesure du jeu	

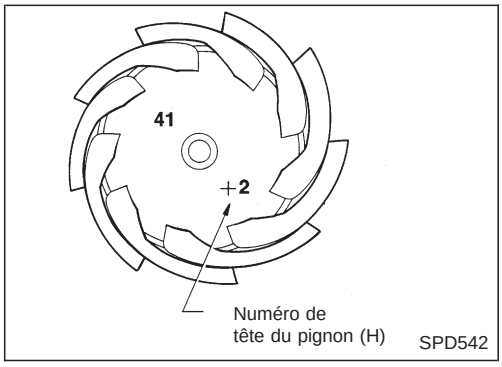

SPD542

3. Reporter les chiffres suivants dans le tableau.
   H : Numéro de tête du pignon

Simpo PDF Merge and Split Unregistered Version - http://www.simpopdf.com

Hauteur de pignon d'attaque (Suite)

D′: Chiffre indiqué sur le faux-arbre.

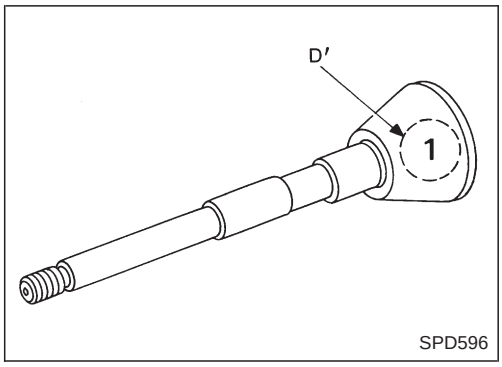

4. Placer l'outil spécial (faux-arbre) de la façon indiquée ci-contre et serrer avec précaution l'écrou de pignon d'attaque à une précharge de 1,0 à 1,4 N·m (10 à 14 kg-cm).
   Numéros d'outils :
   - Ⓐ **Faux-arbre (KV38100110)**
   - Ⓑ **Collier (KV38100130)**

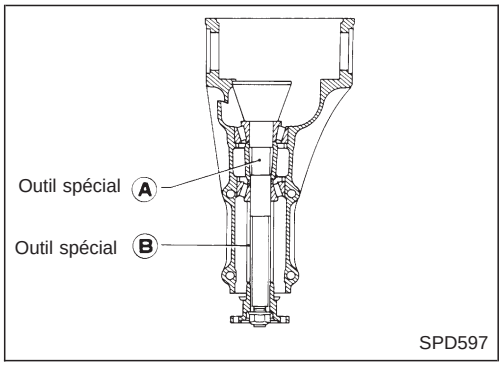

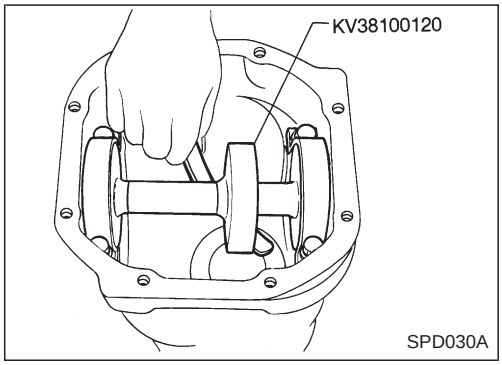

5. Monter l'outil spécial (jauge de hauteur) dans le carter de pont et mesurer le jeu entre la jauge de hauteur et la face du faux-arbre.
6. Substituer ces valeurs dans l'équation pour calculer l'épaisseur de la rondelle.

Si les valeurs représentant H et D′ ne sont pas données, les considérer comme nulles et procéder aux calculs.

T (épaisseur de la rondelle) = N − [(H − D′) x 0,01] + 3,00

Exemple :

N = 0,23
H = 2
D′ = 1

T = N − [(H − D′) x 0,01] + 3,00
= 0,23 − [(2 − 1) x 0,01] + 3,00

(1) H 2
−D′ ..... −1
+1

(2) +1
x 0,01
+0,01

(3) N 0,23
− (+0,01)
0,22

(4) 0,22
+3,00
3,22

∴T = 3,22

7. Sélectionner la rondelle de réglage en hauteur du pignon appropriée.

Simpo PDF Merge and Split Unregistered Version - http://www.simpopdf.com

Hauteur de pignon d’attaque (Suite)

Rondelle de réglage en hauteur du pignon d’attaque :
Consulter les SDS, PD-82.

Si l’on ne peut trouver une rondelle de l’épaisseur désirée, utiliser une rondelle dont l’épaisseur est la plus proche de la valeur calculée.

Exemple :

Valeur calculée . . . T = 3,22 mm
Rondelle à utiliser . . . T = 3,21 mm

Simpo PDF Merge and Split Unregistered Version - http://www.simpopdf.com

Contact entre les dents

Il est nécessaire de vérifier le jeu d'entre-dents, afin de s'assurer que la relation entre la couronne et le pignon d'attaque est correcte.
Des jeux de pignons hypoïdes en position incorrecte pourront être bruyants ou voir leur durée de vie abrégée. On peut assurer un niveau de bruit minimum et une longévité maximum grâce à la vérification du contact entre les dents.

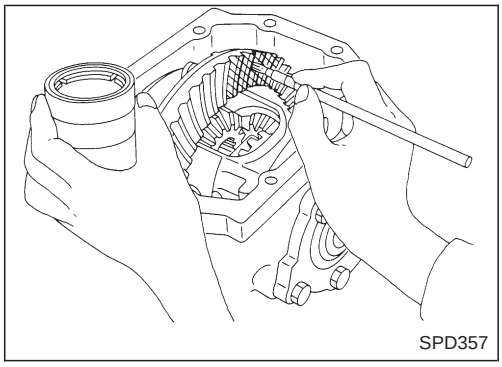
SPD357

1. Nettoyer soigneusement les dents de la couronne et du pignon d'attaque.
2. Appliquer une très légère quantité d'oxyde de fer en poudre et d'huile ou un mélange équivalent sur 3 ou 4 dents du côté entraînement de la couronne.

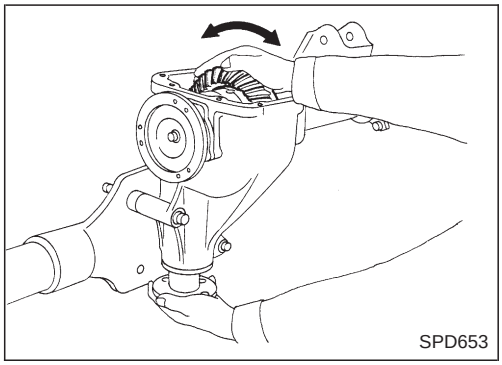
SPD653

3. Maintenir le flasque d'accouplement à l'arrêt et faire tourner la couronne dans les deux sens.

En principe, le contact entre les dents sera correct si l'on a correctement calculé l'épaisseur des cales et si le battement est correct. Néanmoins, il peut arriver qu'il soit nécessaire de suivre une méthode empirique afin d'obtenir un contact correct entre les dents. La surface de contact entre les dents sera la meilleure indication de la justesse du réglage du différentiel.

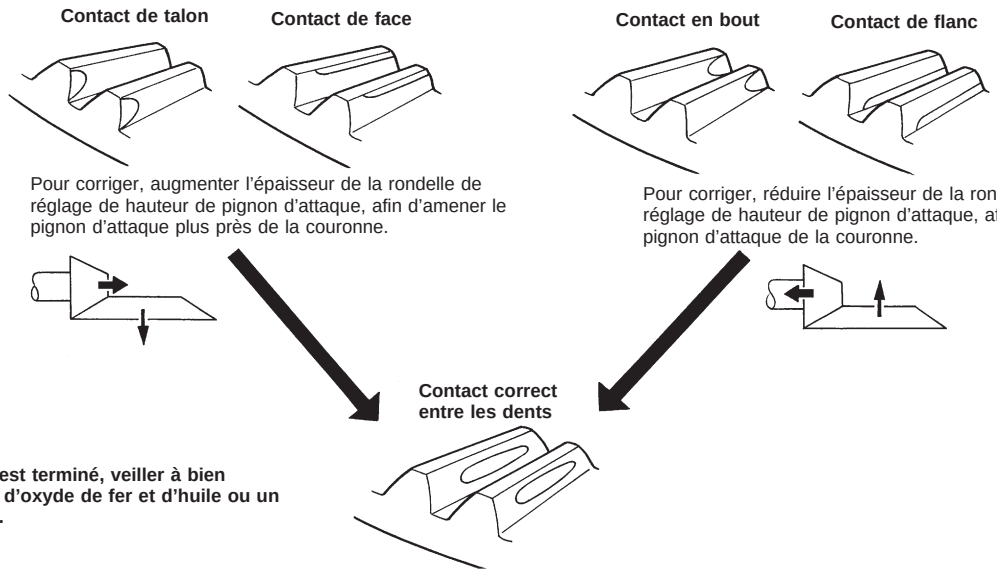

Lorsque le réglage est terminé, veiller à bien essuyer toute trace d'oxyde de fer et d'huile ou un mélange équivalent.

SPD007

Simpo PDF Merge and Split Unregistered Version - http://www.simpopdf.com

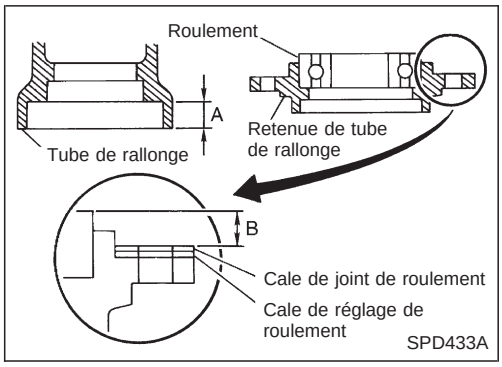

Tube de rallonge et arbre latéral de différentiel

1. Mesurer le jeu axial du roulement d'essieu arrière.
   Jeu axial du roulement d'essieu arrière (A − B) :
   0,1 mm ou moins
   Le jeu axial peut être réglé au moyen d'une cale de réglage de roulement.
   Cales de réglage de roulement disponibles :
   Consulter les SDS, PD-82.

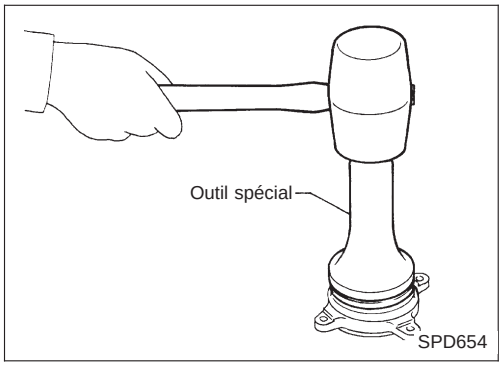

2. Reposer le joint à graisse.

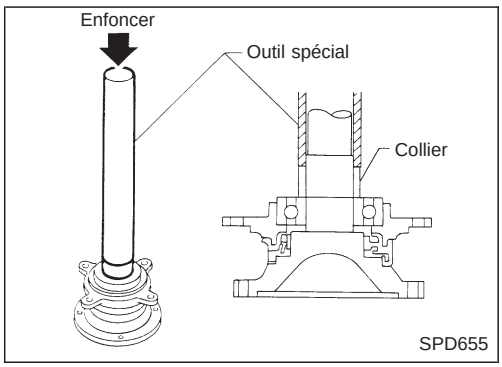

3. Reposer la pièce de retenue du tube de rallonge, le roulement d'essieu arrière et le collier de roulement d'axe d'essieu arrière sur l'arbre latéral de différentiel.
4. Reposer l'ensemble d'arbre latéral de différentiel dans le tube de rallonge.

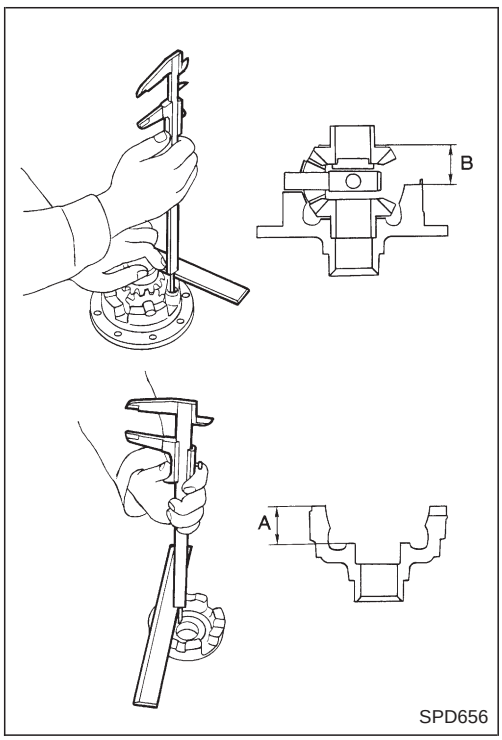

Logement de différentiel

1. Mesurer le jeu entre la rondelle de butée de planétaire et le logement de différentiel.
   Jeu entre rondelle de butée de planétaire et logement de différentiel (A − B) :
   Moins de 0,15 mm
   Le jeu peut être réglé au moyen d'une rondelle de butée de planétaire.
   Rondelles de butée de planétaires disponibles :
   Consulter les SDS, PD-82.
2. Enduire d'huile pour engrenages les surfaces des dents des planétaires et les surfaces de butée, et vérifier si l'ensemble tourne correctement.

Simpo PDF Merge and Split Unregistered Version - http://www.simpopdf.com

Logement de différentiel (Suite)

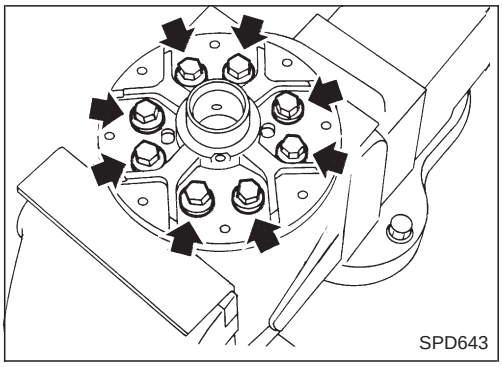
SPD643

3. Reposer les logements de différentiel gauche et droit.

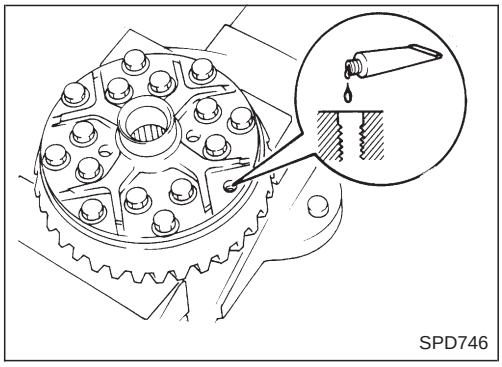
SPD746

4. Poser le logement de différentiel sur la couronne.
5. Appliquer du produit de blocage [Locktite (blocage de goujon) ou un équivalent] sur les boulons de la couronne, et visser les boulons.

Serrer les boulons en diagonale, en tapotant doucement les têtes de boulons avec un marteau.

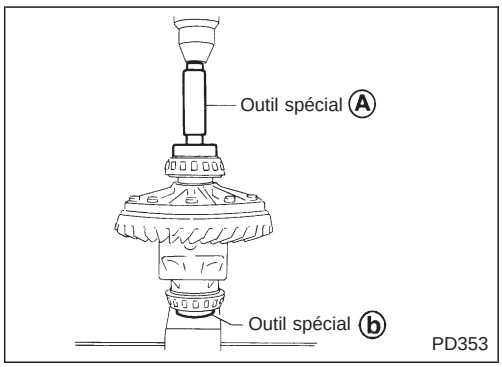

PD353

6. Enfoncer à la presse les cônes internes du roulement latéral dans le logement de différentiel à l'aide des outils spéciaux.
   Numéros d'outils :
   - Ⓐ **ST33230000**
   - Ⓑ **ST33061000**

Carter de pont

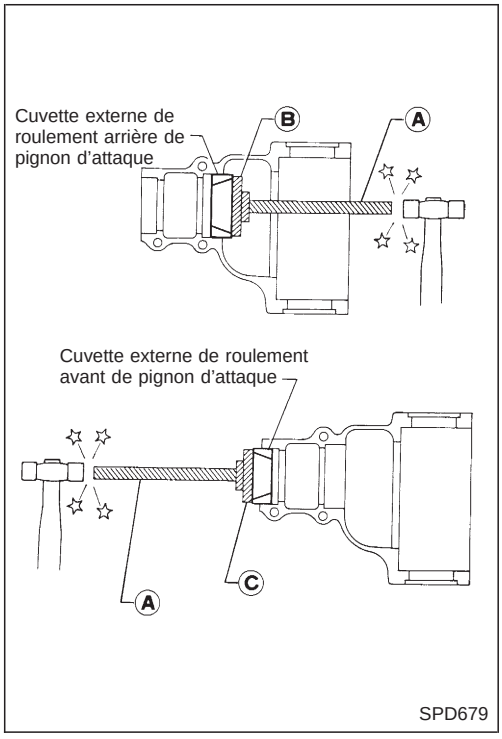

SPD679

1. Enfoncer à la presse les cuvettes externes de roulement avant et arrière à l'aide des outils spéciaux.
   Numéros d'outils :
   - Ⓐ **ST30611000**
   - Ⓑ **ST30621000**
   - Ⓒ **ST30701000**

Simpo PDF Merge and Split Unregistered Version - http://www.simpopdf.com

Carter de pont (Suite)

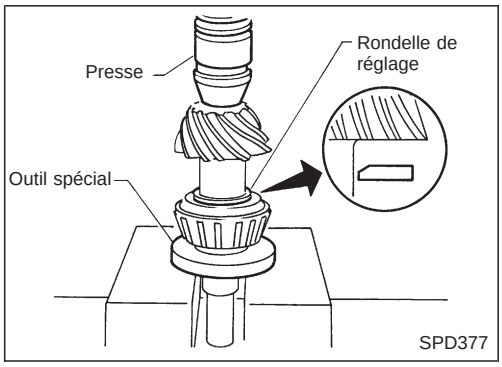

2. Sélectionner une rondelle de réglage de roulement de pignon d'attaque et une rondelle de réglage de hauteur du pignon d'attaque. Consulter le titre ''REGLAGE'', PD-25.
3. Reposer la rondelle de réglage de hauteur de pignon d'attaque sur le pignon d'attaque, et monter à la presse le cône interne de roulement arrière dans ce dernier, à l'aide d'une presse et de l'outil spécial.
   Numéro de l'outil : ST30901000

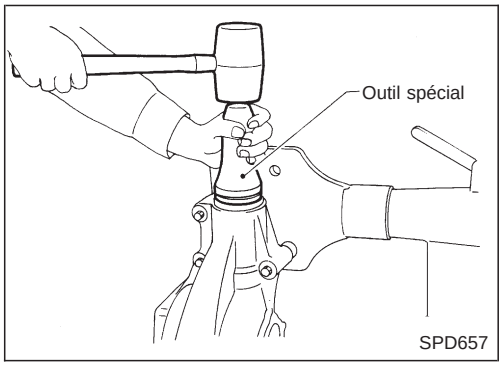

4. Placer le cône interne de roulement avant de pignon d'attaque dans le carter de pont.
5. Remplir le creux entre les lèvres du joint d'huile de graisse à usages multiples. Monter le joint d'huile avant.
   Numéro de l'outil : ST30720000

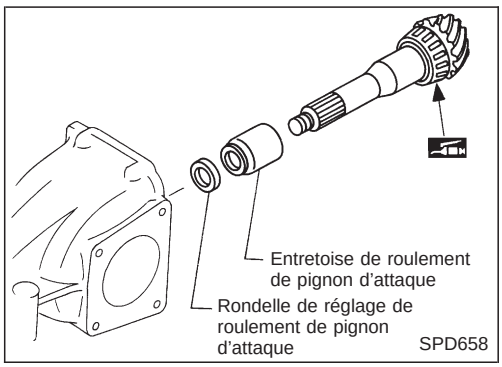

6. Placer l'entretoise de roulement du pignon d'attaque, la rondelle de réglage de roulement du pignon et le pignon d'attaque dans le carter de pont.

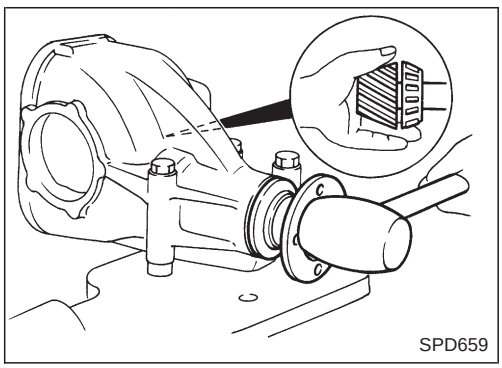

7. Introduire le flasque d'accouplement dans le pignon d'attaque en le tapant légèrement avec un maillet à tête souple.

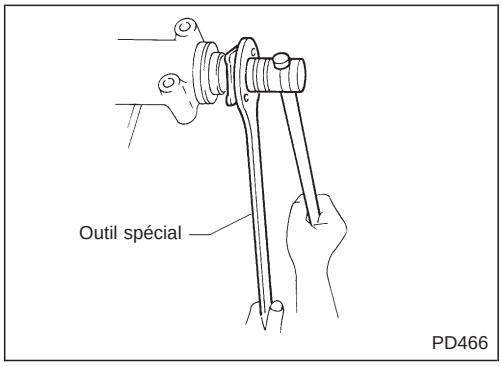

8. Serrer l'écrou de pignon d'attaque au couple spécifié.

Eliminer toutes traces d'huile ou de graisse du filetage du pignon d'attaque et de l'écrou de pignon.

Numéro de l'outil : ST38060002

Simpo PDF Merge and Split Unregistered Version - http://www.simpopdf.com

Carter de pont (Suite)

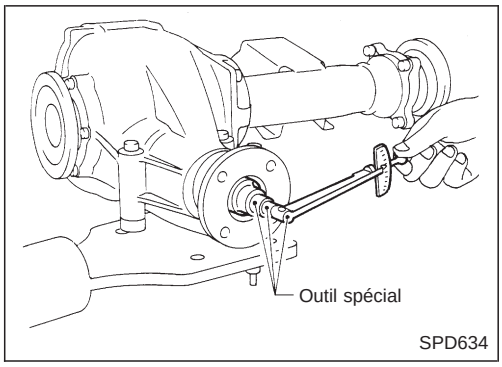

9. Tourner le pignon d'attaque de plusieurs tours dans les deux sens et mesurer la précharge de roulement du pignon.
   Numéro de l'outil : ST3127S000
   Précharge de roulement du pignon (avec le joint d'huile avant) :
   1,1 - 1,7 N·m (11 - 17 kg-cm)
   Précharge de roulement du pignon (sans le joint d'huile avant) :
   1,0 - 1,6 N·m (10 - 16 kg-cm)

Si la précharge de roulement du pignon est hors spécifications, remplacer la rondelle de réglage de roulement de pignon et l'entretoise par des pièces d'épaisseur différentes.

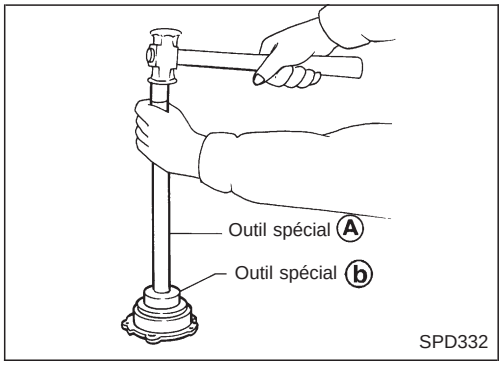

10. Sélectionner une cale de réglage de pièce de retenue latérale. Consulter le titre ''REGLAGE'', PD-24.
11. Monter la cuvette externe de roulement latéral dans la pièce de retenue latérale.
    Numéros d'outils :
    Ⓐ ST30611000
    Ⓑ ST30621000

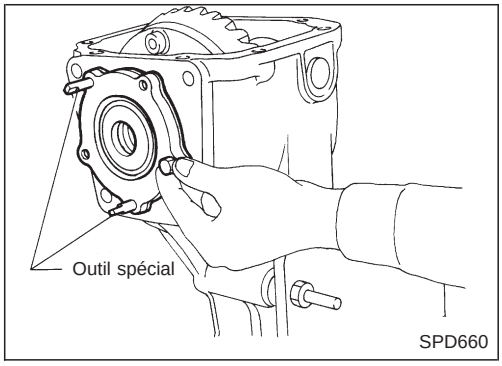

12. Monter le joint d'huile latéral sur la pièce de retenue latérale.
    Numéro de l'outil : ST33270000
13. Monter l'ensemble du logement de différentiel.
14. Placer les cales de réglage de retenue latérale (consulter ''REGLAGE'', PD-24), et le joint torique sur la pièce de retenue latérale, puis monter le tout dans le carter de pont.
    Numéro de l'outil : ST33720000

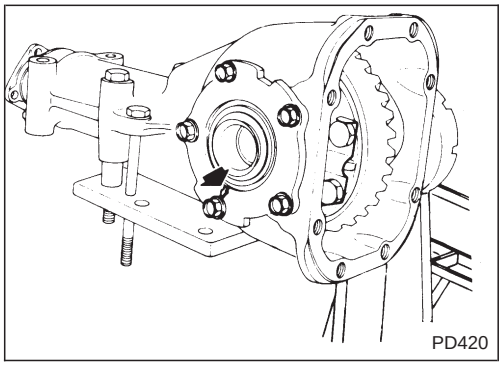

- Aligner les flèches poinçonnées sur la retenue latérale et le carter de pont.

Simpo PDF Merge and Split Unregistered Version - http://www.simpopdf.com

Carter de pont (Suite)

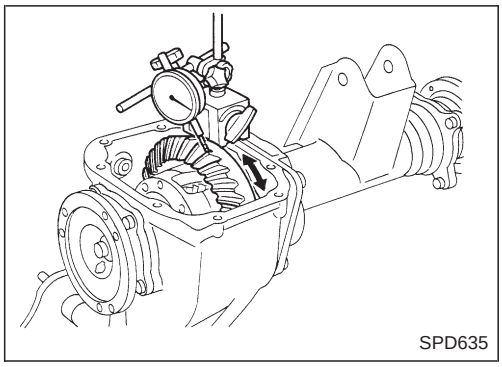
SPD635

15. Mesurer le battement entre la couronne et le pignon d'attaque avec un comparateur à cadran.
    Battement entre la couronne et le pignon d'attaque :
    0,13 - 0,18 mm
- Si le battement est trop petit, diminuer l'épaisseur de la cale droite et augmenter l'épaisseur de la cale gauche d'une quantité égale.
  Si le battement est trop grand, inverser la procédure ci-dessus.

Ne jamais changer la quantité totale de cales d'épaisseur, car ceci changera la précharge des roulements.

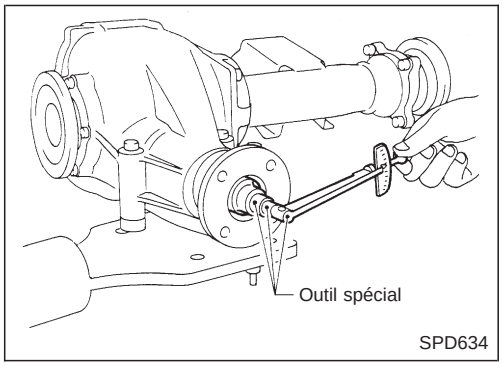

SPD634

16. Contrôler la précharge totale à l'aide de l'outil spécial.

Lors du contrôle de la précharge, faire tourner le pignon d'attaque plusieurs fois dans les deux sens pour asseoir les rouleaux de roulement.

Numéro de l'outil : ST3127S000
Précharge totale :
1,2 - 2,3 N·m
(12 - 23 kg-cm)

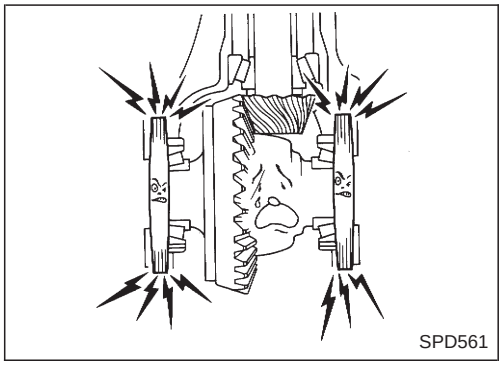
SPD561

- Si la précharge est trop grande, ajouter la même épaisseur de cale de chaque côté.
- Si la précharge est trop petite, retirer la même épaisseur de cale de chaque côté.

Ne jamais rajouter ou enlever un nombre différent de cales d'épaisseur de chaque côté, car ceci changera le battement entre la couronne et le pignon d'attaque.

17. Vérifier à nouveau le battement entre la couronne et le pignon d'attaque car celui-ci peut changer avec l'augmentation ou la diminution de l'épaisseur des cales.

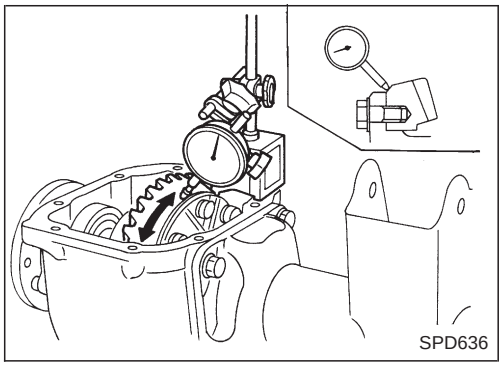
SPD636

18. Contrôler le voile de la couronne à l'aide d'un comparateur à cadran.
    Limite de voile :
    0,05 mm
- Si le battement varie de manière excessive en plusieurs endroits, les variations proviennent parfois de la présence de corps étrangers entre la couronne et le logement de différentiel.
- Si le battement varie fortement alors que le voile de la couronne se trouve dans les limites spécifiées, il faut remplacer le jeu de pignons hypoïdes ou le logement de différentiel.

19. Contrôler le contact entre les dents. Consulter le titre ''REGLAGE'', PD-28.
20. Remonter le couvercle arrière et le joint plat.

Simpo PDF Merge and Split Unregistered Version - http://www.simpopdf.com

Carter de pont (Suite)

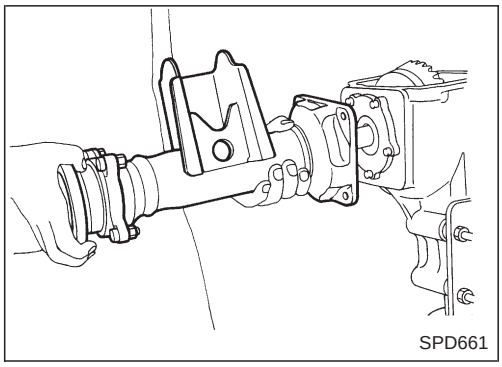
SPD661

21. Reposer le tube de rallonge et l’arbre latéral de différentiel complet.

Simpo PDF Merge and Split Unregistered Version - http://www.simpopdf.com

Modèle à 2 satellites

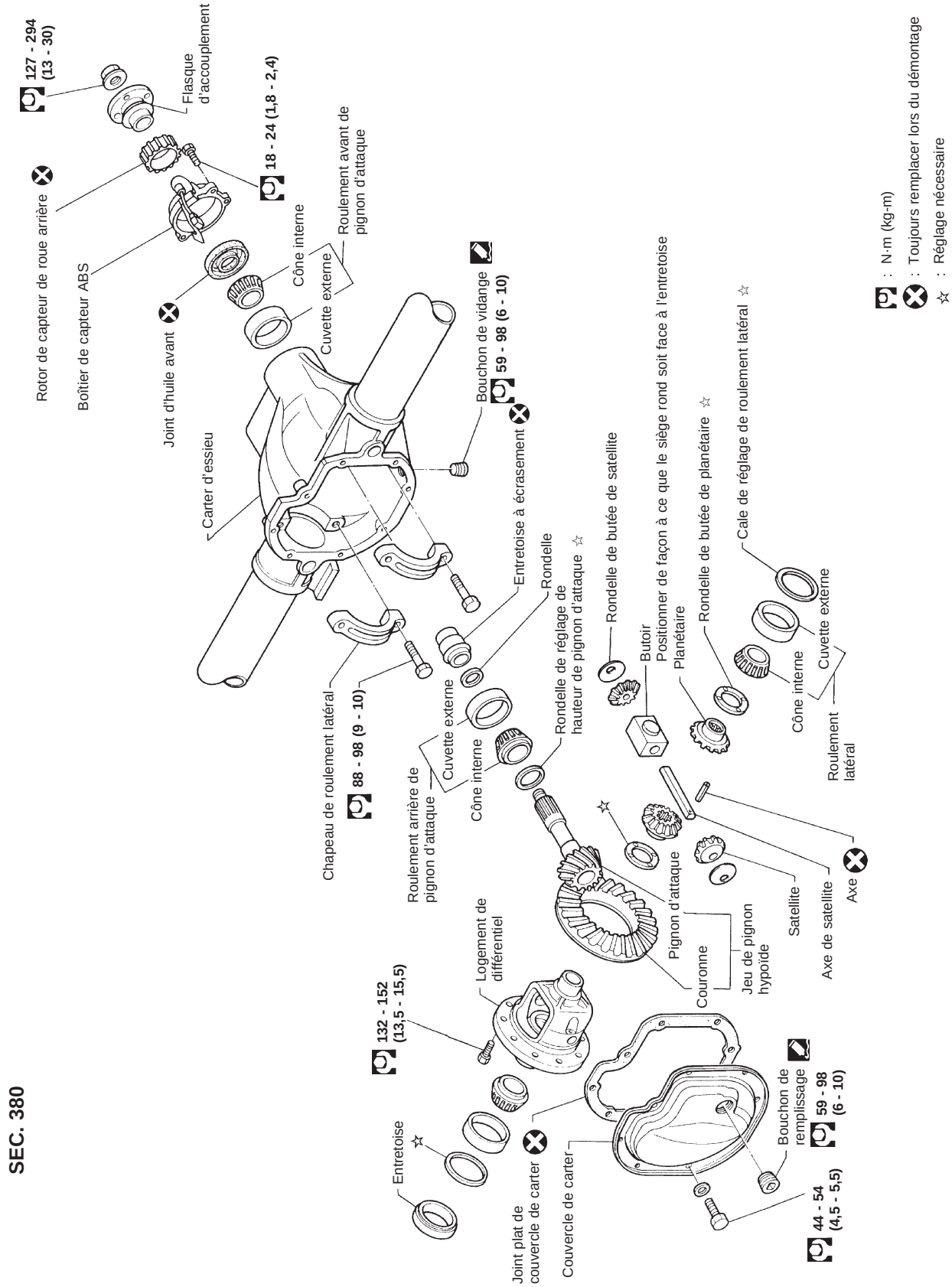

SEC. 380

SPD425A

Simpo PDF Merge and Split Unregistered Version - http://www.simpopdf.com

Modèle à 4 satellites

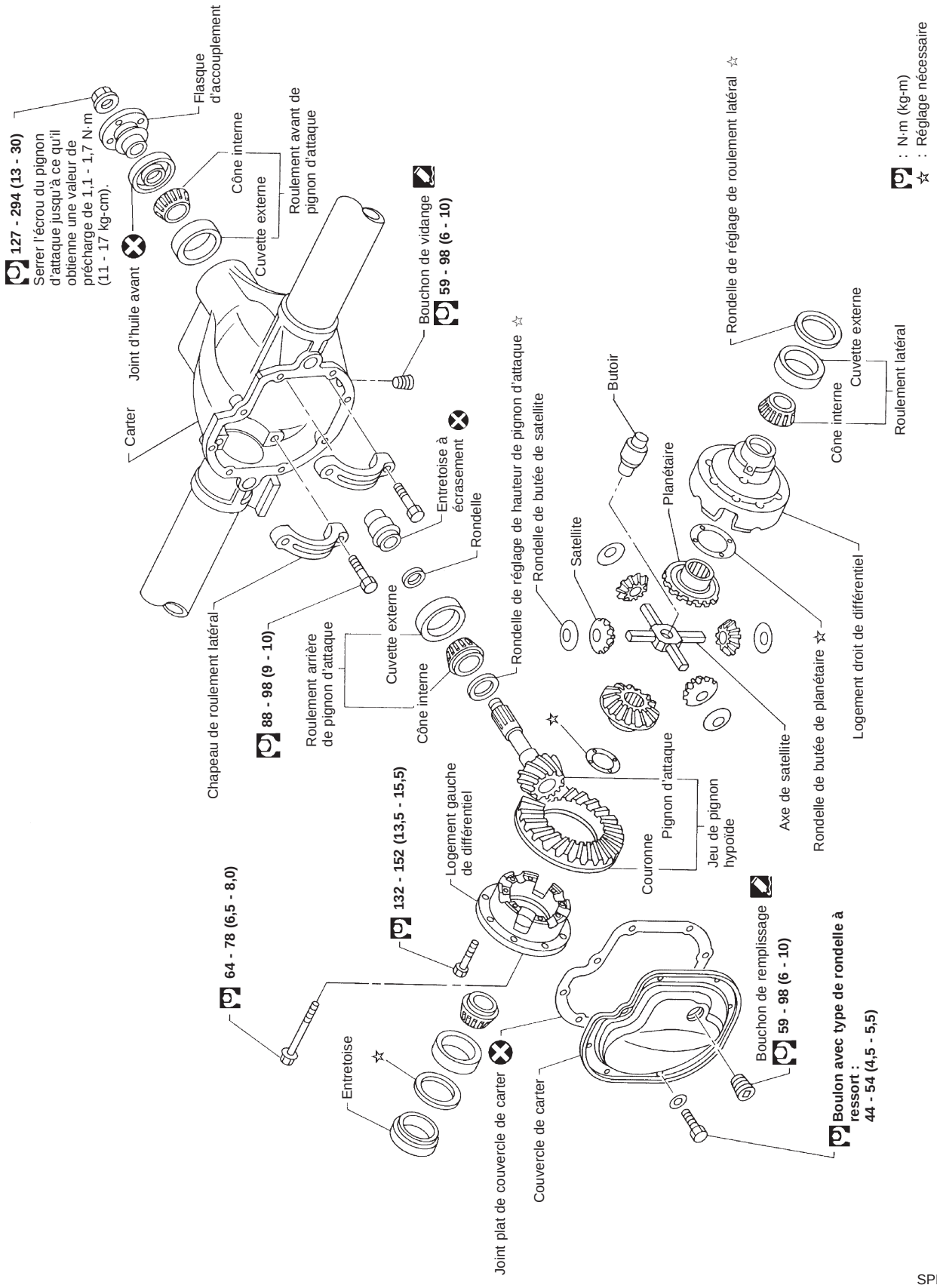

SPD426A

Simpo PDF Merge and Split Unregistered Version - http://www.simpopdf.com

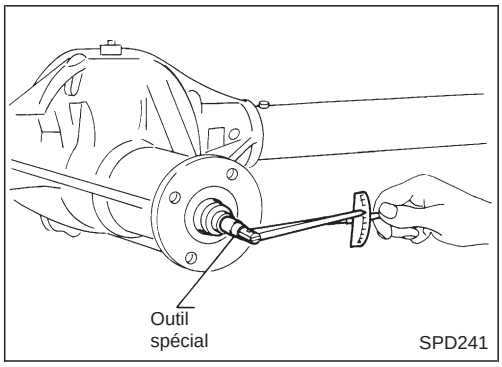

Inspection préalable

Avant de démonter le pont, il faut effectuer l'inspection ci-dessous.

- Précharge totale

a. Tourner le pignon d'attaque de plusieurs tours dans les deux sens pour asseoir les rouleaux de roulement.
b. Contrôler la précharge totale à l'aide de l'outil spécial.
   Numéro de l'outil : ST3127S000
   Précharge totale :
   1,2 - 2,3 N·m
   (12 - 23 kg-cm)

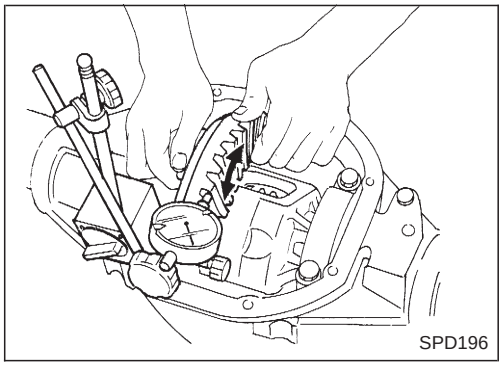

- Battement entre la couronne et le pignon d'attaque.
  Vérifier le battement de la couronne à l'aide d'un comparateur à cadran, à plusieurs endroits.
  Battement entre la couronne et le pignon d'attaque :
  0,13 - 0,18 mm

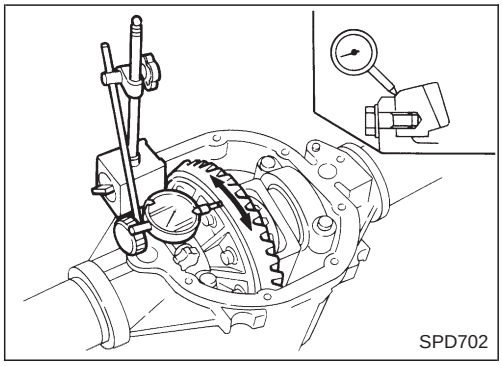

- Voile de la couronne
  Contrôler le voile de la couronne à l'aide d'un comparateur à cadran.
  Limite de voile : 0,05 mm

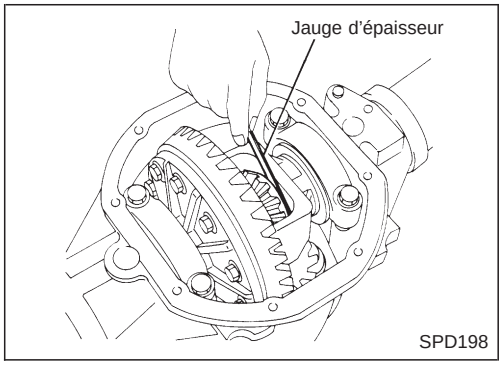

- Contact entre les dents
  Contrôler le contact entre les dents. Consulter le titre ''REGLAGE'', PD-52.
- Battement entre les planétaires et les satellites
  Mesurer le jeu entre la rondelle de butée de planétaire et le logement de différentiel à l'aide d'un calibre d'épaisseur.
  Jeu entre rondelle de butée de planétaire et logement de différentiel :
  Moins de 0,15 mm

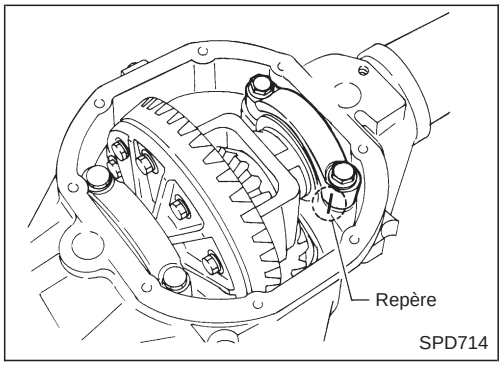

Boîtier de différentiel

1. Déposer le couvercle arrière et le joint plat du couvercle arrière.
2. Tracer des marques de repère sur un côté du chapeau de roulement latéral avec de la peinture ou un poinçon pour s'assurer qu'il est remis en position adéquate lors du remontage.

Les chapeaux de roulement sont alésés en ligne durant l'usinage et doivent être reposés dans leur position d'origine.

Simpo PDF Merge and Split Unregistered Version - http://www.simpopdf.com

Boîtier de différentiel (Suite)

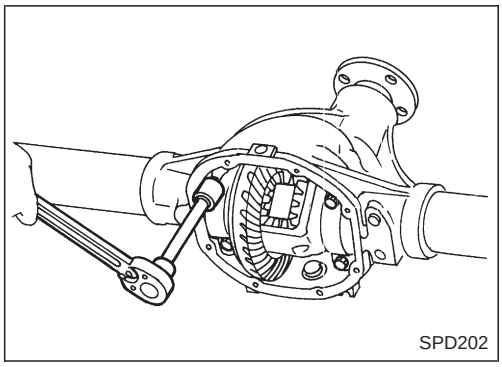
SPD202

3. Déposer les chapeaux des roulements latéraux.

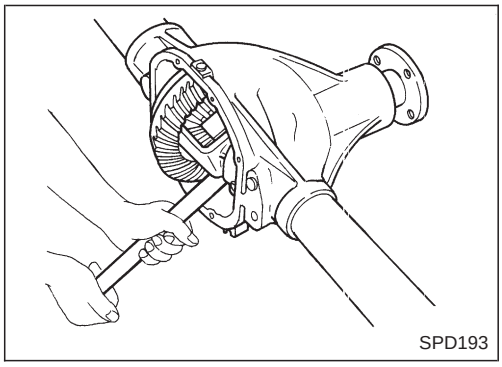
SPD193

4. Déposer l'ensemble du logement de différentiel avec un pied de biche.

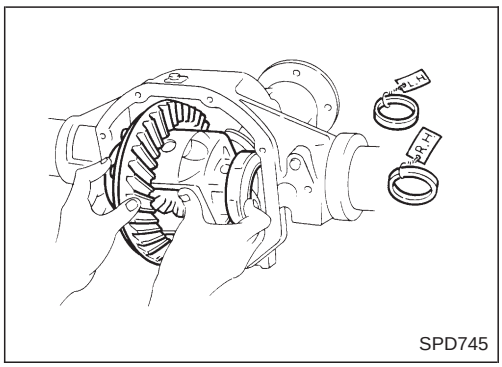

SPD745

Conserver les cuvettes externes du roulement latéral avec leurs cônes internes respectifs – ne jamais les intervertir.

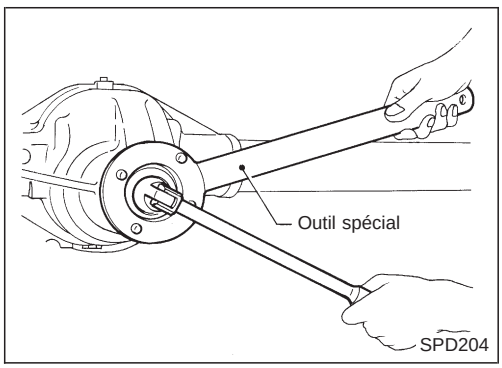

SPD204

5. Déposer l'écrou de pignon d'attaque avec un outil spécial.
   Numéro de l'outil : ST38060002

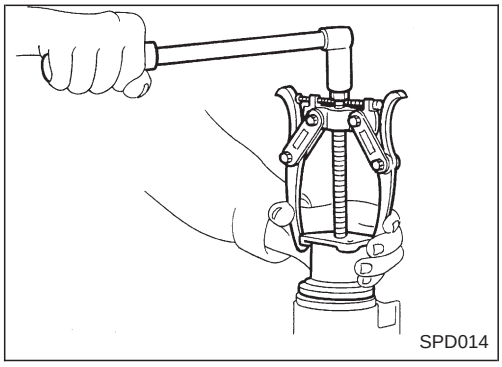
SPD014

6. Déposer le flasque d'accouplement avec un extracteur.

Simpo PDF Merge and Split Unregistered Version - http://www.simpopdf.com

Boîtier de différentiel (Suite)

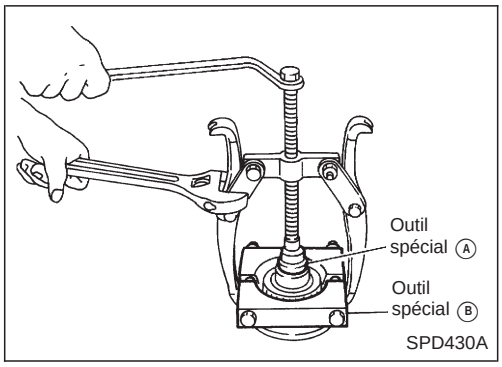

7. Déposer le rotor de capteur avec les outils spéciaux (modèles avec ABS).
   Numéros des outils :
   - Ⓐ **ST33061000**
   - Ⓑ **ST30031000**
8. Déposer le boîtier de capteur ABS.

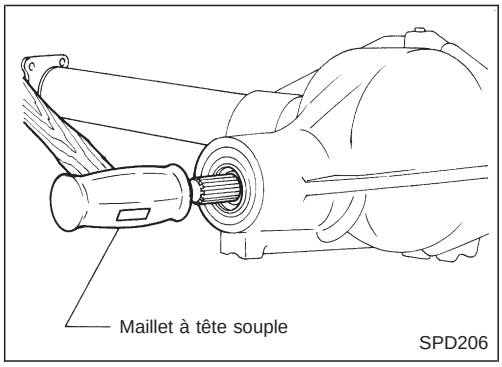

9. Déposer le pignon d'attaque avec un maillet à tête souple.
10. Déposer le joint d'huile avant et le cône interne de roulement avant du pignon d'attaque.

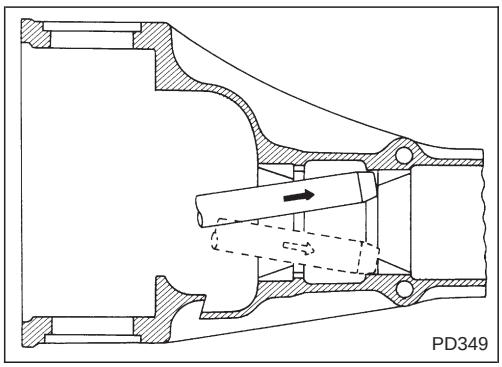

11. Déposer les cuvettes externes de roulement du pignon avec un chassoir en bronze.

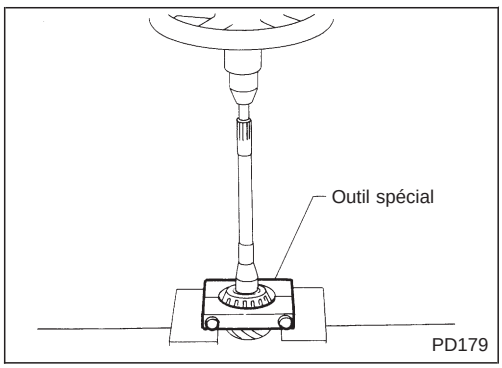

12. Déposer le cône interne de roulement arrière du pignon et la rondelle de réglage de hauteur du pignon.
    Numéro de l'outil : ST30031000

Simpo PDF Merge and Split Unregistered Version - http://www.simpopdf.com

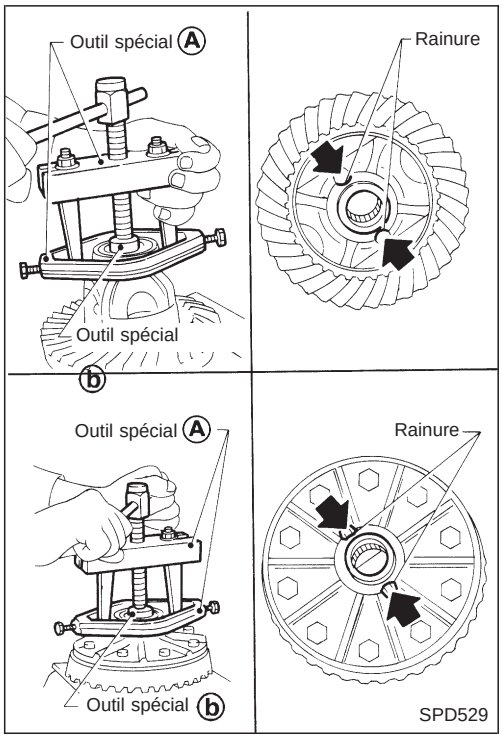

Logement de différentiel

1. Déposer les cônes internes de roulements latéraux.

Pour éviter d'endommager les roulements, introduire les griffes de l'extracteur dans les rainures.

Numéros d'outils :

Ⓐ ST33051001
Ⓑ ST33061000

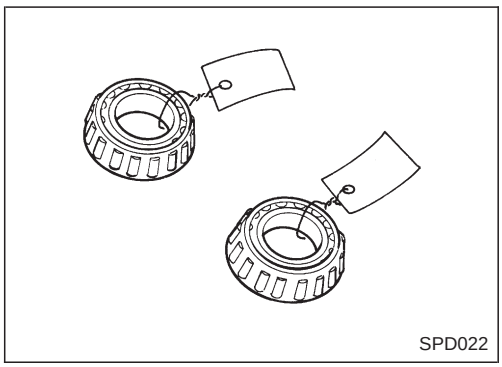

Veiller à ne pas confondre les pièces gauche et droite.

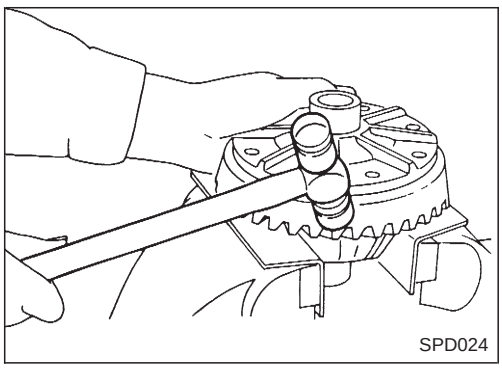

2. Desserrer en diagonale les boulons de la couronne.
3. Frapper la couronne avec un maillet à tête souple pour la détacher du logement de différentiel.

Frapper de manière régulière sur toute la périphérie, afin d'éviter que la couronne ne se voile.

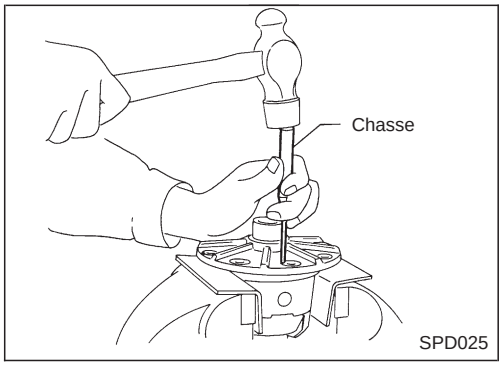

4. Chasser la goupille d'arrêt d'axe de satellite par le côté couronne.

La goupille d'arrêt est matée à hauteur de la bouche du logement de différentiel.

Simpo PDF Merge and Split Unregistered Version - http://www.simpopdf.com

Couronne et pignon d'attaque

Contrôler les dents de la couronne pour voir si elles ne sont pas ébréchées, fêlées ou rayées. Si l'on découvre une détérioration quelconque, remplacer la couronne et le pignon d'attaque comme un ensemble (jeu de pignons hypoïdes).

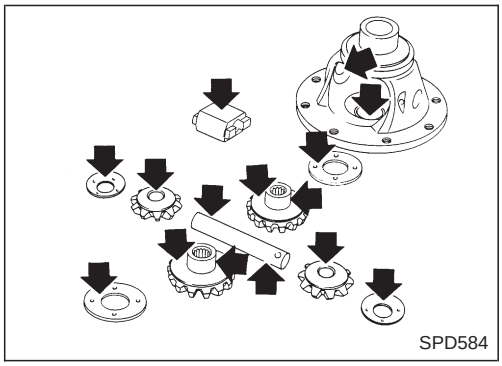
SPD584

Ensemble de logement de différentiel

Contrôler les surfaces d'appui du logement de différentiel, des planétaires, des satellites, de l'axe de satellite, du butoir et des rondelles de butée.

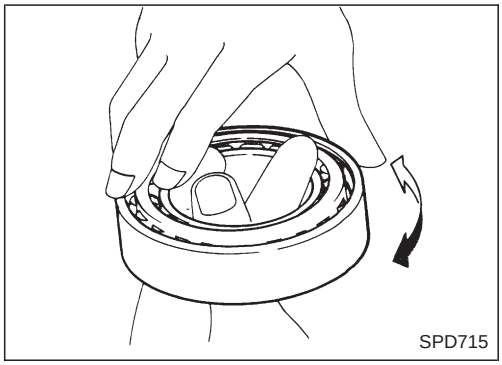
SPD715

Roulements

1. Nettoyer soigneusement les roulements.
2. Vérifier si les roulements ne sont pas usés, rayés, piqués ou ébréchés.
   Vérifier si les roulements à rouleaux coniques tournent librement. S'ils sont endommagés, remplacer comme un ensemble la cuvette externe et le cône interne.

Simpo PDF Merge and Split Unregistered Version - http://www.simpopdf.com

Nombre de disques et plateaux (un côté)

Modèle	C200
Disque de friction	6
Plateau de friction	6
Plaque à ressort	1

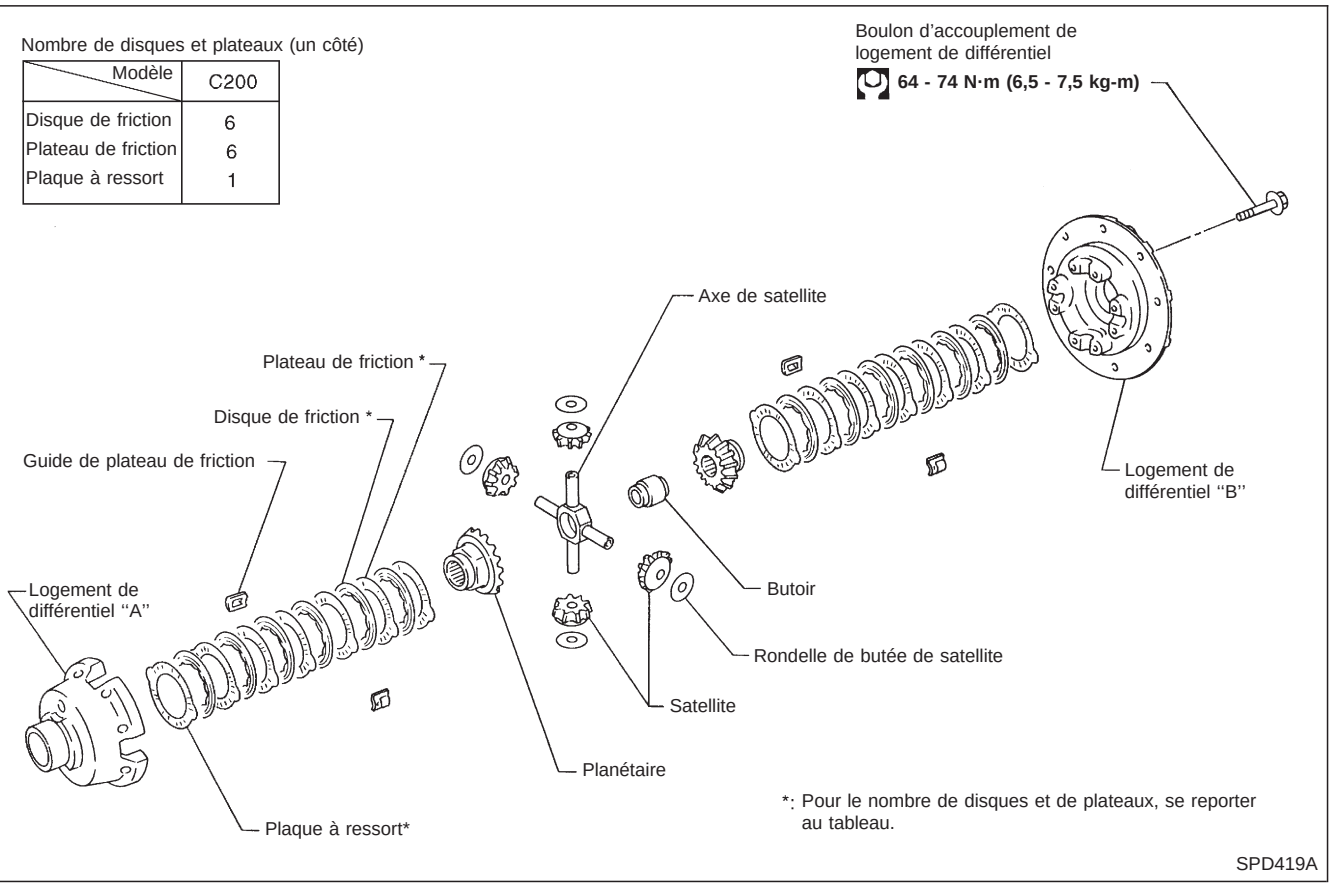

ATTENTION :
Ne pas faire tourner le moteur lorqu'une seule roue (arrière) est décollée du sol.

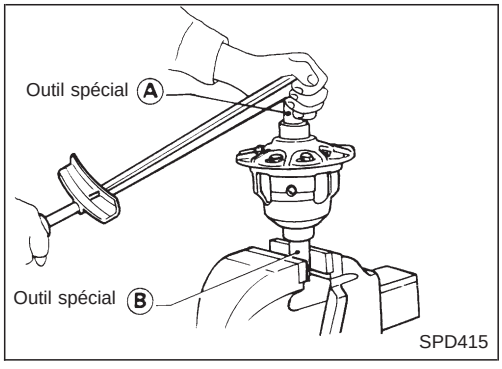

Préparation pour démontage

VERIFICATION DU COUPLE DE DIFFERENTIEL

Mesurer le couple de différentiel avec les outils spéciaux.
S'il n'est pas dans les limites spécifiées, inspecter les composants du différentiel à glissement limité.

Couple de différentiel :
88 - 108 N·m
(9,0 - 11,0 kg-m)
Numéros d'outils :
(A) KV38105110
(B) KV38105120

Simpo PDF Merge and Split Unregistered Version - http://www.simpopdf.com

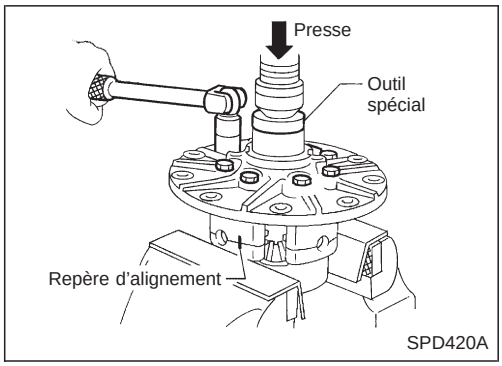

Démontage

1. Déposer les boulons du coupleur à la presse.
   Numéro de l'outil : ST33081000
2. Séparer les logements de différentiel A et B.
   Sortir les composants internes (disques et plateaux, etc.).

Tracer des repères sur les logements de différentiel de manière à pouvoir les réinstaller dans leur position d'origine.

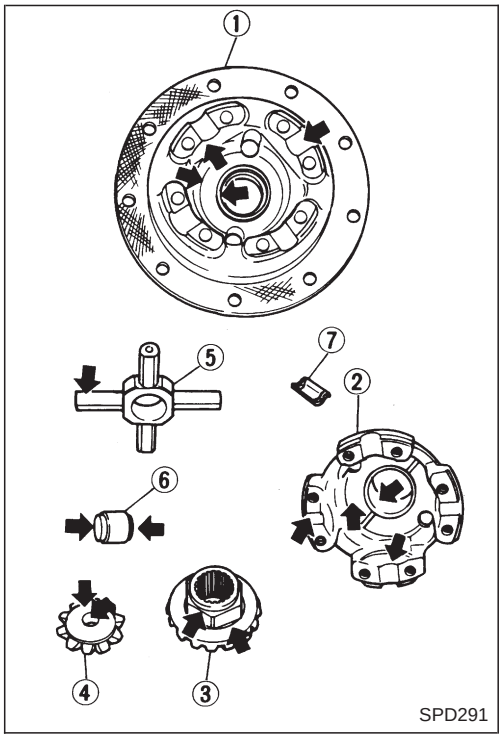

Inspection

SURFACES DE CONTACT

1. Nettoyer les pièces démontées dans un bain de solvant approprié et les sécher à l'air comprimé.
2. Si les surfaces suivantes présentent des traces de bavures ou de rayures, les poncer avec une pierre à fusil.
   ① Logement de différentiel B
   ② Logement de différentiel A
   ③ Planétaire
   ④ Satellite
   ⑤ Axe de satellite
   ⑥ Butoir
   ⑦ Guide de plateau de friction

DISQUE ET PLATEAU

1. Nettoyer les disques et les plateaux dans un bain de solvant approprié et les sécher à l'air comprimé.
2. Vérifier si les disques et les plateaux ne sont pas usés, ébréchés et qu'ils ne présentent pas de bavures.

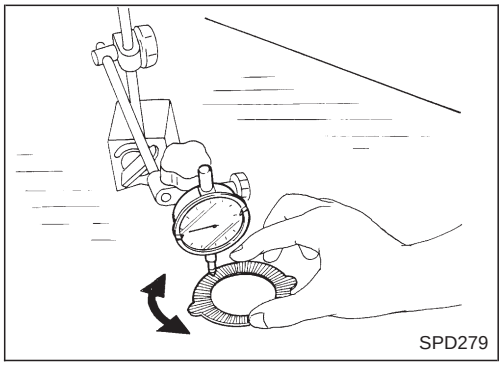

3. Vérifier si les disques ou plateaux de friction ne sont pas voilés.
   Voile maximum toléré :
   0,08 mm
   Si la limite est dépassée, remplacer par un nouveau disque ou plateau pour éviter que l'embrayage ne patine ou ne colle.

Simpo PDF Merge and Split Unregistered Version - http://www.simpopdf.com

Inspection (Suite)

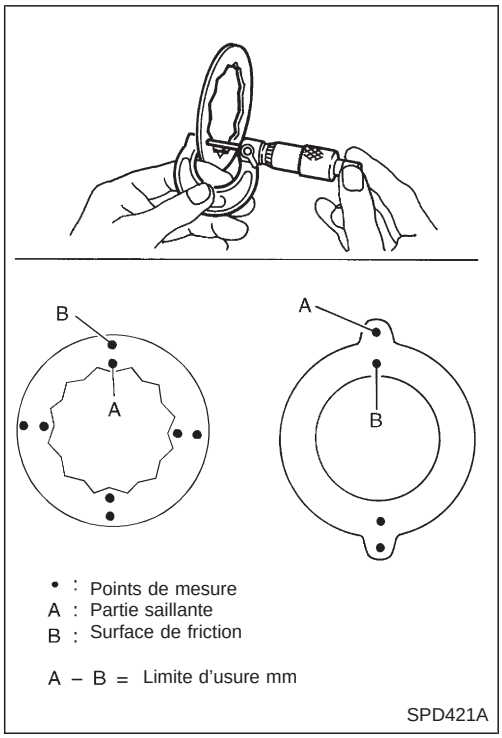

4. Mesurer les surfaces de friction et les parties saillantes des disques de friction, des plateaux de friction et de la plaque à ressort. Si l'une des pièces est usée au-delà de la limite spécifiée, la remplacer avec une pièce neuve ayant la même épaisseur que la partie protubérante.
   Limite d'usure :
   0,1 mm ou moins

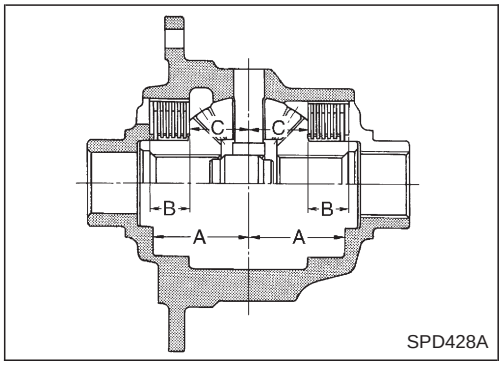

Réglage

JEU AXIAL ENTRE DISQUE DE FRICTION ET PLATEAU DE FRICTION

Le jeu axial des disques et plateaux de friction peut être calculé à l'aide de l'équation suivante et doit être réglé dans la plage suivante.
Le réglage peut se faire en choisissant un disque de friction ayant deux épaisseurs différentes.

Jeu axial E :
0,05 - 0,15 mm

E = A − (B + C)

A : Longueur de la surface de contact du logement de différentiel par rapport au fond intérieur du logement de différentiel.
B : Epaisseur totale des disques de friction, des plateaux de friction et de la plaque à ressort d'un côté du logement de différentiel.
C : Longueur de la surface de contact du logement de différentiel par rapport au côté arrière du planétaire de différentiel

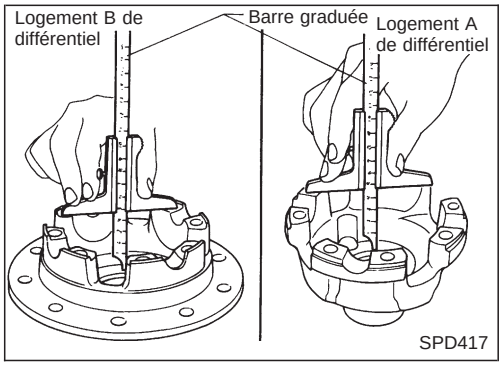

1. Valeurs de mesure de ''A''.
   Longueur standard A :
   49,50 - 49,55 mm

Simpo PDF Merge and Split Unregistered Version - http://www.simpopdf.com

Réglage (Suite)

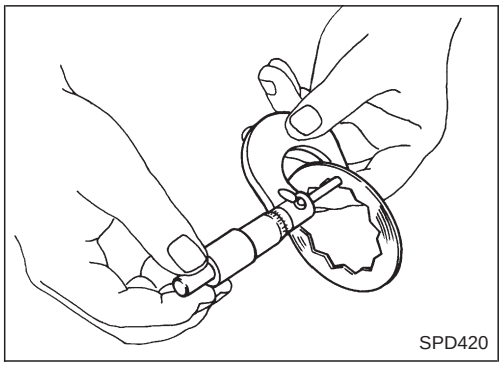
SPD420

2. Mesurer l'épaisseur de chaque disque et plateau.
   Epaisseur totale "B" :
   19,24 - 20,36 mm
   Nombre de disques et plateaux (un côté) :
   Disques de friction 6
   Plateaux de friction 6
   Plaque à ressort 1

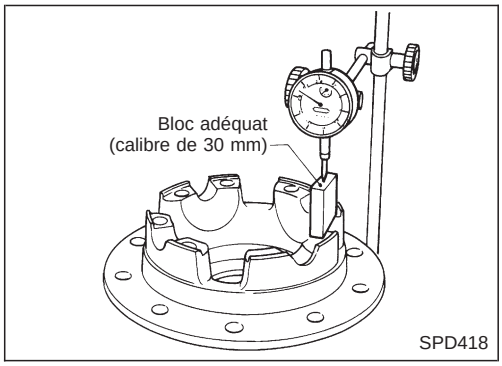

SPD418

3. Mesurer les valeurs de "C".
a. Monter un comparateur à cadran sur la plaque de base.
b. Placer le logement de différentiel B sur la plaque de base, et reposer le calibre sur le logement B.

Etalonner ensuite le comparateur en plaçant son pointeau sur le calibre.

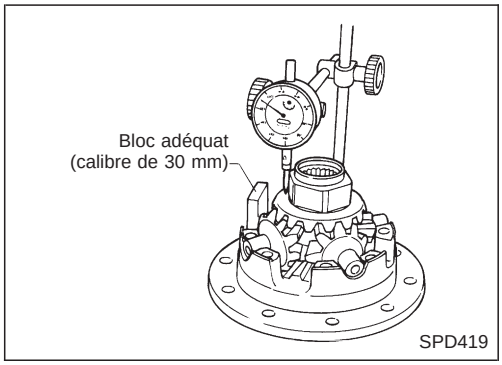

SPD419

c. Reposer les satellites, les planétaires et l'axe de satellite dans le logement de différentiel B.
d. Placer le pointeau du comparateur à cadran sur le planétaire, et lire la mesure.

Exemple :

E = A − D
= A − (B + C)
= 0,05 à 0,15 mm
A = 49,52 mm
B = 19,45 mm
C = 29,7 mm
D = B + C

B . . .	19,45
+ C . . .	29,7
	49,15

E = A − D

A . . .	49,52
−D . . .	49,15
	0,37

D'après l'équation ci-dessus, le jeu axial de 0,37 mm dépasse la limite spécifiée entre 0,05 et 0,15 mm.
Sélectionner des disques et plateaux appropriés pour assurer un réglage correct.

Simpo PDF Merge and Split Unregistered Version - http://www.simpopdf.com

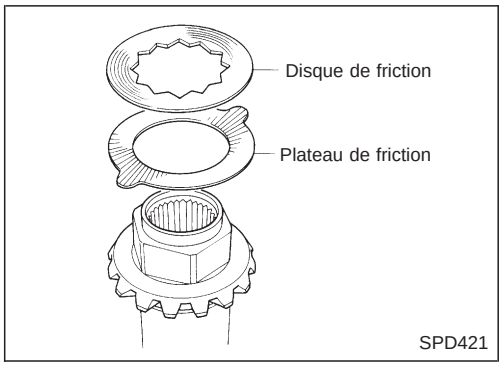

Remontage

Avant d'assembler les disques et les plateaux, les lubrifier dans un bain d'huile pour différentiel à glissement limité.

1. Faire alterner les plateaux et les disques de friction en observant les numéros spécifiés à l'arrière du planétaire.

Toujours positionner le plateau de friction en premier lieu sur l'arrière du planétaire.

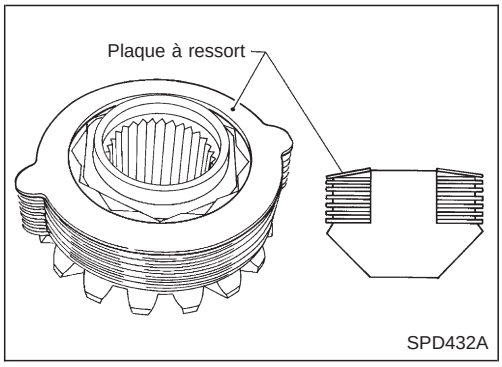

2. Reposer la plaque à ressort.

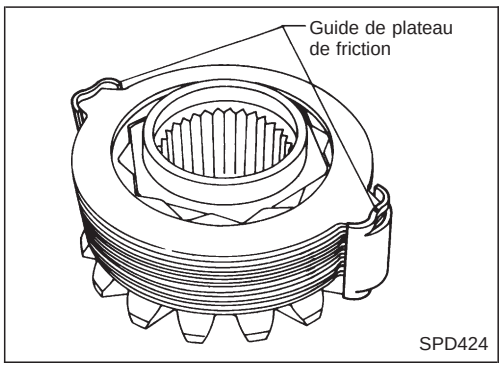

3. Reposer les guides de plateaux de friction.

Aligner correctement les protubérances des plateaux de friction et enduire de graisse les surfaces internes des guides de plateaux de friction afin de les empêcher de tomber.

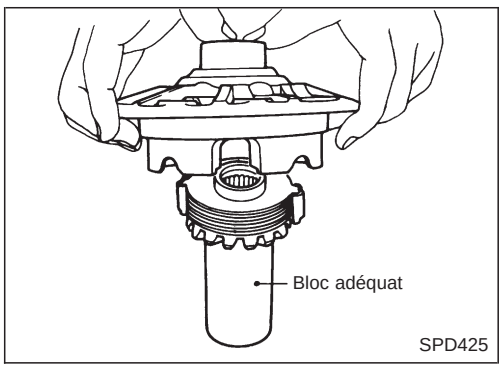

4. Monter le logement de différentiel B sur l'ensemble constitué par les planétaires, les disques, les plateaux et le guide de plateau de friction.

- **Reposer le support de différential B en soutenant les guides de plateaux de friction avec le majeur par l'orifice d'huile du logement de différentiel.**
- **Veiller à ne pas détacher la plaque à ressort de la partie héxagonale du planétaire.**

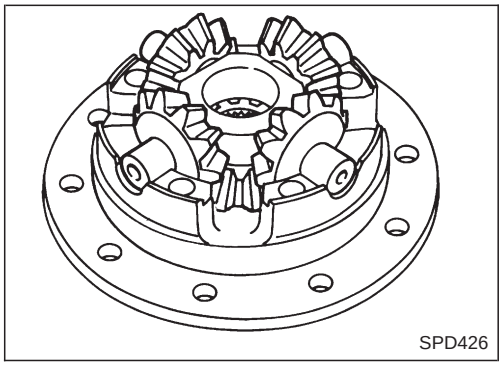

5. Monter les satellites et l'axe de satellite dans le logement de différentiel B.

Simpo PDF Merge and Split Unregistered Version - http://www.simpopdf.com

Remontage (Suite)

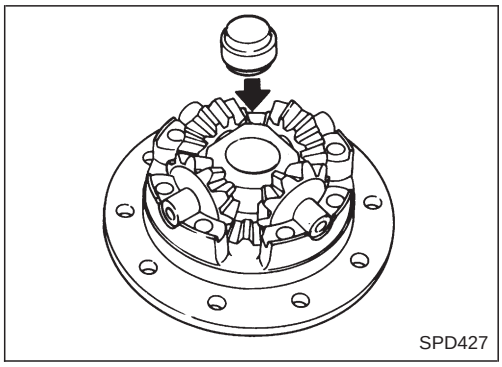
SPD427

6. Reposer le butoir.

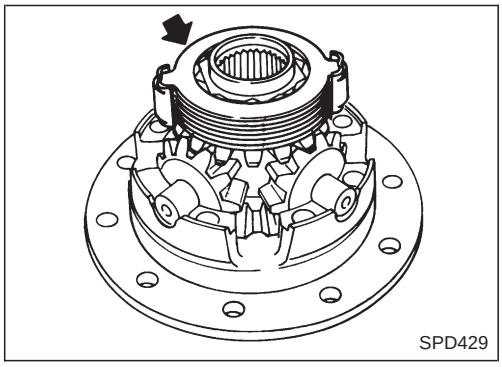
SPD429

7. Reposer le planétaire sur les satellites.
8. Reposer chaque disque et plateau.

Suivre la même procédure que celle décrite aux étapes 1 à 3.

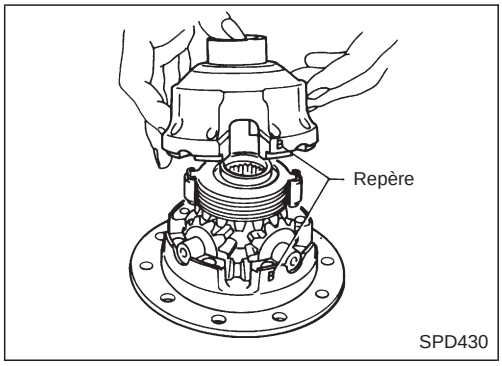

SPD430

9. Reposer le logement de différentiel A.

Positionner les logements de différentiel A et B en alignant les repères sur les logements.

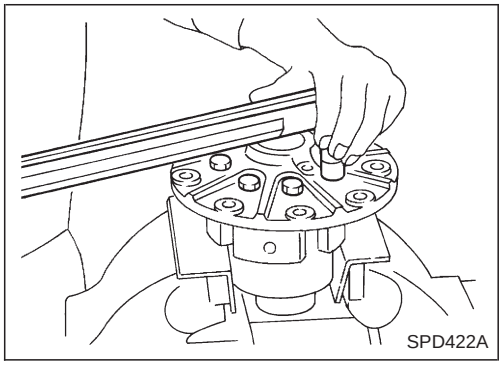
SPD422A

10. Serrer les boulons du logement de différentiel.
11. Placer la couronne sur le logement de différentiel et reposer des boulons neufs.

Serrer les boulons en diagonale, en tapotant doucement les têtes de boulons avec un marteau.

12. Reposer le cône interne de roulement latéral.
13. Vérifier le couple de différentiel.

Simpo PDF Merge and Split Unregistered Version - http://www.simpopdf.com

Pour que le pont puisse fonctionner de façon silencieuse et fiable, les cinq réglages suivants doivent être exécutés correctement.

1. Précharge du roulement latéral.
2. Hauteur du pignon d'attaque.
3. Précharge de roulement du pignon. Consulter le titre ''REMONTAGE'', PD-56.
4. Battement entre la couronne et le pignon. Consulter le titre ''REMONTAGE'', PD-57.
5. Jeu d'entre-dents de la couronne et du pignon.

Précharge de roulement latéral

Une sélection de cales de précharge de roulement latéral de support de différentiel est utile pour mener à bien cette procédure.

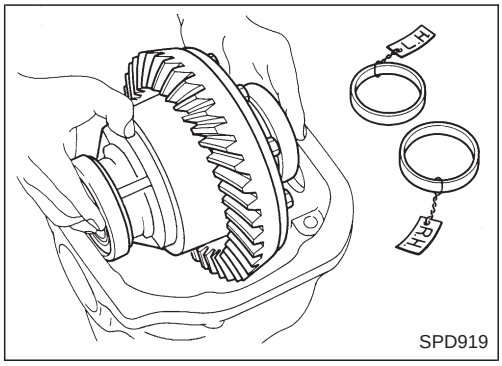

SPD919

1. S'assurer que toutes les pièces sont propres. S'assurer également que les roulements ont bien été lubrifiés avec de l'huile fluide ou de l'huile pour boîte automatique de type ''DEXRON™''.
2. Mettre en place le boîtier de différentiel, contenant les roulements latéraux et les cuvette de roulement, dans le carter de pont.

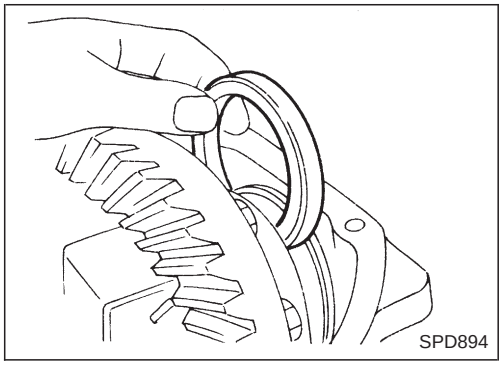
SPD894

3. Mettre l'entretoise de roulement latéral en place.

ATTENTION :
L'entretoise de roulement latéral est placée sur la droite ou sur la gauche en fonction du rapport de la vitesse du pont. Veiller à la replacer du bon côté.

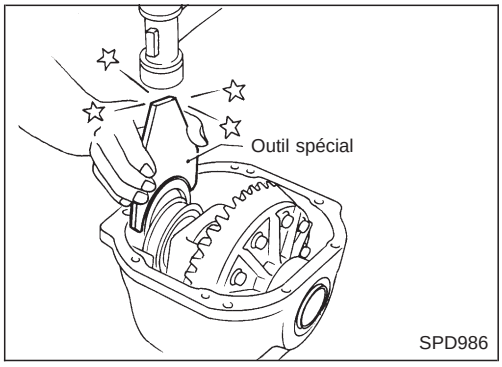

SPD986

4. Utiliser l'outil spécial pour placer les cales d'origine de précharge de roulement latéral du support de différentiel sur l'extrémité du support, du côté opposé à la couronne.
   Numéro de l'outil : KV38100600

Simpo PDF Merge and Split Unregistered Version - http://www.simpopdf.com

Précharge de roulement latéral (Suite)

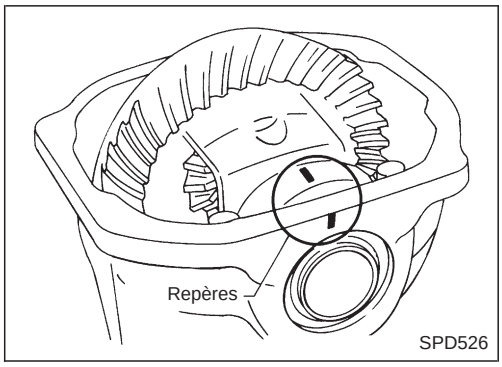

5. Placer les chapeaux des roulements latéraux en position correcte et serrer au couple prescrit les boulons de serrage des chapeaux de roulements.
   Spécification :
   88 - 98 N·m
   (9,0 - 10,0 kg-m)
6. Tourner le support de différentiel plusieurs fois pour asseoir les roulements.

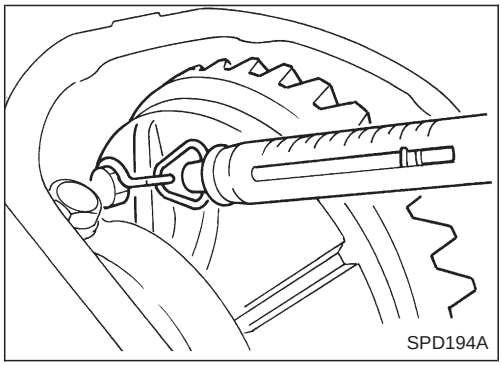

7. Mesurer le couple de rotation du support de différentiel avec un dynamomètre au niveau du boulon de serrage de la couronne.
   Spécification :
   34,3 - 39,2 N (3,5 - 4,0 kg) de force de traction au boulon de couronne

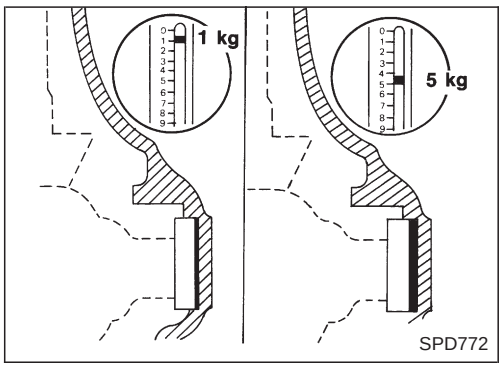

8. Si le couple de rotation n'est pas compris dans les spécifications, le corriger de la manière suivante :
- Si le couple de rotation est inférieur à la valeur spécifiée, installer des rondelles plus épaisses.
- Si le couple de rotation est supérieur à la valeur spécifiée, installer des rondelles plus fines.
- Consulter la section relative aux SDS pour les dimensions de rondelles et les numéros de pièces.

9. Noter la quantité totale d'épaisseur de cale nécessaire pour obtenir une précharge de roulement latéral de support de différentiel correcte.

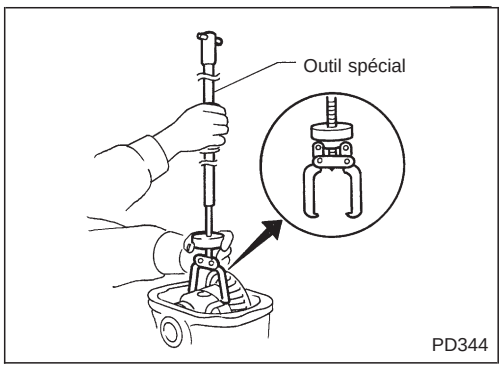

10. Déposer le support de différentiel du carter de pont. Conserver les rondelles de précharge sélectionnées pour un usage ultérieur lors du remontage de l'unité de pont.

Simpo PDF Merge and Split Unregistered Version - http://www.simpopdf.com

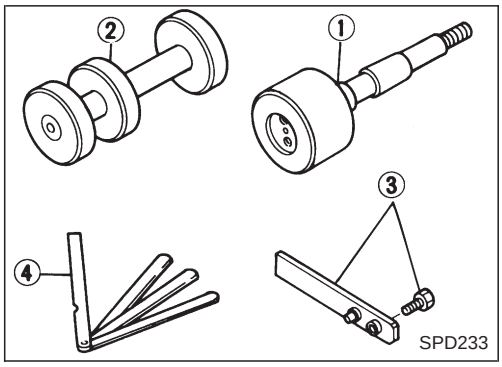

Hauteur de pignon d'attaque

1. Préparer les outils spéciaux permettant le réglage de la hauteur du pignon d'attaque.

① Faux-arbre (KV38103910)
② Jauge de hauteur (KV38100120)
③ Arrêt (KV38100140)
④ Jauge d'épaisseur

2. Pour faciliter le travail, préparer un tableau, comme celui ci-dessous, pour organiser les calculs.

LETTRES	CENTIEMES DE MILLIMETRE
H : Numéro de tête du pignon	
N : Mesure du jeu	

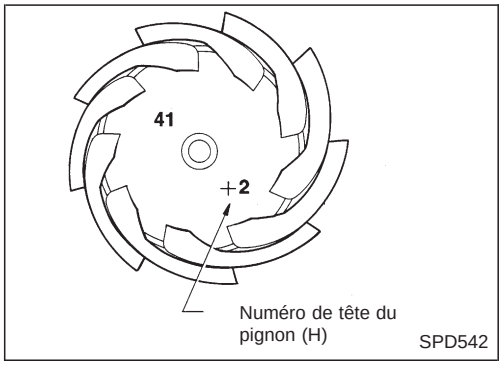

3. Reporter les chiffres suivants dans le tableau.
H : Numéro de tête du pignon

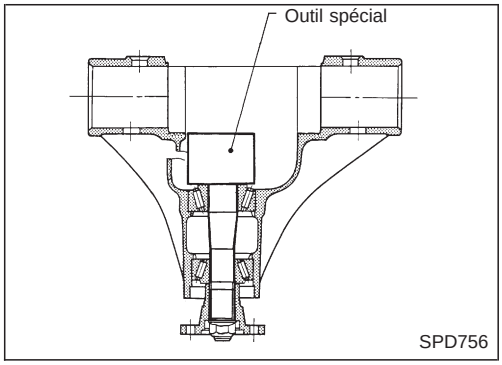

4. Placer l'outil spécial (faux-arbre) de la façon indiquée ci-contre et serrer avec précaution l'écrou de pignon d'attaque à une précharge de 1,0 à 1,3 N·m (10 à 13 kg-cm).
Numéro de l'outil : KV38103910

Simpo PDF Merge and Split Unregistered Version - http://www.simpopdf.com

Hauteur de pignon d'attaque (Suite)

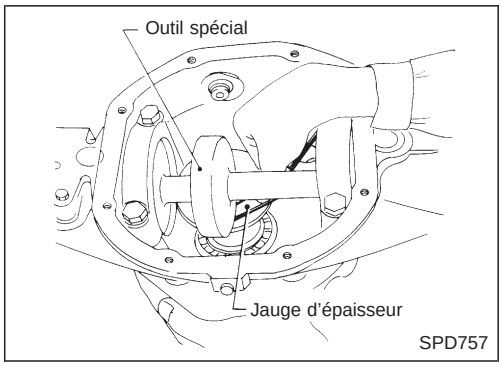

5. Monter l'outil (jauge de hauteur) dans le carter de pont et mesurer le jeu ''N'' entre la jauge de hauteur et la face du faux-arbre.
   Numéro de l'outil : KV38100120
6. Substituer ces valeurs dans l'équation pour calculer l'épaisseur de la rondelle.

Si la valeur représentant H n'est pas donnée, la considérer comme nulle et procéder au calcul.

T (épaisseur de la rondelle) = N − (H x 0,01) + 3,00

Exemple :

N = 0,23
H = 1

T = N − (H x 0,01) + 3,00 = 0,23 − (1 x 0,01) + 3,00

(1) H 1
x 0,01

+0,01

(2) N 0,23
− (+0,01)

0,22

(3) 0,22
+3,00

3,22

∴T = 3,22

7. Sélectionner la rondelle adéquate (consulter les SDS).

Si l'on ne peut trouver une rondelle de l'épaisseur désirée, utiliser une rondelle dont l'épaisseur est la plus proche de la valeur calculée.

Exemple :
Valeur calculée . . . T = 3,22 mm
Rondelle à utiliser . . . T = 3,21 mm

Simpo PDF Merge and Split Unregistered Version - http://www.simpopdf.com

Contact entre les dents

Il est nécessaire de vérifier le jeu d'entre-dents, afin de s'assurer que la relation entre la couronne et le pignon d'attaque est correcte.
Des jeux de pignons hypoïdes en position incorrecte pourront être bruyants ou voir leur durée de vie abrégée. On peut assurer un niveau de bruit minimum et une longévité maximum grâce à la vérification du contact entre les dents.

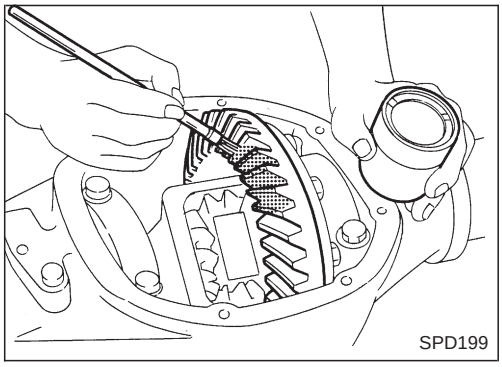
SPD199

1. Nettoyer soigneusement les dents de la couronne et du pignon d'attaque.
2. Appliquer une très légère quantité d'oxyde de fer en poudre et d'huile ou un mélange équivalent sur 3 ou 4 dents du côté entraînement de la couronne.

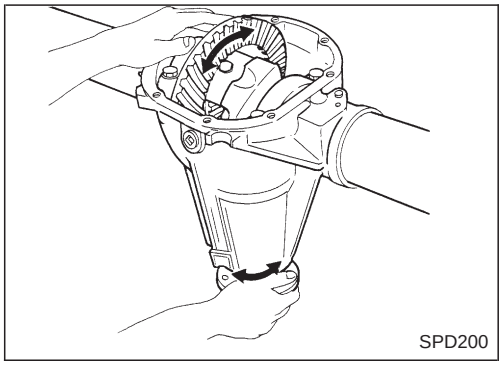
SPD200

3. Maintenir le flasque d'accouplement à l'arrêt et faire tourner la couronne dans les deux sens.

En principe, le contact entre les dents sera correct si l'on a correctement calculé l'épaisseur des cales et si le battement est correct. Néanmoins, il peut arriver qu'il soit nécessaire de suivre une méthode empirique afin d'obtenir un contact correct entre les dents. La surface de contact entre les dents sera la meilleure indication de la justesse du réglage du différentiel.

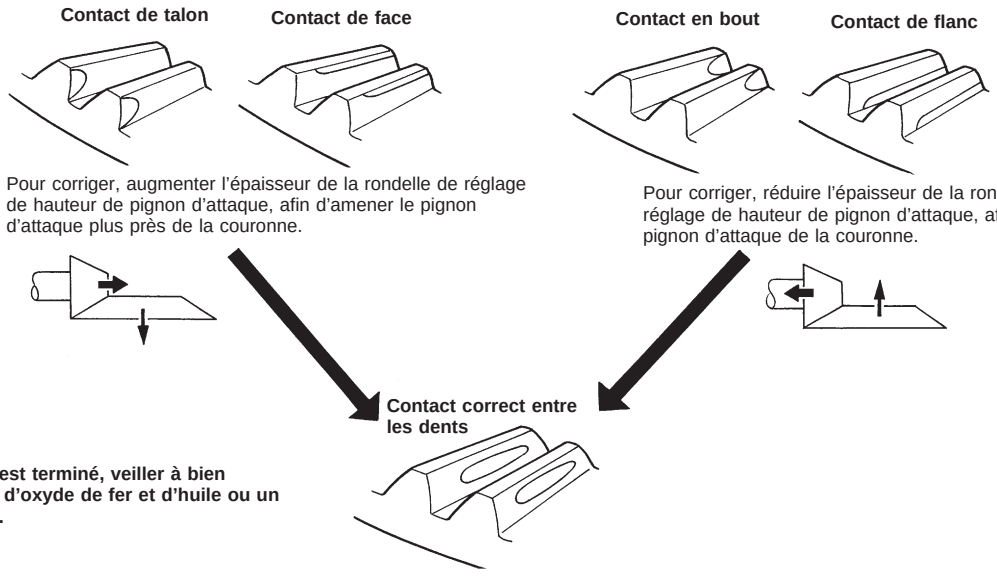

Lorsque le réglage est terminé, veiller à bien essuyer toute trace d'oxyde de fer et d'huile ou un mélange équivalent.

SPD007

Simpo PDF Merge and Split Unregistered Version - http://www.simpopdf.com

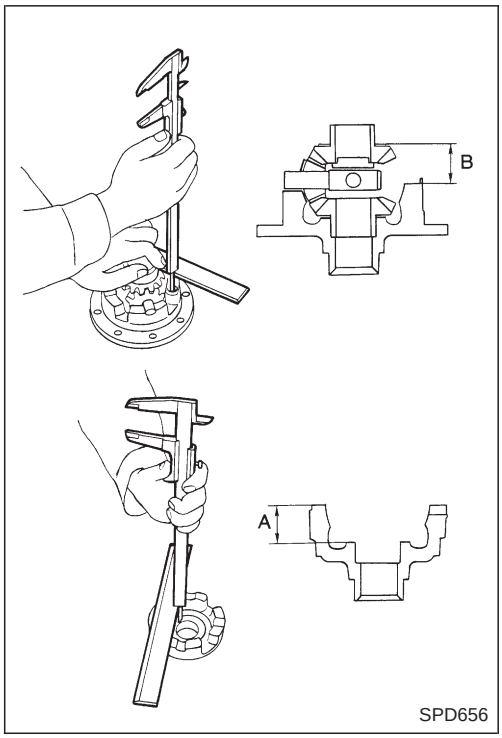

Logement de différentiel

1. Mesurer le jeu entre la rondelle de butée de planétaire et le logement de différentiel.
   Jeu entre rondelle de butée de planétaire et logement de différentiel (A − B) :
   Moins de 0,15 mm
   Le jeu peut être réglé au moyen d'une rondelle de butée de planétaire. Consulter les SDS, PD-83.
2. Enduire d'huile pour engrenages les surfaces des dents des planétaires et les surfaces de butée, et vérifier si l'ensemble tourne correctement.

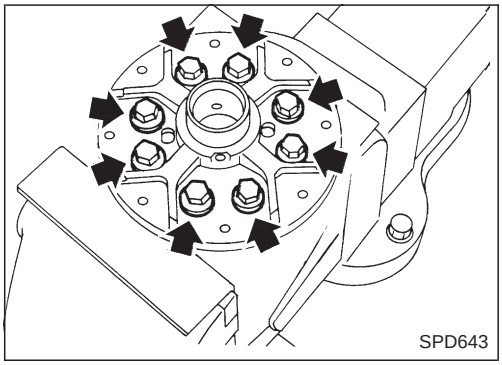

3. Reposer les logements de différentiel gauche et droit.

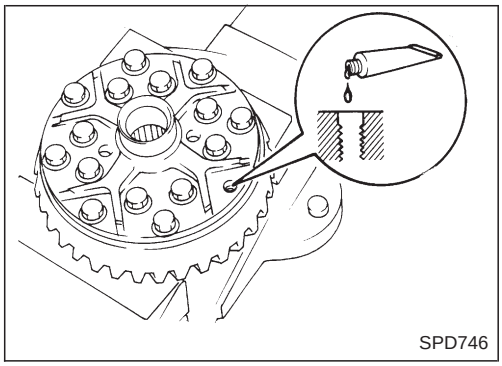

4. Poser le logement de différentiel sur la couronne.
5. Appliquer du produit de blocage [Locktite (blocage de goujon) ou un équivalent] sur les boulons de la couronne, et visser les boulons.

Serrer les boulons en diagonale, en tapotant doucement les têtes de boulons avec un marteau.

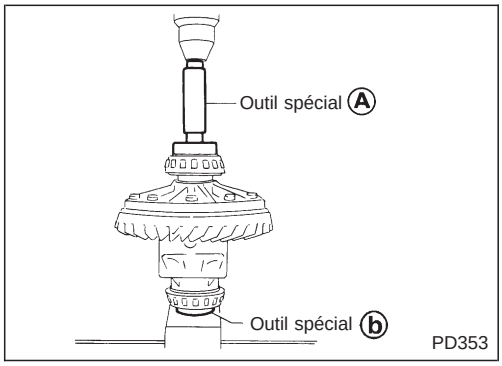

6. Enfoncer à la presse les cônes internes du roulement latéral dans le logement de différentiel à l'aide des outils spéciaux.
   Numéros d'outils :
   Ⓐ **ST33230000**
   Ⓑ **ST33081000**

Simpo PDF Merge and Split Unregistered Version - http://www.simpopdf.com

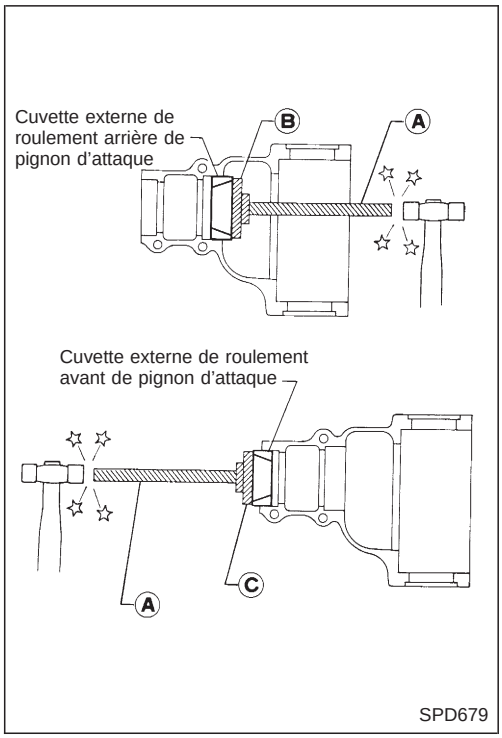

Boîtier de différentiel

1. Enfoncer à la presse les cuvettes externes de roulement avant et arrière à l'aide des outils spéciaux.
   Numéros d'outils :
   - Ⓐ **ST30611000**
   - Ⓑ **ST30621000**
   - Ⓒ **ST30613000**

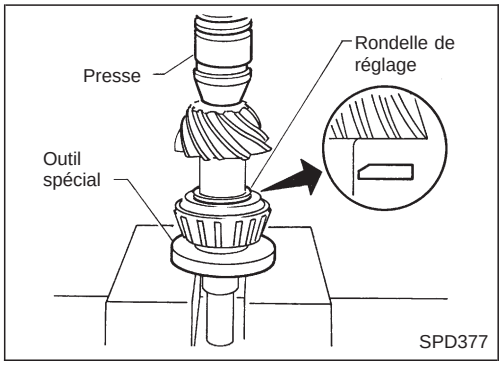

2. Sélectionner une rondelle de réglage de hauteur de pignon. Consulter le titre ''REGLAGE'', PD-50.
3. Monter la rondelle de réglage de hauteur de pignon sur le pignon d'attaque, puis monter à la presse le cône interne du roulement arrière dans ce dernier, à l'aide d'une presse et de l'outil spécial.
   Numéro de l'outil : ST30901000

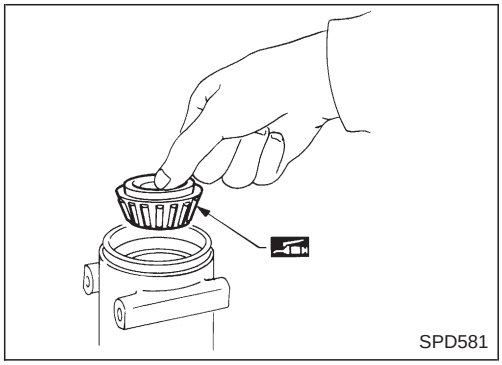

4. Placer le cône interne de roulement avant du pignon dans le carter de pont.

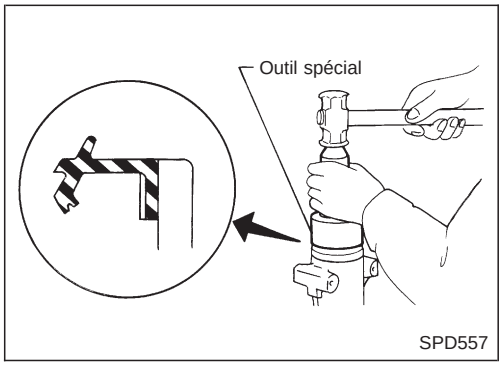

5. Remplir le creux entre les lèvres du joint d'huile de graisse à usages multiples. Monter le joint d'huile avant.
   Numéro de l'outil : KV38100500

Simpo PDF Merge and Split Unregistered Version - http://www.simpopdf.com

Boîtier de différentiel (Suite)

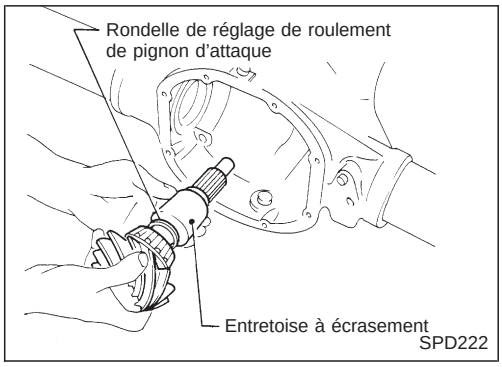

6. Mettre en place l'entretoise de roulement du pignon d'attaque, la rondelle de réglage de roulement du pignon d'attaque et le pignon d'attaque dans le carter de pont.

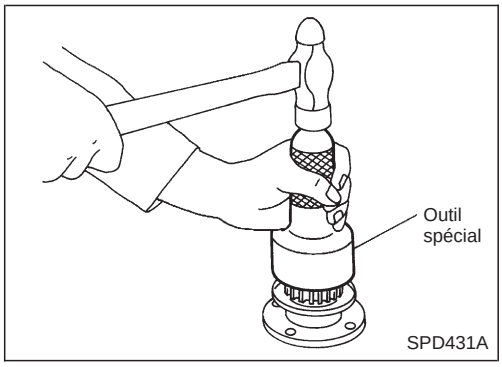

7. Introduire le rotor du capteur dans le flasque d'accouplement avec l'outil spécial.
   Numéro de l'outil : ST30720000
8. Monter le boîtier de capteur d'ABS sur le carter de pont.

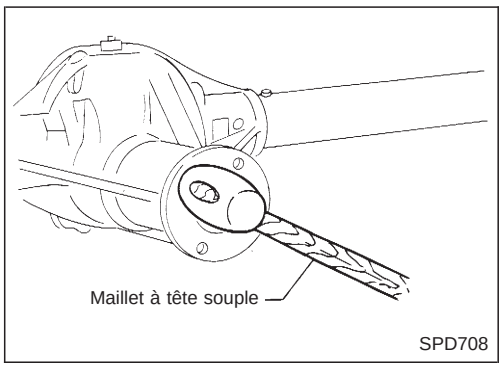

9. Installer le flasque d'accouplement dans le pignon d'attaque en le tapant légèrement avec un maillet à tête souple.

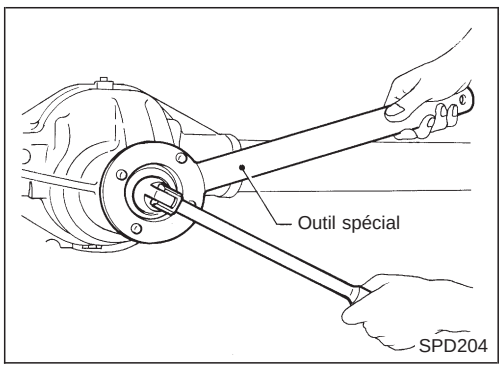

10. Serrer l'écrou de pignon à 127 N·m (13 kg-m).
Eliminer toutes traces d'huile ou de graisse du filetage du pignon d'attaque et de l'écrou de pignon.
Numéro de l'outil : ST38060002

Simpo PDF Merge and Split Unregistered Version - http://www.simpopdf.com

Boîtier de différentiel (Suite)

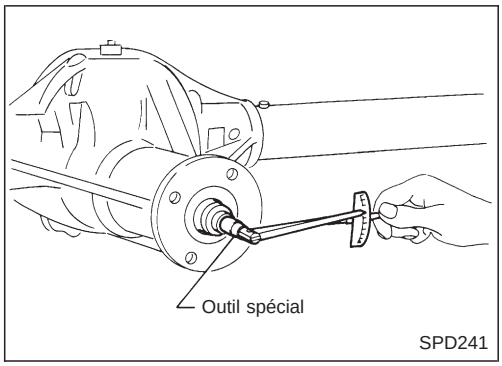

11. Serrer l'écrou de pignon progressivement par petits degrés jusqu'à ce que la précharge spécifiée soit obtenue. Lors du contrôle de la précharge, tourner le pignon d'attaque plusieurs fois dans les deux sens pour asseoir les rouleaux de roulement.
    Numéro de l'outil : ST3127S000
    Précharge de roulement du pignon (avec le joint d'huile avant) :
    1,1 - 1,7 N·m (11 - 17 kg-cm)
    Précharge de roulement du pignon (sans le joint d'huile avant) :
    1,0 - 1,6 N·m (10 - 16 kg-cm)

Il faudra répéter cette procédure si :

- **La précharge maximum est obtenue avant que le couple de serrage minimum d'écrou de pignon ne soit atteint.**
- **La précharge minimum n'est pas obtenue tant que le couple de serrage maximum d'écrou de pignon n'est pas atteint.**

12. Sélectionner une rondelle de réglage de roulement latéral. Consulter le titre Réglage.
13. Reposer l'ensemble de logement de différentiel avec les cuvettes externes de roulement latéral dans le carter de pont.

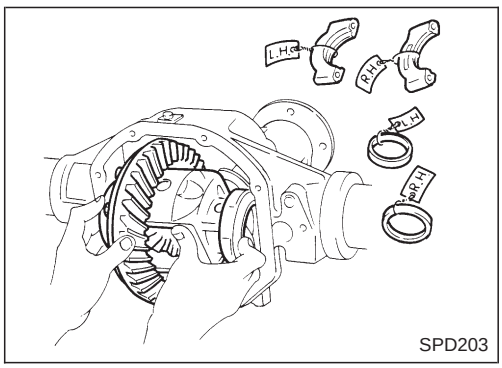

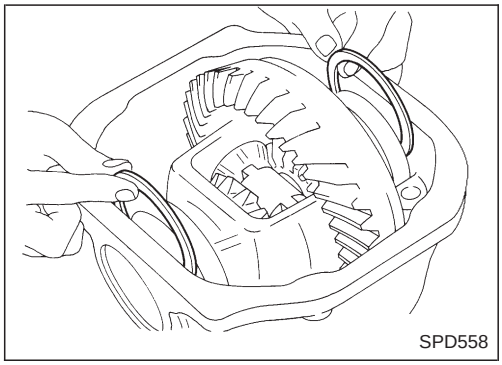

14. Mettre les rondelles de réglage des roulements latéraux gauche et droit en place entre les roulements latéraux et le carter de pont.

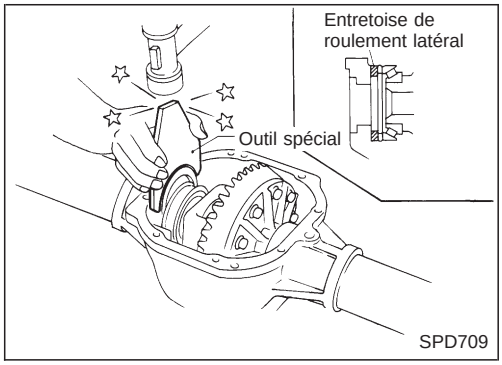

15. Enfoncer l'entretoise de roulement latéral à l'aide de l'outil spécial.
    Numéro de l'outil : KV38100600

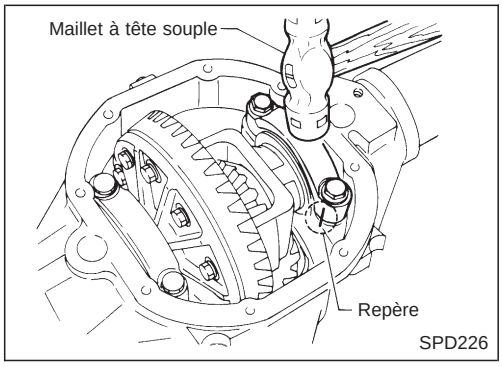

16. Aligner les marques de repères des chapeaux de roulements avec celles du carter de pont et monter les chapeaux sur le carter de pont.

Simpo PDF Merge and Split Unregistered Version - http://www.simpopdf.com

Boîtier de différentiel (Suite)

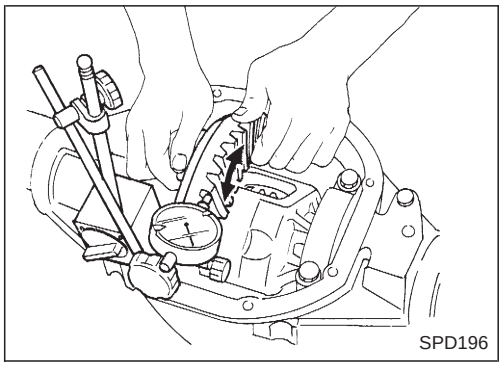
SPD196

17. Mesurer le battement entre la couronne et le pignon d'attaque avec un comparateur à cadran.
    Battement entre la couronne et le pignon d'attaque :
    0,13 - 0,18 mm
- Si le battement est trop petit, diminuer l'épaisseur de la cale d'épaisseur droite et augmenter l'épaisseur de la cale gauche d'une quantité égale.
  Si le battement est trop grand, inverser la procédure ci-dessus.

Ne jamais changer la quantité totale de cales d'épaisseur, car ceci changera la précharge des roulements.

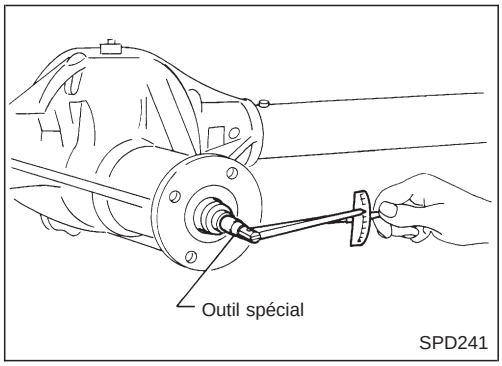

SPD241

18. Contrôler la précharge totale à l'aide de l'outil spécial.

Lors du contrôle de la précharge, tourner le pignon d'attaque plusieurs fois dans les deux sens pour asseoir correctement les rouleaux de roulement.

Précharge totale:
1,2 - 2,3 N·m (12 - 23 kg-cm)
Numéro de l'outil : ST3127S000

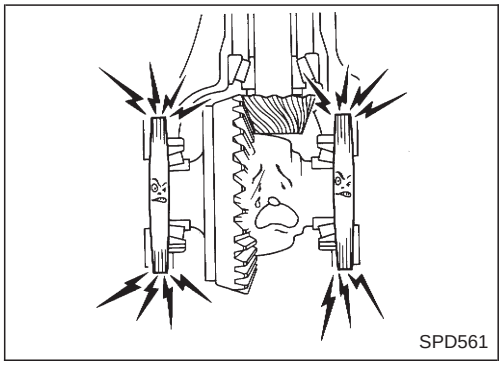
SPD561

- Si la précharge est trop grande, retirer la même épaisseur de cale de chaque côté.
- Si la précharge est trop faible, ajouter la même quantité de cale des deux côtés.

Ne jamais rajouter ou enlever un nombre différent de cales d'épaisseur de chaque côté, car ceci changera le battement entre la couronne et le pignon d'attaque.

19. Vérifier à nouveau le battement entre la couronne et le pignon d'attaque car celui-ci peut changer avec l'augmentation ou la diminution de l'épaisseur des cales.

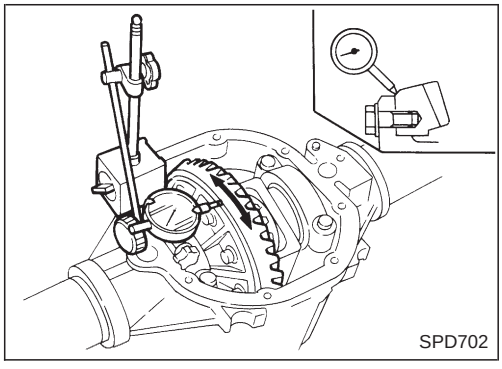
SPD702

20. Contrôler le voile de la couronne à l'aide d'un comparateur à cadran.
    Limite de voile :
    0,05 mm
- Si le battement varie de manière excessive en plusieurs endroits, les variations proviennent parfois de la présence de corps étrangers entre la couronne et le logement de différentiel.
- Si le battement varie fortement alors que le voile de la couronne se trouve dans les limites spécifiées, il faut remplacer le jeu de pignons hypoïdes ou le logement de différentiel.

21. Contrôler le contact entre les dents. Consulter le titre ''REGLAGE'', PD-52.
22. Remonter le couvercle arrière et le joint plat.

Simpo PDF Merge and Split Unregistered Version - http://www.simpopdf.com

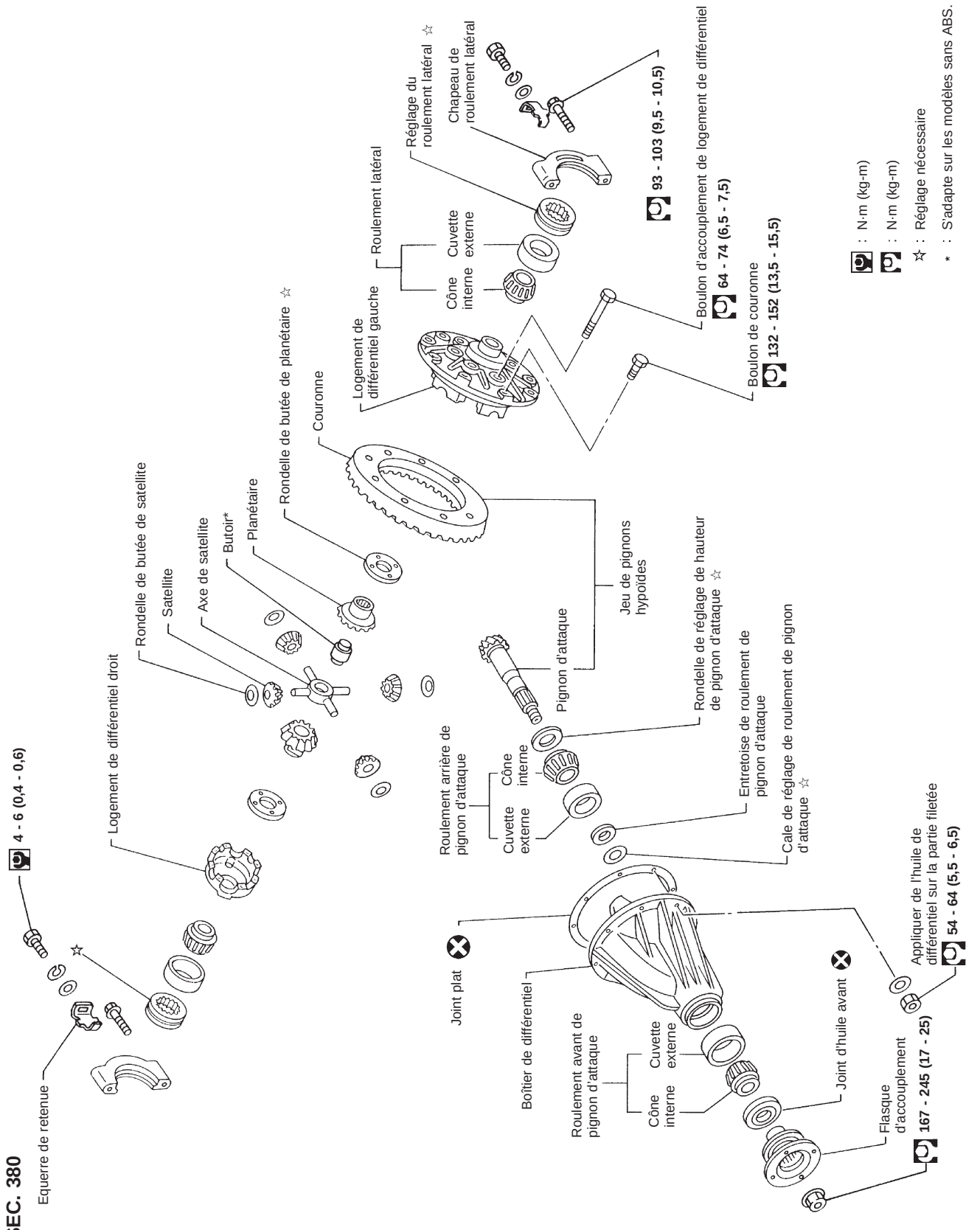

SPD427A

Simpo PDF Merge and Split Unregistered Version - http://www.simpopdf.com

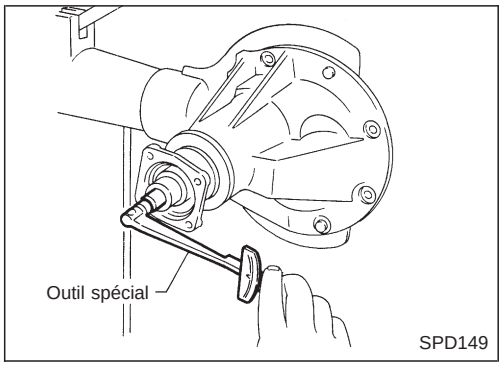

Inspection préalable

Avant de démonter le pont, effectuer l'inspection suivante.

- Précharge totale

a. Tourner le pignon d'attaque de plusieurs tours dans les deux sens pour asseoir correctement les rouleaux de roulement.

b. Contrôler la précharge totale à l'aide de l'outil spécial.

Précharge totale (avec joint d'huile avant) :
Roulement du pignon d'attaque
Neuf : 1,5 - 1,7 N·m (15 - 17 kg-cm)
Usagé : 1,7 - 2,5 N·m (17 - 25 kg-cm)
Numéro de l'outil : ST3127S000

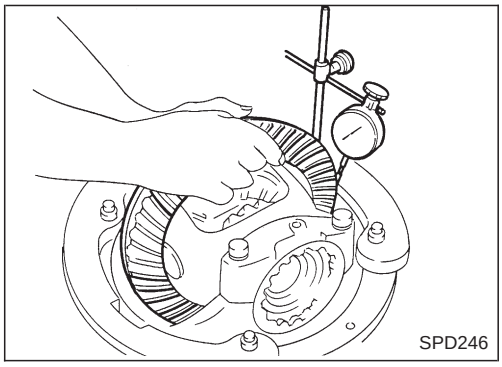

- Battement entre la couronne et le pignon d'attaque

Vérifier le battement de la couronne à l'aide d'un comparateur à cadran, à plusieurs endroits.

Battement entre la couronne et le pignon d'attaque :
0,13 - 0,18 mm

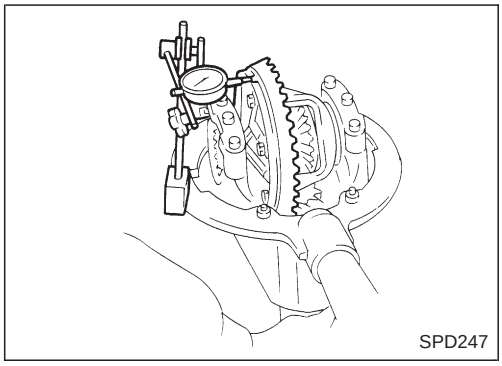

- Voile de la couronne

Contrôler le voile de la couronne à l'aide d'un comparateur à cadran.

Limite de voile :
0,08 mm

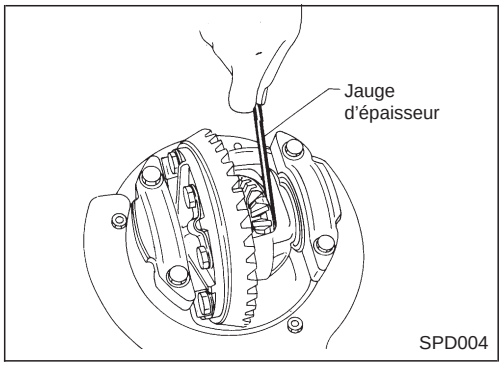

- Contact entre les dents

Vérifier le contact entre les dents, consulter ''REGLAGE'', PD-73.

- Battement entre les planétaires et les satellites

Mesurer le jeu entre la rondelle de butée de planétaire et le logement de différentiel à l'aide d'une jauge d'épaisseur.

Jeu entre rondelle de butée de planétaire et logement de différentiel :
0,1 - 0,2 mm

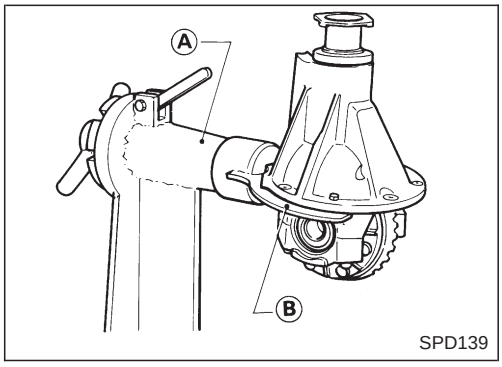

Boîtier de différentiel

1. Monter l'ensemble de pont sur l'outil spécial.

Numéros d'outils :
Ⓐ ST0501S000
Ⓑ ST06340000

Simpo PDF Merge and Split Unregistered Version - http://www.simpopdf.com

Boîtier de différentiel (Suite)

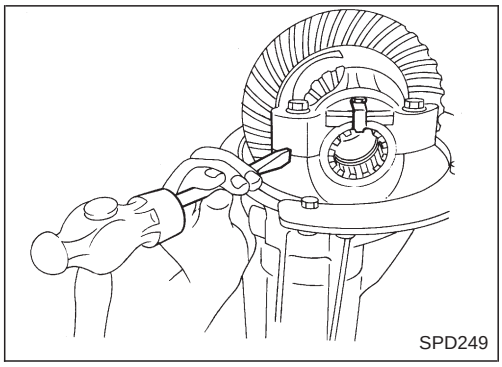
SPD249

2. Tracer des marques de repères sur un côté du chapeau de roulement latéral avec de la peinture ou un poinçon pour s'assurer qu'il est remis en position adéquate lors du remontage.

Les chapeaux de roulement sont alésés en ligne durant l'usinage et doivent être reposés dans leur position d'origine.

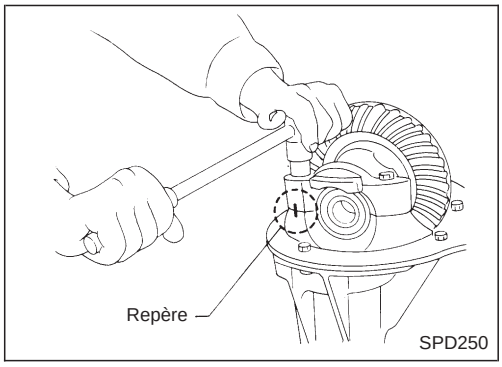

SPD250

3. Déposer les équerres de retenue et les chapeaux de roulements latéraux.

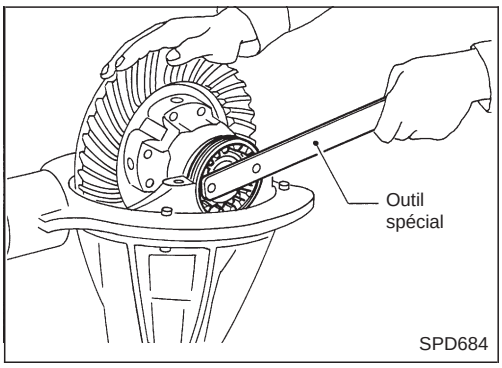

SPD684

4. Déposer le régleur de roulement latéral avec l'outil spécial.
   Numéro de l'outil : ST32580000

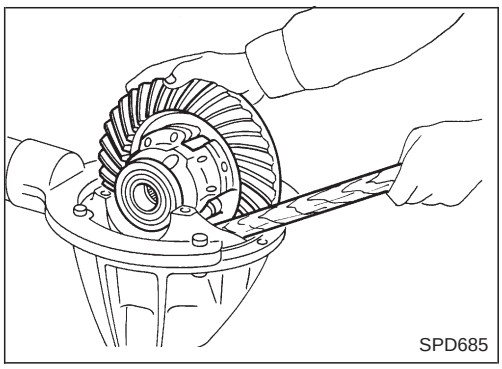
SPD685

5. Déposer l'ensemble du logement de différentiel avec un pied de biche.

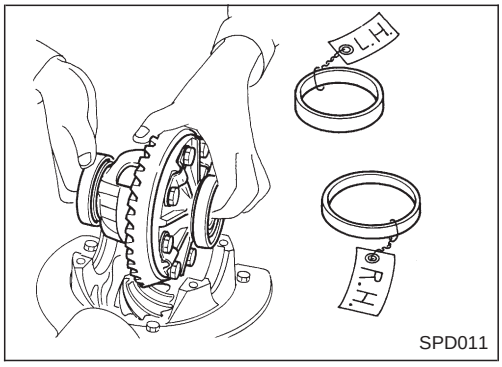

SPD011

Conserver les cuvettes externes du roulement latéral avec leurs cônes internes respectifs – ne jamais les intervertir.

Simpo PDF Merge and Split Unregistered Version - http://www.simpopdf.com

Boîtier de différentiel (Suite)

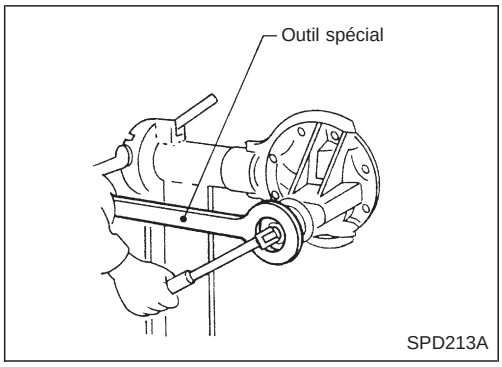

6. Déposer l'écrou de pignon d'attaque avec l'outil spécial.
   Numéro de l'outil : KV38104700
7. Déposer le flasque d'accouplement avec un extracteur.
8. Déposer le capteur d'ABS.

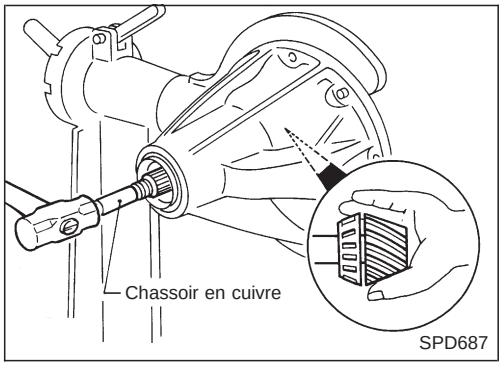

9. Sortir le pignon d'attaque avec le cône interne de roulement arrière de pignon, l'entretoise de roulement de pignon d'attaque et la cale de réglage de roulement du pignon.

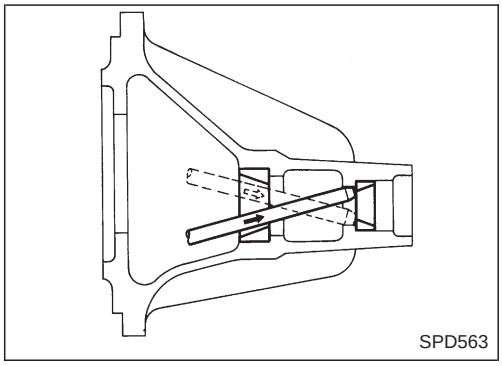

10. Déposer le joint d'huile avant et le cône interne de roulement avant du pignon.
11. Déposer les cuvettes externes de roulement du pignon avec un chassoir en bronze.

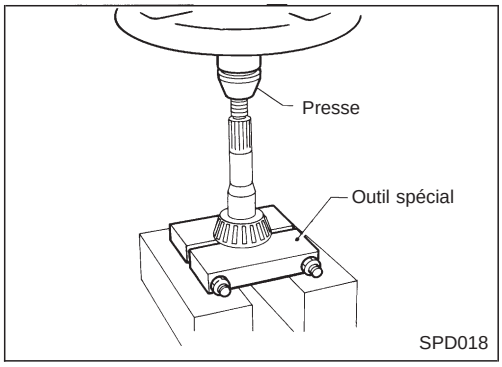

12. Déposer le cône interne du roulement arrière du pignon et la rondelle de réglage du pignon d'attaque.
    Numéro de l'outil : ST30031000

Logement de différentiel

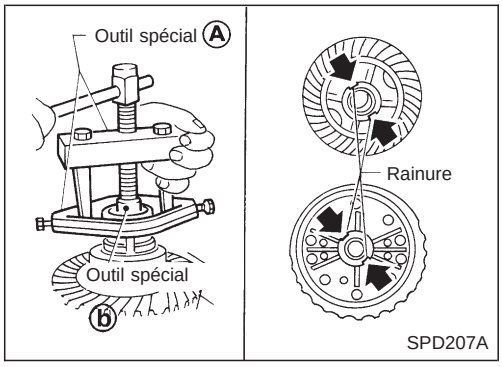

1. Déposer les cônes internes de roulements latéraux.

Pour éviter d'endommager les roulements, introduire les griffes de l'extracteur dans les rainures.

Numéros d'outils :
- Ⓐ **ST33051001**
- Ⓑ **ST33061000**

Simpo PDF Merge and Split Unregistered Version - http://www.simpopdf.com

Logement de différentiel (Suite)

Veiller à ne pas confondre les pièces gauche et droite.

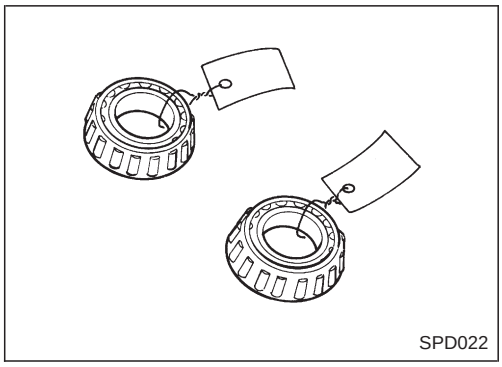
SPD022

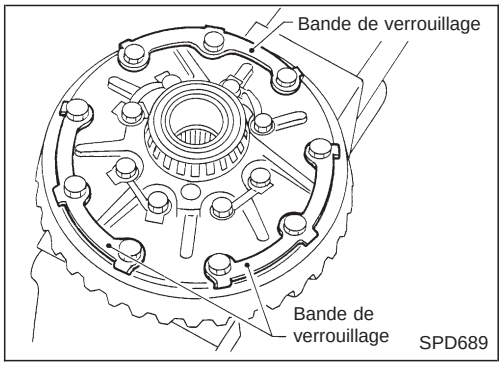

SPD689

2. Déployer les nouvelles bandes de verrouillage et desserrer en diagonale les boulons de la couronne.

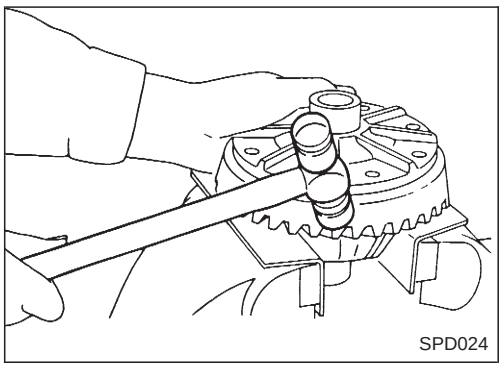
SPD024

3. Frapper la couronne avec un maillet à tête souple pour la détacher du différentiel.

Frapper de manière régulière sur toute la périphérie, afin d'éviter que la couronne ne se voile.

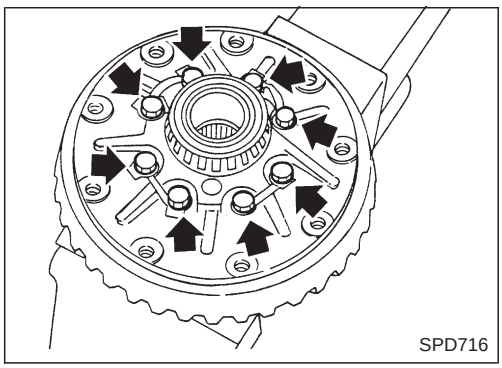
SPD716

4. Séparer les logements de différentiel gauche et droit.

Tracer des marques de repères sur les côtés gauche et droit du logement de différentiel avant de les séparer.

Simpo PDF Merge and Split Unregistered Version - http://www.simpopdf.com

Couronne et pignon d'attaque

Contrôler les dents de la couronne pour voir si elles ne sont pas ébréchées, fêlées ou rayées.
Si l'on découvre une détérioration quelconque, remplacer la couronne et le pignon d'attaque comme un ensemble (jeu de pignons hypoïdes).

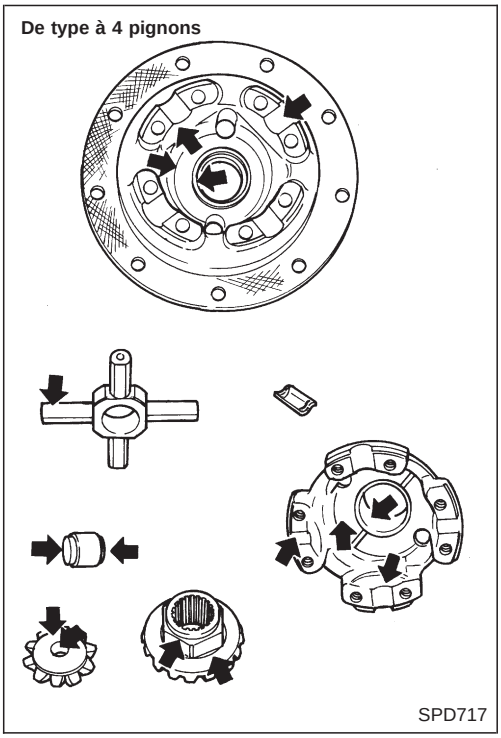

Ensemble de logement de différentiel

Contrôler les surfaces d'appui du logement de différentiel, des planétaires, des satellites, de l'axe de satellite et des rondelles de butée.

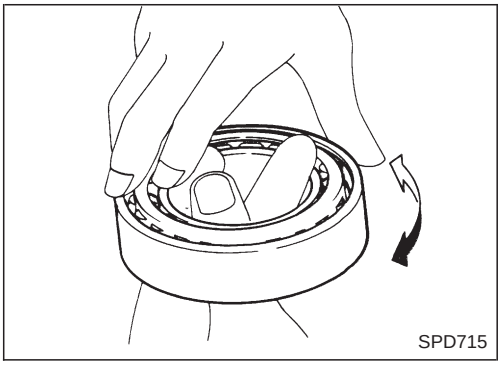

Roulements

1. Nettoyer soigneusement les roulements.
2. Vérifier si les roulements ne sont pas usés, rayés, piqués ou ébréchés.
   Vérifier si les roulements à rouleaux coniques tournent librement. S'ils sont endommagés, remplacer comme un ensemble la cuvette externe et le cône interne.

Simpo PDF Merge and Split Unregistered Version - http://www.simpopdf.com

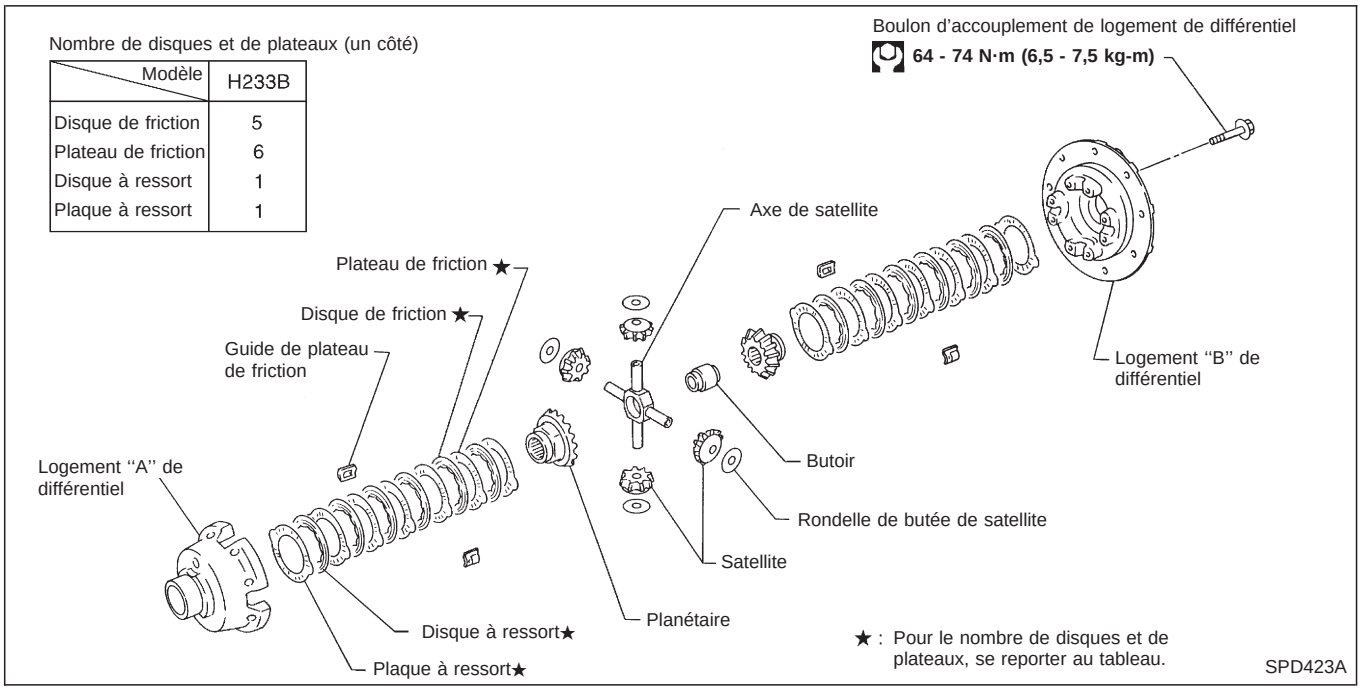

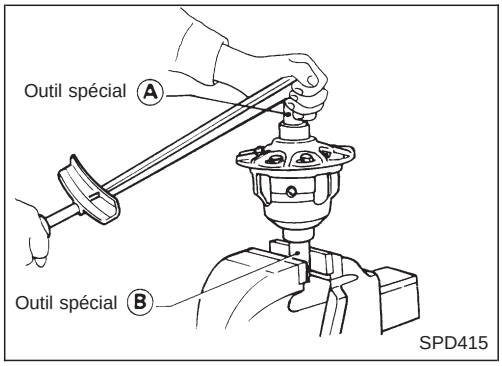

ATTENTION :
Ne pas faire tourner le moteur lorqu'une seule roue (arrière) est décollée du sol.

Préparation pour démontage

VERIFICATION DU COUPLE DE DIFFERENTIEL

Mesurer le couple de différentiel avec les outils spéciaux.
S'il n'est pas dans les limites spécifiées, inspecter les composants du différentiel à glissement limité.

Couple de différentiel :
201 - 240 N·m
(20,5 - 24,5 kg-m)
Numéros d'outils :
Ⓐ KV38105210
Ⓑ KV38105220

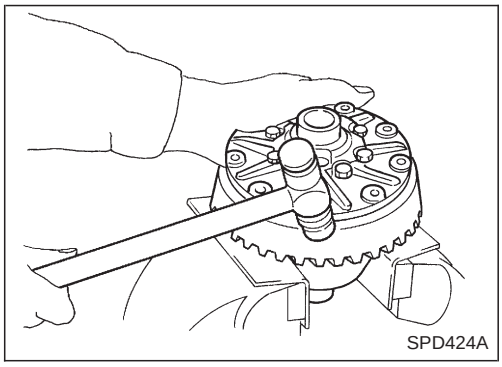

Démontage

1. Déposer le cône interne du roulement latéral avec l'outil spécial.
2. Desserrer en diagonale les boulons de la couronne.
3. Frapper la couronne avec un maillet à tête souple pour l'extraire du logement de différentiel.

Frapper de manière régulière sur toute la périphérie, afin d'éviter que la couronne ne se voile.

Simpo PDF Merge and Split Unregistered Version - http://www.simpopdf.com

Démontage (Suite)

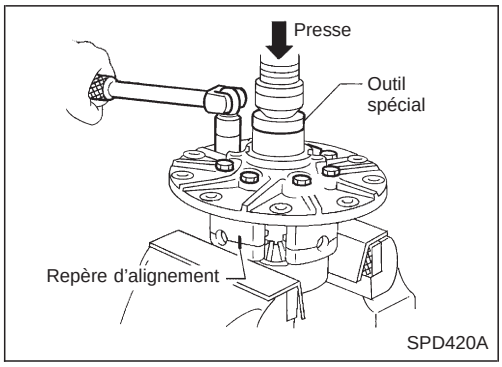

4. Déposer les boulons du coupleur des logements de différentiel A et B avec une presse.
   Numéro de l'outil : ST33081000
5. Séparer les logements de différentiel A et B.
   Sortir les composants internes (disques et plateaux, etc.).

Tracer des repères sur les logements de différentiel de manière à pouvoir les réinstaller dans leur position d'origine.

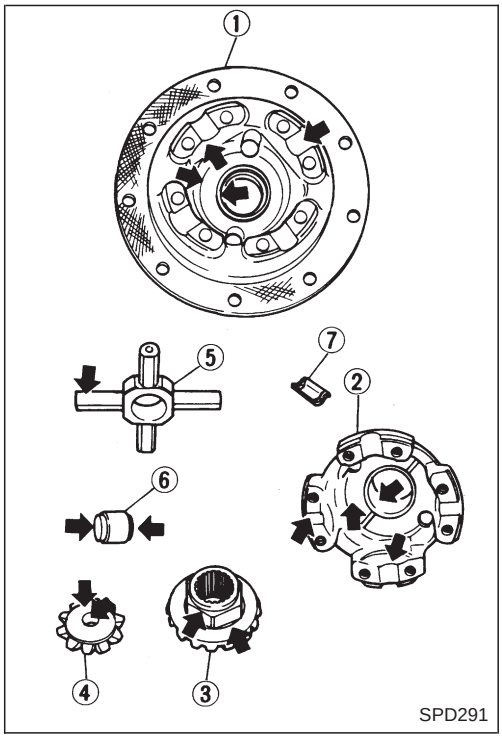

Inspection

SURFACES DE CONTACT

1. Nettoyer les pièces démontées dans un bain de solvant approprié et les sécher à l'air comprimé.
2. Si les surfaces suivantes présentent des traces de bavures ou de rayures, les poncer avec une pierre à fusil.
   ① Carter de différentiel B
   ② Carter de différentiel A
   ③ Planétaire
   ④ Satellite
   ⑤ Axe de satellite
   ⑥ Butoir
   ⑦ Guide de plateau de friction

DISQUE ET PLATEAU

1. Nettoyer les disques et les plateaux dans un bain de solvant approprié et les sécher à l'air comprimé.
2. Vérifier si les disques et les plateaux ne sont pas usés, ébréchés et qu'ils ne présentent pas de bavures.

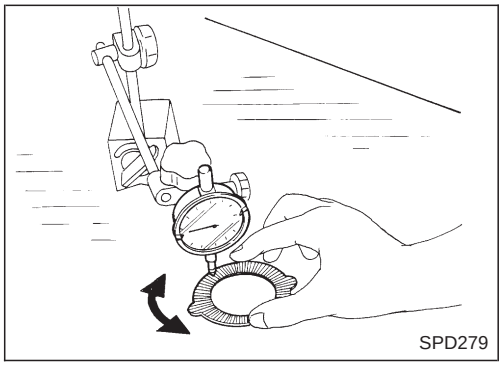

3. Vérifier si les disques ou plateaux de friction ne sont pas voilés.
   Voile maximum toléré :
   0,08 mm
   Si la limite est dépassée, remplacer par un nouveau disque ou plateau pour éviter que l'embrayage ne patine ou ne colle.

Simpo PDF Merge and Split Unregistered Version - http://www.simpopdf.com

Inspection (Suite)

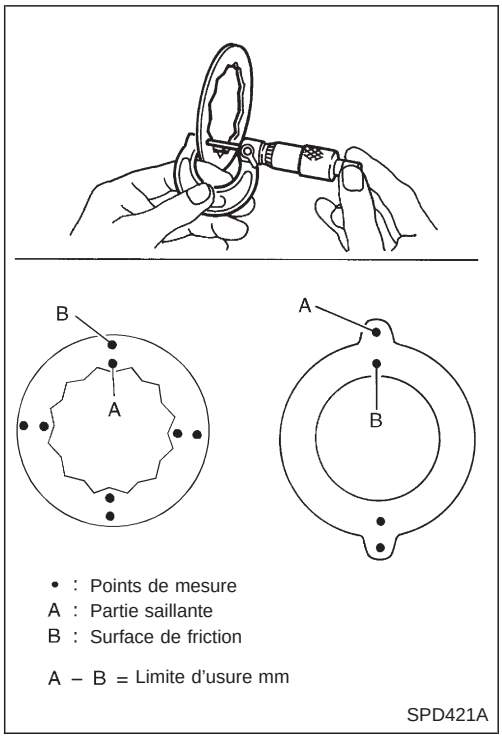

4. Mesurer les surfaces de friction et les parties saillantes des disques de friction, des plateaux de friction, du disque et de la plaque à ressort.
   Si l'une des pièces est usée au-delà de la limite spécifiée, la remplacer avec une pièce neuve ayant la même épaisseur que la partie protubérante.
   Limite d'usure :
   0,1 mm ou moins

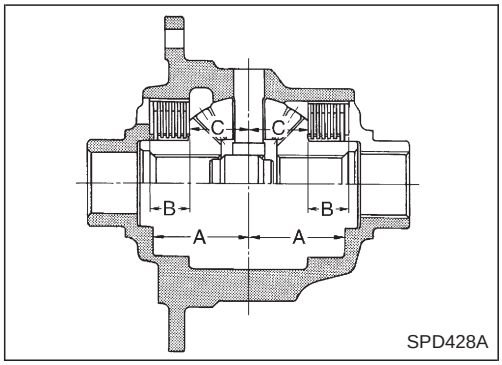

Réglage

JEU AXIAL ENTRE DISQUE DE FRICTION ET PLATEAU DE FRICTION

Le jeu axial des disques et plateaux de friction peut être calculé à l'aide de l'équation suivante et doit être réglé dans la plage suivante.
Le réglage peut se faire en choisissant un disque de friction ayant deux épaisseurs différentes.

Jeu axial E :
0,05 - 0,15 mm
E = A − (B + C)

A: Longueur de la surface de contact du logement de différentiel par rapport au fond intérieur du logement de différentiel.
B: Epaisseur totale des disques de friction, des plateaux de friction, du disque à ressort et de la plaque à ressort d'un côté du logement de différentiel.
C: Longueur de la surface de contact du logement de différentiel par rapport au côté arrière du planétaire de différentiel.

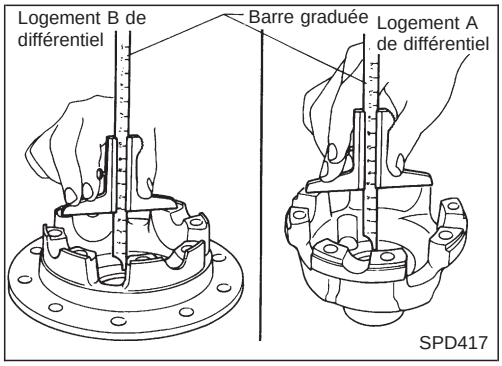

1. Valeurs de mesure de ''A''.
   Longueur standard A :
   49,50 - 49,55 mm

Simpo PDF Merge and Split Unregistered Version - http://www.simpopdf.com

Réglage (Suite)

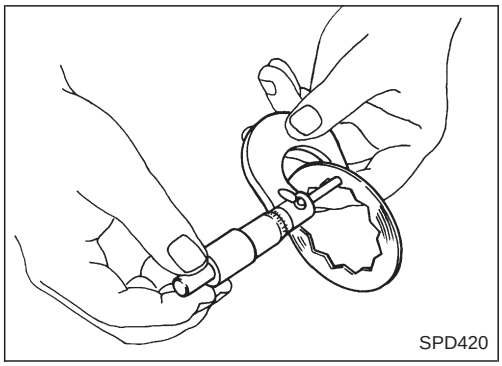
SPD420

2. Mesurer l'épaisseur de chaque disque et plateau.
   Epaisseur totale "B" :
   19,24 - 20,26 mm
   Nombre de disques et plateaux (un côté) :
   Disques de friction 5
   Plateaux de friction 6
   Disque à ressort 1
   Plaque à ressort 1

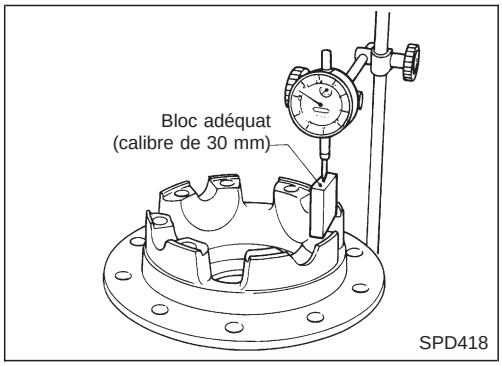

SPD418

3. Mesurer les valeurs de "C".
a. Monter un comparateur à cadran sur la plaque de base.
b. Placer le logement de différentiel B sur la plaque de base, et reposer le calibre sur le logement B.

Etalonner ensuite le comparateur en plaçant son pointeau sur le calibre.

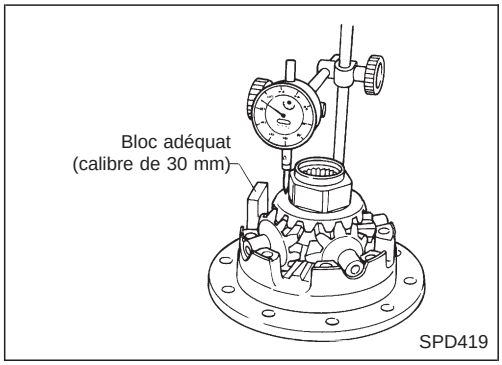

SPD419

c. Reposer les satellites, les planétaires et l'axe de satellite dans le logement de différentiel B.
d. Placer le pointeau du comparateur à cadran sur le planétaire, et lire la mesure.

Exemple :

E = A − D = A − (B + C) = 0,05 à 0,15 mm
A = 49,52 mm
B = 19,45 mm
C = 29,7 mm
D = B + C

B . . . 19,45	
+C . . . 29,7	
49,15	

E = A − D

A . . . 49,52	
−D . . . 49,15	
0,37	

D'après l'équation ci-dessus, le jeu axial de 0,37 mm dépasse la limite spécifiée entre 0,05 et 0,15 mm.
Sélectionner des disques et plateaux appropriés pour assurer un réglage correct.

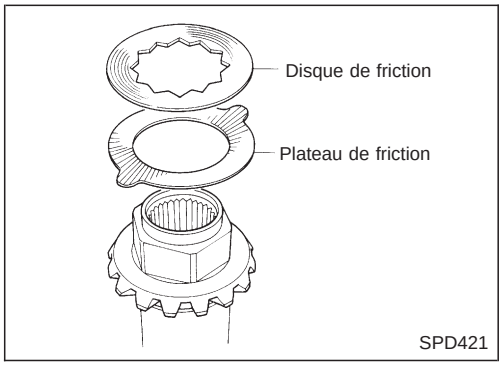

SPD421

Remontage

Avant d'assembler les disques et les plateaux, les lubrifier dans un bain d'huile pour différentiel à glissement limité.

1. Faire alterner les plateaux et les disques de friction en observant les numéros spécifiés à l'arrière du planétaire.

Toujours positionner le plateau de friction en premier lieu sur l'arrière du planétaire.

Simpo PDF Merge and Split Unregistered Version - http://www.simpopdf.com

Remontage (Suite)

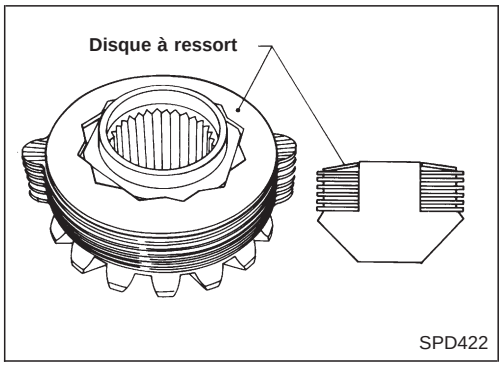

2. Reposer le disque à ressort.

Aligner les 12 trous angulaires dans le disque à ressort sur la surface hexagonale du planétaire.

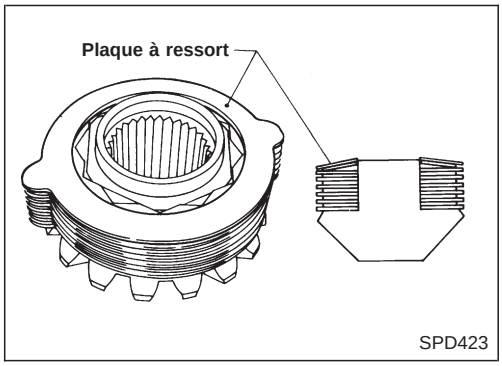

3. Reposer la plaque à ressort.

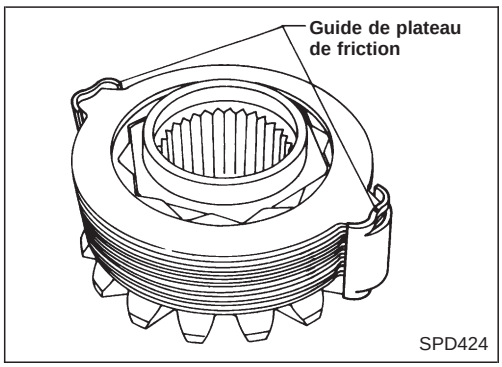

4. Reposer les guides de plateaux de friction.

Aligner correctement les protubérances des plateaux de friction et enduire de graisse les surfaces internes des guides de plateaux de friction afin de les empêcher de tomber.

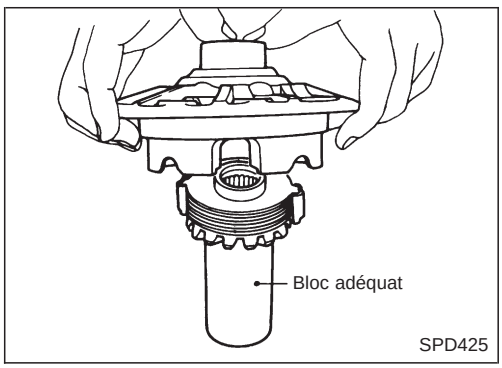

5. Monter le logement de différentiel B sur l'ensemble constitué par les planétaires, les disques, les plateaux et le guide de plateau de friction.

- **Reposer le support de différential B en soutenant les guides de plateaux de friction avec le majeur par l'orifice d'huile du logement de différentiel.**
- **Veiller à ne pas détacher le disque à ressort de la partie hexagonale du planétaire.**

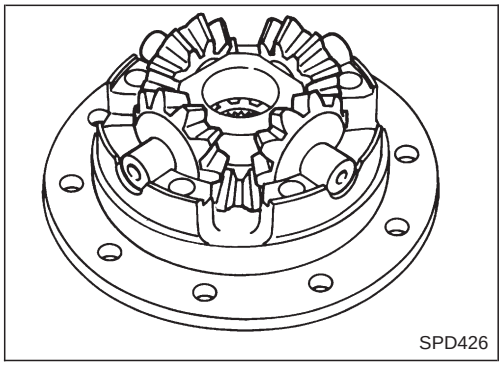

6. Monter les satellites et l'axe de satellite dans le logement de différentiel B.

Simpo PDF Merge and Split Unregistered Version - http://www.simpopdf.com

Remontage (Suite)

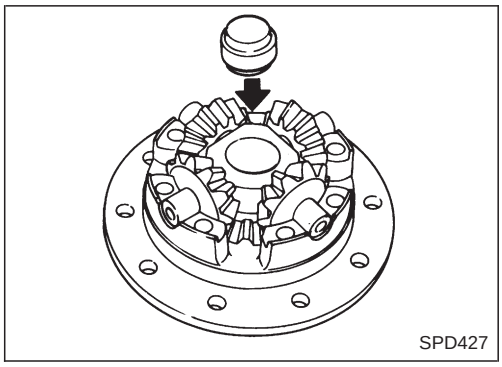
SPD427

7. Reposer le bloc de butoir.

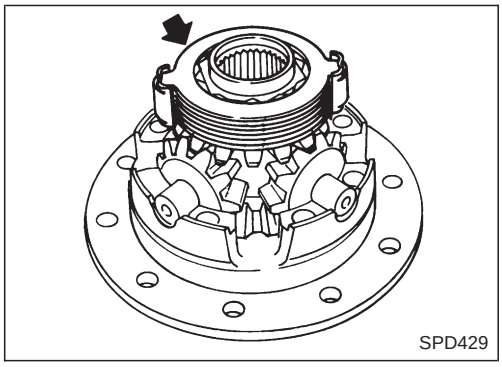
SPD429

8. Reposer le planétaire sur les satellites.
9. Reposer chaque disque et plateau.

Suivre la même procédure que celle décrite aux étapes 1 à 4.

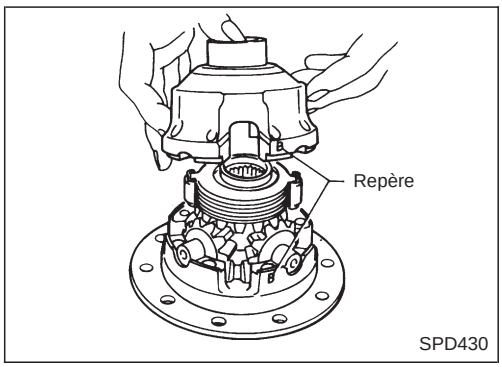

SPD430

10. Reposer le logement de différentiel A.

Positionner les logements de différentiel A et B en alignant les repères sur les logements.

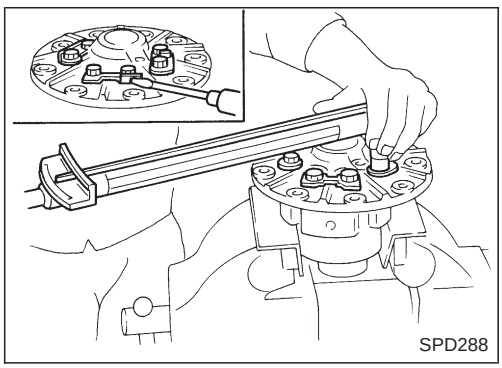
SPD288

11. Serrer les boulons du logement de différentiel.
12. Placer la couronne sur le logement de différentiel et reposer des bandes de verrouillage et des boulons neufs.

Serrer les boulons en diagonale, en tapotant doucement les têtes de boulons avec un marteau.
Puis plier les bandes de verrouillage pour bloquer les boulons en place.

13. Reposer le cône interne de roulement latéral.
14. Vérifier le couple de différentiel.

Simpo PDF Merge and Split Unregistered Version - http://www.simpopdf.com

Pour que le pont puisse fonctionner de façon silencieuse et fiable, les cinq réglages suivants doivent être exécutés correctement.

1. Précharge du roulement latéral.
2. Hauteur du pignon d'attaque.
3. Précharge de roulement du pignon. Consulter le titre ''REMONTAGE'', PD-76.
4. Battement entre la couronne et le pignon. Consulter le titre ''REMONTAGE'', PD-77.
5. Jeu d'entre-dents de la couronne et du pignon.

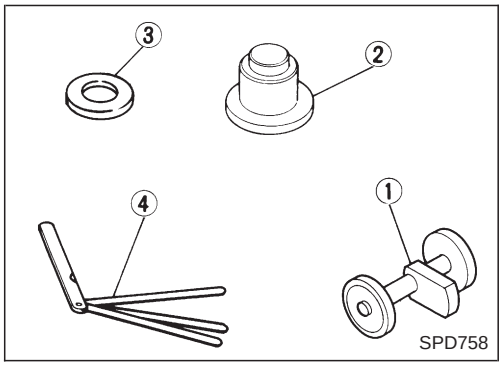

SPD758

Hauteur de pignon d'attaque

1. Préparer d'abord les outils permettant le réglage de hauteur de pignon.
   ① Jauge de hauteur (ST31251000)
   ② Faux-arbre (ST31181001)
   ③ Entretoise (épaisseur : 2,00 mm) (KV38108700)
   ④ Jauge d'épaisseur
2. Pour faciliter le travail, préparer un tableau, comme celui ci-dessous, pour organiser les calculs.

LETTRES	CENTIEMES DE MILLIMETRE
H : Numéro de tête du pignon	
D′ : Chiffre indiqué sur le faux-arbre	
S : Chiffre indiqué sur la jauge de hauteur	
N : Mesure du jeu	

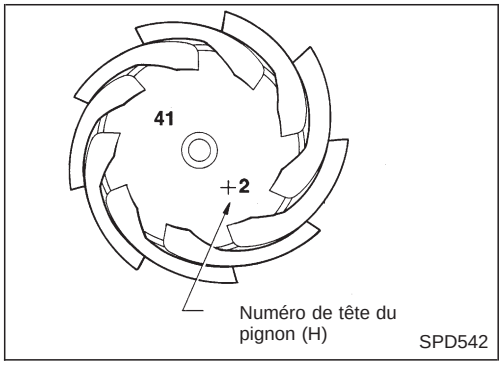

SPD542

3. Reporter les chiffres suivants dans le tableau.
   H : Numéro de tête du pignon

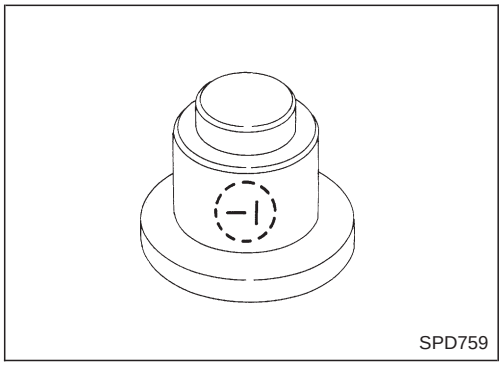

SPD759

D′ : Chiffre indiqué sur le faux-arbre

Simpo PDF Merge and Split Unregistered Version - http://www.simpopdf.com

Hauteur de pignon d'attaque (Suite)

S : Chiffre indiqué sur la jauge de hauteur

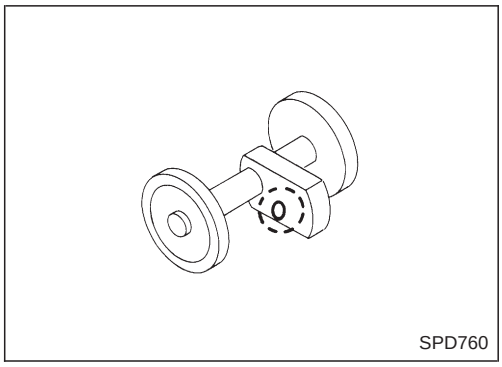
SPD760

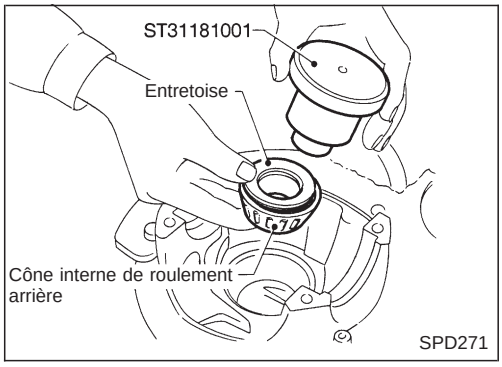

SPD271

4. Mettre en place la cuvette interne de roulement arrière de pignon et les outils spéciaux dans le carter de pont.

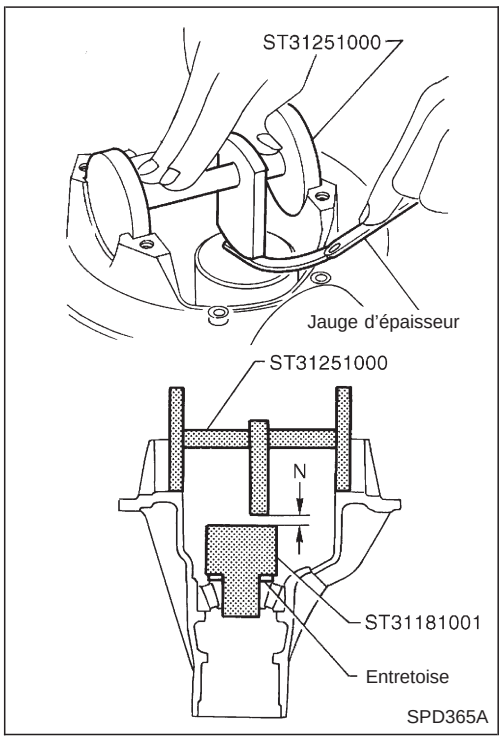

SPD365A

5. Monter l'outil (jauge de hauteur) sur le carter de pont et mesurer le jeu entre la pointe de la jauge de hauteur et la face du faux-arbre.

Simpo PDF Merge and Split Unregistered Version - http://www.simpopdf.com

Hauteur de pignon d'attaque (Suite)

6. Substituer ces valeurs dans l'équation pour calculer l'épaisseur de la rondelle.

Si les valeurs représentant H, D′ et S ne sont pas données, les considérer comme nulles et procéder au calcul.

T (épaisseur de la rondelle) = N − [(H − D′ − S) x 0,01] + 2,75

Exemple :

N = 0,30
H = 2
D′ = −1
S = 0

T = N − [(H − D′ − S) x 0,01] + 2,75
= 0,30 − [{2 − (−1) − 0} x 0,01] + 2,75

(1)
H 2
−D′ ..... −(−1)
3
−S ..... −0
3

(2)
3
x 0,01
0,03

(3)
N 0,30
−0,03
0,27

(4)
0,27
+2,75
3,02

∴T = 3,02

7. Sélectionner la rondelle de réglage en hauteur du pignon appropriée.

Rondelle de réglage en hauteur du pignon d'attaque : Consulter les SDS, PD-84.

Si l'on ne peut trouver une rondelle de l'épaisseur désirée, utiliser une rondelle dont l'épaisseur est la plus proche de la valeur calculée.

Exemple :

Valeur calculée . . . T = 3,02 mm
Rondelle à utiliser . . . T = 3,03 mm

Simpo PDF Merge and Split Unregistered Version - http://www.simpopdf.com

Contact entre les dents

Il est nécessaire de vérifier le jeu d'entre-dents, afin de s'assurer que la relation entre la couronne et le pignon d'attaque est correcte.
Des jeux de pignons hypoïdes en position incorrecte pourront être bruyants ou voir leur durée de vie abrégée. On peut assurer un niveau de bruit minimum et une longévité maximum grâce à la vérification du contact entre les dents.

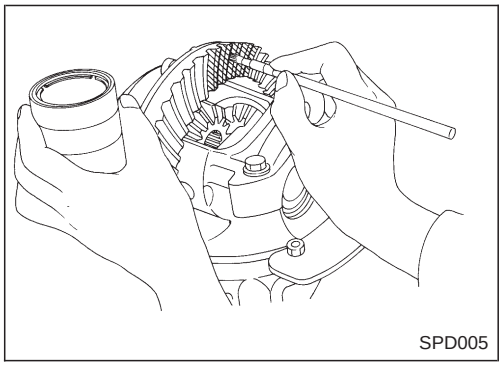
SPD005

1. Nettoyer soigneusement les dents de la couronne et du pignon d'attaque.
2. Appliquer une très légère quantité d'oxyde de fer en poudre et d'huile ou un mélange équivalent sur 3 ou 4 dents du côté entraînement de la couronne.

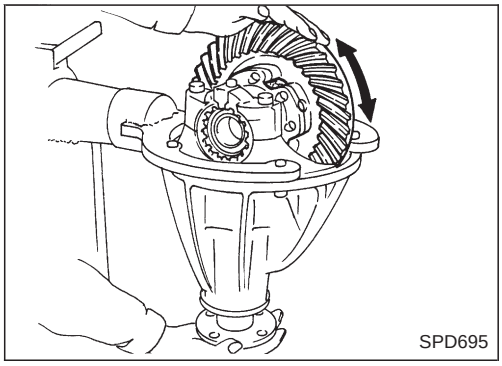
SPD695

3. Maintenir le flasque d'accouplement à l'arrêt et faire tourner la couronne dans les deux sens.

en principe, le contact entre les dents sera correct si l'on a correctement calculé l'épaisseur des cales et si le battement est correct. Néanmoins, il peut arriver qu'il soit nécessaire de suivre une méthode empirique afin d'obtenir un contact correct entre les dents. La surface de contact entre les dents sera la meilleure indication de la justesse du réglage du différentiel.

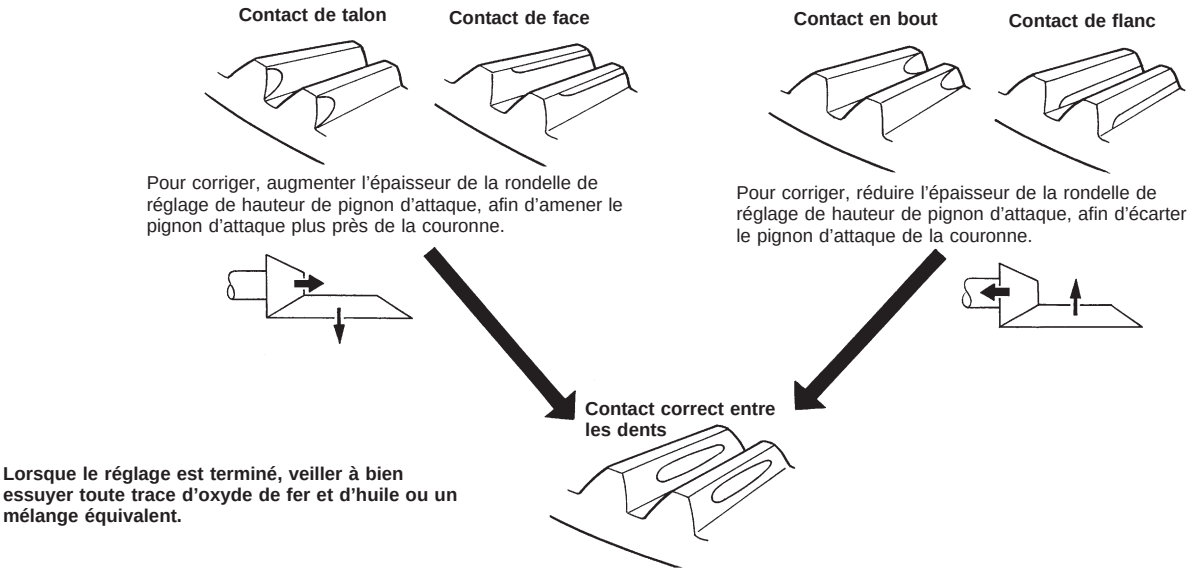

Lorsque le réglage est terminé, veiller à bien essuyer toute trace d'oxyde de fer et d'huile ou un mélange équivalent.

SPD007

Simpo PDF Merge and Split Unregistered Version - http://www.simpopdf.com

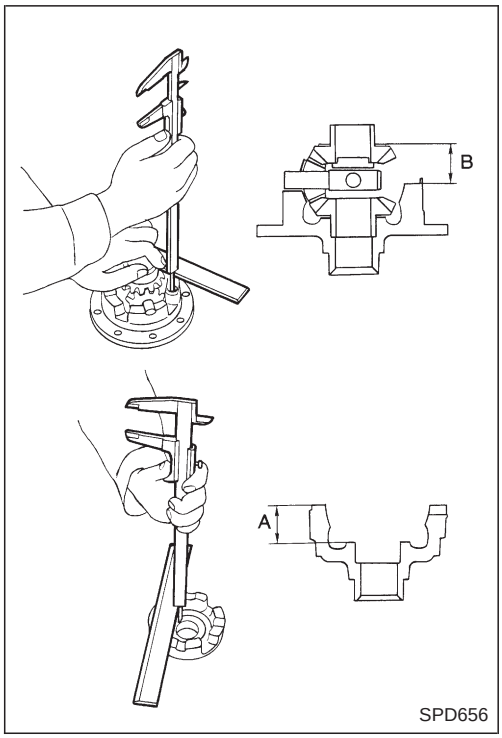

Logement de différentiel

1. Mesurer le jeu entre la rondelle de butée de planétaire et le logement de différentiel.
   Jeu entre rondelle de butée de planétaire et logement de différentiel (A − B) :
   Moins de 0,15 mm
   Le jeu peut être réglé au moyen d'une rondelle de butée de planétaire. Consulter les SDS, PD-84.
2. Enduire d'huile pour engrenages les surfaces des dents des pignons et les surfaces de butée, et vérifier si l'ensemble tourne correctement.

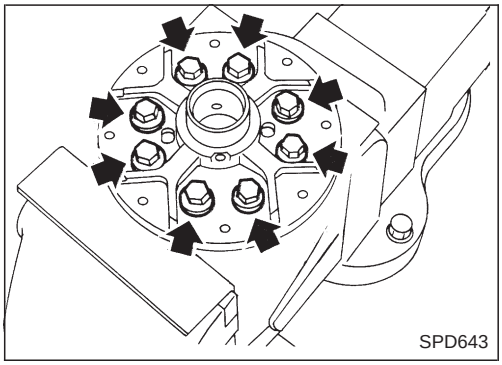

3. Reposer les logements de différentiel gauche et droit.
4. Reposer le logement de différentiel sur la couronne.

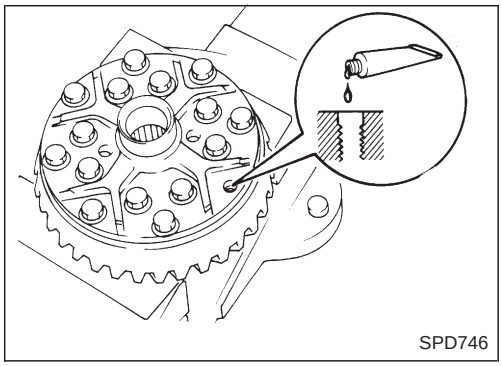

5. Poser le logement de différentiel sur la couronne.
6. Appliquer du produit de blocage [Locktite (blocage de goujon) ou un équivalent] sur les boulons de la couronne, et visser les boulons.

Serrer les boulons en diagonale, en tapotant doucement les têtes de boulons avec un marteau.

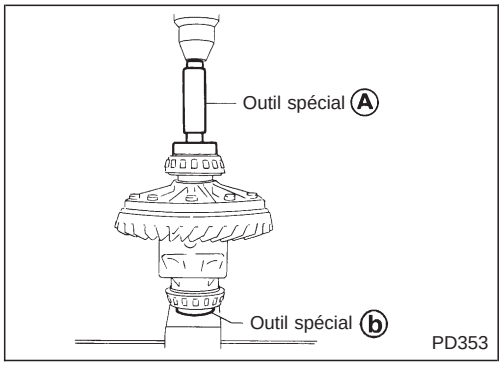

7. Enfoncer à la presse les cônes internes du roulement latéral dans le logement de différentiel à l'aide des outils spéciaux.
   Numéros d'outils :
   Ⓐ **ST33190000**
   Ⓑ **ST33081000**

Simpo PDF Merge and Split Unregistered Version - http://www.simpopdf.com

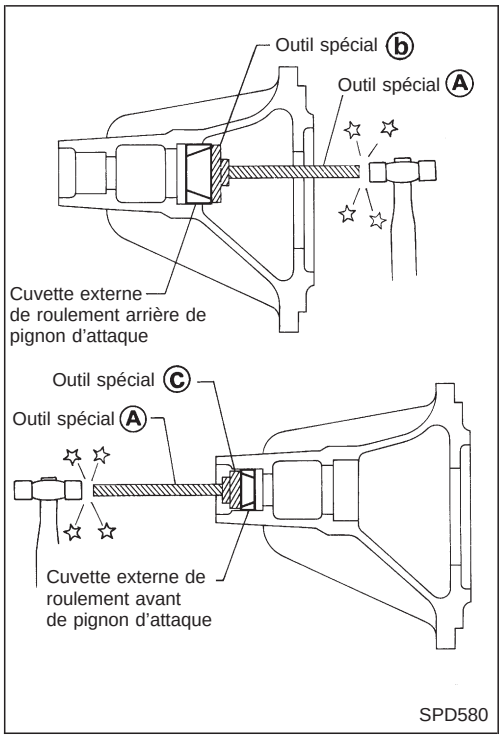

Boîtier de différentiel

1. Enfoncer à la presse les cuvettes externes de roulement avant et arrière à l'aide des outils spéciaux.
   Numéros d'outils :
   - (A) **ST30611000**
   - (B) **ST30621000**
   - (C) **ST30613000**

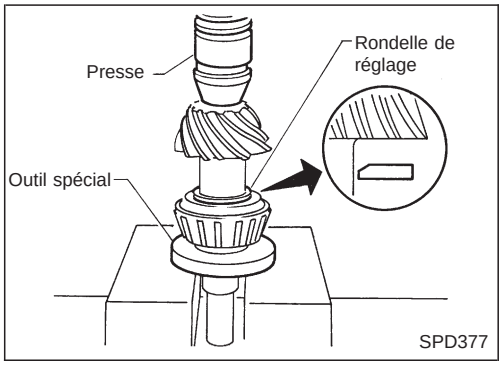

2. Sélectionner une rondelle de réglage de hauteur du pignon d'attaque. Consulter le titre ''REGLAGE'', PD-70.
3. Reposer la rondelle de réglage du pignon d'attaque sur le pignon d'attaque, et monter à la presse le cône interne de roulement arrière dans ce dernier, à l'aide d'une presse et de l'outil spécial.
   Numéro de l'outil : ST30901000

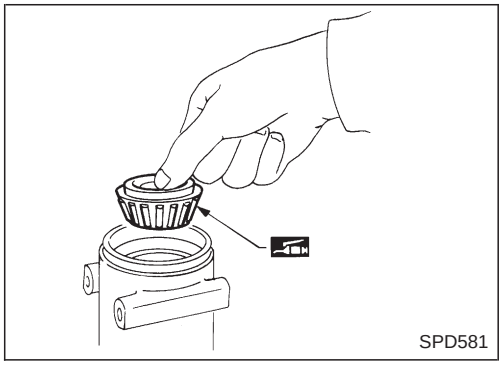

4. Placer le cône interne de roulement avant du pignon d'attaque dans le carter de pont.

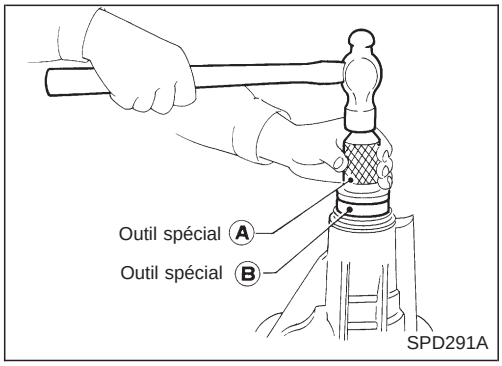

5. Remplir le creux entre les lèvres du joint d'huile de graisse à usages multiples. Monter le joint d'huile avant.
   Numéros d'outils :
   - (A) **ST15310000**
   - (B) **KV40104710**

Simpo PDF Merge and Split Unregistered Version - http://www.simpopdf.com

Boîtier de différentiel (Suite)

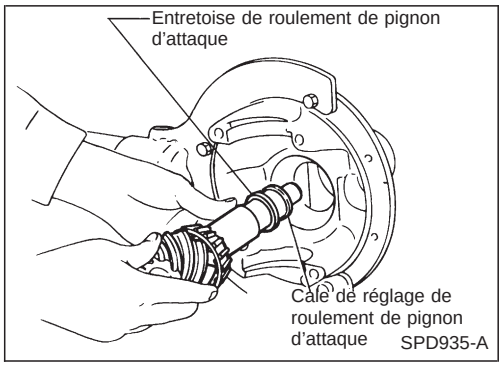

6. Placer l'entretoise de roulement du pignon d'attaque, la cale de réglage de roulement du pignon et le pignon d'attaque dans le carter de pont.

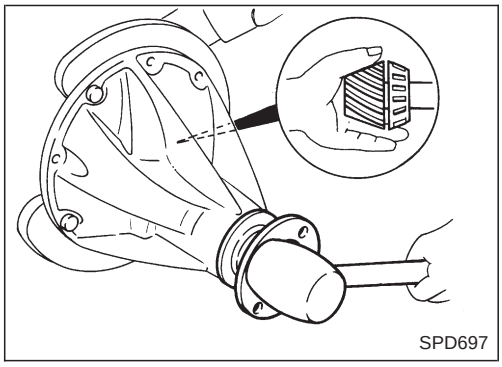

7. Introduire le flasque d'accouplement dans le pignon d'attaque en le tapant légèrement avec un maillet à tête souple.

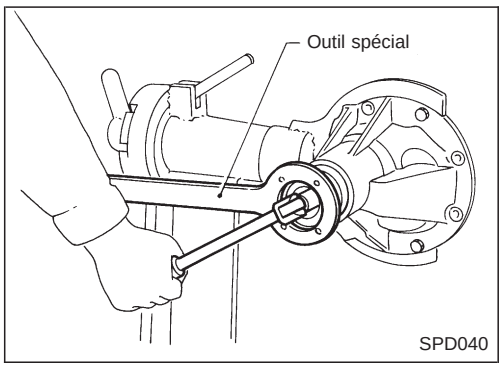

8. Serrer l'écrou de pignon au couple spécifié.

Eliminer toutes traces d'huile ou de graisse du filetage du pignon d'attaque et de l'écrou de pignon.

Numéro de l'outil : KV38104700

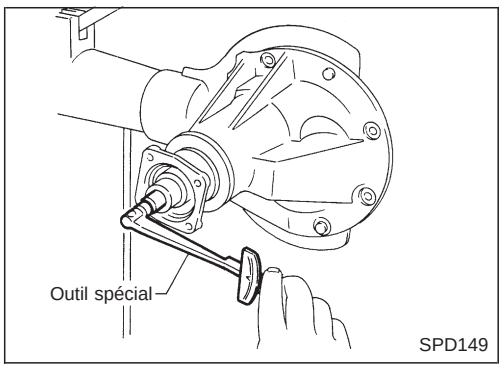

9. Tourner le pignon d'attaque de plusieurs tours dans les deux sens, et mesurer la précharge de roulement du pignon.

Numéro de l'outil : ST3127S000

Précharge de roulement du pignon (avec le joint d'huile avant) :

1,4 - 1,7 N·m (14 - 17 kg-cm)

Précharge de roulement du pignon (sans le joint d'huile avant) :

1,2 - 1,5 N·m (12 - 15 kg-cm)

Si la précharge est hors spécification, régler l'épaisseur combinée de l'entretoise et de la cale en remplaçant la cale et l'entretoise par des pièces plus fines.

- Commencer par l'épaisseur combinée d'entretoise et de cale la plus épaisse.
- Associer chaque épaisseur d'entretoise et de cale une par une jusqu'à obtenir la valeur spécifiée.

Simpo PDF Merge and Split Unregistered Version - http://www.simpopdf.com

Boîtier de différentiel (Suite)

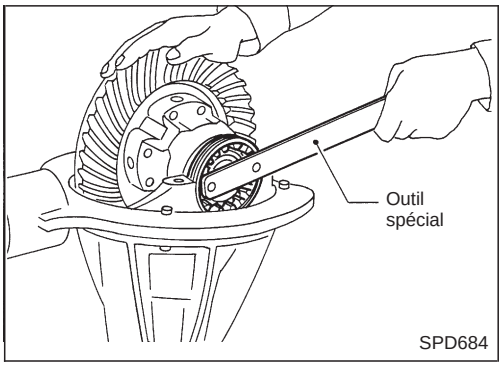

10. Reposer l'ensemble de logement de différentiel avec les cuvettes externes de roulement latéral dans le carter de pont.
11. Positionner les régleurs de roulements latéraux sur le carter de pont en engrenant correctement les filetages; visser les régleurs légèrement à ce stade de l'assemblage.
    Numéro de l'outil : ST32580000

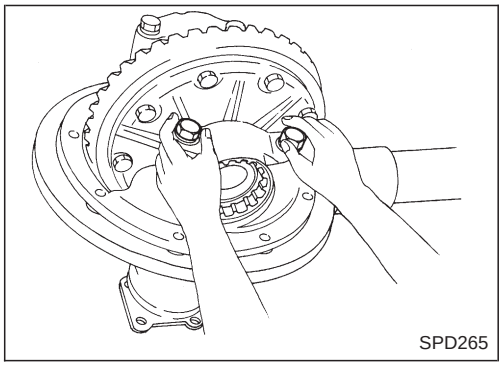

12. Aligner les marques de repères des chapeaux de roulement avec celles du carter de pont et monter les chapeaux sur le carter de pont.
- Ne pas encore serrer pour permettre le serrage futur des régleurs de roulements latéraux.

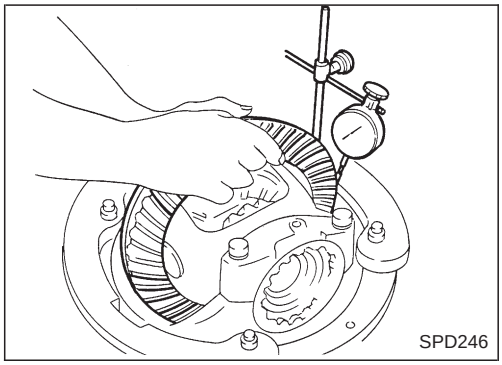

13. Serrer les régleurs de roulement latéraux gauche et droit alternativement et mesurer en même temps le battement de la couronne et la précharge totale. Ajuster les régleurs de roulements latéraux droit et gauche en les serrant alternativement de façon à obtenir le battement de couronne approprié et la précharge totale.
    Battement entre la couronne et le pignon d'attaque :
    0,13 - 0,18 mm

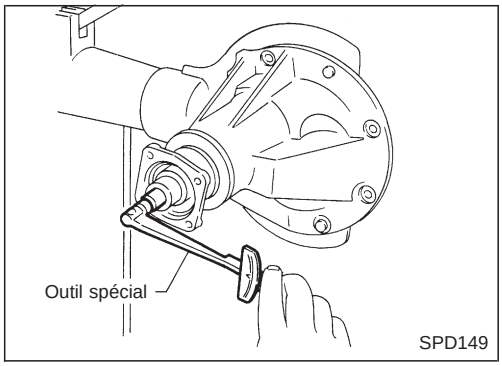

- **Lors du contrôle de la précharge, tourner le pignon d'attaque plusieurs fois dans les deux sens pour asseoir les rouleaux de roulement.**
  Numéro de l'outil : ST3127S000
  Précharge totale (avec joint d'huile avant) :
  Roulement du pignon d'attaque
  Neuf : 1,5 - 1,7 N·m (15 - 17 kg-cm)
  Usagé : 1,7 - 2,5 N·m (17 - 25 kg-cm)

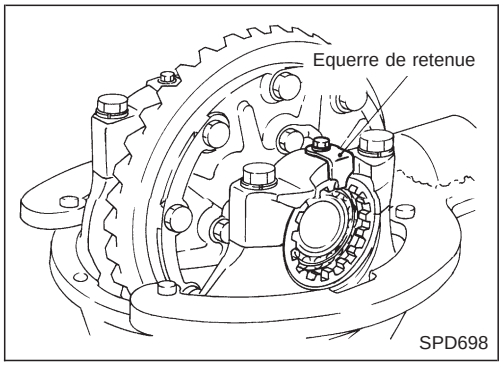

14. Serrer les boulons des chapeaux de roulements latéraux.
15. Reposer les équerres de retenue afin d'éviter que les roulements tournent.

Simpo PDF Merge and Split Unregistered Version - http://www.simpopdf.com

Boîtier de différentiel (Suite)

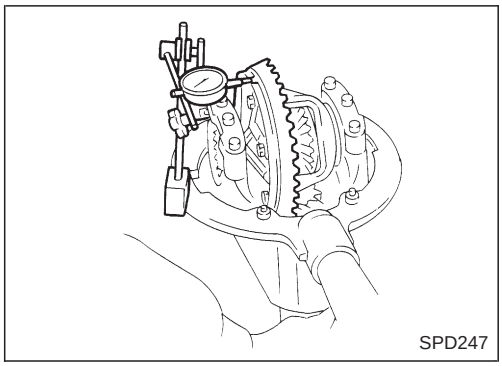
SPD247

16. Contrôler le voile de la couronne à l'aide d'un comparateur à cadran.
    Limite de voile : 0,08 mm
- Si le battement varie de manière excessive en plusieurs endroits, les variations proviennent parfois de la présence de corps étrangers entre la couronne et le logement de différentiel.
- Si le battement varie fortement alors que le voile de la couronne se trouve dans les limites spécifiées, il faut remplacer le jeu de pignons hypoïdes ou le logement de différentiel.

17. Contrôler le contact entre les dents. Consulter le titre ''REGLAGE'', PD-73.

Simpo PDF Merge and Split Unregistered Version - http://www.simpopdf.com

Arbre de transmission

CARACTERISTIQUES GENERALES

Modèles à 2 roues motrices

Modèle concerné			Carrosserie courte		Carrosserie longue	
			Sans ABS	Avec ABS	Sans ABS	Avec ABS
Modèle d'arbre de transmission			3S71H			
Nombre de joints			3			
Méthode d'accouplement avec la boîte			Type à manchon			
Type de roulements de croisillons			Type solidaire (type démontable)			
Longueur d'arbre (entre croisillons)	mm	1ère	665		641	
		2nde	680	654	1 004	978
Diamètre extérieur d'arbre	mm	1ère	75			
		2nde	65			

Modèles à 4 roues motrices

Emplacement			Avant	Arrière
Modèle concerné			KA24	KA24
Modèle d'arbre de transmission			2F63H	3S71H
Nombre de joints			2	3
Méthode d'accouplement avec la boîte			Type à flasque	Type à manchon
Type de roulements de croisillons			Type solidaire (type démontable)	
Longueur d'arbre (entre croisillons)	mm	1ère	546	396
		2nde	–	866
Diamètre extérieur d'arbre	mm	1ère	63,5	75,0
		2nde	–	65,0

Simpo PDF Merge and Split Unregistered Version - http://www.simpopdf.com

Arbre de transmission (Suite)

INSPECTION ET REGLAGE

Arbre de transmission avant

Unité : mm

Modèle d'arbre de transmission	2F63H	2F71H
		KA24
Limite de jeu axial de croisillon	0,02	
Limite de voile de l'arbre de transmission	0,6	
Point de mesure A	136,5	126

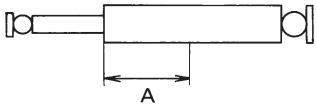

SPD996

Arbre de transmission arrière

Unité : mm

Modèle d'arbre de transmission	3S71H	3S80B
Limite de jeu axial de croisillon	0,02	
Limite de voile de l'arbre de transmission	0,6	
Points de mesure		
A	162	
B	172	
C	192	

Roulement central

Croisillon

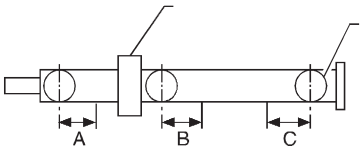

SPD418A

Joncs d'arrêt disponibles

Modèles 71H

Epaisseur mm	Couleur d'identification	N° de pièce
1,99	Blanc	37146-01G00
2,02	Jaune	37147-01G00
2,05	Rouge	37148-01G00
2,08	Vert	37149-01G00
2,11	Bleu	37150-01G00
2,14	Marron clair	37151-01G00
2,17	Rose	37152-01G00
2,20	Sans peinture	37153-01G00

Modèles 80B

Epaisseur mm	Couleur d'identification	N° de pièce
1,99	Blanc	37146-C9400
2,02	Jaune	37147-C9400
2,05	Rouge	37148-C9400
2,08	Vert	37149-C9400
2,11	Bleu	37150-C9400
2,14	Marron clair	37151-C9400
2,17	Noir	37152-C9400
2,20	Sans peinture	37153-C9400

Simpo PDF Merge and Split Unregistered Version - http://www.simpopdf.com

Pont

CARACTERISTIQUES GENERALES

Modèles à 2 roues motrices

Modèle concerné		TD25		KA24E	
Modèle de pont		Standard	Option	Standard	Option
		C200			
		2 satellites	LSD	2 satellites	LSD
Contenance en huile (environ)	ℓ	1,3			
Rapport de démultiplication		4,375		3,900	
Nombre de dents	Couronne	35		39	
	Pignon d'attaque	8		10	

Modèles à 4 roues motrices

Modèle concerné		KA24E	
Pont avant		R180A	
		4 satellites	
Contenance en huile (environ)	ℓ	1,3	
Pont arrière		Standard	Option
		C200	
		4 satellites	LSD
Contenance en huile (environ)	ℓ	1,3	
Rapport de démultiplication		4,625	
Nombre de dents	Couronne	37	
	Pignon d'attaque	8	

Simpo PDF Merge and Split Unregistered Version - http://www.simpopdf.com

Pont (Suite)

INSPECTION ET REGLAGE (R180A)

Voile de la couronne

Limite de voile de la couronne	mm	0,05

Réglage du roulement d'essieu

Jeu axial du roulement d'essieu	mm	0 - 0,1

Cales de réglage de roulement d'essieu disponibles

Epaisseur mm	N° de pièce
0,10	38233-01G11
0,20	38233-01G12
0,30	38233-01G13
0,40	38233-01G14

Réglage des planétaires

Battement des planétaires (jeu entre planétaire et logement de différentiel)	mm	Moins de 0,15

Rondelles de butée de planétaires disponibles

Epaisseur mm	N° de pièce
0,75	38424-W2010
0,78	38424-W2011
0,81	38424-W2012
0,84	38424-W2013
0,87	38424-W2014
0,90	38424-W2015
0,93	38424-W2016
0,96	38424-W2017

Réglage du roulement latéral

Résistance de rotation de l'ensemble de boîtier de différentiel	N (kg)	34,3 - 39,2 (3,5 - 4,0)
Méthode de réglage du roulement latéral		Cale de réglage

Cales de pièce de retenue latérale disponibles

Epaisseur mm	N° de pièce
0,20	38453-01G00
0,25	38453-01G01
0,30	38453-01G02
0,40	38453-01G03
0,50	38453-01G04

Réglage de la précharge totale

Précharge totale	N·m (kg-cm)	1,2 - 2,3 (12 - 23)
Battement de la couronne	mm	0,13 - 0,18

Réglage de la hauteur du pignon d'attaque

Rondelles de réglage de la hauteur du pignon d'attaque disponibles

Epaisseur mm	N° de pièce
3,09	38154-P6017
3,12	38154-P6018
3,15	38154-P6019
3,18	38154-P6020
3,21	38154-P6021
3,24	38154-P6022
3,27	38154-P6023
3,30	38154-P6024
3,33	38154-P6025
3,36	38154-P6026
3,39	38154-P6027
3,42	38154-P6028
3,45	38154-P6029
3,48	38154-P6030
3,51	38154-P6031
3,54	38154-P6032
3,57	38154-P6033
3,60	38154-P6034
3,63	38154-P6035
3,66	38154-P6036

Réglage de la précharge du pignon d'attaque

Méthode de réglage de la précharge de roulement du pignon d'attaque	Rondelle et entretoise de réglage
Précharge du pignon d'attaque N·m (kg-cm)	
Avec un joint d'huile avant	1,1 - 1,7 (11 - 17)
Sans joint d'huile avant	1,0 - 1,6 (10 - 16)

Rondelles de réglage disponibles de précharge de roulement du pignon d'attaque

Epaisseur mm	N° de pièce
6,58 - 6,60	38127-01G00
6,56 - 6,58	38127-01G01
6,54 - 6,56	38127-01G02
6,52 - 6,54	38127-01G03
6,50 - 6,52	38127-01G04
6,48 - 6,50	38127-01G05
6,46 - 6,48	38127-01G06
6,44 - 6,46	38127-01G07
6,42 - 6,44	38127-01G08
6,40 - 6,42	38127-01G09
6,38 - 6,40	38127-01G10
6,36 - 6,38	38127-01G11
6,34 - 6,36	38127-01G12
6,32 - 6,34	38127-01G13
6,30 - 6,32	38127-01G14

Entretoises de réglage disponibles de précharge de roulement du pignon d'attaque

Longueur mm	N° de pièce
52,20	38130-78500
52,40	38131-78500
52,60	38132-78500
52,80	38133-78500
53,00	38134-78500
53,20	38135-78500

Simpo PDF Merge and Split Unregistered Version - http://www.simpopdf.com

Pont (Suite)

INSPECTION ET REGLACE (C200)

Voile de la couronne

Limite de voile de la couronne mm	0,05

Réglage des planétaires (sans LSD)

Battement des planétaires (jeu entre planétaire et logement de différentiel) mm	Moins de 0,15

Rondelles de butée de planétaires disponibles (2x2)

Epaisseur mm	N° de pièce
0,75	38424-N3110
0,78	38424-N3111
0,81	38424-N3112
0,84	38424-N3113
0,87	38424-N3114
0,90	38424-N3115
0,93	38424-N3116

Rondelles de butée de planétaires disponibles (4x4)

Epaisseur mm	N° de pièce
0,75	38424-E3000
0,80	38424-E3001
0,85	38424-E3002
0,90	38424-E3003

Réglage du roulement latéral

Résistance de rotation de l'ensemble du logement de différentiel N (kg)	34,3 - 39,2 (3,5 - 4,0)

Rondelles de réglage de roulement latéral disponibles

Epaisseur mm	N° de pièce
2,00	38453-N3100
2,05	38453-N3101
2,10	38453-N3102
2,15	38453-N3103
2,20	38453-N3104
2,25	38453-N3105
2,30	38453-N3106
2,35	38453-N3107
2,40	38453-N3108
2,45	38453-N3109
2,50	38453-N3110
2,55	38453-N3111
2,60	38453-N3112

Réglage de la hauteur du pignon d'attaque

Rondelles de réglage de la hauteur du pignon d'attaque disponibles

Epaisseur mm	N° de pièce
3,09	38154-P6017
3,12	38154-P6018
3,15	38154-P6019
3,18	38154-P6020
3,21	38154-P6021
3,24	38154-P6022
3,27	38154-P6023
3,30	38154-P6024
3,33	38154-P6025
3,36	38154-P6026
3,39	38154-P6027
3,42	38154-P6028
3,45	38154-P6029
3,48	38154-P6030
3,51	38154-P6031
3,54	38154-P6032
3,57	38154-P6033
3,60	38154-P6034
3,63	38154-P6035
3,66	38154-P6036

Réglage de la précharge du pignon d'attaque

Méthode de réglage de la précharge de roulement du pignon d'attaque	Entretoise à écrasement
Précharge du pignon d'attaque N·m (kg-cm)	
Avec joint d'huile avant	1,1 - 1,7 (11 - 17)
Sans joint d'huile avant	1,0 - 1,6 (10 - 16)

Réglage de la précharge totale

Précharge totale N·m (kg-cm)	1,2 - 2,3 (12 - 23)
Battement de la couronne mm	0,13 - 0,18

– Entretien supplémentaire pour modèle avec LSD –

Réglage du couple de différentiel

Couple de différentiel N·m (kg-m)	88 - 108 (9,0 - 11,0)
Nombre de disques et plateaux Disque de friction Plateau de friction Plaque à ressort	 12 12 2
Limite d'usure du plateau et du disque mm	0,1
Tolérance de voile des disques et plateaux de friction mm	0,08
Epaisseur totale mm	19,24 - 20,36

Disques et plateaux disponibles

Nom de pièce	Epaisseur mm	N° de pièce
Disque de friction	1,5	38433-C6002 (Type standard)
	1,6	38433-C6003 (Type réglable)
Plateau de friction	1,5	38432-C6001
Plaque à ressort	1,5	38435-C6011

Simpo PDF Merge and Split Unregistered Version - http://www.simpopdf.com

Pont (Suite)

INSPECTION ET REGLAGE (H233B)

Voile de la couronne

Limite de voile de la couronne mm	0,08

Réglage des planétaires (sans LSD)

Battement des planétaires (jeu entre planétaire et logement de différentiel) mm	0,1 - 0,2

Rondelles de butée de planétaires disponibles

Epaisseur mm	N° de pièce
1,75	38424-T5000
1,80	38424-T5001
1,85	38424-T5002

– Entretien supplémentaire pour modèle avec LSD –

Réglage du couple de différentiel

Couple de différentiel N·m (kg-m)	201 - 240 (20,5 - 24,5)
Nombre de disques et plateaux	
Disque de friction	10
Plateau de friction	12
Disque à ressort	2
Plaque à ressort	2
Limite d'usure du plateau et du disque mm	0,1
Tolérance de voile des disques et plateaux de friction mm	0,08
Epaisseur totale mm	19,24 - 20,26

Disques et plateaux disponibles

Nom de pièce	Epaisseur mm	N° de pièce
Disque de friction	1,48 - 1,52	38433-C6000 (Type standard)
	1,58 - 1,62	38433-C6001 (Type réglable)
Plateau de friction	1,48 - 1,52	38432-C6000
Disque à ressort	1,48 - 1,52	38436-C6000
Plaque à ressort	1,48 - 1,52	38435-C6010

Réglage de la hauteur du pignon d'attaque

Rondelles de réglage de la hauteur du pignon d'attaque disponibles

Epaisseur mm	N° de pièce
2,58	38151-01J00
2,61	38151-01J01
2,64	38151-01J02
2,67	38151-01J03
2,70	38151-01J04
2,73	38151-01J05
2,76	38151-01J06
2,79	38151-01J07
2,82	38151-01J08
2,85	38151-01J09
2,88	38151-01J10
2,91	38151-01J11
2,94	38151-01J12
2,97	38151-01J13
3,00	38151-01J14
3,03	38151-01J15
3,06	38151-01J16
3,09	38151-01J17
3,12	38151-01J18
3,15	38151-01J19
3,18	38151-01J60
3,21	38151-01J61
3,24	38151-01J62
3,27	38151-01J63
3,30	38151-01J64
3,33	38151-01J65
3,36	38151-01J66
3,39	38151-01J67
3,42	38151-01J68
3,45	38151-01J69
3,48	38151-01J70
3,51	38151-01J71
3,54	38151-01J72
3,57	38151-01J73
3,60	38151-01J74
3,63	38151-01J75
3,66	38151-01J76

Simpo PDF Merge and Split Unregistered Version - http://www.simpopdf.com

Pont (Suite)

Réglage de la précharge du pignon d'attaque

Méthode de réglage de la précharge de roulement du pignon d'attaque	Cale et entretoise de réglage
Précharge du pignon d'attaque N·m (kg-cm)	
Avec joint d'huile avant	1,4 - 1,7 (14 - 17)
Sans joint d'huile avant	1,2 - 1,5 (12 - 15)

Cales de réglage de précharge du pignon d'attaque disponibles

Epaisseur mm	N° de pièce
2,31	38125-82100
2,33	38126-82100
2,35	38127-82100
2,37	38128-82100
2,39	38129-82100
2,41	38130-82100
2,43	38131-82100
2,45	38132-82100
2,47	38133-82100
2,49	38134-82100
2,51	38135-82100
2,53	38136-82100
2,55	38137-82100
2,57	38138-82100
2,59	38139-82100

Entretoises de réglage de précharge du pignon d'attaque disponibles

Longueur mm	N° de pièce
4,50	38165-76000
4,75	38166-76000
5,00	38167-76000
5,25	38166-01J00
5,50	38166-01J10

Réglage de la précharge totale

Précharge totale N·m (kg-cm) Avec joint d'huile avant	Roulement du pignon d'attaque	Neuf	1,5 - 1,7 (15 - 17)
		Usagé	1,7 - 2,5 (17 - 25)
Battement de la couronne mm			0,13 - 0,18
Méthode de réglage du roulement latéral			Régleur latéral

Simpo PDF Merge and Split Unregistered Version - http://www.simpopdf.com

ESSIEU ET SUSPENSION ARRIERE

SECTION **RA**

TABLE DES MATIERES

PRECAUTIONS ET PREPARATION 1
- Précautions 1
- Outillage spécial 1
- Outils en vente dans le commerce 2

ESSIEU ET SUSPENSION ARRIERE 3

ENTRETIEN SUR LE VEHICULE 4
- Pièces de la suspension et de l'essieu arrière 4
- Roulement de roue arrière 4

ESSIEU ARRIERE 5
- Composants 5
- Dépose 6
- Inspection 7
- Repose - Modèles à 2 et 4 roues motrices sans ABS - 8
- Repose – Modèles 4 x 4 avec ABS – 10

SUSPENSION ARRIERE 12
- Amortisseur 13
- Ressort à lames 13

CARACTERISTIQUES ET VALEURS DE REGLAGE (SDS) 16
- Caractéristiques générales 16
- Inspection et réglage 16

Simpo PDF Merge and Split Unregistered Version - http://www.simpopdf.com

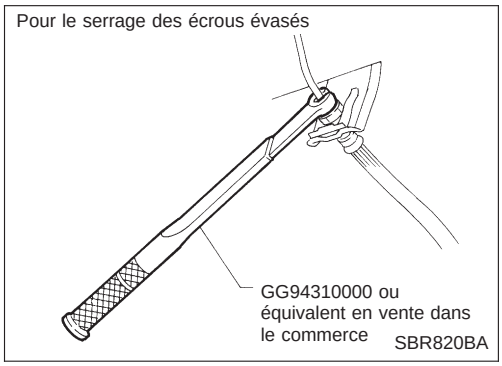

Précautions

- **Lors de la repose des pièces en caoutchouc, effectuer le serrage final à vide*, les pneus reposant au sol.**
  *** : Avec plein de carburant, de liquide de refroidissement et d'huile moteur. Avec pneu de secours, cric, outillage à main et tapis dans la position spécifiée.**
- **Utiliser une clé pour écrou évasé lors de la dépose ou de la repose des tuyaux de frein.**
- **Après la repose des pièces de la suspension déposées, vérifier l'alignement des roues et le régler si nécessaire.**
- **Toujours serrer les canalisations de frein au couple spécifié lors de l'installation.**

Outillage spécial

Numéro de l'outil Nom de l'outil	Description	
KV40101000 Chandelle de support d'essieu	 NT159	Dépose de l'arbre d'essieu arrière
ST36230000 Marteau coulissant	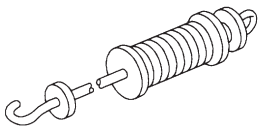 NT126	Dépose de l'arbre d'essieu arrière
ST38020000 Clé pour contre-écrou de roulement	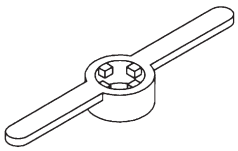 NT160	Dépose du contre-écrou de roulement de roue
KV40106500 Extracteur de roulement d'arbre d'essieu arrière	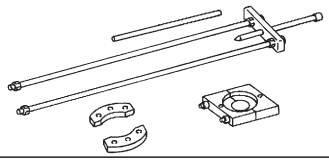 NT683	Dépose du roulement de roue et rotor de capteur d'ABS
ST37840000 Guide d'arbre d'essieu arrière	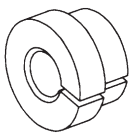 NT162	Repose de l'arbre d'essieu arrière
GG94310000 Clé dynamométrique pour écrous évasés	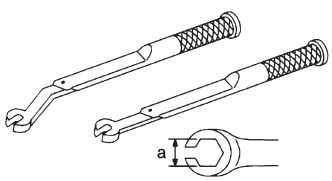 NT406	Dépose et repose des conduites de frein **a : 10 mm**

Simpo PDF Merge and Split Unregistered Version - http://www.simpopdf.com

Outils en vente dans le commerce

Nom de l'outil	Description	
① Adaptateur pour écrou évasé ② clé dynamométrique	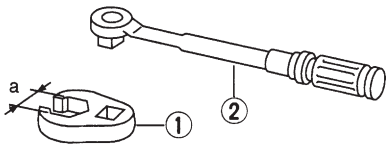 NT360	Dépose et repose de chaque conduite de frein **a : 10 mm**
Chassoir du joint d'huile d'essieu arrière	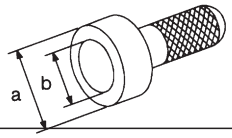 NT115	Repose du joint d'huile **a : 74 mm** ϕ **b : 68 mm** ϕ
Chassoir du joint d'huile d'essieu arrière	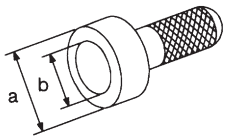 NT115	Repose du joint d'huile **a : 54,5 mm** ϕ **b : 34,5 mm** ϕ

Simpo PDF Merge and Split Unregistered Version - http://www.simpopdf.com

2 ROUES MOTRICES (2 X 2)

SEC. 380•430•431

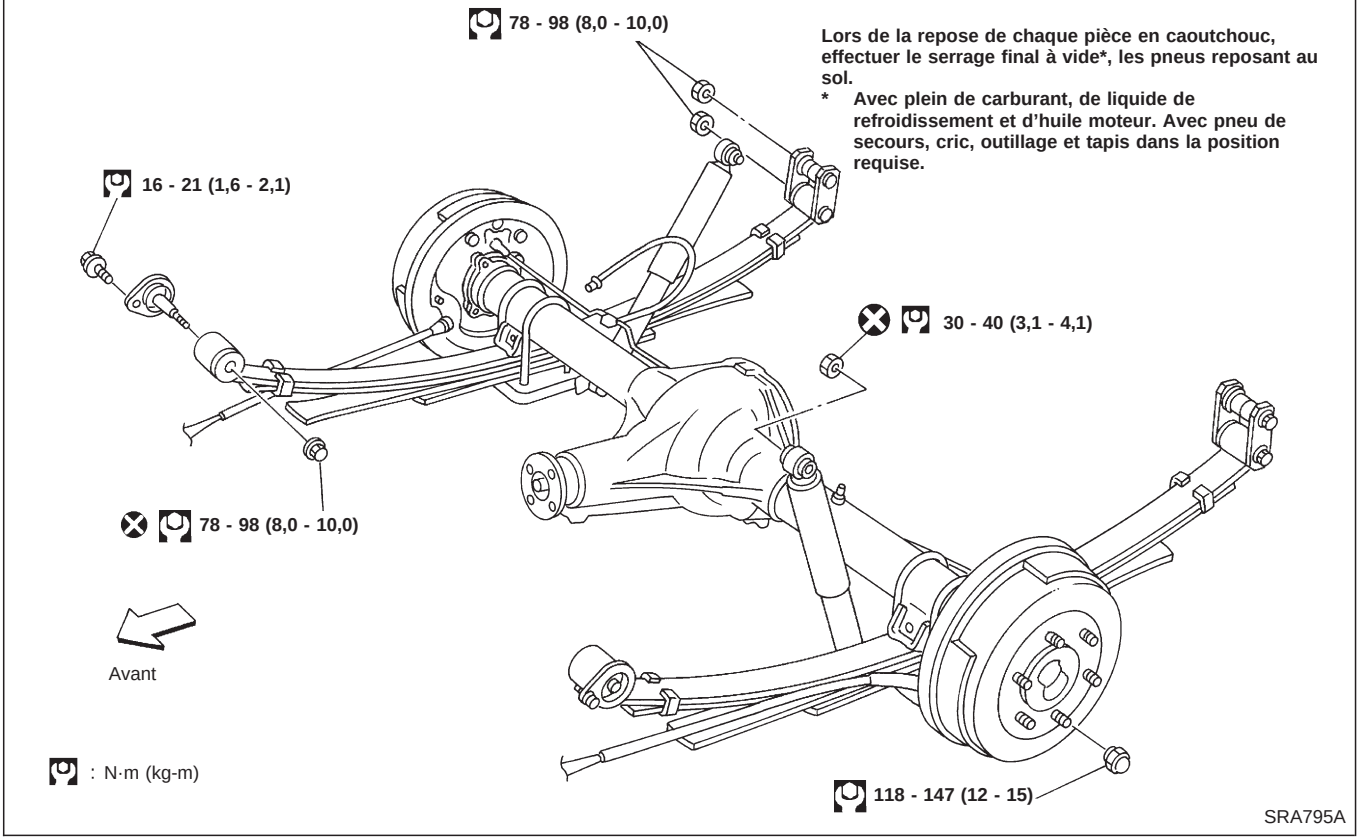

SRA795A

4 ROUES MOTRICES (4 x 4)

SEC. 380•430•431

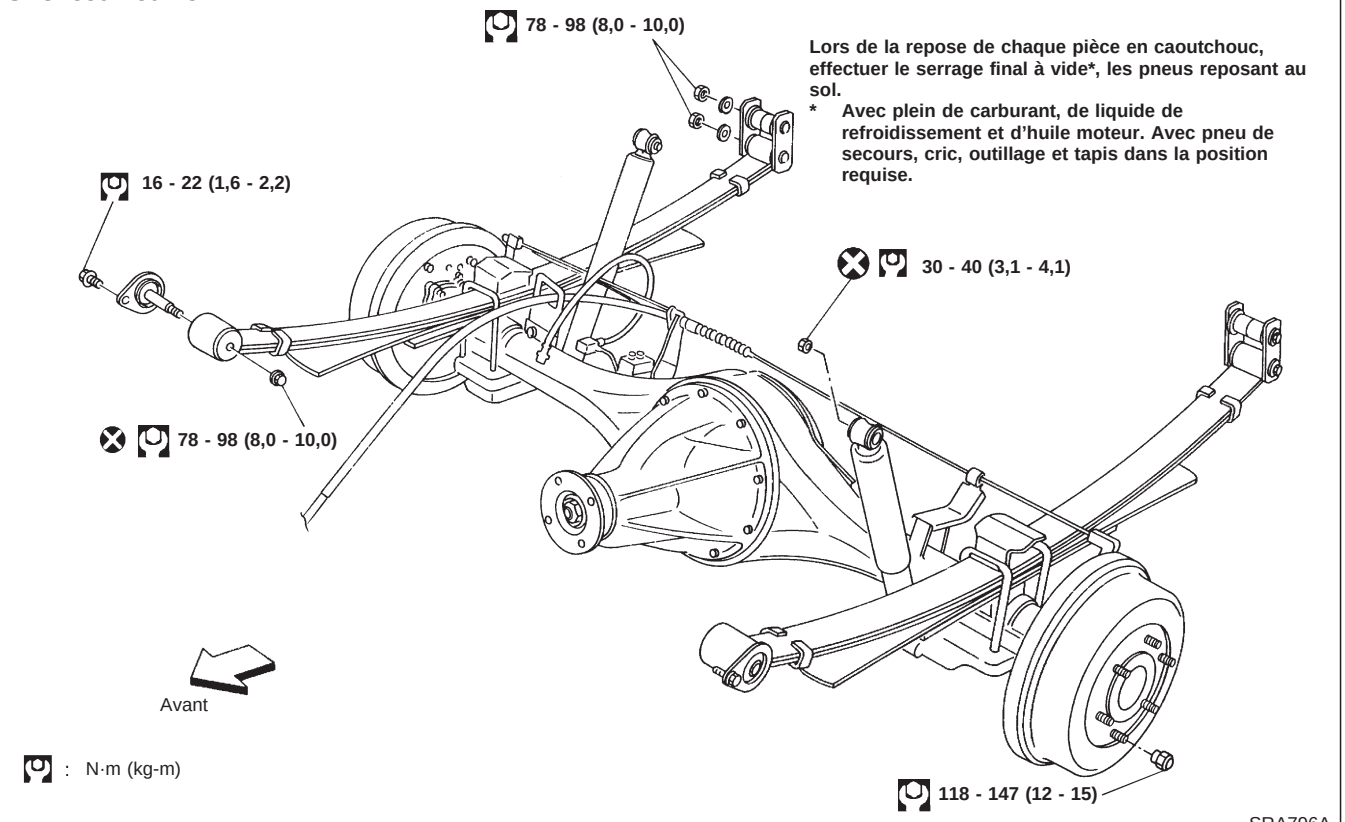

SRA796A

Simpo PDF Merge and Split Unregistered Version - http://www.simpopdf.com

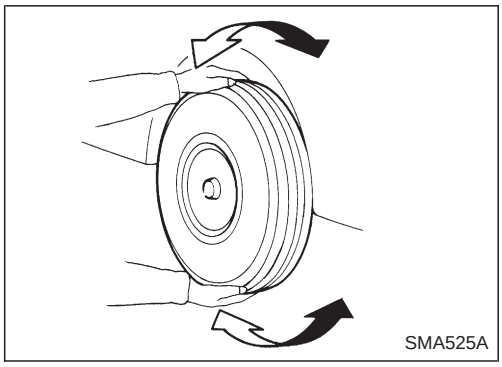
SMA525A

Pièces de la suspension et de l'essieu arrière

Vérifier que les pièces de la suspension et de l'essieu arrière ne présentent pas de jeu excessif, d'usure ou de dommages.

- Secouer chaque roue arrière pour détecter tout jeu excessif.

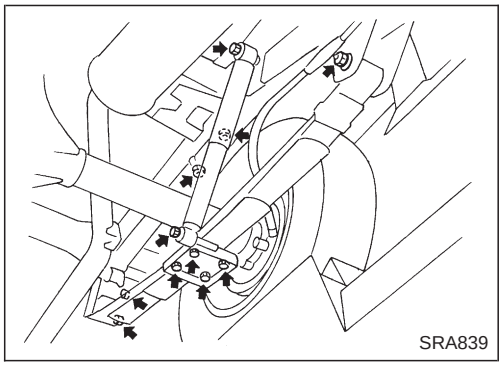
SRA839

- Resserrer tous les écrous et boulons au couple spécifié.
  : se reporter à SUSPENSION ARRIERE, RA-12.

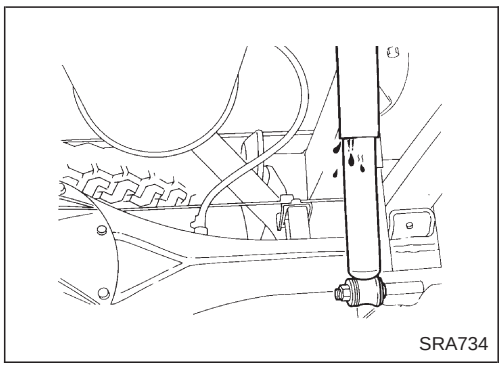
SRA734

- Vérifier que les amortisseurs ne présentent pas de fuites d'huile ou d'autres traces de détérioration.
- Vérifier que la bague de l'amortisseur ne présente pas d'usure excessive ou autres dommages.

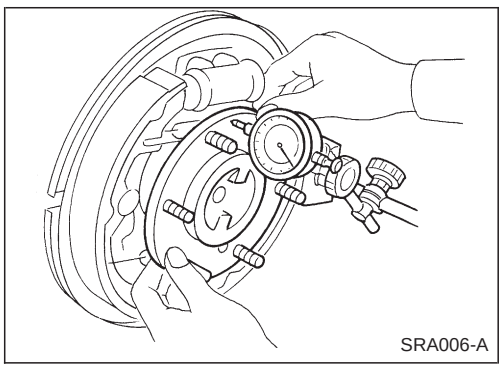
SRA006-A

Roulement de roue arrière

- S'assurer que les roulements de roues tournent en douceur.
- Vérifier le jeu axial.

  Jeu axial :

  Se reporter aux SDS, RA-16.

Simpo PDF Merge and Split Unregistered Version - http://www.simpopdf.com

Composants

SEC. 430

Modèles à 2 roues motrices et 4 roues motrices sans ABS

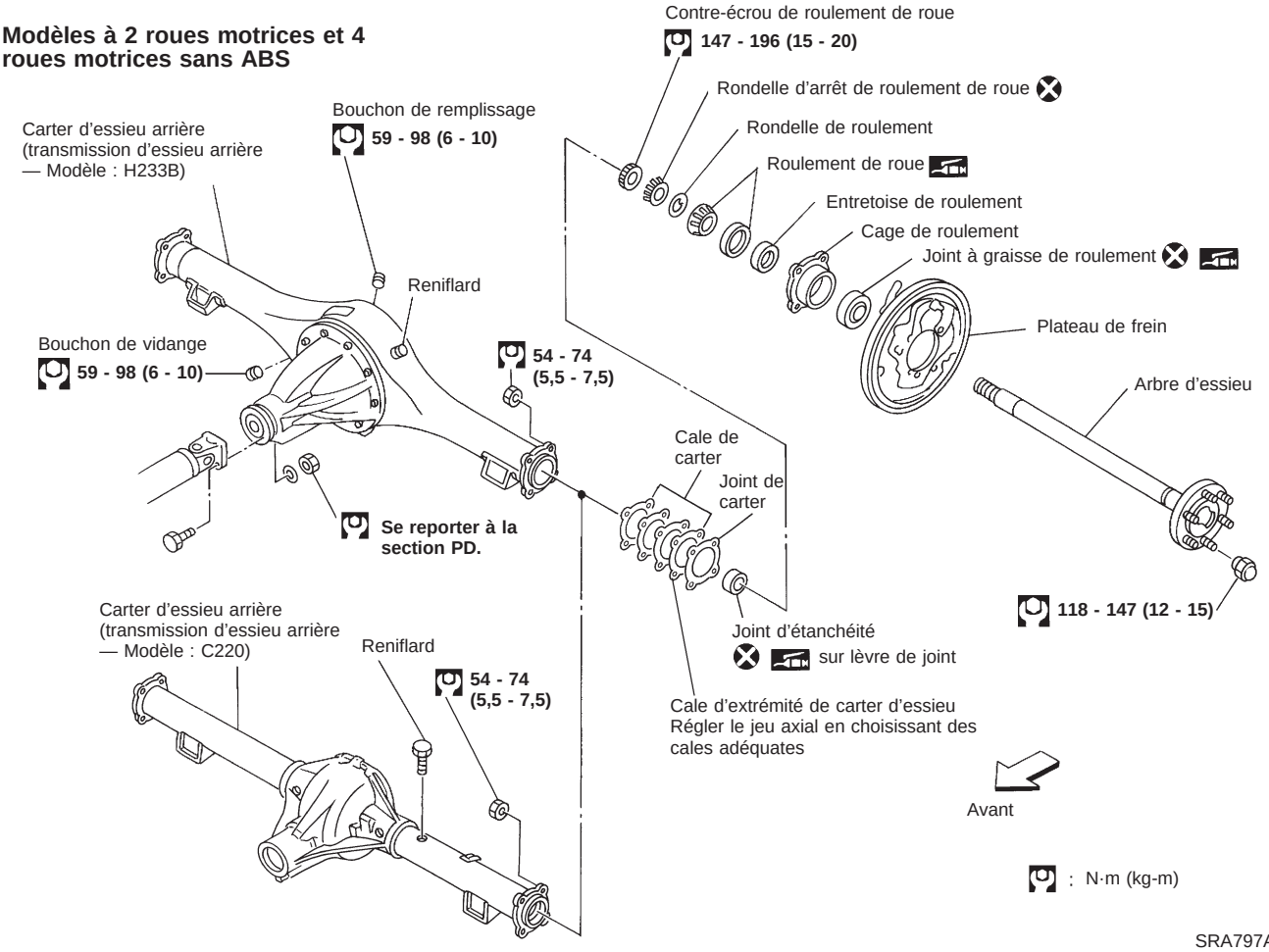

SRA797AA

SEC. 430•476
Modèles à 4 roues motrices avec ABS

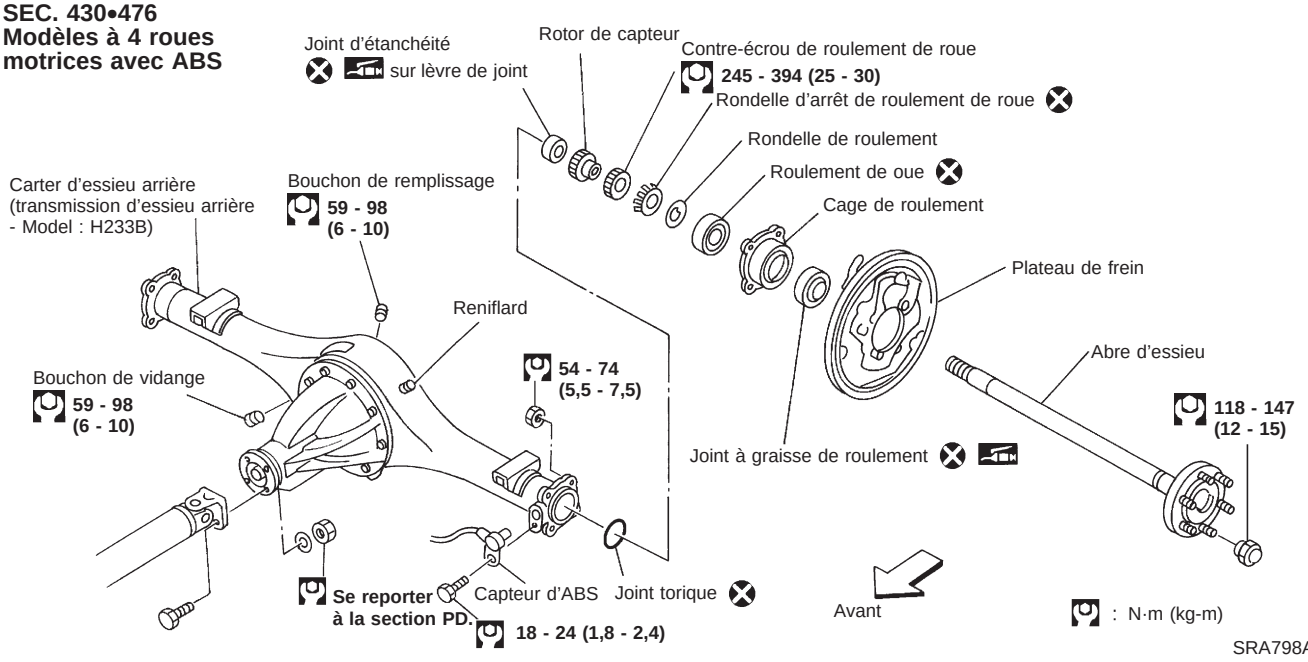

SRA798AA

Simpo PDF Merge and Split Unregistered Version - http://www.simpopdf.com

Dépose

- **Avant de déposer l'essieu arrière, déconnecter le capteur de roue ABS de l'ensemble. Puis le déposer de l'essieu. Dans le cas contraire, les câbles de capteur pourraient s'endommager ce que rendrait le capteur inopérant.**
- **Le roulement de roue ne nécessite aucun entretien.**
- Si le roulement de roue émet un grincement pendant l'opération, remplacer le roulement de roue.
- Une fois que le roulement de roue est déposé, il faut le remplacer par un neuf. L'ancien ensemble ne peut être réutilisé.

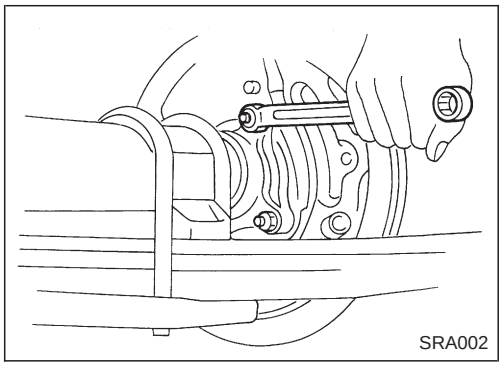
SRA002

1. Débrancher le câble de frein de stationnement et le tuyau de frein.
2. Déposer les écrous fixant la cage de roulement de roue avec le plateau de frein.

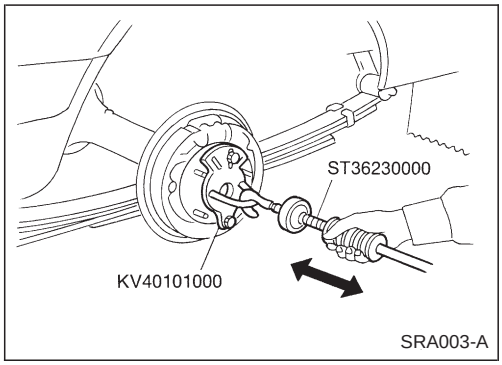

SRA003-A

3. Extraire l'arbre d'essieu à l'aide d'un outil spécial.

Lors de l'extraction de l'arbre d'essieu, veiller à ne pas endommager le joint d'huile.

4. Déposer la cale et le joint du carter.
   — Modèles à 2 et 4 roues motrices sans ABS —
5. Déposer le joint torique. — Modèles 4 X 4 avec ABS —
6. Déposer le joint d'huile.

Ne pas réutiliser le joint d'huile une fois déposé.
Toujours reposer un joint neuf.

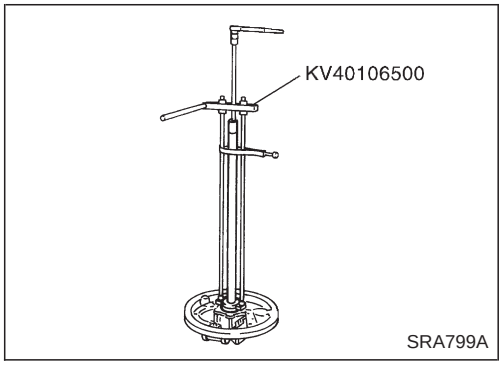

SRA799A

7. Déposer le rotor de capteur ABS. — Modèles 4 X 4 avec ABS —

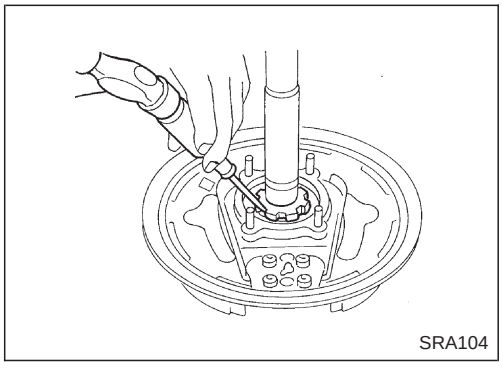
SRA104

8. Redresser la rondelle de verrouillage à l'aide d'un tournevis.

Simpo PDF Merge and Split Unregistered Version - http://www.simpopdf.com

Dépose (Suite)

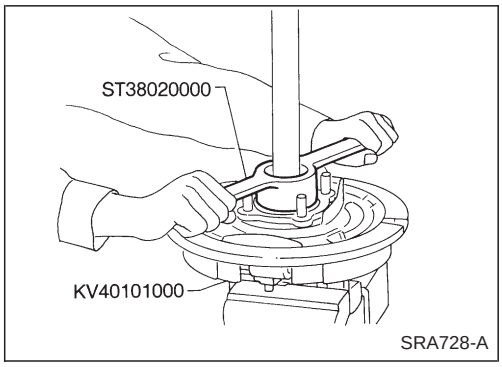

9. Déposer le contre-écrou de roulement de roue à l'aide de l'outil spécial.

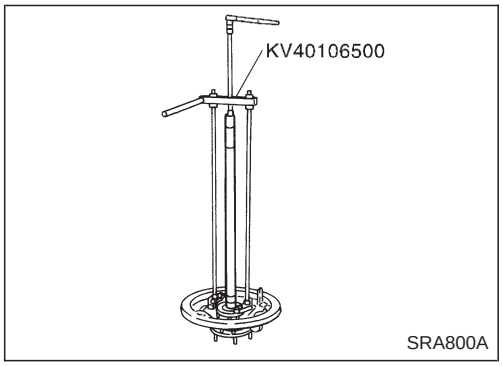

10. Déposer le roulement de roue avec la cage de roulement et le plateau de frein de l'arbre d'essieu.

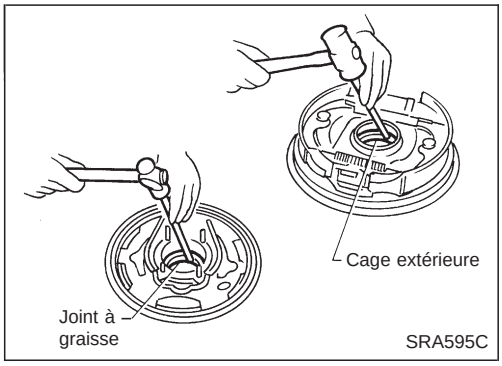

11. Déposer le joint à graisse dans la cage de roulement à l'aide d'une barre adéquate.
12. Déposer la cage extérieure du roulement de roue à l'aide d'un chassoir en laiton.
    — Modèles à 2 et 4 roues motrices sans ABS —

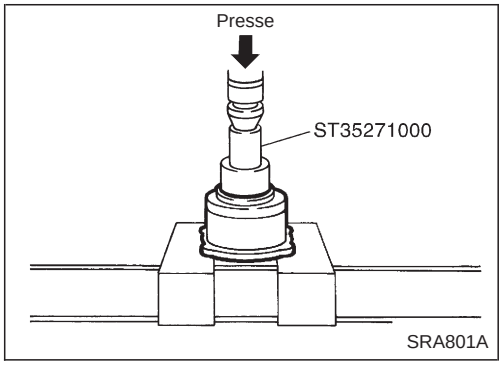

13. Déposer le roulement de roue.
    — Modèles 4 X 4 avec ABS —

Inspection

ARBRE D'ESSIEU

- Vérifier que le semi-arbre n'est pas tordu, fendu, abîmé, usé ou déformé. Remplacer si nécessaire.

ROULEMENT DE ROUE

- S'assurer que le roulement de roue tourne librement et sans bruit, qu'il n'est pas fissuré, piqué ou usé.

Simpo PDF Merge and Split Unregistered Version - http://www.simpopdf.com

CARTER D'ESSIEU

- Vérifier que le carter d'essieu n'est pas tordu, déformé ou fissuré. Le remplacer si nécessaire.

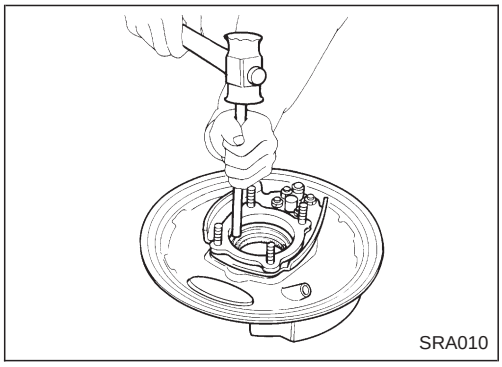
SRA010

Repose — Modèles à 2 et 4 roues motrices sans ABS —

1. Reposer la cage extérieure de roulement de roue à l'aide d'un chassoir en laiton.
2. Reposer un joint à graisse neuf dans la cage de roulement.

Après la repose d'un joint d'huile neuf, enduire la lèvre d'étanchéité de graisse à usages multiples.

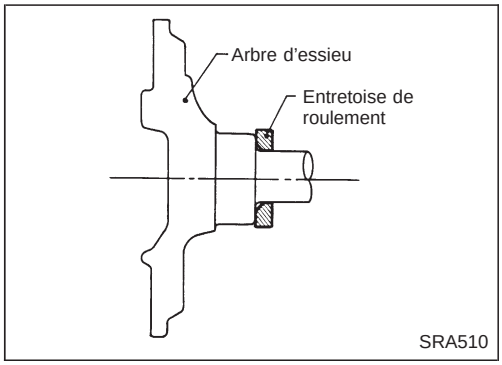

SRA510

3. Reposer l'entretoise de roulement avec le côté chanfreiné orienté vers le flasque de l'arbre d'essieu.

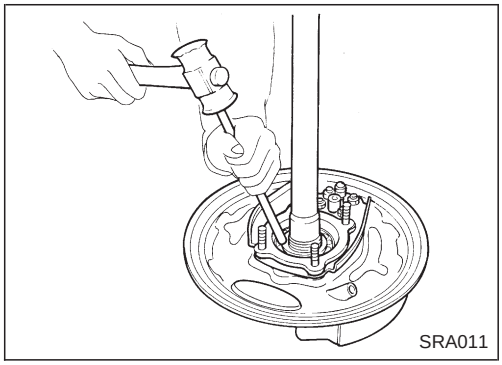
SRA011

4. Reposer la cage intérieure de roulement de roue à l'aide d'un chassoir en laiton.
5. Enduire chaque cône de roulement de graisse à usages multiples.

Quantité adéquate de graisse :
8 - 12 g

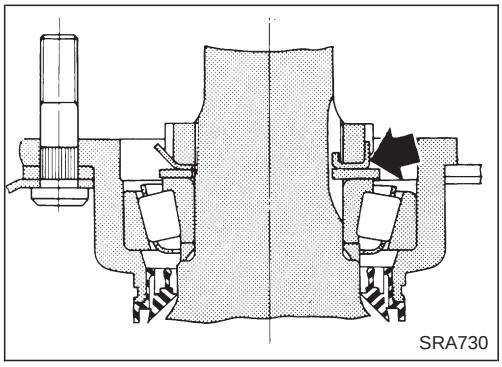
SRA730

6. Reposer une rondelle plate et une rondelle de verrouillage de roulement de roue neuve.
7. Serrer le contre-écrou de roulement de roue.

Adapter correctement la lèvre de la rondelle de verrouillage du roulement de roue dans la rainure du contre-écrou de roulement de roue en serrant le contre-écrou. Veiller à tordre la rondelle vers le haut.

Simpo PDF Merge and Split Unregistered Version - http://www.simpopdf.com

Repose — Modèles à 2 et 4 roues motrices sans ABS — (Suite)

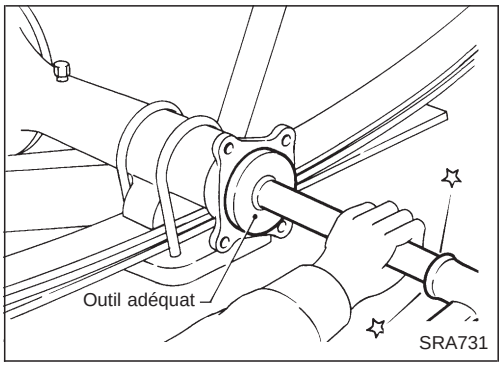

8. Reposer un joint à graisse neuf à l'aide d'un outil adéquat.

Après repose d'un joint d'huile neuf, enduire la lèvre d'étanchéité de graisse à usages multiples.

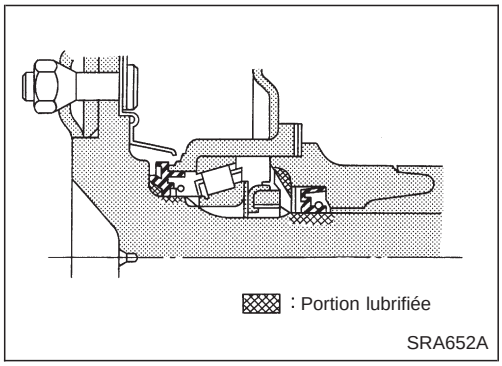

9. Appliquer de la graisse à usages multiples sur l'encoche à l'extrémité du carter d'essieu.
10. Appliquer de l'huile pour pignons sur la cannelure de l'arbre d'essieu. Enduire la surface d'étanchéité de l'arbre d'essieu de graisse à usages multiples (comme indiqué ci-à gauche).

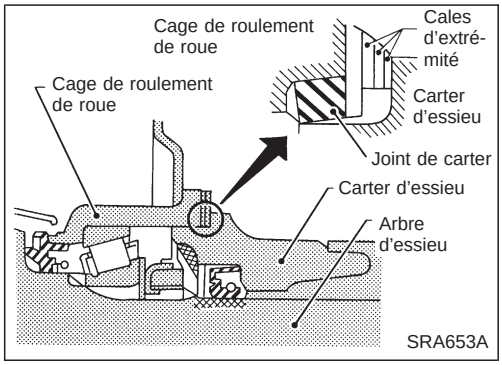

11. Régler le jeu axial.

a. Sélectionner les cales d'extrémité.

Epaisseur standard : 1,5 mm
Cale d'extrémité du carter arrière : se reporter aux SDS, RA-16.

Ne pas introduire les cales d'extrémité entre le joint de carter et la cage de roulement.

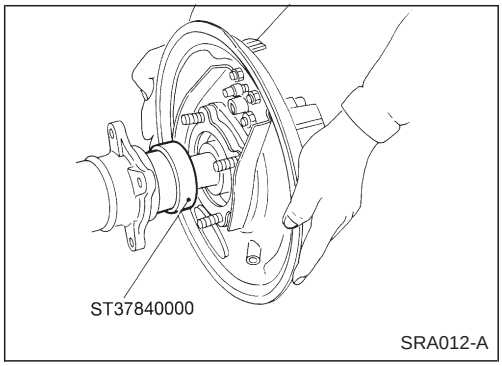

b. Introduire l'arbre d'essieu en le guidant avec l'outil spécial.

Lors de l'insertion de l'arbre d'essieu, veiller à ne pas endommager le joint d'huile.

c. Mesurer le jeu de l'arbre d'essieu.

Jeu axial :
Entretien d'un côté de l'essieu
0,02 - 0,15 mm
Entretien des deux côtés de l'essieu
Sur le premier essieu (droit ou gauche)
0,30 - 0,90 mm
Sur le deuxième essieu
0,02 - 0,15 mm

Simpo PDF Merge and Split Unregistered Version - http://www.simpopdf.com

Repose — Modèles à 2 et 4 roues motrices sans ABS — (Suite)

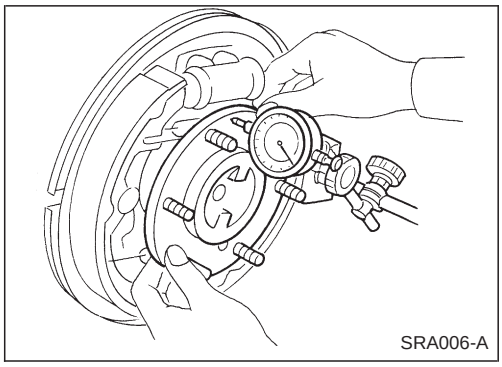
SRA006-A

d. Si le jeu axial n'est pas dans les limites spécifiées, resélectionner les cales d'extrémité du carter d'essieu.

Si les cales gauche et droite présentent une différence d'épaisseur de plus de 1 mm, ajuster leur épaisseur en ajoutant ou ôtant des cales par le côté jusqu'à ce que la différence soit inférieure à 1 mm.

Repose – Modèles 4 x 4 avec ABS –

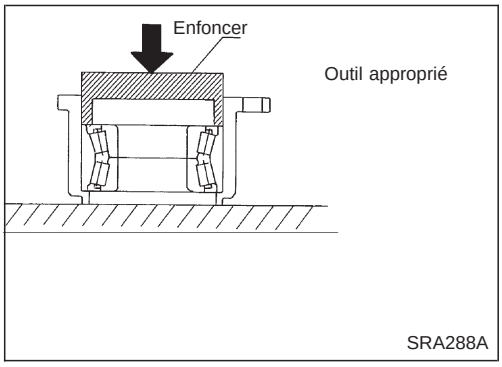

SRA288A

1. Enfoncer l'ensemble de roulement de roue neuf jusqu'à ce qu'il s'emboîte au fond de la cage de roulement.
   Charge maximum P :
   78 kN (8 tonnes)

Toujours enfoncer la cuvette externe de roulement de roue lors de la repose.

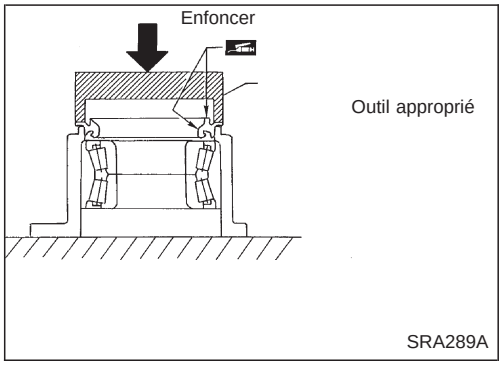

SRA289A

2. Enfoncer le joint à graisse neuf jusqu'à ce qu'il touche le fond de la cage de roulement.

Après la repose d'un joint d'huile neuf, enduire sa lèvre d'étanchéité de graisse à usages multiples.

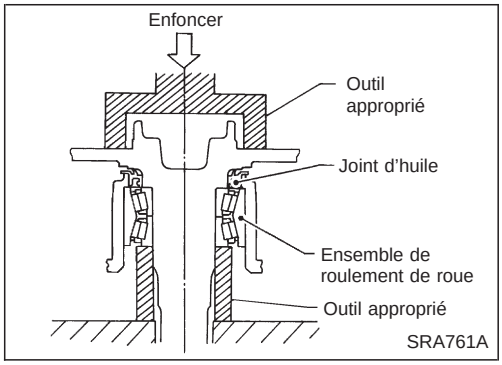

SRA761A

3. Enfoncer l'arbre d'essieu dans la cuvette interne de roulement de roue.
   Charge maximum P :
   47,1 kN (4,8 tonnes)

Veiller à ne pas endommager ou déformer le joint d'huile.

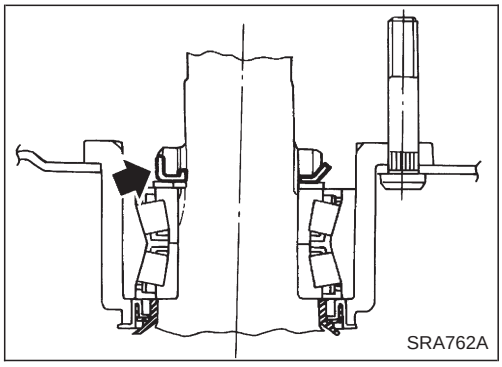
SRA762A

4. Reposer une rondelle plate et une rondelle de verrouillage de roulement de roue neuve.
5. Serrer le contre-écrou de roulement de roue au couple spécifié.
   : 245 - 294 (25 - 30 kg-m)

Adapter correctement la lèvre de la rondelle de verrouillage du roulement de roue dans la rainure du contre-écrou de roulement de roue en serrant le contre-écrou. Veiller à tordre la rondelle vers le haut.

Simpo PDF Merge and Split Unregistered Version - http://www.simpopdf.com

Repose – Modèles 4 x 4 avec ABS – (Suite)

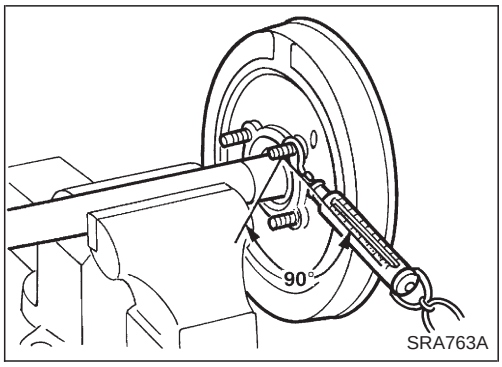

6. Contrôler la précharge du roulement de roues.
a. Tourner la cuvette de roulement (en prenant soin de l'arbre d'essieu) deux ou trois fois. Il doit tourner librement.
b. Fixer le dynamomètre au boulon de la cuvette externe (comme indiqué ci-à gauche), et le tirer à un régime de 10 tr/mn pour mesurer la précharge.
Indication du dynamomètre :
6,9 - 48,1 N (0,7 - 4,9 kg)

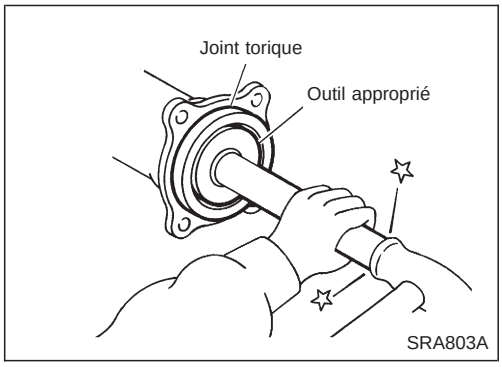

7. Reposer un joint d'huile neuf sur le carter de l'essieu arrière à l'aide d'un outil adéquat.

Après la repose d'un joint d'huile neuf, enduire la lèvre d'étanchéité de graisse à usages multiples.

8. Reposer le joint torique neuf sur le carter d'essieu arrière.

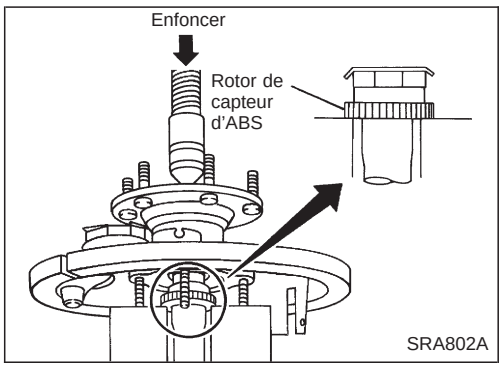

9. Enfoncer le rotor de capteur d'ABS dans l'arbre d'essieu jusqu'à ce qu'il entre en contact avec le contre-écrou de roulement de roue.

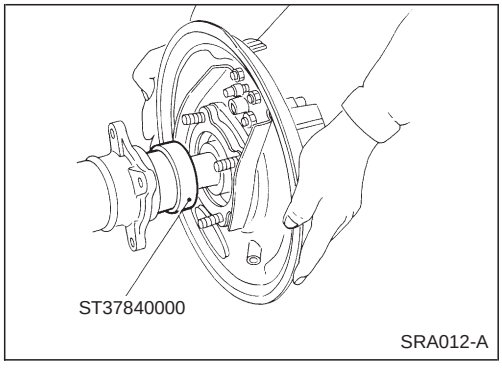

10. Positionner les arbres d'essieu dans le carter d'essieu arrière en les guidant avec l'outil spécial.

Veiller à ne pas endommager le joint d'huile.

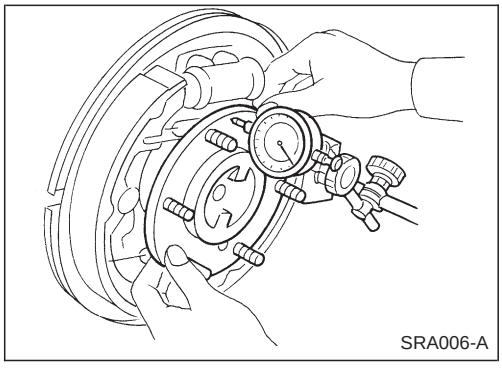

11. Vérifier le jeu axial.
a. S'assurer que les roulements de roues tournent en douceur.
b. Vérifier le jeu axial.
Jeu axial :
0 mm

Simpo PDF Merge and Split Unregistered Version - http://www.simpopdf.com

2 ROUES MOTRICES (2 X 2)

SEC. 431

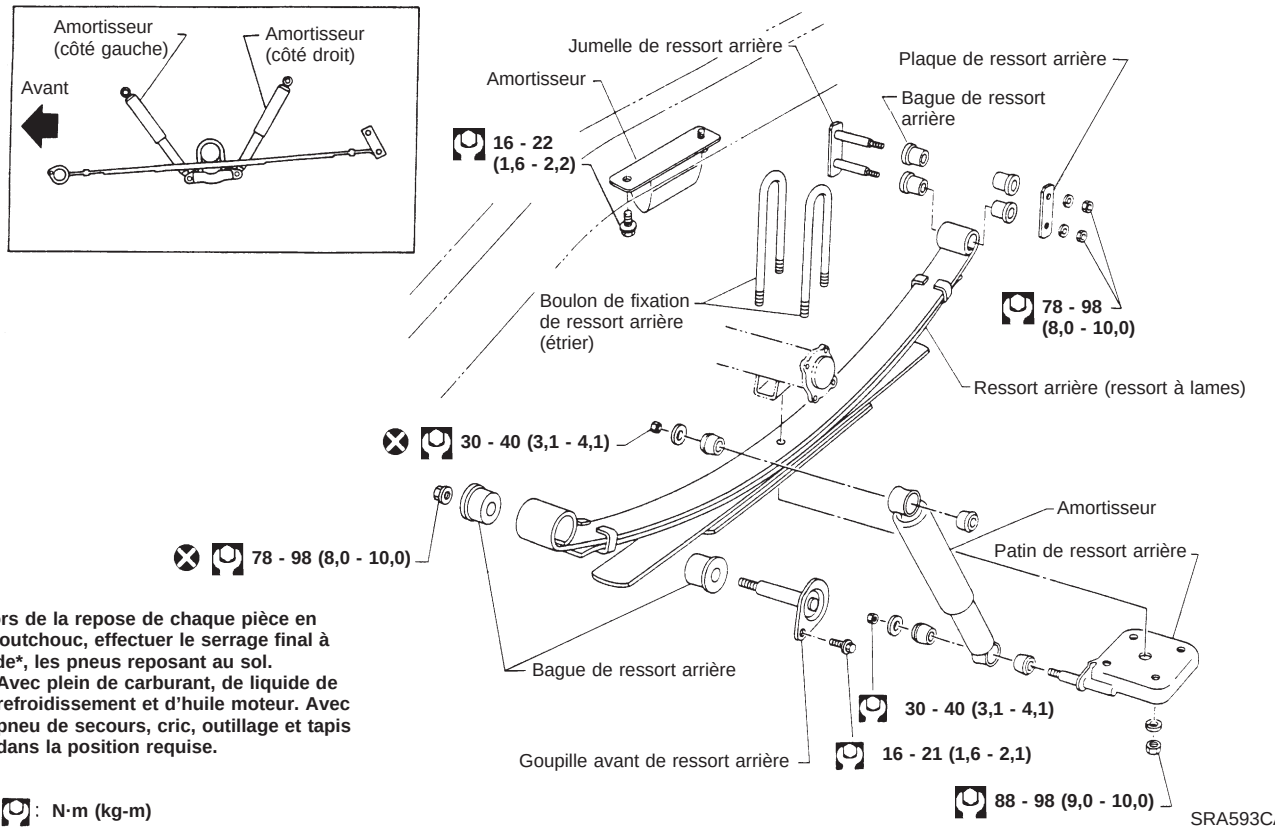

Lors de la repose de chaque pièce en caoutchouc, effectuer le serrage final à vide*, les pneus reposant au sol.
*** Avec plein de carburant, de liquide de refroidissement et d'huile moteur. Avec pneu de secours, cric, outillage et tapis dans la position requise.**

: N·m (kg-m)

SRA593CA

4 ROUES MOTRICES (4 X 4)

SEC. 431

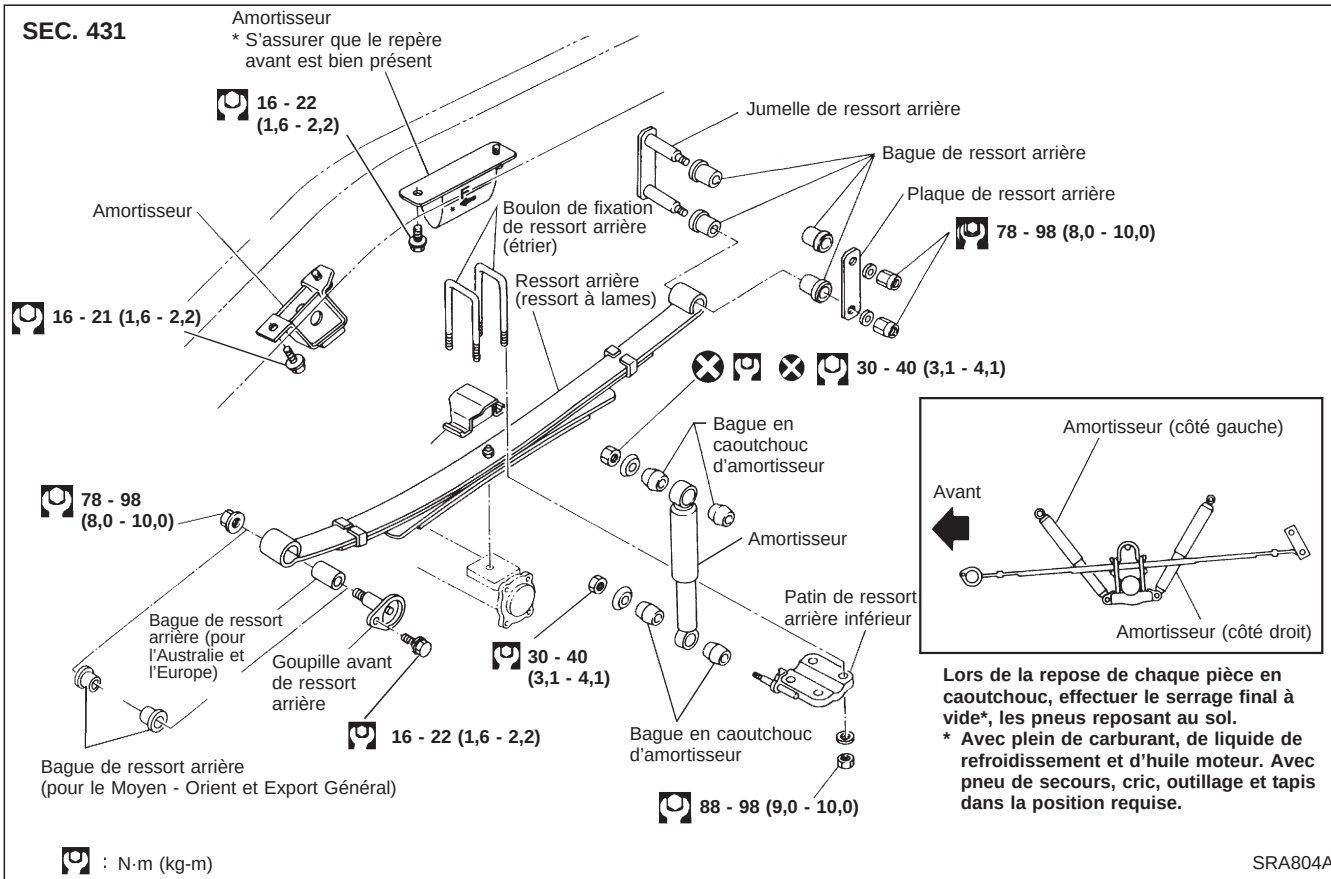

Lors de la repose de chaque pièce en caoutchouc, effectuer le serrage final à vide*, les pneus reposant au sol.
*** Avec plein de carburant, de liquide de refroidissement et d'huile moteur. Avec pneu de secours, cric, outillage et tapis dans la position requise.**

: N·m (kg-m)

SRA804AA

Simpo PDF Merge and Split Unregistered Version - http://www.simpopdf.com

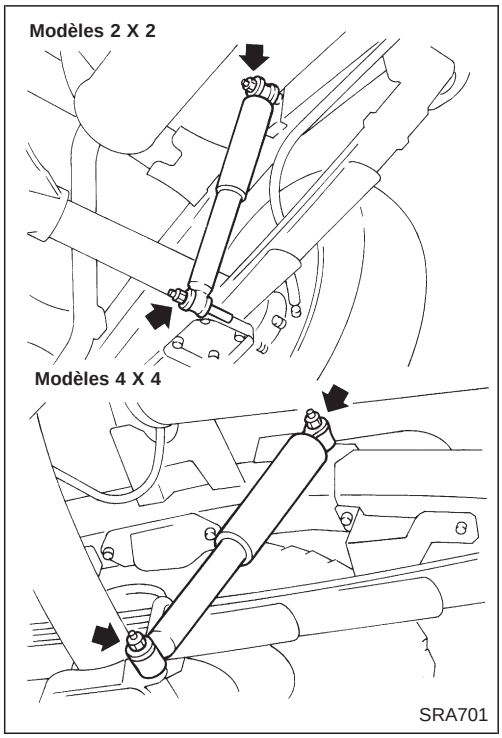

Amortisseur

DEPOSE ET REPOSE

- Déposer l'amortisseur en désaccouplant les extrémités supérieure et inférieure.

INSPECTION

- Si des fuites d'huile, des fissures ou des déformations surviennent, remplacer l'amortisseur.
- Si les bagues en caoutchouc sont fissurées ou déformées, les remplacer.

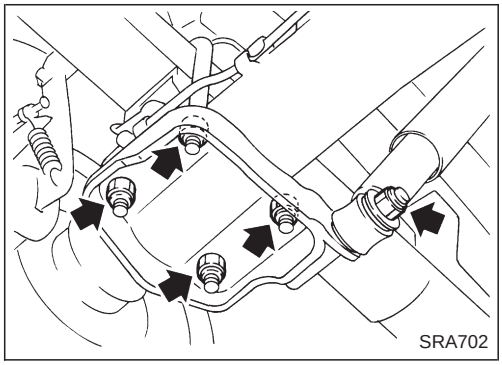

Ressort à lames

DEPOSE ET REPOSE

1. Débrancher l'extrémité inférieure de l'amortisseur, et déposer les étriers.

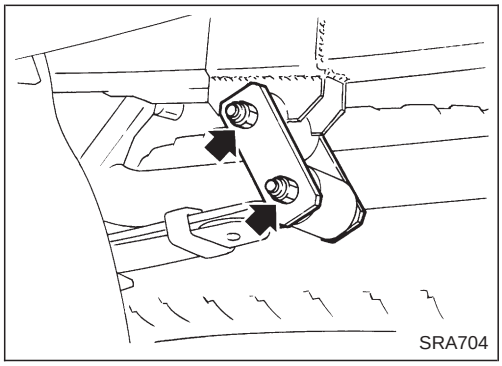

2. Désaccoupler la jumelle de ressort.

Simpo PDF Merge and Split Unregistered Version - http://www.simpopdf.com

Ressort à lames (Suite)

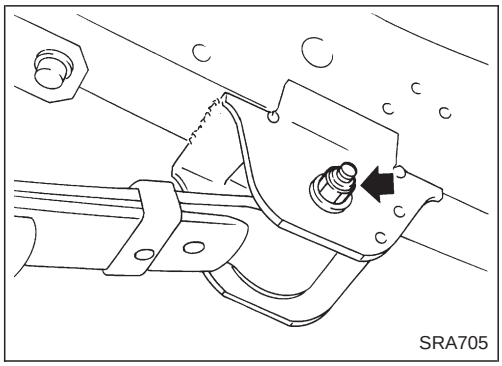
SRA705

3. Extraire la goupille.

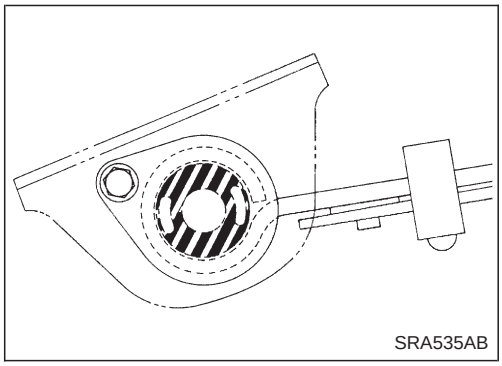
SRA535AB

INSPECTION

- Vérifier que le ressort à lames n'est pas fissuré. Remplacer si nécessaire.
- Vérifier que le support avant et sa goupille, la jumelle, les étriers et le patin de ressort ne sont pas usés, fendus ou tordus et que les filets ne sont pas abîmés. Les remplacer si nécessaire.
- Vérifier que toutes les bagues ne présentent pas de déformations ou de fissures. Remplacer si nécessaire.
  [Modèles 4 X 4 pour l'Australie et l'Europe : bague avant de ressort arrière]
  S'assurer que la bague avant est correctement installée.

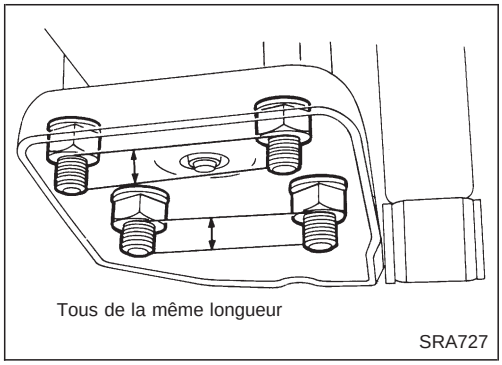
Tous de la même longueur
SRA727

REPOSE

1. Enduire de savon les bagues en caoutchouc.
2. Reposer la jumelle du ressort et la goupille avant, puis serrer les écrous à la main.
3. Reposer le patin et les écrous de ressort sous le ressort à lames ou le carter d'essieu.
4. Serrer en diagonale les écrous de fixation de l'étrier.

Serrer les étriers de sorte que tous les étriers sous le patin aient la même longueur.

5. Reposer l'amortisseur et serrer les écrous à la main.

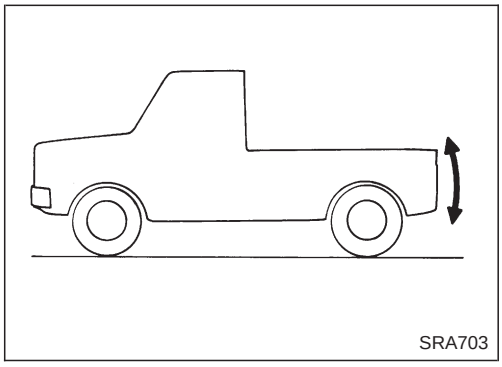
SRA703

6. Déposer les chandelles et basculer le véhicule afin de stabiliser la suspension (à vide).

Simpo PDF Merge and Split Unregistered Version - http://www.simpopdf.com

Ressort à lames (Suite)

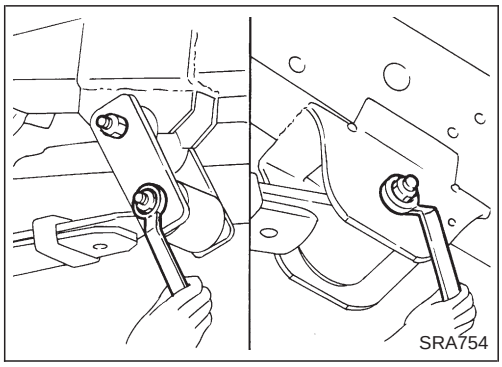

7. Serrer les écrous de jumelle de ressort, les écrous de goupille avant et les écrous de l'amortisseur.

Lors de la repose des pièces en caoutchouc, effectuer le serrage final à vide*, les pneus reposant au sol.

* Avec plein de carburant, de liquide de refroidissement et d'huile moteur. Avec pneu de secours, cric, outillage à main et tapis dans la position spécifiée.

Simpo PDF Merge and Split Unregistered Version - http://www.simpopdf.com

Caractéristiques générales

Type de suspension	Essieu rigide avec ressort à lames semi-elliptique
Type d'amortisseur	Hydraulique à double effet

Inspection et réglage

ROULEMENT DE ROUE — Modèles à 2 et 4 roues motrices sans ABS —

Jeu axial total mm	0,02 - 0,15	
	Epaisseur mm	Numéro de la pièce
Cales d'extrémité du carter d'essieu arrière disponibles	0,05	43086-P0110
	0,07	43087-P0110
	0,10	43088-P0110
	0,15	43086-B9500
	0,20	43089-P0110
	0,50	43090-P0110
	1,00	43036-01G00

ROULEMENT DE ROUE — Modèles 4 X 4 avec ABS —

Jeu axial total	mm	0
Précharge de roulement de roue au boulon de cage de roulement	N (kg)	6,9- 48,1 (0,7 - 4,9)

Simpo PDF Merge and Split Unregistered Version - http://www.simpopdf.com

SYSTEME DE RETENUE

SECTION RS

TABLE DES MATIERES

PRECAUTION 1
Système de retenue supplémentaire (SRS) ‘‘COUSSIN GONFLABLE’’ (modèles à 4 roues motrices) 1
Système de retenue supplémentaire (SRS) ‘‘COUSSIN GONFLABLE’’ (modèles à 2 roues motrices) 1
CEINTURES DE SECURITE 2
Ceinture de sécurité avant 3
Ceinture de sécurité arrière 4
SYSTEME DE RETENUE SUPPLEMENTAIRE (SRS) 6
Précautions pour l’entretien du SRS ‘‘COUSSIN GONFLABLE’’ 6
Outillage spécial 6
Description 7
Disposition des composants du SRS 8
Points d’entretien 9
Dépose et repose – Boîtier de capteurs de diagnostic (modèles à 4 roues motrices) 10
Dépose et repose – module de coussin gonflable et câble spiralé (modèles à 4 roues motrices) 11
Dépose et repose – module de coussin gonflable et câble spiralé (modèles à 2 roues motrices) 11
Dépose – module de coussin gonflable et câble spiralé 12
Repose – Module de coussin gonflable et câble spiralé 13
Mise au rebut du module de coussin gonflable .. 14
DIAGNOSTICS DES DEFAUTS – Système de retenue supplémentaire (SRS) – Modèles à 2 roues motrices 18
Comment effectuer des diagnostics de défauts permettant une réparation rapide et précise 18
Schéma de câblage – SRS – 19
Autodiagnostic 20
DIAGNOSTIC DE COLLISION – Modèles à 2 roues motrices 22
DIAGNOSTICS DES DEFAUTS – Système de retenue supplémentaire (SRS) – 23
Introduction des diagnostics de défauts 23
Comment effectuer des diagnostics de défauts permettant une réparation rapide et précise 25
Schéma de câblage – SRS – 27
Vérification du fonctionnement du SRS 29
Diagnostic des défauts avec CONSULT 30
Diagnostic de défaut sans CONSULT 38
Diagnostics de défaut : le témoin ‘‘AIR BAG’’ ne s’éteint pas 42
Diagnostics de défaut : le témoin ‘‘AIR BAG’’ ne s’allume pas 43
Diagnostics de défaut : le SRS ne passe pas en mode de Diagnostic en utilisant le contact de porte 43
DIAGNOSTIC DE COLLISION – Modèles à 4 roues motrices 44

Simpo PDF Merge and Split Unregistered Version - http://www.simpopdf.com

Lors de la lecture des schémas de câblage :
- **Lire la section GI, ‘‘COMMENT LIRE LES SCHEMAS DE CABLAGE’’.**
- **Voir la section EL, ‘‘DISTRIBUTION DE L’ALIMENTATION ELECTRIQUE’’ pour connaître les circuits de distribution de l’alimentation électrique.**

Se reporter à la section GI aux chapitres ‘‘COMMENT LIRE LES ORGANIGRAMMES DANS LES DIAGNOSTICS DES DEFAUTS’’ et ‘‘COMMENT ACCOMPLIR UN DIAGNOSTIC EFFICACE EN CAS D’INCIDENT ELECTRIQUE’’ pour effectuer les diagnostics des défauts.

Simpo PDF Merge and Split Unregistered Version - http://www.simpopdf.com

Système de retenue supplémentaire (SRS) ‘‘COUSSIN GONFLABLE’’ (modèles à 4 roues motrices)

Utilisé avec une ceinture de sécurité, le coussin gonflable du système de retenue supplémentaire contribue à réduire les risques et la gravité des blessures subies par le conducteur en cas de collision frontale. Le système de retenue supplémentaire se compose de module de coussin gonflable (air bag) (situé dans le moyeu du volant) d’un boîtier de capteurs de diagnostic, d’un témoin lumineux, d’un faisceau de câblage et d’un câble spiralé.

AVERTISSEMENT :

- **Pour ne pas affecter le fonctionnement du SRS, ce qui augmenterait les risques de blessures graves ou mortelles en cas de collision entraînant le déploiement du coussin gonflable, toutes les opérations d’entretien doivent être effectuées par un concessionnaire NISSAN agréé.**
- **Un entretien incorrect, y compris une mauvaise dépose ou repose du SRS, pourra entraîner des risques de blessures dues au déploiement accidentel du système.**
- **Ne pas utiliser d’équipement d’essai électrique sur les circuits connexes au SRS, sauf instructions données dans ce Manuel de Réparation. Les faisceaux de câblage du SRS sont recouverts d’une gaine d’isolation de couleur jaune soit juste devant les connecteurs de faisceau soit sur le faisceau en entier pour faciliter leur identification.**

Système de retenue supplémentaire (SRS) ‘‘COUSSIN GONFLABLE’’ (modèles à 2 roues motrices)

Utilisé avec une ceinture de sécurité, le coussin gonflable du système de retenue supplémentaire contribue à réduire les risques et la gravité des blessures subies par le conducteur en cas de collision frontale. Le système de retenue supplémentaire se compose de module de coussin gonflable (air bag) (situé dans le moyeu du volant) d’un boîtier de capteurs de diagnostic, d’un témoin lumineux, d’un faisceau de câblage et d’un câble spiralé.

AVERTISSEMENT :

- **Pour ne pas affecter le fonctionnement du SRS, ce qui augmenterait les risques de blessures graves ou mortelles en cas de collision entraînant le déploiement du coussin gonflable, toutes les opérations d’entretien doivent être effectuées par un concessionnaire NISSAN agréé.**
- **Un entretien incorrect, y compris une mauvaise dépose ou repose du SRS, pourra entraîner des risques de blessures dues au déploiement accidentel du système.**
- **Ne pas utiliser d’équipement d’essai électrique sur les circuits connexes au SRS, sauf instructions données dans ce Manuel de Réparation.**

Simpo PDF Merge and Split Unregistered Version - http://www.simpopdf.com

ATTENTION :

- **Ne pas démonter la boucle ou l'ensemble de la ceinture de sécurité.**
- **Remplacer les boulons d'ancrage s'ils sont déformés ou usés.**
- **Ne pas huiler la languette et la boucle.**
- **Ne pas réparer les composants de l'ensemble de ceinture de sécurité dont l'état est suspect. Remplacer l'ensemble complet de ceinture de sécurité.**
- **Si les sangles sont coupées, usées ou endommagées, remplacer l'ensemble de ceinture de sécurité.**
- **Lors du remplacement de l'ensemble de ceinture de sécurité, utiliser un ensemble de ceinture de sécurité d'origine.**
- **Après chaque collision, inspecter toutes les ceintures de sécurité ainsi que les enrouleurs et toutes les autres pièces connexes.**

Simpo PDF Merge and Split Unregistered Version - http://www.simpopdf.com

Ceinture de sécurité avant

① Déposer le siège avant. Se reporter au chapitre ‘‘SIEGES’’ dans la section BT pour plus de détails.
② Déposer la protection du boulon d’ancrage.
③ Déposer le boulon d’ancrage au plancher.
④ Déposer la garniture de montant central. Se reporter au chapitre ‘‘GARNITURE INTERIEURE’’ dans la section BT pour plus de détails.
⑤ Déposer le boulon d’ancrage de baudrier.
⑥ Déposer le second guide de ceinture.
⑦ Déposer les boulons de fixation de l’enrouleur de ceinture de sécurité, puis déposer la ceinture de sécurité et son enrouleur.

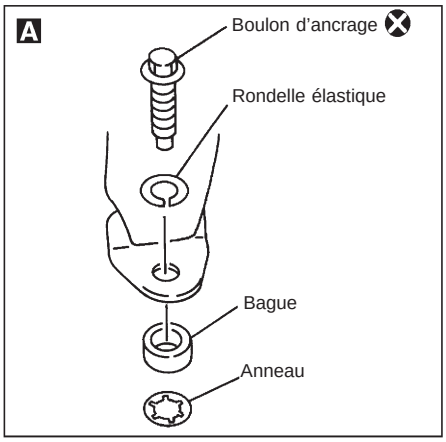

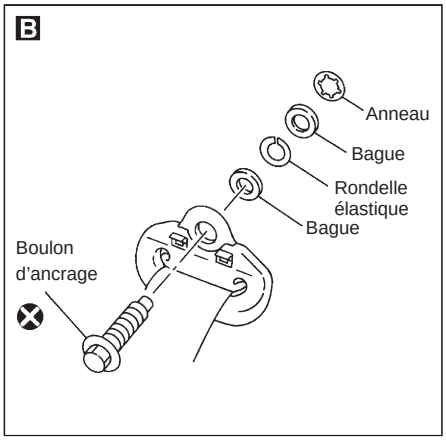

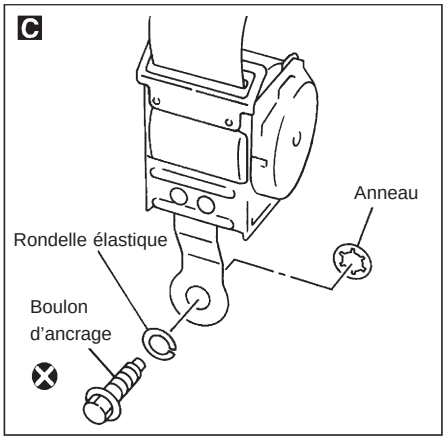

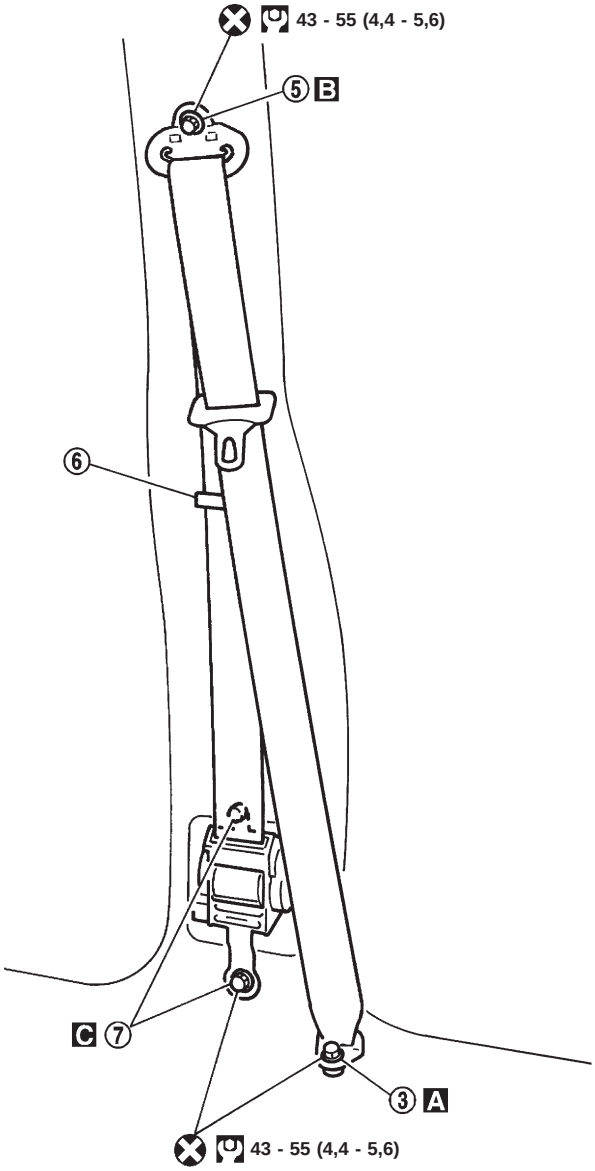

: N·m (kg-m)

SRS320

Simpo PDF Merge and Split Unregistered Version - http://www.simpopdf.com

Ceinture de sécurité arrière

MODELE A CABINE DOUBLE

① Rabattre le dossier vers l'avant.
② Oter chaque boulon d'ancrage.



: N·m (kg-m)

SRS321

Simpo PDF Merge and Split Unregistered Version - http://www.simpopdf.com

Ceinture de sécurité arrière (Suite)

MODELE A GRANDE CABINE

① Déposer la garniture inférieure du strapontin.
② Oter chaque boulon d'ancrage.

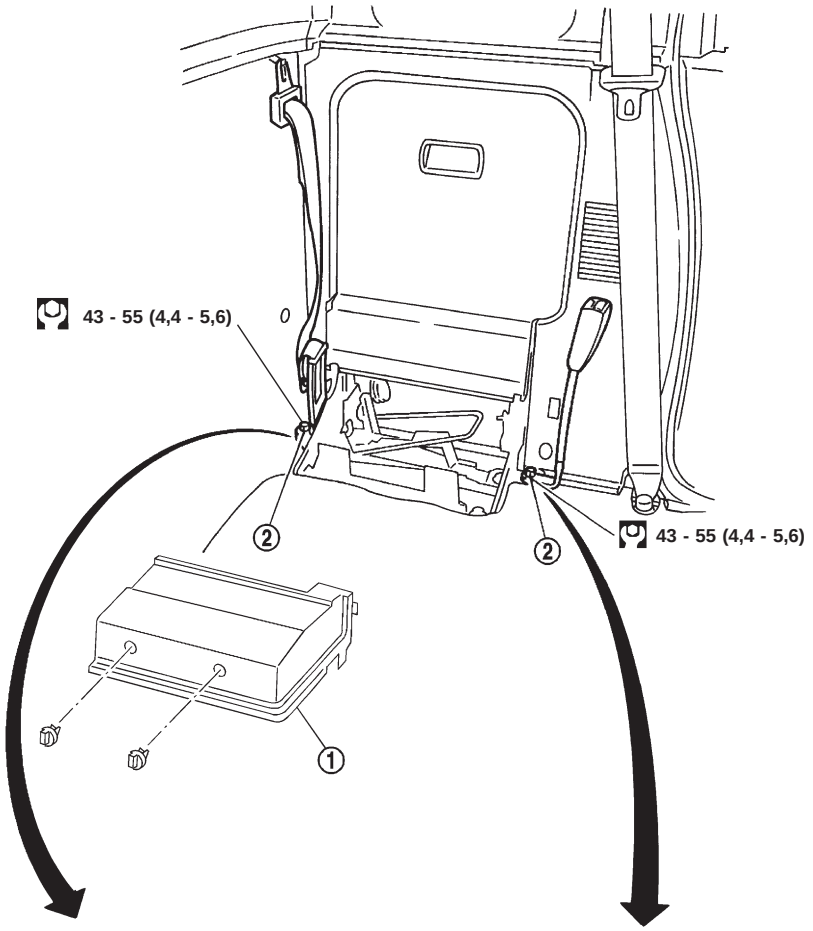

: N·m (kg-m)

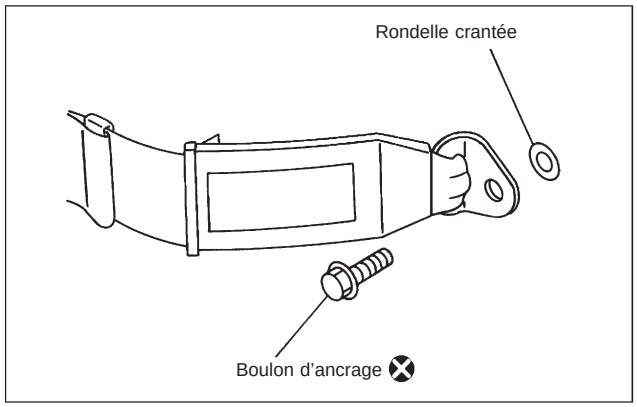

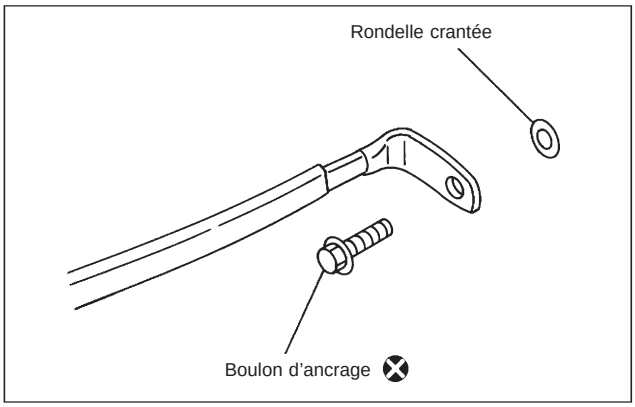

SRS547

Simpo PDF Merge and Split Unregistered Version - http://www.simpopdf.com

Précautions pour l'entretien du SRS ''COUSSIN GONFLABLE''

- Ne pas utiliser de multimètre pour vérifier les circuits du SRS, sauf si indiqué dans ce Manuel de Réparation.
- Couper le contact d'allumage (''OFF''), débrancher les deux câbles de la batterie et attendre au moins 3 minutes avant de procéder à toute réparation du SRS.
  Le coussin gonflable peut encore se déployer pendant un délai de 3 minutes environ après que les câbles ont été débranchés. Attendre par conséquent au moins 3 minutes avant de travailler sur les connecteurs ou les câbles du SRS.
- Pour les modèles à 2 roues motrices, ne pas séparer le boîtier de capteurs de diagnostic du volant de direction.
- Pour les modèles à 4 roues motrices, le boîtier de capteurs de diagnostic doit toujours être reposé en prenant soin d'orienter les flèches ''⇧'' vers l'avant du véhicule pour assurer un bon fonctionnement. Vérifier également que le boîtier de capteurs de diagnostic ne présente pas de fissures, déformations ou traces de rouille avant de le reposer. Le remplacer le cas échéant.
- Le câble spiralé doit être aligné avec le point mort car le nombre de tours qu'il peut faire est limité. Ne pas tenter de tourner le volant de direction ou la colonne de direction après la dépose du pignon de direction.
- Manipuler le module de coussin gonflable avec précaution. Toujours le poser avec la garniture dirigée vers le haut.
- Exécuter l'autodiagnostic pour contrôler que l'ensemble du SRS fonctionne normalement après avoir remplacé l'un des composants.

Outillage spécial

Numéro de l'outil Nom de l'outil	Description	
KV99106400 Outil de déploiement	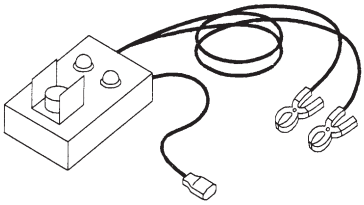 NT357	Mise au rebut du module de coussin gonflable
KV99105300 Support de module de coussin gonflable.	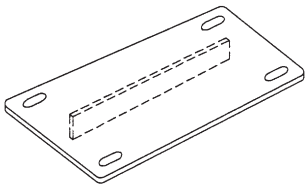 NT354	Plaque d'ancrage du module de coussin gonflable
HT61961000 et HT62152000 combinés *1 Tournevis spécial pour vis torx	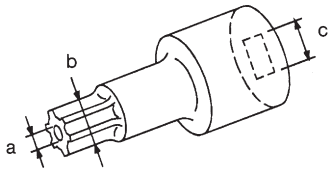 NT361	A utiliser pour les boulons spéciaux. [TOURNEVIS A EMPREINTE ANTI-EFFRACTION (Taille T50)]. **a : 3,5 dia.** **b : 8,5 - 8,6 dia.** **c : environ 10 mm^2.** Unité : mm

*1 : Outil spécial ou équivalent en vente dans le commerce

Simpo PDF Merge and Split Unregistered Version - http://www.simpopdf.com

Description

Le coussin gonflable se déploie lorsque le boîtier de capteurs de diagnostic est activé alors que le contact est sur la position ‘‘ON’’ ou ‘‘START’’.

Modèles à 4 roues motrices

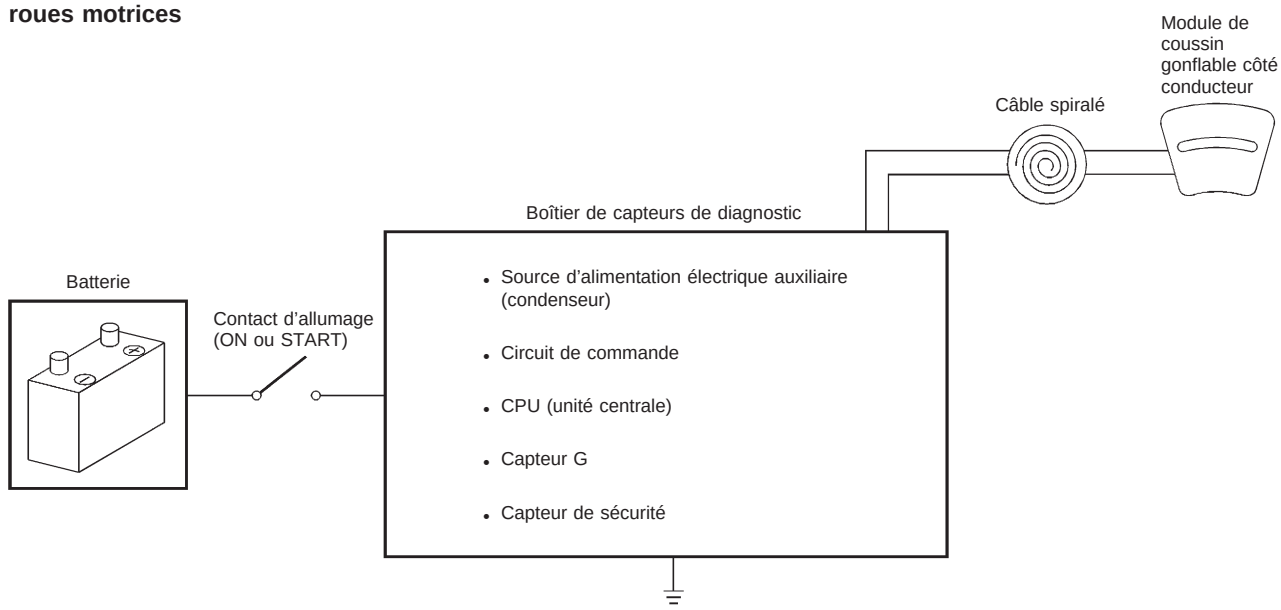

Modèles à 2 roues motrices

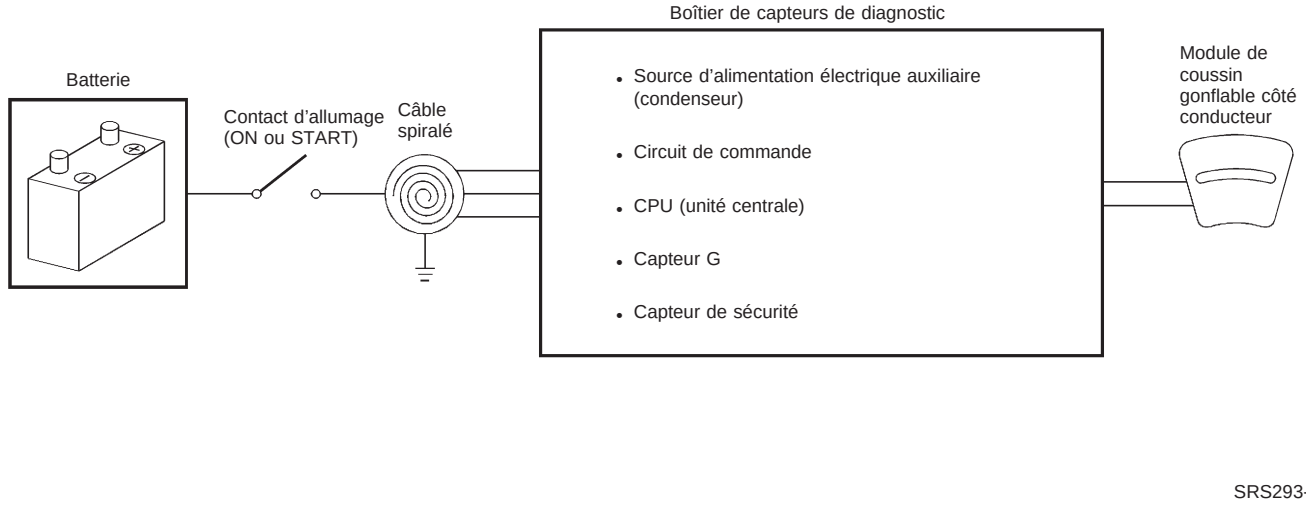

Simpo PDF Merge and Split Unregistered Version - http://www.simpopdf.com

Disposition des composants du SRS

Modèle à 4 roues motrices
SEC. 253•484

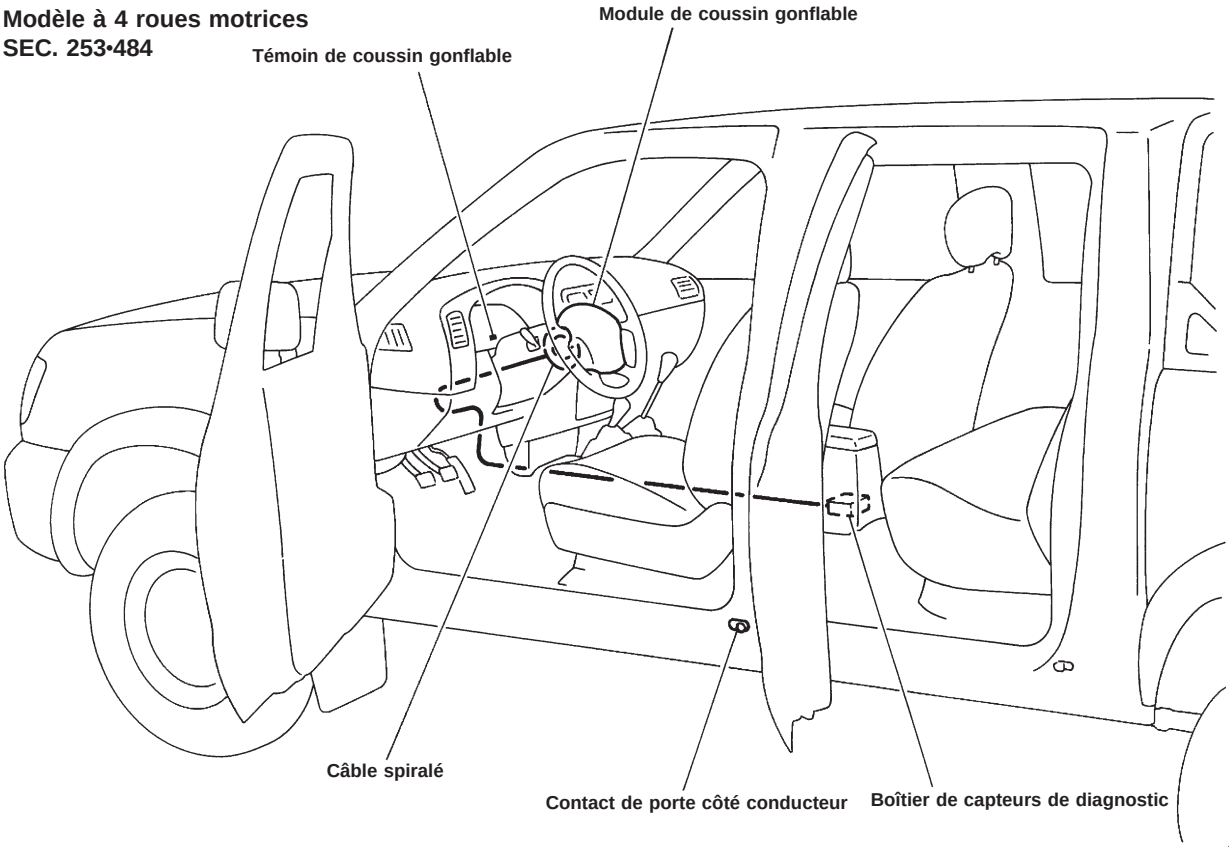

SRS394

Modèle à 2 roues motrices
SEC. 253•484

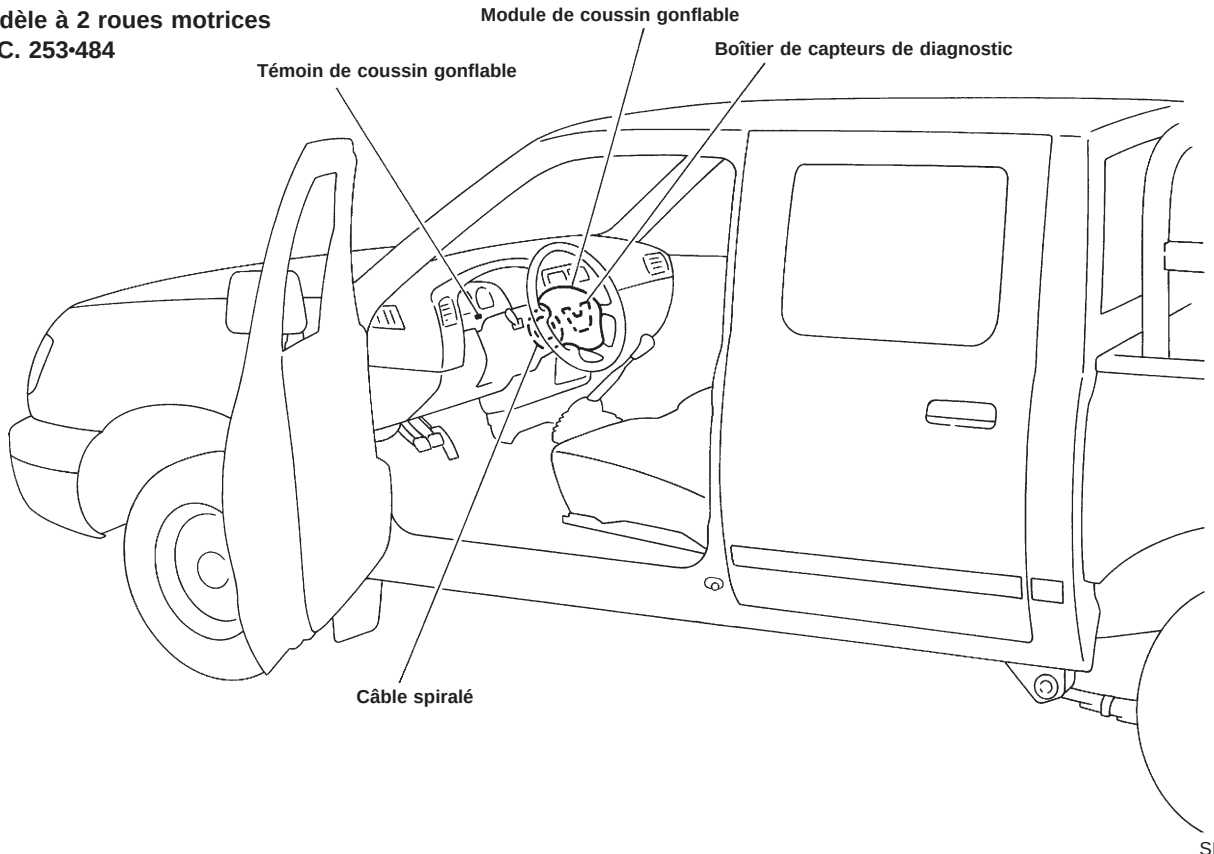

SRS395

Simpo PDF Merge and Split Unregistered Version - http://www.simpopdf.com



Points d'entretien

ATTENTION :
Ne pas utiliser de multimètre pour tester le circuit du SRS.

1. Vérifier le fonctionnement du témoin ''AIR BAG''.
   Le témoin ''AIR BAG'' s'allume lorsque l'on tourne la clé du contact d'allumage sur ''ON''. Le témoin ''AIR BAG'' s'éteindra après environ 7 secondes si aucun défaut n'est détecté. Si l'une des conditions suivantes affectant le témoin de coussin gonflable se produit, vérifier immédiatement le système de coussin gonflable. Se reporter à RS-29 (4 x 4), RS-20 (2 x 2) pour plus de détails.

- Le témoin ne s'allume pas lorsque le contact d'allumage est sur ''ON''.
- Le témoin ne s'éteint pas dans les 7 secondes après que le contact d'allumage a été mis sur ''ON''.
- Le témoin clignote pendant environ 7 secondes après que le contact d'allumage a été mis sur ''ON''.

2. Inspecter visuellement les composants du SRS.

(1) Boîtier de capteurs de diagnostic
- Vérifier si le boîtier de capteurs de diagnostic et le support ne sont pas bosselés, fissurés ou déformés.
- Vérifier si les connecteurs ne sont pas endommagés et les bornes déformées.

(2) Module de coussin gonflable et volant de direction
- Déposer le module de coussin gonflable du volant de direction. Vérifier si le cache du faisceau et les connecteurs ne sont pas endommagés, les bornes déformées et le faisceau coincé.
- Reposer le module de coussin gonflable côté conducteur sur le volant de direction et vérifier s'il est correctement monté et aligné sur le volant de direction.
- Vérifier si le volant de direction ne présente pas un jeu excessif.

(3) Câble spiralé
- Vérifier si le câble spiralé n'est pas bosselé, fissuré ou déformé.
- Vérifier si les connecteurs et la bande de protection ne sont pas endommagés.
- Vérifier si le volant de direction est exempt de tout bruit, point de force et qu'il tourne librement.

(4) Faisceau principal et faisceau de coussin gonflable
- Vérifier si les connecteurs ne sont pas desserrés ou endommagés et que les bornes ne sont pas déformées.
- Vérifier si les faisceaux ne coincent pas et qu'ils ne sont pas usés par le frottement ou coupés.

ATTENTION :
Remplacer les boulons usagés, le boulon de masse par des boulons neufs.

Simpo PDF Merge and Split Unregistered Version - http://www.simpopdf.com

Dépose et repose – Boîtier de capteurs de diagnostic (modèles à 4 roues motrices)

ATTENTION :

- **Avant de procéder à l'entretien du SRS, couper le contact d'allumage, déconnecter les deux câbles de la batterie et attendre au moins 3 minutes.**
- **Les boulons spéciaux sont revêtus d'une couche d'agent de freinage tandis que le boulon supplémentaire correspond à la masse. Ne pas réutiliser les boulons une fois déposés ; les remplacer par des neufs.**
- **Vérifier si le boîtier de capteurs de diagnostic est reposé correctement.**
- **Vérifier si le boîtier de capteurs de diagnostic n'est pas déformé, bosselé, fissuré ou rouillé. S'il est visiblement endommagé, le remplacer par un neuf.**
- **Vérifier si les supports du boîtier de capteurs de diagnostic ne sont pas déformés ou rouillés.**
- **Remplacer le boîtier de capteurs de diagnostic en cas de chute ou d'impact.**
- **Après avoir remplacé le boîtier de capteurs de diagnostic, effectuer l'autodiagnostic du SRS. Se reporter à ''Autodiagnostic'' pour plus de détails (RS-29).**

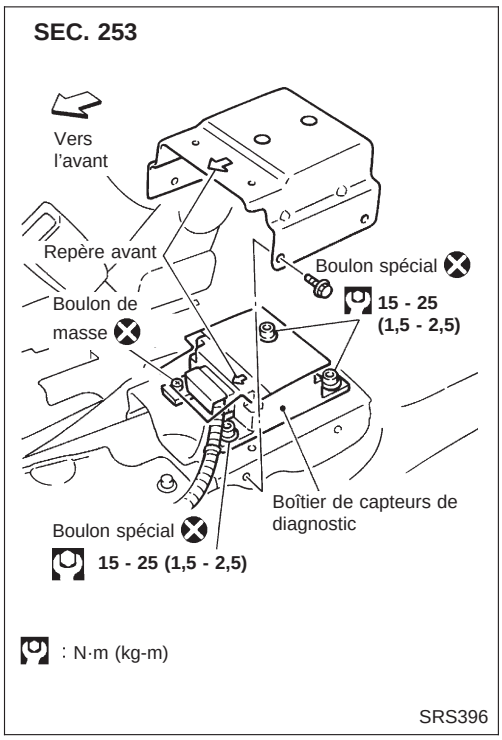

DEPOSE DU BOITIER DE CAPTEURS DE DIAGNOSTIC

1. Débrancher le connecteur du module de coussin gonflable.
2. Déposer la console. Se reporter à ''TABLEAU DE BORD'' dans la section BT (modèles à cabine double à 4 roues motrices)
3. Déposer le support de la console.
4. Débrancher le connecteur du boîtier de capteurs de diagnostic.
5. Déposer le boulon et les boulons spéciaux du boîtier de capteurs de diagnostic à l'aide du TOURNEVIS A EMPREINTE ANTIEFFRACTION (Taille T50).
   Puis déposer le boîtier de capteurs de diagnostic.

NOTE :

- **Pour la repose, procéder dans l'ordre inverse de la dépose.**

Simpo PDF Merge and Split Unregistered Version - http://www.simpopdf.com

Dépose et repose – module de coussin gonflable et câble spiralé (modèles à 4 roues motrices)

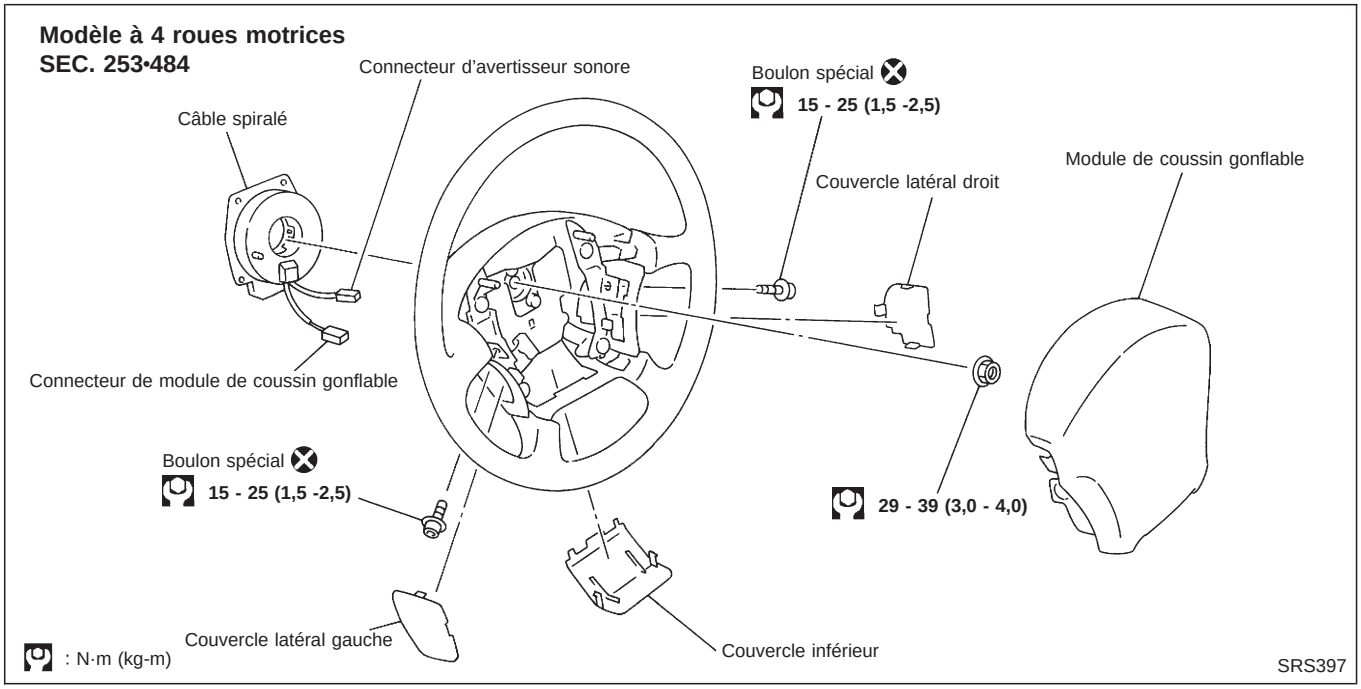

Dépose et repose – module de coussin gonflable et câble spiralé (modèles à 2 roues motrices)

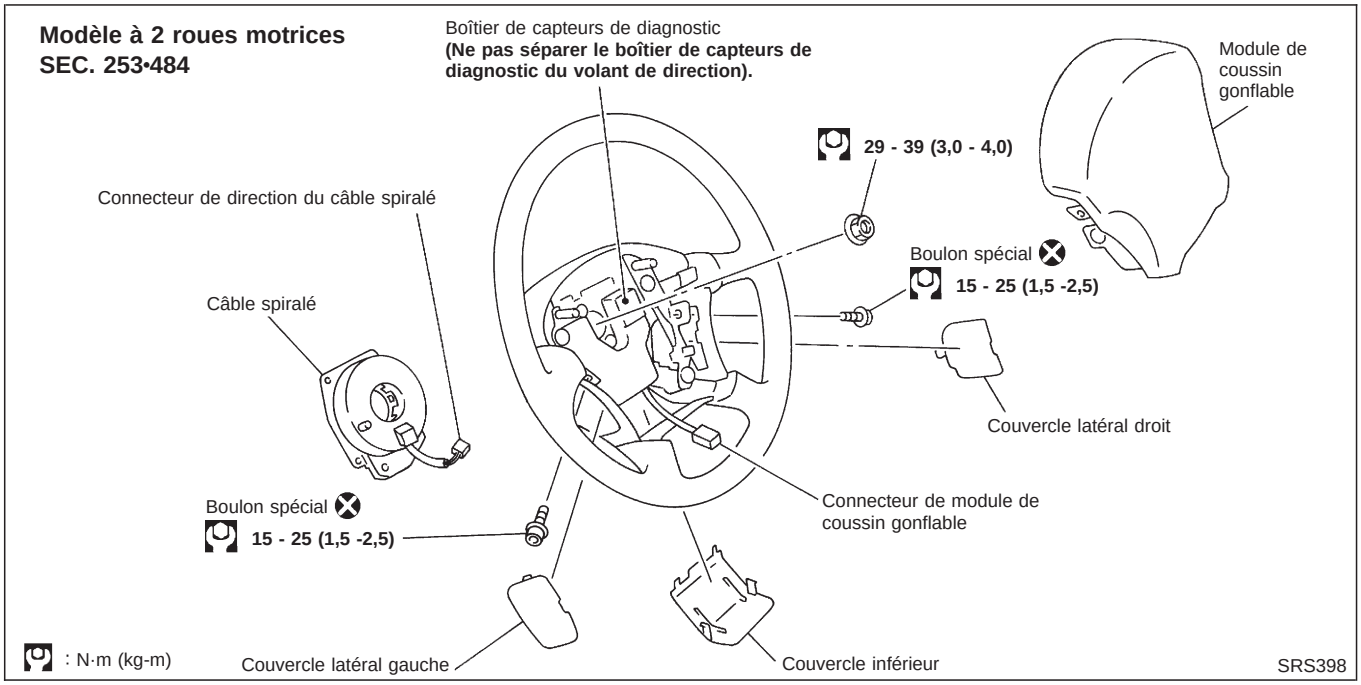

Simpo PDF Merge and Split Unregistered Version - http://www.simpopdf.com

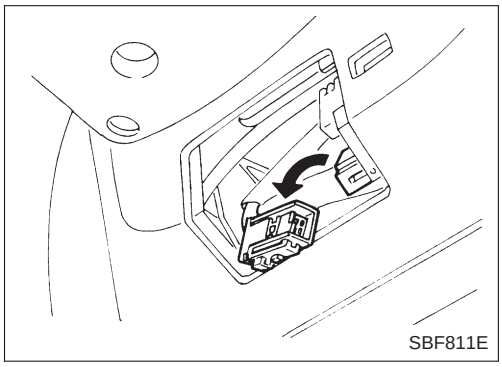
SBF811E

Dépose – module de coussin gonflable et câble spiralé

ATTENTION :

- **Avant de procéder à l'entretien du SRS, couper le contact d'allumage, déconnecter les deux câbles de la batterie et attendre au moins 3 minutes.**
- **Toujours se positionner sur le côté du module de coussin gonflable.**

1. Déposer le couvercle inférieur du volant de direction et débrancher le connecteur du module de coussin gonflable.

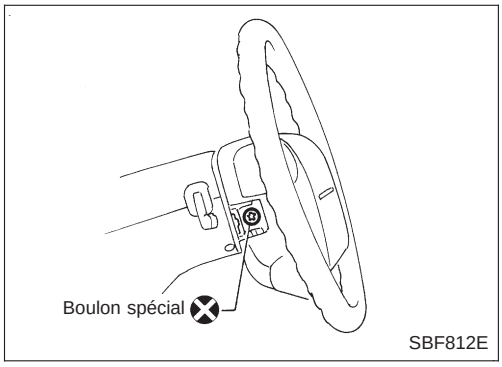

SBF812E

2. Déposer les couvercles latéraux. A l'aide d'un TOURNEVIS A EMPREINTE ANTIEFFRACTION (taille 50), déposer les boulons spéciaux gauche et droit. Le module de coussin gonflable peut alors être déposé.

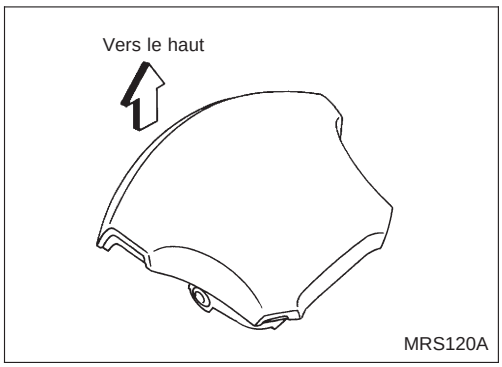

MRS120A

ATTENTION :

- **Toujours poser le module de coussin gonflable avec la garniture dirigée vers le haut.**
- **Ne pas tenter de démonter le module de coussin gonflable.**
- **Les boulons spéciaux sont revêtus d'une couche d'agent de freinage. Ne pas réutiliser les boulons une fois déposés ; les remplacer par des neufs.**



SBF814E

- **Remplacer le module de coussin gonflable s'il est tombé ou s'il a subi un impact.**
- **Ne pas exposer le module de coussin gonflable à des températures supérieures à 90°C.**
- **Ne pas laisser de l'huile, de la graisse ou de l'eau venir en contact avec le module de coussin gonflable.**

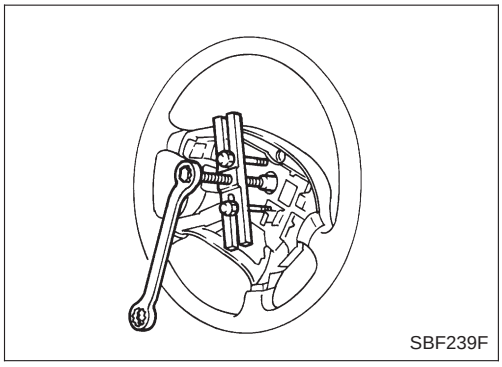
SBF239F

3. Régler le volant de direction en position neutre.
4. Débrancher le connecteur de l'avertisseur sonore (système de coussin gonflable double)/le connecteur de direction du câble spiralé (système de coussin gonflable simple) et déposer les écrous.
5. A l'aide d'un extracteur de volant de direction, déposer le volant de direction. Veiller à ne pas trop serrer le boulon de l'extracteur sur le volant de direction.

ATTENTION :

- **Ne pas taper ou heurter le volant de direction.**

6. Déposer le couvercle de la colonne de direction.

Simpo PDF Merge and Split Unregistered Version - http://www.simpopdf.com

Dépose – module de coussin gonflable et câble spiralé (Suite)

7.Débrancher les connecteurs et retirer les quatre vis. Le câble spiralé peut alors être déposé.

ATTENTION :

- **Ne pas essayer de démonter le câble spiralé.**
- **Ne pas lubrifier le câble spiralé.**
- **Pour les modèles à 2 roues motrices, ne pas séparer le boîtier de capteurs de diagnostic du volant de direction.**

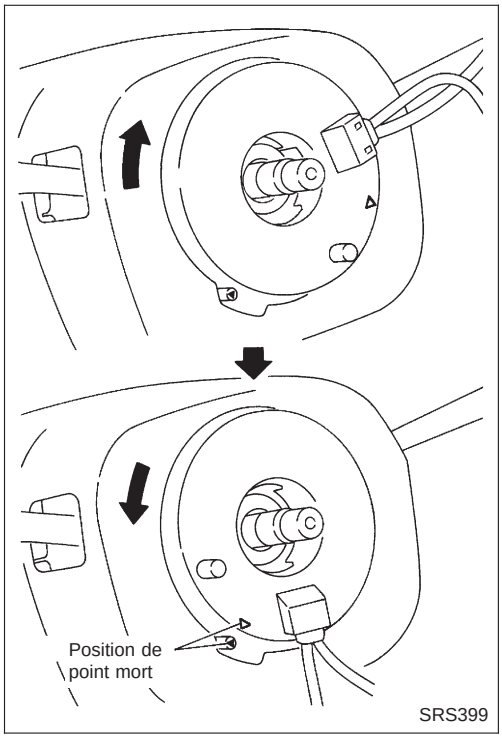

SRS399

Repose – Module de coussin gonflable et câble spiralé

1. Placer les roues avant en ligne droite.
2. Brancher le connecteur de câble spiralé et le serrer le câble avec des vis. Reposer le cache de colonne de direction.

ATTENTION :

- **Un câble spiralé incorrectement monté peut se rompre lorsqu'on tourne le volant de direction.**
- **La timonerie de direction étant déconnectée, le câble risque de se rompre si l'on tourne le volant de direction au delà d'un nombre limité de tours. Le câble spiralé peut effectuer jusqu'à 2,5 tours de la gauche en partant de la position de butée droite.**

3. S'assurer que le câble spiralé est sur la position neutre. Pour obtenir la position neutre, le tourner d'environ 2,5 tours vers la gauche à partir de la position de butée droite. Aligner les deux repères(▽ ▲).

Modèles à 4 roues motrices

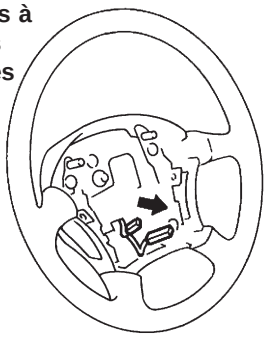
SRS166-B

MODELES A 4 ROUES MOTRICES

4. Reposer les douilles de guidage du câble spiralé du volant de direction, puis tirer le câble spiralé à travers celles-ci.
5. Brancher le connecteur d'avertisseur sonore et engager le câble spiralé dans les cliquets du volant de direction.
6. Serrer l'écrou.

: 29 - 39 N·m (3,0 - 4,0 kg-m)

Modèles à 2 roues motrices

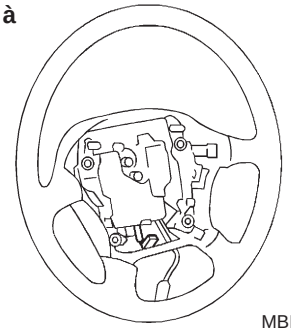
MBF648BB

MODELES A 2 ROUES MOTRICES

4. Reposer les douilles de guidage du câble spiralé du volant de direction, puis tirer le câble spiralé à travers celles-ci.
5. Brancher le connecteur de direction du câble spiralé au boîtier de capteurs de diagnostic dans le volant de direction.
6. Serrer l'écrou.

: 29 - 39 N·m (3,0 - 4,0 kg-m)

Simpo PDF Merge and Split Unregistered Version - http://www.simpopdf.com

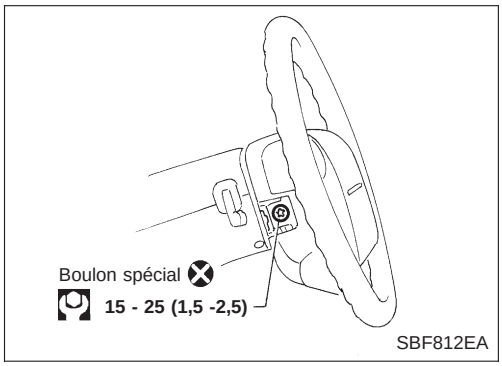

Repose – Module de coussin gonflable et câble spiralé (Suite)

7. Mettre le module de coussin gonflable en position et le fixer avec des boulons spéciaux neufs.
8. Brancher le connecteur du module de coussin gonflable.
9. Reposer tous les couvercles.
10. Exécuter l'autodiagnostic afin de s'assurer du fonctionnement normal du SRS (utiliser CONSULT ou contrôler le témoin).
    Avant d'effectuer l'autodiagnostic, brancher les deux câbles de batterie.
11. Braquer le volant de direction à fond vers la gauche, puis vers la droite pour s'assurer que le câble spiralé est en position neutre.
    Si le témoin de coussin gonflable clignote ou reste allumé (en mode Utilisateur), cela signifie que le câble spiralé peut se rompre en raison de sa position incorrecte. Effectuer l'autodiagnostic de nouveau (en utilisant le CONSULT ou le témoin). Si un défaut est trouvé, remplacer le câble spiralé par un neuf.

Mise au rebut du module de coussin gonflable

- Avant de mettre au rebut les modules de coussin gonflable ou les véhicules équipés d'un tel système, déployer le système. Si ce système a déjà été déployé lors d'un accident, le mettre au rebut en se reportant au chapitre ''MISE AU REBUT DU MODULE DE COUSSIN GONFLABLE (RS-17).
- Lors du déploiement du module de coussin gonflable, toujours utiliser l'outil spécial ; outil de déploiement KV99106400.
- Se tenir à une distance minimum de 5 m lors du déploiement du module de coussin gonflable.
- Lors du déploiement du module de coussin gonflable, une détonation bruyante et un dégagement de fumée s'ensuivent. La fumée n'est pas nocive, mais on veillera toutefois à ne pas l'inhaler en raison de ses propriétés irritantes pouvant être à l'origine d'un étouffement.
- Ne jamais déployer plus d'un module de coussin gonflable à la fois.
- En raison de la température élevée des composants du module de coussin gonflable, ne pas toucher le module pendant au moins 30 minutes après le déploiement.
- Veiller à porter des gants lors de la manipulation d'un module de coussin gonflable déployé.
- Ne jamais asperger d'eau sur un module de coussin gonflable déployé.
- Se nettoyer les mains correctement une fois le travail fini.
- Garer le véhicule à l'extérieur dans un espace libre d'au moins 6 mètres de rayon avant de déployer le module de coussin gonflable monté sur le véhicule.
- Utiliser un voltmètre pour s'assurer que la batterie du véhicule est chargée à fond.
- Ne pas mettre au rebut le module de coussin gonflable non déployé.

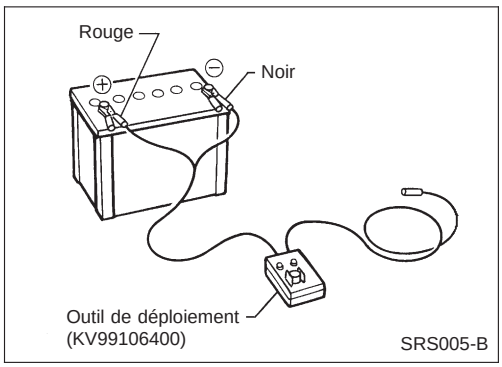

VERIFICATION DE L'OUTIL DE DEPLOIEMENT
Branchement sur la batterie

ATTENTION :
La batterie doit débiter au moins 9,6 V.
Sortir la batterie du véhicule et la placer sur une cale en bois dur à environ 5 m du véhicule.

- Attendre 10 à 12 minutes après que la batterie du véhicule est débranchée, avant de continuer.
- Brancher le clip rouge de l'outil de déploiement à la borne positive de batterie et le clip noir à la borne négative.

Veiller à respecter les polarités. Le témoin à la droite de l'outil, sur lequel est indiqué ''outil de déploiement sous tension'', doit s'allumer en vert. Si le témoin de droite s'allume en rouge, inverser les polarités à la batterie.

Simpo PDF Merge and Split Unregistered Version - http://www.simpopdf.com

Mise au rebut du module de coussin gonflable (Suite)

Vérification de l'outil de déploiement

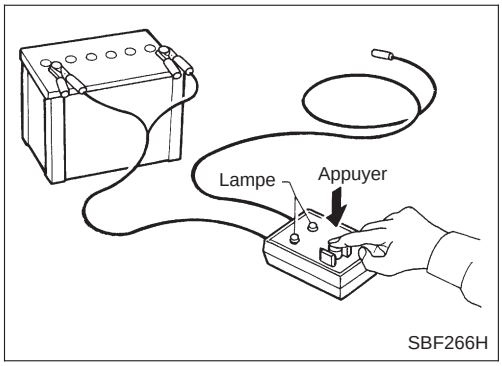

Appuyer sur l'interrupteur de l'outil de déploiement pour l'amener en position ''MARCHE''. Le témoin à la gauche de l'outil, sur lequel est indiqué ''tension du connecteur de coussin gonflable'' doit s'allumer. S'il ne s'allume pas, remplacer l'outil.

Tableau de fonctionnement des témoins de l'outil de déploiement de coussin gonflable (batterie branchée)

Position de l'interrupteur	Témoin gauche, vert* ''TENSION CONNECTEUR COUSSIN GONFLABLE''.	Témoin de droite, vert* ''OUTIL DE DEPLOIEMENT SOUS TENSION''
ARRET	ARRET	MARCHE
MARCHE	MARCHE	MARCHE

* : Si ce témoin s'allume en rouge, l'outil est mal connecté à la batterie. Inverser le sens des polarités et s'assurer que le témoin s'allume en vert.

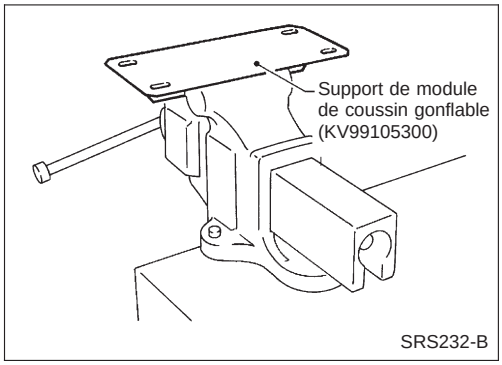

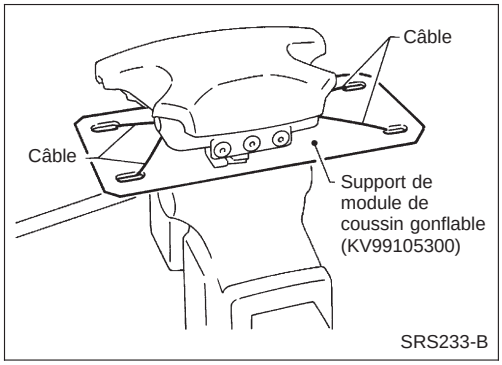

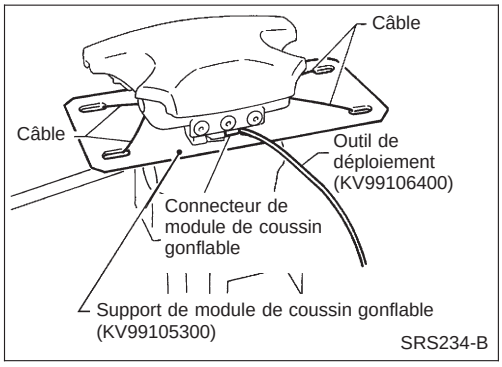

PROCEDURES DE DEPLOIEMENT DU MODULE DE COUSSIN GONFLABLE (EXTERIEUR DU VEHICULE)

Il est déconseillé de déployer le module de coussin gonflable à bord du véhicule, sauf si ce dernier doit être mis au rebut. Ceci est susceptible d'endommager l'intérieur du véhicule.
Immobiliser le module de coussin gonflable dans un étau fixé sur une base solide pendant le déploiement.

Déploiement du module de coussin gonflable côté conducteur (extérieur du véhicule)

1. Attacher le module de coussin gonflable sur son support à l'aide d'un câble.

ATTENTION :
Utiliser un câble d'au moins 1 mm de diamètre.

2. Fixer solidement dans un étau le support de module de coussin gonflable [outil spécial : KV99105300] assorti du module.

3. Brancher l'outil de déploiement (outil spécial : KV99106400) au connecteur du module de coussin gonflable.

Simpo PDF Merge and Split Unregistered Version - http://www.simpopdf.com

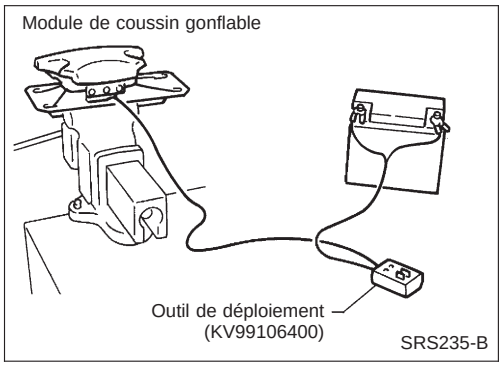

Mise au rebut du module de coussin gonflable (Suite)

4. Brancher le clip rouge de l'outil de déploiement à la borne positive de batterie et le clip noir à la borne négative.
5. Le témoin à la droite de l'outil, sur lequel est indiqué ''outil de déploiement sous tension'', doit s'allumer en vert et non en rouge.
6. Appuyer sur l'interrupteur de l'outil de déploiement. Le témoin à la gauche de l'outil, sur lequel est indiqué ''tension du connecteur de coussin gonflable'' doit s'allumer et le module de coussin gonflable se déployer.

ATTENTION :
Se tenir à une distance minimum de 5 m lors du déploiement du module de coussin gonflable.

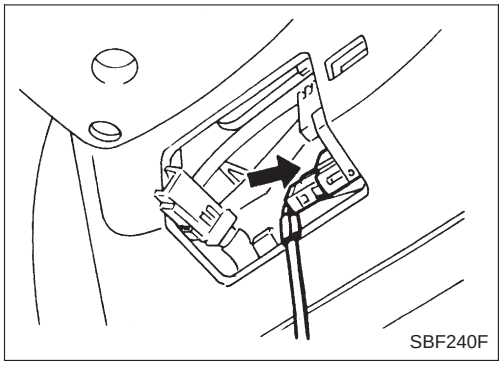

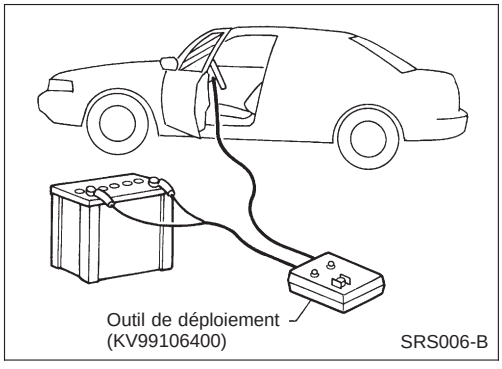

DEPLOIEMENT DU MODULE DE COUSSIN GONFLABLE INSTALLE SUR LE VEHICULE

Lors de la mise au rebut du véhicule, déployer le module de coussin gonflable alors qu'il est toujours installé dans le véhicule.

ATTENTION :
Lors du déploiement du module de coussin gonflable, s'assurer que le véhicule est vide.

1. Débrancher les deux câbles de la batterie et attendre 3 minutes.
2. Débrancher le connecteur du module de coussin gonflable.
3. Brancher l'outil de déploiement (outil spécial : KV99106400) au module de coussin gonflable.
4. Brancher le clip rouge de l'outil de déploiement à la borne positive de batterie et le clip noir à la borne négative.
5. Le témoin à la droite de l'outil, sur lequel est indiqué ''outil de déploiement sous tension'', doit s'allumer en vert et non en rouge.
6. Appuyer sur l'interrupteur de l'outil de déploiement. Le témoin à la gauche de l'outil, sur lequel est indiqué ''tension du connecteur de coussin gonflable'' doit s'allumer et le module de coussin gonflable se déployer.

ATTENTION :

- **Garer le véhicule à l'extérieur dans un espace libre d'au moins 6 mètres de rayon avant de déployer le module de coussin gonflable monté sur le véhicule.**

Simpo PDF Merge and Split Unregistered Version - http://www.simpopdf.com

Mise au rebut du module de coussin gonflable (Suite)

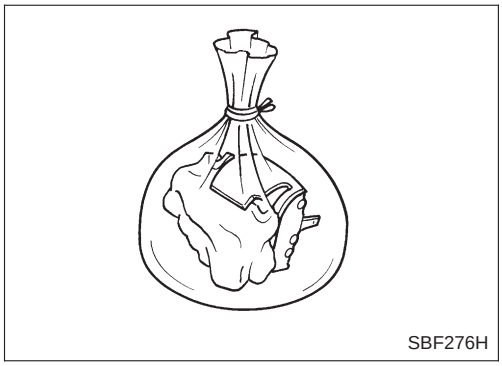
SBF276H

MISE AU REBUT DU MODULE DE COUSSIN GONFLABLE

Le module de coussin gonflable est très chaud. Avant de mettre le module de coussin gonflable au rebut, attendre au moins 30 minutes. L'enfermer dans un sac en plastique hermétique avant de le mettre au rebut.

ATTENTION :

- **Ne jamais asperger d'eau un module de coussin gonflable déployé.**
- **Veiller à porter des gants lors de la manipulation d'un module de coussin gonflable déployé.**
- **Le déploiement du coussin gonflable ne dégage pas de gaz nocifs. Toutefois veiller à ne pas inhaler le gaz en raison de ses propriétés irritantes pouvant être à l'origine d'un étouffement.**
- **Ne pas tenter de démonter le module de coussin gonflable.**
- **Le module de coussin gonflable ne peut être réutilisé.**
- **Se nettoyer les mains correctement une fois le travail fini.**

Simpo PDF Merge and Split Unregistered Version - http://www.simpopdf.com

Comment effectuer des diagnostics de défauts permettant une réparation rapide et précise

Une bonne compréhension des conditions de mauvais fonctionnement peut permettre de localiser la panne plus rapidement et avec plus de précision.
En règle générale, chaque client réagit différemment face à un problème. Il est indispensable de bien comprendre les symptômes ou les conditions de la plainte d'un client.

INFORMATIONS FOURNIES PAR LE CLIENT

QUOI	Modèle de véhicule
QUAND	Date, fréquences
OU	Etat de la route
COMMENT	Conditions de fonctionnement, symptômes

VERIFICATION PRELIMINAIRE

Vérifier si les pièces suivantes sont en bon état.
- Batterie [se reporter à la section MA (''ENTRETIEN GENERAL'')].
- Fusible [Se reporter à la section EL (''Fusible'', ''DISPOSITION DE L'ALIMENTATION ELECTRIQUE'')].
- Connexions entre les composants du système et le faisceau.

FONCTION DE DIAGNOSTIC

Les résultats de l'autodiagnostic du SRS peuvent être lus à l'aide du témoin ''AIR BAG''.

Note : CONSULT ne peut pas être utilisé pour les diagnostics des défauts.

ATTENTION :
- **Ne pas utiliser de multimètre pour vérifier les connecteurs du faisceau du SRS, sauf instructions expresses données dans ce Manuel de Réparation.**
- **Ne pas essayer de réparer, épisser ou modifier le faisceau de câblage du SRS. Si le faisceau est endommagé, le remplacer par un neuf.**
- **Maintenir le circuit de masse dans un état de propreté satisfaisant.**

PROCEDURE DE TRAVAIL

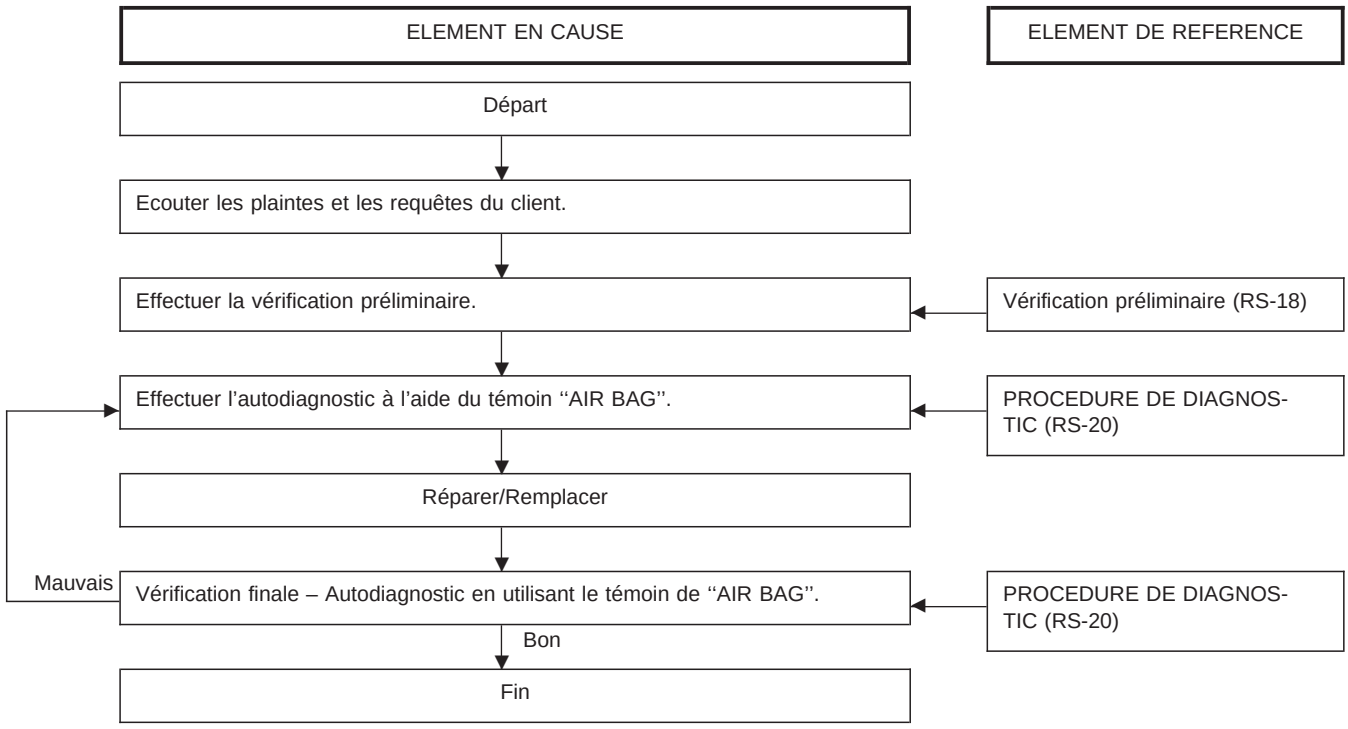

Simpo PDF Merge and Split Unregistered Version - http://www.simpopdf.com

Schéma de câblage – SRS –

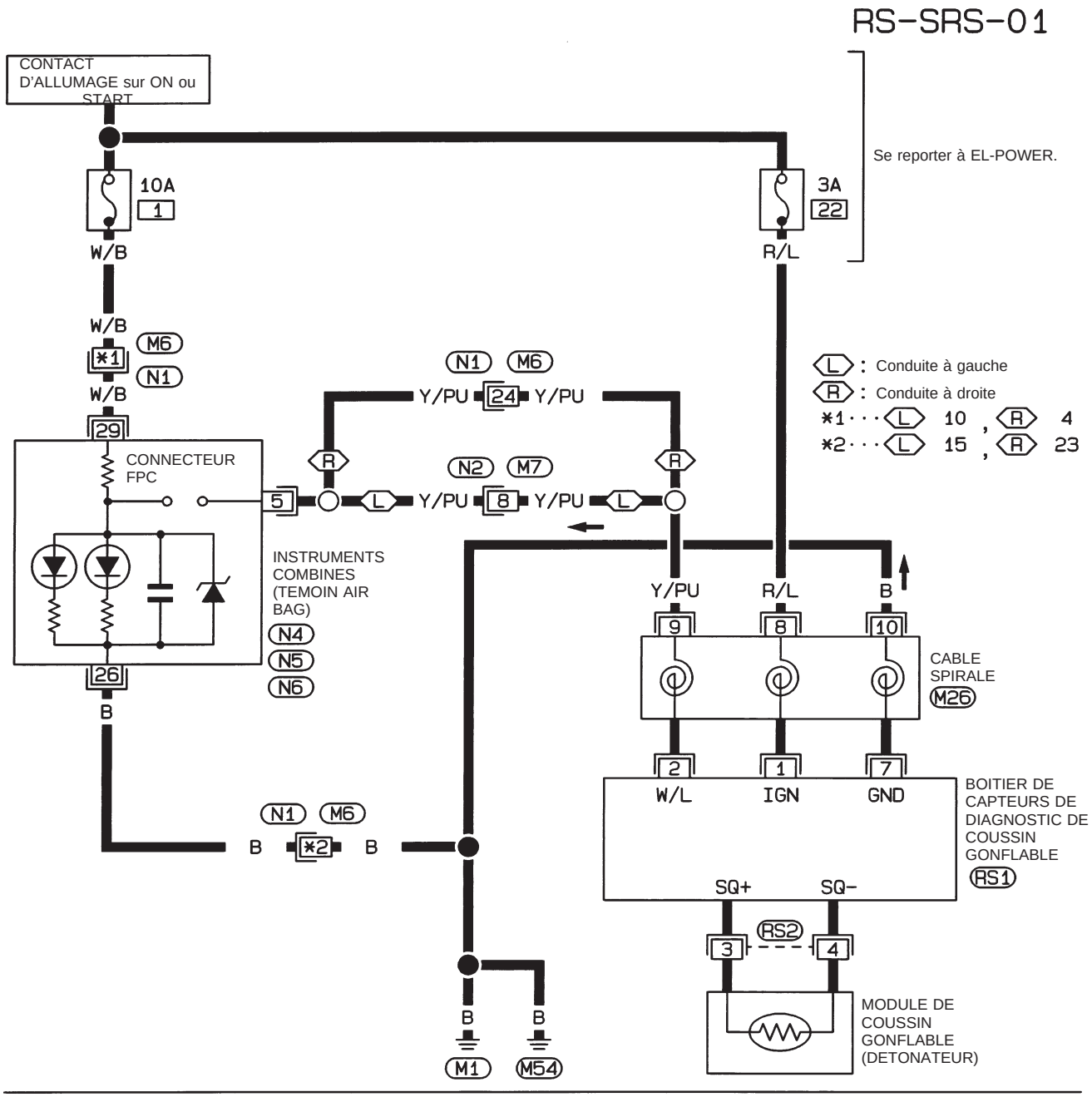

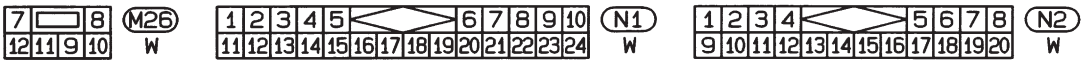





* : Ce connecteur n'est pas indiqué dans "DISPOSITION DES FAISCEAUX" dans la section EL.

HRS034

Simpo PDF Merge and Split Unregistered Version - http://www.simpopdf.com

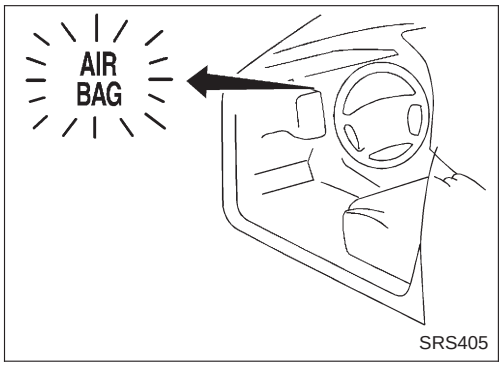

Autodiagnostic

PROCEDURE DE DIAGNOSTIC
(sans CONSULT)

Vérifier le fonctionnement du SRS à l'aide du témoin ''AIR BAG'' – Mode Utilisateur

1. Le témoin ''AIR BAG'' est actionné lorsque l'on tourne le contact d'allumage de la position ''OFF'' sur ''ON''.
2. Comparer le fonctionnement du témoin ''AIR BAG'' au tableau ci-dessous.

Note : CONSULT ne peut pas être utilisé pour les diagnostics des défauts.

Fonctionnement du témoin ''AIR BAG'' – Mode utilisateur –

1. Normal

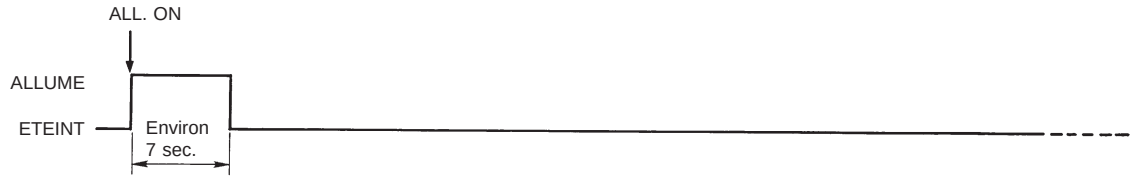

2. Anormal– Si le témoin fonctionne comme suit, vérifier immédiatement le SRS.

- Clignotement

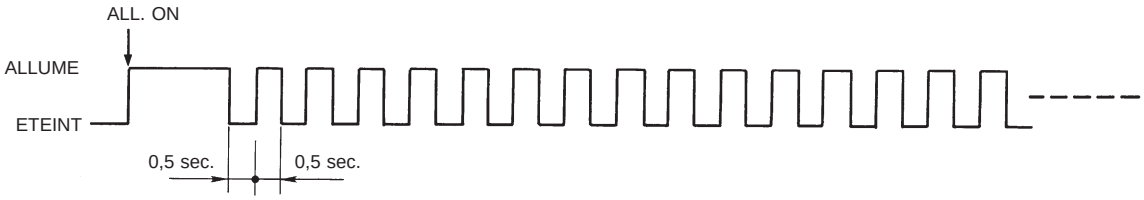

- Le témoin ne s'allume pas du tout.

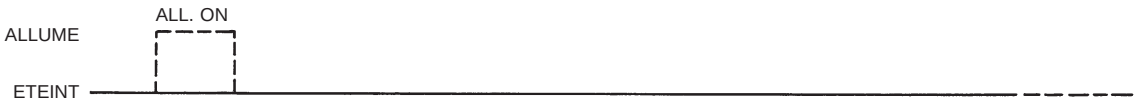

- Constamment allumé



MRS106

Simpo PDF Merge and Split Unregistered Version - http://www.simpopdf.com

Autodiagnostic (Suite)

PROCEDURES DE REPARATION

ATTENTION :
Avant toute intervention sur un coussin gonflable, couper le contact, débrancher les deux câbles de la batterie et attendre au moins 3 minutes.

Fonctionnement du témoin	Explication	Ordre de réparation
Le témoin clignote.*	Le circuit du module de coussin gonflable est ouvert ou court-circuité.	1. Inspecter visuellement le faisceau de câblage et les connecteurs. 2. Remplacer le module de coussin gonflable. 3. Remplacer l'ensemble de volant de direction (y compris le boîtier de capteurs de diagnostic).
	Boîtier de capteurs de diagnostic défectueux	
Le témoin ne s'allume pas du tout.	Le fusible des instruments combinés est grillé.	1. Vérifier le fusible des instruments combinés. 2. Inspecter visuellement les faisceaux de câblage et les connecteurs. 3. Vérifier la D.E.L. du témoin. 4. Remplacer le câble spiralé. 5. Remplacer l'ensemble de volant de direction (y compris le boîtier de capteurs de diagnostic). 6. Remplacer les instruments combinés.
	Le circuit de l'alimentation électrique du témoin est ouvert	
	Il y a court-circuit entre le témoin et le boîtier de capteurs de diagnostic.	
	D.E.L. défectueuse	
	Instruments combinés défectueux	
	Boîtier de capteurs de diagnostic défectueux	
Le témoin est constamment allumé.	Le fusible du SRS coussin gonflable est grillé.	1. Vérifier le fusible du coussin gonflable. 2. Inspecter visuellement le faisceau de câblage et les connecteurs des instruments combinés, du boîtier de capteurs de diagnostic et du câble spiralé. 3. Remplacer le câble spiralé. 4. Remplacer l'ensemble de volant de direction (y compris le boîtier de capteurs de diagnostic).
	Circuit ouvert entre le témoin et le boîtier de capteurs de diagnostic.	
	Boîtier de capteurs de diagnostic défectueux	

*** : Une fois le coussin gonflable déployé, le témoin peut clignoter en raison d'un circuit ouvert dans le module de coussin gonflable.**

Suivre les procédures dans l'ordre numérique lors de la réparation des pièces défectueuses. Vérifier si le défaut est éliminé à l'aide du témoin de coussin gonflable, après chaque réparation. Si le défaut subsiste, passer à l'étape suivante. Aucune réparation supplémentaire n'est requise si le défaut a disparu.

Simpo PDF Merge and Split Unregistered Version - http://www.simpopdf.com

Pour réparer le SRS ‘‘COUSSIN GONFLABLE’’, effectuer les étapes suivantes :

Lorsque le SRS est activé lors d’une collision :

① Déposer le module de coussin gonflable.
② Déposer l’ensemble de volant de direction.
③ Vérifier le câble spiralé à l’aide du tableau ci-dessous :
- Si le câble spiralé est visiblement endommagé (bosses, fissures ou déformation), le remplacer par un câble neuf.

④ Installer un ensemble de volant de direction neuf.
⑤ Reposer un nouveau module de coussin gonflable.
⑥ Effectuer un autodiagnostic à l’aide du témoin ‘‘AIR BAG’’ pour vérifier que l’ensemble du SRS fonctionne correctement.
Se reporter à RS-20 pour plus de détails.

Lorsque le SRS n’est pas activé lors d’une collision :

① Contrôler les composants du SRS à l’aide du tableau ci-dessous :
- Si les composants du SRS sont visiblement bosselés, fissurés ou déformés, les remplacer par des composants neufs.

② Effectuer un autodiagnostic à l’aide du témoin ‘‘AIR BAG’’ pour vérifier que l’ensemble du SRS fonctionne correctement. Se reporter à RS-20 pour plus de détails.

Inspection du SRS

Pièce	Le SRS est activé.	Le SRS n’est PAS activé.
Module de coussin gonflable	REMPLACER Reposer avec les boulons neufs.	1. Déposer le module de coussin gonflable. Vérifier si le cache du faisceau et les connecteurs ne sont pas endommagés, les bornes déformées et le faisceau coincé. 2. Reposer le module de coussin gonflable dans le volant de direction pour en contrôler l’adaptabilité ou l’alignement avec le volant de direction. 3. Aucun dommage trouvé, reposer l’ensemble en utilisant des boulons neufs. 4. En cas de dommage – REMPLACER. Le coussin gonflable doit être déployé avant d’être mis au rebut.
Ensemble de volant de direction (y compris le boîtier de capteurs de diagnostic)	REMPLACER	1. Vérifier visuellement si le volant de direction n’est pas déformé. 2. Vérifier si le faisceau et les connecteurs ne sont pas endommagés et que les bornes ne sont pas déformées. 3. Vérifier si le boîtier de capteurs de diagnostic n’est pas bosselé, fissuré ou déformé. **Ne pas déposer le boîtier de capteurs de diagnostic du volant de direction.** 4. Monter le module de coussin gonflable pour en contrôler l’adaptabilité ou l’alignement avec le volant de direction. 5. Si l’on ne peut trouver aucun dommage, remonter l’ensemble de volant de direction. 6. En cas de dommage – REMPLACER.
Câble spiralé	1. Vérifier si le câble spiralé n’est pas bosselé, fissuré ou déformé. 2. Vérifier si les connecteurs et la bande de protection ne sont pas endommagés. 3. Vérifier si le volant de direction est exempt de tout bruit, point de force et qu’il tourne librement. 4. Si l’on ne constate aucun dommage, le reposer. 5. En cas de dommage – REMPLACER.	
Faisceau et connecteurs	1. Vérifier si les connecteurs sont bien branchés, s’ils ne sont pas endommagés et si les bornes ne sont pas déformées. 2. Vérifier si le faisceau ne coince pas et qu’il n’est pas effiloché, coupé ou déformé. 3. Reposer le faisceau et les connecteurs s’il n’y a pas de dommage. 4. En cas de dommage – REMPLACER la partie du faisceau endommagée. Ne pas essayer de réparer, épisser ou modifier le faisceau du SRS.	

Simpo PDF Merge and Split Unregistered Version - http://www.simpopdf.com

Introduction des diagnostics de défauts

ATTENTION :

- **Ne pas utiliser de multimètre pour vérifier les connecteurs du faisceau du SRS, sauf instructions expresses données dans ce Manuel de Réparation. Les faisceaux de câblage du SRS sont facilement identifiables grâce à une gaine de faisceau ou à une bande isolante jaune placée juste avant les connecteurs de faisceau.**
- **Ne pas essayer de réparer, épisser ou modifier le faisceau de câblage du SRS. Si le faisceau est endommagé, le remplacer par un neuf.**
- **Maintenir le circuit de masse dans un état de propreté satisfaisant.**

FONCTION DE DIAGNOSTIC

Les résultats de l'autodiagnostic du SRS peuvent être lus à l'aide du témoin ''AIR BAG'' et/ou de CONSULT. La lecture de ces résultats peut avoir lieu grâce aux deux modes suivants – ''Mode utilisateur'' et ''Mode de diagnostic''.
Le mode Utilisateur est exclusivement conçu pour le client (conducteur). Ce mode avertit le conducteur de la présence d'un défaut dans le système en actionnant le témoin ''AIR BAG''.
Le mode de Diagnostic permet au technicien de localiser et d'inspecter la pièce défectueuse.
Les applications des modes témoin ''AIR BAG'' et CONSULT sont comme suit :

	Mode utilisateur	Mode de diagnostic	Type d'affichage
Témoin ''AIR BAG''	X	X	Fonctionnement MAR/ARR.
CONSULT	–	X	Contrôle

MODE DE DIAGNOSTIC POUR CONSULT

- ''AUTO-DIAG [COURANT]''
  Un résultat d'autodiagnostic courant (également indiqué par le clignotement du témoin en mode de Diagnostic) s'affiche en temps réel sur l'écran de CONSULT. Cela signifie qu'une pièce défectueuse doit être réparée.
- ''AUTO-DIAG'' [PASS]''
  Les résultats de diagnostic enregistrés auparavant dans la mémoire (également indiqués par le nombre de clignotements du témoin en mode de Diagnostic) s'affichent sur l'écran CONSULT. Les résultats enregistrés sont gardé en mémoire tant que celle-ci n'a pas été effacée.
- ''ENREG DIAG DEFAUT''
  Avec ''ENREG DIAG DEFAUT'', les résultats de diagnostic précedemment effacés peuvent être rappelés et affichés à nouveau sur l'écran CONSULT.

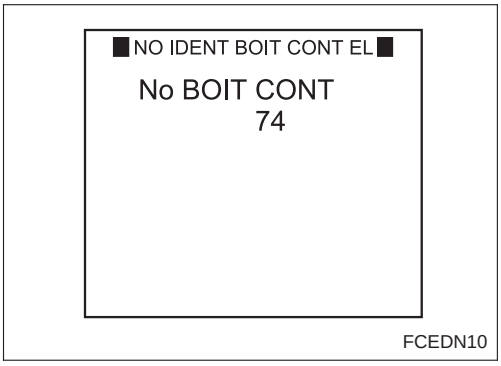

- No IDENT BOIT CONT EL
  Pour chaque modèle, le boîtier de capteurs de diagnostic est assorti d'un numéro de classification propre et individuel. Ce numéro s'affichera sur l'écran CONSULT, comme illustré sur la figure de gauche. Lors du remplacement du boîtier de capteurs de diagnostic, se reporter au numéro de pièce pour une bonne compatibilité. Après la repose, il est possible de vérifier si le boîtier de remplacement est approprié en confirmant ce numéro de classification sur l'écran CONSULT.

Pour les modèles D22 NISSAN à 4 roues motrices, le numéro de classification du boîtier de capteurs de diagnostic est 74.

Simpo PDF Merge and Split Unregistered Version - http://www.simpopdf.com

Introduction des diagnostics de défauts (Suite)

COMMENT CHANGER LE MODE D'AUTODIAGNOSTIC

Avec CONSULT

Du mode Utilisateur au mode de Diagnostic.

Le système passe automatiquement du mode Utilisateur en mode de Diagnostic lorsque l'on sélectionne l'option AIRBAG sur l'écran ''SELECTION SYSTEME''.

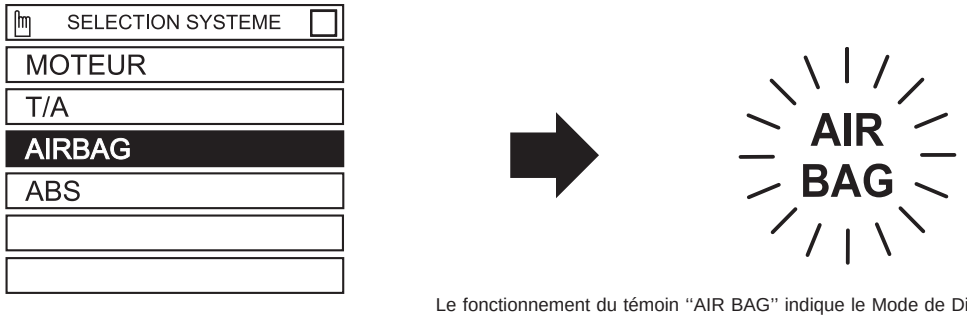

Le fonctionnement du témoin ''AIR BAG'' indique le Mode de Diagnostic. FCXSS03

Du mode de Diagnostic au mode Utilisateur.

Pour revenir sur le mode Utilisateur à partir du mode de Diagnostic, appuyer sur la touche ''BACK'' (RETOUR) de CONSULT, jusqu'à ce que ''SELECTION SYSTEME'' s'affiche. Le mode de Diagnostic est automatiquement remplacé par le mode Utilisateur.

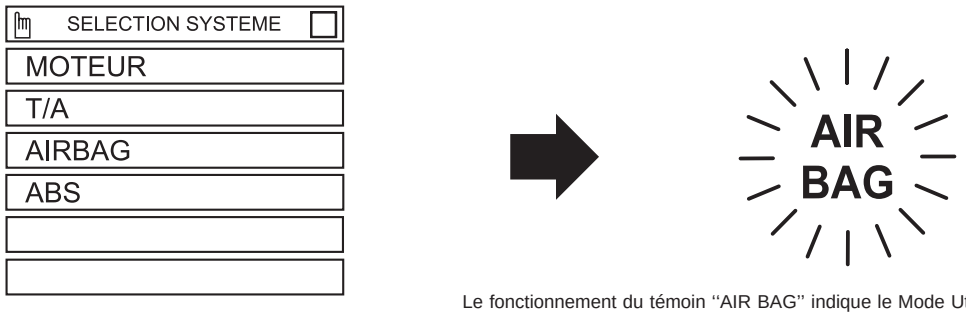

Le fonctionnement du témoin ''AIR BAG'' indique le Mode Utilisateur. FCXSS04

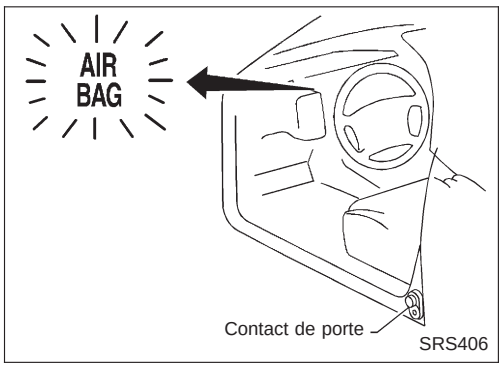

Sans CONSULT

Du mode Utilisateur au mode de Diagnostic.

Le mode de Diagnostic est activé uniquement lorsqu'un défaut est détecté, en appuyant au moins 5 fois dans un délai de 7 secondes sur le contact de la porte du conducteur après avoir mis le contact d'allumage. Le SRS ne passera pas en mode de Diagnostic si aucun défaut n'est détecté.

Du mode de Diagnostic au mode Utilisateur.

Lorsqu' un défaut est détecté pour revenir sur le mode Utilisateur à partir du mode de Diagnostic, couper le contact d'allumage, l'allumer de nouveau et appuyer sur le contact de porte côté conducteur au moins 5 fois en 7 secondes.

Une fois le défaut réparé, couper le contact d'allumage pendant au moins une seconde avant de le rétablir. Le mode de Diagnostic retourne au mode Utilisateur.

Simpo PDF Merge and Split Unregistered Version - http://www.simpopdf.com

Introduction des diagnostics de défauts (Suite)

COMMENT EFFACER LES RESULTATS DE L'AUTODIAGNOSTIC

Avec CONSULT

- ''AUTO-DIAG [COURANT]''
  Le résultat d'autodiagnostic courant s'affiche en temps réel sur l'écran de CONSULT. Une fois le défaut complètement éliminé, aucun défaut de fonctionnement n'est plus détecté sur l'écran ''AUTO-DIAG [COURANT]''.

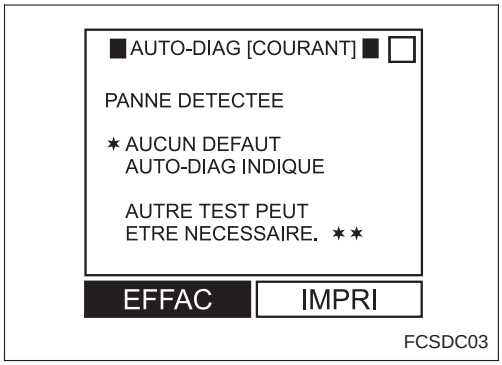

- ''AUTO-DIAG'' [PASSE]''

Revenir sur l'écran CONSULT ''AUTO-DIAG [COURANT]'' en appuyant sur la touche ''BACK'' (RETOUR) de CONSULT et en sélectionnant ''AUTO-DIAG [COURANT]'' dans ''SELECTION MODE DIAG''. Appuyer sur ''EFFAC'' en mode ''AUTO-DIAG [COURANT]''.

NOTE :
Si le défaut mémorisé en mode ''AUTO-DIAG [PASSE]'' n'est pas effacé, le mode Utilisateur indiquera un défaut de système par le biais du témoin, même si le défaut a été complètement éliminé.

- ''ENREG DIAG DEFAUT''
  La mémoire du mode ''ENREGIS DIAG DEFAUT'' ne peut pas être effacée.

Sans CONSULT

Une fois le défaut réparé, couper le contact d'allumage pendant au moins une seconde avant de le rétablir. Le mode de Diagnostic retourne au mode Utilisateur. Le code de défaut sera alors effacé.

Comment effectuer des diagnostics de défauts permettant une réparation rapide et précise

Une bonne compréhension des conditions de mauvais fonctionnement peut permettre de localiser la panne plus rapidement et avec plus de précision.
En règle générale, chaque client réagit différemment face à un problème. Il est indispensable de bien comprendre les symptômes ou les conditions de la plainte d'un client.

INFORMATIONS FOURNIES PAR LE CLIENT

QUOI	Modèle de véhicule
QUAND	Date, fréquences
OU	Etat de la route
COMMENT	Conditions de fonctionnement, symptômes

VERIFICATION PRELIMINAIRE

Vérifier si les pièces suivantes sont en bon état.

- Batterie [Se reporter à la section EL (''BATTERIE'').]
- Fusible [Se reporter à la section EL (''Fusible'', ''DISPOSITION DE L'ALIMENTATION ELECTRIQUE'')].
- Connexions entre les composants du système et le faisceaux.

Simpo PDF Merge and Split Unregistered Version - http://www.simpopdf.com

Comment effectuer des diagnostics de défauts permettant une réparation rapide et précise (Suite)

PROCEDURE DE TRAVAIL

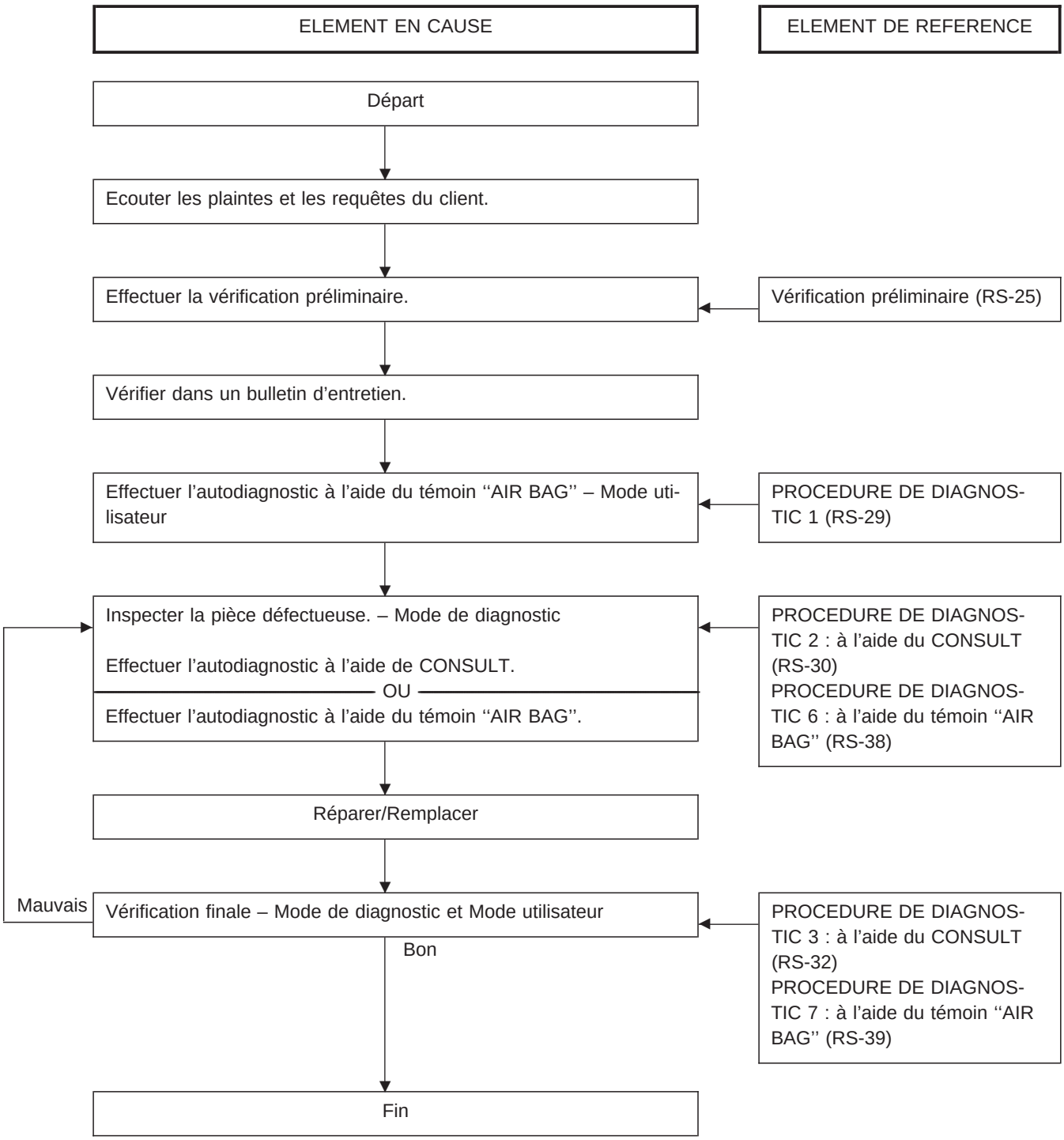

Simpo PDF Merge and Split Unregistered Version - http://www.simpopdf.com

Schéma de câblage – SRS –

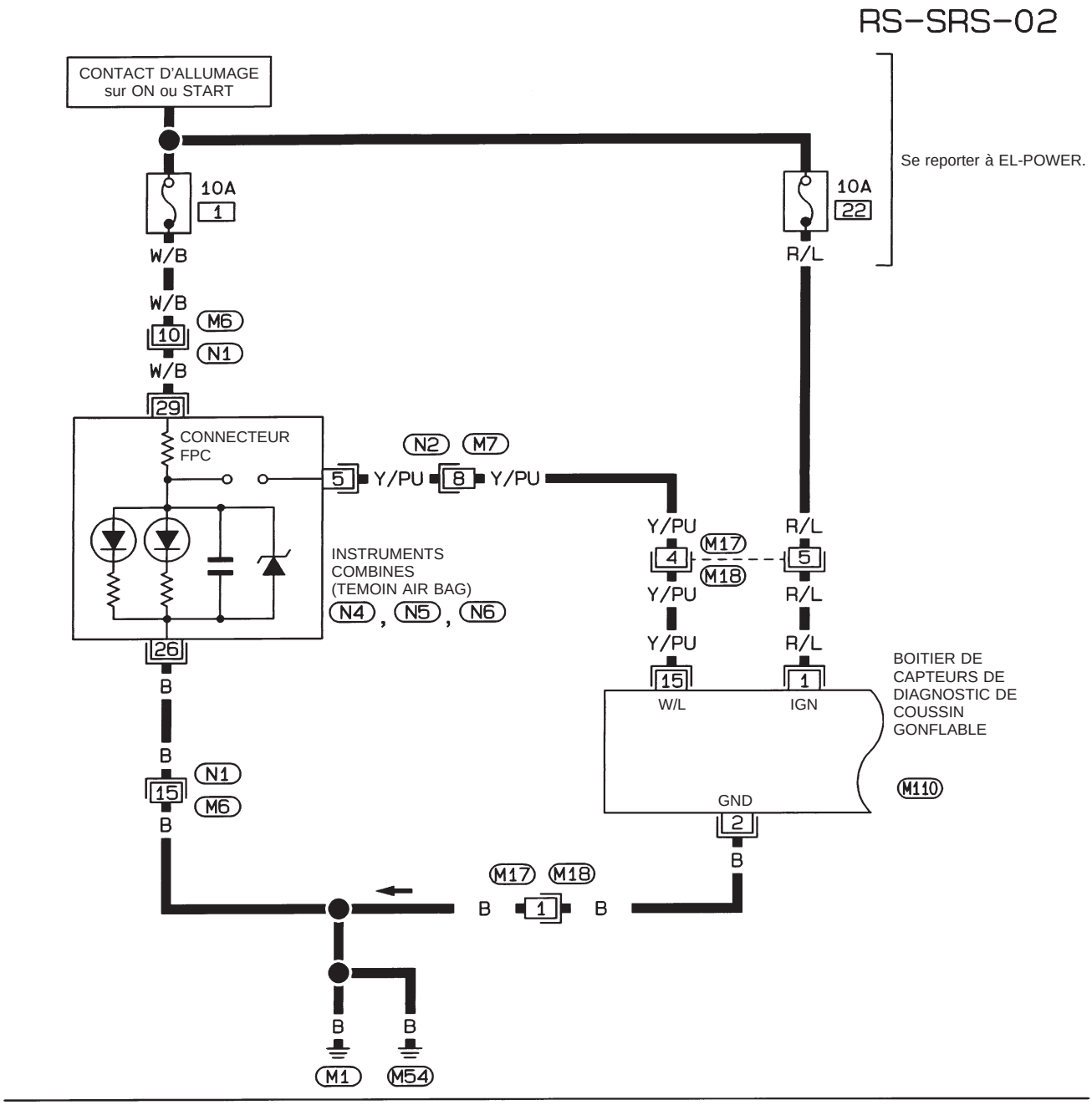

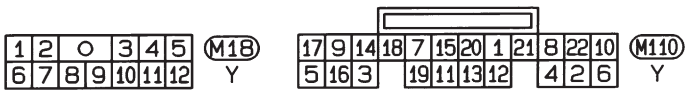



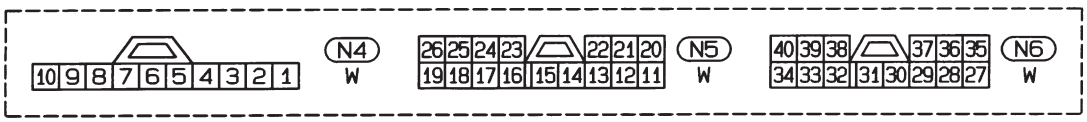

HRS024

Simpo PDF Merge and Split Unregistered Version - http://www.simpopdf.com

Schéma de câblage – SRS – (Suite)

RS-SRS-03

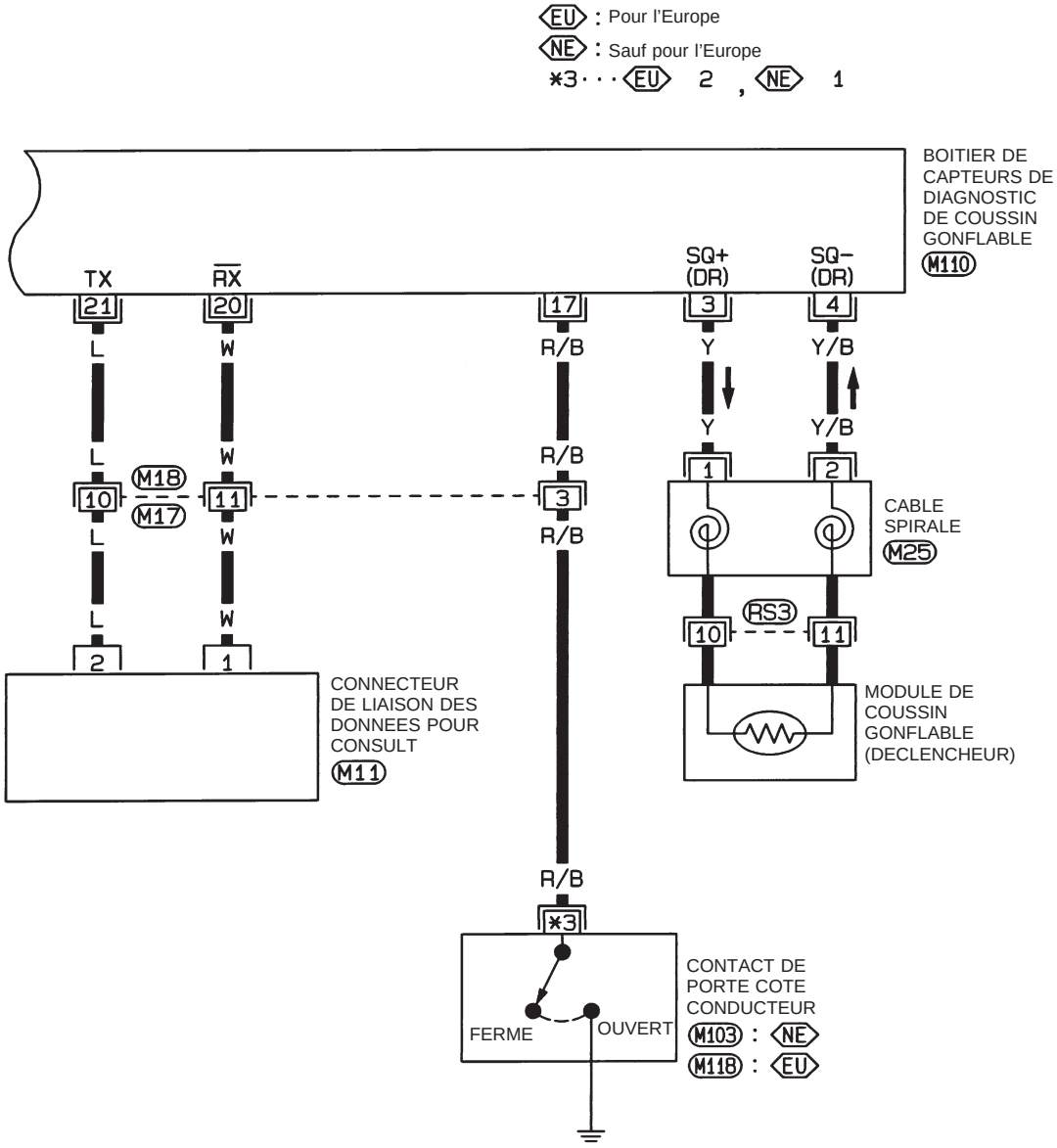

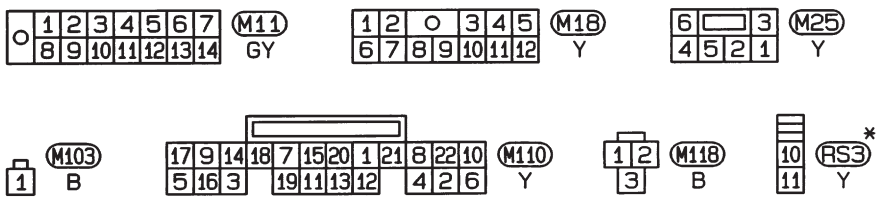

✱ : Ce connecteur n'est pas indiqué dans ''DISPOSITION DES FAISCEAUX'' dans la section EL.

HRS035

Simpo PDF Merge and Split Unregistered Version - http://www.simpopdf.com

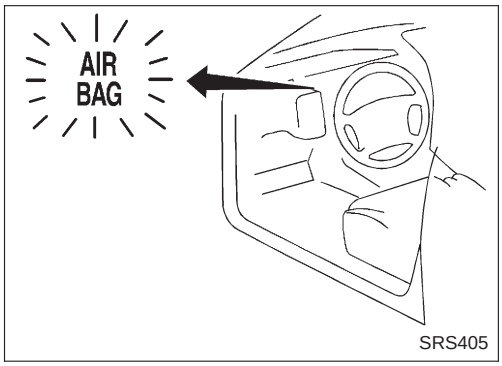

Vérification du fonctionnement du SRS

PROCEDURE DE DIAGNOSTIC 1

Vérifier le fonctionnement du SRS à l'aide du témoin ''AIR BAG'' – Mode Utilisateur

1. le témoin ''AIR BAG'' s'allume lorsque l'on tourne le contact d'allumage de la position ''OFF'' sur ''ON''.
2. Comparer le fonctionnement du témoin ''AIR BAG'' au tableau ci-dessous.

Fonctionnement du témoin ''AIR BAG'' – Mode utilisateur –	Conditions du SRS	Elément de référence
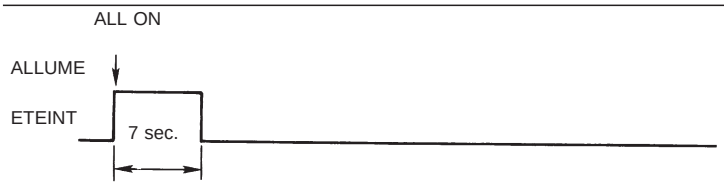 MRS095A	Aucun défaut n'est détecté. Aucune démarche supplémentaire n'est nécessaire.	—
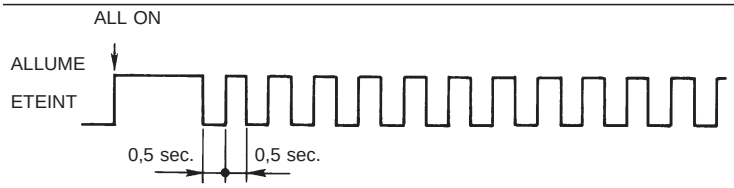 MRS096A	Le système présente un défaut et doit être réparé comme indiqué.	Aller à la PROCEDURE DE DIAGNOSTIC 2 ou 6 (RS-30 ou 38)
 MRS097A	Le coussin gonflable est déployé.	Aller à DIAGNOSTIC DE COLLISION (RS-44).
	Le fusible de coussin gonflable, le boîtier de capteurs de diagnostic ou le faisceau est défectueux et doit être réparé.	Aller à la PROCEDURE DE DIAGNOSTIC 9 (RS-42).
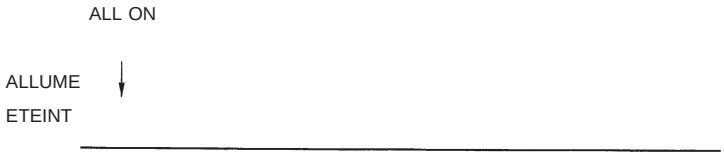 MRS098A	Un des défauts suivants s'est manifesté et doit être réparé. ● Le fusible des instruments combinés est grillé. ● Le circuit du témoin ''AIR BAG'' est en court-circuit. ● Le boîtier de capteurs de diagnostic est défectueux.	Aller à la PROCEDURE DE DIAGNOSTIC 10 (RS-43).

NOTE :
Si le fonctionnement du témoin ''AIR BAG'' diffère du fonctionnement spécifié plus haut, se reporter à Fonctionnement du témoin ''AIR BAG'' – Mode de diagnostic –, PROCEDURE DE DIAGNOSTIC 6 (étape 4), RS-38.

Simpo PDF Merge and Split Unregistered Version - http://www.simpopdf.com

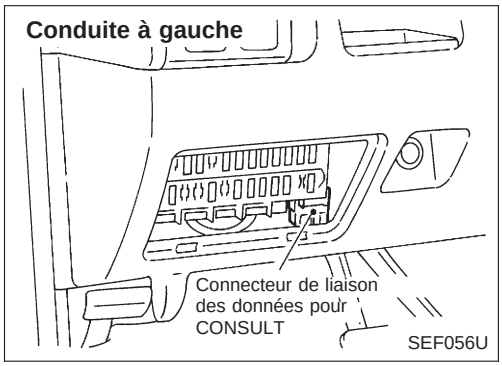

Diagnostic des défauts avec CONSULT

PROCEDURE DE DIAGNOSTIC 2

Inspection des pièces défectueuses du SRS à l'aide de CONSULT – Mode de diagnostic

1. Tourner le contact d'allumage sur ''OFF''.
2. Brancher ''CONSULT'' au connecteur de liaison des données.

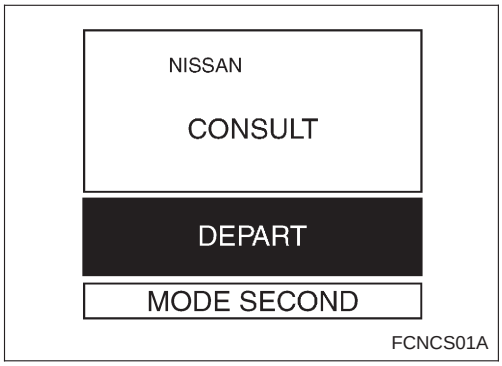

3. Mettre le contact d'allumage sur 'ON''.
4. Appuyer sur ''DEPART''.

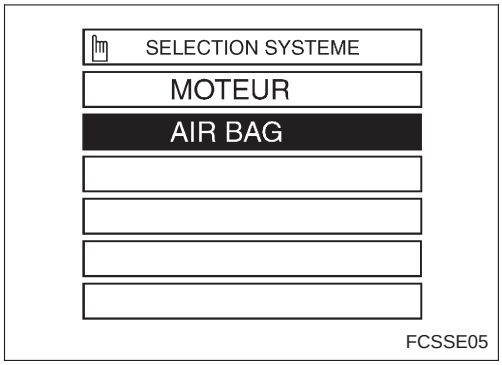

5. Appuyer sur ''AIR BAG''.

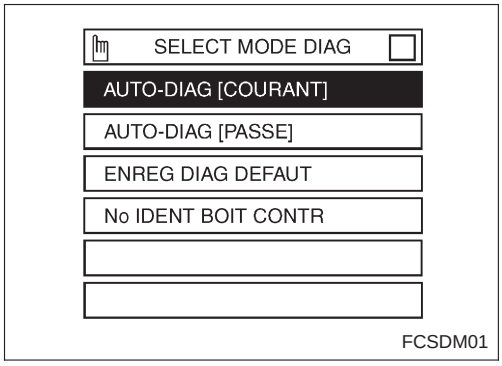

6. Appuyer sur ''AUTO-DIAG [COURANT]''.

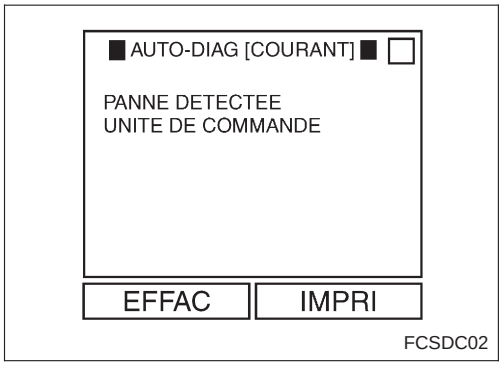

7. Les codes de diagnostic sont affichés dans ''AUTO-DIAG [COURANT]''.

Simpo PDF Merge and Split Unregistered Version - http://www.simpopdf.com

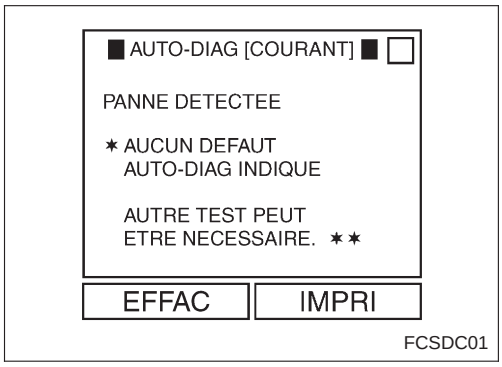

Diagnostic des défauts avec CONSULT (Suite)

Si aucun défaut n'est détecté dans ''AUTO-DIAG [COURANT]'', même lorsqu'un défaut est détecté en PROCEDURE DE DIAGNOSTIC 1, vérifier la tension de la batterie. Si la tension de la batterie est inférieure à 9 V, recharger la batterie. Puis aller à la PROCEDURE DE DIAGNOSTIC 3, page RS-32. Si la tension de la batterie est normale, aller à la PROCEDURE DE DIAGNOSTIC 4, page RS-34 afin d'effectuer le diagnostic des cas suivants :

- Les résultats de diagnostic (précédemment mémorisés) n'ont pas été effacés, même après que le système a été réparé.
- Défaut de fonctionnement intermittent du SRS.

8. Appuyer sur ''IMPRI''.
9. Comparer les codes de diagnostic au TABLEAU DES CODES DE DIAGNOSTIC CONSULT, page RS-31.
10. Pour revenir sur le mode Utilisateur à partir du mode de Diagnostic, appuyer sur la touche ''BACK'' (RETOUR) de CONSULT, jusqu'à ce que ''SELECTION SYSTEME'' s'affiche.
11. Couper le contact, puis débrancher le CONSULT ainsi que les deux câbles de la batterie.
12. Réparer le système comme décrit dans ''Ordre de réparation'' dans le TABLEAU DE CODE DE DIAGNOSTIC DU CONSULT, qui correspond au code du problème. Se reporter à RS-10 pour la procédure de remplacement des composants.
13. Après avoir réparé le système, aller à la PROCEDURE DE DIAGNOSTIC 3 pour effectuer un contrôle final, page RS-32.

TABLEAU DES CODES DE DIAGNOSTIC CONSULT (''AUTO-DIAG [COURANT]'')

Elément de diagnostic	Explication/causes possibles		Ordre de réparation **Vérifier le système SRS à chaque remplacement de pièce.**
AUCUN DEFAUT AUTO-DIAG INDIQUE.	Lorsque le défaut de fonctionnement est indiqué par le témoin ''AIR BAG'' en mode Utilisateur.	● Le défaut d'autodiagnostic (''AUTO-DIAG [PASSE]'') (précédemment mémorisé) n'a pas été effacé après que le système a été réparé. ● Un problème intermittent a été détecté dans le passé.	● Aller à la PROCEDURE DE DIAGNOSTIC 4 (RS-34).
	● Aucun défaut n'est détecté.		● Aller à PROCEDURE DE DIAGNOSTIC 3 (RS-32)
MODULE AIR BAG [OUVERT]	● Le circuit du module de coussin gonflable côté conducteur est ouvert (y compris le câble spiralé).)		1. Inspecter visuellement la connexion du faisceau de câblage. 2. Remplacer le faisceau s'il est visiblement endommagé. 3. Remplacer le module de coussin gonflable côté conducteur. (il doit être déployé avant la mise au rebut). 4. Remplacer le câble spiralé. 5. Remplacer le boîtier de capteurs de diagnostic.
MODULE AIR BAG [COURT TENS BATT]	● Le circuit du module de coussin gonflable côté conducteur est court-circuité à l'un des circuits d'alimentation électrique (y compris le câble spiralé).		
MODULE AIR BAG [COURT-CIRC MASSE]	● Le circuit du module de coussin gonflable du conducteur est court-circuité à la masse (y compris le câble spiralé).		
MODULE AIR BAG [COURT-CIRC]	● Les circuits du module de coussin gonflable côté conducteur sont court-circuités les uns avec autres.		
UNITE DE COMMANDE	● Le boîtier de capteurs de diagnostic est hors service.		1. Vérifier visuellement les connexions de faisceau de câblage. 2. Remplacer le boîtier de capteurs de diagnostic.

*** Suivre les procédures dans l'ordre numérique lors de la réparation des pièces défectueuses. Vérifier si le défaut de fonctionnement est éliminé à l'aide du témoin de coussin gonflable ou de CONSULT après chaque réparation. Si le défaut subsiste, passer à l'étape suivante. Aucune réparation supplémentaire n'est requise si le défaut a disparu.**

Simpo PDF Merge and Split Unregistered Version - http://www.simpopdf.com

Diagnostic des défauts avec CONSULT (Suite)

PROCEDURE DE DIAGNOSTIC 3

Vérification finale après réparation du SRS à l'aide de CONSULT – mode de Diagnostic

1. Après avoir réparé le SRS, brancher les deux câbles de la batterie.
2. Brancher CONSULT au connecteur de liaison des données.
3. Mettre le contact d'allumage de la position ''OFF'' sur ''ON''.

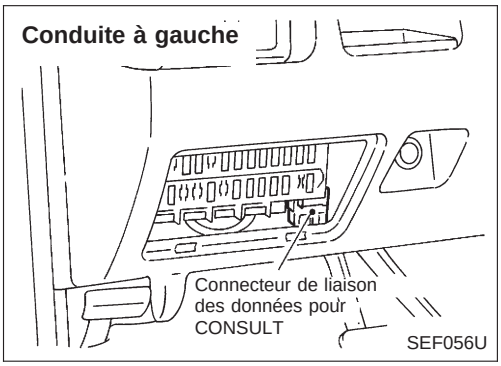

4. Appuyer sur ''DEPART''.

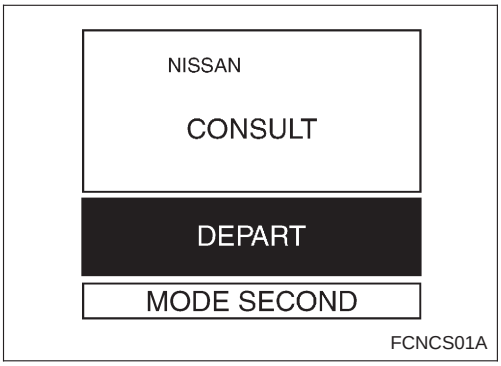

5. Appuyer sur ''AIR BAG''.

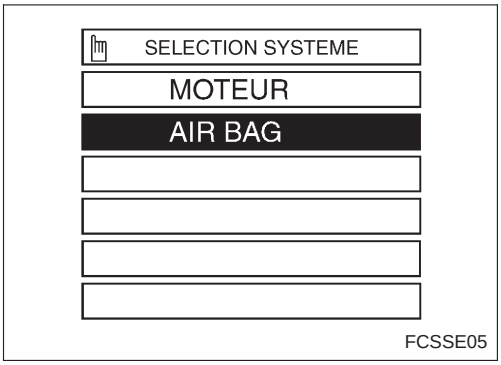

6. Appuyer sur ''AUTO-DIAG [COURANT]''.

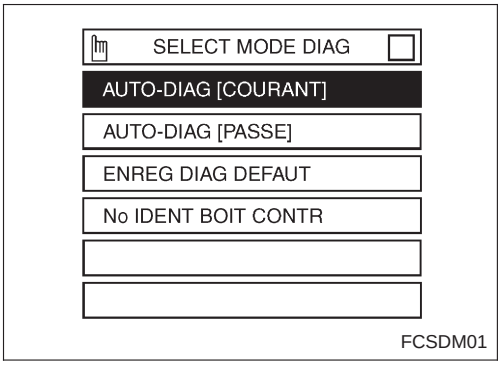

7. Si aucun défaut n'est détecté dans ''AUTO-DIAG [COURANT]'', cela signifie que la réparation du SRS est achevée.
   Si un code de défaut est affiché dans ''AUTO-DIAG [COURANT]'', le composant défectueux n'a pas été complètement réparé ou un autre composant défectueux a été détecté. Aller à la PROCEDURE DE DIAGNOSTIC 2, page RS-30 et réparer complètement le composant défectueux.

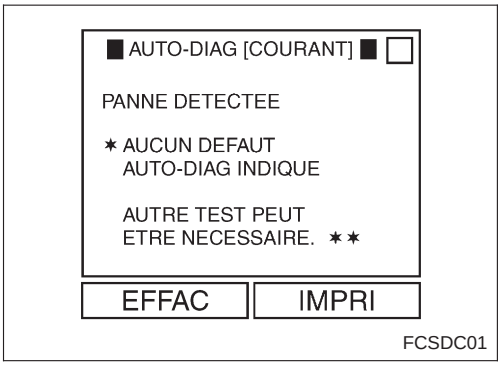

Simpo PDF Merge and Split Unregistered Version - http://www.simpopdf.com

Diagnostic des défauts avec CONSULT (Suite)

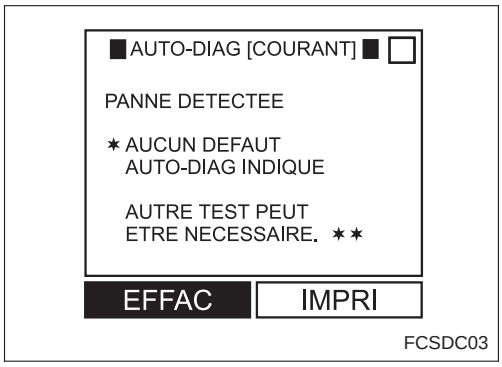

8. Appuyer sur ‘‘EFFAC’’.

NOTE :

Appuyer sur ‘‘EFFAC’’ pour effacer le défaut de la mémoire (‘‘AUTO-DIAG [PASSE]’’).

Si le défaut mémorisé en mode ‘‘AUTO-DIAG [PASSE]’’ n’est pas effacé, le mode Utilisateur indiquera un défaut de système par le biais du témoin, même si le défaut a été complètement éliminé.

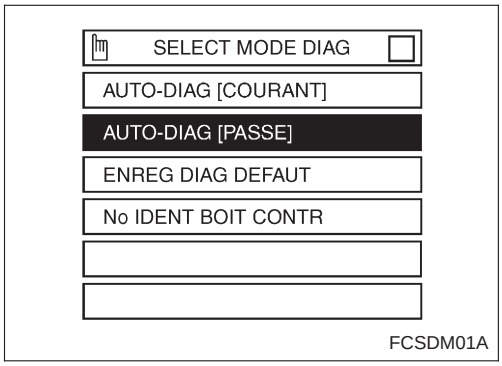

9. Appuyer sur la touche ‘‘BACK’’ (RETOUR) de CONSULT pour sélectionner ‘‘AUTO-DIAG [PASSE]’’ sur l’écran ‘‘SELECT MODE DIAG’’. Appuyer sur ‘‘AUTO-DIAG [PASSE]’’.

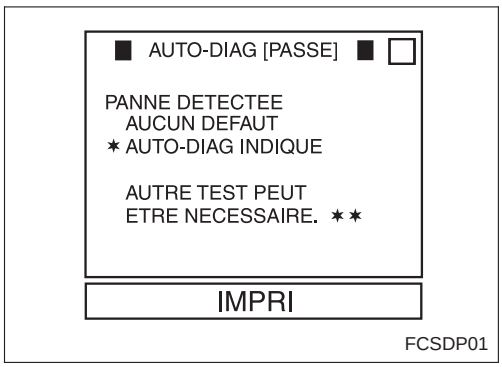

10. Vérifier qu’aucun défaut d’autodiagnostic n’est détecté dans ‘‘AUTO-DIAG [PASSE]’’.
11. Appuyer sur la touche ‘‘BACK’’ (RETOUR) de CONSULT jusqu’à affichage de SELECTION SYSTEME afin de passer du mode de Diagnostic en mode Utilisateur, puis débrancher CONSULT.
12. Tourner le contact d’allumage sur ‘‘OFF’’.
13. Aller à la PROCEDURE DE DIAGNOSTIC 1, page RS-29, pour vérifier le fonctionnement du SRS à l’aide du témoin ‘‘AIR BAG’’ en mode Utilisateur.

Simpo PDF Merge and Split Unregistered Version - http://www.simpopdf.com

Diagnostic des défauts avec CONSULT (Suite)

PROCEDURE DE DIAGNOSTIC 4 (suite de la PROCEDURE DE DIAGNOSTIC 2)

Inspection d'un défaut enregistré du SRS

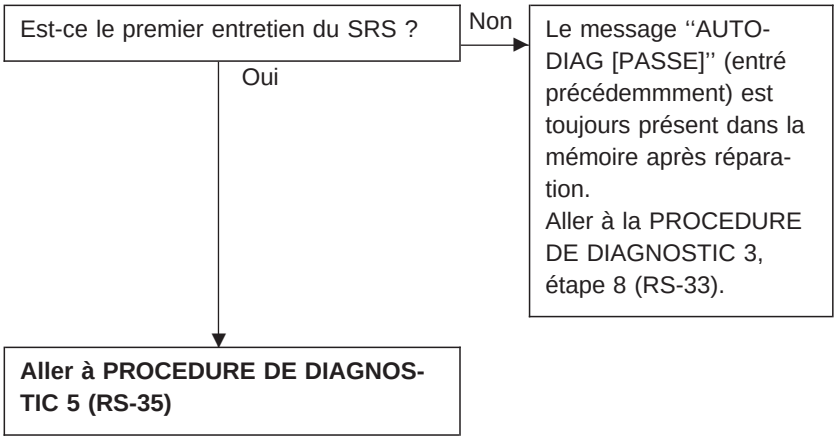

Simpo PDF Merge and Split Unregistered Version - http://www.simpopdf.com

Diagnostic des défauts avec CONSULT (Suite)

PROCEDURE DE DIAGNOSTIC 5

Inspection d'un problème intermittent du SRS à l'aide de CONSULT – Mode de diagnostic

1. Tourner le contact d'allumage sur ''OFF''.
2. Brancher ''CONSULT'' au connecteur de liaison des données.

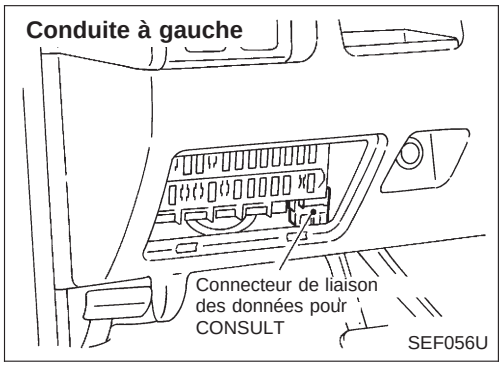

3. Mettre le contact d'allumage sur 'ON''.
4. Appuyer sur ''DEPART''.

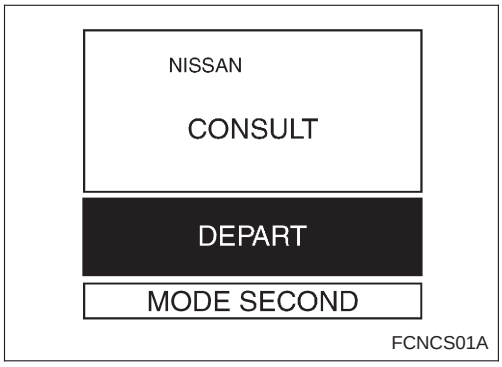

5. Appuyer sur ''AIR BAG''.

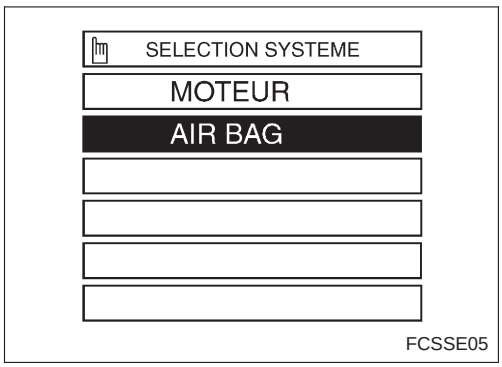

6. Appuyer sur ''AUTO-DIAG [PASSE]''.

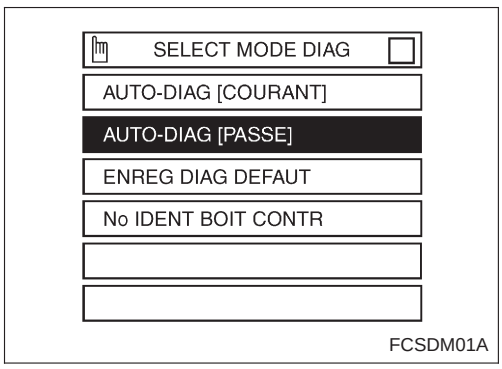

7. Si les codes de diagnostic s'affichent dans ''AUTO-DIAG [PASSE]'', passer à l'étape 10.

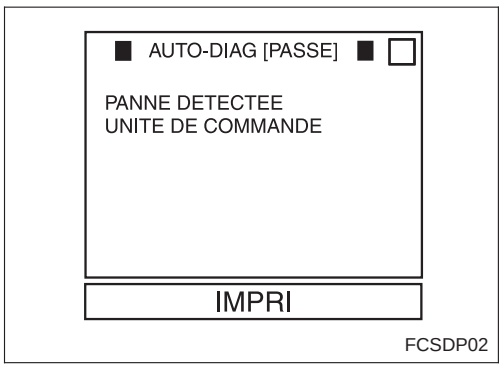

Simpo PDF Merge and Split Unregistered Version - http://www.simpopdf.com

Diagnostic des défauts avec CONSULT (Suite)

Si aucun défaut d'autodiagnostic n'est détecté dans ''AUTO-DIAG [PASSE]'', appuyer sur ''RETOUR'' et revenir à ''SELECT MODE DIAG''.

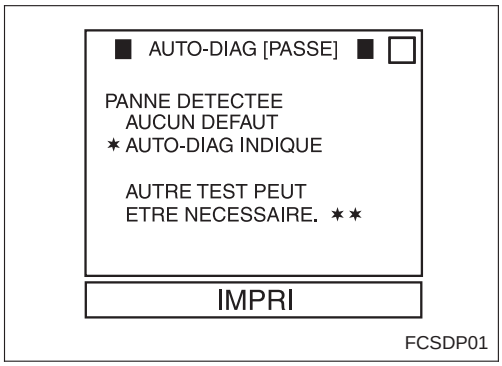

8. Appuyer sur ''ENREG DIAG DEFAUT''.

NOTE :
Avec ''ENREG DIAG DEFAUT'', les résultats de diagnostic précedemment effacés peuvent être rappelés et affichés à nouveau.

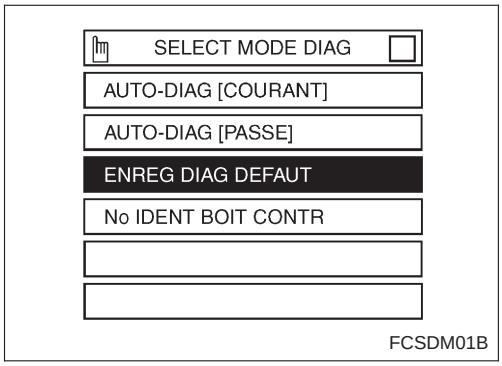

9. Le code de diagnostic est affiché dans ''ENREG DIAG DEFAUT''.

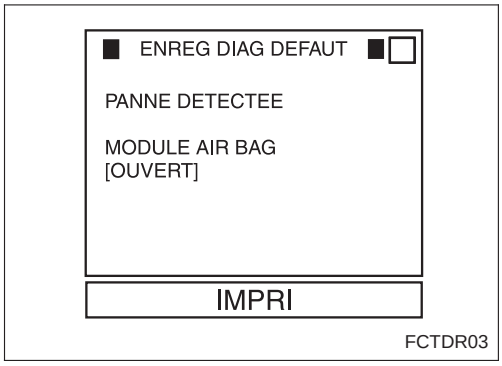

10. Appuyer sur ''IMPRI''.
11. Comparer les codes de diagnostic au TABLEAU DES CODES DE DIAGNOSTIC DES PROBLEMES INTERMITTENTS, à la page RS-37.
12. Appuyer sur la touche ''RETOUR'' du CONSULT jusqu'à ce que l'écran ''SELECTION SYSTEM'' apparaisse, puis éteindre le CONSULT.
13. Couper le contact, puis débrancher le CONSULT ainsi que les deux câbles de la batterie.
14. Réparer le système comme décrit dans ''Ordre de réparation'' dans le TABLEAU DES CODES DE DIAGNOSTIC POUR PROBLEMES INTERMITTENTS, qui correspond au code du problème. Se reporter à RS-10 pour la procédure de remplacement des composants.
15. Aller à la PROCEDURE DE DIAGNOSTIC 3, page RS-32, pour effectuer un contrôle final.

Simpo PDF Merge and Split Unregistered Version - http://www.simpopdf.com

Diagnostic des défauts avec CONSULT (Suite)

TABLEAU DES CODES DE DIAGNOSTIC DES PROBLEMES INTERMITTENTS (''AUTO-DIAG [PASSE]'' ou ''ENREGIST DIAG DEFAUT'')

Elément de diagnostic	Explication	Ordre de réparation
AUCUN DEFAUT AUTO-DIAG INDIQUE.	● Aucun défaut n'est détecté.	● Aller à la PROCEDURE DE DIAGNOSTIC 3 (RS-32) après avoir rechargé la batterie.
MODULE AIR BAG [OUVERT]	● Le circuit du module de coussin gonflable côté conducteur est ouvert (y compris le câble spiralé).	● Inspecter visuellement la connexion du faisceau de câblage. ● Remplacer le faisceau s'il est visiblement endommagé. ● Remplacer le module de coussin gonflable côté conducteur. (il doit être déployé avant la mise au rebut). ● Remplacer le câble spiralé. ● Remplacer le boîtier de capteurs de diagnostic.
MODULE AIR BAG [COURT TENS BATT]	● Le circuit du module de coussin gonflable côté conducteur est court-circuité à l'un des circuits d'alimentation électrique (y compris le câble spiralé).	
MODULE AIR BAG [COURT-CIRC MASSE]	● Le circuit du module de coussin gonflable du conducteur est court-circuité à la masse (y compris le câble spiralé).	
MODULE AIR BAG [COURT-CIRC]	● Les circuits du module de coussin gonflable côté conducteur sont court-circuités les uns avec autres.	
UNITE DE COMMANDE	● Le boîtier de capteurs de diagnostic est hors service.	● Inspecter visuellement la connexion du faisceau de câblage. ● Remplacer le boîtier de capteurs de diagnostic.

* Il est difficile de situer les emplacements où les problèmes intermittents se manifestent. Pour cette raison, il convient d'effectuer les procédures décrites dans l'ordre de réparation, avant de procéder au contrôle final du système.

Simpo PDF Merge and Split Unregistered Version - http://www.simpopdf.com

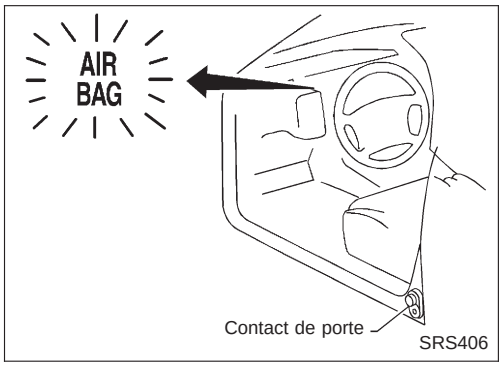

Diagnostic de défaut sans CONSULT

PROCEDURE DE DIAGNOSTIC 6

Inspection des pièces défectueuses du SRS à l'aide du témoin ''AIR BAG'' – Mode de diagnostic

NOTE :

Le SRS ne passera pas en mode de Diagnostic si aucun défaut n'est détecté en mode Utilisateur.

1. Ouvrir la portière du conducteur.
2. Mettre le contact d'allumage de la position ''OFF'' sur ''ON''.
3. Appuyer sur le contact de porte côté conducteur au moins 5 fois en 7 secondes après avoir mis le contact d'allumage sur ''ON''.
   Le SRS est maintenant en mode de Diagnostic.
4. Le témoin ''AIR BAG'' fonctionne en mode de Diagnostic comme suit :

NOTE :

Si le SRS ne passe pas en mode de Diagnostic, alors qu'un défaut de fonctionnement est détecté en mode Utilisateur, aller à la PROCEDURE DE DIAGNOSTIC 11, page RS-43.

N°	Séquence de clignotement du témoin ''AIR BAG'' – Mode de Diagnostic –	Conditions du SRS
1	ⓐ à ⓑ sont répétés 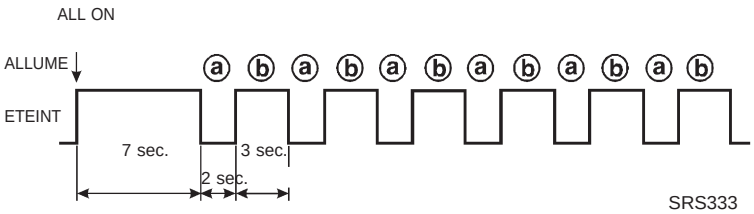	● Les résultats de diagnostic (précédemment mémorisés) n'ont pas été effacés, même après que le système a été réparé. ● Un problème intermittent a été détecté dans le passé. Aller à PROCEDURE DE DIAGNOSTIC 8 (RS-42)
2	ⓐ à ⓓ sont répétés. ⓑ – Témoin de coussin gonflable côté conducteur et passager (pour l'identification d'un défaut de coussin gonflable pour conducteur et/ou passager) ⓓ – Indique le composant défectueux. Le nombre de clignotements varie selon le composant défectueux (0,5 sec. ALLUME et 0,5 sec. ETEINT. L'état ETEINT représente un clignotement). 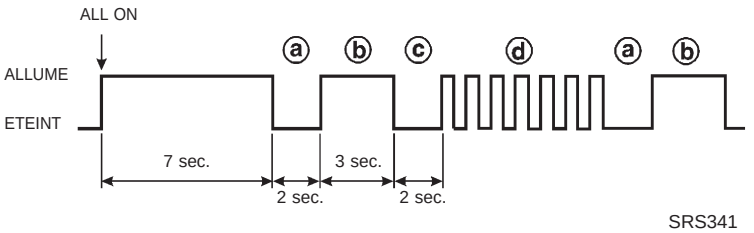	Le système présente un défaut et doit être réparé.

5. Le composant défectueux est indiqué par le nombre de clignotements (ⓓ ou ⓕ). Comparer le nombre de clignotements au TABLEAU DE CODES DE CLIGNOTEMENT DU TEMOIN ''AIR BAG'', page RS-39, et localiser le composant défectueux.
6. Couper le contact et débrancher les deux câbles de masse de la batterie.

Simpo PDF Merge and Split Unregistered Version - http://www.simpopdf.com

Diagnostic de défaut sans CONSULT (Suite)

7. Réparer le système selon l'''Ordre de réparation'' du TABLEAU DE CODES DE CLIGNOTEMENT DU TEMOIN ''AIR BAG'' correspondant au code de clignotement. Se reporter à RS-10 pour la procédure de remplacement des composants.
8. Après avoir réparé le système, aller à la PROCEDURE DE DIAGNOSTIC 7, page RS-39.

TABLEAU DE CODES DE CLIGNOTEMENT DU TEMOIN ''AIR BAG'' (MODE DE DIAGNOSTIC)

Témoin	Code de clignotement ⓓ (nombre de clignotements)	Explication	Ordre de réparation Vérifier le système SRS à chaque remplacement de pièce.
Témoin ''AIR BAG''	0	● Le défaut d'autodiagnostic n'a pas été effacé après que le système a été réparé. ● Un problème intermittent a été détecté dans le passé.	Aller à PROCEDURE DE DIAGNOSTIC 8 (RS-42).
	2	Le circuit du module de coussin gonflable côté conducteur est hors service.	1. Vérifier visuellement les connexions de faisceau de câblage. 2. Remplacer le câble spiralé. 3. Remplacer le module de coussin gonflable côté conducteur (avant de le mettre au rebut, il est nécessaire de le déployer). 4. Remplacer le boîtier de capteurs de diagnostic. 5. Remplacer le faisceau de coussin gonflable.
	7	Le boîtier de capteurs de diagnostic ne fonctionne pas.	1. Vérifier visuellement les connexions de faisceau de câblage. 2. Remplacer le boîtier de capteurs de diagnostic.

*** Suivre les procédures dans l'ordre numérique lors de la réparation des pièces défectueuses. Vérifier si le défaut est éliminé à l'aide du témoin de coussin gonflable (en mode Utilisateur) ou du CONSULT après chaque réparation. Si le défaut subsiste, passer à l'étape suivante. Aucune réparation supplémentaire n'est requise si le défaut a disparu.**

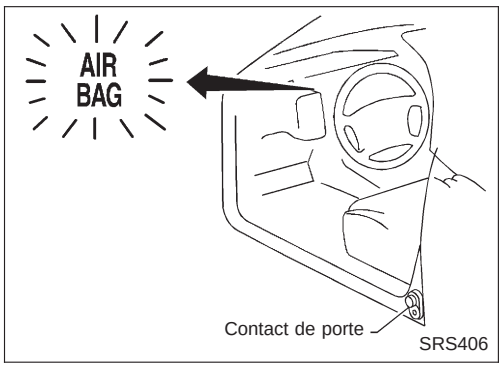

PROCEDURE DE DIAGNOSTIC 7

Vérification finale après réparation du SRS à l'aide du témoin ''AIR BAG'' – Mode de Diagnostic et mode Utilisateur

1. Après avoir réparé le SRS, brancher les deux câbles de la batterie.
2. Ouvrir la portière du conducteur.
3. Mettre le contact d'allumage de la position ''OFF'' sur ''ON''.
4. Le témoin ''AIR BAG'' fonctionne en mode de Diagnostic comme suit :

Simpo PDF Merge and Split Unregistered Version - http://www.simpopdf.com

Diagnostic de défaut sans CONSULT (Suite)

N°	Séquence de clignotement du témoin ''AIR BAG'' – Mode de Diagnostic –		Conditions du SRS
1	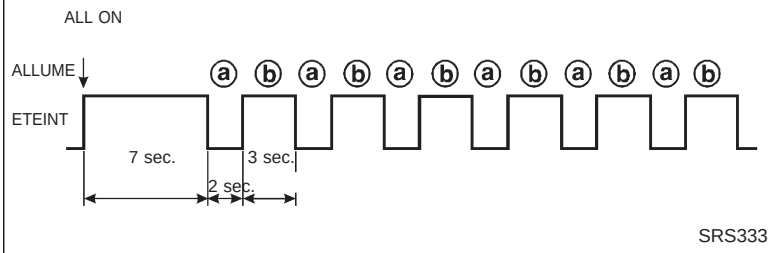 SRS333	ⓐ à ⓑ sont répétés.	Aucun défaut n'est détecté ou la réparation est achevée. Aucune démarche supplémentaire n'est nécessaire.
2	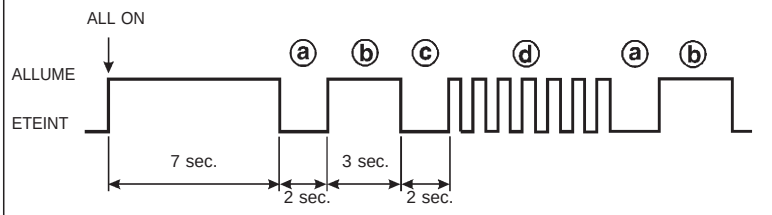 SRS341	ⓐ à ⓓ sont répétés. ⓑ – Témoin de coussin gonflable côté conducteur et passager (pour l'identification d'un défaut de coussin gonflable pour conducteur et/ou passager) ⓓ – Indique le composant défectueux. Le nombre de clignotements varie selon le composant défectueux (0,5 sec. ALLUME et 0,5 sec. ETEINT. L'état ETEINT représente un clignotement).	Le système présente un défaut et doit être réparé.

NOTE :
Si le boîtier de capteurs de diagnostic est remplacé par un boîtier neuf, le témoin ''AIR BAG'' fonctionnera en mode Utilisateur. La vérification du fonctionnement du témoin ''AIR BAG'' en mode de Diagnostic n'est pas nécessaire. Passer à l'étape 6.

5. Si le témoin ''AIR BAG'' fonctionne conformément à la séquence n° 1 du tableau précédent, couper le contact d'allumage pour passer du mode de Diagnostic en mode Utilisateur et pour effacer le défaut de la mémoire. Puis passer à l'étape 6.

   Si le témoin ''AIR BAG'' fonctionne conformément à la séquence n° 2 ou n° 3 du tableau précédent, le composant défectueux n'est pas complètement réparé ou un autre composant défectueux a été détecté. Aller à la PROCEDURE DE DIAGNOSTIC 6, page RS-38, et réparer complètement le composant défectueux.
6. Tourner le contact d'allumage sur ''ON''. Le témoin ''AIR BAG'' fonctionne en mode Utilisateur. Comparer le fonctionnement du témoin ''AIR BAG'' au tableau ci-dessous.

NOTE :
S'il est nécessaire de passer du mode de Diagnostic au mode Utilisateur quand un défaut est détecté, tourner le contact d'allumage de ''OFF'' sur ''ON''. Puis appuyer sur le contact de porte côté conducteur au moins 5 fois en 7 secondes après avoir mis le contact d'allumage sur ''ON''.

Simpo PDF Merge and Split Unregistered Version - http://www.simpopdf.com

Diagnostic de défaut sans CONSULT (Suite)

Le SRS est maintenant en mode Utilisateur.

Fonctionnement du témoin ‘‘AIR BAG’’ – Mode utilisateur –	Conditions du SRS	Elément de référence
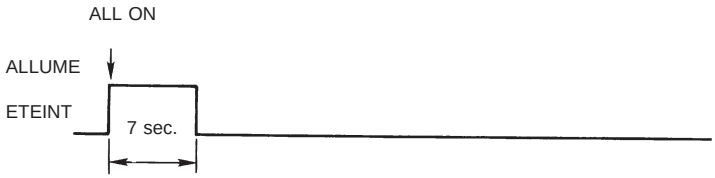 MRS095A	Aucun défaut n’est détecté. Aucune démarche supplémentaire n’est nécessaire.	–
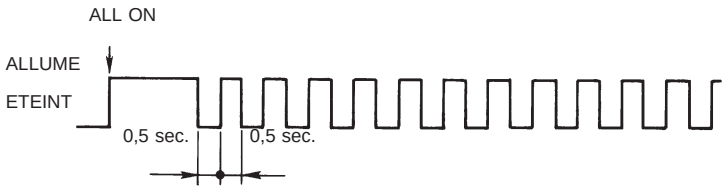 MRS096A	Le système présente un défaut et doit être réparé comme indiqué.	Aller à la PROCEDURE DE DIAGNOSTIC 2 ou 6 (RS-30 ou 38)
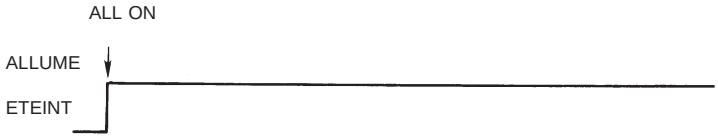 MRS097A	Le coussin gonflable est déployé.	Aller à DIAGNOSTIC DE COLLISION (RS-44)
	Le fusible de coussin gonflable, le boîtier de capteurs de diagnostic ou le faisceau est défectueux et doit être réparé.	Aller à la PROCEDURE DE DIAGNOSTIC 9 (RS-42).
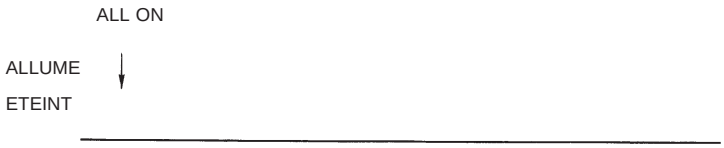 MRS098A	Un des défauts suivants s’est manifesté et doit être réparé. ● Le fusible des instruments combinés est grillé. ● Le circuit du témoin ‘‘AIR BAG’’ est ouvert ou en court-circuit. ● Le boîtier de capteurs de diagnostic est défectueux.	Aller à la PROCEDURE DE DIAGNOSTIC 10 (RS-43).

Simpo PDF Merge and Split Unregistered Version - http://www.simpopdf.com

Diagnostic de défaut sans CONSULT (Suite)

PROCEDURE DE DIAGNOSTIC 8 (suite de la PROCEDURE DE DIAGNOSTIC 6)

Inspection d'un défaut enregistré du SRS

Est-ce le premier entretien du SRS ?

Non → Les résultats de diagnostic (précédemment mémorisés) n'ont pas été effacés, même après que le système a été réparé.
Aller à PROCEDURE DE DIAGNOSTIC 7, étape 5 (RS-40)

Oui

Aller à PROCEDURE DE DIAGNOSTIC 5 (RS-35) (l'inspection ne peut être poursuivie sans CONSULT).

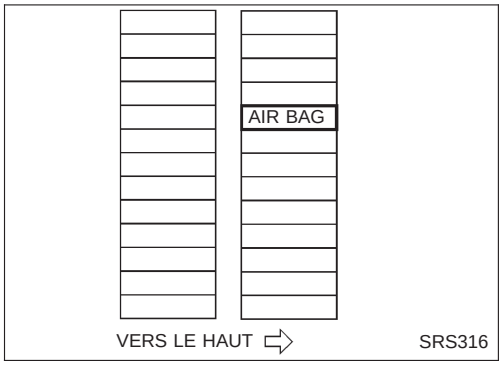

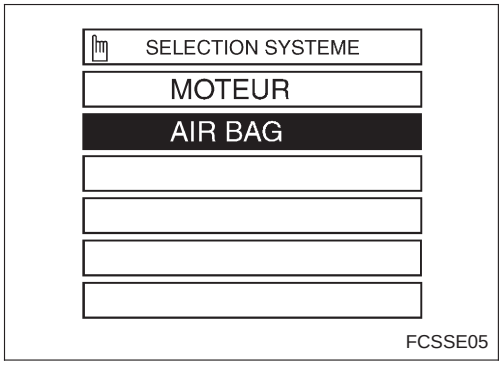

Diagnostics de défaut : le témoin ''AIR BAG'' ne s'éteint pas

PROCEDURE DE DIAGNOSTIC 9

Le coussin gonflable est-il déployé ?

Oui → Consulter le DIAGNOSTIC DE COLLISION (RS-44)

Non

Le fusible du coussin gonflable (''Air Bag'') du SRS fonctionne-t-il correctement ?

Non → Remplacer le fusible.

Oui

Brancher CONSULT et appuyer sur ''DEPART''.
●Est-ce que ''AIR BAG'' s'affiche sur l'écran CONSULT ?

Non → Inspecter visuellement les connexions du faisceau de câblage du boîtier de capteurs de diagnostic. Si les raccords de faisceaux sont bons, remplacer le boîtier de capteurs de diagnostic.

Oui

Est-ce que la connexion de faisceau entre le témoin et le boîtier de capteurs de diagnostic est bonne ?

Non → Brancher le connecteur du témoin et du boîtier de capteurs de diagnostic correctement. Si le témoin ne s'éteint toujours pas, remplacer le faisceau.

Oui

Remplacer le boîtier de capteurs de diagnostic.

Simpo PDF Merge and Split Unregistered Version - http://www.simpopdf.com

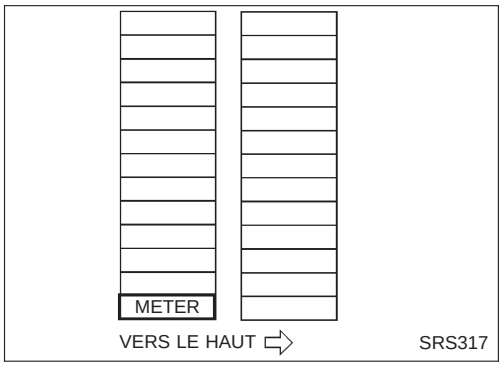

Diagnostics de défaut : le témoin ‘‘AIR BAG’’ ne s’allume pas

PROCEDURE DE DIAGNOSTIC 10

Le fusible du témoin fonctionne-t-il correctement ?	Non	Remplacer le fusible.
Oui		
Est-ce que la D.E.L. du témoin fonctionne correctement ?	Non	Remplacer la D.E.L. du témoin.
Oui		
1. Débrancher le connecteur du boîtier de capteurs de diagnostic. 2. Mettre le contact d’allumage sur ON. ● Le témoin s’allume-t-il ?	Non	Vérifier le circuit de mise à la masse du témoin ‘‘AIR BAG’’.
Oui		
Remplacer le boîtier de capteurs de diagnostic.		

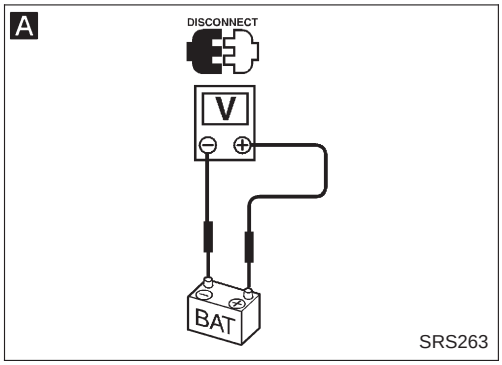

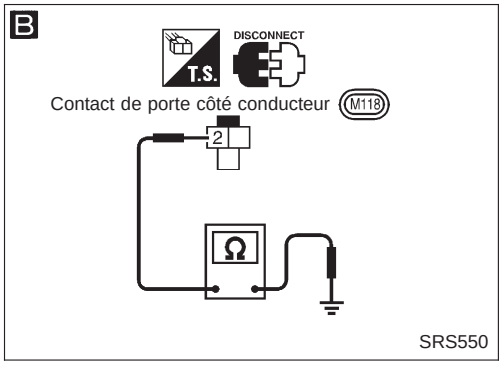

Diagnostics de défaut : le SRS ne passe pas en mode de Diagnostic en utilisant le contact de porte

PROCEDURE DE DIAGNOSTIC 11

A

Débrancher les deux câbles de la batterie et contrôler la tension de cette dernière à l’aide du multimètre. ● Est-ce que la tension de la batterie est de plus de 9V ?	Non	Charger la batterie.
Oui		

B

Vérifier la continuité du faisceau entre la borne ② du connecteur du contact de porte côté conducteur et la masse de carrosserie. ● Y a-t-il continuité ?	Non	Remplacer le contact de porte côté conducteur. Si le SRS ne passe toujours pas en mode de Diagnostic, remplacer ou réparer le faisceau.
Oui		
Remplacer le boîtier de capteurs de diagnostic.		
Aller à PROCEDURE DE DIAGNOSTIC 1 (RS-29)		

Simpo PDF Merge and Split Unregistered Version - http://www.simpopdf.com

COLLISION FRONTALE

Procéder de la façon suivante pour réparer le SRS en cas de collision frontale.

Lorsque le SRS est activé lors d'une collision :

① Remplacer le boîtier de capteurs de diagnostic.
② Déposer le module de coussin gonflable.
③ Contrôler les composants du SRS à l'aide du tableau ci-dessous :
- Remplacer les composants du SRS qui montrent des signes visibles de dommages (bosses, fissures, déformation).

④ Reposer un nouveau module de coussin gonflable.
⑤ Effectuer un autodiagnostic à l'aide de CONSULT et du témoin ''AIR BAG''. Se reporter à ''Autodiagnostic'' pour plus de détails (RS-29). S'assurer que l'ensemble du SRS fonctionne correctement.

Lorsque le SRS n'est pas activé lors d'une collision :

① Contrôler les composants du SRS à l'aide du tableau ci-dessous :
- Remplacer les composants du SRS qui montrent des signes visibles de dommages (bosses, fissures, déformation).

② Effectuer un autodiagnostic à l'aide de CONSULT et du témoin ''AIR BAG''. Se reporter à ''Autodiagnostic'' pour plus de détails (RS-29). S'assurer que l'ensemble du SRS fonctionne correctement.

Inspection du SRS

Pièce	Le SRS est activé.	Le SRS n'est PAS activé.
Module de coussin gonflable	REMPLACER Reposer le module de coussin gonflable en utilisant des boulons neufs.	1. Déposer le module de coussin gonflable. Vérifier si le cache du faisceau et les connecteurs ne sont pas endommagés, les bornes déformées et le faisceau coincé. 2. Reposer le module de coussin gonflable côté conducteur sur le volant de direction et vérifier s'il est correctement monté et aligné sur le volant de direction. 3. Si aucun dommage n'a été trouvé, reposer l'ensemble en utilisant des boulons neufs. 4. En cas de dommage – REMPLACER. Le coussin gonflable doit être déployé avant d'être mis au rebut.
Boîtier de capteurs de diagnostic	REMPLACER Reposer le boîtier de capteurs de diagnostic en utilisant des boulons neufs.	1. Vérifier si le boîtier et son support ne sont pas bosselés, fissurés ou déformés. 2. Vérifier si les connecteurs ne sont pas endommagés et les bornes déformées. 3. Si aucun dommage n'a été trouvé, reposer l'ensemble avec des boulons neufs. 4. En cas de dommage – REMPLACER. Reposer le boîtier de capteurs de diagnostic en utilisant des boulons neufs.
Volant de direction	1. Vérifier visuellement que le volant de direction n'est pas endommagé. 2. Vérifier si le faisceau (intégré au volant de direction) et les connecteurs ne sont pas endommagés et les bornes déformées. 3. Monter le module de coussin gonflable pour en contrôler l'adaptabilité ou l'alignement avec le volant de direction. 4. Vérifier si le volant de direction ne présente pas un jeu excessif. 5. Reposer l'ensemble s'il n'y a pas de dommage. 6. En cas de dommage – REMPLACER.	
Câble spiralé	1. Contrôler visuellement que le câble spiralé et la commande combinée ne sont pas endommagés. 2. Vérifier si les connecteurs, les câbles de plomb et la bande de protection sont en bon état. 3. Vérifier si le volant de direction est exempt de tout bruit, point de force et qu'il tourne librement. 4. Si l'on ne constate aucun dommage, le reposer. 5. En cas de dommage – REMPLACER.	
Faisceau et connecteurs	1. Vérifier si les connecteurs sont bien branchés, s'ils ne sont pas endommagés et si les bornes ne sont pas déformées. 2. Vérifier si le faisceau ne coince pas et qu'il n'est pas effiloché, coupé ou déformé. 3. Si l'on ne constate aucun dommage, reposer le faisceau et les connecteurs. 4. En cas de dommage – REMPLACER la partie du faisceau endommagée. Ne pas essayer de réparer, épisser ou modifier le faisceau du SRS.	

Simpo PDF Merge and Split Unregistered Version - http://www.simpopdf.com

SECTION ST

TABLE DES MATIERES

PRECAUTIONS ET PREPARATION 1
Système de retenue supplémentaire (SRS) ‘‘COUSSIN GONFLABLE’’ (modèles à 4 roues motrices) 1
Système de retenue supplementaire (SRS) ‘‘COUSSIN GONFLABLE’’ (modèles à 2 roues motrices) 1
Précautions pour le système de direction 1
Outillage spécial 2
ENTRETIEN SUR LE VEHICULE 4
Système de direction 4
Contrôle et réglage des courroies d’entraînement (pour direction assistée) 4
Contrôle du niveau de liquide (pour direction assistée) 4
Contrôle des fuites de liquide (pour direction assistée) 5
Purge du système hydraulique (pour direction assistée) 5
Contrôle de la force de rotation du volant (pour direction assistée) 6
Contrôle du jeu du volant de direction 7
Contrôle de la position neutre du volant 7
Contrôle de l’angle de rotation des roues avant 7
Contrôle du système hydraulique (pour direction assistée) 8
VOLANT ET COLONNE DE DIRECTION 9
Volant 9
Colonne de direction 10
Démontage et remontage 11
Inspection 12
BOITIER DE DIRECTION MANUELLE (modèle : VB66K) 13
Dépose et repose 13
Démontage 14
Remontage et réglage 15
Inspection 18
DIRECTION ASSISTEE (modèle : PB48S) 20
Description 20
BOITIER DE DIRECTION ASSISTEE (modèle : PB48S) 21
Dépose et repose 21
Composants du mécanisme de direction assistée 21
Inspection et réglage de pré-démontage 22
Démontage 23
Remontage 25
DIRECTION ASSISTEE (modèle : PB59K) 28
Description 28
BOITIER DE DIRECTION ASSISTEE (modèle : PB59K) 29
Dépose et repose 29
Composants du mécanisme de direction assistée 29
Inspection et réglage de pré-démontage 30
Démontage 31
Remontage 33
POMPE A HUILE DE DIRECTION ASSISTEE 35
Démontage et remontage 35
Inspection de pré-démontage 35
Inspection 36
Démontage 36
Remontage 37
TIMONERIE DE DIRECTION 38
Dépose et repose 38
Démontage 39
Inspection 40

Simpo PDF Merge and Split Unregistered Version - http://www.simpopdf.com

CARACTERISTIQUES ET VALEURS DE REGLAGE (SDS) 42
Caractéristiques générales 42
Inspection et réglage 42

Simpo PDF Merge and Split Unregistered Version - http://www.simpopdf.com

Système de retenue supplémentaire (SRS) "COUSSIN GONFLABLE" (modèles à 4 roues motrices)

Utilisé avec une ceinture de sécurité, le coussin gonflable du système de retenue supplémentaire contribue à réduire les risques et la gravité des blessures subies par le conducteur en cas de collision frontale. Le système de retenue supplémentaire se compose d'un module de coussin gonflable (air bag) (situé dans le moyeu du volant), d'un boîtier de capteurs de diagnostic, d'un témoin avertisseur, d'un faisceau de câblage et d'un câble spiralé. Les informations nécessaires à l'entretien sans danger du système se trouvent à la **section RS** de ce manuel de réparation.

AVERTISSEMENT :

- **Pour ne pas affecter le fonctionnement du SRS, ce qui augmenterait les risques de blessures graves ou mortelles en cas de collision entraînant le déploiement du coussin gonflable (air bag), toutes les opérations d'entretien doivent être effectuées par un concessionnaire NISSAN agréé.**
- **Un entretien incorrect, y compris une mauvaise dépose ou repose du SRS, pourra entraîner des risques de blessures dues au déploiement accidentel du système.**
- **Ne pas utiliser d'équipement d'essai électrique sur les circuits connexes du SRS sauf sur indication de ce manuel de réparation. Les faisceaux de câblage électrique du SRS sont équipés d'une gaine d'isolation jaune soit juste devant les connecteurs de faisceau, soit sur le faisceau tout entier pour une identification plus rapide.**

Système de retenue supplementaire (SRS) "COUSSIN GONFLABLE" (modèles à 2 roues motrices)

Utilisé avec une ceinture de sécurité, le coussin gonflable du système de retenue supplémentaire contribue à réduire les risques et la gravité des blessures subies par le conducteur en cas de collision frontale. Le système de retenue supplémentaire se compose d'un module de coussin gonflable (air bag) (situé dans le moyeu du volant), d'un boîtier de capteurs de diagnostic, d'un témoin avertisseur, d'un faisceau de câblage et d'un câble spiralé. Les informations nécessaires à l'entretien sans danger du système se trouvent à la **section RS** de ce manuel de réparation.

AVERTISSEMENT :

- **Pour ne pas affecter le fonctionnement du SRS, ce qui augmenterait les risques de blessures graves ou mortelles en cas de collision entraînant le déploiement du coussin gonflable (air bag), toutes les opérations d'entretien doivent être effectuées par un concessionnaire NISSAN agréé.**
- **Un entretien incorrect, y compris une mauvaise dépose ou repose du SRS, pourra entraîner des risques de blessures dues au déploiement accidentel du système.**
- **Ne pas utiliser d'équipement d'essai électrique sur les circuits connexes du SRS.**

Précautions pour le système de direction

- **Avant le démontage, nettoyer soigneusement l'extérieur du boîtier.**
- **Le démontage doit être fait dans un environnement propre. Il est particulièrement important d'empêcher la contamination des parties internes du système par la saleté ou tout autre corps étranger.**
- **Pour assurer un remontage simple et correct, disposer les pièces démontées, en ordre, sur un établi.**
- **Utiliser des chiffons en nylon ou des serviettes en papier pour essuyer les pièces ; les chiffons habituels d'atelier risquent de laisser des peluches qui peuvent entraîner des défaillances dans le fonctionnement.**
- **Avant l'inspection ou le remontage, nettoyer soigneusement toutes les pièces à l'aide d'un solvant ininflammable à usages multiples.**
- **Avant le remontage, enduire les pièces du circuit hydraulique de liquide pour boîte de vitesses automatique* recommandé. On peut enduire les joints toriques et les joints d'huile de graisse minérale (vaseline). Ne jamais utiliser d'autre graisse.**
- **Remplacer tous les joints, les joints d'huile et les joints toriques. Eviter d'endommager les joints toriques, les joints d'huile et les joints lors du montage. Exécuter tous les essais de fonctionnement indiqués.**

  *** : Liquide pour boîte de vitesses automatique de type DEXRON™ II E, DEXRON™ III, ou un produit équivalent.**

Simpo PDF Merge and Split Unregistered Version - http://www.simpopdf.com

Outillage spécial

Numéro de l'outil Nom de l'outil	Description		Application	
			Direction manuelle	Direction assistée
ST27180001 Extracteur de volant	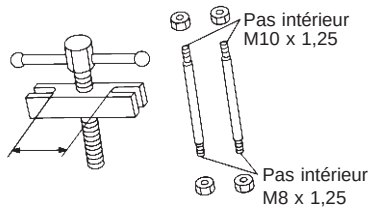 NT544	Dépose du volant	X	X
HT72520000 Extracteur de rotule	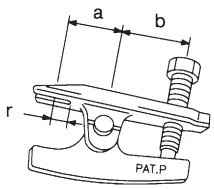 NT546	Dépose de la rotule et de l'articulation pivotante **a : 33 mm** **b : 50 mm** **r : R11,5 mm**	X	X
ST29020001 Extracteur de bielle pendante de direction	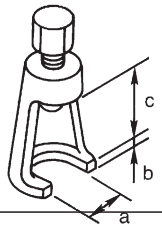 NT694	Dépose de la bielle pendante **a : 34 mm** **b : 6,5 mm** **c : 61,5 mm**	X	X
KV48101500 Clé pour contre-écrou	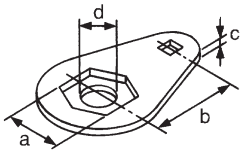 NT534	Dépose et repose du contre-écrou **a : 73,1 mm** **b : 100 mm** **c : 12 mm** **d : 60 mm** ϕ	X	–
KV48101400 Clé pour bouchon de réglage	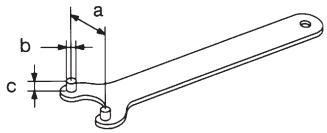 NT539	Réglage et serrage du contre-écrou **a : 46,7 mm** **b : 8,5 mm** ϕ **c : 7 mm**	X	–
ST3127S000 ① GG91030000 Clé dynamométrique ② HT62940000 Adaptateur pour douilles ③ HT62900000 Adaptateur pour douilles	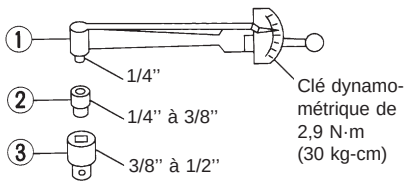 NT541	Mesure du couple de rotation	X	X

Simpo PDF Merge and Split Unregistered Version - http://www.simpopdf.com

Outillage spécial (Suite)

Numéro de l'outil Nom de l'outil	Description		Application	
			Direction manuelle	Direction assistée
KV48100301 Bâti pour amortisseur et boîtier de direction	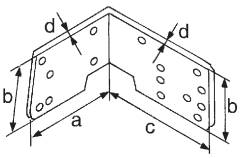 NT688	Pignon de direction installé. **a : 162 mm** **b : 110 mm** **c : 190 mm** **d : 9 mm**	X	X
KV48103500 Manomètre	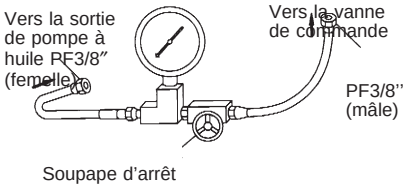 NT547	Mesure de la pression d'huile	–	X
KV48102500 Adaptateur pour manomètre	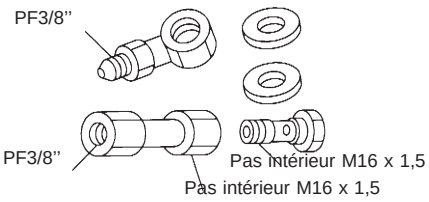 NT542	Mesure de la pression d'huile (utiliser avec KV48103500)	–	X
KV481009S0 Jeu de chassoir pour joints d'huile ① KV48100910 Chassoir ② KV48100920 Adaptateur ③ KV48100930 Adaptateur	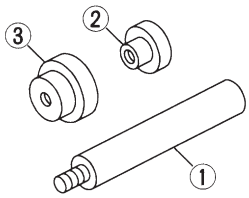 NT174	Repose des joints d'huile	–	X
KV48100700 Adaptateur de couple	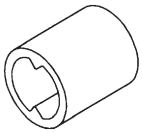 NT169	Réglage de la précharge de roulement de vis sans fin	X	X

Simpo PDF Merge and Split Unregistered Version - http://www.simpopdf.com

Système de direction

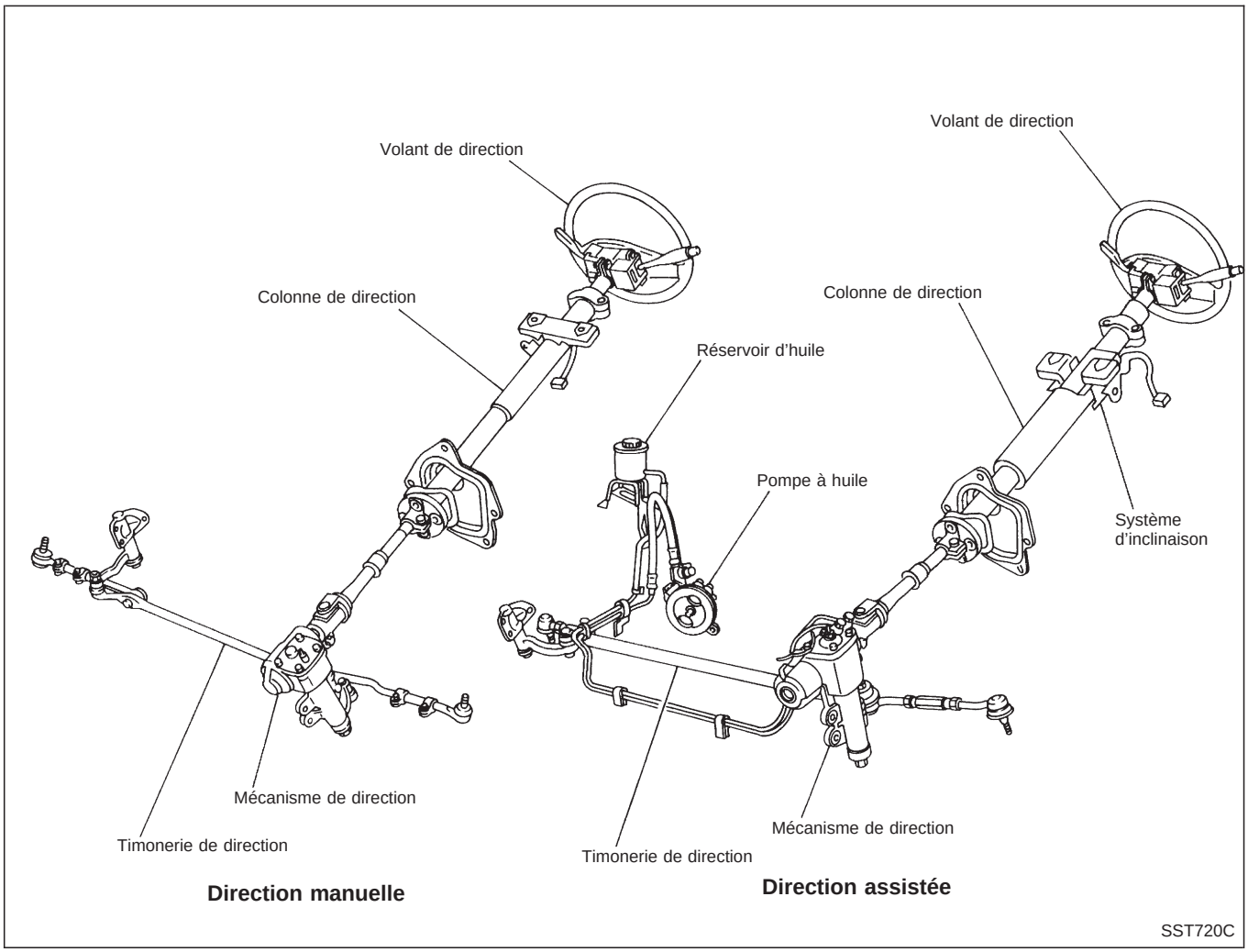

Contrôle et réglage des courroies d'entraînement (pour direction assistée)

Consulter la section MA (''Contrôle des courroies d'entraînement'', ''ENTRETIEN DU MOTEUR'').

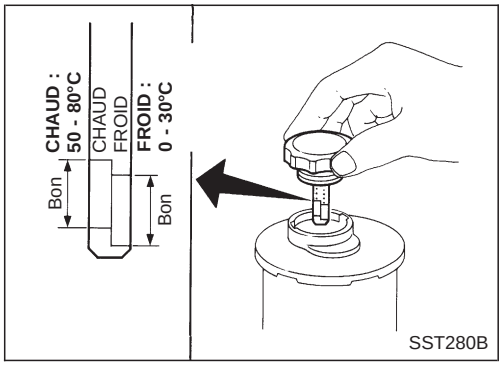

Contrôle du niveau de liquide (pour direction assistée)

Vérifier le niveau de liquide avec le moteur arrêté.
Vérifier le niveau de liquide sur la jauge du bouchon de réservoir.
Le niveau de liquide doit être contrôlé au repère ''HOT'' (chaud) lorsque la température du liquide est comprise entre 50 et 80°C.
Le niveau de liquide doit être contrôlé au repère ''COLD'' (froid) lorsque la température du liquide est comprise entre 0 et 30°C.
ATTENTION :

- **Ne pas remplir excessivement.**

Simpo PDF Merge and Split Unregistered Version - http://www.simpopdf.com

Contrôle du niveau de liquide (pour direction assistée) (Suite)

- **Le fluide recommandé est le liquide pour boîte de vitesses automatique de type ''DEXRON™ II E, DEXRON™ III'', ou un liquide équivalent.**

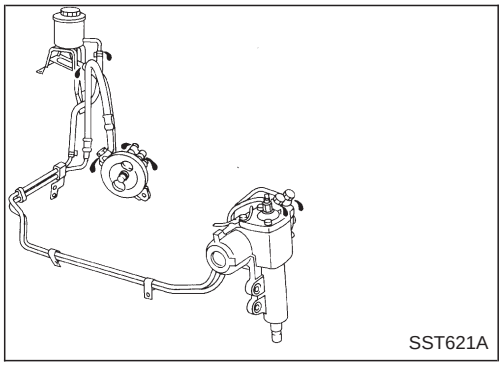
SST621A

Contrôle des fuites de liquide (pour direction assistée)

Vérifier si les canalisations sont correctement raccordées et rechercher la présence de fuites, fissures, dommages, usure par frottement ou autres détériorations.

1. Faire tourner le moteur au ralenti et à 1 000 tr/mn.
- **S'assurer que la température du liquide contenu dans le réservoir atteint environ 60 à 80°.**
2. Faire tourner à plusieurs reprises le volant de gauche à droite.
3. Maintenir le volant dans chaque position de butée pendant 5 secondes et vérifier soigneusement s'il n'y a pas de fuites.

ATTENTION :
Ne pas maintenir le volant de direction à la butée pendant plus de 15 secondes.

4. Si l'on remarque une fuite au niveau des canalisations, desserrer l'écrou évasé puis le resserrer.

Ne pas serrer le raccord excessivement, car ceci risque d'endommager le joint torique, la rondelle et le raccord.

5. Si l'on remarque une fuite au niveau de la pompe de direction assistée, inspecter la pompe. Consulter la page ST-35.
6. Si l'on remarque une fuite au niveau du mécanisme de direction assistée, vérifier le mécanisme. Consulter la page ST-20 (PB48S), ou ST-28 (PB59K).

Purge du système hydraulique (pour direction assistée)

1. Décoller les roues avant du sol en levant l'avant du véhicule.
2. Faire l'appoint de liquide dans le réservoir jusqu'au niveau spécifié. Puis tourner le volant de façon rapide dans les deux sens en touchant légèrement les butées.
   Recommencer cette opération jusqu'à ce que le niveau de liquide ne diminue plus.
3. Démarrer le moteur.
   Recommencer l'étape 2 ci-dessus.

Simpo PDF Merge and Split Unregistered Version - http://www.simpopdf.com

Purge du système hydraulique (pour direction assistée) (Suite)

- Une purge d'air incomplète causera les défaillances suivantes :

a. Apparition de bulles d'air dans le réservoir
b. Bruit de cliquetis provenant de la pompe de direction assistée
c. Bourdonnement excessif de la pompe de direction assistée
Dans ce cas, recommencer la purge de l'air.

La soupape ou la pompe de direction assistée peuvent émettre un bruit d'écoulement de liquide. Ceci est normal lorsque le véhicule est stationnaire ou lorsque l'on tourne lentement le volant de direction, et n'affecte en rien les performances ou la durée de vie du système.

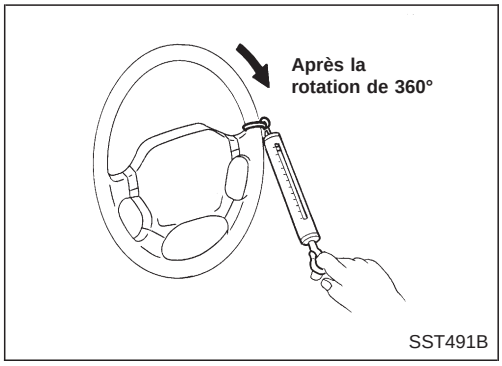

Contrôle de la force de rotation du volant (pour direction assistée)

1. Garer le véhicule sur une surface plane et sèche, et serrer le frein de stationnement.
2. Démarrer le moteur et le laisser tourner au ralenti ou à 1 000 tr/mn.
3. Amener le liquide de direction assistée à sa température de fonctionnement normale (s'assurer que la température du liquide atteint environ 60 à 80°C).

La pression de gonflage des pneus doit être normale.

4. Contrôler la force de rotation du volant après avoir tourné le volant de 360° à partir de la position neutre.

Force de rotation du volant :
Type PB48S
24,5 - 29,4 N (2,5 - 3,0 kg)
Type PB59K
39 N (4 kg) ou moins

5. Si la force de rotation du volant est hors spécification, vérifier les points suivants :

a. Le système hydraulique. Consulter le titre ''Contrôle du système hydraulique'', ST-8.
b. La colonne de direction. Se reporter à la page ST-10.
c. La suspension et l'essieu avant. Consulter la section FA (''Pièces de l'essieu et de la suspension avant'', ''ENTRETIEN SUR LE VEHICULE'').
d. Le couple de rotation du boîtier de direction. Consulter le titre ''MESURE DU COUPLE DE ROTATION'', ST-22 (PB48S), ou ST-30 (PB59K).

Simpo PDF Merge and Split Unregistered Version - http://www.simpopdf.com

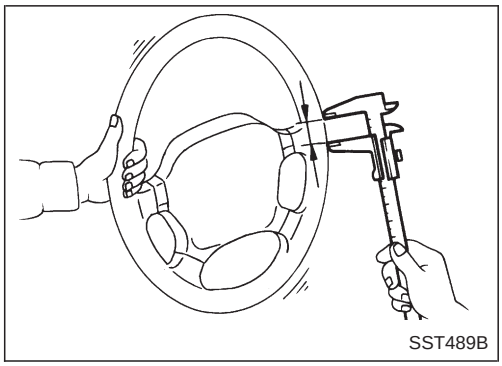
SST489B

Contrôle du jeu du volant de direction

- Placer les roues en position de marche en ligne droite et vérifier le jeu du volant.
  Jeu à hauteur du volant :
  35 mm ou moins
- Si le jeu est hors spécification, vérifier si les composants suivants ne sont pas desserrés ou usés.

a. La colonne de direction. Consulter la page ST-10.
b. La suspension et l'essieu avant. Consulter la section FA (''Pièces de l'essieu et de la suspension avant'', ''ENTRETIEN SUR LE VEHICULE'').
c. Le boîtier de direction [consulter les pages ST-13(direction manuelle), 21 (direction assistée PB48S), ou ST-28 (direction assistée PB59K)].

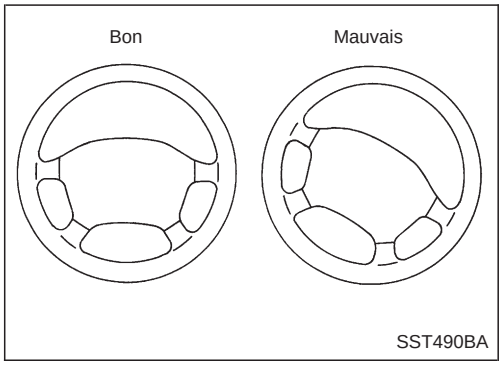

SST490BA

Contrôle de la position neutre du volant

- S'assurer que l'alignement des roues est correct.
  Alignement des roues :
  Consulter la section FA (''Inspection et réglage'', ''CARACTERISTIQUES ET VALEURS DE REGLAGE'').
- Avant de retirer le volant, vérifier que le boîtier de direction est correctement centré.

Contrôle

1. S'assurer que le volant se trouve dans la position neutre lorsqu'on roule en ligne droite.
2. S'il n'est pas dans la position neutre, déposer le volant et le remonter correctement.
3. Si la position neutre n'est toujours pas correcte :

a. Desserrer les contre-écrous de barre d'accouplement.
b. Déplacer les barres d'accouplement, dans la direction opposée, d'une même distance des côtés gauche et droit. Ceci compensera l'erreur du point neutre.

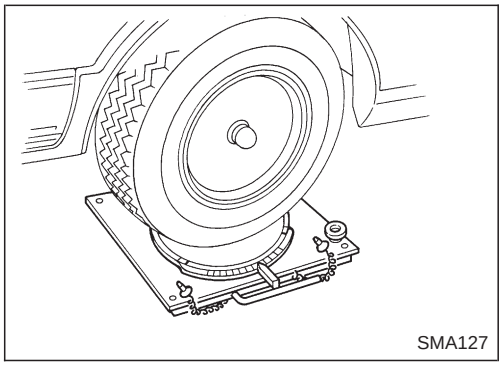
SMA127

Contrôle de l'angle de rotation des roues avant

1. Faire tourner le volant à bout de course vers la droite, puis vers la gauche ; mesurer l'angle de braquage.
   Angle de braquage total :
   Consulter la section FA (''Inspection et réglage'', ''CARACTERISTIQUES ET VALEURS DE REGLAGE'').
2. Si l'angle est hors spécification, vérifier le réglage du boulon de butée. Consulter la section FA (''ANGLE DE BRAQUAGE DES ROUES AVANT'', ''Alignement des roues avant'').

Simpo PDF Merge and Split Unregistered Version - http://www.simpopdf.com

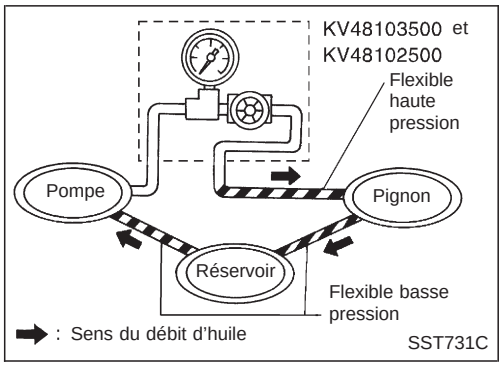

Contrôle du système hydraulique (pour direction assistée)

Vérifier la tension de la courroie d'entraînement, la poulie motrice ainsi que la pression de gonflage des pneus, avant de commencer.

1. Disposer l'outil spécial. Ouvrir la soupape d'arrêt. Purger l'air hors du circuit. Consulter le titre ''Purge du système hydraulique'', ST-5.
2. Faire tourner le moteur au ralenti ou à 1 000 tr/mn.

- **S'assurer que la température du liquide dans le réservoir atteint environ 60 à 80°.**

AVERTISSEMENT :

Réchauffer le moteur une fois la soupape d'arrêt entièrement ouverte. Si le moteur est démarré avec la soupape d'arrêt fermée, la pression de liquide dans la pompe de direction assistée augmentera à son maximum. Ceci fera augmenter la température du liquide de façon anormale.

3. Vérifier la pression alors que le volant est tourné à bout de course vers la gauche ou vers la droite, avec le moteur à un ralenti de 1 000 tr/mn.

ATTENTION :

Ne pas maintenir le volant à la butée pendant plus de 15 secondes à la fois.

Pression maximum de la pompe à huile :
7 649 - 8 238 kPa (76,5 - 82,4 bar, 78 - 84 kg/cm^2)
au ralenti

4. Si la pression de direction assistée est en dessous de la pression standard, fermer lentement la soupape d'arrêt et vérifier la pression.

ATTENTION :

Ne pas laisser la soupape d'arrêt fermée pendant plus de 15 secondes.

- Lorsque la pression atteint son maximum, le boîtier est endommagé. Contrôler le mécanisme de direction assistée. Consulter la page ST-21 (PB48S), ou ST28 (PB59K).
- Si la pression reste en dessous de la pression standard, la pompe est endommagée. Contrôler la pompe de direction assistée. Consulter la page ST-35.

5. Si la pression de direction assistée est supérieure à la pression standard, la soupape de commande de débit de la pompe de direction assistée est endommagée. Contrôler la pompe de direction assistée. Consulter la page ST-35.
6. Après la vérification du système hydraulique, déposer l'outil spécial et faire l'appoint de liquide selon les besoins. Puis purger complètement l'air du système. Consulter la page ST-5.

Simpo PDF Merge and Split Unregistered Version - http://www.simpopdf.com

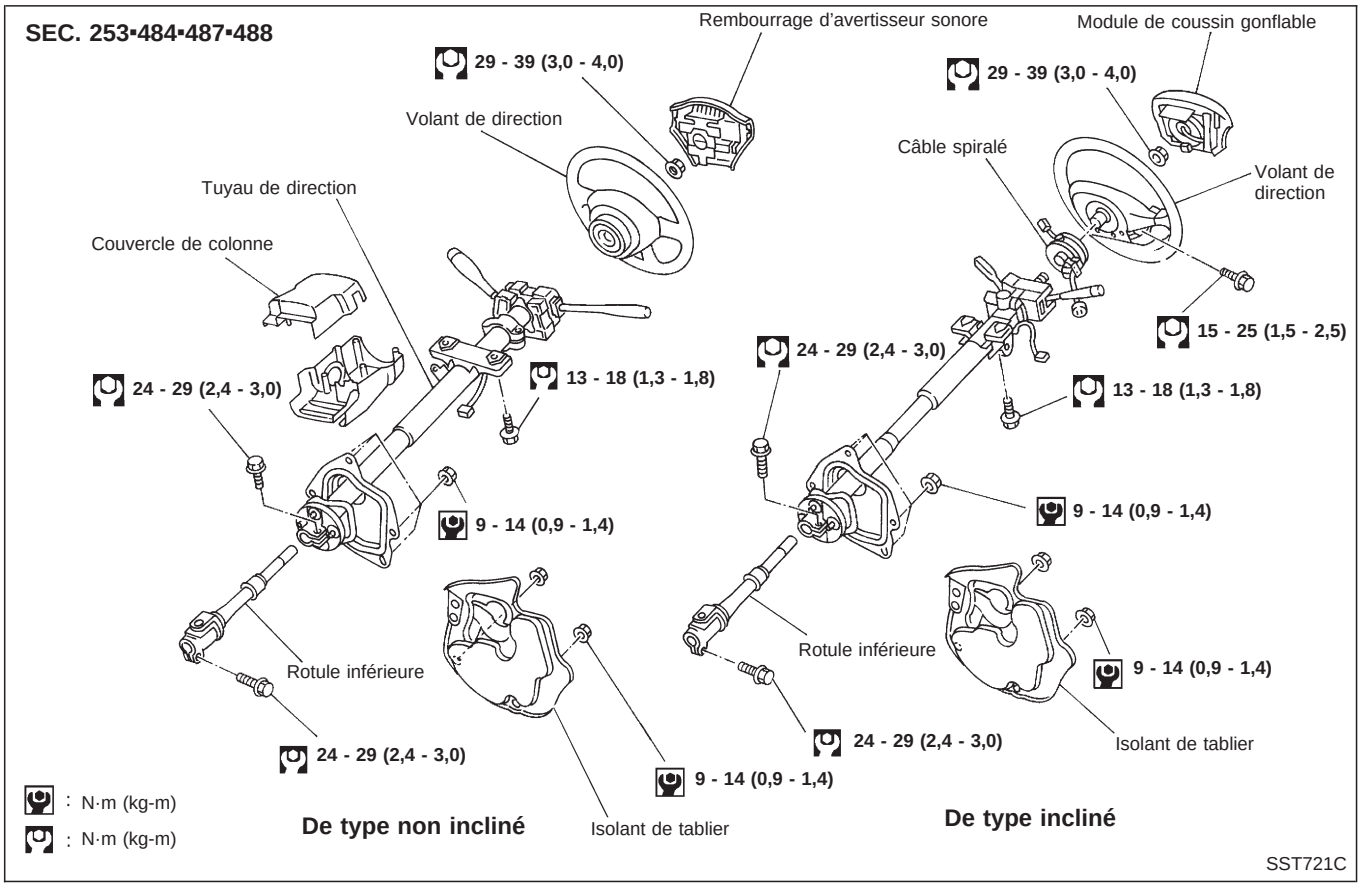

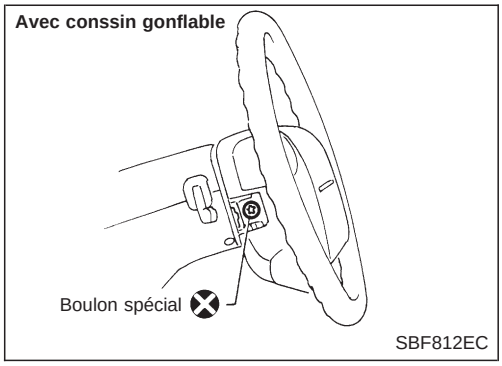

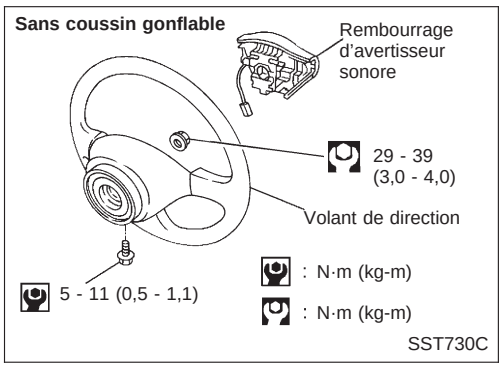

Volant

DEPOSE ET REPOSE

1. Déposer le module de coussin gonflable et le câble spiralé. Consulter la secion RS [''Module de coussin gonflable et câble spiralé'', ''SYSTEME DE RETENUE SUPPLEMENTAIRE (SRS)] (avec coussin gonflable).
   Déposer le rembourrage d'avertisseur sonore (sans coussin gonflable).
2. Débrancher le connecteur de l'avertisseur sonore et déposer l'écrou du volant.

Simpo PDF Merge and Split Unregistered Version - http://www.simpopdf.com

Volant (Suite)

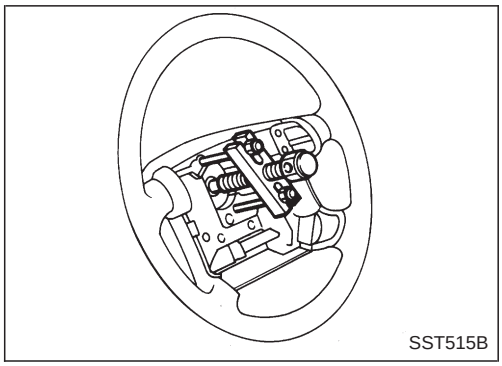
SST515B

3. Déposer le volant avec l'outil spécial.

- Pour la repose, consulter la section RS [''Module de coussin gonflable et câble spiralé'', ''SYSTEME DE RETENUE SUPPLEMENTAIRE (SRS)''].

Colonne de direction

DEPOSE

ATTENTION :

- **La rotation du câble spiralé (élément de coussin gonflable du SRS) est limitée. Si le boîtier de direction doit être déposé, mettre les roues avant en position de marche en ligne droite.**
  Ne pas tourner la colonne de direction lorsque le boîtier est déposé.
- **Déposer le volant avant la rotule inférieure de direction de façon à ne pas endommager le câble spiralé du SRS. Consulter la page ST-9.**

1. Déposer le volant, consulter la page ST-9.
2. Déposer le capot de colonne de direction.
3. Déposer le panneau inférieur du tableau de bord.
4. Débrancher les connecteurs électriques de la commande combinée et le connecteur de faisceau du coussin gonflable.
5. Déposer l'isolant de tablier.
6. Déposer le boulon de la rotule inférieure.
7. Retirer les deux boulons de la colonne de direction et déposer la colonne.

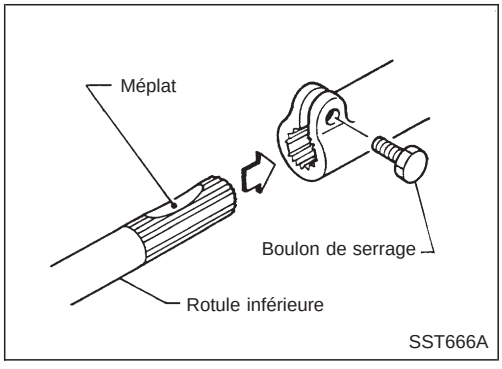

SST666A

REPOSE

- Lors de la repose de la colonne de direction, serrer à la main tous les boulons de fixation du support inférieur et de la bride ; les serrer ensuite au couple spécifié. S'assurer que la colonne de direction n'est pas soumise à une tension excessive.
- Lors du raccordement de la rotule inférieure de direction, veiller à orienter le boulon de serrage vers le méplat.
- Aligner correctement le câble spiralé lors de la repose du volant. Consulter la section RS [''Module de coussin gonflable et câble spiralé'', ''SYSTEME DE RETENUE SUPPLEMENTAIRE (SRS)''].

ATTENTION :

Après la repose, manoeuvrer le volant afin de s'assurer qu'il tourne librement et que le nombre de tours depuis la position de marche en ligne droite vers les butées gauche et droite est identique. S'assurer que le volant se trouve en position neutre en position de marche en ligne droite.

Simpo PDF Merge and Split Unregistered Version - http://www.simpopdf.com

Démontage et remontage

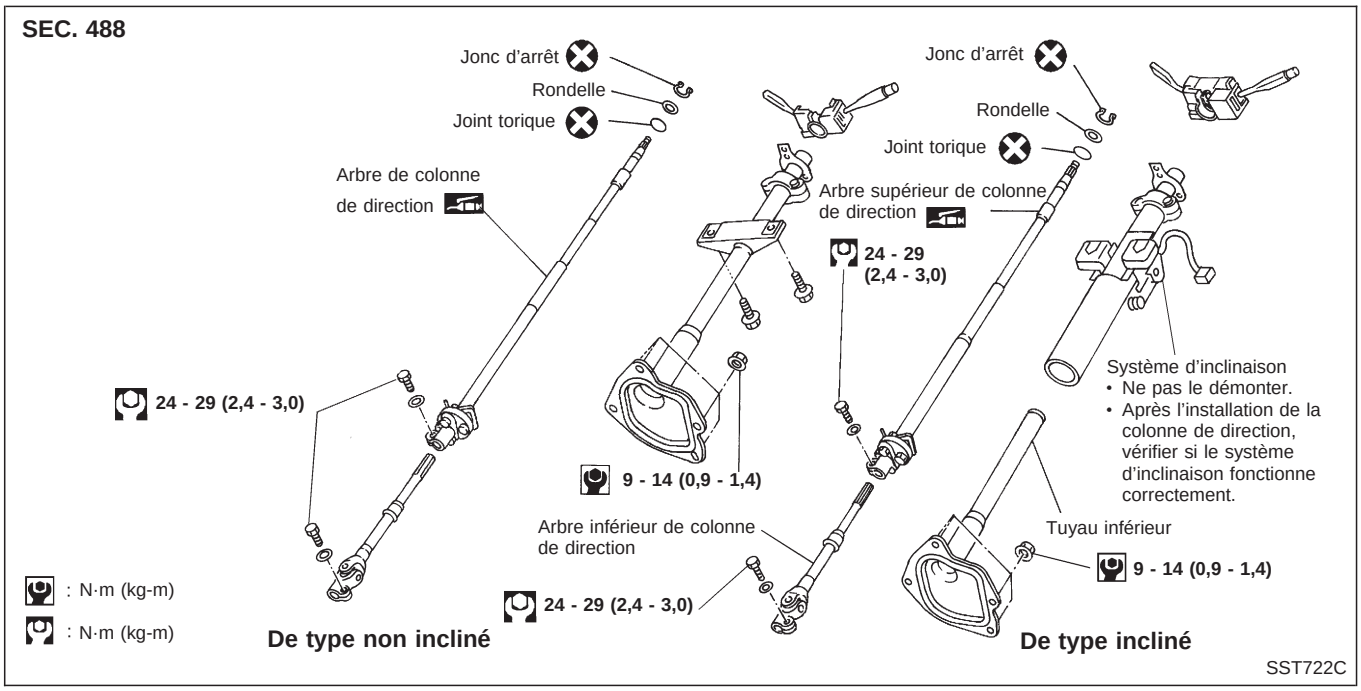

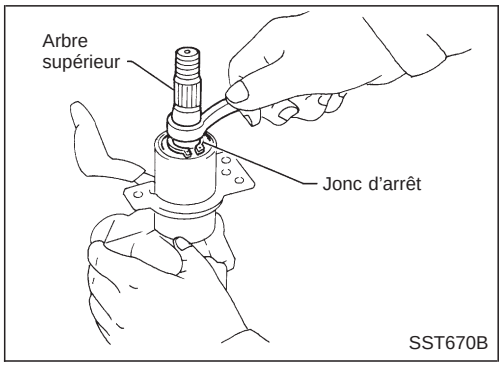

- Lors du montage et du démontage, déverrouiller l'antivol de direction à l'aide de sa clé.
- Déposer la commande combinée.
- Veiller à ce que la partie circulaire du jonc d'arrêt soit bien tournée vers le roulement lors de sa mise en place.
- Monter le jonc d'arrêt sur l'arbre supérieur à l'aide d'un outil approprié.

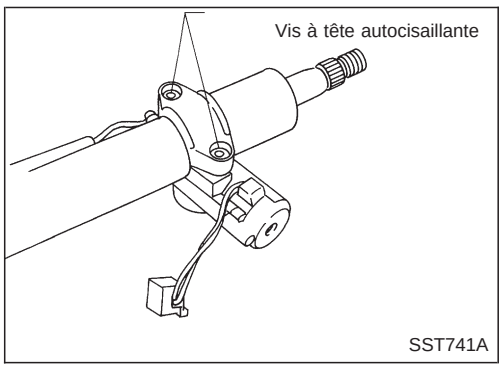

- Verrouillage de direction

a. Briser les vis à tête autocisaillante à l'aide d'une perceuse ou d'un outil approprié quelconque.

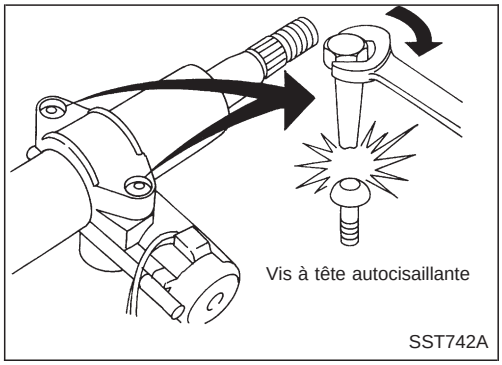

b. Reposer des vis à tête autocisaillante, puis les serrer jusqu'à rupture de la tête.

Simpo PDF Merge and Split Unregistered Version - http://www.simpopdf.com

Démontage et remontage (Suite)

Système d'inclinaison

Après avoir remonté la colonne de direction, vérifier le fonctionnement du mécanisme d'inclinaison.

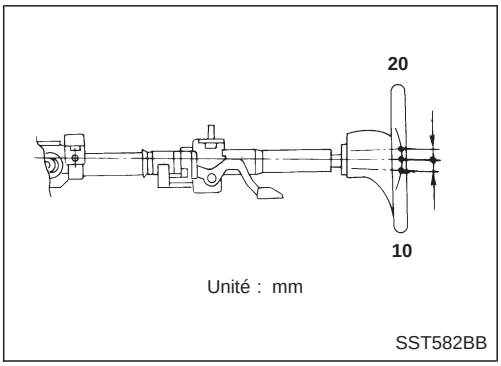

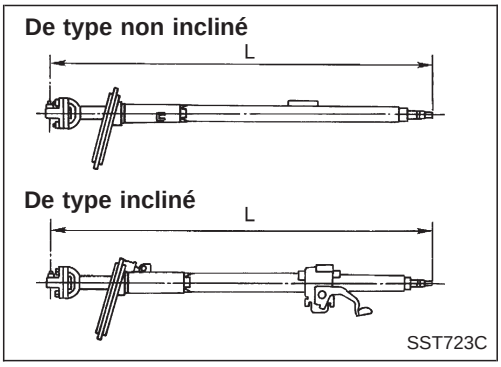

Inspection

- Si le volant ne tourne pas en douceur, vérifier la colonne de direction comme indiqué ci-après et remplacer les pièces endommagées.

a. Vérifier si les roulements de colonne ne sont pas endommagés ou usés de manière inégale. Lubrifier avec de la graisse à usages multiples recommandée ou remplacer la colonne de direction comme un ensemble, si nécessaire.

b. Vérifier si la jupe de colonne de direction n'est ni déformée ni brisée. La remplacer si nécessaire.

- Lorsque le véhicule a subi une légère collision, vérifier la dimension "L". Si la valeur trouvée n'est pas dans les limites spécifiées, remplacer la colonne de direction comme un ensemble.

Longueur de la colonne de direction "L" :
Moteur KA24 avec conduite à droite
822,1 - 823,7 mm
Sauf moteur KA24 avec conduite à droite
866,1 - 867,7 mm

Simpo PDF Merge and Split Unregistered Version - http://www.simpopdf.com

Dépose et repose

SEC. 480

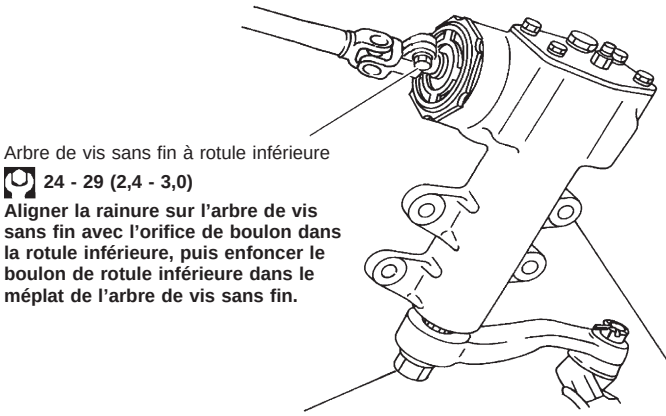

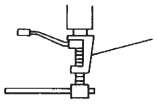

• Installer la bielle pendante.
Aligner les quatre rainures des cannelures de l'arbre de pignon sur les quatre saillies des cannelures de l'arbre de secteur, puis installer et serrer la rondelle de verrouillage et l'écrou.

: N·m (kg-m)

SST724C

SEC. 480

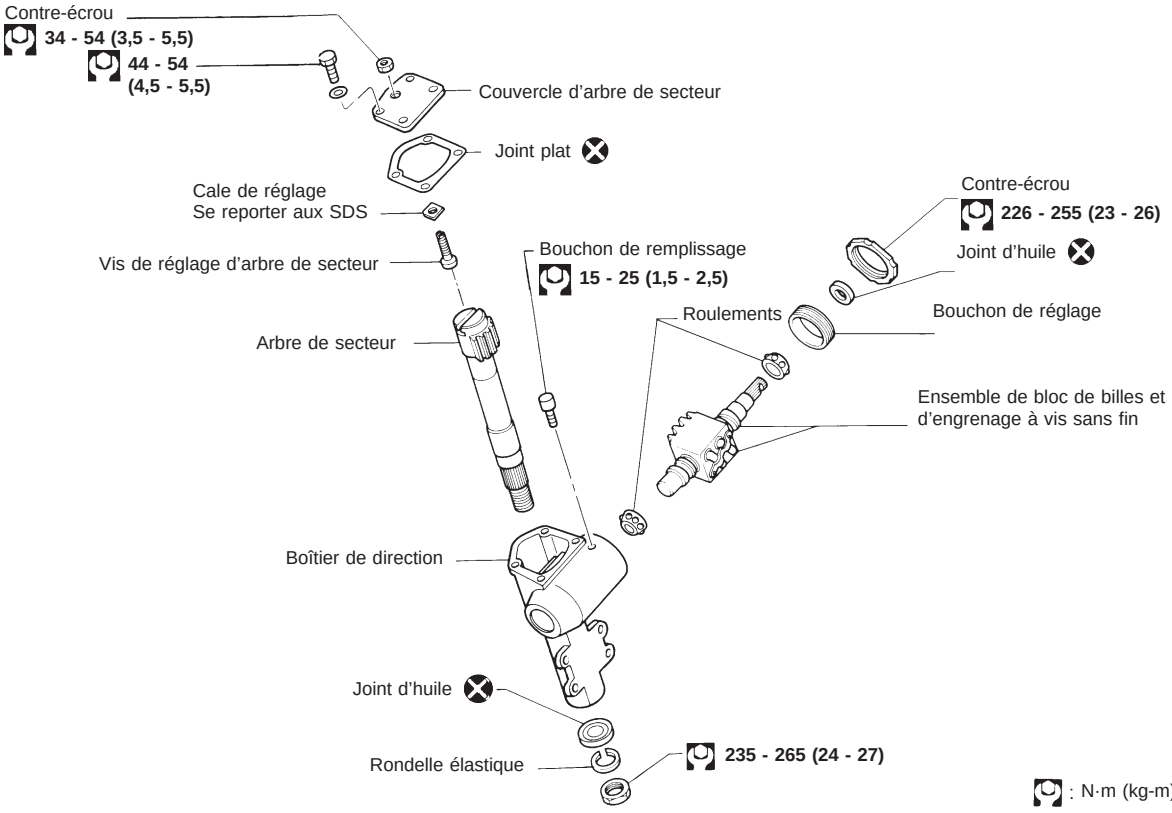

: N·m (kg-m)

SST312CA

Simpo PDF Merge and Split Unregistered Version - http://www.simpopdf.com

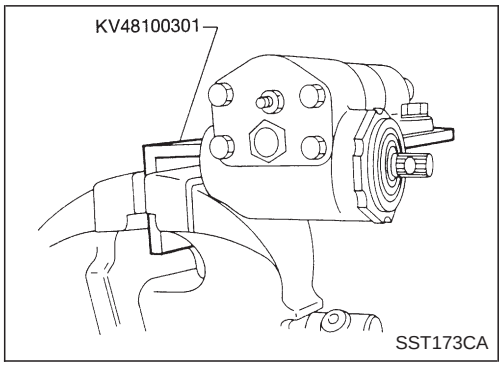

Démontage

1. Placer le boîtier de direction dans un étau à l'aide de l'outil spécial.

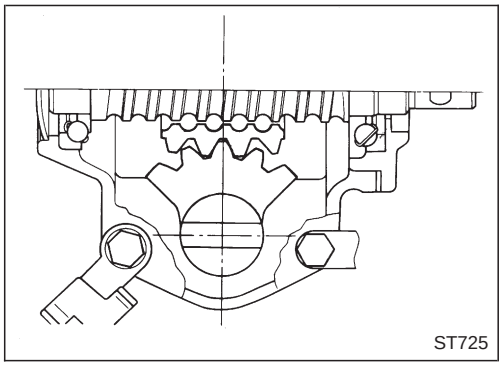

2. Mettre l'engrenage à vis sans fin en position de marche en ligne droite.
3. Déposer l'arbre de secteur avec son couvercle.

ATTENTION :

- **Lorsque l'on retire l'arbre de secteur, il faut veiller à ne pas endommager le joint d'huile ou les pièces associées.**
- **Ne pas déposer les roulements à aiguilles d'arbre de secteur du boîtier de direction. Remplacer le boîtier de direction comme un ensemble, si nécessaire.**

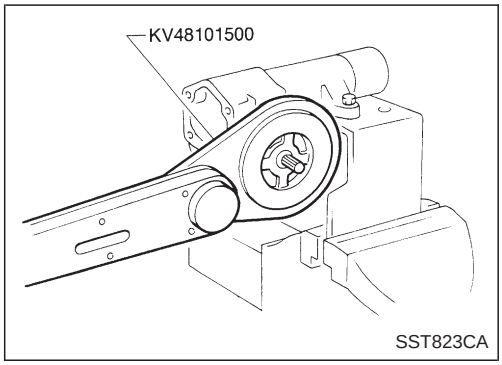

4. Desserrer le contre-écrou du bouchon de réglage avec l'outil spécial.

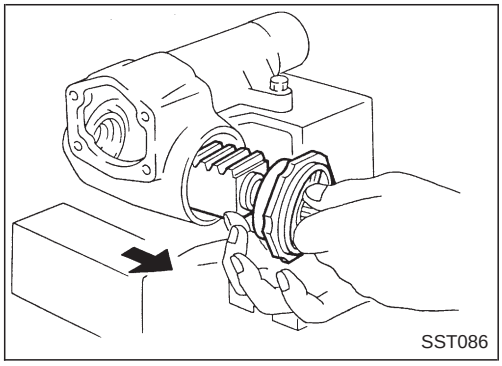

5. Déposer l'engrenage à vis sans fin avec le roulement à vis.

ATTENTION :

- **Veiller à ne pas faire tourner le bloc de billes entièrement d'un côté ou de l'autre de l'engrenage à vis sans fin.**
  Les extrémités des guides de billes seront endommagées si l'écrou tourne jusqu'à ce qu'il soit arrêté par l'extrémité de l'engrenage à vis sans fin.
- **Ne pas séparer le bloc de billes de l'ensemble d'engrenage à vis sans fin.**
  Si nécessaire, remplacer le tout comme un ensemble.
- **Ne pas déposer les roulements à aiguilles d'arbre de secteur du boîtier de direction.**
  Si nécessaire, remplacer le boîtier de direction complet comme un ensemble.

Simpo PDF Merge and Split Unregistered Version - http://www.simpopdf.com

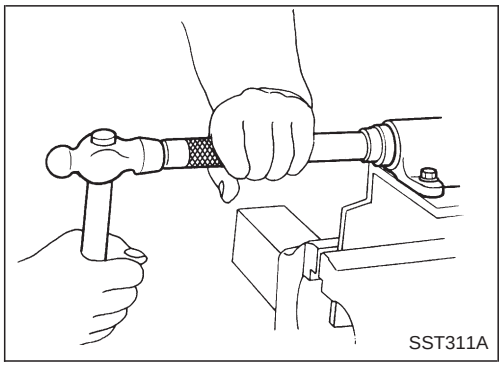
SST311A

Remontage et réglage

Enduire de graisse à usages multiples la surface d'étanchéité des joints d'huile neufs de l'arbre de secteur et de l'engrenage à vis sans fin.

PRECHARGE DE ROULEMENT D'ENGRENAGE A VIS SANS FIN

1. Mettre le joint d'huile en place.

Avant de reposer le joint d'huile, enduire sa surface de contact avec de l'huile pour engrenages.

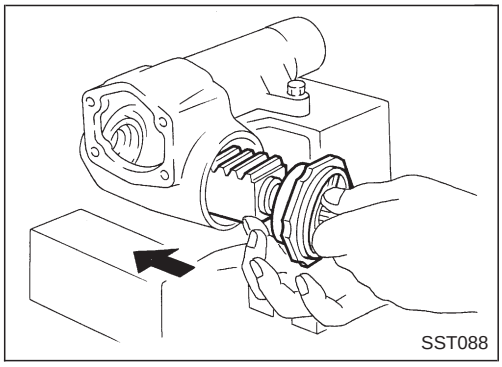
SST088

2. Mettre en place l'ensemble d'engrenage à vis sans fin, avec son roulement, dans le boîtier de direction.

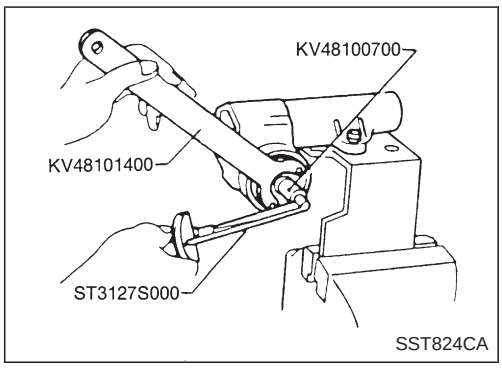

SST824CA

3. Régler la précharge de roulement d'engrenage à vis sans fin à l'aide des outils spéciaux.

ATTENTION :

- **Toujours régler la précharge de roulement d'engrenage à vis sans fin en tournant le bouchon de réglage dans le sens des aiguilles d'une montre.**
- **Avant de mesurer la précharge, faire tourner l'engrenage à vis sans fin de plusieurs tours dans les deux sens pour asseoir le roulement d'engrenage à vis sans fin.**

Précharge de roulement d'engrenage à vis sans fin :
0,69 - 0,88 N·m (7,0 - 9,0 kg-cm)

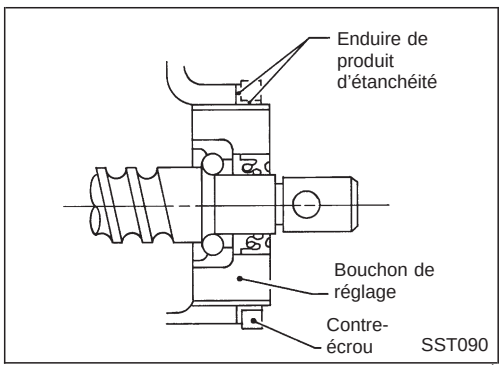

SST090

4. Enduire la surface interne du contre-écrou avec un produit d'étanchéité adéquat.

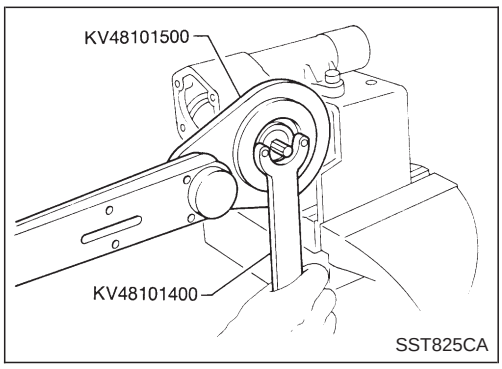

SST825CA

5. Serrer le contre-écrou à l'aide des outils spéciaux.

Contre-écrou :
: 226 - 255 N·m (23 - 26 kg-m)

Simpo PDF Merge and Split Unregistered Version - http://www.simpopdf.com

Remontage et réglage (Suite)

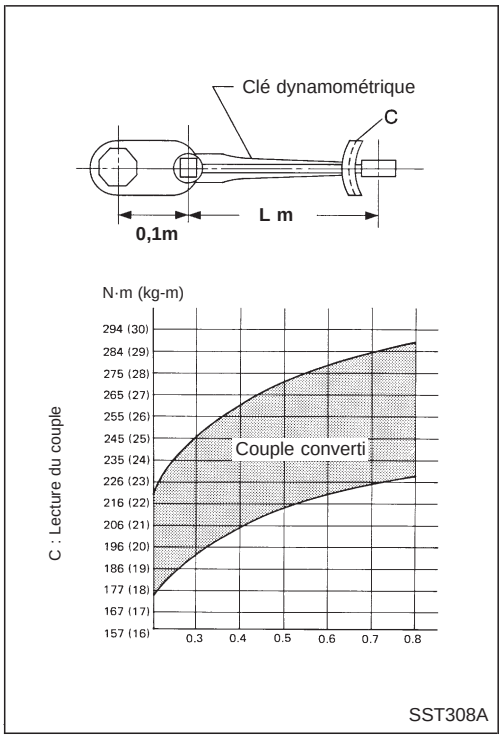

- Lors du serrage du contre-écrou, utiliser le graphique ci-contre pour déterminer la lecture correcte du couple (longueur de la clé dynamométrique par rapport au réglage ou à la lecture du couple).

6. Après avoir serré le contre-écrou, s'assurer que la précharge de roulement d'engrenage à vis sans fin est conforme à la valeur spécifiée.

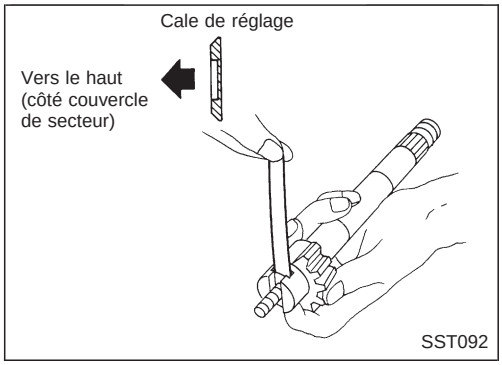

JEU AXIAL DE L'ARBRE DE SECTEUR

Sélectionner et installer une cale de réglage adéquate pour obtenir un jeu axial approprié entre l'arbre de secteur et la vis de réglage.

Jeu axial d'arbre de secteur :
0,1 mm ou moins
Cales d'épaisseur de vis de réglage d'arbre de secteur :
Consulter les SDS, ST-43.

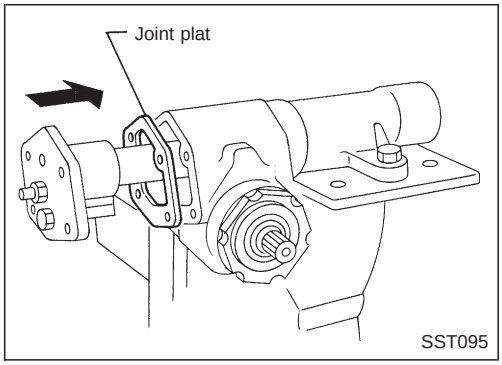

PRECHARGE DU BOITIER DE DIRECTION ET BATTEMENT

1. Mettre la vis sans fin dans la position de marche en ligne droite.

Introduire avec précaution l'arbre de secteur dans le boîtier de direction, en veillant à ne pas rayer le joint d'huile.

2. Tourner la vis de réglage jusqu'à ce que l'arbre de secteur soit juste en contact avec le bloc de billes. Serrer provisoirement le contre-écrou.
3. Lubrifier la partie en contact avec l'arbre de secteur et le bloc de billes à l'aide d'huile pour engrenages ou de graisse pour roulements.

Simpo PDF Merge and Split Unregistered Version - http://www.simpopdf.com

Remontage et réglage (Suite)

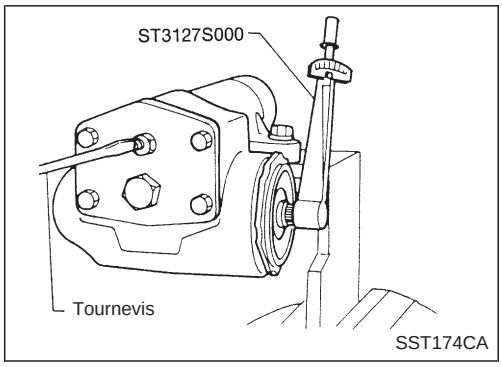

4. Régler le couple de rotation du boîtier de direction dans une position de marche en ligne droite avec l'outil spécial, puis verrouiller avec le contre-écrou.

ATTENTION :

- **Toujours régler la précharge du boîtier de direction en tournant la vis de réglage dans le sens des aiguilles d'une montre.**
- **Faire tourner l'engrenage à vis sans fin de quelques tours dans les deux sens pour asseoir le boîtier de direction.**

a. Mesurer le couple de rotation à 360° de la position de marche en ligne droite, à l'aide des outils spéciaux.

Couple de rotation à 360° :
0,69 - 0,88 N·m (7,0 - 9,0 kg-cm)

b. Mesurer le couple de rotation en position de marche en ligne droite.

La position de marche en ligne droite est la position dans laquelle l'arbre d'entrée est ramené de 2,14 tours (deux tours complets et 50°) depuis la butée.

Couple de rotation en position de marche en ligne droite :
0,20 - 0,39 N·m (2,0 - 4,0 kg-cm) supérieur au couple de rotation à 360°

Couple de rotation maximum :
1,08 N·m (11,0 kg-cm)

Si le couple de rotation est hors spécifications, le régler en agissant sur la vis de réglage de l'arbre de secteur.

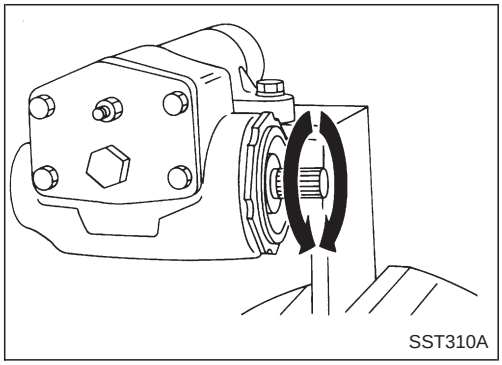

5. Tourner la vis sans fin à plusieurs reprises à la main afin d'asseoir correctement le roulement.
6. Vérifier la précharge du boîtier de direction. La réajuster si nécessaire.

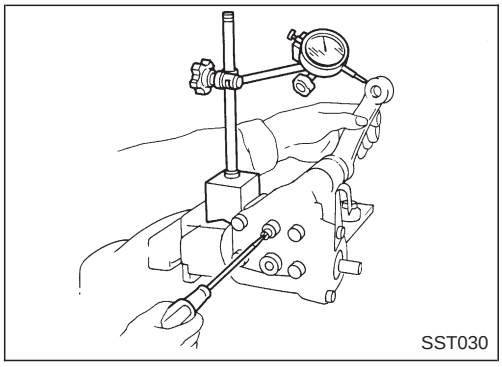

7. Mesurer la précharge totale.
8. Vérifier le battement.
   Mesurer le battement au niveau de l'extrémité supérieure de la bielle pendante dans la position de marche en ligne droite.

Battement (en position de marche en ligne droite) :
0,1 mm ou moins

Simpo PDF Merge and Split Unregistered Version - http://www.simpopdf.com

Inspection

Nettoyer toutes les pièces démontées dans un bain de solvant, et vérifier leur état.

ARBRE DE SECTEUR

1. Contrôler la surface des dents pour voir si elle n'est pas piquée, rayée, ébréchée ou autrement endommagée, et remplacer si nécessaire.
2. Contrôler si l'arbre de secteur n'est pas déformé à hauteur du moletage et le remplacer si nécessaire. Vérifier également si le boîtier de direction n'est pas déformé.

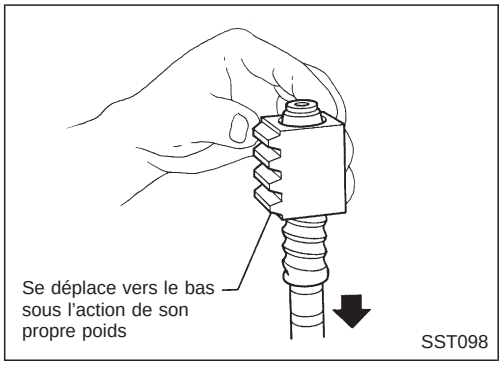

ENSEMBLE DE VIS SANS FIN

1. Contrôler la surface des dents du bloc de billes. Remplacer si l'on découvre des piqûres, de l'usure ou tout autre dommage.
2. Le bloc de billes doit tourner librement sur la vis sans fin. S'il est trop serré, l'ensemble doit être remplacé. Contrôler la rotation du bloc de billes en procédant comme suit :

ATTENTION :
Veiller à ne pas laisser le bloc de billes tourner entièrement d'un côté ou de l'autre de l'engrenage à vis sans fin.

a. Déplacer le bloc de billes d'une extrémité à l'autre de l'engrenage à vis sans fin. Ramener progressivement l'arbre de vis sans fin et le bloc de billes vers l'extrémité jusqu'à ce que le bloc se déplace vers le bas sur l'engrenage à vis sans fin, sous l'action de son propre poids.
b. Si le bloc ne se déplace pas librement sur toute la course, remplacer l'ensemble.

Veiller à ne pas endommager le tube de guidage du bloc de billes lorsqu'on effectue ce contrôle.

ROULEMENT

1. Inspecter le roulement de l'engrenage à vis sans fin pour voir s'il n'est pas usé, piqué ou endommagé. Le remplacer si nécessaire.

Lors du remplacement du roulement d'engrenage à vis sans fin, remplacer le roulement et la cuvette externe comme un ensemble.

2. Si le roulement à aiguilles de l'arbre de secteur est usé ou endommagé, remplacer le boîtier de direction comme un ensemble.

JOINTS D'HUILE

- Jeter tous les joints d'huile qui ont été déposés.

Simpo PDF Merge and Split Unregistered Version - http://www.simpopdf.com

Inspection (Suite)

- Remplacer le joint d'huile si sa surface d'étanchéité est déformée ou fissurée.
- Mettre au rebut le joint d'huile si le ressort est fatigué ou disloqué.

Simpo PDF Merge and Split Unregistered Version (http://www.simpopdf.com

Description

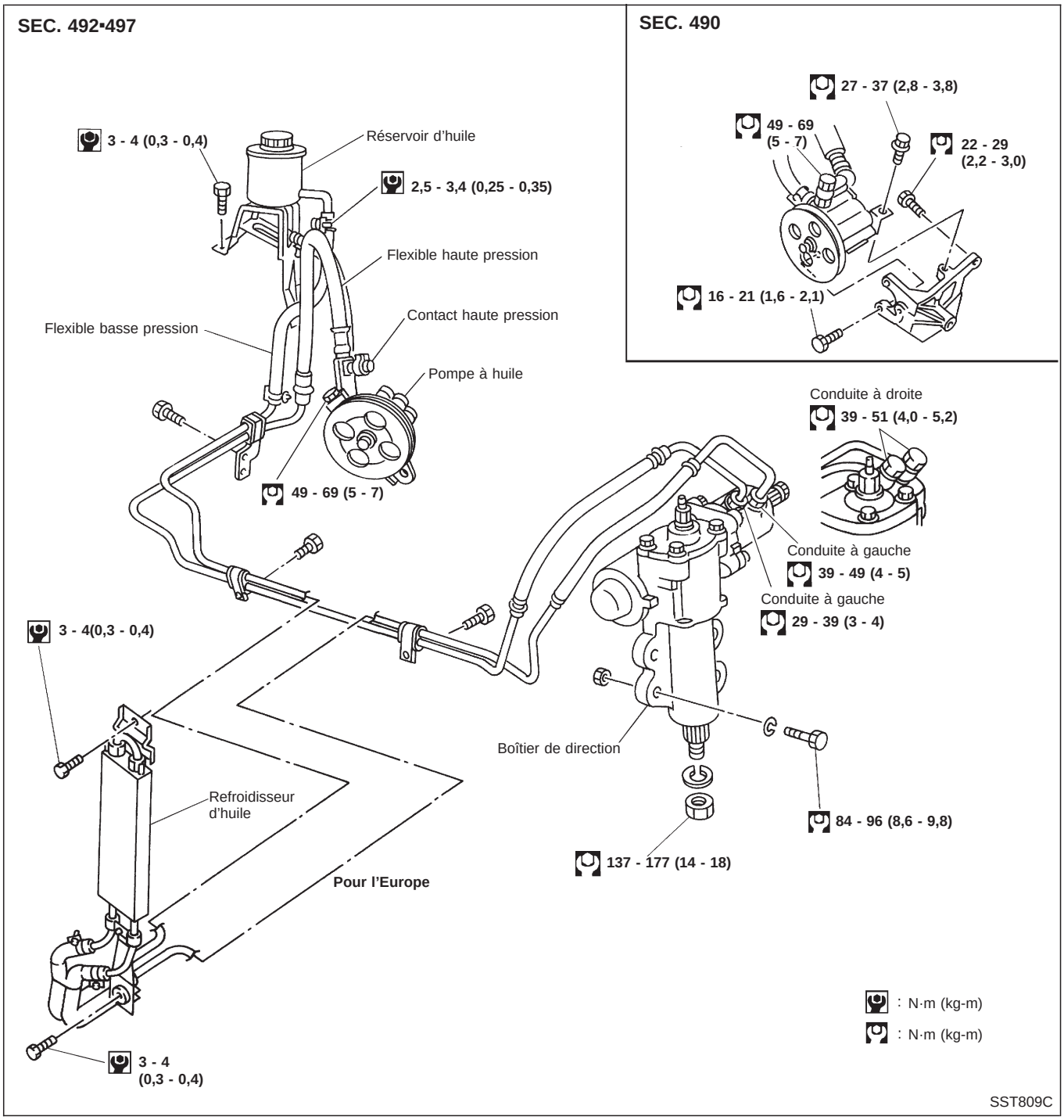

ATTENTION :

- **Seules certaines pièces sont démontables. Ne démonter que les pièces spécifiées.**
- **L'endroit où le démontage est effectué doit être le plus propre possible.**
- **Se laver les mains avant d'entreprendre le démontage.**
- **Ne pas utiliser de chiffons d'atelier ; utiliser du tissu en nylon ou des serviettes en papier.**
- **Suivre les procédures et respecter les avertissements du Manuel de Réparation.**

Simpo PDF Merge and Split Unregistered Version - http://www.simpopdf.com

Dépose et repose

Avant la dépose, nettoyer à la vapeur les parties extérieures du boîtier de direction et de la pompe à huile. Puis sécher à l'air comprimé.

BOITIER DE DIRECTION

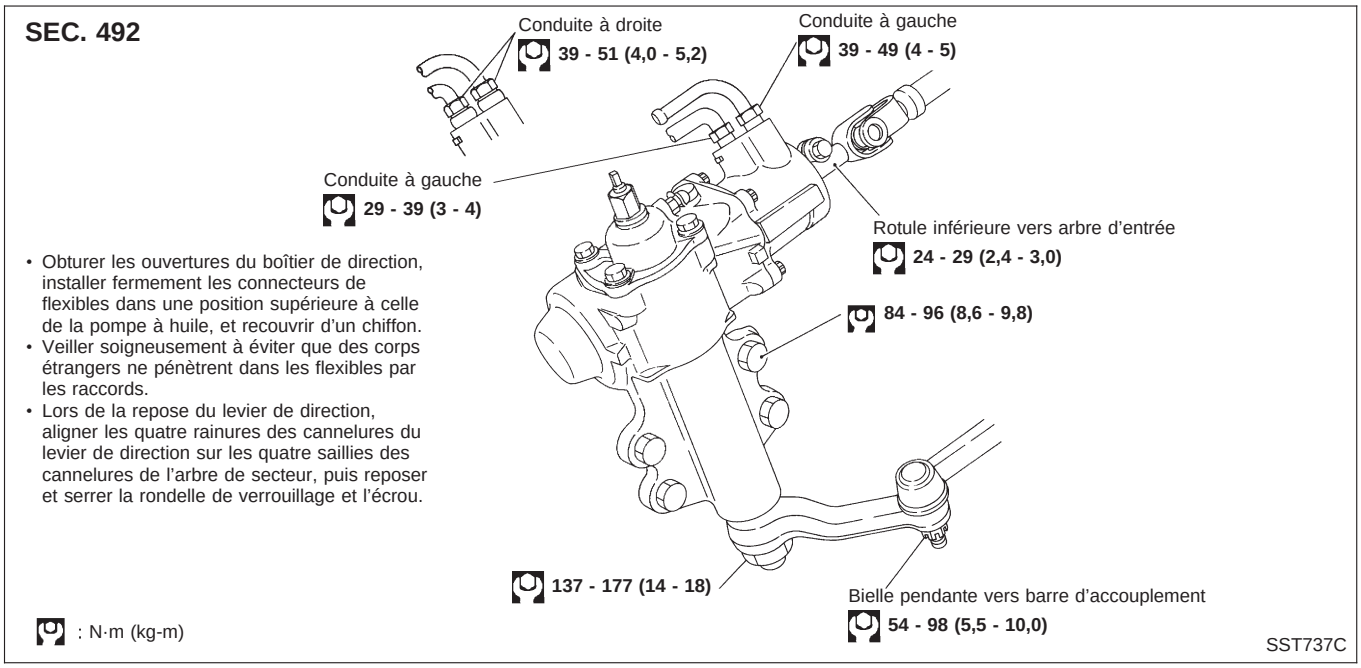

Composants du mécanisme de direction assistée

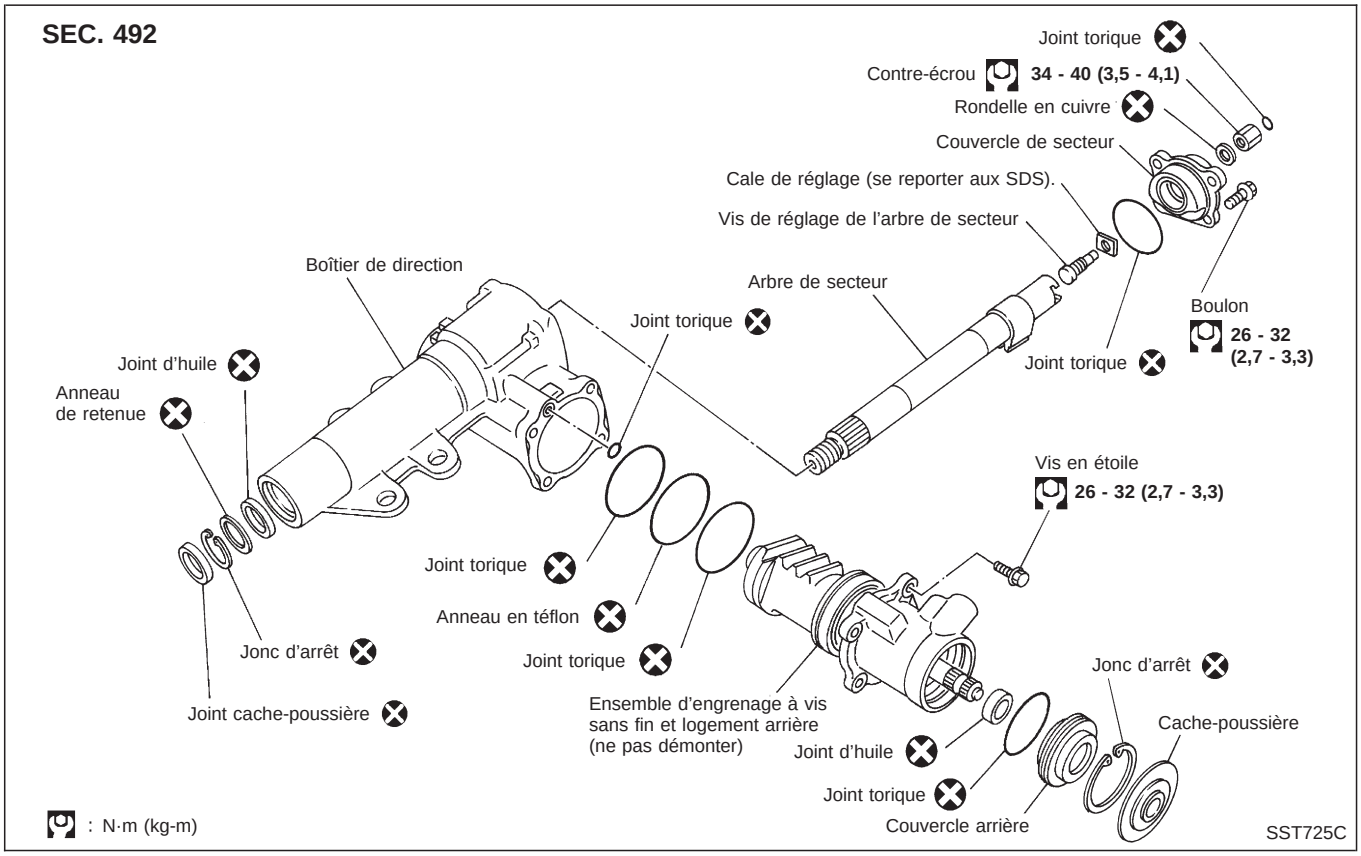

Simpo PDF Merge and Split Unregistered Version - http://www.simpopdf.com

Inspection et réglage de pré-démontage

Avant de démonter les composants du mécanisme de direction assistée, s'assurer qu'il n'y a pas de fuites d'huile sur le pourtour de la surface d'étanchéité, et contrôler le couple de rotation de la direction de la manière suivante :

Contrôler la surface d'étanchéité.

- Joint torique d'écrou de vis de réglage
- Joint torique de couvercle d'arbre de secteur
- Joint d'huile d'arbre de secteur
- Joint d'huile et joint torique de couvercle arrière
- Joint torique de logement arrière
- Joint torique de boîtier de direction

Jeter les joints d'huile et les joints toriques qui ont été déposés. Remplacer les joints d'huile et les joints toriques si leur surface d'étanchéité est déformée ou fissurée.

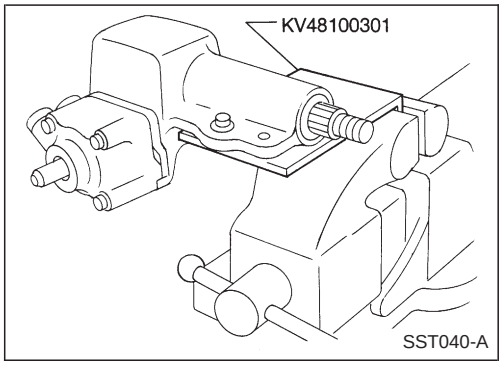

MESURE DU COUPLE DE ROTATION

1. Mesurer le couple de rotation à 360°.

a. Installer le boîtier de direction sur l'outil spécial.

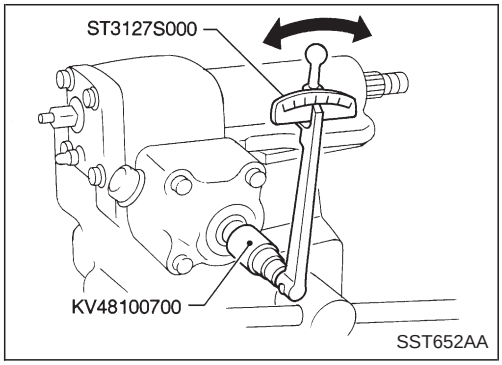

b. Tourner l'arbre d'entrée à bout de course vers la gauche et la droite à plusieurs reprises.

c. Mesurer le couple de rotation à 360° de la position de marche en ligne droite à l'aide des outils spéciaux.

Couple de rotation à 360° :
0,7 - 1,2 N·m (7 - 12 kg-cm)

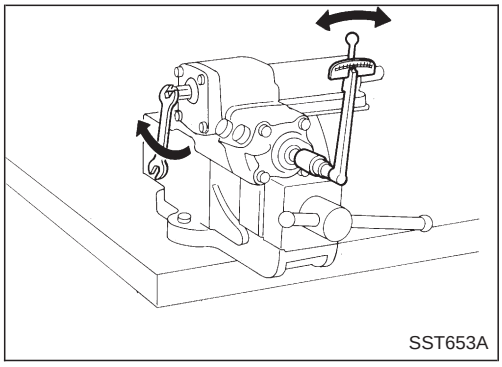

d. Mesurer le couple de rotation en position de marche en ligne droite.

La position de marche en ligne droite est la position dans laquelle l'arbre d'entrée est ramené de 2,14 tours (deux tours complets et 50°) depuis la butée.

Couple de rotation en position de marche en ligne droite :
0,1 - 0,4 N·m (1 - 4 kg-cm) supérieur au couple de rotation à 360°

Couple de rotation maximum :
1,1 - 1,6 N·m (11 - 16 kg-cm)

Simpo PDF Merge and Split Unregistered Version - http://www.simpopdf.com

Inspection et réglage de pré-démontage (Suite)

Si le couple de rotation est hors spécifications, le régler en agissant sur la vis de réglage de l'arbre de secteur.

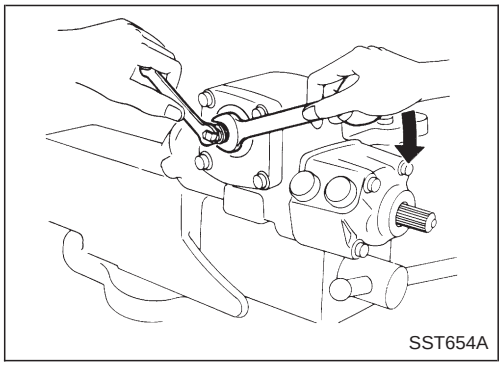
SST654A

2. Serrer le contre-écrou de vis de réglage à l'aide des outils spéciaux.

Démontage

Mesurer le couple de rotation avant de procéder au démontage.
S'il est hors spécifications, remplacer l'ensemble de boîtier de direction.
ATTENTION :
Les pièces d'étanchéité à l'huile, la rondelle de cuivre et le jonc d'arrêt ne doivent pas être réutilisés une fois qu'ils ont été déposés.

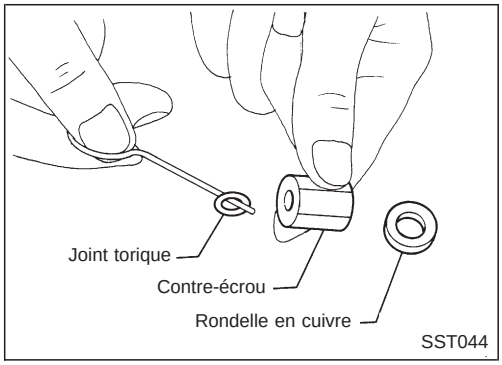

SST044

JONC D'ARRET DE CONTRE-ECROU DE VIS DE REGLAGE

Déposer le contre-écrou de vis de réglage, et remplacer le joint torique.

JOINT D'HUILE D'ARBRE DE SECTEUR

1. Placer l'arbre d'entrée en position de marche en ligne droite.
La position de marche en ligne droite est la position dans laquelle l'arbre d'entrée est ramené de 2,14 tours (deux tours complets et 50°) depuis la butée.

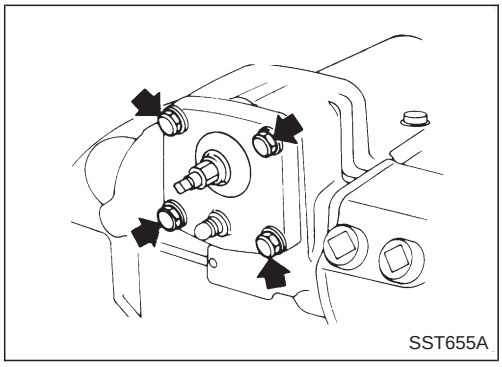
SST655A

2. Déconnecter le boulon du couvercle d'arbre de secteur.
Ne pas tourner le contre-écrou sauf en cas de nécessité; sans quoi il endommagerait le joint torique, ce qui provoquerait une fuite d'huile.

Simpo PDF Merge and Split Unregistered Version - http://www.simpopdf.com

Démontage (Suite)

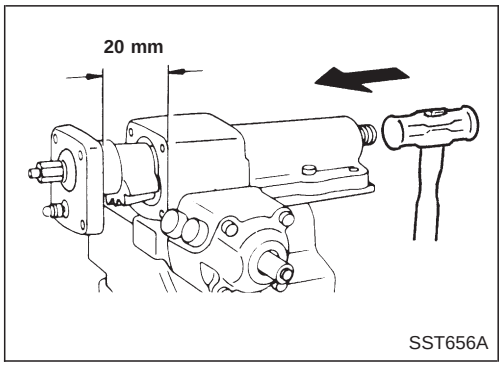

SST656A

3. Extraire l'arbre de secteur.

Faire sortir l'extrémité de l'arbre de secteur d'environ 20 mm.

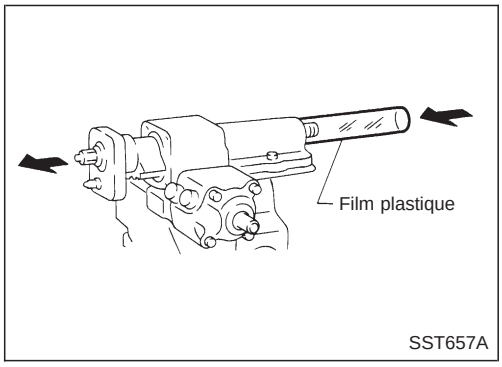

SST657A

4. Connecter un rouleau de film plastique à l'arbre de secteur.
   Film plastique :
   Epaisseur 0,1 mm
   Longueur x largeur 200 x 200 mm
5. Sortir l'arbre de secteur à la main.

Entourer d'un film plastique les roulements à aiguilles situés à deux endroits à l'intérieur du boîtier de direction, et extraire l'arbre de secteur au même moment de façon à ce que les roulements ne chutent pas dans le boîtier.

JOINT TORIQUE DE LOGEMENT ARRIERE

1. Retirer la vis en étoile.

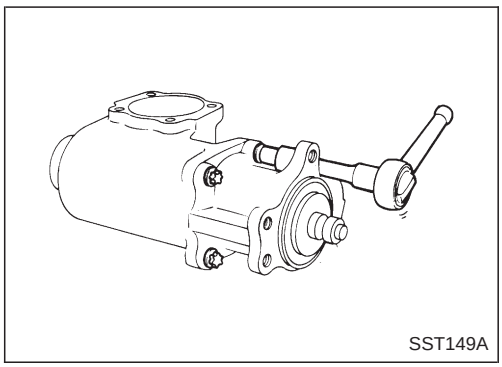
SST149A

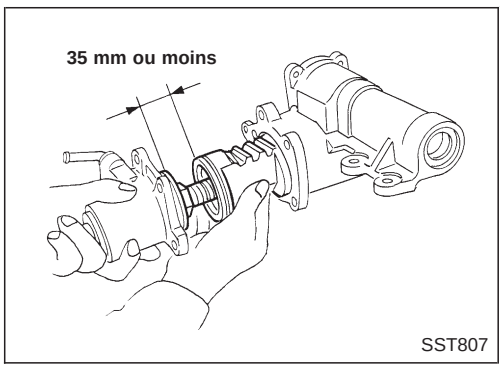

SST807

2. Déposer le logement arrière avec l'ensemble d'engrenage à vis sans fin.

ATTENTION :

- **Lorsque l'engrenage à vis sans fin est déposé, il est possible que le piston tourne et se détache sous l'effet de son propre poids. Maintenir le piston pour l'empêcher de tourner.**
- **Si le jeu entre le piston et le logement arrière excède 35 mm, la recirculation de billes sortira de la rainure d'engrenage à vis sans fin ; il ne faut donc pas reposer le piston mais remplacer l'ensemble complet.**
- **Lors de la dépose, veiller à ne pas endommager l'anneau en téflon situé à l'extrémité du piston.**

Simpo PDF Merge and Split Unregistered Version - http://www.simpopdf.com

Démontage (Suite)

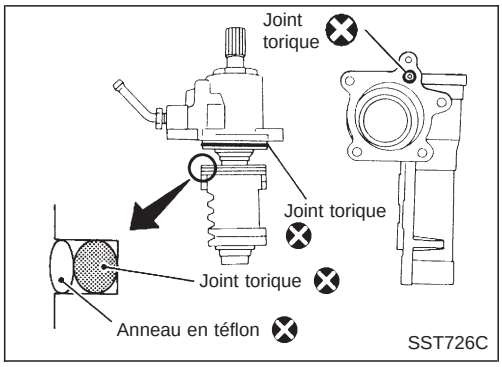

3. Déposer les joints toriques et l'anneau en téflon.

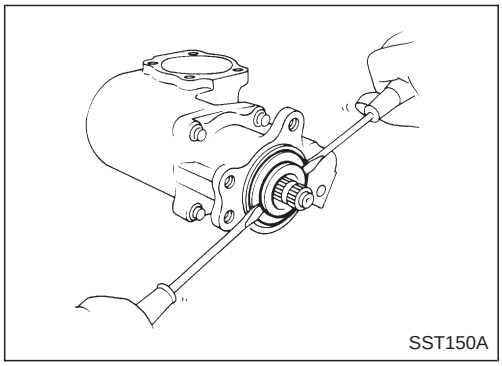

JOINT TORIQUE DE COUVERCLE ARRIERE ET JOINT D'HUILE

1. Déposer le jonc d'arrêt, puis le couvercle arrière.
2. Déposer le joint torique et le joint d'huile.

Remontage

JOINT TORIQUE DE CONTRE-ECROU DE VIS DE REGLAGE

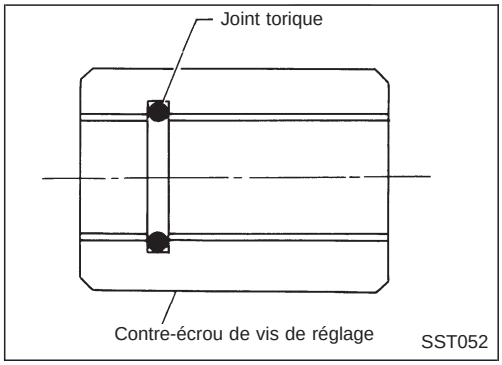

Introduire un joint torique neuf dans le contre-écrou de la vis de réglage.

- **Appliquer une fine couche de vaseline sur le joint torique avant de le reposer.**
- **Introduire le joint torique pour s'assurer qu'il est adapté à la rainure.**

JOINT D'HUILE D'ARBRE DE SECTEUR

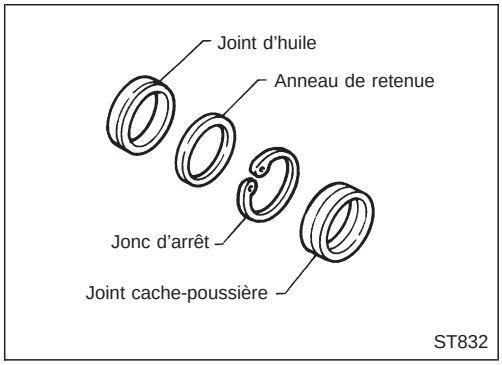

- **Lors de la repose, veiller à utiliser un joint d'huile neuf, un joint cache-poussière, un anneau de retenue et un jonc d'arrêt.**
- **Enduire le joint d'huile neuf et le joint cache-poussière d'une fine couche de vaseline avant de les monter.**

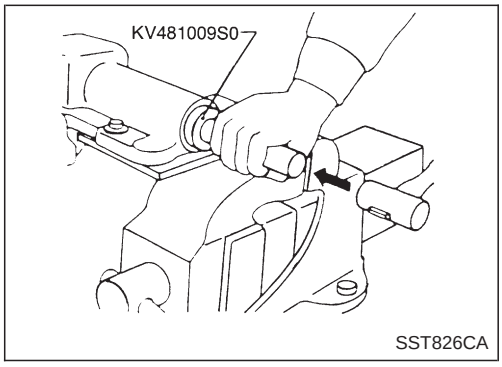

1. Monter un joint d'huile neuf à la presse, puis monter le joint de réserve avec l'outil spécial.

Simpo PDF Merge and Split Unregistered Version - http://www.simpopdf.com

Remontage (Suite)

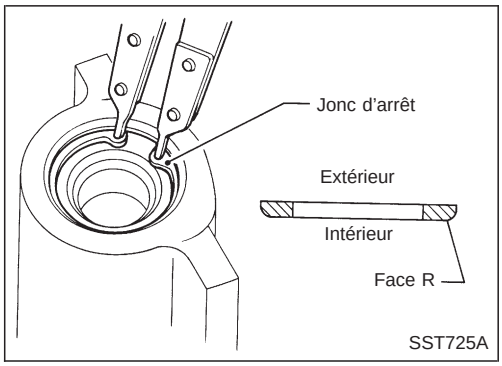

2. Reposer un jonc d'arrêt neuf dans le boîtier de direction.

ATTENTION :

- **Tourner le jonc d'arrêt pour s'assurer qu'il passe dans la rainure.**
- **Toujours reposer le jonc d'arrêt en orientant la face R vers l'intérieur.**

3. Monter un joint cache-poussière à la presse.

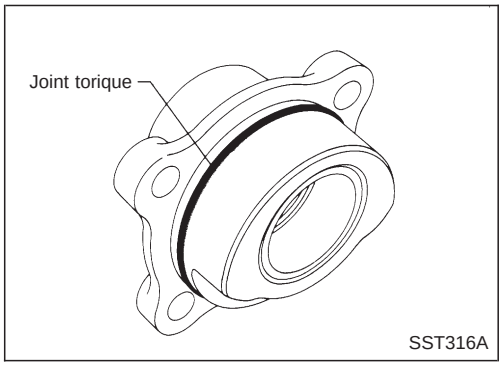

4. Monter le joint torique dans le couvercle d'arbre de secteur.

- **Avant la repose, enduire le joint torique d'une fine couche de vaseline.**
- **S'assurer que le joint torique est correctement installé et n'est pas endommagé par l'arbre de secteur.**

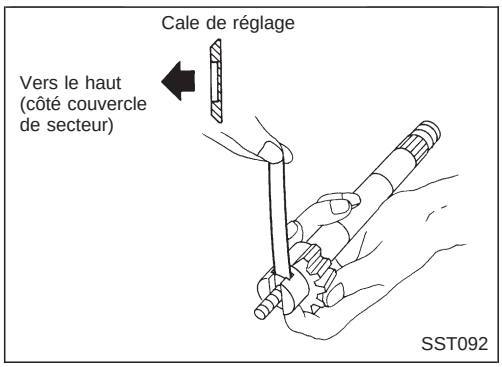

JEU AXIAL DE L'ARBRE DE SECTEUR

Choisir une cale d'épaisseur de réglage adéquate et régler le jeu axial entre l'arbre de secteur et la vis de réglage.

Jeu axial d'arbre de secteur :
0,01 - 0,03 mm

Cales d'épaisseur de vis de réglage d'arbre de secteur :
Consulter les SDS, ST-43.

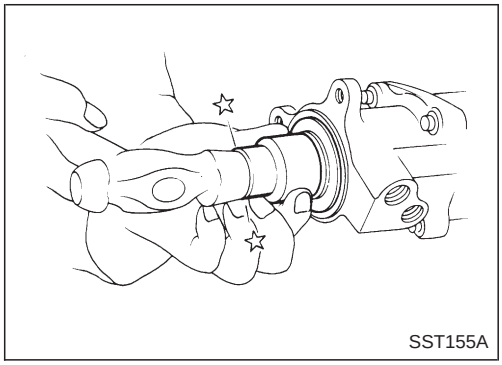

JOINT TORIQUE DE COUVERCLE ARRIERE ET JOINT D'HUILE

1. Reposer un joint torique et un joint d'huile neufs.
2. Reposer le couvercle arrière, puis reposer un jonc d'arrêt neuf.

ATTENTION :

- **Tourner le jonc d'arrêt en s'assurant qu'il s'adapte bien dans la rainure.**
- **Toujours reposer le jonc d'arrêt en tournant la bordure arrondie vers le couvercle arrière.**

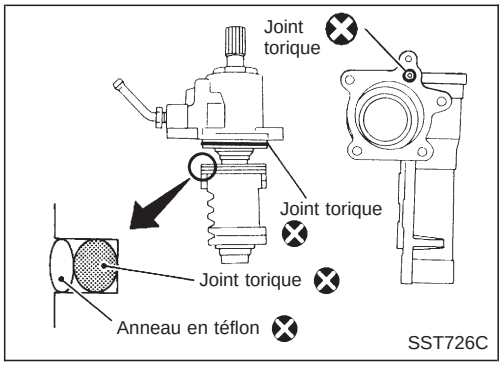

JOINT TORIQUE DE LOGEMENT ARRIERE

1. Reposer des joints toriques et un anneau en téflon neufs.

a. Avant la repose, enduire les joints d'une fine couche de vaseline.

b. S'assurer que les joints sont correctement installés et ne sont pas endommagés par l'engrenage à vis sans fin.

Simpo PDF Merge and Split Unregistered Version - http://www.simpopdf.com

Remontage (Suite)

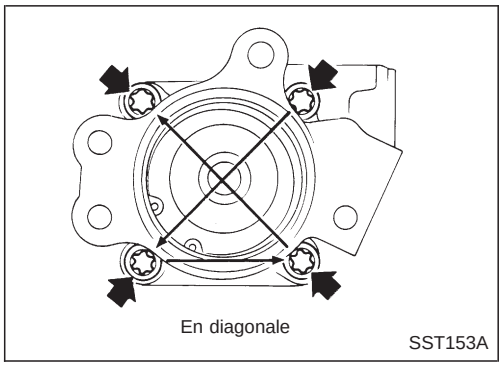

2. Introduite progressivement l'engrenage à vis sans fin et l'ensemble du logement arrière dans le boîtier de direction, en veillant à ne pas endommager le joint d'huile et les joints toriques.
3. Reposer des vis en étoile.

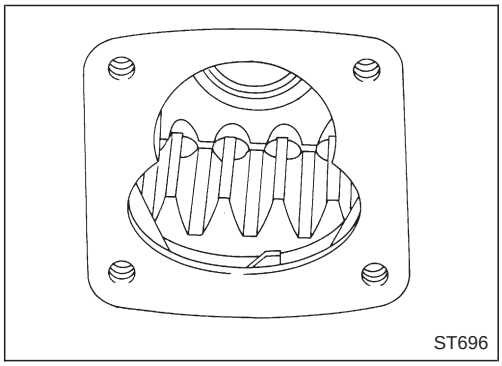

ARBRE DE SECTEUR

1. Placer la crémaillère de piston en position de marche en ligne droite.

Tourner la crémaillère de piston d'environ 10° à 15° vers soi avec le doigt. Ceci permet d'introduire facilement l'arbre de secteur.

2. Envelopper de ruban adhésif en vinyle la partie cannelée de l'arbre de secteur.

Le ruban adhésif en vinyle empêche les lèvres du joint d'huile d'être endommagées pendant l'insertion.

3. Introduire l'arbre de secteur progressivement dans le boîtier de direction, en veillant à ne pas endommager le joint d'huile.

Retirer le film plastique lors de l'insertion de l'arbre de secteur dans le boîtier de direction. Veiller à ce que les roulements ne tombent pas dans le boîtier.

4. Serrer les boulons du couvercle d'arbre de secteur.
5. Vérifier le couple de rotation et la précharge du boîtier de direction assistée.

Consulter le titre ''MESURE DU COUPLE DE ROTATION'', ''Inspection et réglage de pré-démontage'', ST-22.

- **Si le couple de rotation est très différent de la valeur avant démontage, remplacer l'ensemble complet.**

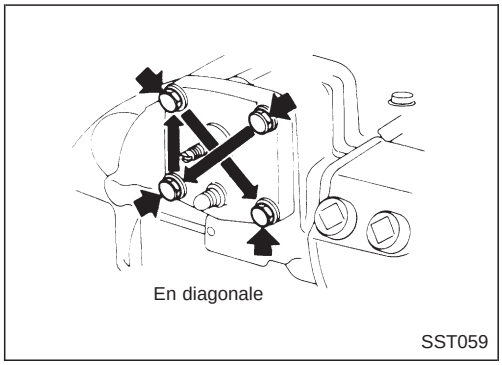

Simpo PDF Merge and Split Unregistered Version - http://www.simpopdf.com

Description

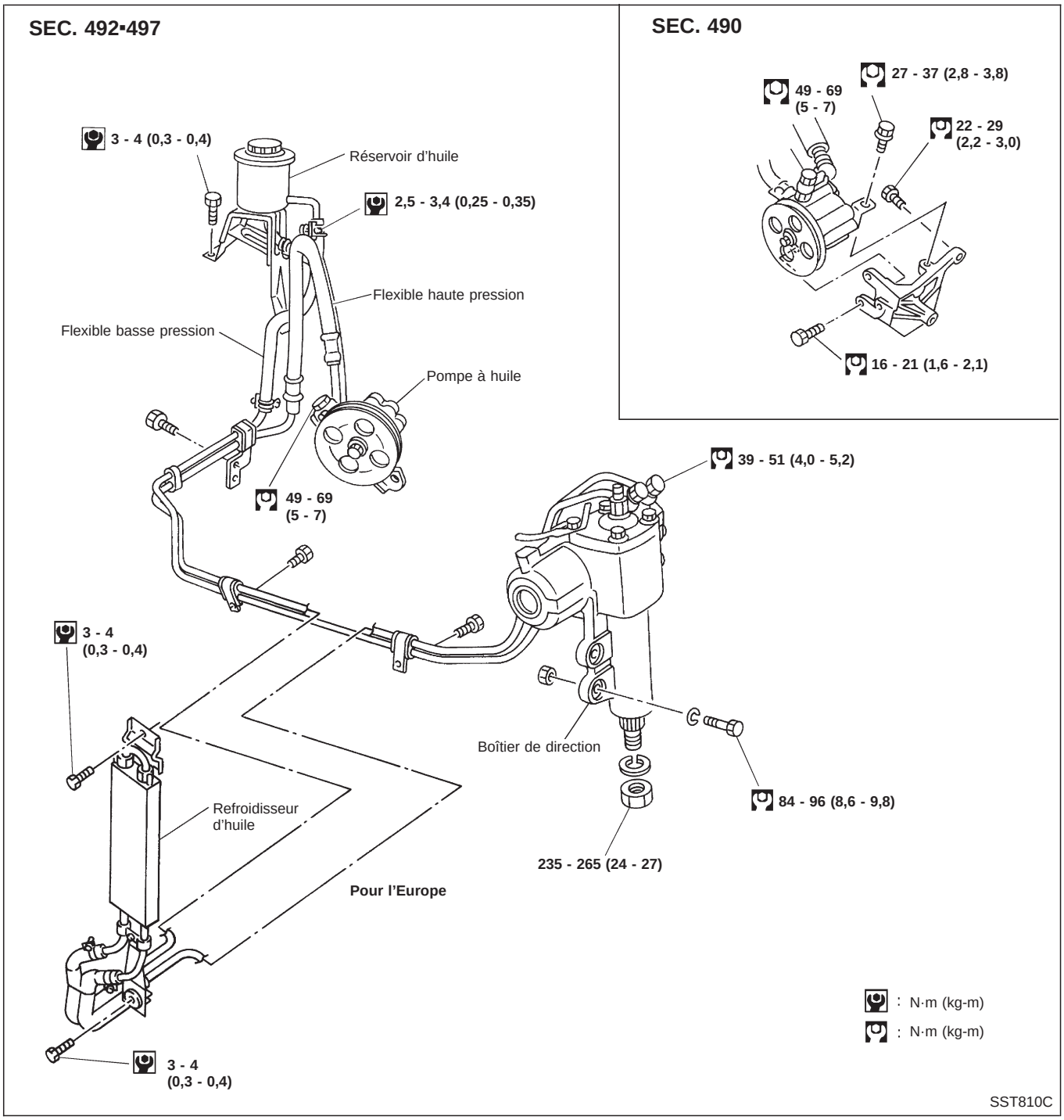

ATTENTION :

- **Seules certaines pièces sont démontables. Ne démonter que les pièces spécifiées.**
- **L'endroit où le démontage est effectué doit être le plus propre possible.**
- **Se laver les mains avant d'entreprendre le démontage.**
- **Ne pas utiliser de chiffons d'atelier ; utiliser du tissu en nylon ou des serviettes en papier.**
- **Suivre les procédures et respecter les avertissements du Manuel de Réparation.**

Simpo PDF Merge and Split Unregistered Version - http://www.simpopdf.com

Dépose et repose

Avant la dépose, nettoyer à la vapeur les parties extérieures du boîtier de direction et de la pompe à huile. Puis sécher à l'air comprimé.

BOITIER DE DIRECTION

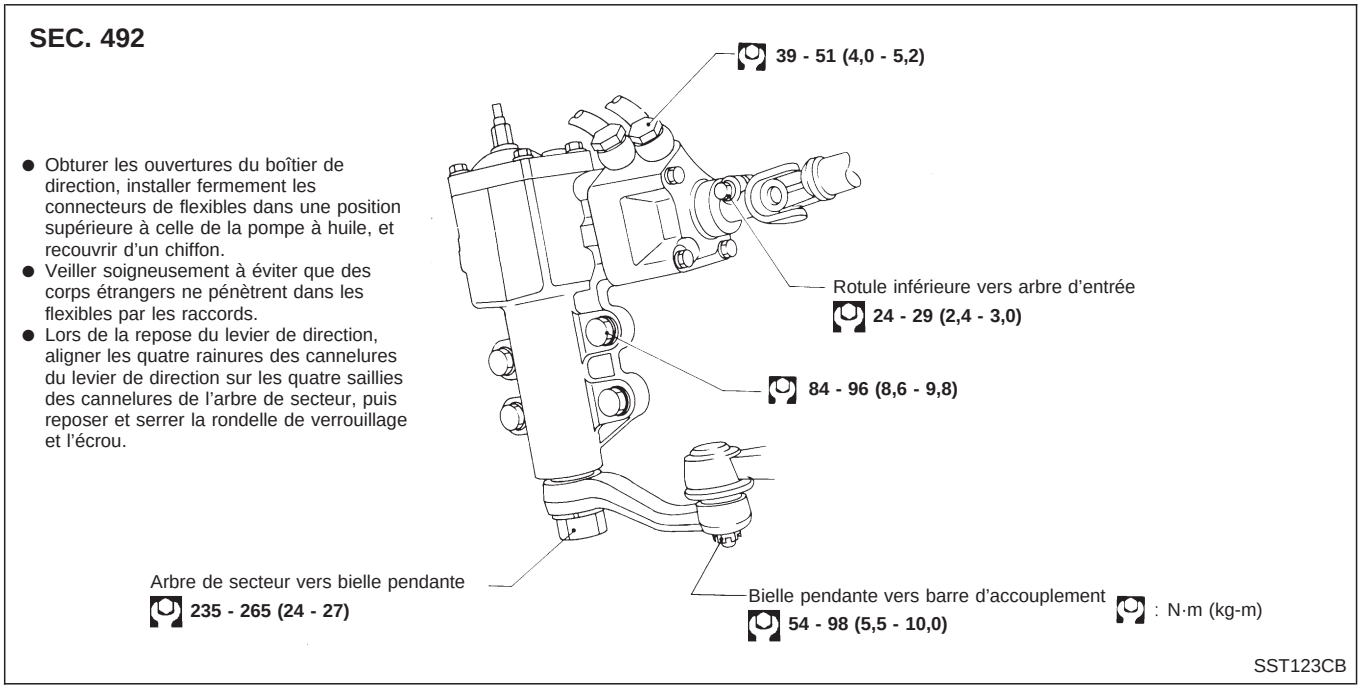

Composants du mécanisme de direction assistée

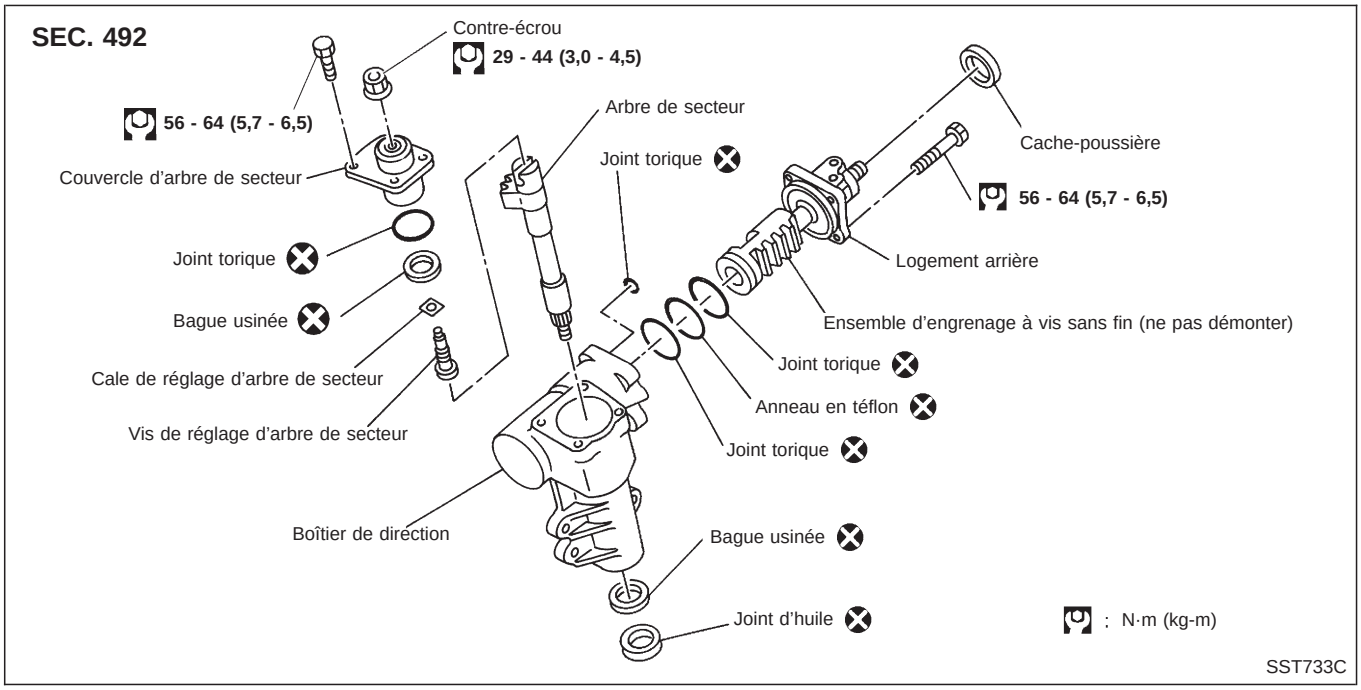

Simpo PDF Merge and Split Unregistered Version - http://www.simpopdf.com

Inspection et réglage de pré-démontage

Avant de démonter les composants du mécanisme de direction assistée, s'assurer qu'il n'y a pas de fuites d'huile sur le pourtour de la surface d'étanchéité, et contrôler le couple de rotation de la direction de la manière suivante :

Contrôler la surface d'étanchéité.

- Joint torique de couvercle d'arbre de secteur
- Bague usinée d'arbre de secteur
- Joint d'huile d'arbre de secteur
- Joint torique de logement arrière
- Joint torique du boîtier de direction

Jeter les joints d'huile et les joints toriques qui ont été déposés. Remplacer les joints d'huile et les joints toriques si la surface d'étanchéité est déformée ou fissurée.

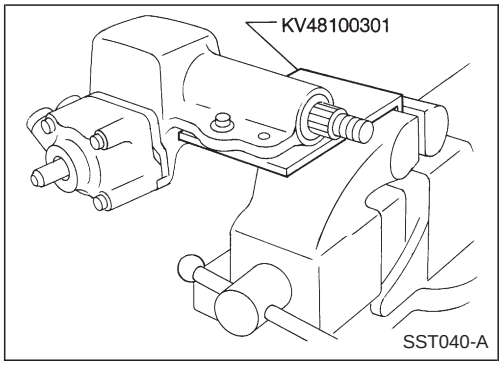

MESURE DU COUPLE DE ROTATION

1. Mesurer le couple de rotation à 360°.

a. Monter le boîtier de direction sur l'outil spécial.

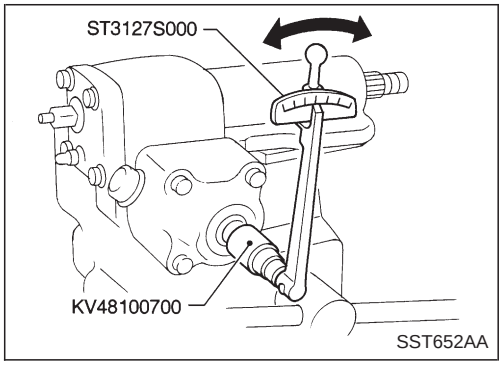

b. Tourner l'arbre d'entrée à bout de course vers la gauche et la droite à plusieurs reprises.

c. Mesurer le couple de rotation à 360° de la position de marche en ligne droite à l'aide des outils spéciaux.

Couple de rotation à 360° :
0,15 - 0,78 N·m (1,5 - 8,0 kg-cm)

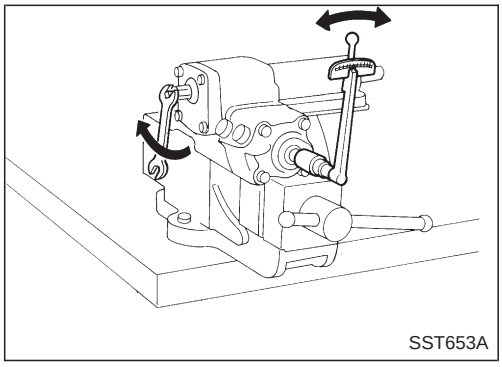

d. Mesurer le couple de rotation en position de marche en ligne droite.

La position de marche en ligne droite est la position dans laquelle l'arbre d'entrée est ramené de 2,14 tours (deux tours complets et 50°) depuis la butée.

Couple de rotation en position de marche en ligne droite :
0,2 - 0,5 N·m (2 - 5 kg-cm) supérieur au couple de rotation à 360°

Couple de rotation maximum :
0,44 - 1,18 N·m (4,5 - 12 kg-cm)

Simpo PDF Merge and Split Unregistered Version - http://www.simpopdf.com

Inspection et réglage de pré-démontage (Suite)

Si le couple de rotation est hors spécifications, le régler en agissant sur la vis de réglage de l'arbre de secteur.

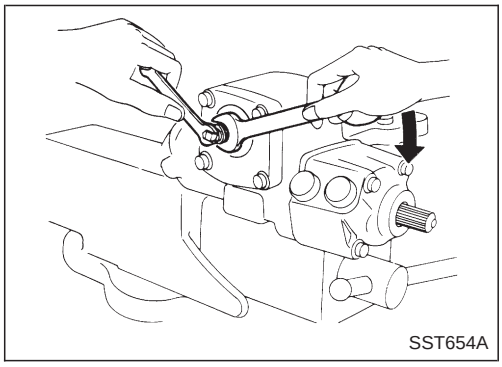
SST654A

2. Serrer le contre-écrou de vis de réglage à l'aide des outils spéciaux.

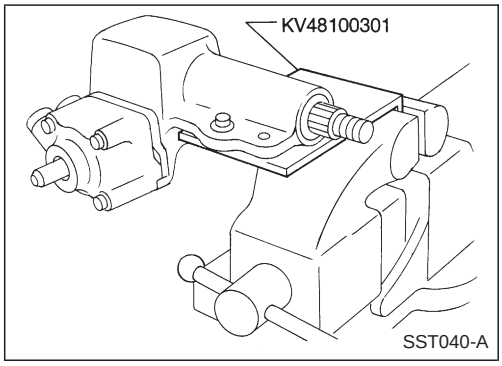

SST040-A

Démontage

Mesurer le couple de rotation avant de procéder au démontage.
S'il est hors spécifications, remplacer l'ensemble de boîtier de direction.
ATTENTION :
Les pièces d'étanchéité à l'huile et le jonc d'arrêt ne doivent pas être réutilisés une fois qu'ils ont été déposés.

1. Placer le boîtier de direction dans l'étau à l'aide de l'outil spécial.
2. Mettre la vis sans fin dans la position de marche en ligne droite.
3. Desserrer (sans le retirer) le boulon du couvercle de l'arbre de secteur.
4. Taper sur l'extrémité de l'arbre de secteur avec un maillet à tête en caoutchouc.
5. Déposer l'arbre de secteur à la main.

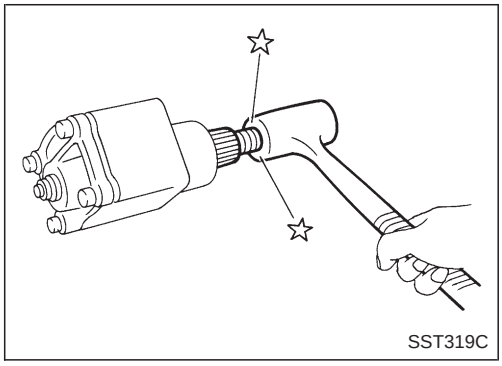
SST319C

Simpo PDF Merge and Split Unregistered Version - http://www.simpopdf.com

Démontage (Suite)

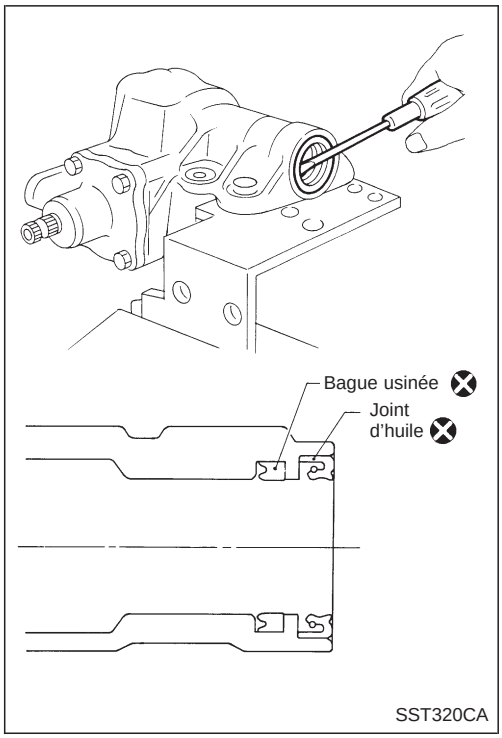

6. Déposer le joint d'huile.
7. Déposer la bague usinée.

ATTENTION :
Veiller à ne pas rayer le boîtier de direction lors de la dépose du joint d'huile et de la bague usinée.

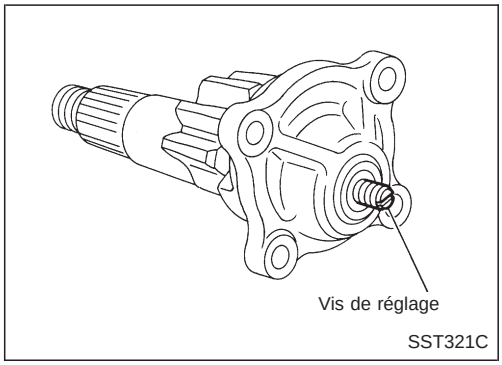

8. Déposer le contre-écrou, puis desserrer la vis de réglage avec un tournevis. Dissocier le coucercle et l'arbre de secteur.

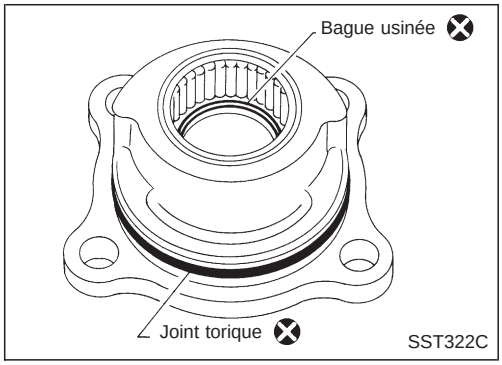

9. Déposer le joint torique.
10. Déposer la bague usinée.

ATTENTION :
- **Lors de la dépose de la bague usinée, veiller à ne pas griffer le couvercle de secteur, le roulement à aiguilles, etc.**
- **Le roulement à aiguilles est une pièce indémontable. Déposer l'ensemble du couvercle secteur s'il est endommagé.**

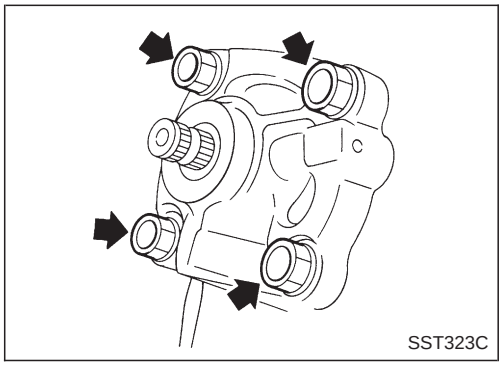

11. Déposer le cache-poussière.
12. Dépose les boulons de logement arrière.
13. Déposer le logement arrière avec l'ensemble d'engrenage à vis sans fin.

ATTENTION :
L'ensemble d'engrenage à vis sans fin est une pièce indémontable. Lors de sa dépose, veiller à ne pas désengager l'engrenage à vis sans fin de l'arbre et à ne pas le laisser chuter.

14. Déposer l'anneau en téflon et le joint torique de l'ensemble d'engrenage à vis sans fin.

Simpo PDF Merge and Split Unregistered Version - http://www.simpopdf.com

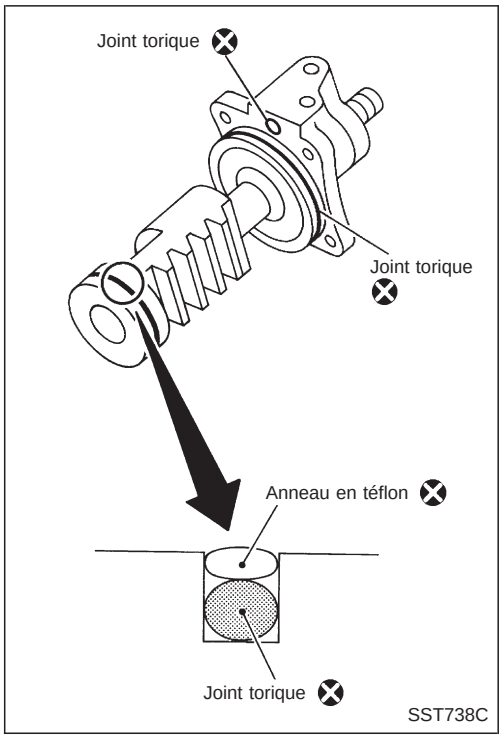

Remontage

1. Reposer un joint torique neuf sur l'ensemble d'engrenage à vis sans fin.
- **Enduire le joint torique neuf d'une fine couche de liquide ATF.**
2. Monter un anneau en téflon neuf sur l'ensemble d'engrenage à vis sans fin.
- **Veiller à ce que l'anneau en téflon ait une assise correcte.**
3. Adapter des joints toriques neufs sur le logement arrière.

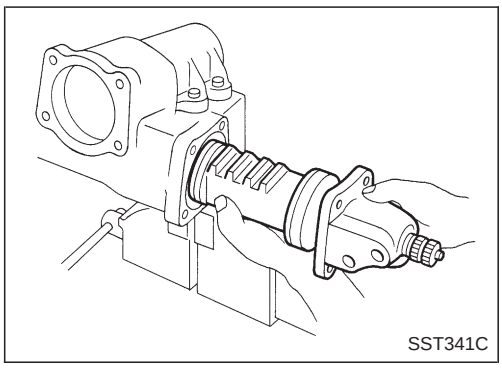

4. Reposer l'ensemble d'engrenage à vis sans fin en plaçant le logement arrière dans le boîtier de direction.

ATTENTION :
- **Enduire le boîtier de direction et le piston d'une fine couche de liquide ATF avant de les introduire.**
- **Veiller à ne pas endommager l'anneau en téflon situé à l'extrémité du piston lorsqu'on introduit l'ensemble d'engrenage à vis sans fin dans le boîtier de direction.**

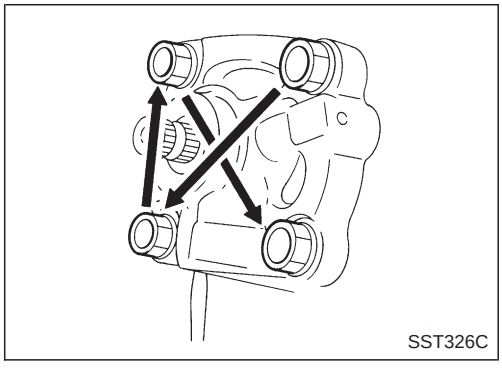

5. Serrer progressivement en diagonale les boulons du logement arrière.

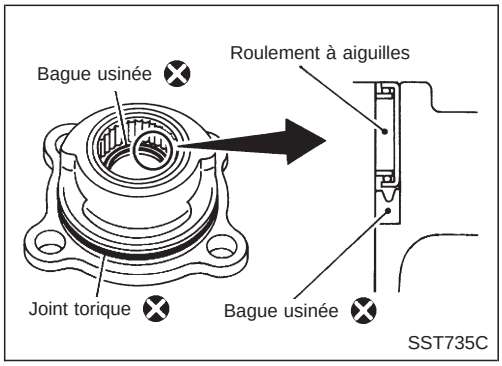

6. Monter un joint torique neuf dans le couvercle de l'arbre de secteur.
- **Avant la repose, enduire le joint torique d'une fine couche de liquide ATF.**
7. Reposer une bague usinée neuve dans le couvercle de l'arbre de secteur.
- **Avant la repose, enduire la bague usinée d'une fine couche de liquide ATF.**
- **Diriger le côté rainuré de la bague usinée vers le roulement à aiguilles.**

Simpo PDF Merge and Split Unregistered Version - http://www.simpopdf.com

Remontage (Suite)

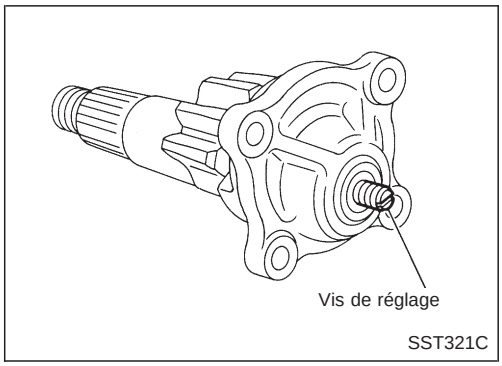

8. Adapter l'arbre de secteur dans le couvercle d'arbre de secteur.
   Régler la vis de réglage à sa position de dépassement maximum.
- **Avant d'adapter l'arbre de secteur, enduire la vis de réglage et la cale de vis de réglage de graisse à usages multiples.**

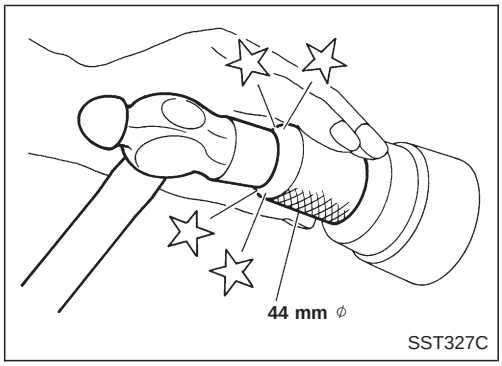

9. Reposer un joint d'huile neuf dans le boîtier de direction à l'aide d'un outil adéquat.
- **Enduire les lèvres du joint d'huile de graisse à usages multiples avant de le reposer.**

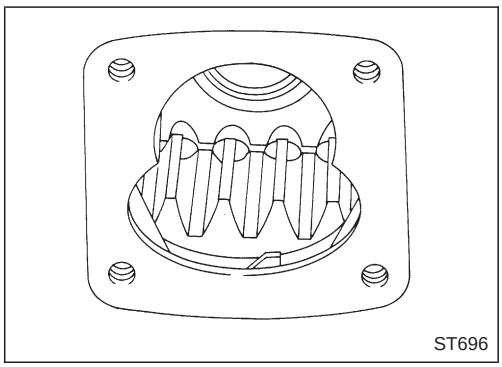

10. Placer la crémaillère de piston en position de marche en ligne droite.

Tourner la crémaillère de piston d'environ 10° à 15° vers soi avec le doigt.
Ceci permet d'introduire facilement l'arbre de secteur.

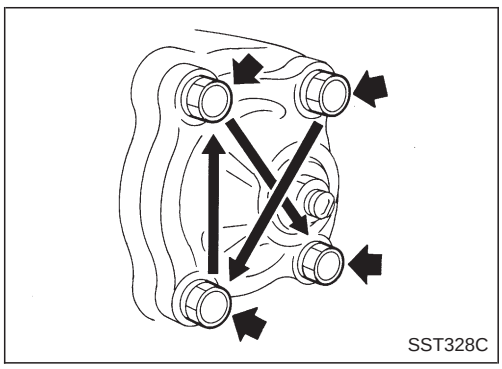

11. Introduire progressivement l'arbre de secteur dans le boîtier de direction.
12. Serrer les boulons du couvercle d'arbre de secteur.
13. Régler le couple de rotation de l'engrenage à vis sans fin en agissant sur la vis de réglage de l'arbre de secteur puis en la bloquant avec un contre-écrou.

Consulter le titre ''MESURE DU COUPLE DE ROTATION'', ''Inspection et réglage de pré-démontage'', ST-30.
- **Si la valeur du couple de rotation réglée et à régler est considérablement différente de la valeur avant la dépose, remplacer l'ensemble complet.**

14. Contrôler le jeu axial de l'arbre de secteur en position neutre.
    Jeu axial :
    Moins de 0,1 mm
    L'ajuster avec la vis de réglage s'il est hors spécifications.
15. Vérifer la précharge de l'engrenage à vis sans fin. Si la valeur ne se trouve pas dans les limites spécifiées, la régler à nouveau.

Simpo PDF Merge and Split Unregistered Version - http://www.simpopdf.com

Démontage et remontage

SEC. 490

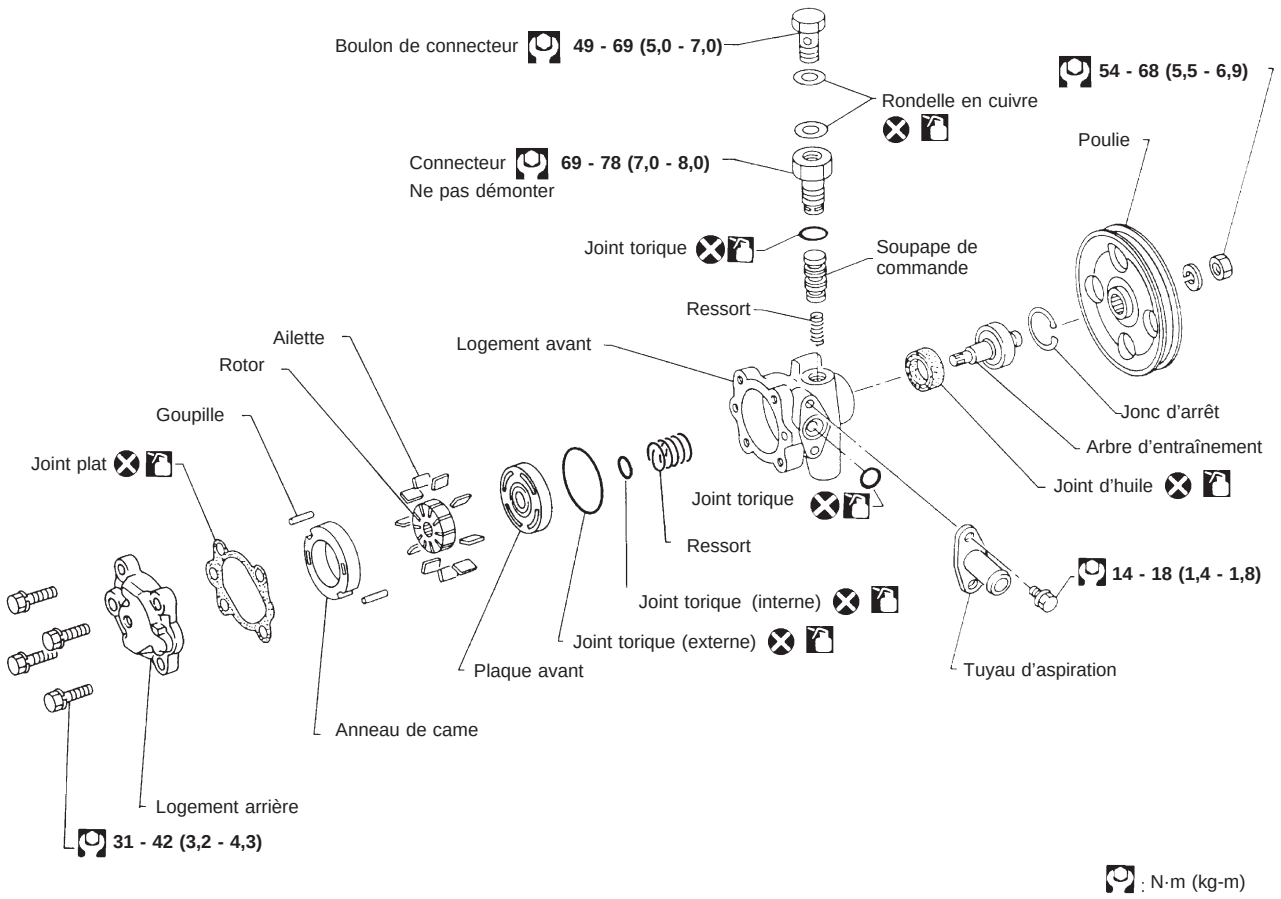

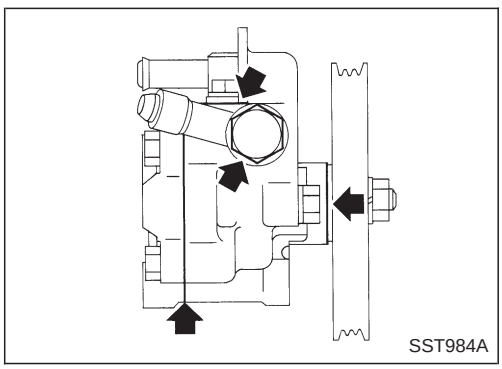

Inspection de pré-démontage

Démonter la pompe à huile de direction assistée uniquement lorsque les problèmes suivants sont détectés.

- Fuites d'huile aux points indiqués sur la figure.
- Poulie déformée ou endommagée.
- Performance pauvre.

Simpo PDF Merge and Split Unregistered Version - http://www.simpopdf.com

Inspection

POULIE ET AXE DE POULIE

- Si la poulie est fissurée ou déformée, la remplacer.
- Si l'on découvre une fuite à hauteur de l'axe de poulie, remplacer le joint d'huile.

Démontage

ATTENTION :

- **Seules certaines pièces sont démontables. Ne démonter que les pièces spécifiées.**
- **L'endroit où le démontage est effectué doit être le plus propre possible.**
- **Se laver les mains avant d'entreprendre le démontage.**
- **Ne pas utiliser de chiffons d'atelier ; utiliser du tissu en nylon ou des serviettes en papier.**
- **Ne pas laisser d'impuretés pénétrer dans les pièces ni les toucher lors du démontage et du remontage.**

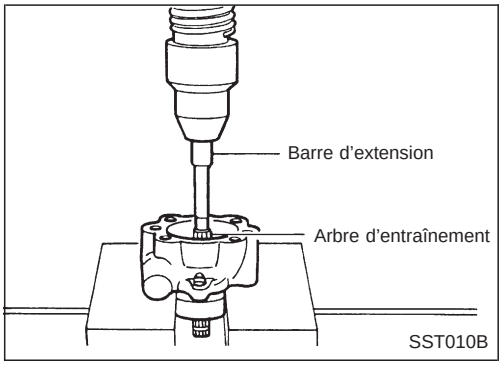

- Déposer le jonc d'arrêt, puis extraire l'arbre d'entraînement.
- **Veiller à ne pas laisser tomber l'arbre d'entraînement.**

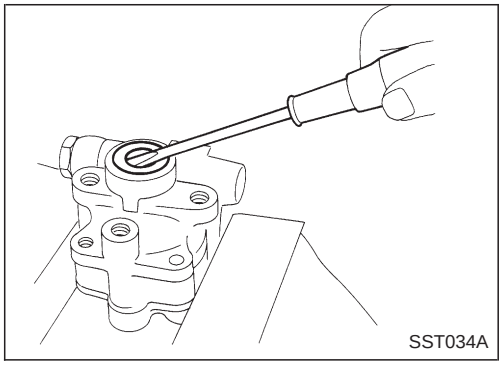

- Déposer le joint d'huile.
- **Veiller à ne pas endommager le logement avant.**

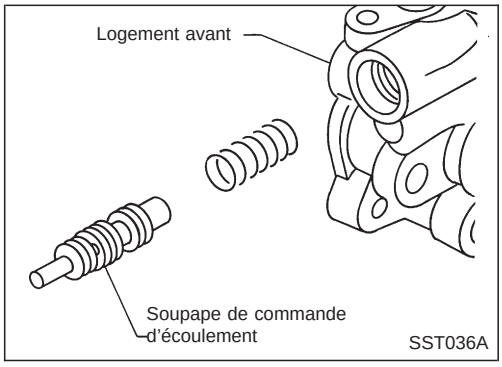

- Déposer le raccord.
- **Veiller à ne pas laisser tomber la soupape de commande.**

Simpo PDF Merge and Split Unregistered Version - http://www.simpopdf.com

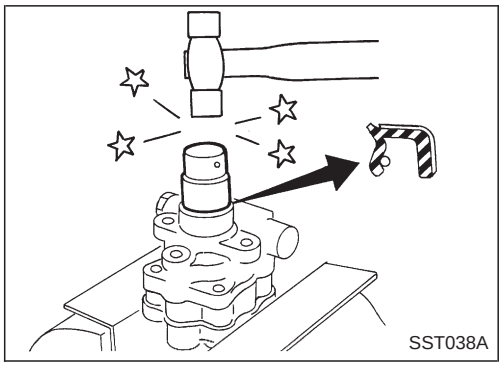
SST038A

Remontage

Monter la pompe à huile en respectant les instructions suivantes.

- Veiller à mettre les joints toriques et le joint d'huile en place convenablement.
- Toujours monter des joints toriques et des joint d'huile neufs.
- Faire attention au sens de pose du joint d'huile.
- L'anneau de came, le rotor et les ailettes doivent être remplacés en tant qu'ensemble si nécessaire.
- Lors du remontage, enduire chaque pièce de liquide ATF.

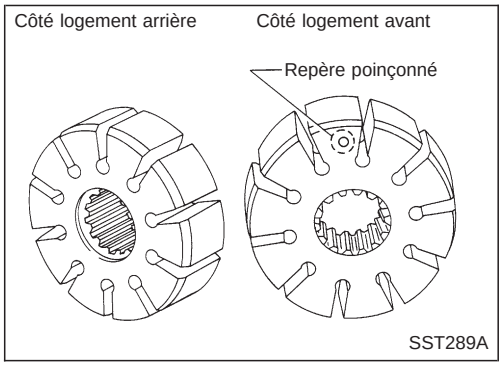

SST289A

- Faire attention au sens de montage du rotor.

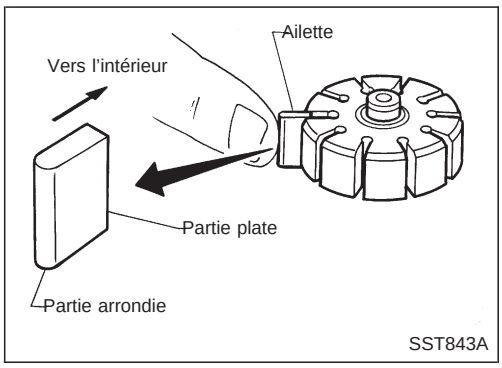

SST843A

- Lors de la repose des ailettes sur le rotor, les bords arrondis des ailettes doivent être face au côté anneau de came.

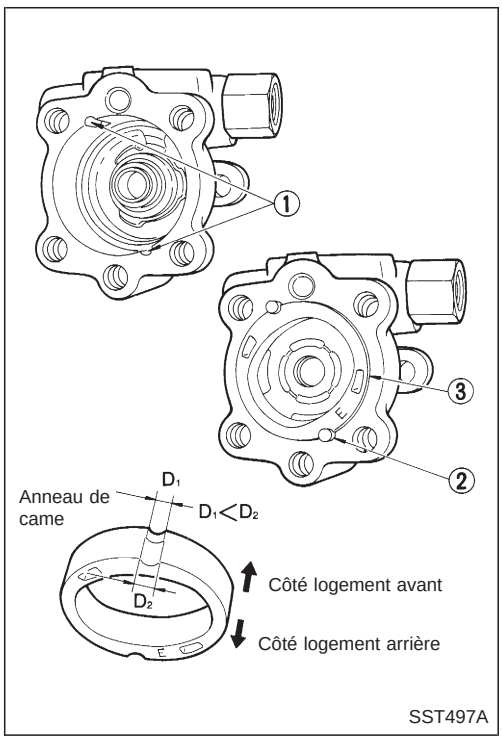

SST497A

- Introduire la goupille ② dans la rainure ① du logement avant et de la plaque avant. Puis monter l'anneau de came ③ de la façon indiquée ci-contre.
  Anneau de came :
  D_1 est inférieur à D_2

Simpo PDF Merge and Split Unregistered Version - http://www.simpopdf.com

Dépose et repose

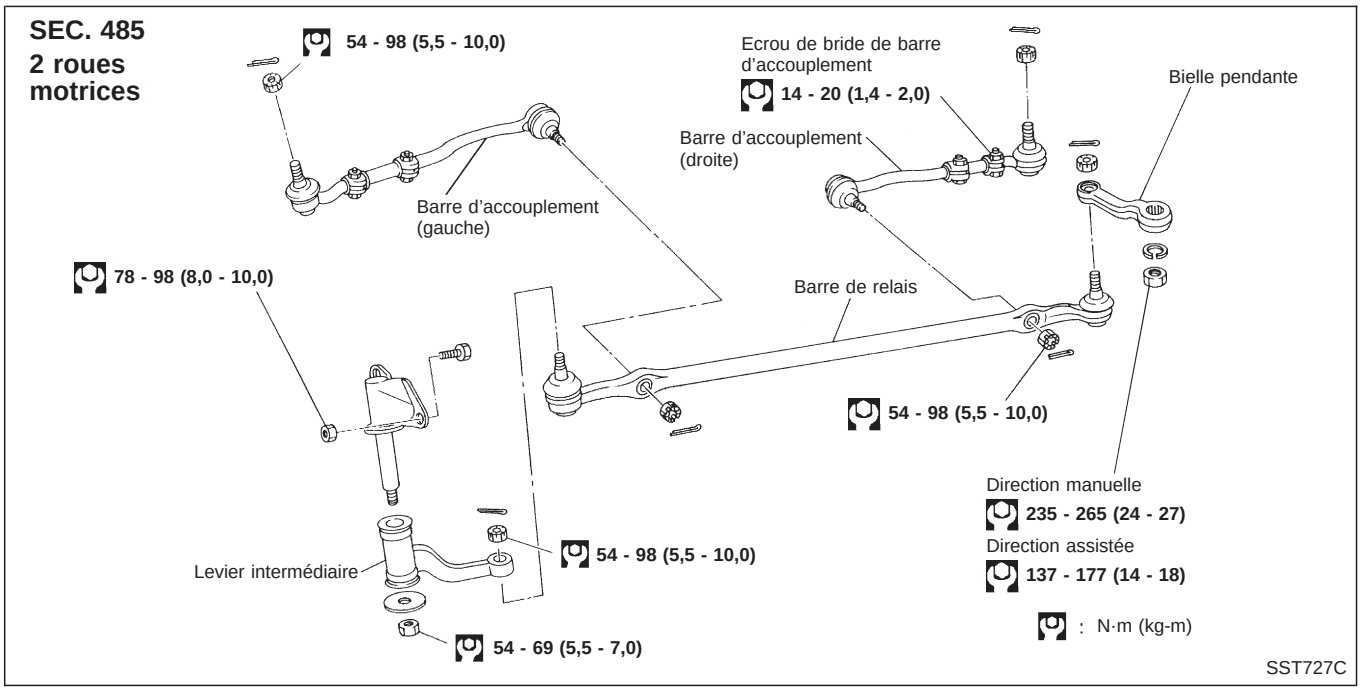

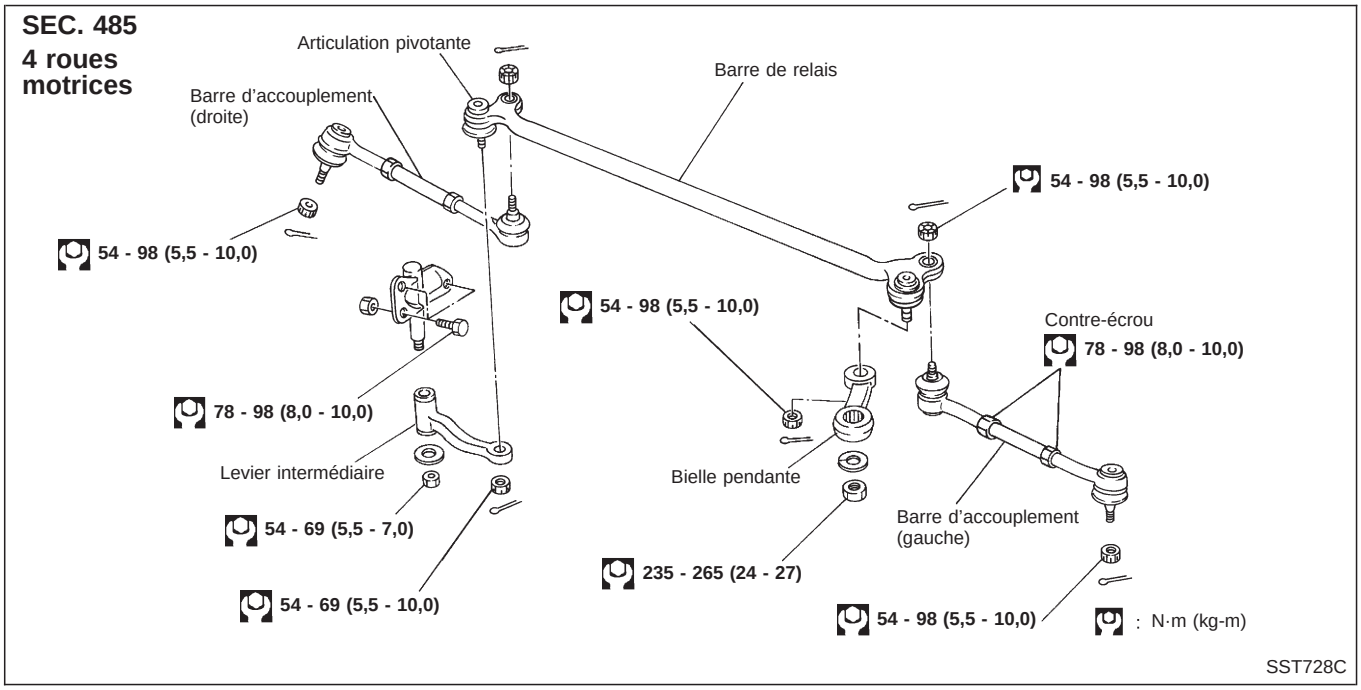

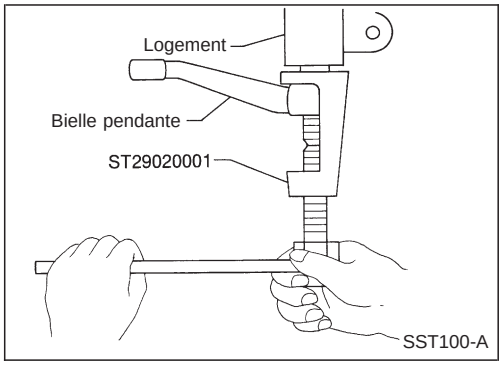

Déposer la bielle pendante avec l'outil spécial.

Simpo PDF Merge and Split Unregistered Version - http://www.simpopdf.com

Dépose et repose (Suite)

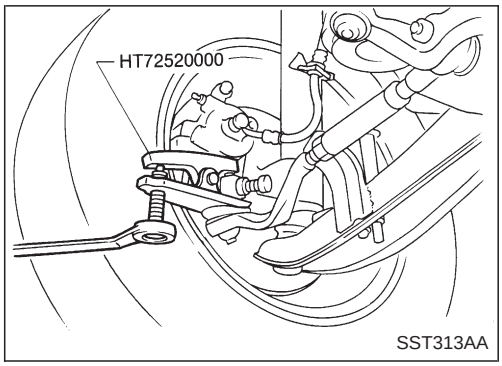

Déposer la barre d'accouplement du bras de fusée avec l'outil spécial.

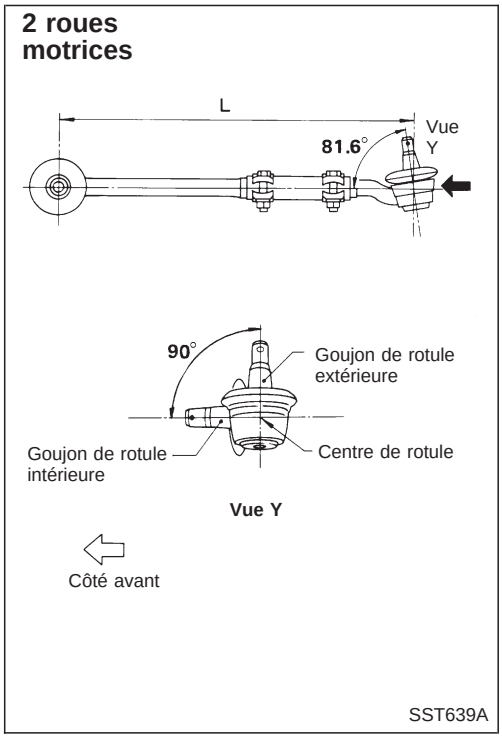

Démontage

ENSEMBLE DE LEVIER INTERMEDIAIRE

- Enduire les bagues d'une couche de graisse à usages multiples.
- Monter les bagues à la presse dans les carters de renvoi, puis introduire avec précaution l'axe de support de renvoi jusqu'à ce que la bague dépasse.

BARRE INTERMEDIAIRE DE DIRECTION ET BARRE D'ACCOUPLEMENT

1. Lorsque les joints à rotule de la barre d'accouplement et la barre sont séparés, régler correctement la longueur de la barre d'accouplement.
   Il faut procéder au réglage à l'entraxe des goujons des rotules.
2. Serrer l'écrou de bride de barre d'accouplement de façon à ce que la rotule sur le goujon de rotule extérieure se place comme suit par rapport à celle sur le goujon de rotule intérieure.
   L : Standard
   343,9 mm . . . 2 roues motrices
   297,6 mm . . . 4 roues motrices

ATTENTION :
Veiller à ce que les barres d'accouplement soient vissées de plus de 35 mm dans leurs tubes.

Simpo PDF Merge and Split Unregistered Version - http://www.simpopdf.com

4 roues motrices

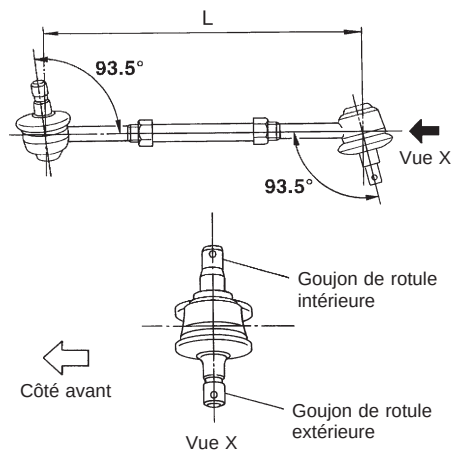

SST729C

Rotule

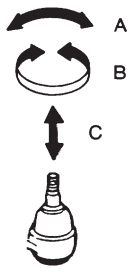

SST827C

Articulation pivotante

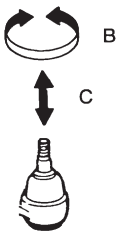

SFA817A

Inspection

ARTICULATIONS A ROTULES ET ARTICULATIONS PIVOTANTES

1. Vérifier s'il n'y a pas de jeu aux articulations. Si le goujon de la rotule ou de l'articulation pivotante est usé, si son jeu axial est excessif ou si sa manoeuvre est difficile, remplacer l'unité complète.
   Force d'oscillation (point de mesure : l'orifice de goupille fendue) ''A'' :
   Rotule
   15,7 - 147,1 N (1,6 - 15,0 kg)
   Couple de rotation ''B'' :
   Rotule
   0,5 - 4,9 N·m (5 - 50 kg-cm)
   Articulation pivotante
   1,0 - 5,9 N·m (10 - 60 kg-cm)
   Jeu axial ''C'' :
   Rotule et articulation pivotante
   0 mm
2. Vérifier l'état du cache-poussière. S'il est excessivement craquelé, remplacer l'unité complète.

ATTENTION :
Veiller à ne pas laisser les cônes des articulations entrer en contact avec de la graisse ou de l'huile.

ENSEMBLE DE LEVIER INTERMEDIAIRE

- Vérifier si la bague de caoutchouc de l'arbre intermédiaire n'est pas brisée, abîmée, ou qu'elle ne présente pas de jeu. La remplacer si nécessaire.
- Lubrifier l'ensemble d'arbre intermédiaire avec de la graisse à usages multiples, si nécessaire.

Simpo PDF Merge and Split Unregistered Version - http://www.simpopdf.com

Inspection (Suite)

BARRE INTERMEDIAIRE DE DIRECTION ET BARRE D'ACCOUPLEMENT

Vérifier si les barres d'accouplement et les barres intermédiaires de direction ne sont pas brisées, tordues ou fissurées, et les remplacer par des pièces neuves si nécessaire.

EMPLACEMENT DES FIXATIONS

- Vérifier si les points de fixation (écrous et goupilles fendues) ne sont pas desserrés, n'ont pas de jeu et ne sont pas brisés.
- Lorsqu'on décèle un desserrement ou un jeu, contrôler que la partie conique des articulations, de l'axe de pignon ou du bras intermédiaire n'est pas usée.
- Pour le remontage de chaque articulation, utiliser des goupilles fendues neuves.

Simpo PDF Merge and Split Unregistered Version - http://www.simpopdf.com

Caractéristiques générales

Type de colonne de direction (dépliable)	Direction manuelle	Direction assistée	
	2x2	2x2	4x4
Type de boîtier de direction	VB66K	PB48S	PB59K
Tours du volant sur le véhicule (de butée à butée)	5,8	3,6	3,7
Rapport du mécanisme de direction	24,4 - 26,8	16,5	17

Jeu axial du volant	mm	0
Jeu du volant	mm	35 ou moins

Inspection et réglage

COLONNE DE DIRECTION

Unité : mm

	Dimension "L"
Moteur KA24 avec conduite à droite	822,1 - 823,7
Sauf moteur KA24 avec conduite à droite	866,1 - 867,7

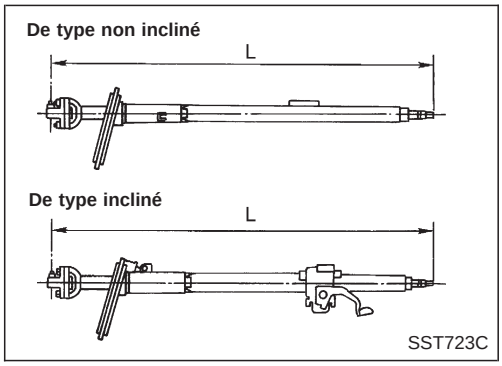

Simpo PDF Merge and Split Unregistered Version - http://www.simpopdf.com

BOITIER DE DIRECTION MANUELLE (modèle : VB66K)

Précharge du roulement de vis sans fin N·m (kg-cm)	0,69 - 0,88 (7,0 - 9,0)	
Couple de rotation du boîtier de direction N·m (kg-cm)		
à 360° de la position de marche en ligne droite	0,69 - 0,88 (7,0 - 9,0)	
Position de marche en ligne droite (par rapport à une rotation du volant de 360°)	0,20 - 0,39 (2,0 - 4,0) plus élevée	
Couple de rotation maximum	1,08 (11,0)	
Battement à l'extrémité supérieure de la bielle pendante (position de marche en ligne droite) mm	0 - 0,1	
Jeu axial (entre l'arbre de secteur et la vis de réglage) mm	0,1 ou moins	
Epaisseur de cales de réglage	Epaisseur mm	Numéro de pièce
	1,95	48129-84500
	2,00	48130-84500
	2,05	48131-84500
Contenance en huile ℓ	env. 0,62	

TIMONERIE DE DIRECTION

Modèle concerné	2x2	4x4
Articulation pivotante de biellette d'accouplement		
Couple de rotation N·m (kg-cm)	–	1,0 - 5,9 (10 - 60)
Jeu axial mm	–	0
Rotules de barre et de biellette d'accouplement		
Force d'oscillation à l'orifice de goupille fendue N (kg)	15,7 - 147,1 (1,6 - 15,0)	
Couple de rotation N·m (kg-cm)	0,5 - 4,9 (5 - 50)	
Jeu axial mm	0	
Longueur standard de barre d'accouplement (L) mm	343,9	297,6

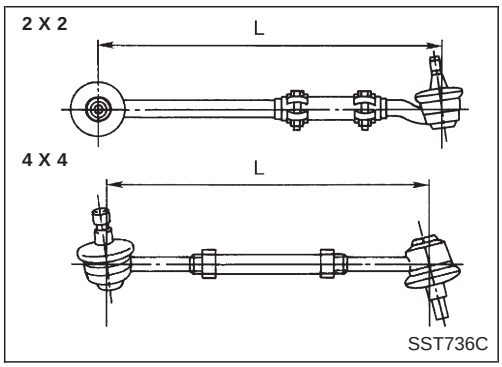

DIRECTION ASSISTEE (modèle : PB48S)

Force de rotation du volant (à 360° de la position neutre et à la circonférence du volant) N (kg)	24,5 - 29,4 (2,5 - 3,0)	
Pression de la pompe à huile kPa (bar, kg/cm^2)	7 649 - 8 238 (76,5 - 82,4, 78 - 84) au ralenti	
Contenance en liquide mℓ	Environ 900 - 1 000	
Température normale de fonctionnement °C	60 - 80	
Couple de rotation du boîtier de direction N·m (kg-cm)		
à 360° de la position de marche en ligne droite	0,7 - 1,2 (7 - 12)	
Position de marche en ligne droite (par rapport à une rotation du volant de 360°)	0,1 - 0,4 (1 - 4) plus élevée	
Couple de rotation maximum	1,1 - 1,6 (11 - 16)	
Battement à l'extrémité supérieure de la bielle pendante (position de marche en ligne droite) mm	0 - 0,1	
Jeu axial (entre l'arbre de secteur et la vis de réglage) mm	0,01 - 0,03	
Epaisseur de cales de réglage	Epaisseur mm	Numéro de pièce
	1 575 - 1 600	48213-B0100
	1 550 - 1 575	48214-B0100
	1 525 - 1 550	48215-B0100
	1 500 - 1 525	48216-B0100
	1 475 - 1 500	48217-B0100
	1 450 - 1 475	48218-B0100

Simpo PDF Merge and Split Unregistered Version - http://www.simpopdf.com

DIRECTION ASSISTEE (modèle : PB59K)

Force de rotation du volant (à 360° de la position neutre et à la circonférence du volant) N (kg)	39 (4) ou moins
Pression de la pompe à huile kPa (bar, kg/cm^2)	7 649 - 8 238 (76,5 - 82,4, 78 - 84) au ralenti
Contenance en liquide mℓ	Environ 1 000 à 1 100
Température normale de fonctionnement °C	60 - 80
Couple de rotation du boîtier de direction N·m (kg-cm)	
à 360° de la position de marche en ligne droite	0,15 - 0,78 (1,5 - 8,0)
Position de marche en ligne droite (par rapport à une rotation du volant de 360°)	0,2 - 0,5 (2 - 5) plus élevée
Couple de rotation maximum	0,44 - 1,18 (4,5 - 12)
Battement à l'extrémité supérieure de la bielle pendante (position de marche en ligne droite) mm	0 - 0,1
Jeu axial (à l'extrémité de l'arbre de secteur en position neutre) mm	0,1 ou moins

Simpo PDF Merge and Split Unregistered Version - http://www.simpopdf.com

BOITE DE TRANSFERT

SECTION **TF**

TABLE DES MATIERES

PREPARATION 1
Outillage spécial 1
Outillage en vente dans le commerce 2
DESCRIPTION 3
Vue en coupe 3
ENTRETIEN SUR LE VEHICULE 4
Remplacement du joint d'huile 4
Vérification du contact de position 5
DEPOSE ET REPOSE 6
Dépose 6
Repose 6
COMMANDE DE BOITE DE TRANSFERT 7
REVISION MAJEURE 8
Composants du carter 8
Composants de la boîte 9
Composants de la commande des vitesses 10
DEMONTAGE 11
REPARATION DES COMPOSANTS 16
Arbre secondaire 16
Semi-arbre avant 18
Pignon de renvoi 19
Pignon principal 19
Carter avant 21
Couvercle de carter avant 21
Retenue de roulement 22
Carter arrière 22
Composants de la commande des vitesses 23
REMONTAGE 24
CARACTERISTIQUES ET VALEURS DE REGLAGE (SDS) 31
Caractéristiques générales 31
Inspection et réglage 31

Simpo PDF Merge and Split Unregistered Version - http://www.simpopdf.com

Outillage spécial

Numéro de l'outil Nom de l'outil	Description	
ST38060002 Clé pour flasque	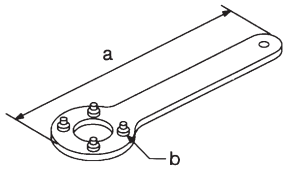 NT428	Dépose de l'écrou du flasque d'accouplement Repose de l'écrou du flasque d'accouplement **a : 480 mm** **b : Dia. du pas : 75 mm** **Dia. de l'axe : 10 mm**
ST30021000 Extracteur	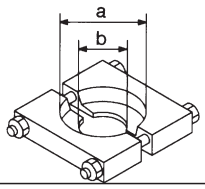 NT411	Dépose du roulement avant du pignon de renvoi (à utiliser avec l'outil spécial ST36710010) Dépose du moyeu de rapport lent et élevé **a : ϕ 110 mm** **b : ϕ 68 mm**
ST30031000 Extracteur	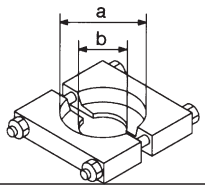 NT411	Dépose du roulement arrière du pignon de renvoi (à utiliser avec l'outil spécial ST36710010) **a : ϕ 90 mm** **b : ϕ 50 mm**
ST33290001 Extracteur	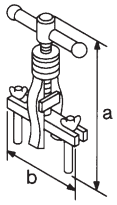 NT414	Dépose du joint d'huile du carter central Dépose du joint d'huile arrière **a : 250 mm** **b : 160 mm**
ST33051001 Extracteur	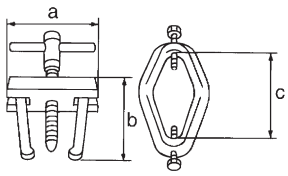 NT657	Dépose du flasque d'accouplement **a : 135 mm** **b : 100 mm** **c : 130 mm**
ST30720000 Chassoir	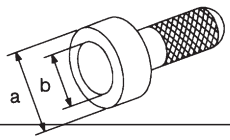 NT115	Repose du joint d'huile du carter central Repose du joint d'huile arrière **a : ϕ 77 mm** **b : ϕ 55,5 mm**
ST36710010 Chassoir	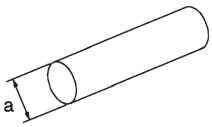 NT063	Dépose du roulement avant du pignon de renvoi (à utiliser avec l'outil spécial ST30021000) Dépose du roulement arrière du pignon de renvoi (à utiliser avec l'outil spécial ST30031000) **a : ϕ 34,5 mm**
ST33061000 Chassoir	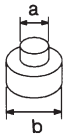 NT116	Dépose du roulement du pignon principal **a : ϕ 28,5 mm** **b : ϕ 38 mm**

Simpo PDF Merge and Split Unregistered Version - http://www.simpopdf.com

Outillage spécial (Suite)

Numéro de l'outil Nom de l'outil	Description	
ST30613000 Chassoir	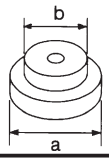 NT073	Repose du roulement de pignon principal Repose du joint d'huile du couvercle **a : ϕ 72 mm** **b : ϕ 48 mm**

Outillage en vente dans le commerce

Nom de l'outil	Description	
Extracteur	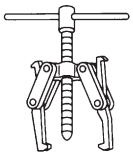 NT077	Dépose du roulement avant du semi-arbre avant Dépose du roulement arrière du semi-arbre avant Dépose du roulement du pignon principal
Chassoir	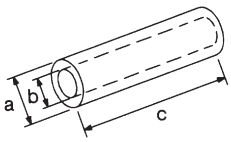 NT117	① Repose du roulement arrière de l'arbre secondaire ② Repose du moyeu de rapport lent et élevé ③ Repose du joint d'huile d'arbre de passage des vitesses ① **a : ϕ 50 mm** **b : ϕ 42 mm** **c : 180 mm** ② **a : ϕ 60 mm** **b : ϕ 50 mm** **c : 60 mm** ③ **a : ϕ 26 mm** **b : ϕ 20 mm** **c : 150 mm**

Simpo PDF Merge and Split Unregistered Version - http://www.simpopdf.com

Vue en coupe

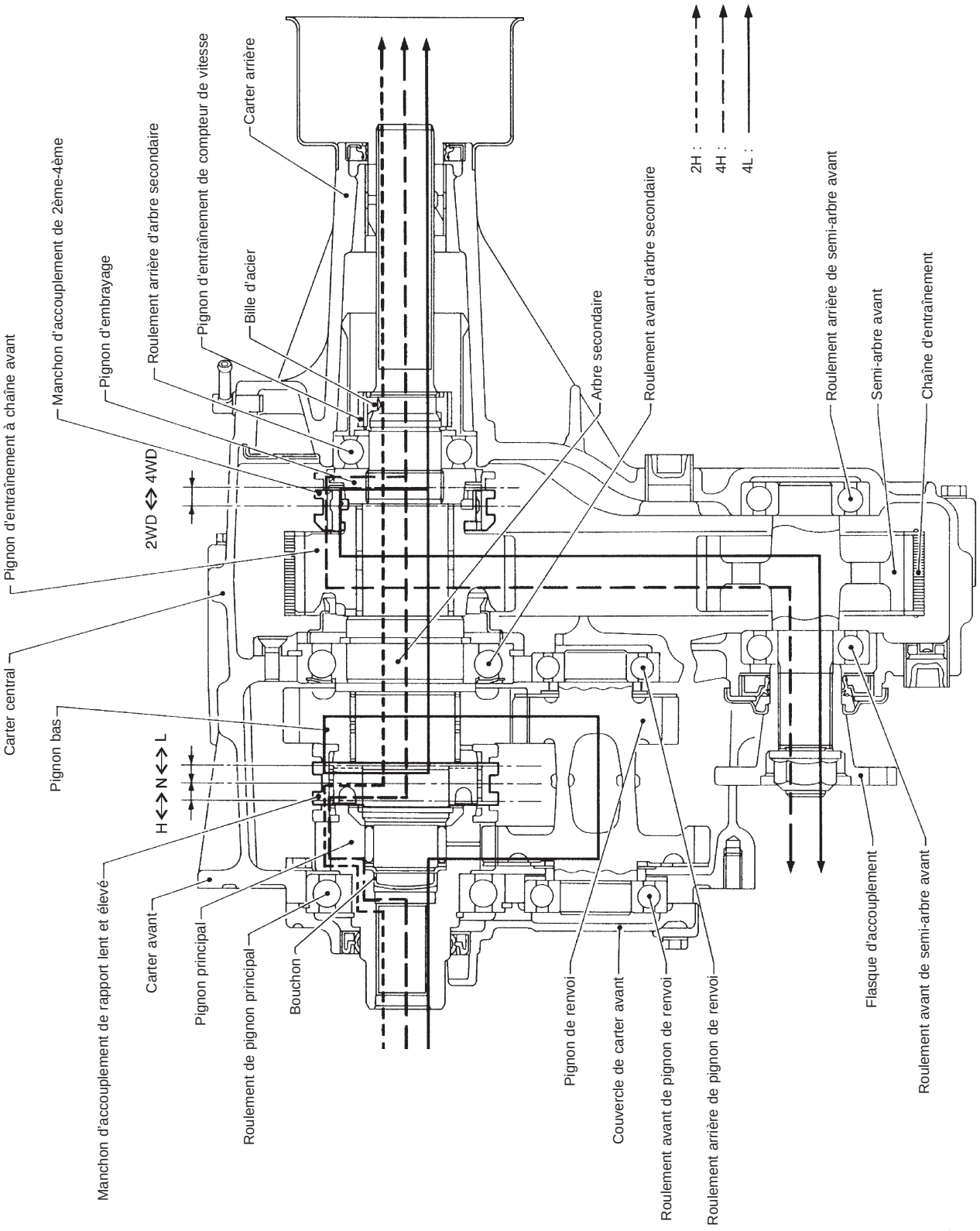

SMT598D

Simpo PDF Merge and Split Unregistered Version - http://www.simpopdf.com

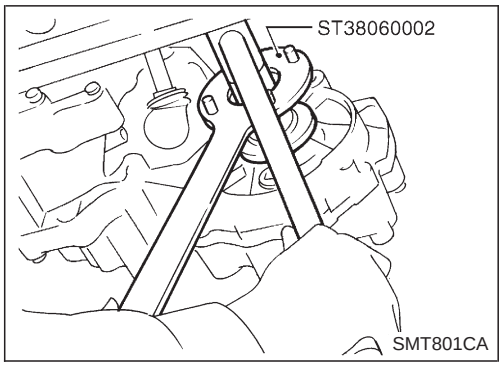

Remplacement du joint d'huile

JOINT D'HUILE DU CARTER CENTRAL

1. Déposer le tuyau d'échappement avant et l'isolant thermique. Se reporter à ''Dépose'', TF-6.
2. Déposer l'arbre de transmission avant. Se reporter à la section PD (''Dépose et repose'', ''ARBRE DE TRANSMISSION'').
3. Déposer l'écrou du flasque d'accouplement.

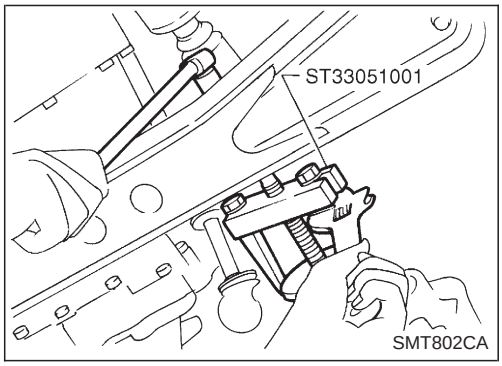

4. Déposer le flasque d'accouplement.

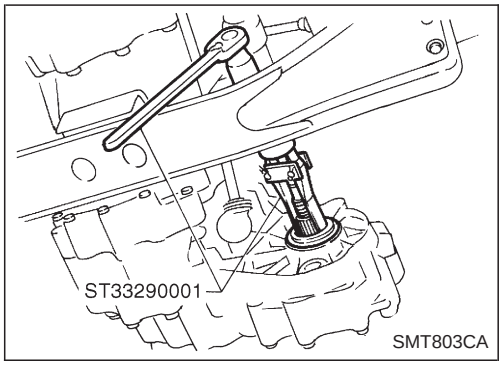

5. Déposer le joint d'huile du carter central.
6. Reposer le joint d'huile du carter central.
- **Avant la repose, appliquer de la graisse à usages multiples sur la lèvre du joint.**
7. Reposer le flasque d'accouplement.

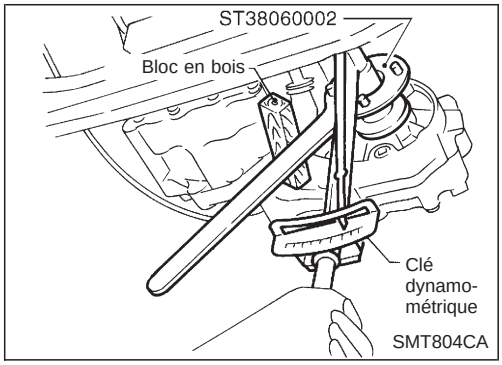

8. Serrer l'écrou au couple spécifié.
9. Reposer l'arbre de transmission avant.

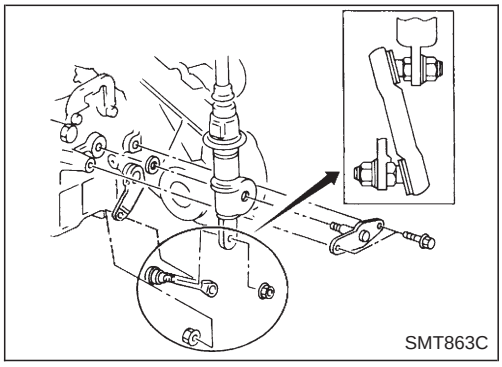

JOINT D'HUILE DE L'ARBRE DE PASSAGE DES VITESSES

1. Déposer l'arbre de transmission avant. Se reporter à la section PD (''Dépose et repose'', ''ARBRE DE TRANSMISSION'').
2. Déposer le flasque d'accouplement. Se reporter au joint d'huile du carter central, ci-dessus.
3. Déposer le levier de commande de la boîte de transfert du levier de passage externe de la boîte de transfert. Puis déposer le levier de passage externe.

Simpo PDF Merge and Split Unregistered Version - http://www.simpopdf.com

Remplacement du joint d'huile (Suite)

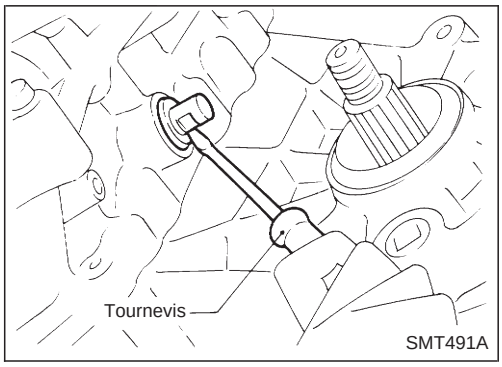

4. Déposer le joint d'huile de l'arbre de passage des vitesses.
● **Veiller à ne pas endommager l'arbre transversal.**

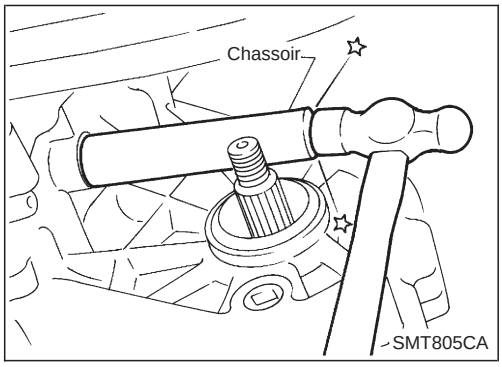

5. Reposer le joint d'huile de l'arbre de passage des vitesses.
● **Avant la repose, appliquer de la graisse à usages multiples sur la lèvre du joint.**
6. Reposer la timonerie de commande de la boîte de transfert.
7. Reposer le flasque d'accouplement. Se reporter au joint d'huile du carter central, TF-4.
8. Reposer l'arbre de transmission avant.

JOINT D'HUILE ARRIERE

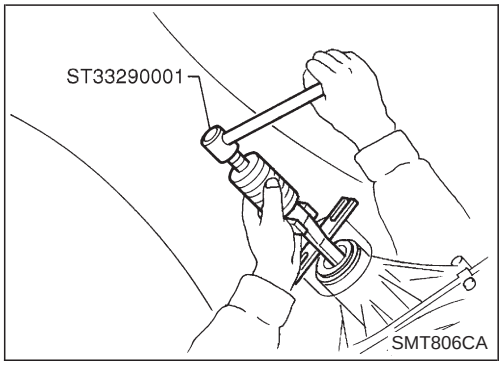

1. Déposer l'arbre de transmission arrière. Se reporter à la section PD (''Dépose et repose'', ''ARBRE DE TRANSMISSION'').
2. Déposer le joint d'huile arrière.

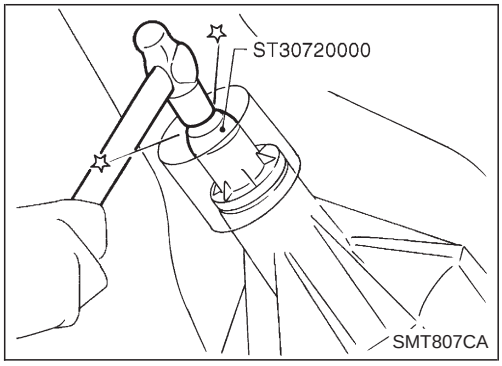

3. Reposer le joint d'huile arrière.
● **Avant la repose, appliquer de la graisse à usages multiples sur la lèvre du joint.**
4. Reposer l'arbre de transmission arrière.

Vérification du contact de position

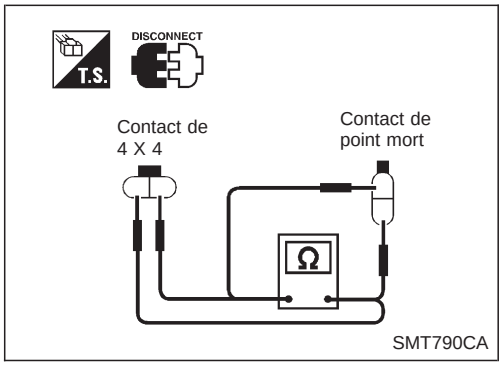

Contact	Position de pignon	Continuité
Contact de 4 X 4	4 X 4	Oui
	Sauf 4 X 4	Non
Contact de point mort	Point mort	Oui
	Sauf point mort	Non

Simpo PDF Merge and Split Unregistered Version - http://www.simpopdf.com

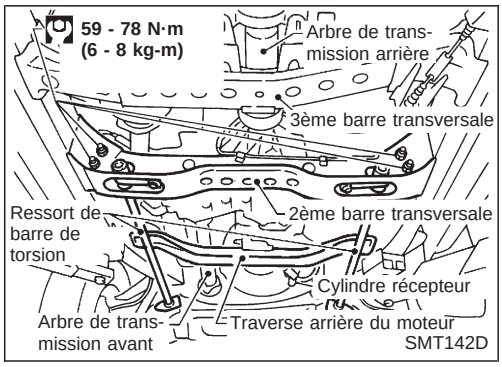

Dépose

1. Vidanger l'huile des boîtes de transfert et de vitesses.
2. Déposer l'arbre de transmission avant et arrière. Se reporter à la section PD (''Dépose et repose'', ''ARBRE DE TRANSMISSION'').
   Introduire le bouchon dans le joint d'huile arrière après avoir déposé l'arbre de transmission.
   - **Veiller à ne pas endommager la cannelure, la chape à manchon et le joint d'huile arrière lors de la dépose de l'arbre de transmission.**
3. Déposer le ressort de la barre de torsion. Se reporter à la section FA (''Ressort de barre de torsion'', ''SUSPENSION AVANT''). Puis déposer la deuxième barre transversale.
4. Débrancher les contacts de 4 X 4 et de point mort.

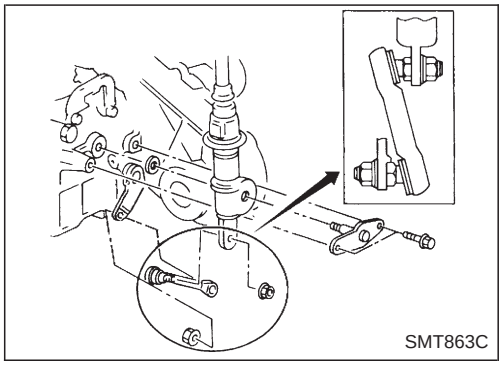

5. Déposer le levier de commande de la boîte de transfert du levier de passage externe de la boîte de transfert.
6. Séparer la boîte de transfert de la boîte de vitesses.

ATTENTION :
Soutenir la boîte de transfert lors de sa dépose.

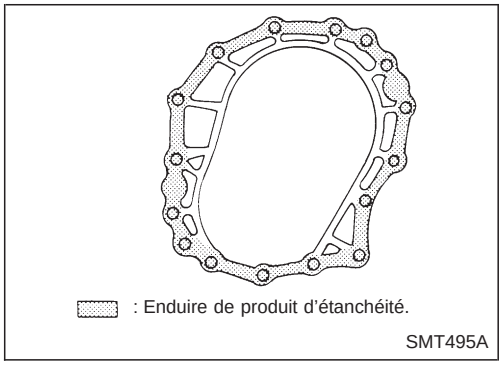

Repose

- Enduire de produit d'étanchéité recommandé la surface d'appui de la boîte de vitesses.
  Produit d'étanchéité recommandé :
  Pièce Nissan d'origine KP610-00250, Three Bond 1215 ou équivalent

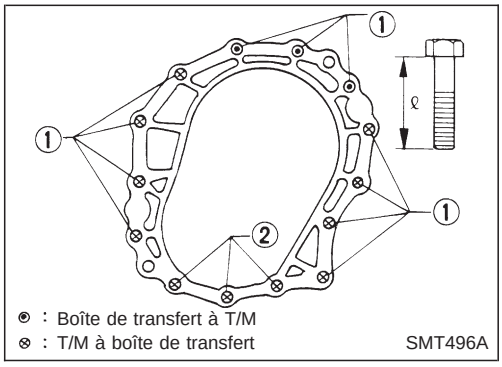

- Serrer les boulons de fixation de la boîte de transfert.

N° de boulon	Couple de serrage N·m (kg-m)	ℓ mm
①	31 à 41 (3,2 à 4,2)	45
②	31 à 41 (3,2 à 4,2)	60

Simpo PDF Merge and Split Unregistered Version - http://www.simpopdf.com

SEC. 333

: N·m (kg-m)
: N·m (kg-m)
1 : Remplir de graisse à usages multiples.
2 : Enduire de graisse à usages multiples.
*1 : Plier les cliquets pour la repose. Veiller à ne pas endommager le soufflet.
*2 : Ne pas toucher le soufflet avec un outil pointu ou dur car il est fragile.

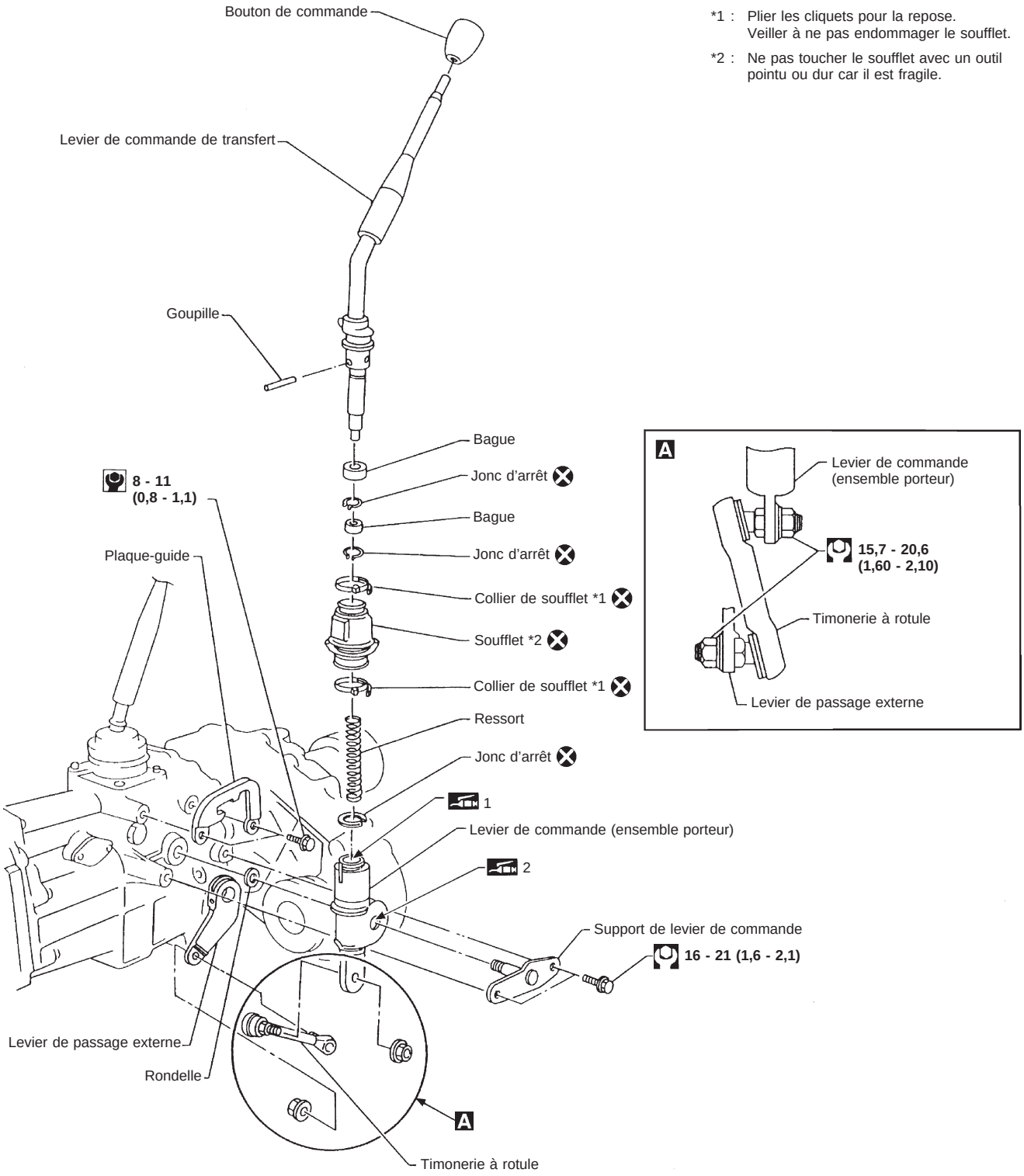

SMT864CB

Simpo PDF Merge and Split Unregistered Version - http://www.simpopdf.com

Composants du carter

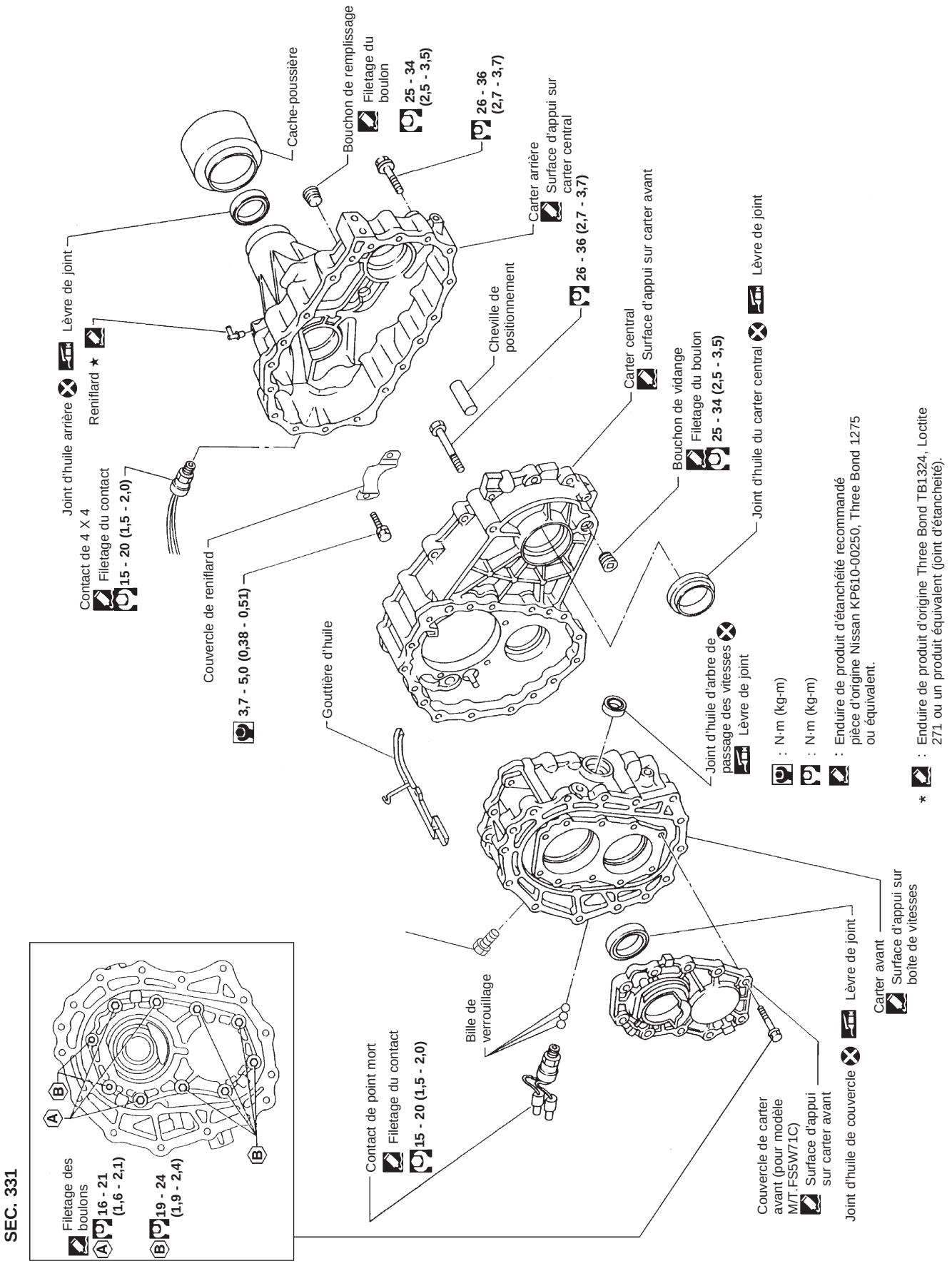

SMT599D

Simpo PDF Merge and Split Unregistered Version - http://www.simpopdf.com

Composants de la boîte

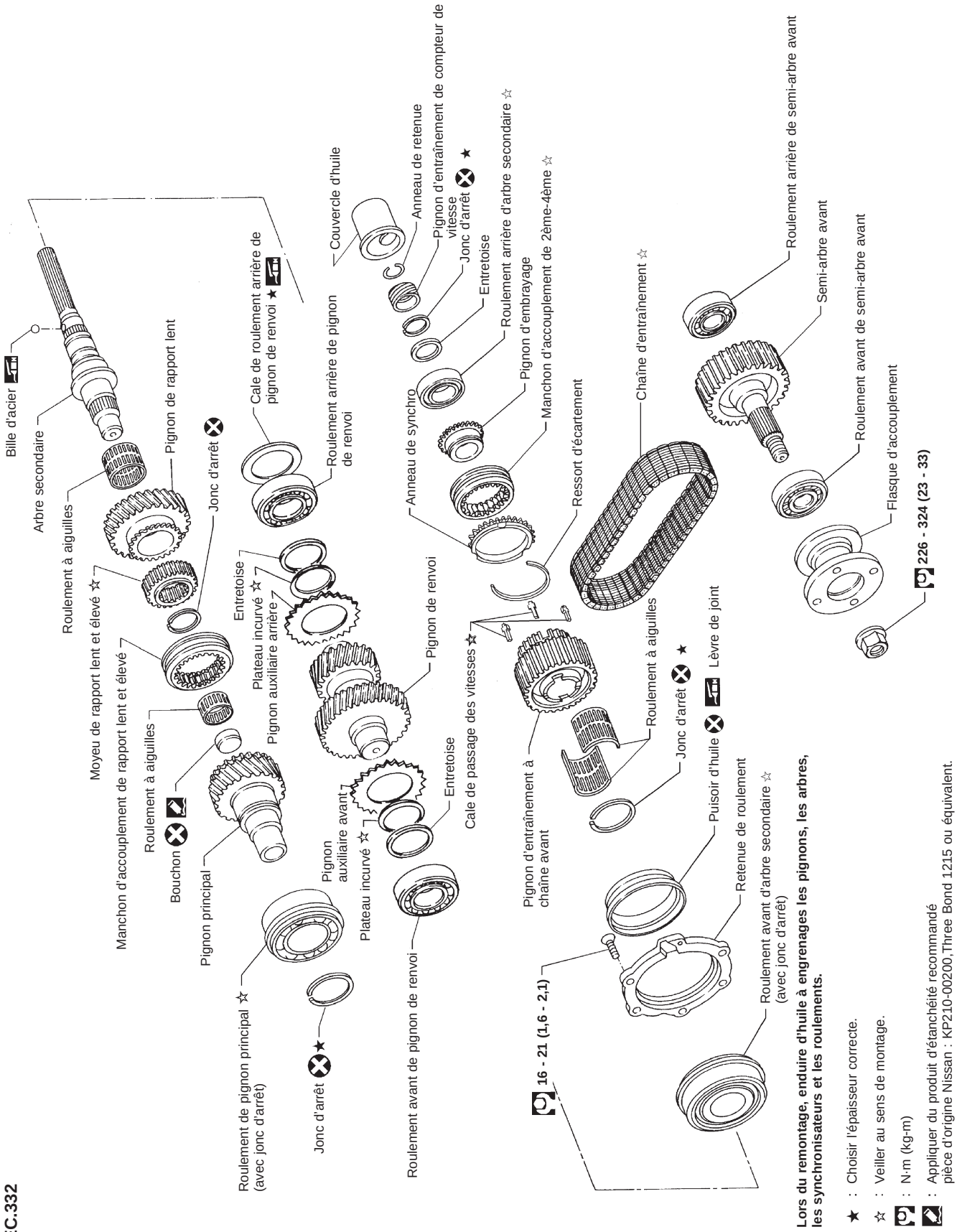

SEC.332

SMT141DA

Simpo PDF Merge and Split Unregistered Version - http://www.simpopdf.com

Composants de la commande des vitesses

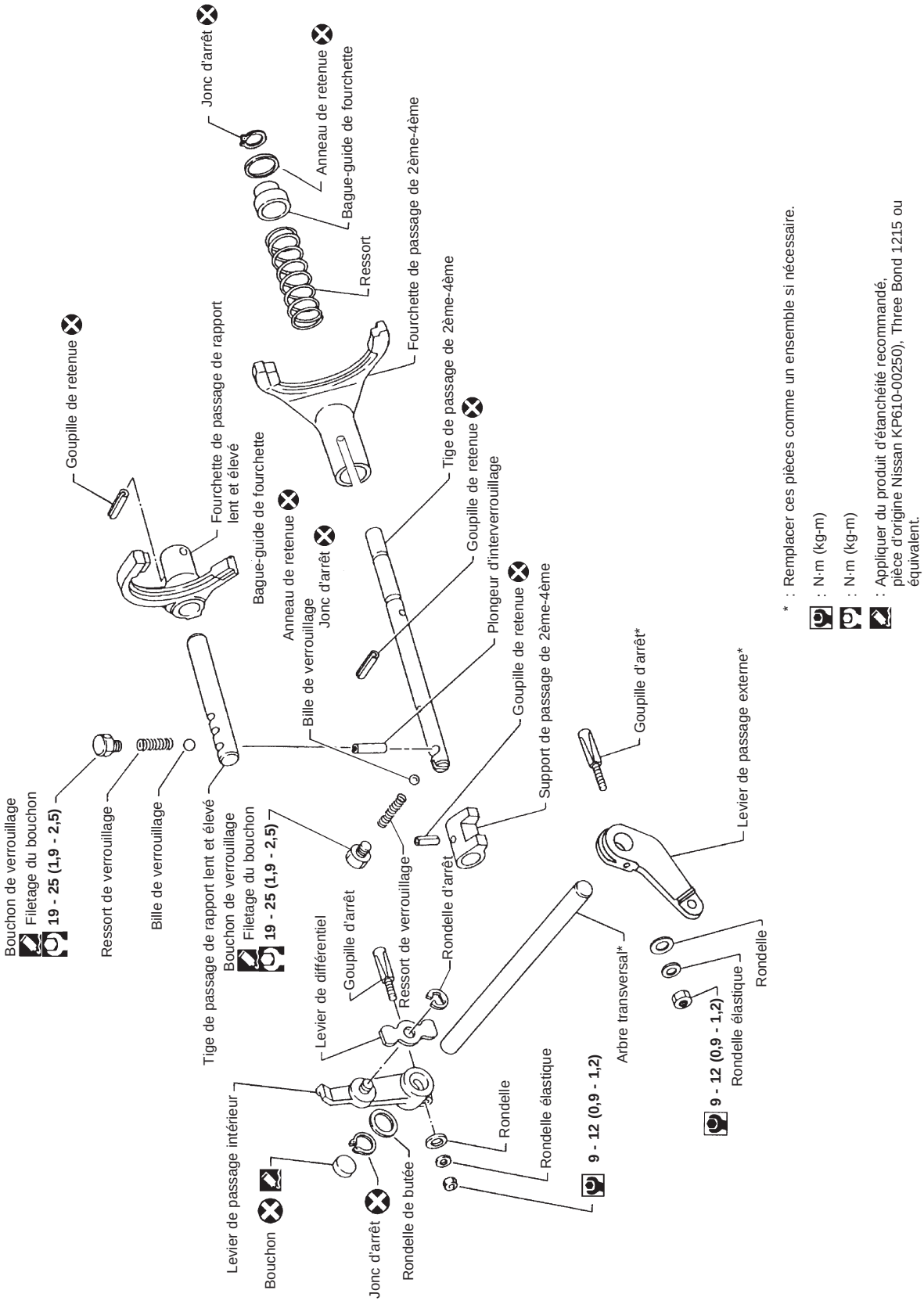

SMT600D

Simpo PDF Merge and Split Unregistered Version - http://www.simpopdf.com

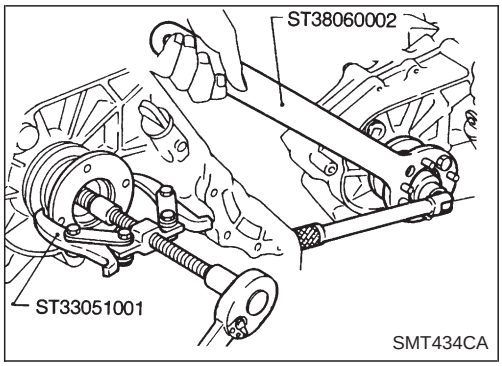

1. Déposer l'écrou du flasque d'accouplement.
2. Déposer le flasque d'accouplement.

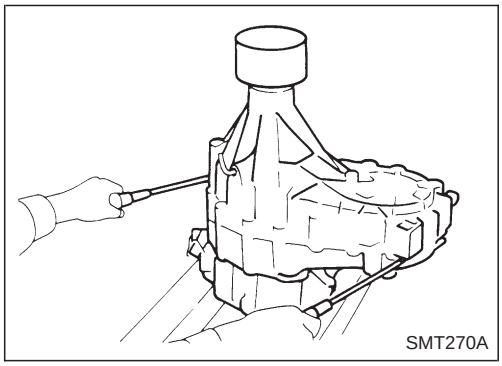

3. Déposer le contact de 4 X 4.
4. Déposer le carter arrière.

● **Veiller à ne pas endommager la surface d'appui.**

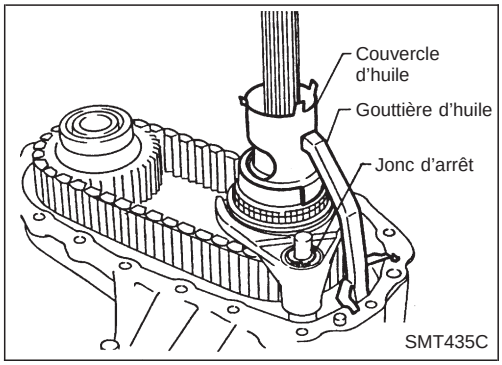

5. Déposer le couvercle et la gouttière d'huile.
6. Déposer le jonc d'arrêt et l'anneau de retenue de la tige de passage de 2ème-4ème.

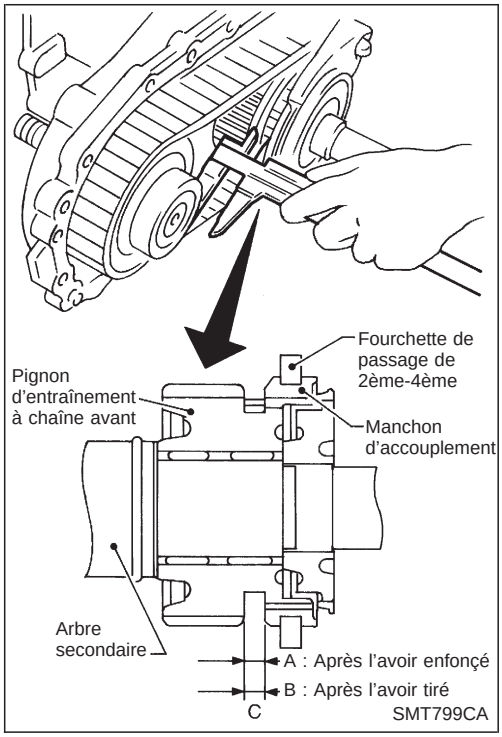

7. A l'aide de calibres, mesurer la différence entre le pignon d'entraînement à chaîne avant et le manchon d'accouplement de 2ème-4ème comme indiqué dans la Méthode de mesure ci-dessous. Si hors spécifications, vérifier que le pignon d'entraînement à chaîne avant, le manchon d'accouplement de 2ème-4ème, le pignon d'embrayage, la fourchette de passage de 2ème-4ème et l'axe de fourchette de 2ème-4ème ne présentent pas de défauts. Remplacer la(les) pièce(s) défectueuse(s) si nécessaire.

Méthode de mesure

a. Déplacer le manchon d'accouplement jusqu'à ce qu'il entre en contact avec le pignon à chaîne, puis mesurer la dimension A. Déplacer le manchon d'accouplement jusqu'à ce qu'il entre en contact avec le pignon d'embrayage, puis mesurer la dimension B. Calculer la différence de dimension C entre les deux mesures A et B.

C = A − B

b. Pour déterminer la dimension A, mesurer à 3 ou 4 endroits différents en tournant le pignon à chaîne pour obtenir une valeur moyenne sur 3 à 4 mesures.

Spécification C :

Se reporter à TF-31.

Simpo PDF Merge and Split Unregistered Version - http://www.simpopdf.com

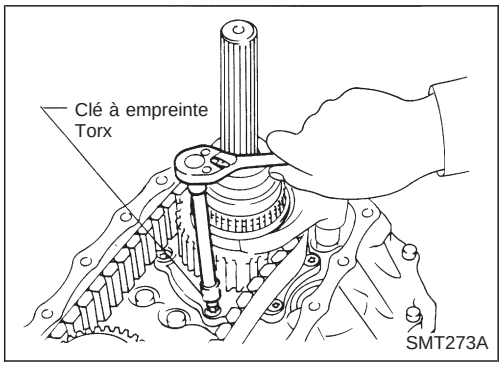

8. Déposer les boulons fixant la retenue de roulement.
- **Cette étape est indispensable pour pouvoir déposer l'arbre secondaire du carter central.**

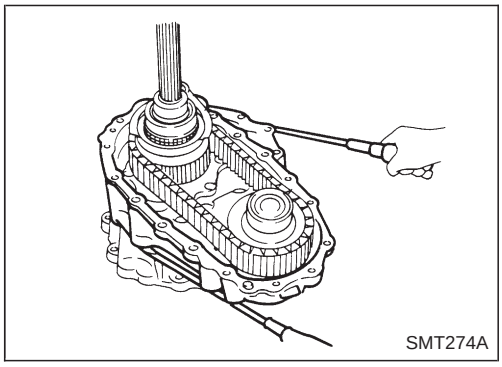

9. Déposer les boulons fixant le carter central au carter avant, puis séparer le carter central du carter avant.

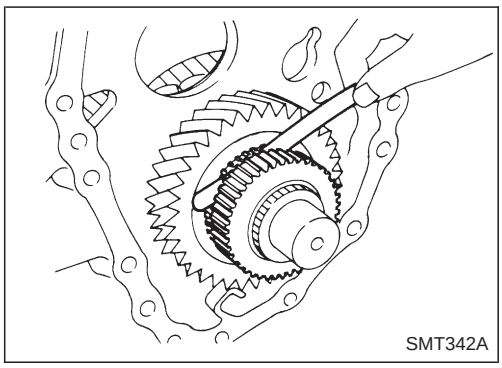

10. Mesurer le jeu axial du pignon de rapport lent.
Standard :
0,2 - 0,35 mm
- **Si le jeu axial dépasse la valeur maximum, vérifier si le pignon de rapport lent et le moyeu de rapport lent/élevé ne sont pas usés.**

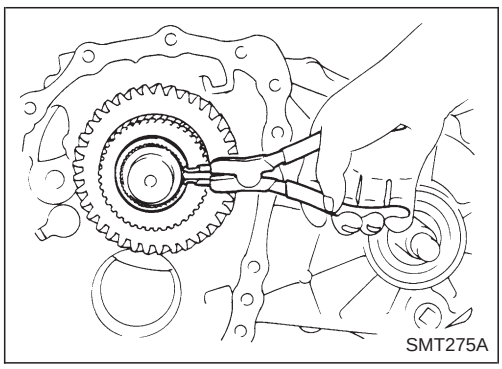

11. Démonter le carter central.
a. Déposer le jonc d'arrêt de l'arbre secondaire.

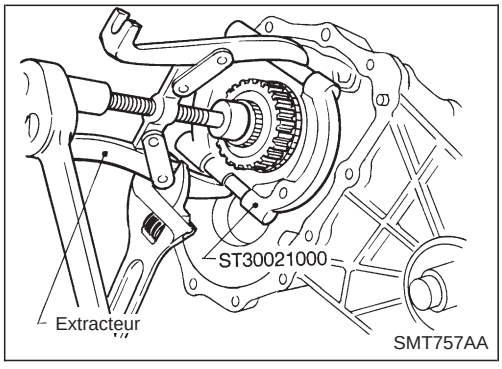

b. Extraire le pignon de rapport lent avec le moyeu de rapport lent/élevé.

Simpo PDF Merge and Split Unregistered Version - http://www.simpopdf.com

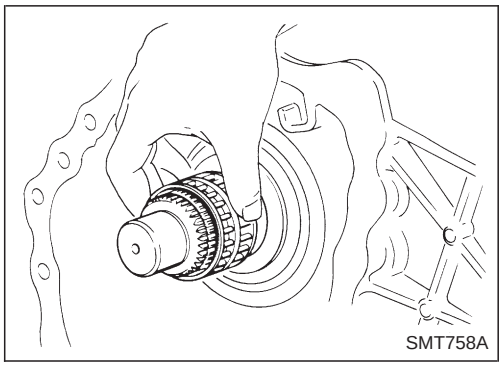
SMT758A

c. Déposer le roulement à aiguilles du pignon de rapport lent.

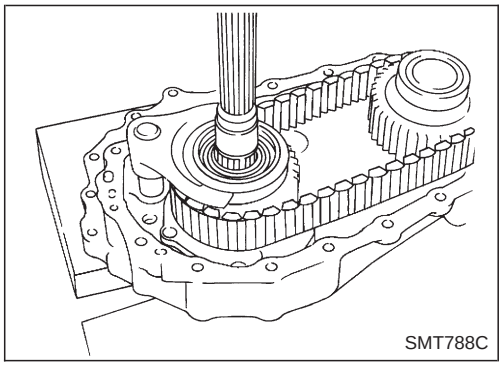
SMT788C

d. S'assurer que la chaîne d'entraînement est correctement orientée avant de la déposer (elle doit être reposée dans la même direction).

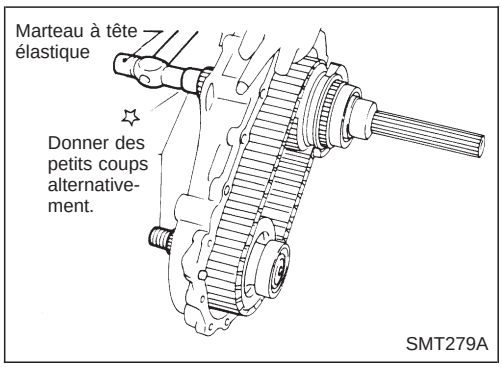

SMT279A

e. Déposer l'arbre secondaire, le pignon d'entraînement avant et la chaîne d'entraînement comme un ensemble en frappant alternativement sur l'extrémité avant de l'arbre secondaire et du semi-arbre avant.
- **Veiller à ne pas tordre la chaîne d'entraînement.**

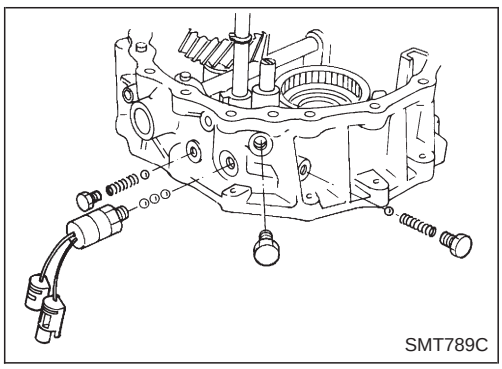
SMT789C

12. Démonter le carter avant.
a. Déposer le contact, les bouchons, les ressorts et les billes de verrouillage.

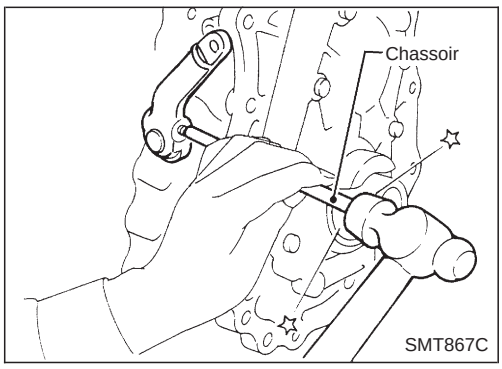

SMT867C

b. Déposer le levier de passage externe.

Simpo PDF Merge and Split Unregistered Version - http://www.simpopdf.com

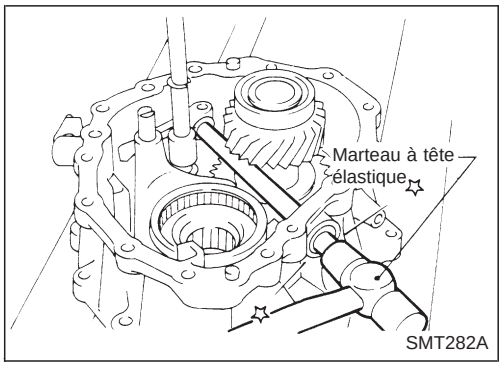

c. Déposer la goupille d'arrêt du levier de passage interne, et chasser l'arbre transversal avec le bouchon.

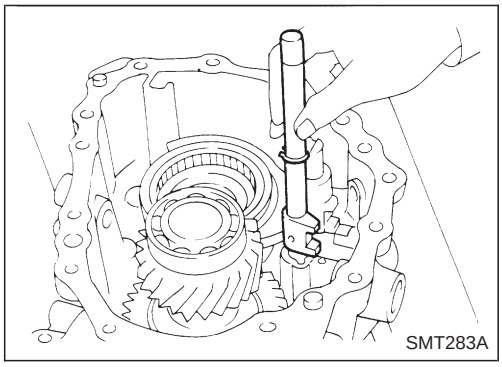

d. Déposer la tige de passage de 2ème-4ème.

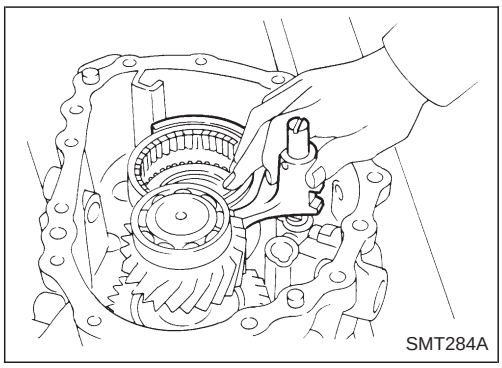

e. Déposer la fourchette et la tige de passage de rapport lent/élevé avec le manchon d'accouplement.

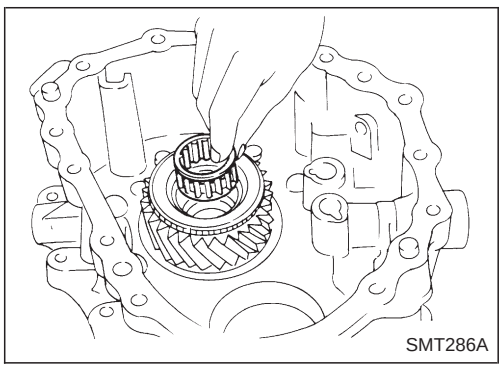

f. Déposer le roulement à aiguilles du pignon principal.

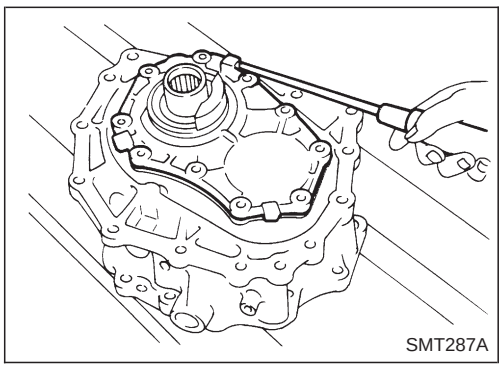

g. Déposer les boulons fixant le couvercle de carter avant, puis déposer le carter.

Simpo PDF Merge and Split Unregistered Version - http://www.simpopdf.com

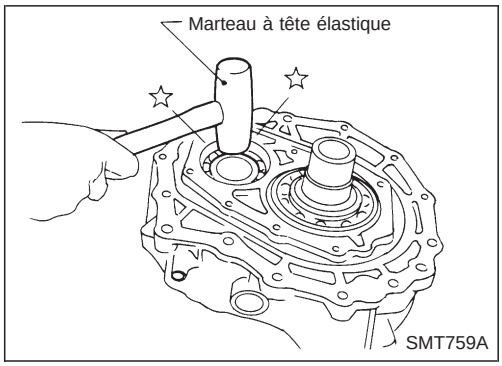

h. Déposer le pignon de renvoi en le frappant légèrement.

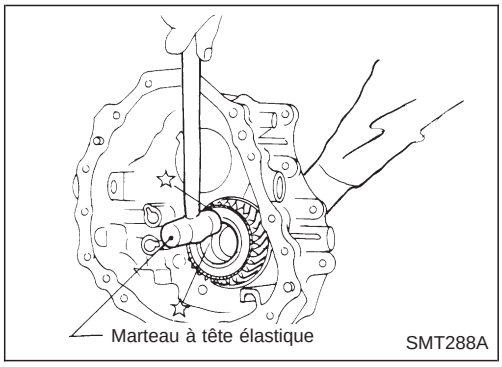

i. Déposer le pignon principal en le frappant légèrement.

Simpo PDF Merge and Split Unregistered Version - http://www.simpopdf.com

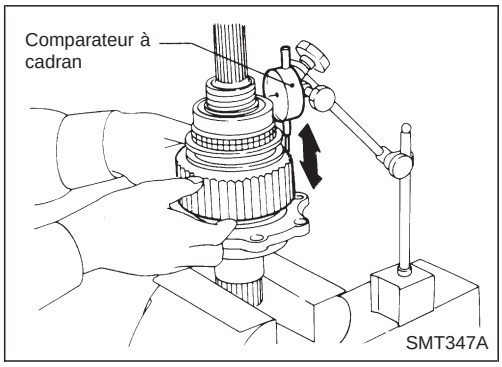

Arbre secondaire

DEMONTAGE

1. Vérifier le jeu axial du pignon d'entraînement à chaîne avant.
   Standard :
   0,2 - 0,35 mm

- **Si le jeu axial dépasse la valeur maximum, vérifier si le pignon d'entraînement à chaîne avant et le pignon d'embrayage ne sont pas usés.**

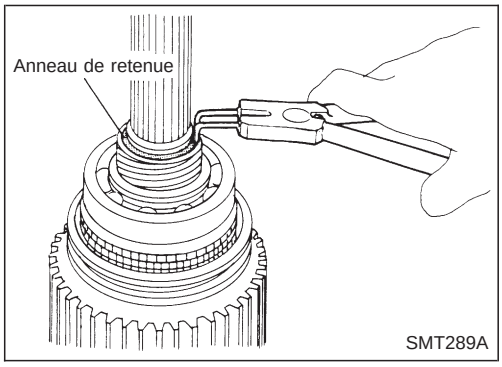

2. Déposer l'anneau de retenue, le pignon d'entraînement du compteur de vitesse et la bille d'acier.

- **Veiller à ne pas perdre la bille d'acier.**

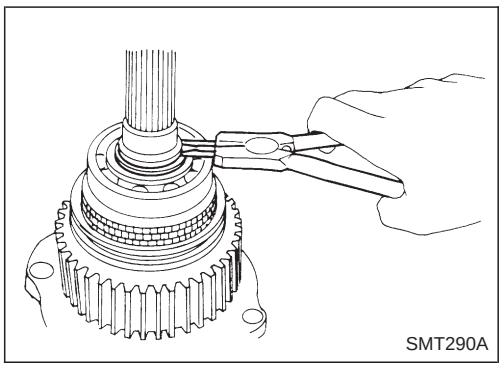

3. Déposer le jonc d'arrêt et l'entretoise.

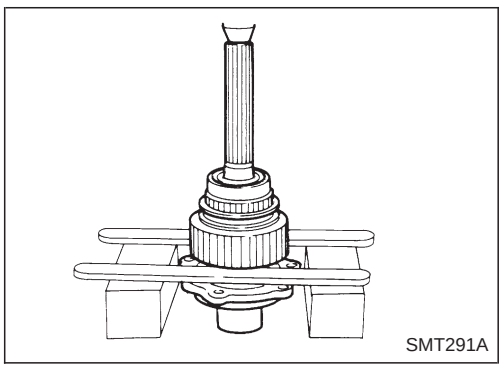

4. Extraire le pignon d'entraînement à chaîne avant avec le roulement arrière d'arbre secondaire et le pignon d'embrayage.
5. Déposer le roulement à aiguilles.

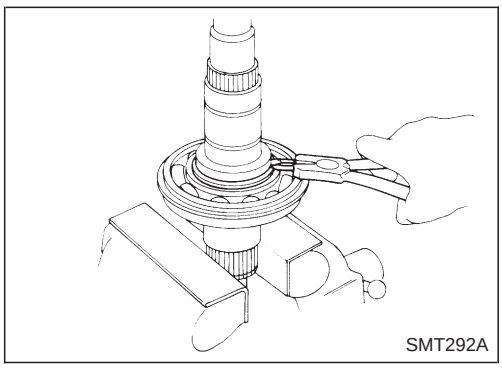

6. Déposer la retenue de roulement, puis déposer le jonc d'arrêt et l'entretoise.

Simpo PDF Merge and Split Unregistered Version - http://www.simpopdf.com

Arbre secondaire (Suite)

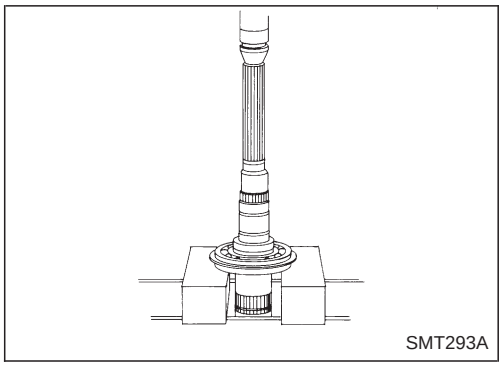
SMT293A

7. Extraire le roulement avant d'arbre secondaire de l'arbre secondaire.

INSPECTION

Pignon et arbre

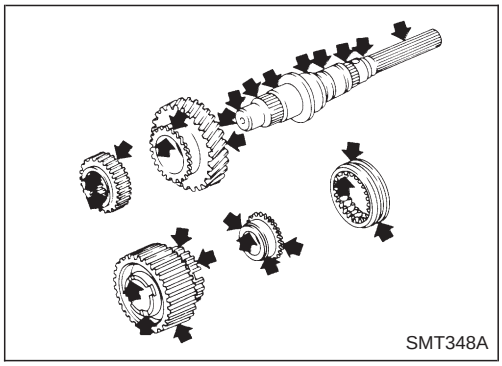
SMT348A

- Vérifier si les pignons ne se sont pas excessivement usés, ébréchés ou fêlés.
- Vérifier que l'arbre ne présente pas de fissures, d'usure ou de voilage.
- Vérifier que le manchon d'accouplement ne présente pas d'usure ou de dommages.

Roulement

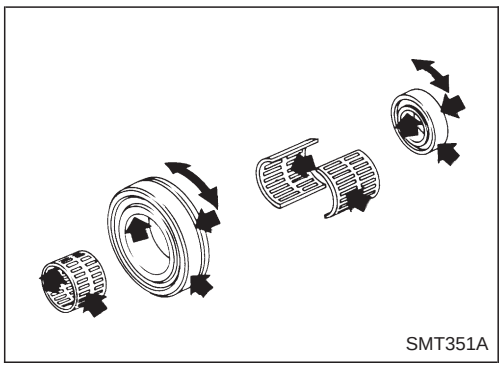
SMT351A

- S'assurer que les roulements tournent librement et qu'ils sont exempts de bruits, fissures, piqûres ou usure.

Anneau de synchro.

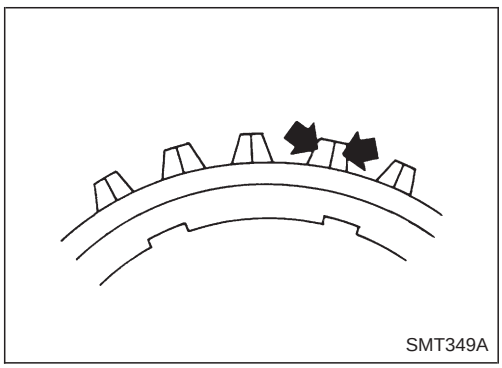
SMT349A

- Vérifier que l'anneau de synchro. ne présente pas de fissures ou de déformations.

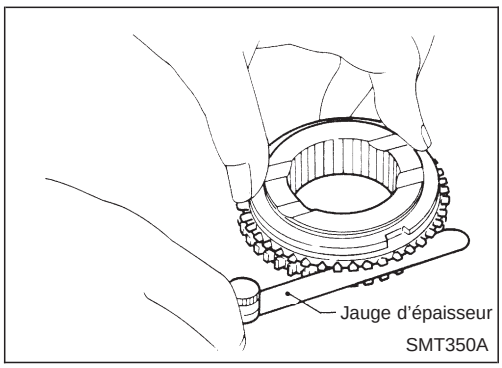

SMT350A

- Mesurer le jeu entre l'anneau de synchro. et le pignon d'embrayage.

  Jeu entre l'anneau de synchro. et le pignon d'embrayage :

  Se reporter aux SDS, TF-31.

Simpo PDF Merge and Split Unregistered Version - http://www.simpopdf.com

Arbre secondaire (Suite)

REMONTAGE

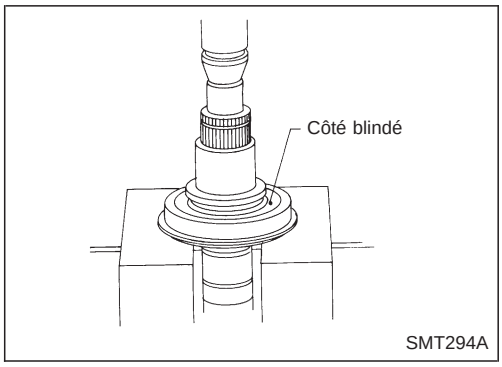

1. Monter à la presse le roulement avant de l'arbre secondaire dans l'arbre secondaire.
   - **Veiller au sens de la repose.**

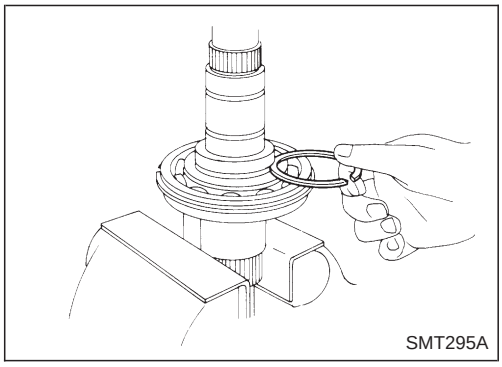

2. Reposer l'entretoise.
3. Choisir un jonc d'arrêt d'épaisseur adéquate, puis le monter.
   Jeu admissible entre le jonc d'arrêt et la rainure :
   0 - 0,15 mm
   Jonc d'arrêt disponible pour roulement avant d'arbre secondaire :
   Se reporter aux SDS, TF-31.
4. En ce qui concerne les autres procédures, se reporter à "REMONTAGE", TF-24.

Semi-arbre avant

DEMONTAGE

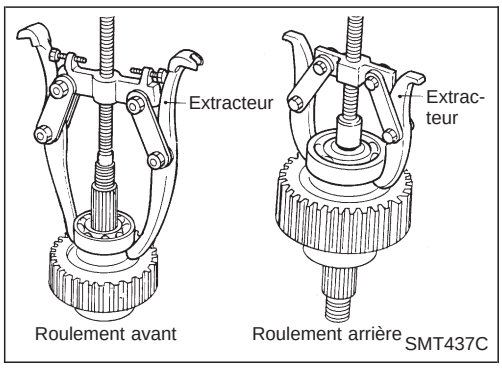

- Roulements avant et arrière du semi-arbre avant

INSPECTION

Pignon à chaîne et arbre

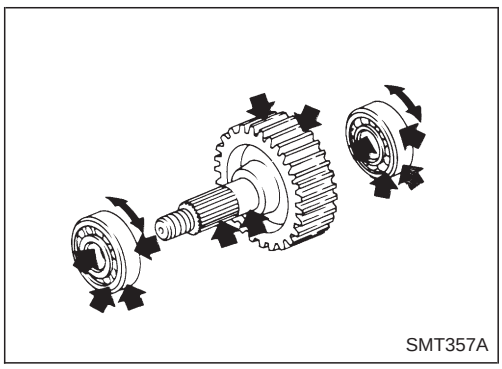

- Vérifier que le pignon à chaîne n'est pas excessivement usé, ébréché ou fêlé.
- Vérifier si l'arbre n'est pas fissuré ou usé.

Roulement

- S'assurer que les roulements tournent librement et qu'ils sont exempts de bruits, fissures, piqûres ou usure.

REMONTAGE

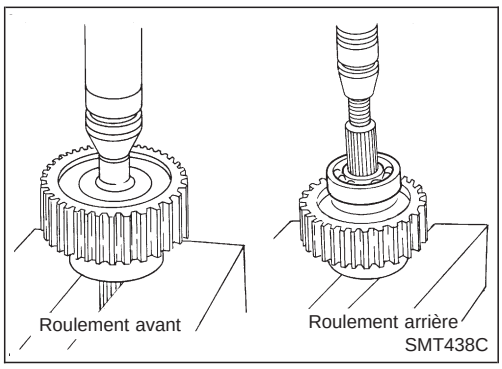

- Monter à la presse les roulements avant et arrière du semi-arbre avant.

Simpo PDF Merge and Split Unregistered Version - http://www.simpopdf.com

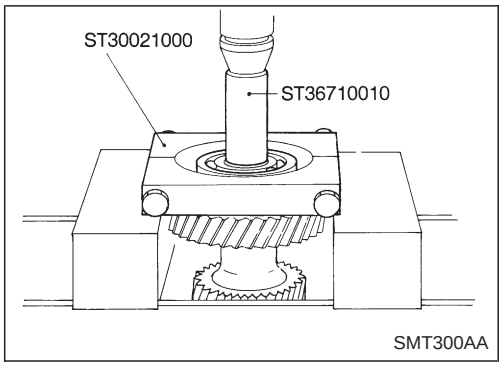

Pignon de renvoi

DEMONTAGE

1. Chasser à la presse le roulement avant du pignon de renvoi.
- Déposer le pignon auxiliaire avant, l'entretoise et le plateau incurvé.

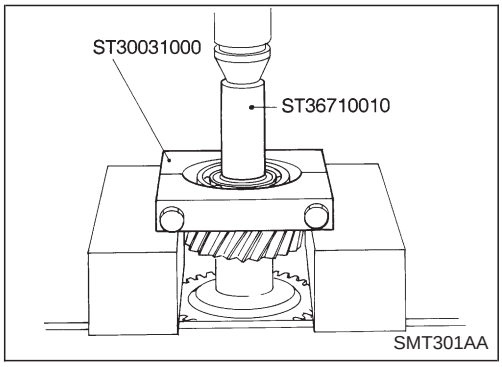

2. Chasser à la presse le roulement arrière du pignon de renvoi, puis déposer le pignon auxiliaire arrière, l'entretoise et le plateau incurvé.

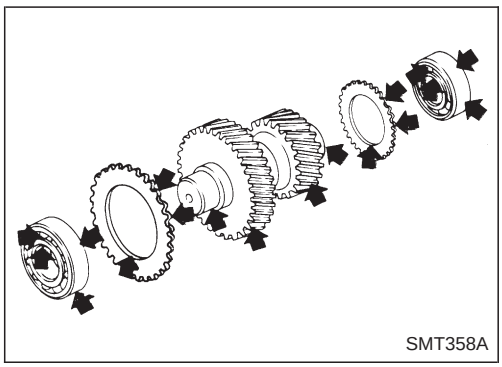

INSPECTION

Pignon et arbre

- Vérifier si les pignons ne sont pas excessivement usés, ébréchés ou fêlés.
- Vérifier si l'arbre n'est pas fissuré ou usé.

Roulement

- S'assurer que les roulements tournent librement et qu'ils sont exempts de bruits, fissures, piqûres ou usure.

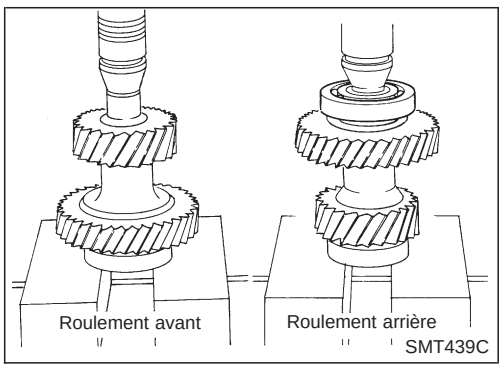

REMONTAGE

1. Reposer le pignon auxiliaire avant, le plateau incurvé et l'entretoise.
- Monter à la presse le roulement avant du pignon de renvoi.
2. Reposer le pignon auxiliaire arrière, le plateau incurvé et l'entretoise, puis monter à la presse le roulement arrière du pignon de renvoi.

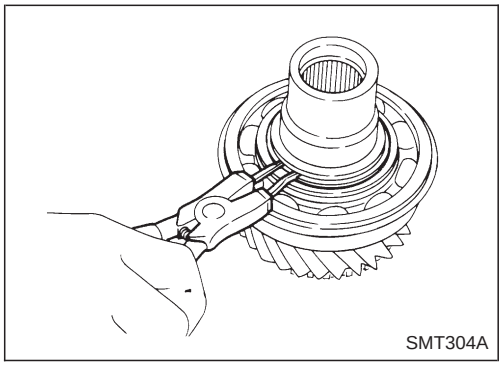

Pignon principal

DEMONTAGE

Roulement de pignon principal

1. Déposer le jonc d'arrêt.

Simpo PDF Merge and Split Unregistered Version - http://www.simpopdf.com

Pignon principal (Suite)

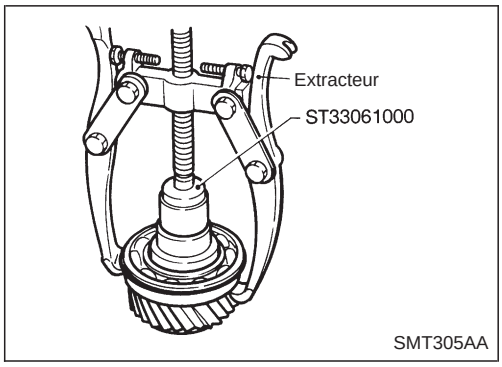

2. Extraire le roulement du pignon principal.

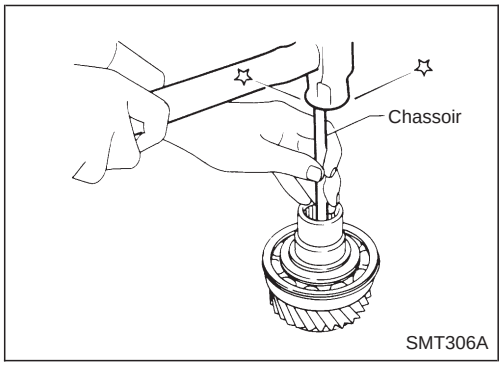

Bouchon

- **Toujours le remplacer par un bouchon neuf lorsqu'il est déposé.**

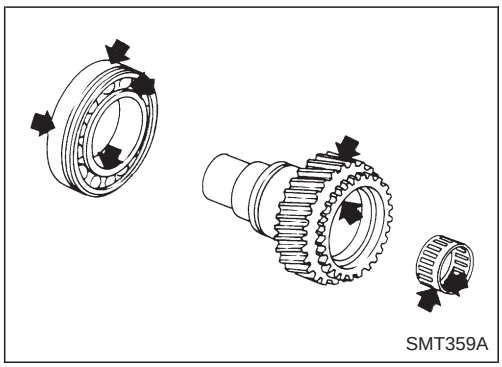

INSPECTION

Pignon et arbre

- Vérifier si les pignons ne sont pas excessivement usés, ébréchés ou fêlés.
- Vérifier si l'arbre n'est pas fissuré ou usé.

Roulement

- S'assurer que les roulements tournent librement et qu'ils sont exempts de bruits, fissures, piqûres ou usure.

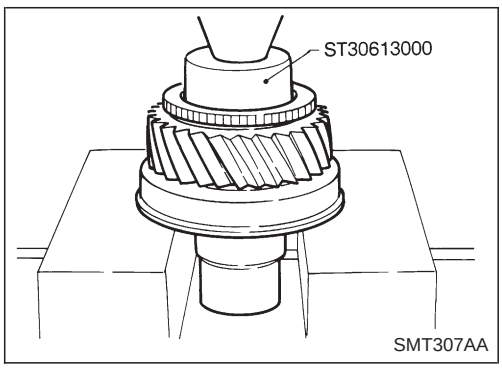

REMONTAGE

Roulement de pignon principal

1. Monter à la presse le roulement du pignon principal.

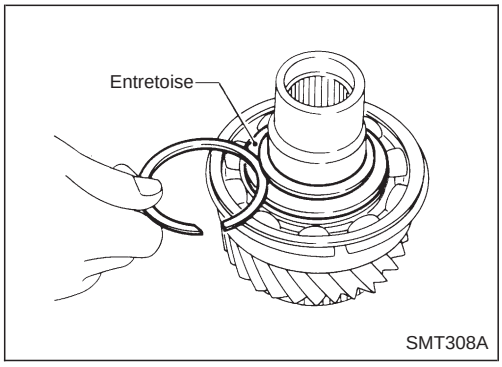

2. Choisir un jonc d'arrêt d'épaisseur adéquate, puis le monter.
   Jeu admissible entre le jonc d'arrêt et la rainure :
   0 à 0,15 mm
   Jonc d'arrêt disponible pour roulement de pignon principal :
   Se reporter aux SDS, TF-31.

Simpo PDF Merge and Split Unregistered Version - http://www.simpopdf.com

Pignon principal (Suite)

Bouchon

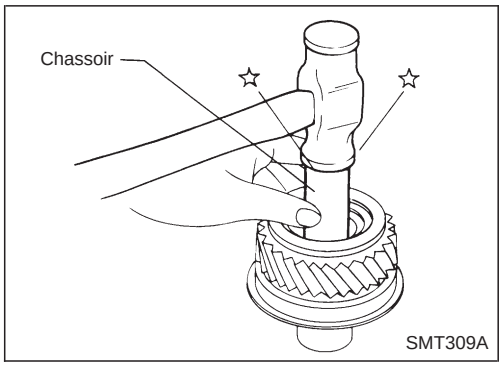

- Enduire le bouchon de produit d'étanchéité et le reposer.
  Produit d'étanchéité :
  Consulter ''Composants de la boîte'', TF-9.

Carter avant

JOINT D'HUILE DE L'ARBRE DE PASSAGE DES VITESSES

Dépose

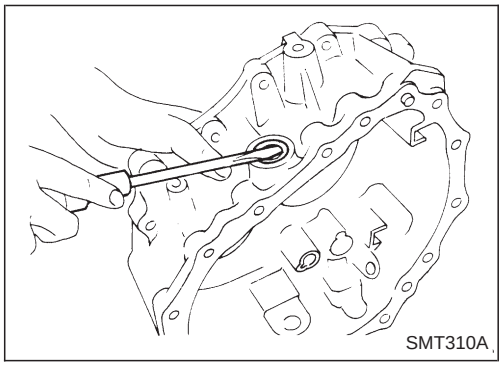

- A l'aide d'un tournevis, extraire l'ancien joint.
- Veiller à ne pas endommager le carter.
- Toujours le remplacer par un joint neuf lorsqu'il a été déposé.

Repose

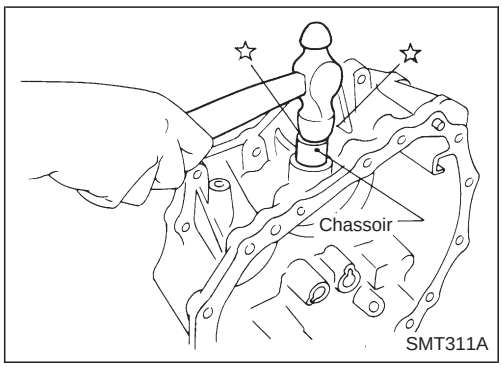

- Reposer le joint d'huile d'arbre de passage neuf jusqu'à ce qu'il arrive au ras du carter.
- Avant la repose, appliquer de la graisse à usages multiples sur la lèvre du joint.

Couvercle de carter avant

JOINT D'HUILE DE COUVERCLE

Dépose

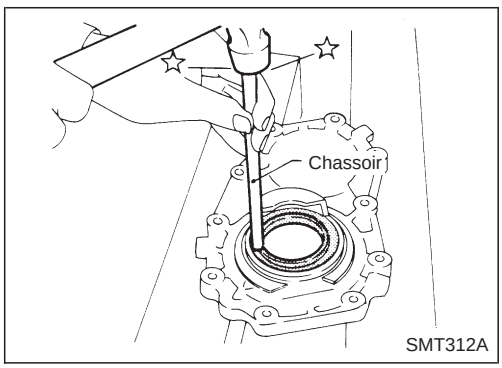

- Extraire le joint ancien par l'intérieur du couvercle de carter avant.
- Veiller à ne pas endommager le couvercle de carter avant.

Repose

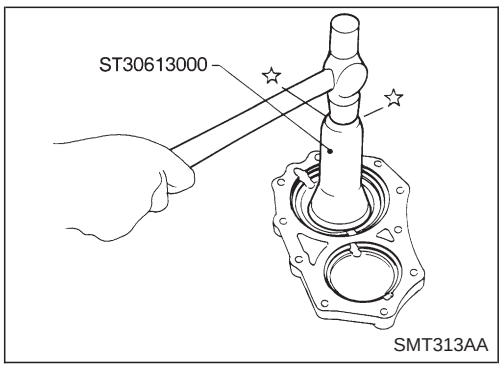

- Reposer le joint d'huile du couvercle de carter avant neuf jusqu'à ce qu'il soit à ras.
- Avant la repose, appliquer de la graisse à usages multiples sur la lèvre du joint.

Simpo PDF Merge and Split Unregistered Version - http://www.simpopdf.com

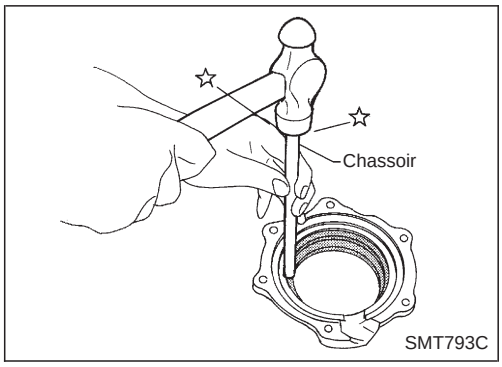

Retenue de roulement

PUISOIR D'HUILE

Dépose

- Extraire le puisoir d'huile par l'intérieur de la retenue de roulement.
- Veiller à ne pas endommager la retenue de roulement.

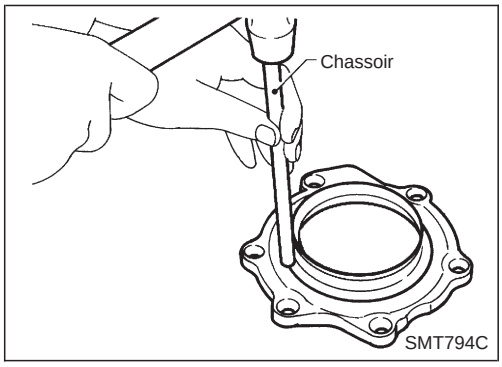

Repose

- Reposer le puisoir d'huile jusqu'à ce qu'il soit à ras.
- Veiller à ne pas endommager ou déformer le puisoir d'huile ou la retenue de roulement.
- Avant la repose, appliquer de la graisse à usages multiples sur la lèvre du joint.

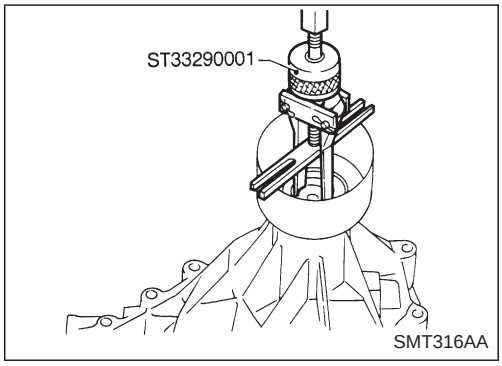

Carter arrière

JOINT D'HUILE ARRIERE

Dépose

- Extraire le joint d'huile arrière.

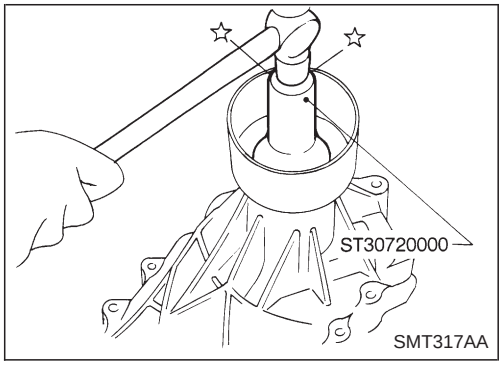

Repose

- Reposer le joint d'huile arrière neuf jusqu'à ce qu'il soit à ras.
- Avant la repose, appliquer de la graisse à usages multiples sur la lèvre du joint.

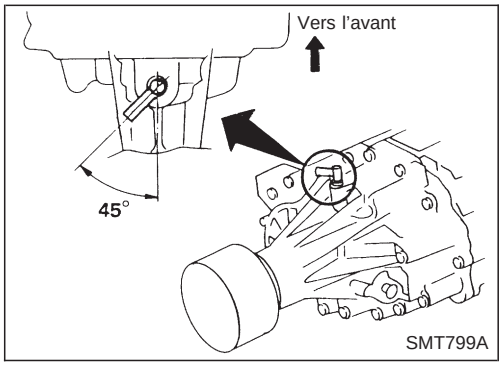

RENIFLARD

- Reposer comme indiqué dans l'illustration.
  Enduire de produit d'étanchéité :
  Consulter ''Composants du carter'', TF-8.

Simpo PDF Merge and Split Unregistered Version - http://www.simpopdf.com

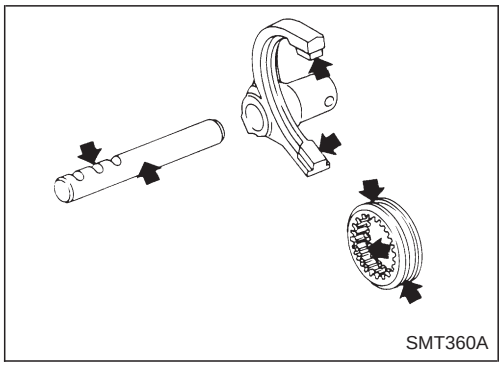
SMT360A

Composants de la commande des vitesses

INSPECTION

- Vérifier que les surfaces de contact et de glissement ne présentent pas d'usure, d'éraflures, de saillies, ou d'autres défauts.

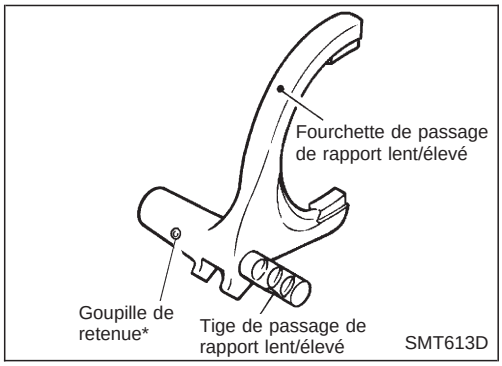

SMT613D

TIGE ET FOURCHETTE DE PASSAGE DE RAPPORT LENT/ELEVE

- Monter comme indiqué dans l'illustration.

*La goupille de retenue est de la même taille que celle pour la tige de passage de 2ème-4ème.

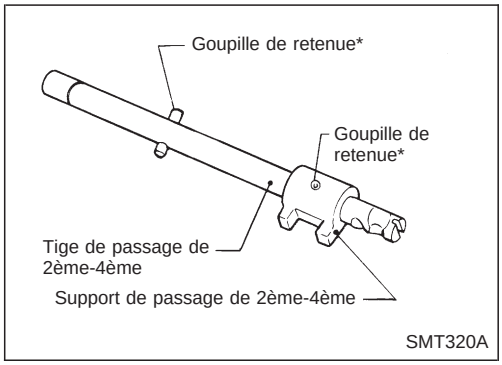

SMT320A

TIGE ET FOURCHETTE DE PASSAGE DE 2EME-4EME

- Monter comme indiqué dans l'illustration.

*Les goupilles de retenue sont de même taille.

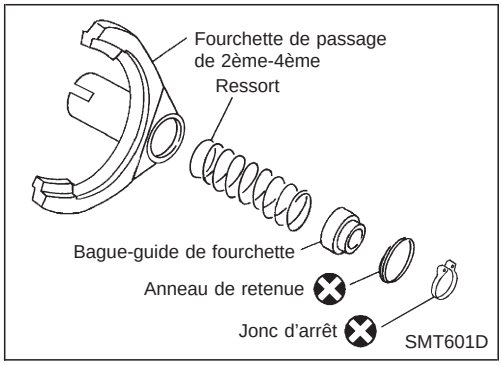

SMT601D

- **Veiller plus particulièrement au sens de la bague-guide de fourchette.**

Simpo PDF Merge and Split Unregistered Version - http://www.simpopdf.com

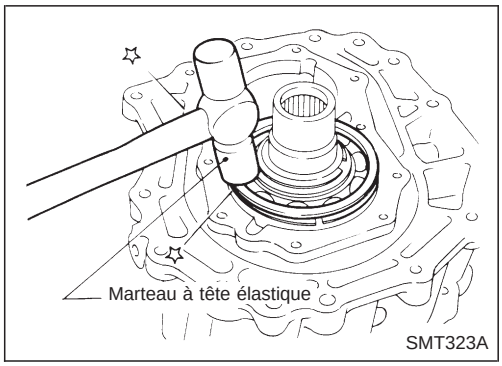

1. Remonter le carter avant.
a. Reposer le pignon principal en le frappant légèrement.

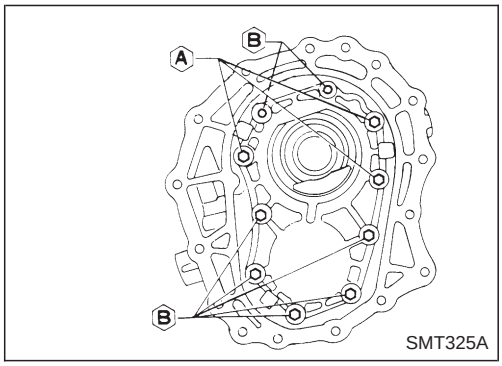

b. Enduire de produit d'étanchéité la surface d'appui et les boulons du couvercle de carter avant, puis monter l'ensemble sur le carter avant.

Produit d'étanchéité :
Consulter ''Composants du carter'', TF-8.

- **Ces dix boulons doivent être enduits de produit d'étanchéité.**
- **Couple de serrage**
  A : 16 - 21 N·m
  (1,6 - 2,1 kg-m)
  B : 19 - 24 N·m
  (1,9 - 2,4 kg-m)

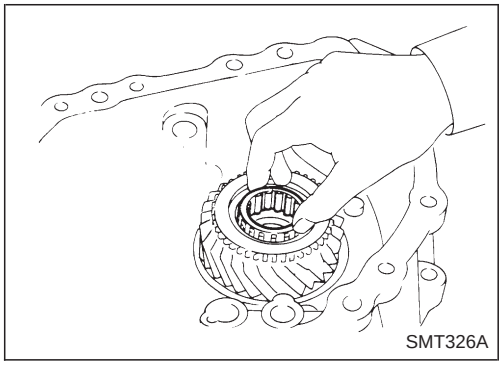

c. Appliquer de l'huile pour pignons sur le roulement à aiguilles, puis le reposer dans le pignon principal.

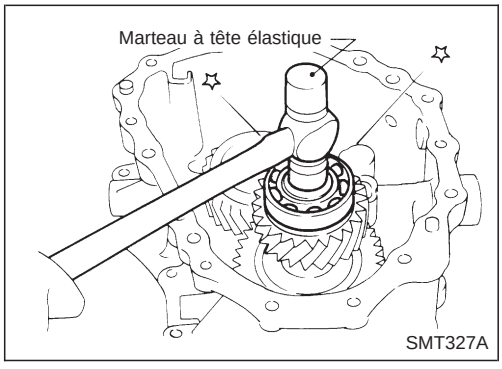

d. Reposer le pignon de renvoi en le frappant légèrement.

Simpo PDF Merge and Split Unregistered Version - http://www.simpopdf.com

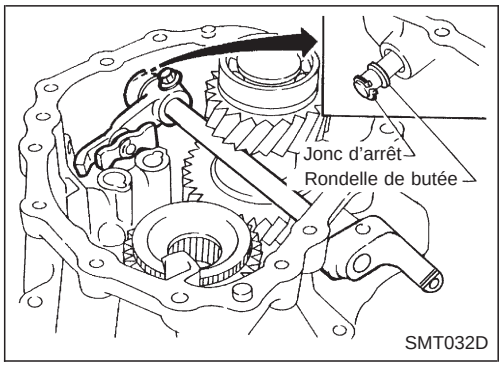

e. Reposer l'arbre transversal et le levier de passage interne.

- **Lors du remplacement de l'arbre transversal, du levier de passage externe ou de la goupille d'arrêt du levier de passage externe, les remplacer comme un ensemble.**

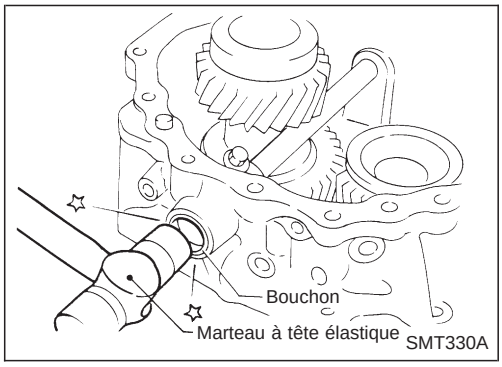

f. Enduire de produit d'étanchéité le bouchon, et l'installer sur le carter avant.

Produit d'étanchéité :

Consulter ''Composants de la commande des vitesses'', TF-10.

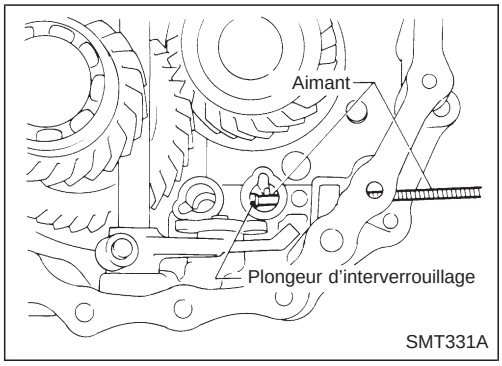

g. Introduire le plongeur d'interverrouillage dans le carter avant.

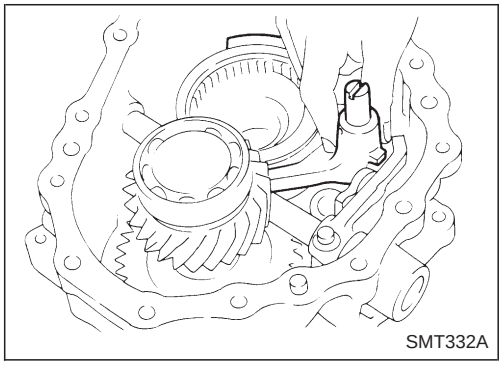

h. Reposer la fourchette et la tige de passage de rapport lent/élevé avec le manchon d'accouplement.

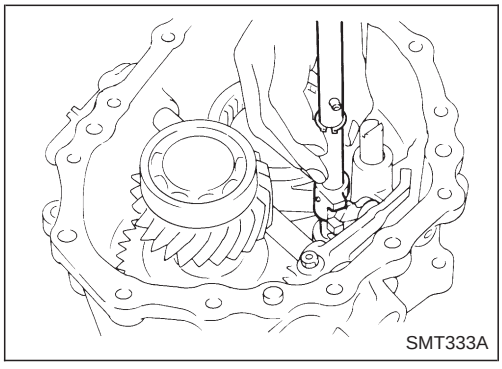

i. Reposer la tige de passage de 2ème-4ème.

Simpo PDF Merge and Split Unregistered Version - http://www.simpopdf.com

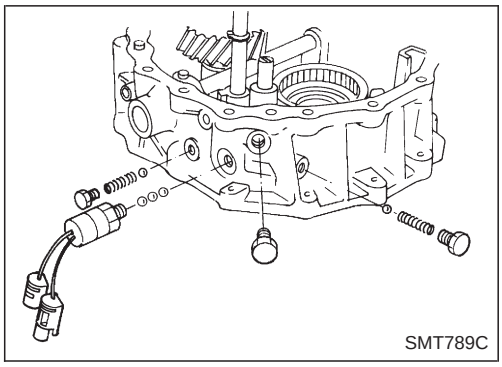
SMT789C

j. Reposer les contacts, les billes de verrouillage, les ressorts de verrouillage et les bouchons.

● **Enduire les contacts et les bouchons de produit d'étanchéité.**

Produit d'étanchéité:

Consulter ''Composants du carter'', TF-8.

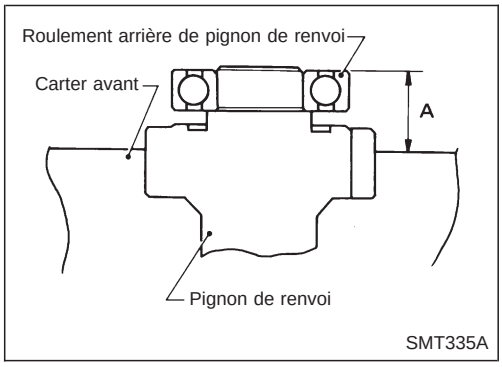

SMT335A

2. Choisir une cale de roulement arrière du pignon de renvoi.

Jeu axial du pignon de renvoi :

0 - 0,2 mm

Cale de roulement arrière du pignon de renvoi :

Se reporter aux SDS, TF-31.

a. Mesurer la distance ''A'' entre la surface supérieure du roulement arrière de pignon de renvoi et la surface d'appui du carter avant.

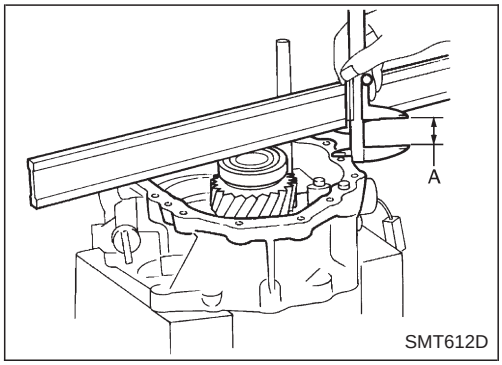

SMT612D

b. Choisir la cale adéquate en se servant du tableau des SDS. Se reporter aux SDS, TF-31.

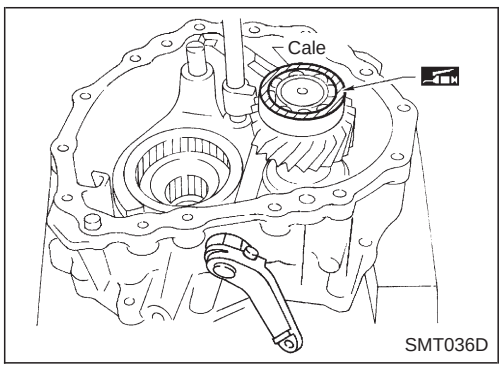

SMT036D

3. Placer la cale adéquate graissée sur le roulement arrière du pignon de renvoi.
4. Appliquer de l'huile pour pignons sur chaque pièce du carter avant.

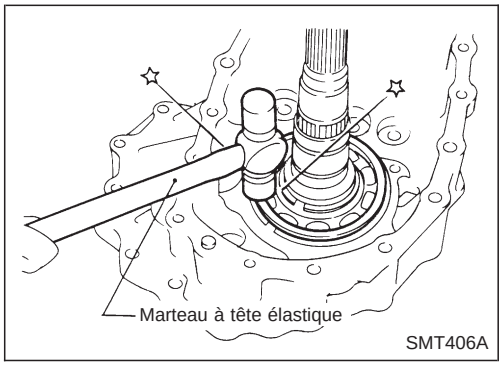

SMT406A

5. Remonter le carter central.

a. Reposer l'arbre secondaire sur le carter central en le frappant légèrement.

● **Appliquer de l'huile pour pignons sur le roulement avant de l'arbre secondaire.**

Simpo PDF Merge and Split Unregistered Version - http://www.simpopdf.com

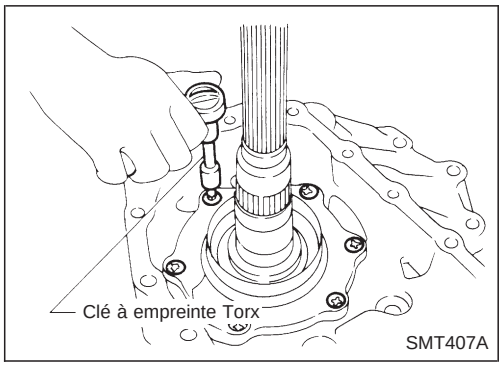

b. Reposer la retenue de roulement.

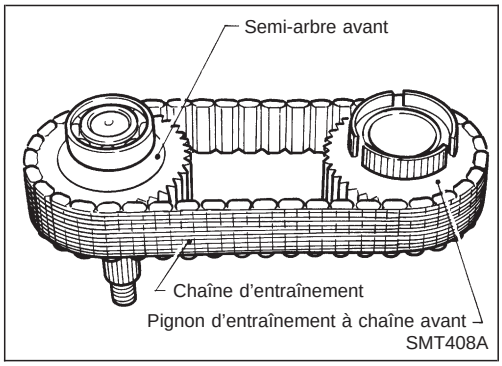

c. Poser la chaîne d'entraînement sur le pignon d'entraînement à chaîne avant et le semi-arbre avant, puis les placer dans le carter central.

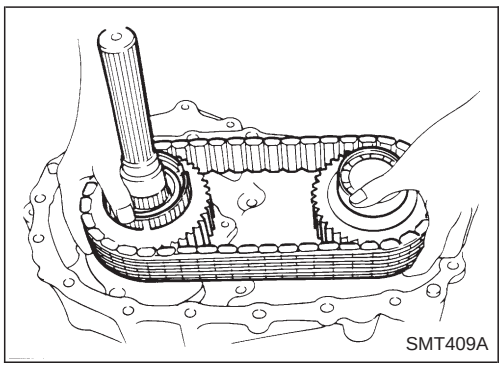

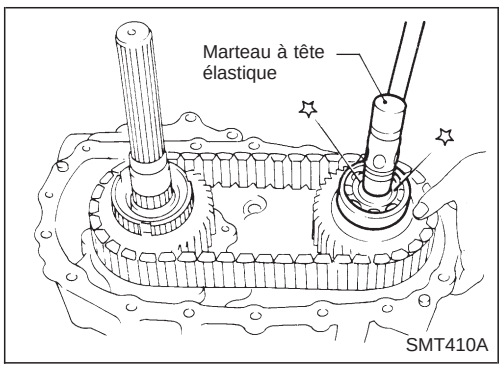

d. Reposer le semi-arbre avant en le frappant légèrement.
- **S'assurer que les arbres sont alignés dans le carter.**

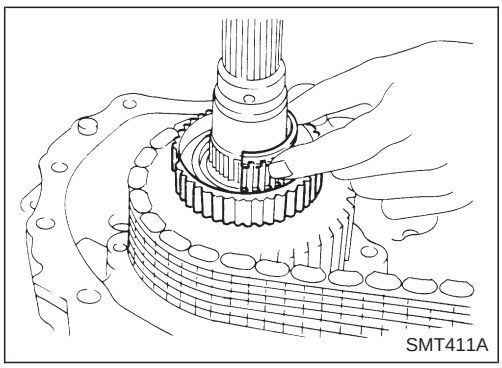

e. Appliquer de l'huile pour pignons sur les roulements à aiguilles, puis les installer sur le pignon d'entraînement à chaîne avant.
- **Ces roulements à aiguilles seront reposés plus facilement si l'on fait tourner le pignon d'entraînement à chaîne avant durant leur montage.**

Simpo PDF Merge and Split Unregistered Version - http://www.simpopdf.com

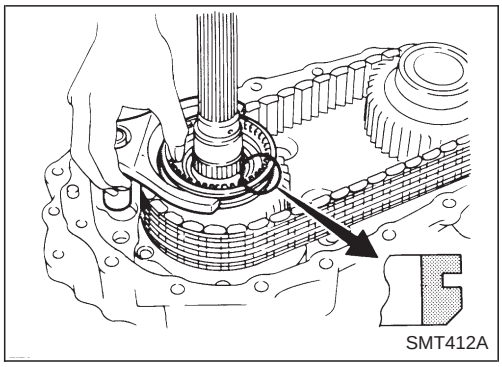
SMT412A

f. Reposer le manchon d'accouplement de 2ème-4ème avec la fourchette de passage de 2ème-4ème.
- **Veiller particulièrement à l'orientation du manchon d'accouplement.**

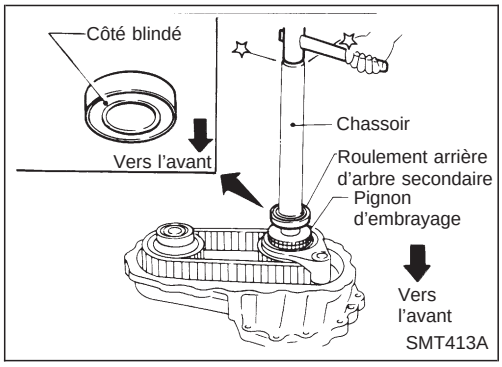

SMT413A

g. Reposer le pignon d'embrayage et le roulement arrière d'arbre secondaire.
- **Placer une cale en bois sous l'arbre secondaire afin de protéger le roulement avant de ce dernier.**

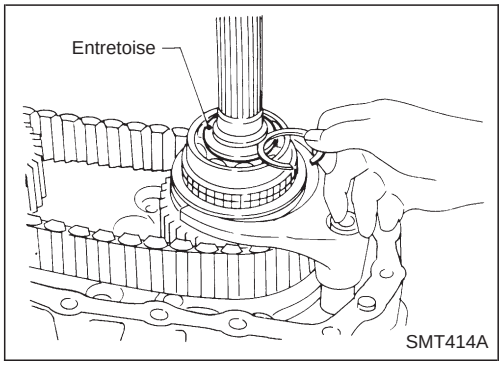

SMT414A

h. Reposer l'entretoise.
i. Choisir le jonc d'arrêt d'épaisseur adéquate, puis le monter.

Jeu admissible entre le jonc d'arrêt et la rainure :
0 - 0,15 mm
Jonc d'arrêt disponible pour roulement arrière d'arbre secondaire :
Se reporter aux SDS, TF-31.

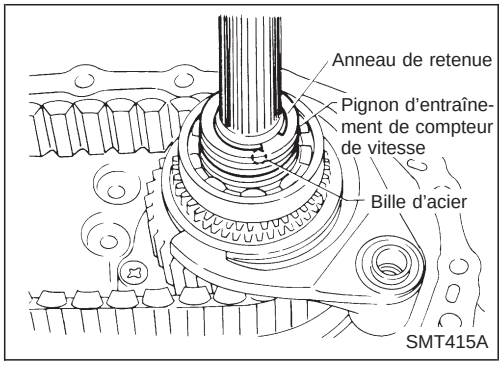

SMT415A

j. Reposer la bille d'acier, le pignon d'entraînement du compteur de vitesse et l'anneau de retenue.
- **La bille d'acier est la plus petite des billes de verrouillage pour cette unité.**

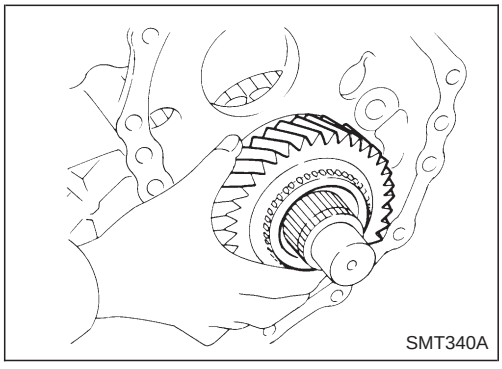
SMT340A

k. Reposer le pignon de rapport lent et son roulement sur l'arbre secondaire.
- **Appliquer de l'huile pour pignons sur le roulement à aiguilles.**

Simpo PDF Merge and Split Unregistered Version - http://www.simpopdf.com

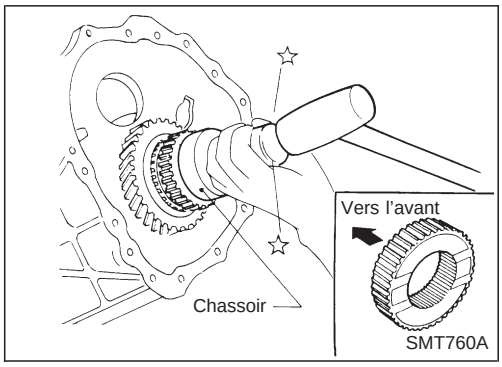

l. Reposer le moyeu de rapport lent/élevé et le jonc d'arrêt sur l'arbre secondaire.
- **Veiller particulièrement au sens du moyeu de rapport lent/élevé.**

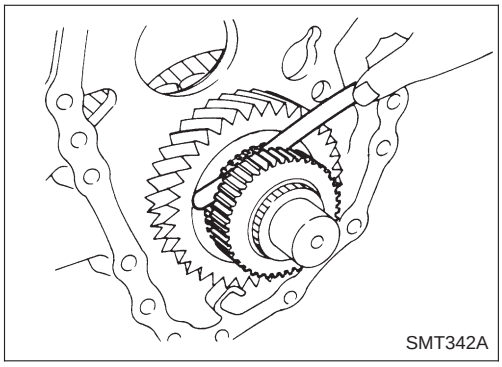

m. Mesurer le jeu axial du pignon de rapport lent.
Standard : 0,2 - 0,35 mm

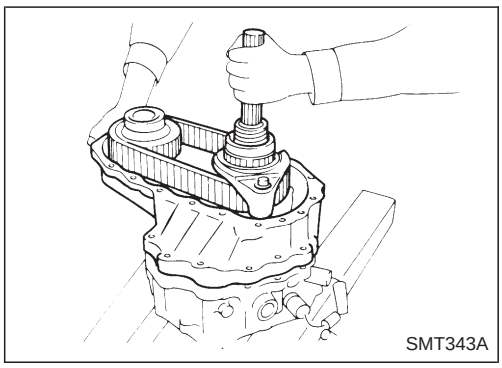

6. Enduire de produit d'étanchéité la surface d'appui, et placer le carter central sur le carter avant, puis serrer les boulons.
Produit d'étanchéité :
Consulter ''Composants du carter'', TF-8.

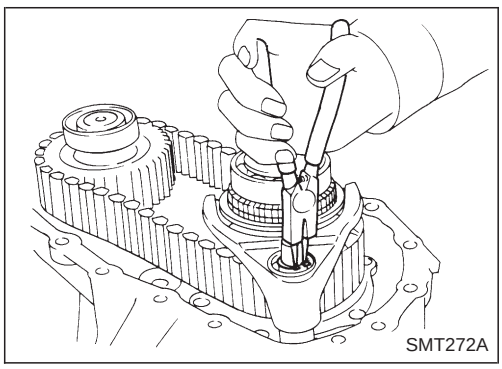

7. Reposer le jonc d'arrêt sur la tige de passage de 2ème-4ème.

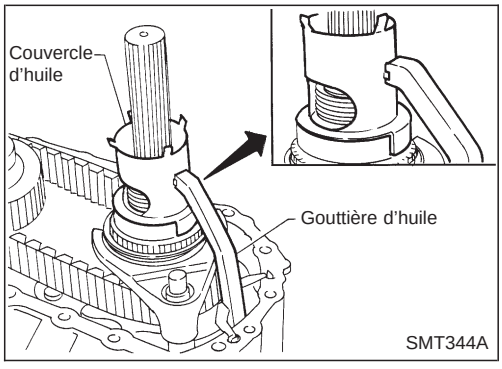

8. Reposer la gouttière et le couvercle d'huile.
9. Appliquer de l'huile pour pignons sur chaque pièce du carter central.

Simpo PDF Merge and Split Unregistered Version - http://www.simpopdf.com

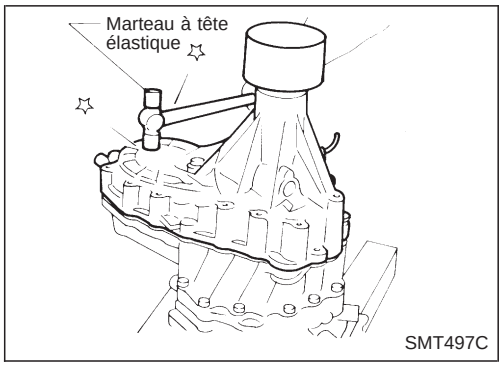

10. Enduire la surface d'appui de produit d'étanchéité et installer le carter arrière sur le carter central.
11. Reposer le contact 4 X 4.

- **Enduire la partie filetée du contact de produit d'étanchéité.**
  Produit d'étanchéité :
  Consulter ''Composants du carter'', TF-8.

Simpo PDF Merge and Split Unregistered Version - http://www.simpopdf.com

Caractéristiques générales

Modèle de boîte de transfert			TX10A
Rapport de démultiplication	Elevé		1,000
	Lent		2,020
Nombre de dents	Pignon principal		29
	Pignon de rapport lent		37
	Pignon de renvoi	Elevé	38
		lent	24
	Pignon d'entraînement à chaîne avant		41
	Semi-arbre avant		41
Contenance en huile*		ℓ	2,2

*Consulter la section MA (''Liquides et lubrifiants'', ''LIQUIDES ET LUBRIFIANTS RECOMMANDES'').

Inspection et réglage

JEU ENTRE LE PIGNON D'ENTRAINEMENT A CHAINE AVANT ET LE MANCHON D'ACCOUPLEMENT DE 2EME-4EME

Jeu admissible "C"	0,2 - 0,54 mm

JEU AXIAL DES PIGNONS

Unité : mm

Pignon d'entraînement à chaîne avant	0,2 - 0,35
Pignon de rapport lent	0,2 - 0,35
Pignon de renvoi	0 - 0,2

JEU ENTRE ANNEAU DE SYNCHRO ET PIGNON D'EMBRAYAGE

Unité : mm

Standard	Limite d'usure
1,0 - 1,5	0,5

JONC D'ARRET DISPONIBLE

Roulement avant d'arbre secondaire

Jeu acceptable	0 - 0,15 mm
Epaisseur mm	N° de pièce
3,10	33138-73P10
3,19	33138-73P11
3,28	33138-73P12

Roulement arrière d'arbre secondaire

Jeu acceptable	0 - 0,15 mm
Epaisseur mm	N° de pièce
1,80	33138-73P20
1,89	33138-73P21
1,98	33138-73P22
2,07	33138-73P23
2,16	33138-73P24

Roulement de pignon principal

Jeu acceptable	0 - 0,15 mm
Epaisseur mm	N° de pièce
2,60	33114-73P00
2,69	33114-73P01
2,78	33114-73P02

CALES DISPONIBLES

Roulement arrière de pignon de renvoi

Distance "A" mm	Cale(s)	
	Epaisseur mm	N° de pièce
32,65 - 32,55	Pas nécessaire	
32,55 - 32,45	0,1	33112-C6900
32,45 - 32,35	0,2	33112-C6901
32,35 - 32,25	0,3	33112-C6902
32,25 - 32,15	0,4	33112-C6903
32,15 - 32,05	0,5	33112-33G00
32,05 - 31,95	0,6	33112-33G01

Roulement arrière de pignon de renvoi

Carter avant

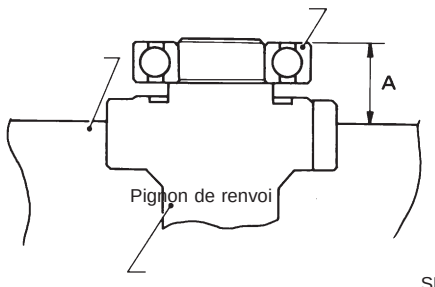

SMT335A

Simpo PDF Merge and Split Unregistered Version - http://www.simpopdf.com

<SUPPLEMENT-I>

SYSTEME DE FREINAGE

SECTION BR

AVIS DE MODIFICATION :
Les modèles équipés du moteur TD25Ti ont été récemment introduits.

TABLE DES MATIERES

DIAGNOSTICS DES DEFAUTS.....1002
Schéma/Moteur TD25Ti.....1002
Schéma de câblage - ABS -/Moteur TD25Ti avec conduite à gauche.....1003
Schéma de câblage – ABS –/Moteur TD25Ti avec conduite à droite 1007

CARACTERISTIQUES ET VALEURS DE REGLAGE (SDS).....1011
Caractéristiques générales 1011
Inspection et réglage 1012

Simpo PDF Merge and Split Unregistered Version - http://www.simpopdf.com

Schéma/Moteur TD25Ti

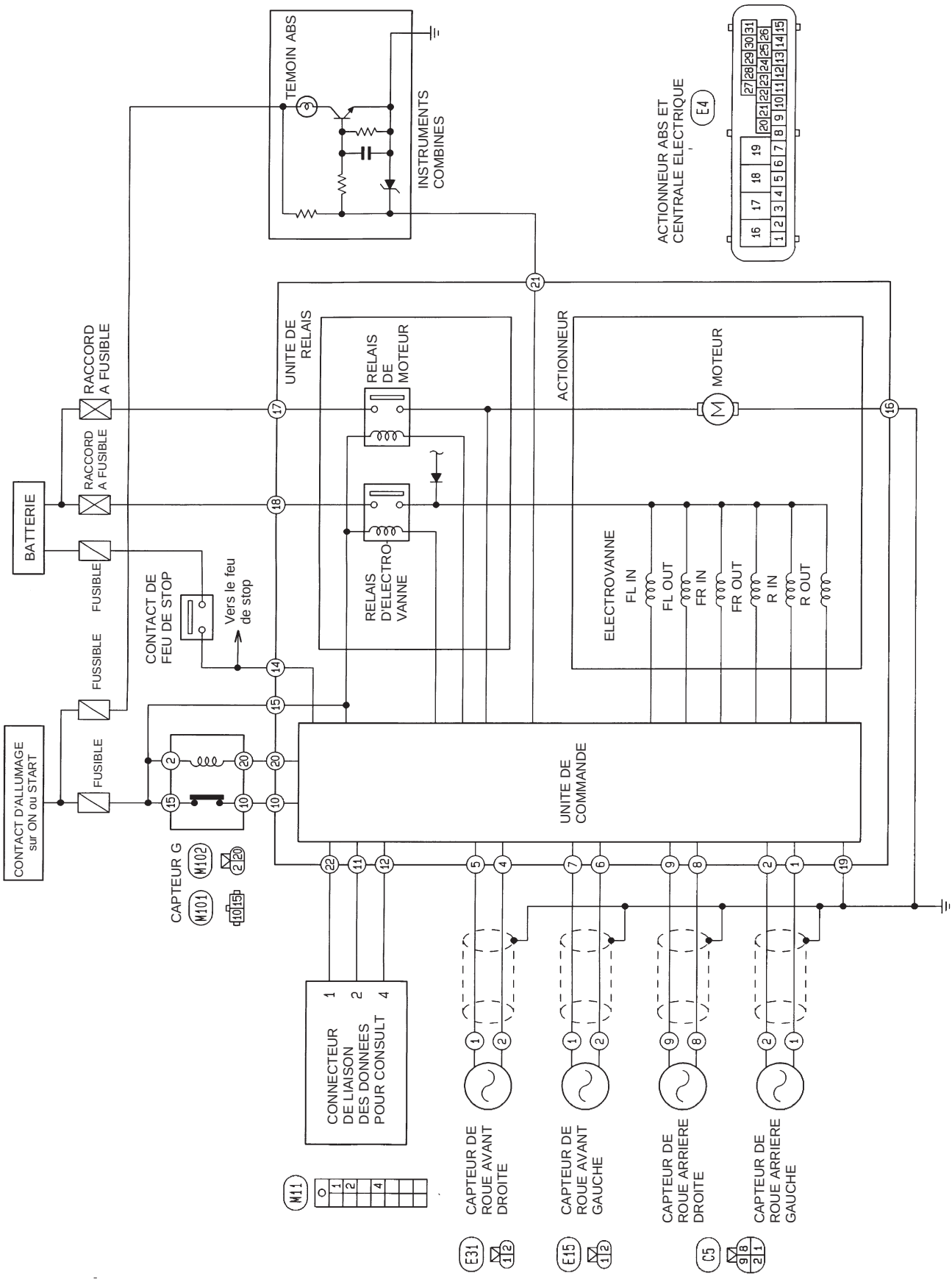

HBR078

Simpo PDF Merge and Split Unregistered Version - http://www.simpopdf.com

Schéma de câblage — ABS —/Moteur TD25Ti avec conduite à gauche

BR-ABS-07

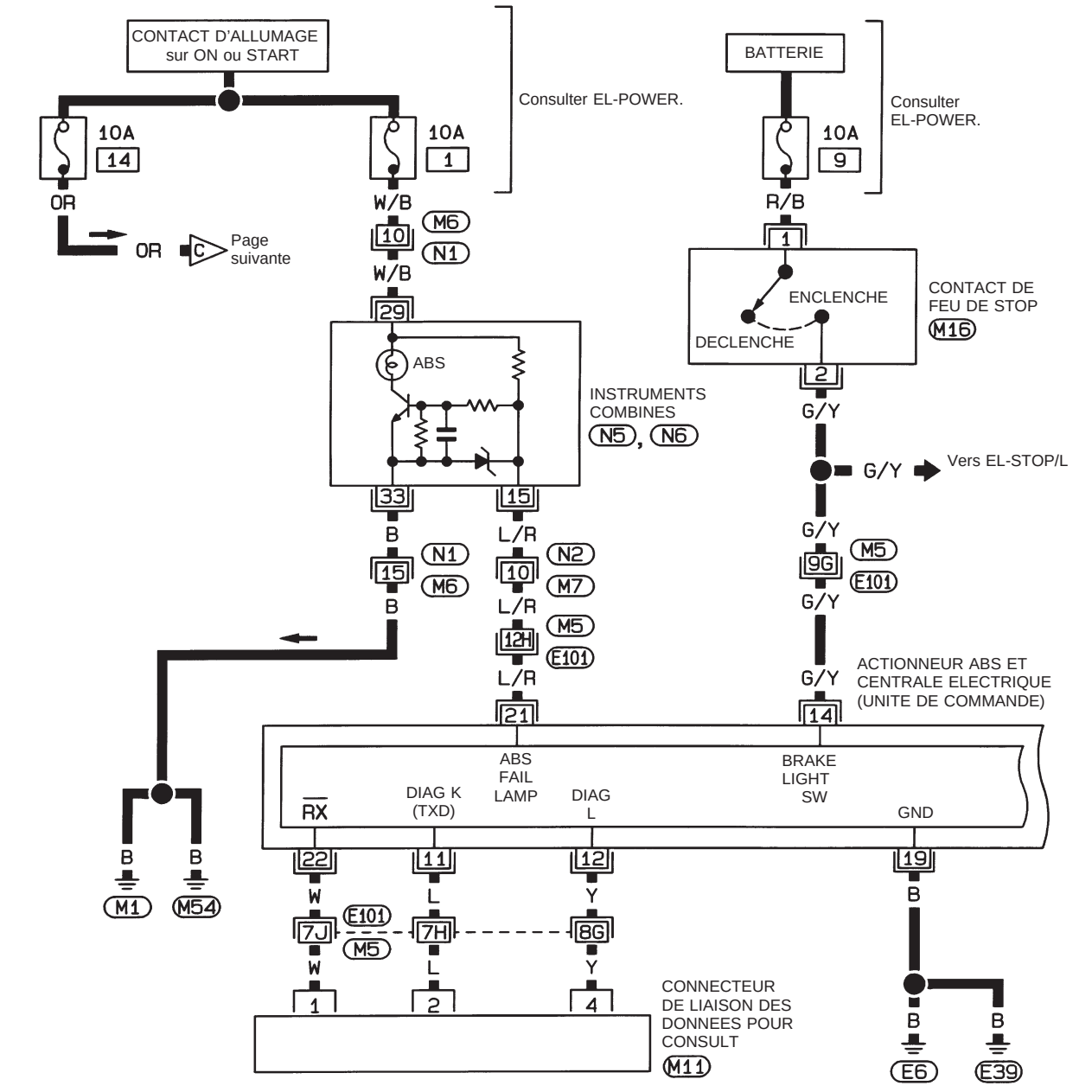

HBR074

Simpo PDF Merge and Split Unregistered Version - http://www.simpopdf.com

Schéma de câblage — ABS —/Moteur TD25Ti avec conduite à gauche (Suite)

BR-ABS-08

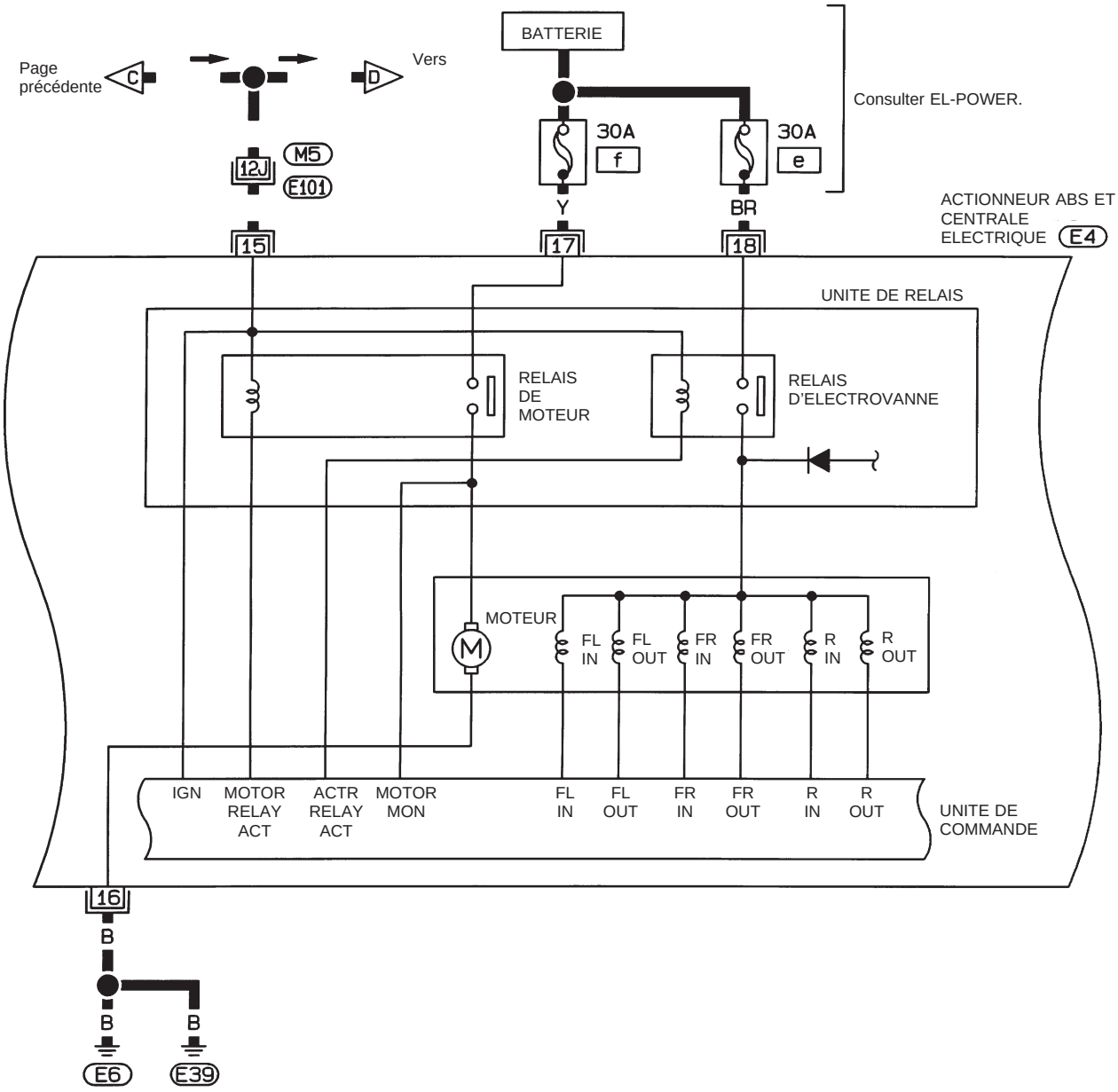

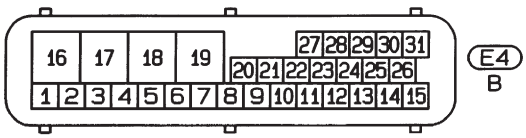

Consulter la dernière page dépliante.

M5 , E101

HBR075

Simpo PDF Merge and Split Unregistered Version - http://www.simpopdf.com

Schéma de câblage — ABS —/Moteur TD25Ti avec conduite à gauche (Suite)

BR-ABS-09

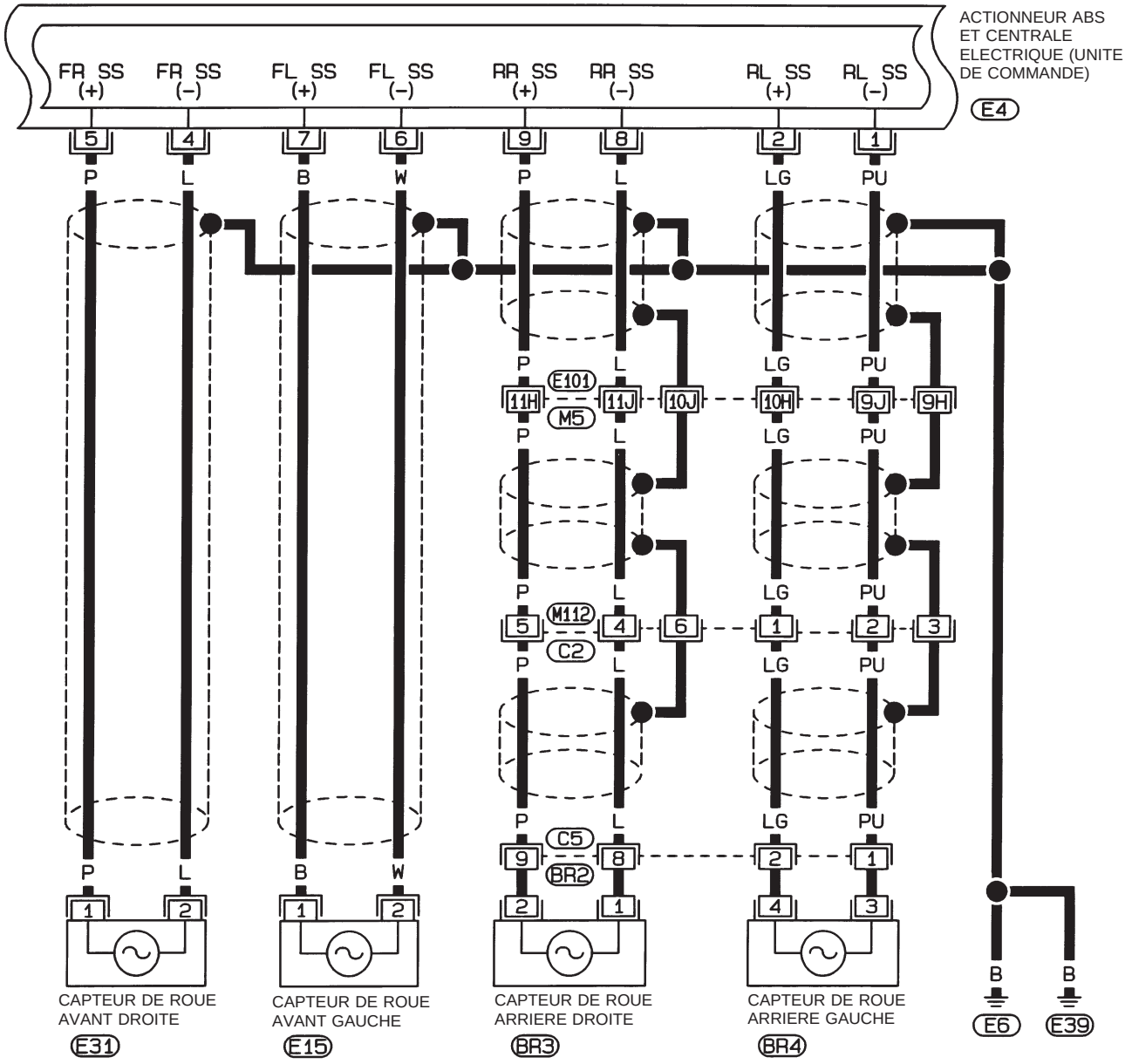







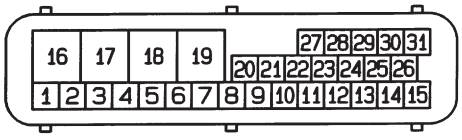





Consulter la dernière page dépliante.

M5 , E101

* : Ce connecteur n'apparaît pas dans la ''DISPOSITION DES FAISCEAUX'' de la section EL.

HBR076

Simpo PDF Merge and Split Unregistered Version - http://www.simpopdf.com

Schéma de câblage — ABS —/Moteur TD25Ti avec conduite à gauche (Suite)

BR-ABS-10

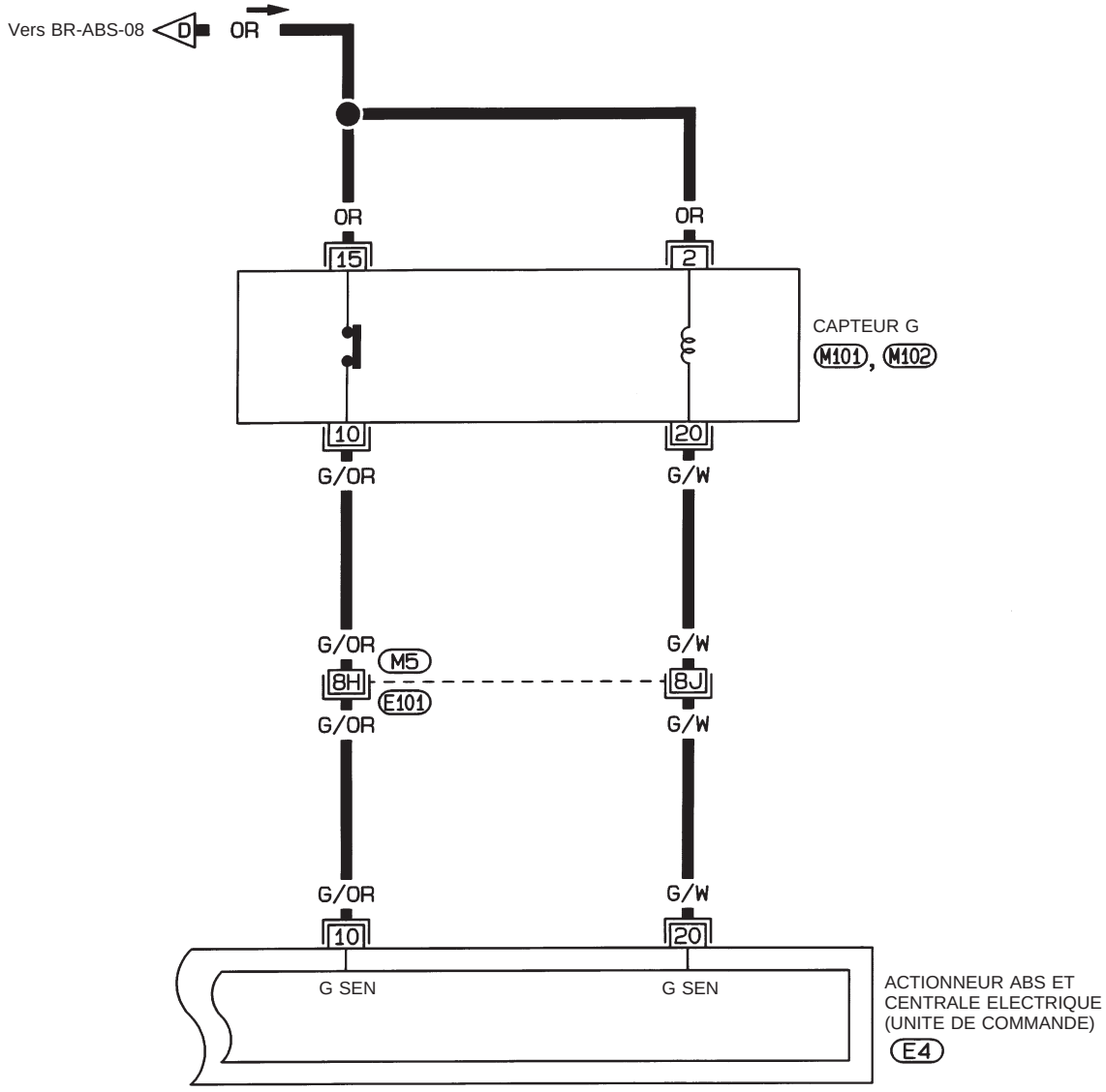

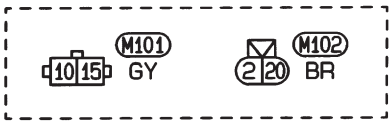

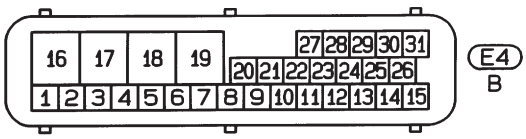

Consulter la dernière page dépliante.
M5, E101

HBR077

Simpo PDF Merge and Split Unregistered Version - http://www.simpopdf.com

Schéma de câblage – ABS –/Moteur TD25Ti avec conduite à droite

BR-ABS-11

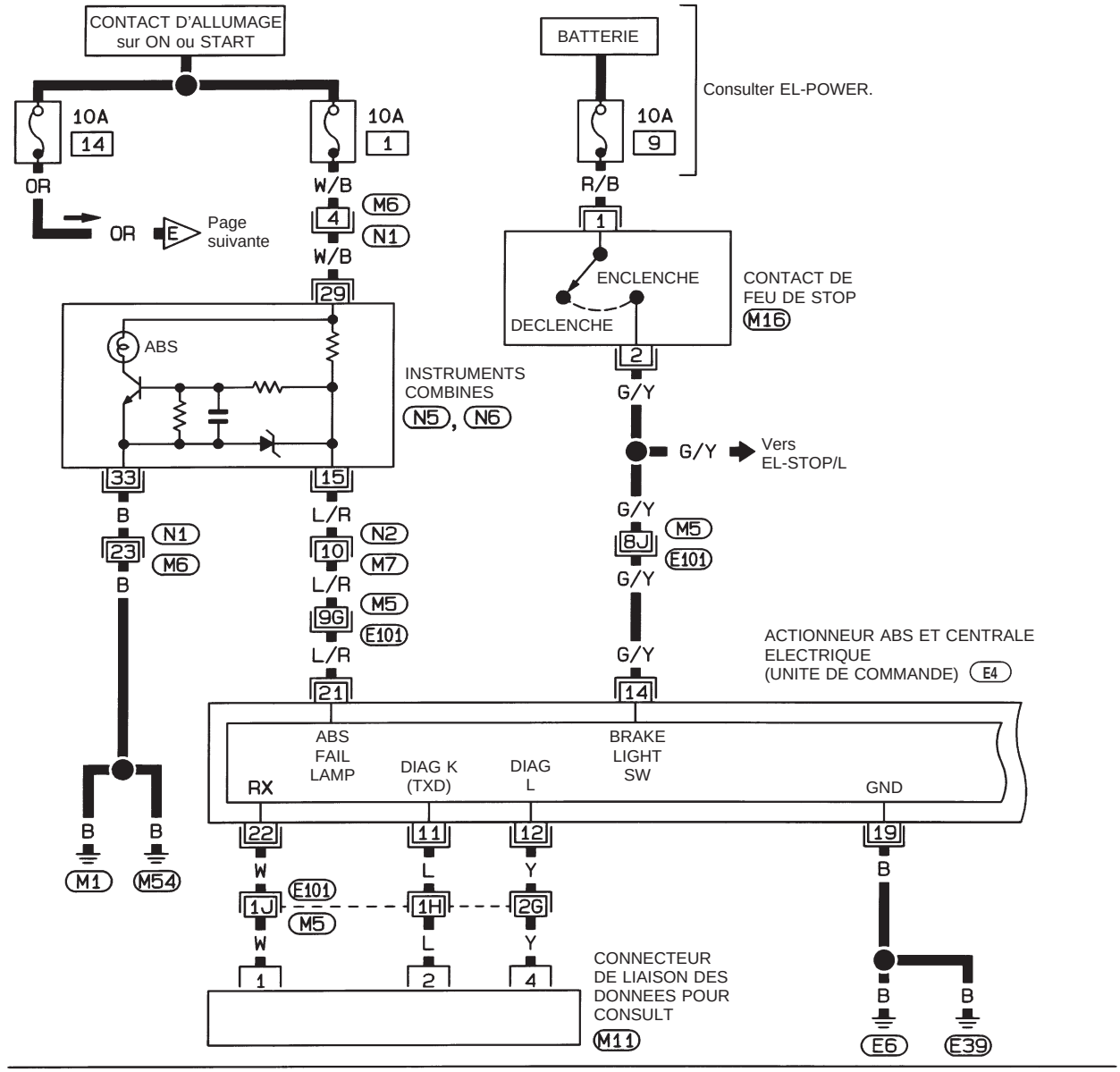

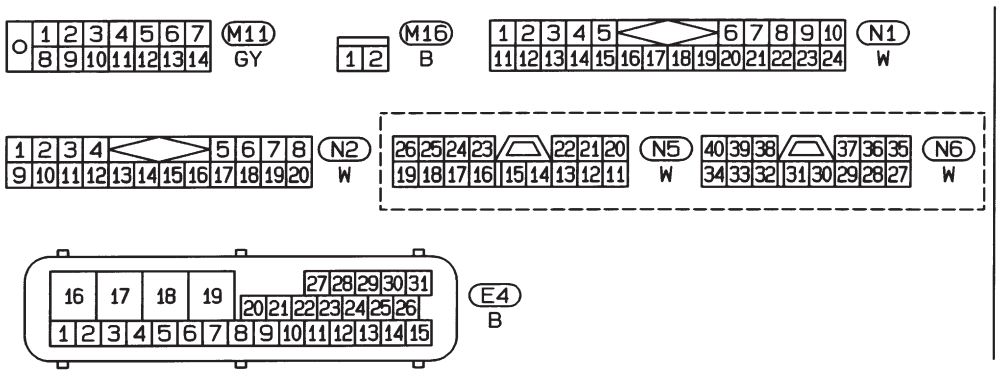

Consulter la dernière page dépliante.

M5, E101

HBR080

Simpo PDF Merge and Split Unregistered Version - http://www.simpopdf.com

Schéma de câblage – ABS –/Moteur TD25Ti avec conduite à droite (Suite)

BR–ABS–12

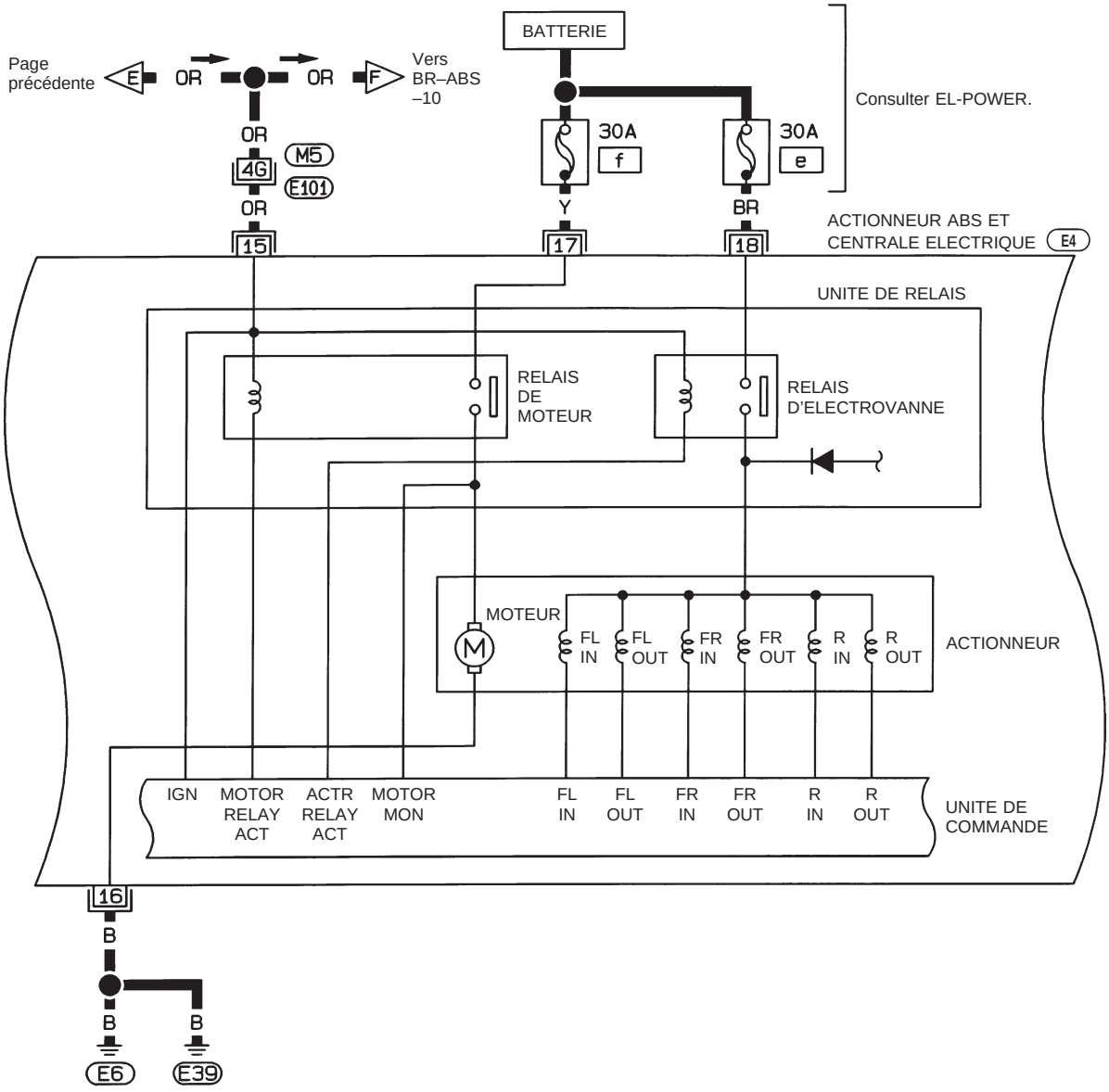

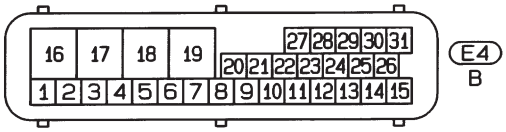

Consulter la dernière page dépliante.

M5 , E101

HBR081

Simpo PDF Merge and Split Unregistered Version - http://www.simpopdf.com

Schéma de câblage – ABS –/Moteur TD25Ti avec conduite à droite (Suite)

BR-ABS-13

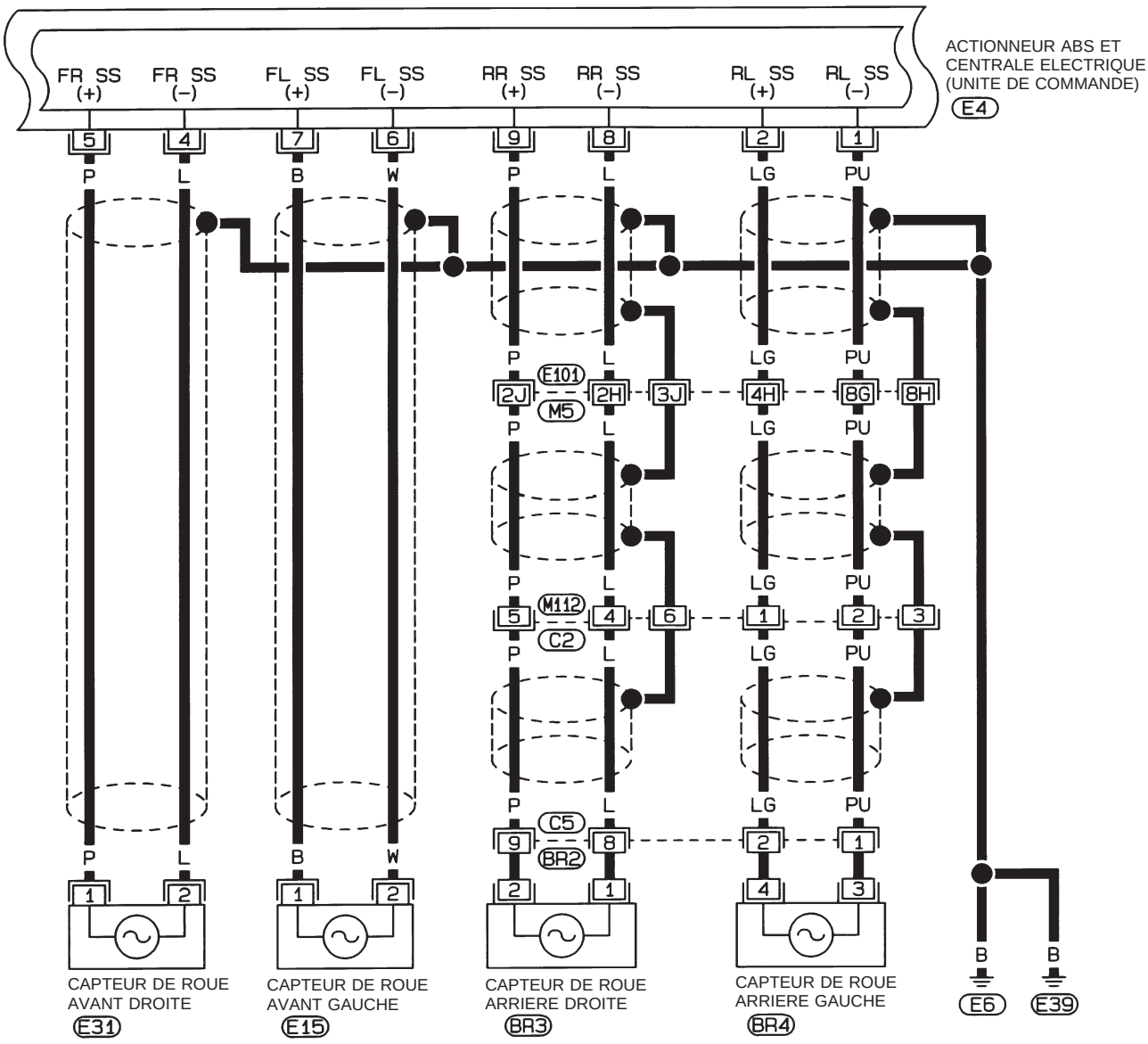

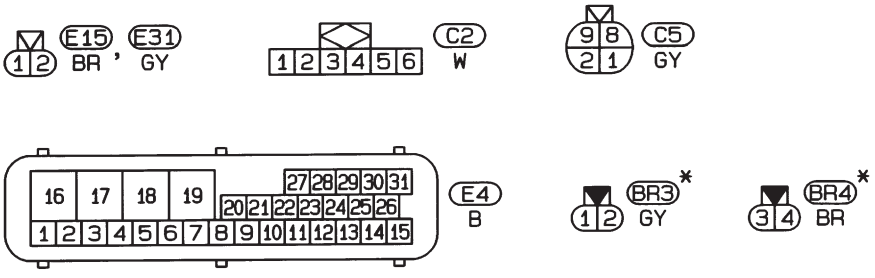

Consulter la dernière page dépliante.

M5 , E101

* : Ce connecteur n'apparaît pas dans la "DISPOSITION DES FAISCEAUX" de la section EL.

HBR082

Simpo PDF Merge and Split Unregistered Version - http://www.simpopdf.com

Schéma de câblage – ABS –/Moteur TD25Ti avec conduite à droite (Suite)

BR-ABS-14

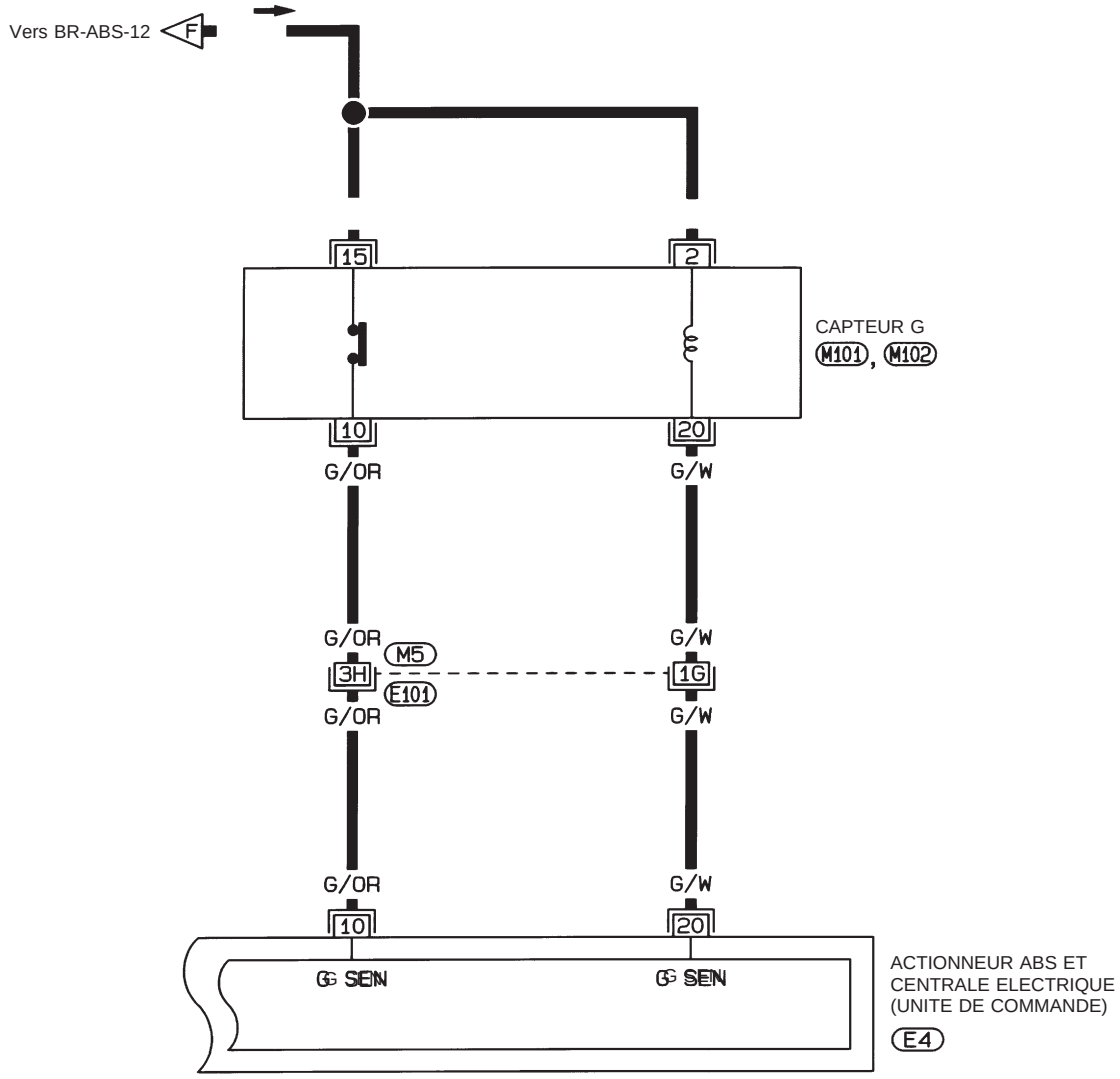

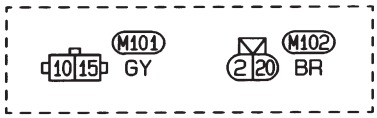

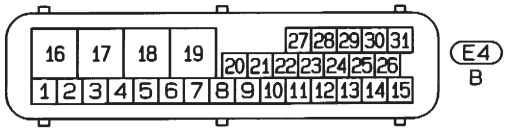

Consulter la dernière page dépliante.
M5, E101

HBR083

Simpo PDF Merge and Split Unregistered Version - http://www.simpopdf.com

Caractéristiques générales

MODELES AVEC MOTEUR TD25Ti

Destination		Europe
Modèle concerné		TD25Ti
Frein avant Type		Frein à disque CL28VD
Diamètre d'alésage du cylindre	mm	42,8 x 2
Dimension des plaquettes Longueur x largeur x épaisseur	mm	146,6 x 48,5 x 10
Diamètre extérieur du rotor x épaisseur	mm	277 x 26
Frein arrière Type		Frein à tambour LT30A
Diamètre d'alésage du cylindre de roue	mm	22,22
Dimension de la garniture Longueur x largeur x épaisseur	mm	296,0 x 50,0 x 6,1
Diamètre intérieur du tambour	mm	295
Diamètre d'alésage du maître-cylindre	mm	23,81
Vanne de commande Type		LSV (compensateur asservi)
Point de rupture x rapport de réduction	kPa (bar, kg/cm^2)	(Variable) x 0,15
Assistance de frein Modèle		M215T
Diamètre de diaphragme	mm	Primaire : 230 Secondaire : 205
Liquide de frein recommandé		DOT 4*1

*1: Consulter la section MA (''Liquides et lubrifiants'', ''LIQUIDES ET LUBRIFIANTS CONSEILLES'').

Simpo PDF Merge and Split Unregistered Version - http://www.simpopdf.com

Inspection et réglage

FREIN A DISQUE

Unité : mm

Modèle de frein	CL28VD
Limite d'usure des plaquettes	
Epaisseur minimum	2,0
Limite de réparation du rotor	
Epaisseur minimum	24,0

FREIN A TAMBOUR

Unité : mm

Modèle de frein	LT30A
Limite d'usure de la garniture	
Epaisseur minimum	1,5
Limite de réparation du tambour	
Diamètre interne maximum	296,5
Limite de faux-rond	0,15

PEDALE DE FREIN

Unité : mm

Hauteur libre "H"*	
Conduite à gauche	209 - 219
Conduite à droite	203 - 213
Course complète "D" [en appliquant une force de 490 N (50 kg) alors que le moteur tourne]	120,0
Jeu "C" entre butée de pédale et extrémité filetée du contact de feu stop	0,3 - 1,0
Jeu libre de la pédale	
A la chape	1,0 - 3,0
Au patin de pédale	4 - 12

* : Mesurée de la surface du panneau de renfort de tablier au patin de pédale.

COMMANDE DE FREIN DE STATIONNEMENT

Type de commande		Levier à poignée	Levier central
Course du levier [en appliquant une force de 196 N (20 kg)]	2x2	8 - 10	—
	4x4	10 - 12	8 - 10
Course du levier lorsque le témoin s'allume		1	

Simpo PDF Merge and Split Unregistered Version - http://www.simpopdf.com

<SUPPLEMENT-I>

EMBRAYAGE

SECTION CL

AVIS DE MODIFICATION :
Le moteur TD25Ti a été ajouté.

TABLE DES MATIERES

SYSTEME D'EMBRAYAGE 1002
Pédale d'embrayage 1003
INSPECTION ET REGLAGE 1004
Réglage de la pédale d'embrayage 1004
Procédure de purge d'air 1004
COMMANDE D'EMBRAYAGE HYDRAULIQUE 1005
Cylindre récepteur 1005
MECANISME DE DEBRAYAGE 1006
DISQUE D'EMBRAYAGE ET COUVERCLE D'EMBRAYAGE 1008
Disque d'embrayage et volant-moteur 1008
Couvercle d'embrayage 1009
CARACTERISTIQUES ET VALEURS DE REGLAGE (SDS) 1010
Caractéristiques générales 1010
Inspection et réglage 1010

Simpo PDF Merge and Split Unregistered Version - http://www.simpopdf.com

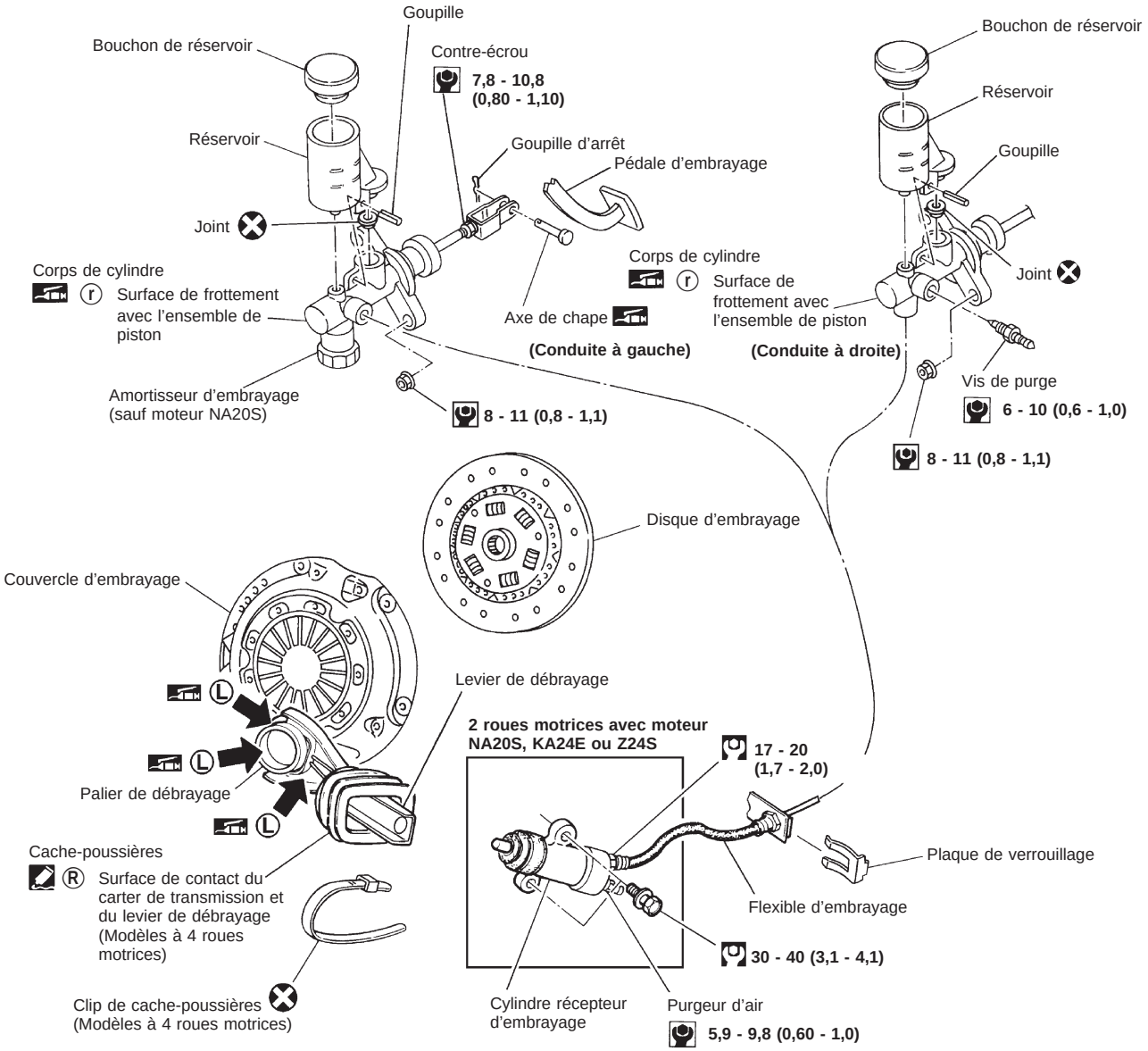

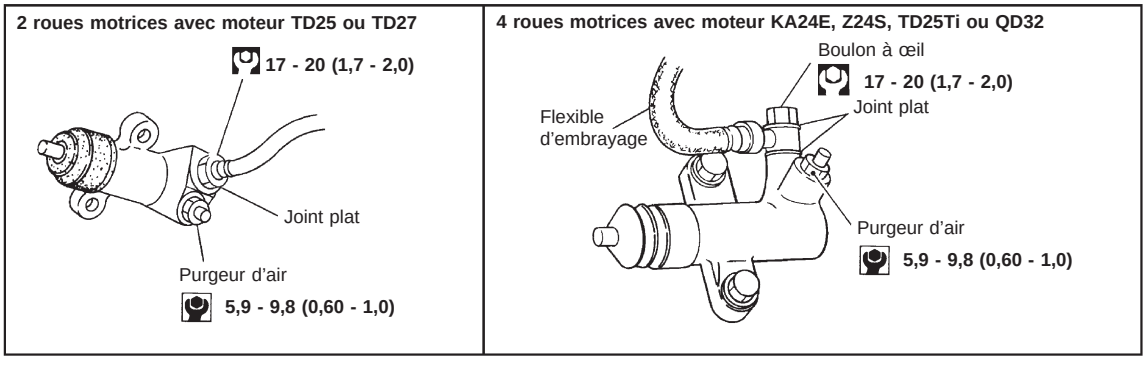

: N·m (kg-m)

: N·m (kg-m)

Ⓡ : Appliquer le produit détanchéité recommandé : composant d'origine Nissan (KP115-00100), Three Bond TB1212 ou équivalent.

Ⓛ : Appliquer de la graisse à base de lithium comprenant du bisulphure de molybdène.

ⓡ : Appliquer du lubifiant pour caoutchouc.

SCL795-A

Simpo PDF Merge and Split Unregistered Version - http://www.simpopdf.com

Pédale d'embrayage

Conduite à gauche

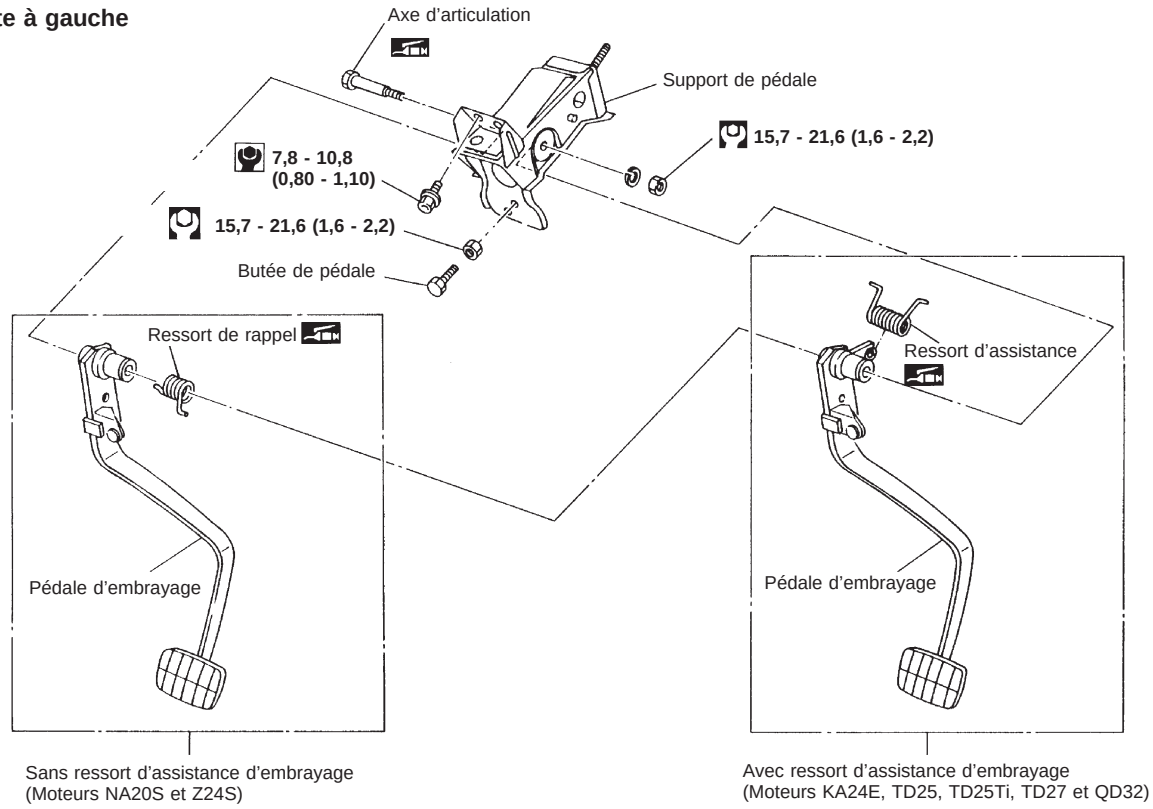

Conduite à droite

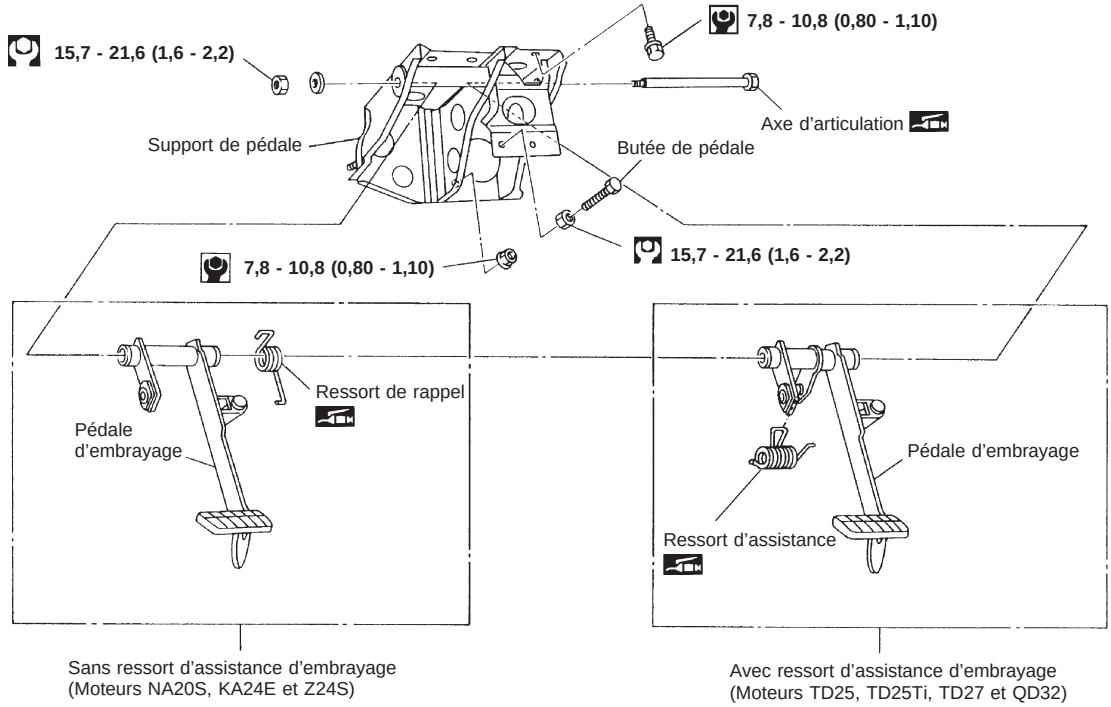

: N·m (kg-m)

: N·m (kg-m)

SCL741-B

Simpo PDF Merge and Split Unregistered Version - http://www.simpopdf.com

Réglage de la pédale d'embrayage

1. Régler la hauteur de la pédale en agissant sur la butée de pédale.
2. Régler le jeu libre de la pédale avec la tige de poussoir.

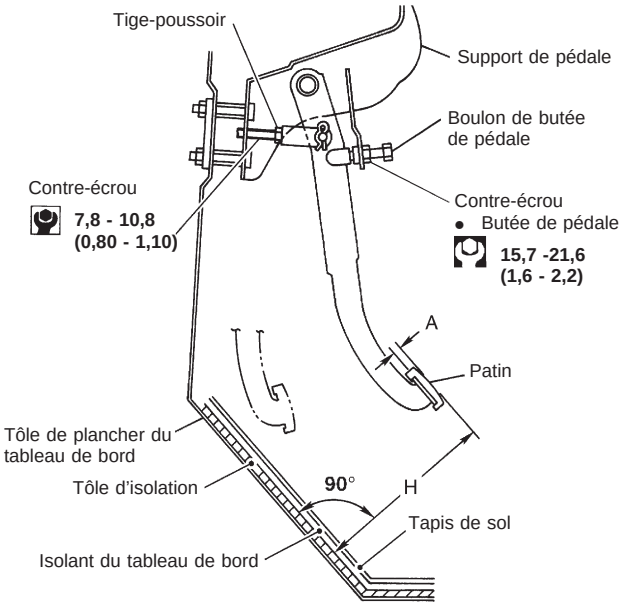

Hauteur de la pédale "H" (Mesure de la surface de la tôle d'isolation au patin de pédale) :
Conduite à gauche
Moteurs NA20S, KA24E, Z24S, TD25 et Z24S
221 - 231 mm
Moteurs TD25Ti et QD32
240 - 250 mm
Conduite à droite
Moteurs NA20S, KA24E, Z24S, TD25 et Z24S
195 - 205 mm
Moteurs TD25Ti et QD32
203 - 213 mm
Jeu libre de la pédale "A" :
1 - 1,5 mm

: N·m (kg-m)
: N·m (kg-m)

SCL742-B

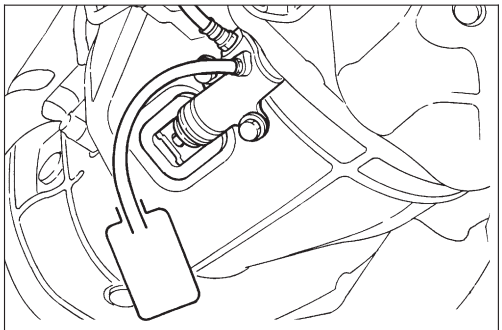

Cylindre récepteur d'embrayage SCL203

Procédure de purge d'air

Purger l'air en suivant la méthode suivante.
Purger l'air du maître-cylindre (modèles avec conduite à droite uniquement) puis du cylindre récepteur.

1. Remplir le réservoir du maître-cylindre avec du liquide de frein neuf.
2. Connecter un flexible transparent en vinyle au purgeur d'air.
3. Enfoncer lentement la pédale d'embrayage sur toute sa course puis la relâcher complètement. Répéter cette opération plusieurs fois à 2 ou 3 secondes d'intervalle.
4. Ouvrir la purge d'air en enfonçant la pédale d'embrayage à fond.
5. Fermer le purgeur d'air.
6. Relâcher la pédale d'embrayage et attendre au moins 5 secondes.
7. Répéter les étapes 3 à 6 ci-dessus jusqu'à ce que le liquide de frein soit clair, sans bulles d'air.

Simpo PDF Merge and Split Unregistered Version - http://www.simpopdf.com

Cylindre récepteur

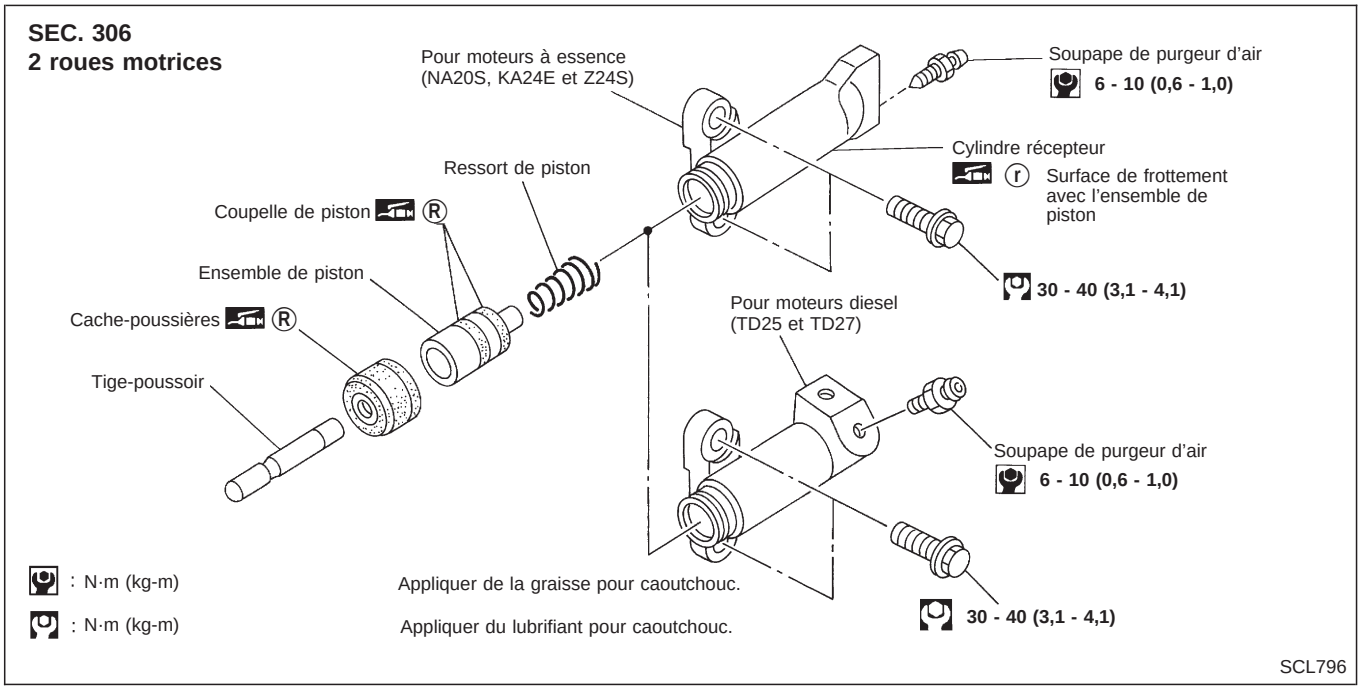

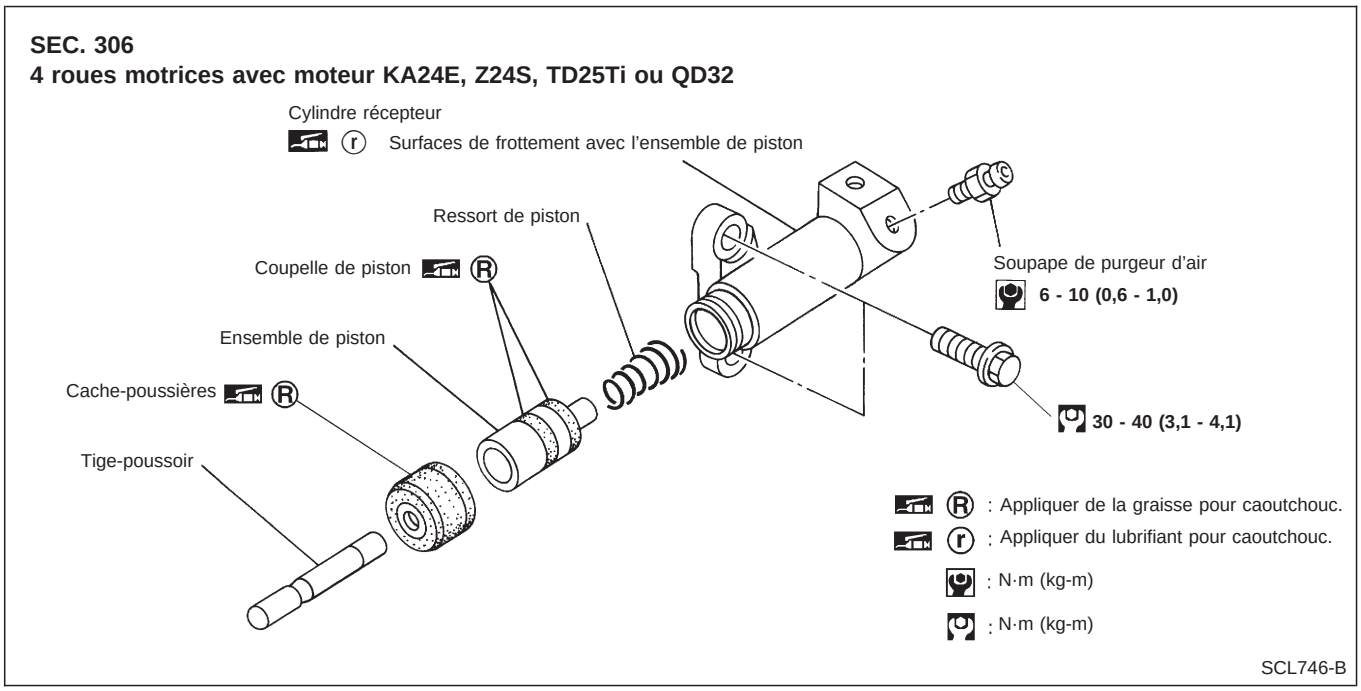

INSPECTION

- Vérifier si la surface de frottement du cylindre présente des traces d'usure, de rouille ou de détérioration. Remplacer si nécessaire.
- Vérifier si le piston et la coupelle présentent des signes d'usure ou de détérioration. Remplacer si nécessaire.
- Vérifier si le ressort de piston n'est pas usé ou endommagé. Remplacer si nécessaire.
- Vérifier si le cache-poussière n'est pas fêlé, déformé ou endommagé. Remplacer si nécessaire.

Simpo PDF Merge and Split Unregistered Version - http://www.simpopdf.com

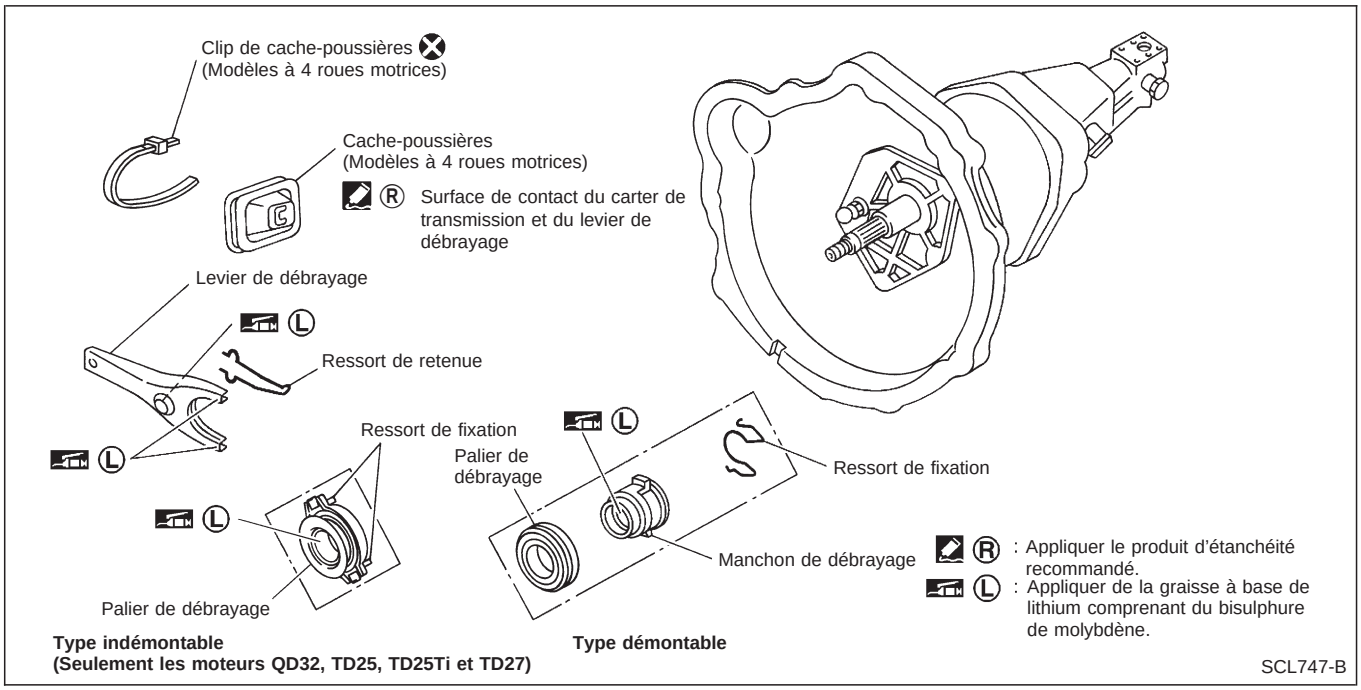

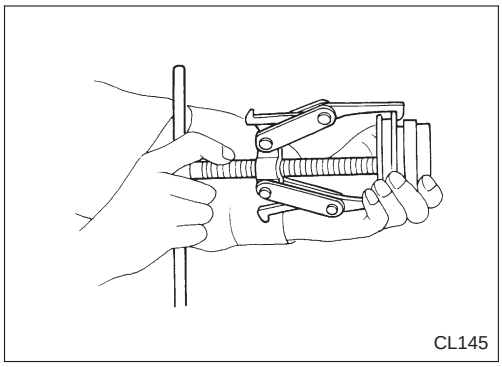

DEPOSE ET REPOSE

Type démontable

- Déposer le palier de débrayage.

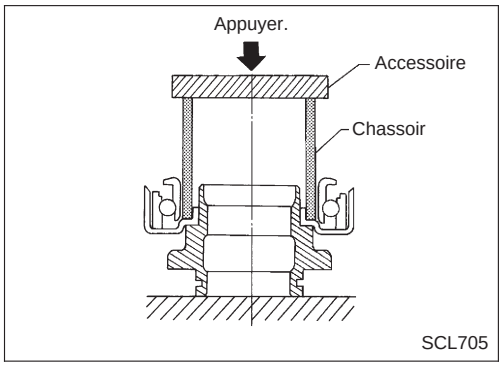

- Reposer le palier de débrayage avec le chassoir approprié.

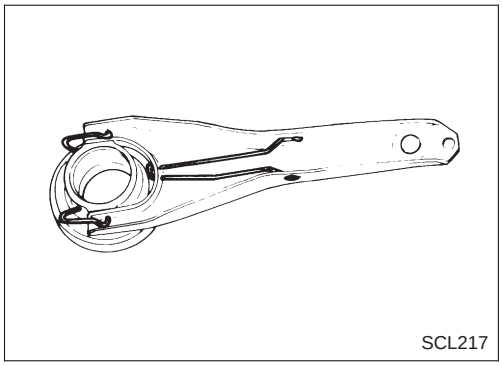

- Installer le ressort de retenue et le ressort de fixation.

Simpo PDF Merge and Split Unregistered Version - http://www.simpopdf.com

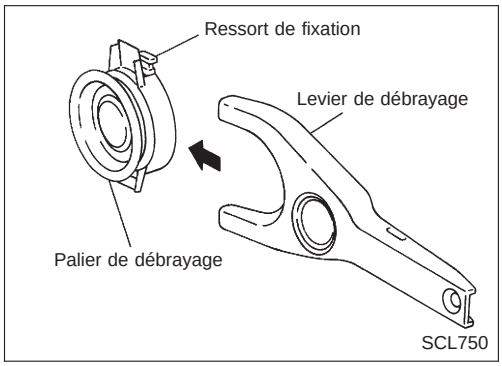

Type indémontable

- Insérer le levier de débrayage en respectant le sens indiqué par la flèche.

INSPECTION

Vérifier les pièces suivantes, et les remplacer si nécessaire.

- Le palier de débrayage pour voir s'il tourne librement et s'il n'émet pas de bruits anormaux et ne présente pas de fêlures, de piqûres ou d'usure.
- Le manchon de débrayage et la surface de frottement du levier de débrayage pour voir si ces pièces ne présentent pas de traces d'usure, de rouille ou de détérioration.

LUBRIFICATION

- Enduire de graisse recommandée les surfaces de contact et de frottement.
- **Il ne faut pas mettre trop de lubrifiant, car ceci risque d'endommager les garnitures du disque d'embrayage.**

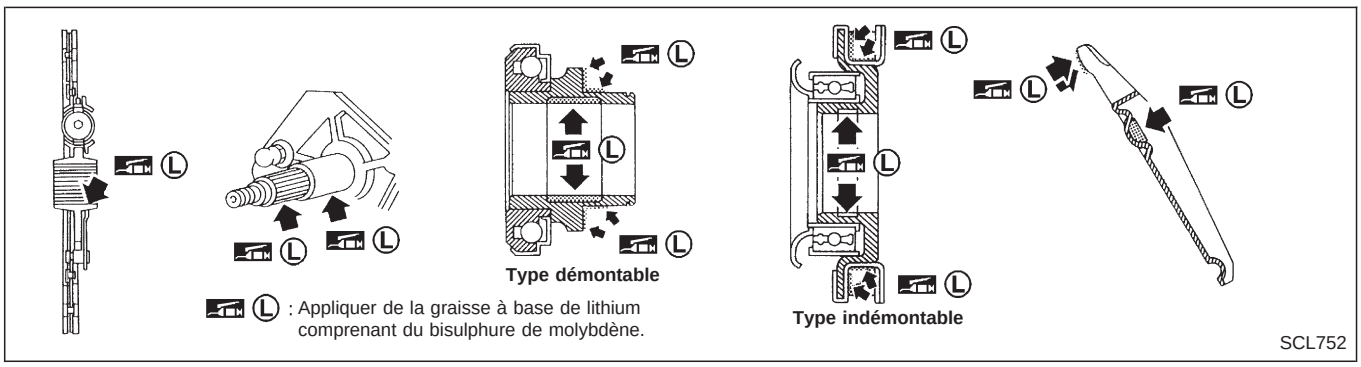

Simpo PDF Merge and Split Unregistered Version - http://www.simpopdf.com

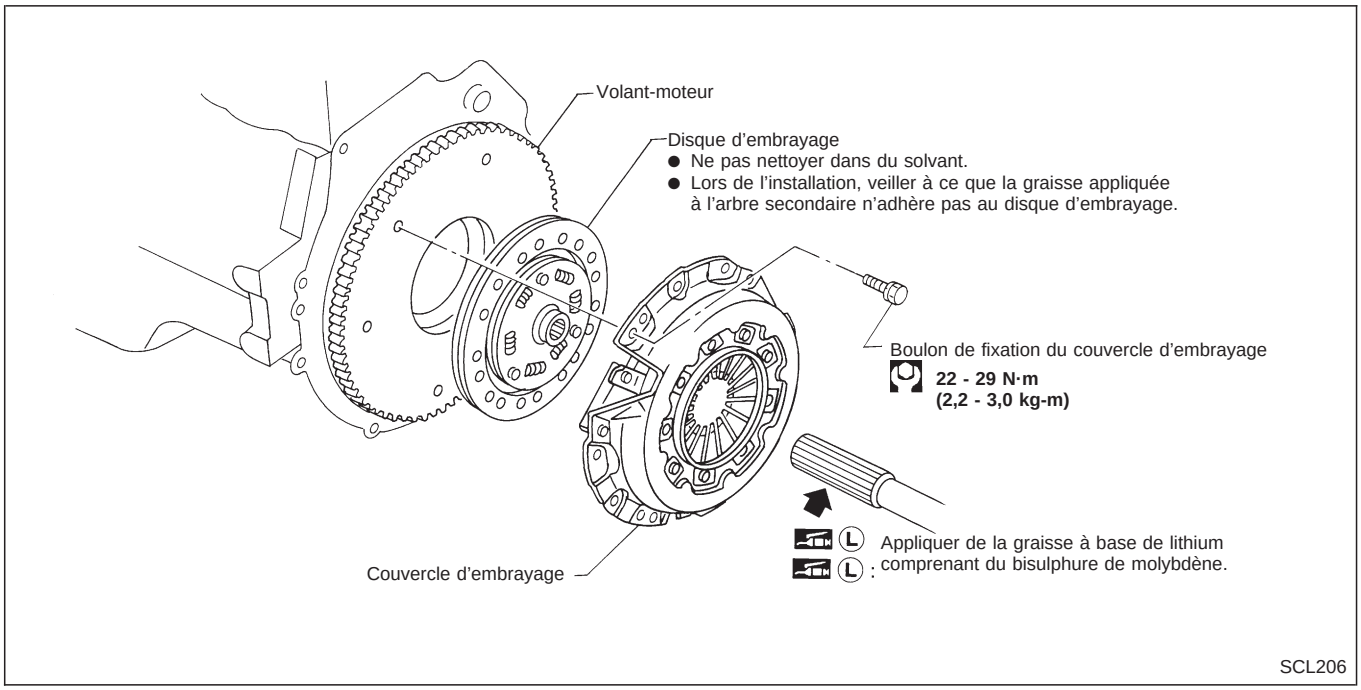

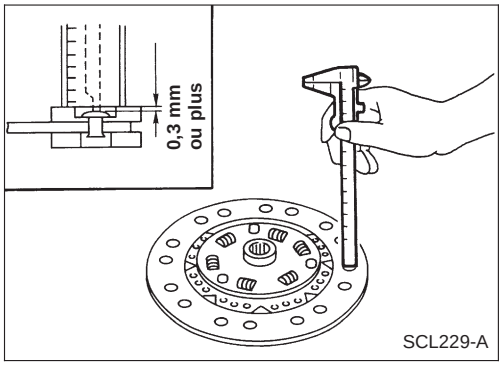

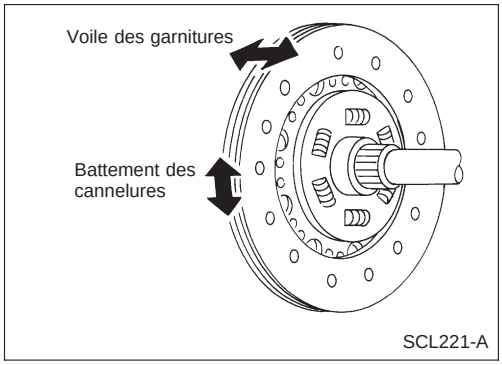

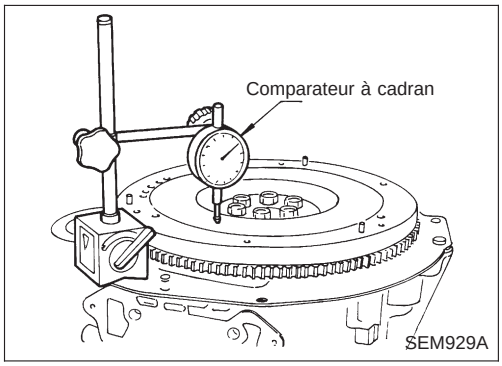

Disque d'embrayage et volant-moteur

INSPECTION

- Contrôler le disque d'embrayage pour voir s'il n'y a pas de traces de brûlures, de décoloration, de fuites d'huile ou de graisse. Remplacer si nécessaire.
- Contrôler le disque d'embrayage pour voir si les garnitures ne sont pas usées.
  Limite d'usure de la surface des garnitures jusqu'aux têtes de rivets :
  0,3 mm
- Contrôler le disque d'embrayage et mesurer le battement des cannelures et le voile des garnitures.
  Battement maximum de cannelures (à la bordure extérieure du disque) :
  240 1,0 mm Sauf pour les moteurs TD25Ti et QD32
  250 1,0 mm Moteurs TD25Ti et QD32
  Limite de voile :
  0,7 mm Moteurs TD25 et TD27
  1,0 mm Sauf moteurs TD25 et TD27
  Distance du point de contrôle du voile, sauf pour les moteurs (depuis le centre du moyeu) :
  240 115 mm Sauf pour les moteurs TD25Ti et QD32
  250 120 mm Moteurs TD25Ti et QD32
- Vérifier si les surfaces de contact du disque d'embrayage et du volant-moteur ne sont pas légèrement brûlées ou décolorées. Réparer le volant-moteur au papier émeri.
- Contrôler le voile du volant-moteur.
  Limite de voile :
  Se reporter à la section EM (''Inspection'', ''BLOC-CYLINDRES'').

Simpo PDF Merge and Split Unregistered Version - http://www.simpopdf.com

Disque d'embrayage et volant-moteur (Suite)

REPOSE

- Enduire de graisse recommandée la surface de contact de la partie cannelée.

Trop de lubrifiant risque d'endommager le disque d'embrayage.

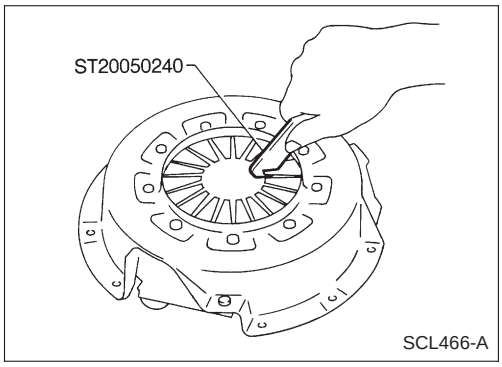

Couvercle d'embrayage

INSPECTION

- Corriger la différence de hauteur des ressorts de diaphragme à l'aide de l'outil spécial.

Limite d'irrégularité de hauteur :

250 0,5 mm Moteurs TD25Ti et QD32
240 0,5 mm Sauf pour les moteurs TD25 et TD27
0,7 mm Moteurs TD25 et TD27

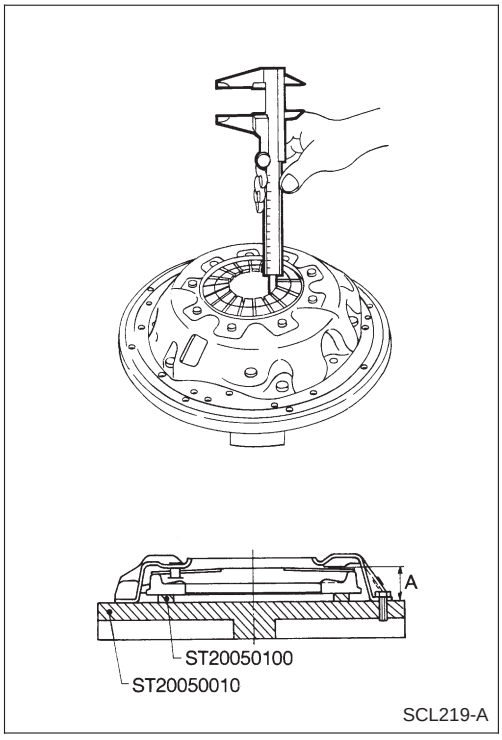

- Placer l'outil spécial et contrôler la hauteur et l'irrégularité des ressorts de diaphragme.

Placer des calibres d'épaisseur de 0,2 mm sur les entretoises (ST20050100) lors de la vérification des modèles 240 ou 250.

Hauteur du ressort de diaphragme ''A'' :

240 37,5 - 39,5 mm Sauf moteurs TD25Ti et QD32
250 36,5 - 38,5 mm Moteur TD25Ti
37,0 - 39,0 mm Moteur QD32

- Contrôler les bagues de butée pour voir si elles ne sont pas usées ou endommagées en secouant l'ensemble de couvercle de haut en bas pour voir s'il est bruyant, ou en frappant légèrement sur les rivets et en écoutant le son émis. Remplacer l'ensemble de couvercle d'embrayage si nécessaire.
- Contrôler la surface de contact entre le plateau de pression et le disque d'embrayage pour voir s'il n'y a pas de légères brûlures ou de décolorations. Réparer le plateau de pression avec du papier émeri.
- Contrôler la surface de contact entre le plateau de pression et le disque d'embrayage pour voir s'il n'y a pas de déformations ou autres dommages. Remplacer si nécessaire.

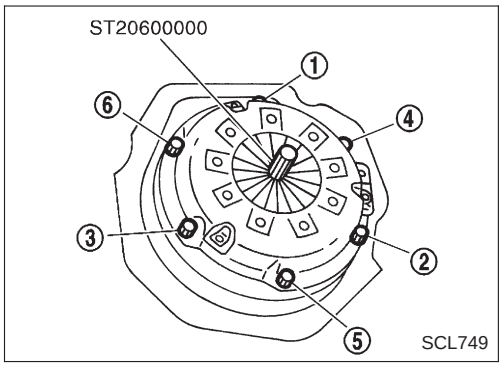

REPOSE

- Introduire l'outil spécial dans le moyeu du disque d'embrayage pour la mise en place du couvercle et du disque d'embrayage.
- Veiller à ce qu'il n'y ait pas de graisse sur la garniture d'embrayage.
- Serrer les boulons dans l'ordre numérique, en deux étapes.

Première étape :
: 10 - 20 N·m (1,0 - 2,0 kg-m)
Etape finale :
: 22 - 29 N·m (2,2 - 3,0 kg-m)

Simpo PDF Merge and Split Unregistered Version - http://www.simopdf.com

Caractéristiques générales

SYSTEME DE COMMANDE D'EMBRAYAGE

Type de commande d'embrayage	Hydraulique

MAITRE-CYLINDRE D'EMBRAYAGE (tous modèles)

Diamètre intérieur	mm	15,87

CYLINDRE RECEPTEUR D'EMBRAYAGE

Unité : mm

Diamètre intérieur	Conduite à gauche	Sauf moteur TD25Ti	17,46
		Moteur TD25Ti	19,05
	Conduite à droite		19,05

DISQUE D'EMBRAYAGE

Destination	Australie, Moyen-Orient et pays généraux		
Modèle	240		250
Moteur	NA20S, KA24E, Z24S	TD27	TD25Ti, QD32
Dimensions de la garniture mm (Diamètre extérieur x diamètre intérieur x épaisseur)	240 x 150 x 3,5	240 x 160 x 3,5	250 x 160 x 3,5
Epaisseur de l'ensemble de disque Avec charge mm	7,6 - 8,0 Avec 3 923 N (400 kg)	7,5 - 7,9 Avec 3 923 N (400 kg)	7,9 - 8,3 Avec 5 884 N (600 kg)

Destination	Europe		
Modèle	240		250
Moteur	KA24E	TD25	TD25Ti
Dimensions de la garniture mm (Diamètre extérieur x diamètre intérieur x épaisseur)	240 x 150 x 3,5	240 x 160 x 3,5	250 x 160 x 3,5
Epaisseur de l'ensemble de disque Avec charge mm	7,8 - 8,2 Avec 4 904 N (500 kg)	7,5 - 7,9 Avec 3 923 N (400 kg)	7,9 - 8,3 Avec 5 884 N (600 kg)

COUVERCLE D'EMBRAYAGE

Modèle	240		250
Moteur	NA20S, TD25, TD27	KA24E, Z24S	TD25Ti, QD32
Pleine charge N (kg)	3 923 (400)	4 413 (450)	5 394 (550)

Inspection et réglage

PEDALE D'EMBRAYAGE

Unité : mm

Hauteur de la pédale "H*"	
Conduite à gauche	
Moteurs NA20S, Z24S, TD25, TD27 et KA24E	221 - 231
Moteurs TD25Ti et QD32	240 - 250
Conduite à droite	
Moteurs NA20S, Z24S, TD25, TD27 et KA24E	195 - 205
Moteurs TD25Ti et QD32	203 - 213
Jeu libre de la pédale (à l'axe de chape)	1 - 1,5

*: Mesuré de la surface de la tôle d'isolation au patin de pédale.

DISQUE D'EMBRAYAGE

Unité : mm

Modèle	240		250
Moteur	NA20S, KA24E, Z24S	TD25, TD27	TD25Ti, QD32
Limite d'usure de la surface des garnitures jusqu'aux têtes des rivets	0,3 ou plus		
Limite de voile de la garniture	1,0	0,7	1,0
Distance du point de contrôle du voile (depuis le centre du moyeu)	115		120
Battement maximum de cannelures (à la bordure extérieure du disque)	1,0		1,0

Simpo PDF Merge and Split Unregistered Version - http://www.simopdf.com

COUVERCLE D’EMBRAYAGE

Unité : mm

Modèle	240		250
Moteur	NA20S, KA24E, Z24S	TD25, TD27	TD25Ti, QD32
Hauteur du ressort de diaphragme	37,5 - 39,5		37,0 - 39,0
Limite d’irrégularité de hauteur de ressort de diaphragme	0,5	0,7	0,5

Simpo PDF Merge and Split Unregistered Version - http://www.simpopdf.com

<SUPPLEMENT-I>

SYSTEME DE GESTION DU MOTEUR

SECTION EC

AVIS DE MODIFICATION :

Moteur TD

- Le moteur TD25Ti a été ajouté pour l'Europe. Pour les caractéristiques autres que celles décrites ici, se reporter au moteur TD25.

TABLE DES MATIERES

TD25Ti

POMPE A INJECTION 1002
Dépose 1002
SYSTEME DE PRECHAUFFAGE RAPIDE 1003
Emplacement des composants 1003
Schéma de câblage 1004
SYSTEME EGR 1006
Emplacement des composants 1006
Description 1007
Fonctionnement 1008
Inspection du système 1009
Inspection des composants 1009
MINUTEUR DE SOLENOIDE 1010
Fonctionnement 1010
Inspection 1010
CIRCUIT DE COMMANDE DU RALENTI ACCELERE 1011
Schéma de câblage 1011
CARACTERISTIQUES ET VALEURS DE REGLAGE (SDS) 1012
Pompe à injection de type VE 1012
Calibrage standard de la pompe à injection 1013

Lecture des schémas de câblage :

- **Lire la section GI : " COMMENT LIRE LES SCHEMAS DE CABLAGE"**
- **Voir la section EL : "DISPOSITION DE L'ALIMENTATION ELECTRIQUE" pour connaître les circuits de distribution de l'alimentation électrique.**

Pour le diagnostic des pannes, lire la section GI "COMMENT LIRE LES ORGANIGRAMMES DANS LES DIAGNOSTICS DES DEFAUTS" et "COMMENT ACCOMPLIR UN DIAGNOSTIC EFFICACE EN CAS D'INCIDENT ELECTRIQUE".

Simpo PDF Merge and Split Unregistered Version - http://www.simpopdf.com

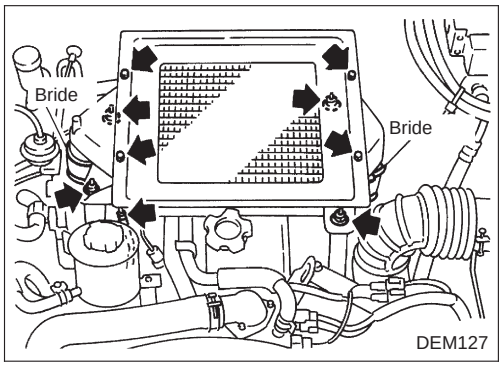

Dépose

- Déposer le refroidisseur de l'air de suralimentation avant de déposer le tube à injection.

Simpo PDF Merge and Split Unregistered Version - http://www.simpopdf.com

Emplacement des composants

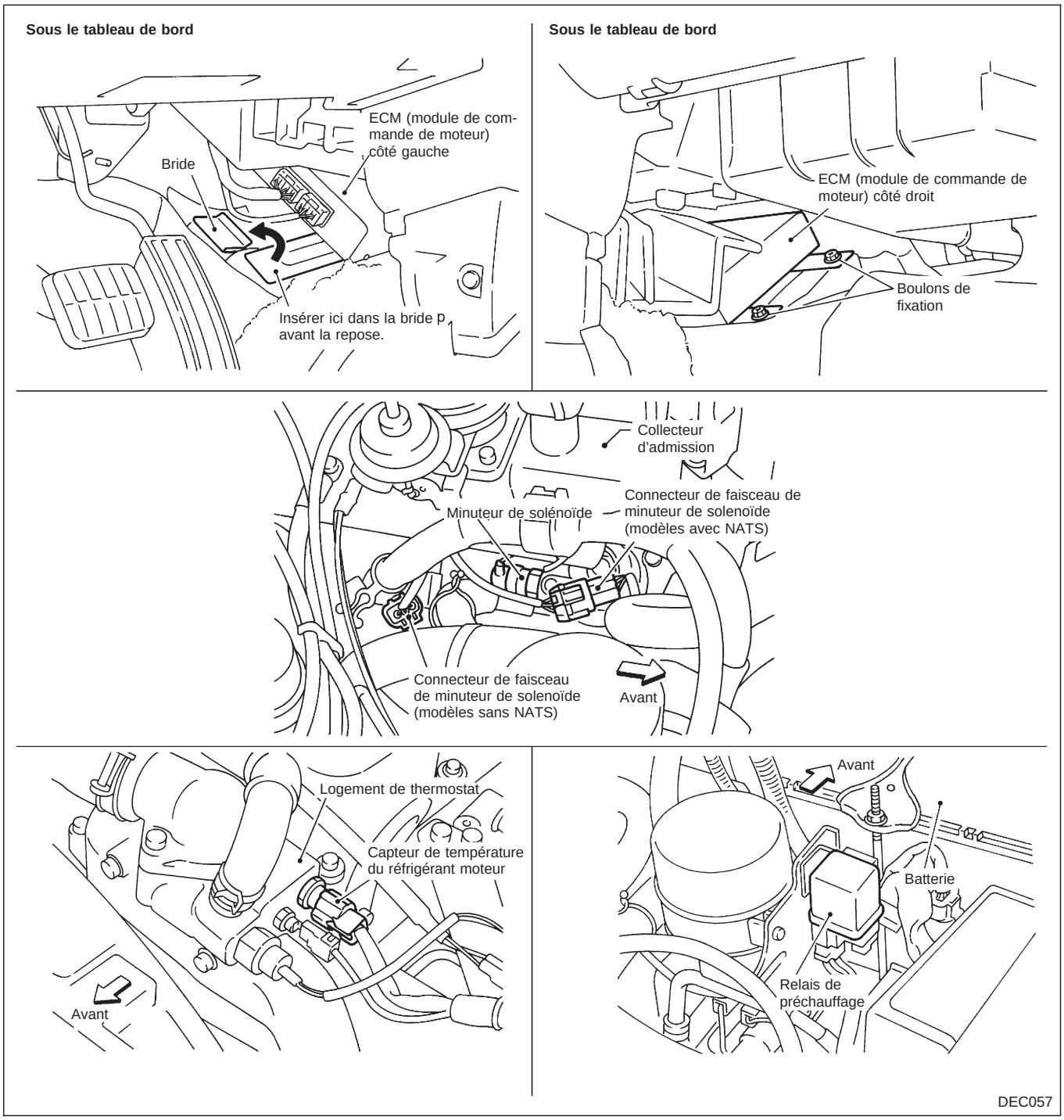

Simpo PDF Merge and Split Unregistered Version - http://www.simpopdf.com

Schéma de câblage

MOTEURS TD25 & TD25Ti (c. à g.)

EC-GLOW-14

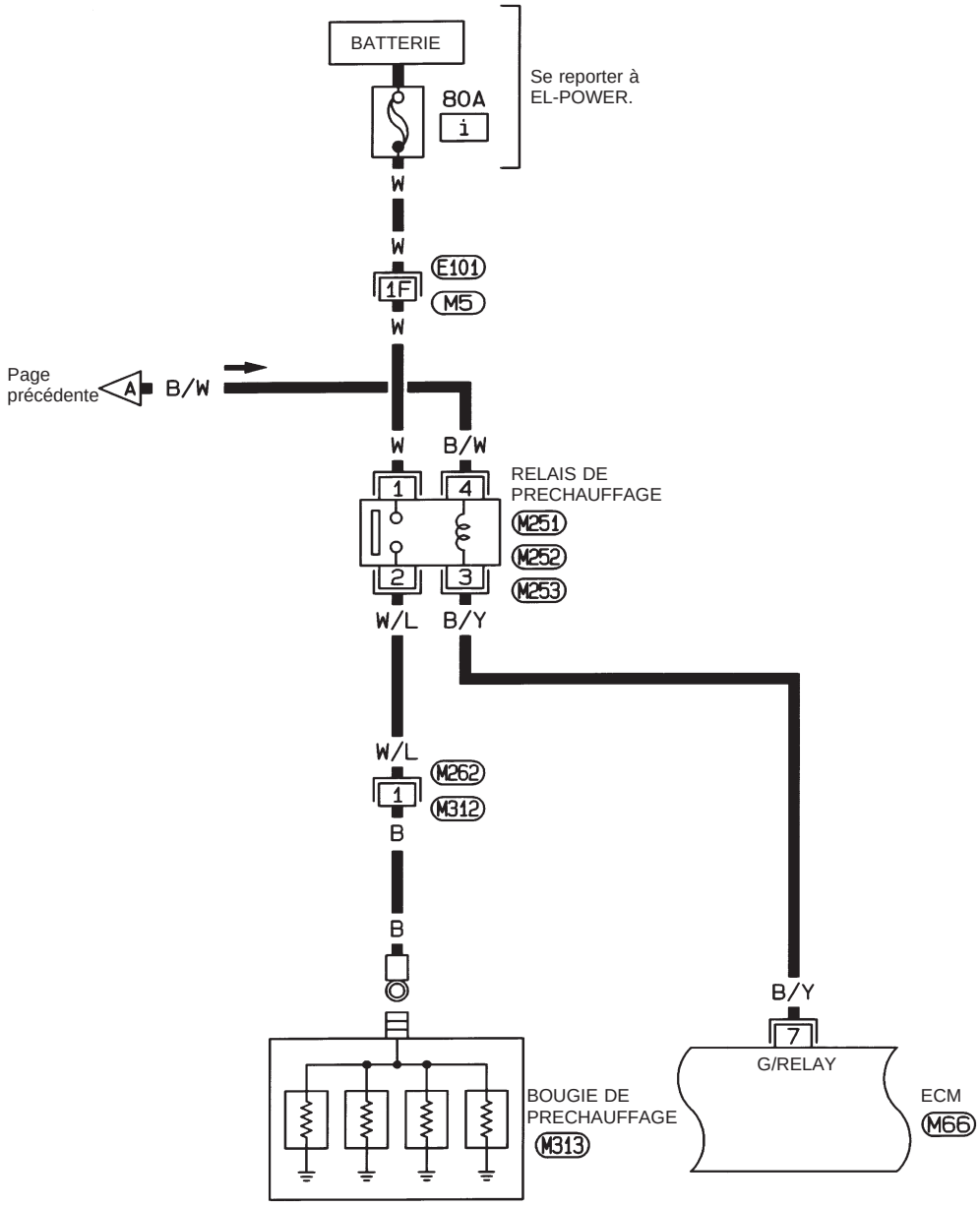

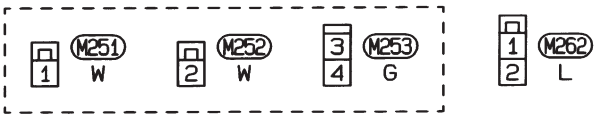

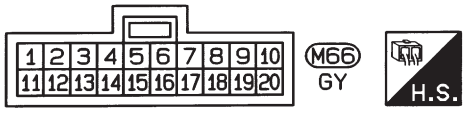

Consulter la dernière page dépliante.
M5, E101

HEC615

Simpo PDF Merge and Split Unregistered Version - http://www.simpopdf.com

Schéma de câblage (Suite)

MOTEURS TD25 & TD25Ti (c. à d.)

EC-GLOW-17

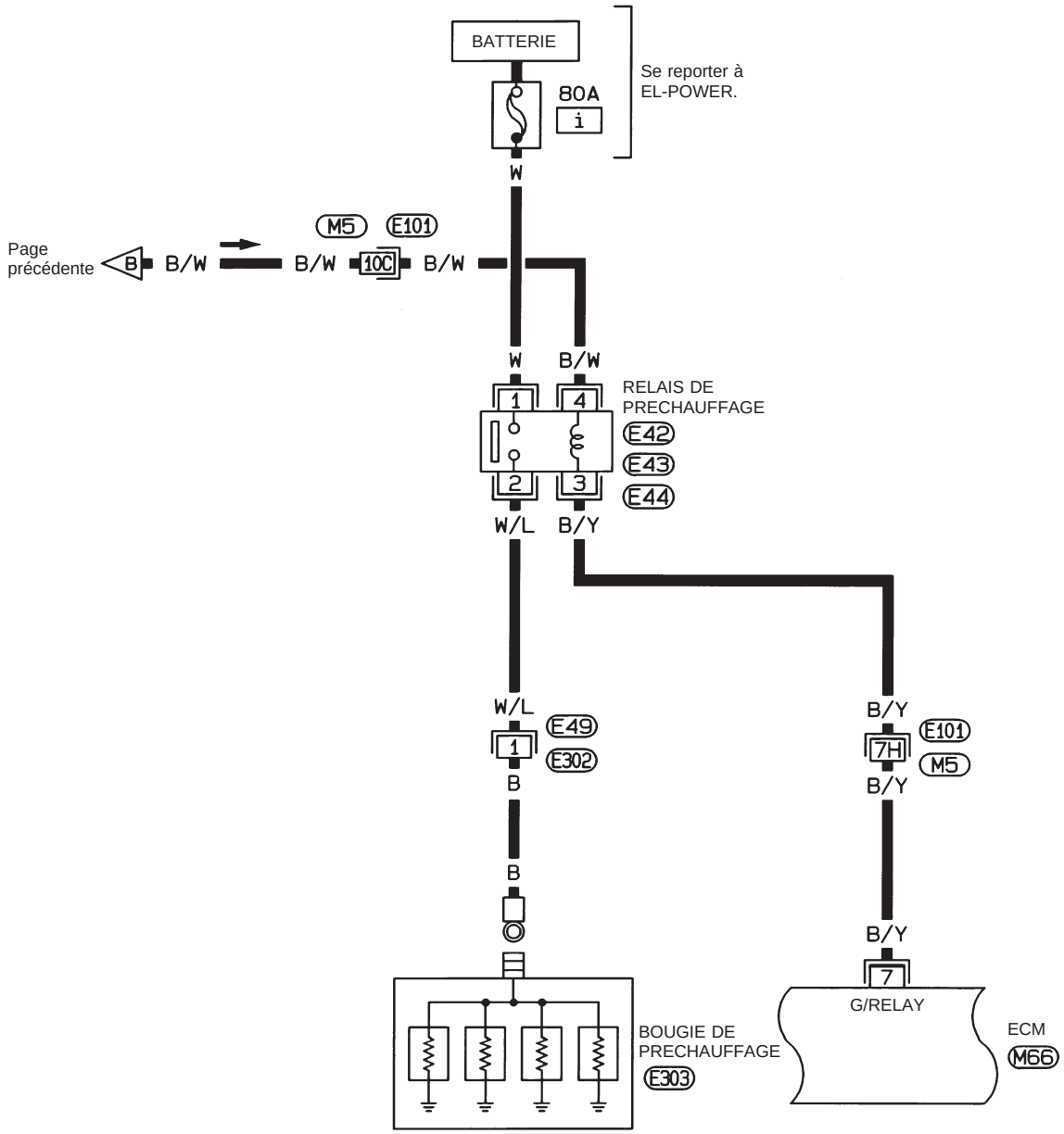

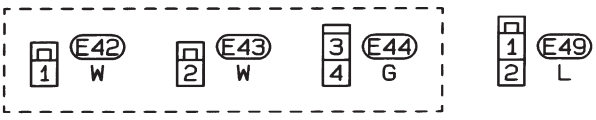

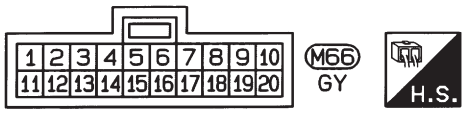

Consulter la dernière page dépliante.
M5, E101

HEC617

Simpo PDF Merge and Split Unregistered Version - http://www.simpopdf.com

Emplacement des composants

MOTEUR TD25Ti

Sous le tableau de bord

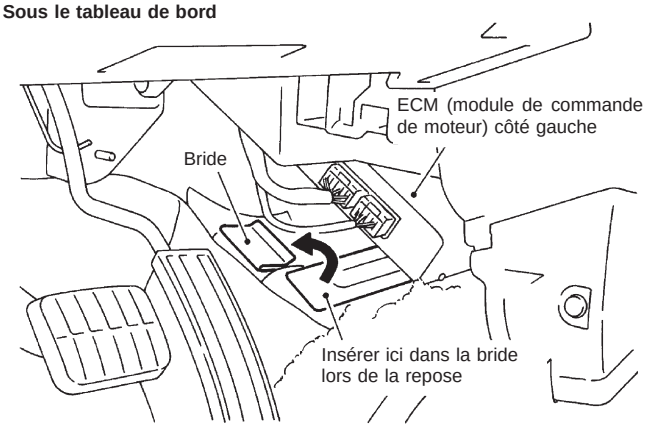

Sous le tableau de bord

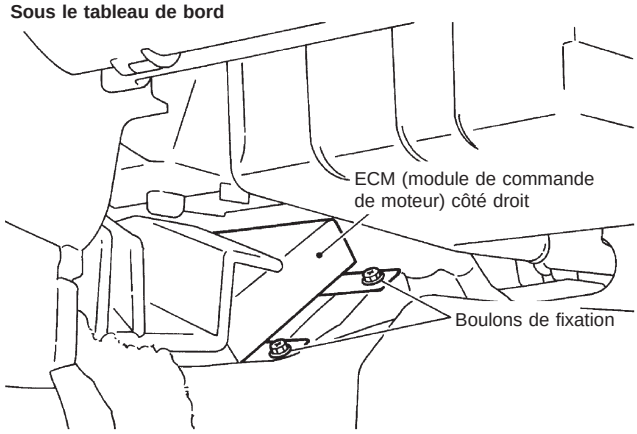

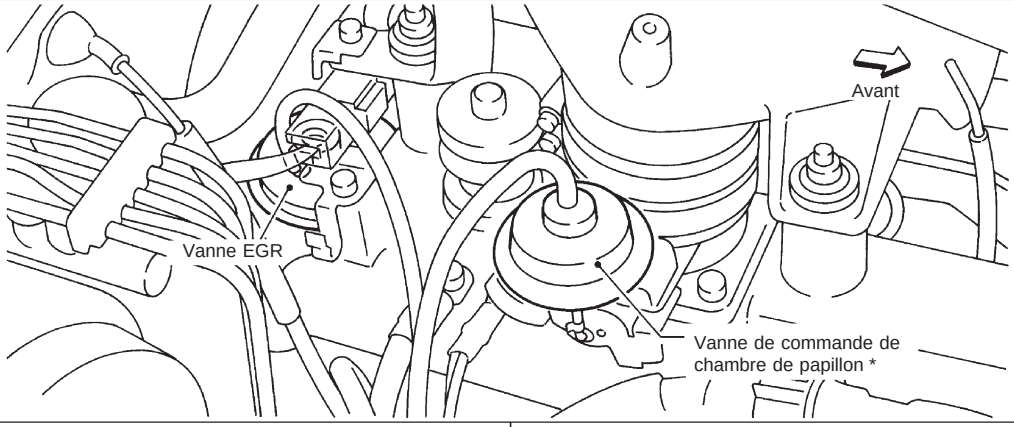

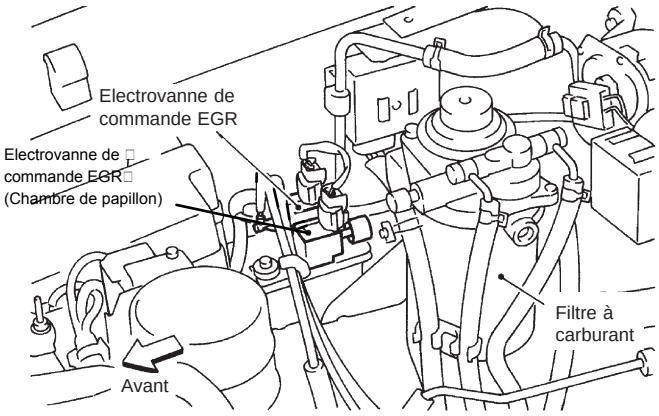

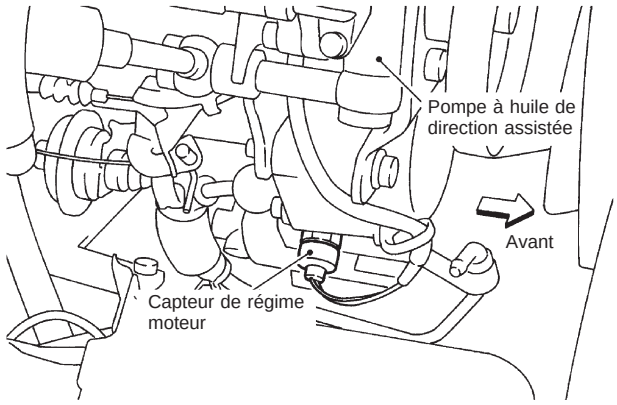

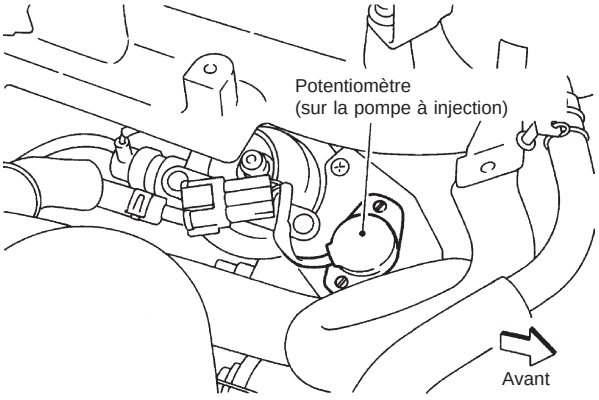

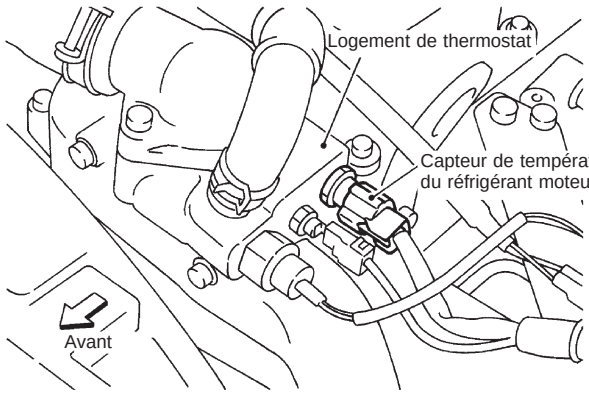

DEC054

*: Selon modèle

Description

MOTEUR TD25Ti

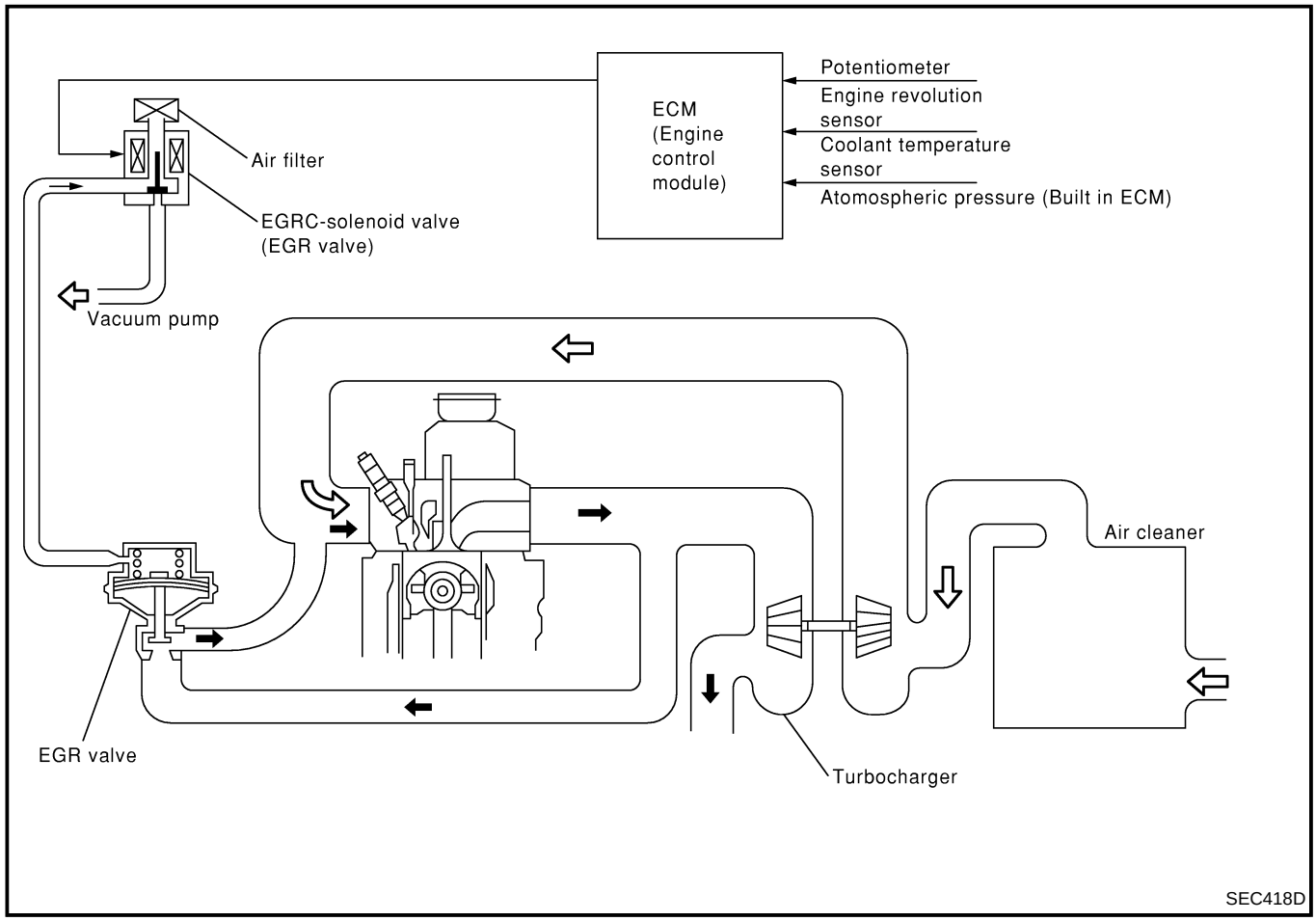

Le système EGR est dessiné pour contrôler l'émission d'oxydes d'azote (NOx) en redistribuant les gaz d'échappement dans le collecteur d'admission par l'intermédiaire de la vanne de commande E.G.R. Pour le circuit électrique du système EGR, se reporter au ''SYSTEME DE PRECHAUFFAGE RAPIDE'' EC-1007b

Schéma de circuit

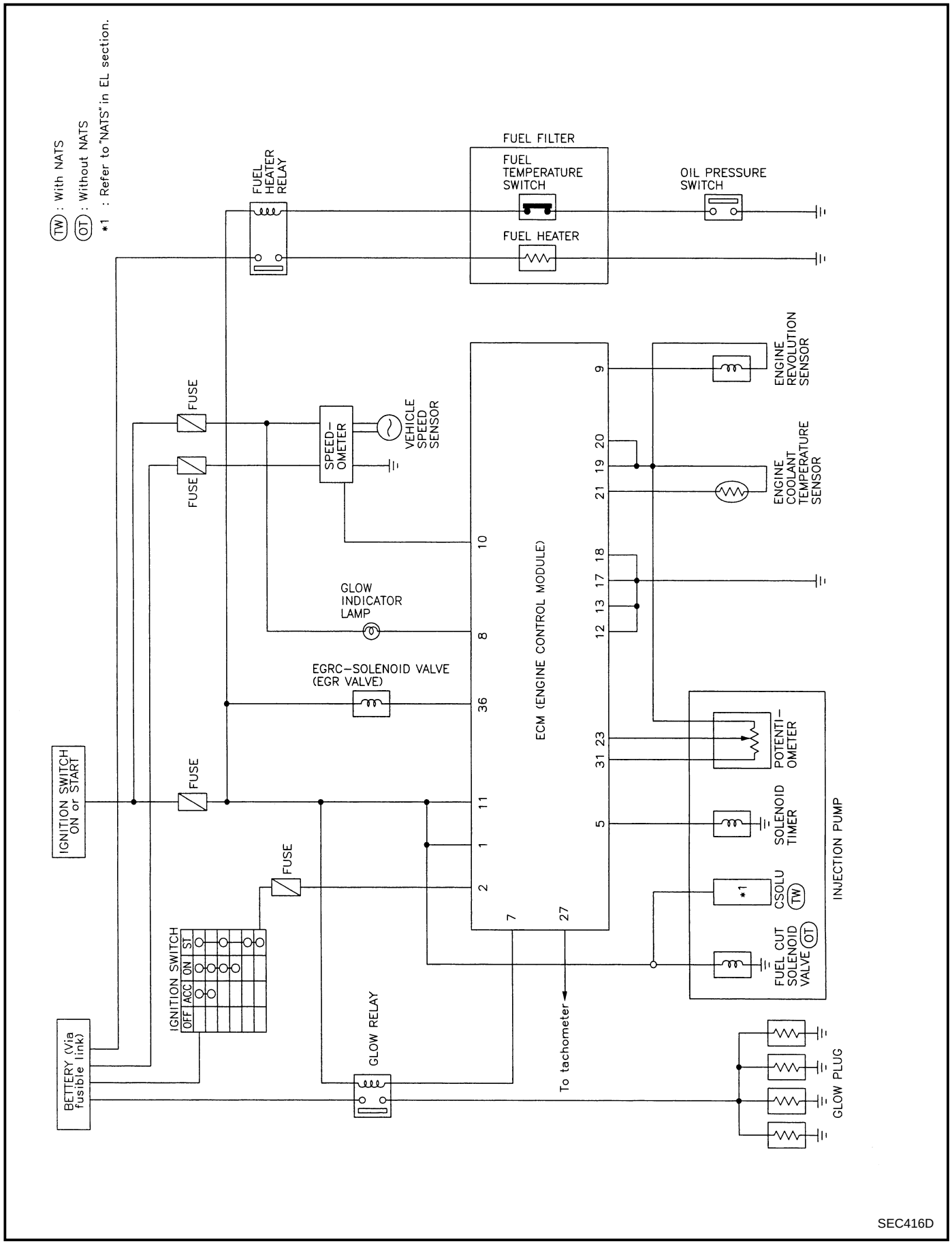

Fonctionnement

Température de réfrigérant ℃	Charge du moteur (Zone EGR)	Electrovanne de commande EGR	Vanne EGR	Débit de gaz EGR
Inférieur à 60	Tout	ARRET (Fermé)	Fermée	Non
Supérieur à 60	Charge légère (Zone ①)	MARCHE (Ouvert)	Ouvert	Oui
	Forte charge*1 (Zone ②)	ARRET (Fermé)	Fermée	Non

*1: Cela comprend également les conditions dans lesquelles le moteur est arrêté avec le contact d'allumage sur ON ou lorsque la pression atmosphérique est inférieure à 90,0 kPa (900 mbar, 675 mmHg).

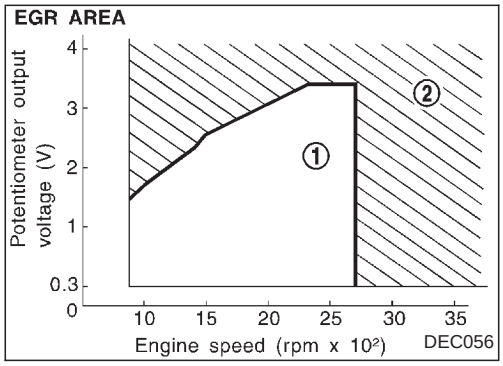

Simpo PDF Merge and Split Unregistered Version - http://www.simpopdf.com

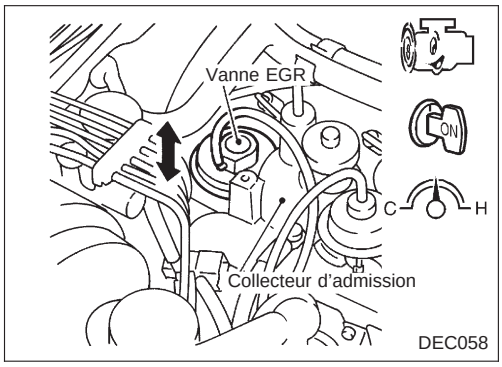

Inspection du système

FONCTIONNEMENT GENERAL

1. Démarrer le moteur et le laisser s'échauffer suffisamment.
2. S'assurer que le mouvement du diaphragme de la vanne EGR (utiliser les doigts pour s'assurer du mouvement de diaphragme de vanne EGR) satisfait aux conditions suivantes.

Au ralenti :

Le diaphragme ne bouge pas.

En emballant le moteur du ralenti à un régime de 1 000 à 2 700 tr/mn :

Le diaphragme bouge.

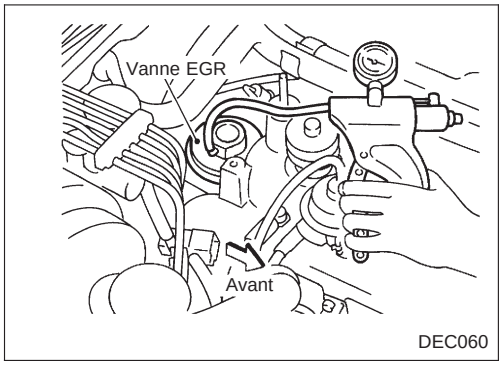

Inspection des composants

Vanne EGR

Appliquer une dépression à l'orifice de dépression de la vanne EGR à l'aide d'une pompe à vide manuelle.

Le diaphragme de la vanne EGR doit se soulever.

Si le résultat est mauvais, remplacer la vanne EGR.

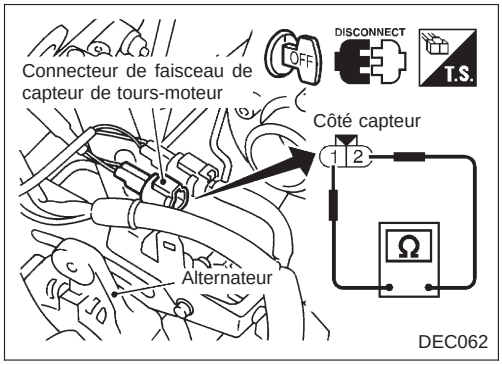

Capteur de régime moteur

1. Débrancher le connecteur de faisceau du capteur de régime moteur.
2. Vérifier la résistance entre les bornes ① et ②.

Résistance : environ 1,6 kΩ (à 25°C)

Si le résultat est mauvais, remplacer le capteur.

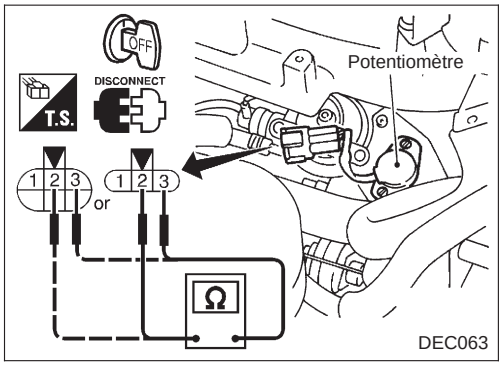

Potentiomètre

1. Débrancher le connecteur de faisceau du potentiomètre.
2. S'assurer que la résitance entre les bornes ② et ③ change lorsque l'accélérateur est utilisé.

Condition de la pédale d'accélérateur	Resistance kΩ (à 20°C)
Complètement relâchée	Environ 0,7
Partiellement enfoncé	0,7 - 5
Enfoncée à pleine course	Environ 5

Si le résultat est mauvais, remplacer le potentiomètre.

Simpo PDF Merge and Split Unregistered Version - http://www.simpopdf.com

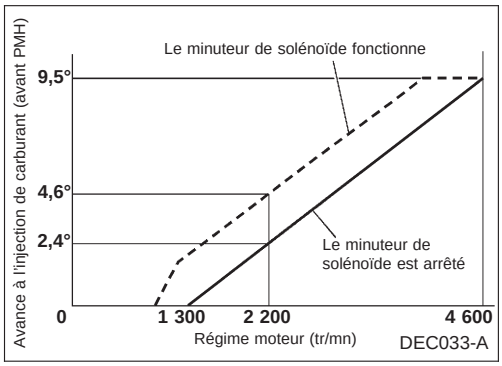

Fonctionnement

CARACTERISTIQUES DU MINUTEUR

Les figures indiquent les différences de l'avance à l'injection de carburant par rapport au régime moteur lorsque le minuteur de solénoïde est actionné ou non.
Lorsque le minuteur de solénoïde s'enclenche, l'avance à l'injection progresse d'environ 2°. Ainsi, le démarrage à froid du moteur par temps froid est grandement amélioré.

Application :

	N° de pièce	N° d'assemblage de pompe
TD25Ti	16700 3S900	104780-9010
	16700 3S901	104780-9020

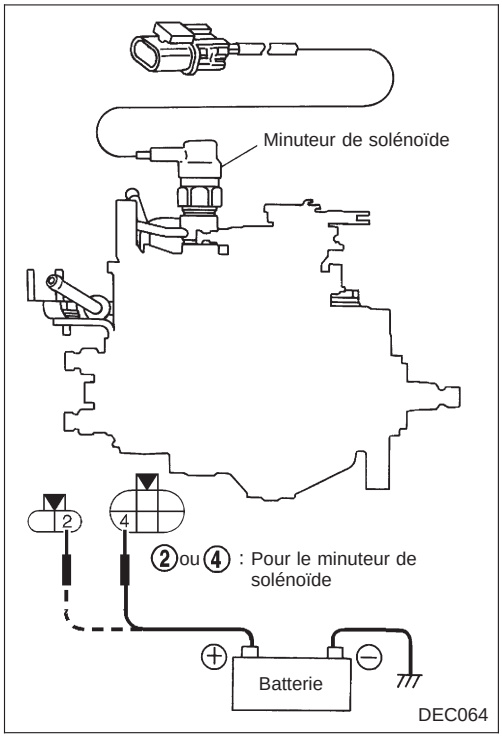

Inspection

MINUTEUR DE SOLENOIDE

1. Débrancher le faisceau du minuteur de solénoïde et s'assurer que le solénoïde émet un bruit de déclic lorsque la batterie est branchée et débranchée.
   Si le solénoïde comporte un défaut, le remplacer.

Rebrancher le connecteur après contrôle.

Simpo PDF Merge and Split Unregistered Version - http://www.simopdf.com

Schéma de câblage

POUR L'EUROPE

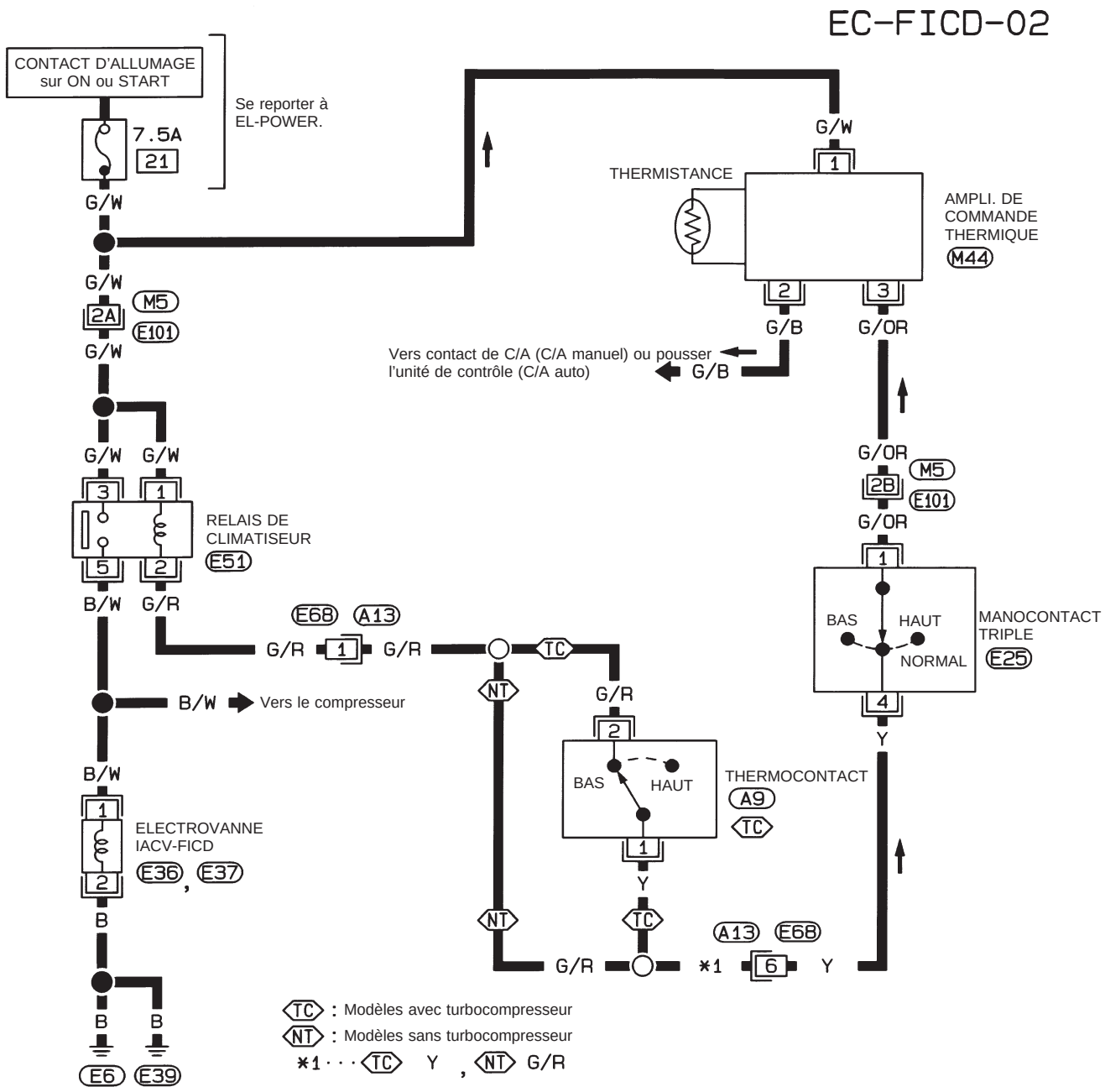

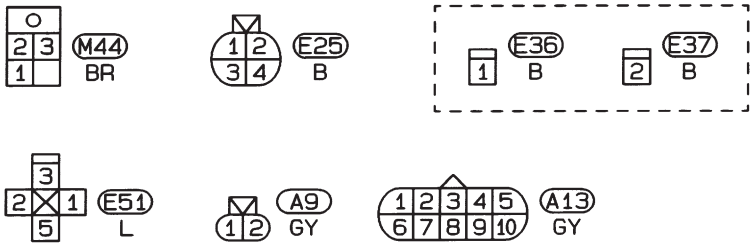

Consulter la dernière page dépliante.
M5 , E101

HEC616

Simpo PDF Merge and Split Unregistered Version - http://www.simpopdf.com

Pompe à injection de type VE

APPLICATION

Moteur	Destination	N° de pièce	N° d'assemblage de pompe	Remarques
TD25Ti	Europe	16700 3S900	104780-9010	
		16700 3S901	104780-9020	Avec système antivol Nissan (NATS)

CONTROLE ET REGLAGE

Levée de plongeur

Moteur	Levée de plongeur au P.M.H. mm		N° pièce	N° d'assemblage de pompe
	Inspection	Réglage		
TD25Ti	0,71±0,05	0,71±0,02	16700 3S900	104780-9010
			16700 3S901	104780-9020

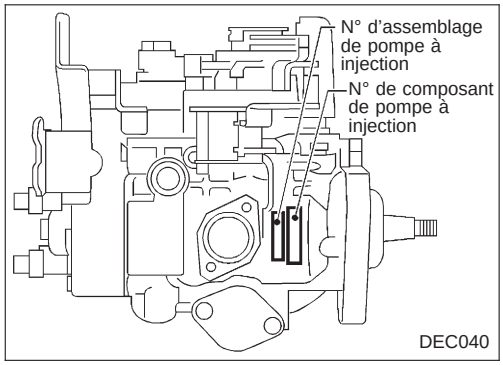

Simpo PDF Merge and Split Unregistered Version - http://www.simpopdf.com

Calibrage standard de la pompe à injection

MOTEUR TD25Ti

N° d'assemblage de pompe à injection	104780-9010/ 104780-9020
N° pièce	16700 3S900/ 16700 3S901

Sene de rotation de la pompe : dans le sens des aiguilles d'une montre - vue du côté entraînement

1. Conditions d'essai

1 - 1 Injecteur : 105780-0060 (NP-DN0SD1510)
1 - 2 Support d'injecteur : 105780-2150
1 - 3 Pression d'ouverture d'injecteur : 13 000 $^{+300}_{0}$ kPa ($130{,}0^{+3{,}0}_{0}$ bar, 133^{+3}_{0} kg/cm^2)
1 - 4 Tuyau d'injection : 2 dia. x 6 dia. x 450 mm
1 - 5 Température du carburant : 45^{+5}_{0} °C
1 - 6 Pression de pompe d'alimentation : 20 kPa (0,20 bar, 0,2 kg/cm^2)

2. Réglage		Régime de la pompe tr/mn	Réglages	Pression d'air de charge KPa (mbar, mmHg)	Différence de débit mℓ
2 - 1	Course du dispositif de distribution	1 100	ARRET 2,1 - 2,5 mm	65,4 - 68,0 (653 - 680, 490 - 510)	—
2 - 2	Pression de la pompe d'alimentation	1 100	ARRET 403 - 461 kPa (4,03 - 4,61 bar, 4,11 - 4,7 kg/cm^2)	65,4 - 68,0 (653 - 680, 490 - 510)	—
2 - 3	Débit à pleine charge	1 200 (Pleine course)	71,1 - 72,1 mℓ/1 000 course	65,4 - 68,0 (653 - 680, 490 - 510)	6,0
		800 (BCS)	53,4 - 54,4 mℓ/1000 course	30,7 - 33,3 (307 - 333, 230 - 250)	—
		500 (NA)	39,0 - 40,0 mℓ/1 000 course	0 (0, 0)	—
2 - 4	Régulation du régime de ralenti	350	7,4 - 11,4 mℓ/1 000 course*	0 (0, 0)	2,0
2 - 5	Démarrage	100	60,0 - 95,0 mℓ/1000 course*	0 (0, 0)	—
2 - 6	Régulation du régime à pleine charge	2 500	14,7 - 18,7 mℓ /1 000 course	65,4 - 68,0 (653 - 680, 490 - 510)	—
2 - 7	Réglage du minuteur de charge	1 100	1,5 - 1,9 mm	65,4 - 68,0 (653 - 680, 490 - 510)	—

3. Caractéristiques d'essai		Pression d'air de charge	65,4 - 68,0 kPa (653 - 680 mbar, 490 - 510 mmHg)				
		Minuteur de solénoïde	MARCHE		ARRET		
3 - 1	Dispositif de distribution	N = tr/mn mm	1 100 3,6 - 4,6*	2 150 7,3 - 8,2	700 Inférieure à 0,8	1 100 2,0 - 2,6	2 150 6,7 - 7,7
3 - 2	Pompe d'alimentation	N = tr/mn kPa (bar, kg/cm^2)	—			1 100 393 - 471 (3,93 - 4,71, 4,01 - 4,8)	2 150 608 - 686 (6,08 - 6,86, 6,2 - 7,0)
3 - 3	Débit de trop-plein	N = tr/mn mℓ/min.	1 100 320 - 580		—		

3 - 4 Quantités de carburant injecté

Position du levier de commande de régime	Régime de la pompe tr/mn	Débit de carburant mℓ/ 1 000 course	Pression d'air de charge kPa (mbar, mmHg)
Régime maxi	1 200 (Pleine course)	70,6 - 72,6	65,4 - 68,0 (653 - 680, 490 - 510)
	800 (BCS)	52,9 - 53,9	30,7 - 33,3 (307 - 333, 230 - 250)
	500 (NA)	38,5 - 40,5	0 (0, 0)
	1 000	69,3 - 74,3*	65,4 - 68,0 (653 - 680, 490 - 510)
	1 500	68,1 - 74,1*	
	2 000	63,7 - 69,7*	
	2 250	46,2*	
	2 500	13,7 - 19,7	
	2 750	Inférieur à 5,0	
Contact coupé Vanne magnétique	350	0	0 (0, 0)
Ralenti	350	6,9 - 11,9	0 (0, 0)
3 - 5 Solénoïde	Tension de déclenchement maxi : 8V Tension d'essai : 12 - 14V		

4. Dimensions	
K	3,2 - 3,4 mm
KF	5,7 - 5,9 mm
MS	0,6 - 0,8 mm
BCS	6,8 - 7,2 mm
Pré-course	0,08 - 0,12 mm
Angle du levier de commande	
α	51,0 - 59,0 degrés
β	31,0 - 41,0 degrés
γ	—

MARCHE : le minuteur de solénoïde est en marche. * : Valeur de référence
ARRET : le minuteur de solénoïde est arrêté.
Lorsque la position MARCHE-ARRET du chronomètre de solénoïde n'est pas indiquée dans les spécifications, c'est que la position est sur ARRET.

Simpo PDF Merge and Split Unregistered Version - http://www.simpopdf.com

Calibrage standard de la pompe à injection (Suite)

Position de mesure de l'angle du levier de commande

Mesurer les angles (α, β) du levier de commande.

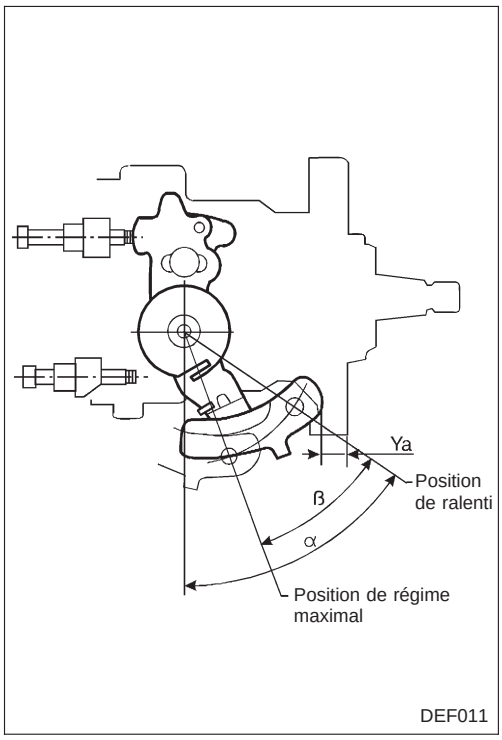

Réglage du minuteur de charge

1. Régler l'arbre régulateur de façon à ce que le jeu entre l'extrémité du flasque et l'extrémité de l'arbre régulateur soit d'environ 3 mm, puis bloquer l'écrou.
2. Fixer le levier de commande dans une position respectant les conditions suivantes.
   Pression de suralimentation : 66,7±1,3 kPa (667±13 mbar, 500±10 mmHg)
   Régime de la pompe : 1 100 tr/mn
   Quantité de carburant injecté : 44,0±0,5 mℓ/1 000 course
3. Avec le levier de commande positionné comme décrit au numéro 2 ci-dessus, régler le manchon du régulateur de façon à ce que la course du minuteur soit conforme aux valeurs spécifiées (élément 2 - 7 du tableau de réglage de la pompe).
4. Fixer le levier de commande dans une position respectant les conditions suivantes et confirmer la course du minuteur.

Position du levier de commande			Valeurs spécifiées	
Régime de la pompe tr/mn	Quantité d'injection de carburant mℓ/1 000 course	Pression de suralimentation kPa (mbar, mmHg)	Course du minuteur mm	Valeur de reduction de la course du minuteur mm
1 100	44,0±1,0	66,7±1,3 (667±13, 500±10)	1,7±0,3	0,6*
1 100	20,0±2,5	66,7±1,3 (667±13, 500±10)	0,7±0,5	1,6*

* :Valeur de référence

Réglage du potentiomètre

1. Maintenir le levier de commande dans la position de ralenti.
2. Régler le potentiomètre de façon que la tension de sortie soit de 1,4±0,03V. Puis fixer le potentiomètre.
3. Après avoir réglé le potentiomètre, confirmer les spécifications de tension de sortie du potentiomètre à l'angle maximal du levier de commande ci-dessous.

Tension de sortie V	Angle du levier de commande	Remarques
1,4±0,03	Ralenti	Point de réglage
Supérieur à 9,5	Pleine course	Point de vérification

Simpo PDF Merge and Split Unregistered Version - http://www.simpopdf.com

Calibrage standard de la pompe à injection (Suite)

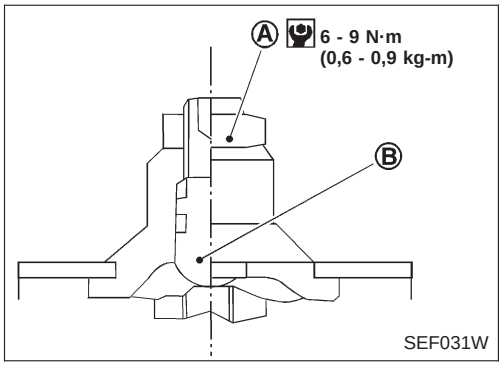

Réglage du compensateur de suralimentation (BCS)

1. Régler la quantité d'injection à pleine charge de la vitesse de pompe de 1 200 tr/mn à la valeur spécifiée du point de contrôle 2-3 dans le tableau de réglage de la pompe.
2. Régler les quantités d'injection du BCS de la vitesse de pompe de 800 tr/mn à la valeur spécifiée du point de contrôle 2-3 dans le tableau de réglage de la pompe.
3. Confirmer les quantités d'injection du NA de la vitesse de pompe de 500 tr/mn à la valeur spécifiée du point de contrôle 2-3 dans le tableau de réglage de la pompe.
4. Si le NA ci-dessus n'est pas comme spécifié, desserrer l'écrou Ⓐ et régler la vis Ⓑ de façon à ce que le NA satisfasse aux conditions, puis serrer l'écrou Ⓐ.

ATTENTION :
Ne pas serrer ou desserrer la vis Ⓑ de plus d'un tour.

Simpo PDF Merge and Split Unregistered Version - http://www.simpopdf.com

<SUPPLEMENT-I>

EQUIPEMENT ELECTRIQUE

SECTION EL

Lecture des schémas de câblage :
● Lire la section GI, ‘‘COMMENT LIRE LES SCHEMAS DE CABLAGE’’.
Pour les diagnostics des défauts, lire la section GI, ‘‘COMMENT LIRE LES ORGANIGRAMMES DANS LES DIAGNOSTICS DES DEFAUTS’’ et ‘‘COMMENT ACCOMPLIR UN DIAGNOSTIC EFFICACE EN CAS D’INCIDENT ELECTRIQUE’’.

TABLE DES MATIERES

DISPOSITION DE L’ALIMENTATION ELECTRIQUE 1003
Schéma 1003
Schéma de câblage - POWER - 1004
BATTERIE 1011
Caractéristiques et valeurs de réglage (SDS) 1011
CIRCUIT DE DEMARRAGE 1012
Construction 1012
Caractéristiques et valeurs de réglage (SDS) 1012
CIRCUIT DE CHARGE 1013
Construction 1013
Caractéristiques et valeurs de réglage (SDS) 1013
PHARES -- Système de mise en veilleuse des codes -- 1014
Schéma de câblage - DIMDIP - 1014
CLIGNOTANTS ET FEUX DE DETRESSE 1017
Schéma de câblage - TURN -/Modèles à 4 roues motrices avec conduite à gauche pour l’Europe 1017
Schéma de câblage - TURN -/Modèles à 4 roues motrices avec conduite à droite pour l’Europe 1020
ECLAIRAGE 1023
Schéma de câblage - ILL -/Conduite à gauche 1023
PLAFONNIER ET SPOT DE LECTURE 1025
Schéma de câblage - INT/L - 1025
TEMOINS LUMINEUX 1027
Schéma de câblage - WARN -/Conduite à droite 1027
DESEMBUAGE DE LUNETTE ARRIERE ET DE RETROVISEUR 1032
Schéma de câblage - DEF - 1032
SYSTEME AUDIO 1033
Schéma de câblage -AUDIO -/Conduite à droite 1033
LEVE-GLACE ELECTRIQUE 1034
Schéma de câblage - WINDOW -/Conduite à gauche 1034
Schéma de câblage - WINDOW -/Conduite à droite 1038
VERROUILLAGE ELECTRIQUE DE PORTE 1042
Schéma de câblage - D/LOCK - 1042
SYSTEME DE MULTI-TELECOMMANDE/POUR L’EUROPE 1044
Schéma de câblage - MULTI -/Conduite à gauche 1044
Schéma de câblage - MULTI -/Conduite à droite 1048
EMPLACEMENT DES DISPOSITIFS ELECTRIQUES 1052
Compartiment moteur 1052
Compartiment passager 1053
DISPOSITION DES FAISCEAUX 1055
Faisceau principal 1056
Faisceau de compartiment moteur 1062
Faisceau d’alternateur 1064
Faisceau des instruments 1065

Simpo PDF Merge and Split Unregistered Version - http://www.simpopdf.com

Faisceau de plafonnier/Modèles à cabine double 1066
Faisceau de porte avant (côté gauche)..... 1067
Faisceau de porte avant (côté droit) 1068
CODES DE SCHEMA DE CABLAGE (CODES DE CELLULES) 1069

Simpo PDF Merge and Split Unregistered Version - http://www.simpopdf.com

Schéma

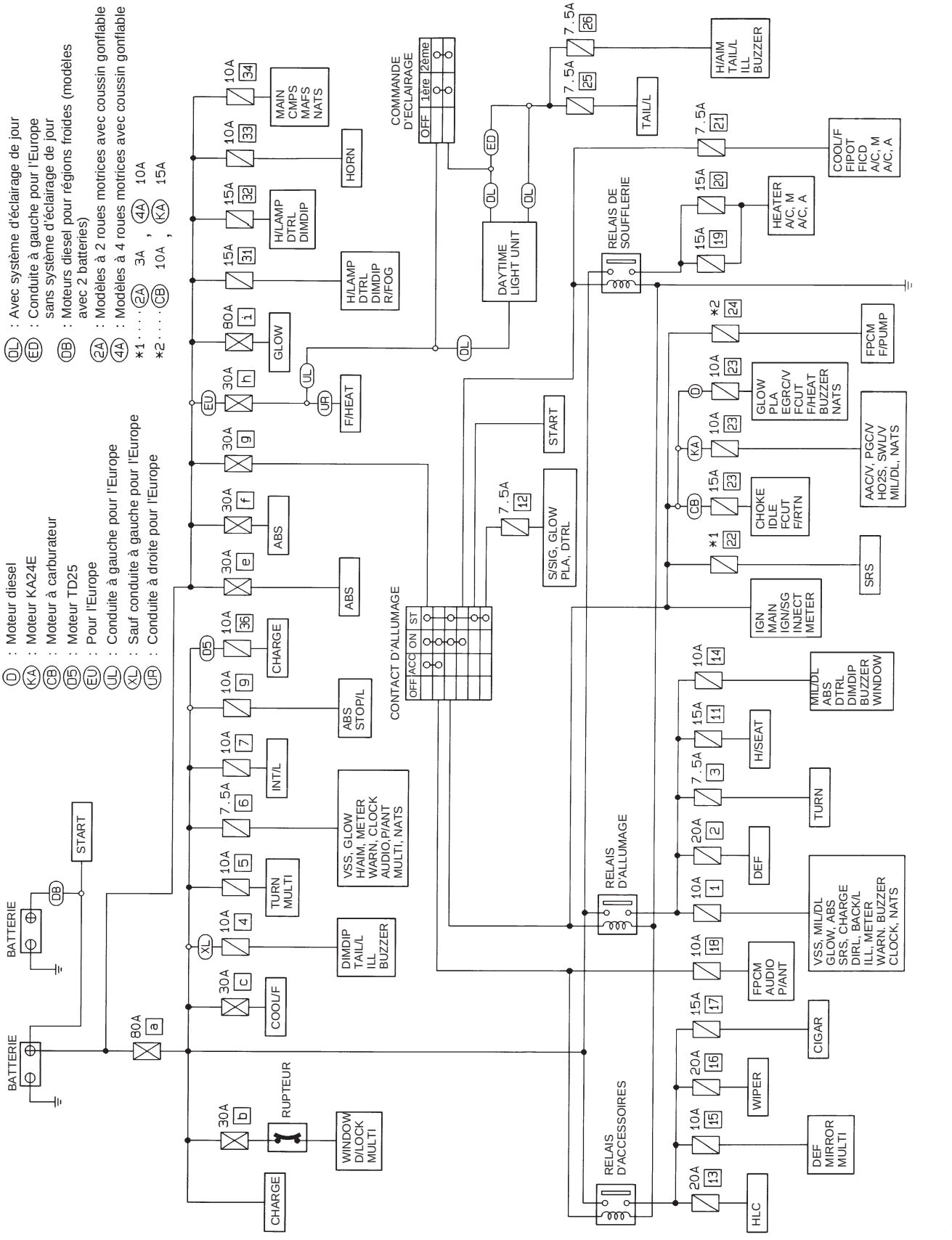

HEL463A

Simpo PDF Merge and Split Unregistered Version - http://www.simpopdf.com

Schéma de câblage — POWER —

ALIMENTATION ELECTRIQUE DE LA BATTERIE — CONTACT D'ALLUMAGE DANS N'IMPORTE QUELLE POSITION

EL-POWER-01

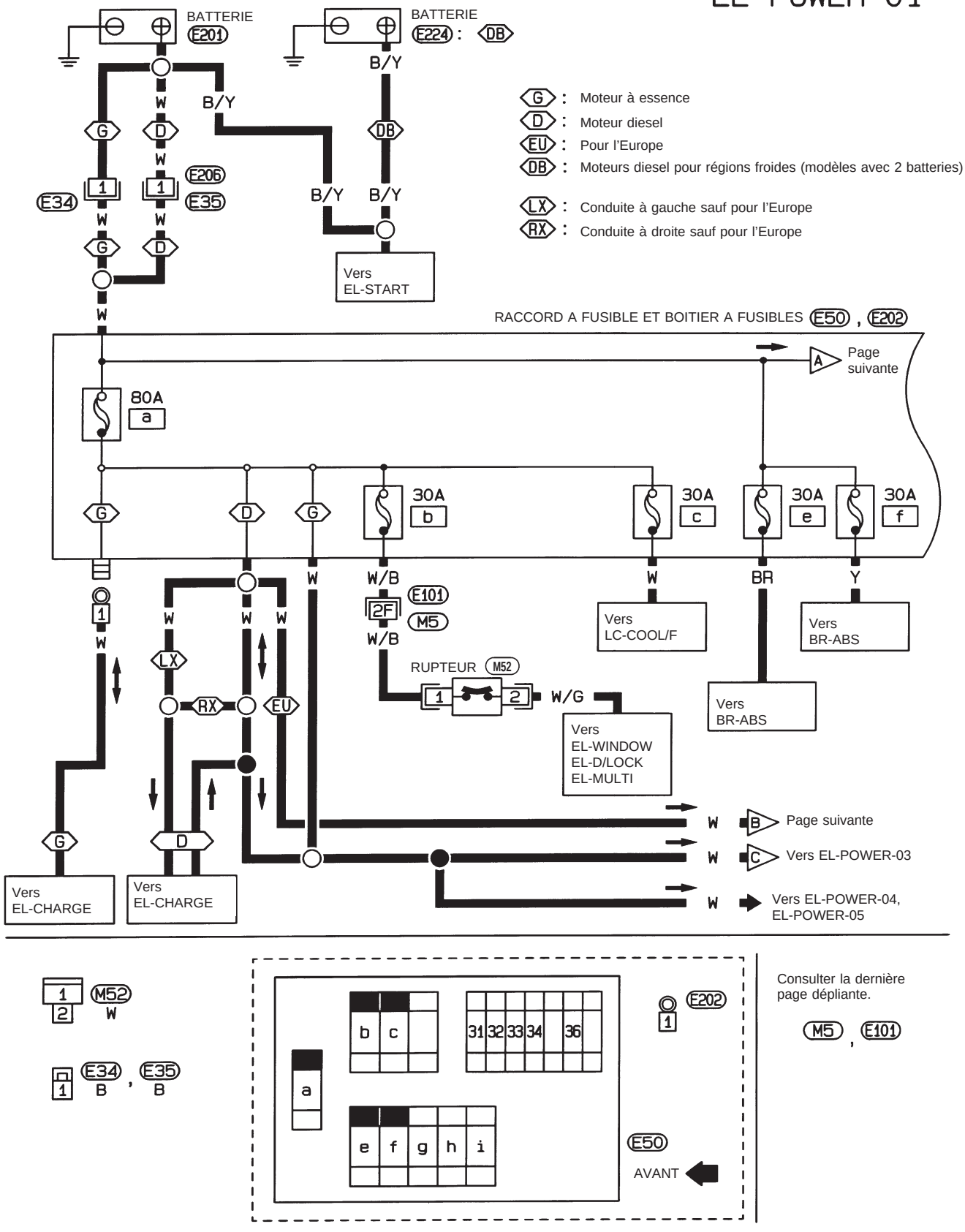

HEL310A

Simpo PDF Merge and Split Unregistered Version - http://www.simpopdf.com

Schéma de câblage — POWER — (Suite)

EL-POWER-02

UL : Conduite à gauche pour l'Europe
UR : Conduite à droite pour l'Europe
D5 : Moteur TD25

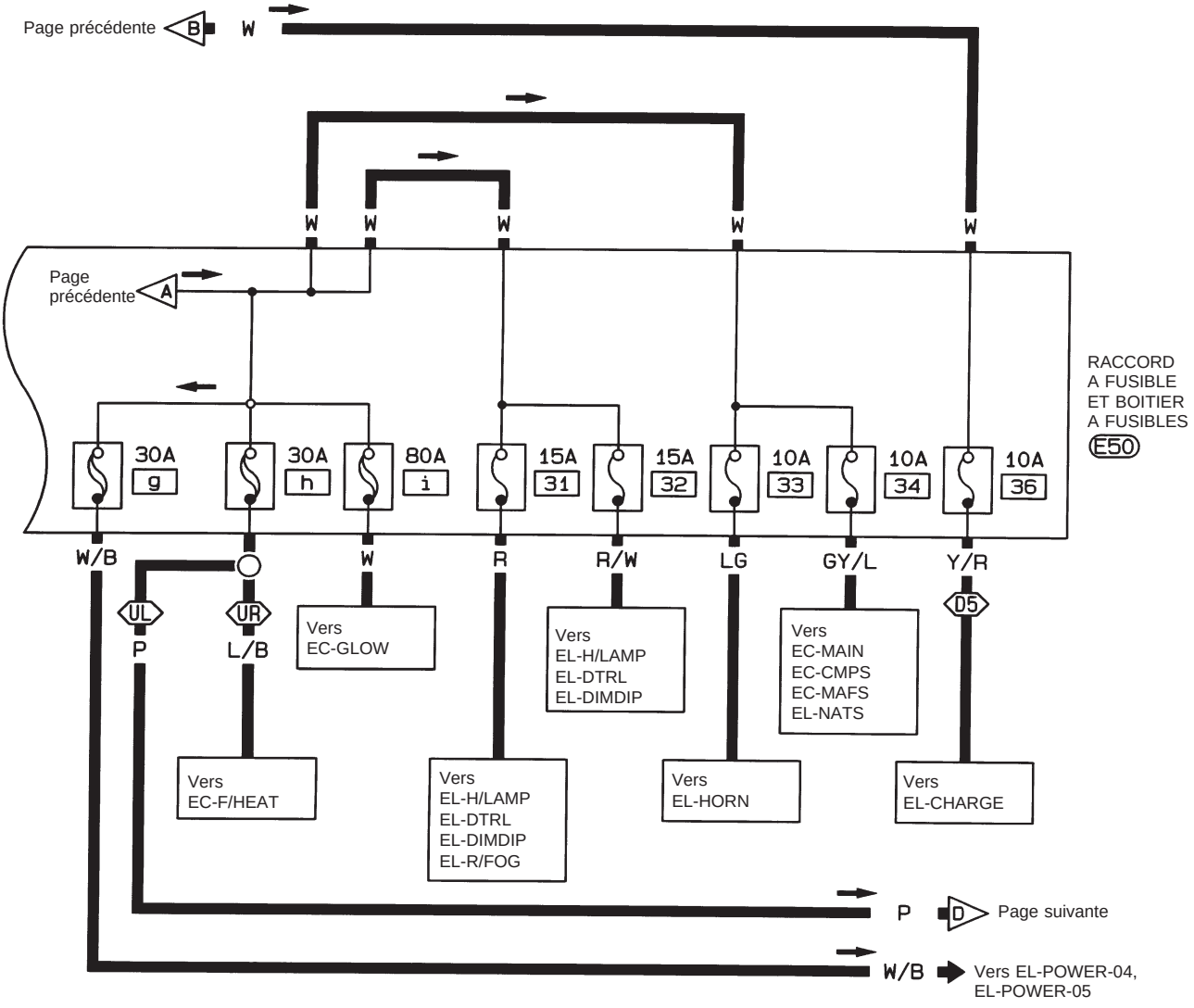

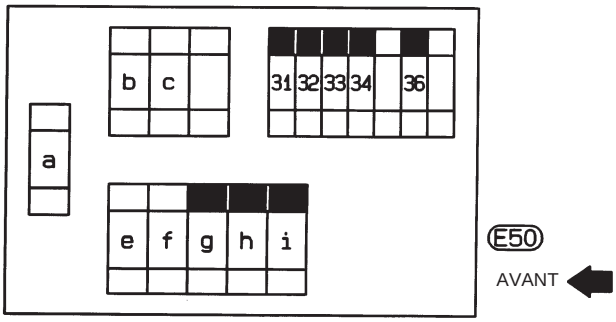

HEL311A

Simpo PDF Merge and Split Unregistered Version - http://www.simpopdf.com

Schéma de câblage — POWER — (Suite)

EL-POWER-03

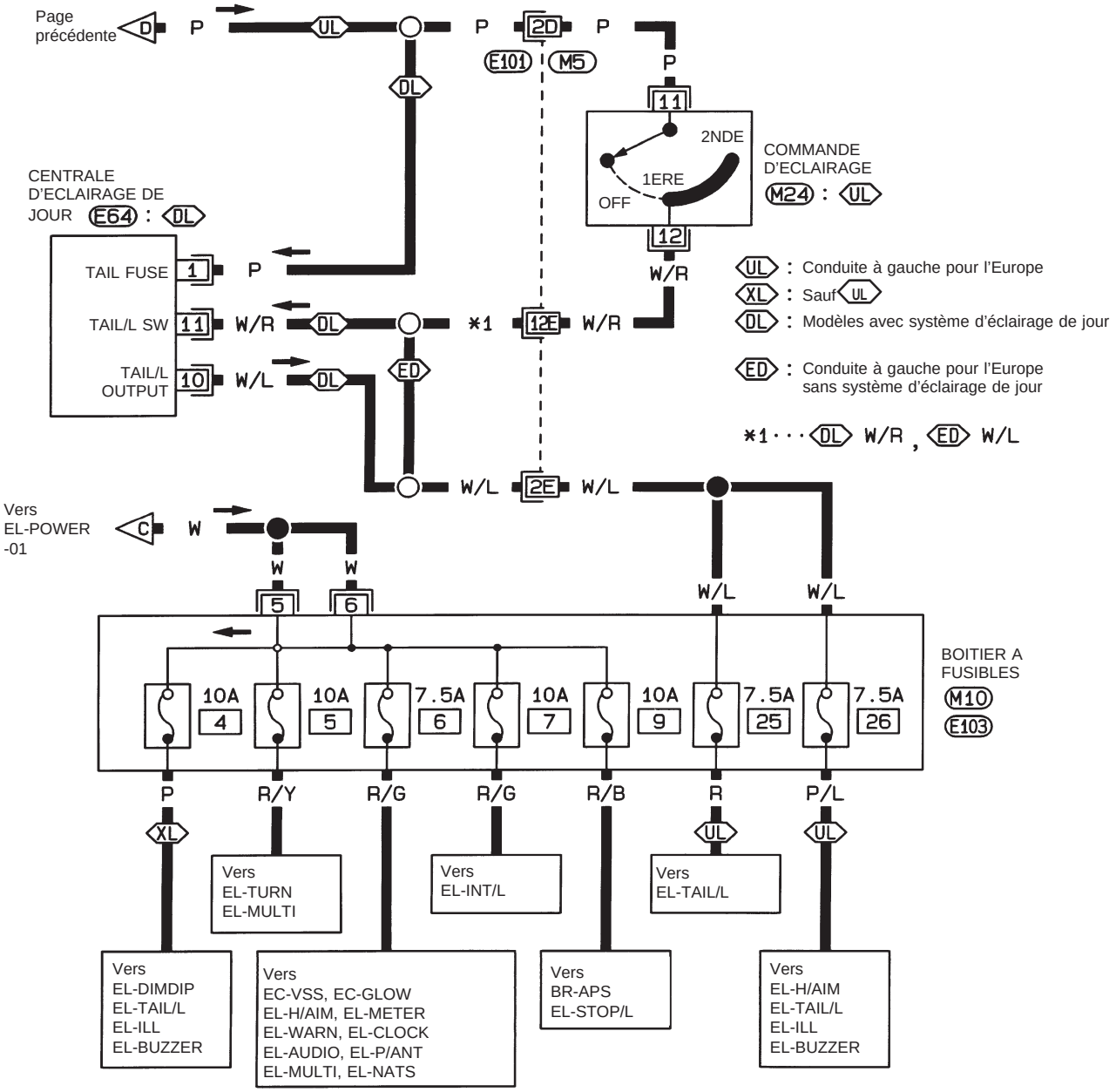

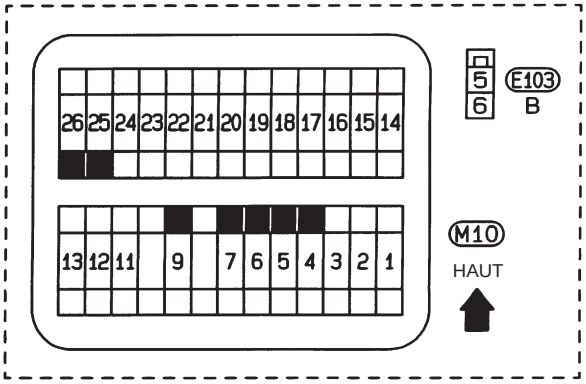

Consulter la dernière page dépliante.
M5 , E101

HEL312A

Simpo PDF Merge and Split Unregistered Version - http://www.simpopdf.com

Schéma de câblage — POWER — (Suite)

ALIMENTATION ELECTRIQUE AUXILIAIRE - CONTACT D'ALLUMAGE SUR "ACC" OU "ON"

EL-POWER-04

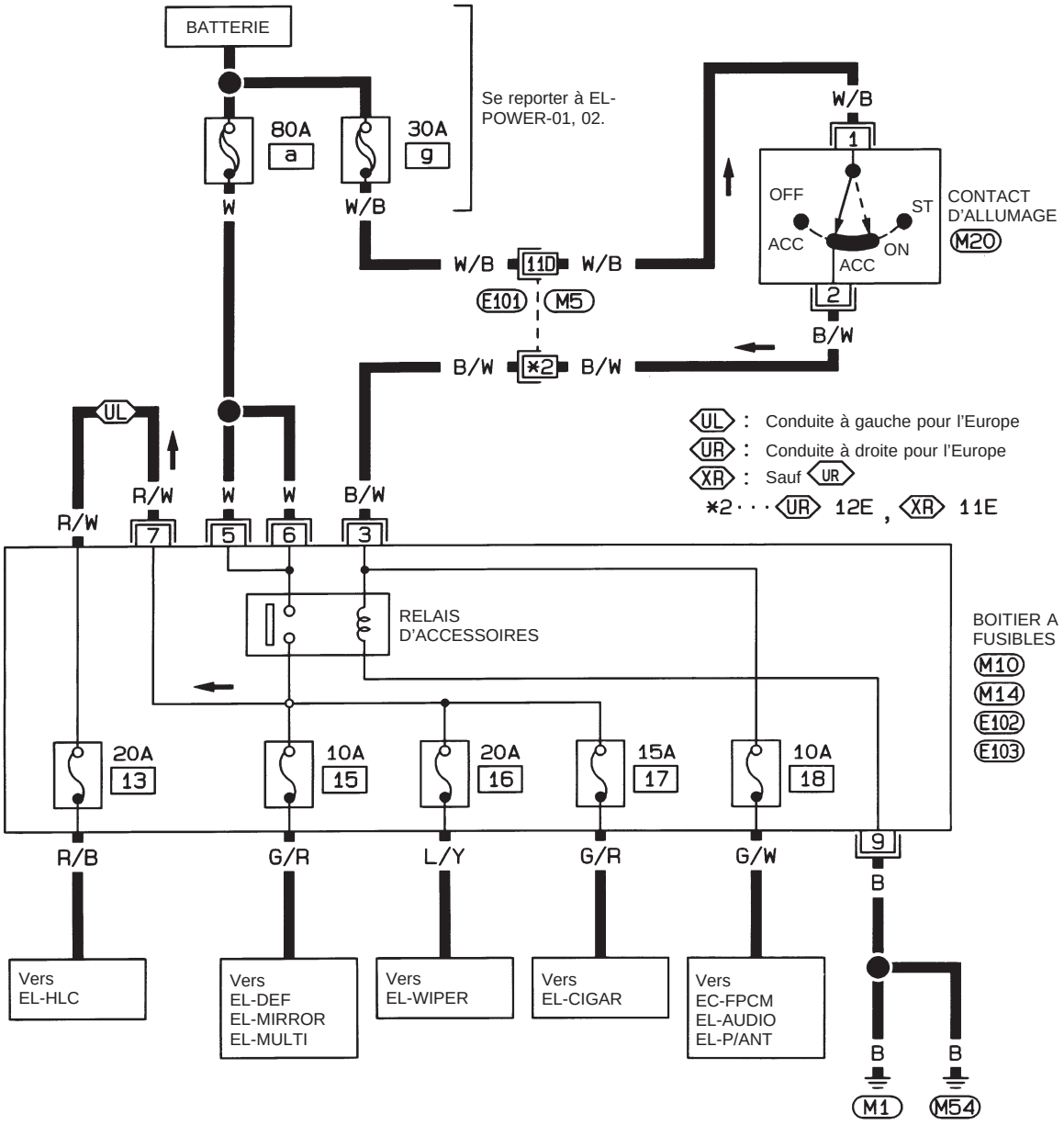

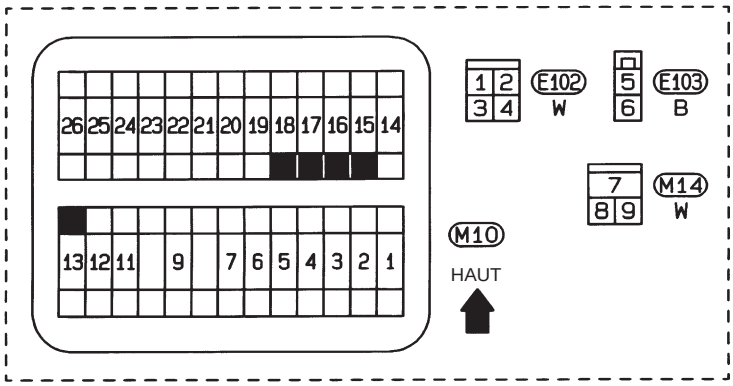

Consulter la dernière page dépliante.

M5 , E101

HEL464A

Simpo PDF Merge and Split Unregistered Version - http://www.simpopdf.com

Schéma de câblage — POWER — (Suite)

ALIMENTATION ELECTRIQUE D'ALLUMAGE — CONTACT D'ALLUMAGE SUR "ON" ET/ OU "START"

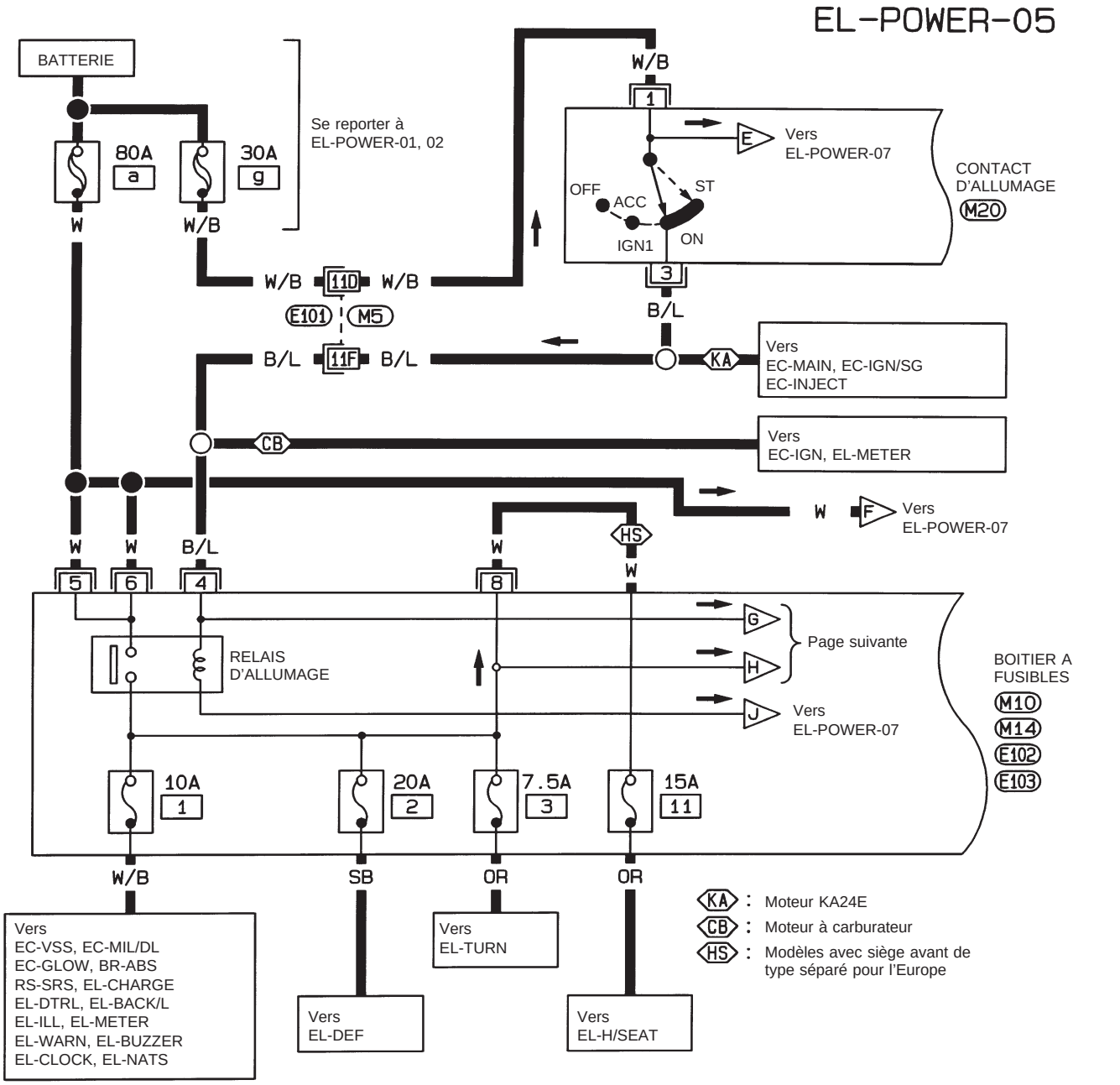

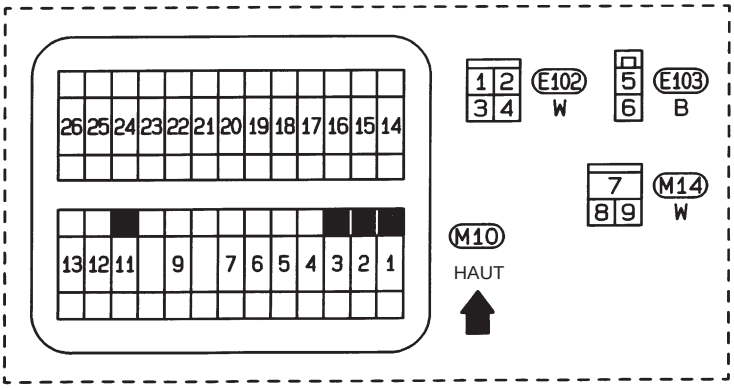

Consulter la dernière page dépliante.

M5 , E101

HEL314A

Simpo PDF Merge and Split Unregistered Version - http://www.simpopdf.com

Schéma de câblage — POWER — (Suite)

EL-POWER-06

(D) : Moteur diesel
(NA) : Moteur NA20S
(Z) : Moteur Z24S
(KA) : Moteur KA24E
(CB) : Moteur à carburateur
(AS) : Modèles avec ABS
(PW) : Modèles avec lève-glace électrique sans ABS

(PN) : Modèles sans ABS et sans lève-glace électrique
(2A) : Modèles à 2 roues motrices avec coussin gonflable
(4A) : Modèles à 4 roues motrices avec coussin gonflable
*3 : Pour l'Europe ..... OR
Sauf pour l'Europe ... (AS) OR, (PW) W/B, (PN) B/W
*4 ··· (2A) 3A , (4A) 10A
*5 ··· (NA) W/G , (Z) W/L
*6 ··· (CB) 10A , (KA) 15A

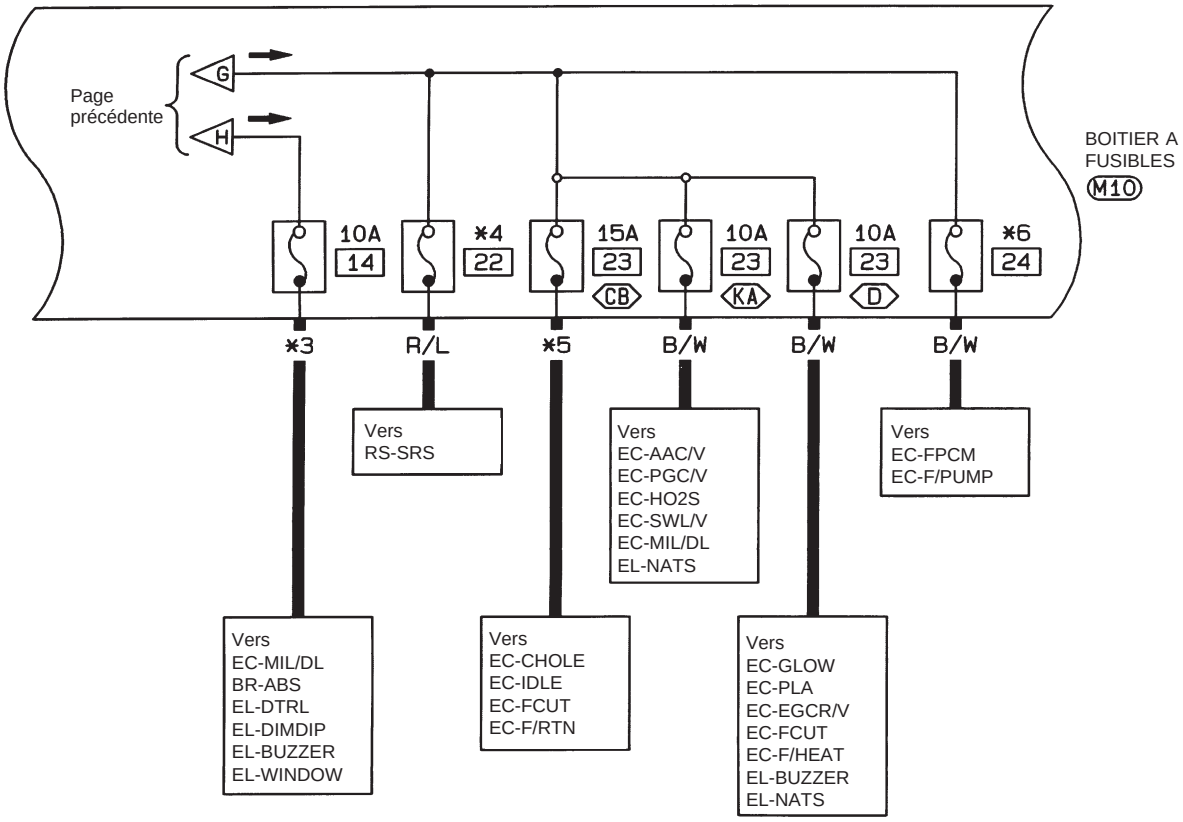

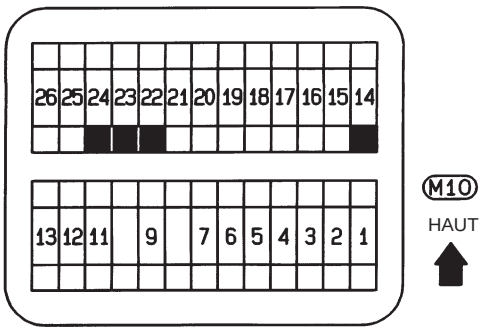

HEL315A

Simpo PDF Merge and Split Unregistered Version - http://www.simpopdf.com

Schéma de câblage — POWER — (Suite)

EL-POWER-07

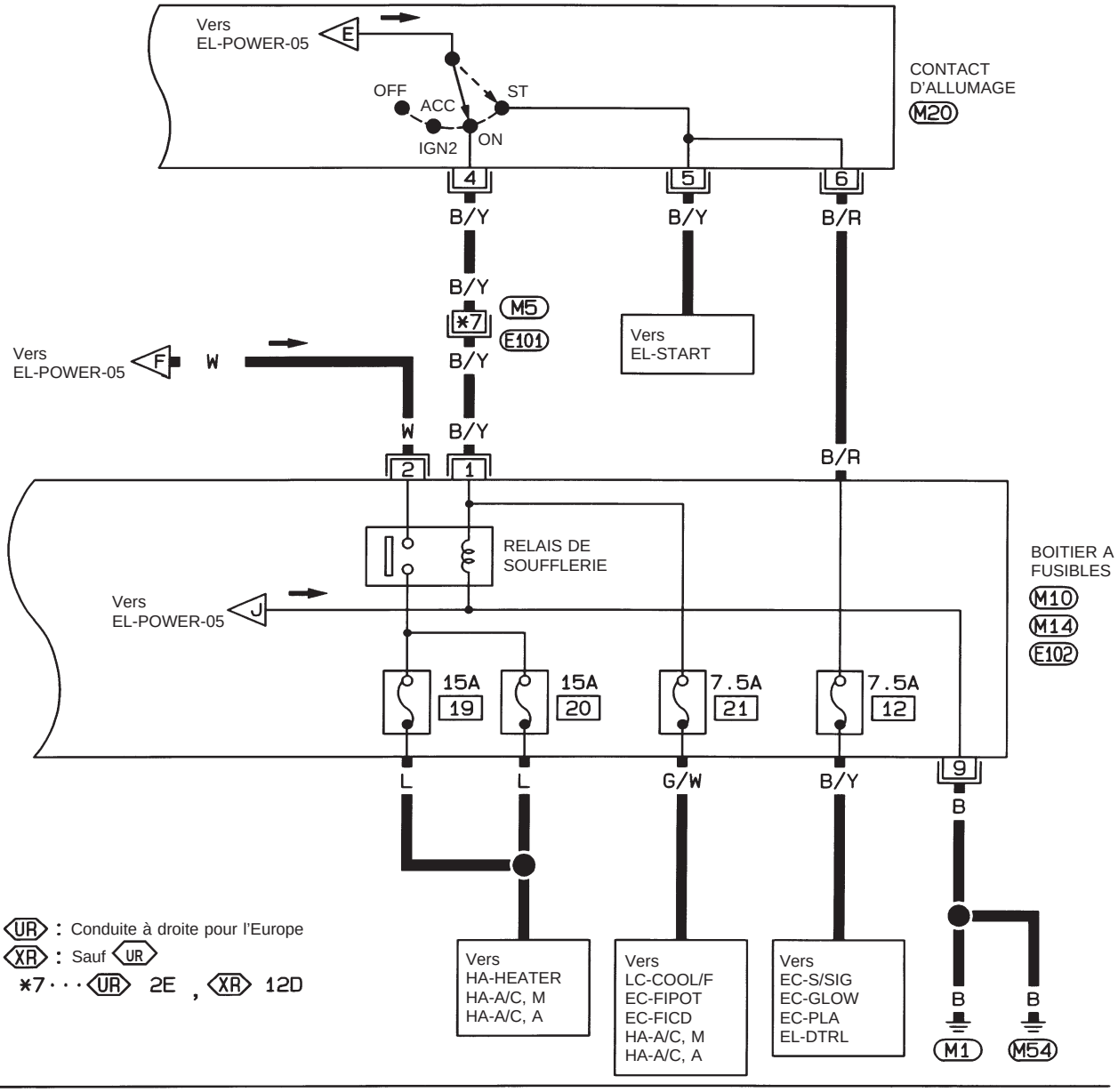

UR : Conduite à droite pour l'Europe
XR : Sauf UR
*7 ··· UR 2E , XR 12D

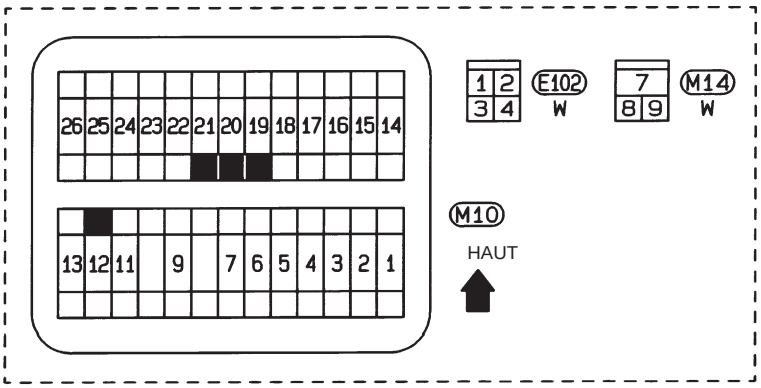

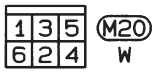

Consulter la dernière page dépliante.
M5 , E101

HEL465A

Simpo PDF Merge and Split Unregistered Version - http://www.simpopdf.com

Caractéristiques et valeurs de réglage (SDS)

Modèle concerné	Europe	
	TD25, TD25Ti	
	Standard	Option
Type	95D31R	80D26L, 80D26R
Contenance V-AH	12-64	12-55

Simpo PDF Merge and Split Unregistered Version - http://www.simpopdf.com

Construction

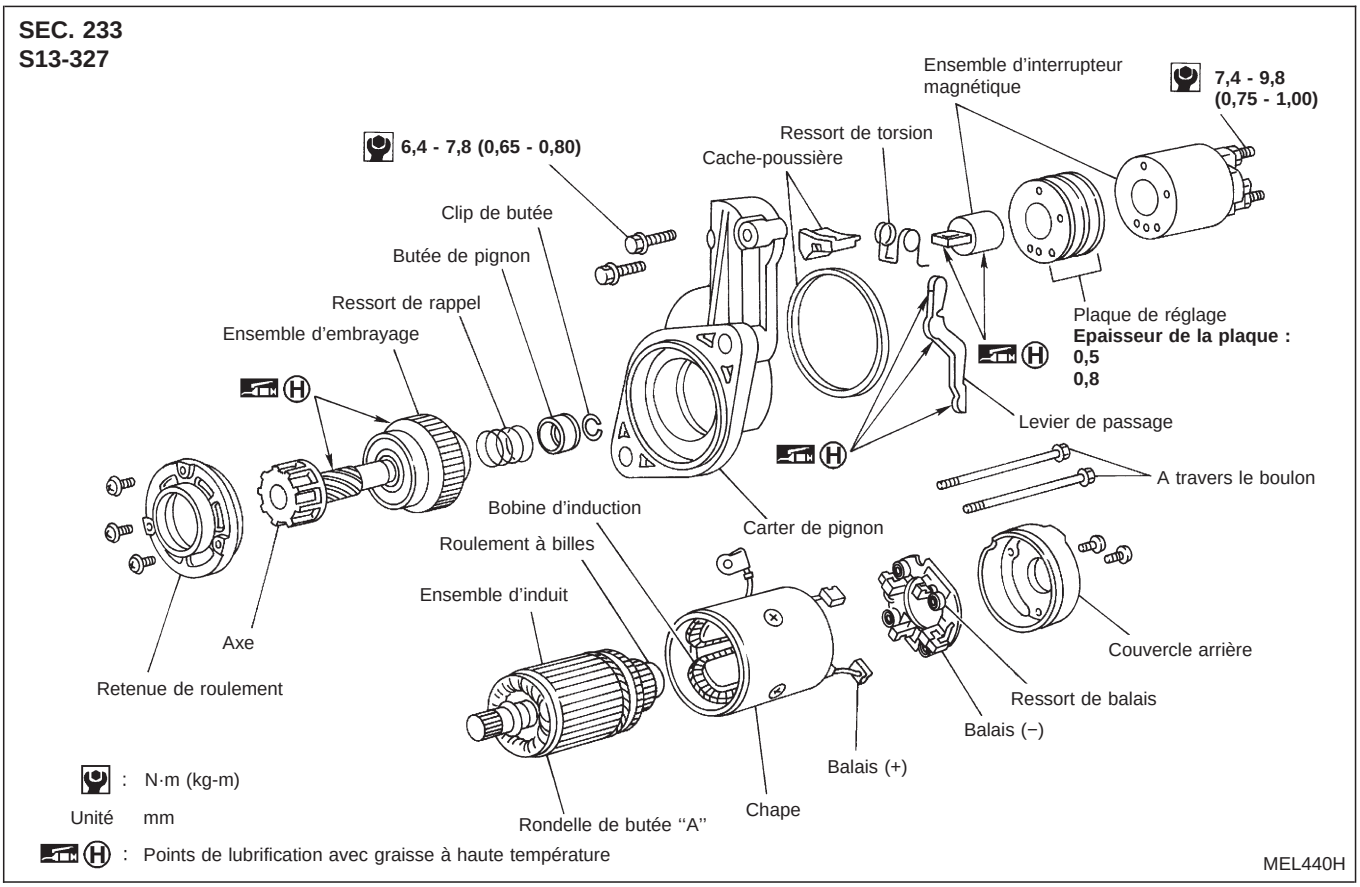

Caractéristiques et valeurs de réglage (SDS)

DEMARREUR

Type		S13-327
		HITACHI
		Diminution
Modèle concerné		2 roues motrices
		TD25, TD25Ti, TD27
		Standard
Tension du système	V	12
A vide		
Tension de borne	V	11,0
Courant	A	Moins de 160
Régime	tr/mn	Plus de 4 000
Diamètre minimum du commutateur	mm	35,5
Longueur minimum des balais	mm	9,0
Tension du ressort de balais	N (kg)	—
Mouvement "ℓ" en hauteur de l'ensemble de pignon	mm	0,3 - 1,5

Simpo PDF Merge and Split Unregistered Version - http://www.simpopdf.com

Construction

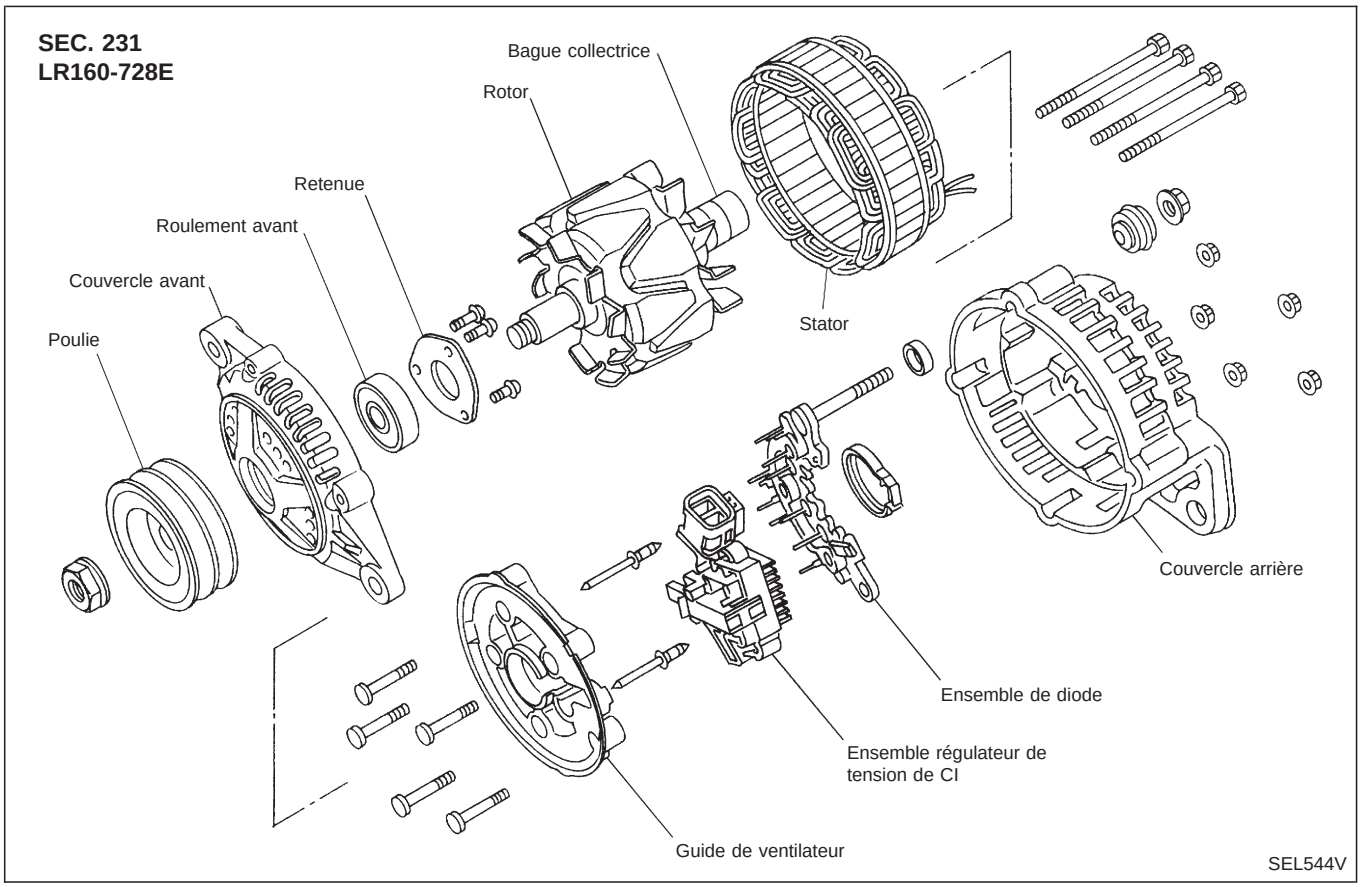

Caractéristiques et valeurs de réglage (SDS)

ALTERNATEUR

Type		LR160-728E
		HITACHI
Modèle concerné		TD25, TD25Ti, TD27, QD32
		Standard
Puissance nominale	V-A	12-60
Polarité de masse		Négative
Régime minimum à vide (avec une tension de 13,5V)	tr/mn	Moins de 1 300
Courant de sortie à chaud	Amp./tr/mn	Plus de 17/1 300 Plus de 48/2 500 Plus de 57/5 000
Tension de sortie réglée	V	14,1 - 14,7
Longueur minimum des balais	mm	6,0
Pression du ressort de balais	N(g)	1,00 - 3,43 (102 - 350)
Diamètre externe minimum de la bague collectrice	mm	26,0
Résistance de rotor (bobine d'induction)	Ω	2,58

Simpo PDF Merge and Split Unregistered Version - http://www.simpopdf.com

Schéma de câblage — DIMDIP —

EL-DIMDIP-01

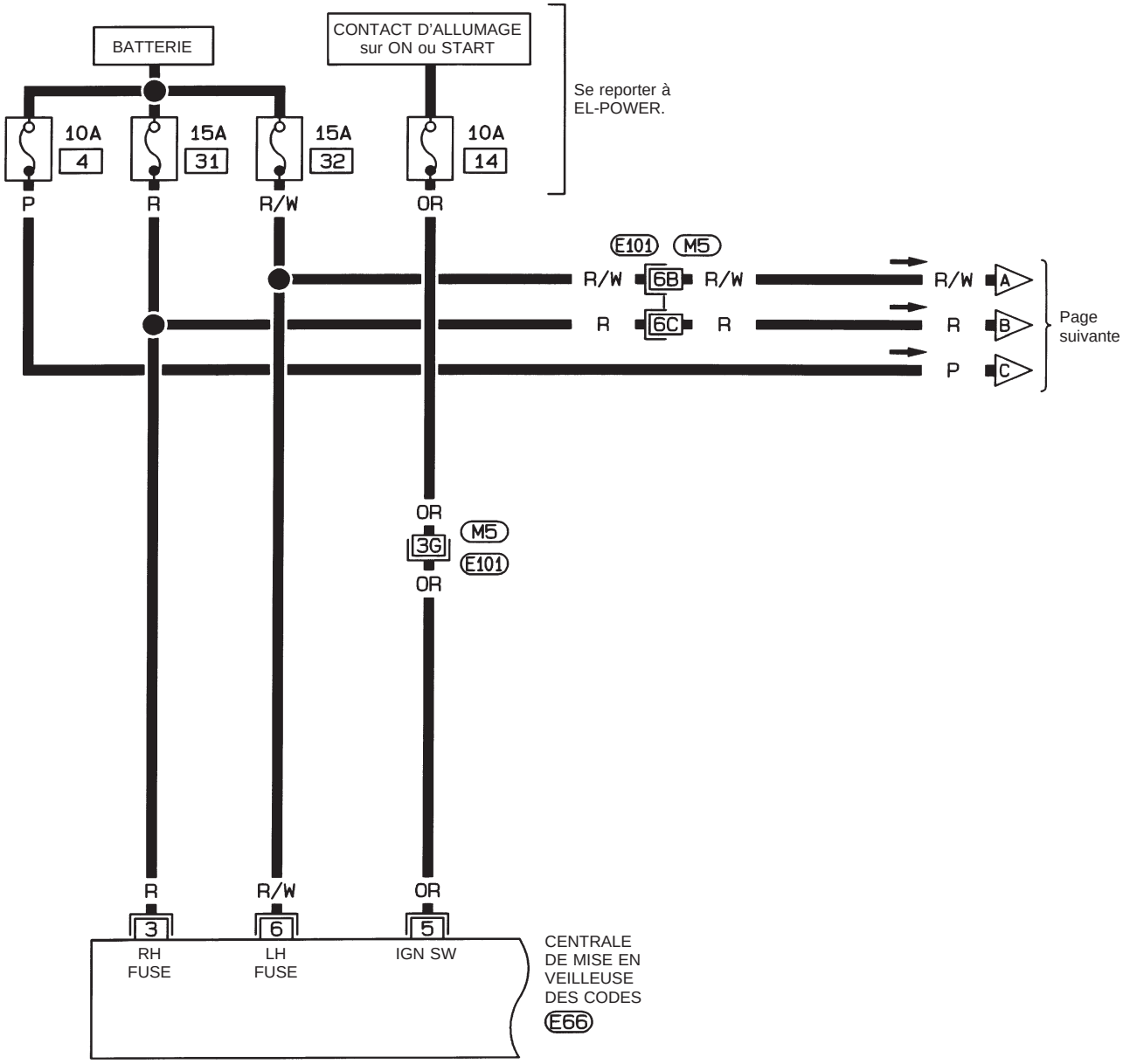

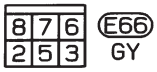

Consulter la dernière page dépliante.

M5, E101

HEL485A

Simpo PDF Merge and Split Unregistered Version - http://www.simpopdf.com

Schéma de câblage — DIMDIP — (Suite)

EL-DIMDIP-02

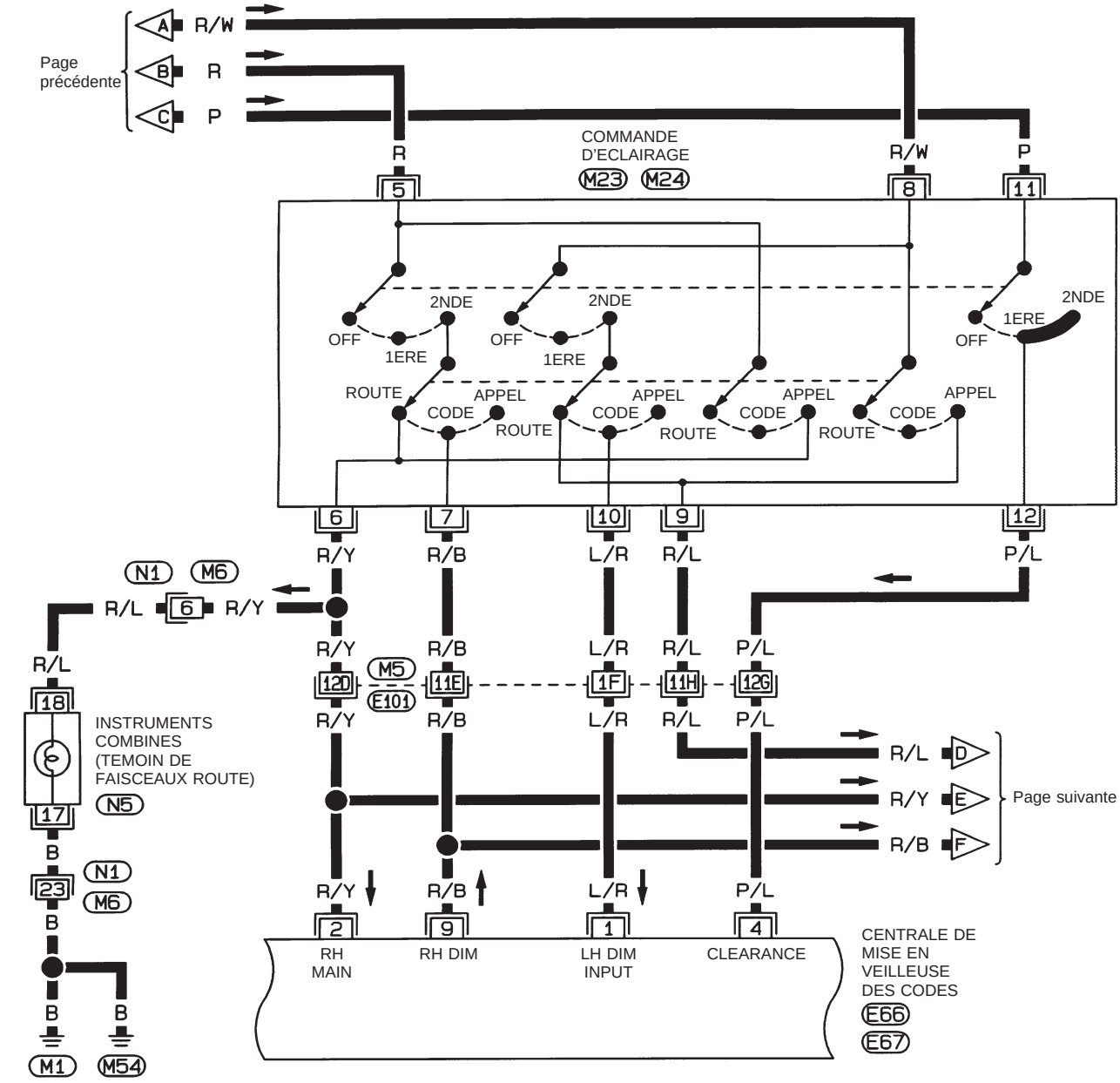

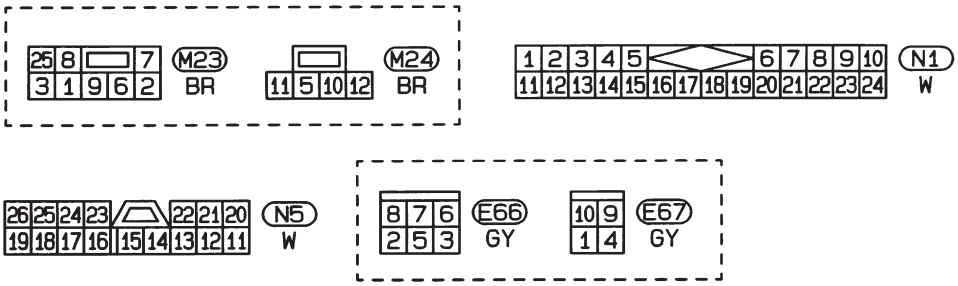

Consulter la dernière page dépliante.

M5, E101

HEL328A

Simpo PDF Merge and Split Unregistered Version - http://www.simpopdf.com

Schéma de câblage — DIMDIP — (Suite)

EL-DIMDIP-03

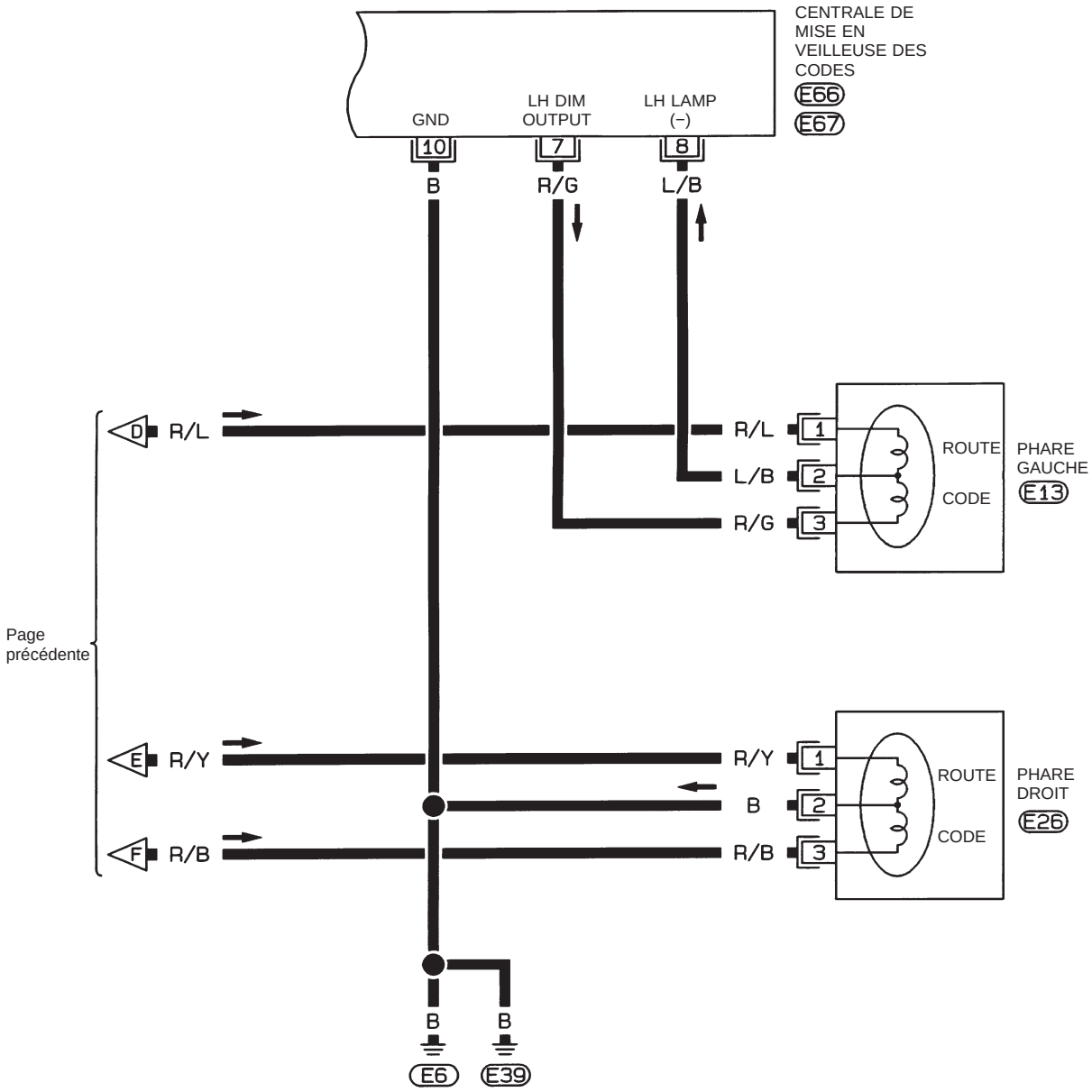

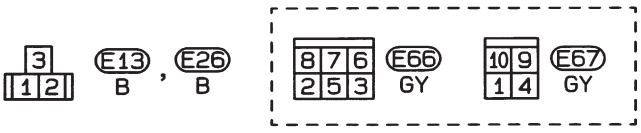

HEL329A

Simpo PDF Merge and Split Unregistered Version - http://www.simpopdf.com

Schéma de câblage — TURN —/Modèles à 4 roues motrices avec conduite à gauche pour l'Europe

EL-TURN-03

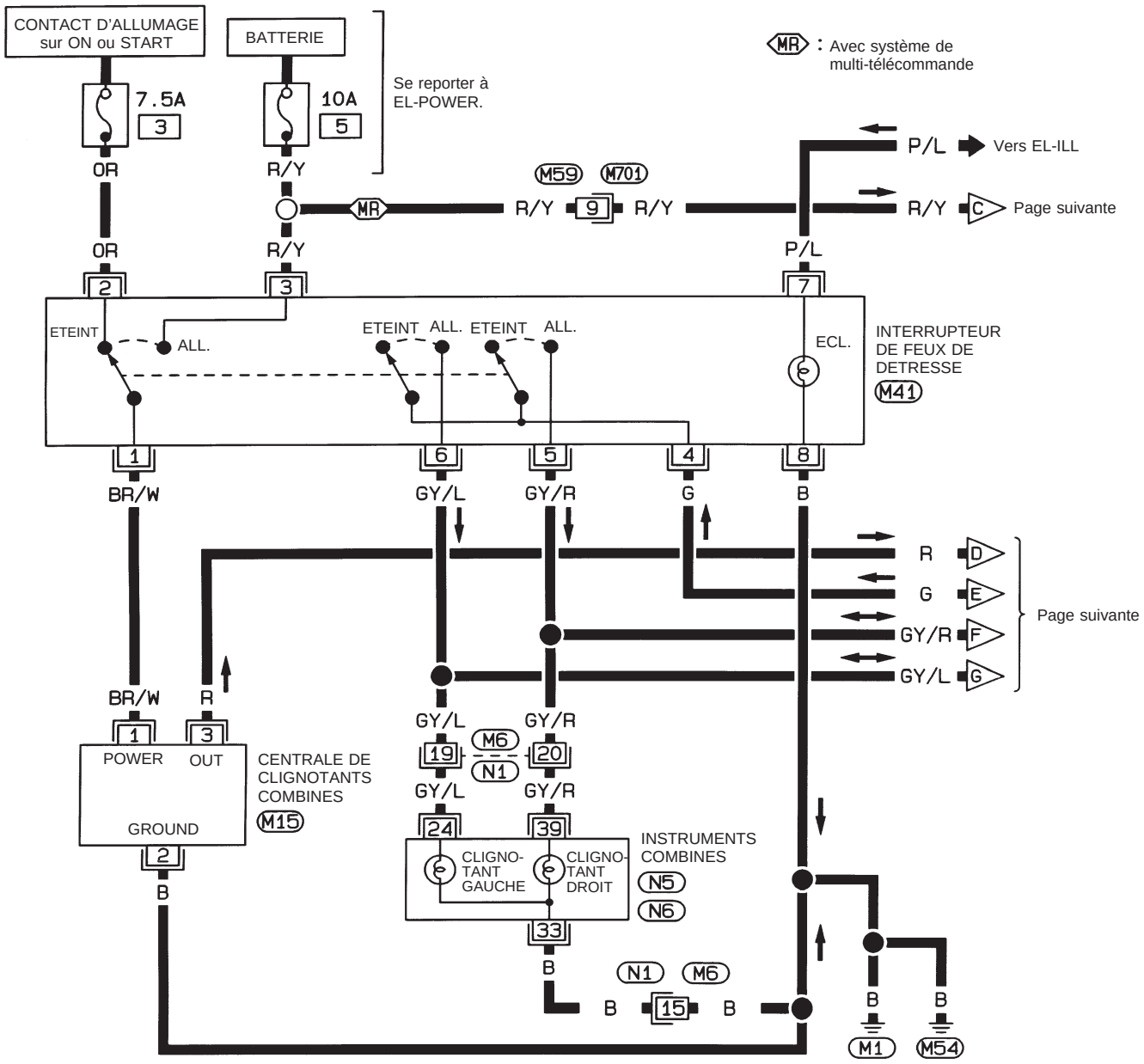

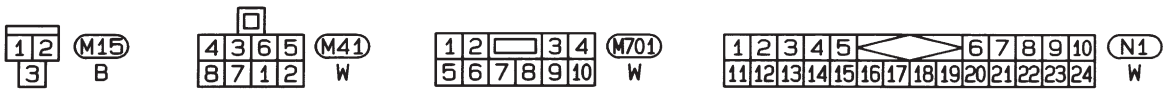

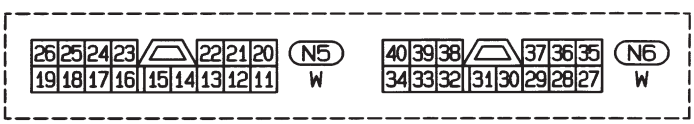

HEL486A

Simpo PDF Merge and Split Unregistered Version - http://www.simpopdf.com

Schéma de câblage — TURN —/Modèles à 4 roues motrices avec conduite à gauche pour l'Europe (Suite)

EL-TURN-04

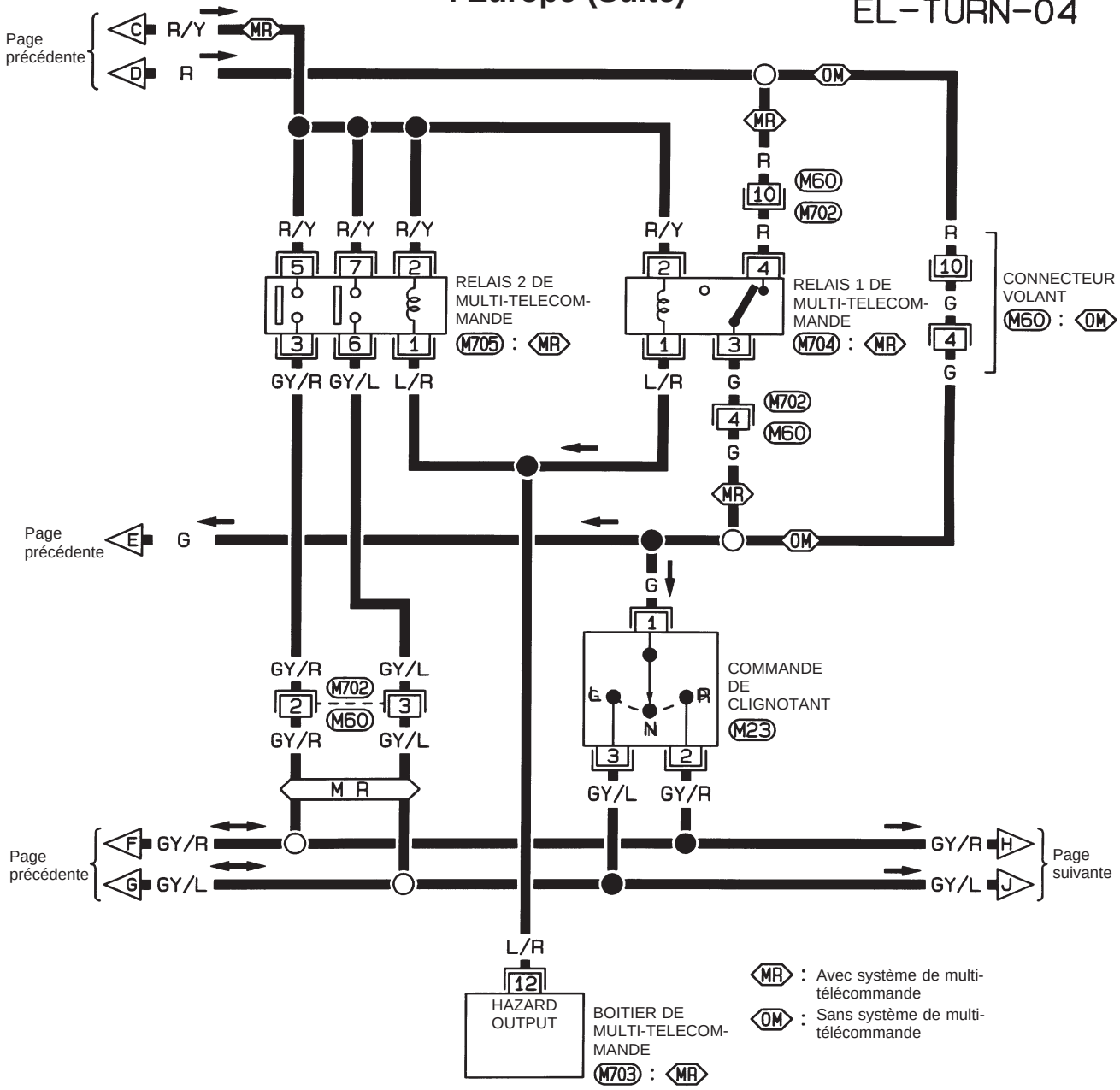

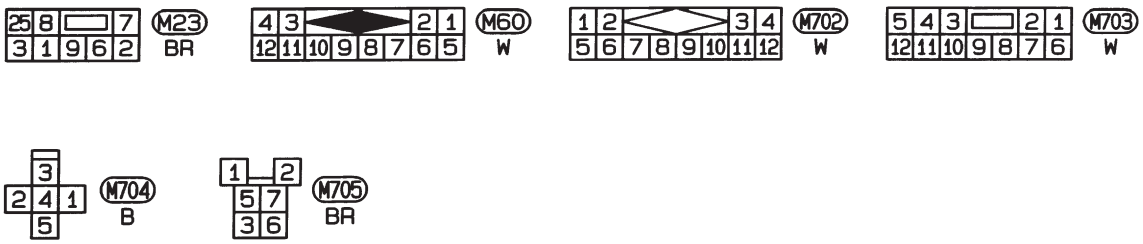

HEL342A

Simpo PDF Merge and Split Unregistered Version - http://www.simpopdf.com

Schéma de câblage — TURN —/Modèles à 4 roues motrices avec conduite à gauche pour l'Europe (Suite)

EL-TURN-05

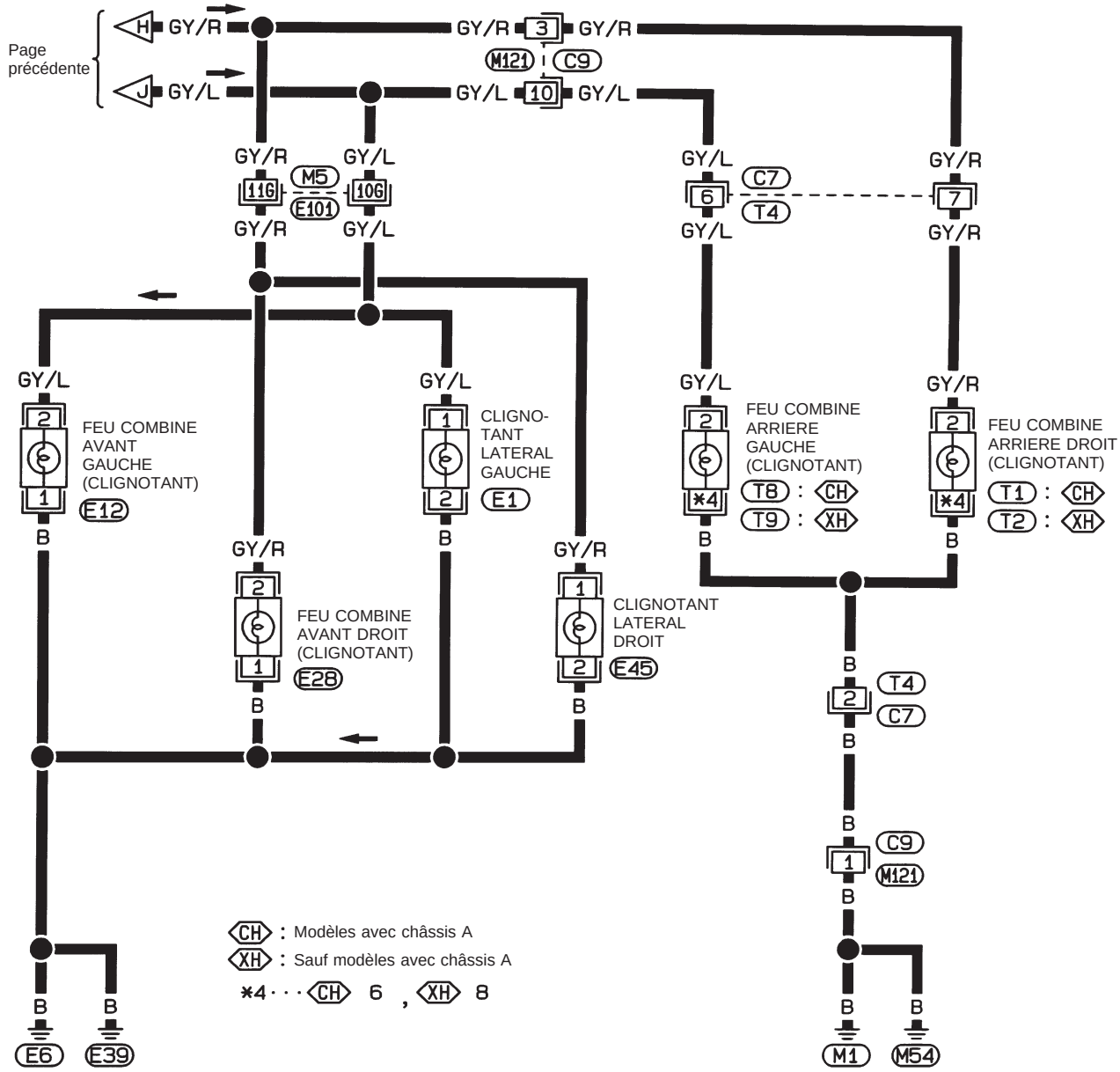

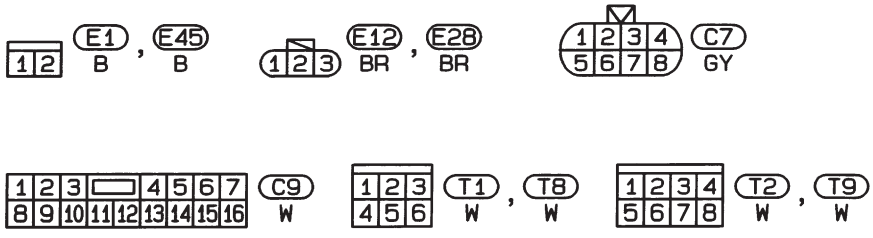

Consulter la dernière page dépliante.
M5 , E101

HEL343A

Simpo PDF Merge and Split Unregistered Version - http://www.simpopdf.com

Schéma de câblage — TURN —/Modèles à 4 roues motrices avec conduite à droite pour l'Europe

EL-TURN-06

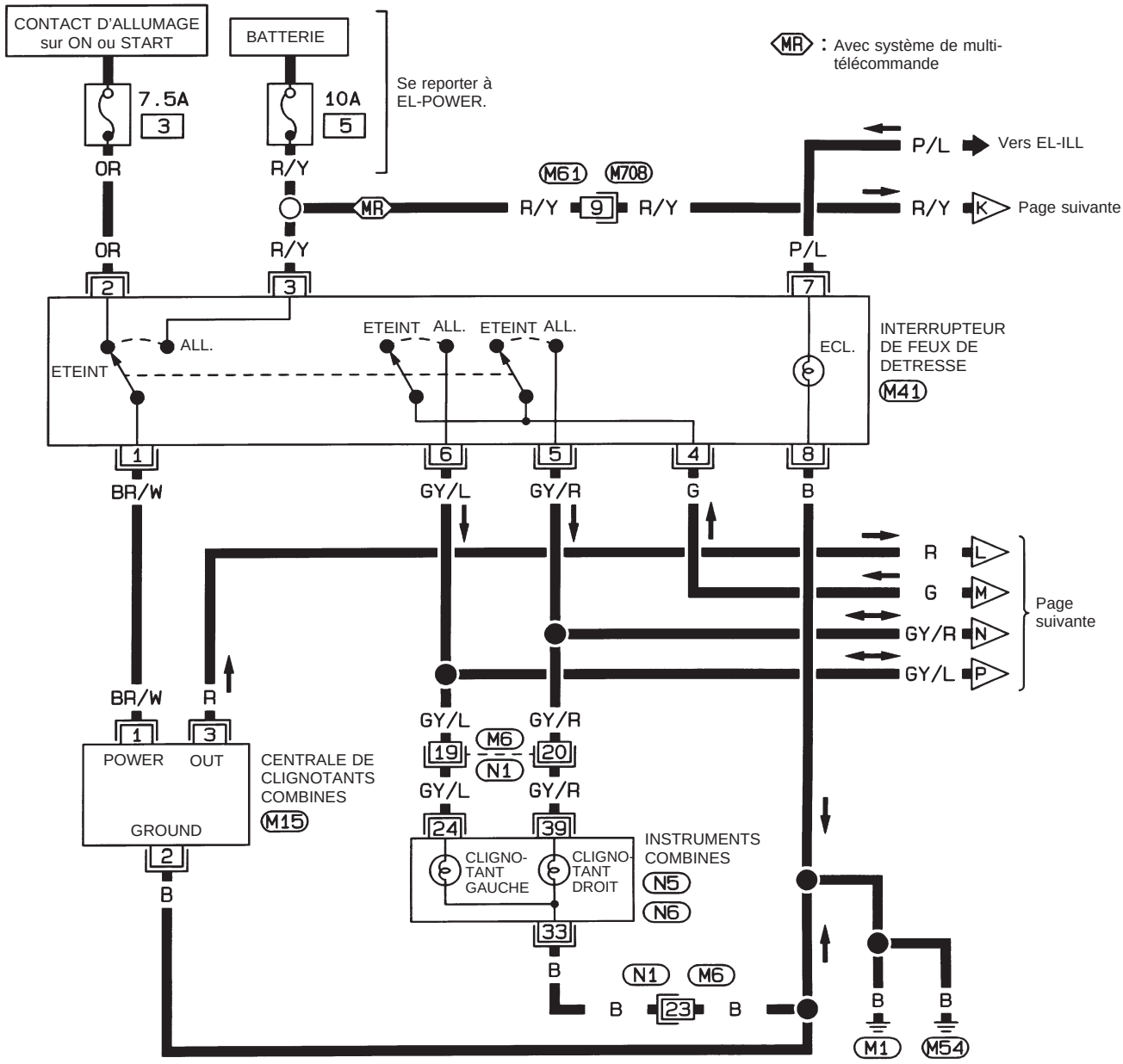



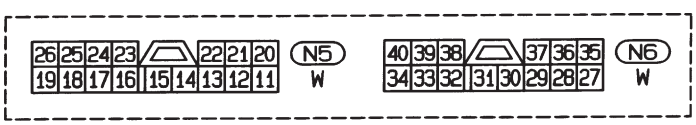

HEL466A

Simpo PDF Merge and Split Unregistered Version - http://www.simpopdf.com

Schéma de câblage — TURN —/Modèles à 4 roues motrices avec conduite à droite pour l'Europe (Suite)

EL-TURN-07

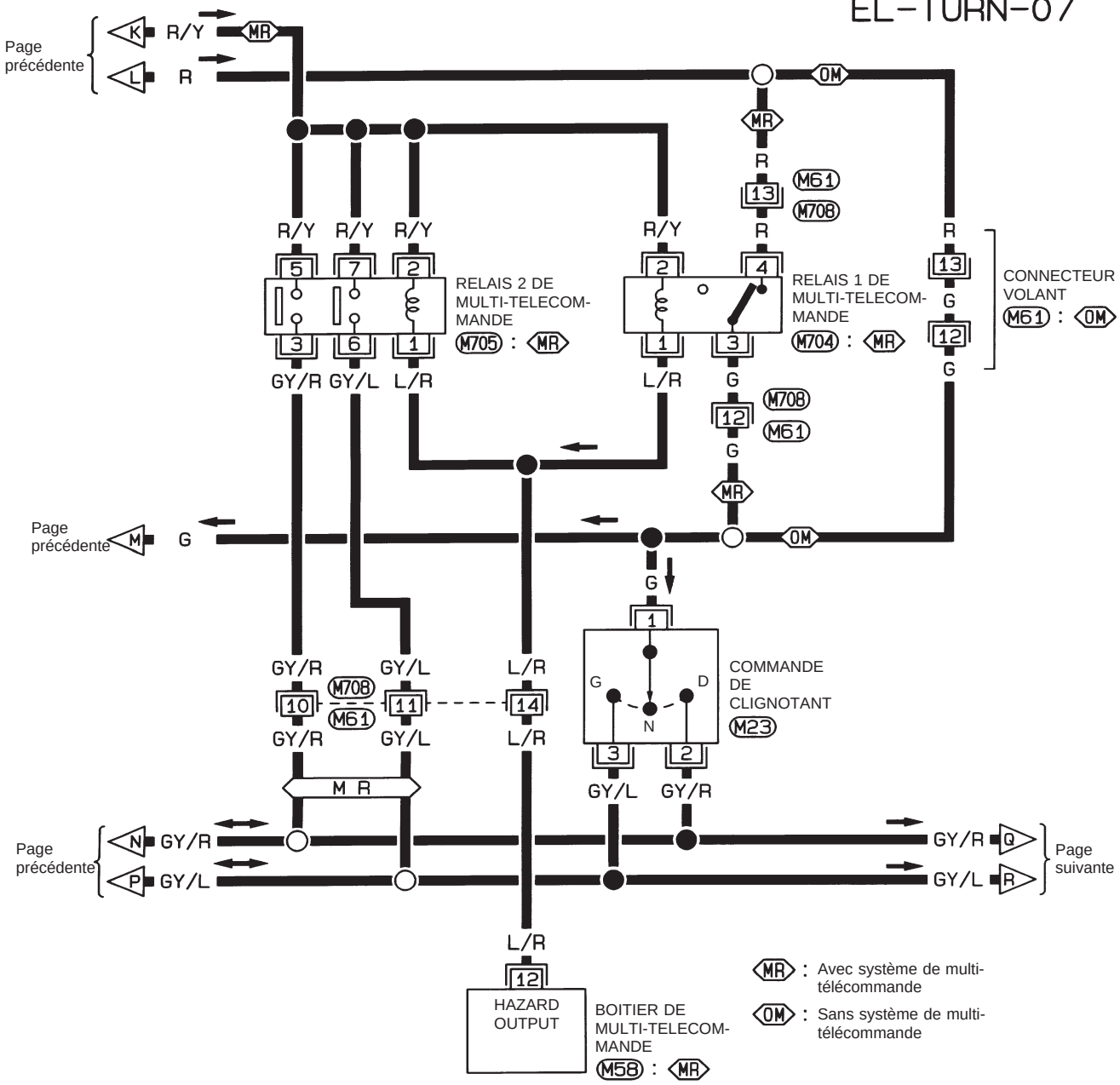

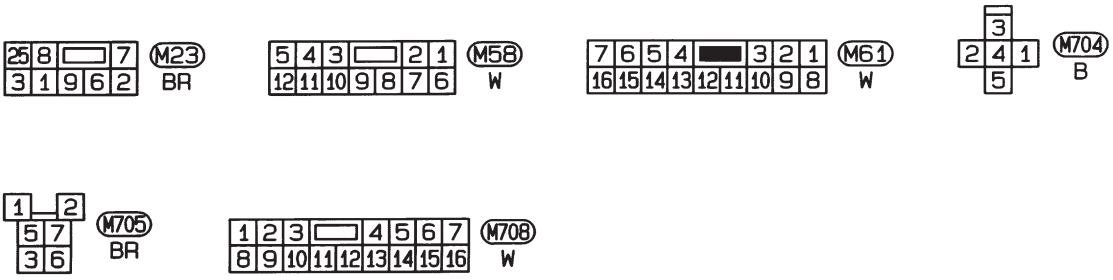

HEL467A

Simpo PDF Merge and Split Unregistered Version - http://www.simpopdf.com

Schéma de câblage — TURN —/Modèles à 4 roues motrices avec conduite à droite pour l'Europe (Suite)

EL-TURN-08

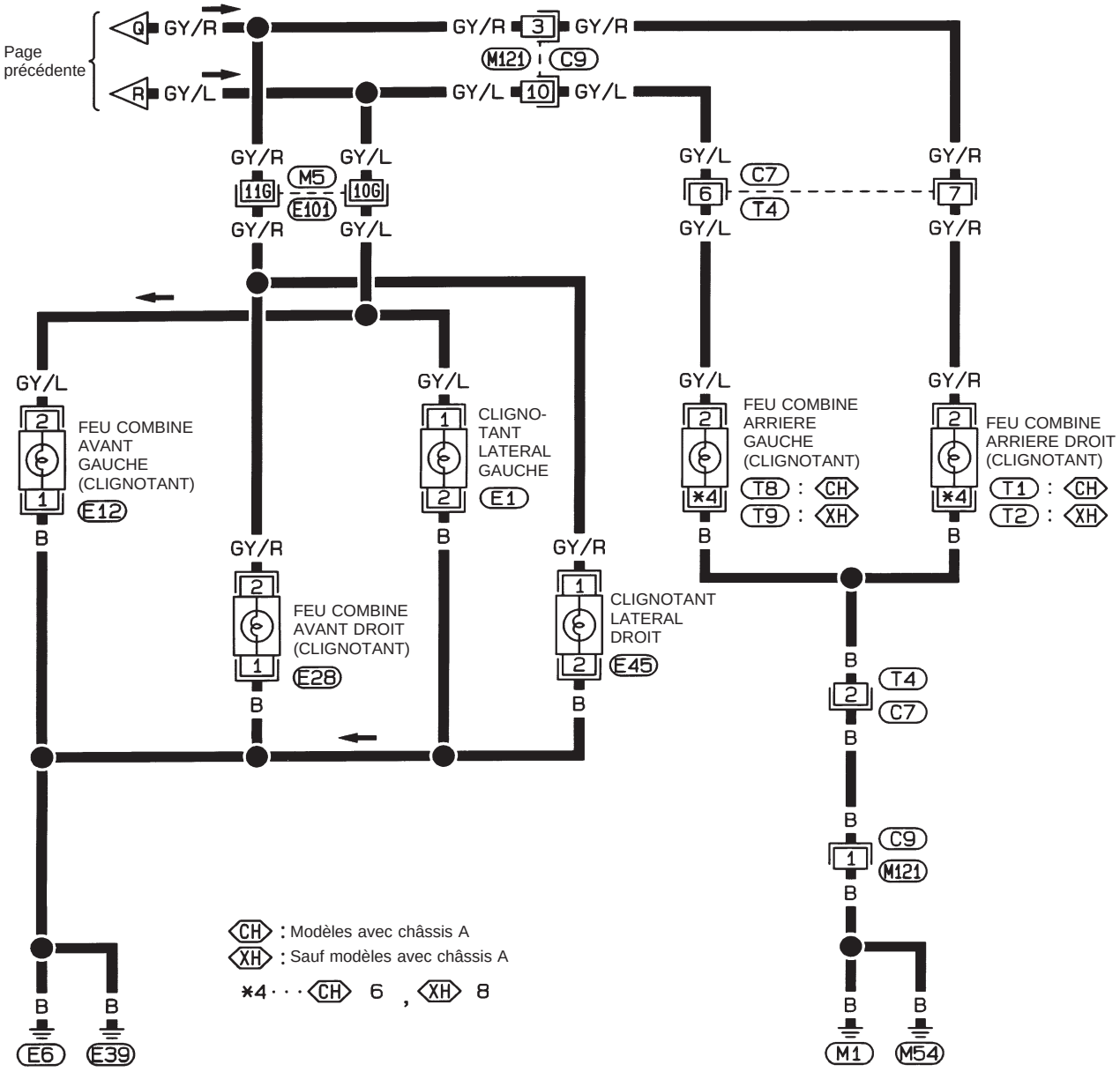

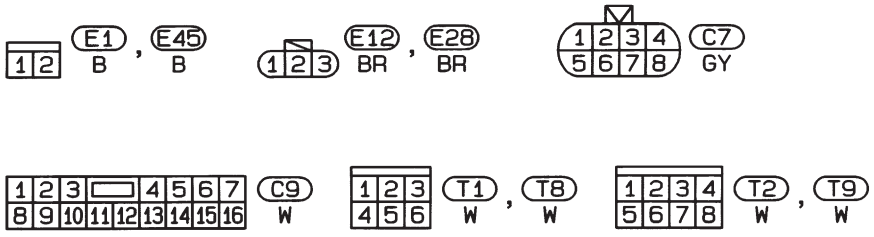

Consulter la dernière page dépliante.

M5 , E101

HEL468A

Simpo PDF Merge and Split Unregistered Version - http://www.simpopdf.com

Schéma de câblage — ILL —/Conduite à gauche

EL-ILL-01

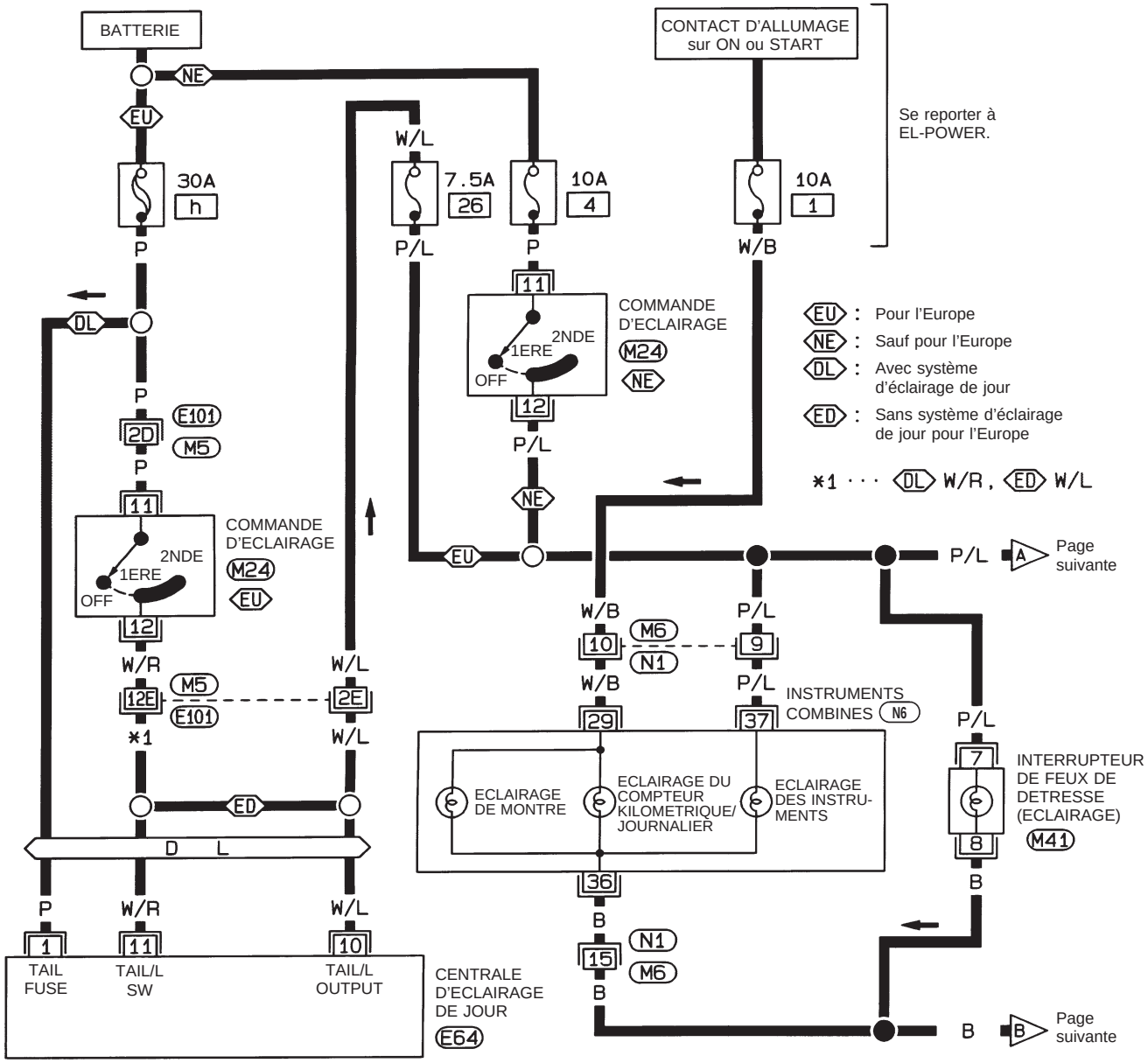

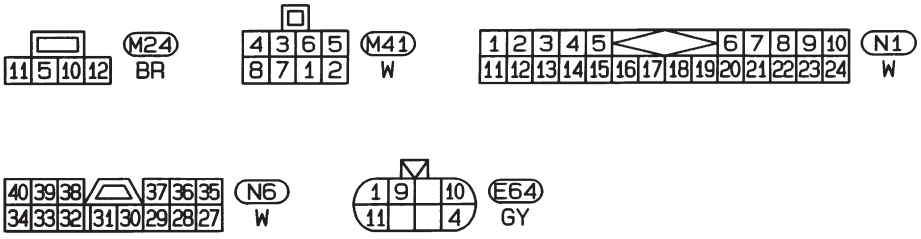

Consulter la dernière page dépliante.

M5, E101

HEL344A

Simpo PDF Merge and Split Unregistered Version - http://www.simpopdf.com

Schéma de câblage — ILL —/Conduite à gauche (Suite)

EL-ILL-02

EU : Pour l'Europe
NE : Sauf pour l'Europe
AA : Modèles avec C/A automatique
MA : Modèles avec C/A manuel
WC : Modèles avec lecteur CD
AM : Modèles sans lecteur CD (radio avec 1 haut-parleur sauf pour l'Europe)
FM : Modèles sans lecteur CD (pour l'Europe et avec 2 ou 4 haut-parleurs de radio sauf pour l'Europe)
SG : Catégorie S-GL et GL pour le Moyen-Orient

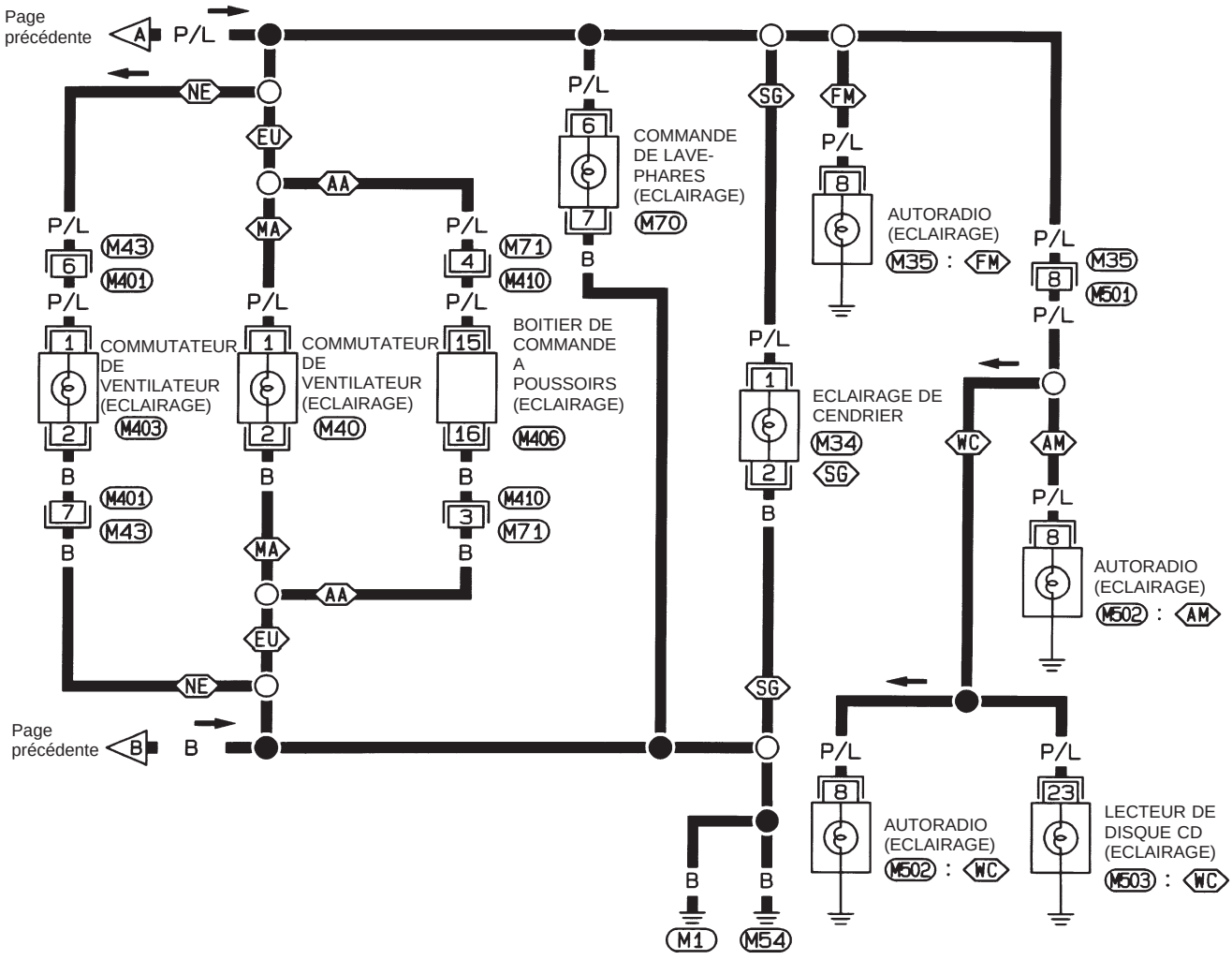

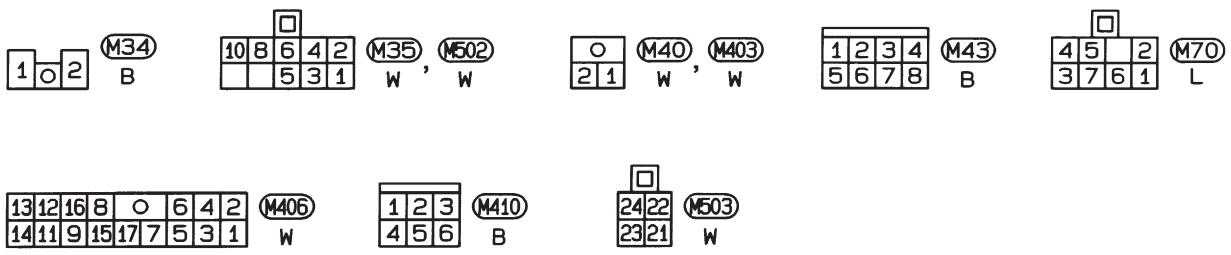

HEL469A

Simpo PDF Merge and Split Unregistered Version - http://www.simpopdf.com

Schéma de câblage — INT/L —

EL-INT/L-01

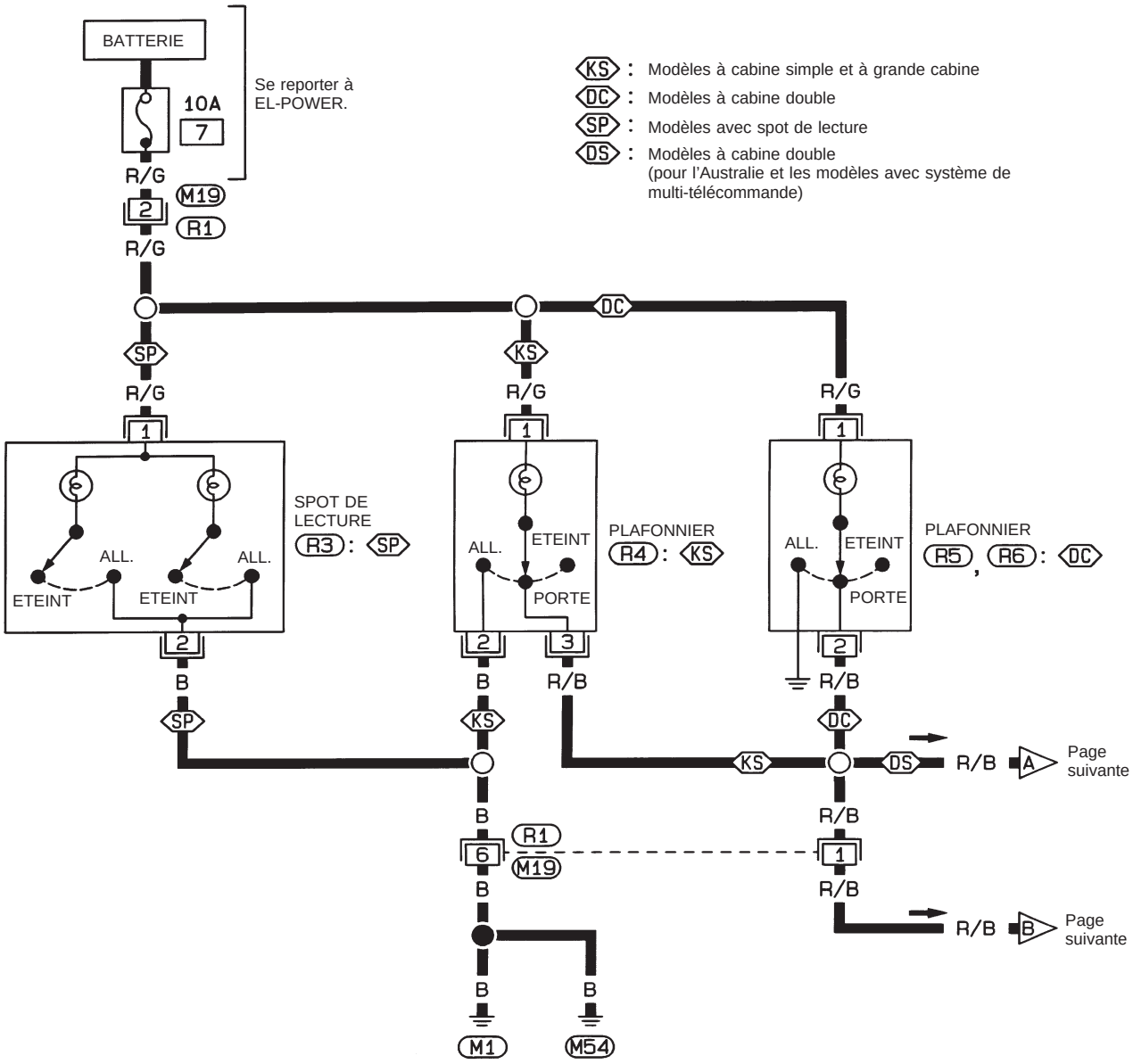

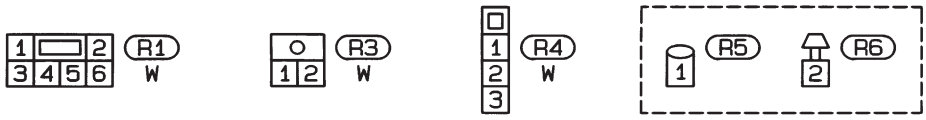

HEL348A

Simpo PDF Merge and Split Unregistered Version - http://www.simpopdf.com

Schéma de câblage — INT/L — (Suite)

EL-INT/L-02

EU : Pour l'Europe
NE : Sauf pour l'Europe
AD : Pour l'Australie et les modèles avec système de multi-télécommande
DS : Modèles à cabine double (pour l'Australie et les modèles avec système de multi-télécommande)

*1 ··· EU 2 , NE 1

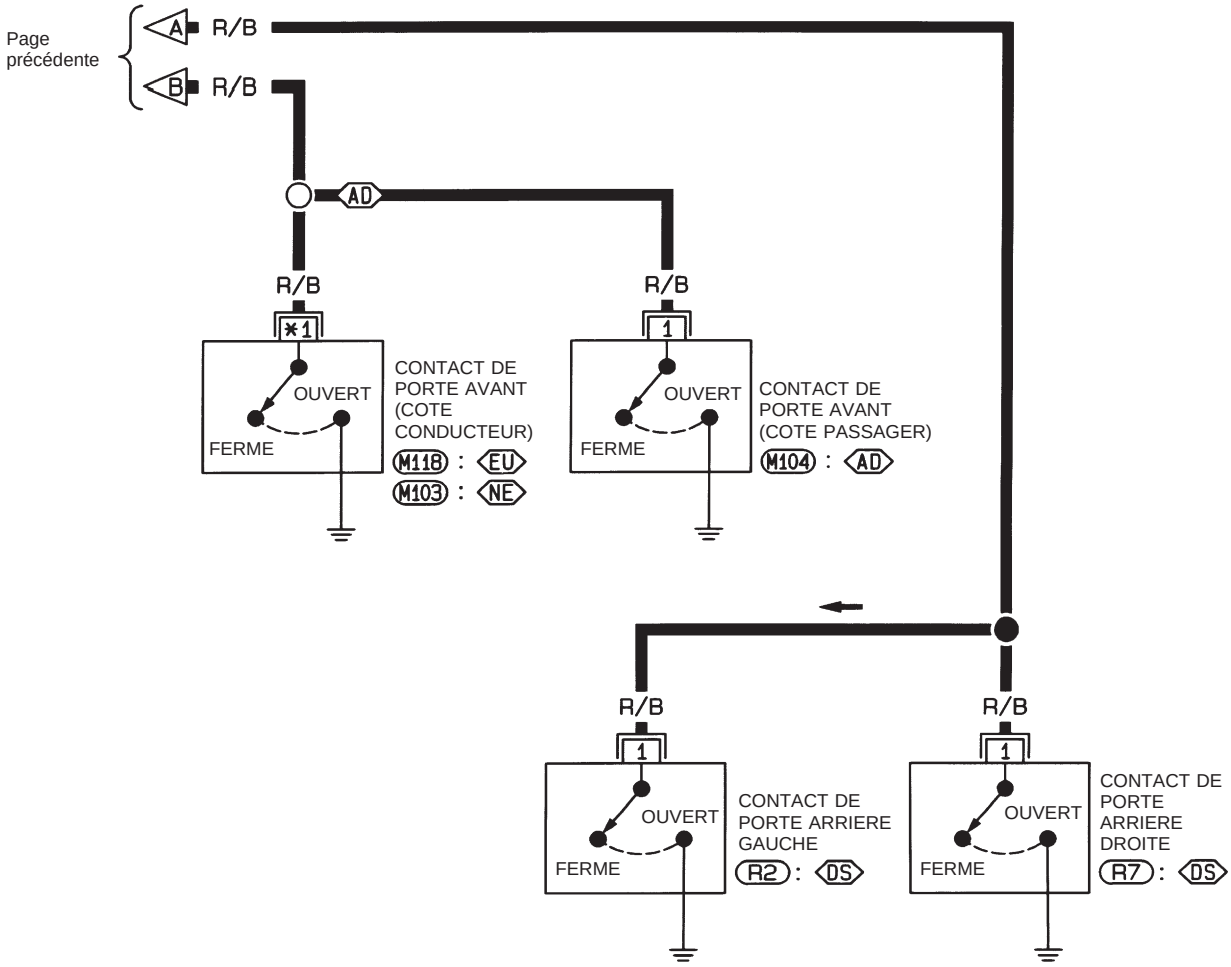



HEL470A

Simpo PDF Merge and Split Unregistered Version - http://www.simpopdf.com

Schéma de câblage — WARN —/Conduite à droite

EL-WARN-06

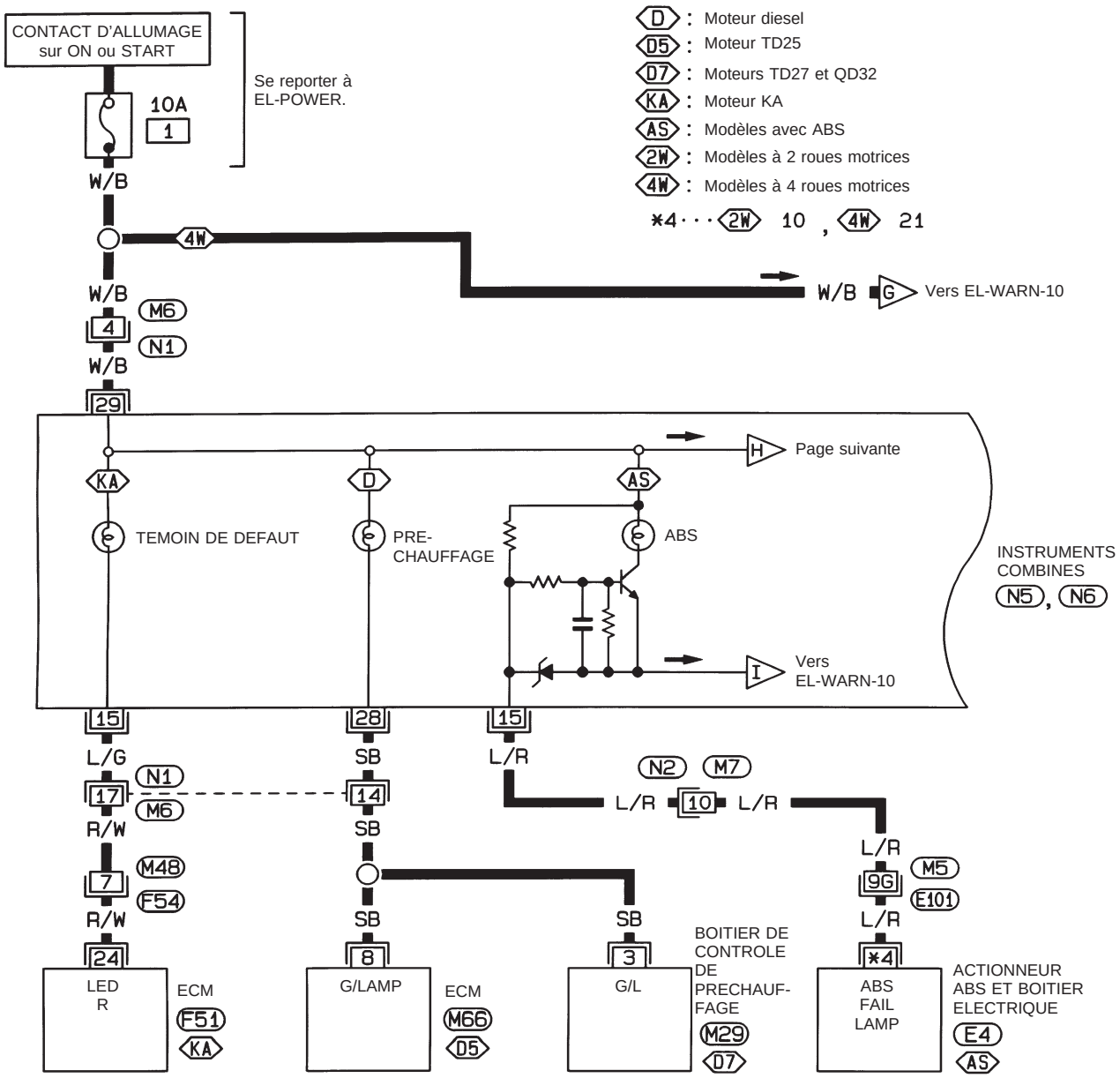

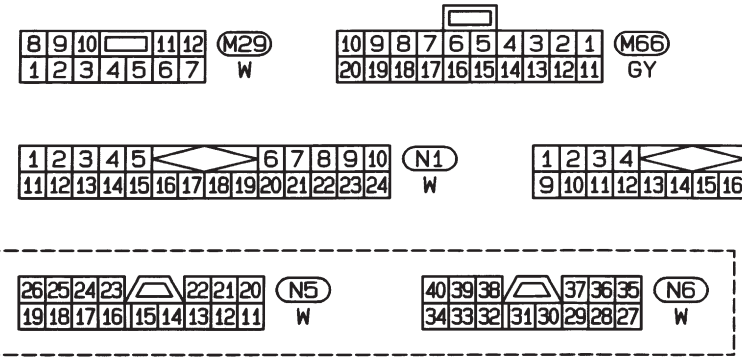

Consulter la dernière page dépliante.
M5 , E101
F51
E4

HEL471A

Simpo PDF Merge and Split Unregistered Version - http://www.simpopdf.com

Schéma de câblage — WARN —/Conduite à droite (Suite)

EL-WARN-07

G : Moteur à essence
D : Moteur diesel
AE : Pour l'Europe et l'Australie
AB : Modèles avec système de coussin gonflable
2A : Modèles à 2 roues motrices avec système de coussin gonflable
4A : Modèles à 4 roues motrices avec système de coussin gonflable

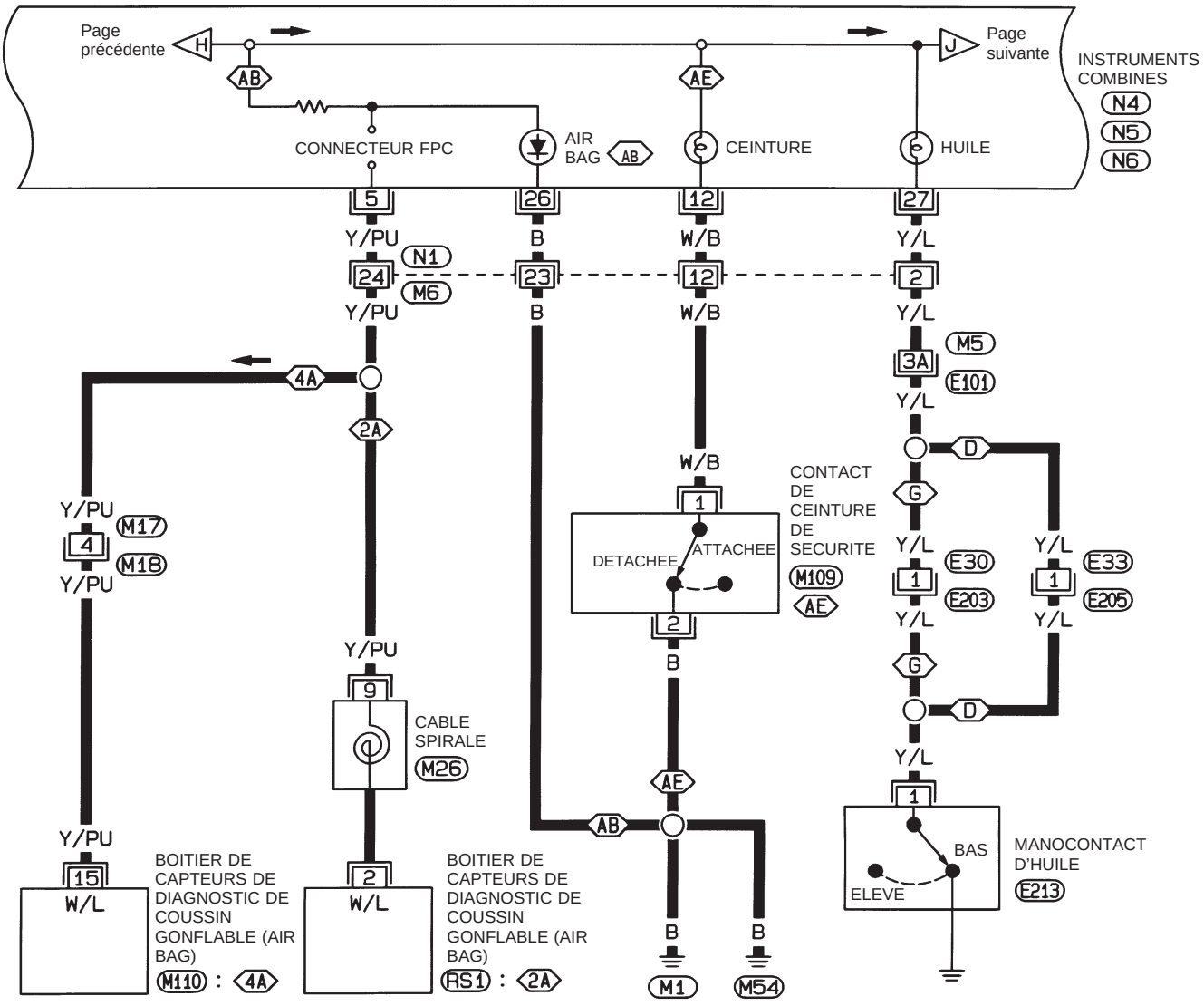

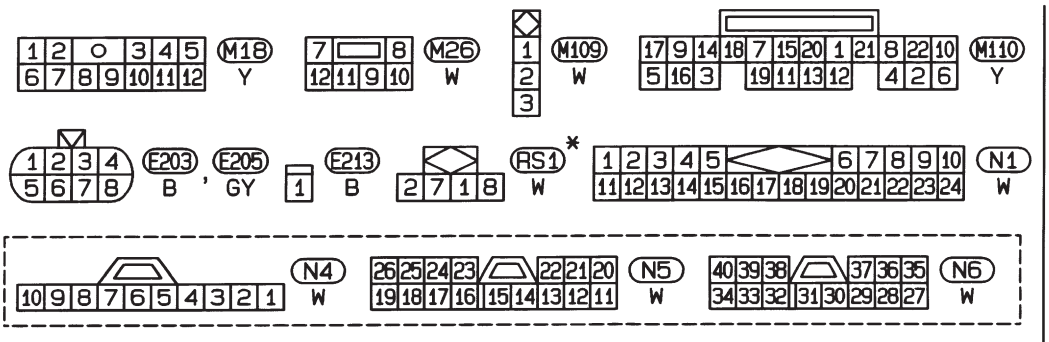

Consulter la dernière page dépliante.
M5, E101

* : Ce connecteur n'est pas indiqué dans la "DISPOSITION DES FAISCEAUX".

HEL472A

Simpo PDF Merge and Split Unregistered Version - http://www.simpopdf.com

Schéma de câblage — WARN —/Conduite à droite (Suite)

EL-WARN-08

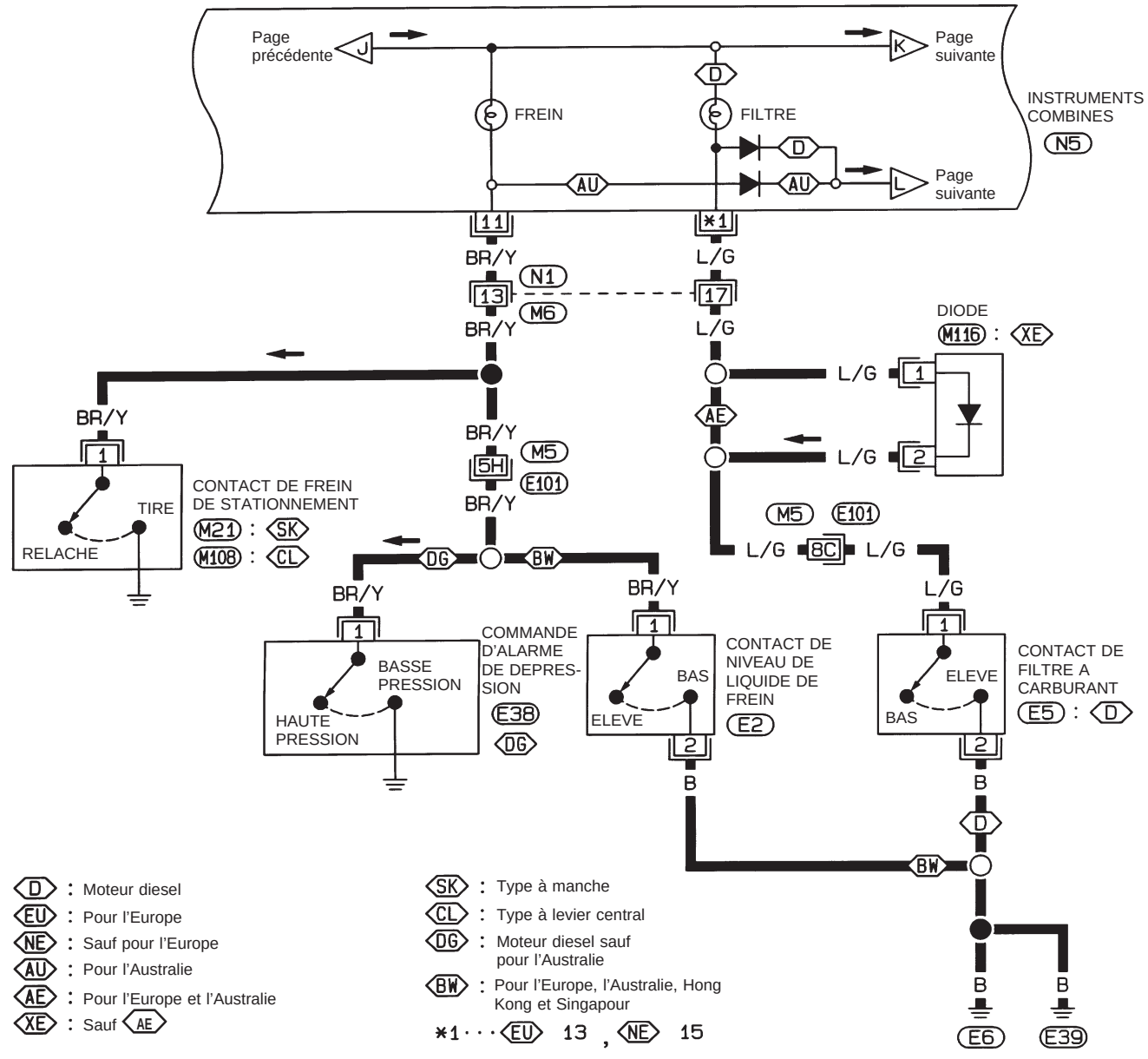

D : Moteur diesel
EU : Pour l'Europe
NE : Sauf pour l'Europe
AU : Pour l'Australie
AE : Pour l'Europe et l'Australie
XE : Sauf AE

SK : Type à manche
CL : Type à levier central
DG : Moteur diesel sauf pour l'Australie
BW : Pour l'Europe, l'Australie, Hong Kong et Singapour

*1 ··· EU 13 , NE 15

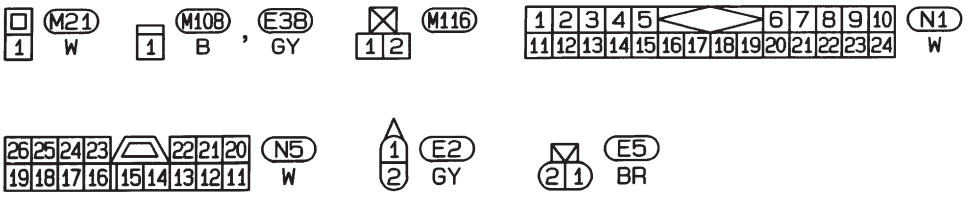

Consulter la dernière page dépliante.
M5 , E101

HEL367A

Simpo PDF Merge and Split Unregistered Version - http://www.simpopdf.com

Schéma de câblage — WARN —/Conduite à droite (Suite)

EL-WARN-09

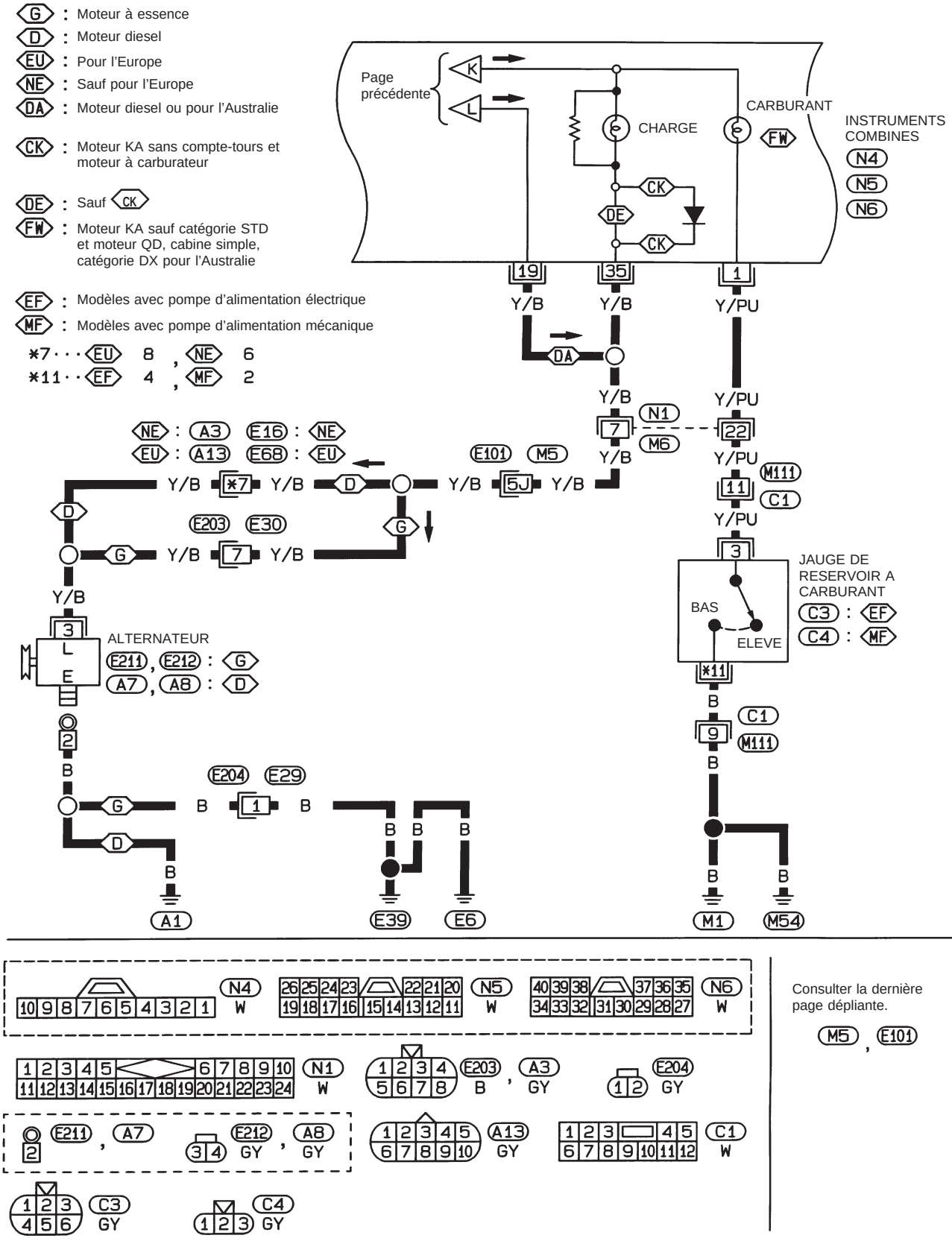

Consulter la dernière page dépliante.
M5 , E101

HEL368A

Simpo PDF Merge and Split Unregistered Version - http://www.simpopdf.com

Schéma de câblage — WARN —/Conduite à droite (Suite)

EL-WARN-10

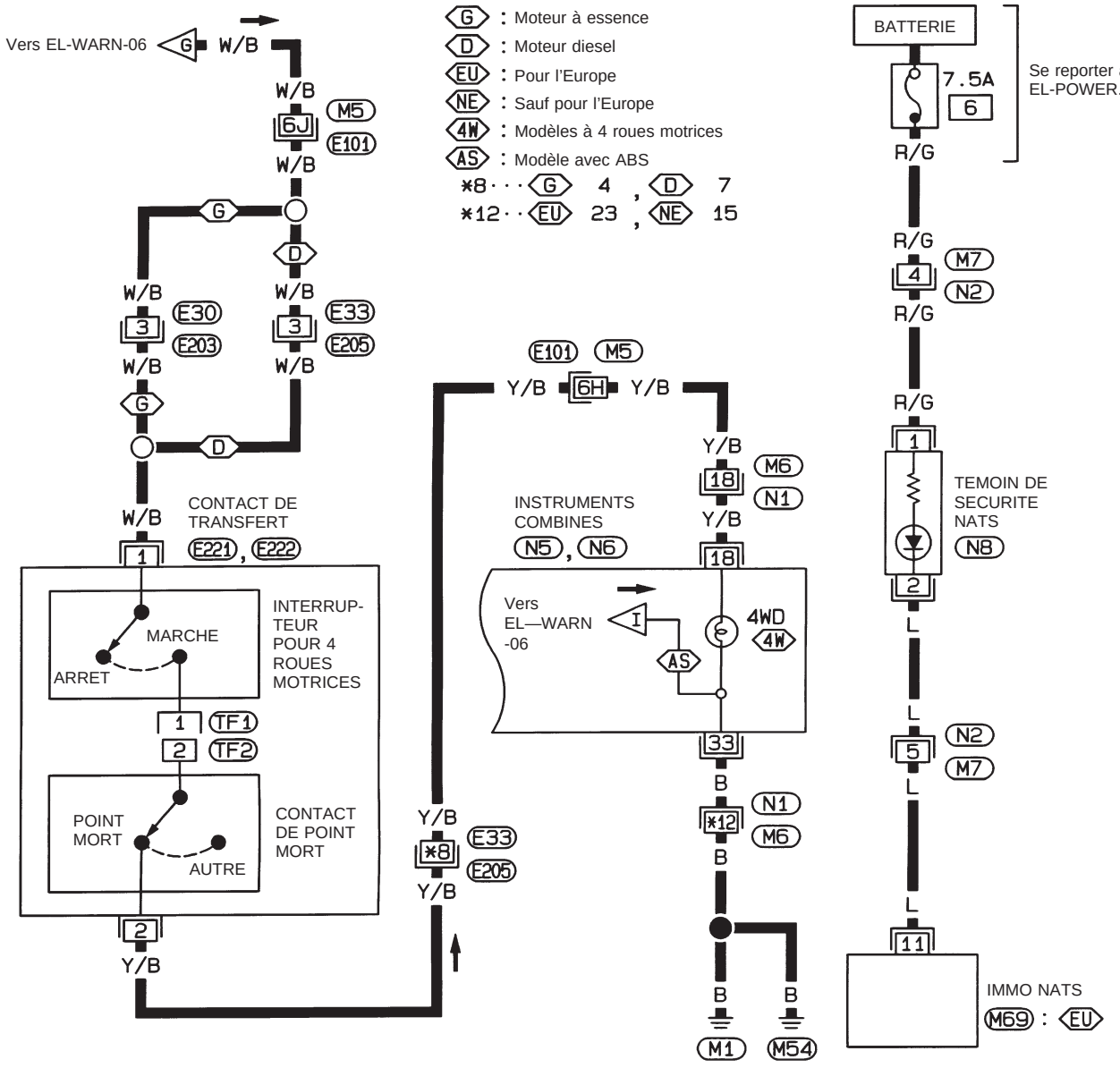

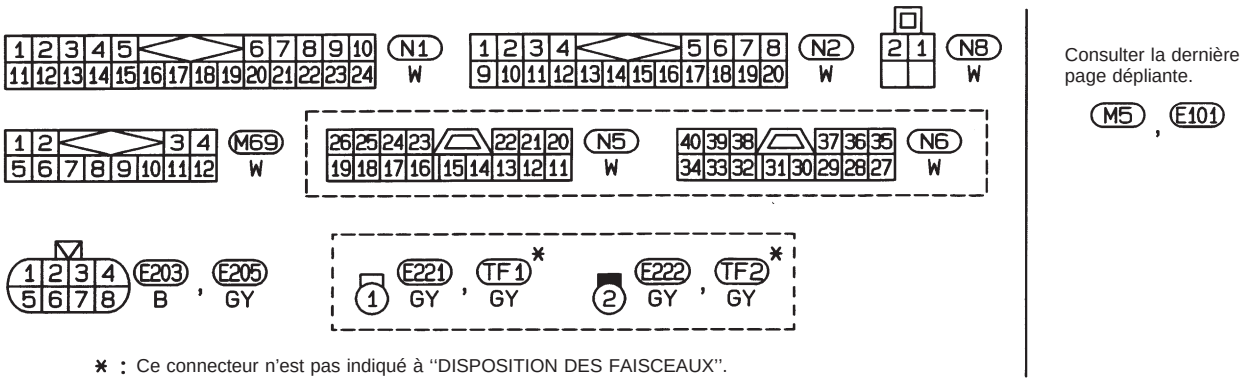

Consulter la dernière page dépliante.
M5 , E101

HEL369A

Simpo PDF Merge and Split Unregistered Version - http://www.simpopdf.com

Schéma de câblage — DEF —

EL-DEF-01

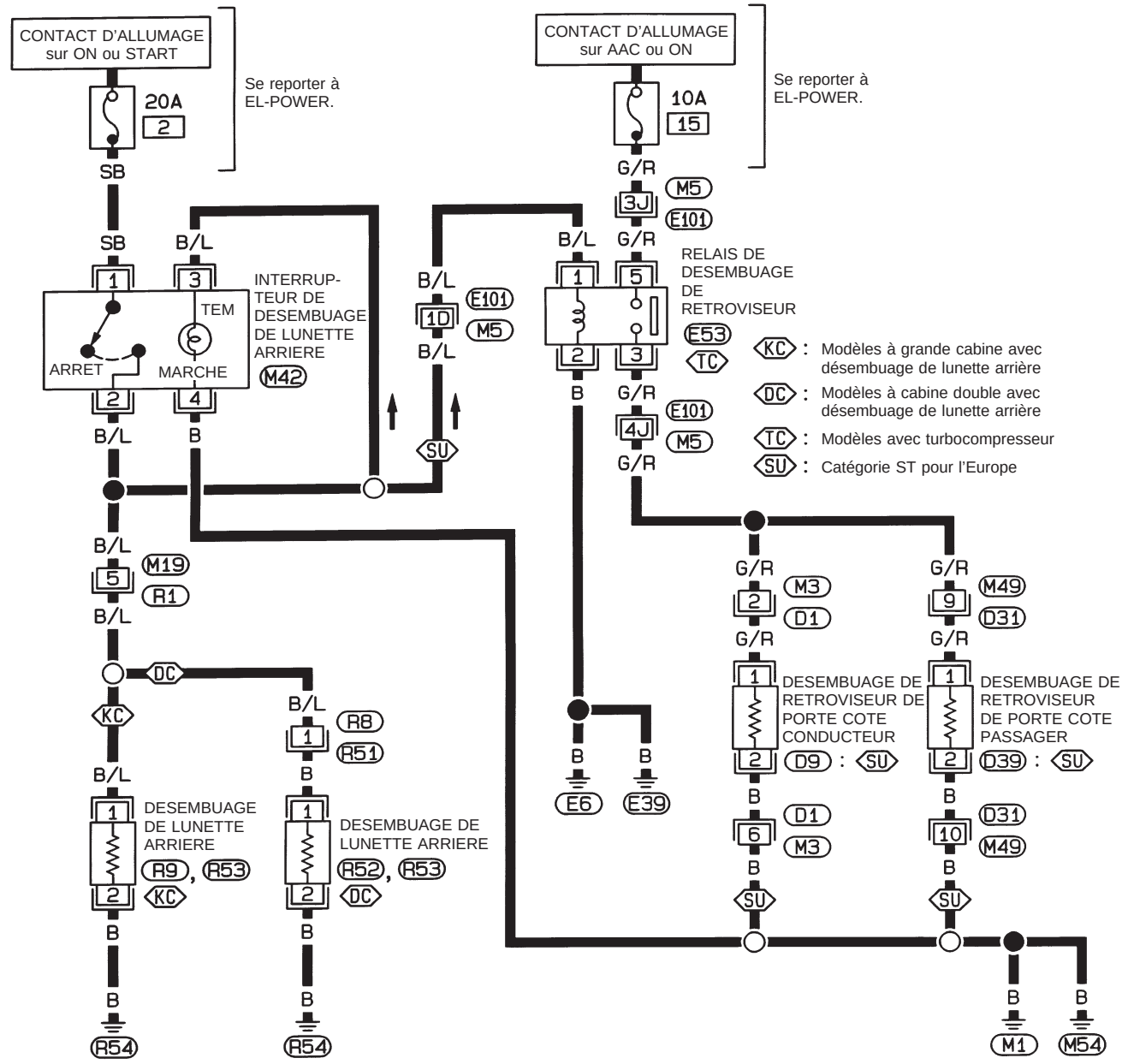

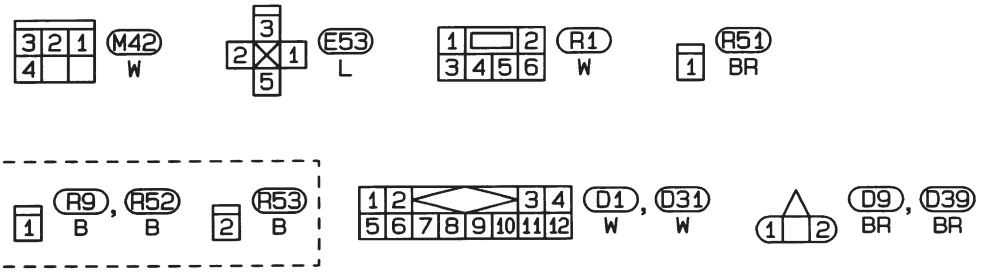

Consulter la dernière page dépliante.

M5 , E101

HEL473A

Simpo PDF Merge and Split Unregistered Version - http://www.simpopdf.com

Schéma de câblage —AUDIO —/Conduite à droite

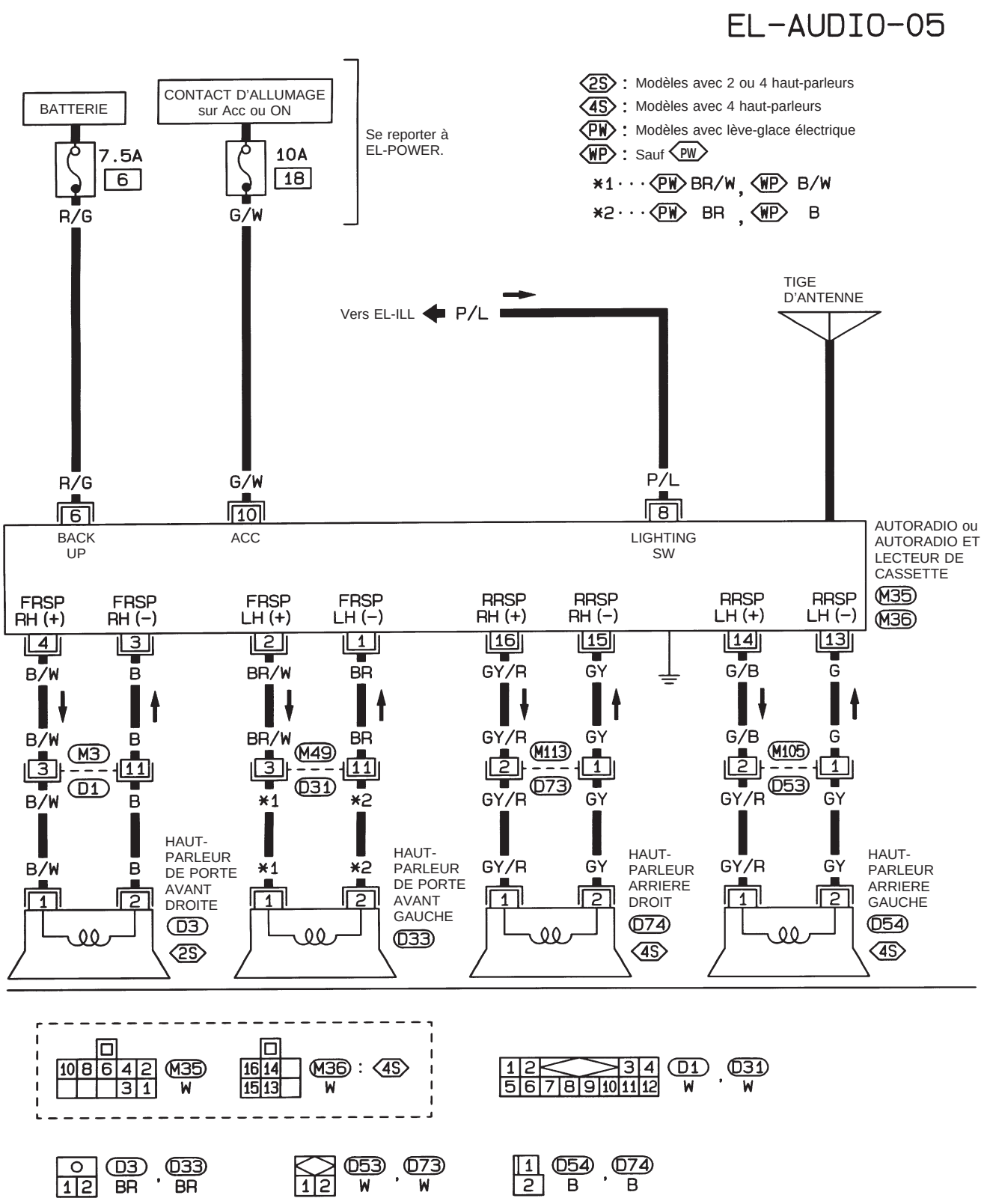

HEL474A

Simpo PDF Merge and Split Unregistered Version - http://www.simpopdf.com

Schéma de câblage — WINDOW —/Conduite à gauche

EL-WINDOW-01

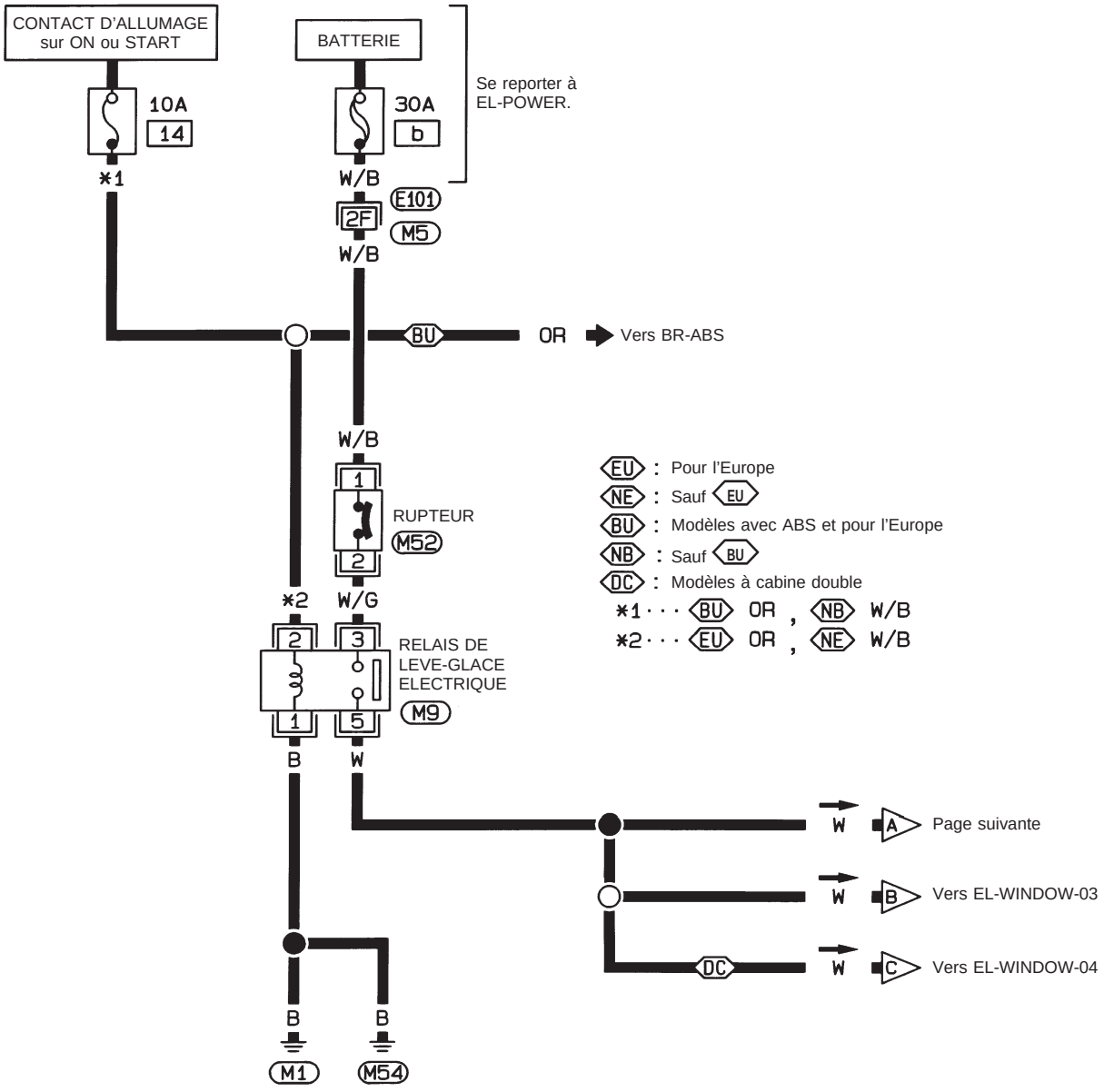

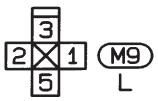



Consulter la dernière page dépliante.

M5 , E101

HEL477A

Simpo PDF Merge and Split Unregistered Version - http://www.simpopdf.com

Schéma de câblage — WINDOW —/Conduite à gauche (Suite)

EL-WINDOW-02

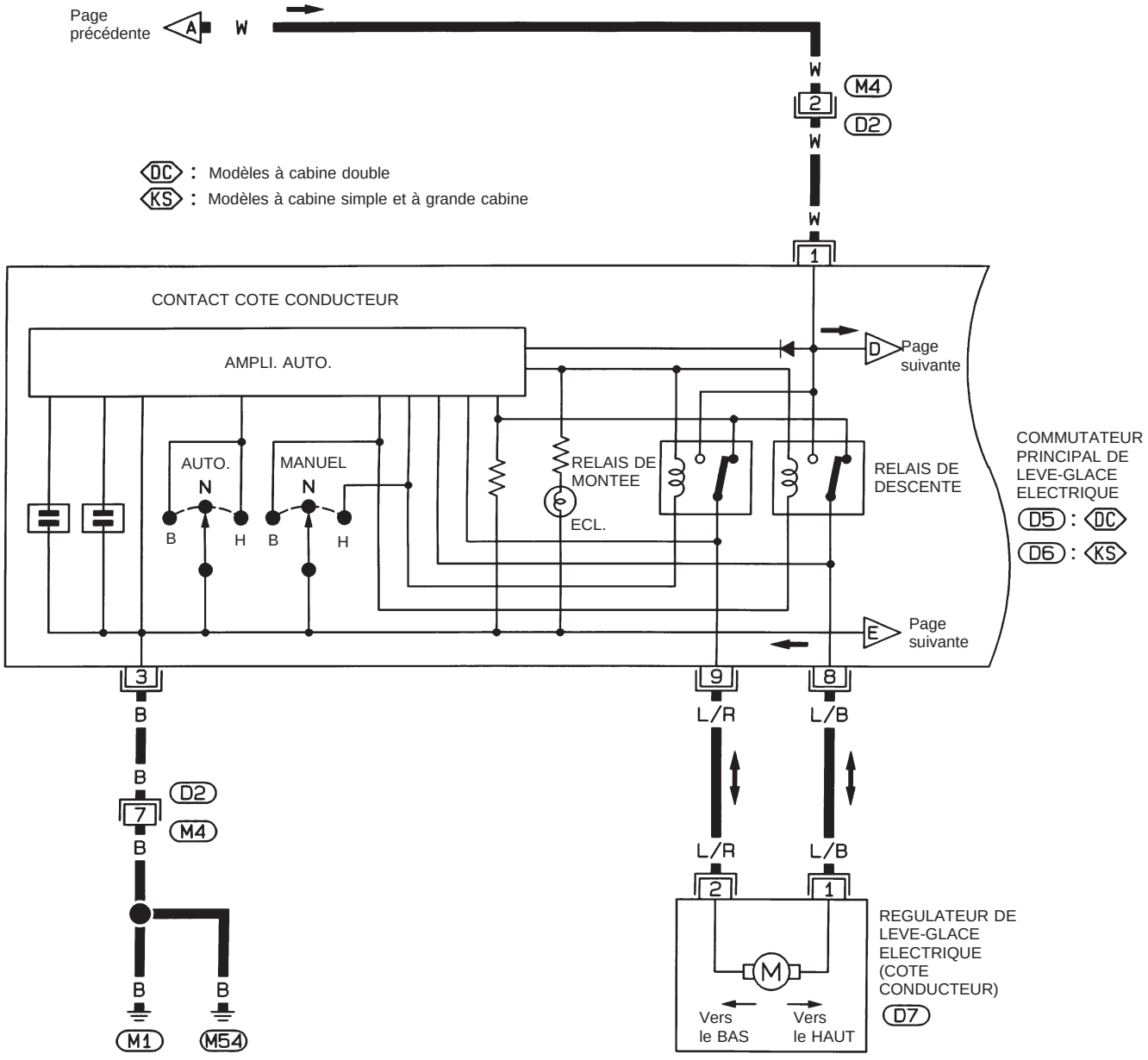

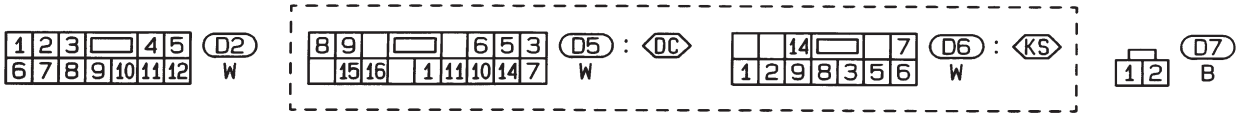

HEL380A

Simpo PDF Merge and Split Unregistered Version - http://www.simpopdf.com

Schéma de câblage — WINDOW —/Conduite à gauche (Suite)

EL-WINDOW-03

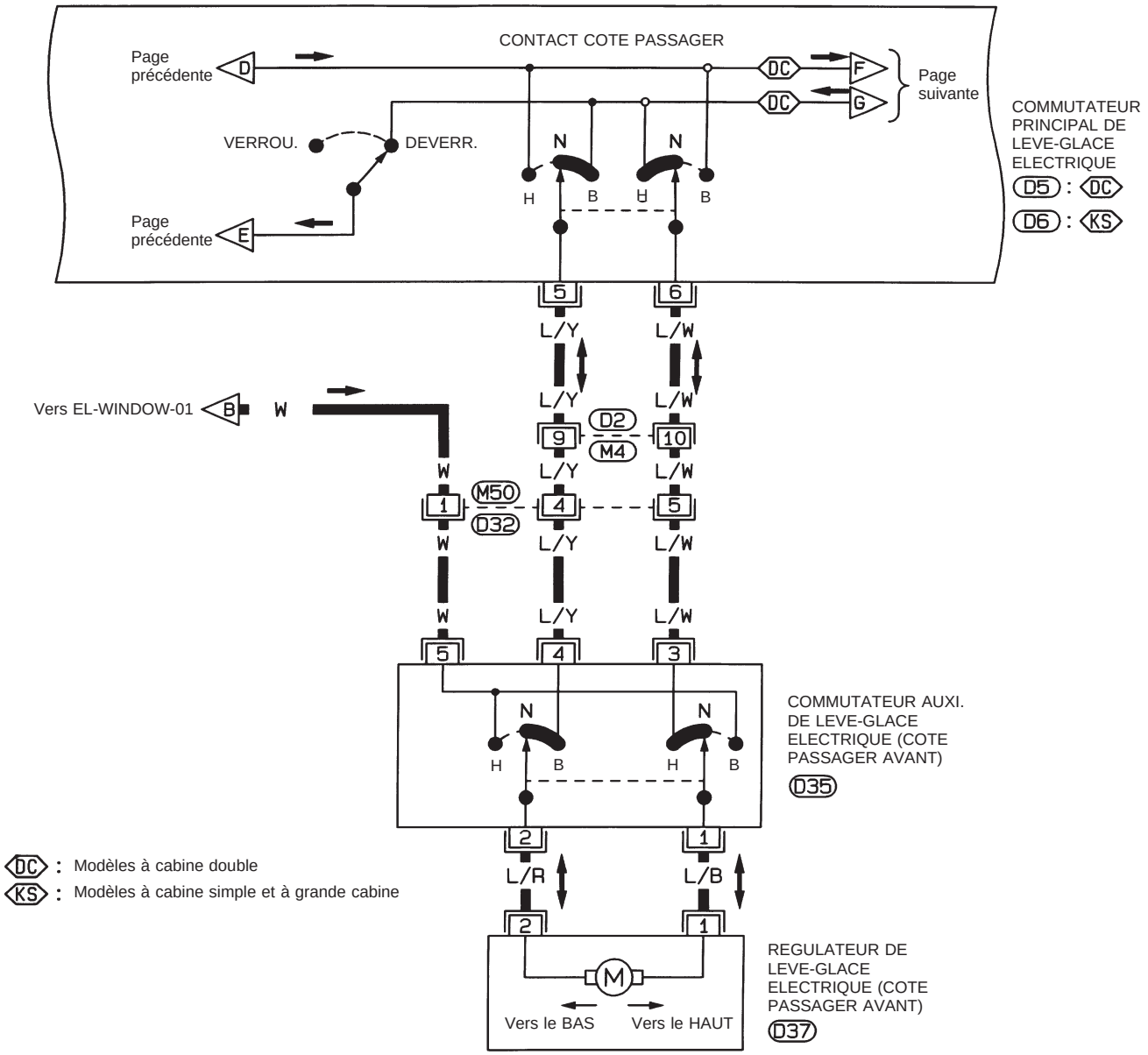

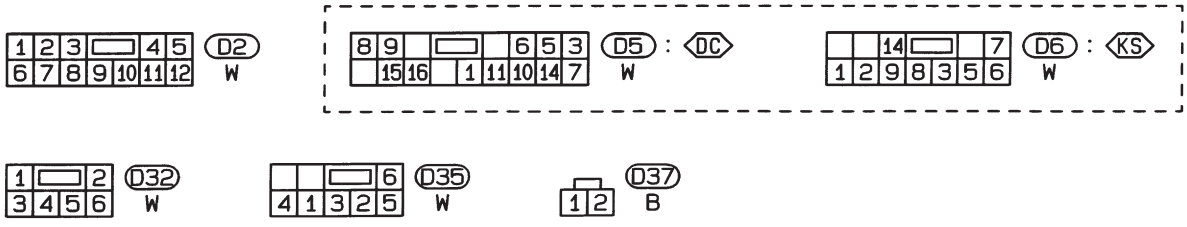

HEL381A

Simpo PDF Merge and Split Unregistered Version - http://www.simpopdf.com

Schéma de câblage — WINDOW —/Conduite à gauche (Suite)

EL-WINDOW-04

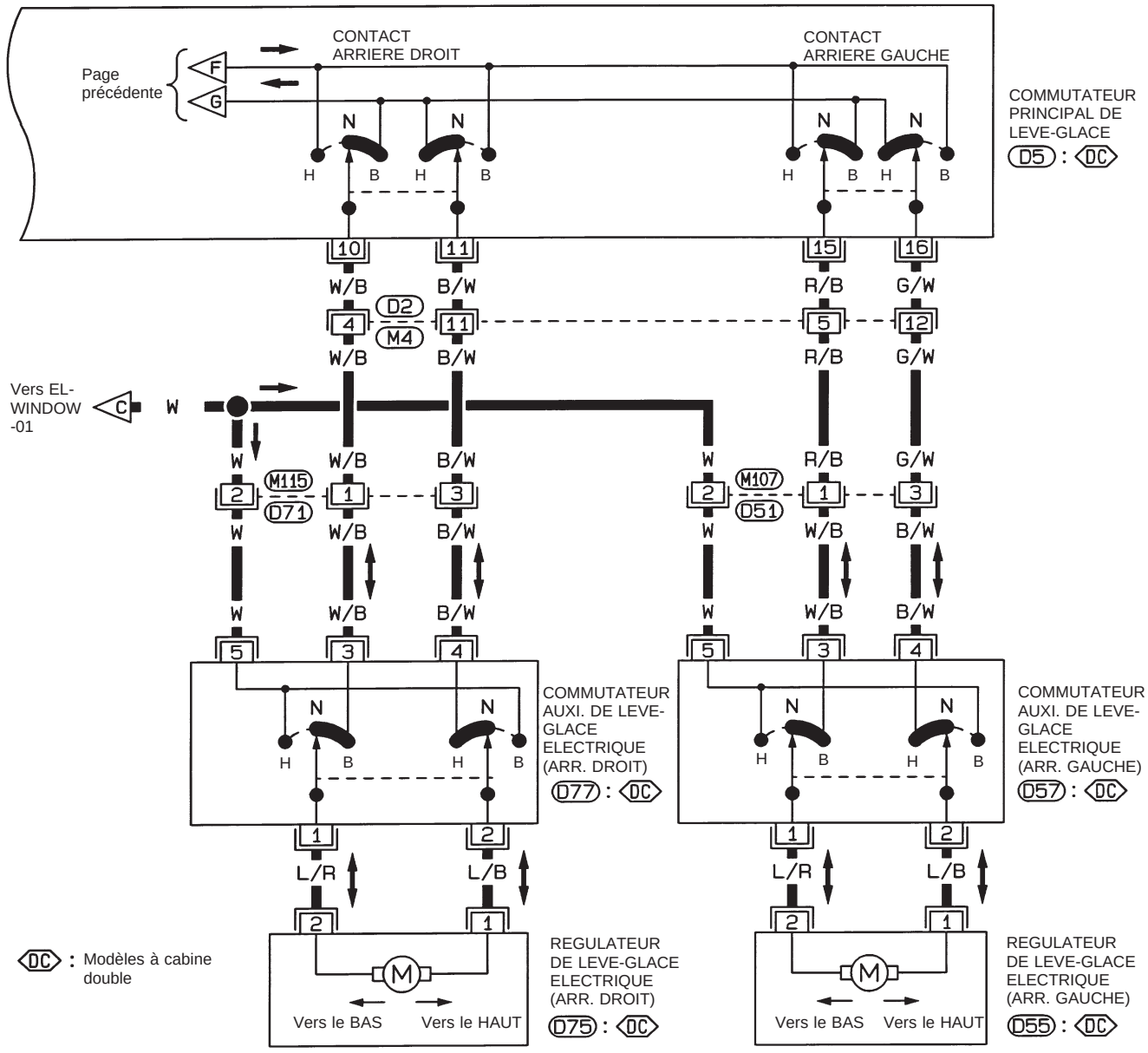

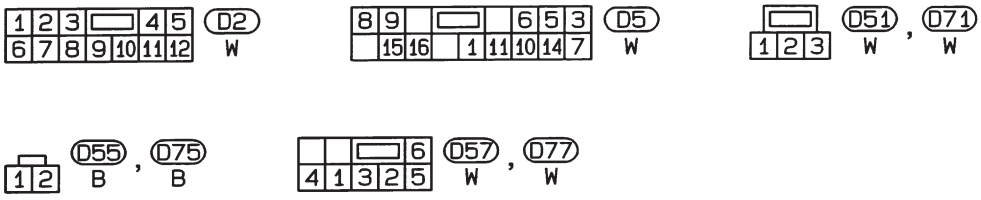

HEL956

Simpo PDF Merge and Split Unregistered Version - http://www.simpopdf.com

Schéma de câblage — WINDOW —/Conduite à droite

EL-WINDOW-05

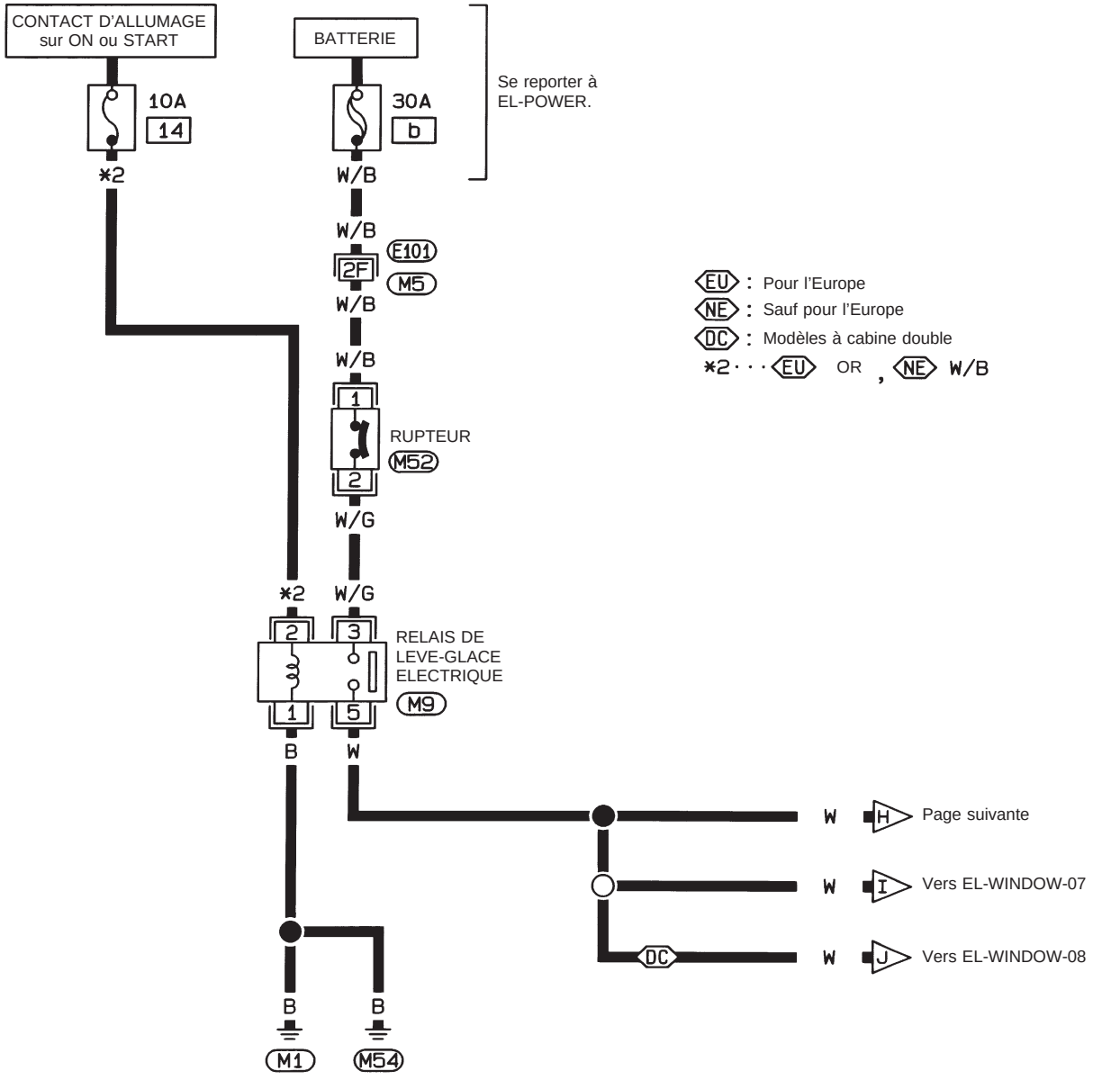

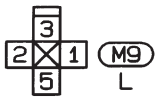



Consulter la dernière page dépliante.

M5 , E101

HEL478A

Simpo PDF Merge and Split Unregistered Version - http://www.simpopdf.com

Schéma de câblage — WINDOW —/Conduite à droite (Suite)

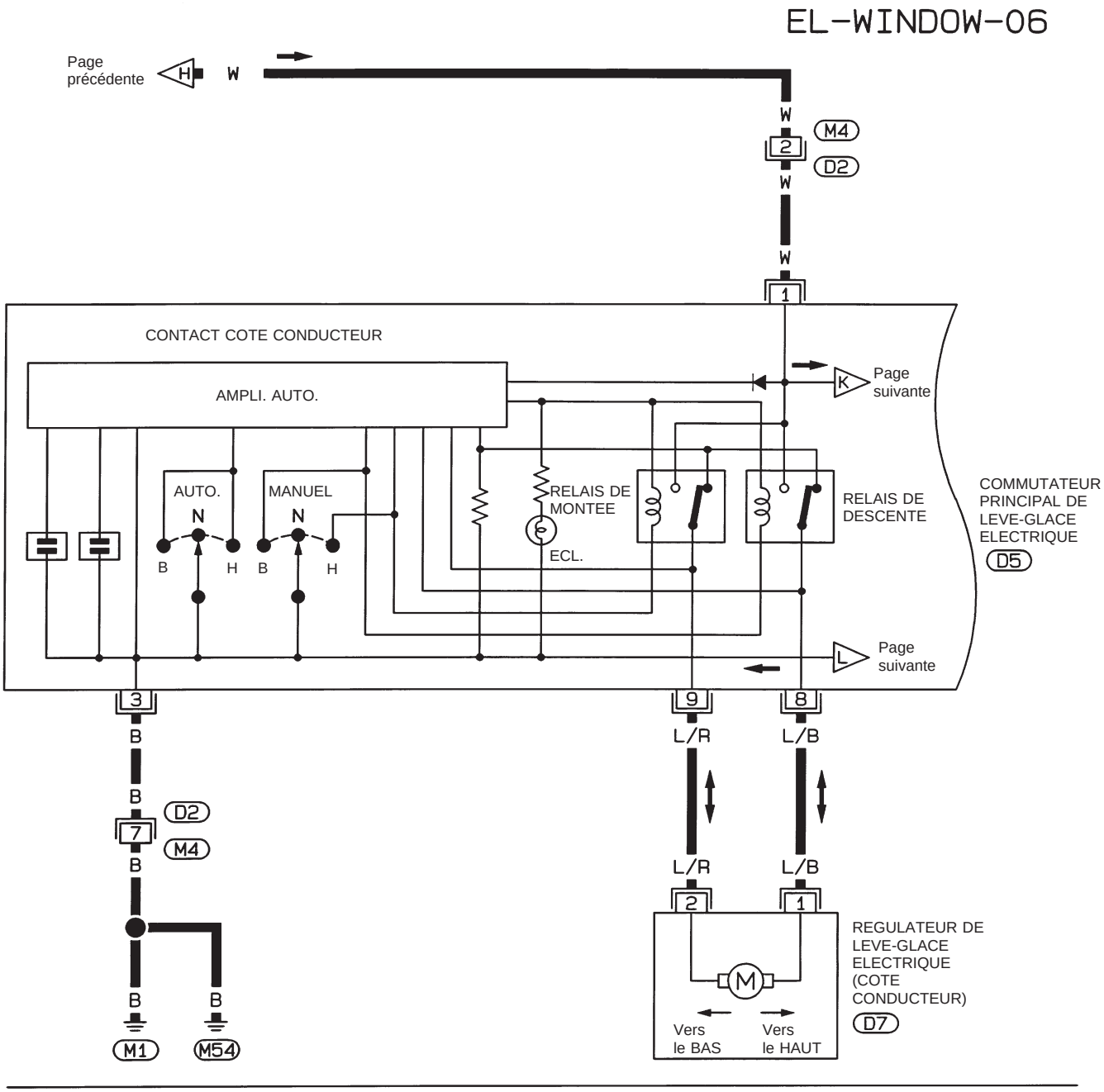

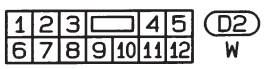

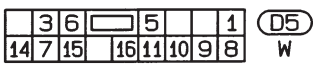

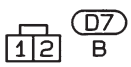

HEL958

Simpo PDF Merge and Split Unregistered Version - http://www.simpopdf.com

Schéma de câblage — WINDOW —/Conduite à droite (Suite)

EL-WINDOW-07

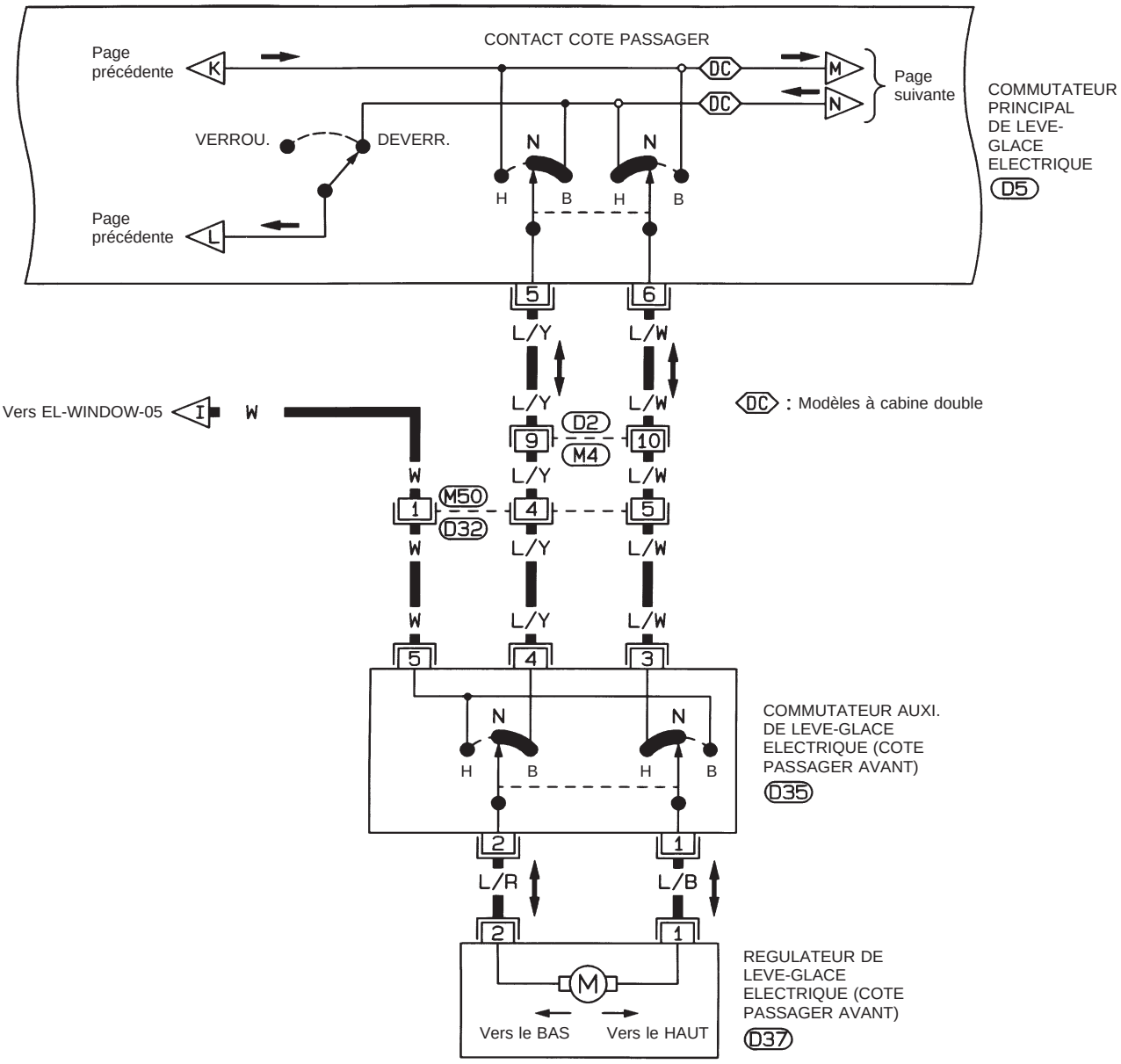



HEL479A

Simpo PDF Merge and Split Unregistered Version - http://www.simpopdf.com

Schéma de câblage — WINDOW —/Conduite à droite (Suite)

EL-WINDOW-08

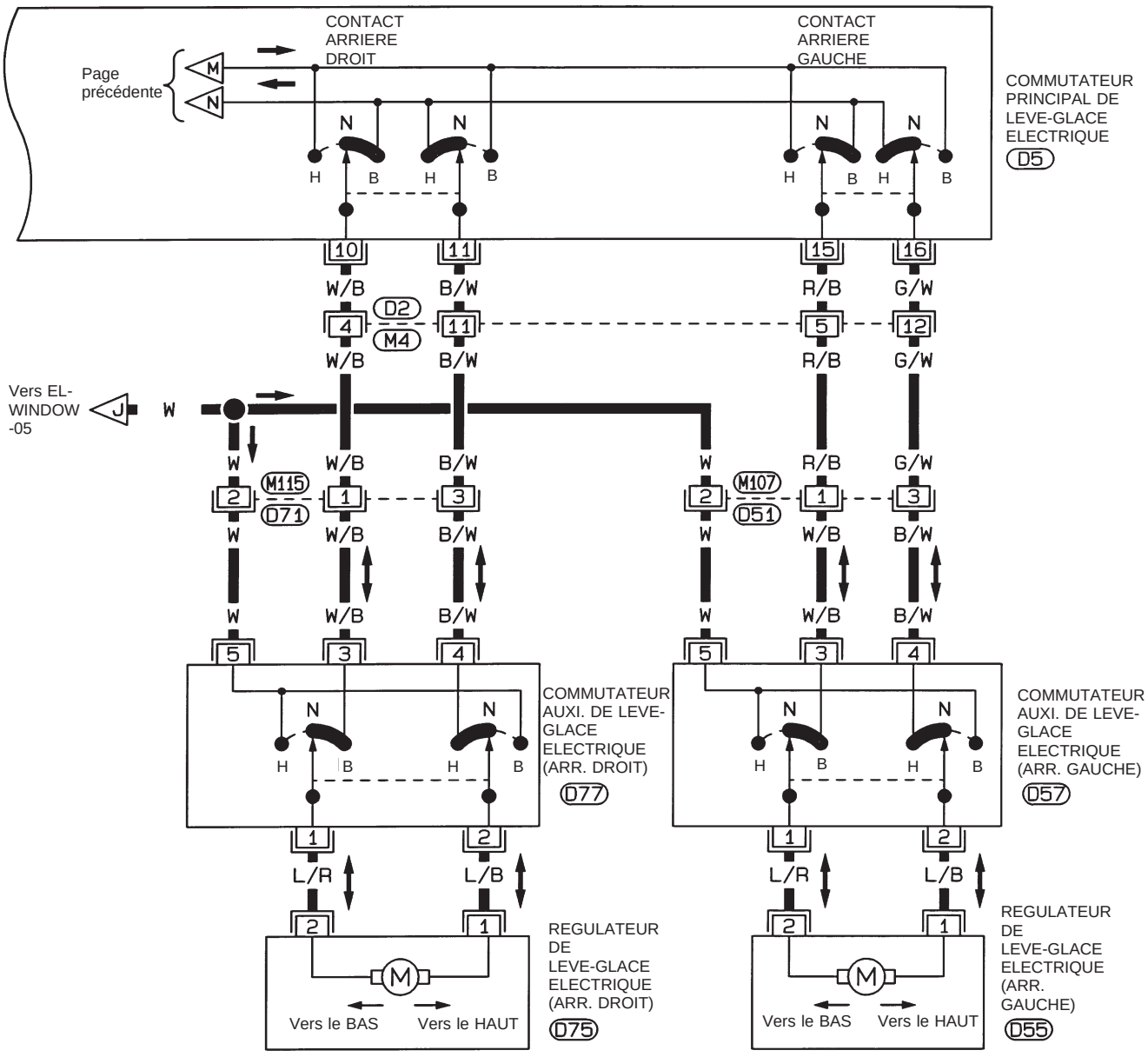

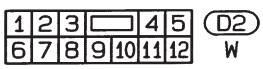

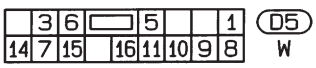



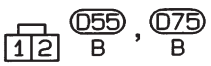



HEL960

Simpo PDF Merge and Split Unregistered Version - http://www.simpopdf.com

Schéma de câblage — D/LOCK —

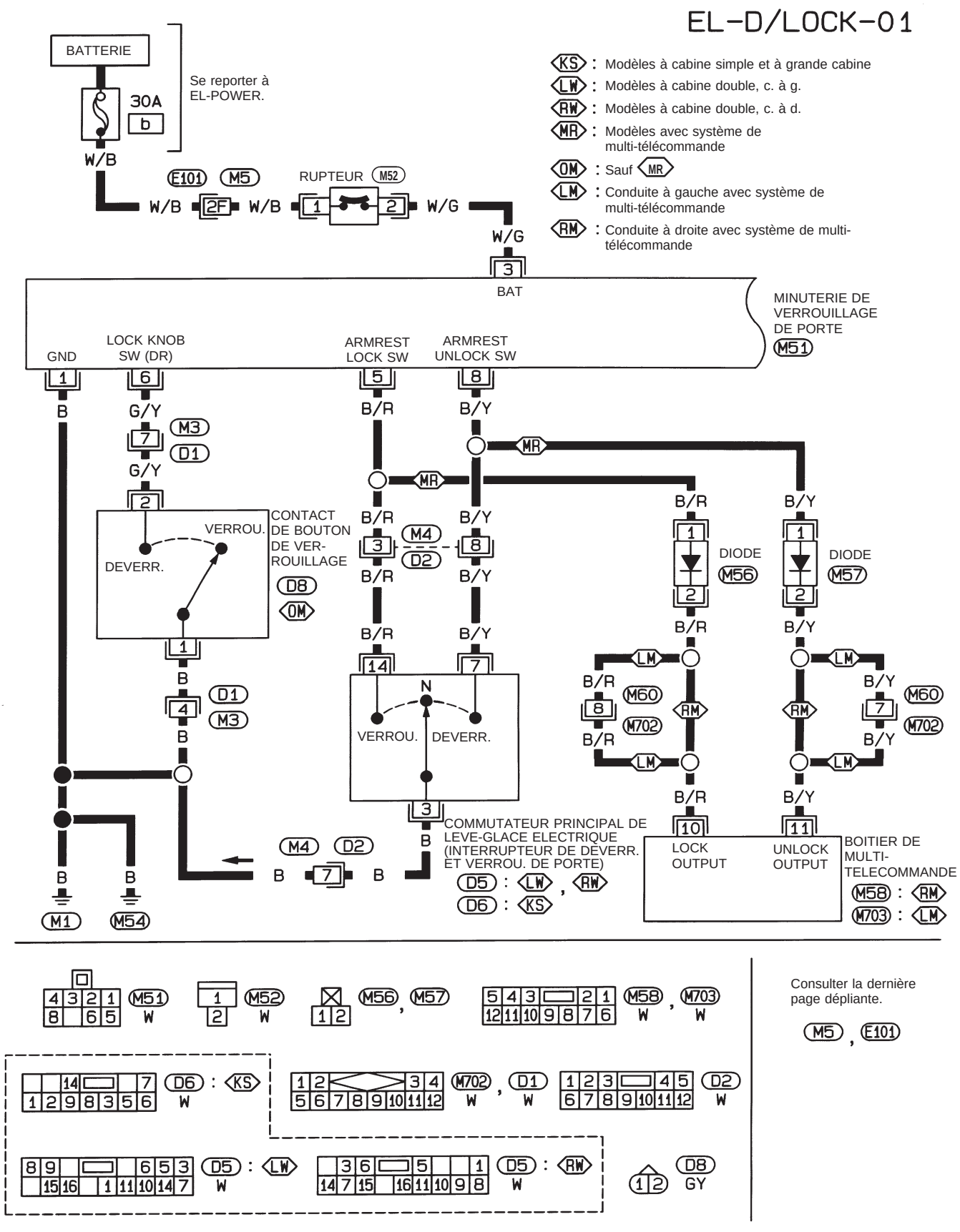

HEL480A

Simpo PDF Merge and Split Unregistered Version - http://www.simpopdf.com

Schéma de câblage — D/LOCK — (Suite)

EL-D/LOCK-02

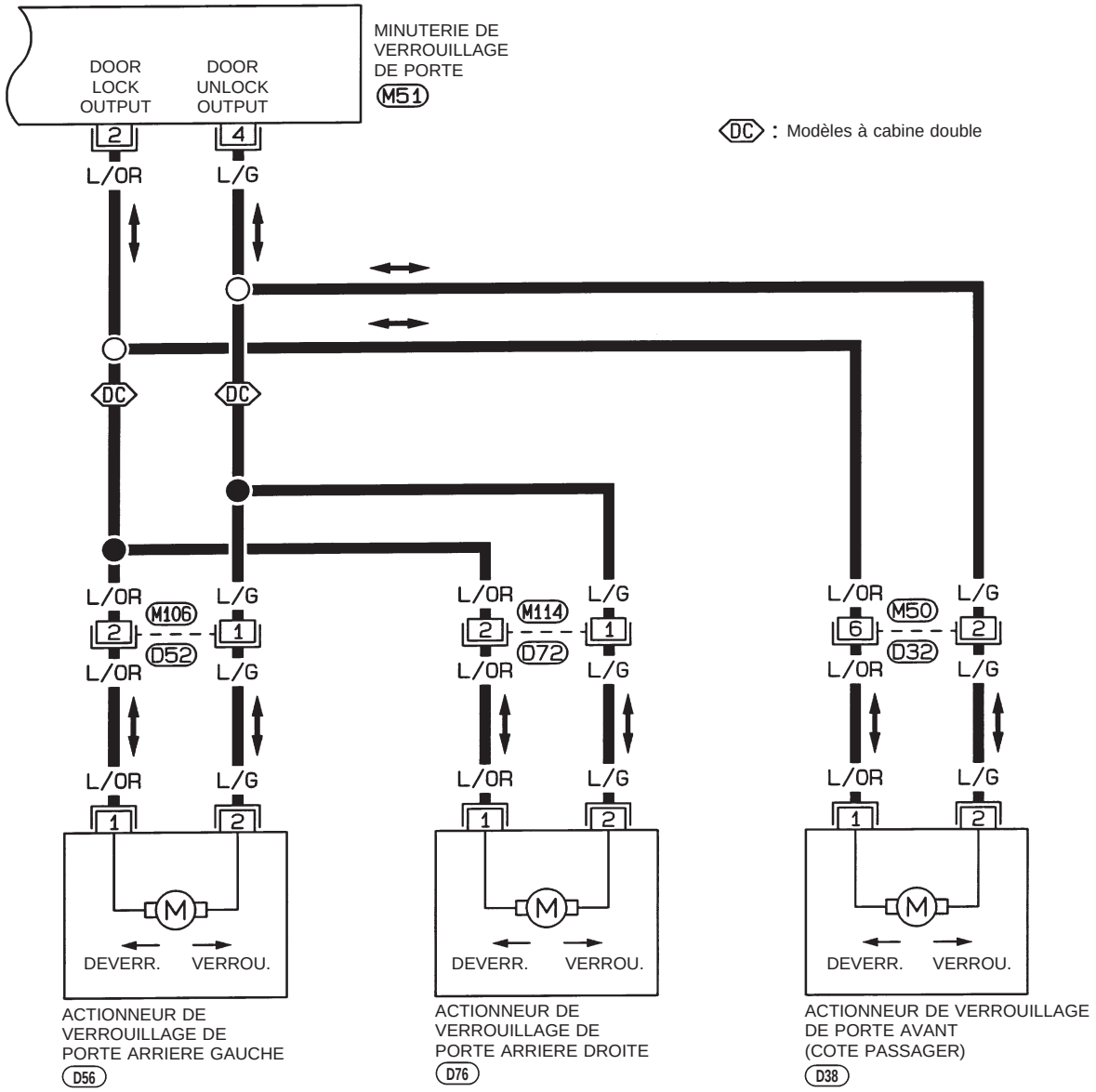



HEL962

Simpo PDF Merge and Split Unregistered Version - http://www.simpopdf.com

Schéma de câblage — MULTI —/Conduite à gauche

EL-MULTI-01

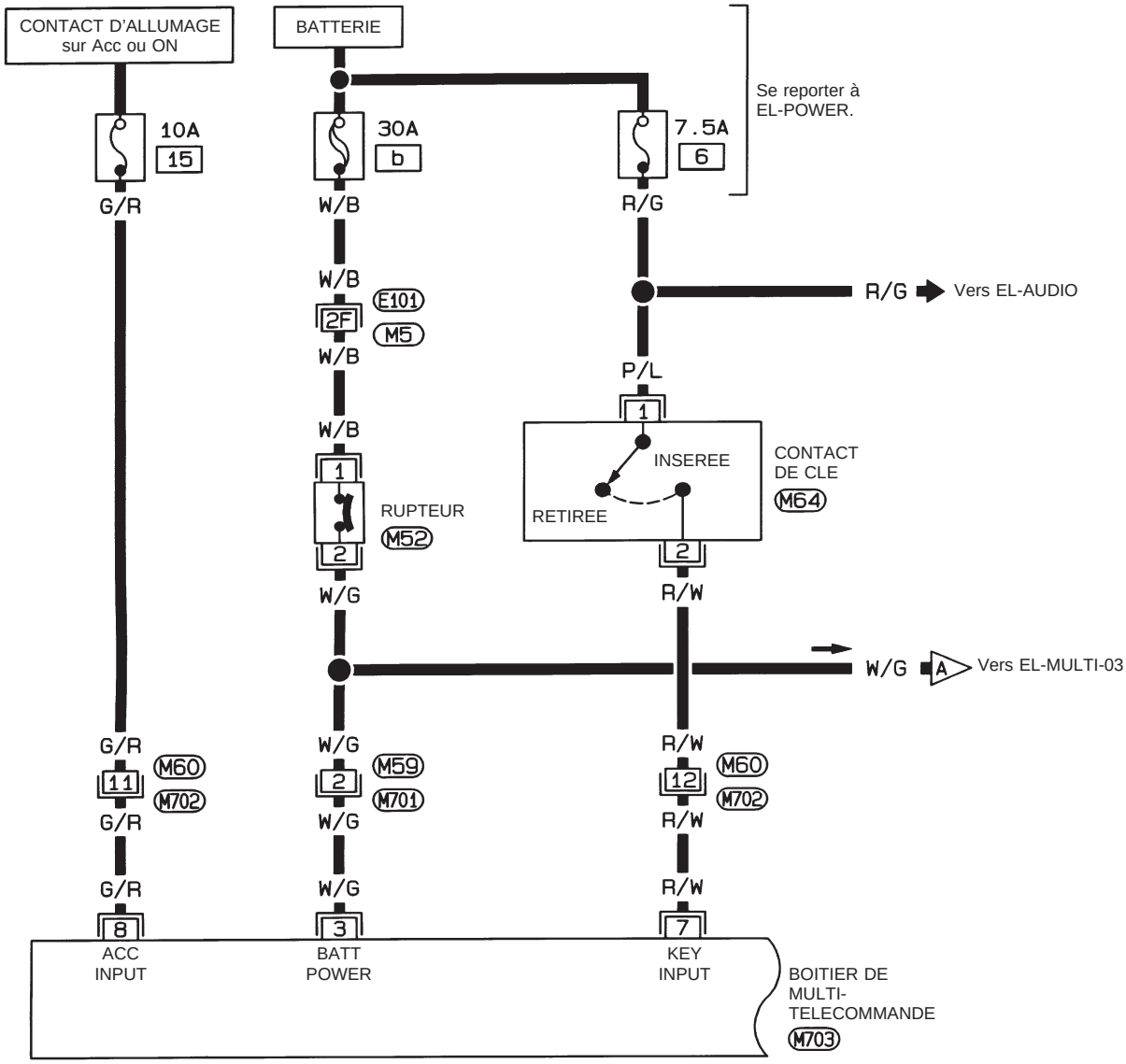

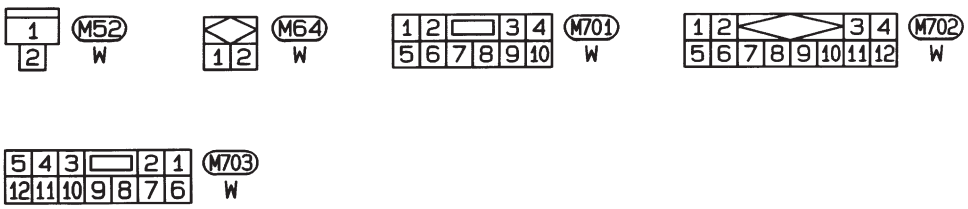

Consulter la dernière page dépliante.

M5 , E101

HEL487A

Simpo PDF Merge and Split Unregistered Version - http://www.simpopdf.com

Schéma de câblage — MULTI —/Conduite à gauche (Suite)

EL-MULTI-02

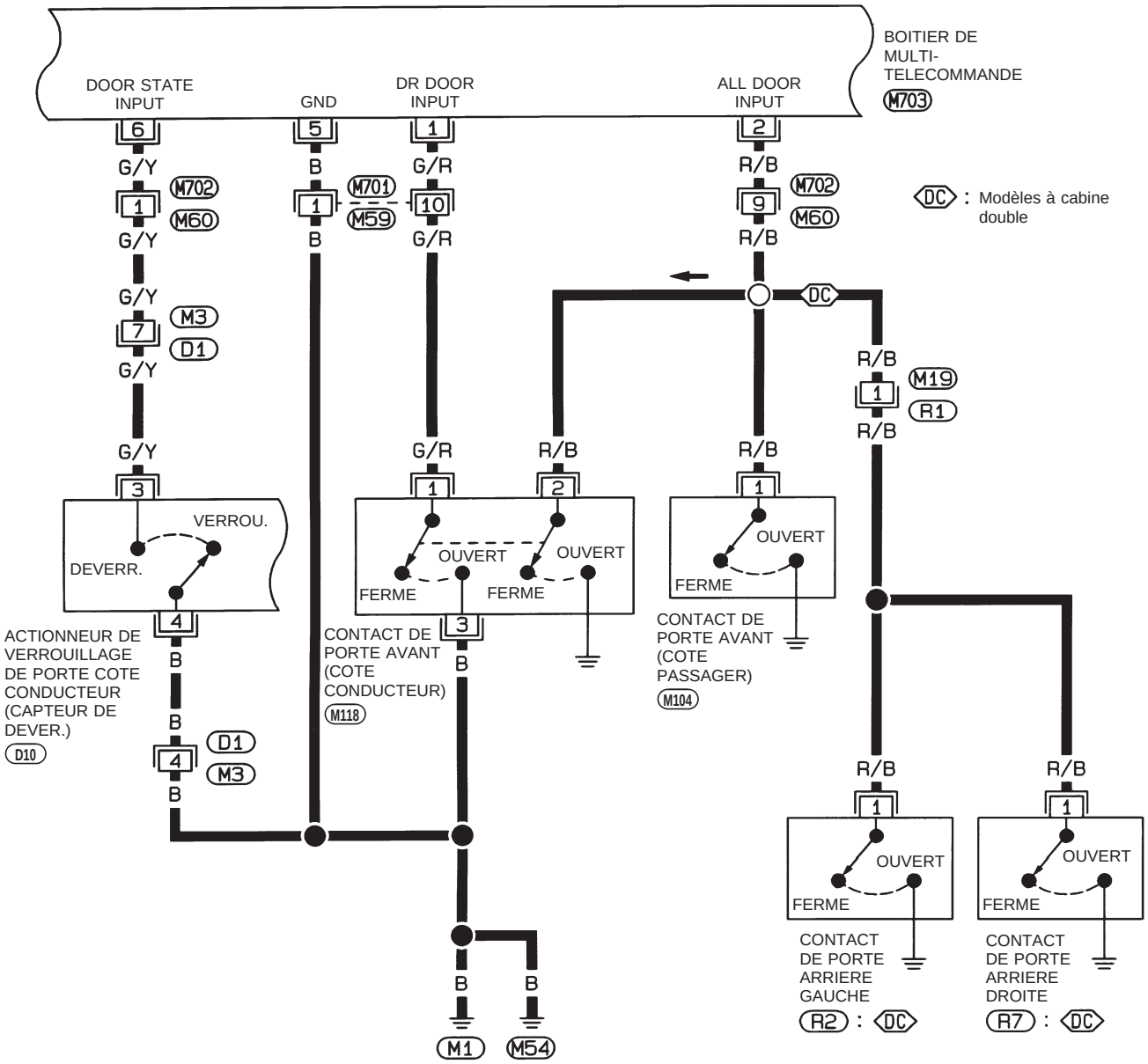

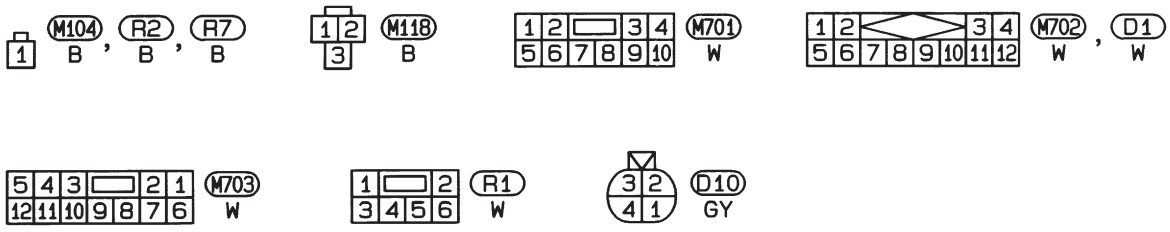

HEL488A

Simpo PDF Merge and Split Unregistered Version - http://www.simpopdf.com

Schéma de câblage — MULTI —/Conduite à gauche (Suite)

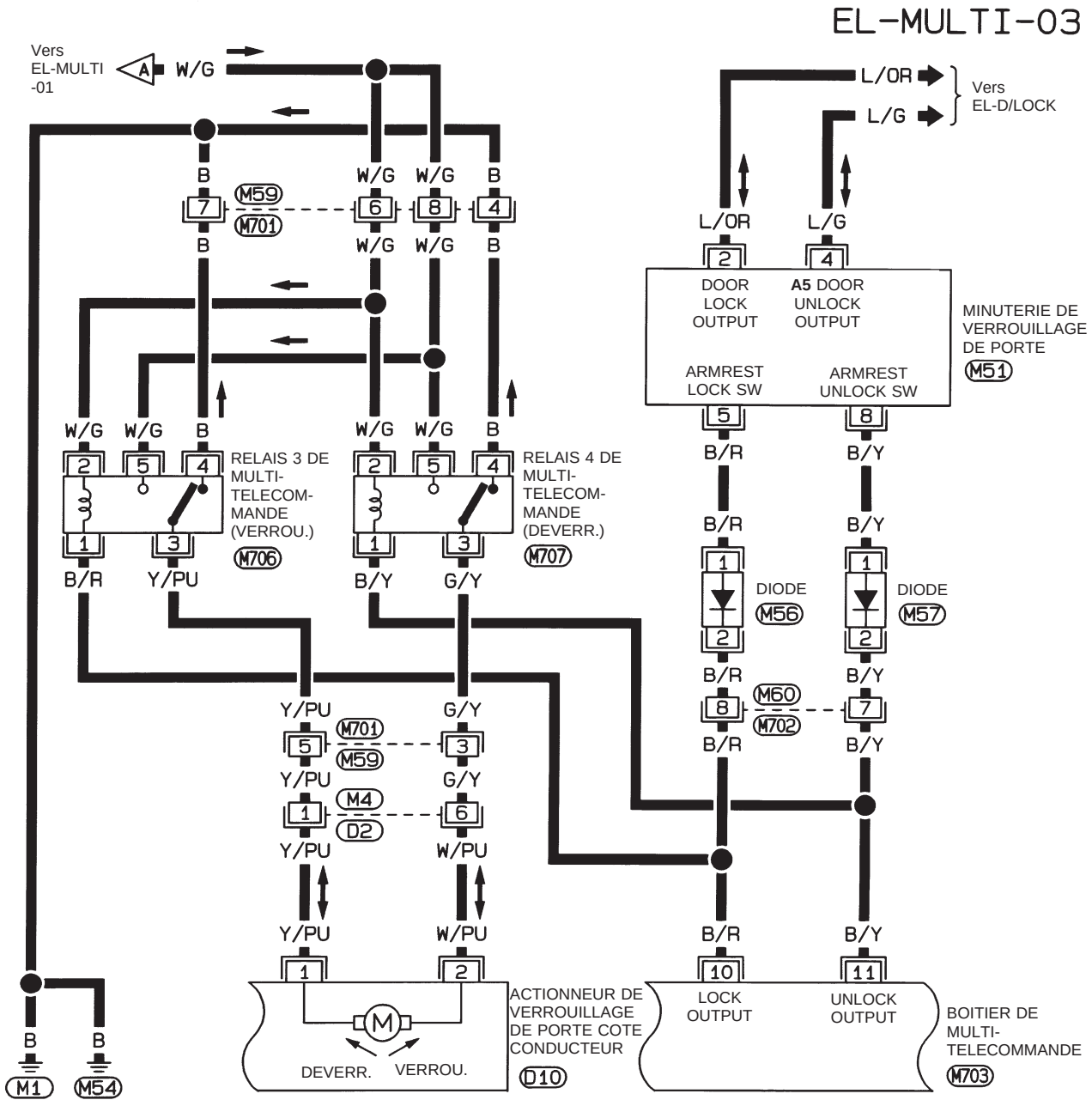

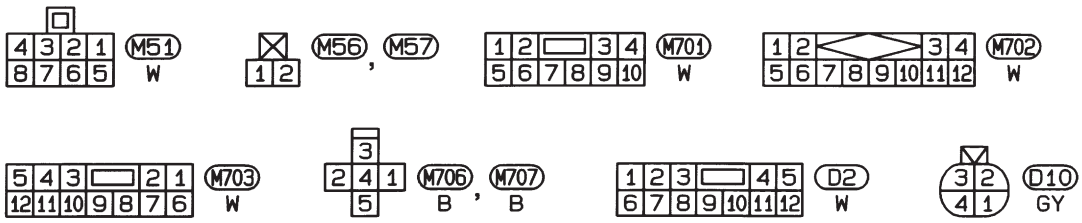

HEL489A

Simpo PDF Merge and Split Unregistered Version - http://www.simpopdf.com

Schéma de câblage — MULTI —/Conduite à gauche (Suite)

EL-MULTI-04

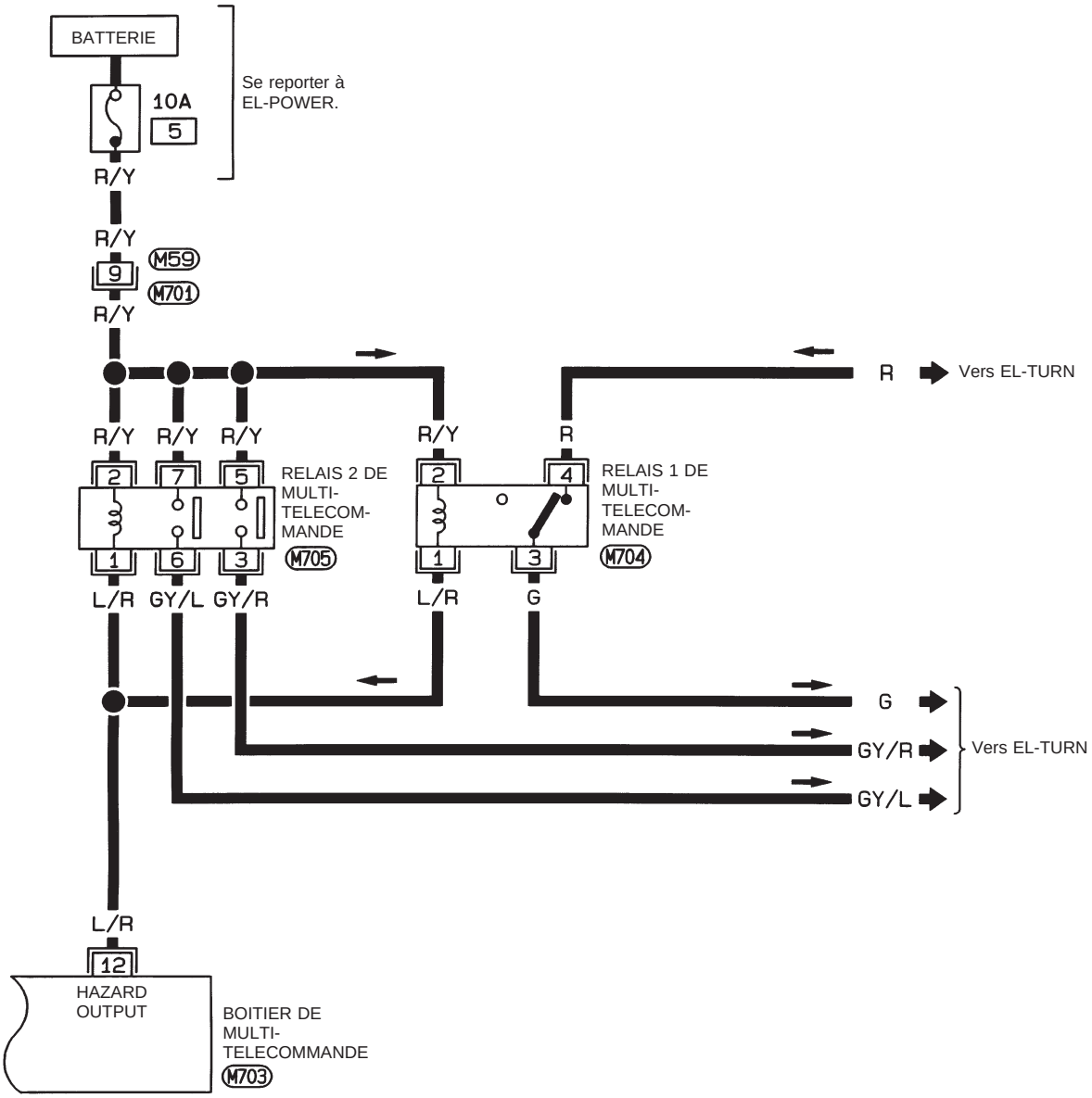

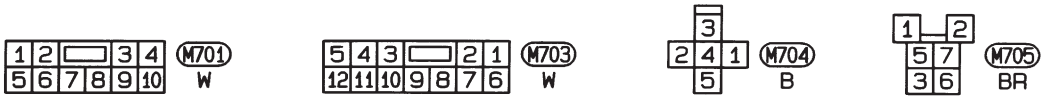

HEL490A

Simpo PDF Merge and Split Unregistered Version - http://www.simpopdf.com

Schéma de câblage — MULTI —/Conduite à droite

EL-MULTI-05

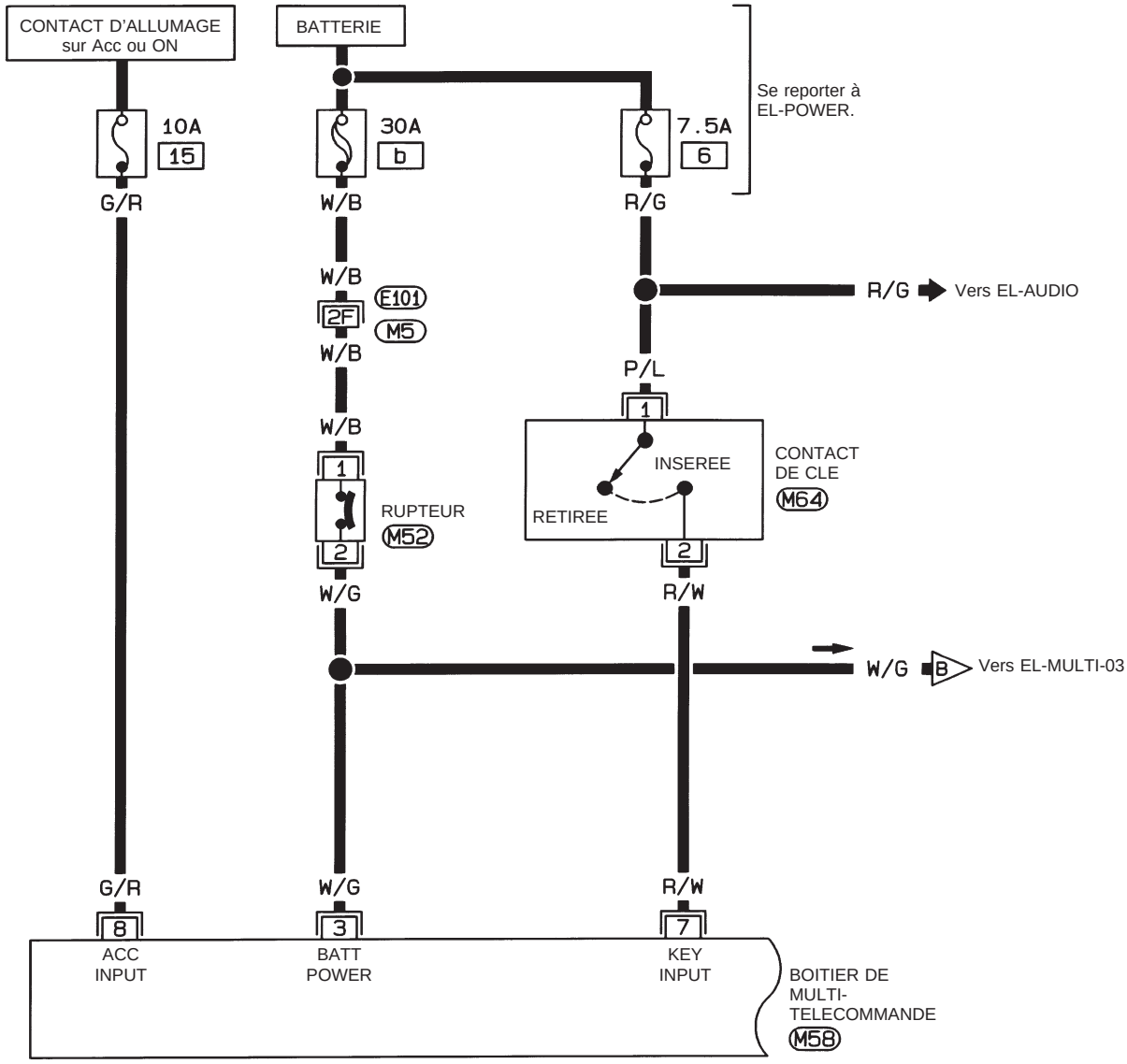



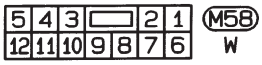



Consulter la dernière page dépliante.

M5 , E101

HEL481A

Simpo PDF Merge and Split Unregistered Version - http://www.simpopdf.com

Schéma de câblage — MULTI —/Conduite à droite (Suite)

EL-MULTI-06

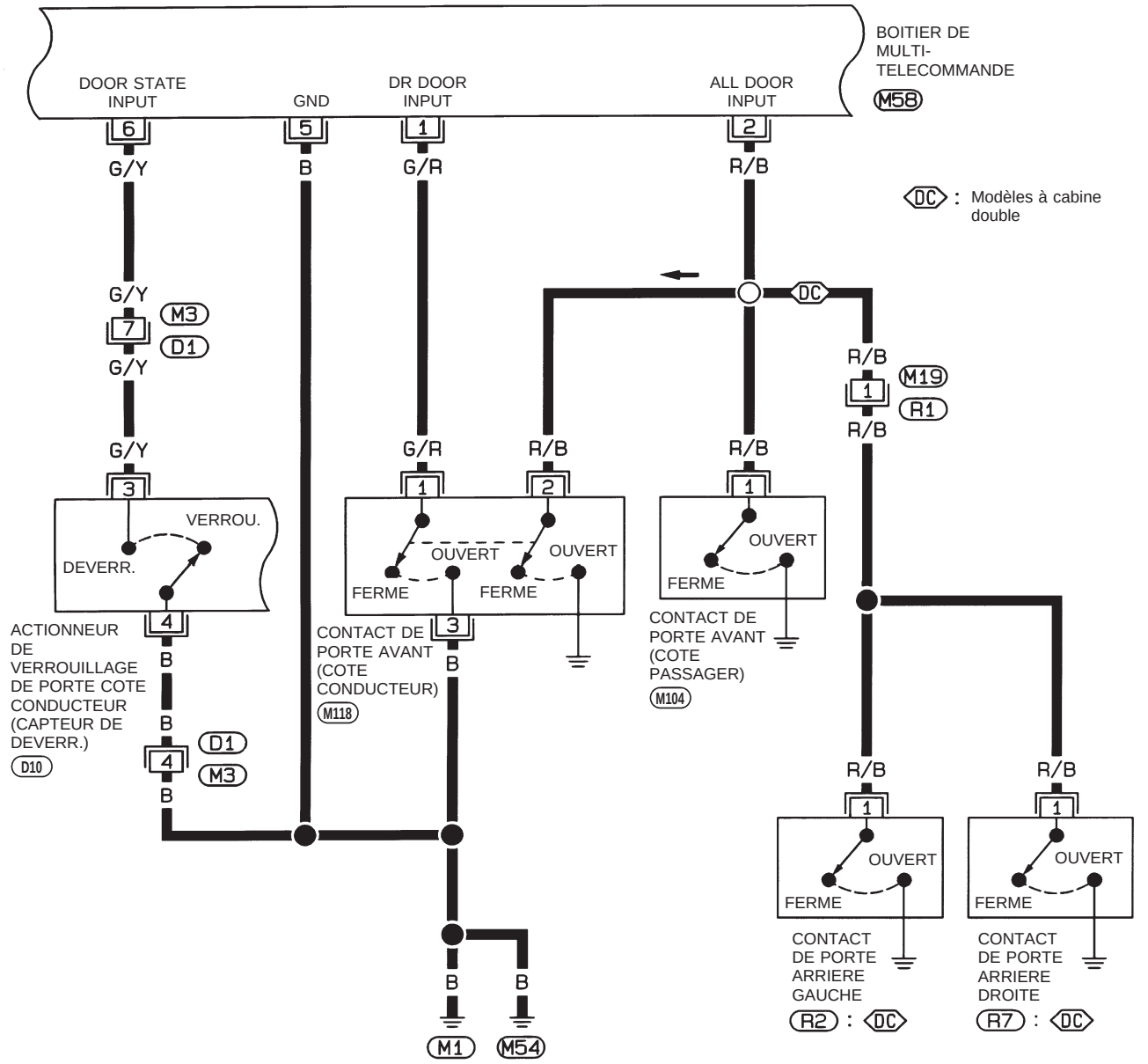





HEL482A

Simpo PDF Merge and Split Unregistered Version - http://www.simpopdf.com

Schéma de câblage — MULTI —/Conduite à droite (Suite)

EL-MULTI-07

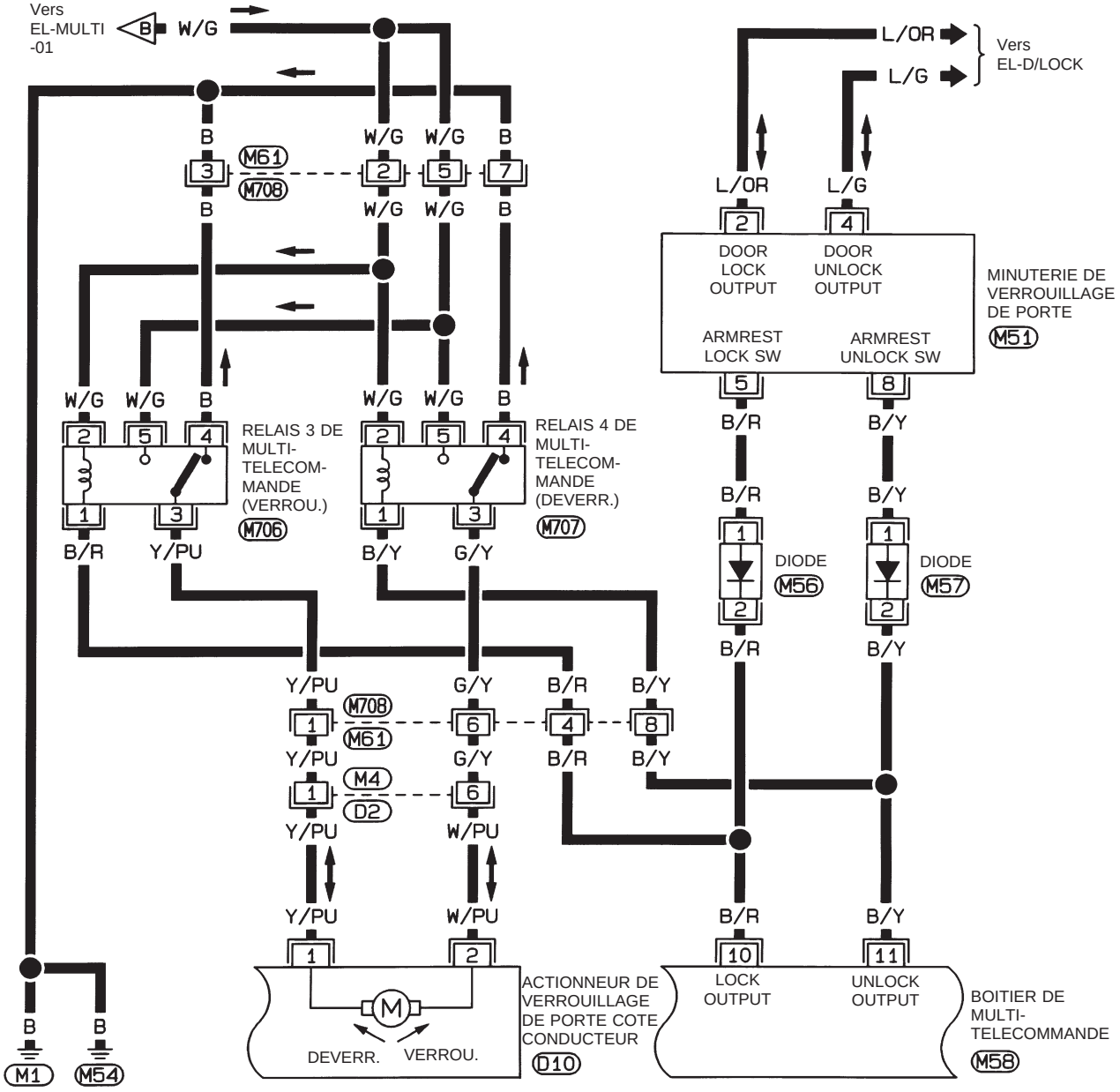

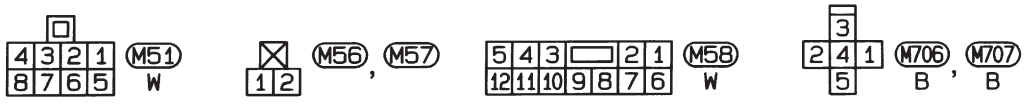

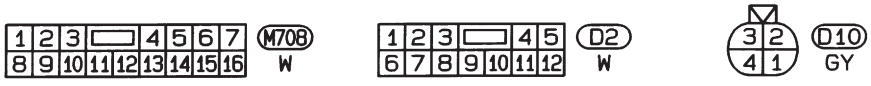

HEL483A

Simpo PDF Merge and Split Unregistered Version - http://www.simpopdf.com

Schéma de câblage — MULTI —/Conduite à droite (Suite)

EL-MULTI-08

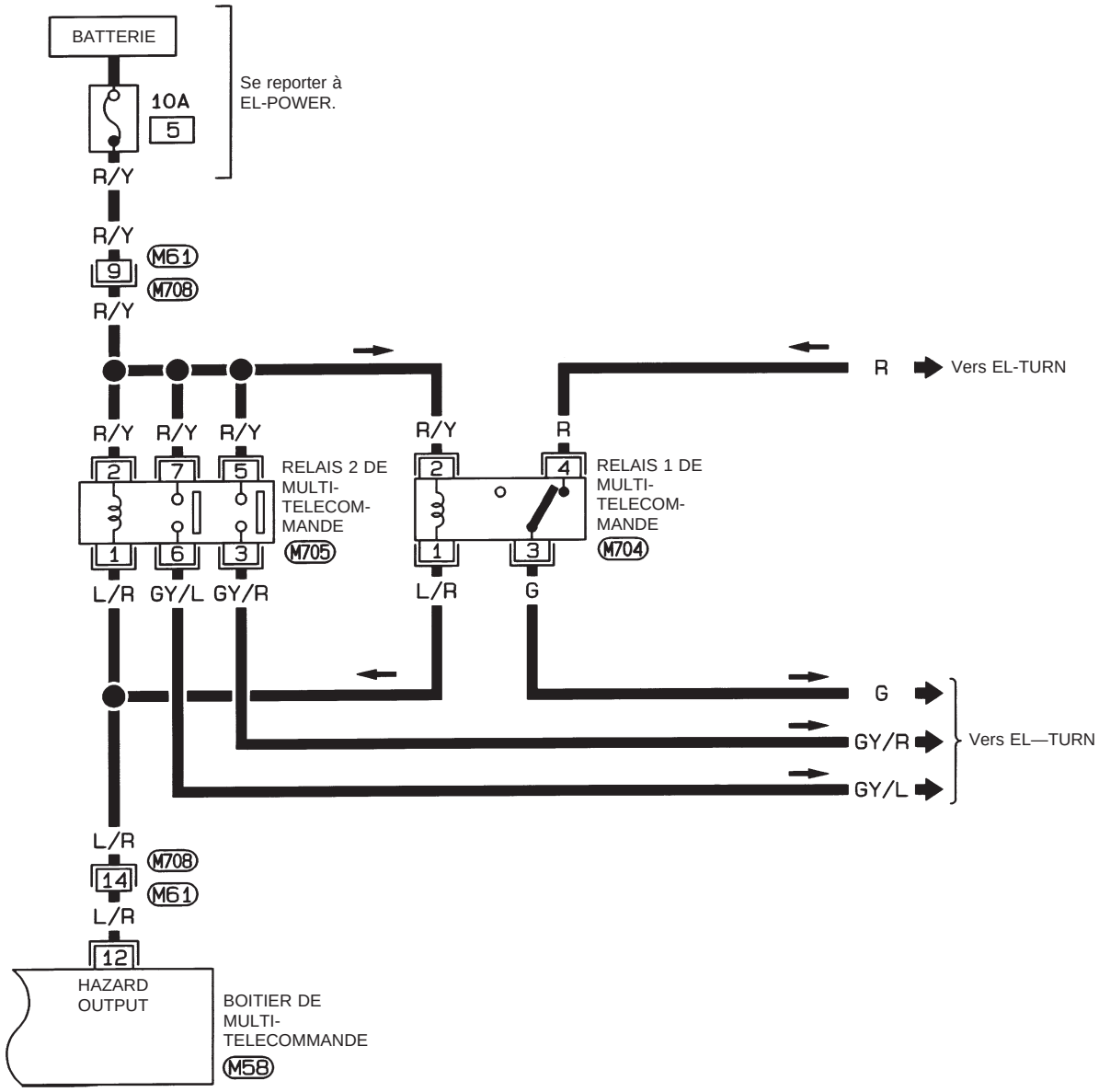

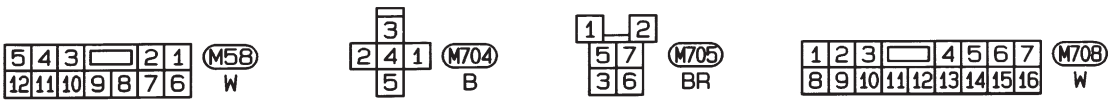

HEL484A

Simpo PDF Merge and Split Unregistered Version - http://www.simpopdf.com

Compartiment moteur

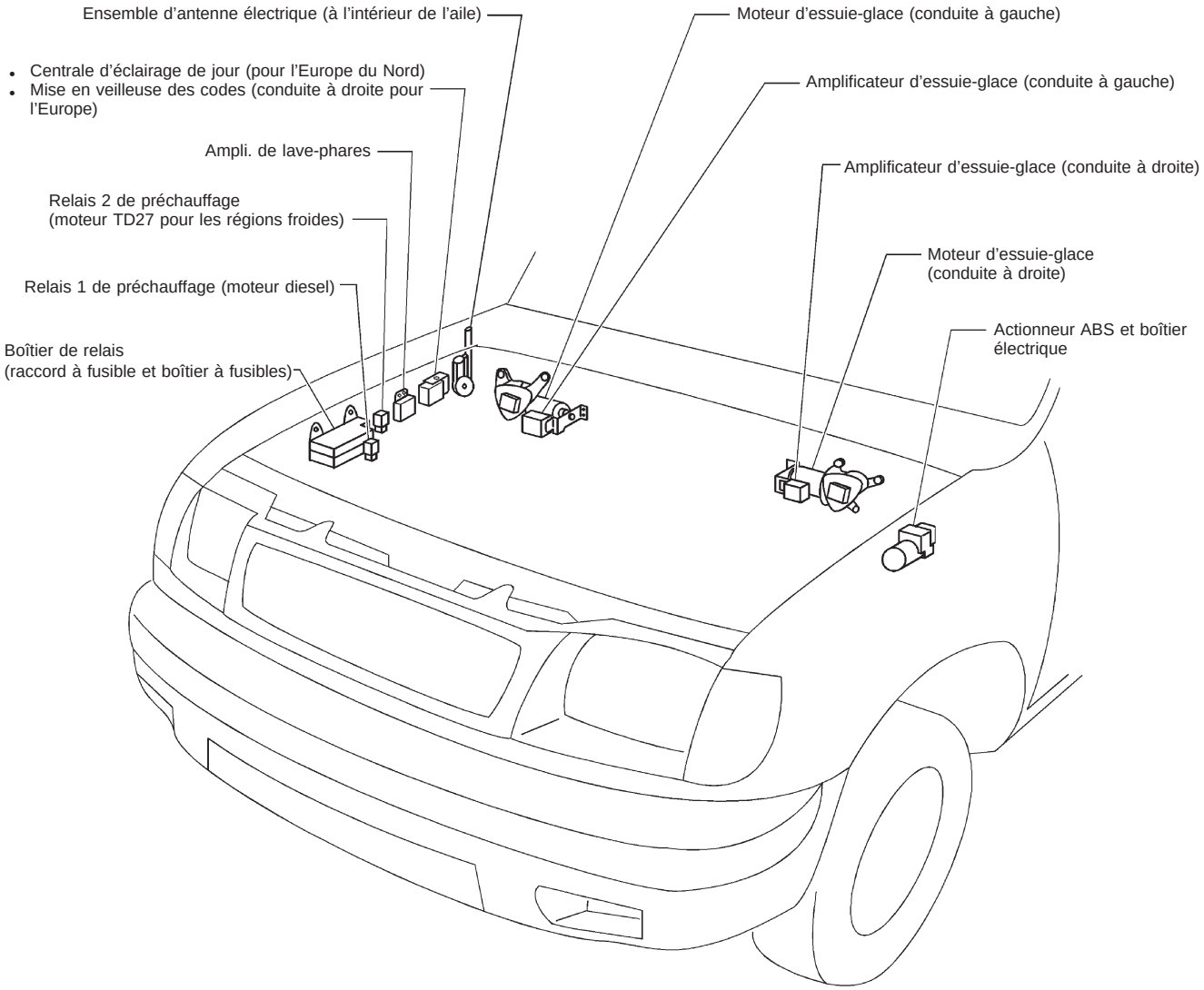

BOITIER DE RELAIS

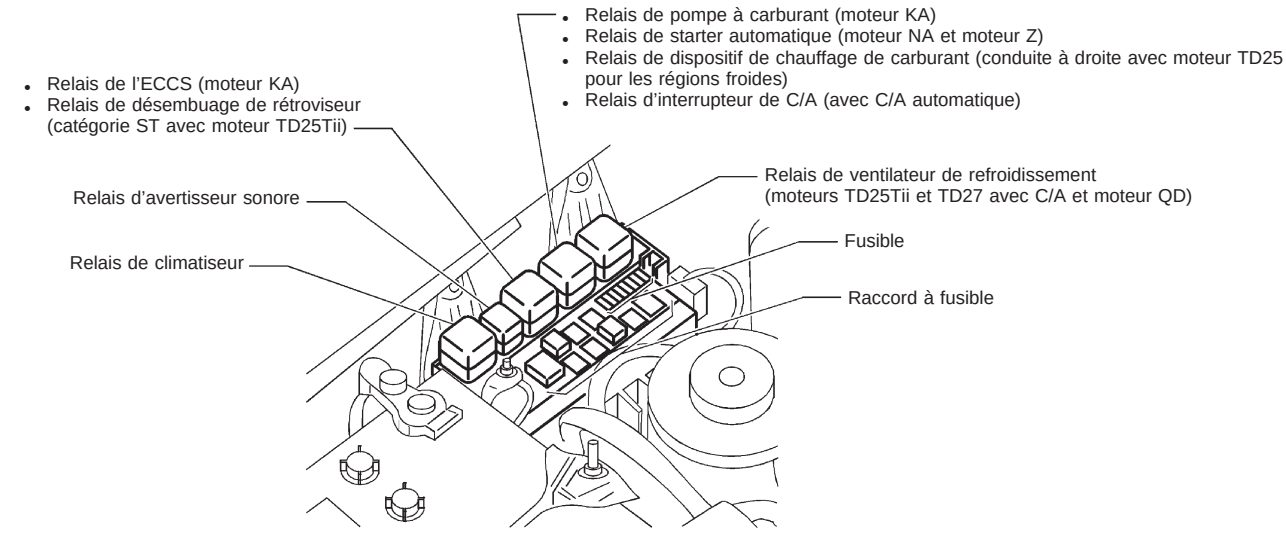

HEL491A

Simpo PDF Merge and Split Unregistered Version - http://www.simpopdf.com

Compartiment passager

CONDUITE A GAUCHE

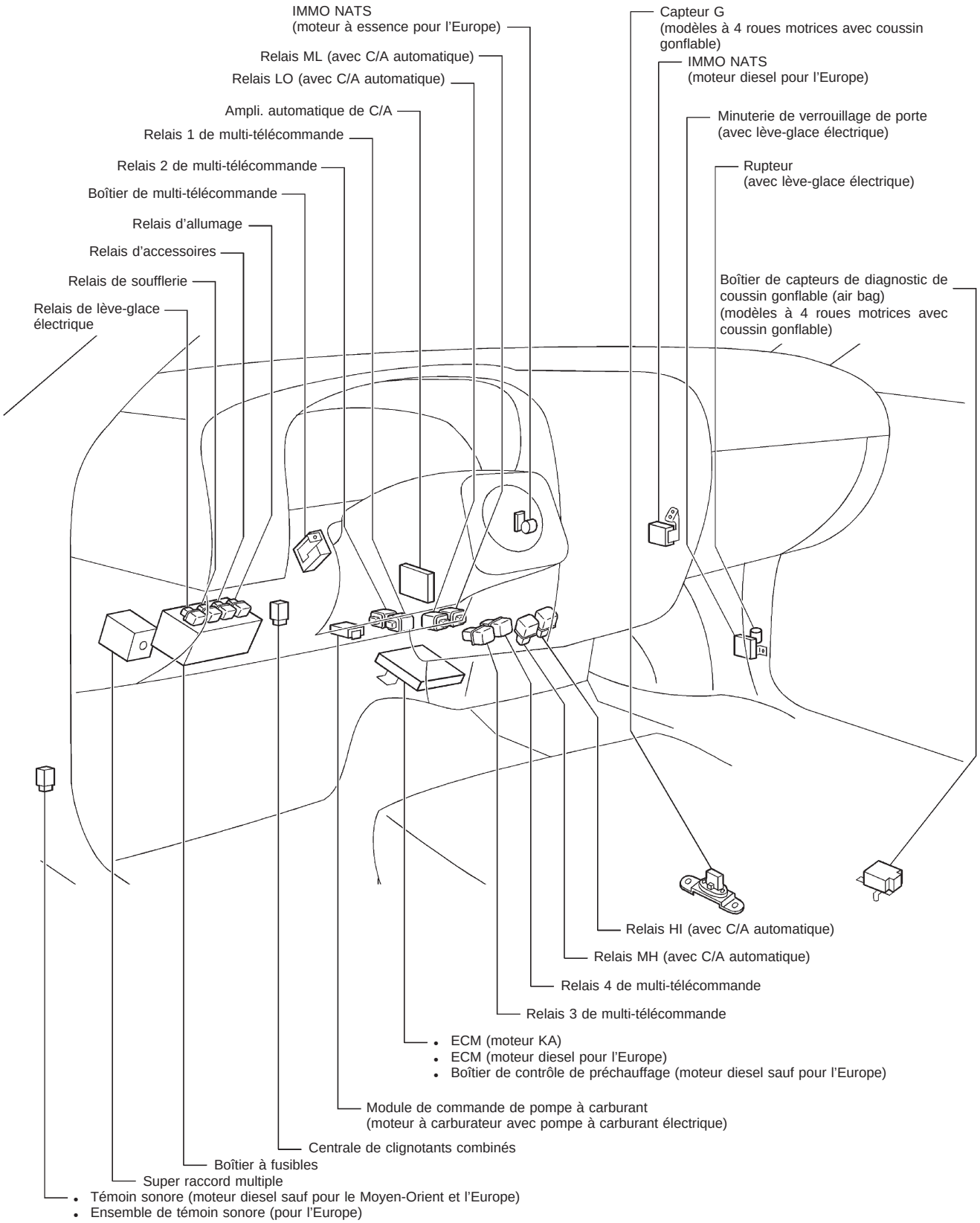

HEL492A

Simpo PDF Merge and Split Unregistered Version - http://www.simpopdf.com

Compartiment passager (Suite)

CONDUITE A DROITE

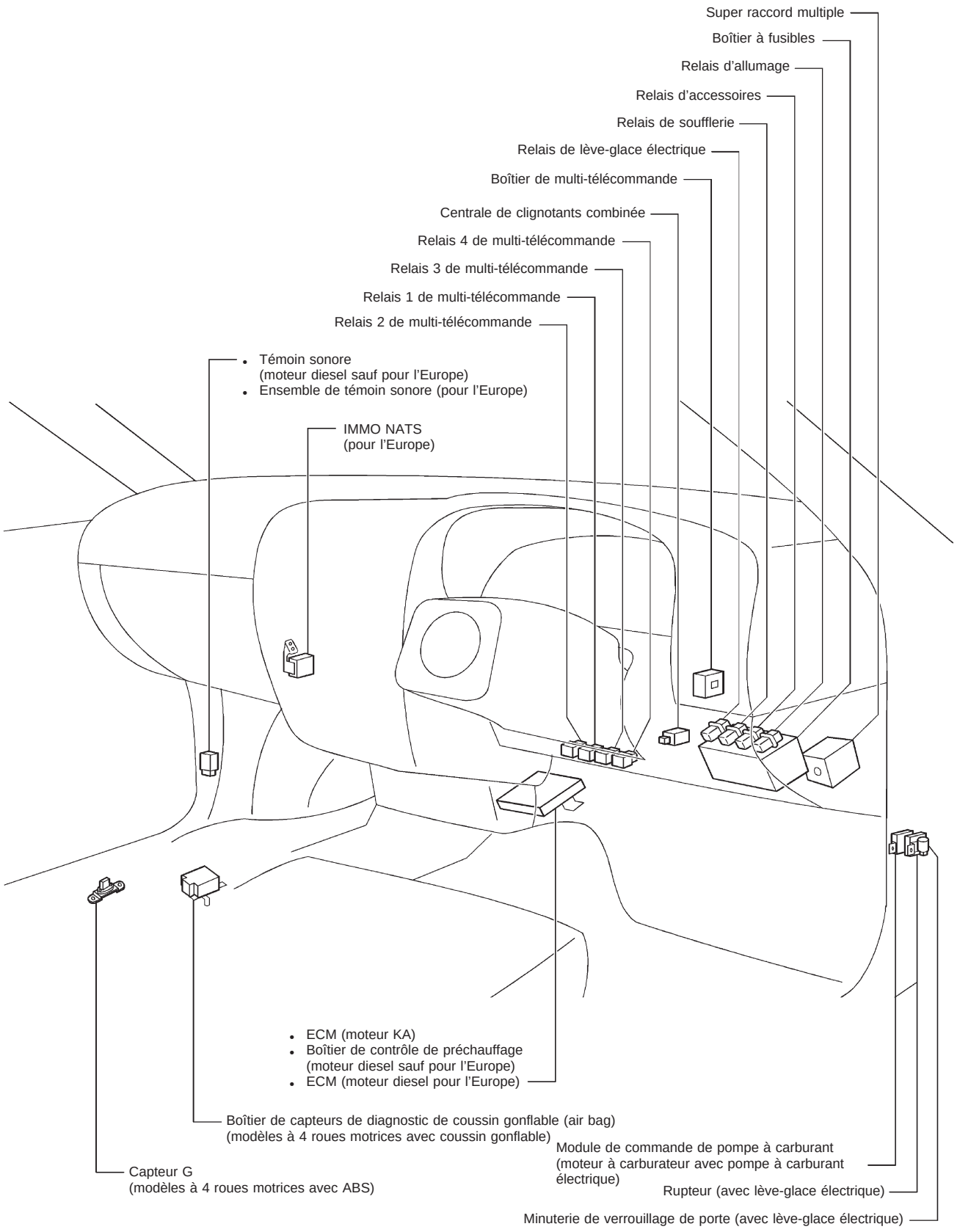

HEL493A

Simpo PDF Merge and Split Unregistered Version - http://www.simpopdf.com

NOTE

Simpo PDF Merge and Split Unregistered Version - http://www.simpopdf.com

Faisceau principal

TABLEAU DE BORD — CONDUITE A GAUCHE POUR L'EUROPE

REMARQUE : pour le faisceau lié au climatiseur automatique, se reporter à E

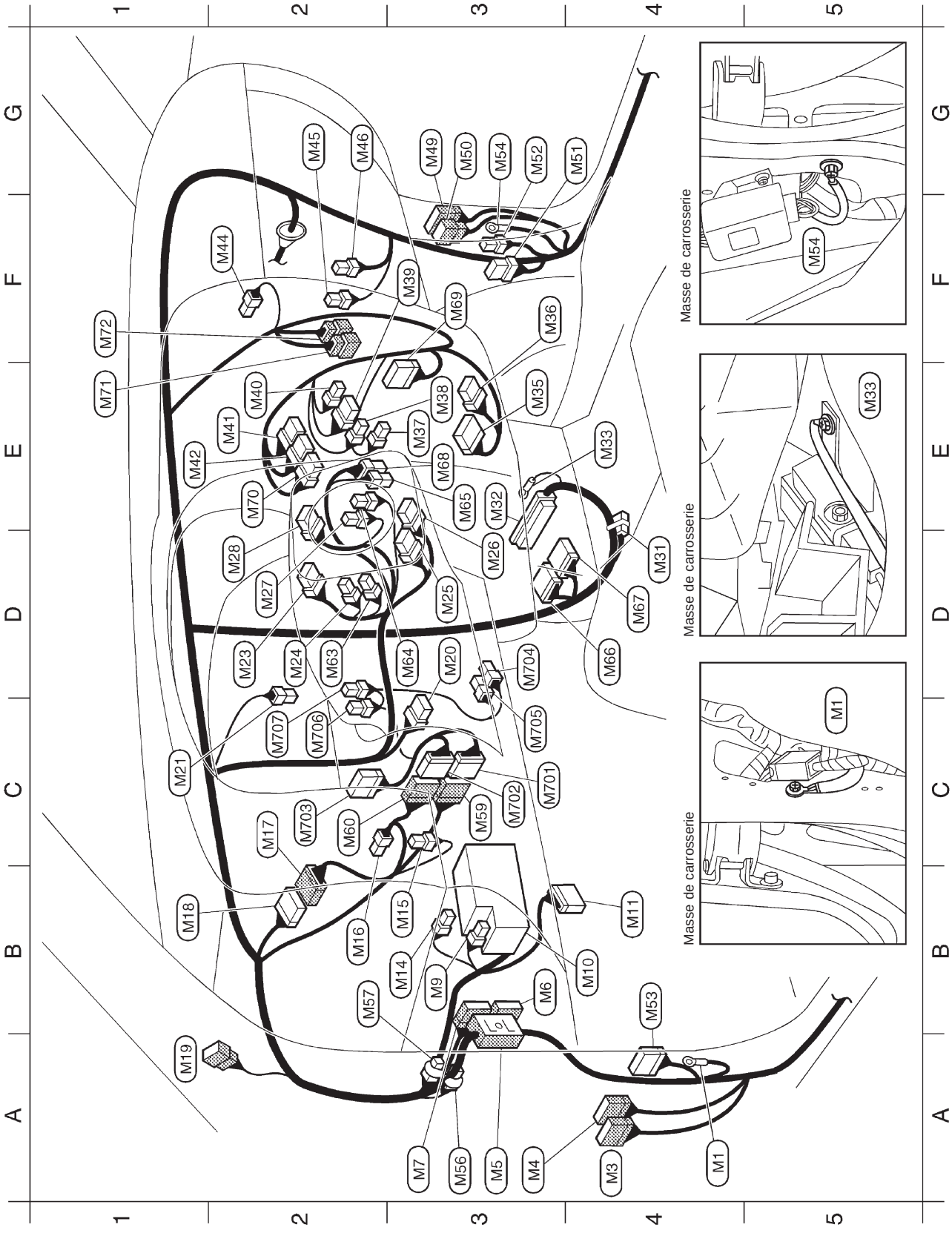

HEL494A

Simpo PDF Merge and Split Unregistered Version - http://www.simpopdf.com

A4	M1	—	: Masse de carrosserie
A4	M3	W/12	: Vers D1
A3	M4	W/12	: Vers D2 (modèles à 4 roues motrices)
A3	M5	Super raccord multiple	: Vers E101
B3	M6	W/24	: Vers N1
A3	M7	W/20	: Vers N2
B3	M9	L/4	: Relais de lève-glace électrique (modèles à 4 roues motrices)
B4	M10	—	: Boîtier à fusibles
B4	M11	GY/14	: Connecteur de liaison des données de diagnostic pour CONSULT
F3	M14	W/3	: Boîtier à fusibles
B3	M15	B/3	: Centrale de clignotants combinée
B2	M16	B/2	: Contact de feux de stop
C2	M17	Y/12	: Vers M18 (modèles à 4 roues motrices avec coussin gonflable)
B1	M18	Y/12	: Vers M17 (modèles à 4 roues motrices avec coussin gonflable)
A1	M19	W/6	: Vers R1
D3	M20	W/6	: Contact d'allumage
C1	M21	W/1	: Contact de frein de stationnement (type à manche)
D2	M23	BR/8	: Commande d'éclairage • Commande de clignotant
D2	M24	BR/4	: Commande d'éclairage
D3	M25	Y/6	: Câble spiralé (modèles à 4 roues motrices avec coussin gonflable)
D3	M26	W/6	: Câble spiralé (modèles à 2 roues motrices avec coussin gonflable)
D2	M27	B/1	: Commande d'avertisseur sonore
D2	M28	GY/8	: Contact d'essuie-glace et de lave-glace
D4	M31	GY/6	: Connecteur de raccord (moteur KA)
E3	M32	W/64	: ECM (moteur KA)
E4	M33	—	: Masse de carrosserie (moteur KA)
E3	M35	W/10	: Autoradio
F3	M36	W/6	: Autoradio (modèles avec 4 haut-parleurs et moteur KA)
E3	M37	B/2	: Allume-cigare
E3	M38	W/3	: Interrupteur de climatiseur (sans C/A automatique)
F3	M39	W/6	: Commutateur de ventilateur (sans C/A automatique)
E2	M40	W/2	: Eclairage de commutateur de ventilateur (sans C/A automatique)
E2	M41	W/8	: Interrupteur de feux de détresse
E1	M42	W/6	: Interrupteur de désembuage de lunette arrière
F2	M44	BR/4	: Amplificateur de commande thermique
G2	M45	BR/4	: Résistance du ventilateur
G2	M46	W/2	: Moteur de soufflerie
G3	M49	W/12	: Vers D31
G3	M50	W/6	: Vers D32 (modèles à 4 roues motrices)
G4	M51	W/8	: Minuterie de verrouillage de porte
G3	M52	W/2	: Rupteur
B4	M53	B/12	: Ensemble de témoin sonore
G3	M54	—	: Masse de carrosserie
A3	M56	-/2	: Diode (pour système de multi-télécommande)
B2	M57	-/2	: Diode (pour système de multi-télécommande)
C3	M59	W/10	: Vers M701 (modèles à 4 roues motrices)
C2	M60	W/12	: Vers M702 ou connecteur volant (modèles à 4 roues motrices)
D2	M63	W/3	: Commande de feu antibrouillard arrière
D3	M64	W/2	: Contact de clé (modèles à 4 roues motrices)
E3	M65	W/4	: Ampli. d'antenne NATS (moteur TD)
D4	M66	GY/20	: ECM (moteur TD)
D4	M67	GY/16	: ECM (moteur TD)
E3	M68	W/8	: IMMO NATS (moteur KA)
F3	M69	W/12	: IMMO NATS (moteur TD)
E2	M70	L/8	: Interrupteur de lave-phare
E1	M71	B/6	: Vers M410 (pour C/A automatique)
F1	M72	W/6	: Vers M411 (pour C/A automatique)

Faisceau auxiliaire (pour système de multi-télécommande)

C3	M701	W/10	: Vers M59
C3	M702	W/12	: Vers M60
C2	M703	W/12	: Boîtier de multi-télécommande
D3	M704	B/5	: Relais 1 de multi-télécommande
C3	M705	BR/6	: Relais 2 de multi-télécommande
C2	M706	B/5	: Relais 3 de multi-télécommande
C2	M707	B/5	: Relais 4 de multi-télécommande

Diode M56, M57

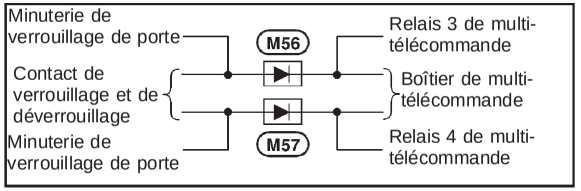

HEL495A

Simpo PDF Merge and Split Unregistered Version - http://www.simpopdf.com

Faisceau principal (Suite)

TABLEAU DE BORD — CONDUITE A DROITE

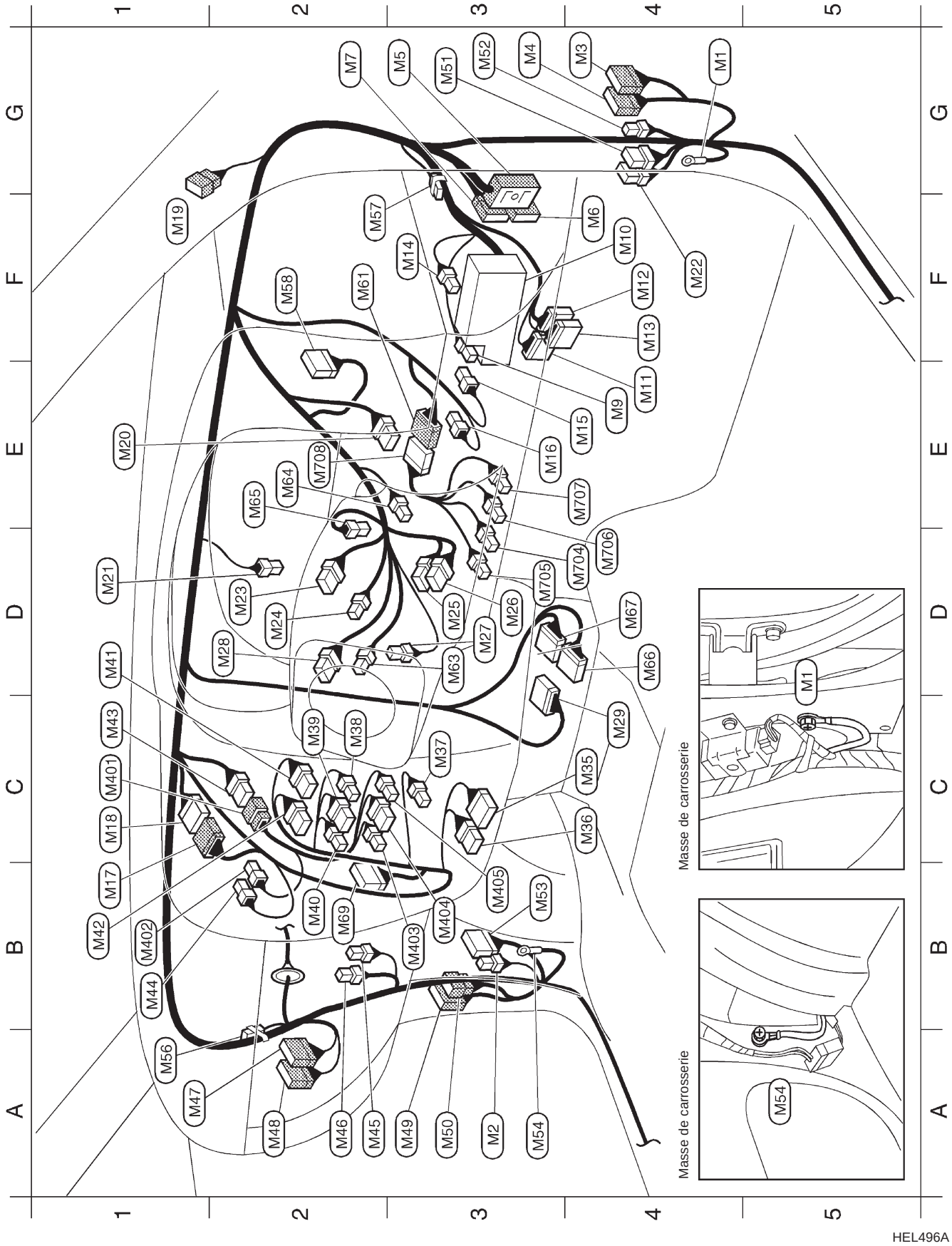

HEL496A

Simpo PDF Merge and Split Unregistered Version - http://www.simpopdf.com

G4 (M1) — : Masse de carrosserie
A3 (M2) W/2 : Témoin sonore (moteur diesel sauf pour l'Europe et l'Australie)
G4 (M3) W/12 : Vers (D1)
G3 (M4) W/12 : Vers (D2) (avec lève-glace électrique)
G3 (M5) Super raccord multiple : Vers (E101)
F4 (M6) W/24 : Vers (N1)
G2 (M7) W/20 : Vers (N2) (pour l'Europe)
E4 (M9) L/4 : Relais de lève-glace électrique
F4 (M10) — : Boîtier à fusibles
E4 (M11) GY/14 : Connecteur de liaison des données de diagnostic pour CONSULT (moteur KA et pour l'Europe)
F4 (M12) B/12 : Connecteur de contrôle (moteur NA)
F4 (M13) B/10 : Connecteur de contrôle (moteur Z)
F3 (M14) W/3 : Boîtier à fusibles
E4 (M15) B/3 : Centrale de clignotants combinée
E3 (M16) B/2 : Contact de feux de stop
B1 (M17) Y/12 : Vers (M18) (modèles à 4 roues motrices avec coussin gonflable)
C1 (M18) Y/12 : Vers (M17) (modèles à 4 roues motrices avec coussin gonflable)
F1 (M19) W/6 : Vers (R1)
E1 (M20) W/6 : Contact d'allumage
D1 (M21) W/1 : Contact de frein de stationnement (type à manche)
F4 (M22) W6 : Module de commande de pompe à carburant (moteur NA et moteur Z)
D2 (M23) BR/8 : Commande d'éclairage
• Commande de clignotant
D2 (M24) BR/4 : Commande d'éclairage
D3 (M25) Y/6 : Câble spiralé (modèles à 4 roues motrices avec coussin gonflable)
D3 (M26) W/6 : Câble spiralé (modèles à 2 roues motrices pour l'Europe)
D3 (M27) B/1 : Commande d'avertisseur sonore
D2 (M28) GY/8 : Commande d'essuie-glace et de lave-glace
C4 (M29) W/12 : Boîtier de contrôle de préchauffage (moteur diesel sauf pour l'Europe)
C4 (M35) W/10 : Autoradio
C4 (M36) W/6 : Autoradio (modèles à cabine double pour l'Europe)
C3 (M37) B/2 : Allume-cigare
C2 (M38) W/3 : Interrupteur de C/A (pour l'Europe et l'Australie)
C2 (M39) W/6 : Commutateur de ventilateur (pour l'Europe et l'Australie)
B2 (M40) W/2 : Eclairage de commutateur de ventilateur (pour l'Europe et l'Australie)
D1 (M41) W/8 : Interrupteur de feux de détresse
B1 (M42) W/6 : Interrupteur de désembuage de lunette arrière (pour l'Europe et cabine double pour l'Australie)
C1 (M43) B/8 : Vers (M401) (sauf pour l'Europe et l'Australie)
B1 (M44) BR/4 : Amplificateur de commande thermique (pour l'Europe et l'Australie)
A2 (M45) BR/4 : Résistance du ventilateur
A2 (M46) W/2 : Moteur de soufflerie
A1 (M47) W/10 : Vers (F55) (moteur KA)
A2 (M48) W/24 : Vers (F54) (moteur KA)
A3 (M49) W/12 : Vers (D31)
A3 (M50) W/6 : Vers (D32) (avec lève-glace électrique)
G3 (M51) W/8 : Minuterie de verrouillage de porte (modèles à 4 roues motrices pour l'Europe et à cabine double catégorie ST pour l'Australie)
G3 (M52) W/2 : Rupteur (modèles à 4 roues motrices pour l'Europe et à cabine double catégorie ST pour l'Australie)
B3 (M53) B/12 : Ensemble de témoin sonore (pour l'Europe)
A3 (M54) — : Masse de carrosserie
A1 (M56) -/2 : Diode (pour système de multi-télécommande)
F2 (M57) -/2 : Diode (pour système de multi-télécommande)
F2 (M58) W/12 : Boîtier de multi-télécommande (modèles à 4 roues motrices pour l'Europe)
F2 (M61) W/16 : Vers (M708) ou connecteur volant (modèles à 4 roues motrices pour l'Europe)
D3 (M63) W/3 : Commande de feu antibrouillard arrière (pour l'Europe)
E2 (M64) W/2 : Contact de clé (modèles à 4 roues motrices pour l'Europe)
E2 (M65) W/4 : Ampli. d'antenne NATS (pour l'Europe)
D4 (M66) GY/20 : ECM (moteur diesel pour l'Europe)
D4 (M67) GY/16 : ECM (moteur diesel pour l'Europe)
B2 (M69) W/12 : IMMO NATS (pour l'Europe)

Compartiment moteur

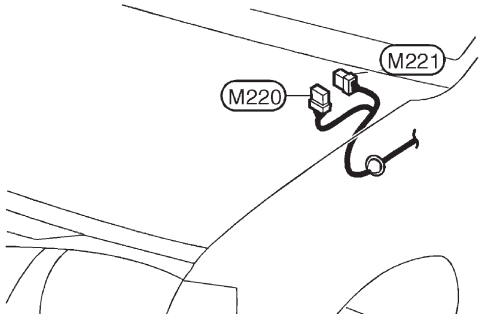

(M220) GY/8 : Ampli. d'essuie-glace ou connecteur volant (moteur diesel pour l'Europe et l'Australie)
(M221) W/6 : Moteur d'essuie-glace (sauf moteur KA)

Faisceau auxiliaire (sauf pour l'Europe et l'Australie)

C1 (M401) B/8 : Vers (M43)
B1 (M402) BR/4 : Amplificateur de commande thermique (modèles avec C/A)
B3 (M403) W/2 : Eclairage de commutateur de ventilateur
B3 (M404) W/6 : Commutateur de ventilateur
B3 (M405) W/3 : Interrupteur de C/A (modèles avec C/A)

Faisceau auxiliaire (pour système de multi-télécommande)

D4 (M704) B/5 : Relais 1 de multi-télécommande
D3 (M705) BR/6 : Relais 2 de multi-télécommande
D4 (M706) B/5 : Relais 3 de multi-télécommande
E4 (M707) B/5 : Relais 4 de multi-télécommande
E2 (M708) W/16 : Vers (M61)

Diode (M56), (M57)

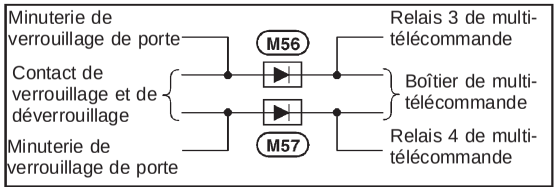

Simpo PDF Merge and Split Unregistered Version - http://www.simpopdf.com

Faisceau principal (Suite)

CLIMATISEUR AUTOMATIQUE

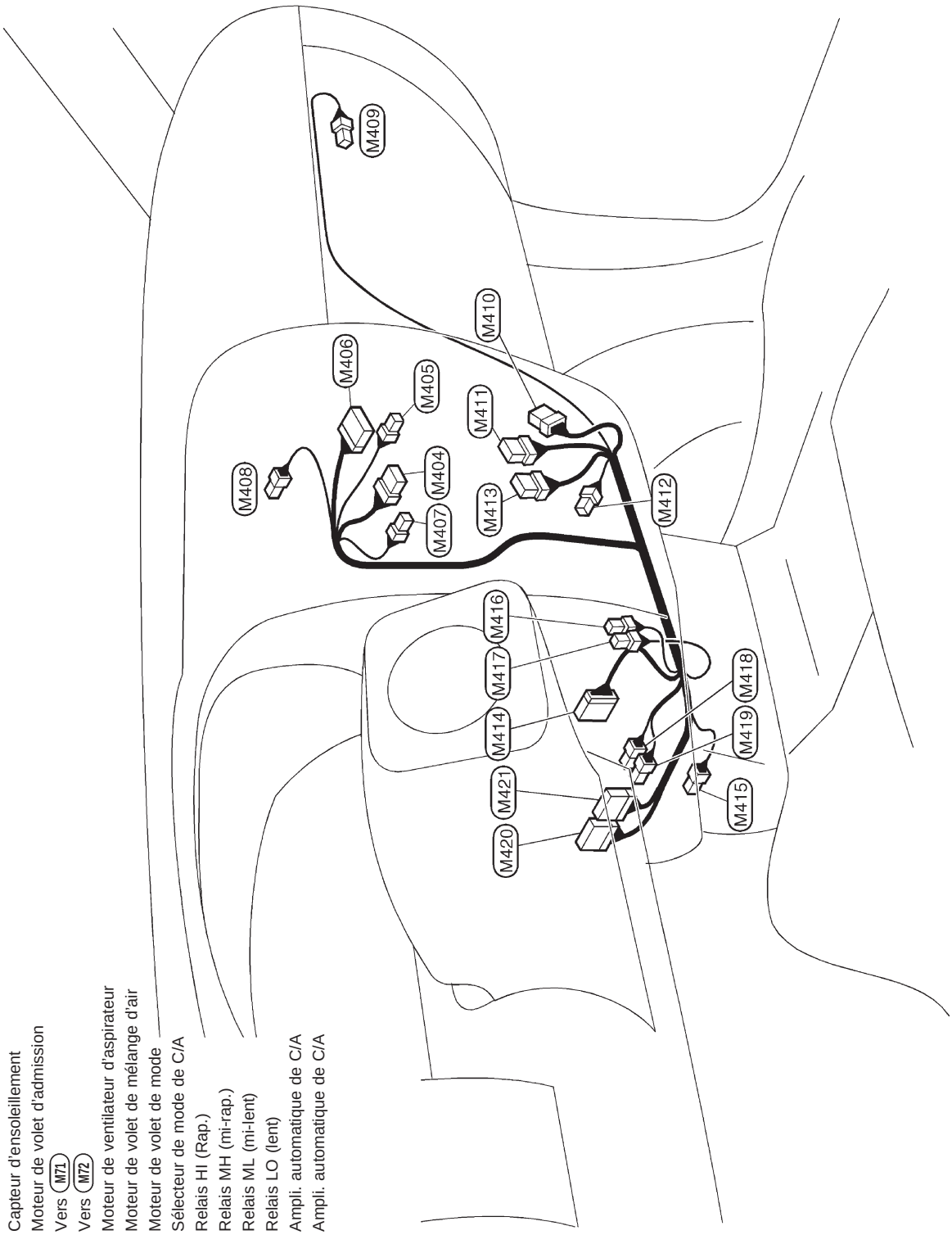

(M404) W/6 : Commutateur de ventilateur
(M405) W/3 : PTC (résistance de commande de température de potentiomètre)
(M406) W/16 : Boîtier de commande à poussoirs
(M407) W/2 : Capteur de l'habitacle
(M408) B/2 : Capteur d'ensoleillement
(M409) W/4 : Moteur de volet d'admission
(M410) B/6 : Vers (M71)
(M411) W/6 : Vers (M72)
(M412) L/2 : Moteur de ventilateur d'aspirateur
(M413) B/6 : Moteur de volet de mélange d'air
(M414) BR/10 : Moteur de volet de mode
(M415) W/4 : Sélecteur de mode de C/A
(M416) L/4 : Relais HI (Rap.)
(M417) L/4 : Relais MH (mi-rap.)
(M418) L/4 : Relais ML (mi-lent)
(M419) L/4 : Relais LO (lent)
(M420) B/12 : Ampli. automatique de C/A
(M421) B/16 : Ampli. automatique de C/A

HEL499A

Simpo PDF Merge and Split Unregistered Version - http://www.simpopdf.com

Faisceau principal (Suite)

COTE CARROSSERIE — CONDUITE A DROITE

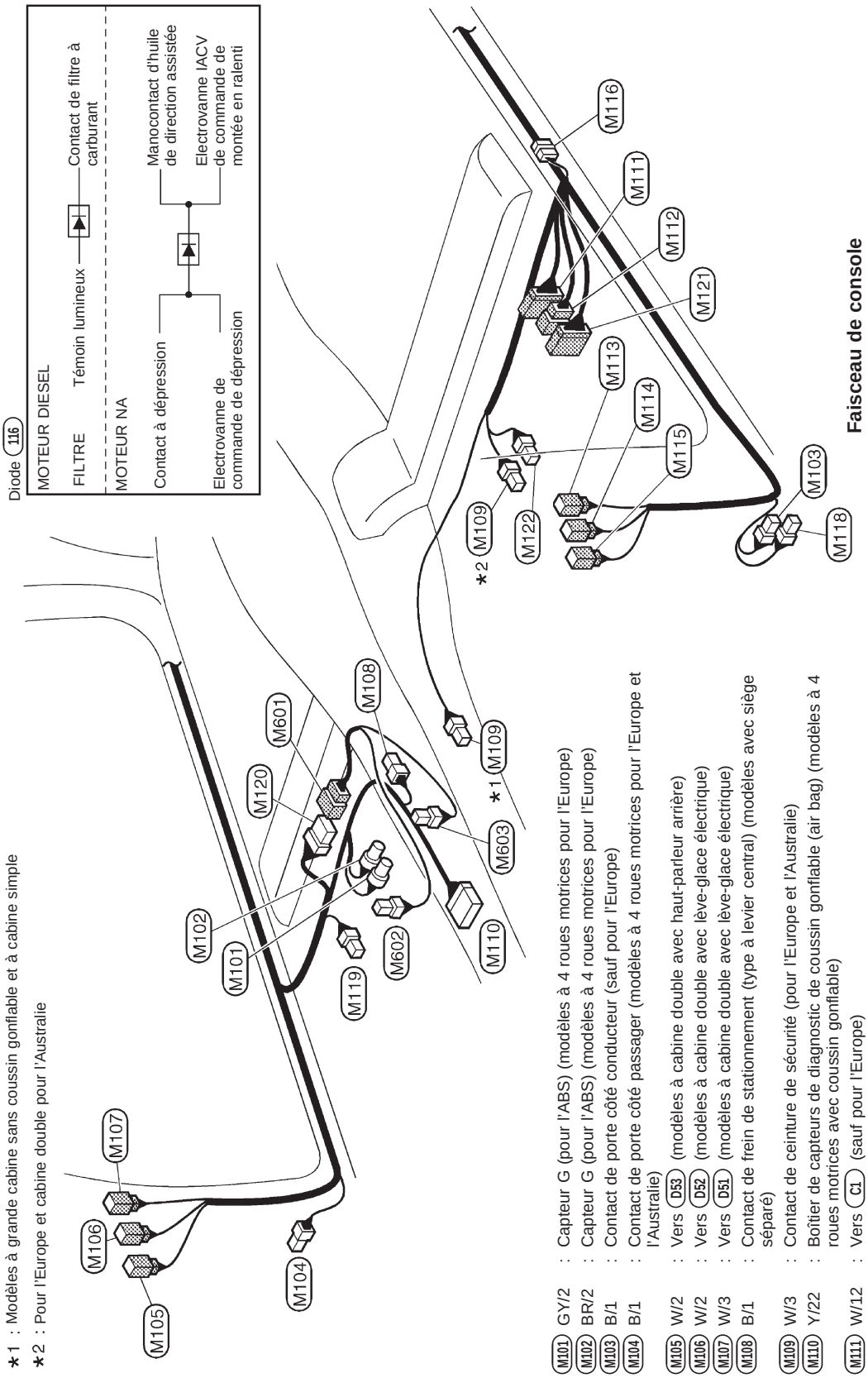

*1 : Modèles à grande cabine sans coussin gonflable et à cabine simple

*2 : Pour l'Europe et cabine double pour l'Australie

(M101) GY/2 : Capteur G (pour l'ABS) (modèles à 4 roues motrices pour l'Europe)
(M102) BR/2 : Capteur G (pour l'ABS) (modèles à 4 roues motrices pour l'Europe)
(M103) B/1 : Contact de porte côté conducteur (sauf pour l'Europe)
(M104) B/1 : Contact de porte côté passager (modèles à 4 roues motrices pour l'Europe et l'Australie)
(M105) W/2 : Vers (D53) (modèles à cabine double avec haut-parleur arrière)
(M106) W/2 : Vers (D52) (modèles à cabine double avec lève-glace électrique)
(M107) W/3 : Vers (D51) (modèles à cabine double avec lève-glace électrique)
(M108) B/1 : Contact de frein de stationnement (type à levier central) (modèles avec siège séparé)
(M109) W/3 : Contact de ceinture de sécurité (pour l'Europe et l'Australie)
(M110) Y/22 : Boîtier de capteurs de diagnostic de coussin gonflable (air bag) (modèles à 4 roues motrices avec coussin gonflable)
(M111) W/12 : Vers (C1) (sauf pour l'Europe)
(M112) W/6 : Vers (C2) (pour l'ABS)
(M113) W/2 : Vers (D73) (modèles à cabine double avec haut-parleur arrière)
(M114) W/2 : Vers (D72) (modèles à cabine double avec lève-glace électrique)
(M115) W/3 : Vers (D71) (modèles à cabine double avec lève-glace électrique)
(M116) -/2 : Diode (moteur diesel sauf pour l'Europe et l'Australie, et le moteur NA)
(M118) B/3 : Contact de porte côté conducteur (pour l'Europe)
(M119) W/3 : Vers le faisceau auxiliaire G. de siège chauffant (pour l'Europe)
(M120) W/8 : Vers (M601) (pour l'Europe)
(M121) W/16 : Vers (C9) (pour l'Europe)
(M122) W/3 : Vers le faisceau auxiliaire D. de siège chauffant (pour l'Europe)

HEL498A

Simpo PDF Merge and Split Unregistered Version - http://www.simpopdf.com

Faisceau de compartiment moteur

CONDUITE A GAUCHE — MOTEUR DIESEL

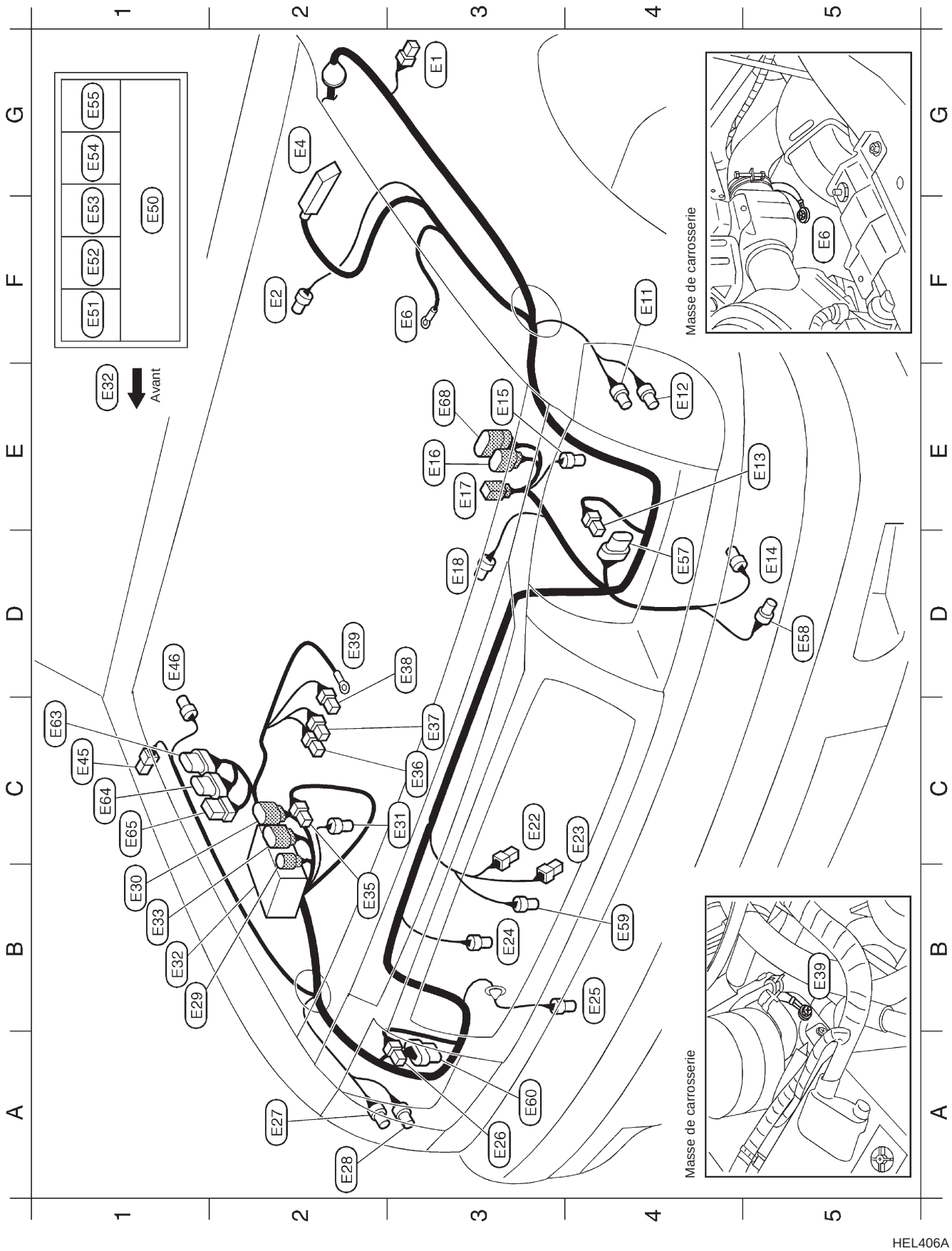

HEL406A

Simpo PDF Merge and Split Unregistered Version - http://www.simpopdf.com

G3 (E1) B/2 : Clignotant latéral gauche (pour l'Europe)
F2 (E2) GY/2 : Contact de niveau de liquide de frein
G2 (E4) B/31 : Actionneur ABS et boîtier électrique (pour l'ABS)
F3 (E6) — : Masse de carrosserie
F4 (E11) GY/3 : Feu combiné avant gauche (sauf pour l'Europe)
E4 (E12) BR/3 : Feu combiné avant gauche (pour l'Europe)
E5 (E13) B/3 : Phare gauche
D5 (E14) GY/2 : Moteur de lave-glace
E3 (E15) BR/2 : Capteur de roue avant gauche (pour l'ABS)
E3 (E16) GY/8 : Vers (A3) (sauf pour l'Europe)
E3 (E17) B/2 : Vers (A2)
D3 (E18) GY/2 : Thermocontact (sauf moteur TD27 pour les régions froides et moteur TD à 2 roues motrices avec ABS pour l'Europe)
C3 (E22) B/1 : Avertisseur sonore (grave)
C4 (E23) B/1 : Eclairage d'avertisseur (aigu) (sauf moteur TD27 pour les régions froides)
B3 (E23) GY/2 : Moteur de ventilateur de refroidissement (sauf moteur TD27 pour les régions froides et le moteur TD à 2 roues motrices avec ABS pour l'Europe)
B4 (E25) B/4 : Manocontact triple
A3 (E26) B/3 : Phare droit
A2 (E27) GY/3 : Feu combiné avant droit (sauf pour l'Europe)
A2 (E28) BR/3 : Feu combiné avant droit (pour l'Europe)
B2 (E29) GY/2 : Vers (E204)
B1 (E30) B/8 : Vers (E203) (pour l'Europe)
C3 (E31) GY/2 : Capteur de roue avant droite (pour l'ABS)
B1 (E32) — : Boîtier à relais (raccord à fusible et boîtier à fusibles)
B1 (E33) GY/8 : Vers (E205)
(E35) B/1 : Vers (E206)
C3 (E36) B/1 : Electrovanne IACV- FICD
C3 (E37) B/1 : Electrovanne IACV-FICD
D3 (E38) GY/1 : Commande d'alarme de dépression
D2 (E39) — : Masse de carrosserie
C1 (E45) B/2 : Clignotant latéral droit (pour l'Europe)
D1 (E46) GY/3 : Antenne électrique (pour l'Europe sauf 2 roues motrices avec ABS)
F1 (E50) — : Raccord à fusible et boîtier à fusibles
F1 (E51) L/4 : Relais de climatiseur
F1 (E52) W/3 : Relais d'avertisseur sonore
F1 (E53) L/4 : Relais de désembuage de rétroviseur (pour l'Europe sauf 2 roues motrices avec ABS)
G1 (E54) L/4 : Relais d'interrupteur de C/A (pour l'Europe sauf 2 roues motrices avec ABS)
G1 (E55) L/4 : Relais de ventilateur de refroidissement (sauf moteur TD27 pour les régions froides et le moteur TD à 2 roues motrices avec ABS pour l'Europe)
D4 (E57) GY/6 : Moteur de réglage du faisceau de phare gauche (pour l'Europe)
D5 (E58) GY/2 : Moteur de lave-phare (pour l'Europe)
B4 (E59) BR/2 : Capteur de température ambiante (pour C/A automatique) (pour l'Europe sauf 2 roues motrices avec ABS)
A3 (E60) GY/6 : Moteur de réglage du faisceau de phare droit (pour l'Europe)
C1 (E63) GY/6 : Centrale d'éclairage de jour (avec circuit d'éclairage de jour)
C1 (E64) GY/8 : Centrale d'éclairage de jour (avec circuit d'éclairage de jour)
C1 (E65) W/6 : Ampli. de lave-phares (pour l'Europe)
E3 (E68) GY/10 : Vers (A13) (pour l'Europe)

COMPARTIMENT PASSAGER

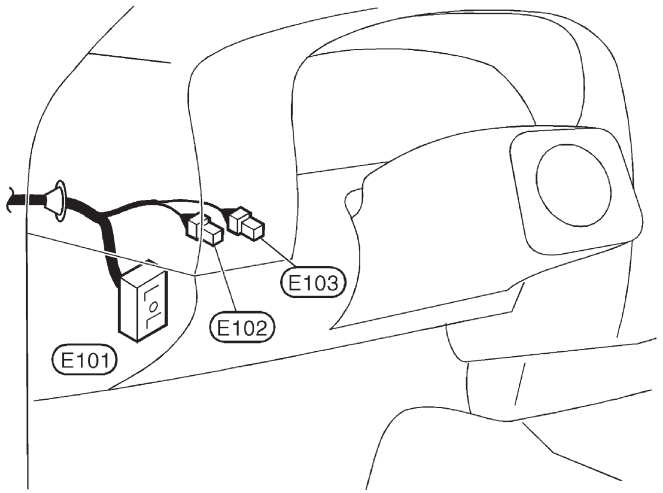

(E101) Super raccord multiple : Vers (M5)
(E102) W/4 : Boîtier à fusibles
(E103) B/2 : Boîtier à fusibles

Simpo PDF Merge and Split Unregistered Version - http://www.simpopdf.com

Faisceau d'alternateur

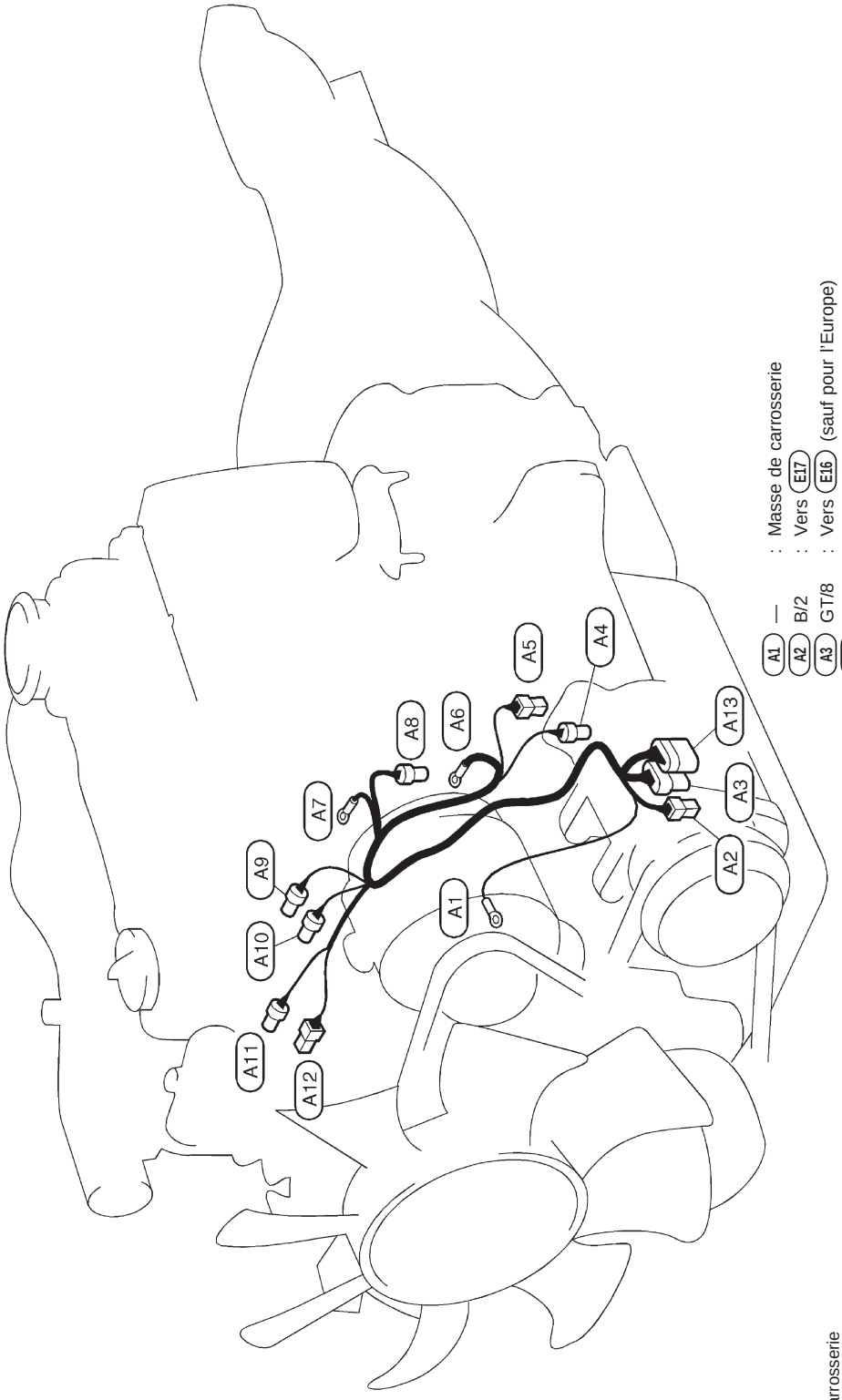

A1 — : Masse de carrosserie
A2 B/2 : Vers E17
A3 GT/8 : Vers E16 (sauf pour l'Europe)
A4 B/1 : Compresseur
A5 B/1 : Manocontact d'huile (pour dispositif de chauffage de carburant)
A6 — : Alternateur (B)
A7 — : Alternateur (E)
A8 GY/2 : Alternateur (S, L)
A9 GT/2 : Thermocontact (modèles avec turbocompresseur et sauf pour l'Europe)
A10 BR/2 : Capteur de régime
A11 GY/2 : Capteur de température du réfrigérant moteur
A12 B/1 : Transmetteur thermique
A13 GY/10 : Vers E68 (pour l'Europe)

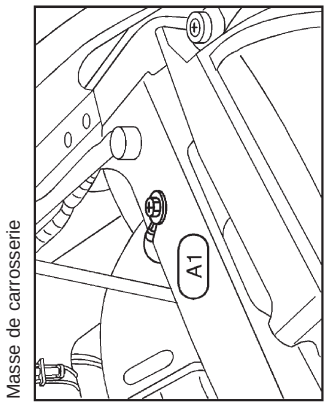

Masse de carrosserie

HEL502A

Simpo PDF Merge and Split Unregistered Version - http://www.simpopdf.com

Faisceau des instruments

CONDUITE A GAUCHE

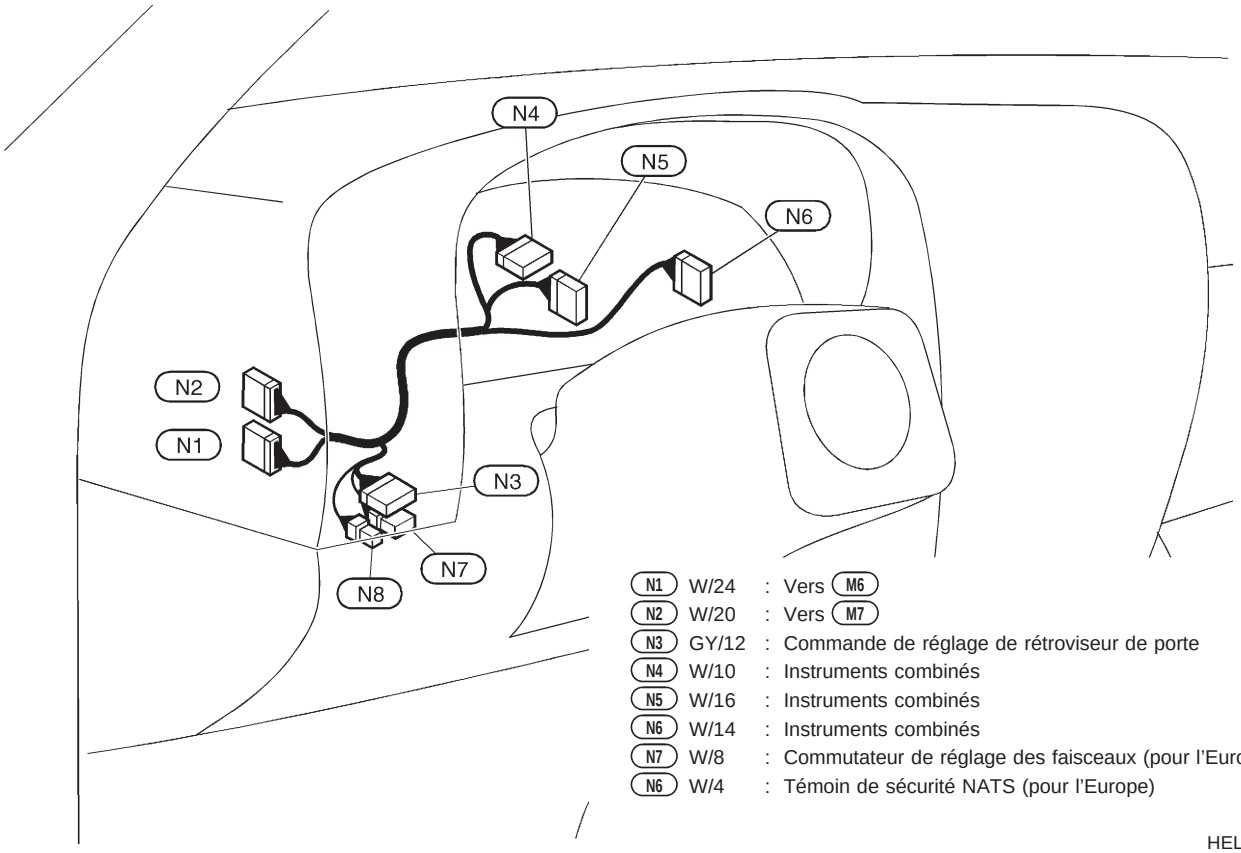

N1	W/24	:	Vers M6
N2	W/20	:	Vers M7
N3	GY/12	:	Commande de réglage de rétroviseur de porte
N4	W/10	:	Instruments combinés
N5	W/16	:	Instruments combinés
N6	W/14	:	Instruments combinés
N7	W/8	:	Commutateur de réglage des faisceaux (pour l'Europe)
N6	W/4	:	Témoin de sécurité NATS (pour l'Europe)

HEL503A

Simpo PDF Merge and Split Unregistered Version - http://www.simpopdf.com

Faisceau de plafonnier/Modèles à cabine double

CONDUITE A GAUCHE

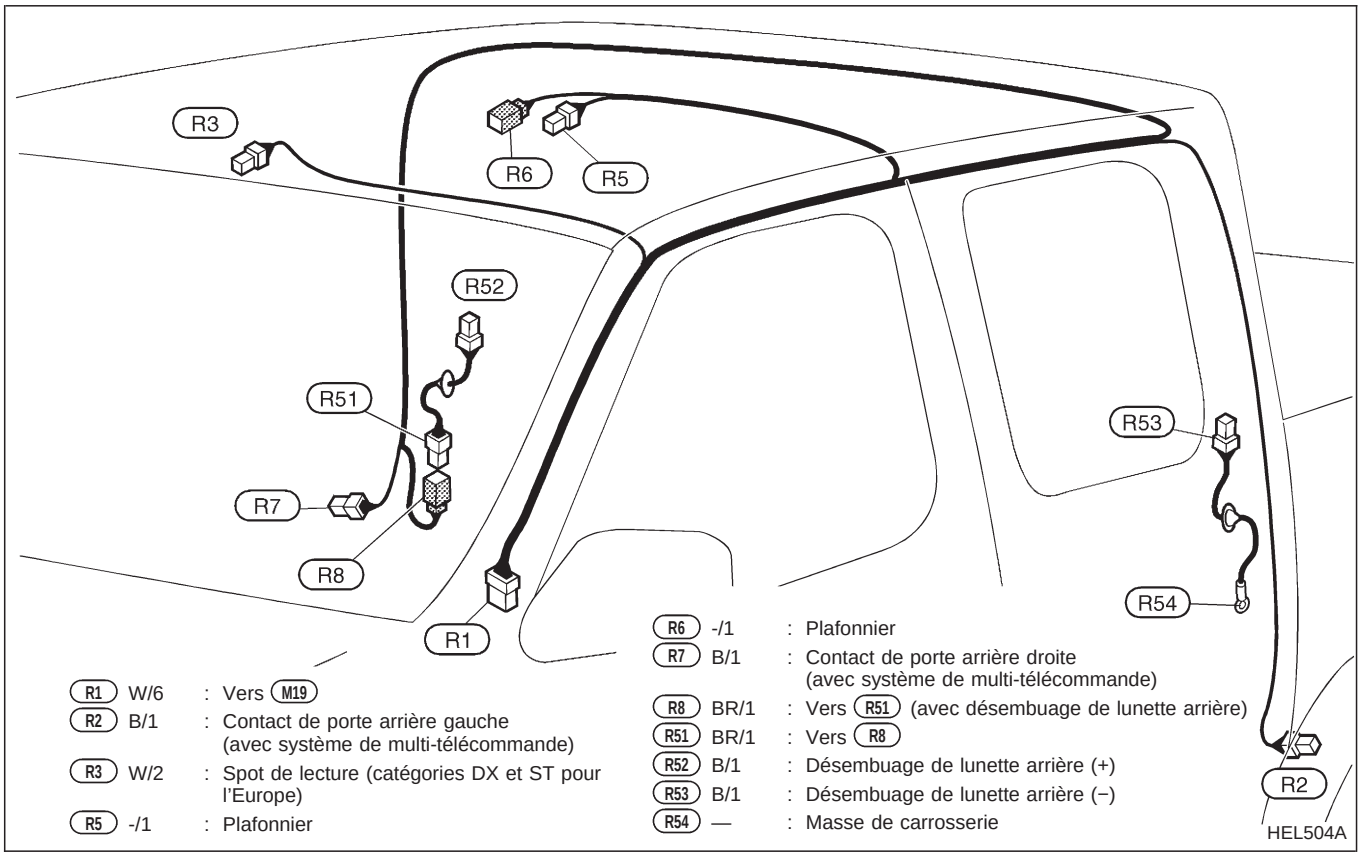

R1 W/6 : Vers M19
R2 B/1 : Contact de porte arrière gauche (avec système de multi-télécommande)
R3 W/2 : Spot de lecture (catégories DX et ST pour l'Europe)
R5 -/1 : Plafonnier
R6 -/1 : Plafonnier
R7 B/1 : Contact de porte arrière droite (avec système de multi-télécommande)
R8 BR/1 : Vers R51 (avec désembuage de lunette arrière)
R51 BR/1 : Vers R8
R52 B/1 : Désembuage de lunette arrière (+)
R53 B/1 : Désembuage de lunette arrière (−)
R54 — : Masse de carrosserie

HEL504A

CONDUITE A DROITE

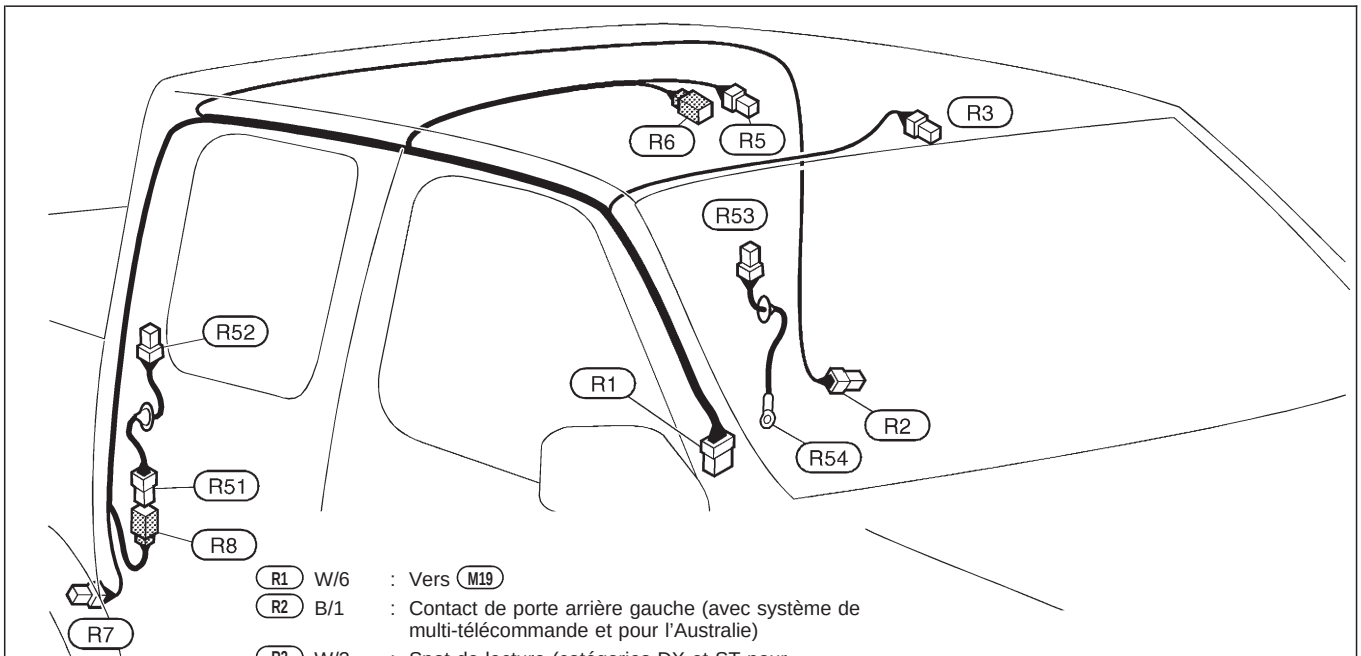

R1 W/6 : Vers M19
R2 B/1 : Contact de porte arrière gauche (avec système de multi-télécommande et pour l'Australie)
R3 W/2 : Spot de lecture (catégories DX et ST pour l'Europe et catégorie ST pour l'Australie)
R5 -/1 : Plafonnier
R6 -/6 : Plafonnier
R7 B/1 : Contact de porte arrière droite (avec système de multi-télécommande et pour l'Australie)
R8 BR/1 : Vers R51 (avec désembuage de lunette arrière)
R51 BR/1 : Vers R8
R52 B/1 : Désembuage de lunette arrière (+)
R53 B/1 : Désembuage de lunette arrière (−)
R54 — : Masse de carrosserie

HEL505A

Simpo PDF Merge and Split Unregistered Version - http://www.simpopdf.com

Faisceau de porte avant (côté gauche)

CONDUITE A GAUCHE

(D1) W/12 : Vers (M3)
(D2) W/12 : Vers (M4) (avec lève-glace électrique)
(D3) BR/2 : Haut-parleur avant
(D4) GY/(: Actionneur de rétroviseur de porte (modèles à cabine double et grande cabine avec lève-glace électrique)
(D5) W/16 : Interrupteur principal de lève-glace électrique (avec lève-glace électrique arrière et avant)
(D6) W/12 : Interrupteur principal de lève-glace électrique Avec lève-glace électrique à l'avant seulement)
(D7) B/2 : Régulateur de lève-glace électrique (avec lève-glace électrique)
(D8) GY/8 : Contact de bouton de verrouillage (avec système de verrouillage électrique des portes sans système de multi-télécommande)
(D9) BR/3 : Désembuage de rétroviseur de porte (avec système de multi-télécommande)
(D10) GY/4 : Actionneur de verrouillage de porte (avec système de multi-télécommande)

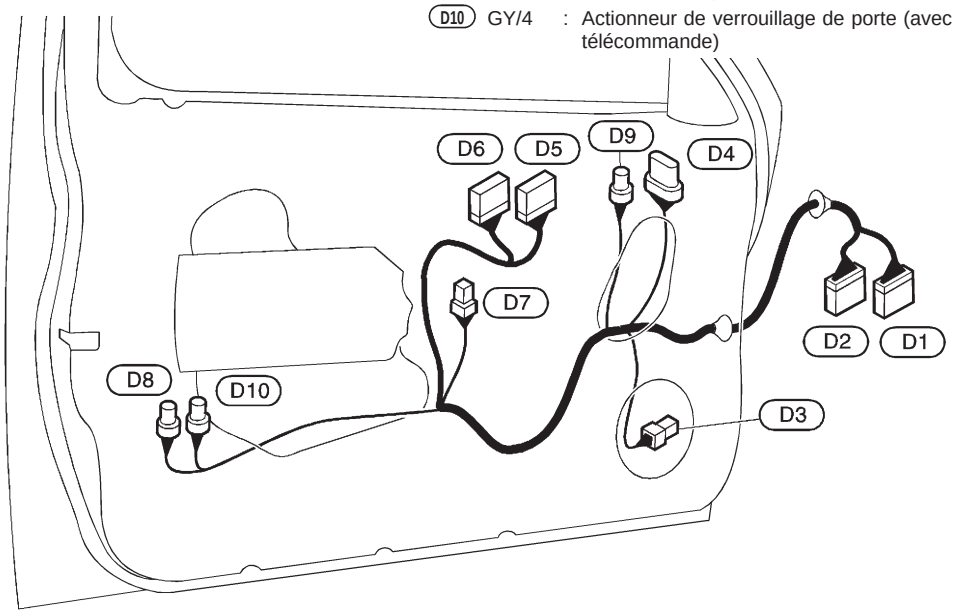

HEL506A

Simpo PDF Merge and Split Unregistered Version - http://www.simpopdf.com

Faisceau de porte avant (côté droit)

CONDUITE A GAUCHE

(D31) W/12 : Vers (M49)
(D32) W/6 : Vers (M50) (avec lève-glace électrique)
(D33) BR/2 : Haut-parleur avant
(D34) GY/5 : Actionneur de rétroviseur de porte (catégorie ST pour l'Europe et avec lève-glace électrique pour le Moyen-Orient)
(D35) W/8 : Interrupteur auxi. de lève-glace électrique (avec lève-glace électrique)
(D37) B/2 : Régulateur de lève-glace électrique (avec lève-glace électrique)
(D38) GY/4 : Actionneur de verrouillage de porte (avec système de verrouillage électrique des portes)
(D39) BR/3 : Désembuage de rétroviseur de porte (catégorie ST pour l'Europe)

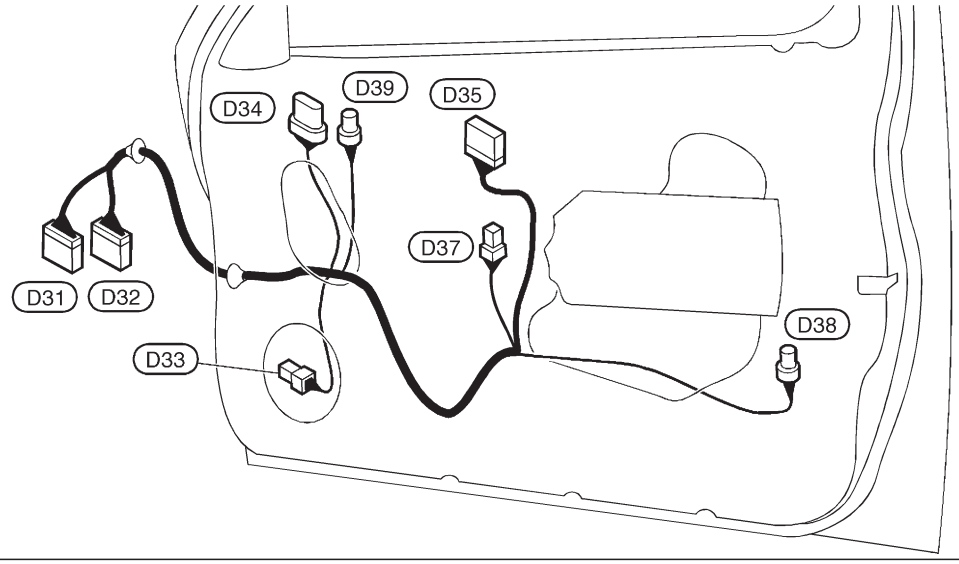

HEL507A

CONDUITE A DROITE

(D1) W/12 : Vers (M3)
(D2) W/12 : Vers (M4) (avec lève-glace électrique)
(D3) BR/2 : Haut-parleur avant
(D5) W/16 : Interrupteur principal de lève-glace électrique (avec lève-glace électrique)
(D7) B/2 : Régulateur de lève-glace électrique (avec lève-glace électrique)
(D8) GY/2 : Contact de bouton de verrouillage (avec système de verrouillage électrique des portes sans système de multi-télécommande)
(D10) GY/4 : Actionneur de verrouillage de porte (avec système de multi-télécommande)

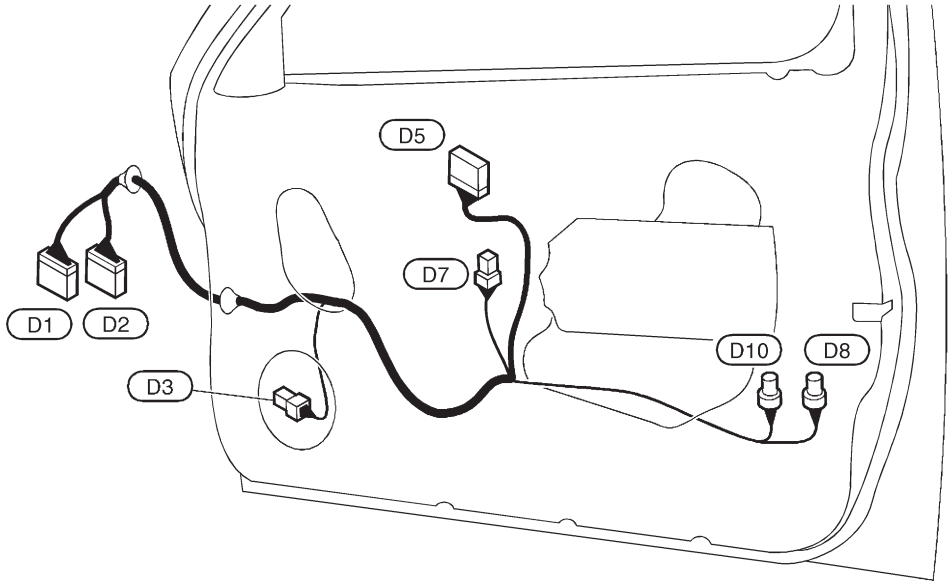

HEL508A

Simpo PDF Merge and Split Unregistered Version - http://www.simpopdf.com

Utiliser le tableau ci-dessous pour déterminer la signification des codes de schémas de câblage.
Se reporter aux codes des schémas de câblage dans l'index pour connaître l'emplacement (le numéro de page) de chaque schéma de câblage.

Code	Section	Nom du schéma de câblage
ABS	BR	Système anti-enrayeur des freins
A/C, A	HA	Climatiseur automatique
A/C, M	HA	Climatiseur manuel
AUDIO	EL	Système audio
DEF	EL	Désembuage de lunette arrière et de rétroviseur de porte
DIMDIP	EL	Phares — avec système de mise en veilleuse des codes
D/LOCK	EL	Verrouillage électrique de porte
FICD	EC	Electrovanne IACV-FICD
GLOW	EC	Circuit de préchauffage rapide

Code	Section	Nom du schéma de câblage
ILL	EL	Eclairage
INT/L	EL	Plafonnier et spot de lecture
MULTI	EL	Système de multi-télécommande
POWER	EL	Disposition de l'alimentation électrique
SRS	RS	Système de retenue supplémentaire
TURN	EL	Clignotants et feux de détresse
WARN	EL	Témoins lumineux
WINDOW	EL	Lève-glace électrique

Simpo PDF Merge and Split Unregistered Version - http://www.simpopdf.com

<SUPPLEMENT-I>

COMPOSANTS DU MOTEUR

SECTION EM

AVIS DE MODIFICATION :

Moteur des séries TD

- Le moteur TD25Ti a été introduit en Europe. Pour les spécifications autres que celles décrites ci-dessous, se reporter au moteur TD25.

TABLE DES MATIERES

TD25Ti

COMPOSANTS EXTERNES 1002
CARTER D'HUILE 1004
Repose 1004
TURBOCOMPRESSEUR 1005
Dépose et repose 1006
Inspection 1006
REFROIDISSEUR A AIR DE SURALIMENTATION 1010
Inspection 1010
CULASSE 1011
Dépose 1012
Inspection 1013
Remontage 1014
Repose 1014
REMPLACEMENT DES JOINTS D'HUILE 1015
REVISION DU MOTEUR 1016
Inspection et remplacement 1017
Remontage 1017
CARACTERISTIQUES ET VALEURS DE REGLAGE (SDS) 1019
Inspection et réglage 1019

Simpo PDF Merge and Split Unregistered Version - http://www.simpopdf.com

SEC. 135•140•185•186•213

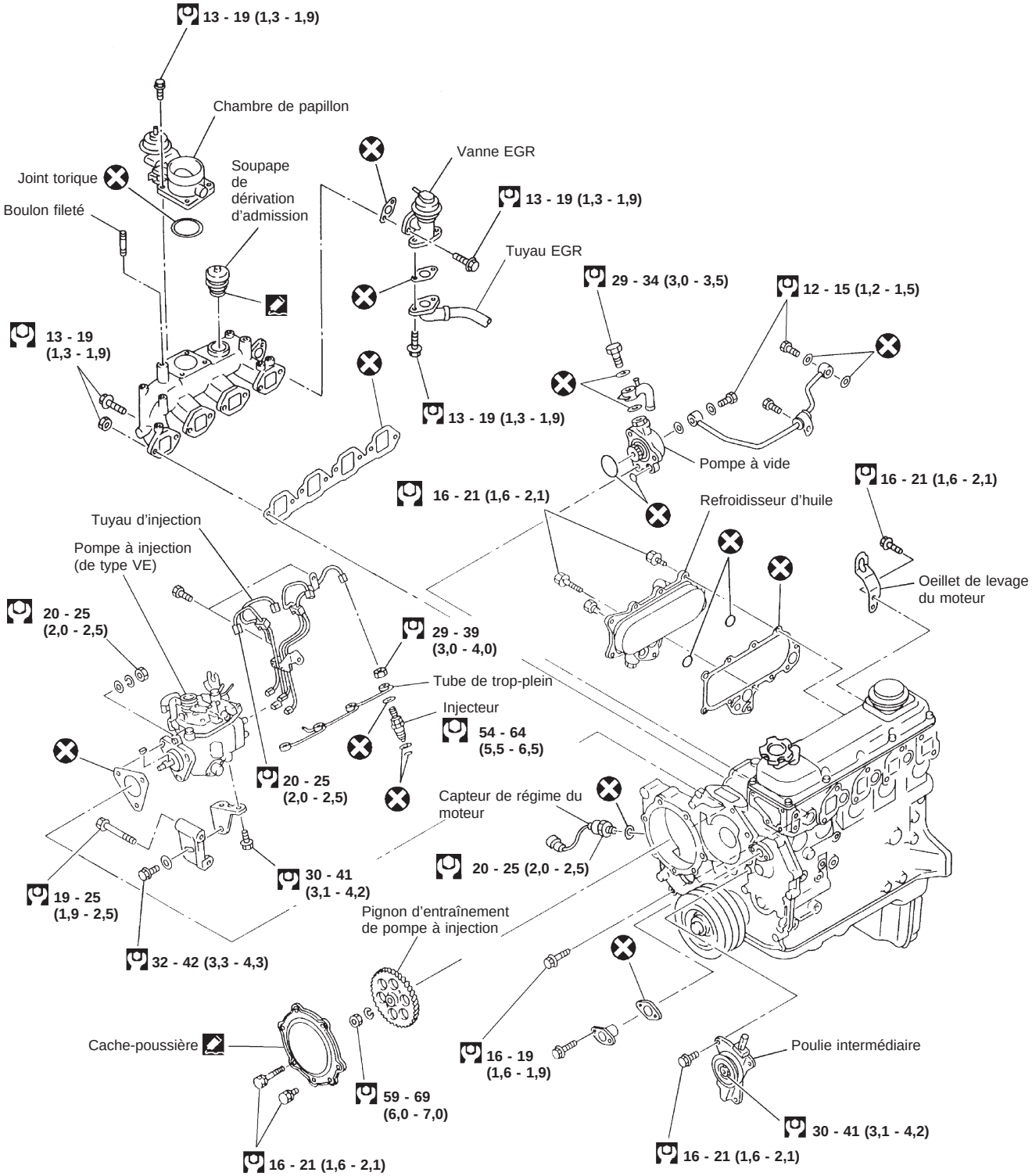

: N·m (kg-m)

: Appliquer le produit d'étanchéité recommandé (pièce d'origine Nissan : KP610-00250) ou équivalent.

DEM113

Simpo PDF Merge and Split Unregistered Version - http://www.simpopdf.com

SEC. 140•144•150•230•275

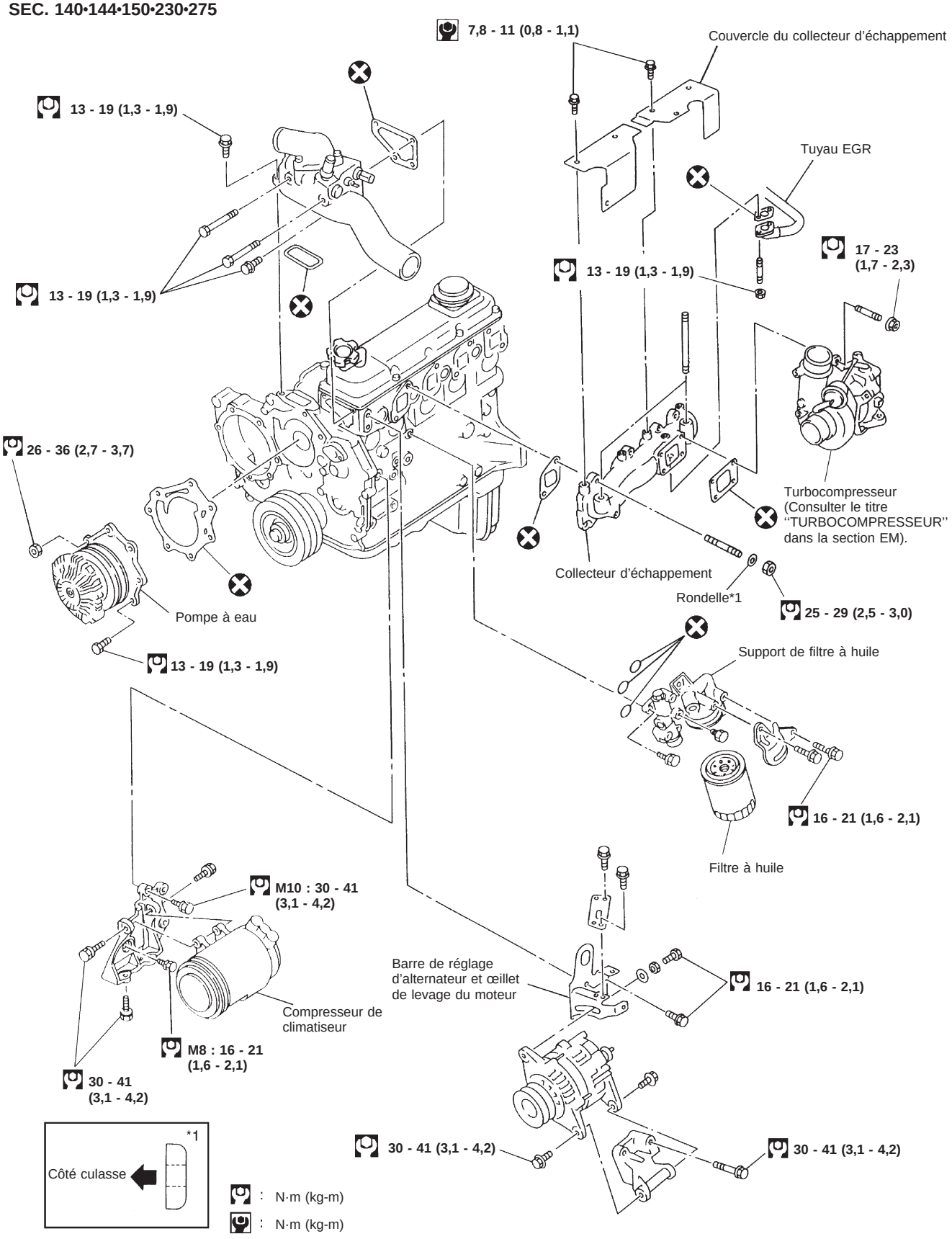

DEM114

Simpo PDF Merge and Split Unregistered Version - http://www.simpopdf.com

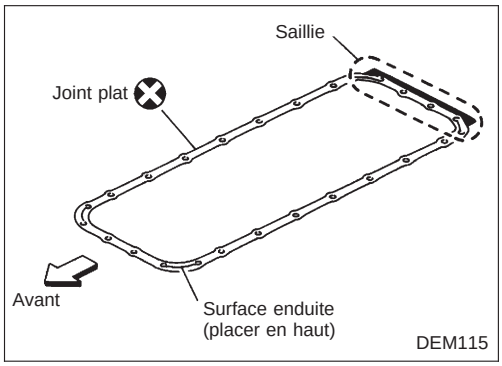

Repose

1. Reposer le joint plat de carter d'huile avec la surface enduite face au bloc-cylindres et la partie en saillie face à l'arrière du moteur.
2. Serrer tous les boulons dans l'ordre inverse de la dépose. Se reporter à la page EM-1016 pour connaître le couple de serrage du carter d'huile et le sens de montage de la rondelle du bouchon de vidange.

Simpo PDF Merge and Split Unregistered Version - http://www.simpopdf.com

SEC. 144

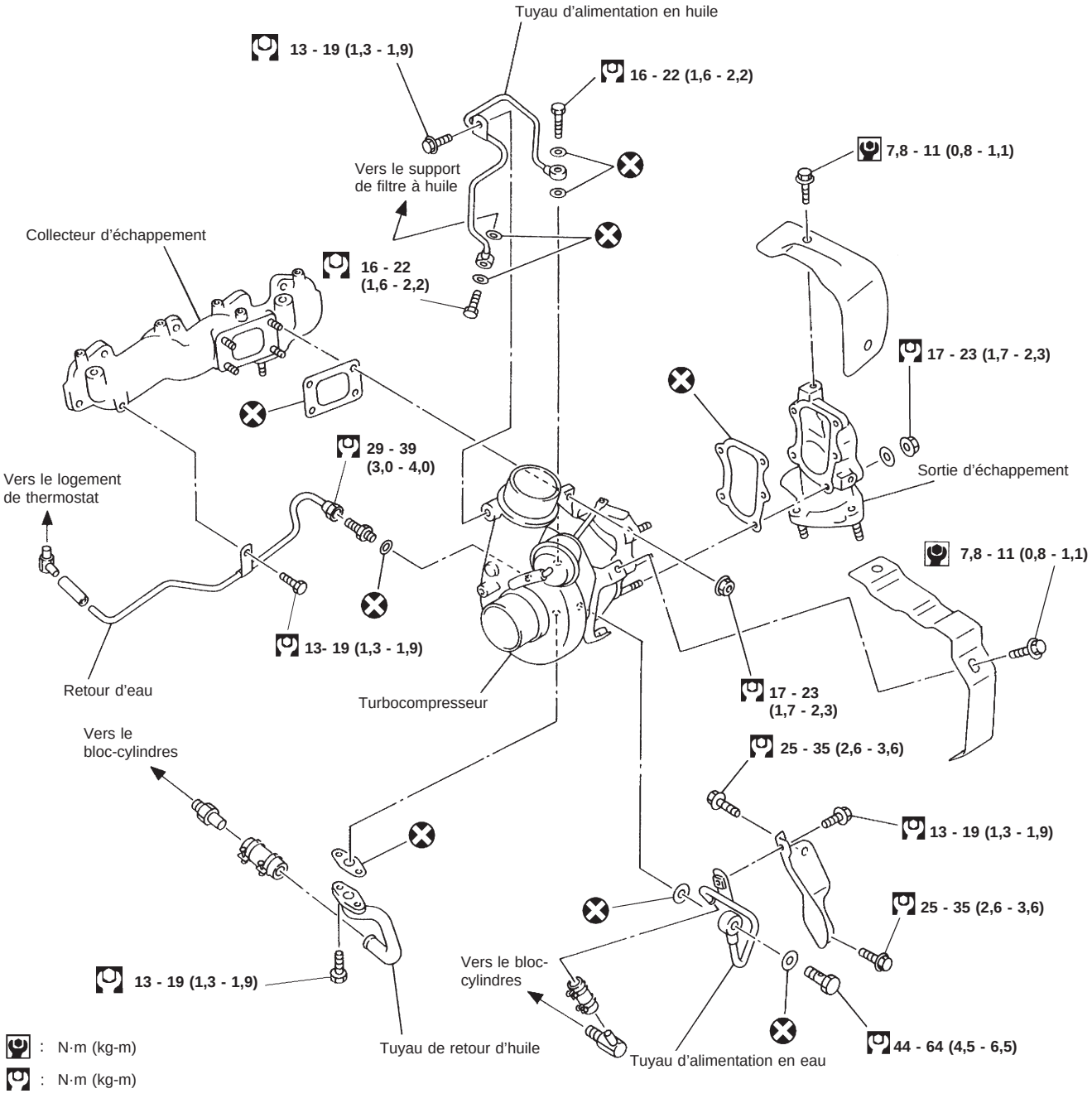

Simpo PDF Merge and Split Unregistered Version - http://www.simpopdf.com

Dépose et repose

Il ne faut pas démonter le turbocompresseur.

1. Vidanger le liquide de refroidissement.
2. Déposer les pièces suivantes :
- Composants du conduit d'air et du refroidisseur d'huile de suralimentation
- Déflecteurs de chaleur
- Tuyau d'échappement avant
- Tuyaux d'huile
- Conduits d'eau
3. Déposer le turbocompresseur du collecteur d'échappement.
4. Déposer les boulons de support du turbocompresseur.

Inspection

Condition 1 : faible puissance du moteur

Cause probable	Rectification
Fuite d'huile au raccord du carter de compresseur et du tuyau d'admission/arrivée, ou au raccord de l'arrivée et du collecteur d'admission.	Fixer le raccord.
Fuite de gaz d'échappement au raccord du carter de turbine et du collecteur d'échappement, du tuyau de raccord ou du tube de sortie.	Fixer le raccord ou remplacer le joint plat.
Vanne de dérivation bloquée en position ouverte.	Remplacer l'ensemble du turbocompresseur.
Tourillon ou palier bloqué ou usé.	
Arbre cassé.	
Dépôt à l'arrière de la roue de turbine.	
Roue de turbine cassée.	

Condition 2 : puissance excessive du moteur

Cause probable	Rectification
Flexible de caoutchouc de commande de soupape de dérivation débranché ou fissuré.	Réparer ou remplacer le flexible en caoutchouc.
Vanne de dérivation bloquée en position fermée.	Remplacer l'ensemble du turbocompresseur.
La membrane de la commande est cassée.	

Simpo PDF Merge and Split Unregistered Version - http://www.simpopdf.com

Inspection (Suite)

Condition 3 : consommation excessive d'huile ou dégagement d'une fumée bleue pâle par le pot d'échappement

Cause probable	Rectification
Fuite d'huile au niveau du raccord du passage d'huile de lubrification.	Fixer le raccord.
Fuite d'huile au niveau du joint d'huile de la turbine.	Remplacer l'ensemble du turbocompresseur.
Fuite d'huile au niveau du joint d'huile de compresseur.	
Tourillon ou palier usé.	

Effectuer les vérifications suivantes. Si le résultat n'est pas satisfaisant, remplacer le turbocompresseur comme un ensemble.

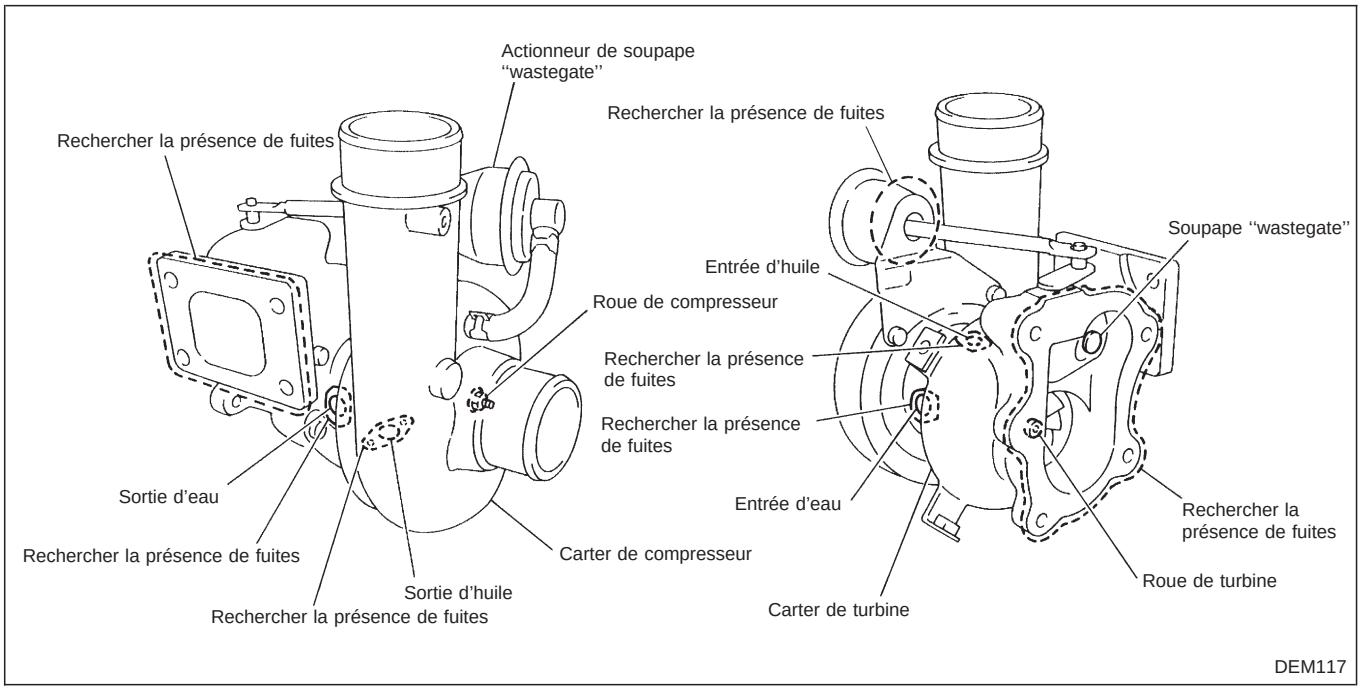

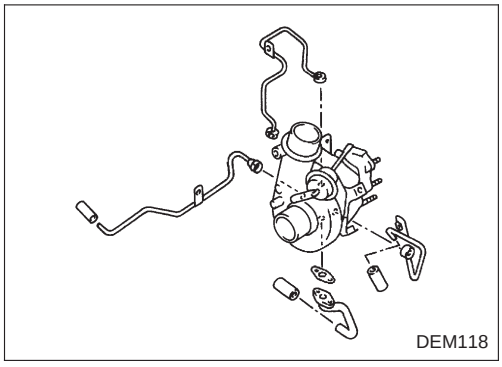

TUYAUX D'HUILE ET D'EAU

Vérifier si les tuyaux ne sont pas bouchés.

Simpo PDF Merge and Split Unregistered Version - http://www.simpopdf.com

Inspection (Suite)

ARBRE DU ROTOR

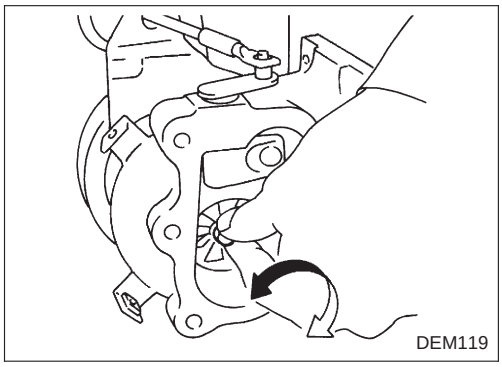
DEM119

1. Vérifier si la rotation de l'arbre de rotor est bien régulière.

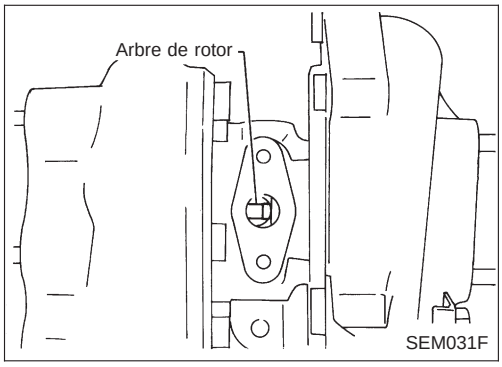

SEM031F

2. Vérifier si il n'y a pas de dépôts de calamine sur l'arbre de rotor.

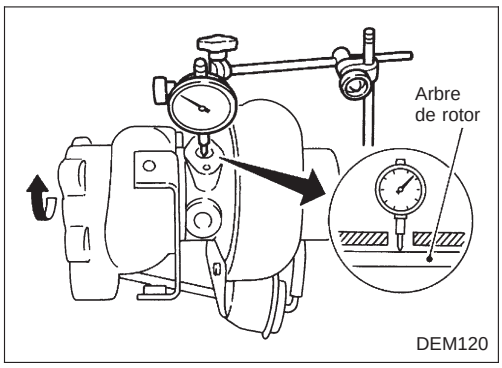

DEM120

3. Mesurer le voile de l'arbre de rotor.
   Voile (Indication totale du comparateur) :
   Standard
   0,092 -0,128 mm

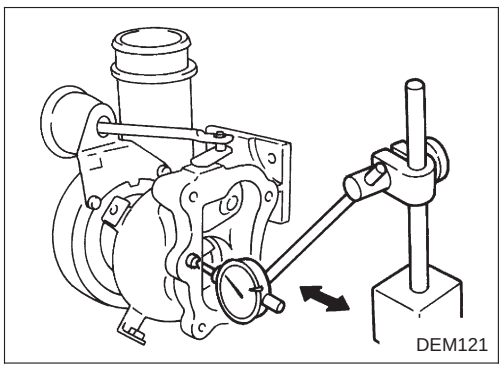
DEM121

4. Mesurer le jeu axial de l'arbre de rotor.
   Jeu axial :
   Standard
   0,02 - 0,06 mm

- **Ne pas laisser tourner les roues pendant la mesure du jeu axial.**

ROUE DE TURBINE

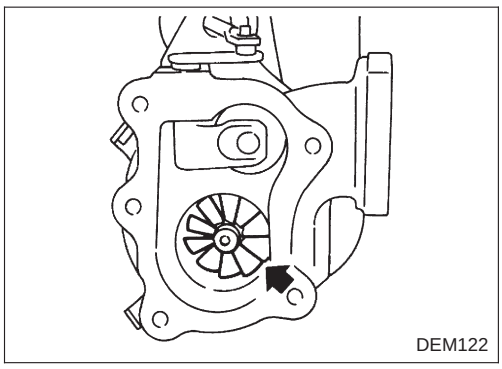
DEM122

Vérifier si la roue de turbine ne présente pas les anomalies suivantes :

- Présence d'huile
- Dépôts de calamine
- Ailettes déformées
- Points de contact avec le carter de turbine

Simpo PDF Merge and Split Unregistered Version - http://www.simpopdf.com

Inspection (Suite)

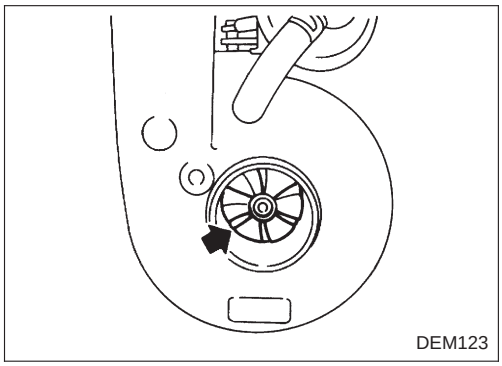
DEM123

ROUE DU COMPRESSEUR

Vérifier si la roue de compresseur ne présente pas les anomalies suivantes :

- Présence d'huile
- Ailettes déformées
- Points de contact avec le carter de compresseur

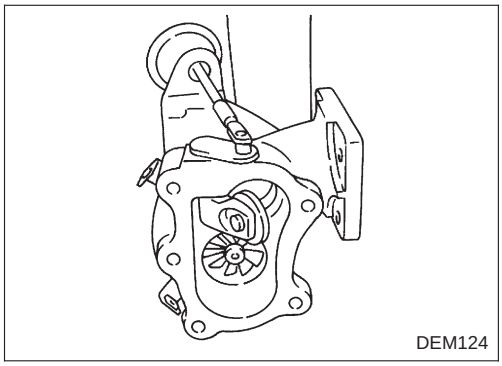
DEM124

SOUPAPE DE DECHARGE WASTEGATE

Enlever la goupille de retenue et vérifier qu'il n'y a pas de fissures sur la soupape ''wastegate'', qu'elle n'est pas déformée et que son mouvement est bien régulier. Vérifier si la surface du siège de soupape est bien régulière.

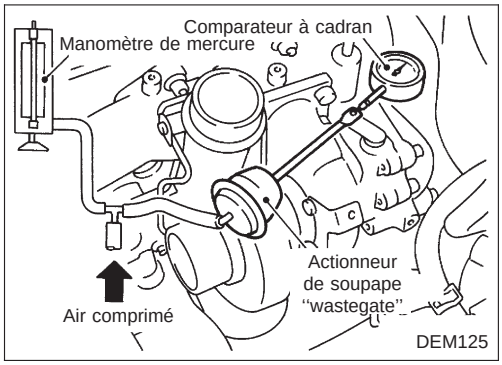

DEM125

COMMANDE DE SOUPAPE WASTEGATE

Contrôler le fonctionnement de l'actionneur de la soupape ''wastegate''.

Ne pas appliquer une pression supérieure à 96,0 kPa (960 mbar, 720 mmHg) au diaphragme de l'actionneur.

Course/pression de l'actionneur de soupape ''wastegate''.

1,5 mm/80,0 - 85,3 kPa
(800 - 853 mbar, 600 - 640 mmHg)

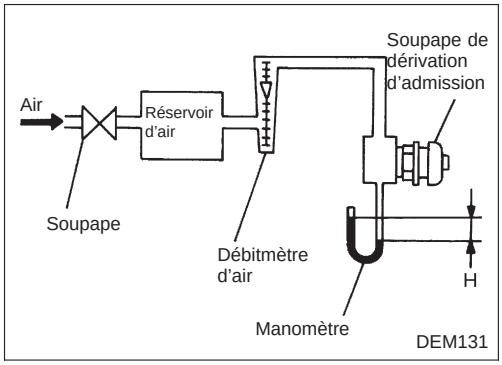

DEM131

SOUPAPE DE DERIVATION D'ADMISSION

Contrôler la pression de décharge d'air de la soupape de dérivation d'admission.

Lecture ''H'' du manomètre :

84,0 - 94,6 kPa (840 - 946 mbar, 630 - 710 mmHg) pour un débit d'air de 20 ℓ/min.

Simpo PDF Merge and Split Unregistered Version - http://www.simpopdf.com

SEC. 144

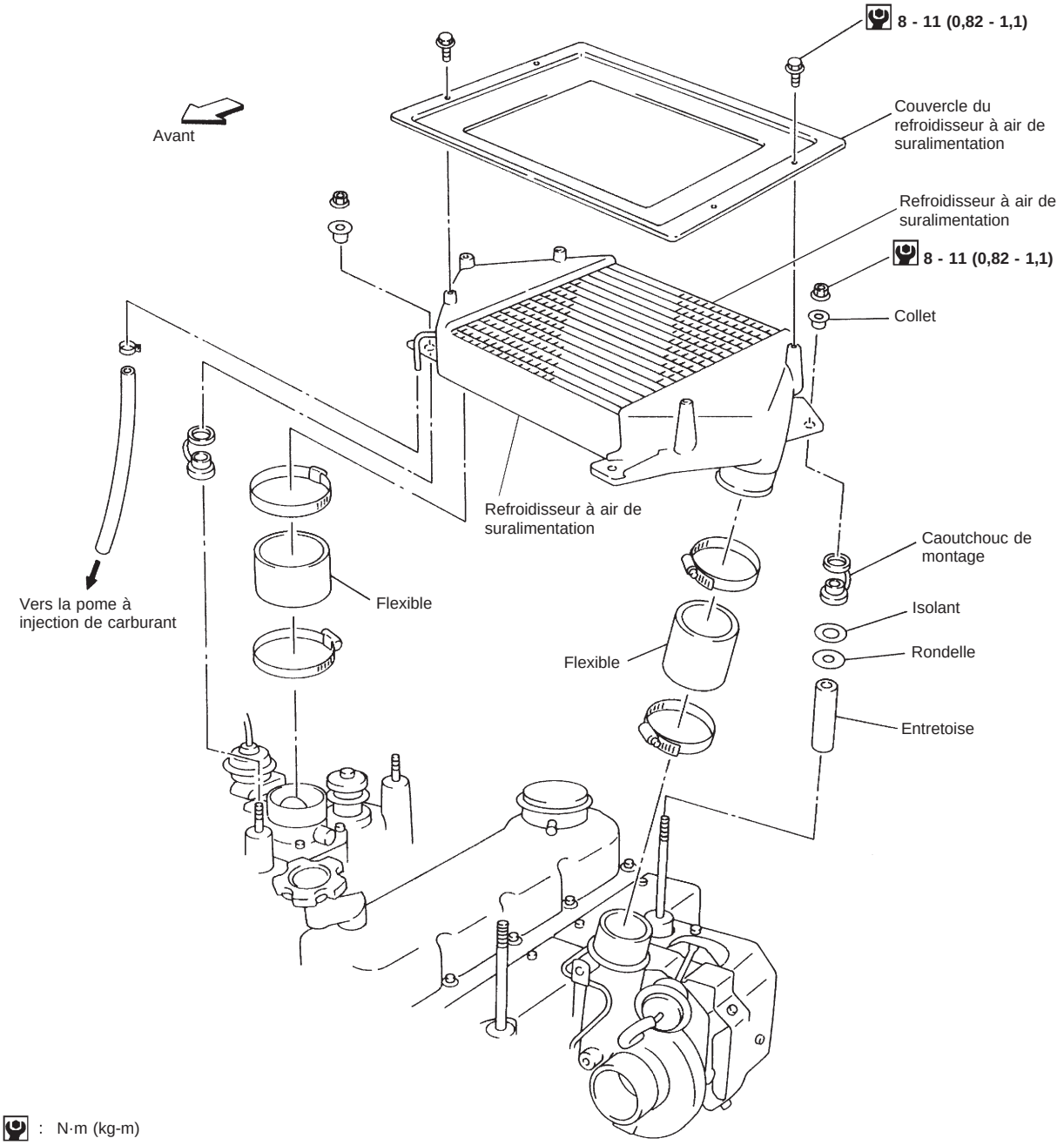

DEM130

Inspection

Vérifier que les passages d'air du noyau du refroidisseur et les ailettes ne sont pas bouchés, ne fuient pas et ne sont pas déformés. Nettoyer ou remplacer le refroidisseur à air de suralimentation si nécessaire.

Veiller à ne pas déformer les ailettes du noyau.

Simpo PDF Merge and Split Unregistered Version - http://www.simpopdf.com

SEC. 111•130•185•220

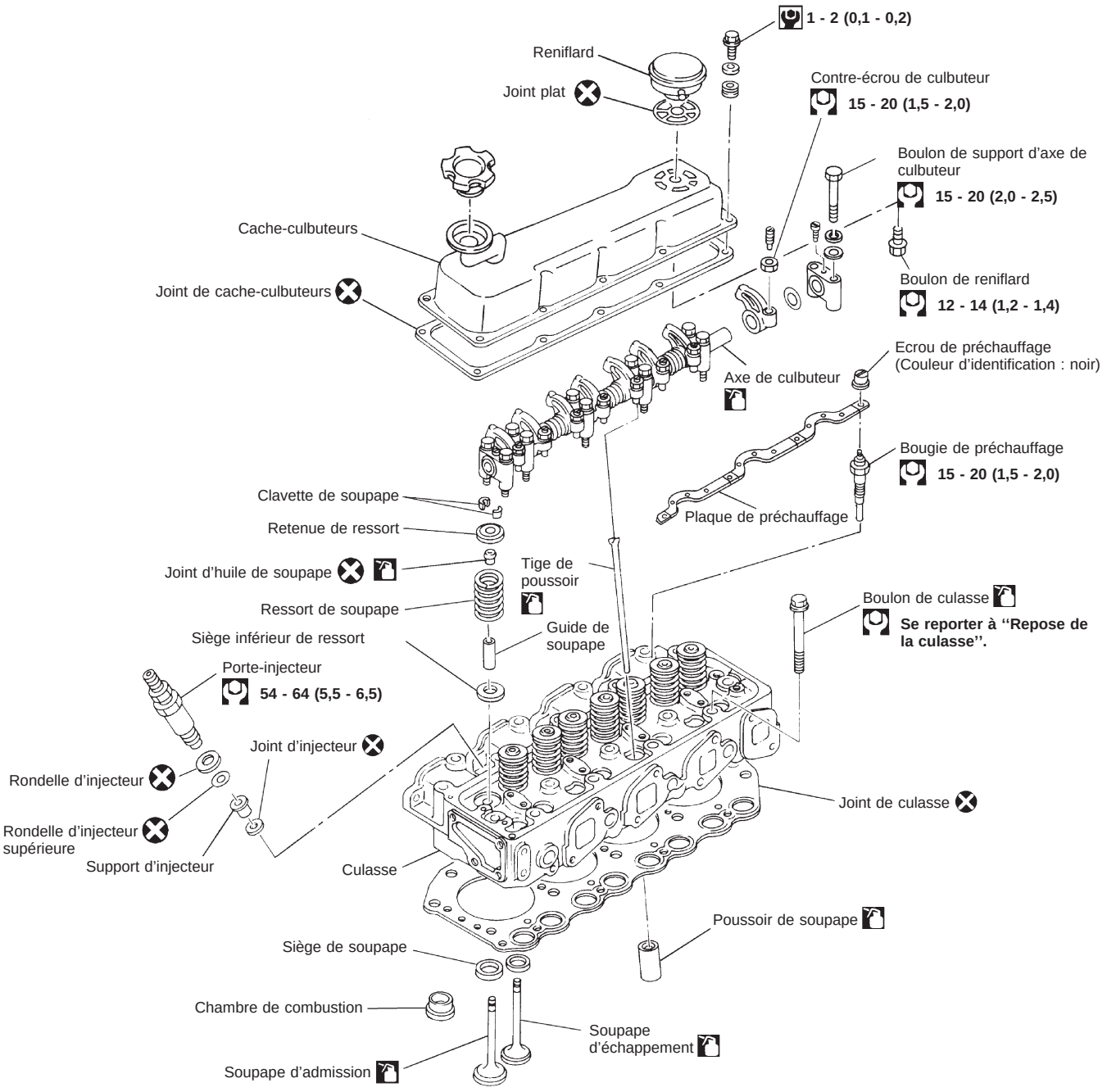

DEM116

Simpo PDF Merge and Split Unregistered Version - http://www.simpopdf.com

ATTENTION :

- **Lors du montage des pièces coulissantes tels que culbuteurs, arbre à cames et joint d'huile, veiller à appliquer une couche d'huile moteur neuve sur leurs surfaces de frottement.**
- **Lors du serrage des boulons de culasse et des boulons d'axe de culbuteurs, enduire d'huile moteur neuve les parties filetées et les faces d'assise des boulons.**

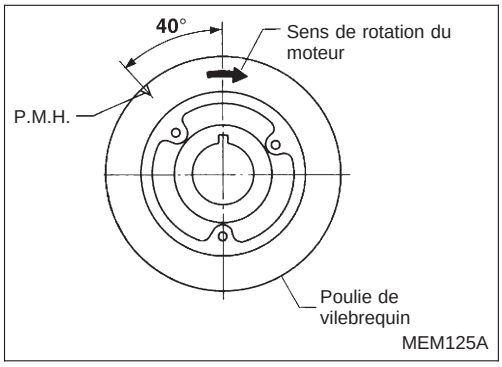

Dépose

1. Placer le cylindre n° 1 au P.M.H. (point mort haut) dans sa course de compression.
2. Vidanger le liquide de refroidissement par les bouchons de vidange situés sur le bloc-cylindres et le radiateur.
3. Déposer les composants du conduit d'air et du refroidisseur à air de suralimentation.
4. Déposer le boulon de réglage de l'alternateur.
5. Déposer le couvercle de sortie d'échappement.
6. Débrancher le tuyau d'échappement de la sortie d'échappement.
7. Déposer les tuyaux d'huile et d'eau du turbocompresseur.
8. Déposer le turbocompresseur du collecteur d'échappement.
9. Débrancher le flexible de sortie de radiateur et le flexible d'entrée d'eau du logement de thermostat.

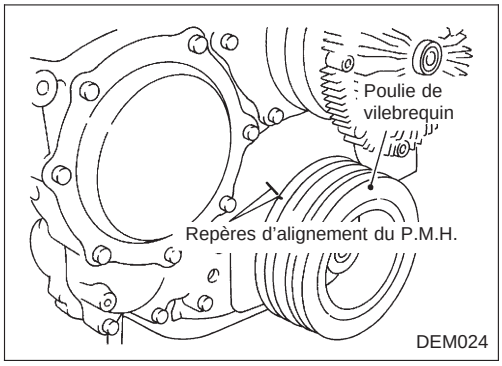

10. Déposer le tuyau d'injection de carburant et le tube de trop-plein.

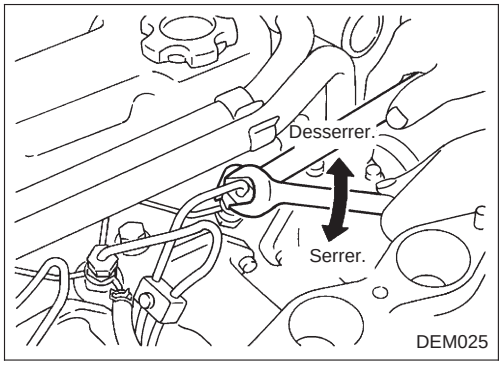

11. Déposer le porte-injecteur et le joint de l'injecteur supérieur à l'aide d'une douille de profondeur.

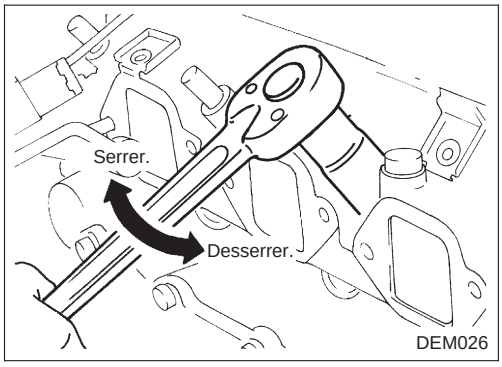

Simpo PDF Merge and Split Unregistered Version - http://www.simpopdf.com

Dépose (Suite)

12. Déposer le cache-culbuteurs.

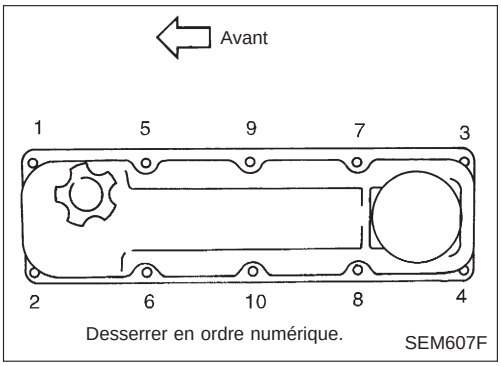

13. Déposer l'axe des culbuteurs avec les culbuteurs.
14. Déposer les tiges de poussoirs.

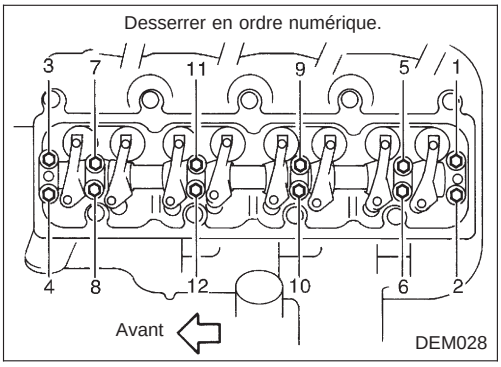

15. Déposer les boulons de culasse dans l'ordre numérique, puis déposer la culasse.

Une dépose dans l'ordre incorrect peut entraîner une déformation ou une fêlure de la culasse.

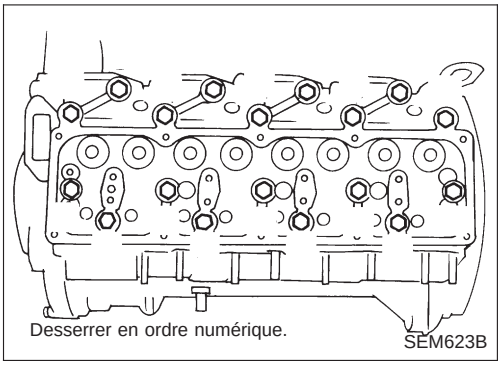

Inspection

REMPLACEMENT DE LA CHAMBRE DE COMBUSTION

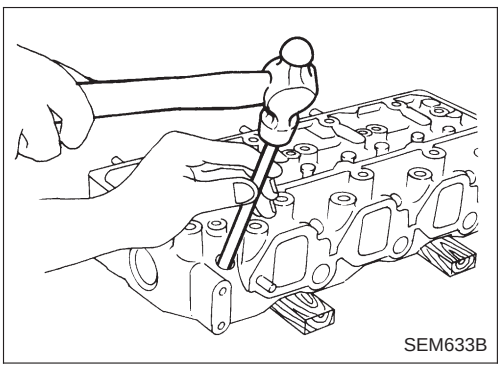

Identification des chambres de combustion

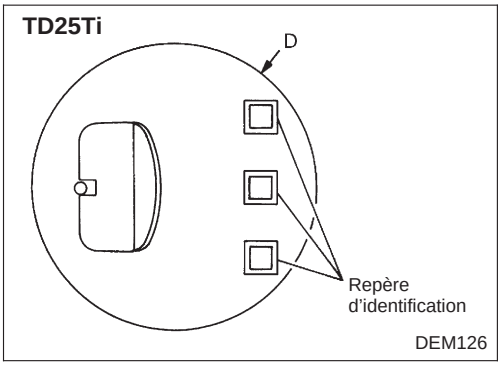

Repère d'identification (sur la chambre de combustion)	Diamètre extérieur "D" mm	Moteur
3 endroits	37	TD25Ti

Simpo PDF Merge and Split Unregistered Version - http://www.simpopdf.com

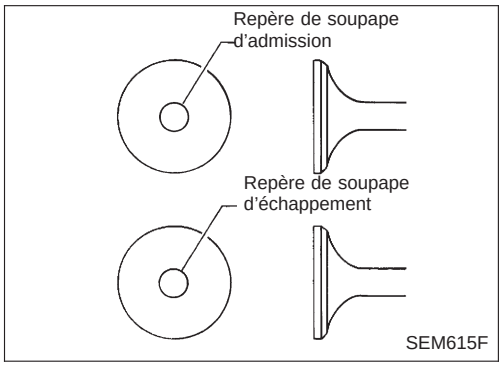

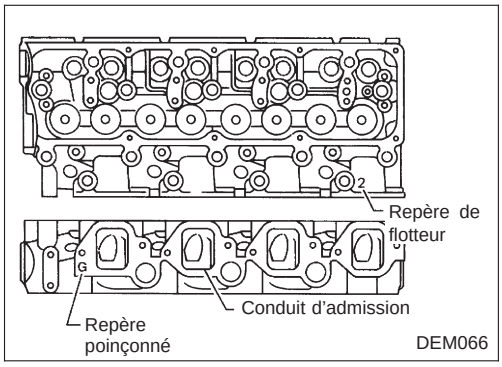

Remontage

Identification des soupapes

Repère d'identification (sur la soupape d'admission et d'échappement)		Moteur
Soupape d'admission	Soupape d'échappement	
2	M	TD25Ti

Repose

Repère d'identification de la culasse

Numéro d'identification (sur la culasse)		Moteur
Repère de flotteur	Repère poinçonné	
W	M	TD25Ti

Simpo PDF Merge and Split Unregistered Version - http://www.simpopdf.com

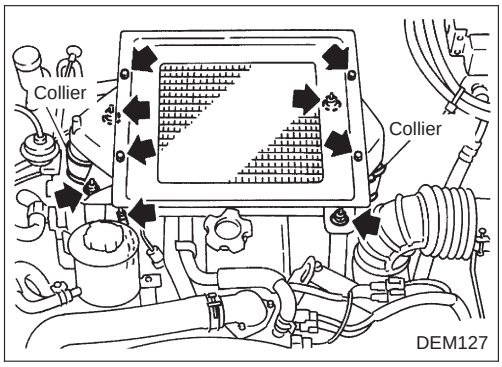

JOINT D'HUILE DE QUEUE DE SOUPAPE

Déposer les pièces suivantes avant de déposer le cache-culbuteurs :

- Refroidisseur à air de suralimentation
- Flexible de gaz de carter

Faire attention de ne pas laisser tomber de pièces dans la chambre de papillon et la sortie du turbocompresseur.

Simpo PDF Merge and Split Unregistered Version - http://www.simpopdf.com

SEC. 110•120•130•135•150•313

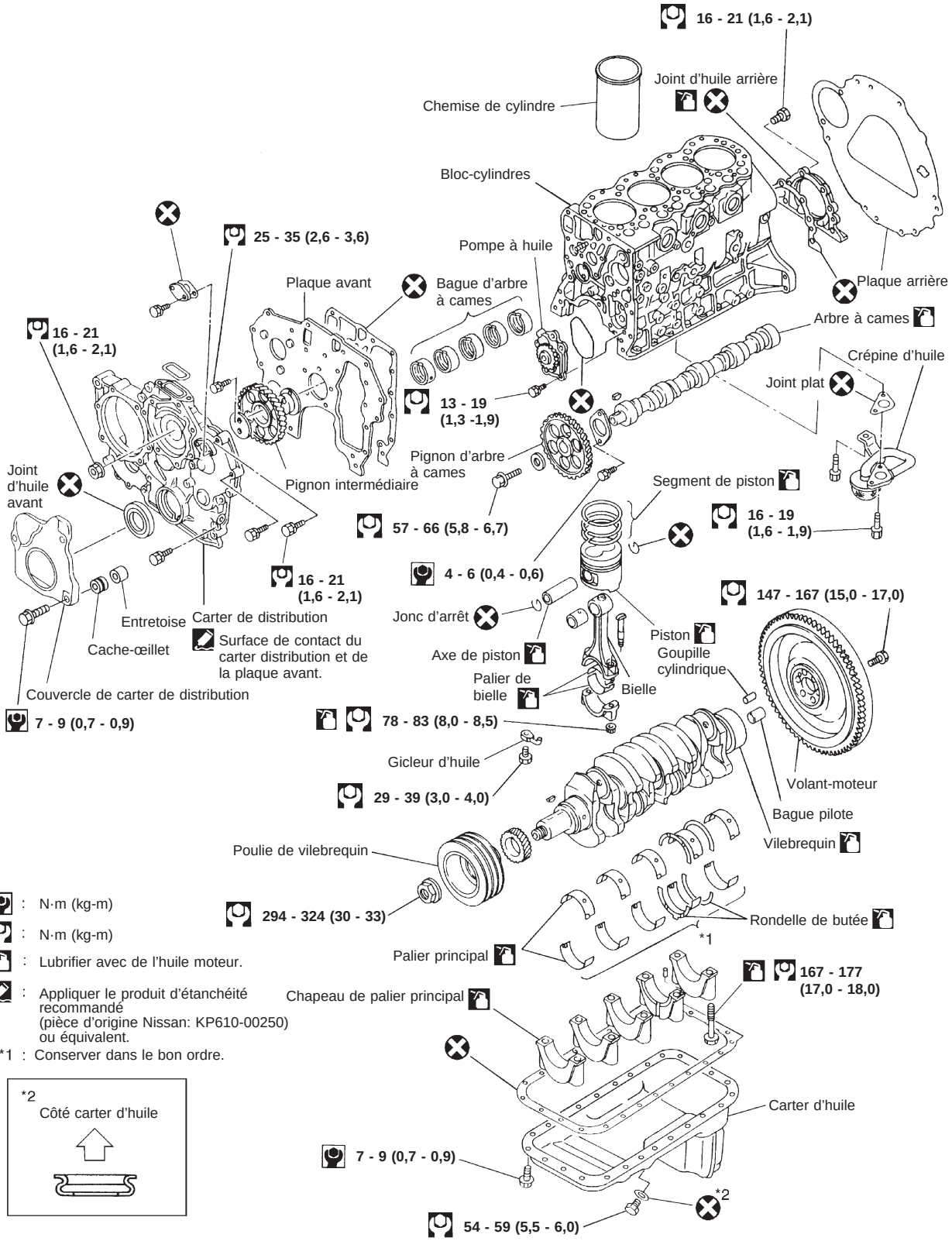

DEM128

Simpo PDF Merge and Split Unregistered Version - http://www.simpopdf.com

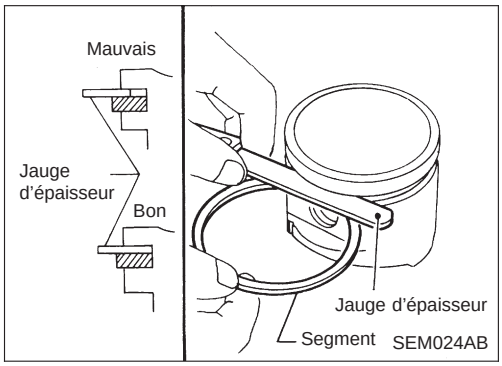

Inspection et remplacement

JEU LATERAL DU SEGMENT DE PISTON

Jeu latéral : mm
Segment de feu
0,05 - 0,07
Segment de compression
0,04 - 0,08
Segment racleur
0,02 - 0,06
Limite maximale de jeu latéral : mm
Segment de feu 0,50
Segment de compression 0,30
Segment racleur 0,15

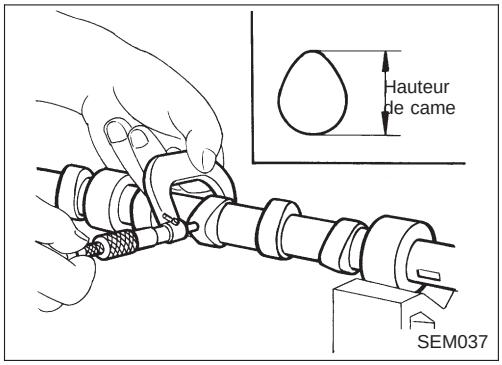

GEOMETRIE DE L'ARBRE A CAMES

Hauteur de la came : mm
Standard
Admission
41,55 - 41,59
Echappement
41,88 - 41,92
Limite
Admission
Inférieure à 41,00
Echappement
Inférieure à 41,40

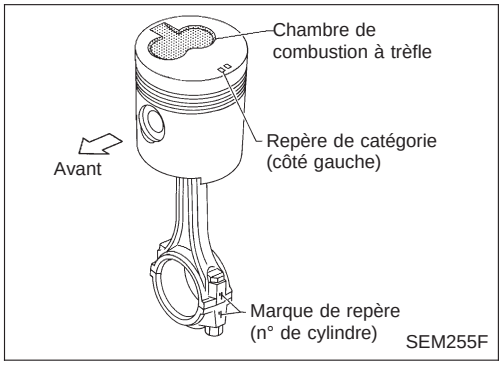

Remontage

PISTON

Remonter les pistons, les axes de piston, les joncs d'arrêt et les bielles.

a. Les numéros qui sont matricés sur la bielle et le chapeau correspondent à chaque cylindre. On doit faire attention de ne pas intervertir les divers éléments, y compris les paliers.

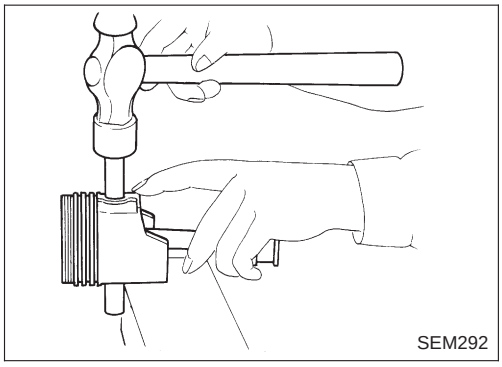

b. Lors de l'introduction de l'axe de piston dans la bielle, chauffer le piston à l'aide d'un réchauffeur ou de l'eau chaude (environ 60 à 70°C), puis enduire d'huile moteur l'axe et le pied de bielle.
c. Après remontage, s'assurer que le piston bascule en douceur.

Simpo PDF Merge and Split Unregistered Version - http://www.simpopdf.com

Remontage (Suite)

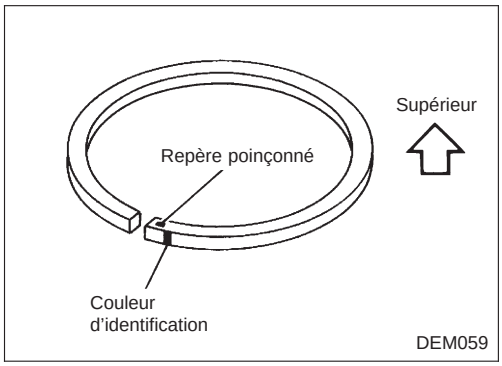

Reposer l'ensemble de pistons.

ATTENTION :

- **Tendre les segments de piston suffisamment pour qu'ils puissent s'adapter dans les rainures de piston.**
- **Toujours installer les segments de piston neufs en dirigeant leurs repères vers le haut.**

	Couleur d'identification
Segment de feu	Jaune
Segment de compression	Rouge

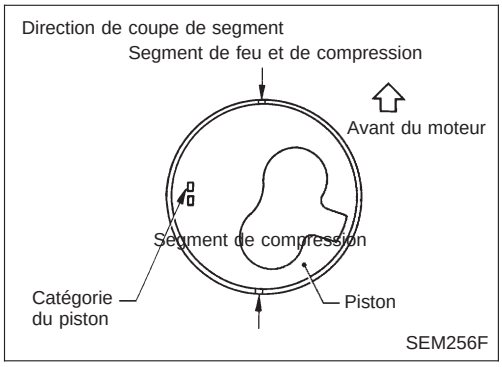

- **Reposer le segment de piston n° 1 de telle sorte que sa coupe soit orientée vers l'axe de piston ; puis reposer les segments de pistons de façon à ce que leurs coupes se trouvent à 180° les unes des autres.**

Simpo PDF Merge and Split Unregistered Version - http://www.simpopdf.com

Inspection et réglage

ARBRE A CAMES ET PALIER D'ARBRE A CAMES

Unité : mm

	Standard	Limite
Jeu entre le tourillon d'arbre à cames et la bague [orifice de graissage]	0,020 - 0,109	0,15
Diamètre de tourillon d'arbre à cames		
Avant	50,721 - 50,740	—
2nde	50,521 - 50,540	—
3ème	50,321 - 50,340	—
4ème	50,121 - 50,140	—
Arrière	49,921 - 49,940	—
Courbure de l'arbre à cames (indication totale du comparateur)	Moins de 0,02	0,06
Jeu axial d'arbre à cames	0,08 - 0,28	0,50

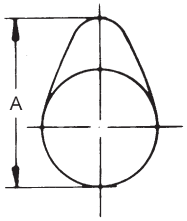

EM671

	Standard	Limite
Hauteur de la came "A"		
Admission	41,55 - 41,59	41,00
Echappement	41,88 - 41,92	41,40

Segment de piston

Unité : mm

	Standard	Limite
Jeu latéral		
Segment de feu	0,05 - 0,07	0,50
Segment de compression	0,04 - 0,08	0,30
Segment racleur	0,02 - 0,06	0,15
Coupe de segment		
Segment de feu	0,30 - 0,45	1,5
Segment de compression	0,20 - 0,35	
Segment racleur (segment à rail)	0,15 - 0,35	

Simpo PDF Merge and Split Unregistered Version - http://www.simpopdf.com

<SUPPLEMENT-I>

ESSIEU ET SUSPENSION AVANT

SECTION FA

AVIS DE MODIFICATION :

L'angle de braquage des roues avant pour les pneus 255/70R15 a été modifié.

TABLE DES MATIERES

ENTRETIEN SUR LE VEHICULE 1002
Alignement des roues avant 1002
CARACTERISTIQUES ET VALEURS DE REGLAGE (SDS) 1003
Inspection et Réglage 1003

Simpo PDF Merge and Split Unregistered Version - http://www.simpopdf.com

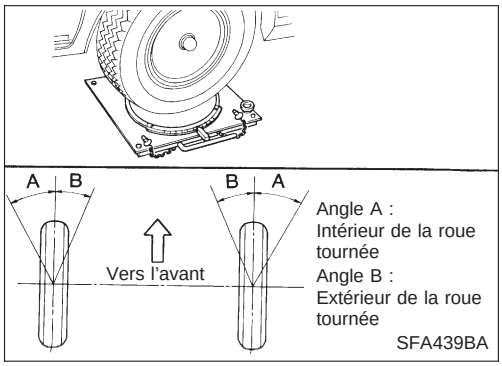

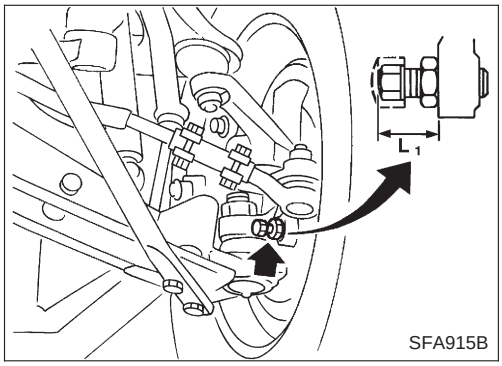

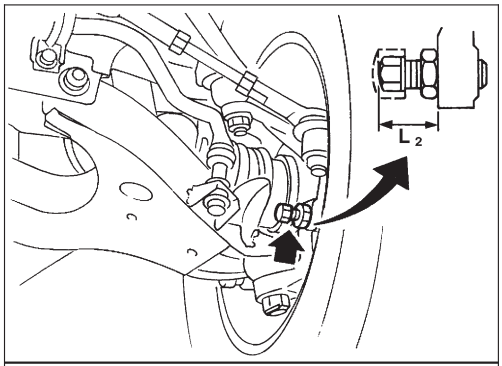

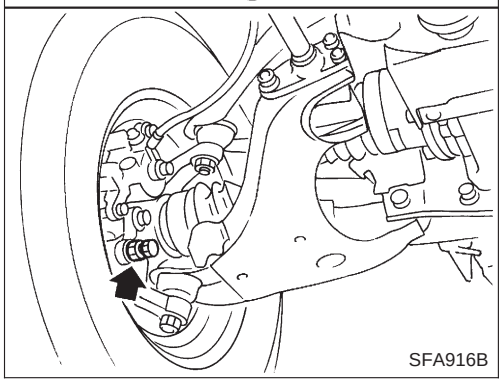

Alignement des roues avant

ANGLE DE BRAQUAGE DES ROUES AVANT

1. Mettre les roues dans la position de marche en ligne droite. Puis pousser le véhicule vers l'avant jusqu'à ce que les roues avant reposent correctement sur la jauge d'angle de braquage.
2. Tourner le volant à bout de course vers la droite et vers la gauche et mesurer l'angle de braquage.

- Pour les modèles avec direction assistée, tourner le volant à bout de course et appliquer une force (à la circonférence du volant) de 98 à 147 N (10 à 15 Kg) avec le moteur au ralenti.
- **Ne pas maintenir le volant en butée pendant plus de 15 secondes.**

Angle de braquage des roues (braquage total) :
Se reporter aux SDS, FA-1003.

3. Régler le boulon de butée si nécessaire.

Longueur standard "L_1" (2 roues motrices) :
20 mm
Contre-écrou de boulon de butée :
: 39 - 49 N·m (4,0 - 5,0 kg-m)

Longueur standard "L_2" (4 roues motrices) :
Sauf pneu 255/70R15 : 26 mm
Pneu 255/70R15 : 30,0 mm
Contre-écrou de boulon de butée :
: 76 - 98 N·m (7,8 - 10,0 kg-m)

Simpo PDF Merge and Split Unregistered Version - http://www.simpopdf.com

Inspection et Réglage

4 X 4

				Australie, Europe		Moyen-Orient, Export général
				Pneus 255/70R15	Sauf pneus 255/70R15	
Carrossage		Minimum		0°06′ (0,10°)		
		Nominal		0°36′ (0,60°)		
		Maximum		1°06′ (1,10°)		
	Degré minute (Degré décimal)	Différence à gauche et à droite		45′ (0,75°) ou moins		
Chasse		Minimum		1°40′ (1,67°)		
		Nominal		2°10′ (2,17°)		
		Maximum		2°40′ (2,67°)		
	Degré minute (Degré décimal)	Différence à gauche et à droite		45′ (0,75°) ou moins		
Inclinaison du pivot de fusée		Minimum		10°18′ (10,30°)		
	Degré minute (Degré décimal)	Nominal		10°48′ (10,80°)		
		Maximum		11°18′ (11,30°)		
Pincement total		Pneu radial	Minimum	3		
			Nominal	4		
			Maxi-mum	5		
Distance (A - B) mm		Pneu diagonal	Minimum	4		
			Nominal	5		
			Maxi-mum	6		
Angle (gauche plus droite)		Pneu radial	Minimum	15′ (0,25°)		
			Nominal	20′ (0,33°)		
			Maxi-mum	25′ (0,42°)		
		Pneu diagonal	Minimum	20′ (0,33°)		
			Nominal	25′ (0,42°)		
	Degré minute (Degré décimal)		Maxi-mum	30′ (0,50°)		
Angle de braquage des roues		Minimum		31°00′ (31,00°)	33°06′ (33,10°)	33°18′ (33,30°)
Braquage total*2	Intérieur Degré minute (Degré décimal)	Nominal		33°00′ (33,00°)	35°06′ (35,10°)	35°18′ (35,30°)
		Maximum		33°00′ (33,00°)	35°06′ (35,10°)	35°18′ (35,30°)
	Extérieur Degré minute (Degré décimal)	Minimum		29°00′ (29,00°)	31°12′ (31,20°)	31°30′ (31,50°)
		Nominal		31°00′ (31,00°)	33°12′ (33,20°)	33°30′ (33,50°)
		Maximum		31°00′ (31,00°)	33°12′ (33,20°)	33°30′ (33,50°)
Hauteur de véhicule						
Hauteur de pivot de bras inférieur (H) mm				45,5 - 49,5		53,3 - 57,3

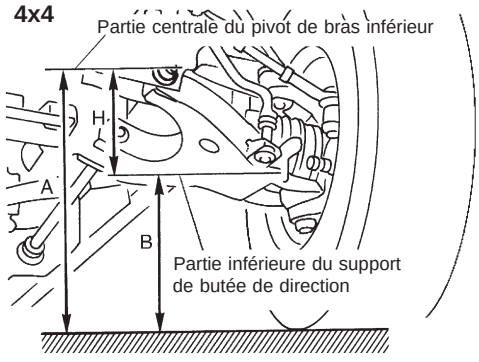

SFA816B

*2 : Pour les modèles avec direction assistée, la force de rotation du volant (à la circonférence du volant) est de 98 à 147 N (10 à 15 kg), le moteur tournant au ralenti.

Simpo PDF Merge and Split Unregistered Version - http://www.simpopdf.com

<SUPPLEMENT-I>

SYSTEMES DE COMMANDE D'ACCELERATEUR, D'ALIMENTATION ET D'ECHAPPEMENT

SECTION FE

AVIS DE MODIFICATION :

- Un système d'échappement pour moteur TD25Ti a été ajouté.

TABLE DES MATIERES

SYSTEME D'ECHAPPEMENT 1002

Simpo PDF Merge and Split Unregistered Version - http://www.simpopdf.com

MOTEUR DIESEL

SEC. 200
Modèles à 4 roues motrices
(avec moteur TD25Ti)

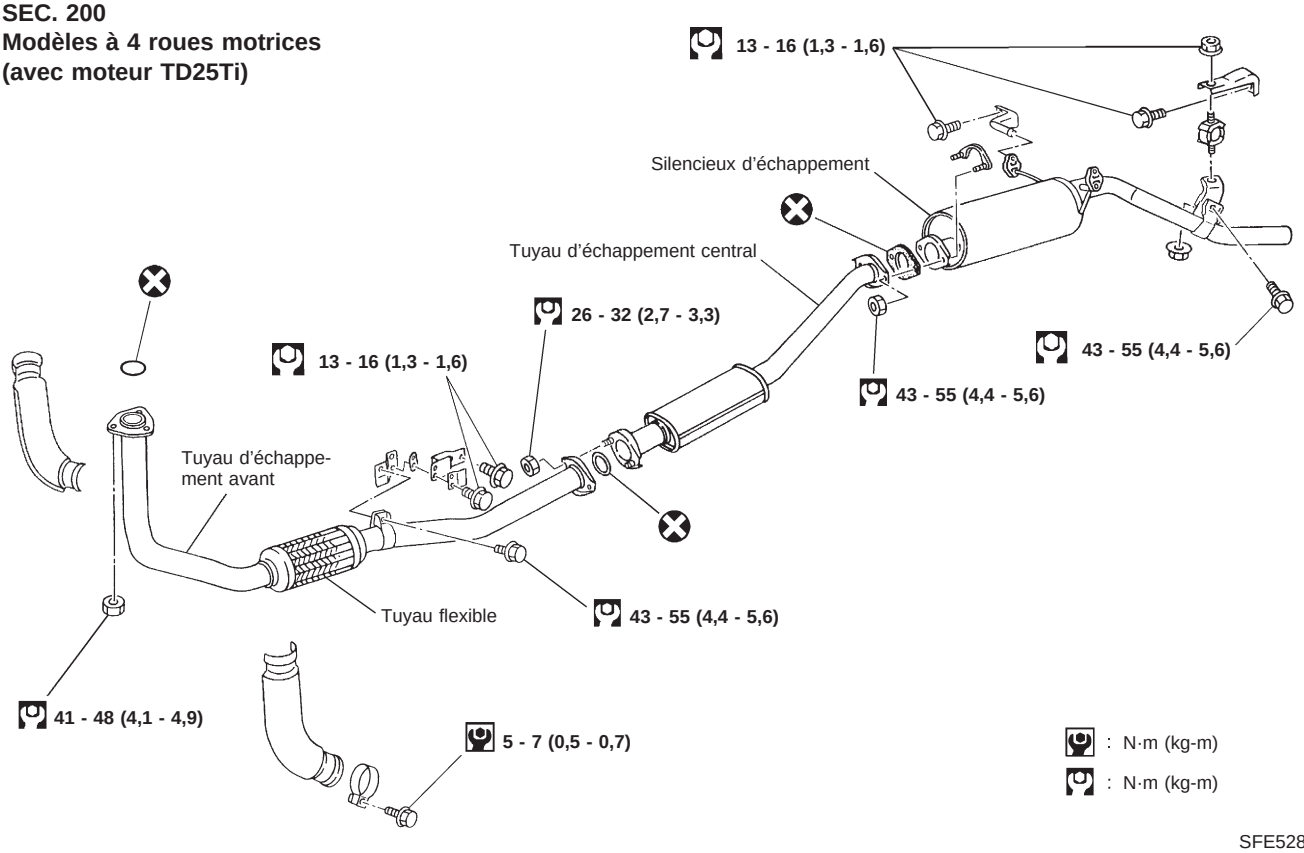

Simpo PDF Merge and Split Unregistered Version - http://www.simpopdf.com

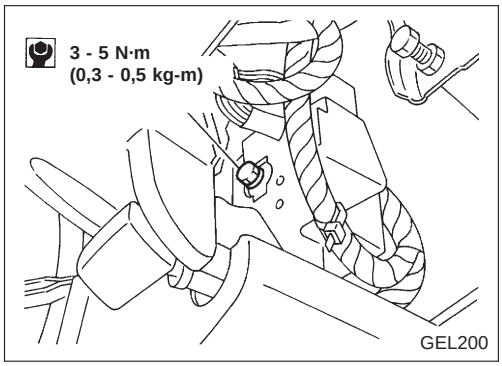

REPOSE

Pour remonter le super raccord multiple, serrer les boulons ‘‘à fond’’ jusqu’à ce que le repère orange apparaisse, puis resserrer au couple spécifié selon les besoins.

: 3 - 5 N·m
(0,3 - 0,5 kg-m)

ATTENTION :
Ne pas trop serrer les boulons car cela pourrait les endommager.

Simpo PDF Merge and Split Unregistered Version - http://www.simpopdf.com

Disposition des bornes

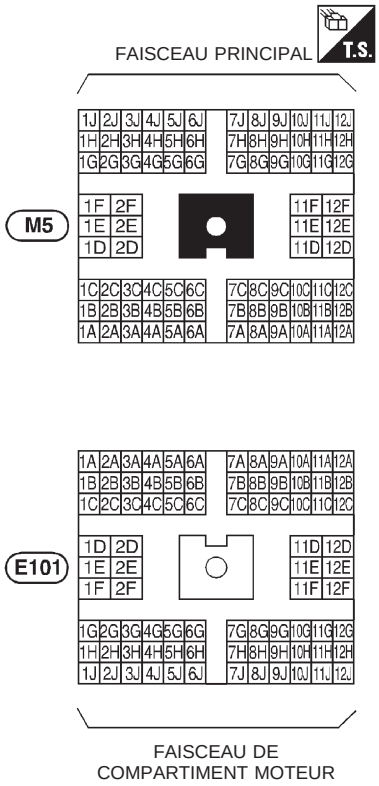

Simpo PDF Merge and Split Unregistered Version - http://www.simpopdf.com

NISSAN

PICKUP

SERIE DES MODELES D22

AVANT-PROPOS

Ce supplément contient des informations sur les opérations d'entretien nécessaires, ainsi que les caractéristiques qui se rapportent à la nouvelle version des séries D22.

Toutes les informations, illustrations et caractéristiques contenues dans ce supplément sont basées sur les derniers renseignements disponibles au moment de la publication. Si le véhicule NISSAN ne répond pas aux caractéristiques indiquées dans ce supplément, consulter son concessionnaire NISSAN.

Nous nous réservons tous droits d'effectuer des changements dans les caractéristiques et les méthodes, à tout moment et sans préavis.

Edition : Février 1998
Imprimé : Aôut 1998 (01)
Numéro de Publication : SM8F-D22SE0E

NISSAN EUROPE S.A.S.

TABLE DE REFERENCE RAPIDE

GENERALITES	GI
ENTRETIEN	MA
ELEMENTS DU MOTEUR	EM
CIRCUIT DE LUBRIFICATION DU MOTEUR ET CIRCUIT DE REFROIDISSEMENT	LC
SYSTEME DE GESTION MOTEUR	EC
SYSTEMES DE COMMANDE D'ACCELERATEUR, D'ALIMENTATION ET D'ECHAPPEMENT	FE
EMBRAYAGE	CL
BOITE DE VITESSES MANUELLE	MT
BOITE DE TRANSFERT	TF
ARBRE DE TRANSMISSION ET PORTE-DIFFERENTIEL	PD
ESSIEU ET SUSPENSION AVANT	FA
ESSIEU ET SUSPENSION ARRIERE	RA
SYSTEME DE FREINAGE	BR
DIRECTION	ST
SYSTEME DE RETENUE	RS
CARROSSERIE ET GARNITURE	BT
CHAUFFAGE ET CLIMATISEUR	HA
EQUIPEMENT ELECTRIQUE	EL
TABLE ALPHABETIQUE	IDX

© 1998 NISSAN EUROPE S.A.S. Imprimé aux Pays-Bas
Cette publication ne peut être reproduite, que ce soit en tout ou en partie, sans la permission préalable écrite de Nissan Europe S.A.S., Paris, France.

Simpo PDF Merge and Split Unregistered Version - http://www.simpopdf.com

AVANT-PROPOS

Ce manuel contient les travaux d'entretien et de réparation concernant les véhicules NISSAN PICKUP, série des modèles D22.

A des fins de sécurité et pour que le rendement des véhicules concernés soit optimal, prière de lire ce manuel complètement. Avant de commencer à entreprendre des travaux, il est particulièrement important d'avoir parfaitement assimilé les PRECAUTIONS signalées dans la section GI.

Toutes les informations contenues dans ce manuel sont basées sur les données de production les plus récentes au moment de la réalisation du manuel. Nous nous réservons le droit de modifier les caractéristiques et les méthodes de travail à n'importe quel moment et sans avis préalable.

NOTE IMPORTANTE DE SECURITE

Un entretien correctement effectué est essentiel, aussi bien pour la sécurité des mécaniciens que pour le fonctionnement adéquat du moteur. Les méthodes d'entretien reprises dans ce manuel de réparation sont décrites de telle manière que le travail puisse être effectué en sécurité et avec précision. Les entretiens varient selon les procédures, les connaissances du technicien et l'outillage, ainsi que les pièces disponibles. Dès lors, toute personne utilisant les procédures d'entretien, un outillage ou des pièces qui ne sont pas spécifiquement recommandées par NISSAN doit auparavant être absolument certain que ceci n'entraîne de danger ni pour sa propre sécurité, ni pour celle du moteur.

NISSAN EUROPE S.A.S.

Service Engineering Section

Paris, France

Simpo PDF Merge and Split Unregistered Version - http://www.simpopdf.com

<SUPPLEMENT-I>

SECTION GI

PRESENTATION DES MODIFICATIONS :

Les changements suivants ont été effectués.

Moteur

- Le moteur TD25Ti a été ajouté pour l'Europe.

Circuit électrique

- Un climatiseur automatique a été ajouté pour l'Europe.

TABLE DES MATIERES

PRECAUTIONS 1003
Précautions pour le turbocompresseur 1003
SYSTEME DE VERIFICATION CONSULT 1004
Equipement de vérification 1004
IDENTIFICATIONS 1005
Variantes de modèles 1005
Dimensions 1008

Simpo PDF Merge and Split Unregistered Version - http://www.simpopdf.com

Précautions pour le turbocompresseur

La turbine du turbocompresseur tourne à des vitesses rapides et atteint des températures très élevées. Il est donc essentiel de maintenir une alimentation en huile propre vers le turbocompresseur et de suivre toutes les instructions d'entretien et de fonctionnement.
Pour que le système fonctionne bien, suivre la méthode indiquée ci-dessous.

1. Utiliser toujours l'huile conseillée. Suivre les instructions pour vidanger en temps utile l'huile et pour compléter le niveau.
2. Eviter d'accélérer à un régime élevé immédiatement après le démarrage.
3. Si le moteur a fonctionné à un régime élevé pendant une période de temps prolongée, le laisser tourner au ralenti pendant quelques minutes avant de l'arrêter.

Simpo PDF Merge and Split Unregistered Version - http://www.simpopdf.com

Equipement de vérification

Pour commander les accessoires ci-dessous, contacter un distributeur NISSAN.

Nom de l'outil	Description
CONSULT NISSAN ① Boîtier CONSULT avec ses accessoires ② Carte programme ● AE950 pour l'Australie ● EF980 sauf pour l'Australie ● NATS-E940* pour NATS	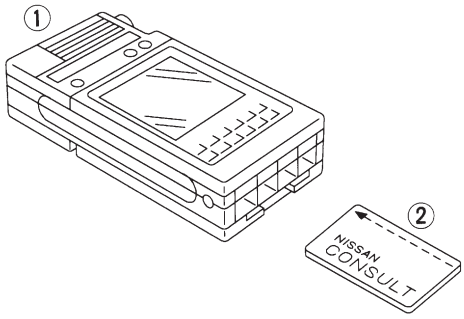 NT004

* : Pour commander la carte de programme NATS, envoyer un bon de commande à NISSAN EUROPE N. V. uniquement.

Simpo PDF Merge and Split Unregistered Version - http://www.simpopdf.com

Variantes de modèles

PICKUP (2 roues motrices)

Destination	Catégorie			Modèle		Moteur	Boîte de vitesses	Porte-différentiel
	Empattement	Cabine	Catégorie	Conduite à gauche	Conduite à droite			
Zones générales (Sauf pour l'Australie, le Moyen-Orient et l'Europe)	Standard	Cabine simple	STD	ABKALCFD22SWL	—	NA20S	FS5W71C	C200
	Long	Cabine simple	STD	ABKGLCFD22SWL	ABKGRCFD22SWL	NA20S		
				AVPGLCFD22NWL	AVPGRCFD22NWL	TD27		
		Cabine double	STD	CBKGLCFD22SWL	CBKGRCFD22SWL	NA20S		
			ST	CBKGLEFD22SWL	—			
			STD	CVPGLCFD22NWL	CVPGRCFD22NWL	TD27		
Australie	Long	Cabine simple	STD	—	ABFGRCFD22EML	KA24E		
			DX	—	ABFGRDFD22EML			
				—	AVPGRDFD22NML	TD27		
		Cabine double	DX	—	CBFGRDFD22EML	KA24E		
			ST	—	CBFGREFD22EML			
			DX	—	CVPGRDFD22NML	TD27		
Moyen-Orient	Standard	Cabine simple	DX	ABEALDFD22SKL	—	Z24S		
			ST	ABEALEFD22SKL	—			
			DX	AVPALDFD22NKL	—	TD27		
	Long		STD	ABEGLCFD22SKL	—	Z24S		
		Cabine double	DX	CBEGLDFD22SKL	—	Z24S		
			ST	CBEGLEFD22SKL	—			
			SE	CBEGLFFD22SKL	—			
			DX	CVPGLDFD22NKL	—	TD27		
Europe	Long	Cabine simple	STD	AVNGLCFD22NQL	AVNGRCFD22NQL	TD25		
			DX	AVNGLDFD22NQL	AVNGRDFD22NQL			
		Grande cabine	DX	BVNGLDFD22NQN	BVNGRDFD22NQN			
				BBFGLDFD22EQN	—	KA24E		
		Cabine double	DX	CVNGLDFD22NQN	—	TD25		

PICKUP (4 roues motrices)

Destination	Catégorie			Modèle		Moteur	Boîte de vitesses	Porte-différentiel		Boîte de transfert
	Empattement	Cabine	Catégorie	Conduite à gauche	Conduite à droite			Avant	Arrière	
Zones générales (Sauf pour l'Australie, le Moyen-Orient et l'Europe)	Long	Cabine simple	STD	ABEULCFD22SWL	ABEURCFD22SWL	Z24S	FS5W71C	R180A	H233B	TX10A
				AVRULCFD22NWL	AVRURCFD22NWL	QD32	FS5R30A		H233B	
		Cabine double	STD	CBEULCFD22SWN	CBEURCFD22SWN	Z24S	FS5W71C		H233B	
				—	CVRURCFD22NWN	QD32	FS5R30A		H233B	
				CBFULCFD22EWN	—	KA24E	FS5W71C		C200	
				CVRULCFD22NWN	—	QD32	FS5R30A		H233B	
			SE	CBFULFFD22EWN	—	KA24E	FS5W71C		C200	
				CVRULFFD22NWN	—	QD32	FS5R30A		H233B	
Australie		Cabine simple	DX	—	ABFURDFD22EML	KA24E	FS5W71C		C200	
			STD	—	AVRURCFD22NML	QD32	FS5R30A		H233B	
			DX	—	AVRURDFD22NML					
		Cabine double	DX	—	CBFURDFD22EMN	KA24E	FS5W71C		C200	
			DX	—	CVRURDFD22NMN	QD32	FS5R30A		H233B	
			ST	—	CVRUREFD22NMN					
Moyen-Orient		Cabine simple	DX	—	ABEULDFD22SKL	Z24S	FS5W71C		H233B	
		Cabine double		—	CBEULDFD22SKN					
Europe	Long	Cabine simple	STD	AVNULCFD22UQL	AVNURCFD22UQL	TD25Ti	FS5R30A		H233B	
			DX	AVNULDFD22UQL	AVNURDFD22UQL					
		Grande cabine	DX	BVNULDFD22UQN	BVNURDFD22UQN					
				BBFULDFD22EQN	—	KA24E	FS5W71C		C200	
			ST	BVNULEFD22UQN	—	TD25Ti	FS5R30A		H233B	
		Cabine double	DX	CVNULDFD22UQN	CVNURDFD22UQN					
				CBFULDFD22EQN	—	KA24E	FS5W71C		C200	
			ST	CVNULEFD22UQN	—	TD25Ti	FS5R30A		H233B	

Simpo PDF Merge and Split Unregistered Version - http://www.simpopdf.com

Simpo PDF Merge and Split Unregistered Version - http://www.simpopdf.com

Variantes de modèles (Suite)

Significations des préfixes et des suffixes (Pickup)

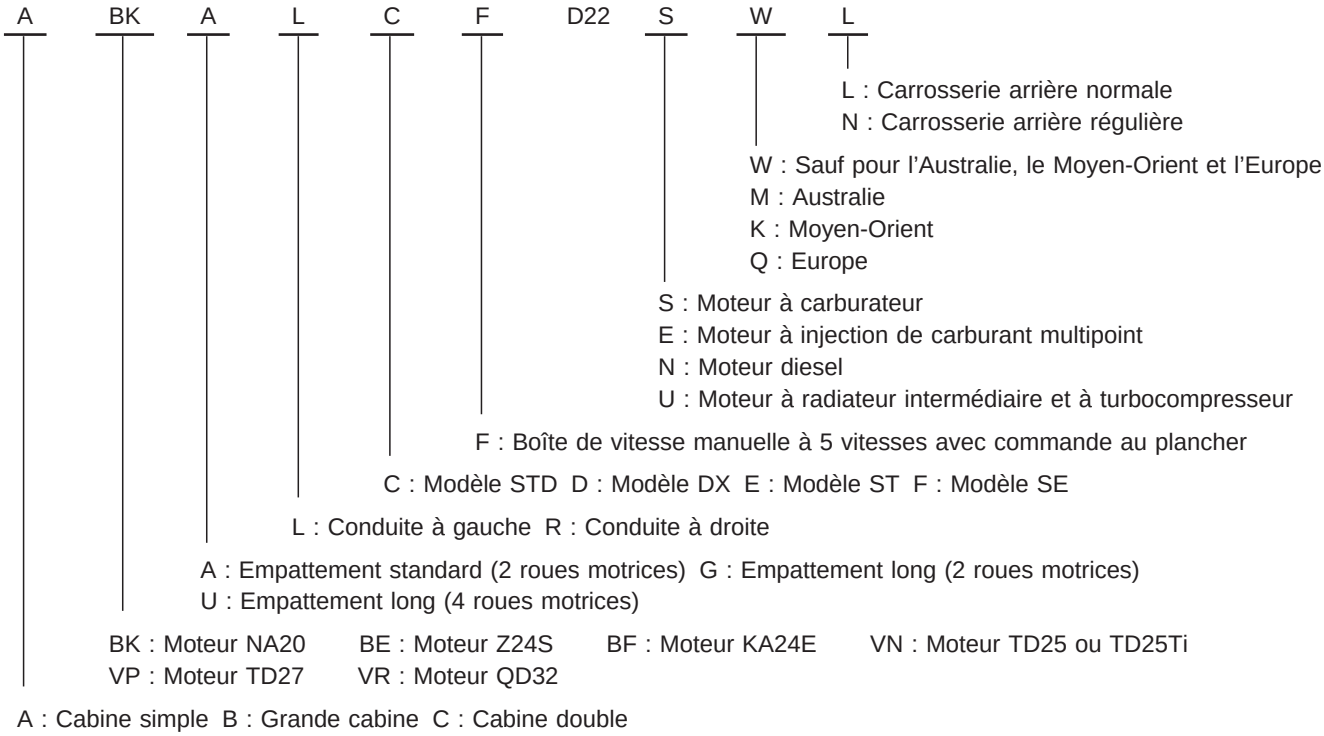

Simpo PDF Merge and Split Unregistered Version - http://www.simpopdf.com

Dimensions

Destination			Europe				
Type de véhicule			Modèle à 2 roues motrices			Modèle à 4 roues motrices	
Empattement			Long			Long	
Type à cabine complète ou plateau			Cabine simple	Grande cabine	Cabine double	Grande cabine	Cabine double
Longueur hors tout*1		mm	4 975	4 975	4 885	4 975	4 885
Largeur hors tout		mm	1 690	1 690	1 690	1 820	1 820
Hauteur hors tout		mm	1 600	1 620*2	1 610	1 700	1 720
Empattement		mm	2950	2 950	2 950	2 950	2 950
Voie	Avant	mm	1 395	1 395	1 395	1 525	1 525
	Arrière	mm	1 390	1 390	1 390	1 505	1 505
Garde au sol minimum		mm	190*3	200	190*3	230 215*4	230 215*4

*1 : sur les modèles équipés de pare-chocs/marche, le pare-chocs ajoute une longueur de 155 mm à la longueur hors tout donnée ci-dessus.

*2, *3 : pour les modèles équipés de pneus 195R14C, ajouter 10 mm à la hauteur hors-tout en garde au sol minimum.

*4 : pour les modèles équipés du moteur TD25Ti.

Simpo PDF Merge and Split Unregistered Version - http://www.simpopdf.com

<SUPPLEMENT-I>

CHAUFFAGE ET CLIMATISEUR

SECTION HA

AVIS DE MODIFICATION :

- Les schémas de cablâge ont été modifiés.
- Un climatiseur automatique a été ajouté pour les modèles européens avec conduite à gauche.

TABLE DES MATIERES

MANUEL

DIAGNOSTICS DES DEFAUTS 1003
Schéma de circuit - Climatiseur 1003
Schéma de câblage - A/C - 1004
Vérification de l'alimentation électrique principale et du circuit de mise à la masse 1007
Procédure de diagnostic 1008
Inspection des composants électriques 1010

AUTO

DESCRIPTION 1012
Introduction 1012
Caractéristiques 1012
Fonctionnement des commandes 1013
DIAGNOSTICS DES DEFAUTS 1014
Comment effectuer un diagnostic des défauts permettant une réparation rapide et efficace .. 1014
Vérification du fonctionnement 1015
Tableau des symptômes 1017
Résistance de contrôle 1019
Vérification préliminaire 1020
Emplacement des composants 1023
Schéma de circuit - Climatiseur automatique/ Conduite à gauche 1024
Schéma de circuit - Boîtier de commande à poussoirs/Conduite à gauche 1025
Schéma de cablâge - A/C, A -/Conduite à gauche 1026
Vérification de l'alimentation électrique principale et du circuit de mise à la masse 1032
Procédure de diagnostic 1 1034
Procédure de diagnostic 2 1036
Procédure de diagnostic 3 1037
Procédure de diagnostic 4 1039
Procédure de diagnostic 5 1040
Procédure de diagnostic 6 1041
Procédure de diagnostic 7 1044
Procédure de diagnostic 8 1045
Procédure de diagnostic 9 1047
Procédure de diagnostic 10 1048
Procédure de diagnostic 11 1051
Procédure de diagnostic 12 1052
Procédure de diagnostic 13 1053
Procédure de diagnostic 14 1054
Procédure de diagnostic 15 1056
Inspection des composants électriques 1059
Système de commande à poussoirs 1062
Dépose et repose 1064
Révision - Ensemble de boîtier de commande à poussoirs 1064
Réglage de la timonerie de commande 1066
DESCRIPTION DU SYSTEME 1068
Aperçu général du système de commande 1068
Composants d'entrée du système de commande 1068
Amplificateur automatique du système de commande (ampli. auto) 1072
Composants de sortie du système de commande 1076

MANUEL ET AUTO

PROCEDURES D'ENTRETIEN 1088
Canalisations de réfrigération 1088
Fixation du compresseur 1090

Simpo PDF Merge and Split Unregistered Version - http://www.simpopdf.com

Caractéristiques générales 1095
Inspection et réglage 1095

Lecture des schémas de câblage :
- **Lire la section GI : ‘‘COMMENT LIRE LES SCHEMAS DE CABLAGE’’.**
- **Voir la section EL, ‘‘DISPOSITION DE L’ALIMENTATION ELECTRIQUE’’ pour connaître les circuits de distribution de l’alimentation électrique.**

Se reporter aux chapitres ‘‘COMMENT LIRE LES ORGANIGRAMMES DANS LES DIAGNOSTICS DES DEFAUTS’’ et ‘‘COMMENT EFFECTUER UN DIAGNOSTIC EFFICACE EN CAS D’INCIDENT ELECTRIQUE’’ à la section GI pour effectuer les diagnostics des défauts.

Simpo PDF Merge and Split Unregistered Version - http://www.simpopdf.com

Schéma de circuit — Climatiseur

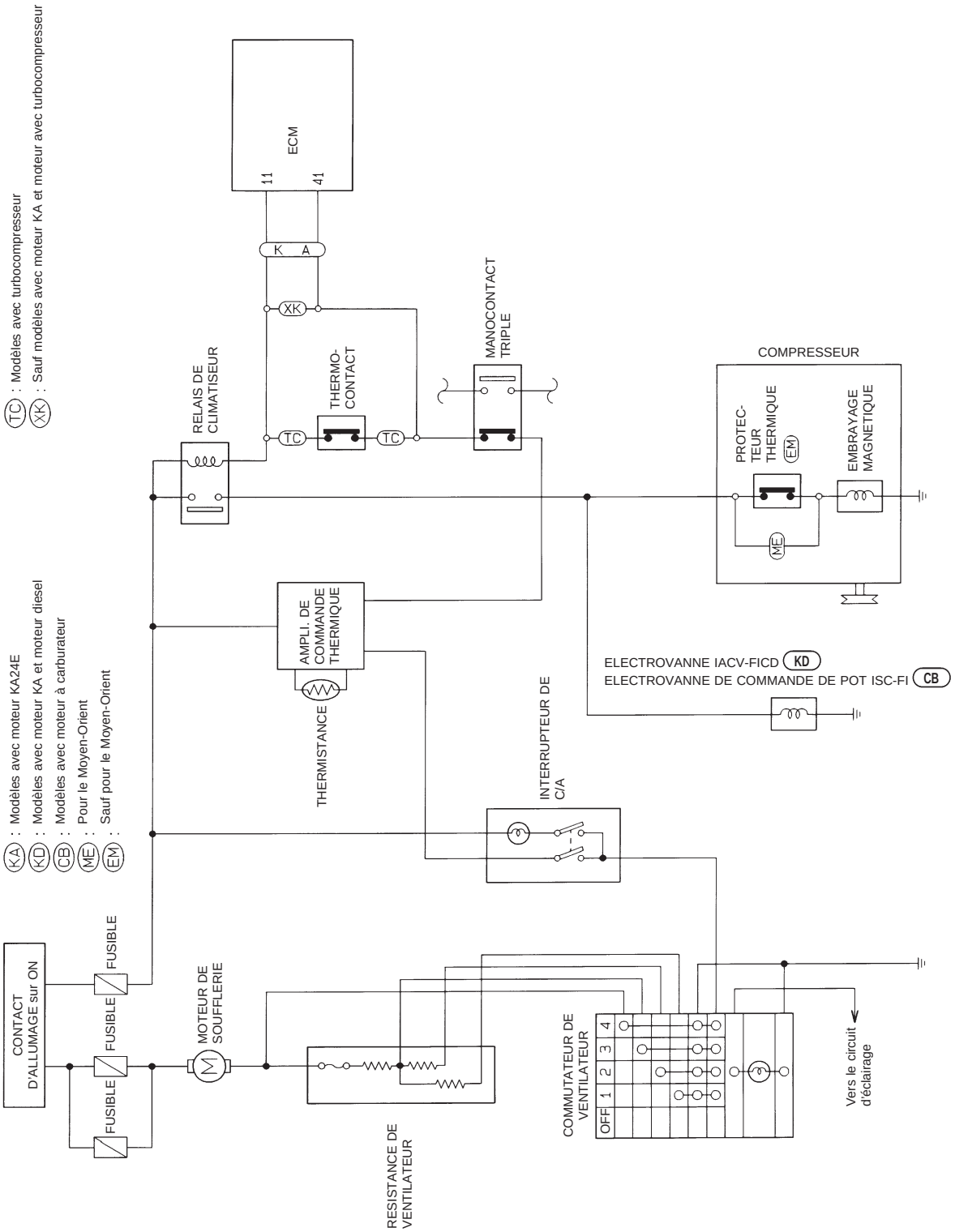

HHA148

Simpo PDF Merge and Split Unregistered Version - http://www.simpopdf.com

Schéma de câblage — A/C —

HA-A/C, M-04

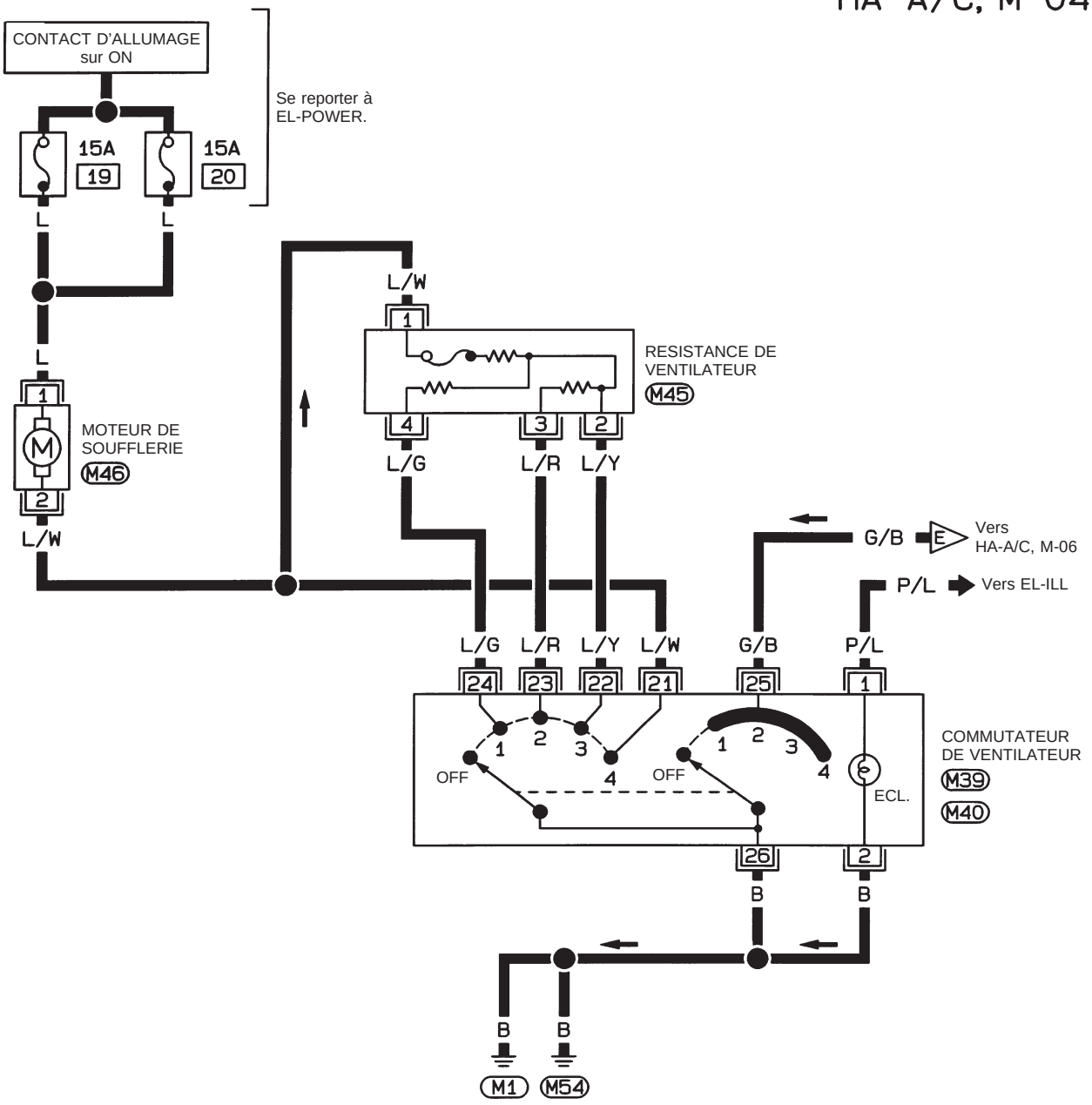



HHA133

Simpo PDF Merge and Split Unregistered Version - http://www.simpopdf.com

Schéma de câblage — A/C — (Suite)

HA-A/C, M-05

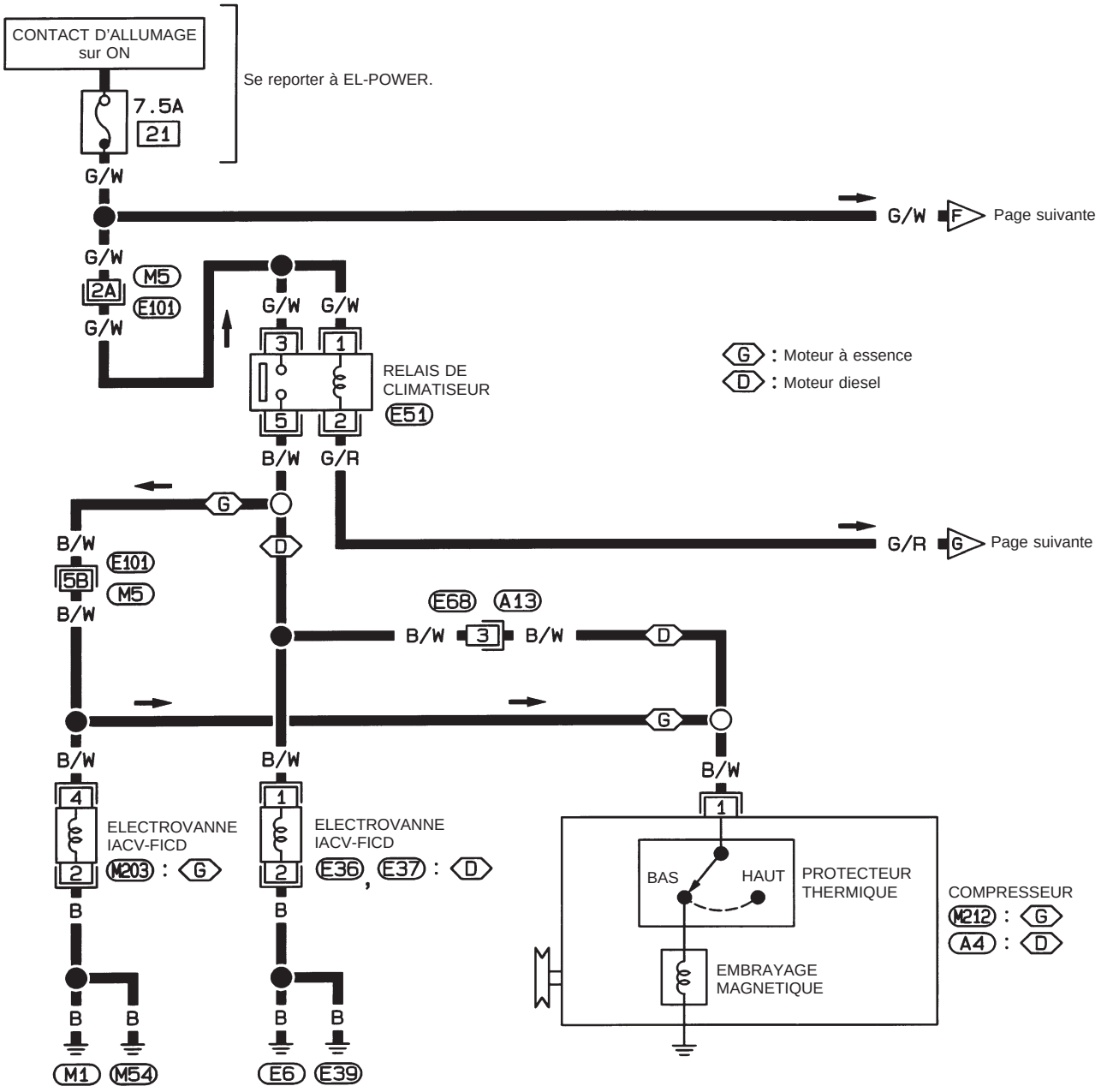

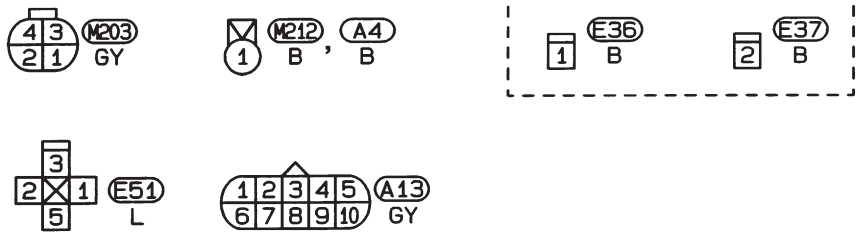

Se reporter à la dernière page dépliante.
M5, E101

HHA134

Simpo PDF Merge and Split Unregistered Version - http://www.simpopdf.com

Schéma de câblage — A/C — (Suite)

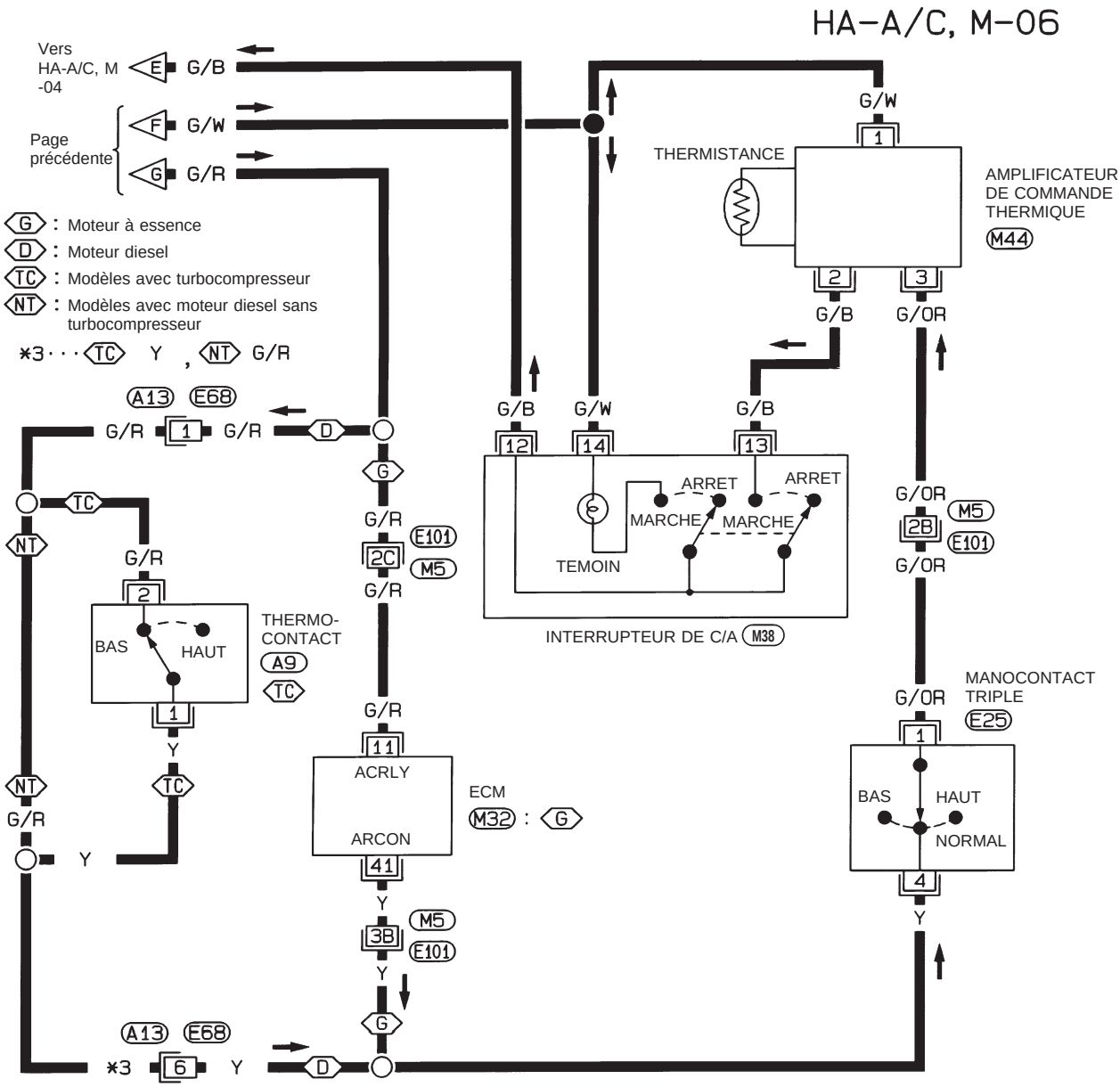

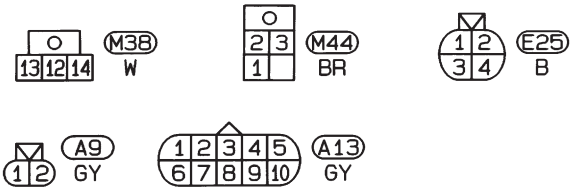

Se reporter à la dernière page dépliante.

M5 , E101

M32

HHA149

Simpo PDF Merge and Split Unregistered Version - http://www.simpopdf.com

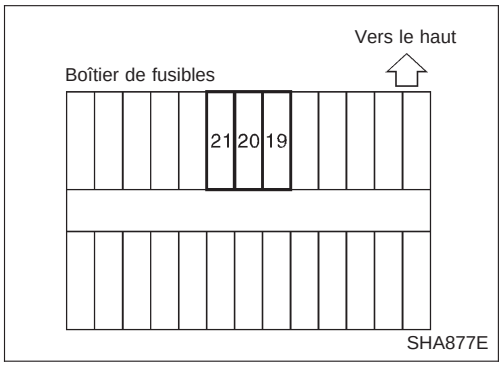

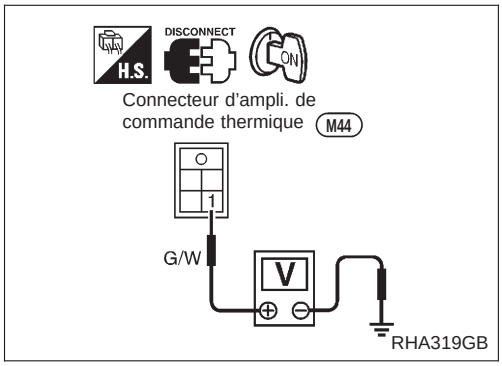

Vérification de l'alimentation électrique principale et du circuit de mise à la masse

VERIFICATION DU FUSIBLE DE L'ALIMENTATION ELECTRIQUE DU SYSTEME DE C/A

Vérifier les fusibles suivants.

- Fusible de 15A (n° 19 et 20) du moteur de soufflerie.
- Fusible de 7,5A (n° 21) de l'ampli. de commande thermique.

Pour de plus amples détails sur le circuit, se reporter au ''Schéma de câblage''.

VERIFICATION DE L'AMPLI. DE COMMANDE THERMIQUE

Vérification du circuit d'alimentation électrique

Vérifier le circuit d'alimentation électrique de l'ampli. de commande thermique lorsque le contact d'allumage est sur ''ON''.

1. Débrancher le connecteur de faisceau de l'ampli. de commande thermique.
2. Brancher le voltmètre du côté faisceau.
3. Mesurer la tension entre la borne ① et la masse de carrosserie.

Borne du voltmètre		Tension
⊕	⊖	
①	Masse de carrosserie	Environ 12V

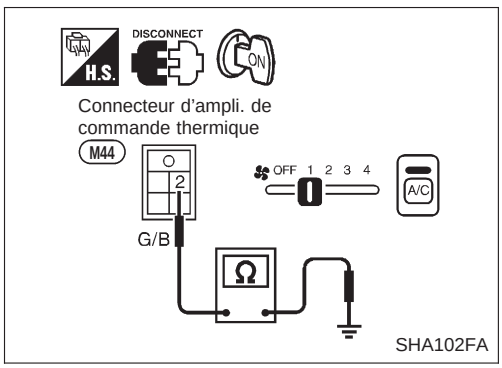

Vérification du circuit de mise à la masse

Vérifier le circuit de mise à la masse de la carrosserie de l'ampli. de commande thermique avec le contact d'allumage sur ''ON'', l'interrupteur de C/A sur ''ON'' et le commutateur de ventilateur sur MARCHE.

1. Débrancher le connecteur de faisceau de l'ampli. de commande thermique.
2. Brancher l'ohmmètre du côté faisceau.
3. Vérifier la continuité entre la borne ② et la masse de carrosserie.

Borne d'ohmmètre		Continuité
⊕	⊖	
②	Masse de carrosserie	Oui

Si le circuit de mise à la masse ne fonctionne pas correctement, vérifier les points suivants.

- Interrupteur de C/A (se reporter à HA-1010).
- Commutateur de ventilateur (se reporter à HA-1010).
- Faisceau ouvert ou court-circuité entre l'ampli. de commande thermique et l'interrupteur de C/A
- Faisceau ouvert ou court-circuité entre l'interrupteur de C/A et le commutateur de ventilateur
- Circuit de mise à la masse du commutateur de ventilateur

Simpo PDF Merge and Split Unregistered Version - http://www.simpopdf.com

A

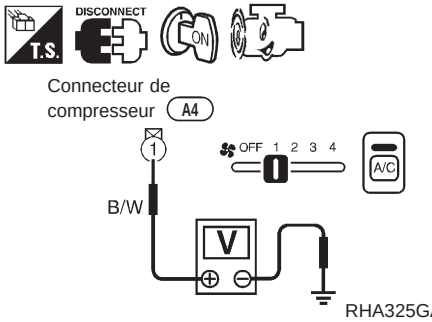

RHA325GA

B

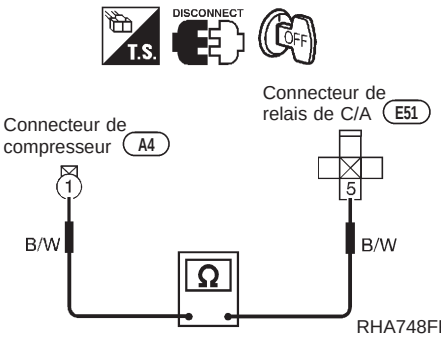

RHA748FF

C

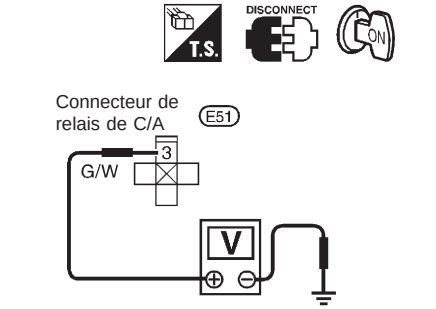

RHA359G

D

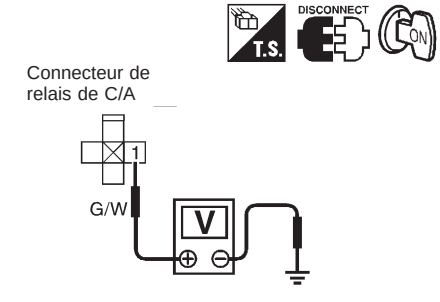

RHA375G

Procédure de diagnostic

SYMPTOME : l'embrayage magnétique ne s'enclenche pas lorsque l'interrupteur de C/A et le commutateur de ventilateur sont enclenchés.

- **Effectuer la VERIFICATION PRELIMINAIRE 1 avant de se reporter à l'organigramme suivant.**

A

VERIFIER L'ALIMENTATION ELECTRIQUE DU COMPRESSEUR.
Débrancher le connecteur de faisceau du compresseur.
Y a-t-il une tension d'environ 12 volts entre la borne ① du faisceau de compresseur et la masse de carrosserie ?

Oui → Vérifier les points suivants.
- Bobine d'embrayage magnétique
- Protecteur thermique

Mauvais → Remplacer l'embrayage magnétique. Se reporter à HA-1091.

Non ↓

B

Note

Vérifier la continuité du circuit entre la borne ⑤ du faisceau de relais de C/A et la borne ① du faisceau de compresseur.
Il doit y avoir continuité.
Si le résultat est satisfaisant, vérifier que le faisceau n'est pas court-circuité.

Bon ↓

C

VERIFIER L'ALIMENTATION ELECTRIQUE DU RELAIS DE C/A.
Y a-t-il une tension d'environ 12 volts entre la borne ③ du faisceau de relais de C/A et la masse de carrosserie ?

Non → Vérifier le circuit de l'alimentation électrique et le fusible de 7,5A (n° 21, situé dans le boîtier à fusibles).
(Se reporter à "DISPOSITION DE L'ALIMENTATION ELECTRIQUE" dans la section EL et à son schéma de câblage).

Oui ↓

D

VERIFIER L'ALIMENTATION ELECTRIQUE DU RELAIS DE C/A.
Y a-t-il une tension d'environ 12 volts entre la borne ① du faisceau de relais de C/A et la masse de carrosserie ?

Oui → Vérifier le circuit de l'alimentation électrique et le fusible de 7,5A (n° 21, situé dans le boîtier à fusibles).
(Se reporter à "DISPOSITION DE L'ALIMENTATION ELECTRIQUE" dans la section EL et à son schéma de câblage).

Non ↓

VERIFIER LE RELAIS DE C/A APRES L'AVOIR DECONNECTE.
Se reporter à HA-1010.

Mauvais → Remplacer le relais de C/A.

Bon ↓

Reconnecter le relais de C/A.

Ⓐ

(Passer à la page suivante).

Simpo PDF Merge and Split Unregistered Version - http://www.simpopdf.com

Procédure de diagnostic (Suite)

E

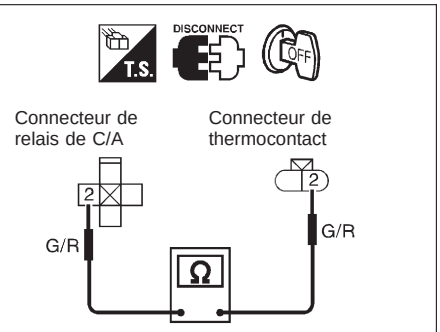

RHA980G

F

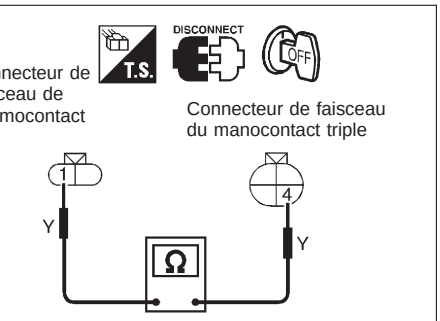

RHA981G

G

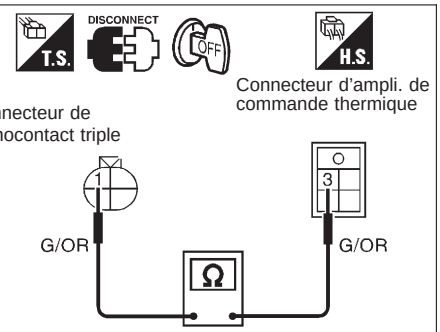

RHA328GA

Ⓐ

E — Note

Vérifier la continuité du circuit entre la borne n° ② du faisceau de relais de C/A et la borne n° ② du faisceau de thermocontact.
Il doit y avoir continuité.
Si le résultat est satisfaisant, vérifier que le faisceau n'est pas court-circuité.

Bon ↓

F — Note

Vérifier la continuité du circuit entre la borne n° ① du faisceau du thermocontact et la borne n° ④ du faisceau de manocontact triple.
Il doit y avoir continuité.
Si le résultat est satisfaisant, vérifier que le faisceau n'est pas court-circuité.

Bon ↓

VERIFIER LE THERMOCONTACT.
Se reporter à HA-1011.

↓

VERIFIER LE MANOCONTACT TRIPLE.
Se reporter à HA-1011.

Mau-vais → Vérifier la quantité de la charge de réfrigérant.

Bon ↓

Vérifier la quantité de la charge de réfrigérant. → Bon ↓ Remplacer le manocontact triple.

Bon ↓

G — Note

Vérifier la continuité du circuit entre la borne n° ① du faisceau du manocontact triple et la borne n° ③ du faisceau de l'ampli. de commande thermique.
Il doit y avoir continuité.
Si le résultat est satisfaisant, vérifier que le faisceau n'est pas court-circuité.

Bon ↓

VERIFIER L'ALIMENTATION ELECTRIQUE ET LE CIRCUIT DE MASSE DE L'AMPLI. DE COMMANDE THERMIQUE.
Se reporter à HA-1011.

Bon ↓

Remplacer l'ampli. de commande thermique.

Note :
Si le résultat est mauvais ou ''Non'' après la vérification de la continuité du circuit, réparer le faisceau ou le connecteur.

Simpo PDF Merge and Split Unregistered Version - http://www.simpopdf.com

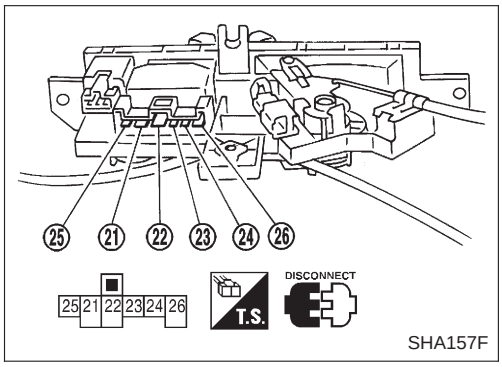

SHA157F

Inspection des composants électriques

COMMUTATEUR DE VENTILATEUR

Vérifier la continuité entre les bornes à chaque position de la commande.

Position du curseur	Continuité entre les bornes
OFF	
1	㉔ — ㉖ — ㉕
2	㉓ — ㉖ — ㉕
3	㉒ — ㉖ — ㉕
4	㉑ — ㉖ — ㉕

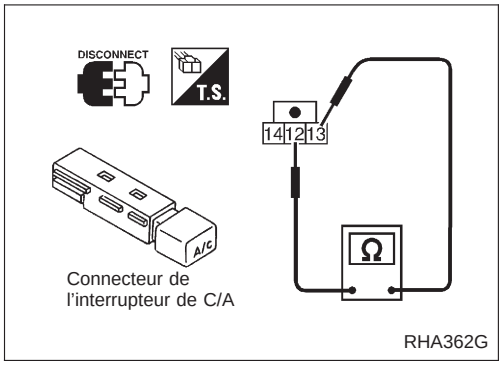

Connecteur de l'interrupteur de C/A

RHA362G

INTERRUPTEUR DE C/A

Vérifier la continuité entre les bornes à chaque position de l'interrupteur.

Position de l'interrupteur	N° de borne		Continuité
A/C	⊕	⊖	
Marche	⑬	⑫	Oui
Arrêt			Non

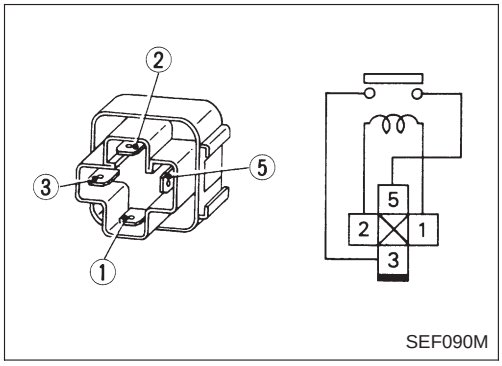

SEF090M

RELAIS DE C/A

Vérifier la continuité entre les bornes n° ③ et ⑤.

Conditions	Continuité
Alimentation en courant continu de 12 volts entre les bornes ① et ②	Oui
Pas d'alimentation	Non

Si le résultat n'est pas satisfaisant, remplacer le relais.

Simpo PDF Merge and Split Unregistered Version - http://www.simpopdf.com

Inspection des composants électriques (Suite)

MANOCONTACT TRIPLE

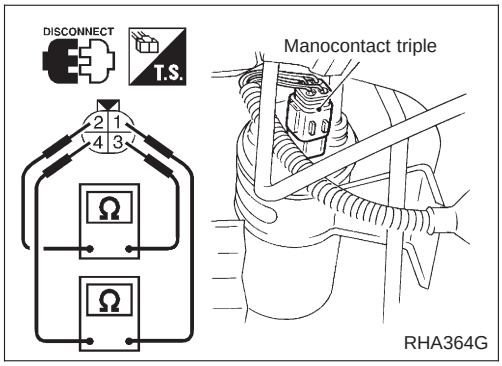

	Bornes	Pression de la canalisation côté haute pression kPa (bar, kg/cm^2)	Fonctionnement	Continuité
Côté basse pression	① - ④	Augmentant jusqu'à 152,0 - 201,0 (1,520 - 2,010, 1,55 - 2,05)	Marche	Existe.
		Diminuant jusqu'à 152,0 - 201,0 (1,520 - 2,010, 1,55 - 2,05)	Arrêt	N'existe pas.
Côté pression moyenne*	② - ③	Augmentant jusqu'à 1 422 - 1 618 (14,22 - 16,18, 14,5 - 16,5)	Marche	Existe.
		Diminuant jusqu'à 1 128 - 1 422 (11,28 - 14,22, 11,5 - 14,5)	Arrêt	N'existe pas.
Côté haute pression	① - ④	Diminuant jusqu'à 2 059 - 2 256 (20,6 - 22,6, 21 - 23)	Marche	Existe.
		Augmentant jusqu'à 2 648 - 2 844 (26,5 - 28,4, 27 - 29)	Arrêt	N'existe pas.

* Pour le fonctionnement du moteur de ventilateur de refroidissement

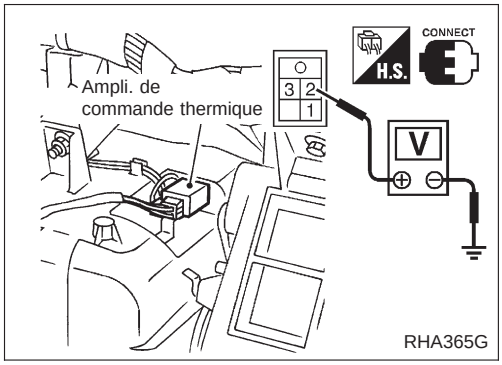

AMPLI. DE COMMANDE THERMIQUE

Température de l'air de sortie de l'évaporateur °C	Fonctionnement de l'ampli. thermique	Vérificateur
Diminuant jusqu'à 0,1 - 0,9	Mettre sur ARRET	Environ 12V
Augmentant jusqu'à 2,5 - 3,5	Mettre sur MARCHE	Environ 0V

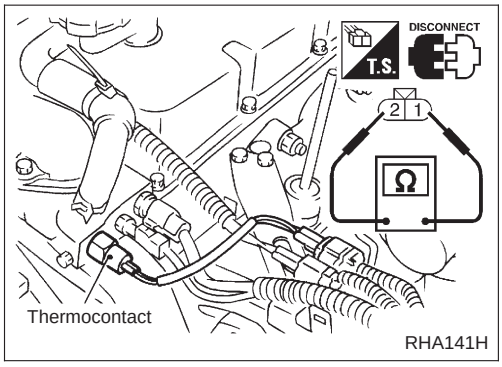

THERMOCONTACT

Température de l'eau °C	N° de borne		Continuité
	⊕	⊖	
Au-dessus de 105	①	②	Non
Inférieure à 100			Oui

Simpo PDF Merge and Split Unregistered Version - http://www.simpopdf.com

Introduction

Le système de contrôle automatique de température (ATC) permet une régulation automatique de la température d'air déchargé et du volume d'air déchargé (vitesse de soufflerie).
Le volet de sortie d'air, le volet d'admission et l'embrayage magnétique du compresseur sont contrôlés par l'opération manuelle de chaque commande.

Caractéristiques

Commande de volet de mélange d'air (contrôle de température automatique).
Le volet de mélange d'air est contrôlé automatiquement afin que la température à l'intérieur du véhicule soit atteinte et maintenue à la température désirée par l'utilisateur. Pour une température de référence donnée, la position du volet de mélange d'air dépendra de : la température ambiante, la température de l'habitacle, l'importance de l'ensoleillement, la température de référence et les signaux de l'interrupteur de C/A.

Contrôle de la vitesse du ventilateur
Lorsque la commande du commutateur du ventilateur est sur la position Auto, la vitesse de soufflerie est automatiquement contrôlée selon : la température de l'air ambiant, la température de l'habitacle, la quantité d'ensoleillement, la température choisie et les signaux de l'interrupteur de C/A. Elle est aussi contrôlée par l'opération manuelle de la commande du commutateur du ventilateur.

Commande de vitesse de ventilateur ou démarrage
Lorsque la température du réfrigérant moteur est basse, la position du volet de sortie d'air est détectée par le microcontact et si ce dernier est mis sur B/L, FOOT ou FOOT/DEF, la vitesse de la soufflerie est contrôlée pour empêcher une grande quantité d'air froid d'être emmagasinée par le plancher.

Commande du volet de sortie
Elle peut être sélectionnée en faisant fonctionner le sélecteur de mode.

Commande de volet d'admission d'air
Elle peut être sélectionnée en changeant la position de l'interrupteur REC.

Commande de l'embrayage magnétique du compresseur
Lorsque l'interrupteur de C/A est sur marche, le transmetteur détecte la température de l'évaporateur. L'amplificateur de commande thermique contrôle le fonctionnement marche-arrêt de l'embrayage selon la température de l'évaporateur.

Simpo PDF Merge and Split Unregistered Version - http://www.simpopdf.com

Fonctionnement des commandes

Climatiseur automatique

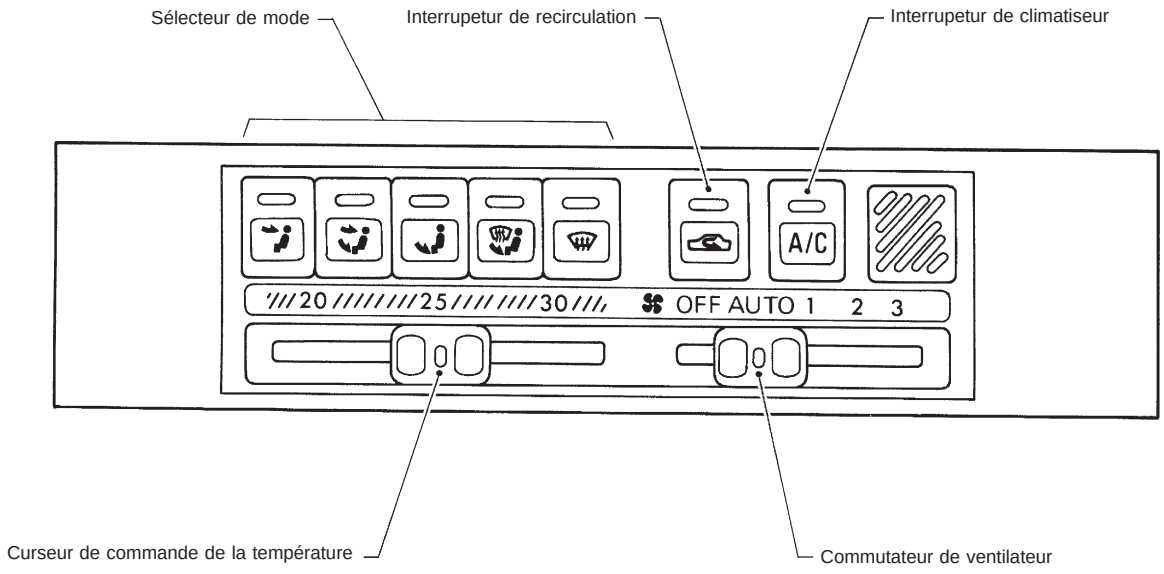

RHA602DA

COMMUTATEUR DE VENTILATEUR

Ce commutateur commande la MISE EN MARCHE et l'ARRET du ventilateur et contrôle sa vitesse.

SELECTEUR DE MODE

Ces interrupteurs permettent à l'air de sortie de circuler.

CURSEUR DE COMMANDE DE LA TEMPERATURE

Ce curseur permet de régler la température de l'air de sortie.

COMMANDE DE RECIRCULATION

Position ARRET :
L'air extérieur est aspiré à l'intérieur du compartiment passager.
Position MARCHE :
L'air intérieur circule à nouveau dans le véhicule.

INTERRUPTEUR DE CLIMATISEUR

Démarrer le moteur, placer le commutateur de ventilateur sur la position voulue (de Auto à 3) puis appuyer sur l'interrupteur de C/A pour mettre le climatiseur en marche. Le témoin s'allumera lorsque le climatiseur se met en marche. Pour arrêter le climatiseur, appuyer de nouveau sur l'interrupteur pour qu'il retrouve sa position originale.

La fonction de refroidissement d'air du climatiseur n'est effective que lorsque le moteur tourne.

Simpo PDF Merge and Split Unregistered Version - http://www.simpopdf.com

Comment effectuer un diagnostic des défauts permettant une réparation rapide et efficace

ORGANIGRAMME

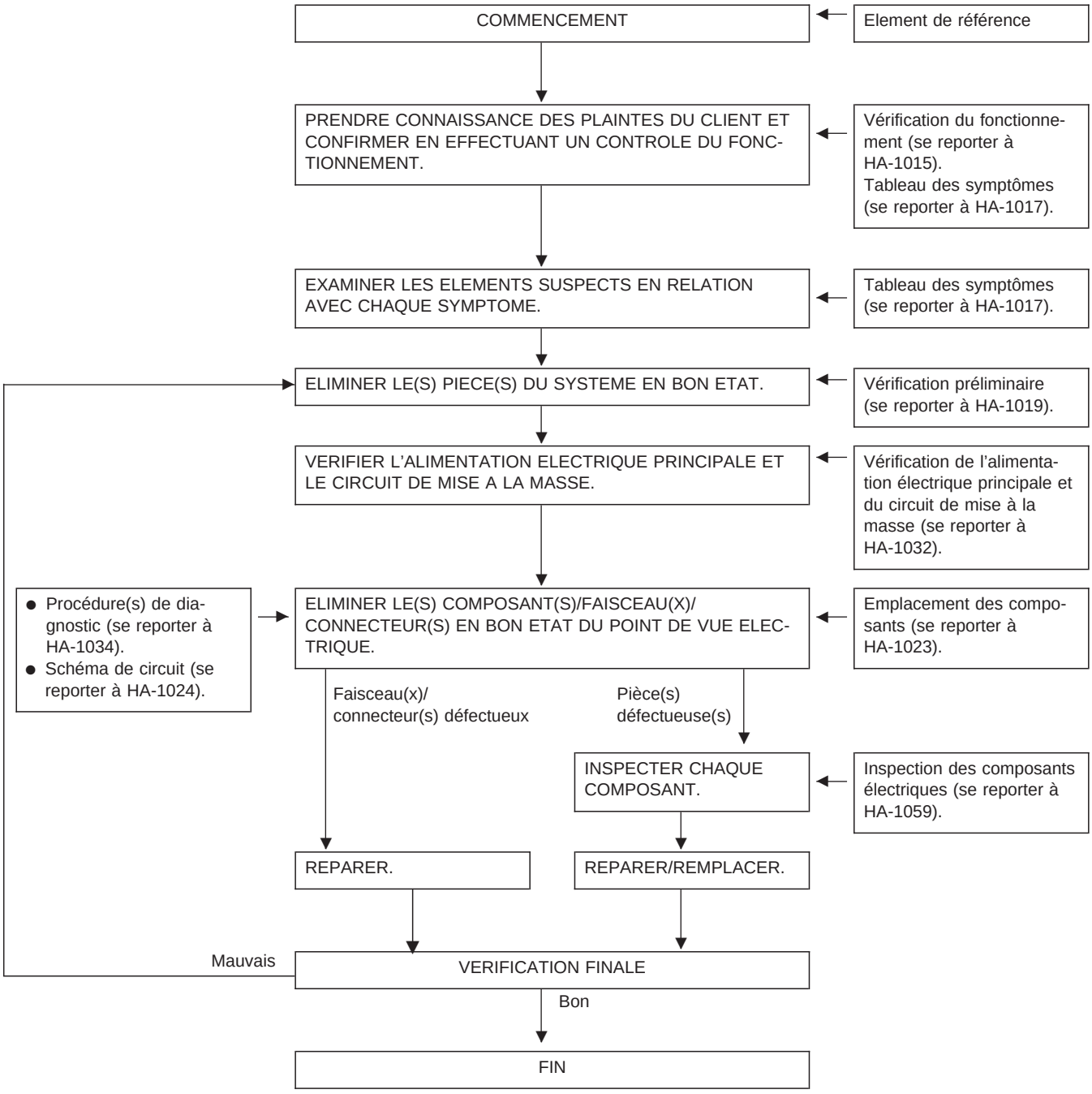

Simpo PDF Merge and Split Unregistered Version - http://www.simpopdf.com

Vérification du fonctionnement

L'objet du contrôle de fonctionnement est de confirmer que le système est dans l'état qui doit être le sien. Les systèmes à contrôler sont la soufflerie, le mode (air de décharge), l'air d'admission, la diminution de température, l'augmentation de température et l'interrupteur de C/A.

CONDITIONS :

Moteur en marche et à température normale de fonctionnement.

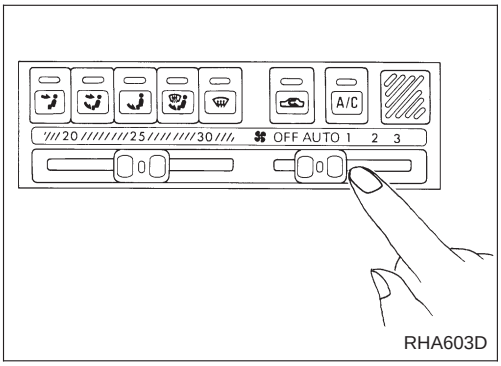

RHA603D

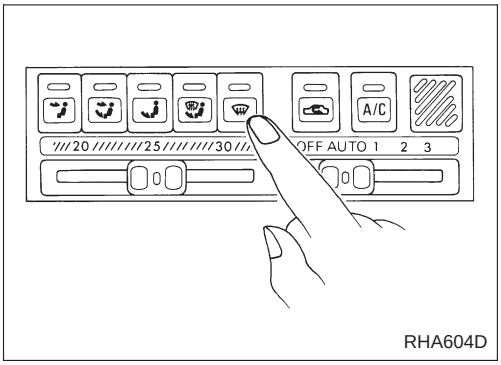

RHA604D

Débit d'air de décharge

Sélecteur de mode	Distribution de l'air de sortie		
	Tableau de bord	Plancher	Dégivreur
	100%	–	–
	70%	30%	–
	40%	60%	–
	40%	30%	30%
	–	–	100%

RHA937G

PROCEDURE :

1. Vérifier la soufflerie.

1) Mettre le commutateur de ventilateur sur AUTO.
   La soufflerie devrait fonctionner à la vitesse AUTO.
2) Puis amener le commutateur à la vitesse 1.
3) Continuer de vérifier la vitesse de soufflerie jusqu'à ce que toutes les vitesses aient été vérifiées.
4) Laisser la soufflerie en vitesse 3.

2. Vérifier l'air de décharge

1) Appuyer sur le bouton .
   L'indicateur VENT devrait s'allumer.
2) S'assurer que tout l'air alimenté sort par les sorties du tableau de bord.
3) Appuyer sur le bouton .
   L'indicateur B/L (bi-niveau) doit s'allumer.
4) S'assurer que l'air de décharge sort par les sorties au tableau de bord et au plancher.
5) Appuyer sur le bouton .
   L'indicateur FOOT (plancher) doit s'allumer.
6) S'assurer que l'air de décharge sort par les sorties au plancher.
7) Appuyer sur le bouton .
   L'indicateur F/D (plancher/dévigrage) doit s'allumer.
8) S'assurer que l'air de décharge sort par les sorties au plancher avec un peu d'air s'échappant des sorties du dégivreur.
9) Apuyer sur le bouton .
   Le témoin DEF (dévigrage) doit s'allumer.
10) S'assurer que tout l'air dispensé sort par les sorties du dégivreur.

Simpo PDF Merge and Split Unregistered Version - http://www.simpopdf.com

Vérification du fonctionnement (Suite)

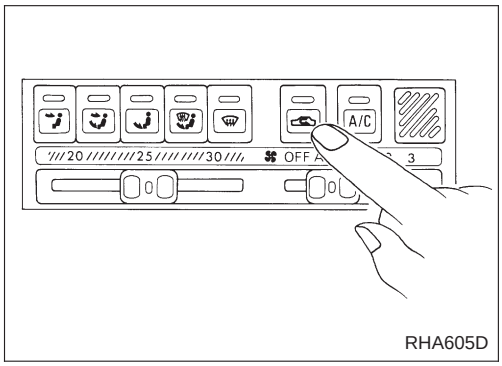

3. Vérifier la recirculation

1) Appuyer sur le bouton .
   Le témoin de RECIRCULATION doit s'allumer.
2) Etre attentif au changement de position du volet d'admission d'air (le bruit de la soufflerie doit se modifier légèrement).

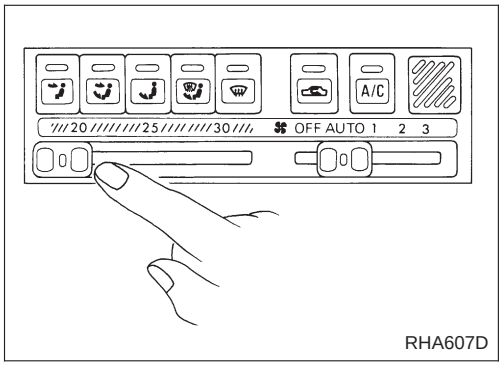

4. Vérifier la diminution de la température.

1) Amener le curseur de commande de la température à la position de FROID maxi.
2) Vérifier la présence d'air froid aux sorties d'air de décharge.

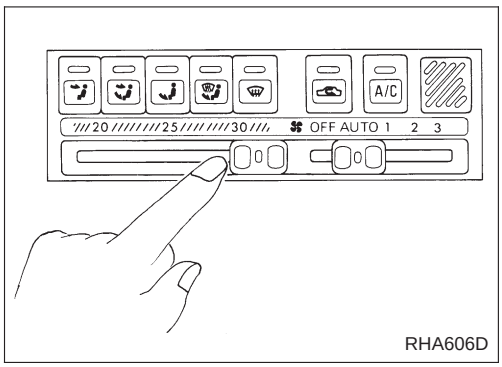

5. Vérifier l'augmentation de la température.

1) Amener le curseur de commande de la température à la position de chaud maxi.
2) Vérifier la présence d'air chaud aux sorties d'air de décharge.

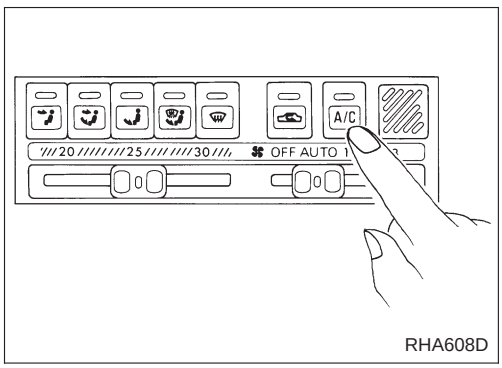

6. Vérifier l'interrupteur de C/A.

Régler le curseur de commande du ventilateur sur la position désirée (de AUTO à 3) et appuyer sur l'interrupteur de C/A pour mettre en marche le climatiseur.
Le témoin s'allumera lorsque le climatiseur se met en marche.

Simpo PDF Merge and Split Unregistered Version - http://www.simpopdf.com

Tableau des symptômes

TABLE DES DIAGNOSTICS

PROCEDURE	Vérification préliminaire			Procédure de diagnostic															Vérification de l'alimentation électrique principale et du circuit de mise à la masse			
PAGE DE REFERENCE	HA-1020	HA-1021	HA-1022	HA-1034	HA-1036	HA-1037	HA-1039	HA-1040	HA-1041	HA-1044	HA-1045	HA-1047	HA-1048	HA-1051	HA-1052	HA-1053	HA-1054	HA-1056	HA-1032	HA-1032	HA-1032	HA-1033
SYMPTOME	Vérification préliminaire 1	Vérification préliminaire 2	Vérification préliminaire 3	Procédure de diagnostic 1	Procédure de diagnostic 2	Procédure de diagnostic 3	Procédure de diagnostic 4	Procédure de diagnostic 5	Procédure de diagnostic 6	Procédure de diagnostic 7	Procédure de diagnostic 8	Procédure de diagnostic 9	Procédure de diagnostic 10	Procédure de diagnostic 11	Procédure de diagnostic 12	Procédure de diagnostic 13	Procédure de diagnostic 14	Procédure de diagnostic 15	Fusibles de 15A	Fusible de 7,5A	Boîtier de commande à poussoirs	Ampli. auto
Le climatiseur ne souffle pas d'air froid.		○		○									○						○	○	○	○
Le moteur de soufflerie ne tourne pas du tout. (commutateur du ventilateur [AUTO] [1] [2] [3])		❶		❷															○	○		
Le moteur de soufflerie ne tourne pas du tout quand la vitesse du ventilateur est sur AUTO (il fonctionne sur vitesse 1, 2 ou 3).					❶														○	○		○
La vitesse du ventilateur du moteur de soufflerie ne change pas lorsque la vitesse du ventilateur est sur AUTO [la vitesse du ventilateur est sur HI (rapide) ou MH (mi-rapide)].						❶													○	○		○
La vitesse du ventilateur du moteur de soufflerie ne change pas lorsque la vitesse du ventilateur est sur AUTO [la vitesse du ventilateur est sur LO (lent)].							❶												○	○		○
La commande de vitesse de ventilateur au démarrage ne fonctionne pas.								❶												○		○
Il y a trop de différence entre la température du PTC et celle de l'habitacle.		❶							❷											○		○
Le moteur de volet de mélange d'air ne fonctionne pas normalement.		❶								❷										○		○
La sortie d'air ne change pas.											❷									○		
Le volet d'admission ne change pas en mode VENT, B/L ou FOOT.	❶											❶								○		
L'embrayage magnétique ne s'engage pas lorsque l'interrupteur de C/A et le commutateur de ventilateur sont sur en marche.													❶							○		
Le circuit du capteur de température ambiante est ouvert ou court-circuité.														❶						○		○
Le circuit du capteur d'habitacle est ouvert ou court-circuité.															❶					○		○
Le circuit du capteur d'ensoleillement est ouvert ou court-circuité.																❶				○		○
Le circuit du transmetteur thermique est ouvert ou court-circuité.																	❶			○		○
L'éclairage, les indicateurs du boîtier de commande à poussoirs ne s'allument pas.																		○		○		
Bruit			❶																			

❶, ❷ : Ces numéros font référence à l'ordre de vérification.
○ : Quant à l'ordre de l'inspection, se reporter à chaque tableau (en fonction de la partie dont le fonctionnement est affecté).

Simpo PDF Merge and Split Unregistered Version - http://www.simpopdf.com

Tableau des symptômes (Suite)

Inspection des composants électriques

| | | |

Simpo PDF Merge and Split Unregistered Version - http://www.simpopdf.com

Résistance de contrôle

Les résistances de contôle sont utilisées pour les diagnostics de défaut du fonctionnement du moteur de soufflerie et pour le fonctionnement du moteur de volet de mélange d'air. Utiliser une résistance de contrôle lors de l'inspection des parties avec C/R *1, C/R *2 dans l'organigramme.

ATTENTION :
Sélectionner les résistances de contrôle dont les valeurs de résistance correspondent à celles indiquées dans le tableau ci-dessous, et les brancher aux connecteurs respectifs.

	Résistance de contrôle	Capteur de température ambiante	Capteur de l'habitacle	Puissance en watts (W)
Vérification du fonctionnement du moteur de soufflerie	C/R *1	1 000Ω	1 500Ω	1/4W
Vérification du fonctionnement du moteur de volet de mélange d'air	C/R *2		2 490Ω	

1. Débrancher les connecteurs de faisceau du capteur de température ambiante et de capteur d'habitacle.
2. Brancher la résistance de contrôle au connecteur de faisceau du capteur de température ambiante et au connecteur de faisceau du capteur d'habitacle lors de l'inspection des parties avec C/R *1, C/R *2 dans l'organigramme des diagnostics de défauts.
3. Mettre le contact sur ''ON''.
4. Mettre l'interrupteur de C/A sur ON (MARCHE).
5. Placer le commutateur VENT sur ON (MARCHE).
6. Tenir le capteur d'ensoleillement à l'abris de la lumière du soleil en le couvrant.

Simpo PDF Merge and Split Unregistered Version - http://www.simpopdf.com

Vérification préliminaire

VERIFICATION PRELIMINAIRE 1

Le volet d'admission n'est pas positionné sur ''FRESH''.

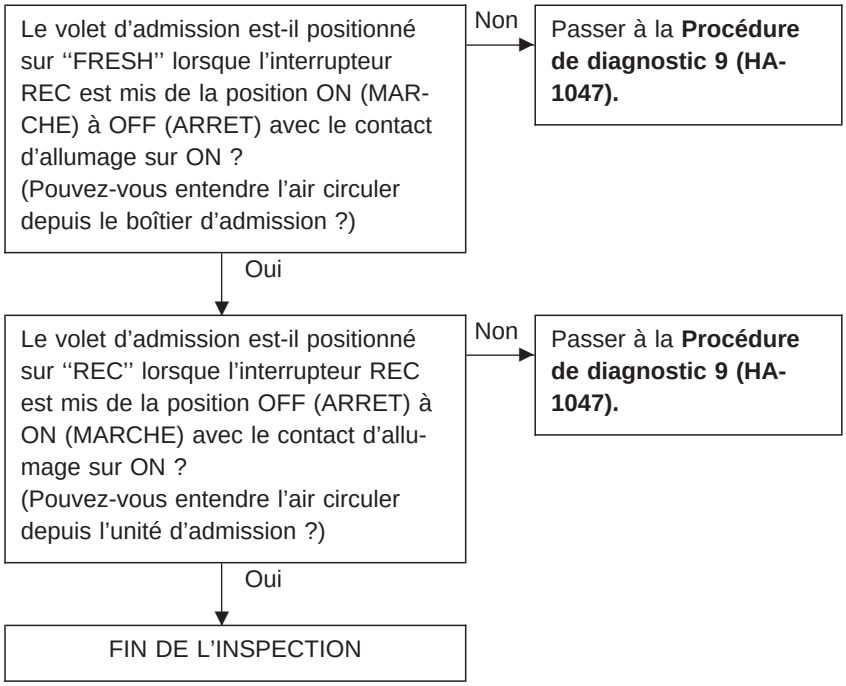

Simpo PDF Merge and Split Unregistered Version - http://www.simpopdf.com

Vérification préliminaire (Suite)

VERIFICATION PRELIMINAIRE 2

Le climatiseur ne souffle pas d'air froid.

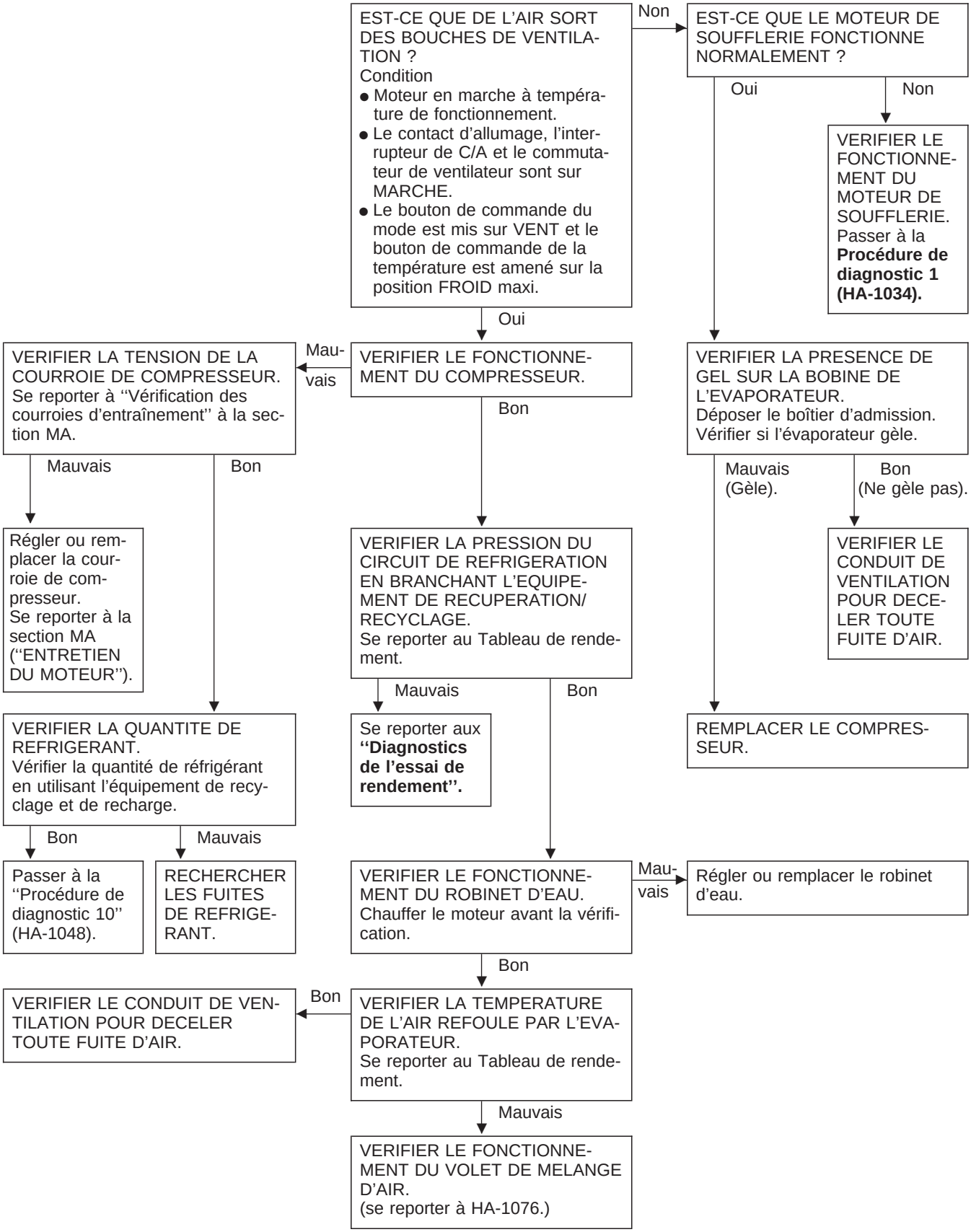

Simpo PDF Merge and Split Unregistered Version - http://www.simpopdf.com

Vérification préliminaire (Suite)

VERIFICATION PRELIMINAIRE 3

Bruit

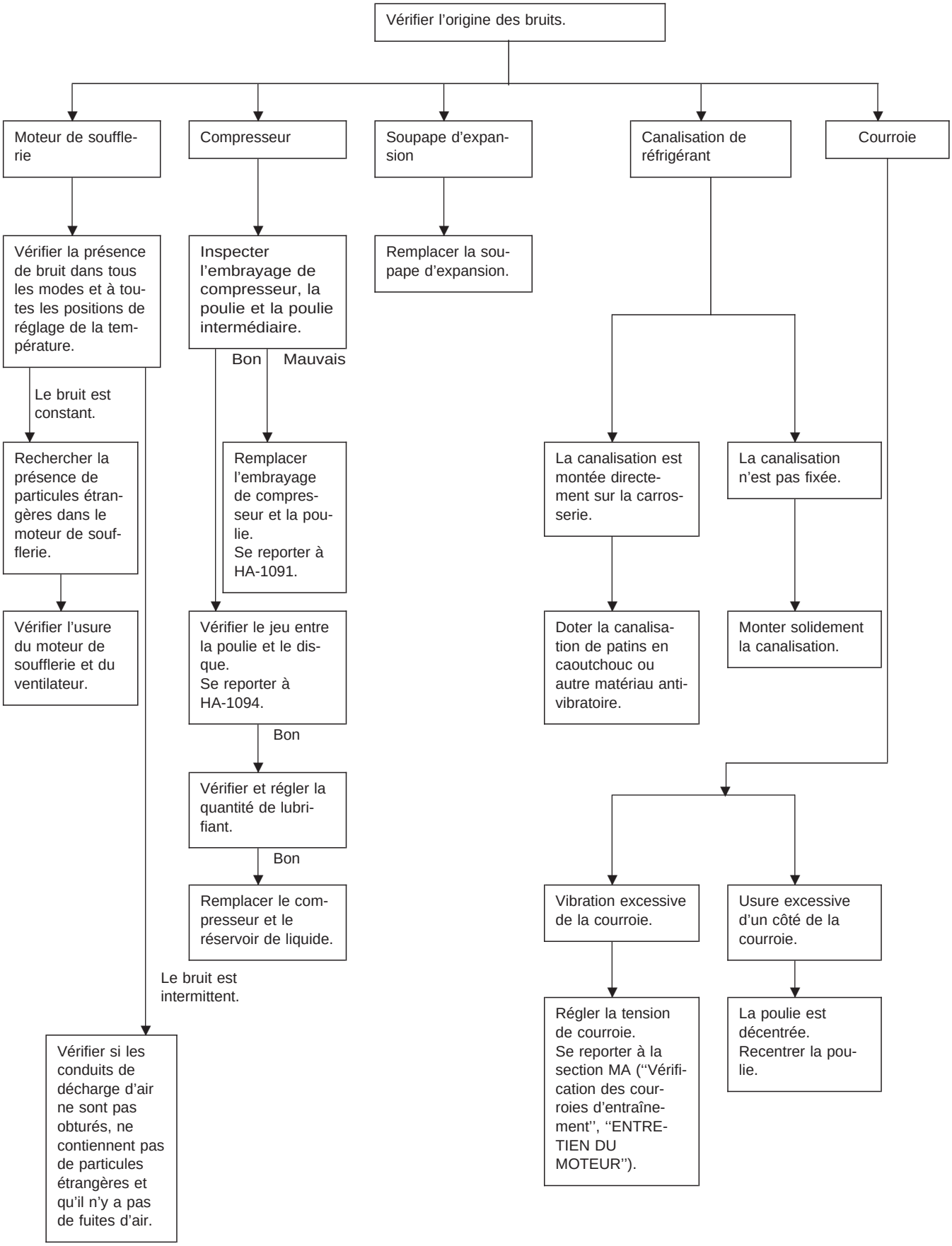

Simpo PDF Merge and Split Unregistered Version - http://www.simpopdf.com

Emplacement des composants

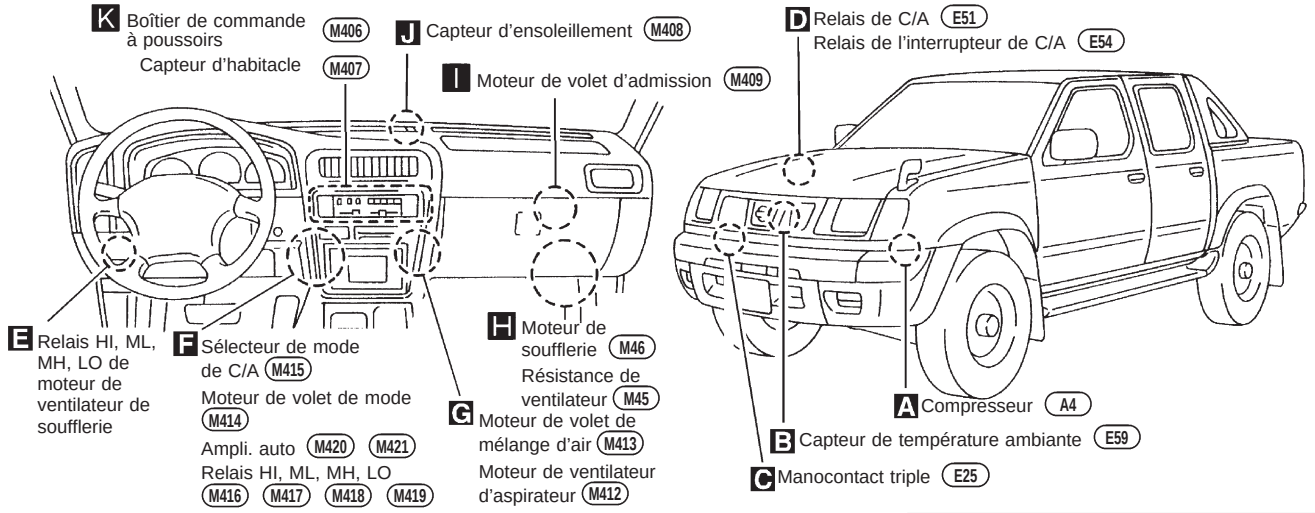

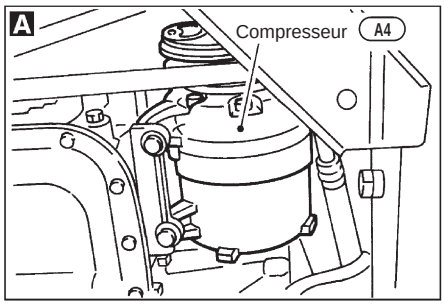

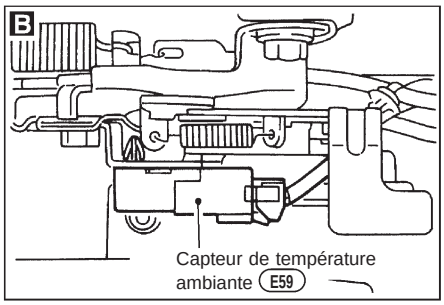

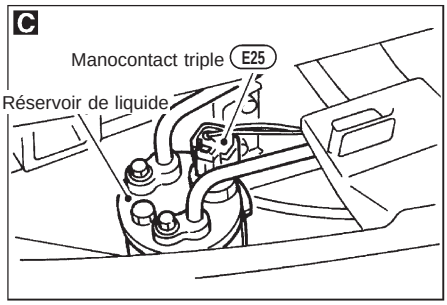

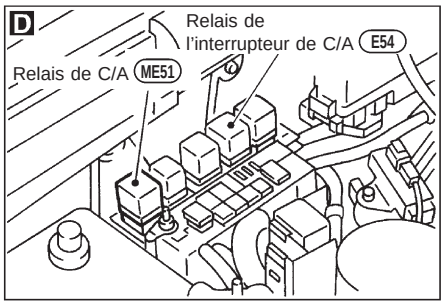

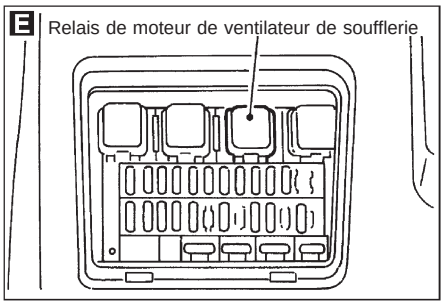

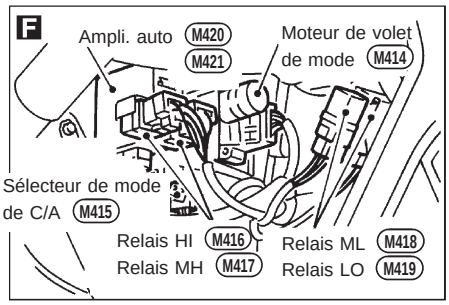

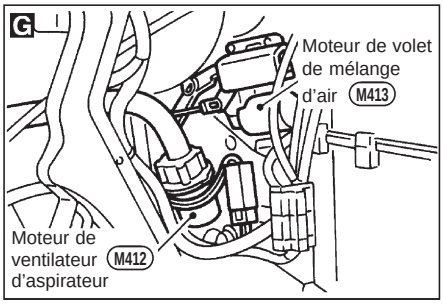

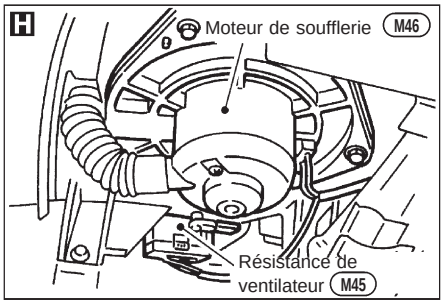

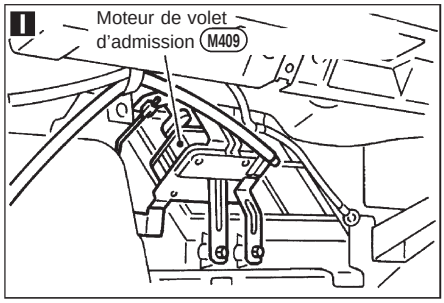

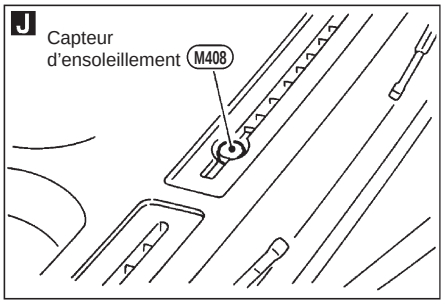

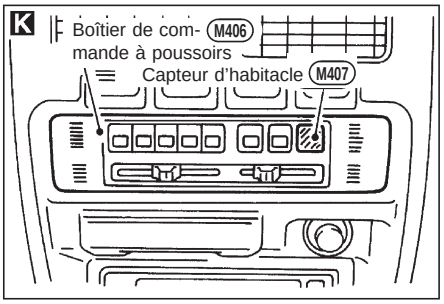

RHA938G

Simpo PDF Merge and Split Unregistered Version - http://www.simpopdf.com

Schéma de circuit — Climatiseur automatique/Conduite à gauche

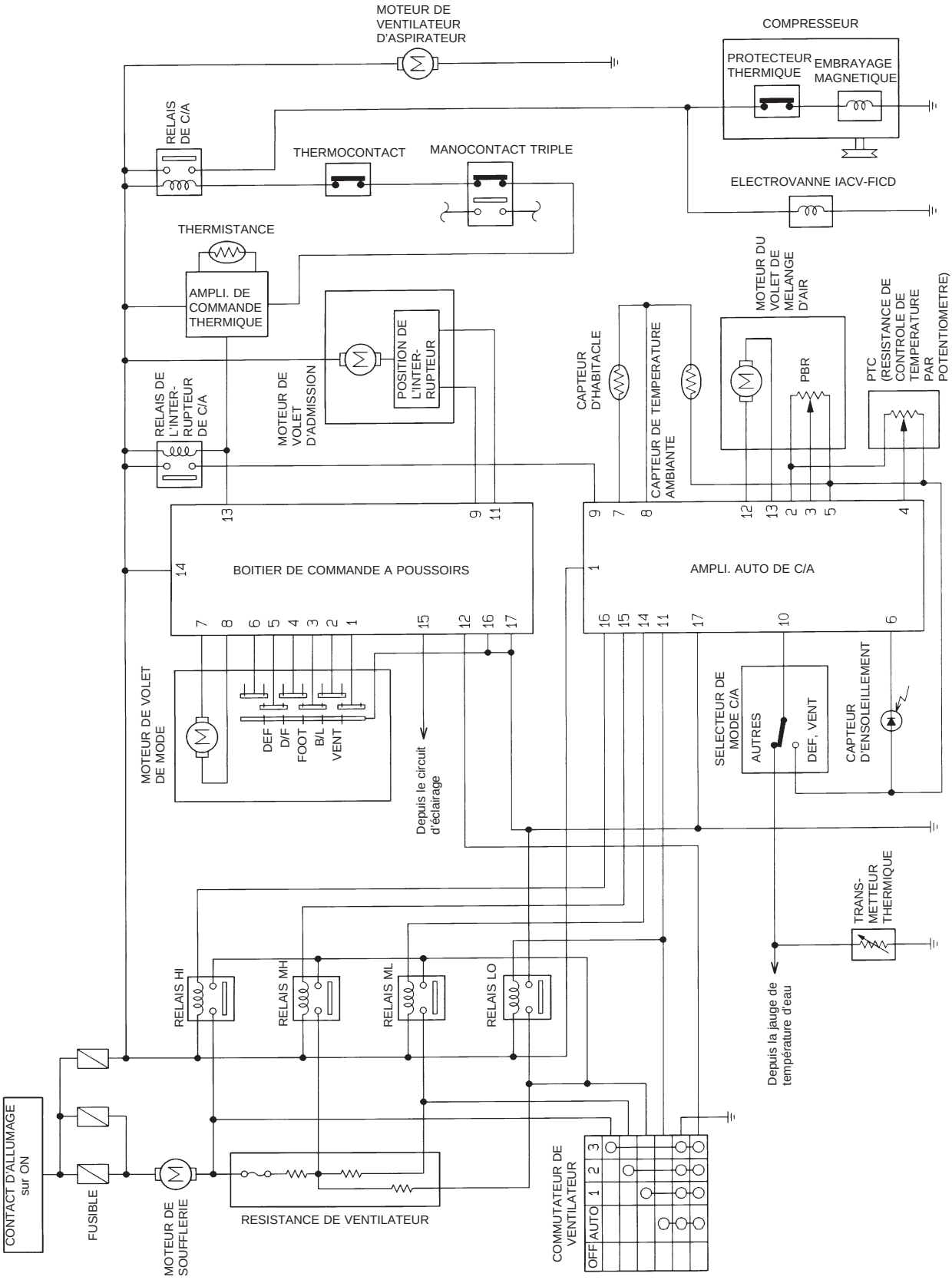

HHA141

Simpo PDF Merge and Split Unregistered Version - http://www.simpopdf.com

Schéma de circuit — Boîtier de commande à poussoirs/Conduite à gauche

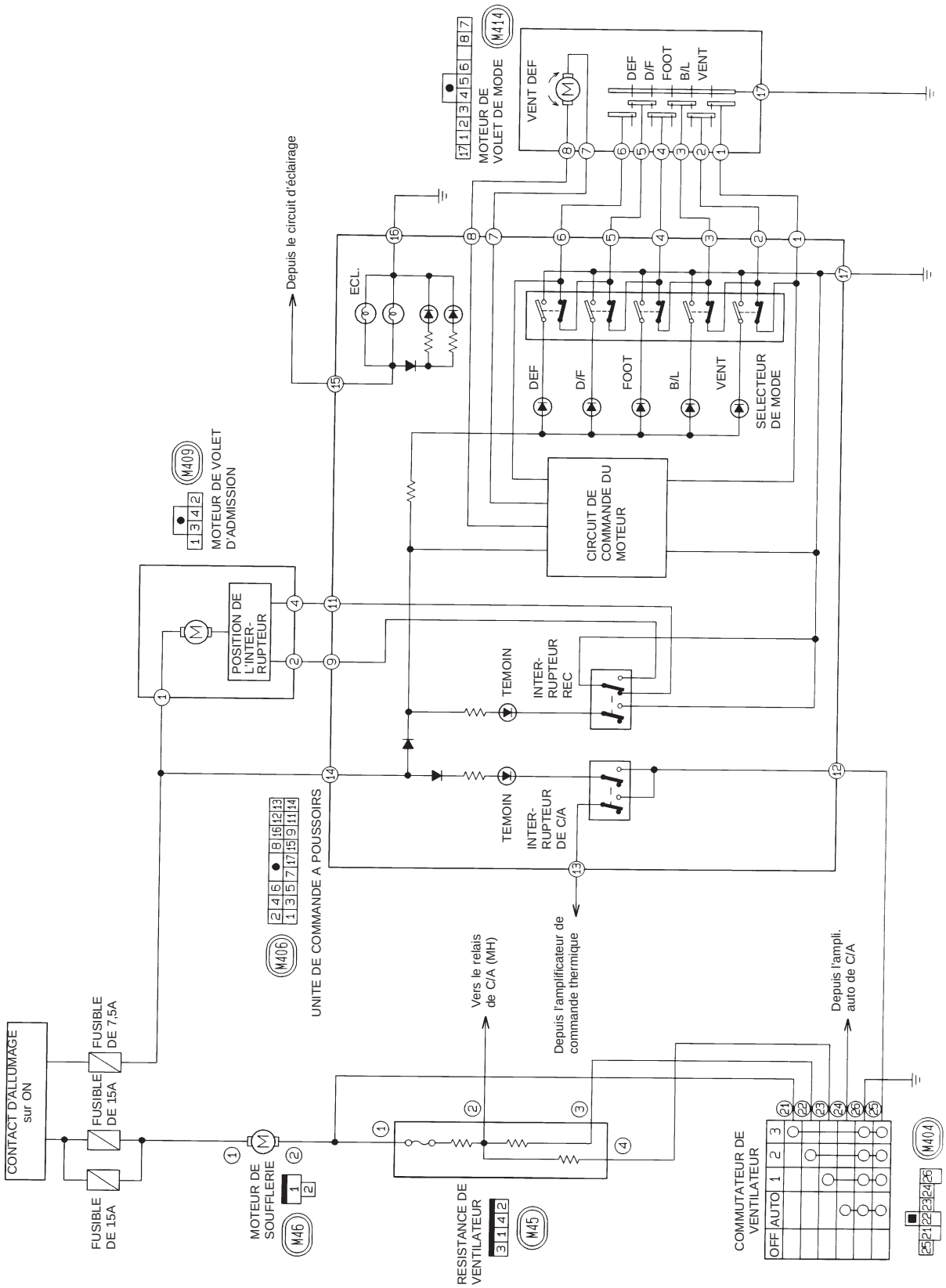

HHA150

Simpo PDF Merge and Split Unregistered Version - http://www.simpopdf.com

Schéma de cablâge — A/C, A —/Conduite à gauche

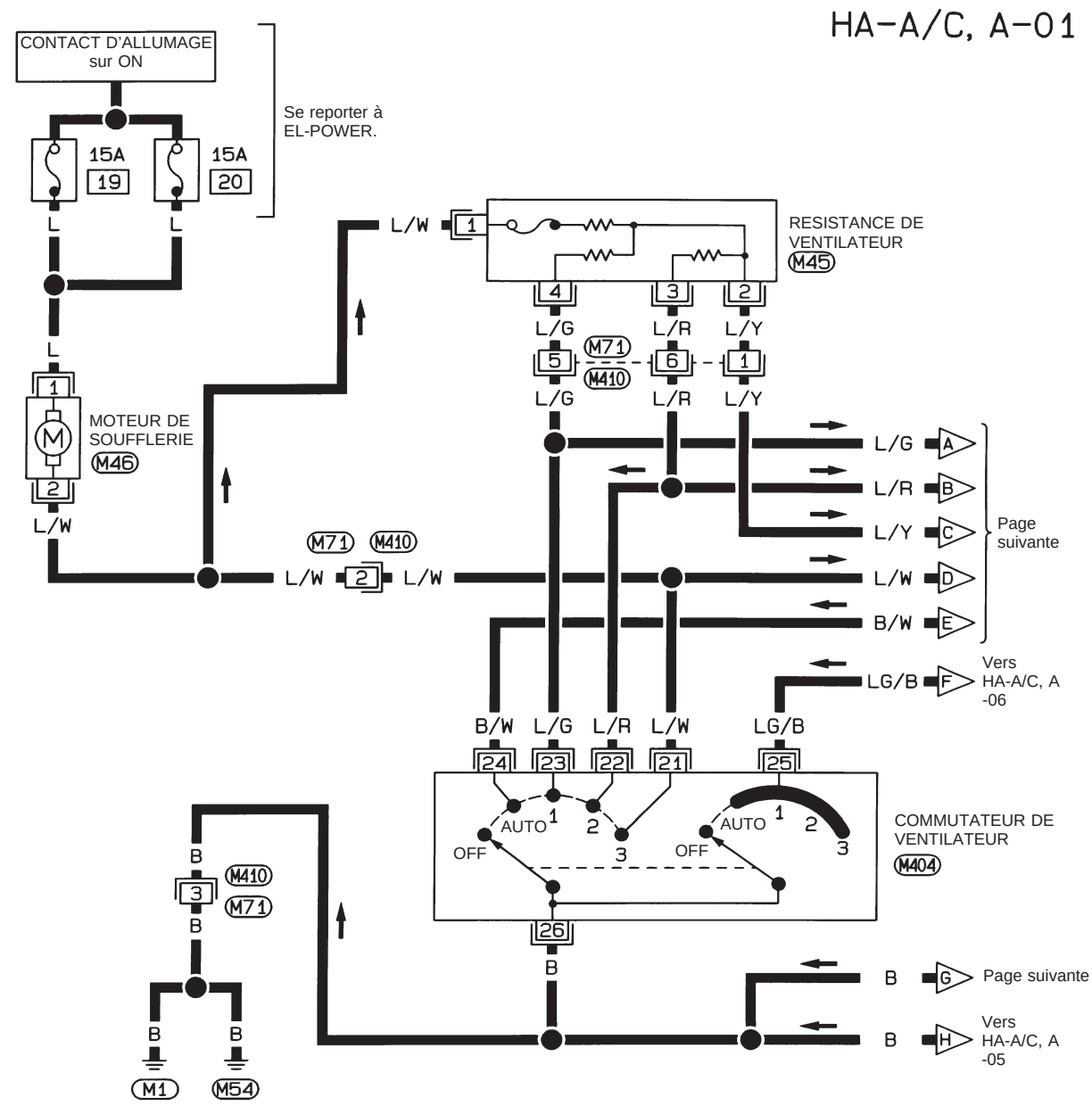



HHA142

Simpo PDF Merge and Split Unregistered Version - http://www.simpopdf.com

Schéma de cablâge — A/C, A —/Conduite à gauche (Suite)

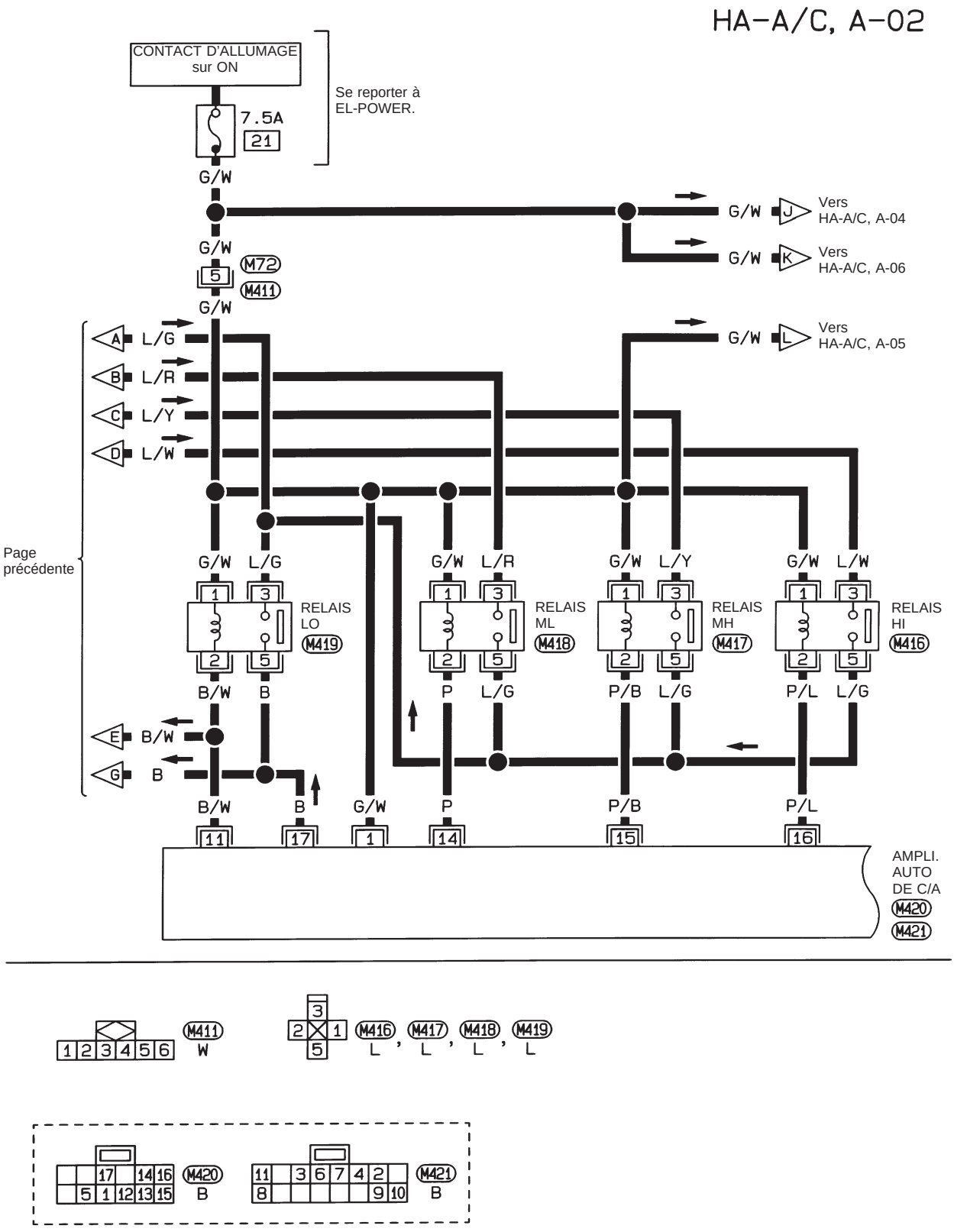

HHA143

Simpo PDF Merge and Split Unregistered Version - http://www.simpopdf.com

Schéma de cablâge — A/C, A —/Conduite à gauche (Suite)

HA-A/C, A-03

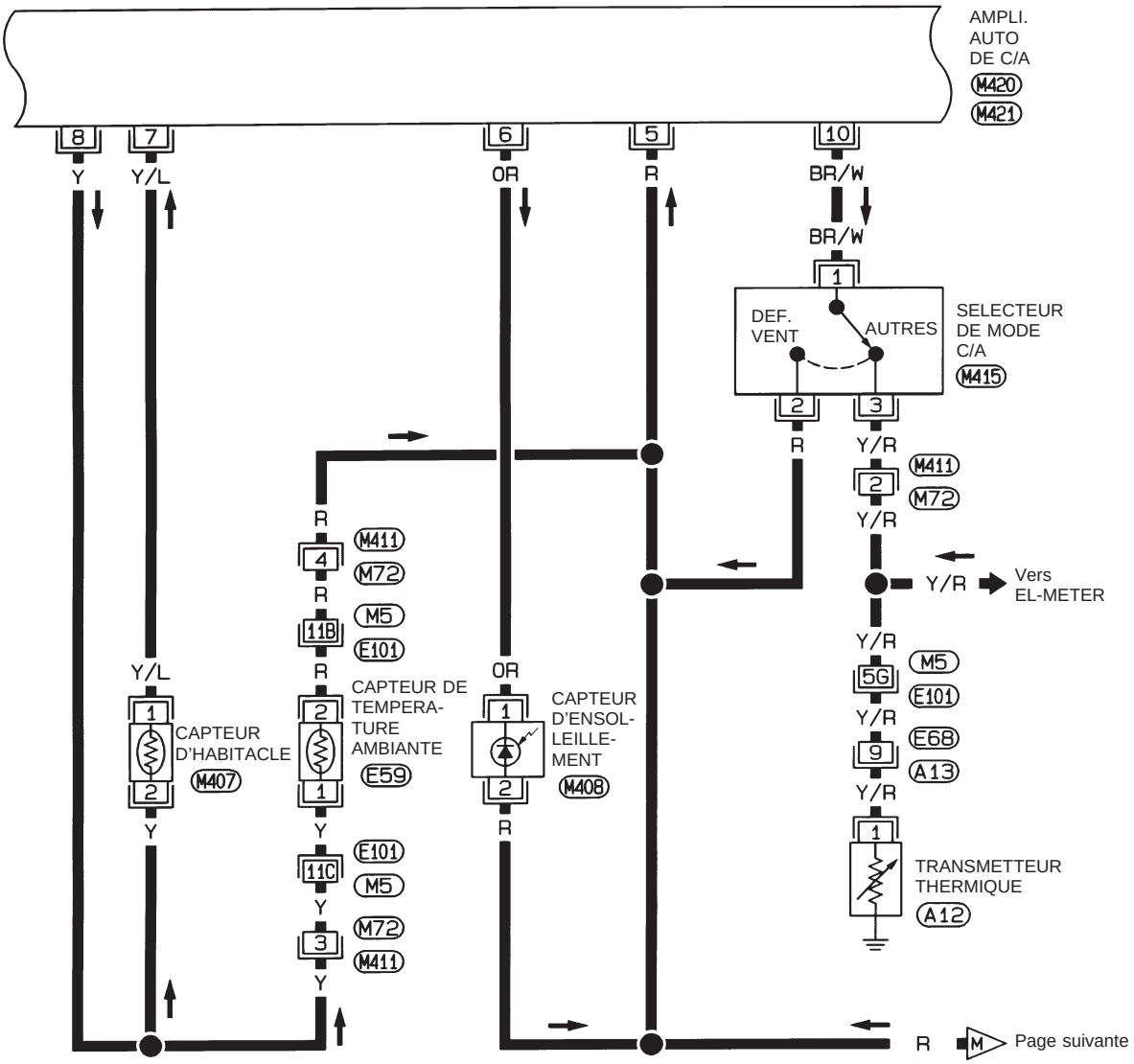

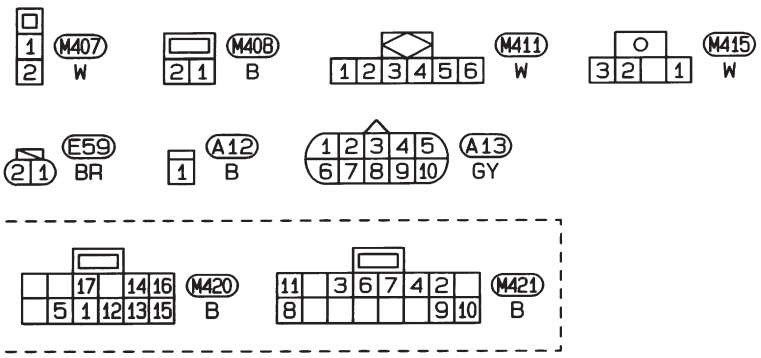

Se reporter à la dernière page dépliante.

M5 , E101

HHA144

Simpo PDF Merge and Split Unregistered Version - http://www.simpopdf.com

Schéma de cablâge — A/C, A —/Conduite à gauche (Suite)

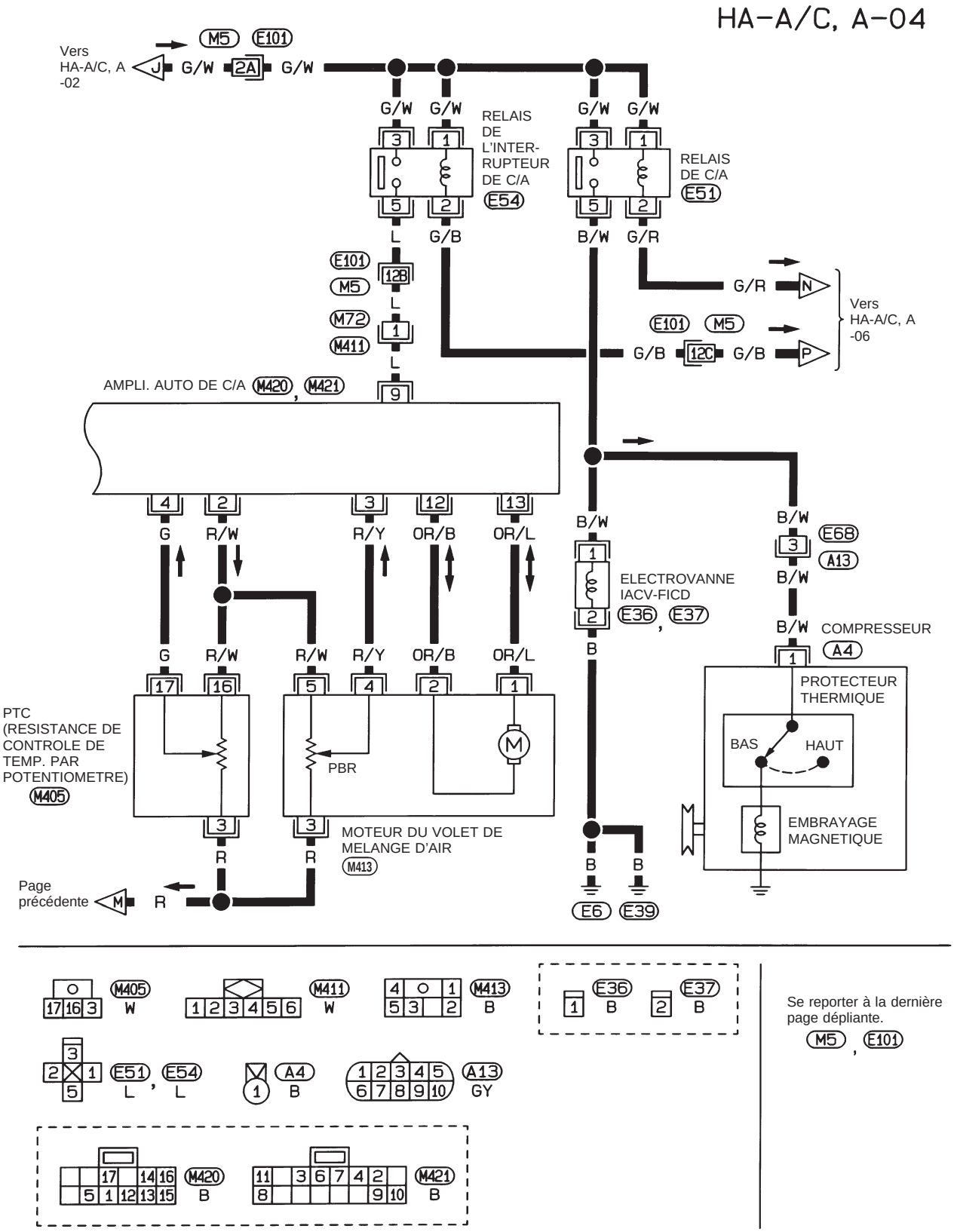

HHA145

Simpo PDF Merge and Split Unregistered Version - http://www.simpopdf.com

Schéma de cablâge — A/C, A —/Conduite à gauche (Suite)

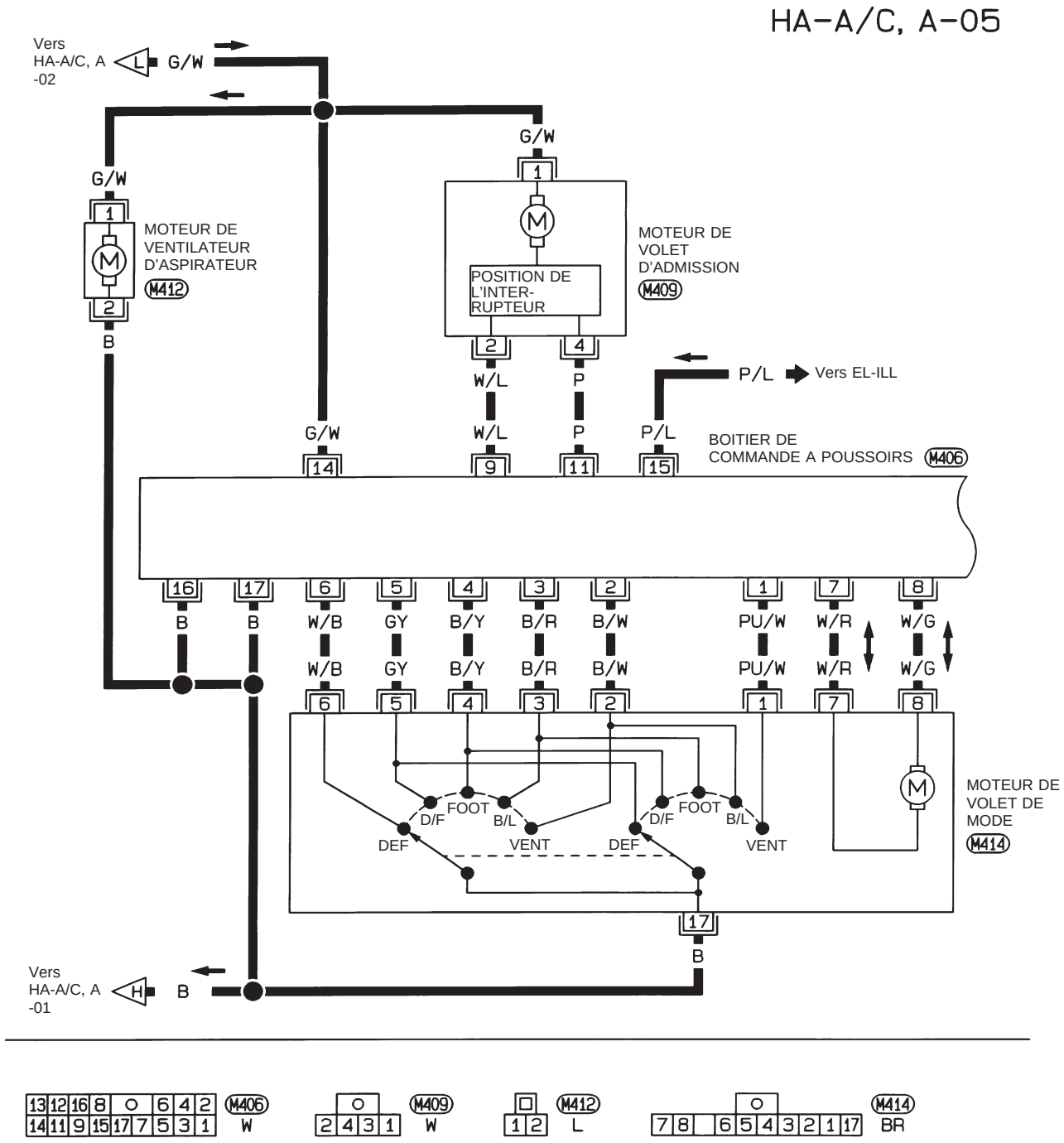

HHA146

Simpo PDF Merge and Split Unregistered Version - http://www.simpopdf.com

Schéma de cablâge — A/C, A —/Conduite à gauche (Suite)

HA-A/C, A-06

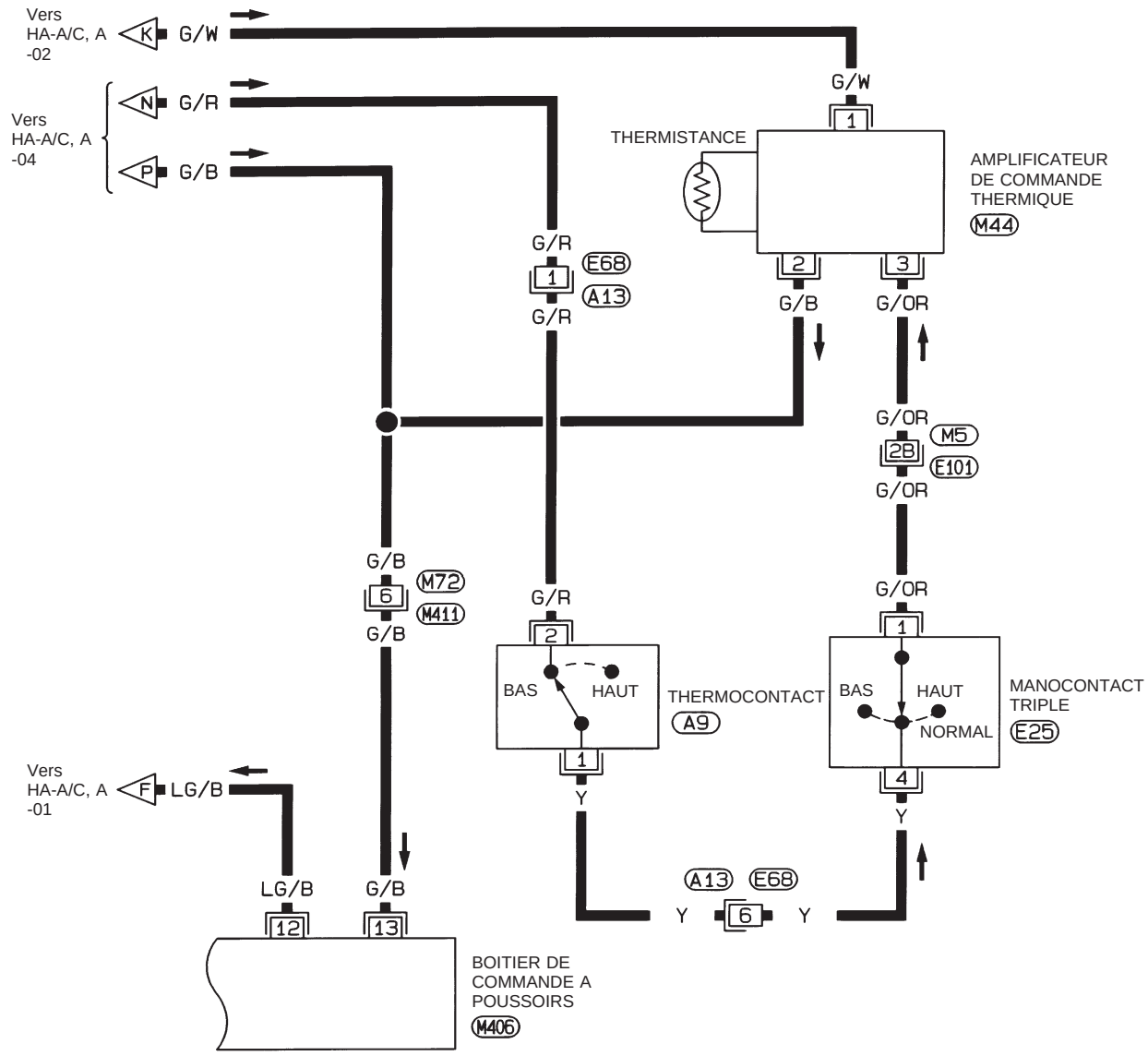

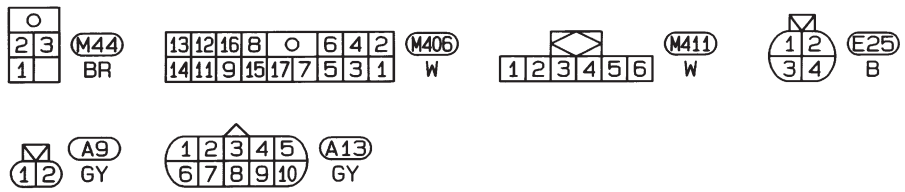

Se reporter à la dernière page dépliante.
M5, E101

HHA147

Simpo PDF Merge and Split Unregistered Version - http://www.simpopdf.com

Vérification de l’alimentation électrique principale et du circuit de mise à la masse

VERIFICATION DU CIRCUIT D’ALIMENTATION ELECTRIQUE DU SYSTEME DE C/A AUTOMATIQUE

Vérifier le circuit d’alimentation du système de climatisation automatique.

Se reporter à ‘‘DISPOSITION DE L’ALIMENTATION ELECTRIQUE’’ dans la section EL et ‘‘Schéma de câblage’’.

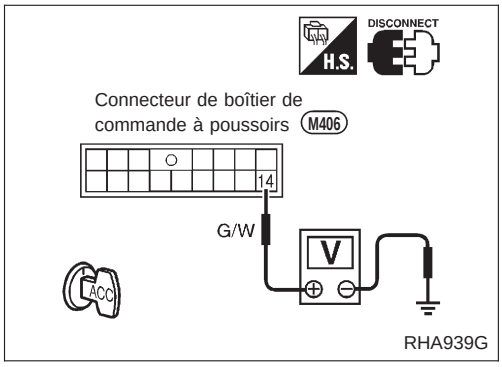

VERIFICATION DU BOITIER DE COMMANDE A POUSSOIRS

Vérifier le circuit d’alimentation électrique du boîtier de commande à poussoirs avec le contact d’allumage sur ACC.

1. Débrancher le connecteur de faisceau du boîtier de commande à poussoirs.
2. Brancher le voltmètre du côté faisceau.
3. Mesurer la tension entre la borne ⑭ et la masse de carrosserie.

Borne du voltmètre		Tension
⊕	⊖	
⑭	Masse de carrosserie	Environ 12V

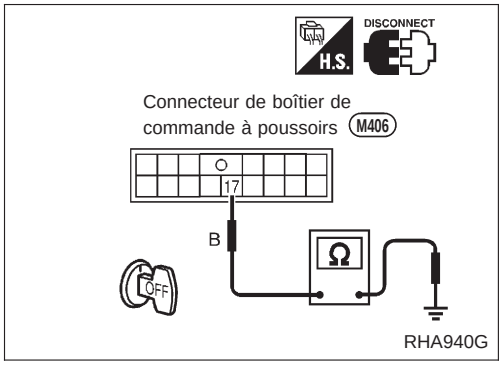

Vérifier le circuit de masse de carrosserie du boîtier de commande à poussoirs avec le contact d’allumage sur ON.

1. Débrancher le connecteur de faisceau du boîtier de commande à poussoirs.
2. Brancher l’ohmmètre du côté faisceau.
3. Vérifier la continuité entre la borne ⑰ et la masse de carrosserie.

Borne d’ohmmètre		Continuité
⊕	⊖	
⑰	Masse de carrosserie	Oui

Simpo PDF Merge and Split Unregistered Version - http://www.simpopdf.com

Vérification de l’alimentation électrique principale et du circuit de mise à la masse (Suite)

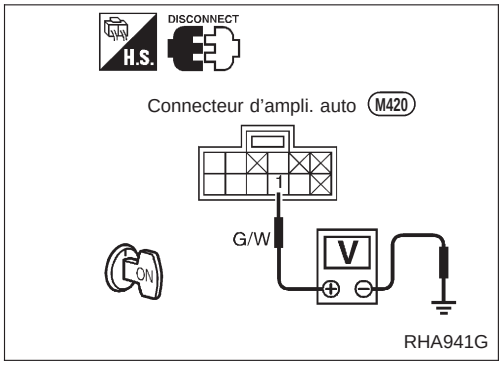

VERIFICATION DE L’AMPLIFICATEUR AUTOMATIQUE

Vérifier le circuit d’alimentation électrique de l’ampli. auto., après avoir mis le contact d’allumage sur ON.

1. Débrancher le connecteur de faisceau de l’amplificateur automatique.
2. Brancher le voltmètre du côté faisceau.
3. Mesurer la tension entre la borne ① et la masse de carrosserie.

Borne du voltmètre		Tension
⊕	⊖	
①	Masse de carrosserie	Environ 12V

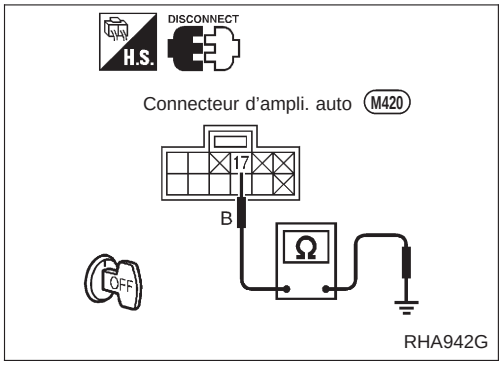

Vérifier le circuit de masse de carrosserie de l’ampli. auto alors que le contact d’allumage est mis sur ‘‘OFF’’.

1. Débrancher le connecteur de faisceau de l’amplificateur automatique.
2. Brancher l’ohmmètre du côté faisceau.
3. Vérifier la continuité entre la borne ⑰ et la masse de carrosserie.

Borne d’ohmmètre		Continuité
⊕	⊖	
⑰	Masse de carrosserie	Oui

Simpo PDF Merge and Split Unregistered Version - http://www.simpopdf.com

A

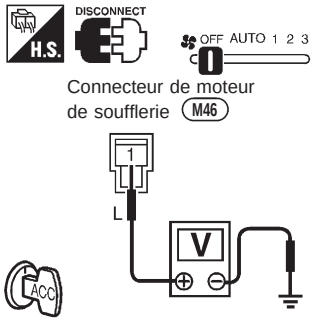

RHA943G

B

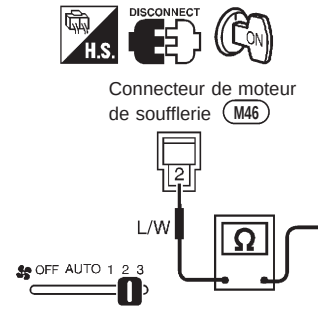

Il doit y avoir continuité.

RHA944G

C

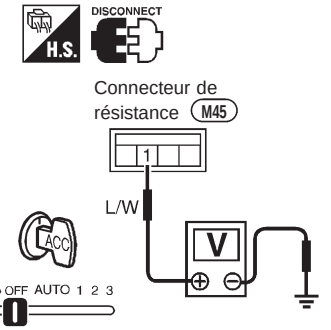

RHA945G

D

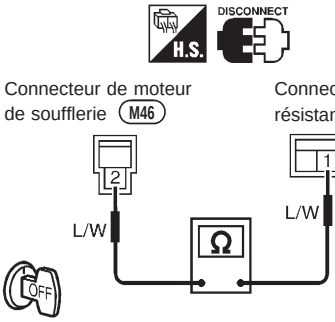

RHA946G

Procédure de diagnostic 1

SYMPTOME : le moteur de soufflerie ne tourne pas du tout (commutateur du ventilateur ''AUTO'', ''1'', ''2'', ''3'')

- **Effectuer la VERIFICATION PRELIMINAIRE 2 avant de se reporter à l'organigramme ci-dessous.**

A

VERIFIER L'ALIMENTATION ELECTRIQUE DU MOTEUR DE SOUFFLERIE.
Débrancher le connecteur de faisceau du moteur de soufflerie.
Y a-t-il une tension d'environ 12 volts entre la borne ① du faisceau de moteur de soufflerie et la masse de carrosserie ?

Mauvais → Vérifier les fusibles de 15A (n° 19, 20) dans le boîtier à fusibles (se reporter à ''DISPOSITION DE L'ALIMENTATION ELECTRIQUE'' dans la section EL et à son schéma de câblage).

Bon ↓

B

Vérifier la continuité du circuit entre la borne ② du faisceau de moteur de soufflerie et la masse de carrosserie.

Mauvais → Rebrancher le connecteur de faisceau du moteur de soufflerie.

Bon ↓

VERIFIER LE MOTEUR DE SOUFFLERIE.

Mauvais ↓

Remplacer le moteur de soufflerie.

C

VERIFIER LE CIRCUIT DU MOTEUR DE SOUFFLERIE ENTRE LE MOTEUR DE SOUFFLERIE ET LA RESISTANCE.
Y a-t-il une tension d'environ 12 volts entre la borne ① du faisceau de résistance et la masse de carrosserie ?

Mauvais → Débrancher les connecteurs de faisceau du moteur de soufflerie et de la résistance.

D

Note

Vérifier la continuité du circuit entre la borne ② du faisceau de moteur de soufflerie et la borne ① du faisceau de résistance.

Bon ↓

Ⓐ

(Passer à la page suivante).

Note :
Si le résultat est mauvais ou ''Non'' après la vérification de la continuité du circuit, réparer le faisceau ou le connecteur.

Simpo PDF Merge and Split Unregistered Version - http://www.simpopdf.com

Procédure de diagnostic 1 (Suite)

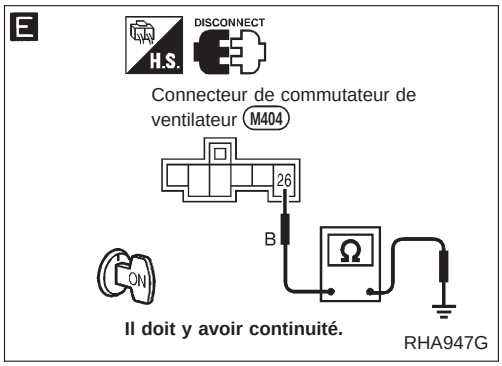

Ⓐ

DEBRANCHER LA RESISTANCE ET LA VERIFIER.
Mau-vais → Remplacer la résistance.

Bon

DEBRANCHER LE COMMUTATEUR DE VENTILATEUR ET LE VERIFIER (se reporter à Inspection des composants électriques) (HA-1059).
Mau-vais → Remplacer le commutateur de ventilateur.

Bon

E Note

Vérifier la continuité du circuit entre la borne ㉖ du faisceau du commutateur de ventilateur et la masse de carrosserie.

Bon

Remplacer le moteur de soufflerie.

Note :
Si le résultat est mauvais ou ''Non'' après la vérification de la continuité du circuit, réparer le faisceau ou le connecteur.

Simpo PDF Merge and Split Unregistered Version - http://www.simpopdf.com

A

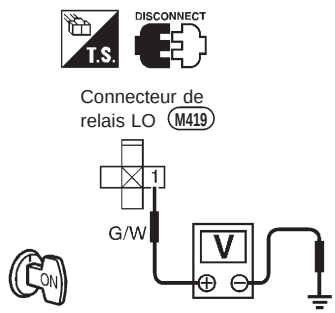

RHA948G

B

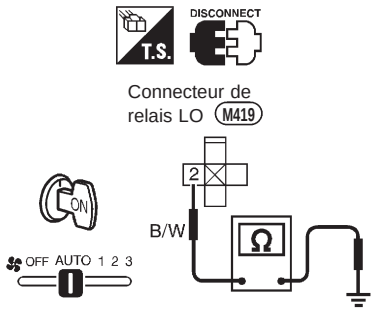

RHA949G

C

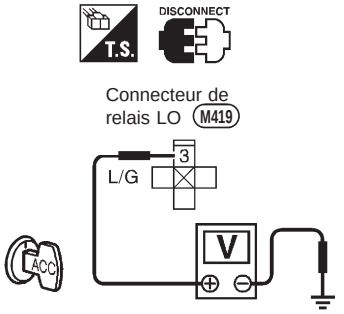

RHA950G

D

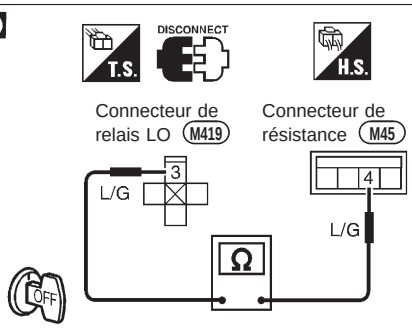

RHA951G

E

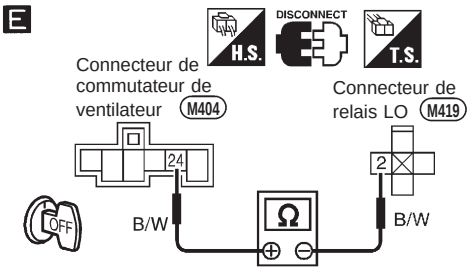

La continuité doit exister lorsque les fils conducteurs d'essai sont connectés comme indiqué, et ne doit pas exister lorsque les fils conducteurs d'essai sont inversés.

RHA952G

Procédure de diagnostic 2

SYMPTOME : le moteur de soufflerie ne tourne pas du tout quand la vitesse du ventilateur est sur AUTO (fonctionne seulement sur vitesse 1, 2 ou 3).

A

VERIFIER L'ALIMENTATION ELECTRIQUE DU RELAIS LO (LENT) DE CLIMATISEUR.
Débrancher le connecteur de faisceau du relais de position LO (lent)
Y a-t-il une tension d'environ 12 volts entre la borne n° ① du faisceau du relais de position LO (lent) et la masse de carrosserie ?

Mauvais → Vérifier le fusible de 7,5A (n° 21) dans le boîtier à fusibles (se reporter à "DISPOSITION DE L'ALIMENTATION ELECTRIQUE" dans la section EL et à son schéma de câblage).

Bon ↓

B

Vérifier la continuité du circuit entre la borne n° ② du faisceau de relais de position LO (lent) et la masse de carrosserie.

Mauvais → DEBRANCHER LE COMMUTATEUR DE VENTILATEUR ET LE VERIFIER (se reporter à Inspection des composants électriques). (HA-1059)

Bon ↓

Bon → Mauvais → Remplacer le commutateur de ventilateur.

E

Note
Vérifier la continuité du circuit entre la borne n° ② du faisceau de relais de position LO (lent) et la borne ㉔ du faisceau du commutateur de ventilateur.

C

VERIFIER L'ALIMENTATION ELECTRIQUE DU RELAIS DE POSITION LO (LENT).
Y a-t-il une tension d'environ 12 volts entre la borne n° ③ du faisceau du relais de position LO (lent) et la masse de carrosserie ?

Mauvais → D

Bon ↓

Ⓐ
(Passer à la page suivante).

D

Note
Vérifier la continuité du circuit entre la borne n° ④ du faisceau de résistance et entre la borne n° ③ du faisceau de relais de position LO (lent).

Note :
Si le résultat est mauvais ou "Non" après la vérification de la continuité du circuit, réparer le faisceau ou le connecteur.

Simpo PDF Merge and Split Unregistered Version - http://www.simpopdf.com

Procédure de diagnostic 2 (Suite)

F

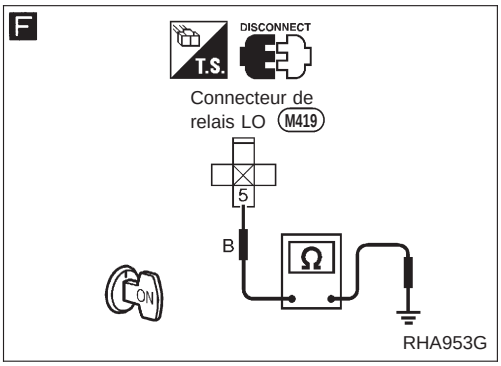

A

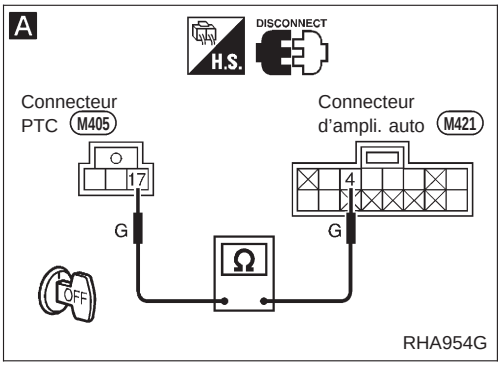

B

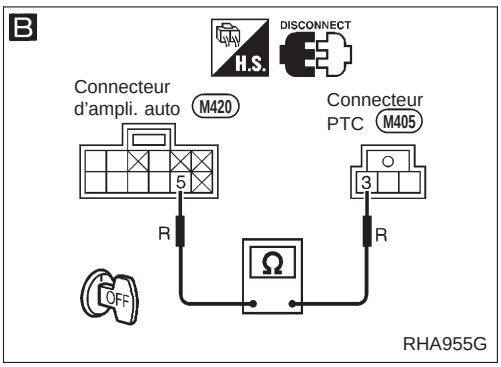

Ⓐ

F — Note

Vérifier la continuité du circuit entre la borne n° ⑤ du faisceau de relais de position LO (lent) et la masse de carrosserie.

Bon ↓

VERIFIER LE RELAIS DE POSITION LO (LENT) APRES L'AVOIR DEBRANCHE.

Mauvais → Remplacer le relais de position LO (lent).

Procédure de diagnostic 3

SYMPTOME : la vitesse du ventilateur du moteur de soufflerie ne change pas lorsque la vitesse du ventilateur est sur AUTO [la vitesse du ventilateur est sur HI (rapide) ou MH (mi-rapide)].

C/R *1

VERIFIER L'AMP. AUTO ET LE PTC.
Brancher la résistance de contrôle (se reporter à HA-1019).
La vitesse du ventilateur du moteur de soufflerie change-t-elle lorsque le PTC est déplacé de 20°C à 30°C ?

Mauvais → A — Note

VERIFIER LE CIRCUIT DU PTC ENTRE LE PTC ET L'AMPLI. AUTO.
Débrancher les connecteurs de faisceau du TPC et de l'ampli. auto.
Vérifier la continuité du circuit entre la borne n° ⑰ du faisceau de PTC et la borne n° ④ du faisceau de l'ampli. auto.

Bon ↓

B — Note

Vérifier la continuité du circuit entre la borne n° ③ du faisceau de PTC et la borne n° ⑤ du faisceau de l'ampli. auto.

Bon ↓

VERIFIER LE PTC (se reporter à HA-1068).

Mauvais → Remplacer le PTC.

Bon ← Rebrancher le connecteur de faisceau du PTC.

Bon ↓

VERIFIER LE CIRCUIT DU CAPTEUR.

	Comment réparer
Circuit du capteur de température ambiante	Passer à la "Procédure de diagnostic 11".
Circuit du capteur d'habitacle	Passer à la "Procédure de diagnostic 12".

Ⓐ

(Passer à la page suivante).

Note :
Si le résultat est mauvais ou "Non" après la vérification de la continuité du circuit, réparer le faisceau ou le connecteur.

Simpo PDF Merge and Split Unregistered Version - http://www.simpopdf.com

Procédure de diagnostic 3 (Suite)

C

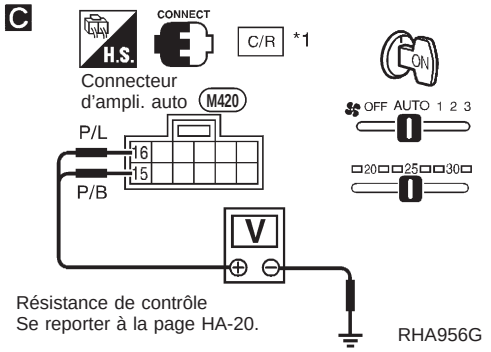

D

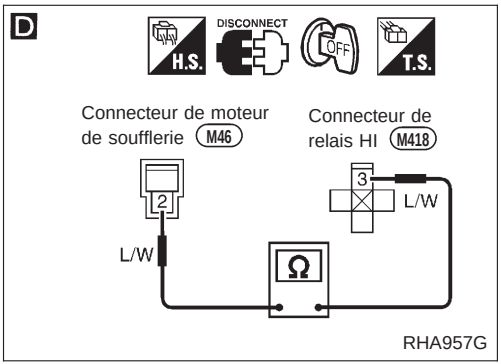

E

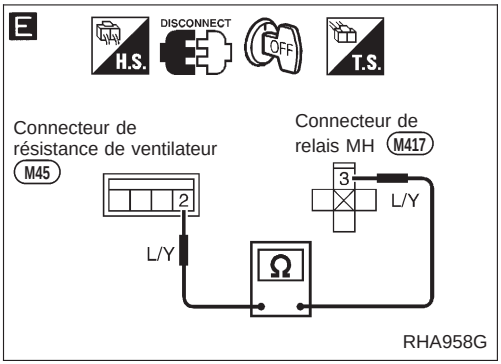

Ⓐ

C

VERIFIER L'AMP. AUTO
Brancher la résistance de contrôle (se reporter à HA-1019).
Y a-t-il une tension d'environ 12 V entre les bornes n° ⑮, ⑯ du faisceau de l'ampli. auto. et la masse de carrosserie ?

Mauvais → Remplacer l'amplificateur automatique.

Bon

VERIFIER LE RELAIS DE POSITION HI (RAPIDE) OU MH (MI-RAPIDE) APRES L'AVOIR DEBRANCHE (se reporter à HA-1060).

Mauvais → Remplacer le relais de position HI (rap.) ou de position MH (mi-rap.).

Bon

D

Note

Y a-t-il continuité entre la borne n° ② du faisceau de moteur de soufflerie et la borne n° ③ du relais de position HI (rap.) ou MH (mi-rap.) ?

Oui

E

Note

Y a-t-il continuité entre la borne n° ② du faisceau de la résistance et la borne n° ③ du faisceau de relais de position MH (mi-rap.) ?

Oui

Remplacer l'amplificateur automatique.

Note :
Si le résultat est mauvais ou "Non" après la vérification de la continuité du circuit, réparer le faisceau ou le connecteur.

Simpo PDF Merge and Split Unregistered Version - http://www.simpopdf.com

A

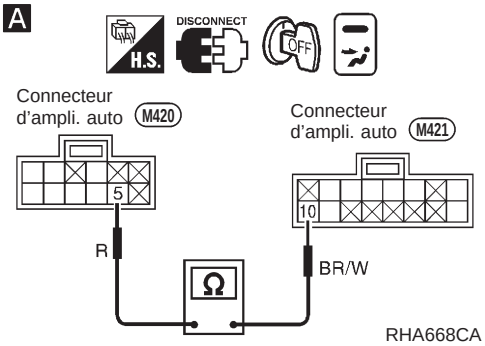

B

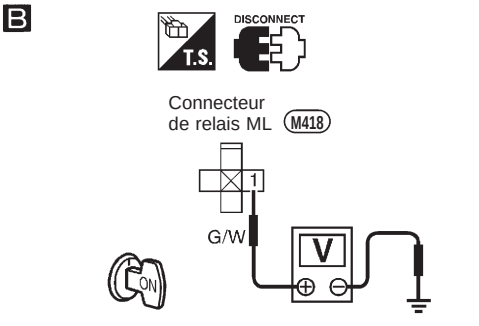

C

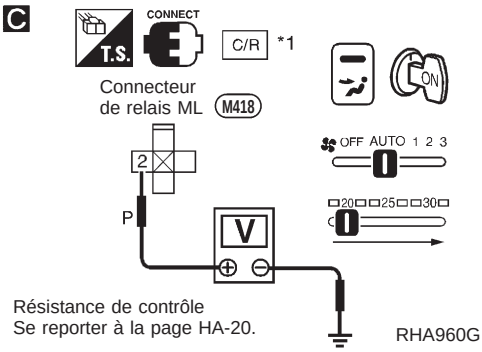

D

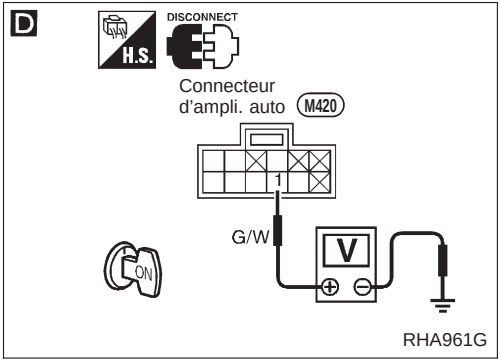

Procédure de diagnostic 4

SYMPTOME : la vitesse du ventilateur du moteur de soufflerie ne change pas lorsque la vitesse du ventilateur est sur AUTO [la vitesse du ventilateur est sur LO (lent)].

A

VERIFIER LE TRANSMETTEUR THERMIQUE.
Débrancher le connecteur de faisceau de l'amplificateur automatique.
La résistance entre les bornes n° (10) et (5) de l'ampli. auto est-elle inférieure à environ 940Ω ?

Bon → **B**

Mauvais →

VERIFIER LE CIRCUIT DU TRANSMETTEUR THERMIQUE.
Passer **à Procédure de diagnostic 14 (HA-1054).**

B

VERIFIER L'ALIMENTATION ELECTRIQUE DU RELAIS DE POSITION ML (MI-LENT).
Débrancher le relais de position ML (mi-lent).
Y a-t-il une tension d'environ 12 volts entre la borne n° (1) du faisceau du relais de position ML (mi-lent) et la masse de carrosserie ?

Bon →

Rebrancher le relais ML (mi-lent).

Mauvais →

Vérifier le fusible de 7,5A (n° 21) dans le boîtier à fusibles (se reporter à "DISPOSITION DE L'ALIMENTATION ELECTRIQUE" dans la section EL et à son schéma de câblage).

C

VERIFIER L'AMP. AUTO
Brancher la résistance de contrôle (se reporter à HA-1019).
Y a-t-il une tension d'environ 0 volts entre la borne n° (2) du faisceau de relais de position ML (mi-lent) et la masse lorsque vous déplacez le PTC de 20°C à 30°C ?

Mauvais →

Remplacer le relais de position ML (mi-lent).

Bon →

D

VERIFIER L'ALIMENTATION ELECTRIQUE DE L'AMPLI. AUTO.
Débrancher le connecteur de faisceau de l'amplificateur automatique.
Y a-t-il une tension d'environ 12 V entre la borne n° (1) du faisceau de l'ampli. auto. et la masse de carrosserie ?

Mauvais →

Vérifier le fusible de 7,5A (n° 21) dans le boîtier à fusibles (se reporter à "DISPOSITION DE L'ALIMENTATION ELECTRIQUE" dans la section EL et à son schéma de câblage).

Bon →

(A)
(Passer à la page suivante).

Simpo PDF Merge and Split Unregistered Version - http://www.simpopdf.com

Procédure de diagnostic 4 (Suite)

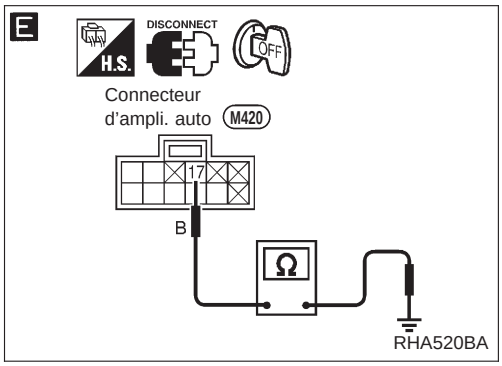

Ⓐ

E

Note

VERIFIER LE CIRCUIT DE MASSE DE L'AMPLI. AUTO
Y a-t-il continuité entre la borne n° (17) du faisceau de l'ampli. auto. et la masse de carrosserie ?

Bon

Remplacer l'amplificateur automatique.

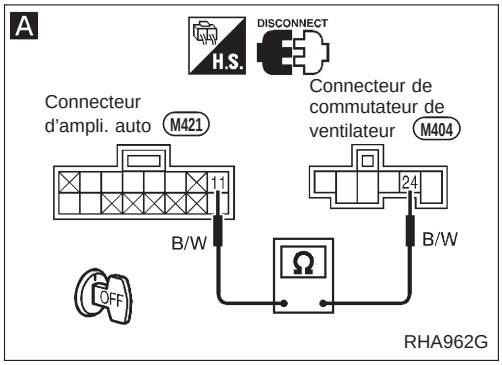

Procédure de diagnostic 5

SYMPTOME : la commande de vitesse de ventilateur au démarrage ne fonctionne pas.

VERIFIER LE CIRCUIT DU TRANSMETTEUR THERMIQUE.
Passer à la **Procédure de diagnostic 14 (HA-1054).**

Mauvais → Remplacer l'ampli. auto, le transmetteur thermique de moteur ou le microcontact.

Bon

A

Note

VERIFIER LE CIRCUIT DE MASSE DE L'AMPLI. AUTO
Débrancher l'ampli. auto et le connecteur de faisceau du commutateur de ventilateur.
Vérifier la continuité du circuit entre la borne n° (11) du faisceau de l'ampli. auto et la borne n° (24) du faisceau du commutateur de ventilateur.

Bon

Remplacer l'amplificateur automatique.

Note :
Si le résultat est mauvais ou "Non" après la vérification de la continuité du circuit, réparer le faisceau ou le connecteur.

Simpo PDF Merge and Split Unregistered Version - http://www.simpopdf.com

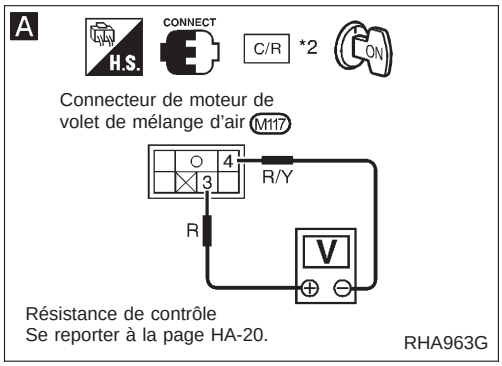

Procédure de diagnostic 6

SYMPTOME : il y a trop de différence entre la température du PTC et celle de l'habitacle.

- **Effectuer la VERIFICATION PRELIMINAIRE 2 avant de se reporter à l'organigramme ci-dessous.**

A

C/R *2

VERIFIER LE RHEOSTAT (PBR).
Brancher la résistance de contrôle (se reporter à HA-1019).
Y a-t-il une tension d'environ 5 V entre les bornes n° ④ et ③ du faisceau du moteur de volet de mélange d'air lorsque le PTC est mis sur 25°C ?

Mauvais → VERIFIER LE PTC (se reporter à HA-1068).

Bon → Ⓐ (Passer à la page suivante).

VERIFIER LE PTC (se reporter à HA-1068).
Bon → VERIFIER LE RHEOSTAT (PBR). Se reporter à Réglage du capteur.
Mauvais → Remplacer le PTC.

VERIFIER LE RHEOSTAT (PBR). Se reporter à Réglage du capteur.
Bon → Remplacer l'amplificateur automatique.
Mauvais → VERIFIER LE MECANISME DU VOLET DE MELANGE D'AIR. Se reporter à ''Réglage de la timonerie de commande'' (se reporter à HA-1067).

VERIFIER LE MECANISME DU VOLET DE MELANGE D'AIR. Se reporter à ''Réglage de la timonerie de commande'' (se reporter à HA-1067).
Bon → Remplacer le PBR.
Mauvais → Réparer ou régler.

Simpo PDF Merge and Split Unregistered Version - http://www.simpopdf.com

Procédure de diagnostic 6 (Suite)

B

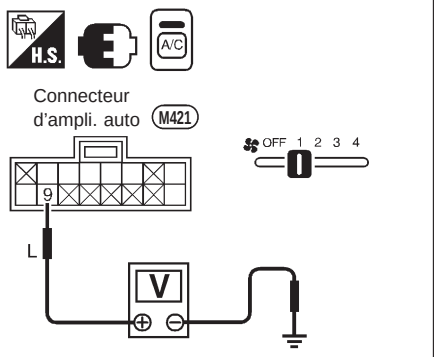

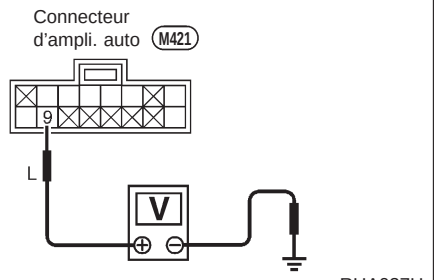

RHA037H

C

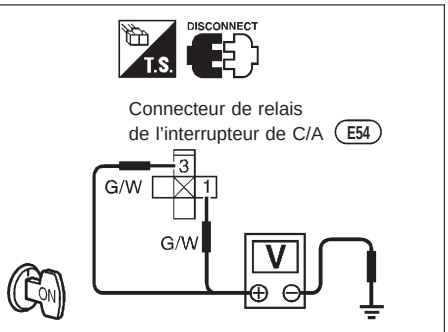

RHA964G

Ⓐ

VERIFIER LE FONCTIONNEMENT DU MOTEUR D'ASPIRATEUR.
Le moteur d'aspirateur tourne-t-il ? (Se reporter à HA-1070).

Mauvais → Ⓒ (Passer à la page suivante).

Bon

VERIFIER LE CAPTEUR D'HABITACLE ET LE CAPTEUR DE TEMPERATURE AMBIANTE (se reporter à Composants d'entrée du système de commande) (HA-1068).

Mauvais → Remplacer le capteur d'habitacle ou le capteur d'air ambiant.

Bon

VERIFIER LE CAPTEUR D'ENSOLEILLEMENT.
Passer à la **Procédure de diagnostic 13 (HA-1053).**

Mauvais → Remplacer le capteur d'ensoleillement ou l'ampli. auto.

Bon

B

VERIFIER LE FONCTIONNEMENT DE L'AMP. AUTO
Y a-t-il une tension d'environ 12 V entre la borne n° ⑨ du faisceau de l'ampli. auto. et la masse de carrosserie lorsque l'interrupteur de C/A est sur marche ?
Y a-t-il une tension d'environ 0 volts entre la borne n° ⑨ du faisceau de l'ampli. auto et la masse lorsque l'interrupteur de C/A est sur arrêt ?

Mauvais → C

Bon

Remplacer l'amplificateur automatique.

C

VERIFIER L'ALIMENTATION ELECTRIQUE DU RELAIS DE L'INTERRUPTEUR DE C/A.
Débrancher le relais de l'interrupteur de C/A.
Y a-t-il une tension d'environ 12 volts entre la borne n° ③ du faisceau du relais de l'interrupteur de C/A et la masse de carrosserie ?

Bon → Ⓑ (Passer à la page suivante).

Mauvais → Vérifier le fusible de 7,5A (n° 21) dans le boîtier à fusibles. (Se reporter à "DISPOSITION DE L'ALIMENTATION ELECTRIQUE" dans la section EL et à son schéma de câblage).

Simpo PDF Merge and Split Unregistered Version - http://www.simpopdf.com

Procédure de diagnostic 6 (Suite)

D

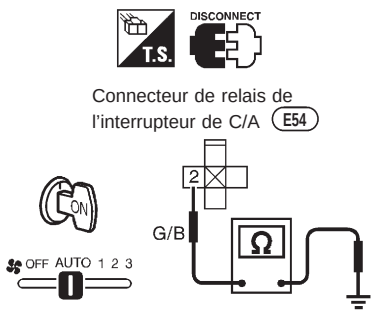

E

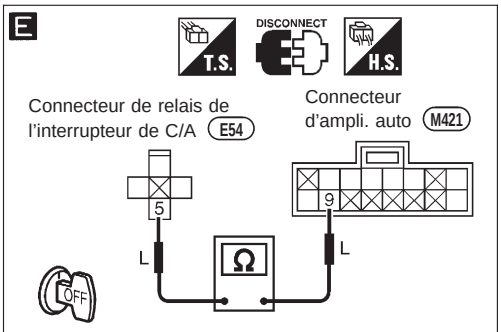

F

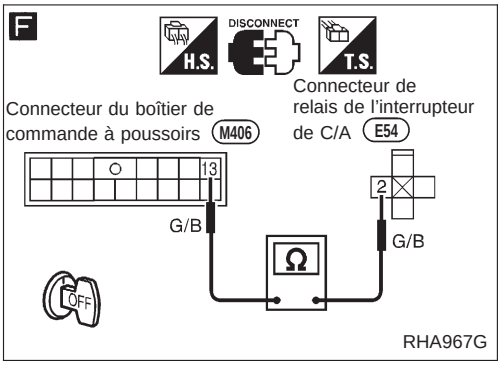

G

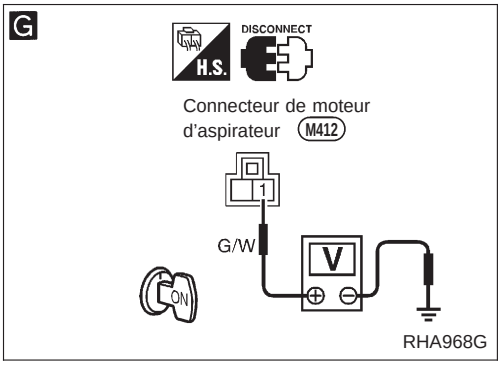

H

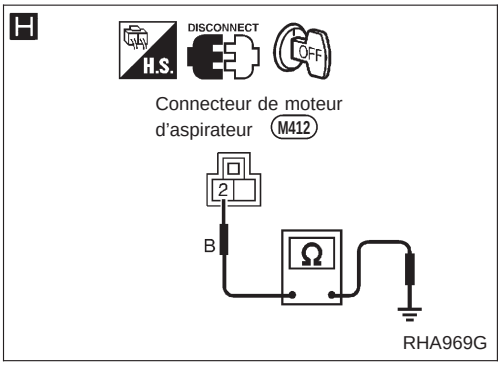

Ⓑ

D

VERIFIER LE CIRCUIT COTE BOBINE DU RELAIS DE L'INTERRUPTEUR DE C/A.
Y a-t-il continuité entre la borne n° ② du faisceau de relais de l'interrupteur de C/A et la masse de carrosserie ?

Mauvais → **F** Note
Vérifier la continuité du circuit entre la borne n° ② du faisceau de relais de C/A et la borne n° ⑬ du faisceau de boîtier de commande à poussoirs.

Bon

VERIFIER LE RELAIS DE L'INTERRUPTEUR DE C/A APRES L'AVOIR DEBRANCHE.

Bon

Mauvais
Remplacer le relais de l'interrupteur de C/A.

E Note
Vérifier la continuité du circuit entre la borne n° ⑤ du faisceau de relais de l'interrupteur de C/A et la borne n° ⑨ du faisceau de l'ampli. auto.

Ⓒ

G

VERIFIER L'ALIMENTATION ELECTRIQUE DU MOTEUR D'ASPIRATEUR.
Débrancher le connecteur de faisceau du moteur d'aspirateur.
Y a-t-il une tension d'environ 12 volts entre la borne n° ① du faisceau du moteur d'aspirateur et la masse de carrosserie ?

Mauvais → Vérifier le fusible de 7,5A (n° 21) dans le boîtier à fusibles. (se reporter à ''DISPOSITION DE L'ALIMENTATION ELECTRIQUE'' dans la section EL et à son schéma de câblage).

Bon

H Note

VERIFIER LE CIRCUIT DE MASSE DE CARROSSERIE DU MOTEUR D'ASPIRATEUR.
Y a-t-il continuité entre la borne n° ② du faisceau de moteur d'aspirateur et la masse de carrosserie ?

Bon

Remplacer le moteur d'aspirateur.

Note :
Si le résultat est mauvais ou ''Non'' après la vérification de la continuité du circuit, réparer le faisceau ou le connecteur.

Simpo PDF Merge and Split Unregistered Version - http://www.simpopdf.com

A

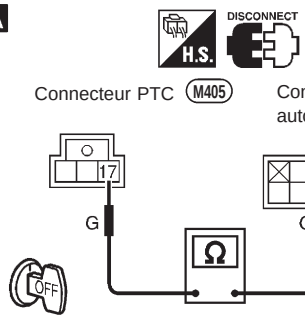

RHA970G

B

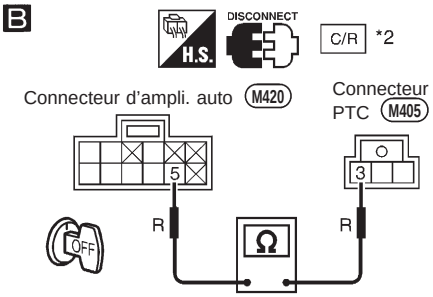

Résistance de contrôle
Se reporter à la page HA-20.

RHA971G

C

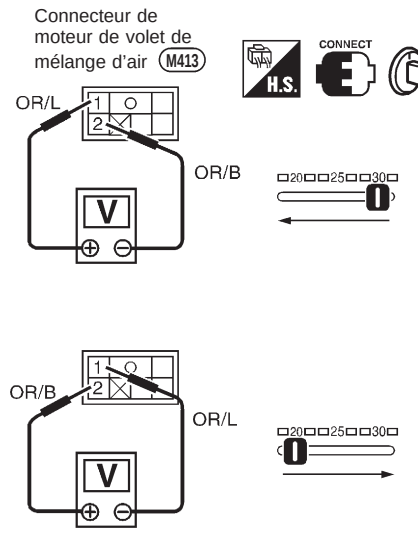

RHA972G

Procédure de diagnostic 7

SYMPTOME : le moteur de volet de mélange d'air ne fonctionne pas normalement.

- **Effectuer la VERIFICATION PRELIMINAIRE 2 avant de se reporter à l'organigramme ci-dessous.**

C/R *2

VERIFIER L'AMP. AUTO ET LE PTC.
Brancher la résistance de contrôle (se reporter à page HA-1019).
Est-ce que la température de la sortie d'air change lorsque le PTC est déplacé de 20°C à 30°C ?

Mauvais → A

Bon ↓

VERIFIER LE CIRCUIT DU CAPTEUR.

	Comment réparer
Circuit du capteur de température ambiante	Passer à la "Procédure de diagnostic 11".
Circuit du capteur d'habitacle	Passer à la "Procédure de diagnostic 12".

A — Note

VERIFIER LE CIRCUIT DU PTC ENTRE LE PTC ET L'AMPLI. AUTO.
Débrancher les connecteurs de faisceau du PTC et de l'ampli. auto.
Vérifier la continuité du circuit entre la borne n° (17) du faisceau de PTC et la borne n° (4) du faisceau de l'ampli. auto.

Bon ↓

B — Note

Vérifier la continuité du circuit entre la borne n° (3) du faisceau de PTC et la borne n° (5) du faisceau de l'ampli. auto.

Bon ↓

VERIFIER LE PTC (se reporter à HA-1068).

Mauvais → Remplacer le PTC.

Bon ↓

C

VERIFIER LA SORTIE DE L'AMPLIFICATEUR AUTOMATIQUE.
Brancher la résistance de contrôle.
Y a-t-il une tension d'environ 10,5 V entre les bornes (2) et (1) du faisceau du moteur de volet de mélange d'air lorsque lorsque vous déplacez le PTC de 20°C à 30°C ou de 30°C à 20°C ?

Fonctionnement du volet de mélange d'air	N° de borne		Tension
	(2)	(1)	
Froid → Chaud	⊕	⊖	Environ 10,5V
Chaud → Froid	⊖	⊕	
Arrêt	—	—	0V

Mauvais → Débrancher les connecteurs de faisceau de l'ampli. auto et du moteur de volet de mélange d'air.

Note

Vérifier la continuité du circuit entre la borne n° (12) ((13)) du faisceau de l'ampli. auto et la borne n° (2) ((1)) du faisceau de moteur de volet de mélange d'air.

Bon ↓

Remplacer l'amplificateur automatique.

Bon ↓

Remplacer le moteur de volet de mélange d'air.

Note :
Si le résultat est mauvais ou "Non" après la vérification de la continuité du circuit, réparer le faisceau ou le connecteur.

Simpo PDF Merge and Split Unregistered Version - http://www.simpopdf.com

A

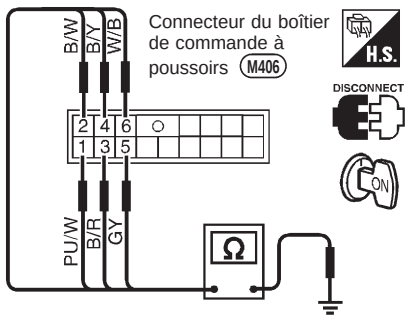

B

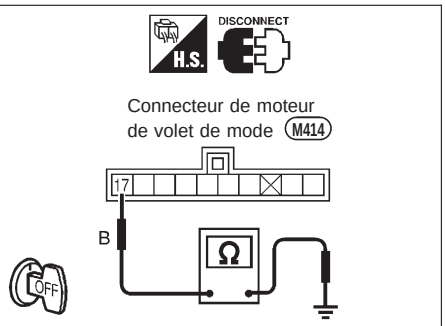

C

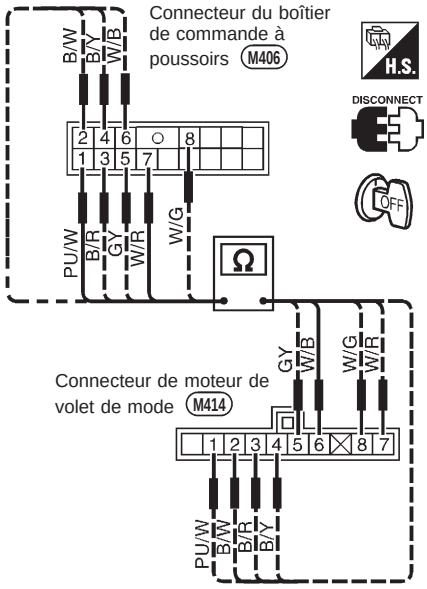

Procédure de diagnostic 8

SYMPTOME : la sortie d'air ne change pas.

- **Effectuer la vérification de l'alimentation électrique principale et du circuit de mise à la masse avant de se référer à l'organigramme suivant.**

A

VERIFIER LE CONTACT DE POSITION DU MOTEUR DE VOLET DE MODE.

1. Enclencher le contact VENT alors que le contact d'allumage est mis sur la position "ON".
2. Couper le contact.
   Débrancher le connecteur du boîtier de commande à poussoirs.
3. Vérifier si la continuité existe entre chaque borne du connecteur du faisceau du boîtier de commande à poussoirs et la masse de carrosserie.
4. Suivre les procédures ci-dessus pour vérifier la continuité à partir de chacun des autres modes, comme indiqué dans le tableau.

Commande de mode	N° de borne ⊕	N° de borne ⊖	Continuité
VENT	① ou ②	Masse de carrosserie	Oui
B/L (BI-NIVEAU)	② ou ③		
FOOT (PLANCHER)	③ ou ④		
F/D (PLAN/DEG)	④ ou ⑤		
DEF (DEG)	⑤ ou ⑥		

Mauvais → Débrancher le connecteur de faisceau du moteur de volet de mode.

Bon

VERIFIER LA TRINGLE LATERALE.

B

Note

VERIFIER LE CIRCUIT DE MASSE DE CARROSSERIE DU MOTEUR DE VOLET DE MODE.

Y a-t-il continuité entre la borne n° ⑰ du faisceau du moteur de volet de mode et la masse de carrosserie ?

Bon

C

Note

Vérifier la continuité du circuit entre chaque borne du boîtier de commande à poussoirs et sur le moteur du volet de mode.

N° de borne ⊕ (Boîtier de commande à poussoirs)	N° de borne ⊖ (Moteur de volet de mode)	Continuité
①	①	Oui
②	②	
③	③	
④	④	
⑤	⑤	
⑥	⑥	
⑦	⑦	
⑧	⑧	

Bon

Ⓐ
(Passer à la page suivante).

Note :
Si le résultat est mauvais ou "Non" après la vérification de la continuité du circuit, réparer le faisceau ou le connecteur.

Simpo PDF Merge and Split Unregistered Version - http://www.simpopdf.com

Procédure de diagnostic 8 (Suite)

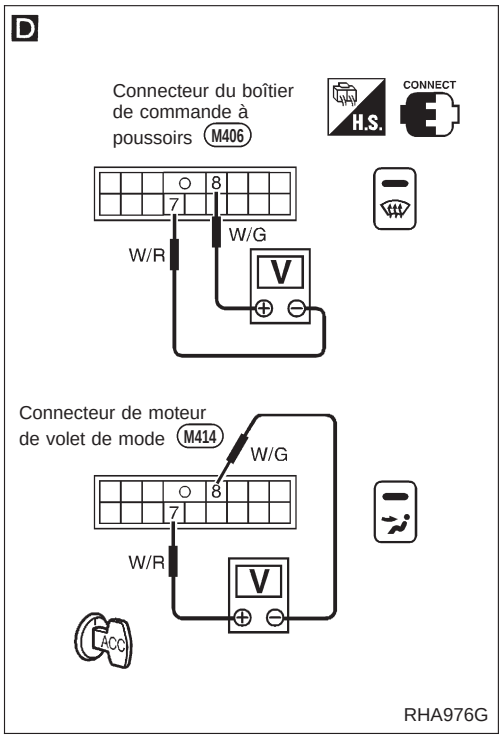

Ⓐ

Raccorder les connecteurs de faisceau du boîtier de commande à poussoirs et du moteur de volet de mode.

D

VERIFIER LA SORTIE DU BOITIER DE COMMANDE A POUSSOIRS.
Est-ce qu'il y a une tension d'environ 12 volts entre les bornes n° ⑦ et ⑧ du faisceau de boîtier de commande à poussoirs lorsque le mode de sélection passe de "VENT" à "DEF" (DEG) ou de "DEF" (DEG) à "VENT" ?

N° de borne		Moteur de volet de mode	
⑦	⑧	Fonctionnement du volet de mode	Sens de la rotation de la timonerie
—	—	Arrêt	Arrêt
⊖	⊕	VENT → DEF (DEG)	Dans le sens des aiguilles d'une montre
⊕	⊖	DEF → VENT (DEG)	Dans le sens contraire des aiguilles d'une montre

Mauvais → Remplacer l'amplificateur de commande incorporé dans le boîtier de commande à poussoirs.

Bon

Remplacer le moteur de volet de mode.

Simpo PDF Merge and Split Unregistered Version - http://www.simpopdf.com

A

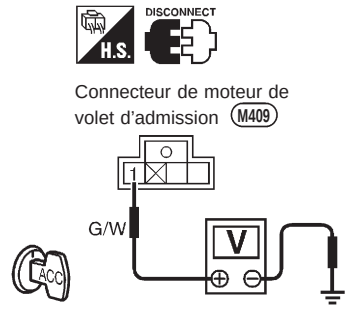

B

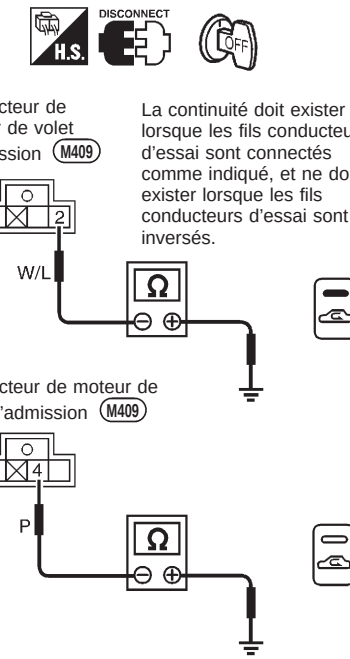

C

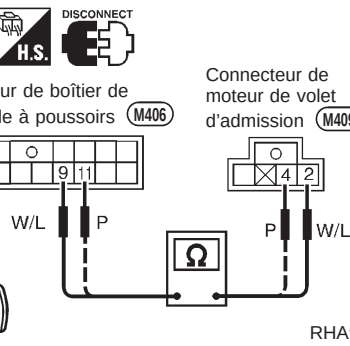

Procédure de diagnostic 9

SYMPTOME : le volet d'admission ne change pas.

- **Effectuer la VERIFICATION PRELIMINAIRE 1, puis la Vérification de l'alimentation électrique principale et du circuit de mise à la masse avant de se reporter à l'organigramme ci-dessous.**

A

VERIFIER L'ALIMENTATION ELECTRIQUE DU MOTEUR DE VOLET D'ADMISSION.
Débrancher le connecteur de faisceau du moteur du volet d'admission.
Y a-t-il une tension d'environ 12 volts entre la borne n° (39) du faisceau du moteur de volet d'admission et la masse de carrosserie ?

Mauvais → Vérifier le fusible de 7,5A (n° 21) dans le boîtier à fusibles (se reporter à "DISPOSITION DE L'ALIMENTATION ELECTRIQUE" dans la section EL et à son schéma de câblage).

Bon ↓

B

VERIFIER LE CIRCUIT DE MASSE DE CARROSSERIE DU MOTEUR DE VOLET D'ADMISSION.
Y a-t-il continuité entre la borne n° (2) du faisceau du moteur de volet d'admission et la masse de carrosserie lorsque REC est en marche ?
Y a-t-il continuité entre la borne n° (4) du faisceau du moteur de volet d'admission et la masse de carrosserie lorsque REC est sur arrêt ?

Mauvais → Débrancher le connecteur de faisceau du boîtier de commande à poussoirs.

C

Note

Vérifier la continuité du circuit entre la borne n° (9) ((11)) du faisceau du boîtier de commande à poussoirs et la borne n° (2) ((4)) du faisceau du moteur de volet d'admission.

Bon ↓

Remplacer l'amplificateur de commande incorporé dans le boîtier de commande à poussoirs.

Bon ↓

Remplacer le moteur du volet d'admission.

Note :
Si le résultat est mauvais ou "Non" après la vérification de la continuité du circuit, réparer le faisceau ou le connecteur.

Simpo PDF Merge and Split Unregistered Version - http://www.simpopdf.com

A

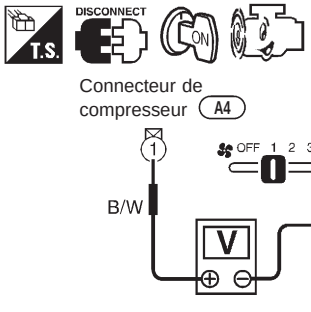

B

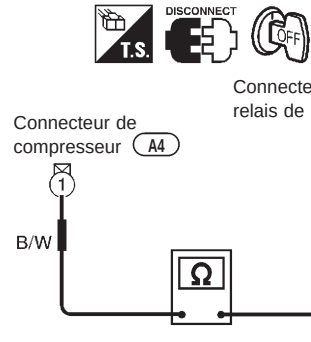

C

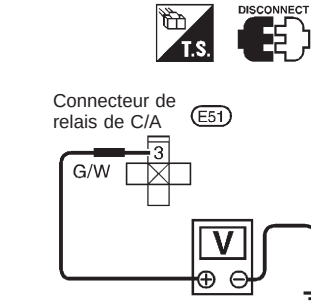

D

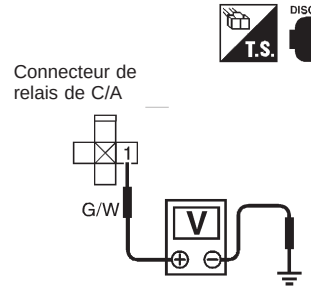

E

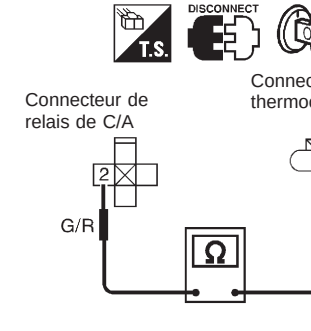

Procédure de diagnostic 10

SYMPTOME : l'embrayage magnétique ne s'enclenche pas lorsque l'interrupteur de C/A et le commutateur de ventilateur sont enclenchés.

A

VERIFIER L'ALIMENTATION ELECTRIQUE DU COMPRESSEUR.
Débrancher le connecteur de faisceau du compresseur.
Y a-t-il une tension d'environ 12 volts entre la borne (1) du faisceau de compresseur et la masse de carrosserie ?

Oui → Vérifier les points suivants.
- Bobine d'embrayage magnétique
- Protecteur thermique

Mauvais → Remplacer l'embrayage magnétique. Se reporter à HA-1091.

Non

B — Note

Vérifier la continuité du circuit entre la borne (5) du faisceau de relais de C/A et la borne (1) du faisceau de compresseur.
Il doit y avoir continuité.
Si le résultat est satisfaisant, vérifier que le faisceau n'est pas court-circuité.

Bon

C

VERIFIER L'ALIMENTATION ELECTRIQUE DU RELAIS DE C/A.
Y a-t-il une tension d'environ 12 volts entre la borne (3) du faisceau de relais de C/A et la masse de carrosserie ?

Non → Vérifier le circuit de l'alimentation électrique et le fusible de 7,5A (n° 21, situé dans le boîtier à fusibles) (se reporter à "DISPOSITION DE L'ALIMENTATION ELECTRIQUE" dans la section EL et à son schéma de câblage).

Oui

D

VERIFIER L'ALIMENTATION ELECTRIQUE DU RELAIS DE C/A.
Y a-t-il une tension d'environ 12 volts entre la borne (1) du faisceau de relais de C/A et la masse de carrosserie ?

Oui → Vérifier le circuit de l'alimentation électrique et le fusible de 7,5A (n° 21, situé dans le boîtier à fusibles) (se reporter à "DISPOSITION DE L'ALIMENTATION ELECTRIQUE" dans la section EL et à son schéma de câblage).

Non

VERIFIER LE RELAIS DE C/A APRES L'AVOIR DECONNECTE.
Se reporter à HA-1060.

Mauvais → Remplacer le relais de C/A.

Bon

Reconnecter le relais de C/A.

E — Note

Vérifier la continuité du circuit entre la borne n° (2) du faisceau de relais de C/A et la borne n° (2) du faisceau de thermocontact.
Il doit y avoir continuité.
Si le résultat est satisfaisant, vérifier que le faisceau n'est pas court-circuité.

Bon

(A)
(Passer à la page suivante).

Note :
Si le résultat est mauvais ou "Non" après la vérification de la continuité du circuit, réparer le faisceau ou le connecteur.

Simpo PDF Merge and Split Unregistered Version - http://www.simpopdf.com

Procédure de diagnostic 10 (Suite)

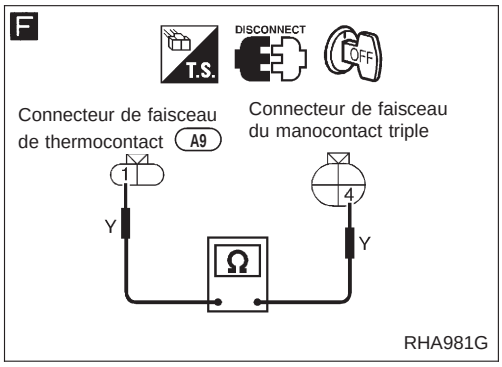

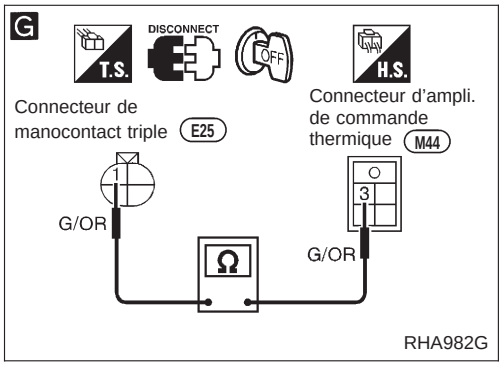

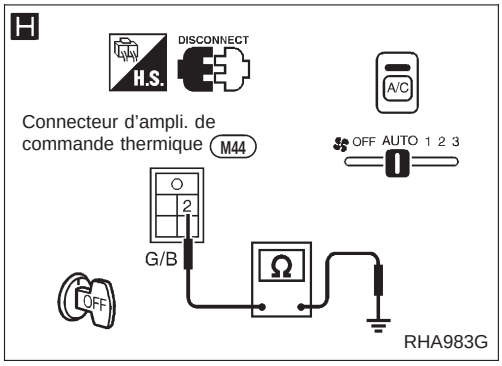

Ⓐ

F Note

Vérifier la continuité du circuit entre la borne n° ① du faisceau du thermocontact et la borne n° ④ du faisceau de manocontact triple.
Il doit y avoir continuité.
Si le résultat est satisfaisant, vérifier que le faisceau n'est pas court-circuité.

↓ Bon

VERIFIER LE THERMOCONTACT.
Se reporter à HA-1061.

↓ Bon

VERIFIER LE MANOCONTACT TRIPLE.
Se reporter à HA-1060.

→ Mauvais → Vérifier la quantité de la remplissage de réfrigérant.

↓ Bon → Remplacer le manocontact triple.

↓ Bon

G Note

Vérifier la continuité du circuit entre la borne n° ① du faisceau du manocontact triple et la borne n° ③ du faisceau de l'ampli. de commande thermique.
Il doit y avoir continuité.
Si le résultat est satisfaisant, vérifier que le faisceau n'est pas court-circuité.

↓ Bon

VERIFIER L'ALIMENTATION ELECTRIQUE DE L'AMPLI. DE COMMANDE THERMIQUE (se reporter à "Vérification de l'alimentation électrique principale et du circuit de mise à la masse") (HA-1032).

↓

H

VERIFIER LE CIRCUIT DE MASSE DE CARROSSERIE DE L'AMPLI. DE COMMANDE THERMIQUE.
Débrancher le connecteur de faisceau de l'ampli. de commande thermique.
Y a-t-il continuité entre la borne ② du faisceau de l'ampli. de commande thermique et la masse de carrosserie ?

→ Bon → Remplacer le commutateur de ventilateur.

↓ Mauvais

Débrancher le connecteur de faisceau du boîtier de commande à poussoirs.

↓

Ⓑ

(Passer à la page suivante).

Note :
Si le résultat est mauvais ou "Non" après la vérification de la continuité du circuit, réparer le faisceau ou le connecteur.

Simpo PDF Merge and Split Unregistered Version - http://www.simpopdf.com

Procédure de diagnostic 10 (Suite)

I

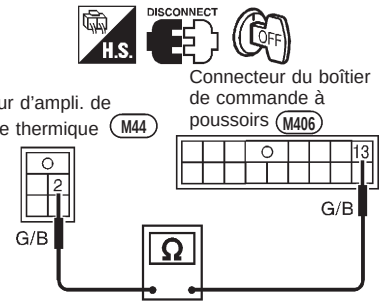

J

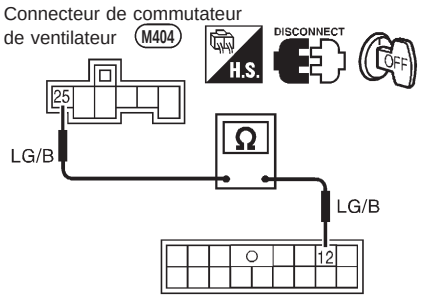

K

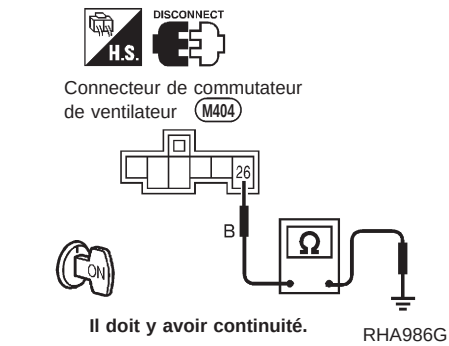

Ⓑ

I — Note

Vérifier la continuité du circuit entre la borne n° ② du faisceau de l'ampli. de commande thermique et la borne n° ⑬ du faisceau du boîtier de commande à poussoirs.

Bon ↓

VERIFIER L'INTERRUPTEUR DE C/A DU BOITIER DE COMMANDE A POUSSOIRS (se reporter à Inspection des composants électriques ; HA-1059).

Mauvais → Remplacer l'ampli. de commande intégré au boîtier de commande à poussoirs.

Bon ↓

Débrancher le connecteur de faisceau du commutateur de ventilateur.

J — Note

Vérifier la continuité du circuit entre la borne n° ⑫ du faisceau du boîtier de commande à poussoirs et la borne n° ㉕ du faisceau du commutateur de ventilateur.

Bon ↓

K — Note

Vérifier la continuité du circuit entre la borne ㉖ du faisceau du commutateur de ventilateur et la masse de carrosserie.

Bon ↓

VERIFIER LE COMMUTATEUR DE VENTILATEUR (se reporter à Inspection des composants électriques) (HA-1059).

Note :
Si le résultat est mauvais ou "Non" après la vérification de la continuité du circuit, réparer le faisceau ou le connecteur.

Simpo PDF Merge and Split Unregistered Version - http://www.simpopdf.com

A

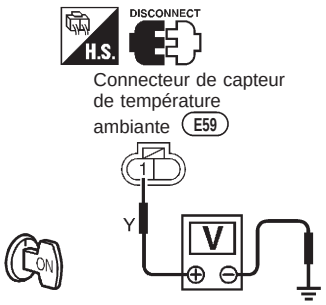

RHA987G

B

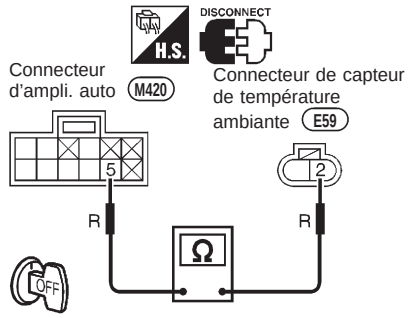

RHA988G

C

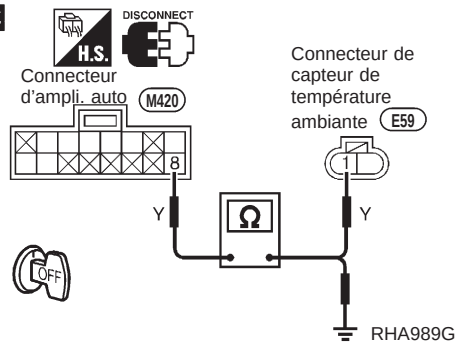

RHA989G

Procédure de diagnostic 11

SYMPTOME : le circuit du capteur de température ambiante est ouvert ou court-circuité.

A

VERIFIER LE CIRCUIT DU CAPTEUR DE TEMPERATURE AMBIANTE ENTRE LE CAPTEUR ET L'AMPLIFICATEUR AUTOMATIQUE.
Débrancher le connecteur de faisceau du capteur de température ambiante.
Y a-t-il une tension d'environ 5 V entre la borne n° ① du faisceau du capteur de température ambiante et la masse de carrosserie ?

Mauvais → Débrancher le connecteur de faisceau de l'amplificateur automatique.

Débrancher le connecteur de faisceau de l'amplificateur automatique. → C

C

Note

Vérifier la continuité du circuit entre la borne n° ⑧ du faisceau de l'ampli. auto et la borne n° ① du faisceau du capteur de température ambiante, et entre la borne n° ⑧ du faisceau de l'ampli. auto et la masse de carrosserie.

Bon → Remplacer l'amplificateur automatique.

Bon → Débrancher le connecteur de faisceau de l'amplificateur automatique.

B

Note

Vérifier la continuité du circuit entre la borne n° ② du faisceau du capteur de température ambiante et la borne n° ⑤ du faisceau de l'ampli. auto.

Bon → VERIFIER LE CAPTEUR DE TEMPERATURE AMBIANTE (se reporter à HA-1070).

Mauvais → Remplacer le capteur de température ambiante.

Bon → Remplacer l'amplificateur automatique.

Note :
Si le résultat est mauvais ou "Non" après la vérification de la continuité du circuit, réparer le faisceau ou le connecteur.

Simpo PDF Merge and Split Unregistered Version - http://www.simpopdf.com

A

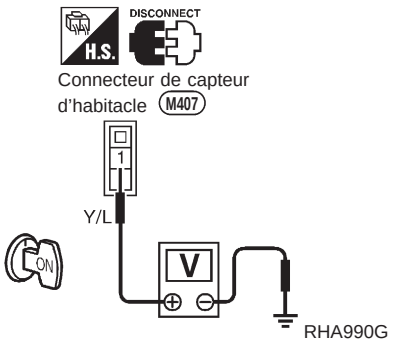

B

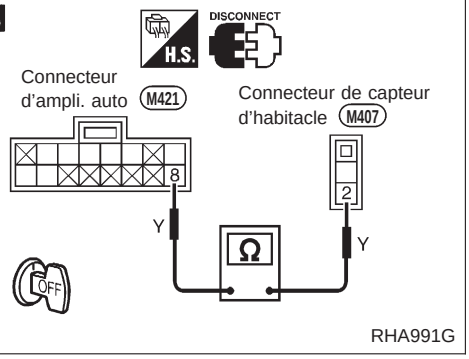

C

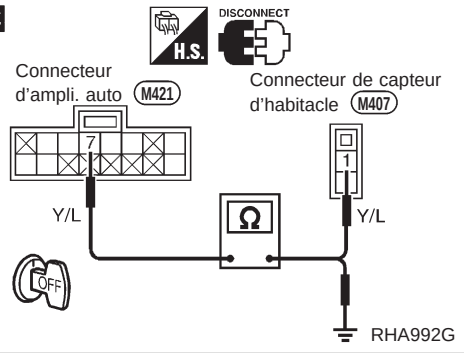

Procédure de diagnostic 12

SYMPTOME : le circuit du capteur d'habitacle est ouvert ou court-circuité.

A

VERIFIER LE CIRCUIT DU CAPTEUR D'HABITACLE DU VEHICULE ENTRE LE CAPTEUR D'HABITACLE DU VEHICULE ET L'AMPLI. AUTO.
Débrancher le connecteur de faisceau du capteur d'habitacle du véhicule.
Y a-t-il une tension d'environ 5 V entre la borne n° ① du faisceau du capteur d'habitacle et la masse de carrosserie ?

Mauvais → Débrancher le connecteur de faisceau de l'amplificateur automatique.

C

Note

Vérifier la continuité du circuit entre la borne n° ⑦ du faisceau de l'ampli. auto et la borne n° ① du faisceau du capteur d'habitacle, et entre la borne n° ⑦ du faisceau de l'ampli. auto et la masse de carrosserie.

Bon → Remplacer l'amplificateur automatique.

Bon → Débrancher le connecteur de faisceau de l'amplificateur automatique.

B

Note

Vérifier la continuité du circuit entre la borne n° ② du faisceau du capteur d'habitacle et la borne n° ⑧ du faisceau de l'ampli. auto..

Bon

VERIFIER LE CAPTEUR D'HABITACLE (se reporter à HA-1069).

Mauvais → Remplacer le capteur d'habitacle du véhicule.

Bon → Remplacer l'amplificateur automatique.

Note :
Si le résultat est mauvais ou "Non" après la vérification de la continuité du circuit, réparer le faisceau ou le connecteur.

Simpo PDF Merge and Split Unregistered Version - http://www.simpopdf.com

A

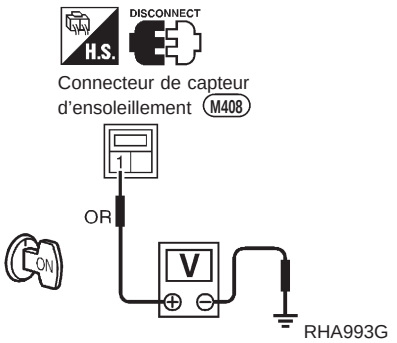

B

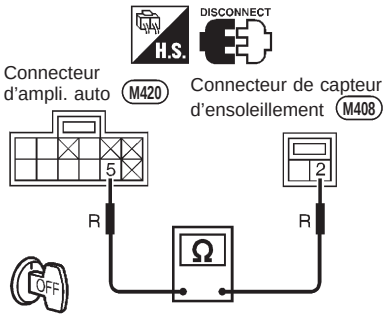

C

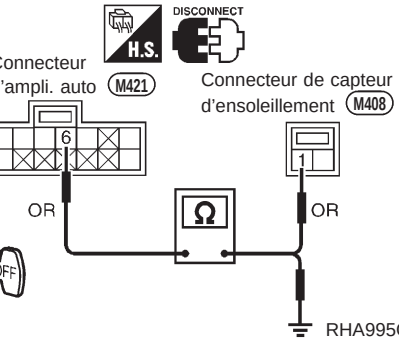

Procédure de diagnostic 13

SYMPTOME : le circuit du capteur d'ensoleillement est ouvert ou court-circuité.

A

VERIFIER LE CIRCUIT DU CAPTEUR D'ENSOLEILLEMENT ENTRE LE CAPTEUR ET L'AMPLIFICATEUR AUTOMATIQUE.
Débrancher le connecteur de faisceau du capteur d'ensoleillement.
Y a-t-il une tension d'environ 5 V entre la borne n° (1) du faisceau du capteur d'ensoleillement et la masse de carrosserie ?

Mauvais → Débrancher le connecteur de faisceau de l'amplificateur automatique.

Débrancher le connecteur de faisceau de l'amplificateur automatique. → C

C — Note

Vérifier la continuité du circuit entre la borne n° (6) du faisceau de l'ampli. auto et la borne n° (1) du faisceau de capteur d'ensoleillement, et entre la borne n° (6) du faisceau de l'ampli. auto et la masse de carrosserie.

Bon → Remplacer l'amplificateur automatique.

Bon → Débrancher le connecteur de faisceau de l'amplificateur automatique.

B — Note

Vérifier la continuité du circuit entre la borne n° (2) du faisceau du capteur d'ensoleillement et la borne n° (5) du faisceau de l'ampli. auto..

Bon → VERIFIER LE CAPTEUR D'ENSOLEILLEMENT (Se reporter à HA-1071).

Mauvais → Remplacer le capteur d'ensoleillement.

Bon → Remplacer l'amplificateur automatique.

Note :
Si le résultat est mauvais ou "Non" après la vérification de la continuité du circuit, réparer le faisceau ou le connecteur.

Simpo PDF Merge and Split Unregistered Version - http://www.simpopdf.com

A

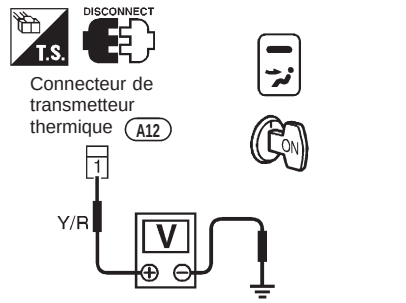

B

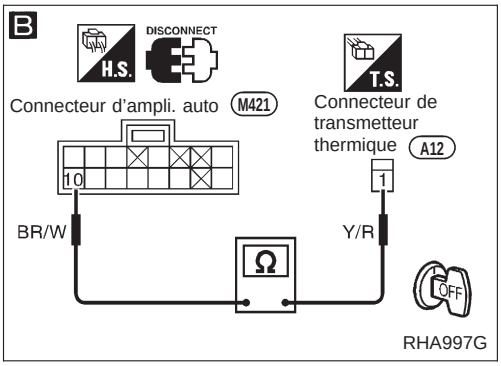

C

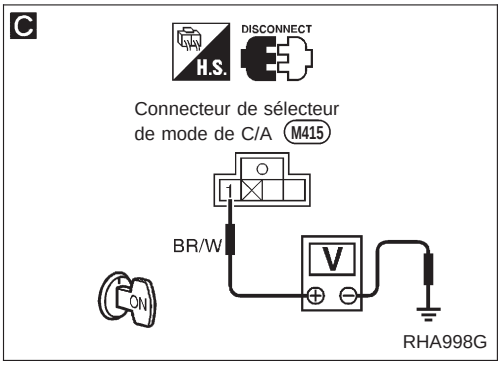

Procédure de diagnostic 14

SYMPTOME : le circuit du transmetteur thermique est ouvert ou court-circuité.

A

VERIFIER LE CIRCUIT DU TRANSMETTEUR THERMIQUE.
Débrancher le connecteur de faisceau du transmetteur thermique.
Y a-t-il une tension d'environ 5 V entre la borne n° ① du faisceau du transmetteur thermique et la masse de carrosserie ?

Mauvais → Débrancher le connecteur de faisceau du micro-contact.

C

Y a-t-il une tension d'environ 5 V entre la borne n° ① du faisceau du micro-contact et la masse de carrosserie ?

Bon → Ⓐ (Passer à la page suivante).

Mauvais → Ⓑ (Passer à la page suivante).

Bon

Débrancher le connecteur de faisceau de l'amplificateur automatique.

B

Note

Vérifier la continuité du circuit entre la borne n° ① du faisceau du transmetteur thermique et la borne n° ⑩ du faisceau de l'ampli. auto.

Bon

VERIFIER LA SONDE THERMIQUE (se reporter à ''CONTROLE DU TRANSMETTEUR THERMIQUE'' dans la section EL).

Mauvais → Remplacer le transmetteur thermique.

Bon

Remplacer l'amplificateur automatique.

Note :
Si le résultat est mauvais ou ''Non'' après la vérification de la continuité du circuit, réparer le faisceau ou le connecteur.

Simpo PDF Merge and Split Unregistered Version - http://www.simpopdf.com

Procédure de diagnostic 14 (Suite)

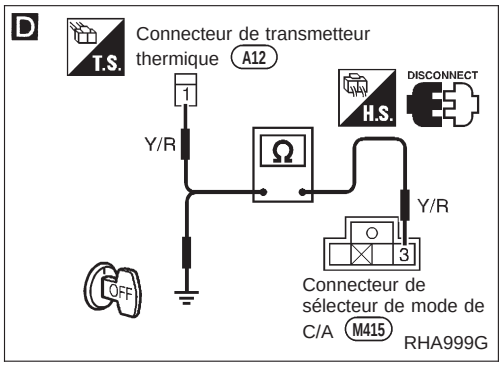

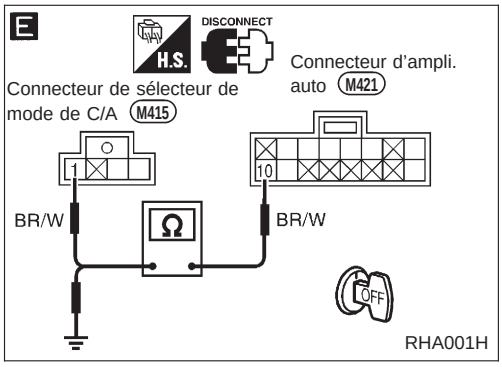

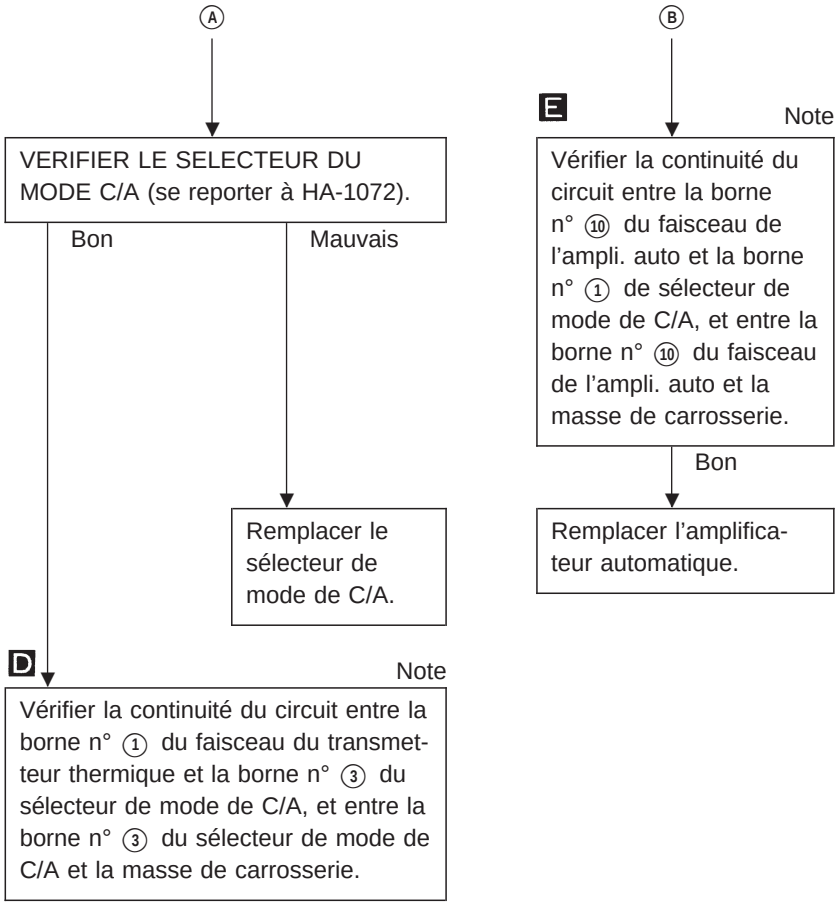

Note :
Si le résultat est mauvais ou "Non" après la vérification de la continuité du circuit, réparer le faisceau ou le connecteur.

Simpo PDF Merge and Split Unregistered Version - http://www.simpopdf.com

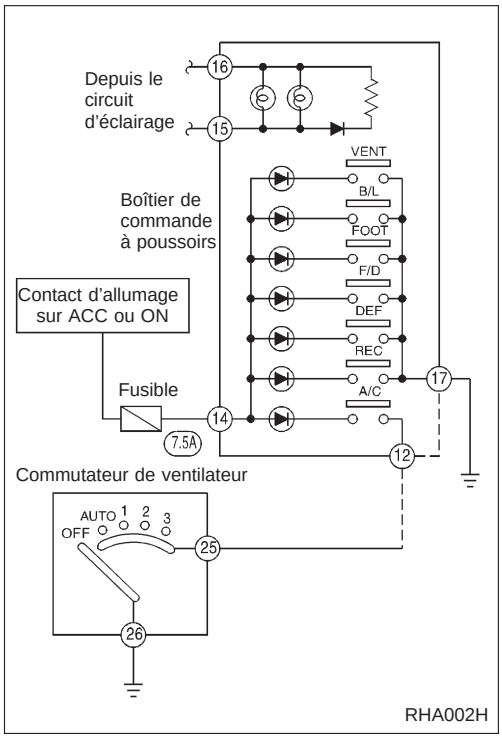

Procédure de diagnostic 15

SYMPTOME : l'éclairage ou les indicateurs du boîtier de commande à poussoirs ne s'allument pas.

- **Avant de se reporter à l'organigramme ci-dessous, effectuer la Vérification de l'alimentation électrique principale et du circuit de mise à la masse.**

Mettre le contact d'allumage et la commande d'éclairage sur ON.

↓

VERIFIER L'ECLAIRAGE ET LES INDICATEURS.

- Enclencher les interrupteurs de C/A, REC et le commutateur de ventilateur.
- Appuyer sur les interrupteurs VENT, B/L (BI-NIVEAU), FOOT (PLANCHER), F/D (PLANCHER/DEG) et DEF (DEG) dans cet ordre.
- Vérifier les incidents et suivre les méthodes de réparation comme suit :

INCIDENTS								"Comment réparer"
ECL. Boîtier de commande à poussoirs	VENT	B/L (BI-NIVEAU)	FOOT (PLANCHER)	F/D (PLAN/-DEG)	DEF (DEG)	REC	A/C (C/A)	
×	○	○	○	○	○	○		Passer à la PROCEDURE DE DIAGNOSTIC 15-1.
	○	○	○	○	○	○	×	Passer à la PROCEDURE DE DIAGNOSTIC 15-2.
○	×	×	×	×	×	×		Passer à la PROCEDURE DE DIAGNOSTIC 15-3.
	△							Remplacer l'ampli. de commande intégré au boîtier de commande à poussoirs.
○	×	×	×	×	×	×	○	Remplacer l'amplificateur de commande à poussoirs intégré au boîtier de commande à poussoirs.
	×	×	×	×	×	×	○	Passer à la PROCEDURE DE DIAGNOSTIC 15-4.

○ : L'éclairage ou l'indicateur s'allume.
× : L'éclairage ou l'indicateur ne s'allume pas.
△ : Quelques indicateurs de VENT, B/L, FOOT, F/D, DEF ou REC s'allument.

Simpo PDF Merge and Split Unregistered Version - http://www.simpopdf.com

Procédure de diagnostic 15 (Suite)

PROCEDURE DE DIAGNOSTIC 15-1

A

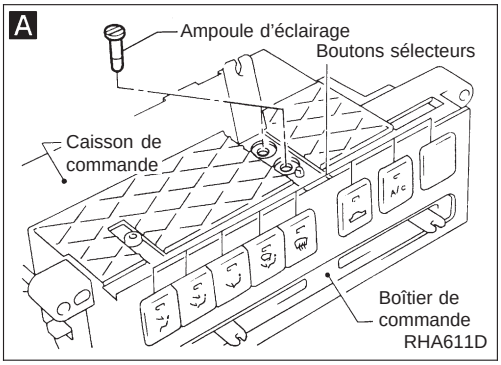

B

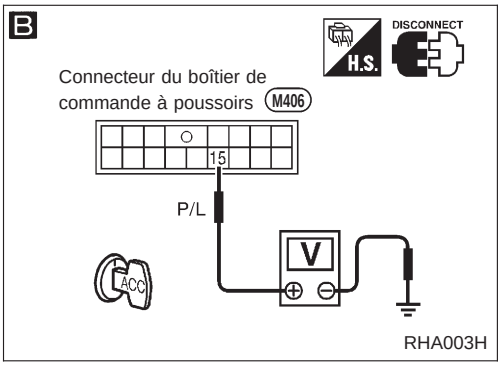

C

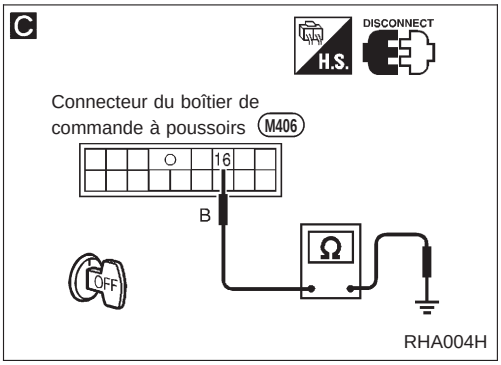

VERIFIER LES AUTRES SYSTEMES D'ECLAIRAGE SAUF POUR LE SYSTEME DE C/A.
Est-ce que les autres éclairages s'allument lorsque le contact d'allumage et la commande d'éclairage sont sur ON ?

Mauvais → VERIFIER LE SYSTEME D'ECLAIRAGE.
Se reporter à ''Eclairage du tableau de bord/ Schéma de câblage'' dans la section EL.

Bon ↓

Mettre le contact d'allumage et la commande d'éclairage sur OFF.

A

VERIFIER L'AMPOULE.
Déposer le boîtier de commande à poussoirs et débrancher les connecteurs de faisceau.
Déposer (les) ampoule(s) d'éclairage

Mauvais → Remplacer l'(les) ampoule(s) d'éclairage.

Bon ↓

B

VERIFIER L'ALIMENTATION ELECTRIQUE DE L'ECLAIRAGE AVEC LA COMMANDE D'ECLAIRAGE SUR ON.
Est-ce qu'il y a une tension d'environ 12 volts entre la borne (15) du faisceau du boîtier de commande à poussoirs et la masse de carrosserie ?

Mauvais → VERIFIER L'ALIMENTATION ELECTRIQUE DU SYSTEME D'ECLAIRAGE DE C/A.
Se reporter à ''Eclairage du tableau de bord/ Schéma de câblage'' dans la section EL.

Bon ↓

C

Note

VERIFIER LE CIRCUIT DE MASSE DE L'ECLAIRAGE.
Y a-t-il continuité entre la borne (16) du faisceau du boîtier de commande à poussoirs et la masse de carrosserie ?

Bon ↓

Remplacer l'amplificateur de commande incorporé dans le boîtier de commande à poussoirs.

Note :
Si le résultat est mauvais ou ''Non'' après la vérification de la continuité du circuit, réparer le faisceau ou le connecteur.

Simpo PDF Merge and Split Unregistered Version - http://www.simpopdf.com

Procédure de diagnostic 15 (Suite)

PROCEDURE DE DIAGNOSTIC 15-2

VERIFIER LE FONCTIONNEMENT DE L'EMBRAYAGE MAGNETIQUE.
L'embrayage magnétique fonctionne-t-il normalement lorsque le moteur, l'interrupteur de C/A et le commutateur de ventilateur sont en marche ?

Mauvais → Passer à la ''Procédure de diagnostic 10'' (se reporter à HA-1048.)

Bon ↓

Remplacer l'amplificateur de commande incorporé dans le boîtier de commande à poussoirs.

PROCEDURE DE DIAGNOSTIC 15-3

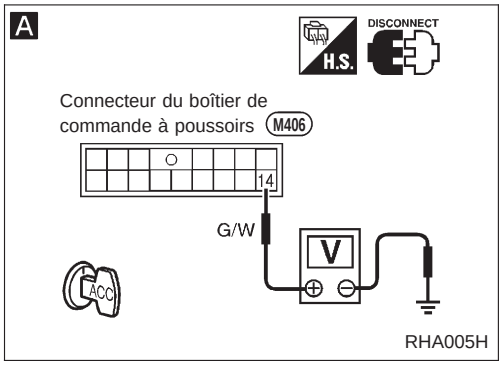

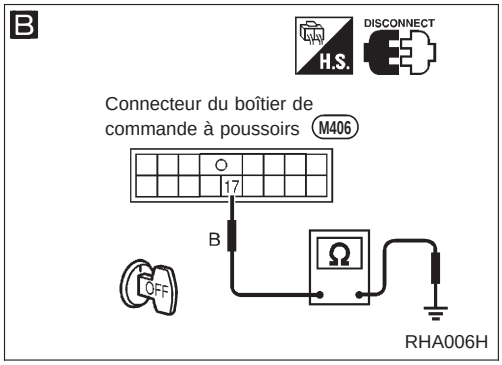

Mettre le contact d'allumage et la commande d'éclairage sur OFF.

↓

Débrancher le connecteur de faisceau du boîtier de commande à poussoirs.

↓

A

VERIFIER L'ALIMENTATION ELECTRIQUE DU BOITIER DE COMMANDE A POUSSOIRS.
Est-ce qu'il y a une tension d'environ 12 volts entre la borne (14) du faisceau du boîtier de commande à poussoirs et la masse de carrosserie ?

Mauvais → Vérifier le fusible de 7,5A (n° 21) dans le boîtier à fusibles (se reporter à ''DISPOSITION DE L'ALIMENTATION ELECTRIQUE'' dans la section EL et à son schéma de câblage).

Bon ↓

B

Note

VERIFIER LE CIRCUIT DE MASSE DE CARROSSERIE DU BOITIER DE COMMANDE A POUSSOIRS.
Y a-t-il continuité entre la borne (17) du faisceau du boîtier de commande à poussoirs et la masse de carrosserie ?

Bon ↓

Remplacer l'amplificateur de commande incorporé dans le boîtier de commande à poussoirs.

Note :
Si le résultat est mauvais ou ''Non'' après la vérification de la continuité du circuit, réparer le faisceau ou le connecteur.

Simpo PDF Merge and Split Unregistered Version - http://www.simpopdf.com

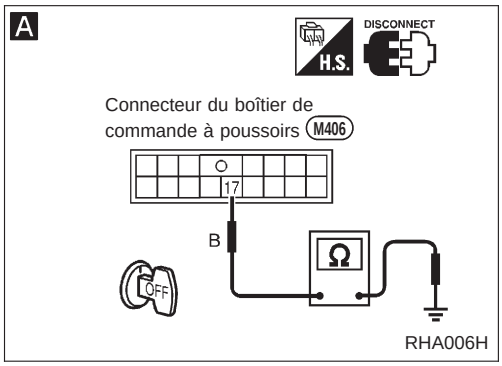

PRCEDURE DE DIAGNOSTIC 15-4

Mettre le contact d'allumage et la commande d'éclairage sur OFF.

↓

Débrancher le connecteur de faisceau du boîtier de commande à poussoirs.

↓

A — Note

VERIFIER LE CIRCUIT DE MASSE DE CARROSSERIE DU BOITIER DE COMMANDE A POUSSOIRS.
Y a-t-il continuité entre la borne ⑰ du faisceau du boîtier de commande à poussoirs et la masse de carrosserie ?

↓ Bon

Remplacer l'amplificateur de commande incorporé dans le boîtier de commande à poussoirs.

Note :
Si le résultat est mauvais ou "Non" après la vérification de la continuité du circuit, réparer le faisceau ou le connecteur.

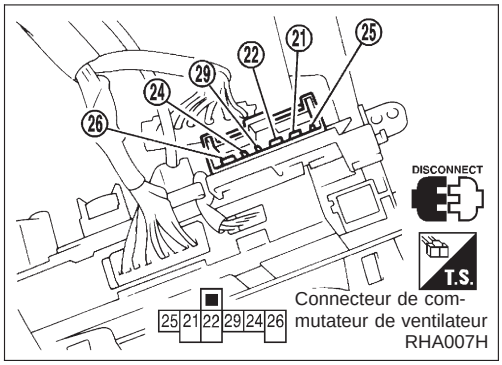

Inspection des composants électriques

COMMUTATEUR DE VENTILATEUR

Vérifier la continuité entre les bornes à chaque position de la commande.

BORNE	POSITION DU CURSEUR				
	Arrêt	AUTO	1	2	3
㉑					○
㉒				○	
㉙			○		
㉔		○			
㉖		○	○	○	○
㉕		○	○	○	○

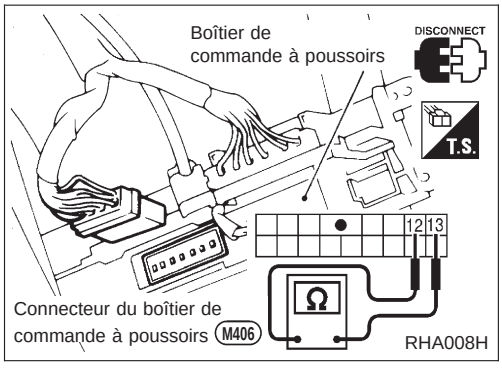

INTERRUPTEUR DE C/A

Vérifier la continuité entre les bornes à chaque position de la commande.

Position de l'interrupteur	N° de borne		Continuité
C/A	⊕	⊖	
Marche	⑬	⑫	Oui
Marche			
Arrêt			

Simpo PDF Merge and Split Unregistered Version - http://www.simpopdf.com

Inspection des composants électriques (Suite)

RELAIS DE A/C (C/A), HI (RAP.), MH (MI-RAP.), ML (MI-LENT) ET LO (LENT)

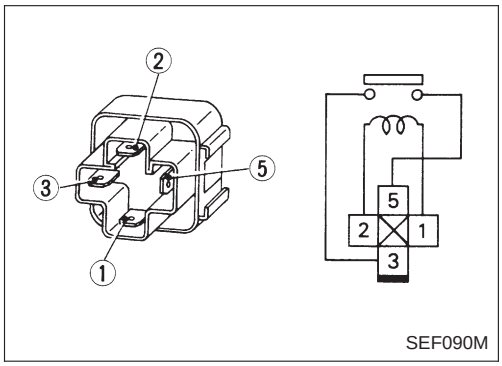

SEF090M

Vérifier la continuité entre les bornes n° ③ et ⑤.

Conditions	Continuité
Alimentation en courant continu de 12 volts entre les bornes ① et ②	Oui
Pas d'alimentation	Non

Si le résultat n'est pas satisfaisant, remplacer le relais.

MANOCONTACT TRIPLE

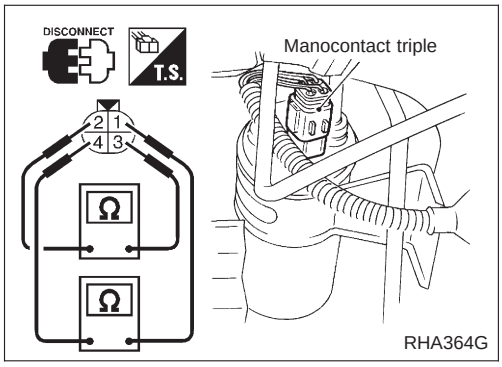

RHA364G

	Bornes	Pression de la canalisation côté haute pression kPa (bar, kg/cm²)	Fonctionnement	Continuité
Côté basse pression	① - ④	Augmentant jusqu'à 152,0 - 201,0 (1,520 - 2,010, 1,55 - 2,05)	Marche	Existe.
		Diminuant jusqu'à 152,0 - 201,0 (1,520 - 2,010, 1,55 - 2,05)	Arrêt	N'existe pas.
Côté pression moyenne*	② - ③	Augmentant jusqu'à 1 422 - 1 618 (14,22 - 16,18, 14,5 - 16,5)	Marche	Existe.
		Diminuant jusqu'à 1 128 - 1 422 (11,28 - 14,22, 11,5 - 14,5)	Arrêt	N'existe pas.
Côté haute pression	① - ④	Diminuant jusqu'à 2 059 - 2 256 (20,6 - 22,6, 21 - 23)	Marche	Existe.
		Augmentant jusqu'à 2 648 - 2 844 (26,5 - 28,4, 27 - 29)	Arrêt	N'existe pas.

* Pour le fonctionnement du moteur de ventilateur de refroidissement

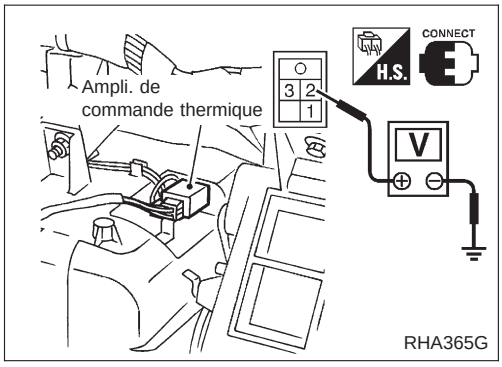

RHA365G

AMPLI. DE COMMANDE THERMIQUE

Température de l'air de sortie de l'évaporateur °C	Fonctionnement de l'ampli. thermique	Vérificateur
Diminuant jusqu'à 0,1 - 0,9	Mettre sur ARRET	Environ 12V
Augmentant jusqu'à 2,5 - 3,5	Mettre sur MARCHE	Environ 0V

Simpo PDF Merge and Split Unregistered Version - http://www.simpopdf.com

Inspection des composants électriques (Suite)

THERMOCONTACT

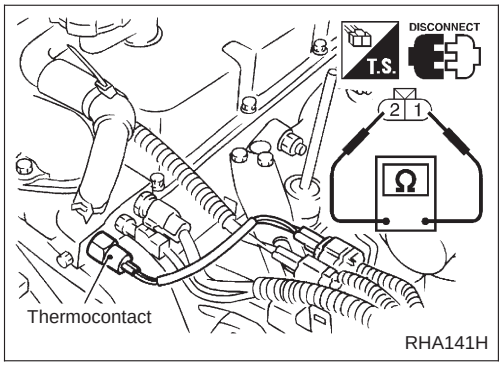

Température de l'eau °C	N° de borne		Continuité
	⊕	⊖	
Au-dessus de 105	①	②	Non
Inférieur à 100			Oui

Simpo PDF Merge and Split Unregistered Version - http://www.simpopdf.com

Système de commande à poussoirs

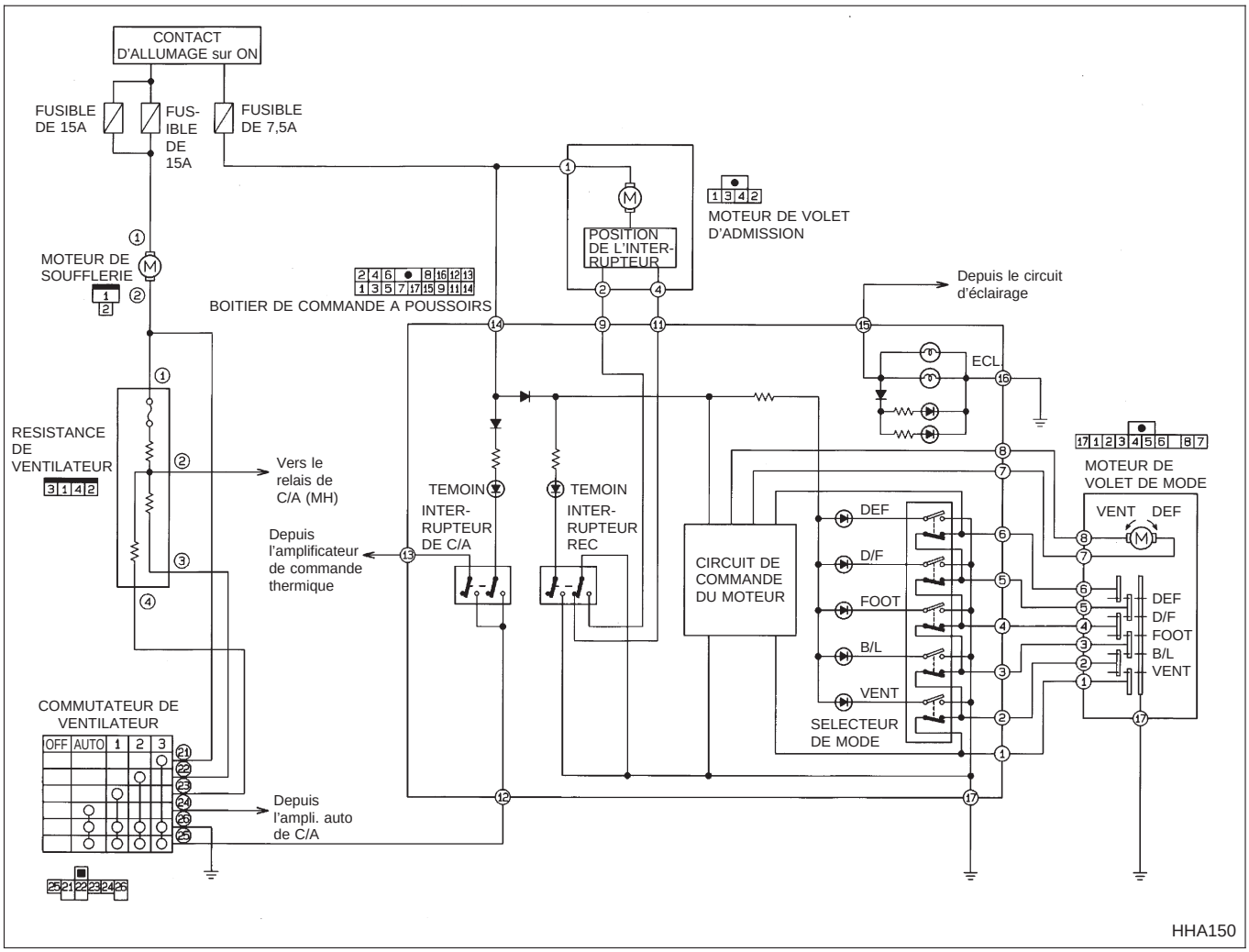

Ce système de commande à poussoirs fait fonctionner les moteurs de volet de mode et d'admission pour activer leurs volets correspondants.

BOUTONS DE SELECTION ET LEUR FONCTION DE CONTROLE

Bouton de sélection		Le témoin s'allume							Sortie d'air	Air d'admis-sion	Compres-seur
		C/A									
C/A		○									Marche*1
Mode			○						VENT		
				○					B/L (BI-NIVEAU)		
					○				FOOT (PLAN-CHER)		
						○			F/D (PLAN/ DEG)	FRE (FRAIS)	
							○		DEF (DEG)	FRE (FRAIS)	
								○		REC	

*1 : Le compresseur est activé par l'ampli. de commande thermique

Simpo PDF Merge and Split Unregistered Version - http://www.simpopdf.com

Système de commande à poussoirs (Suite)

MOTEUR DU VOLET DE MODE

Le moteur du volet de mode est situé sur le côté gauche du boîtier de chauffage. A travers la tringle latérale, il ouvre et ferme les volets d'air frais, de plancher et de dégivrage.
Lorsqu'un sélecteur de mode est enclenché, le contact de position intégré lit le mode correspondant pour déterminer le sens de la rotation du moteur. Dès que le mode désiré est sélectionné, la commande de position arrête le moteur.

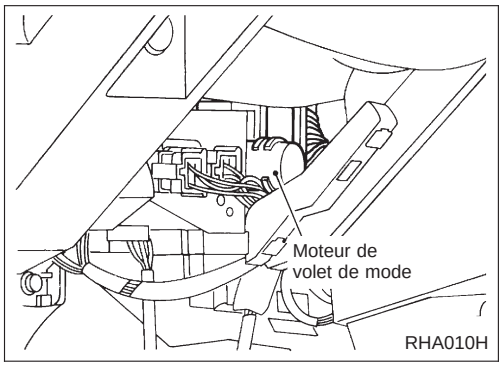

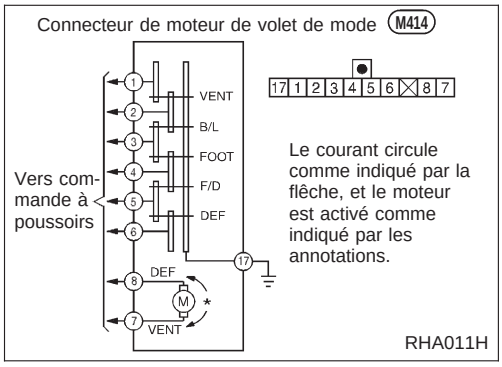

N° de borne		Moteur de volet de mode	
⑦	⑧	Fonctionnement du volet de mode	Sens de la rotation de la timonerie
—	—	Arrêt	Arrêt
⊖	⊕	VENT → DEF (DEG)	Dans le sens des aiguilles d'une montre
⊕	⊖	DEF (DEG) → VENT	Dans le sens contraire des aiguilles d'une montre

MOTEUR DU VOLET D'ADMISSION

Le moteur de volet d'admission est installé sur le boîtier d'admission. Lorsque la position du volet est déterminée par une pression sur l'interrupteur ''REC'' sur le tableau de bord, le moteur tourne et l'entrée d'air change.

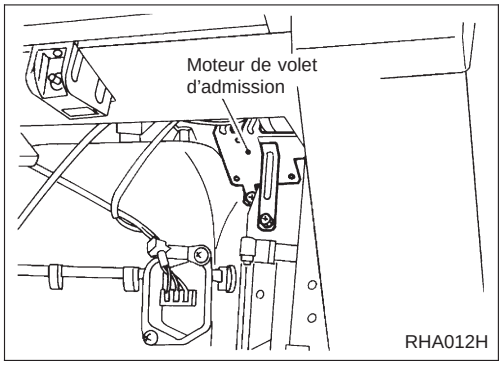

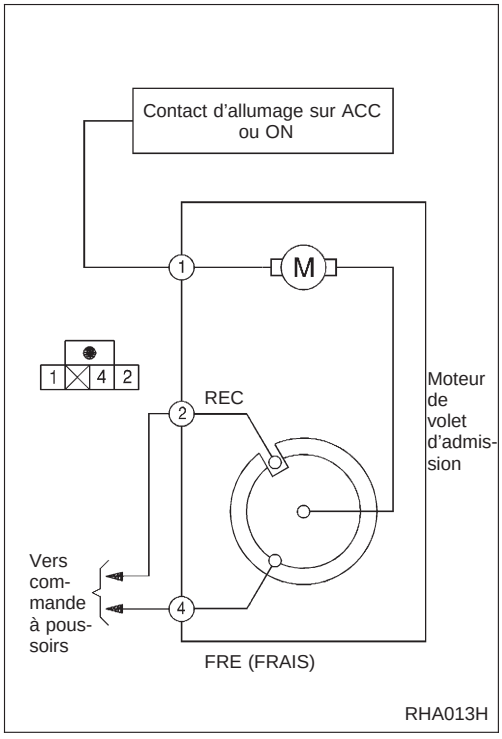

Simpo PDF Merge and Split Unregistered Version - http://www.simpopdf.com

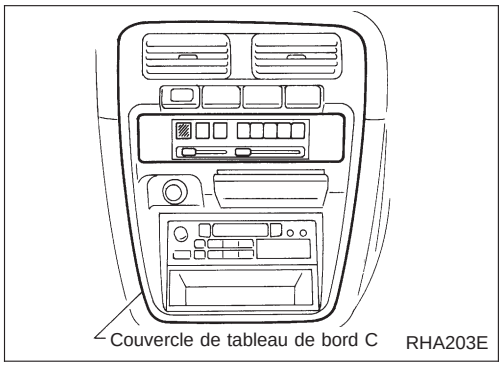

Dépose et repose

1. Déposer le couvercle de tableau de bord C.

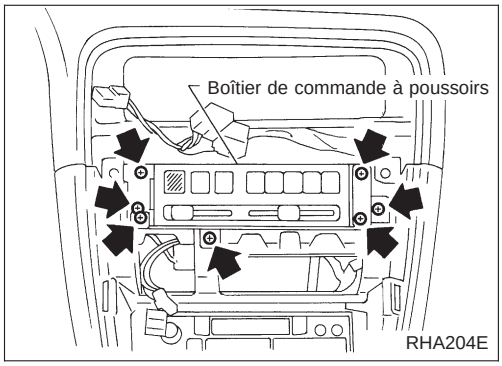

2. Déposer la radio.
3. Déposer les 7 vis du boîtier de commande à poussoirs et son support.
4. Débrancher les connecteurs de faisceau du boîtier de commande à poussoirs, du capteur de l'habitacle et du PTC.
5. Déposer le boîtier de commande à poussoirs.
6. La repose se fait dans l'ordre contraire de la dépose.

Révision — Ensemble de boîtier de commande à poussoirs

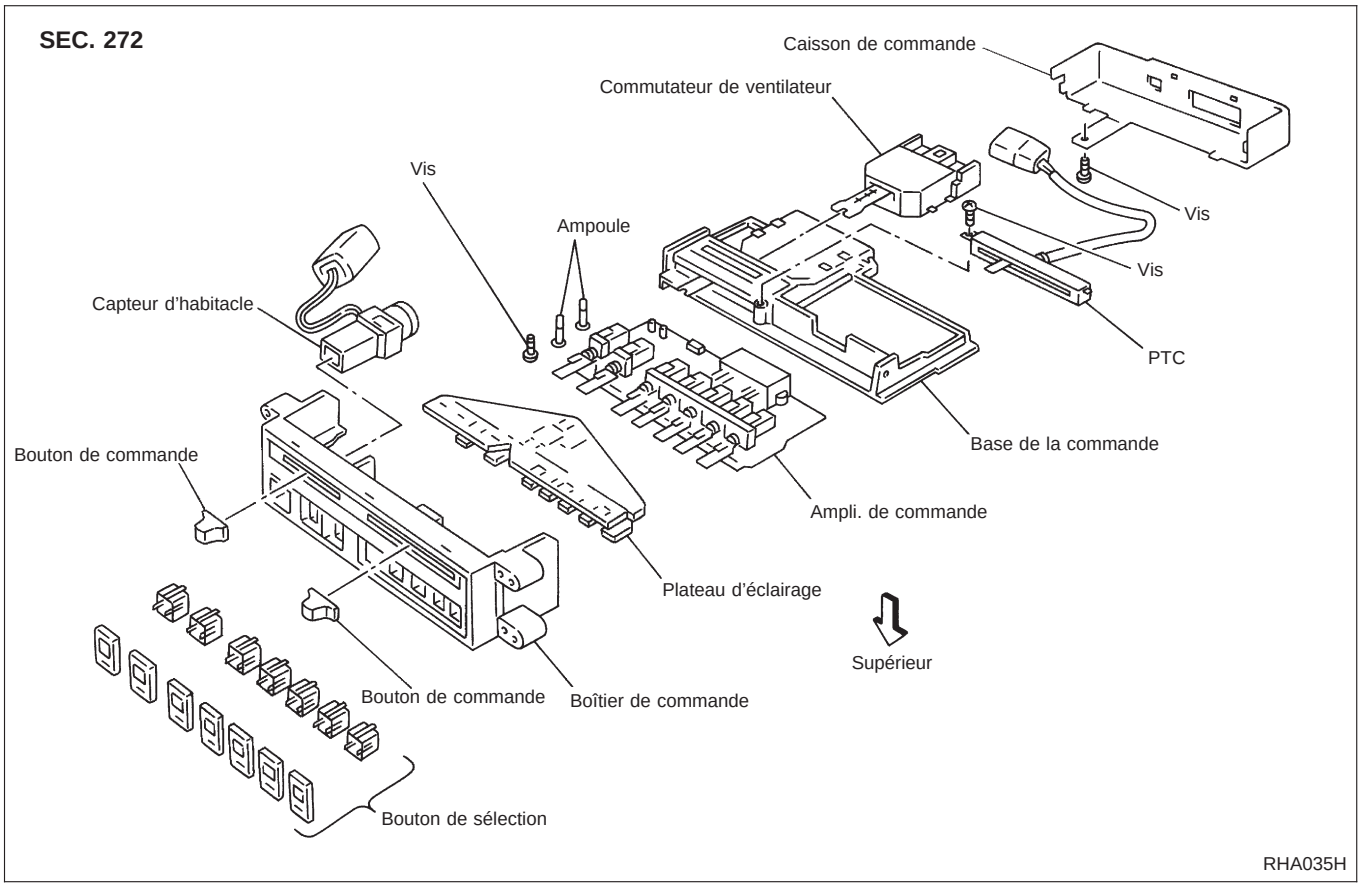

Simpo PDF Merge and Split Unregistered Version - http://www.simpopdf.com

Révision — Ensemble de boîtier de commande à poussoirs (Suite)

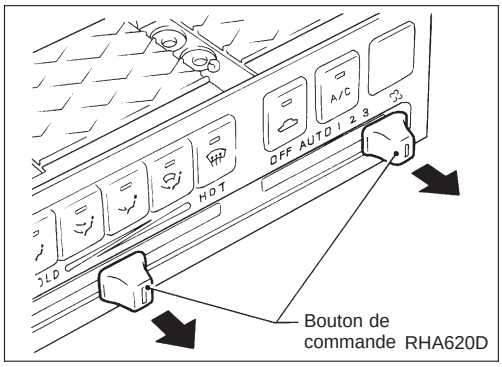

1. Déposer les boutons de commande.

Envelopper les boutons d'un chiffon et tirer dans la direction indiquée par la flêche comme indiqué sur la figure à gauche. Veiller à ne pas rayer les boutons lors de la dépose.

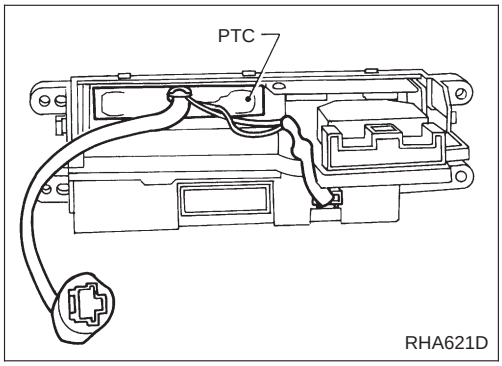

2. Déposer le PTC et débrancher les connecteurs de faisceau de l'éclairage.

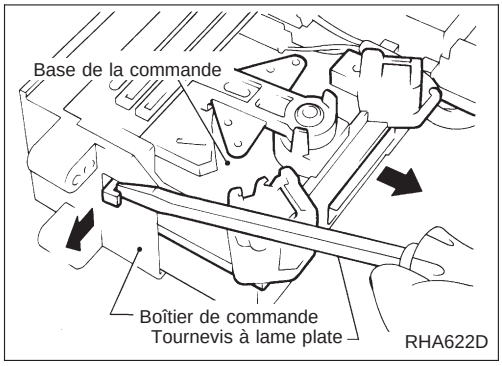

3. Déposer la base de la commande.

Défaire les crochets de chaque extrémité du boîtier de commande et déposer la base du boîtier de commande en le déplaçant dans la direction indiquée par la flèche.

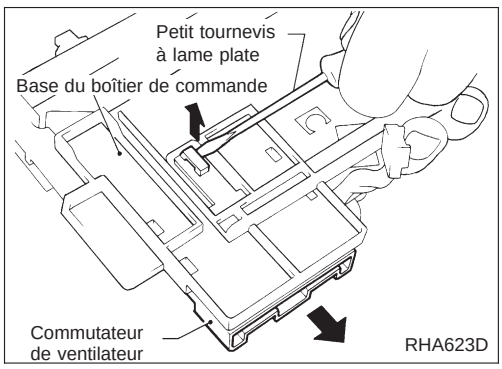

4. Déposer le commutateur de ventilateur.

5. Déposer l'ampoule d'éclairage.

Envelopper la garniture d'un chiffon et déposer les boutons en utilisant des circlips ou des outils similaires. Veiller à ne pas rayer la surface de la garniture.

Simpo PDF Merge and Split Unregistered Version - http://www.simpopdf.com

Révision — Ensemble de boîtier de commande à poussoirs (Suite)

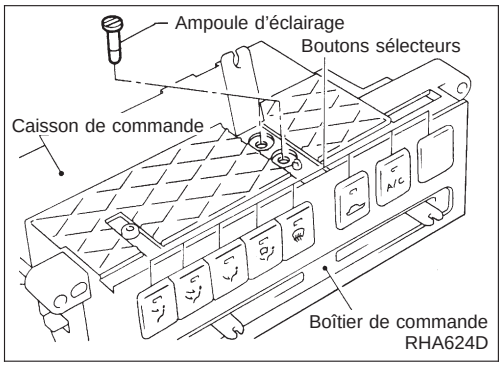

6. Déposer les boutons sélecteurs.
7. Déposer le boîtier de commande.
8. Déposer la plaque d'éclairage.

Veiller à ne pas rayer l'ampli. de commande lors de la dépose de la plaque minéralogique.

9. Déposer la plaque de finition.
10. Déposer l'ampli. de commande.

Veiller à ne pas endommager le substrat lors de la dépose.

11. Débrancher le câble de commande de la température.
12. La repose se fait dans l'ordre contraire de la dépose.

Réglage de la timonerie de commande

VOLET DE MODE

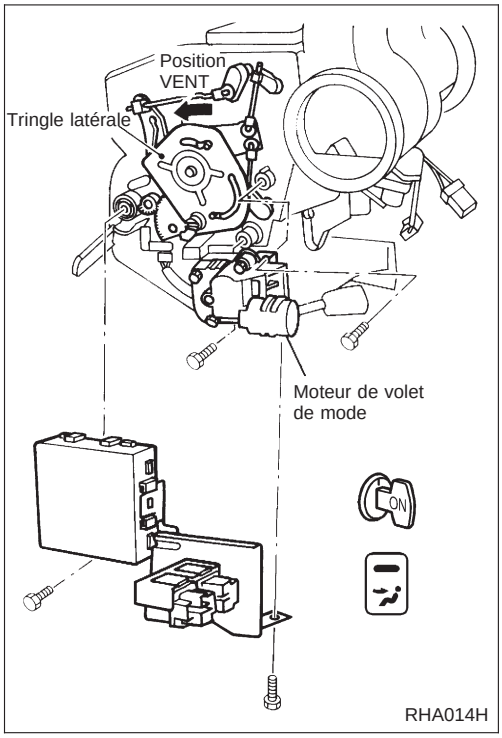

1. Déposer l'amplificateur auto. et le support de relais.
2. Déplacer manuellement la tringle latérale et maintenir le volet de mode en mode VENT.
3. Reposer le moteur de volet de mode sur l'unité de chauffage et le connecter sur le faisceau de C/A automatique.
4. Mettre le contact d'allumage sur ''ON''.
5. Placer l'interrupteur VENT sur ON.
6. Attacher la tige du moteur de volet de mode au support de tige de la tringle latérale.
7. Positionner l'interrupteur DEF sur ON. Vérifier si la tringle latérale fonctionne en pleine ouverture. Mettre aussi le commutateur du ventilateur sur marche afin de vérifier que la tringle latérale fonctionne en pleine ouverture.

Simpo PDF Merge and Split Unregistered Version - http://www.simpopdf.com

Réglage de la timonerie de commande (Suite)

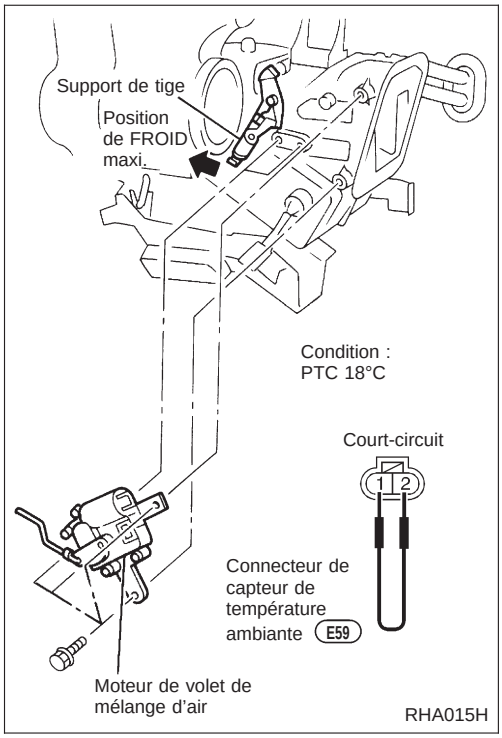

VOLET DE MELANGE D'AIR

1. Reposer le moteur de volet de mélange d'air sur l'unité de chauffage et le connecter sur le faisceau de C/A automatique.
2. Débrancher le connecteur de faisceau du capteur de température ambiante et brancher les bornes ⑤ et ㊺ avec un câble volant.
3. Mettre le PTC à 18°C et le moteur de volet de mélange d'air sur la position de FROID maxi.
4. Déplacer le curseur de volet de mélange d'air à la main et le maintenir sur la position FROID maxi.
5. Fixer le curseur de volet de mélange d'air au support de tige.
6. Vérifier si le volet de mélange d'air fonctionne correctement quand le PTC se déplace de 18 à 32°C.

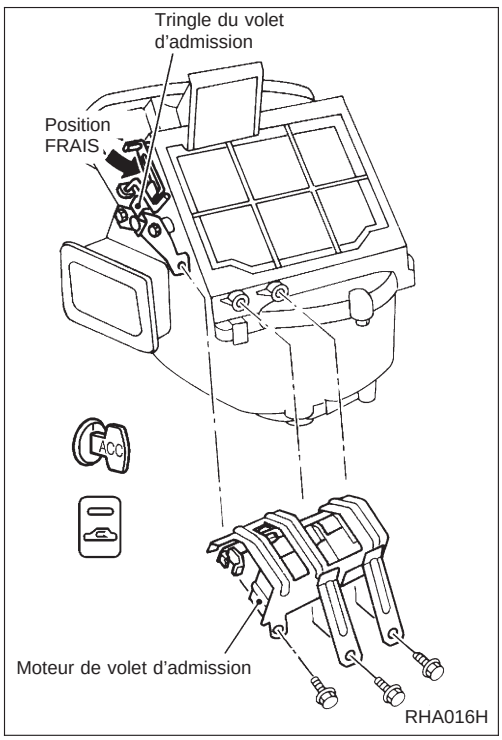

VOLET D'ADMISSION

1. Brancher le connecteur du faisceau du moteur de volet d'admission avant la dépose du moteur de volet d'admission.
2. Mettre le contact d'allumage sur ''ON''.
3. Eteindre l'interrupteur REC.
4. Mettre le curseur de volet d'admission sur la position FRE et reposer le moteur de volet d'admission sur l'unité d'admission.
5. Vérifier si le volet d'admission fonctionne correctement lorsque l'interrupteur de recyclage REC est mis sur ''ON'' et ''OFF''.

Simpo PDF Merge and Split Unregistered Version - http://www.simpopdf.com

Aperçu général du système de commande

Le système de commande se compose de a) capteurs d'admission et contacts, b) ampli. auto. (micro-ordinateur), et c) composants de sortie. La relation entre ces composants est décrite sur le schéma ci-dessous.

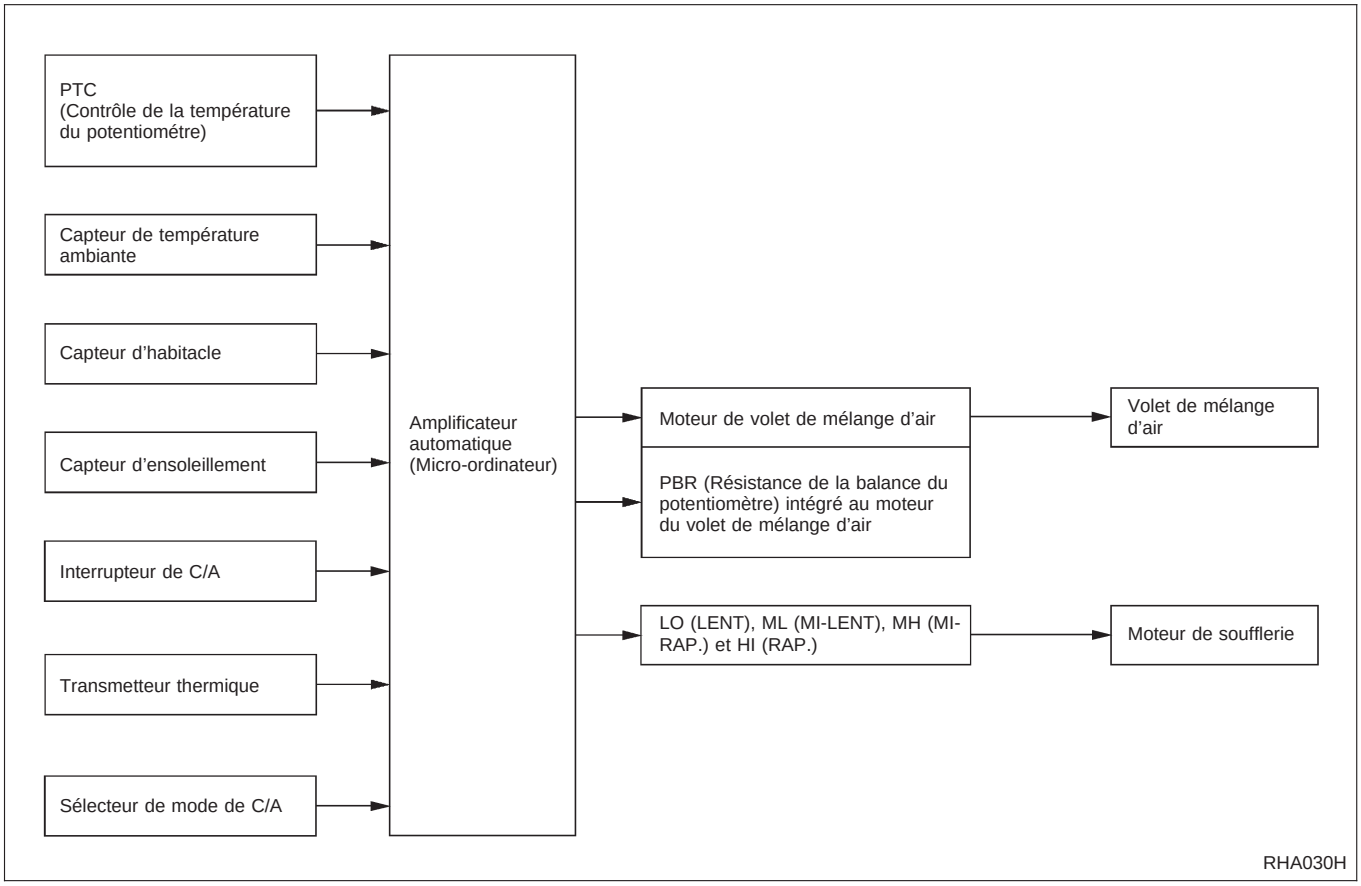

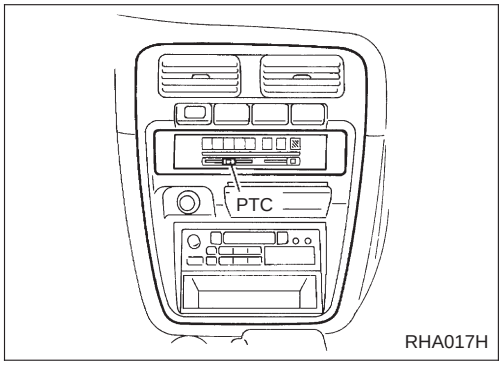

Composants d'entrée du système de commande

CONTROLE DE TEMPERATURE PAR POTENTIOMETRE (PTC)

Le PTC est intégré au boîtier de commande. Il est munie d'une résistance variable qui change selon la température de référence. Cette résistance est branchée au curseur de réglage de la température.

Simpo PDF Merge and Split Unregistered Version - http://www.simpopdf.com

Composants d'entrée du système de commande (Suite)

PTC (potentiomètre)

Après avoir débranché le connecteur de faisceau PTC, calculer la résistance entre les bornes ③ et ⑰ du côté du faisceau PTC.

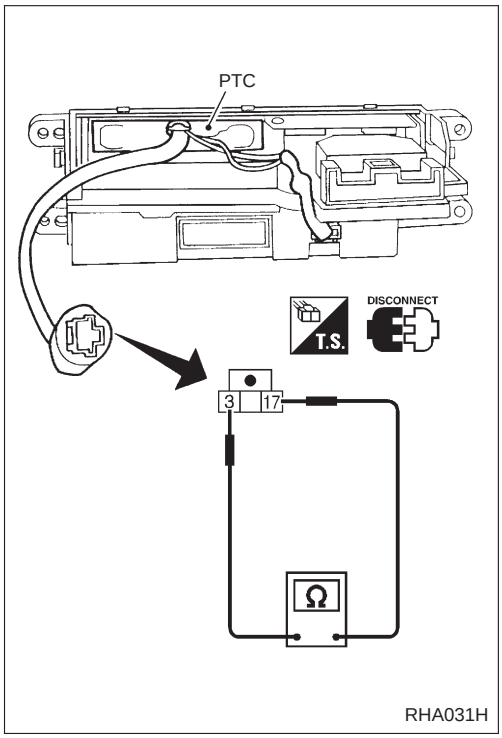

RHA031H

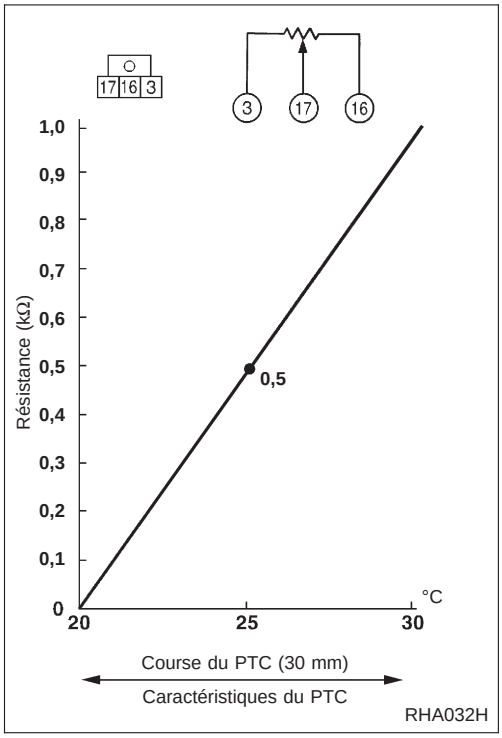

RHA032H

CAPTEUR D'HABITACLE

Le capteur de l'habitacle est attaché au côté droit du boîtier de commande. Il convertit les variations de température de l'air de l'habitacle aspiré par un aspirateur en une valeur de résistance, qui est alors entrée dans l'ampli. auto.

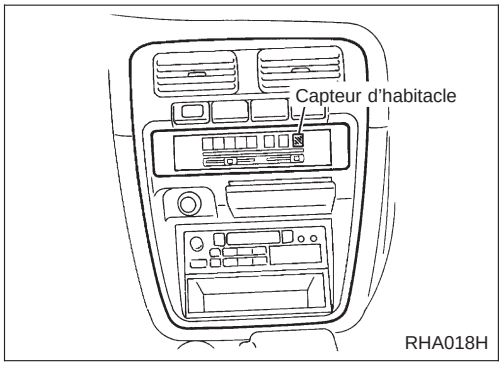

RHA018H

Simpo PDF Merge and Split Unregistered Version - http://www.simpopdf.com

Composants d'entrée du système de commande (Suite)

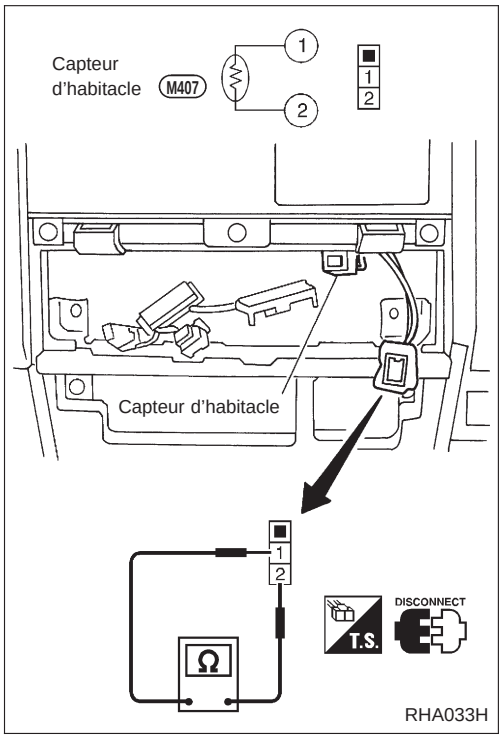

Après avoir débranché le connecteur du faisceau du capteur d'habitacle, mesurer la résistance entre les bornes ① et ② du côté du faisceau du capteur, à l'aide du tableau ci-dessous.

Température °C	Résistance kΩ
0	6,0
5	4,95
10	3,99
15	3,24
20	2,65
25	2,19
30	1,81
35	1,51
40	1,27

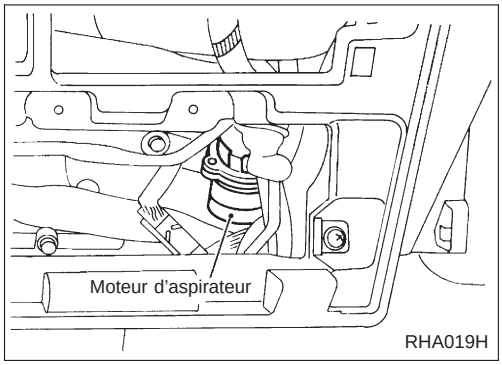

MOTEUR D'ASPIRATEUR

Le moteur d'aspirateur est situé à l'avant de l'unité de chauffage. Le moteur d'aspirateur fait circuler l'air du compartiment en continu dans le capteur d'habitacle lorsque le contact d'allumage est sur ON.

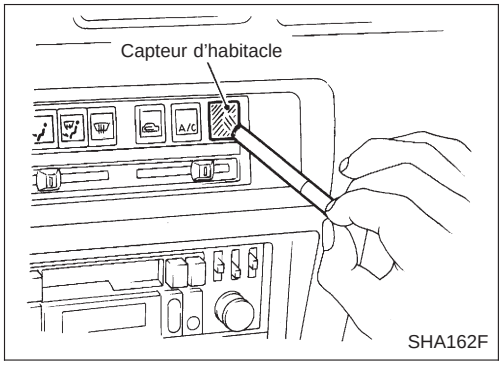

Vérifier si la fumée est correctement aspirée dans le capteur d'habitacle lorsque une cigarette allumée est déplacée près du capteur.

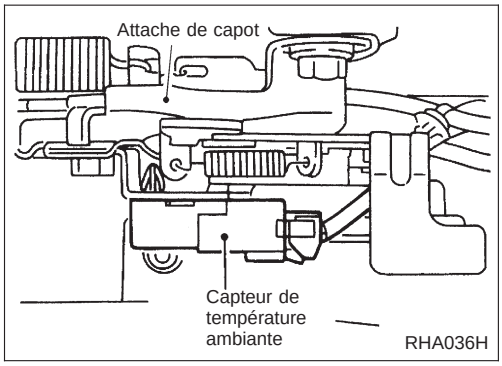

CAPTEUR DE TEMPERATURE AMBIANTE

Le capteur d'air ambiant est situé sur l'appui d'attache de capot. Il détecte la température ambiante et la convertit en une valeur de résistance qui est ensuite entrée dans l'amplificateur auto.

Simpo PDF Merge and Split Unregistered Version - http://www.simpopdf.com

Composants d'entrée du système de commande (Suite)

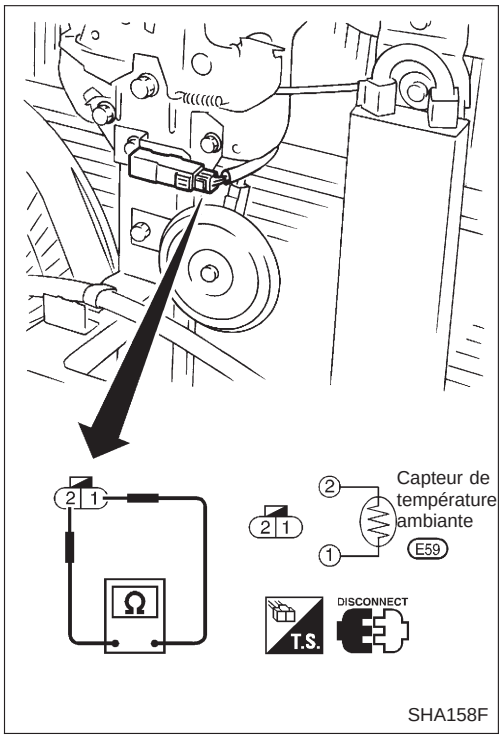

SHA158F

Après avoir déconnecté le connecteur de faisceau du capteur de température ambiante, mesurer la résistance entre les bornes ① et ② côté faisceau du capteur, en se référant au tableau ci-dessous.

Température °C	Résistance kΩ
−20	9,98
−10	5,57
0	3,26
10	1,98
20	1,25
25	1,00
30	0,81
40	0,54

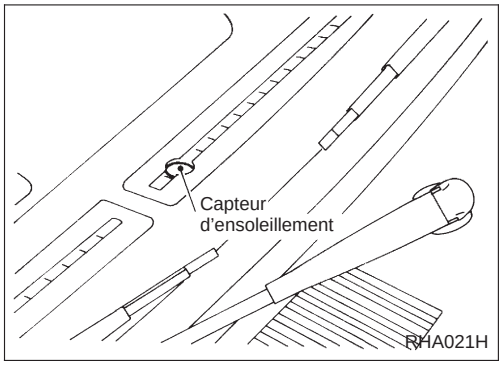

RHA021H

CAPTEUR D'ENSOLEILLEMENT

Le capteur d'ensoleillement est situé au centre de la grille du dégivreur. Il détecte le niveau d'ensoleillement pénétrant à travers le pare-brise à l'aide d'une photodiode et le convertit en une valeur courante qui est ensuite entrée dans l'amplificateur auto.

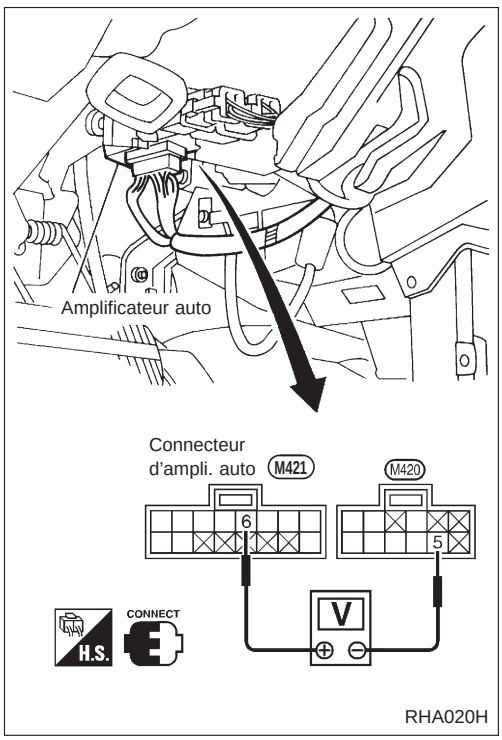

RHA020H

Mesurer la tension entre les bornes ⑤ et ⑥ côté faisceau du climatiseur automatique, au moyen du tableau ci-dessous.

Courant d'entrée mA	Tension de sortie V
0	5,00
0,1	4,09
0,2	3,18
0,3	2,27
0,4	1,36
0,5	0,45

- **Vérifier le fonctionnement du capteur d'ensoleillement en s'assurant qu'il est directement exposé aux rayons du soleil.**

Simpo PDF Merge and Split Unregistered Version - http://www.simpopdf.com

Composants d'entrée du système de commande (Suite)

SELECTEUR DE MODE DE C/A

Le sélecteur de mode C/A se trouve autour de la tringle latérale de l'unité de chauffage et active la tringle en fonction de la position du sélecteur de mode.
Le fonctionnement du sélecteur de mode de C/A est indiqué ci-dessous :

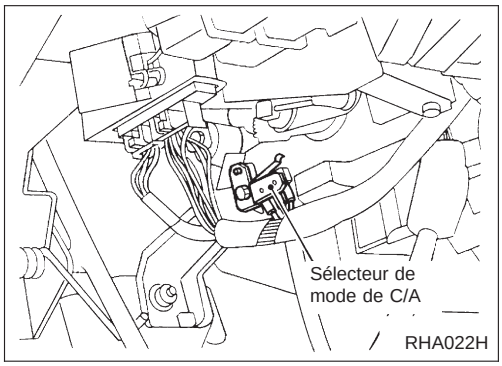

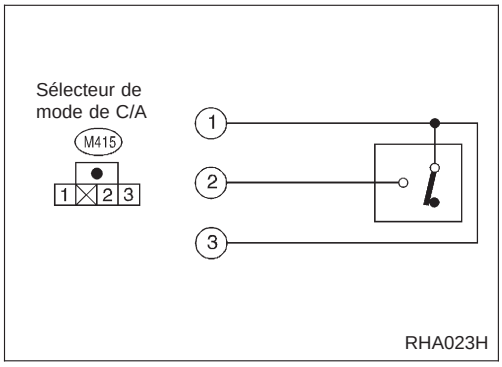

Fonctionnement du sélecteur de mode de C/A

MODE		VENT	B/L (BI-NIVEAU)	FOOT (PLAN-CHER)	FOOT/ DEF (PLAN-CHER/ DEG)	DEF (DEG)
N° de borne	①	○	○	○	○	○
	②	○				○
	③		○	○	○	

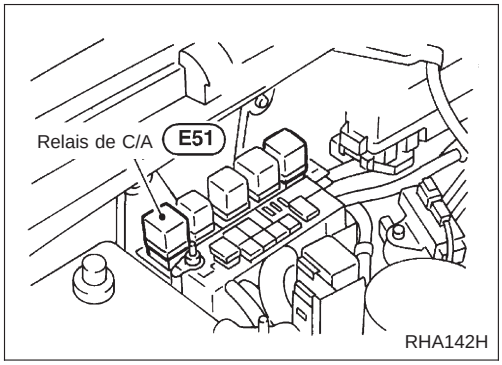

RELAIS DE L'INTERRUPTEUR DE C/A

Le relais de l'interrupteur de C/A est situé sur le côté gauche du compartiment moteur. Lorsque l'interrupteur de C/A et le commutateur du ventilateur sont en marche, le relais de l'interrupteur de C/A fonctionne et transmet des signaux de fonctionnement du C/A à l'amplificateur auto.

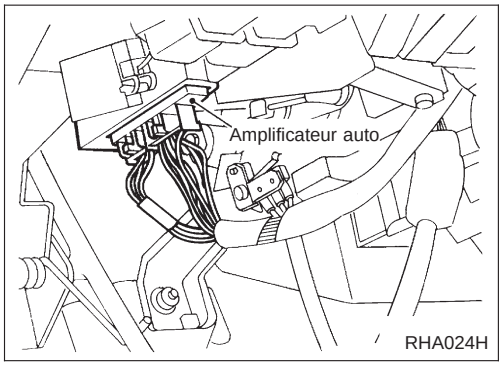

Amplificateur automatique du système de commande (ampli. auto)

L'amplificateur auto. est équipé d'un micro-ordinateur qui traite les données transmises par les différents capteurs et qui sont nécessaires au bon fonctionnement de la climatisation. Le moteur de volet de mélange d'air et le moteur de soufflerie sont alors contrôlés.
Les signaux des différents sélecteurs et du PTC (contrôle de température du potentiomètre) sont directement entrés dans l'amplificateur auto.

Simpo PDF Merge and Split Unregistered Version - http://www.simpopdf.com

Amplificateur automatique du système de commande (ampli. auto) (Suite)

TRAITEMENT DES ENTREES DE NIVEAU D'ENSOLEILLEMENT

L'ampli. auto. comprend également un circuit de traitement qui calcule les moyennes des variations de niveau d'ensoleillement détectées sur une certaine durée. Cela permet d'éviter que le fonctionnement du système ATC (contrôle de température automatique) ne soit affecté par des changements soudains dus à des variations légères ou rapides du niveau d'ensoleillement détecté.

Supposons par exemple que l'on conduise le long d'une route bordée par des groupes de grands arbres espacés. Le niveau d'ensoleillement détecté par le capteur d'ensoleillement variera à chaque fois que la lumière du soleil sera cachée par les arbres. Le circuit de traitement calcule une moyenne du niveau d'ensoleillement détecté sur une certaine durée de façon à ce que l'effet (insignifiant) des arbres obstruant momentanément la lumière n'influent pas sur le fonctionnement de système ATC. De plus, si l'on pénètre dans un long tunnel, le système détectera une variation dans le niveau d'ensoleillement et réagira en conséquence.

Simpo PDF Merge and Split Unregistered Version - http://www.simpopdf.com

Amplificateur automatique du système de commande (ampli. auto) (Suite)

COMPENSATION DU NIVEAU D'ENSOLEILLEMENT

L'amplificateur auto. compense l'ensoleillement en changeant la position du volet de mélange d'air et le volume du débit d'air en fonction de la quantité d'ensoleillement détectée par le capteur d'ensoleillement. Lorsque la quantité d'ensoleillement est importante, le volet de mélange d'air se déplace vers le côté ''FROID''. Avec ce mouvement du volet de mélange d'air, le volume de débit d'air changera aussi.

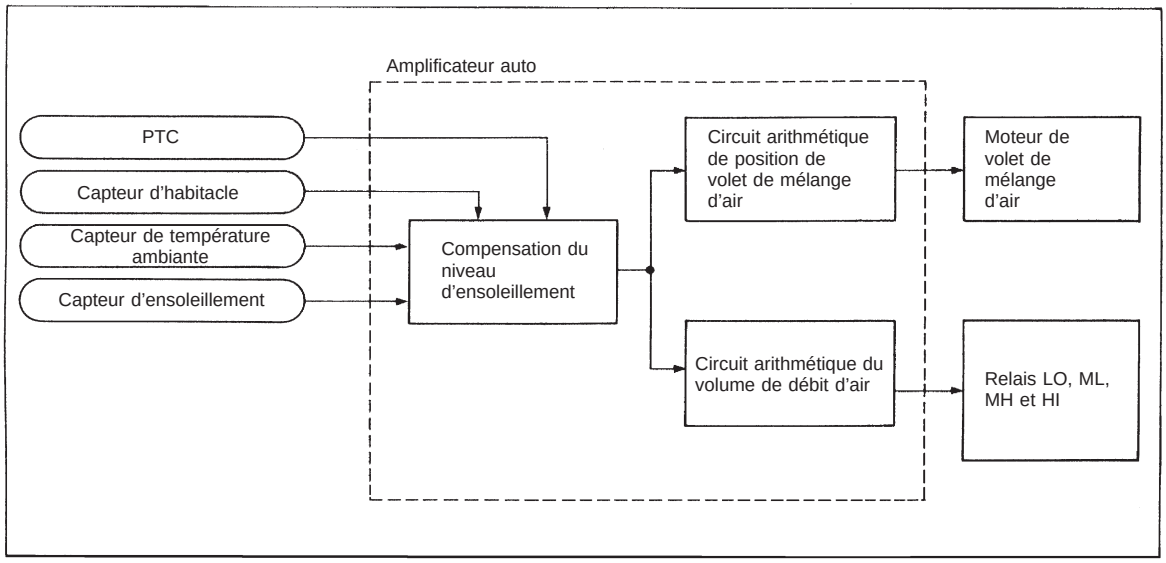

SHA492CB

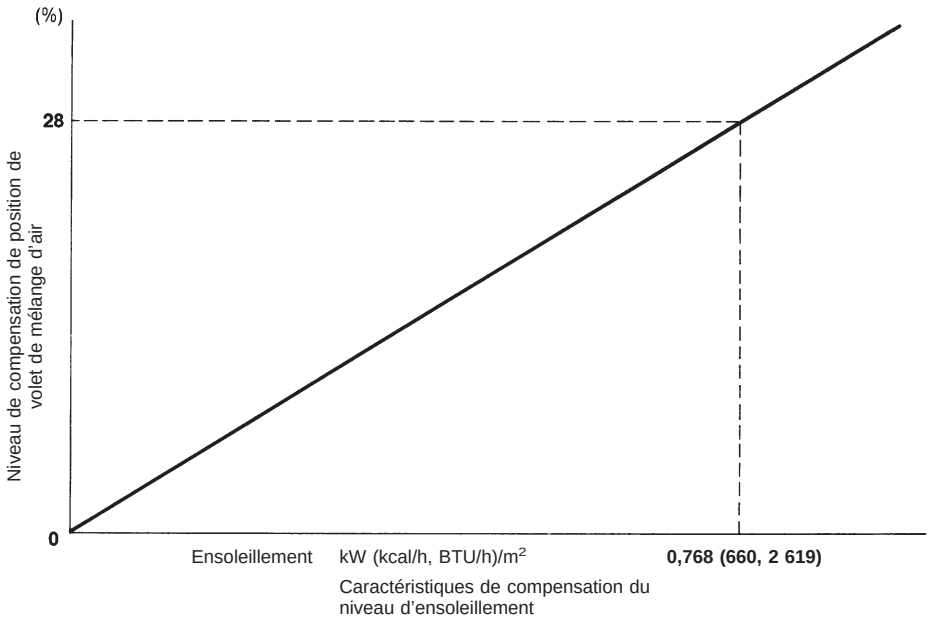

Caractéristiques de compensation du niveau d'ensoleillement

SHA493CA

Simpo PDF Merge and Split Unregistered Version - http://www.simpopdf.com

Amplificateur automatique du système de commande (ampli. auto) (Suite)

COMPENSATION DE L'INTERRUPTEUR DE C/A

L'amplificateur auto. modifie la position du volet de mélange d'air et le volume du débit d'air suite à un signal émis par l'interrupteur de C/A.
Lorsque l'interrupteur de C/A est en marche, l'amplificateur automatique compense le signal d'entrée du PBR (moteur de volet de mélange d'air) et fait bouger le volet de mélange d'air vers le côté ''CHAUD''.

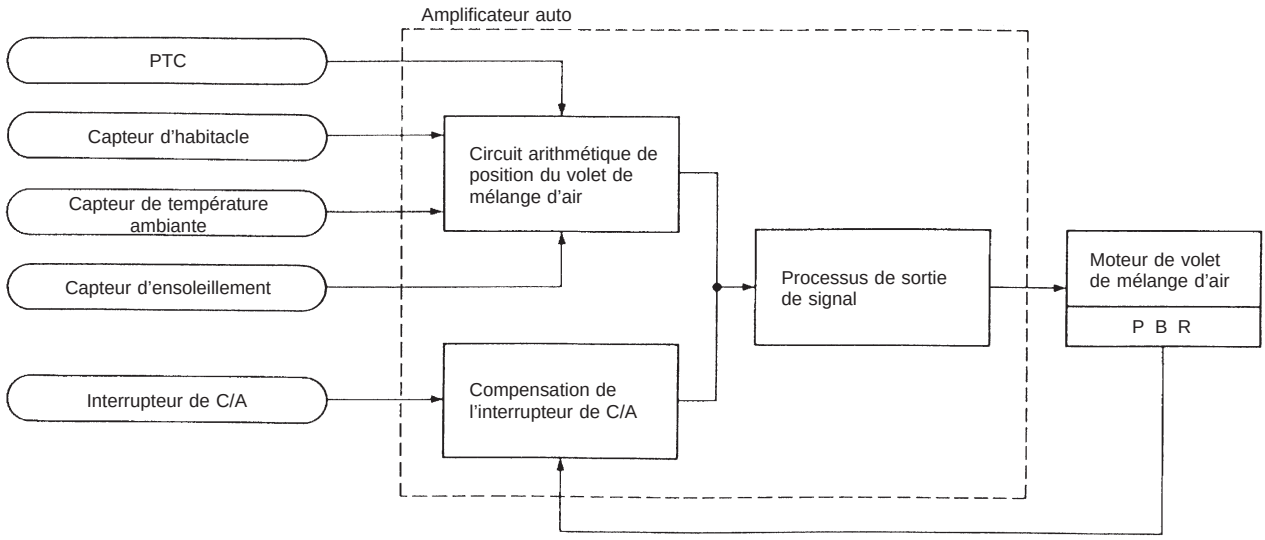

SHA494CB

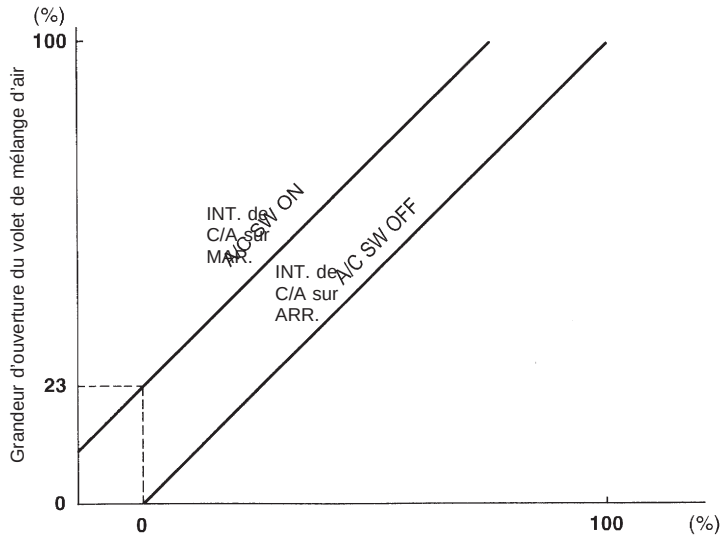

Valeurs arithmétiques de la position du volet de mélange d'air
Caractéristiques de compensation de l'interrupteur de C/A

SHA495CB

Simpo PDF Merge and Split Unregistered Version - http://www.simpopdf.com

Composants de sortie du système de commande

COMMANDE DE VOLET DE MELANGE D'AIR (commande de température automatique)

Composants

Les composants du système de commande du volet de mélange d'air sont :
1) Amplificateur automatique
2) Capteur de température ambiante
3) Capteur de l'habitacle
4) Capteur d'ensoleillement
5) Moteur de volet de mélange d'air (PBR)
6) Interrupteur de climatiseur

Fonctionnement du système

Le volet de mélange d'air est contrôlé automatiquement afin que la température à l'intérieur du véhicule soit maintenue à la température prédéterminée. La température sélectionnée par le PTC (commande de température par potentiomètre) et la température détectée par le capteur de l'habitacle et par le capteur de l'air ambiant sont compensés par le signal du capteur d'ensoleillement. L'amplificateur auto. détermine alors la position du volet de mélange d'air. La position du volet de mélange d'air détectée par le PBR est compensé par le fonctionnement marche-arrêt de l'interrupteur de C/A. La position du volet de mélange d'air déterminée par l'amplificateur auto est comparée avec celle détectée par le PBR. L'amplificateur auto. transmet alors le signal au moteur de volet de mélange d'air pour l'activer.

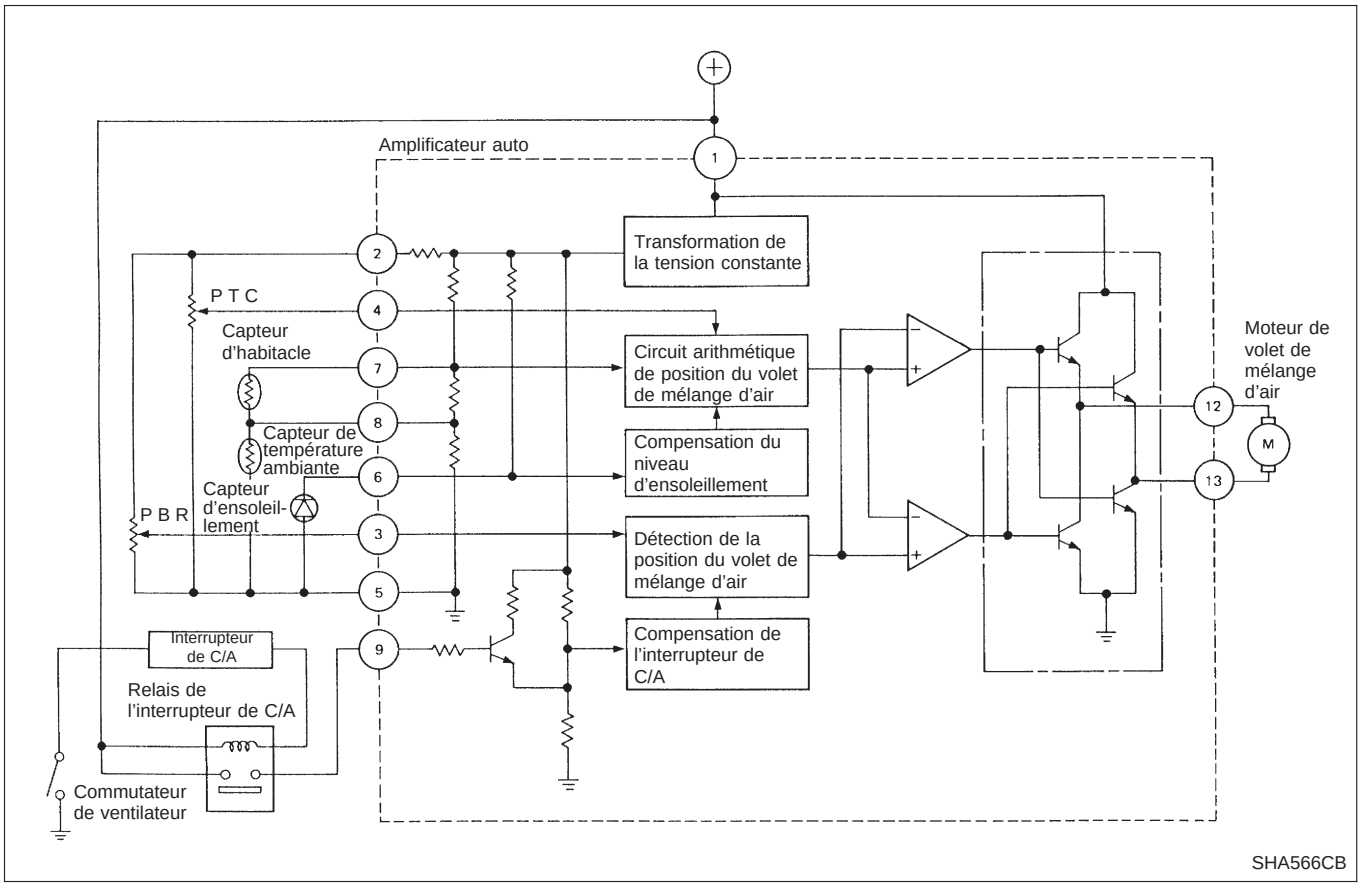

Simpo PDF Merge and Split Unregistered Version - http://www.simpopdf.com

Composants de sortie du système de commande (Suite)

Caractéristique de la commande de volet de mélange d'air

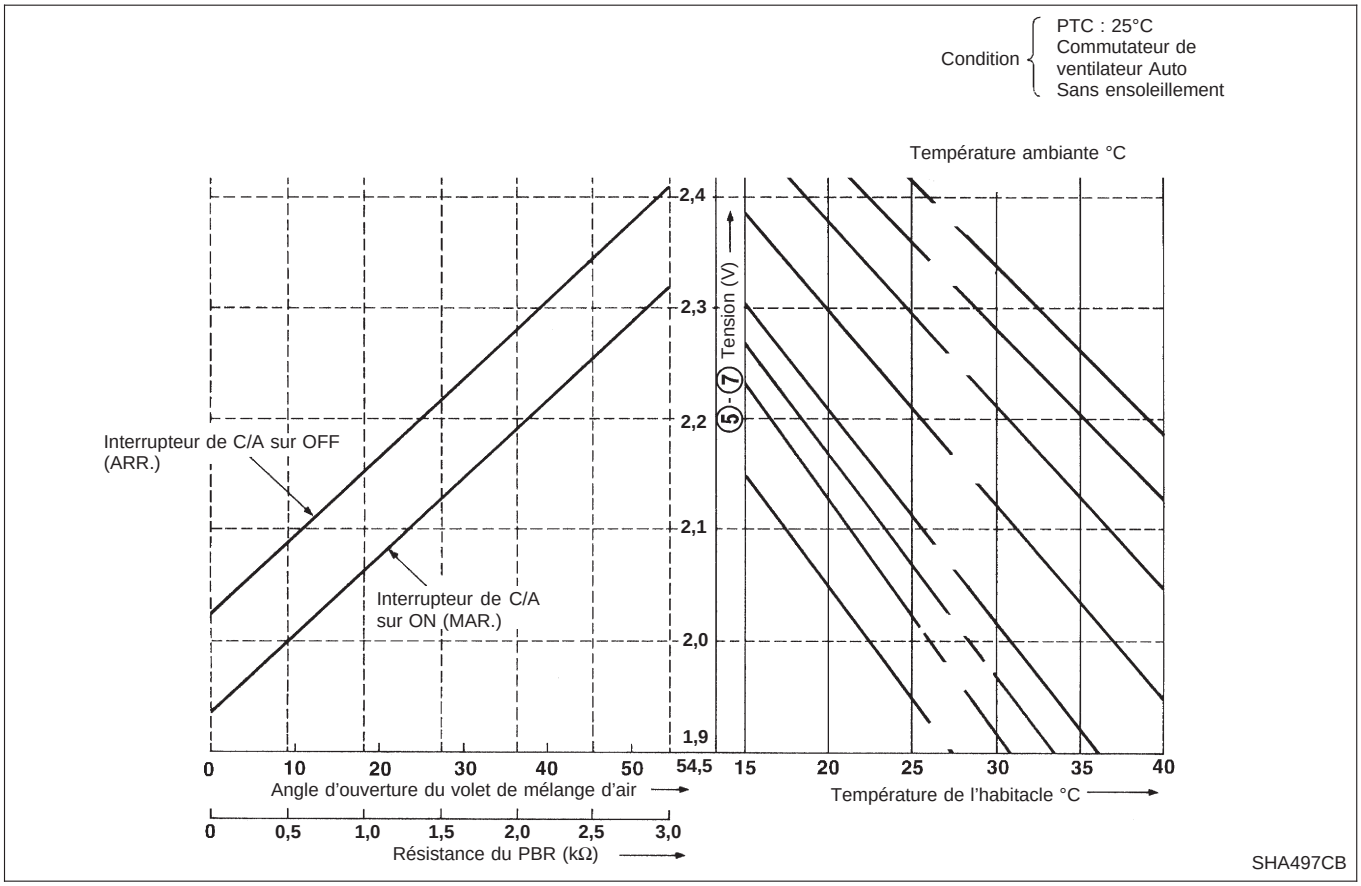

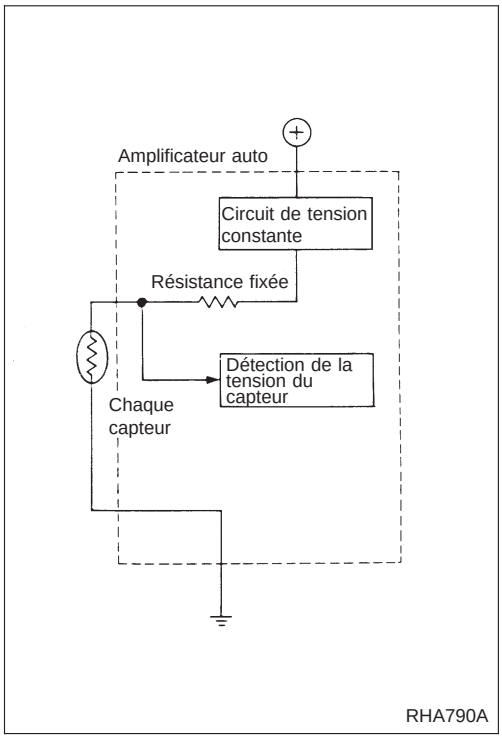

PROCESSUS D'ENTREE DE SIGNAL DE CAPTEUR

L'amplificateur auto. détecte la tension produite par chaque capteur, le PBR et la résistance fixée. La résistance fixée est intégré à l'amplificateur auto. Une tension de 12 volts est d'abord convertie à environ 5 volts par le circuit de tension constante d' où elle est appliquée à la ligne de masse de l'amplificateur auto. via la résistance fixée et le capteur. De cette manière, l'ampli. auto. commande les tensions de la résistance fixée, de chaque capteur et du PBR pour déterminer les entrées du capteur.

Simpo PDF Merge and Split Unregistered Version - http://www.simpopdf.com

Composants de sortie du système de commande (Suite)

FONCTIONNEMENT DU MOTEUR DU VOLET DE MELANGE D'AIR

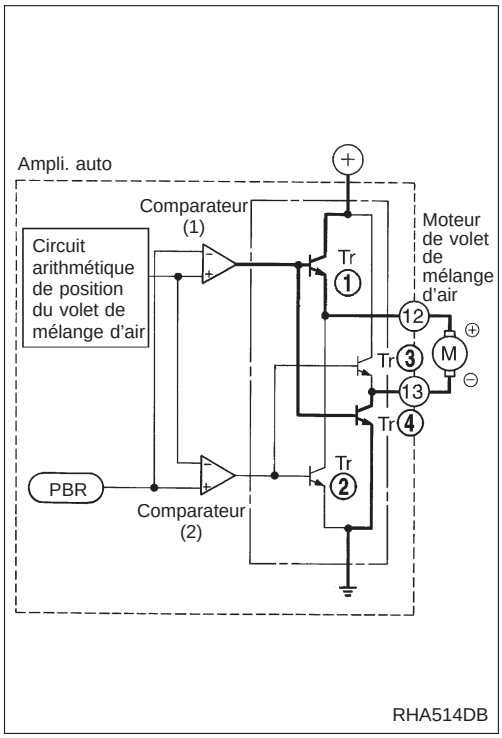

RHA514DB

- Exemple ①
  Lorsque la température du véhicule est moins élevée que la température de référence.
  Lorsque la température du véhicule est faible, la résistance du capteur de l'habitacle est élevée et la tension d'entrée de l'amplificateur automatique devient élevée. Il en résulte que la tension du circuit arithmétique de la position du volet de mélange d'air devient aussi élevée.
  Lorsque cette tension est plus élevée que la tension du PBR, le comparateur (1), les bornes ① et ④ sont activées.
  Par conséquent, la borne n° ⑫ devient ⊕ et la borne n° ⑬ devient ⊖. Le moteur de volet de mélange d'air tourne dans le sens des aiguilles d'une montre et le volet de mélange d'air bouge en direction du côté ''HOT'' (CHAUD).

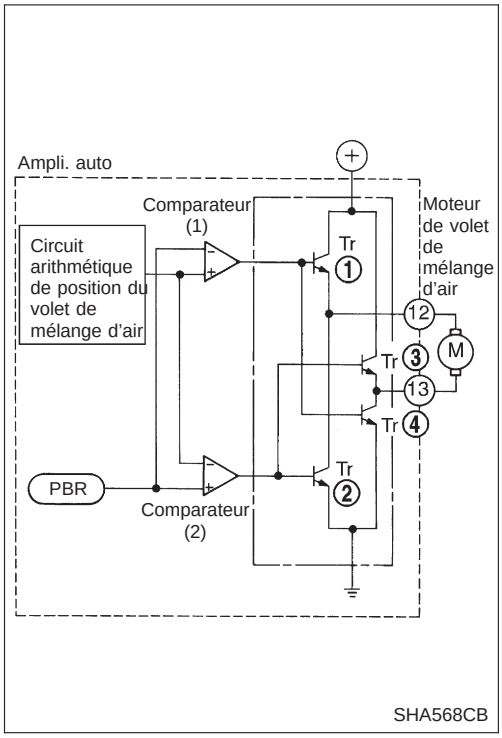

SHA568CB

Comme le volet de mélange bouge vers le côté ''HOT'' (CHAUD), la tension du PBR devient plus basse et, par conséquent, devient égale à celle émise par le circuit arithmétique de la position du volet de mélange d'air. Il en résulte que le comparateur (1) s'arrête de même que le moteur de volet de mélange d'air.

Simpo PDF Merge and Split Unregistered Version - http://www.simpopdf.com

Composants de sortie du système de commande (Suite)

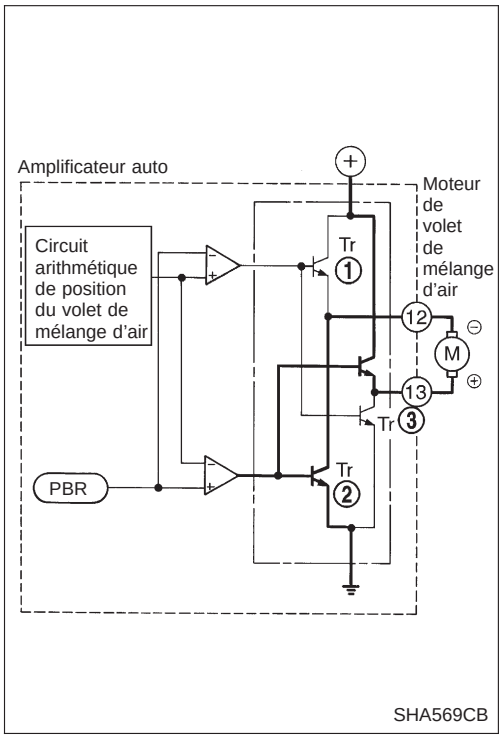

- Exemple ②
  Lorsque la température du véhicule est plus élevée que la température de référence.
  Lorsque la température du véhicule est élevée, la résistance du capteur de l'habitacle est faible et la tension d'entrée de l'amplificateur automatique devient faible. Il en résulte que la tension du circuit arithmétique de la position du volet de mélange d'air devient aussi basse.
  Lorsque cette tension est moins élevée que la tension du PBR, le comparateur (2), les bornes ② et ③ sont activées. Par conséquent, la borne n° ⑬ devient ⊕ et la borne n° ⑫ devient ⊖. Le moteur de volet de mélange d'air tourne dans le sens inverse des aiguilles d'une montre et le volet de mélange d'air bouge en direction du côté ''COLD'' (FROID).

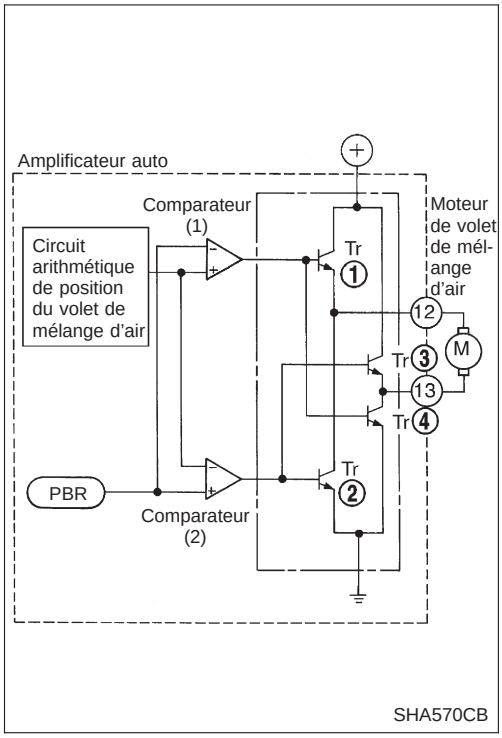

Comme le volet de mélange d'air bouge vers le côté ''COLD'' (FROID), la tension du PBR devient plus basse et par conséquent devient égale à celle émise par le circuit arithmétique de la position du volet de mélange d'air. Il en résulte que le comparateur (2) s'arrête de même que le moteur de volet de mélange d'air.

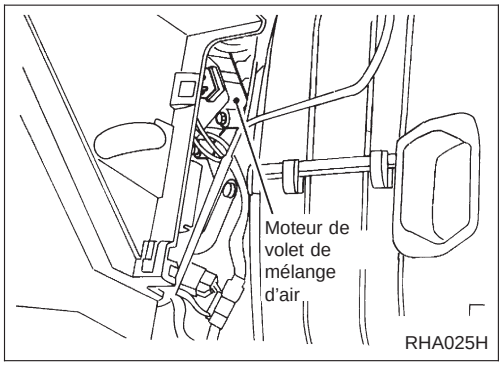

MOTEUR DE VOLET DE MELANGE D'AIR

Le moteur de volet de mélange d'air est attaché à l'unité de chauffage. La rotation permet au volet de mélange d'air de s'ouvrir à la position déterminée par l'amplificateur auto. La rotation du moteur est alors transmise via un arbre. La position du volet de mélange d'air est alors transmise en retour à l'amplificateur auto. via le moteur du volet de mélange d'air du rhéostat (PBR).

Simpo PDF Merge and Split Unregistered Version - http://www.simpopdf.com

Composants de sortie du système de commande (Suite)

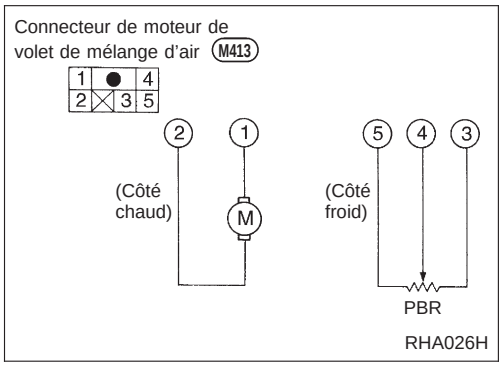

2	1	Fonctionnement du volet de mélange d'air	Sens de mouvement du curseur
⊕	⊖	COLD (FROID) → HOT (CHAUD)	Dans le sens des aiguilles d'une montre (vers le compartiment passager)
—	—	ARRET	ARRET
⊖	⊕	HOT (CHAUD) → COLD (FROID)	Dans le sens contraire des aiguilles d'une montre (vers le compartiment à moteur)

Caractéristiques du PBR

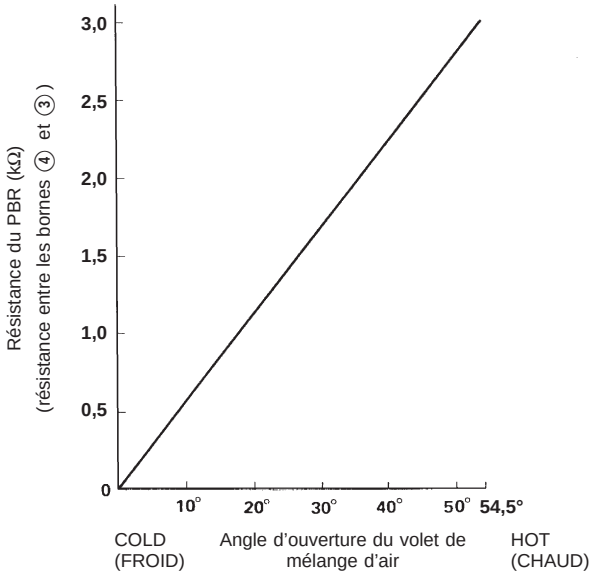

SHA504CA

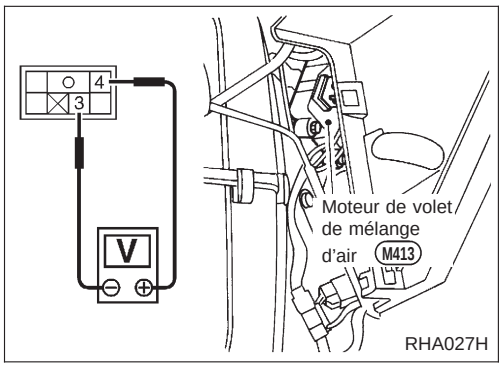

Rhéostat (PBR)

Mesurer la tension entre les bornes ③ et ④ côté faisceau du véhicule.

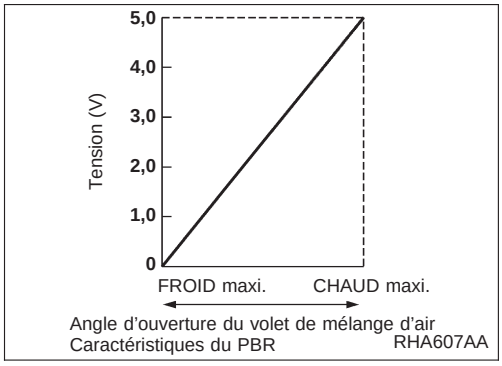

Contact d'allumage : ON

- S'assurer que l'aiguille du testeur décline légèrement lorsque le PTC bouge de 20°C à 30°C et vice versa.

Simpo PDF Merge and Split Unregistered Version - http://www.simpopdf.com

Composants de sortie du système de commande (Suite)

COMMANDE DE LA VITESSE DU VENTILATEUR

Composants

Les composants du système de commande de vitesse du ventilateur sont :
1) Amplificateur automatique
2) Capteur d'habitacle
3) Capteur de température ambiante
4) Capteur d'ensoleillement
5) Relais de l'interrupteur de C/A
6) Interrupteur de C/A
7) Commutateur de ventilateur
8) Moteur de soufflerie
9) Résistance
10) Relais HI (rap.), MH (mi-rap.), ML (mi-lent) et LO (lent)

Fonctionnement du système

La vitesse du ventilateur de soufflerie est automatiquement contrôlée afin que la température à l'intérieur du véhicule soit maintenue à la température prédéterminée.
La température sélectionnée par le PTC (commande de température par potentiomètre) et la température détectée par le capteur de l'habitacle et par le capteur de l'air ambiant sont compensés par le signal du capteur d'ensoleillement. L'amplificateur auto. détermine alors la vitesse du ventilateur depuis le fonctionnement marche-arrêt de l'interrupteur de C/A. La décision de la vitesse du ventilateur par l'amplificateur auto active le relais de ventilateur et le moteur de ventilateur de soufflerie tourne. Lorsque l'interrupteur de C/A est sur marche, la vitesse du ventilateur est activée en 4 étapes ; HI (rap.), MH (mi-rap.), ML (mi-lent) et LO (lent). Lorsque l'interrupteur de C/A est sur arrêt, la vitesse du ventilateur est activée en 3 étapes, MH (mi-rap.), ML (mi-lent) et LO (lent).

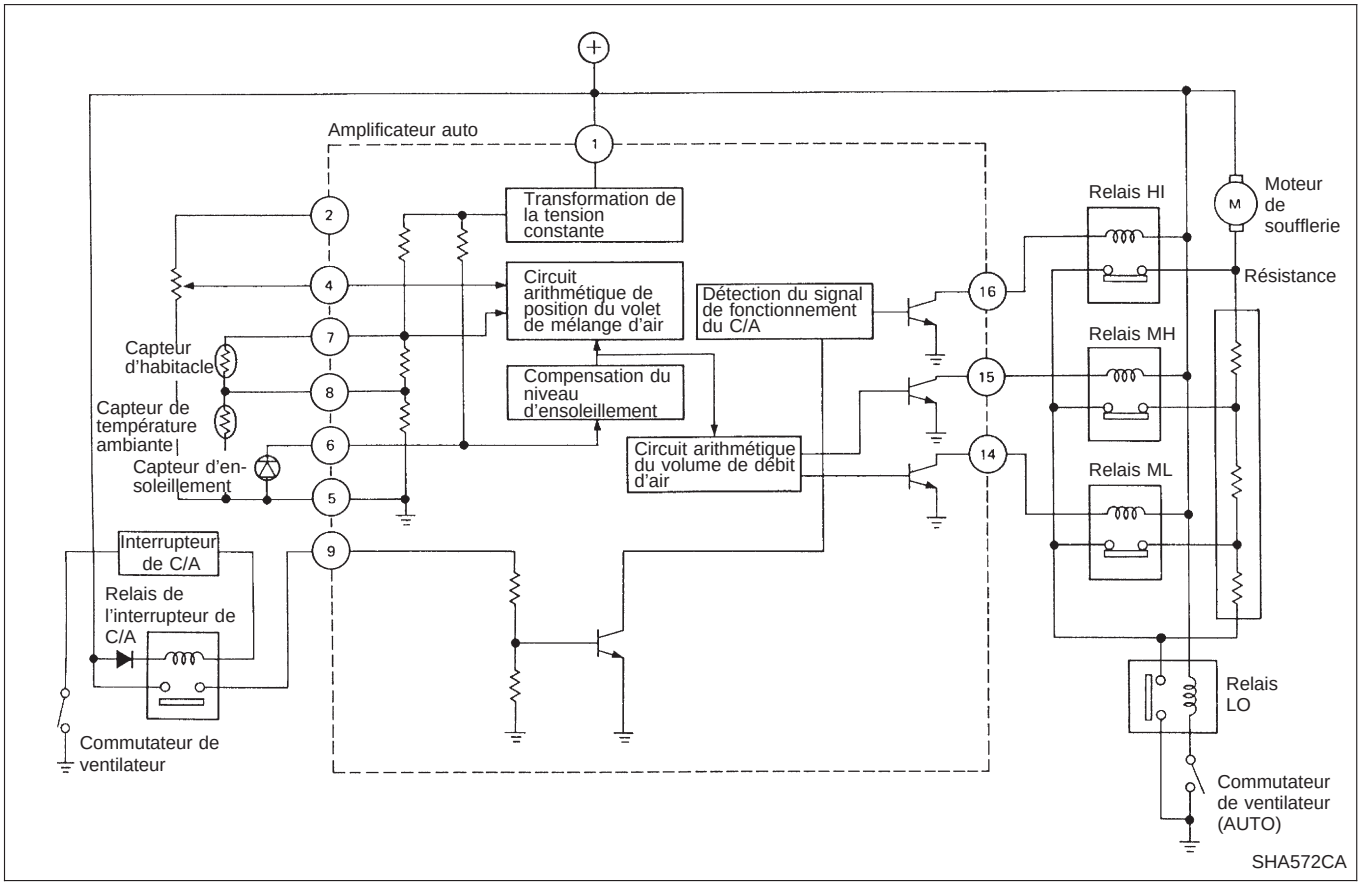

Simpo PDF Merge and Split Unregistered Version - http://www.simpopdf.com

Composants de sortie du système de commande (Suite)

Condition
PTC : 25°C
Commutateur de ventilateur : Auto

: Sans ensoleillement
: Avec ensoleillement 0,768 kW (660 kcal/h, 2 619BTU/h)m ^{2} [\]

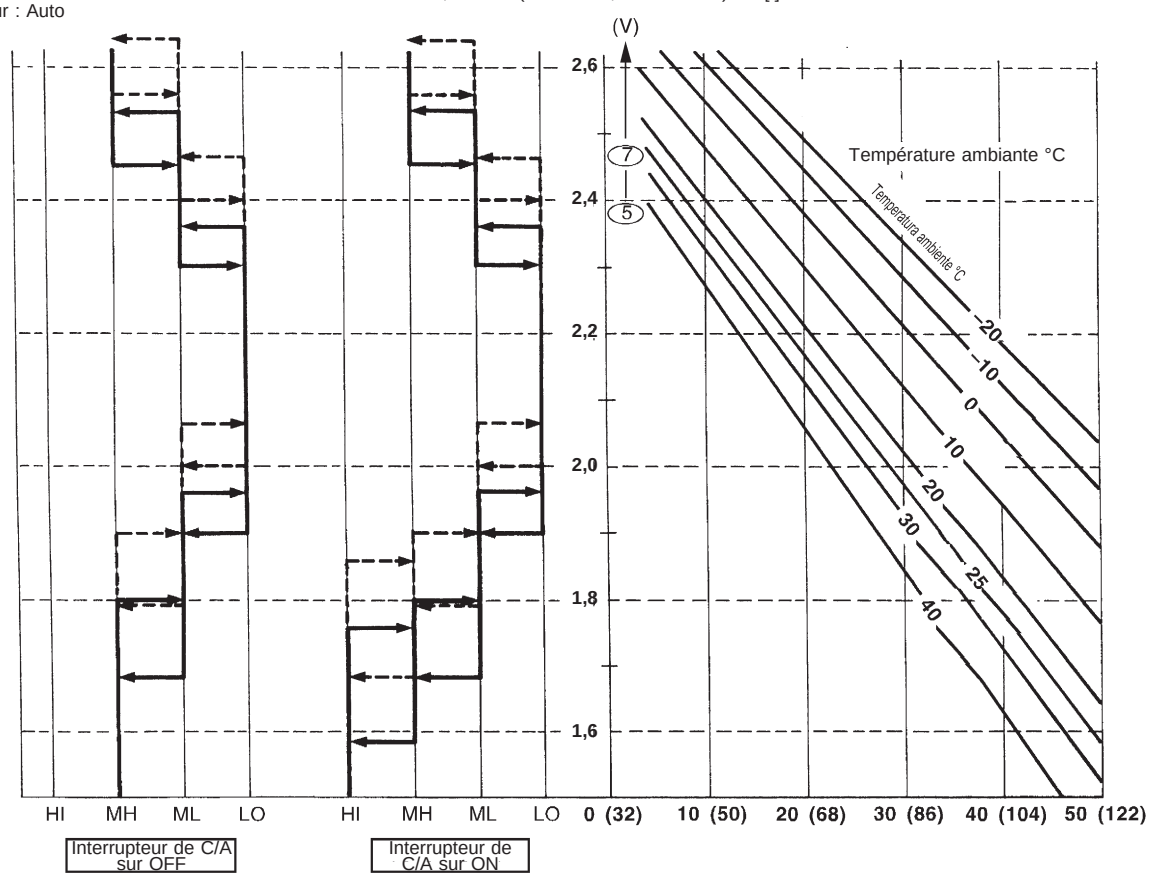

SHA573CC

Simpo PDF Merge and Split Unregistered Version - http://www.simpopdf.com

Composants de sortie du système de commande (Suite)

Les signaux de chaque capteur, le PTC, l'interrupteur de C/A, etc. sont envoyés au circuit arithmétique du volume du débit d'air de l'amplificateur auto. Le débit d'air est déterminé par ce circuit.

(1) Lorsque le volume du débit d'air est mis sur ML (mi-lent)
Le circuit arithmétique du volume du débit d'air alimente la borne ③, qui allume le relais de position ML (mi-lent). Ainsi, le moteur de soufflerie tourne en position ML (mi-lent).

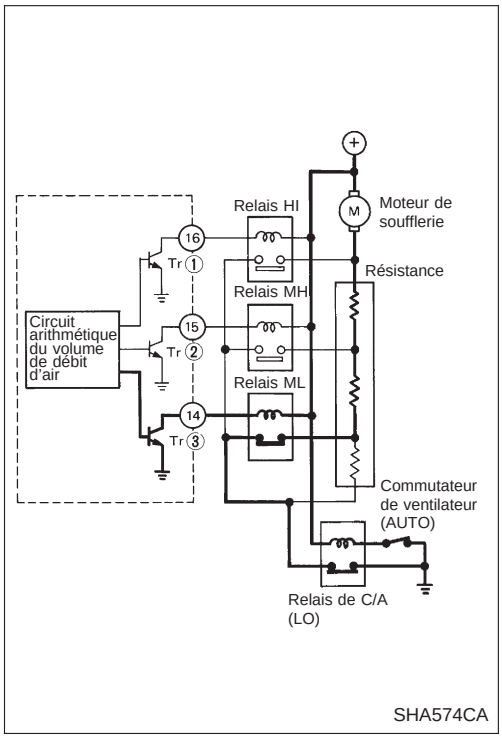

SHA574CA

(2) Une fois mis sur la position HI (rap.)
Le circuit arithmétique du volume du débit d'air alimente la borne ①, qui allume le relais de position HI (rap.). Ainsi, le moteur de soufflerie tourne en position HI (rap.). Les bornes ② et ③ reçoivent aussi du courant ; ceci a pour résultat d'alimenter les relais des positions ML (mi-lent) et MH (mi-rapide).

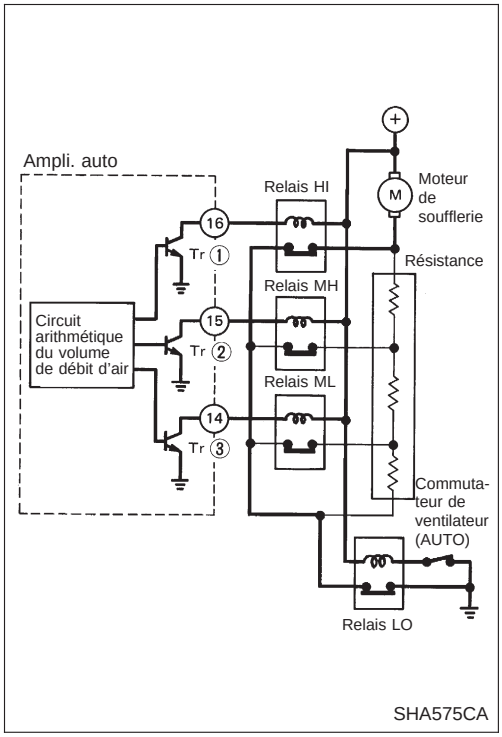

SHA575CA

Simpo PDF Merge and Split Unregistered Version - http://www.simpopdf.com

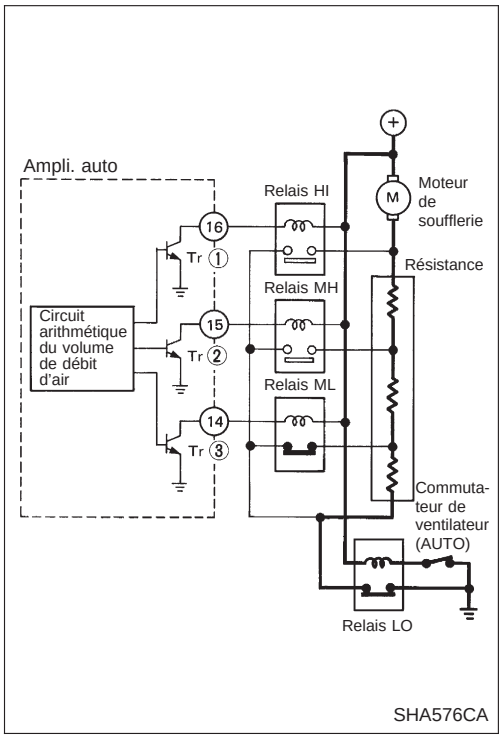

Composants de sortie du système de commande (Suite)

(3) Une fois mis sur la position LO (lent)

Le circuit arithmétique du volume du débit d'air n'alimente pas les bornes ①, ② et ni ③.

Seul le relais de position LO (lente) s'allume entraînant ainsi le moteur de soufflerie en position LO (lent).

Simpo PDF Merge and Split Unregistered Version - http://www.simpopdf.com

Composants de sortie du système de commande (Suite)

COMMANDE DE VITESSE DE VENTILATEUR AU DEMARRAGE

Le système de commande du ventilateur au démarrage est ainsi désigné pour empêcher un excès d'air froid d'être évacué après que le moteur a été démarré lorsque la température du refrigérant moteur est basse. Les composants reliés à ce système sont le microcontact de capteur de température d'eau, les relais de position HI (rap.), MH (mi-rap.), ML (mi-lent), LO (lent), le moteur de soufflerie, la résistance et l'amplificateur auto.

Lorsque la commande du ventilateur est sur AUTO, le microcontact sur ON (soit B/L, FOOT, ou FOOT/DEF) et la température du réfrigérant moteur en dessous de 50 °C, la vitesse de la soufflerie est fixée à la position LO (lent).

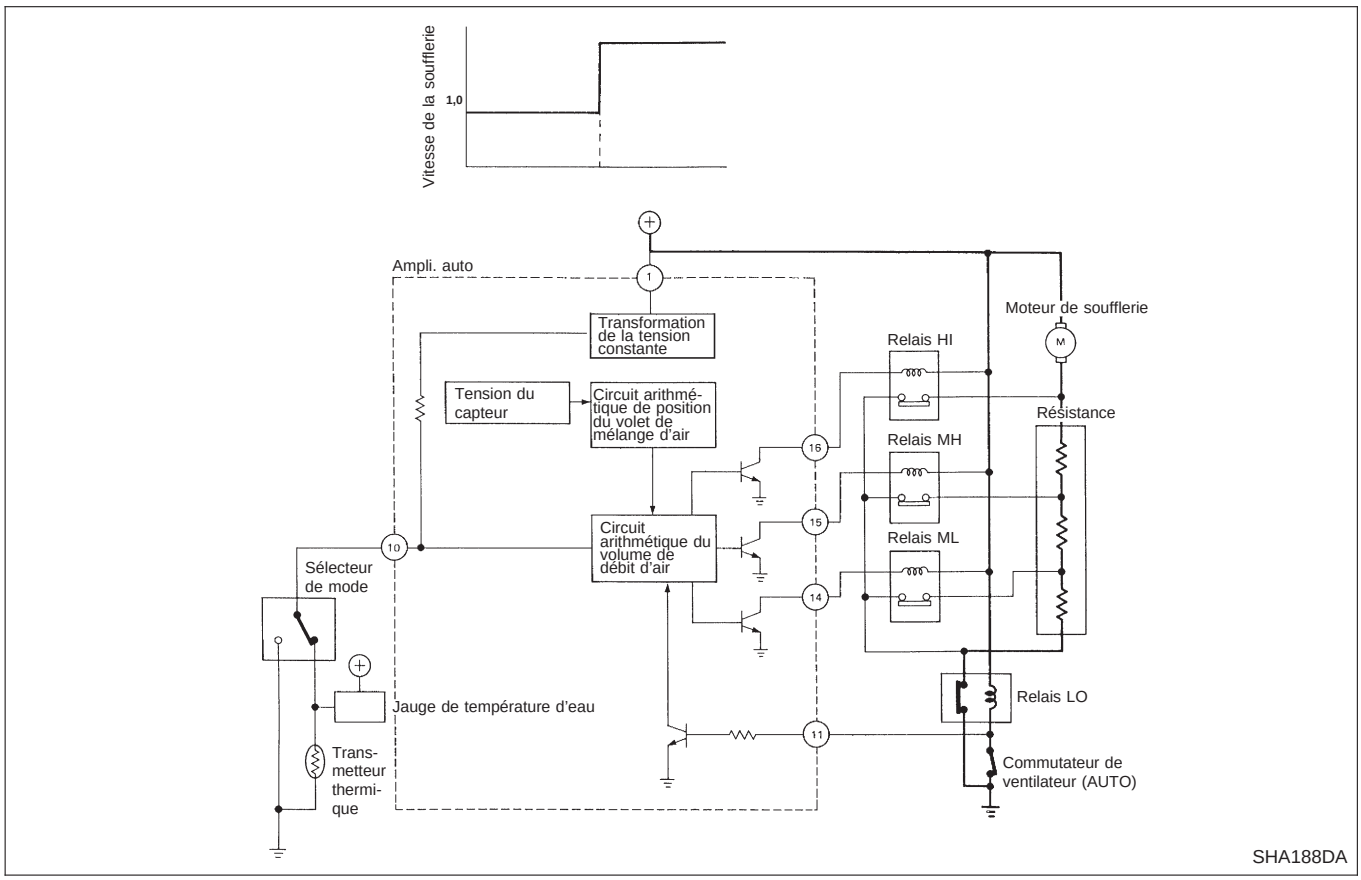

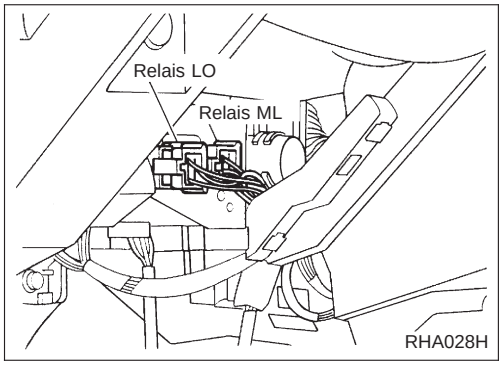

RELAIS LO (lent), ML (mi-lent), MH (mi-rap.) et HI (rap.)

Les relais de position LO (lent) et ML (mi-lent) sont situés sur le support de l'amplificateur auto, et les relais de position MH (mi-rap.) et HI (rap.) à l'arrière de l'unité de radio. Chaque relais de ventilateur marche en fonction du volume du débit d'air déterminé par ampli. auto. Le moteur de soufflerie fonctionne alors en conséquence.

Simpo PDF Merge and Split Unregistered Version - http://www.simpopdf.com

Composants de sortie du système de commande (Suite)

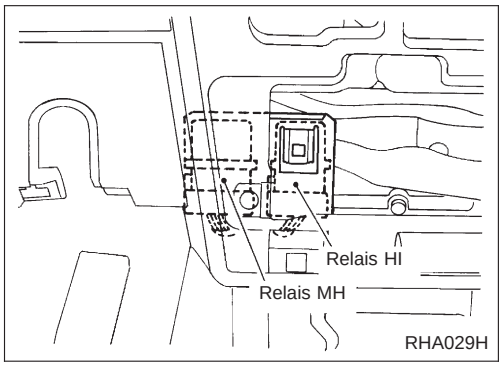

Simpo PDF Merge and Split Unregistered Version - http://www.simpopdf.com

Composants de sortie du système de commande (Suite)

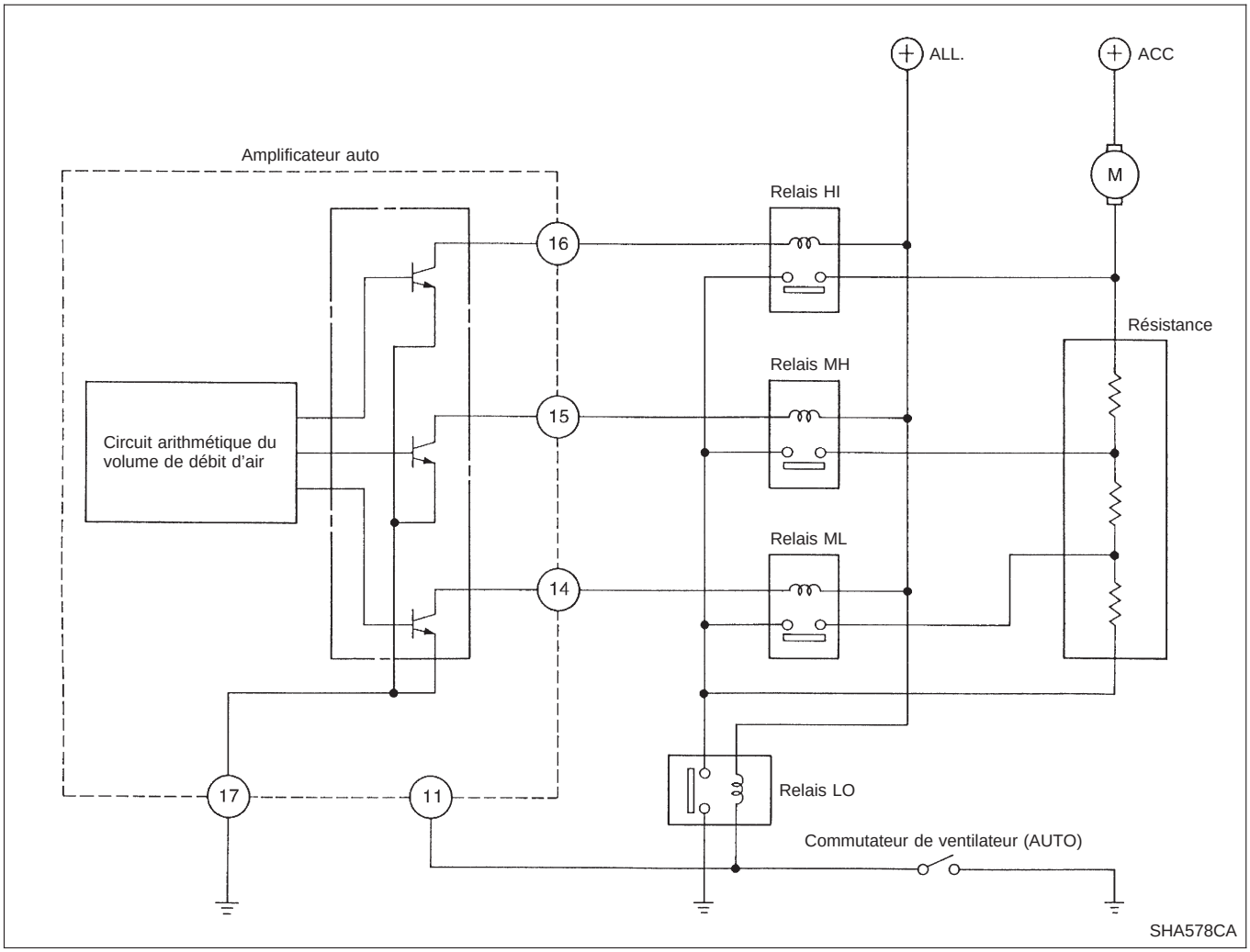

Simpo PDF Merge and Split Unregistered Version - http://www.simpopdf.com

Canalisations de réfrigération

- Se reporter à ''Précautions pour les raccords de réfrigérant''.

CONDUITE A DROITE

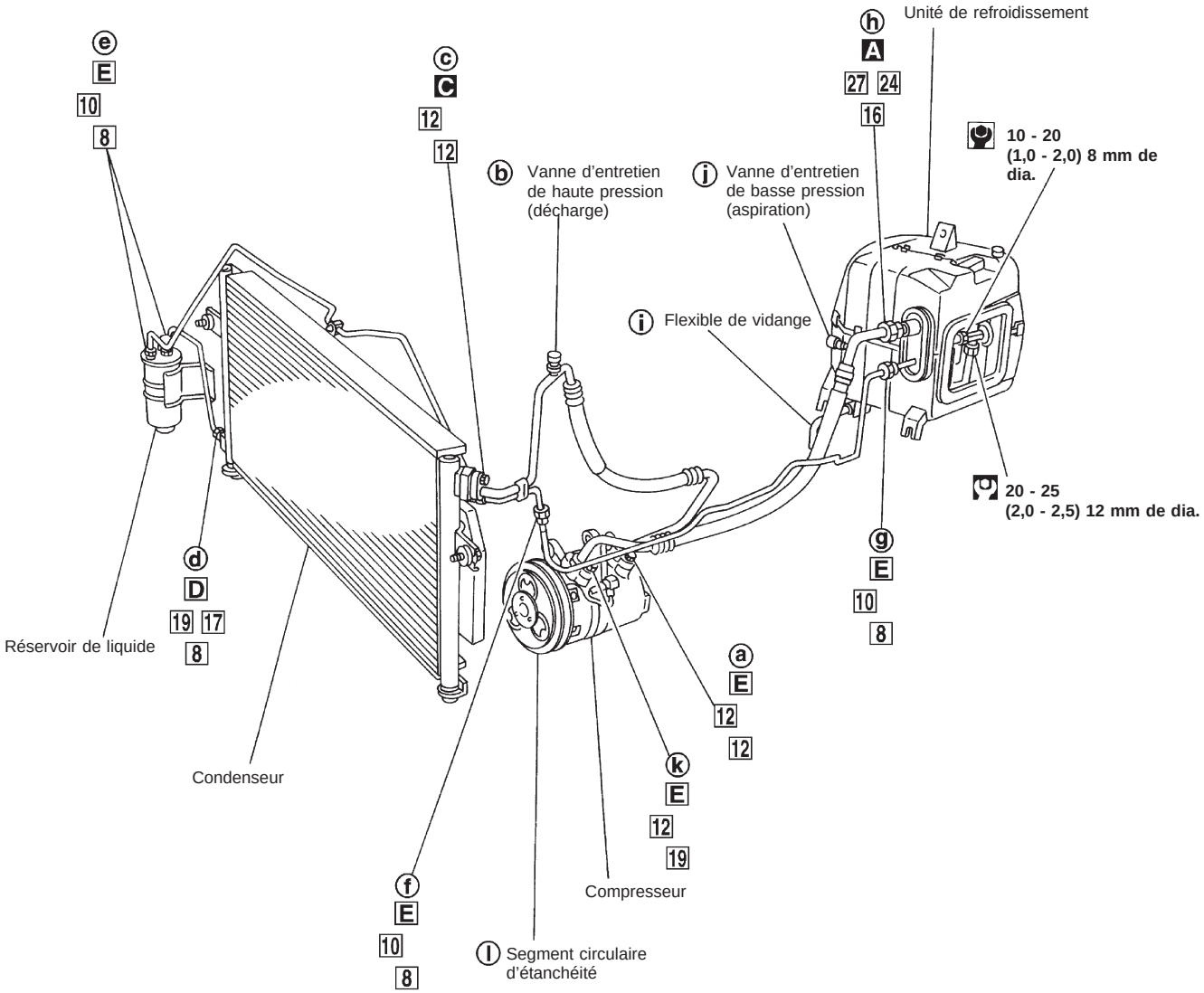

○ : Ordre de vérification des fuites de réfrigérant
□ : (Couple de serrage)
□ □ : (Taille de clé)
□ : (Taille de joint torique)
: N·m (kg-m)
A : **20 - 29 (2,0 - 3,0)**
C : **14 - 18 (1,4 - 1,8)**
: N·m (kg-m)
D : **10 - 20 (1,0 - 2,0)**
E : **8 - 11 (0,8 - 1,1)**

RHA352G

Simpo PDF Merge and Split Unregistered Version - http://www.simpopdf.com

Canalisations de réfrigération (Suite)

- Se reporter à ''Précautions pour les raccords de réfrigérant''.

CONDUITE A GAUCHE

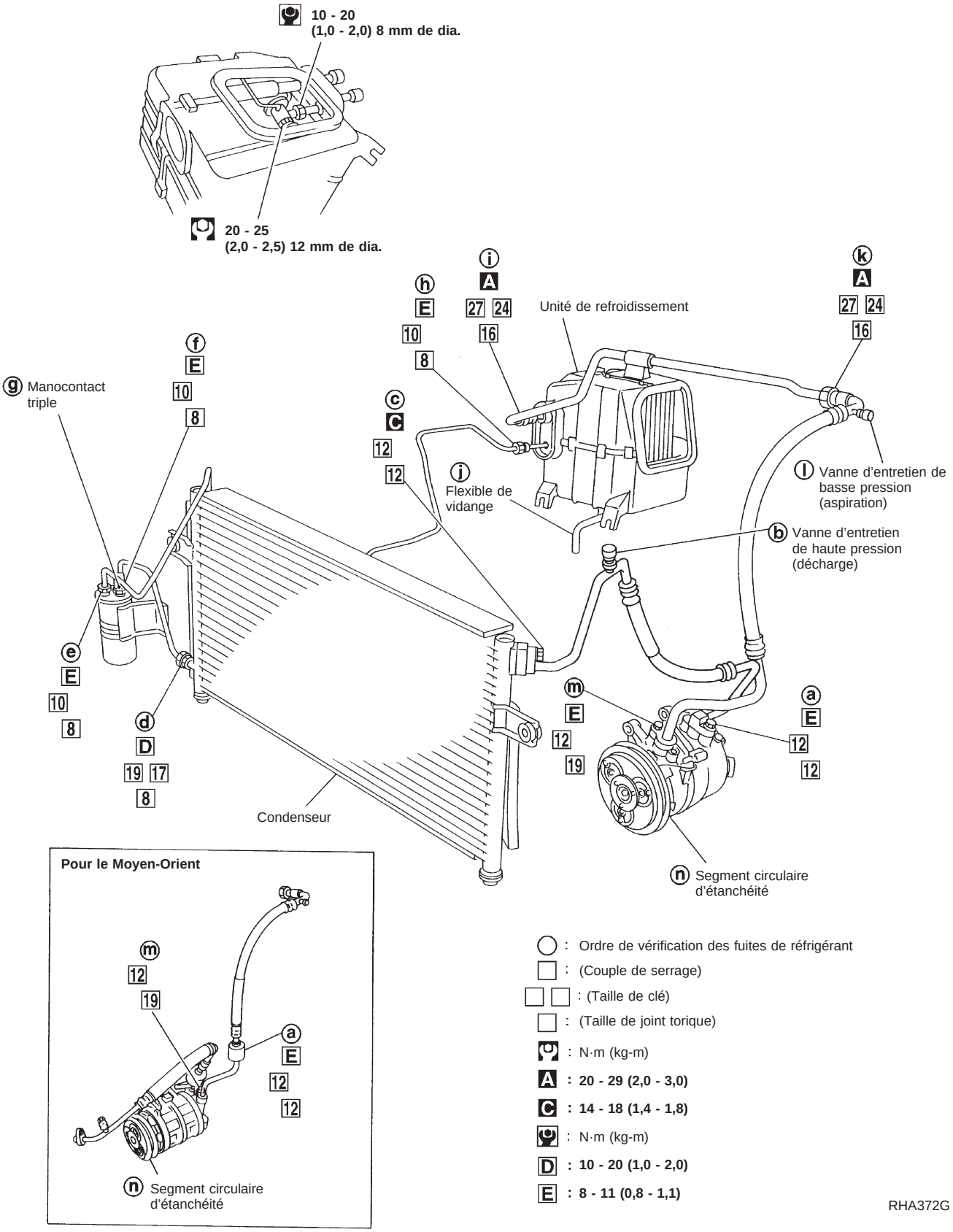

Simpo PDF Merge and Split Unregistered Version - http://www.simpopdf.com

Fixation du compresseur

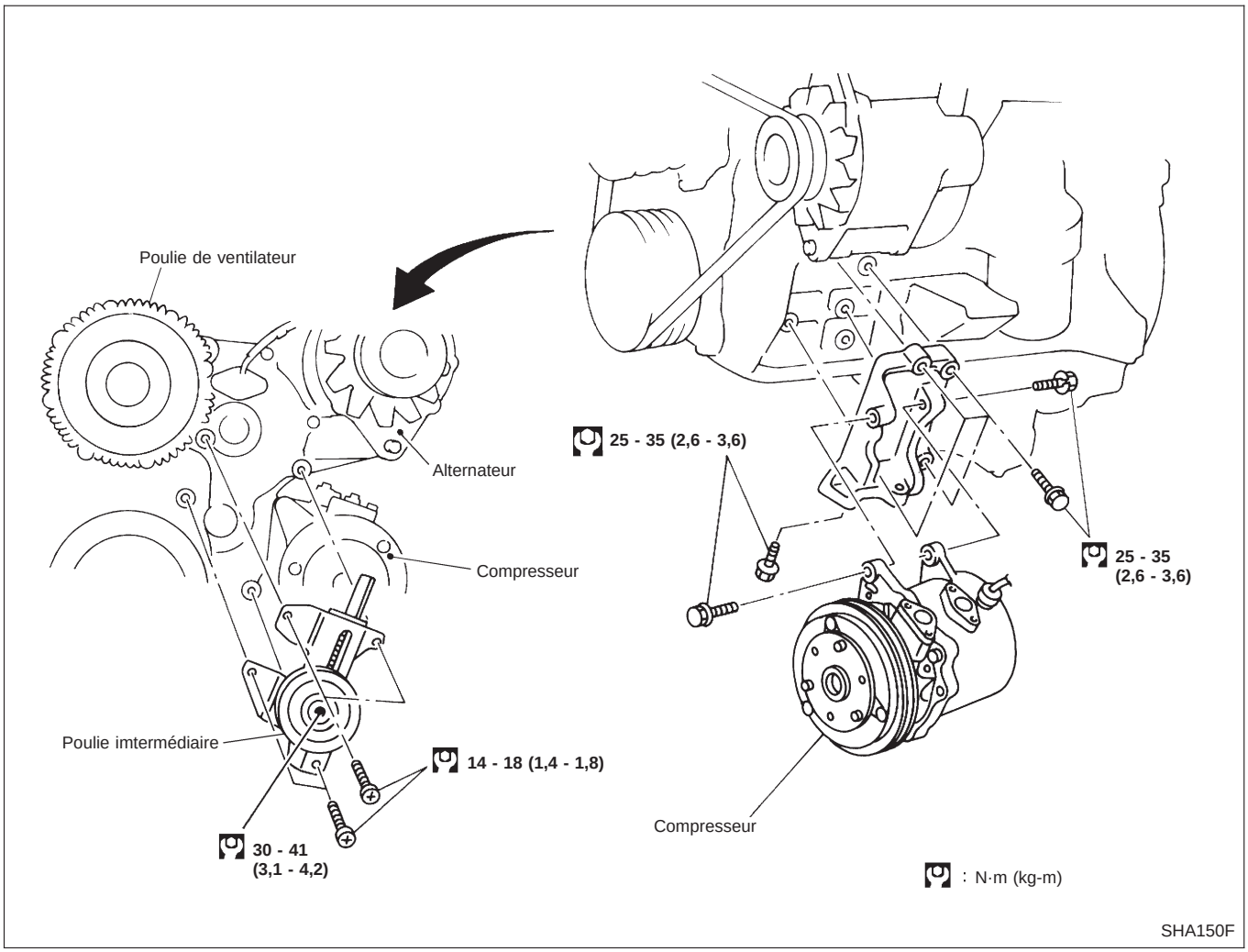

Simpo PDF Merge and Split Unregistered Version - http://www.simpopdf.com

Compresseur — Modèle DKV-14C (marque ZEXEL)

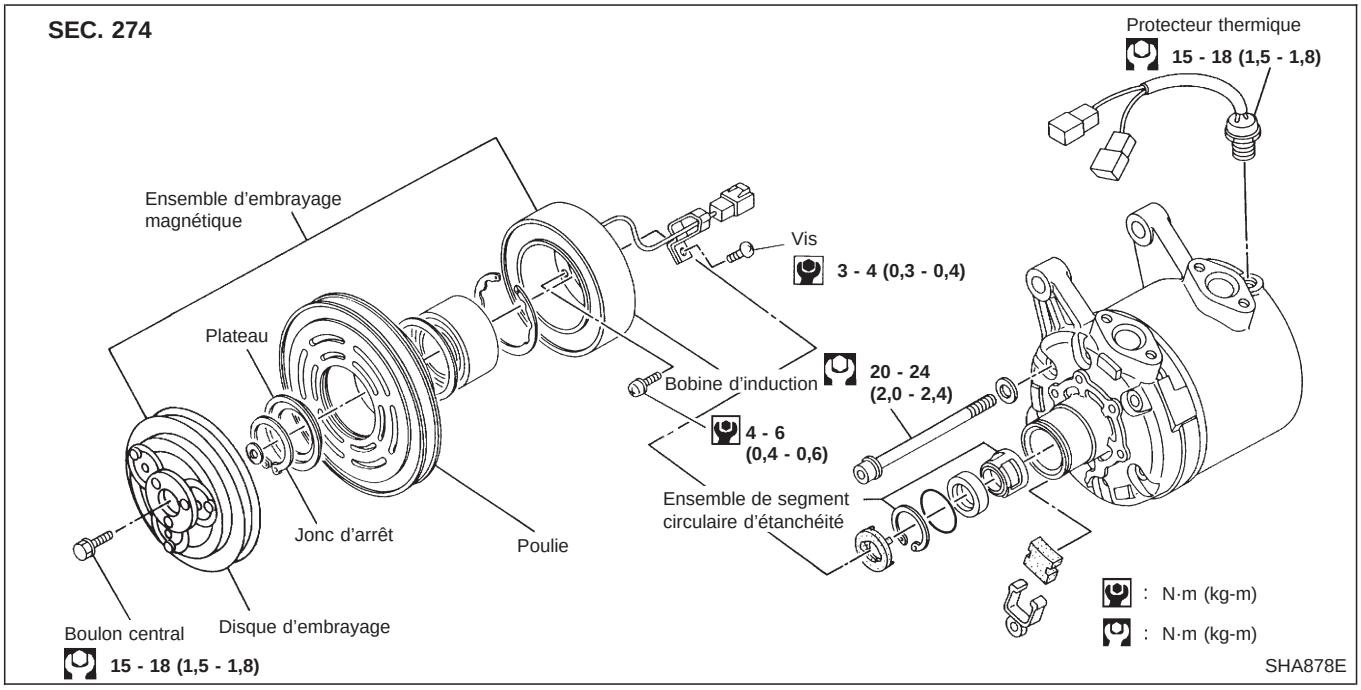

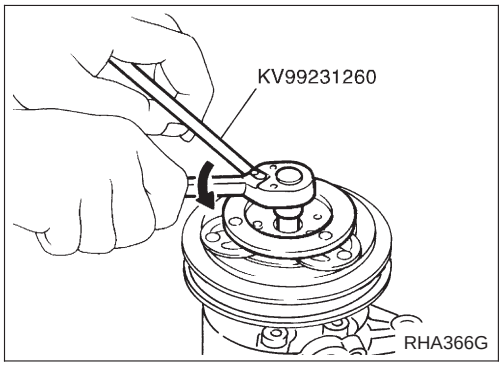

Embrayage de compresseur — Modèle DKV-14C (marque ZEXEL)

DEPOSE

- Lors de la dépose du boulon central, immobiliser le disque d'embrayage avec une clé pour disque d'embrayage.

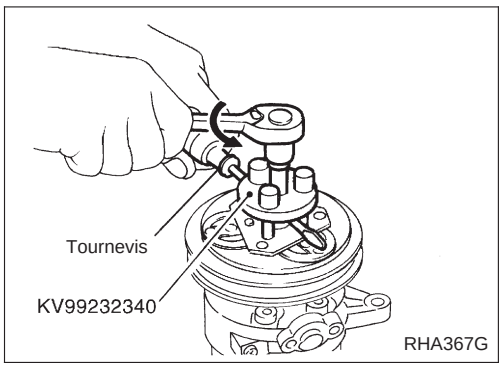

- Déposer le disque d'embrayage à l'aide de l'outil spécial KV99232340.
  Introduire les trois ergots de l'outil d'immobilisation dans le disque d'embrayage. Tourner l'outil dans le sens des aiguilles d'une montre afin de l'accrocher au plateau. Ensuite, serrer le boulon central pour déposer le disque d'embrayage.
  Lors du serrage du boulon central, insérer une barre ronde (tournevis, etc.) entre deux des ergots (comme illustré ci-contre) pour empêcher le disque d'embrayage de tourner. Après avoir déposé le disque d'embrayage, retirer les cales du semi-arbre ou du disque d'embrayage.

Simpo PDF Merge and Split Unregistered Version - http://www.simpopdf.com

Embrayage de compresseur — Modèle DKV-14C (marque ZEXEL) (Suite)

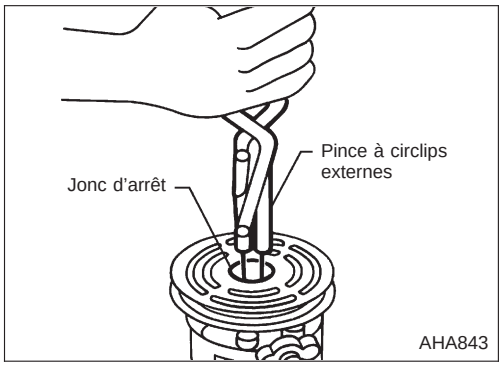

- Retirer le jonc d'arrêt à l'aide d'une pince à circlips externes.

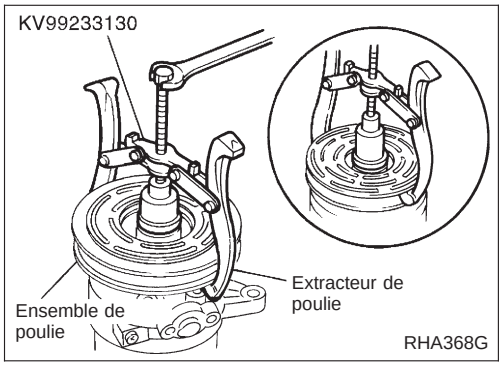

- Dépose de la poulie
  Utiliser n'importe quel extracteur de poulie en vente dans le commerce. Positionner son centre à l'extrémité du semi-arbre, puis déposer la poulie.
  Pour les poulies montées à la presse :
  Afin d'éviter de déformer la rainure de la poulie, placer les mâchoires de l'extracteur sous la rainure de la poulie (et non dans la rainure).
  Pour les poulies attachées à la machine :
  Aligner la rainure de l'extracteur sur la rainure de la poulie, puis déposer la poulie.

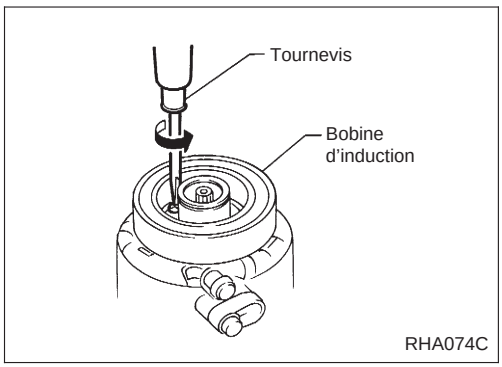

- Déposer la bride du faisceau de la bobine d'induction à l'aide d'un tournevis.
- Retirer les trois vis de fixation de la bobine d'induction et la déposer.

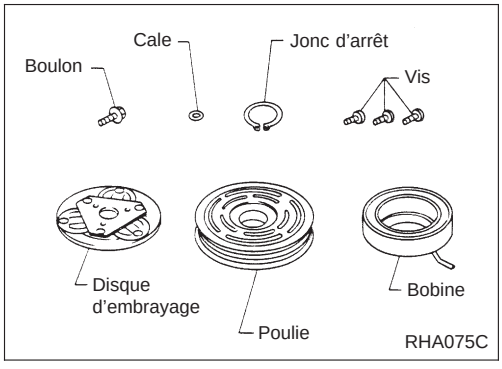

INSPECTION

Disque d'embrayage

Si la surface de friction montre des signes d'altération causés par un échauffement excessif, remplacer le disque d'embrayage et la poulie.

Poulie

Vérifier l'apparence de l'ensemble de la poulie. Si la surface de contact de la poulie comporte des rayures excessives, la poulie et le disque d'embrayage doivent être remplacés. Les surfaces de contact de l'ensemble de poulie doivent être nettoyées avec un dissolvant approprié avant la repose.

Bobine

Vérifier si la bobine ne présente pas de raccords desserrés ou d'isolation fissurée.

Simpo PDF Merge and Split Unregistered Version - http://www.simpopdf.com

Embrayage de compresseur — Modèle DKV-14C (marque ZEXEL) (Suite)

REPOSE

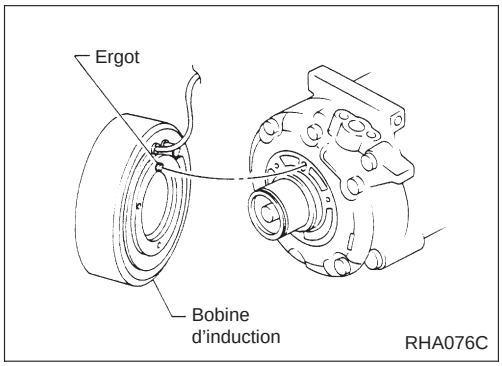

- Reposer la bobine d'induction.
- **Veiller à aligner l'ergot de la bobine avec le trou avant du compresseur.**
- Reposer le clip du faisceau de la bobine d'induction à l'aide d'un tournevis.

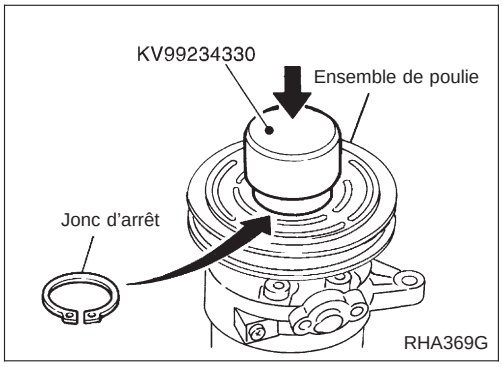

- Reposer l'ensemble de poulie à l'aide de l'outil de repose et d'une presse manuelle, puis reposer le jonc d'arrêt à l'aide d'une pince à circlips.

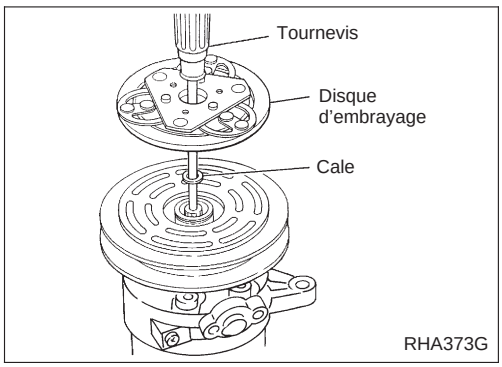

- Reposer le disque d'embrayage sur le semi-arbre avec la ou les cales d'origine. Appuyer sur le disque d'embrayage à la main.

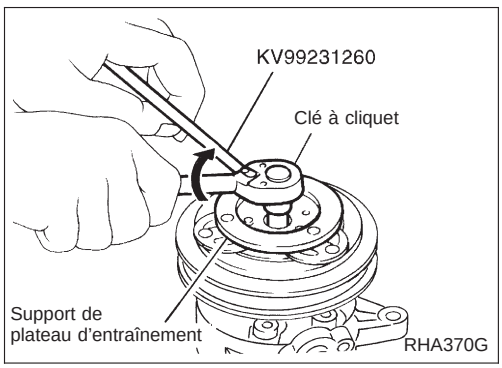

- En utilisant le support pour empêcher le plateau d'entraînement de tourner, serrer les boulons au couple suivant : 12 à 15 N·m (1,2 à 1,5 kg-m).
- **Après avoir serré le boulon, contrôler que la poulie tourne librement.**

Simpo PDF Merge and Split Unregistered Version - http://www.simpopdf.com

Embrayage de compresseur — Modèle DKV-14C (marque ZEXEL) (Suite)

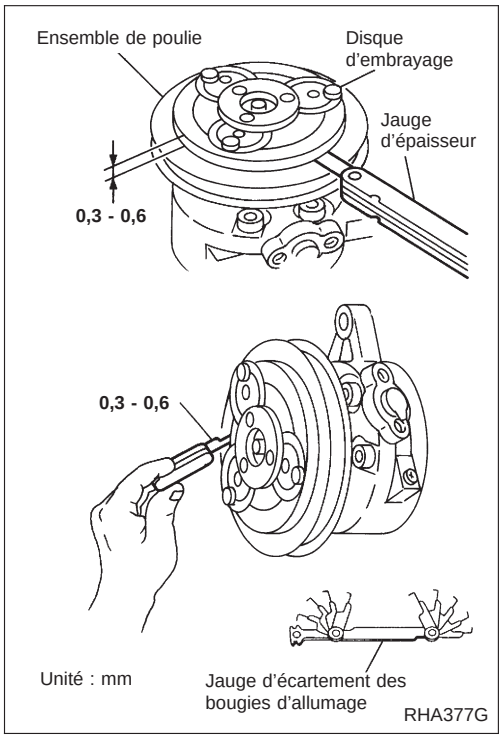

- Vérifier le jeu tout autour de la périphérie du disque d'embrayage.

  Jeu entre disque et poulie :
  0,3 - 0,6 mm

  Si le jeu spécifié n'est pas obtenu, remplacer l'entretoise de réglage et régler à nouveau.

RODAGE

Toujours effectuer un rodage lorsque l'on remplace l'embrayage de compresseur. Pour ce faire, enfoncer et relâcher l'embrayage une trentaine de fois environ. Le rodage augmente le couple transmis.

Protecteur thermique — Modèle DKV-14C (marque ZEXEL)

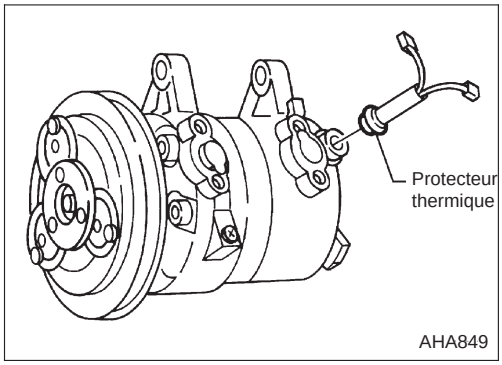

INSPECTION

- Lors de l'entretien, empêcher la pénétration de substances étrangères dans le compresseur.
- Vérifier la continuité entre les deux bornes.

Simpo PDF Merge and Split Unregistered Version - http://www.simpopdf.com

Caractéristiques générales

COMPRESSEUR

Modèle		Marque ZEXEL DKV-14C
Type		Ailette rotative
Cylindrée	cm^3/tr/mn	140
Alésage du cylindre x course	mm	—
Sens de rotation		Dans le sens des aiguilles d'une montre (vue de l'extrémité d'entraînement)
Courroie d'entraînement		Type A

LUBRIFIANT

Type		KLH00-PAGR0
Capacité	mℓ	
Totale dans le circuit		200
Quantité de la charge du compresseur (pièces d'entretien)		200

Inspection et réglage

REFRIGERANT

Type		HFC-134a (R-134a)
Capacité	kg	0,50 - 0,60

COMPRESSEUR

Jeu entre disque d'embrayage et poulie	mm	0,3 - 0,6

REGIME DE RALENTI DU MOTEUR (lorsque le climatiseur est enclenché).

- **Se reporter à la section EC.**

TENSION DE LA COURROIE

- **Se reporter à la section MA (''Vérification des courroies d'entraînement'', ''ENTRETIEN DU MOTEUR'').**

Simpo PDF Merge and Split Unregistered Version - http://www.simpopdf.com

<SUPPLEMENT-I>

TABLE ALPHABETIQUE

SECTION IDX

Simpo PDF Merge and Split Unregistered Version - http://www.simpopdf.com

A

Alignement des roues (avant) FA-1002
Alternateur EL-1013
Ampli. de commande thermique (C/A auto) HA-1060
Ampli. de commande thermique (C/A manuel) HA-1011
Amplificateur automatique (C/A auto) HA-1072

B

Batterie EL-1011

C

Canalisations de réfrigération HA-1088
Capteur d'ensoleillement (C/A auto) HA-1071
Capteur d'habitacle (C/A auto) HA-1069
Capteur de température ambiante (C/A auto) HA-1070
Capteur de régime moteur EC-1009
Carter d'huile (moteur) EM-1004
Circuit de démarrage EL-1012
Circuit de lubrification (moteur TD25Ti) LC-1002
Circuit de refroidissement (moteur TD25Ti) LC-1003
Clignotant EL-1017
Commande à poussoirs de C/A (C/A auto) HA-1062
Commutateur de ventilateur (C/A auto) HA-1059, 1085
Commutateur de ventilateur (C/A manuel) HA-1010
Composants externes du moteur EM-1002
Couvercle d'embrayage CL-1009
Culasse EM-1011
Cylindre récepteur (embrayage) CL-1005

D

Démarreur EL-1012
Dépose du moteur EM-1016
Dépose et repose de l'embrayage de compresseur HA-1091
Dépose et repose de la T/M MT-1002
Désembuage de lunette arrière EL-1032
Désembuage de rétroviseur EL-1032
Diagnostic des défauts de C/A (C/A auto) HA-1014
Diagnostic des défauts de C/A (C/A manuel) HA-1003
Diagnostic des défauts du SRS RS-1003
Dimensions GI-1008
Disposition de l'alimentation électrique EL-1003
Disposition des faisceaux EL-1056
Disque d'embrayage CL-1008

E

Eclairage EL-1023
Eclairage de compartiment - Voir Eclairage intérieur - EL-1025
Empattement (Dimensions) GI-1008
Emplacement des composants de C/A (C/A auto) HA-1023
Emplacement des dispositifs électriques EL-1052

F

Feux de détresse EL-1017
Filetage - Av. & Arr. (Dimensions) GI-1008
Fonctionnement des commandes de C/A (C/A auto) HA-1013

G

Garde au sol GI-1008

H

Hauteur (Dimensions) GI-1008
Huile (Contenance) MA-1007

I

Indice de viscosité (SAE) MA-1008
Informations générales sur CONSULT GI-1004
Inspection de l'arbre à cames EM-1017
Inspection du segment de piston EM-1017
Interrupteur de C/A (C/A auto) HA-1059
Interrupteur de C/A (C/A manuel) HA-1010

L

Largeur (Dimensions) GI-1008
Levier de débrayage (embrayage) CL-1006
Liquides MA-1002
Liste des schémas de câblage (code de cellules) EL-1069
Longueur (Dimensions) GI-1008
Lubrifiants MA-1002

Simpo PDF Merge and Split Unregistered Version - http://www.simpopdf.com

M

Manocontact triple (C/A auto)..... HA-1060
Manocontact triple (C/A manuel)..... HA-1011
Montage du piston.....EM-1017
Moteur de l'aspirateur (C/A auto)..... HA-1070
Moteur de volet d'admission (C/A auto)..... HA-1063
Moteur de volet de mode (C/A auto)..... HA-1063
Moteur du volet de mélange d'air (C/A auto)..... HA-1078
Mécanisme de débrayage d'embrayage..... CL-1006

P

Palier de débrayage (embrayage)..... CL-1006
Pédale d'embrayage..... CL-1003
Plafonnier - Voir Eclairage intérieur -..... EL-1025
Plafonnier..... EL-1025
Plateau de pression - Voir Couvercle d'embrayage..... CL-1009
Potentiomètre..... EC-1009
Pression hydraulique de la direction assistée..... ST-1002
Précautions pour le turbo-compresseur..... GI-1003
Purge d'air (embrayage hydraulique)..... CL-1004

R

Réglage de la timonerie de commande de volet de mode (C/A auto)..... HA-1066
Réglage de la timonerie de commande du volet d'admission (C/A auto)..... HA-1067
Réglage de la timonerie de la commande du volet de mélange d'air (C/A auto)..... HA-1067
Remplacement de l'huile moteur..... MA-1009
Remplacement du joint d'huile (moteur)..... EM-1015
Remplacement du filtre à air..... MA-1010

S

SMJ (super raccord multiple)..... Page dépliante
Spot de lecture..... EL-1025
Schéma de câblage - A/C, A (C/A auto)..... HA-1026
Schéma de câblage - A/C, M..... HA-1004
Schéma de câblage - Climatiseur automatique - (C/A auto)..... HA-1026
Schéma de câblage - D/LOCK..... EL-1042
Schéma de câblage - DEF..... EL-1032
Schéma de câblage - DIMDIP..... EL-1014
Schéma de câblage - FICD..... EC-1011
Schéma de câblage - GLOW..... EC-1004
Schéma de câblage - ILL..... EL-1023
Schéma de câblage - INT/L..... EL-1025
Schéma de câblage - MULTI..... EL-1044
Schéma de câblage - POWER..... EL-1004
Schéma de câblage - SRS..... RS-1003
Schéma de câblage - WINDOW..... EL-1034
Système audio..... EL-1033
Système d'échappement..... FE-1002
Système de mise en veilleuse des codes..... EL-1014
Système de retenue supplémentaire - Schéma de câblage..... RS-1003
Sélecteur de mode de C/A (C/A auto)..... HA-1072

T

Témoins lumineux..... EL-1027
Thermocontact (C/A auto)..... HA-1061
Thermocontact (C/A manuel)..... HA-1011

V

Vanne de commande EGR..... EC-1009
Variantes de modèles..... GI-1005
Vérification du fonctionnement de C/A (C/A auto)..... HA-1015
Verrouillage électrique de porte..... EL-1042
Vidange de l'huile (contenance)..... MA-1002
Volant de direction et colonne de direction..... ST-1003
Volant-moteur (embrayage)..... CL-1008

Simpo PDF Merge and Split Unregistered Version - http://www.simpopdf.com

<SUPPLEMENT-I>

CIRCUIT DE LUBRIFICATION DU MOTEUR ET CIRCUIT DE REFROIDISSEMENT

SECTION **LC**

AVIS DE MODIFICATION :

- Le moteur TD25Ti a été ajouté pour l'Europe. Pour les caractéristiques autres que celles décrites ici, se reporter au moteur TD25.

TABLE DES MATIERES

TD25Ti

CIRCUIT DE LUBRIFICATION DU MOTEUR 1002
Circuit de lubrification 1002

CIRCUIT DE REFROIDISSEMENT DU MOTEUR 1003
Circuit de refroidissement 1003

Simpo PDF Merge and Split Unregistered Version - http://www.simpopdf.com

Circuit de lubrification

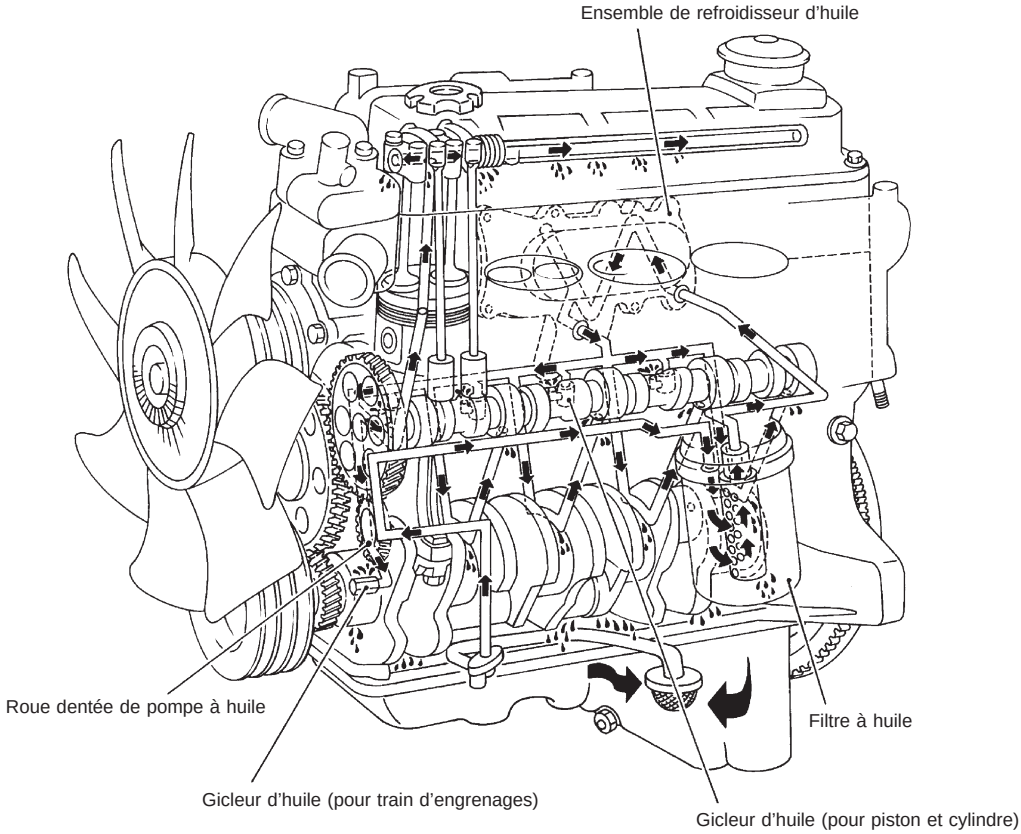

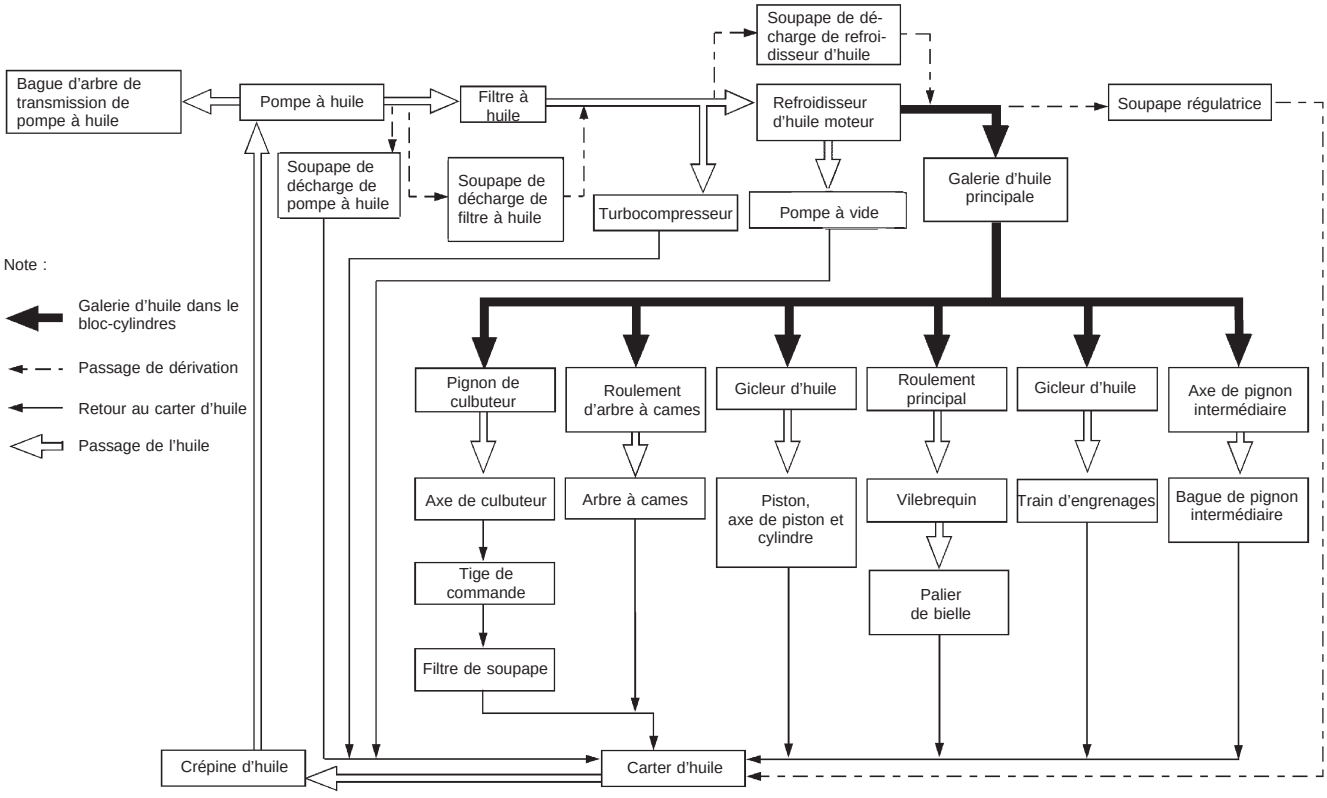

DLC020

Simpo PDF Merge and Split Unregistered Version - http://www.simpopdf.com

Circuit de refroidissement

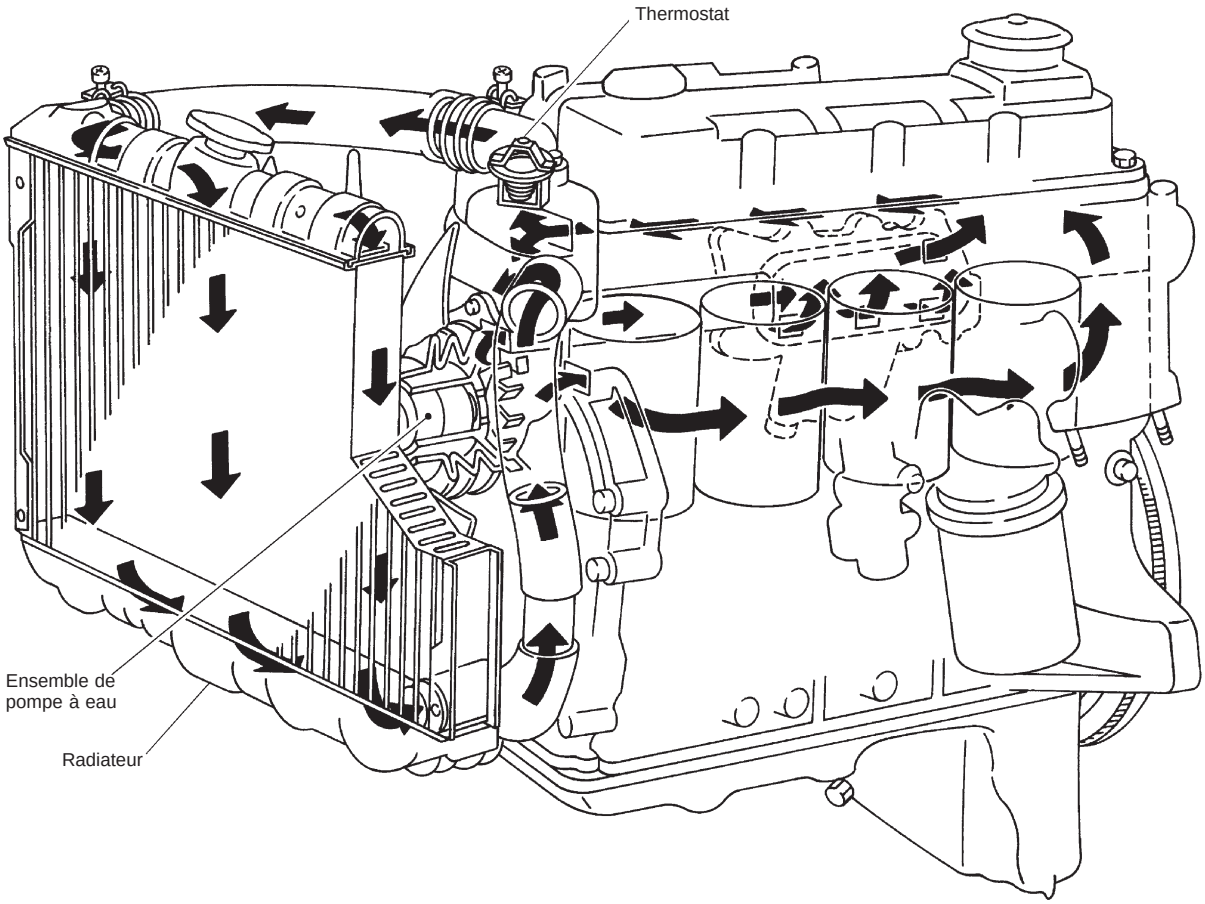

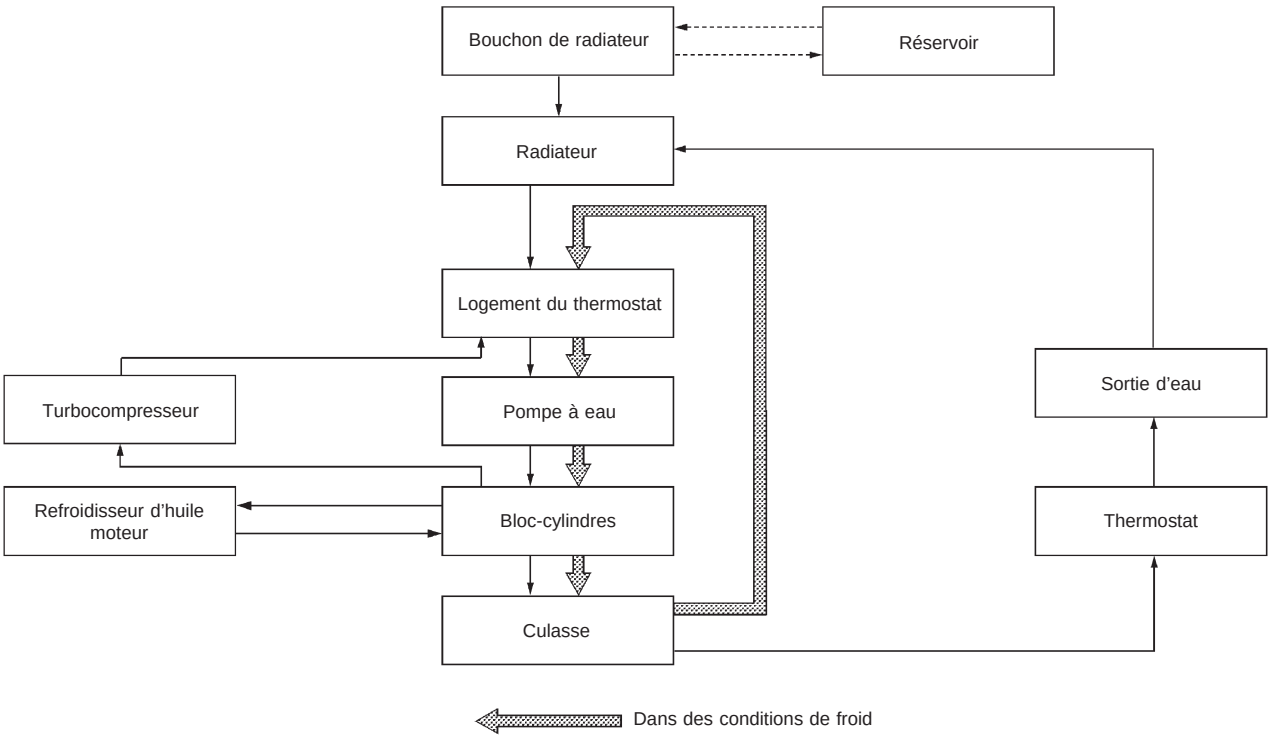

DLC026

Simpo PDF Merge and Split Unregistered Version - http://www.simpopdf.com

<SUPPLEMENT-I>

SECTION MA

AVIS DE MODIFICATION :

- Le moteur TD25Ti a été ajouté pour l'Europe. Pour les caractéristiques autres que celles décrites ici, se reporter au moteur TD25.

TABLE DES MATIERES

ENTRETIEN PERIODIQUE (pour l'Europe) 1002
Entretien courant pour les modèles avec moteur diesel (pour moteur TD25Ti seulement) 1002
Entretien dans des conditions de conduite sévères (pour moteur TD25Ti seulement)..... 1006
LIQUIDES ET LUBRIFIANTS CONSEILLES 1007
Liquides et lubrifiants 1007
Indice de viscosité SAE 1008
ENTRETIEN DU MOTEUR 1009
Remplacement de l'huile moteur 1009
Nettoyage et remplacement du filtre à air 1010

Simpo PDF Merge and Split Unregistered Version - http://www.simpopdf.com

Entretien courant pour les modèles avec moteur diesel (pour moteur TD25Ti seulement)

Entretien du moteur pour les véhicules dont le kilométrage est inférieur à 30 000 km/an

Abréviations : R = Remplacer, I = Inspecter et corriger ou remplacer si nécessaire.

OPERATIONS D'ENTRETIEN		FREQUENCE D'ENTRETIEN									
Effectuer l'entretien sur la base du kilométrage ou bien à intervalle mensuel selon la première éventualité.	km x 1 000	10	20	30	40	50	60	70	80	90	Page de référence
	Mois	**6**	**12**	**18**	**24**	**30**	**36**	**42**	**48**	**54**	
Huile moteur (utiliser l'huile recommandée)*		R	R	R	R	R	R	R	R	R	MA-1009
Filtre à huile moteur*		R	R	R	R	R	R	R	R	R	MA-27
Courroies d'entraînement		I	I	I	I	I	I	I	I	I	MA-26
Liquide de refroidissement antigel moteur (à base d'éthylène glycol)	Voir NOTE (1)								R		MA-28
Circuit de refroidissement			I		I		I		I		MA-29
Filtre à air (type à papier visqueux)*					R				R		MA-1010
Jeu des soupapes d'admission et d'échappement			I		I		I		I		MA-26
Canalisations d'alimentation					I				I		MA-31
Filtre à carburant*					R				R		MA-31
Injecteurs	Voir NOTE (2)										MA-33

NOTE : (1) Remplacer aux premiers 80 000 km ou 48 mois, puis tous les 60 000 km ou 36 mois.
(2) Si la puissance du moteur diminue, si les gaz d'échappement sont noirs ou si le bruit du moteur augmente, contrôler la pression de démarrage des injecteurs et le jet d'injection et, si nécessaire, les régler.

* Les points d'entretien portant une ''*'' doivent faire l'objet d'un entretien plus fréquent en suivant les indications données sous ''Entretien dans des conditions de conduite sévères''.

Simpo PDF Merge and Split Unregistered Version - http://www.simpopdf.com

Entretien courant pour les modèles avec moteur diesel (pour moteur TD25Ti seulement) (Suite)

Entretien du châssis et de la carrosserie pour les véhicules dont le kilométrage annuel est inférieur à 30 000 km/an

Abréviations : R = Remplacer, I = Vérifier et corriger ou remplacer si nécessaire, L = Lubrifier, T = Serrer. [ ] = Seulement à la distance spécifiée.

OPERATIONS D'ENTRETIEN	FREQUENCE D'ENTRETIEN					
Effectuer l'entretien sur la base du kilométrage ou bien à intervalle mensuel selon la première éventualité.	km x 1 000	20	40	60	80	Page de référence
	Mois	**12**	**24**	**36**	**48**	
Orientation des faisceaux de phare		I	I	I	I	NOTE (3)
Alignement des roues (si nécessaire, faire tourner et équilibrer les roues)		I	I	I	I	MA-38, NOTE (4)
Plaquettes de freins, disques et autres composants de freins*		I	I	I	I	MA-39
Garnitures de freins, tambours et autres composants de freins*		I	I	I	I	MA-39
Frein à pied, frein à main et embrayage (jeu libre, course et fonctionnement)		I	I	I	I	NOTE (5)
Assistance de frein, flexibles à dépression, raccords et clapet sens unique			I		I	MA-39
Circuits de freinage et d'embrayage		I	I	I	I	MA-35, 38
Liquide de frein et d'embrayage (pour niveau et fuites)		I	I	I	I	MA-35, 38
Liquide de frein*			R		R	MA-38
Canalisations et liquide de direction assistée (pour niveau et fuites)		I	I	I	I	MA-41
Huile de boîtier de direction manuelle (niveau et fuites)		I	I	I	I	MA-42
Système de coussin gonflable	Voir NOTE (1)					NOTE (6)
Huile de boîte de vitesses manuelle (vérifier les fuites ou remplacer)		I	I	I	[R]	MA-35
Huile de boîte de transfert et d'engrenage de différentiel standard (fuites)*		I	I	R	I	MA-36, 37
Huile pour pignon de différentiel à glissement limité (LSD) (niveau et fuites)*		I	I	R	I	MA-37
Pignon de direction et timonerie, essieu, pièces de suspension et arbre de transmission*		I	I	I	I	MA-36, 41
Points de graissage de la timonerie de direction, des arbres de transmission et de la suspension*	Voir NOTE (2)	L	L	L	L	MA-37
Système d'échappement*		I	I	I	I	MA-35
Semi-arbre*		I	I	I	I	NOTE (7)
Graisse pour roulement de roue avant (modèles à 2 roues motrices)			I		I	NOTE (8)
Graisse pour roulement de roue avant (modèles à 4 roues motrices)*		I	R	I	R	NOTE (8)
Graisse pour moyeu de roue libre (modèles à 4 roues motrices)*		I	I	I	I	NOTE (9)
Montage de la carrosserie		T	T	T	T	NOTE (10)
Corrosion de la carrosserie			Annuellement			MA-45

NOTE : (1) Inspecter après les premiers 10 ans, puis tous les 2 ans.
(2) L'arbre de transmission doit être regraissé quotidiennement s'il est immergé dans l'eau.
(3) ''Réglage des faisceaux'' à la section EL
(4) ''Alignement des roues avant'' à la section FA
(5) ''Pédale de frein et support'' à la section BR, ''Réglage de la pédale d'embrayage'' à la section CL
(6) ''Points d'entretien'' à la section RS
(7) ''ESSIEU AVANT – Semi-arbre'' à la section FA
(8) ''Roulement des roues avant'' à la section FA
(9) ''Moyeu débrayable manuel – 4 X 4 –'' et ''Moyeu débrayable automatique – 4 X 4 –'' à la section FA
(10) ''CABINE ET CARROSSERIE ARRIERE'' à la sectin BT
* Les points d'entretien portant une ''*'' doivent faire l'objet d'un entretien plus fréquent en suivant les indications données sous ''Entretien dans des conditions de conduite sévères''.

Simpo PDF Merge and Split Unregistered Version - http://www.simpopdf.com

Entretien courant pour les modèles avec moteur diesel (pour moteur TD25Ti seulement) (Suite)

Entretien du moteur pour les véhicules dont le kilométrage est supérieeur à 30 000 km/an
Moteur TD25Ti

Abréviations : R = Remplacer, I = Inspecter et corriger ou remplacer si nécessaire.

OPERATIONS D'ENTRETIEN Effectuer l'entretien sur la base du kilométrage.	km x 1 000	FREQUENCE D'ENTRETIEN 10	20	30	40	50	60	70	80	90	100	110	120	Page de référence
Huile moteur (utiliser l'huile recommandée)*		R	R	R	R	R	R	R	R	R	R	R	R	MA-1009
Filtre à huile moteur*		R	R	R	R	R	R	R	R	R	R	R	R	MA-27
Courroies d'entraînement		I	I	I	I	I	I	I	I	I	I	I	I	MA-26
Liquide de refroidissement antigel moteur (à base d'éthylène glycol)	Voir NOTE (1)									R				MA-28
Circuit de refroidissement				I			I			I			I	MA-29
Filtre à air (type à papier visqueux)*							R						R	MA-1010
Jeu des soupapes d'admission et d'échappement				I			I			I			I	MA-26
Canalisations d'alimentation							I						I	MA-31
Filtre à carburant*							R						R	MA-31
Injecteurs	Voir NOTE (2)													MA-33

NOTE : (1) Remplacer aux premiers 90 000 km, puis tous les 60 000 km.
(2) Si la puissance du moteur diminue, si les gaz d'échappement sont noirs ou si le bruit du moteur augmente, contrôler la pression de démarrage des injecteurs et le jet d'injection et, si nécessaire, les régler.
* Les points d'entretien portant une ''*'' doivent faire l'objet d'un entretien plus fréquent en suivant les indications données sous ''Entretien dans des conditions de conduite sévères''.

Simpo PDF Merge and Split Unregistered Version - http://www.simpopdf.com

Entretien courant pour les modèles avec moteur diesel (pour moteur TD25Ti seulement) (Suite)

Entretien du châssis et de la carrosserie pour les véhicules dont le kilométrage est supérieur à 30 000 km/an

Abréviations : R = Remplacer, I = Vérifier et corriger ou remplacer si nécessaire, L = Lubrifier, T = Serrer.

OPERATIONS D'ENTRETIEN	FREQUENCE D'ENTRETIEN				Page de référence
Effectuer l'entretien sur la base du kilométrage. km x 1 000	30	60	90	120	
Orientation des faisceaux de phare	I	I	I	I	NOTE (3)
Alignement des roues (si nécessaire, faire tourner et équilibrer les roues)	I	I	I	I	MA-38, NOTE (4)
Plaquettes de freins, disques et autres composants de freins*	I	I	I	I	MA-39
Garnitures de freins, tambours et autres composants de freins*	I	I	I	I	MA-39
Frein à pied, frein à main et embrayage (jeu libre, course et fonctionnement)	I	I	I	I	NOTE (5)
Assistance de frein, flexibles à dépression, raccords et clapet sens unique		I		I	MA-39
Circuits de freinage et d'embrayage	I	I	I	I	MA-35, 38
Liquide de frein et d'embrayage (pour niveau et fuites)	I	I	I	I	MA-35, 38
Liquide de frein*		R		R	MA-38
Canalisations et liquide de direction assistée (pour niveau et fuites)	I	I	I	I	MA-41
Huile de boîtier de direction manuelle (niveau et fuites)	I	I	I	I	MA-42
Système de coussin gonflable Voir NOTE (1)					NOTE (6)
Huile de boîte de vitesses manuelle (vérifier les fuites ou remplacer)	I	I	R	I	MA-35
Huile de boîte de transfert et d'engrenage de différentiel standard (fuites)*	I	R	I	R	MA-36, 37
Huile pour pignon de différentiel à glissement limité (LSD) (niveau et fuites)*	I	R	I	R	MA-37
Pignon de direction et timonerie, essieu, pièces de suspension et arbre de transmission*	I	I	I	I	MA-36, 41
Points de graissage de la timonerie de direction, des arbres de transmission et de la suspension* Voir NOTE (2)	L	L	L	L	MA-37
Système d'échappement*	I	I	I	I	MA-35
Semi-arbre*	I	I	I	I	NOTE (7)
Graisse pour roulement de roue avant (modèles à 2 roues motrices)		I		I	NOTE (8)
Graisse pour roulement de roue avant (modèles à 4 roues motrices)*	I	R	I	R	NOTE (8)
Graisse pour moyeu de roue libre (modèles à 4 roues motrices)*	I	I	I	I	NOTE (9)
Montage de la carrosserie	T	T	T	T	NOTE (10)
Corrosion de la carrosserie		Annuellement			MA-45

NOTE : (1) Inspecter après les premiers 10 ans, puis tous les 2 ans.
(2) L'arbre de transmission doit être regraissé quotidiennement s'il est immergé dans l'eau.
(3) ''Réglage des faisceaux'' à la section EL
(4) ''Alignement des roues avant'' à la section FA
(5) ''Pédale de frein et support'' à la section BR, ''Réglage de la pédale d'embrayage'' à la section CL
(6) ''Points d'entretien'' à la section RS
(7) ''ESSIEU AVANT – Semi-arbre'' à la section FA
(8) ''Roulement des roues avant'' à la section FA
(9) ''Moyeu débrayable manuel – 4 X 4 –'' et ''Moyeu débrayable automatique – 4 X 4 –'' à la section FA
(10) ''CABINE ET CARROSSERIE ARRIERE'' à la sectin BT
* Les points d'entretien portant une ''*'' doivent faire l'objet d'un entretien plus fréquent en suivant les indications données sous ''Entretien dans des conditions de conduite sévères''.

Simpo PDF Merge and Split Unregistered Version - http://www.simpopdf.com

Entretien dans des conditions de conduite sévères (pour moteur TD25Ti seulement)

Les intervalles d'entretien indiqués aux pages précédentes sont donnés pour des conditions d'utilisation normales. Si le véhicule est principalement utilisé dans les conditions de conduite sévères suivantes, il est nécessaire d'augmenter la fréquence d'entretien indiquée dans le tableau.

Conditions de conduite sévères

A — Conduite dans un environnement poussiéreux
B — Conduite répétée sur de courtes distances
C — Tirage d'une remorque ou d'une caravane
D — Ralenti excessif
E — Conduite dans des conditions climatiques extrêmement difficiles ou dans des endroits où les températures ambiantes sont soit extrêmement basses, soit extrêmement élevées
F — Conduite dans des régions très humides ou montagneuses
G — Conduite sur des chaussées recouvertes de sel ou d'autres matériaux corrosifs
H — Conduite sur des routes inégales et/ou boueuses ou dans le désert
I — Conduite avec usage fréquent des freins ou dans des régions montagneuses
J — Conduite fréquente sur des surfaces inondées

Opérations d'entretien : Vérifier = Vérifier et corriger ou remplacer si nécessaire.

Condition de conduite	Elément d'entretien	Opérations d'entretien	Intervalle d'entretien — Kilométrage annuel		Page de référence
			Moins de 30 000 km	Plus de 30 000 km	
A B C D	Huile moteur	Remplacer	Tous les 5 000 km ou 3 mois	Tous les 5 000 km	MA-1009
	Filtre à huile moteur				MA-27
A	Filtre d'épurateur d'air (type à papier visqueux)	Remplacer	Tous les 20 000 km ou 12 mois	Tous les 30 000 km	MA-1010
A . . . E	Filtre à carburant	Remplacer	Tous les 20 000 km ou 12 mois	Tous les 30 000 km	MA-31
A . C . . . G H I .	Plaquettes de freins, disques et autres composants de freins	Inspecter	Tous les 10 000 km ou 6 mois	Tous les 15 000 km	MA-39
	Garnitures de freins, tambours et autres composants de freins				MA-39
. . . . . F	Liquide de frein	Remplacer	Tous les 20 000 km ou 12 mois	Tous les 30 000 km	MA-38
. . C . . . . H . .	Huile de boîte de transfert et d'engrenage de différentiel standard	Remplacer	Tous les 30 000 km ou 18 mois	Tous les 30 000 km	MA-36, 37
	Huile pour pignon de différentiel à glissement limité (LSD)*1	Remplacer			MA-37
	Semi-arbre	Inspecter	Tous les 10 000 km ou 6 mois	Tous les 15 000 km	*2
. . . . . G H . .	Pignon de direction et timonerie, essieu, pièces de suspension et arbre de transmission	Inspecter			MA-36, 41
	Système d'échappement	Inspecter			MA-35
. . . . . G H . J	Points de graissage de la timonerie de direction, des arbres de transmission et de la suspension	Lubrifier			MA-37
. . . . . J	Graisse pour roulement de roue avant	Inspecter			*3
	Graisse pour moyeu de roue libre	Inspecter			

*1 : Pignon de différentiel intégré à l'unité de verrouillage du différentiel
*2 : "ESSIEU AVANT — Semi-arbre" à la section FA
*3 : "Roulement des roues avant" à la section FA, "Moyeu débrayable manuel — 4 X 4 —" et "Moyeu débrayable automatique — 4 X 4 —" à la section FA

Entretien en cas de conduite tout-terrain (pour modèles à 4 roues motrices seulement)

En cas de conduite tout-terrain dans le sable, la boue ou l'eau aussi profonde que le moyeu de roue, les pièces suivantes devront alors subir des entretiens plus fréquents :

▲ Plaquettes de freins et disques
▲ Garniture de freins et tambours
▲ Canalisations et flexibles de freins
▲ Graisse pour roulement de roue et graisse pour moyeu de roue libre
▲ Graisse pour moyeu de roue libre
▲ Huile de boîte de différentiel, de boîte de vitesses et de boîte de transfert
▲ Timonerie de la direction
▲ Arbre primaire et semi-arbre avant
▲ Filtre à air
▲ Carter d'embrayage (voir si l'eau pénètre. Se reporter à MA-37).

Simpo PDF Merge and Split Unregistered Version - http://www.simpopdf.com

Liquides et lubrifiants

		Contenance (approximative) Litre	Liquides et lubrifiants recommandés
Huile moteur (remplissage)			
Avec filtre à huile			
	NA20S	3.8	Pour l'Europe : Moteur à essence : API SG ou SH*1 Moteur diesel : ACEA B3 Sauf pour l'Europe : Moteur à essence : API SE, SF, SG ou SH*1 Moteur diesel : API CC ou CD*1
	Z24S	2 roues motrices 3,8 4 roues motrices 4,3	
	KA24E	2 roues motrices 3,9 4 roues motrices 4,1	
	TD25 & TD27	6,0	
	QD32 & TD25Ti	6,7	
Sans filtre à huile			
	NA20S	3,4	
	Z24S	2 roues motrices 3,3 4 roues motrices 3,8	
	KA24E	2 roues motrices 3,5 4 roues motrices 3,7	
	TD25 & TD27	5,3	
	QD32 & TD25Ti	6,0	
Circuit de refroidissement (avec réservoir)			
	NA20S	6,8	Liquide de refroidissement antigel (à base d'éthylène glycol) ou eau douce
	Z24S	Avec C/A 8,9 Sans C/A 8,7	
	KA24E	6,7	
	TD25 & TD27	9,5	
	TD25Ti	10,6	
	QD32	9,4. 10,2*4	
Huile pour boîte de vitesses manuelle	FS5R30A	4 roues motrices 5,1	API GL-4*1
	FS5W71C	2 roues motrices 2,0 4 roues motrices 4,9	
Huile de boîte de transfert	TX10A	2,2	Matic "D" Nissan, huile pour boîte de vitesses automatique équivalent*2 ou API GL-4*1
Huile de boîte de différentiel			
Avant :	R180A	1,3	Différentiel standard : API GL-5*1 Pignon de différentiel à glissement limité (LSD) : huile pour engrenages hypoïdes LSD (n° de pièce : KLD31-14002) ou équivalent*3
Arrière :	C200	1,3	
	H233B	2,8	
Liquide pour direction assistée		—	Type DEXRON™ IIE, DEXRON™ III ou équivalent
Liquide de frein et d'embrayage		—	Pour l'Europe : DOT 3 ou DOT 4 (US FMVSS n° 116)*5 Sauf pour l'Europe : DOT 3 (US FMVSS n° 116)
Graisse pour arbre primaire		—	NLGI n° 2 (à base de savon de lithium comprenant du bisulfure de molybdène)
Graisse à usage multiple		—	NLGI n° 2 (à base de savon de lithium)

*1 : Pour plus de détails, se reporter à "Indice de viscosité SAE".
*2 : Pour de plus amples informations sur les marques de liquide correctes, y compris l'ATF du type DEXRON™III/MERCON™, consulter un concessionnaire Nissan.
*3 : API GL-5, SAE 140 et 10% de la quantité de modificateur de friction de LSD (n° de pièce : 38469-C6000) sont des équivalents.
*4 : Pour l'Australie ou modèles avec climatiseur.
*5 : Ne jamais mélanger DOT 3 et DOT 4 (DOT 3 est rempli en atelier).

Simpo PDF Merge and Split Unregistered Version - http://www.simpopdf.com

Indice de viscosité SAE

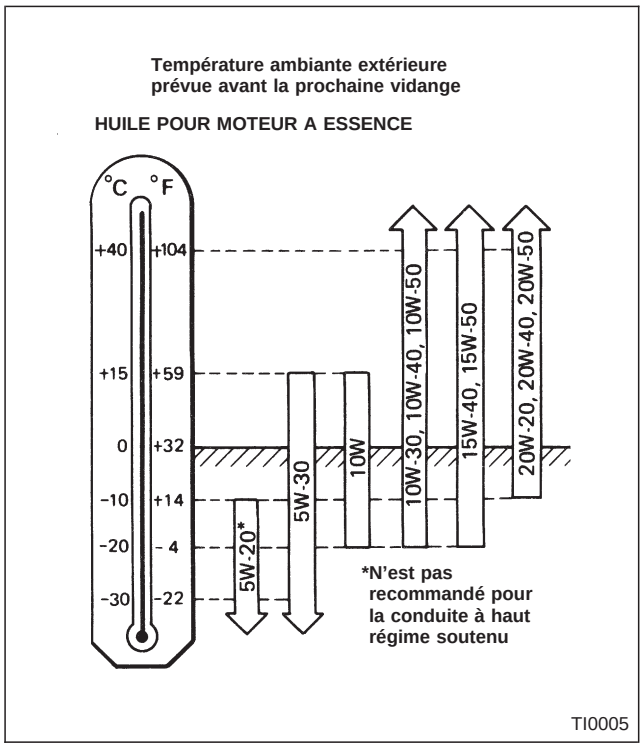

- **Pour les pays tempérés et froids : l'huile 10W-30 convient, avec une température ambiante supérieure à −20°C.**
- **Pour des régions très chaudes : les huiles 20W-20, 20W-40 et 20W-50 conviennent.**

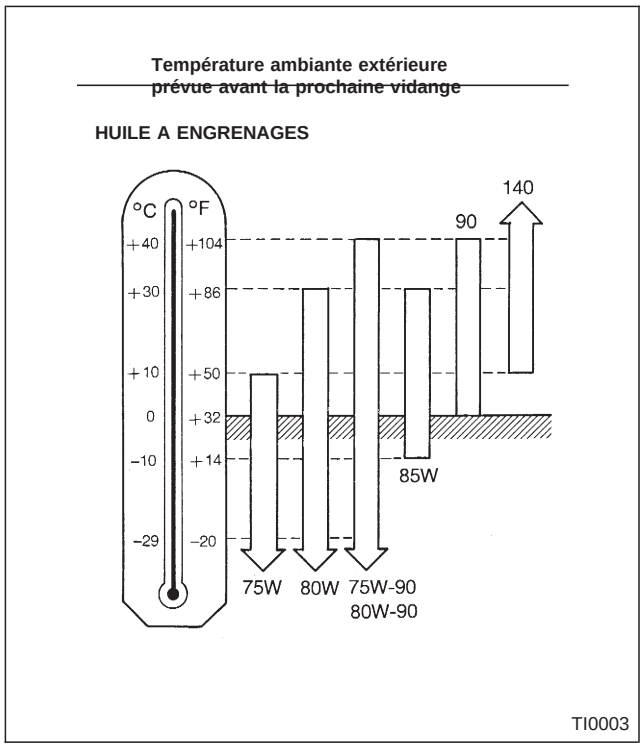

- **Pour des régions tempérées et froides : l'huile 75W-90 pour la boîte de transfert et l'huile 80W-90 pour le différentiel conviennent.**
- **Pour les pays très chauds : l'huile 90 convient à une température ambiante inférieure à 40°C.**
- **Pour tout type de région : l'huile 75W-90 est préférable pour la boîte de vitesse.**

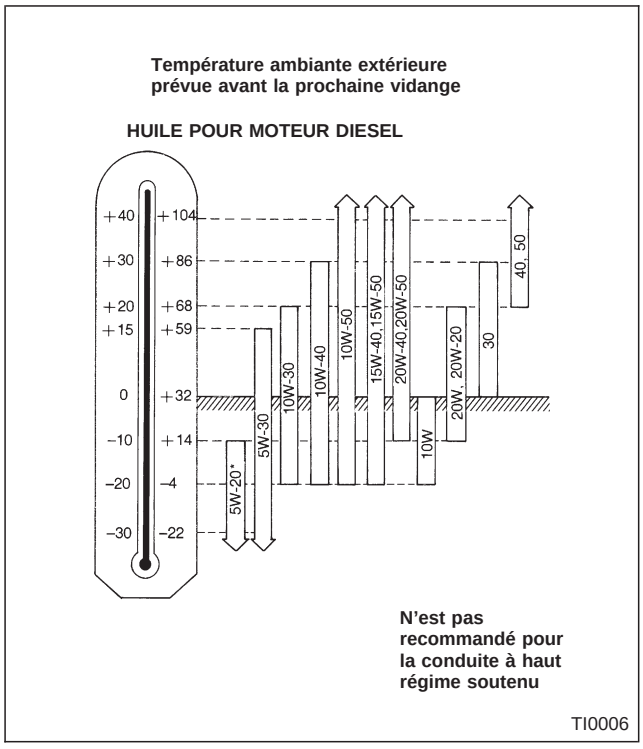

- **Pour les pays froids : l'huile 10W-30 est préférable.**
  Pour les modèles équipés d'un turbocompresseur, l'huile 5W-20 n'est pas recommandée et 5W-30 ne devrait être utilisée qu'en dessous de 0°.
- **Pour les pays tempérés et très chauds : les huiles 20W-40 et 20W-50 conviennent.**

Simpo PDF Merge and Split Unregistered Version - http://www.simpopdf.com

TD25Ti

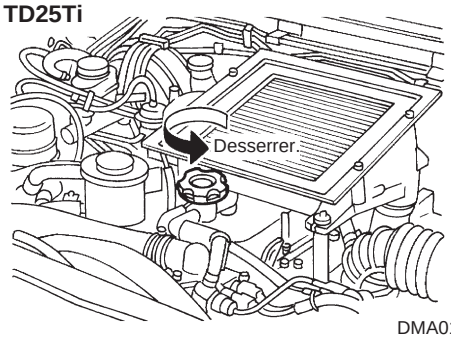

DMA018

Remplacement de l’huile moteur

AVERTISSEMENT :

- **Prendre garde de ne pas se brûler car l’huile moteur est très chaude.**
- **Les contacts prolongés et répétés avec les huiles moteur usagées peuvent provoquer des cancers de la peau ; éviter tout contact direct avec les huiles moteur usagées. En cas de contact avec la peau, laver soigneusement avec du savon ou un produit de nettoyage pour les mains aussi rapidement que possible.**

1. Réchauffer le moteur, et vérifier si les composants du moteur ne présentent pas de fuites d’huile.
2. Déposer le bouchon de vidange et le bouchon de remplissage d’huile et laisser l’huile se vidanger.
3. Vidanger l’huile et faire le plein d’huile moteur neuve.
   Catégorie d’huile : ACEA B3
   Viscosité :
   Voir ‘‘LIQUIDES ET LUBRIFIANTS CONSEILLES’’ à la section MA de l’édition originale du Manuel de Réparation.
   Contenance en huile de remplissage (environ) :
   Sans remplacement du filtre à huile
   TD25Ti 6,0 ℓ
   Avec remplacement du filtre à huile
   TD25Ti 6,7 ℓ

TD25Ti

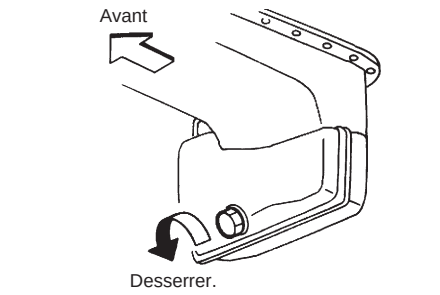

DMA019

ATTENTION :

- **Veiller à nettoyer le bouchon de vidange et le reposer avec une rondelle neuve.**
  Bouchon de vidange :
  : 54 - 59 N·m (5,5 - 6,0 kg-m)
- **La capacité de remplissage varie selon la température de l’huile et le temps de vidange. Utiliser ces valeurs en tant que références et veiller à contrôler à l’aide de la jauge lors du changement d’huile.**

TD25Ti

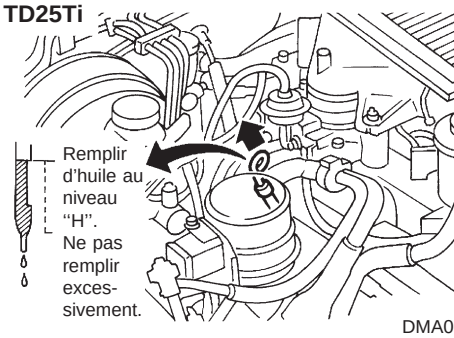

DMA020

4. Contrôler le niveau d’huile.
5. Démarrer le moteur. Vérifier s’il n’y a pas de fuite d’huile autour du bouchon de vidange et du filtre à huile.
6. Faire tourner le moteur pendant quelques minutes, puis couper le contact. Vérifier le niveau d’huile après 10 minutes.

Contenance en liquide de refroidissement (avec réservoir)
TD25Ti 10,6ℓ
Contenance du réservoir (pour niveau MAX.)
0,6ℓ

Simpo PDF Merge and Split Unregistered Version - http://www.simpopdf.com

Nettoyage et remplacement du filtre à air

TD25Ti

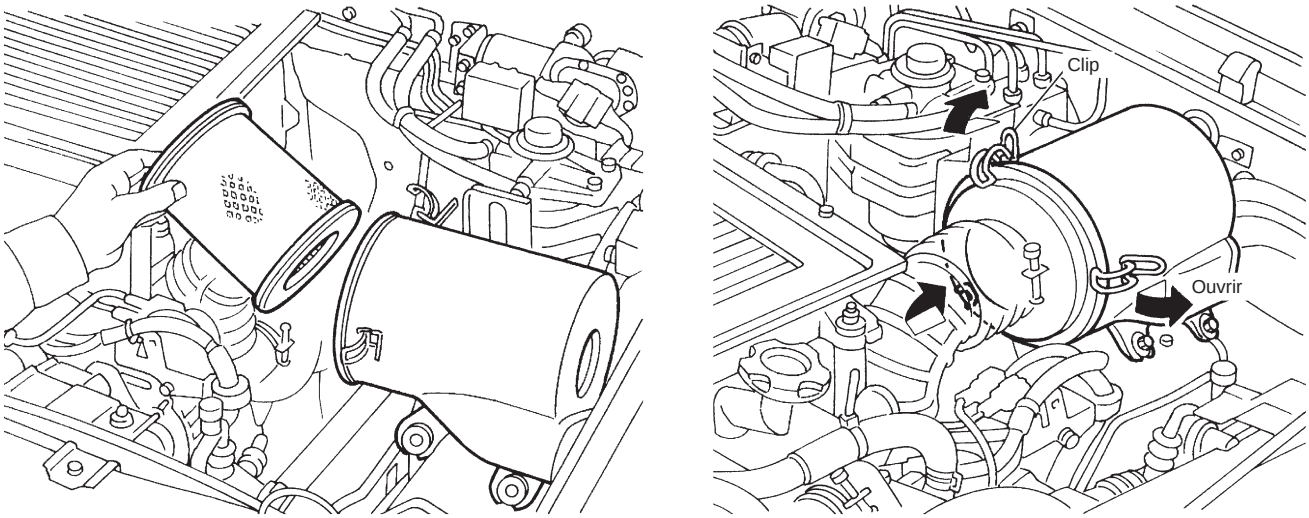

DMA021

FILTRE A PAPIER VISQUEUX

Le filtre à papier visqueux ne nécessite pas de nettoyage entre deux changements.

Simpo PDF Merge and Split Unregistered Version - http://www.simpopdf.com

<SUPPLEMENT-I>

BOITE DE VITESSES MANUELLE

SECTION MT

AVIS DE MODIFICATION :

Le moteur TD25Ti (avec FS5R30A) a été ajouté, et les chapitres DEPOSE ET REPOSE et CARACTERISTIQUES ET VALEURS DE REGLAGE (SDS) ont été modifiés.

TABLE DES MATIERES

FS5W71C et FS5R30A

Repose 1002
CARACTERISTIQUES ET VALEURS DE REGLAGE (SDS) 1003
Caractéristiques générales 1003

Simpo PDF Merge and Split Unregistered Version - http://www.simpopdf.com

FS5W71C

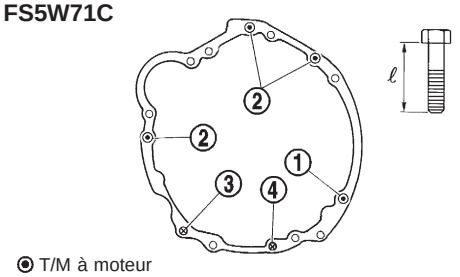

SMT305CA

FS5W71C

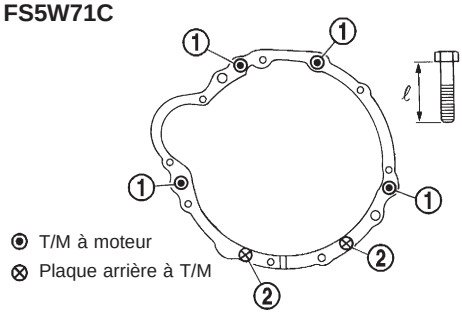

SMT204DA

FS5R30A

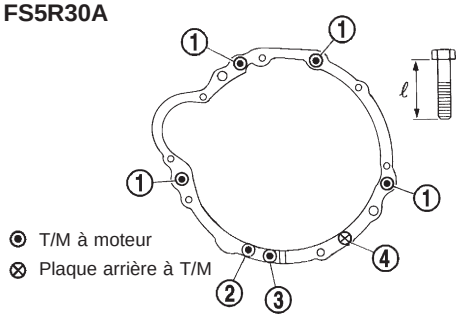

SMT156DA

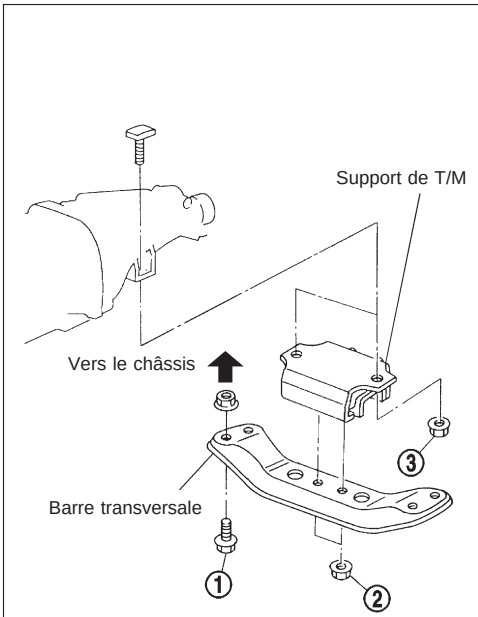

SMT192D

Repose

- Serrer le boulon fixant la boîte de vitesses.
- **Moteurs NA20S, Z24S et KA24E**

N° de boulon	Couple de serrage N·m (kg-m)	ℓ mm
①	39 - 49 (4,0 - 5,0)	65
②	39 - 49 (4,0 - 5,0)	58
③ *	16 - 22 (1,6 - 2,2)	25
④	16 - 22 (1,6 - 2,2)	16

* : Avec écrou

- **Moteurs TD25 et TD27**

N° de boulon	Couple de serrage N·m (kg-m)	ℓ mm
①	39 - 49 (4,0 - 5,0)	58
②	18 - 22 (1,8 - 2,2)	16

- **Moteurs TD25Ti et QD32**

N° de boulon	Couple de serrage N·m (kg-m)	ℓ mm
①	39 - 49 (4,0 - 5,0)	58
②	29 - 39 (3,0 - 4,0)	16
③ *	29 - 39 (3,0 - 4,0)	100
④	18 - 22 (1,8 - 2,2)	16
Gousset du moteur	29 - 39 (3,0 - 4,0)	35

* : Avec écrou

- Serrer les boulons avec le support de boîte de vitesses manuelle, la barre transversale et le châssis.

Unité : N·m (kg-m)

N° de boulon	2x2 et 4x4	Note
①	59 - 69 (6,0 - 7,0)	Barre transversale à châssis
②	41 - 52 (4,2 - 5,3)	Support de boîte manuelle à barre transversale
③	68 - 87 (6,9 - 8,9)	Boîte manuelle à support de boîte manuelle

Simpo PDF Merge and Split Unregistered Version - http://www.simopdf.com

Caractéristiques générales

Destination	Pays généraux	Australie et Europe	Moyen-Orient	Europe	Australie, Moyen-Orient et pays généraux	Moyen-Orient et pays généraux	Australie, Europe et pays généraux	Europe	Australie et pays généraux
Modèle concerné	2 roues motrices					4 roues motrices			
	NA20S	KA24E	Z24S	TD25	TD27	Z24S	KA24E	TD25Ti	QD32
Boîte de vitesses	FS5W71C							FS5R30A	
Nombre de vitesses	5								
Disposition des vitesses									
Type de synchronisation	Warner								
Rapport des vitesses									
1ère	4,220	3,592	3,985			3,592		3,580	
2nde	2,540	2,246	2,246			2,246		2,077	
3ème	1,641	1,415	1,415			1,415		1,360	
4ème	1,000	1,000	1,000			1,000		1,000	
Surmultipliée	0,821	0,821	0,821			0,821		0,811	
Marche arrière	3,657	3,657	3,657			3,657		3,636	
Nombre de dents									
Arbre secondaire									
Entraînement	21	21	21			21		22	
1ère	36	33	34			33		32	
2nde	30	28	28			28		30	
3ème	28	26	26			26		29	
Surmultipliée	21	21	21			21		24	
Marche arrière	36	36	36			36		30	
Arbre de renvoi									
Entraînement	32	32	32			32		32	
1ère	13	14	13			14		13	
2nde	18	19	19			19		21	
3ème	26	28	28			28		31	
Surmultipliée	39	39	39			39		43	
Marche arrière	15	15	15			15		12	
Pignon intermédiaire de marche arrière	21					21		22	
Contenance en huile ℓ	2,0					4,9		5,1	
Remarques	Synchro. de marche arrière Synchro. de type anneau de synchro. double de 1ère et 2nde (moteurs TD25 et TD27)							Synchro. de type anneau de synchro. double de 1ère et 2nde	

Simpo PDF Merge and Split Unregistered Version - http://www.simpopdf.com

<SUPPLEMENT-I>

ARBRE DE TRANSMISSION ET PORTE-DIFFERENTIEL

SECTION PD

AVIS DE MODIFICATION :
Des modèles équipés du moteur TD25Ti ont été nouvellement introduits.

TABLE DES MATIERES

CARACTERISTIQUES ET VALEURS DE REGLAGE (SDS) 1002
Arbre de transmission 1002
Entraînement d'essieu 1003

Simpo PDF Merge and Split Unregistered Version - http://www.simpopdf.com

Arbre de transmission

CARACTERISTIQUES GENERALES

Modèles 4x4

Emplacement		Avant	Arrière
Modèle concerné		TD25Ti	
Modèle d'arbre de transmission		2F71H	3S80B
Nombre de joints		2	3
Méthode d'accouplement avec la boîte de vitesses		Type à flasque	Type à manchon
Type de roulements de croisillon		Type solidaire (type démontable)	
Longueur d'arbre (entre croisillons) mm	1ère	565	377
	2nde	—	847
Diamètre extérieur de l'arbre mm	1ère	50,8	61,0
	2nde	—	65,0

INSPECTION ET REGLAGE

Arbre de transmission avant

Unité : mm

Modèle d'arbre de transmission	2F71H
	TD25Ti
Limite de jeu axial de croisillon	0,02
Limite de voile de l'arbre de transmission	0,6
Point de mesure A	137,5

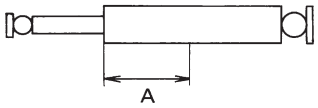

SPD996

Arbre de transmission arrière

Unité : mm

Modèle d'arbre de transmission	3S80B
Limite de jeu axial de croisillon	0,02
Limite de voile de l'arbre de transmission	0,6
Point de mesure	
A	162
B	172
C	192

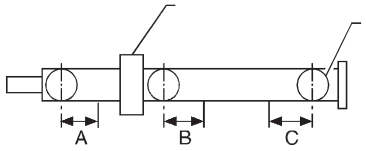

SPD418A

Roulement central

Tourillon

Modèles 71H

Epaisseur mm	Couleur d'identification	N° de pièce
1,99	Blanc	37146-01G00
2,02	Jaune	37147-01G00
2,05	Rouge	37148-01G00
2,08	Vert	37149-01G00
2,11	Bleu	37150-01G00
2,14	Marron clair	37151-01G00
2,17	Rose	37152-01G00
2,20	Sans peinture	37153-01G00

Modèles 80B

Epaisseur mm	Couleur d'identification	N° de pièce
1,99	Blanc	37146-C9400
2,02	Jaune	37147-C9400
2,05	Rouge	37148-C9400
2,08	Vert	37149-C9400
2,11	Bleu	37150-C9400
2,14	Marron clair	37151-C9400
2,17	Noir	37152-C9400
2,20	Sans peinture	37153-C9400

Simpo PDF Merge and Split Unregistered Version - http://www.simpopdf.com

Entraînement d'essieu

CARACTERISTIQUES GENERALES

Modèles 4x4

Modèle concerné		TD25Ti	
Pont avant		R180A	
		4 pignons	
Contenance en huile (environ)	ℓ	1,3	
Pont arrière		Standard	Option
		H233B	
		4 pignons	L. S. D.
Contenance en huile (environ)	ℓ	2,8	
Rapport de démultiplication		4,875	
Nombre de dents	Couronne	39	
	Pignon d'attaque	8	

Simpo PDF Merge and Split Unregistered Version - http://www.simpopdf.com

<SUPPLEMENT-I>

SYSTEME DE RETENUE

SECTION RS

TABLE DES MATIERES

PRECAUTION 1002
Système de retenue supplémentaire (SRS) ‘‘COUSSIN GONFLABLE’’ (modèles à 4 roues motrices) 1002
Système de retenue supplémentaire (SRS) ‘‘COUSSIN GONFLABLE’’ (modèles à 2 roues motrices) 1002

DIAGNOSTICS DES DEFAUTS - Système de retenue supplémentaire (SRS) - Modèles à 4 roues motrices..... 1003
Schéma de câblage - SRS -..... 1003
Diagnostics de défaut : le SRS ne fonctionne pas en mode de Diagnostic en utilisant le contact de porte 1005

Lors de la lecture des schémas de câblage :
- **Lire dans la section GI, ‘‘COMMENT LIRE LES SCHEMAS DE CABLAGE’’**
- **Voir la section EL, ‘‘DISTRIBUTION DE L’ALIMENTATION ELECTRIQUE’’ pour connaître les circuits de distribution de l’alimentation électrique.**

Se reporter aux chapitres ‘‘COMMENT LIRE LES ORGANIGRAMMES DANS LES DIAGNOSTICS DE DEFAUTS’’ et ‘‘COMMENT ACCOMPLIR UN DIAGNOSTIC EFFICACE POUR UN INCIDENT ELECTRIQUE’’ pour effectuer les diagnostics des défauts.

Simpo PDF Merge and Split Unregistered Version - http://www.simpopdf.com

Système de retenue supplémentaire (SRS) ‘‘COUSSIN GONFLABLE’’ (modèles à 4 roues motrices)

Utilisé avec une ceinture de sécurité, le coussin gonflable du système de retenue supplémentaire contribue à réduire les risques et la gravité des blessures subies par le conducteur en cas de collision frontale. Le système de retenue supplémentaire se compose d’un module de coussin gonflable (air bag) (situé dans le moyeu du volant), d’un boîtier de capteurs de diagnostic, d’un témoin lumineux, d’un faisceau de câblage et d’un câble spiralé.

AVERTISSEMENT :

- **Pour ne pas affecter le fonctionnement du SRS, ce qui augmenterait les risques de blessures graves ou mortelles en cas de collision entraînant le déploiement du coussin gonflable, toutes les opérations d’entretien doivent être effectuées par un concessionnaire NISSAN agréé.**
- **Un entretien incorrect, y compris une mauvaise dépose ou repose du SRS, pourra entraîner des risques de blessures dues au déploiement accidentel du système.**
- **Ne pas utiliser d’équipement d’essai électrique sur les circuits connexes au SRS, sauf instructions données dans ce Manuel de Réparation. Les faisceaux de câblage du SRS sont recouverts d’une gaine d’isolation de couleur jaune soit juste devant les connecteurs de faisceau soit sur le faisceau en entier pour faciliter leur identification.**

Système de retenue supplémentaire (SRS) ‘‘COUSSIN GONFLABLE’’ (modèles à 2 roues motrices)

Utilisé avec une ceinture de sécurité, le coussin gonflable du système de retenue supplémentaire contribue à réduire les risques et la gravité des blessures subies par le conducteur en cas de collision frontale. Le système de retenue supplémentaire se compose d’un module de coussin gonflable (air bag) (situé dans le moyeu du volant), d’un boîtier de capteurs de diagnostic, d’un témoin lumineux, d’un faisceau de câblage et d’un câble spiralé.

AVERTISSEMENT :

- **Pour ne pas affecter le fonctionnement du SRS, ce qui augmenterait les risques de blessures graves ou mortelles en cas de collision entraînant le déploiement du coussin gonflable, toutes les opérations d’entretien doivent être effectuées par un concessionnaire NISSAN agréé.**
- **Un entretien incorrect, y compris une mauvaise dépose ou repose du SRS, pourra entraîner des risques de blessures dues au déploiement accidentel du système.**
- **Ne pas utiliser d’équipement d’essai électrique sur les circuits connexes au SRS, sauf instructions données dans ce Manuel de Réparation.**

Simpo PDF Merge and Split Unregistered Version - http://www.simpopdf.com

Schéma de câblage — SRS —

RS-SRS-02

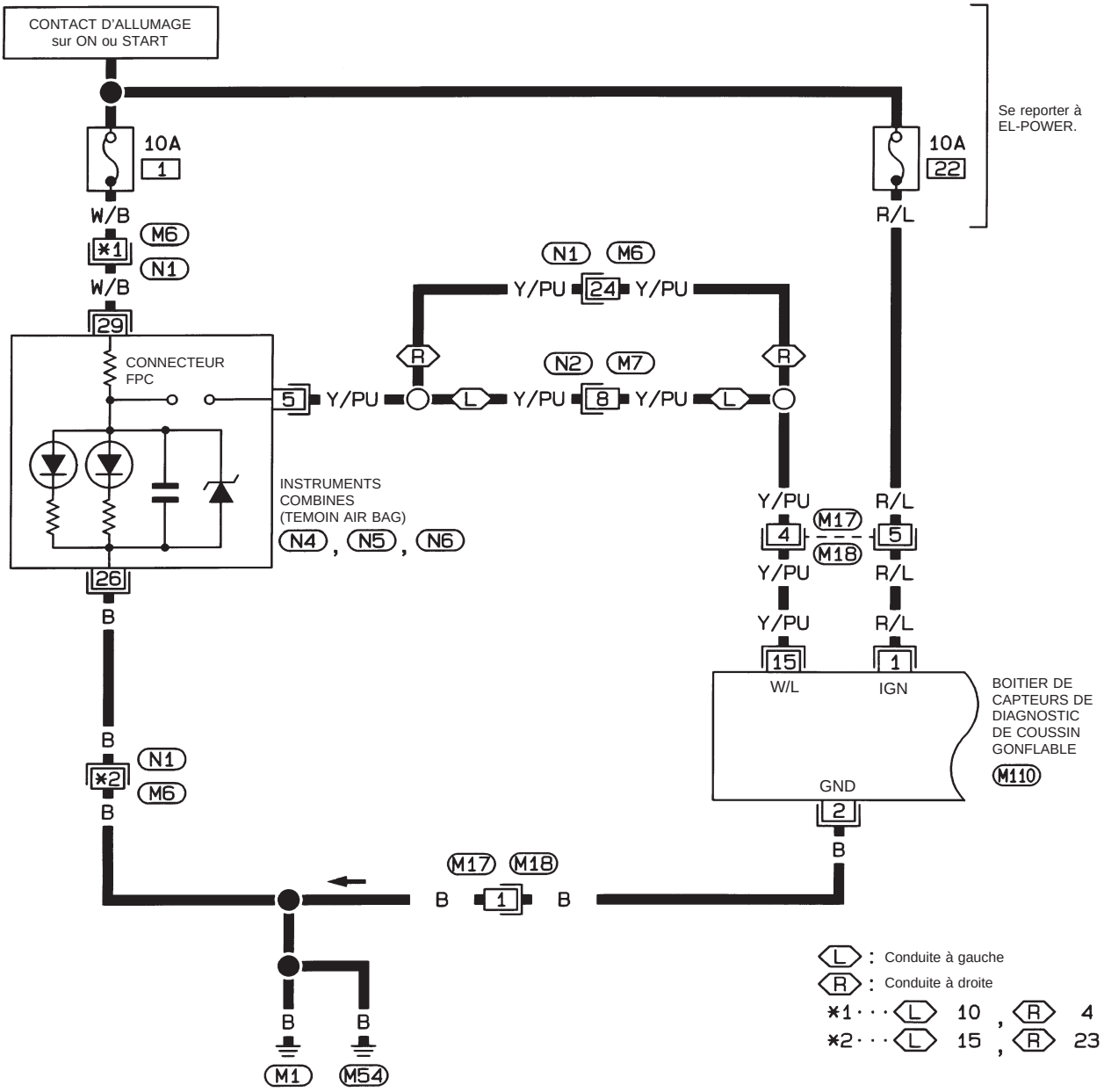

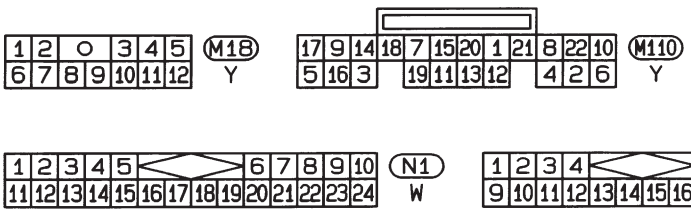

HRS038

Simpo PDF Merge and Split Unregistered Version - http://www.simpopdf.com

Schéma de câblage — SRS — (Suite)

RS-SRS-03

L : Conduite à gauche
R : Conduite à droite
EU : Pour l'Europe
NE : Sauf pour l'Europe
*3 ··· L R/B , R G/R

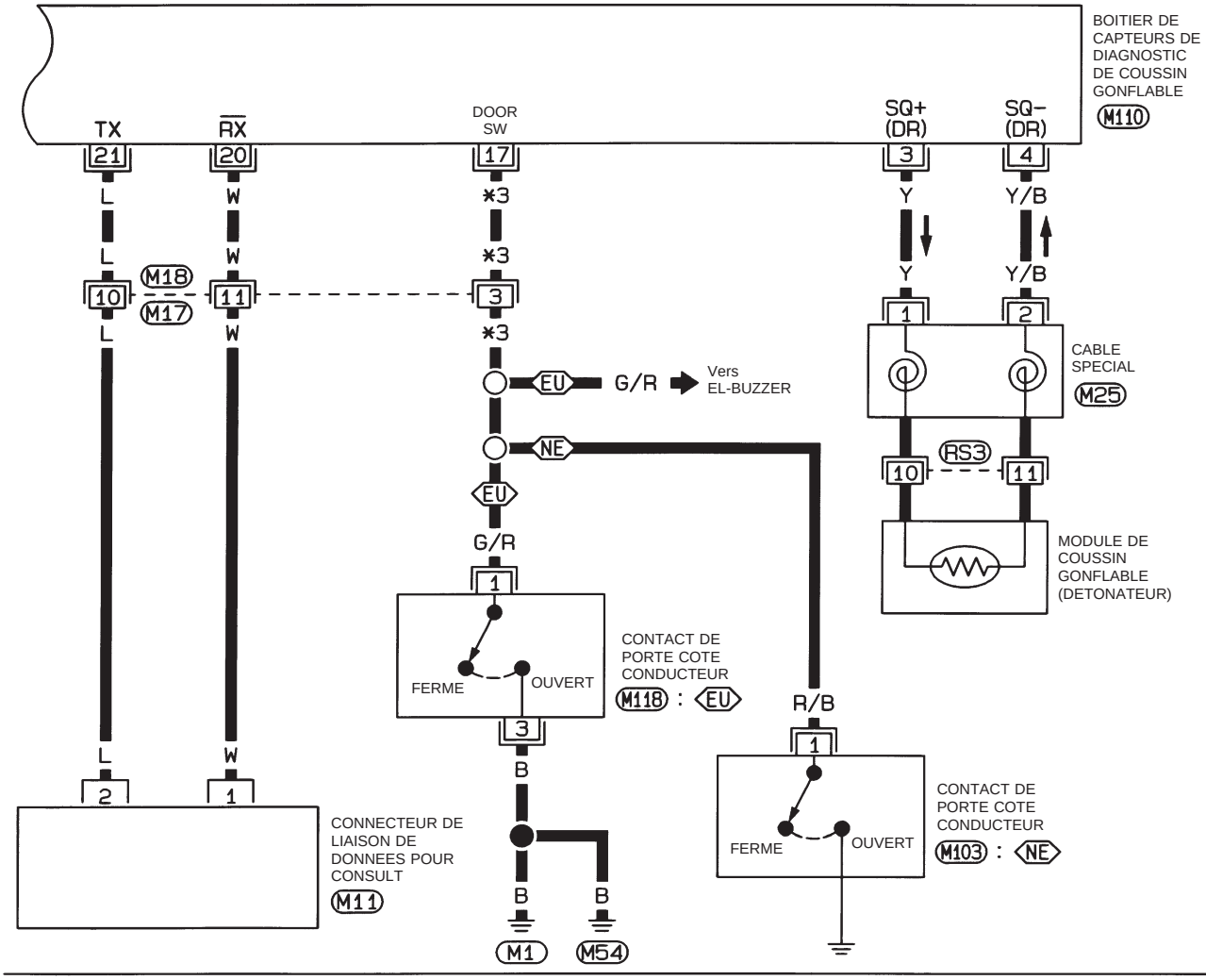

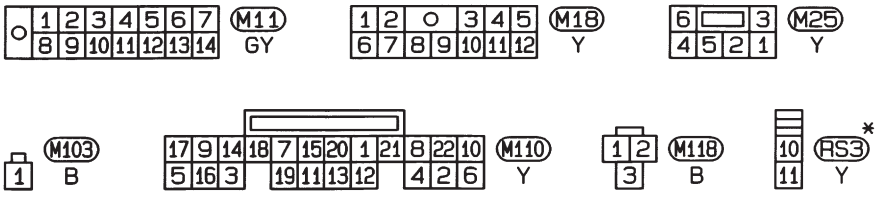

* : Ce connecteur n'est pas indiqué dans "DISPOSITION DES FAISCEAUX", à la section EL.

HRS039

Simpo PDF Merge and Split Unregistered Version - http://www.simpopdf.com

A

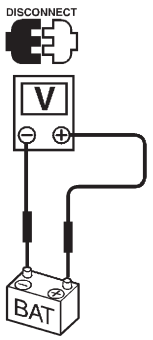

SRS263

B

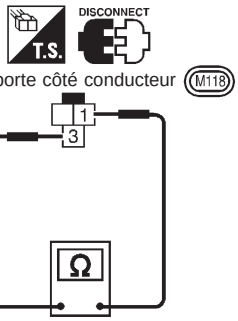

SRS470-A

C

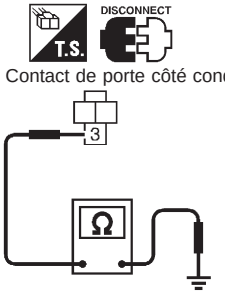

SRS265-G

Diagnostics de défaut : le SRS ne fonctionne pas en mode de Diagnostic en utilisant le contact de porte

PROCEDURE DE DIAGNOSTIC 11 (pour l'Europe)

A

Débrancher les deux câbles de la batterie et contrôler la tension de cette dernière à l'aide du multimètre.
- Est-ce que la tension de la batterie est de plus de 9V ?

Non → Charger la batterie.

Oui ↓

B

Déposer le contact de porte côté conducteur et vérifier la continuité entre les bornes ① et ③ du connecteur de contact de porte côté conducteur dans les conditions suivantes.

Condition	Il y a continuité
Le contact de porte est enfoncé (la porte est fermée).	NON
Le contact de porte est déclenché (la porte est ouverte).	OUI

Non → Remplacer le contact de porte côté conducteur.

Oui ↓

C

Vérifier la continuité entre la borne ③ du connecteur du contact de porte côté conducteur et la masse de carrosserie.
- Y a-t-il continuité ?

Non → Remplacer ou réparer le faisceau.

Oui ↓

Remplacer le boîtier de capteurs de diagnostic.

↓

Aller à ''Vérification du fonctionnement du SRS''.

Simpo PDF Merge and Split Unregistered Version - http://www.simpopdf.com

<SUPPLEMENT-I>

DIRECTION

SECTION ST

AVIS DE MODIFICATION :
Des modèles équipés du moteur TD25Ti ont été récemment ajoutés.

TABLE DES MATIERES

ENTRETIEN SUR LE VEHICULE 1002
Contrôle du système hydraulique (pour direction assistée) 1002
VOLANT ET COLONNE DE DIRECTION 1003
Démontage et remontage 1003
Inspection 1004
CARACTERISTIQUES ET VALEURS DE REGLAGE (SDS) 1005
Inspection et réglage 1005

Simpo PDF Merge and Split Unregistered Version - http://www.simpopdf.com

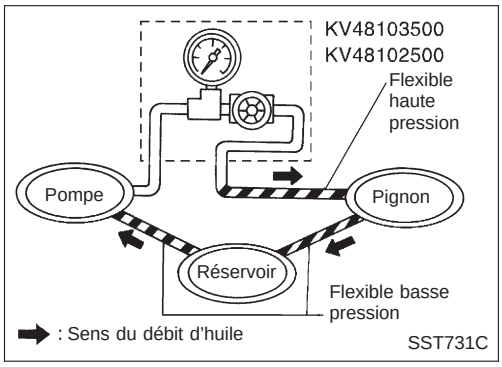

Contrôle du système hydraulique (pour direction assistée)

Vérifier la tension de la courroie d'entraînement, la poulie motrice ainsi que la pression de gonflage des pneus, avant de commencer.

1. Disposer l'outil spécial. Ouvrir la soupape de coupure. Purger l'air hors du circuit. Se reporter à ''Purge du système hydraulique''.
2. Faire tourner le moteur au ralenti ou à 1 000 tr/mn.

- **S'assurer que la température du liquide contenu dans le réservoir atteint environ 60 à 80°.**

AVERTISSEMENT :

Réchauffer le moteur alors que la soupape de coupure est entièrement ouverte. Si le moteur est démarré avec la soupape de coupure fermée, la pression de liquide dans la pompe de direction assistée augmentera à son maximum. Ceci fera augmenter la température du liquide de façon anormale.

3. Vérifier la pression alors que le volant est tourné à bout de course vers la gauche ou vers la droite avec le moteur à un ralenti de 1 000 tr/mn.

ATTENTION :

Ne pas maintenir le volant de direction à bout de course pendant plus de 15 secondes.

Pression maximum de la pompe à huile :
Moteur TD25Ti 8 140 - 8 728 kPa (81,4 - 87,3 bar, 83 - 89 kg/cm^2) au ralenti

4. Si la pression de direction assistée est en dessous de la pression standard, fermer lentement la soupape de coupure et vérifier la pression.

ATTENTION :

Ne pas laisser la soupape de coupure fermée pendant plus de 15 secondes.

- Lorsque la pression atteint son maximum, le boîtier est endommagé. Contrôler le mécanisme de direction assistée. Se reporter à ''BOITIER DE DIRECTION ASSISTEE'' (modèle : PB59K).
- Si la pression reste en dessous de la pression standard, la pompe est endommagée. Contrôler la pompe de direction assistée. Se reporter à ''POMPE A HUILE DE DIRECTION ASSISTEE''.

5. Si la pression de direction assistée est supérieure à la pression standard, c'est que la soupape de commande de débit de la pompe de direction assistée est endommagée. Contrôler la pompe de direction assistée. Se reporter à ''POMPE A HUILE DE DIRECTION ASSISTEE''.
6. Après la vérification du système hydraulique, déposer l'outil spécial et faire l'appoint de liquide selon les besoins. Puis effectuer une purge d'air complète du circuit. Se reporter à ''Purge du système hydraulique''.

Simpo PDF Merge and Split Unregistered Version - http://www.simpopdf.com

Démontage et remontage

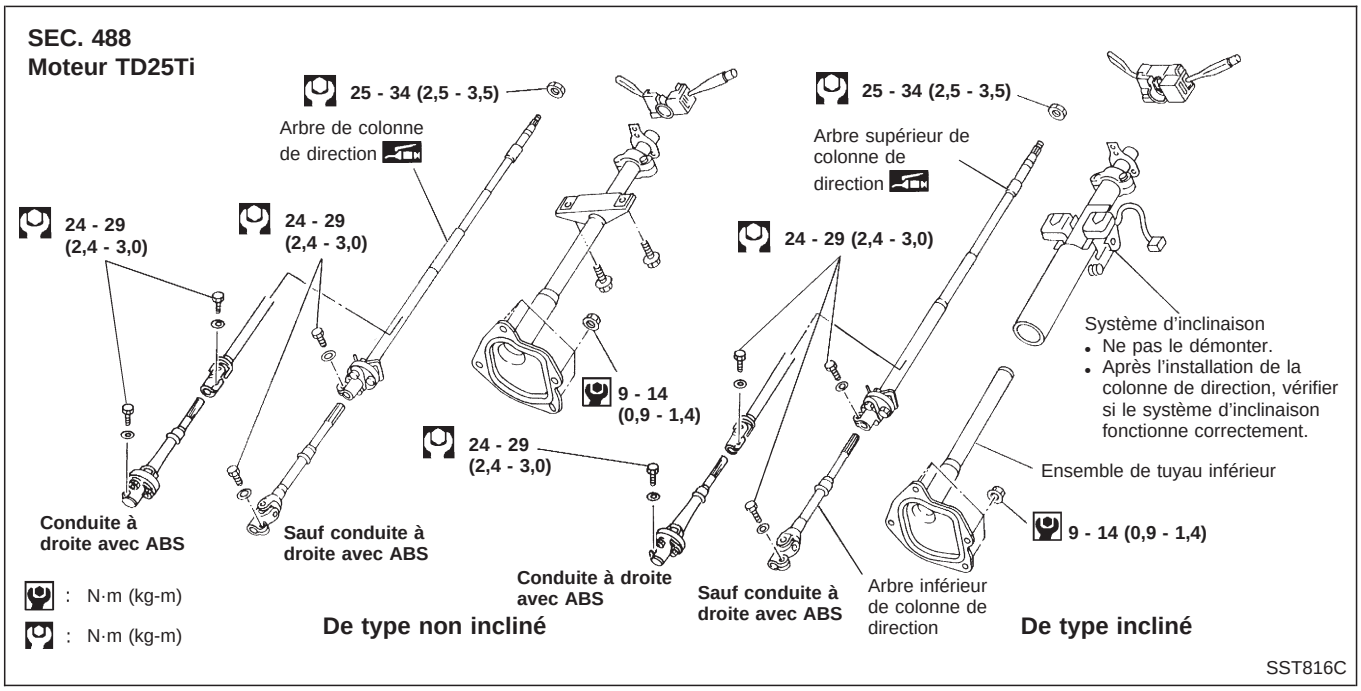

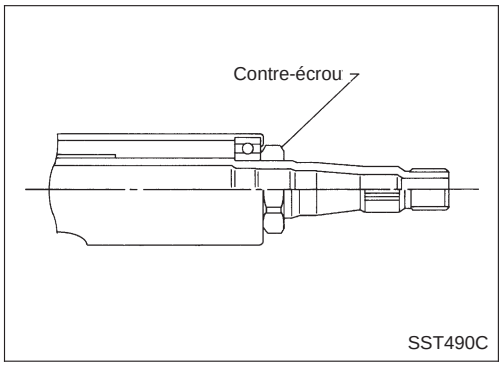

- Lors du montage et du démontage, déverrouiller l'antivol de direction à l'aide de sa clé.
- Déposer la commande combinée.
- Monter le contre-écrou sur l'arbre de colonne de direction et serrer le boulon conformément au couple de serrage spécifié.

Contre-écrou :
: 25 - 34 N·m (2,5 - 3,5 kg-m)

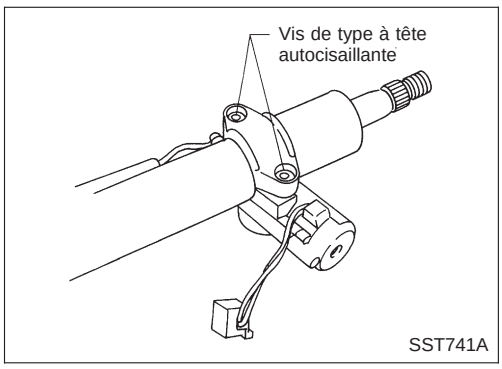

- Verrouillage de direction

a. Briser les vis à tête autocisaillante à l'aide d'une perceuse ou d'un outil approprié quelconque.

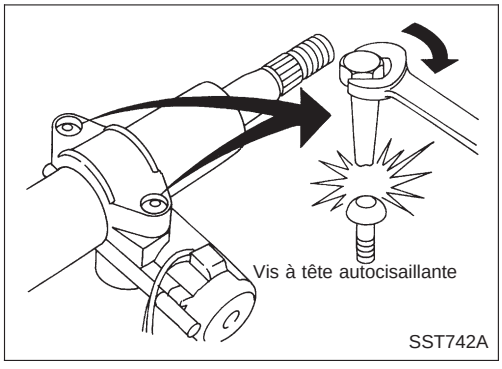

b. Reposer des vis à tête autocisaillante, puis les serrer jusqu'à rupture de la tête.

Simpo PDF Merge and Split Unregistered Version - http://www.simpopdf.com

Démontage et remontage (Suite)

Système d'inclinaison

Après avoir remonté la colonne de direction, vérifier le fonctionnement du mécanisme d'inclinaison.

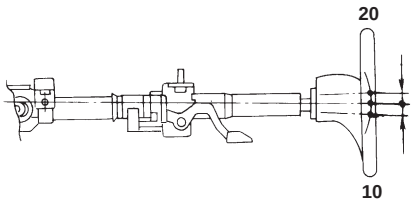

Unité : mm

SST582BB

Conduite à droite avec ABS
De type non incliné

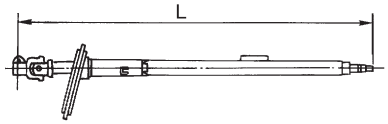

De type incliné

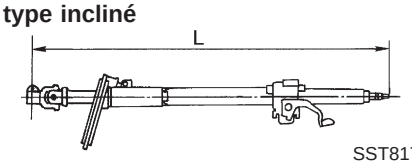

SST817C

Sauf conduite à droite avec ABS
De type non incliné

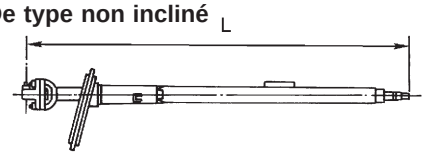

De type incliné

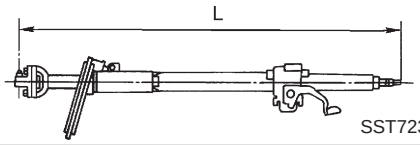

SST723CA

Inspection

- Si le volant ne tourne pas en douceur, vérifier la colonne de direction comme indiqué ci-après et remplacer les pièces endommagées.

a. Vérifier si les roulements de la colonne ne sont pas endommagés ou usés de manière inégale. Lubrifier avec de la graisse à usages multiples recommandée ou remplacer la colonne de direction comme un ensemble, si nécessaire.

b. Vérifier si la jupe de colonne de direction n'est ni déformée ni brisée. Remplacer si nécessaire.

- Lorsque le véhicule a subi une légère collision, vérifier la dimension ''L''. Si la valeur trouvée n'est pas dans les limites spécifiées, remplacer la colonne de direction comme un ensemble.

Longueur de la colonne ''L'' :
Conduite à droite avec ABS
895,0 - 896,6 mm
Sauf conduite à droite avec ABS
863,1 - 864,7 mm

Simpo PDF Merge and Split Unregistered Version - http://www.simpopdf.com

Inspection et réglage

COLONNE DE DIRECTION

Moteur TD25Ti

Unité : mm

	Dimension "L"
Conduite à droite avec ABS	895,0 - 896,6
Sauf conduite à droite avec ABS	863,1 - 864,7

Sauf conduite à droite avec ABS
De type non incliné

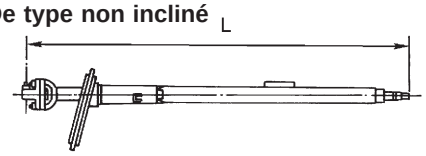

De type incliné

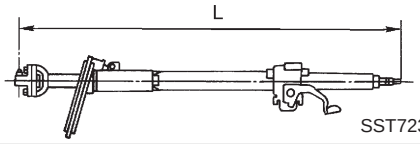

SST723CA

Conduite à droite avec ABS
De type non incliné

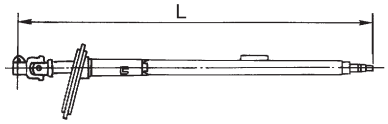

De type incliné

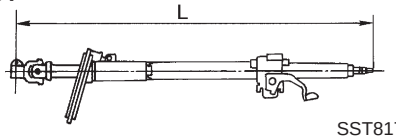

SST817C

SYSTEME DE DIRECTION ASSISTEE (modèle : PB59K)

Force de rotation du volant (à 360° depuis la position neutre à la circonférence du volant) N (Kg)	39 (4) ou moins
Pression de la pompe à huile kPa (bar, kg/cm^2)	Moteur TD25Ti 8 140 - 8 728 (81,4 - 87,3, 83 - 89) au ralenti
Contenance en liquide mℓ	Environ 1 000 à 1 100
Température normale de fonctionnement °C	60 - 80
Couple de rotation du boîtier de direction N·m(kg-cm)	
Position à 360° de la marche en ligne droite	0,15 - 0,78 (1,5 - 8,0)
Position de marche en ligne droite (par rapport à une rotation du volant de 360°)	0,2 - 0,5 (2 - 5) plus élevée
Couple de rotation maximum	0,44 - 1,18 (4,5 - 12)
Battement à l'extrémité supérieure du levier de commande de direction (dans la position de marche en ligne droite) mm	0 - 0,1
Jeu axial (à l'extrémité de l'arbre de secteur en position neutre) mm	0,1 ou moins

Simpo PDF Merge and Split Unregistered Version - http://www.simpopdf.com

<SUPPLEMENT-II>

SYSTEME DE FREINAGE

SECTION BR

AVIS DE MODIFICATION :

- Les schémas de câblage ont été modifiés.
- Les caractéristiques et valeurs de réglage (SDS) ont été modifiées.

TABLE DES MATIERES

DIAGNOSTICS DES DEFAUTS 2002
Disposition des composants et des connecteurs de faisceaux 2002
Schéma de circuit/Modèles avec 2 roues motrices 2003
Schéma de câblage - ABS -/Modèles avec conduite à gauche, 2 roues motrices 2004
Schéma de câblage - ABS -/Modèles avec conduite à droite, 2 roues motrices 2007
Schéma de circuit/4 roues motrices 2010
Schéma de câblage - ABS -/Modèles avec conduite à gauche, 4 roues motrices 2011
Schéma de câblage - ABS -/Modèles avec conduite à droite, 4 roues motrices 2015
DIAGNOSTICS DES DEFAUTS DES ELEMENTS DE L'AUTODIAGNOSTIC 2019
Procédure de diagnostic 1 (capteur de roue ou rotor) 2019
Procédure de diagnostic 2 (électrovanne d'actionneur d'ABS et relais d'électrovanne) ... 2021
Procédure de diagnostic 3 (relais de moteur ou moteur) 2023
Procédure de diagnostic 4 (basse tension) 2025
Procédure de diagnostic 5 (capteur G) 2027
Procédure de diagnostic 6 (boîtier de contrôle) 2028
DIAGNOSTICS DES DEFAUTS DES SYMPTOMES 2029
Procédure de diagnostic 12 (le témoin ne s'allume pas quand le contact d'allumage est sur ON.) 2029
Procédure de diagnostic 13 (le témoin reste allumé lorsque le contact d'allumage est sur ON.) 2031
CARACTERISTIQUES ET VALEURS DE REGLAGE (SDS) 2032
Caractéristiques générales 2032

Simpo PDF Merge and Split Unregistered Version - http://www.simpopdf.com

Disposition des composants et des connecteurs de faisceaux

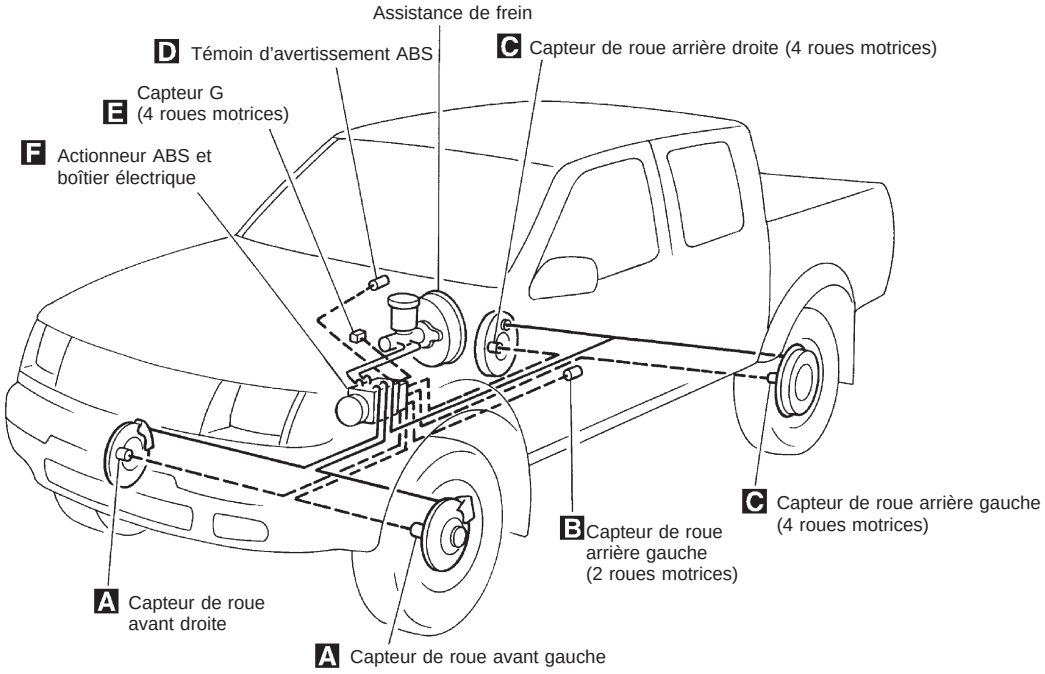

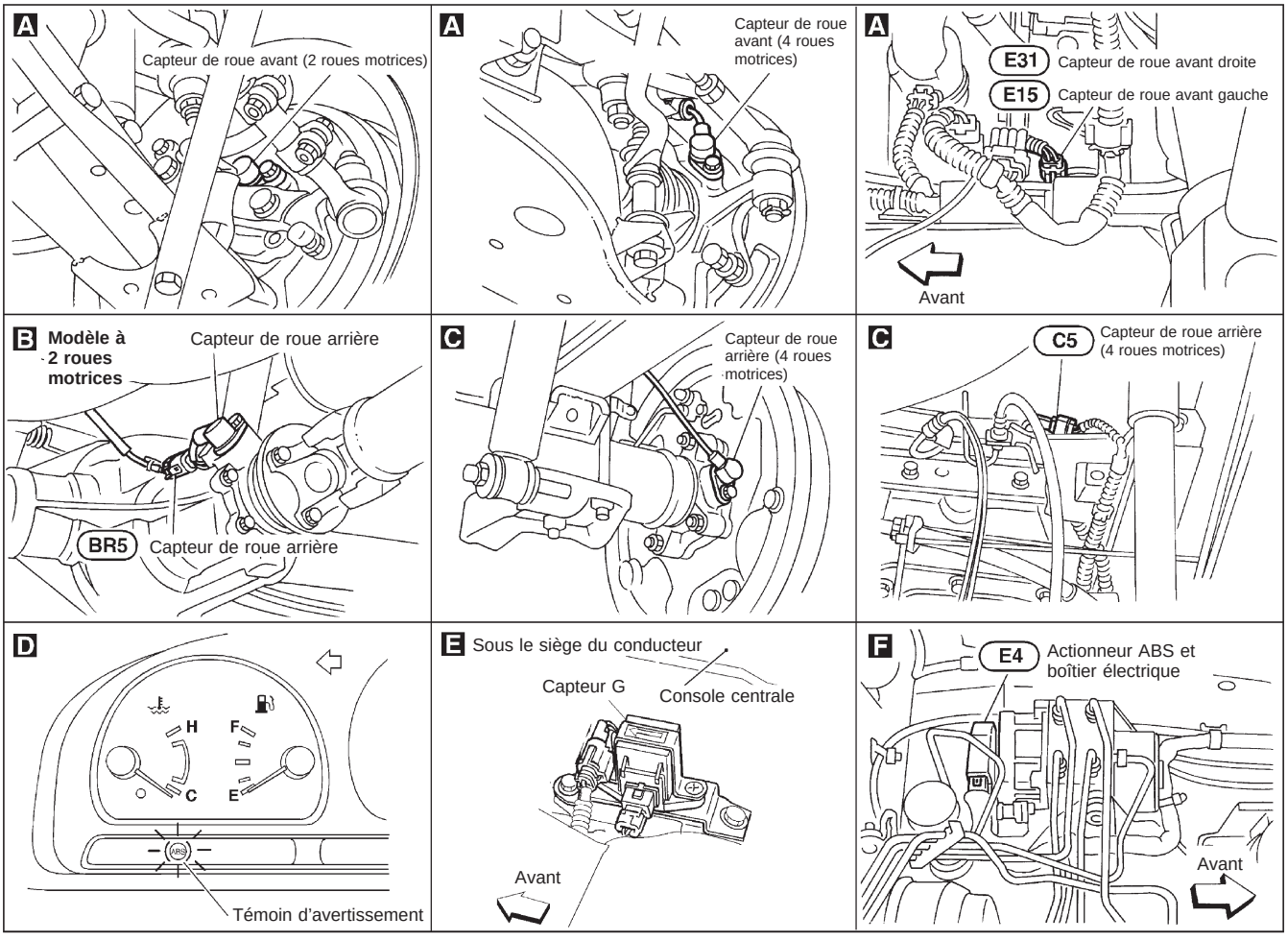

SBR076EA

Simpo PDF Merge and Split Unregistered Version - http://www.simpopdf.com

Schéma de circuit/Modèles avec 2 roues motrices

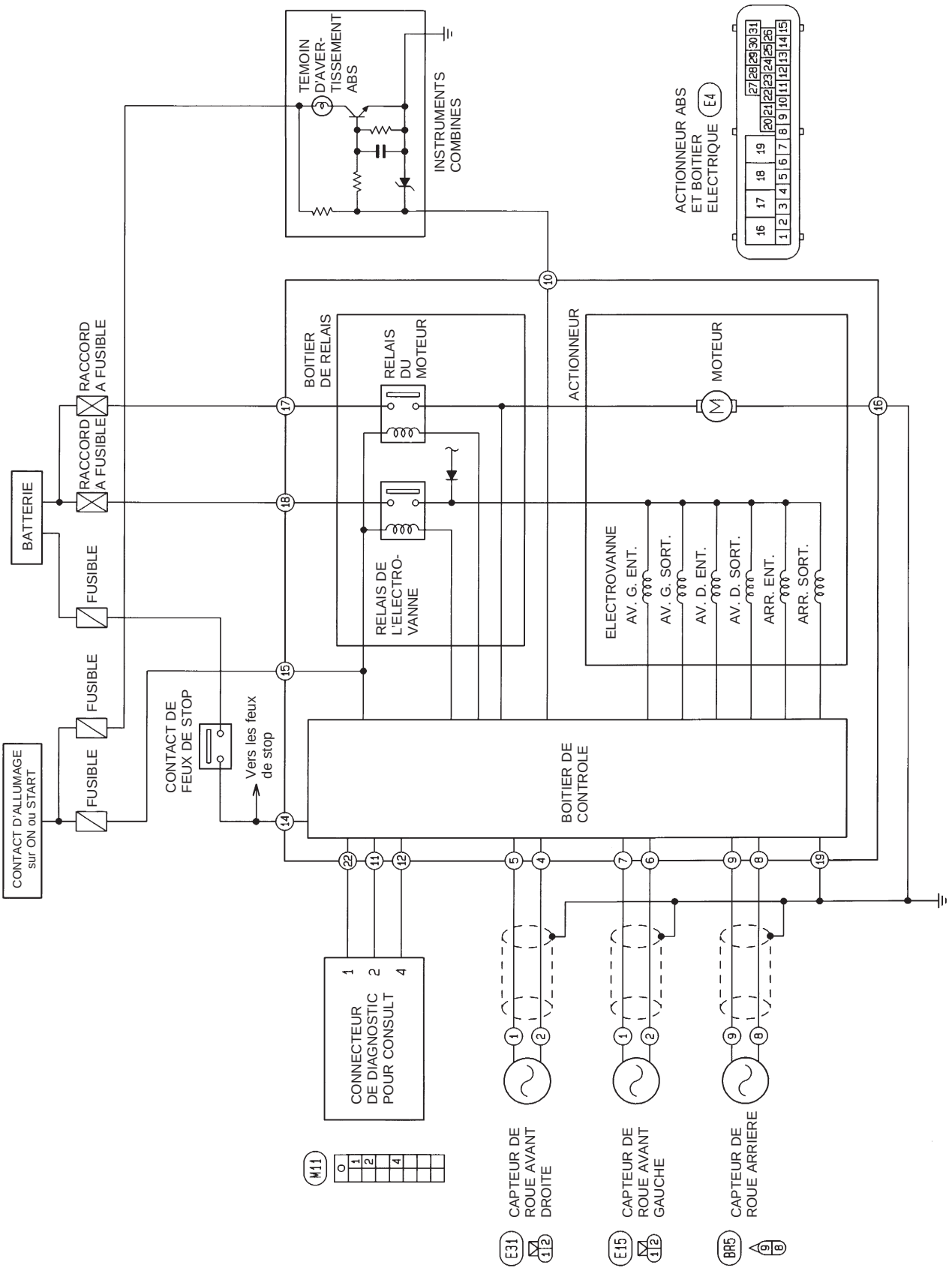

HBR097

Simpo PDF Merge and Split Unregistered Version - http://www.simpopdf.com

Schéma de câblage — ABS —/Modèles avec conduite à gauche, 2 roues motrices

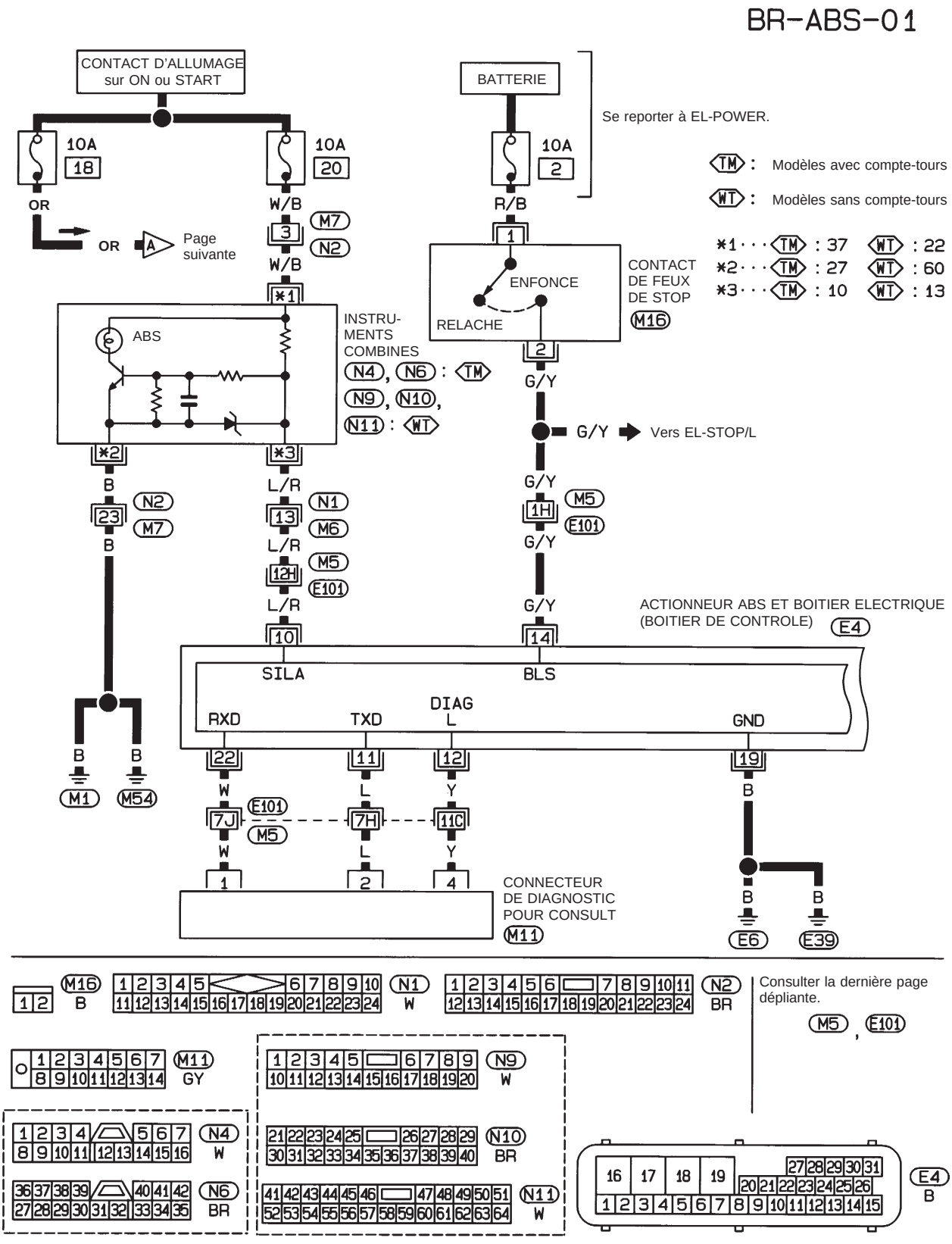

HBR087

Simpo PDF Merge and Split Unregistered Version - http://www.simpopdf.com

Schéma de câblage — ABS —/Modèles avec conduite à gauche, 2 roues motrices (suite)

BR-ABS-02

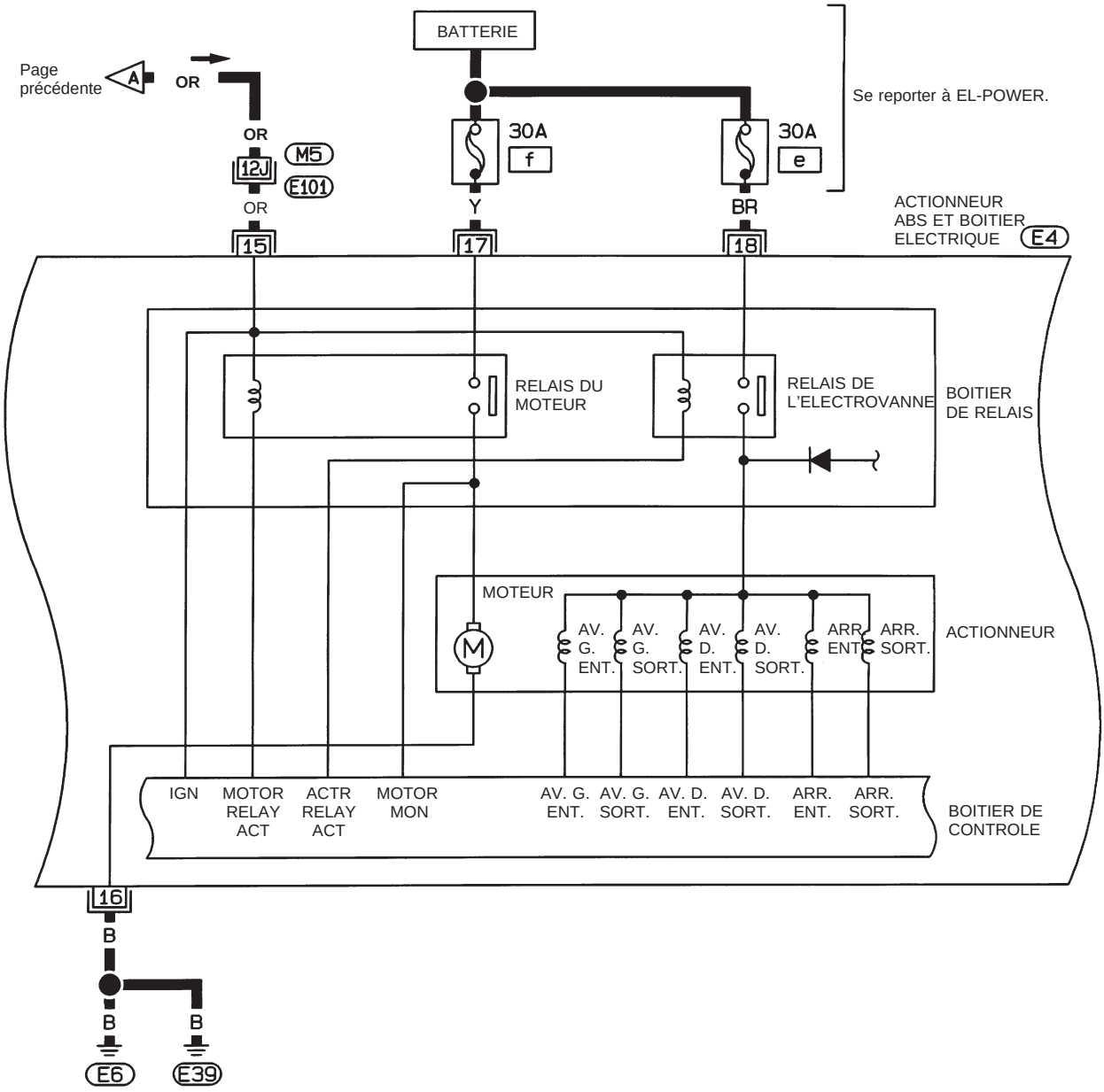

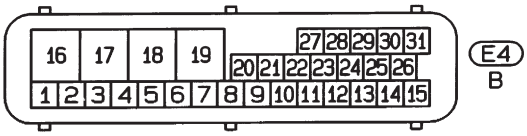

Consulter la dernière page dépliante.

M5, E101

HBR069

Simpo PDF Merge and Split Unregistered Version - http://www.simpopdf.com

Schéma de câblage — ABS —/Modèles avec conduite à gauche, 2 roues motrices (suite)

BR-ABS-03

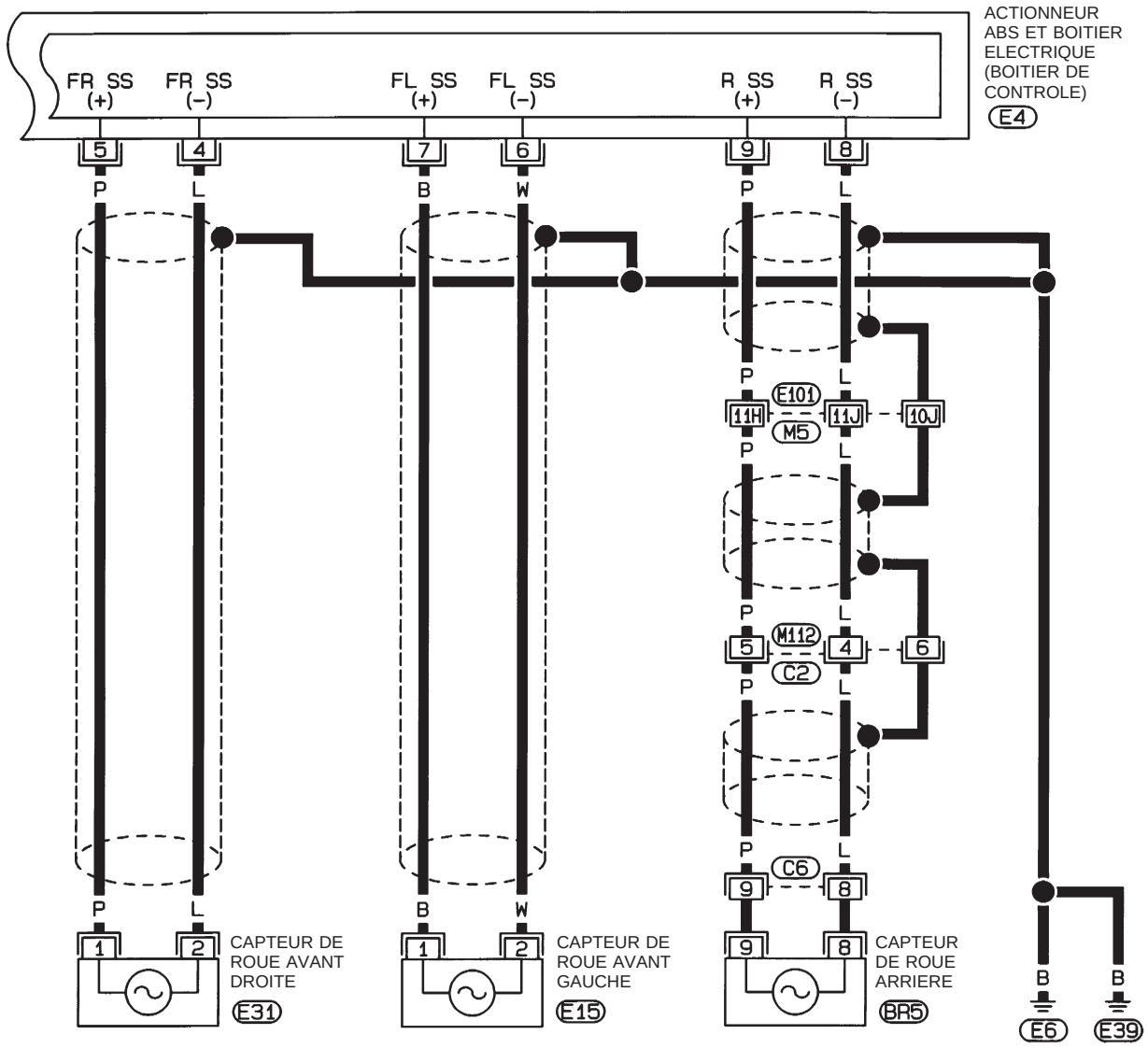

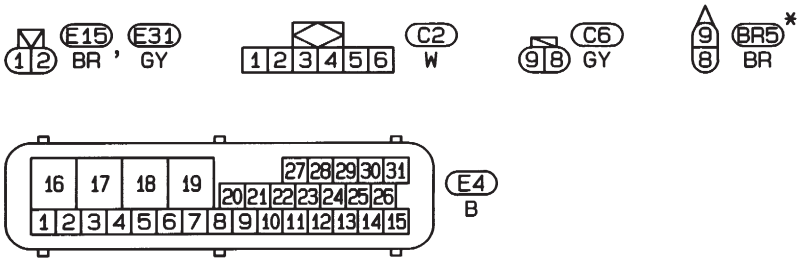

Consulter la dernière page dépliante.

M5 , E101

* : Ce connecteur n'est pas indiqué dans "DISPOSITION DES FAISCEAUX" de la section EL.

HBR098

Simpo PDF Merge and Split Unregistered Version - http://www.simpopdf.com

Schéma de câblage — ABS —/Modèles avec conduite à droite, 2 roues motrices

BR-ABS-04

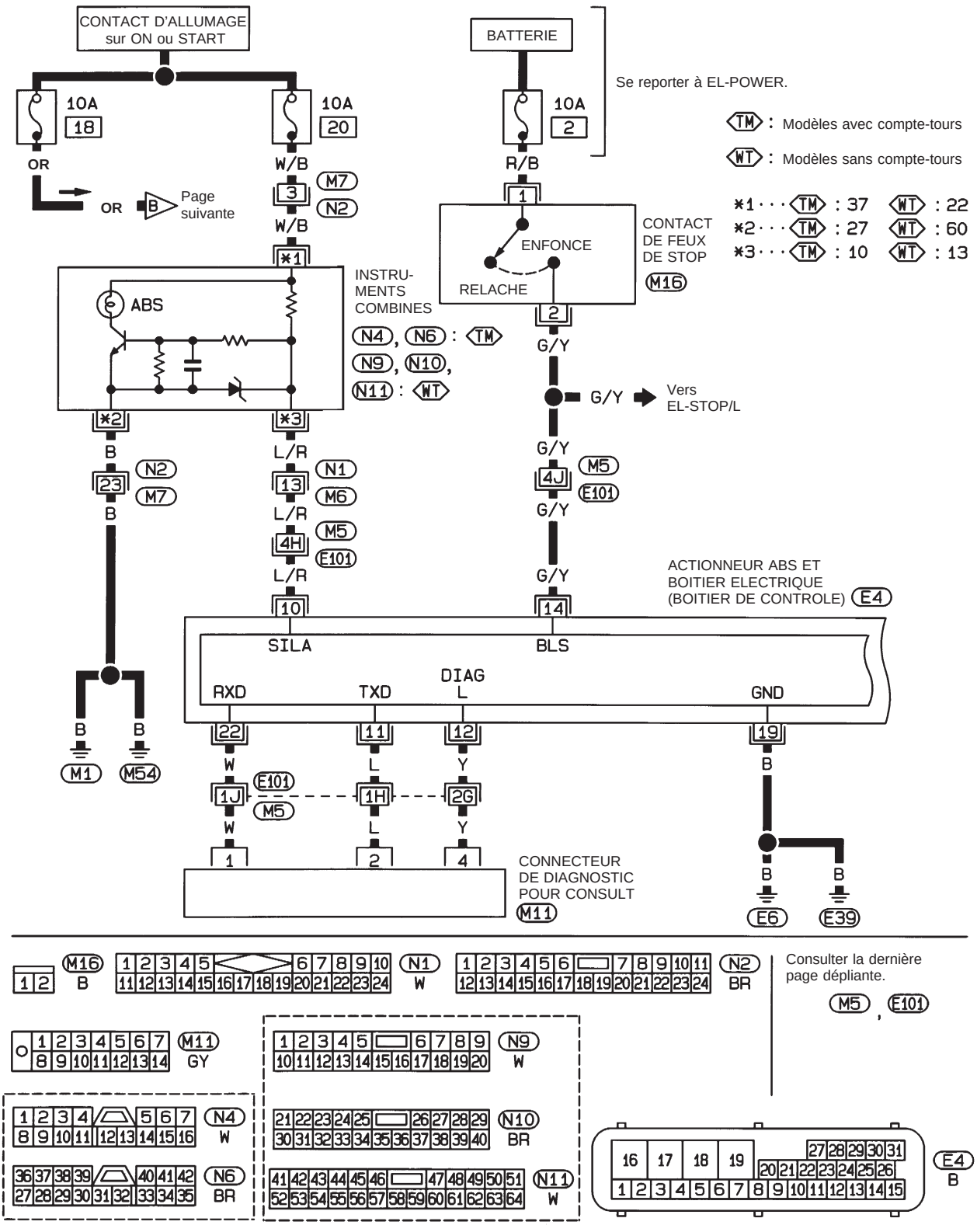

HBR088

Simpo PDF Merge and Split Unregistered Version - http://www.simpopdf.com

Schéma de câblage — ABS —/Modèles avec conduite à droite, 2 roues motrices (suite)

BR-ABS-05

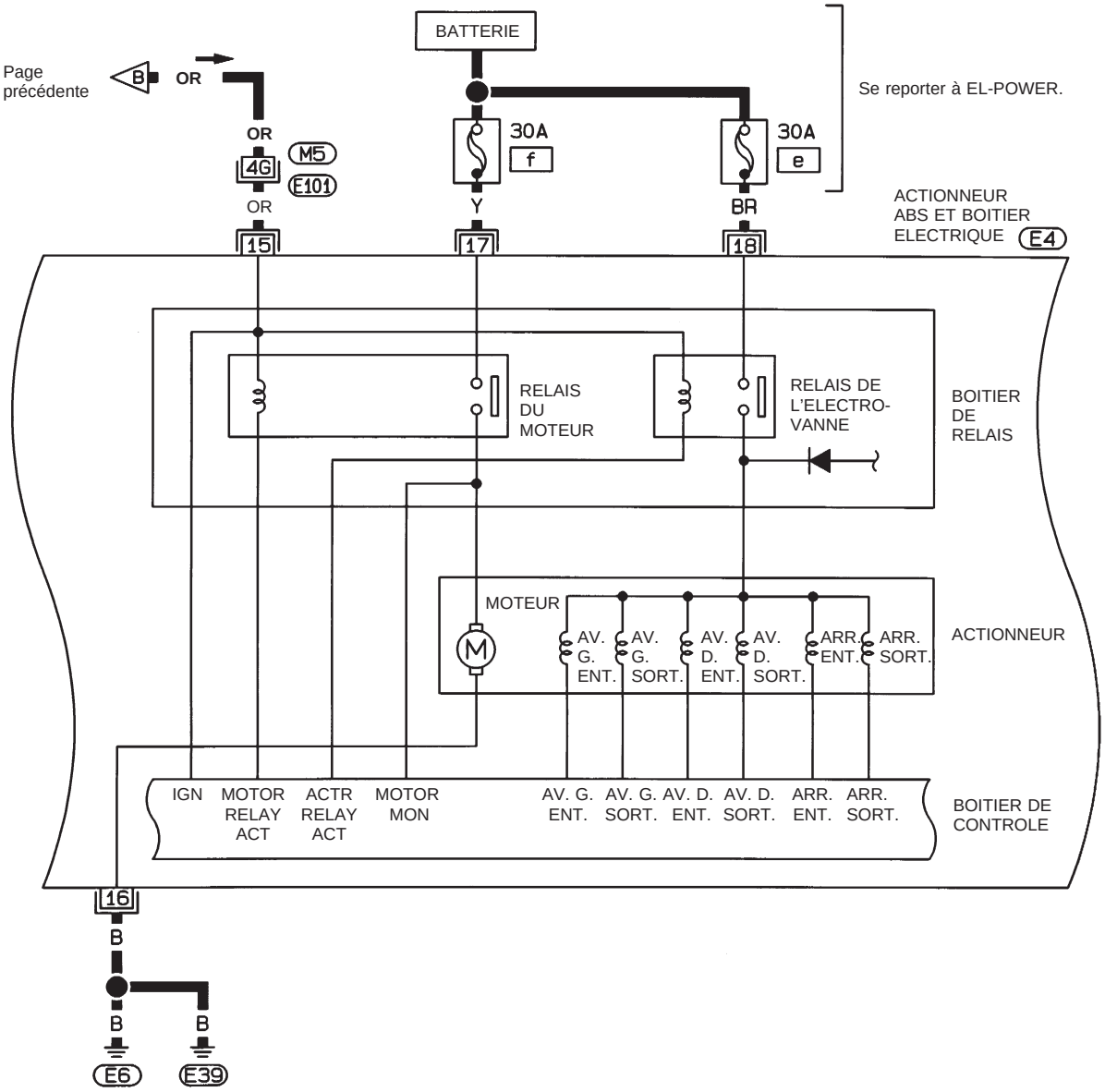

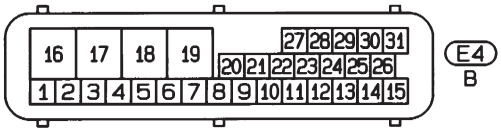

Consulter la dernière page dépliante.

M5 , E101

HBR089

Simpo PDF Merge and Split Unregistered Version - http://www.simpopdf.com

Schéma de câblage — ABS —/Modèles avec conduite à droite, 2 roues motrices (suite)

BR-ABS-06

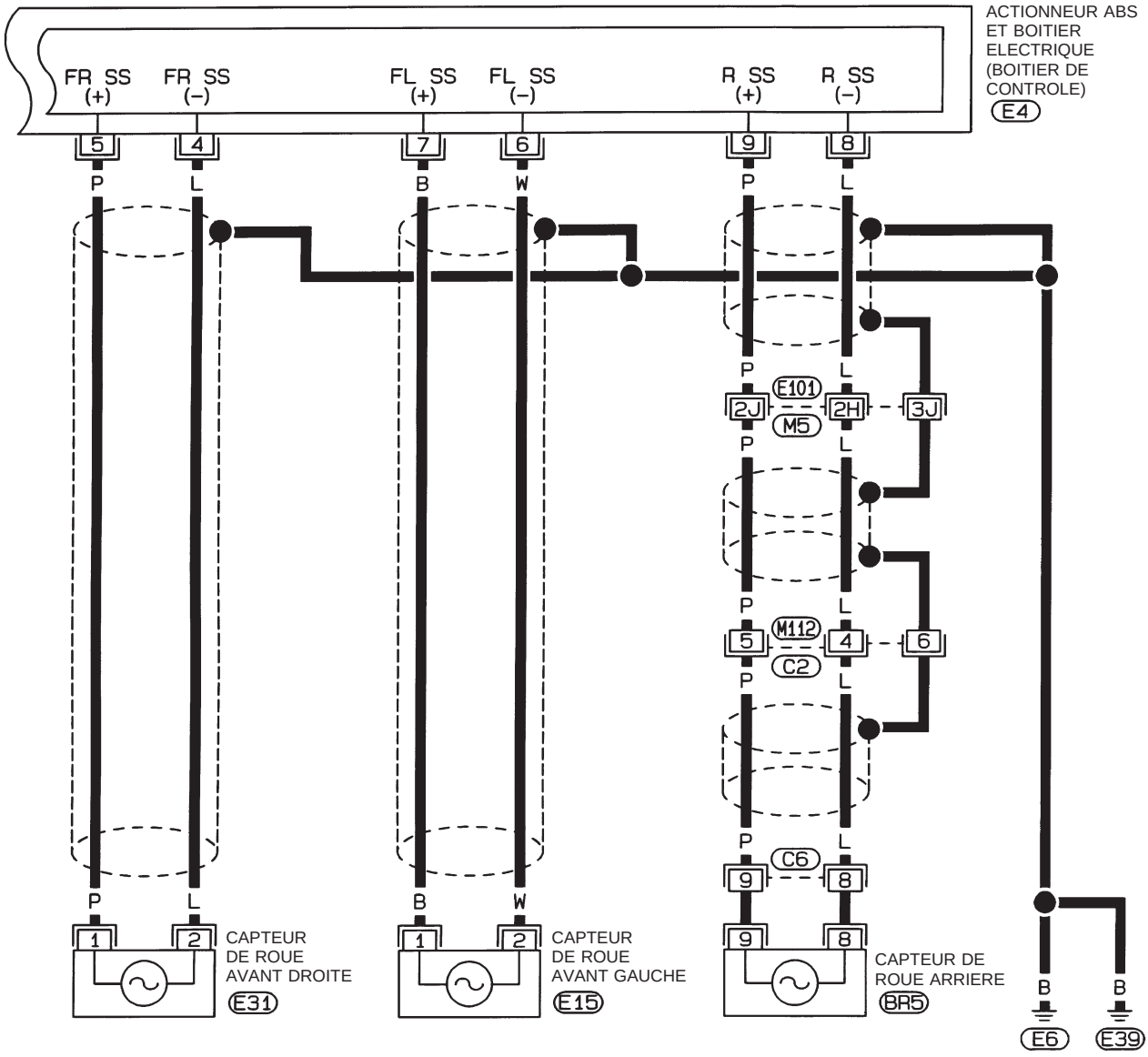

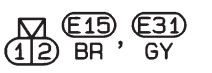







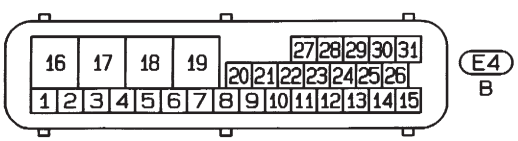

Consulter la dernière page dépliante.

M5 , E101

∗ : Ce connecteur n'est pas indiqué dans "DISPOSITION DES FAISCEAUX" dans la section EL.

HBR073

Simpo PDF Merge and Split Unregistered Version - http://www.simpopdf.com

Schéma de circuit/4 roues motrices

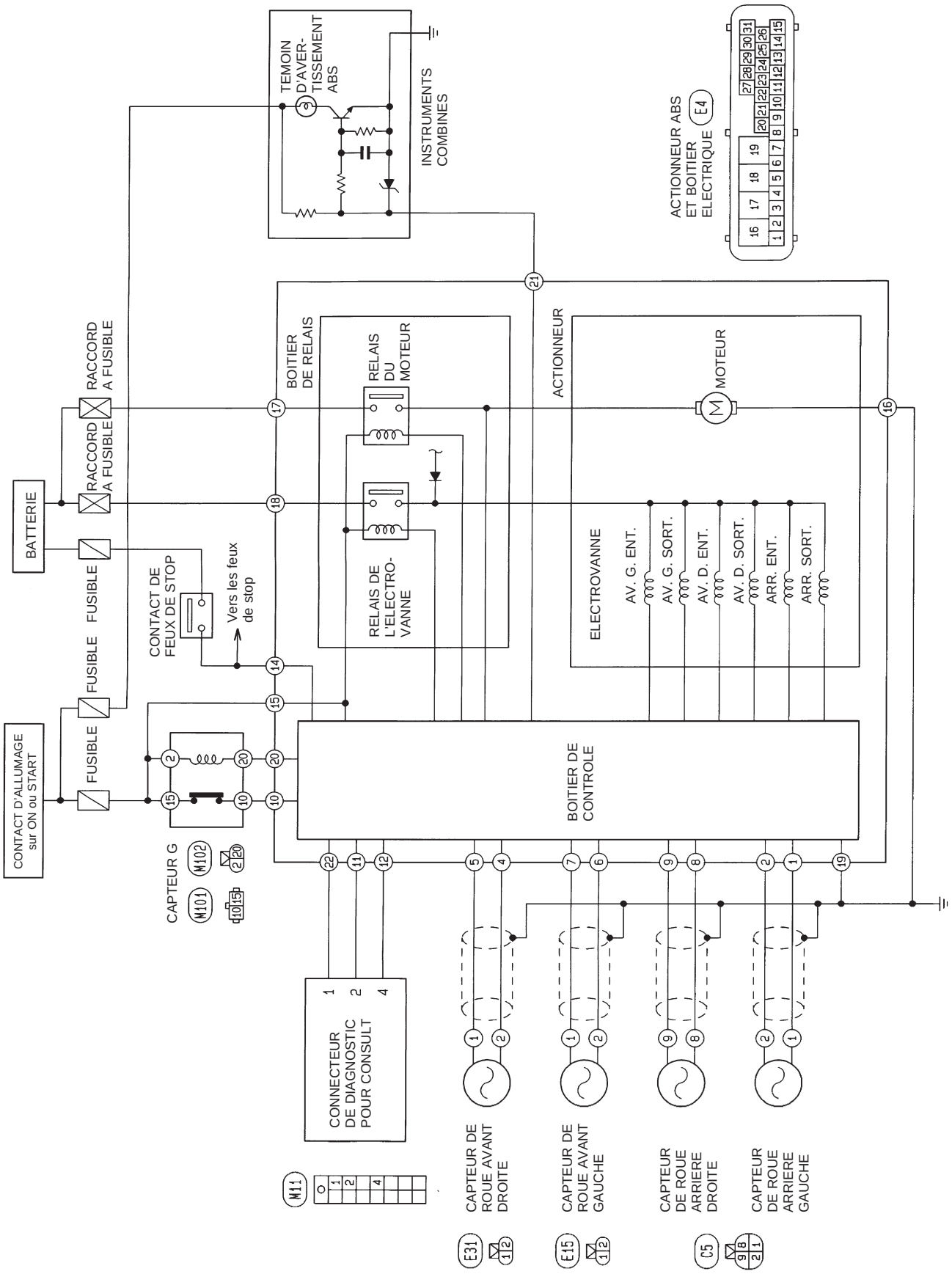

HBR078

Simpo PDF Merge and Split Unregistered Version - http://www.simpopdf.com

Schéma de câblage — ABS —/Modèles avec conduite à gauche, 4 roues motrices

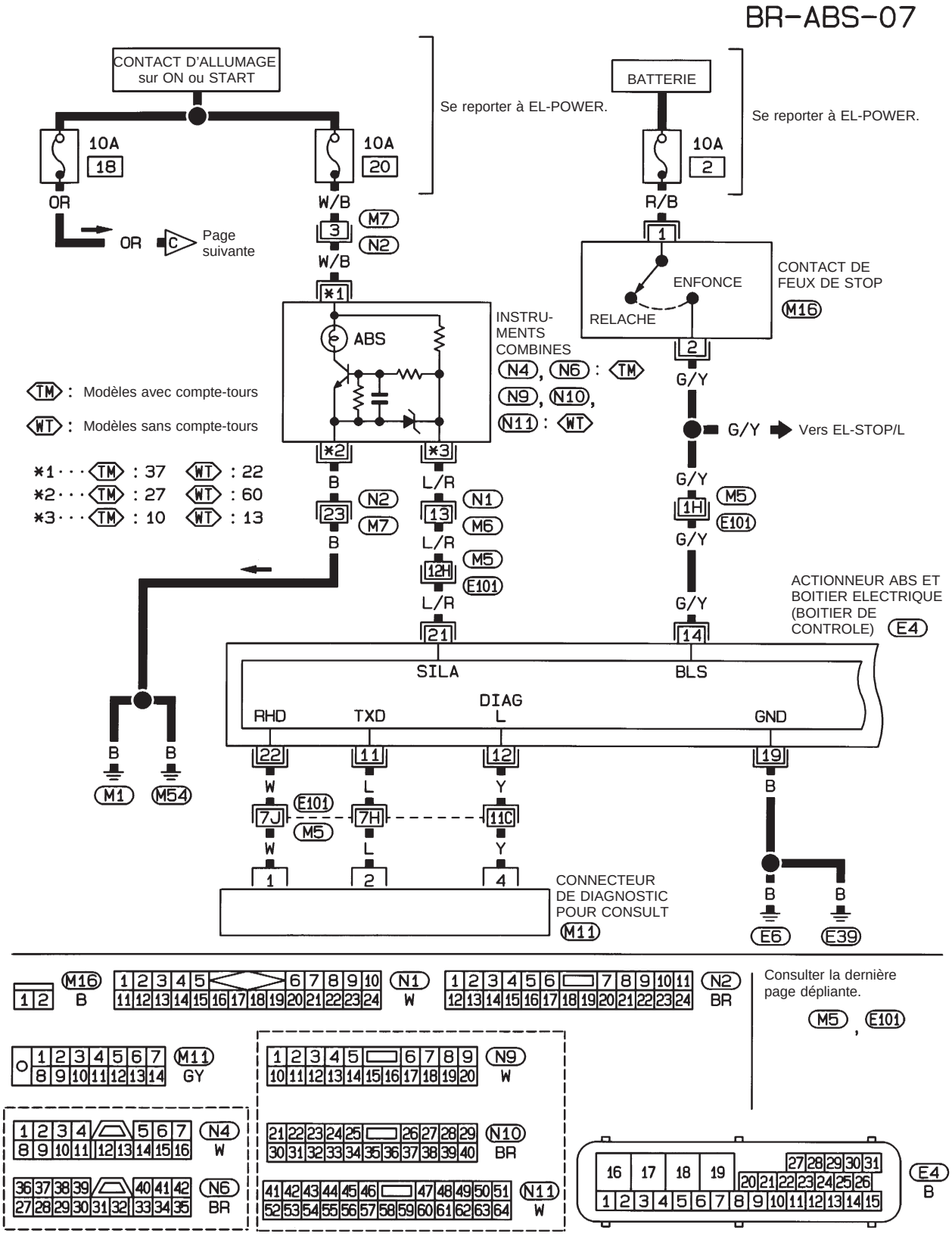

HBR090

Simpo PDF Merge and Split Unregistered Version - http://www.simpopdf.com

Schéma de câblage — ABS —/Modèles avec conduite à gauche, 4 roues motrices (suite)

BR-ABS-08

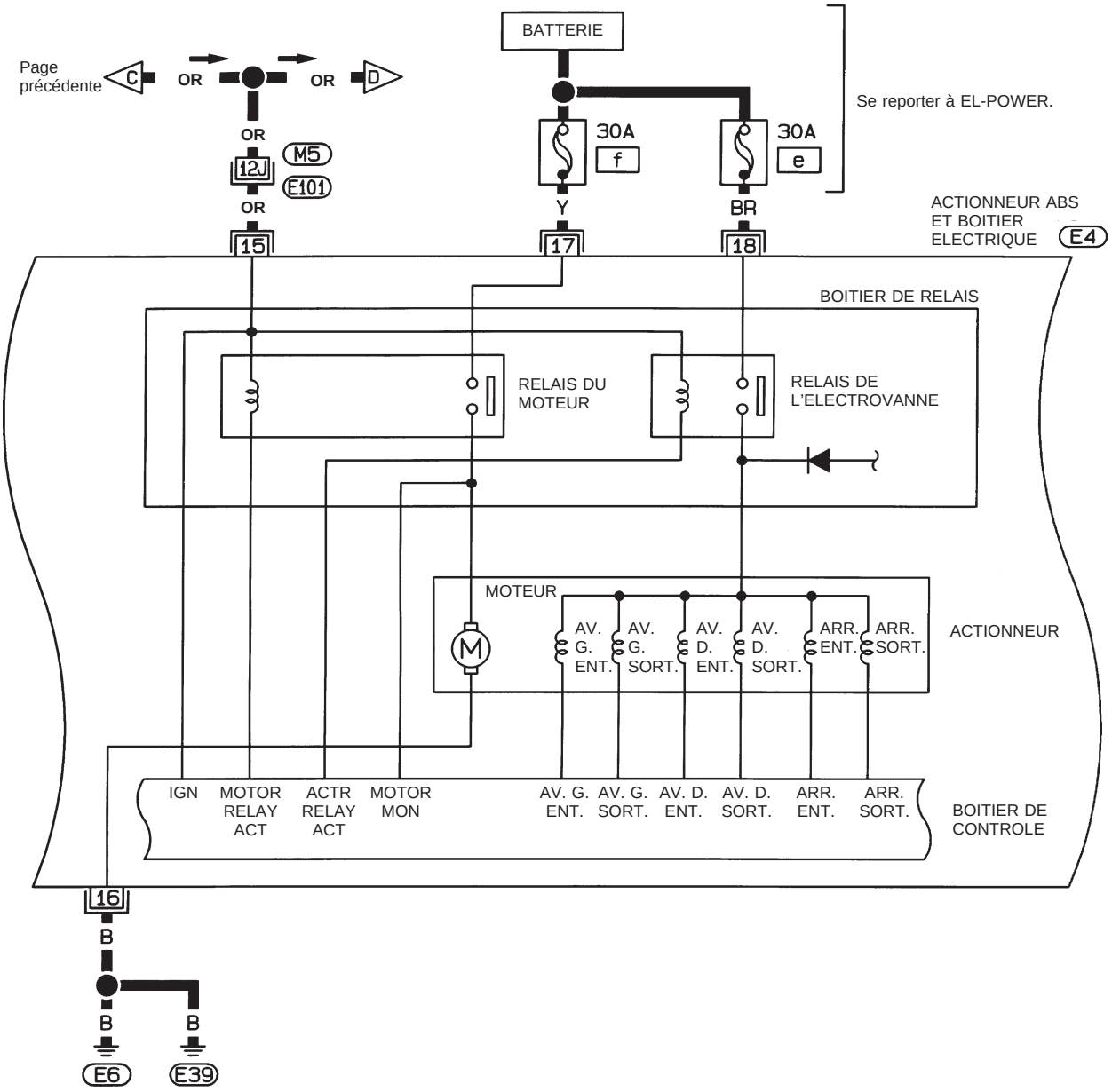

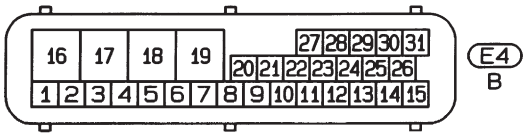

Consulter la dernière page dépliante.

M5 , E101

HBR075

Simpo PDF Merge and Split Unregistered Version - http://www.simpopdf.com

Schéma de câblage — ABS —/Modèles avec conduite à gauche, 4 roues motrices (suite)

BR-ABS-09

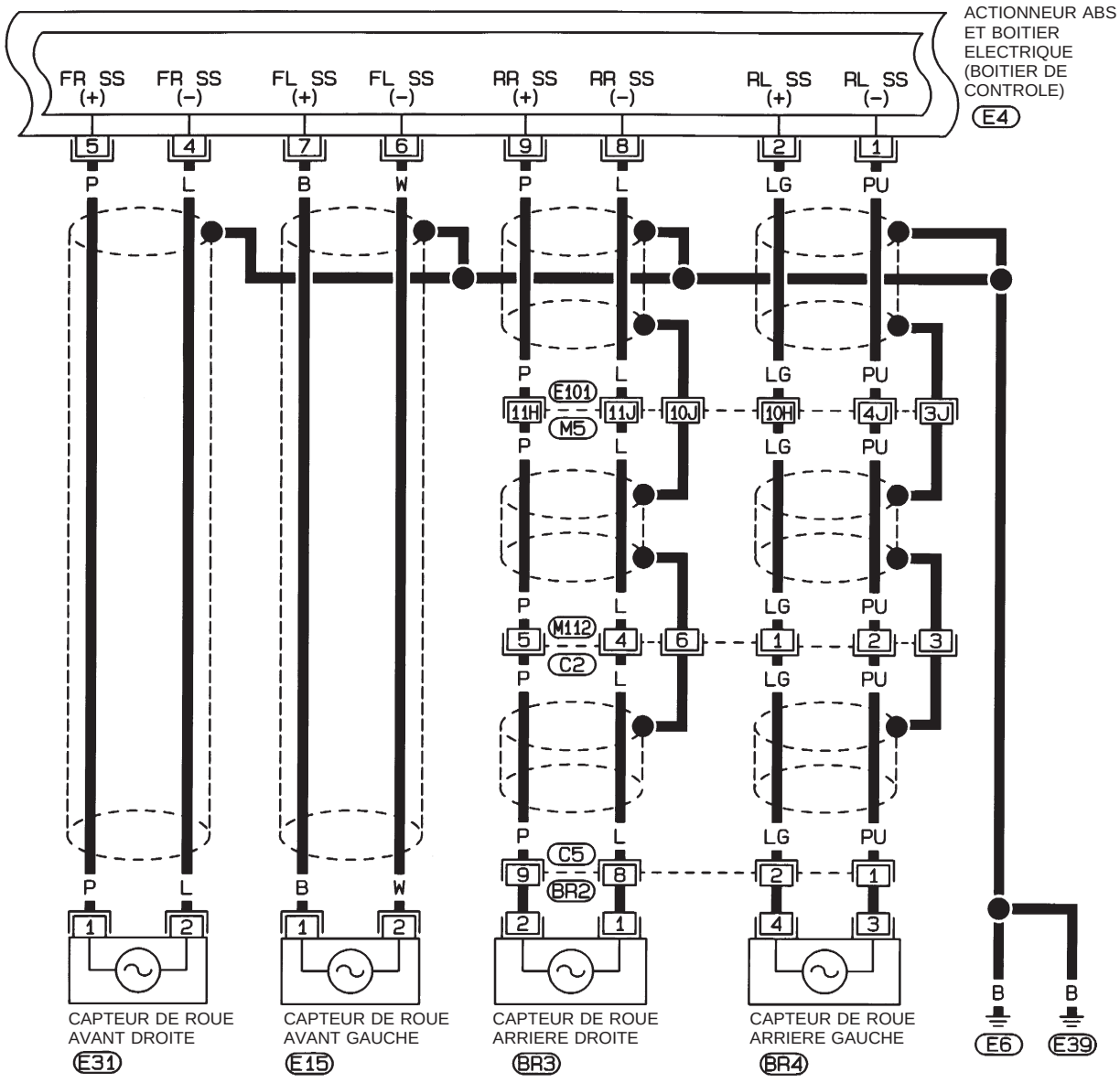

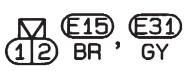





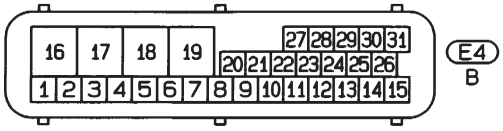





* : Ce connecteur n'est pas indiqué dans "DISPOSITION DES FAISCEAUX" dans la section EL.

Consulter la dernière page dépliante.

M5 , E101

HBR091

Simpo PDF Merge and Split Unregistered Version - http://www.simpopdf.com

Schéma de câblage — ABS —/Modèles avec conduite à gauche, 4 roues motrices (suite)

BR-ABS-10

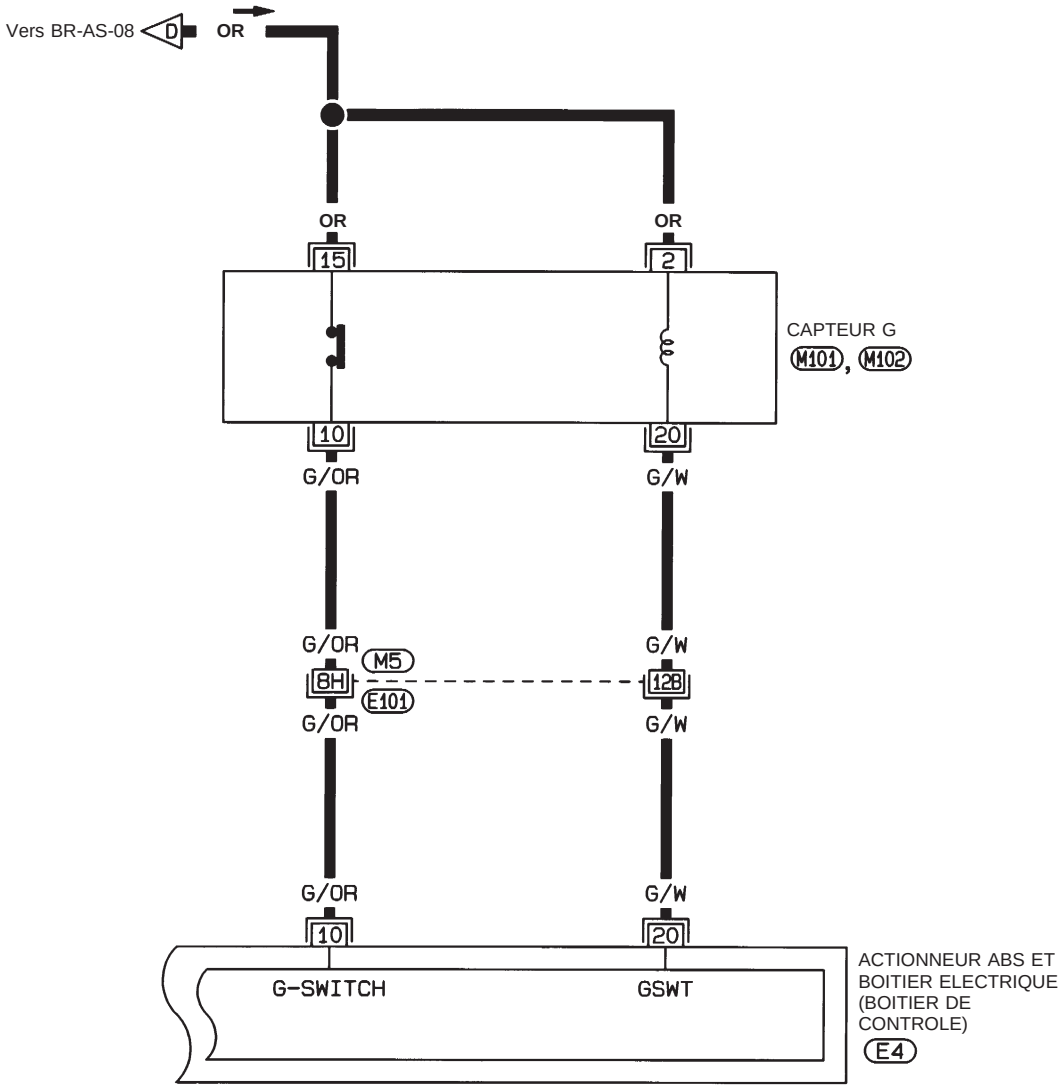

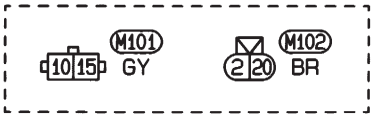

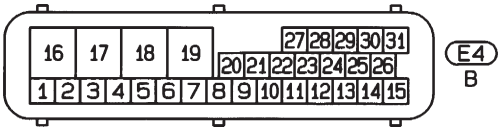

Consulter la dernière page dépliante.

M5, E101

HBR092

Simpo PDF Merge and Split Unregistered Version - http://www.simpopdf.com

Schéma de câblage — ABS —/Modèles avec conduite à droite, 4 roues motrices

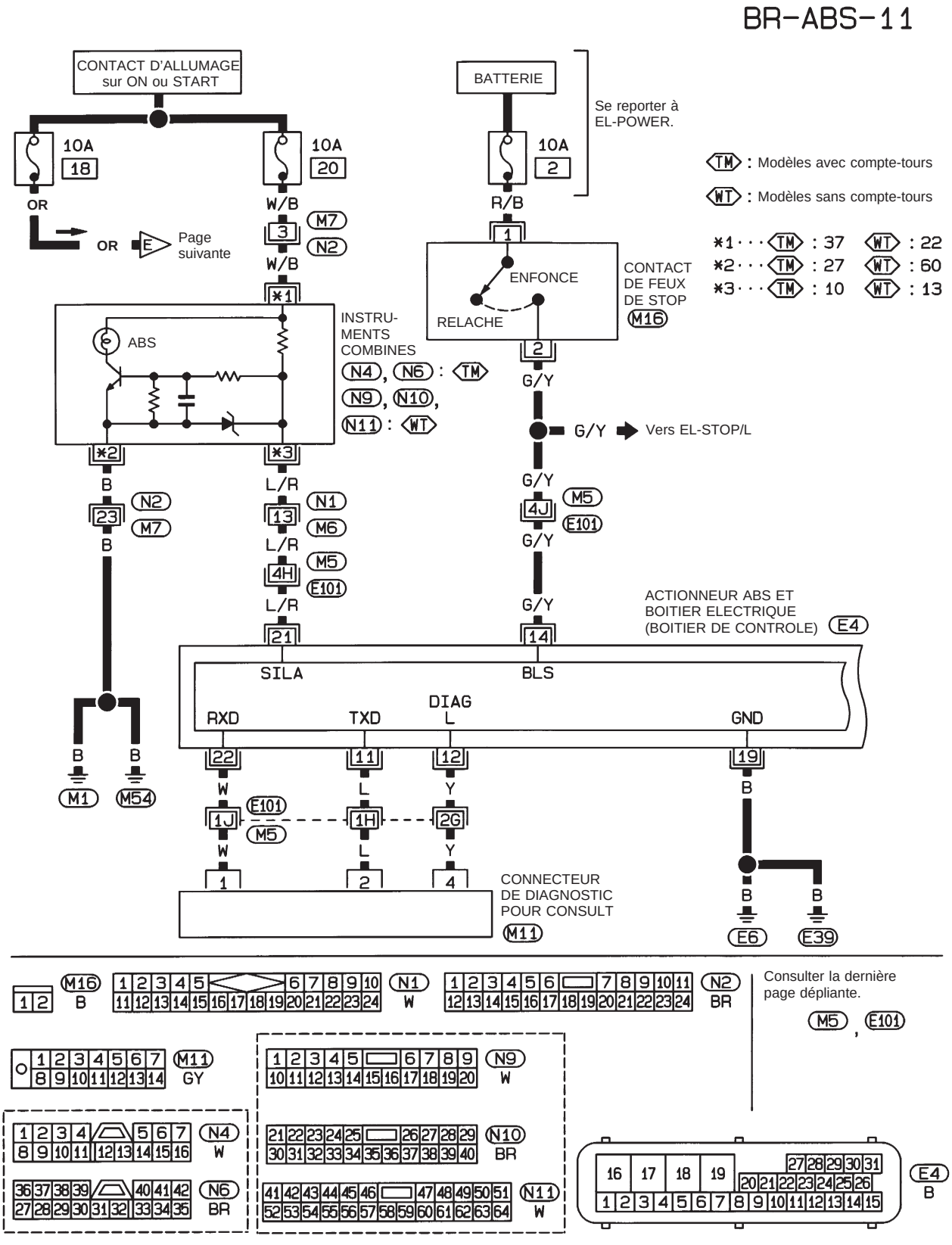

HBR093

Simpo PDF Merge and Split Unregistered Version - http://www.simpopdf.com

Schéma de câblage — ABS —/Modèles avec conduite à droite, 4 roues motrices (suite)

BR-ABS-12

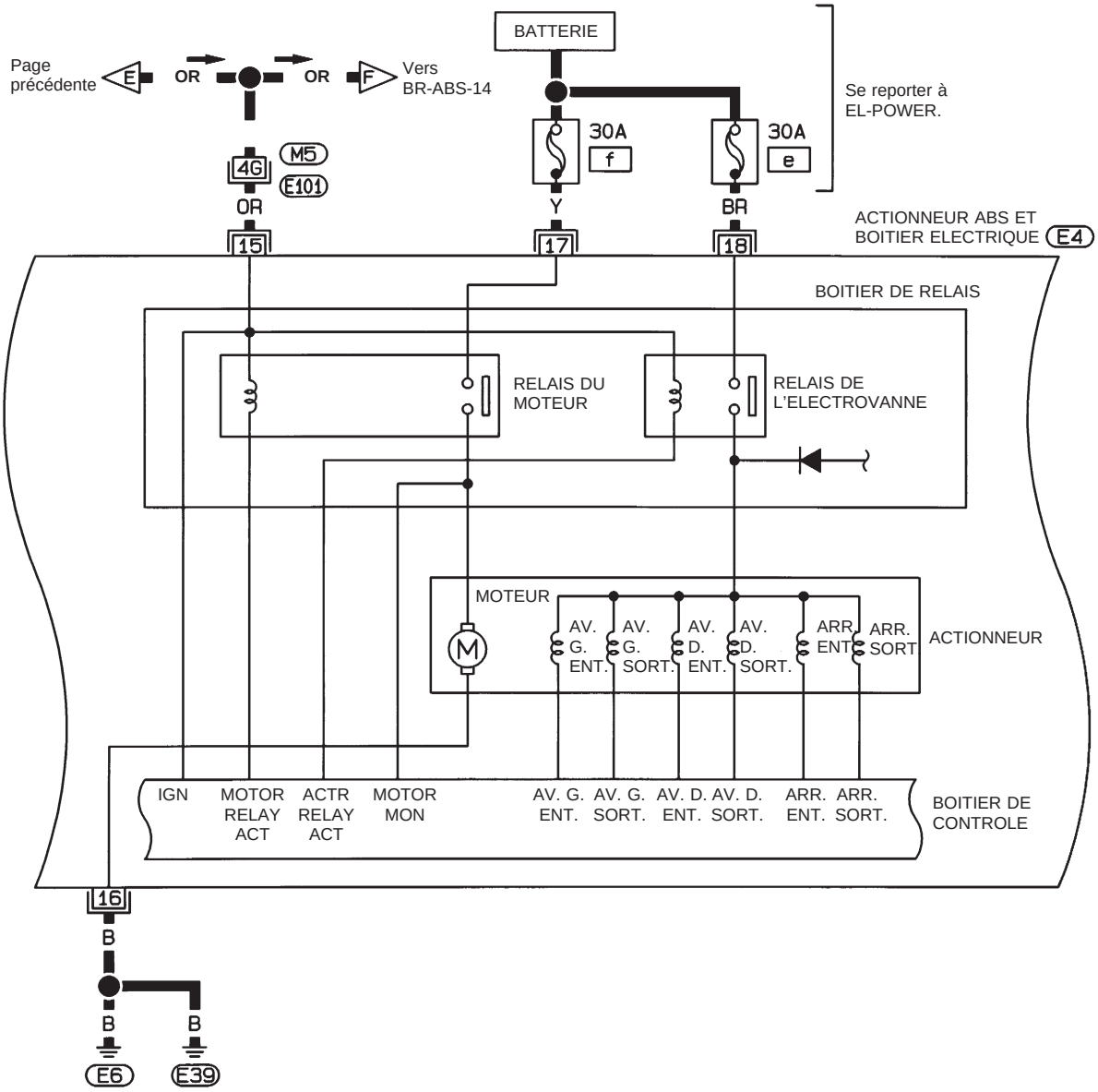

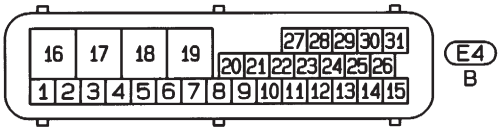

Se reporter à la dernière page dépliante.

M5 , E101

HBR094

Simpo PDF Merge and Split Unregistered Version - http://www.simpopdf.com

Schéma de câblage — ABS —/Modèles avec conduite à droite, 4 roues motrices (suite)

BR-ABS-13

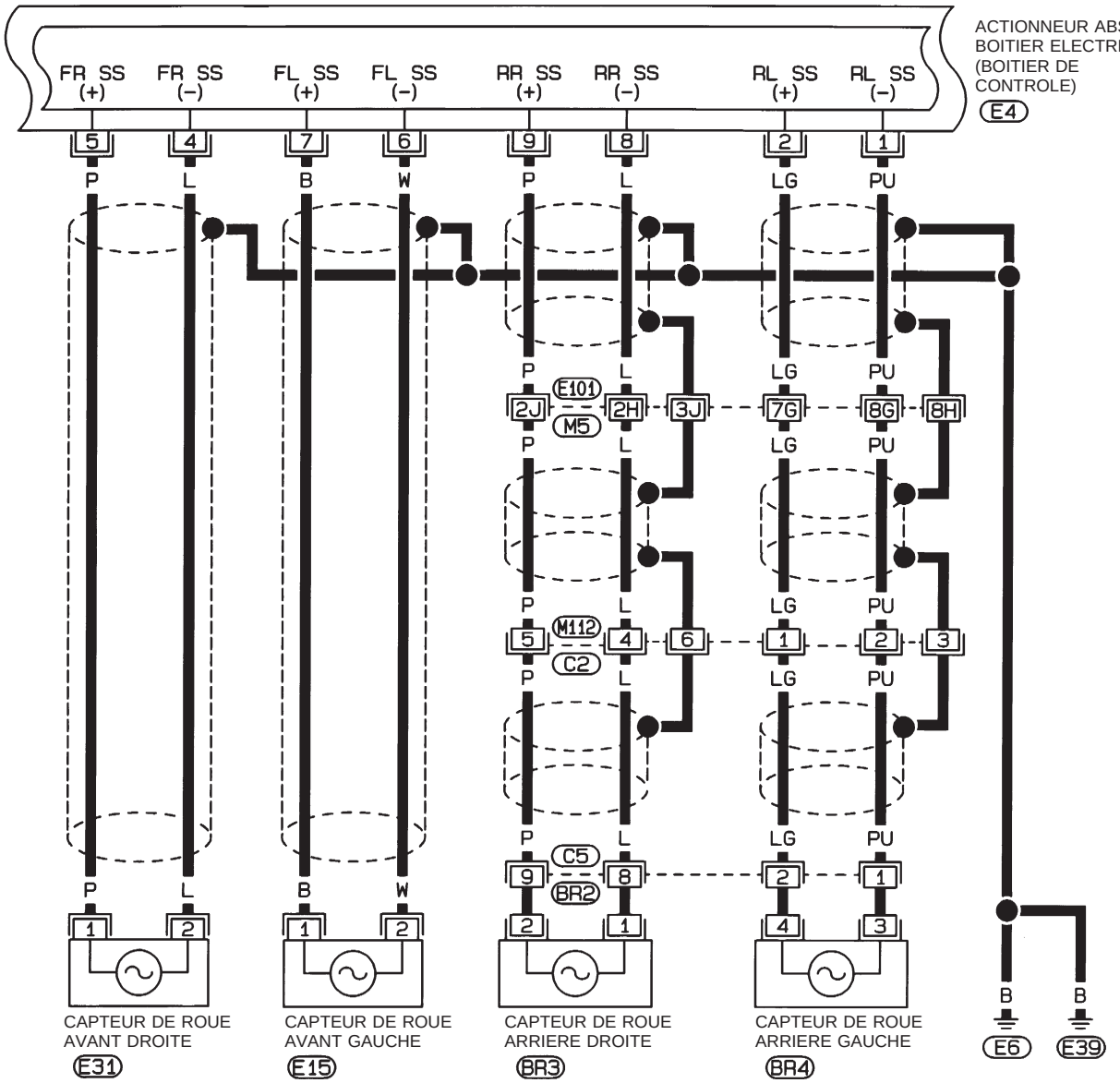

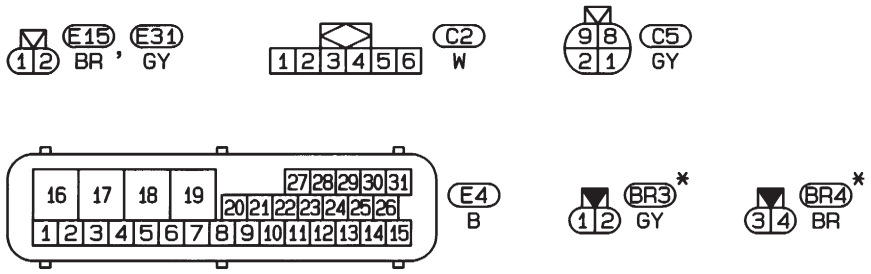

Consulter la dernière page dépliante.

M5 , E101

* : Ce connecteur n'est pas indiqué dans "DISPOSITION DES FAISCEAUX" dans la section EL.

HBR095

Simpo PDF Merge and Split Unregistered Version - http://www.simpopdf.com

Schéma de câblage — ABS —/Modèles avec conduite à droite, 4 roues motrices (suite)

BR-ABS-14

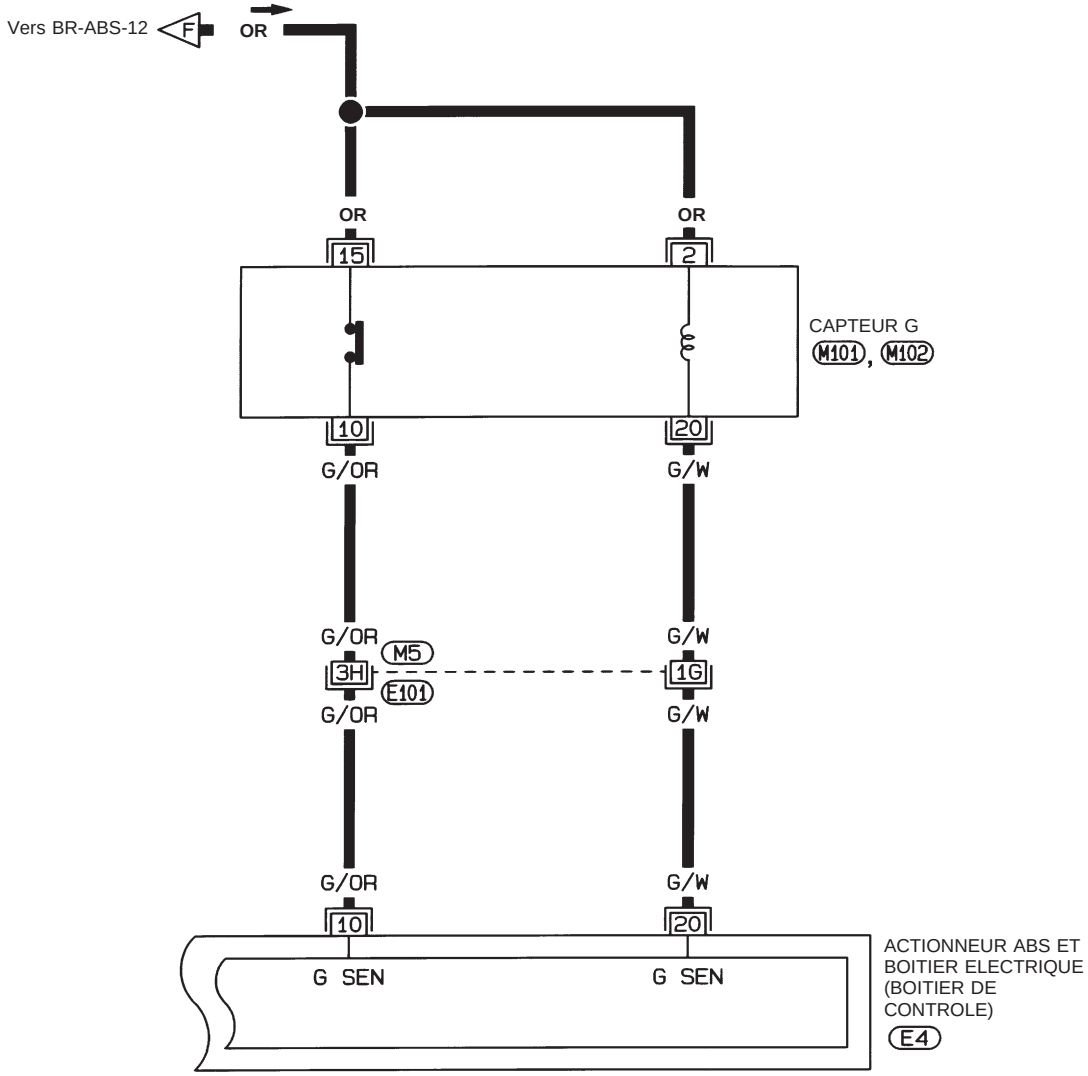

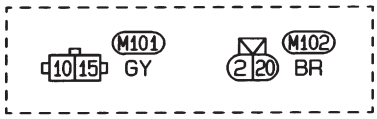

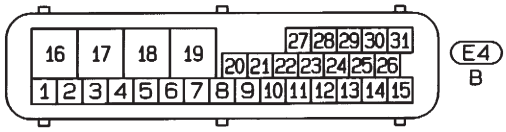

Consulter la dernière page dépliante.

M5, E101

HBR083

Simpo PDF Merge and Split Unregistered Version - http://www.simpopdf.com

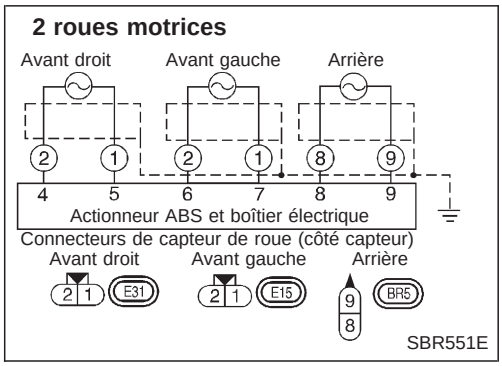

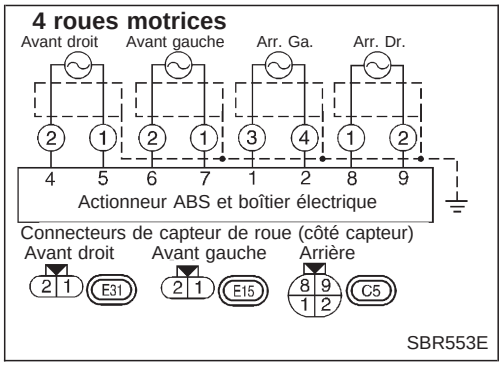

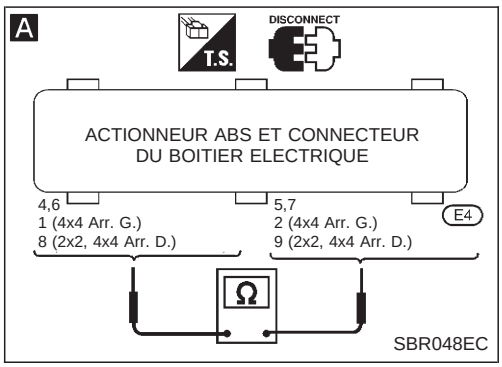

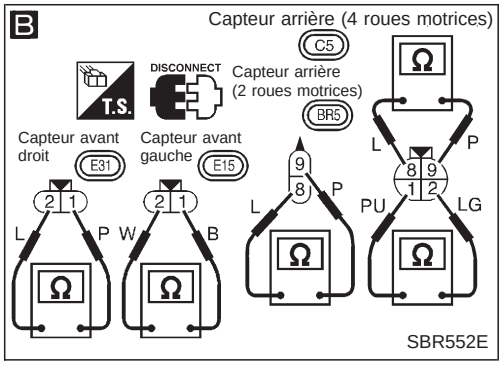

Procédure de diagnostic 1 (capteur de roue ou rotor)

Codes de panne n° 21, 22, 25, 26, 31, 32, 35, 36 ou 18

DEBUT DE L'INSPECTION

1. Débrancher les connecteurs de l'actionneur de l'ABS, le boîtier électrique et le capteur de roue selon le numéro de code de défaut. Contrôler si les bornes ne sont pas endommagées ou les connexions débranchées. Puis rebrancher les connecteurs.
2. Effectuer de nouveau l'autodiagnostic.
   Est-ce que la lampe témoin s'allume à nouveau?

Non → FIN DE L'INSPECTION

Oui

A

VERIFICATION ELECTRIQUE DU CAPTEUR DE ROUE.

1. Débrancher l'actionneur de l'ABS et le connecteur du boîtier électrique.
2. Vérifier la résistance entre l'actionneur de l'ABS et les bornes du connecteur (E4) (côté carrosserie) du boîtier électrique.
   Code n° 21 ou 22 (roue avant droite)
   Bornes (4) et (5)
   Code n° 25 ou 26 (roue avant gauche)
   Bornes (6) et (7)
   Code n° 31 ou 32 (roue arrière droite 4 roues motrices)
   Bornes (8) et (9)
   Code n° 35 ou 36 (roues arrière 2 roues motrices, roue arrière gauche 4 roues motrices)
   Bornes (8) et (9) (roues arrière 2 motrices)
   Bornes (1) et (2) (roue arrière gauche 4 roues motrices)
   Résistance :
   Avant 1,44 - 1,76 kΩ
   Arrière (2 roues motrices) 1,22 - 1,48 kΩ
   Arrière (4 roues motrices) 1,44 - 1,76 kΩ

Bon → (A) (passer à la page suivante).

Mauvais

B

VERIFICATION DU CAPTEUR DE ROUE

Vérifier la résistance de chaque capteur.
Résistance :
Avant 1,44 - 1,76 kΩ
Arrière (2 roues motrices) 1,22 - 1,48 kΩ
Arrière (4 roues motrices) 1,44 - 1,76 kΩ

Bon → Vérifier les points suivants.
- Connecteurs de faisceau (E4), (E31), (E15), (BR5) et (C5)
- Faisceau ouvert ou court-circuité entre les connecteurs de capteur de roue, l'actionneur de l'ABS et le boîtier électrique

Si le résultat est mauvais, réparer le faisceau ou les connecteurs.

Mauvais

REMPLACER.

Remplacer le capteur de roue.

Simpo PDF Merge and Split Unregistered Version - http://www.simpopdf.com

Procédure de diagnostic 1 (capteur de roue ou rotor) (suite)

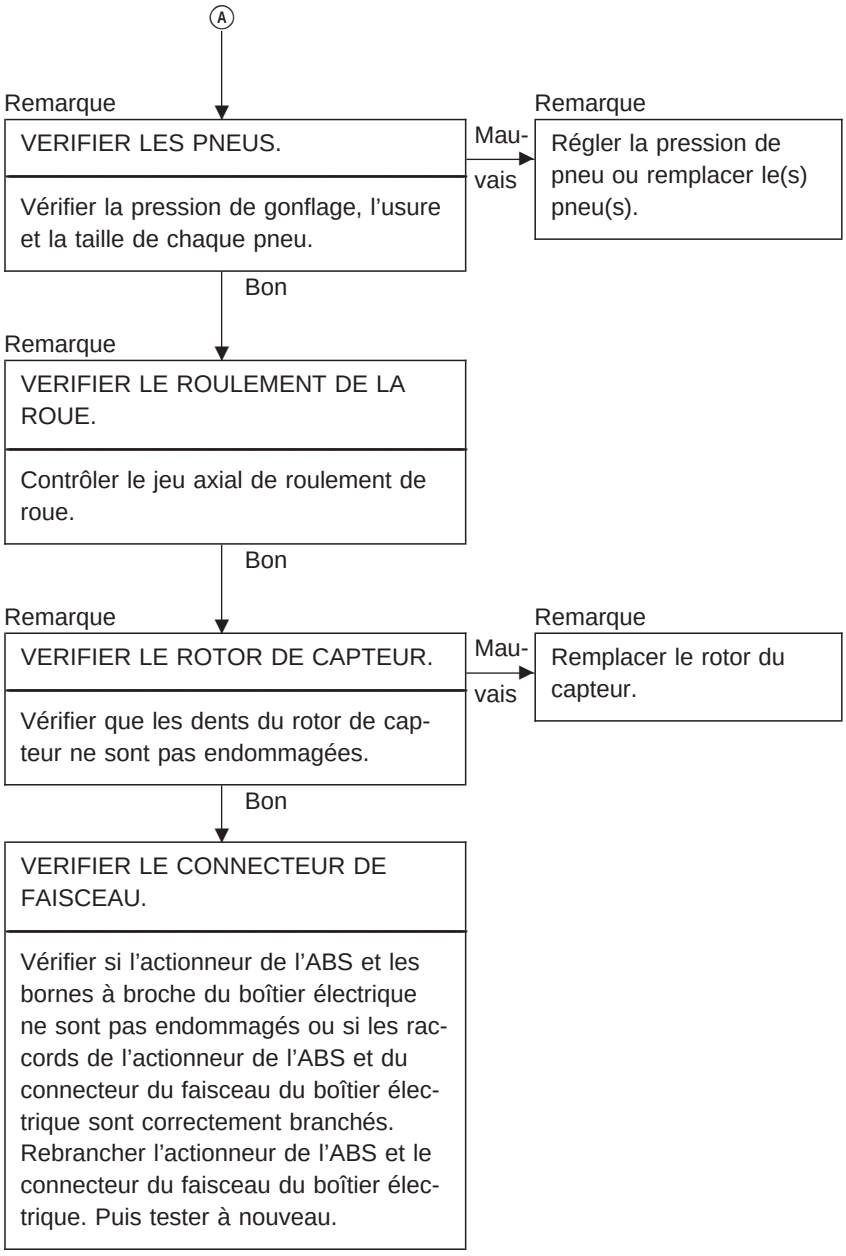

Remarque : La position de la roue doit être signalée par les numéros de code à l'exception du code n° 18 (rotor du capteur).

Simpo PDF Merge and Split Unregistered Version - http://www.simpopdf.com

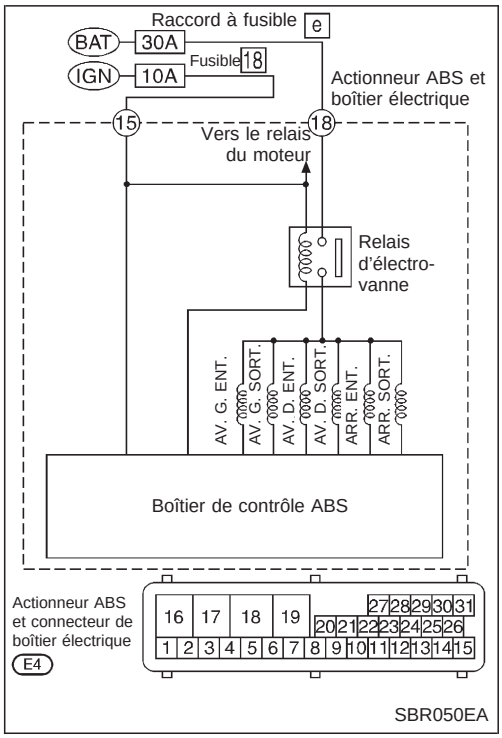

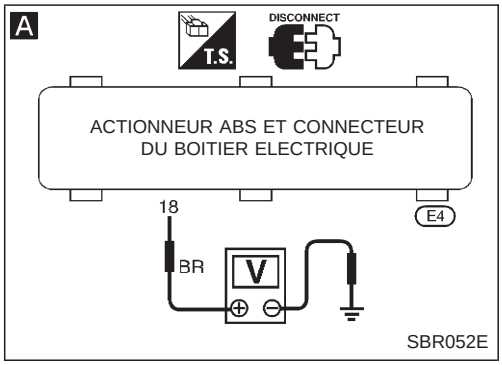

Procédure de diagnostic 2 (électrovanne d'actionneur d'ABS et relais d'électrovanne)

Code de panne n° 41, 45, 55, 42, 46, 56, 63

VERIFIER LE RACCORD A FUSIBLE.

Vérifier le raccord à fusible e de 30 A. Pour la disposition des raccords à fusibles, se reporter au chapitre ''DISPOSITION DE L'ALIMENTATION ELECTRIQUE'' dans la section EL.

Mauvais → (A) (passer à la page suivante).

Bon ↓

VERIFIER LE FUSIBLE.

Vérifier le fusible 18 de 10A. Pour la disposition du fusible, se reporter au chapitre ''DISPOSITION DE L'ALIMENTATION ELECTRIQUE'' dans la section EL.

Mauvais → (B) (passer à la page suivante).

Bon ↓

VERIFIER LE CONNECTEUR.

1. Débrancher l'actionneur de l'ABS et le connecteur du boîtier électrique. Vérifier les bornes pour voir s'il n'y a pas de dommages ou de connexions desserrées. Puis rebrancher le connecteur.
2. Effectuer de nouveau l'autodiagnostic.
   Est-ce que la lampe témoin s'allume à nouveau ?

Non → Fin de l'inspection

Oui ↓

VERIFIER L'ACTIONNEUR ABS ET LE CIRCUIT DE MISE A LA MASSE DU BOITIER ELECTRIQUE.

Se reporter à ACTIONNEUR ABS ET MISE A LA MASSE DU BOITIER ELECTRIQUE et Vérification du circuit de mise à la masse. Se reporter à l'Edition Générale de ce Manuel de Réparation.

Mauvais → Réparer le faisceau et le connecteur.

Bon ↓

A

VERIFIER LE CIRCUIT DE L'ALIMENTATION ELECTRIQUE DU RELAIS DE L'ELECTROVANNE.

1. Débrancher l'actionneur de l'ABS et le connecteur du boîtier électrique.
2. Vérifier la résistance entre l'actionneur de l'ABS et la borne (18) du connecteur (côté carrosserie) (E4) du boîtier électrique et la masse.
   Il doit y avoir tension de la batterie.

Mauvais → Vérifier les points suivants.
- Connecteur de faisceau (E4)
- Faisceau ouvert ou court-circuité entre l'actionneur de l'ABS, le boîtier électrique et le raccord à fusible

Si le résultat n'est pas satisfaisant, réparer le faisceau ou le connecteur.

Bon ↓

REMPLACER.

Remplacer l'actionneur de l'ABS et le boîtier électrique.

Simpo PDF Merge and Split Unregistered Version - http://www.simpopdf.com

Procédure de diagnostic 2 (électrovanne d'actionneur d'ABS et relais d'électrovanne) (suite)

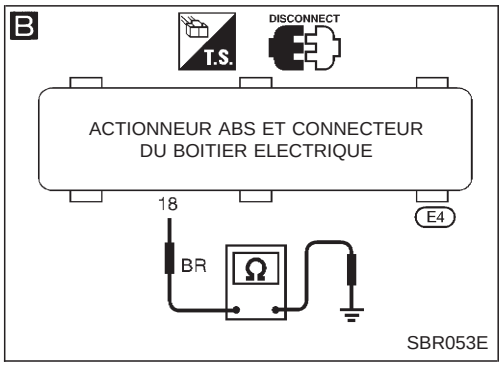

Ⓐ

REMPLACER.

Remplacer le raccord à fusible.
Le raccord à fusible saute-t-il lorsque le contact d'allumage est sur "ON" ?

Non → Fin de l'inspection

Oui

B

VERIFIER LE CIRCUIT DE L'ALIMENTATION ELECTRIQUE DU RELAIS DE L'ELECTROVANNE.

1. Débrancher l'actionneur de l'ABS et le connecteur du boîtier électrique.
2. Vérifier la continuité entre l'actionneur de l'ABS et la borne (18) du connecteur (côté carrosserie) (E4) du boîtier électrique et la masse.
   Il doit y avoir continuité.

Mauvais → Vérifier les points suivants.
- Connecteur de faisceau (E4)
- Faisceau ouvert ou court-circuité entre l'actionneur de l'ABS, le boîtier électrique et le raccord à fusible

Si le résultat n'est pas satisfaisant, réparer le faisceau ou le connecteur.

Bon

REMPLACER.

Remplacer l'actionneur de l'ABS et le boîtier électrique.

Ⓑ

REMPLACER.

Remplacer le fusible.
Le fusible saute-t-il lorsque le contact d'allumage est mis sur "ON" ?

Oui → Vérifier les points suivants.
- Connecteur de faisceau (E4)
- Faisceau ouvert ou court-circuité entre l'actionneur de l'ABS, le boîtier électrique et le fusible

Si le résultat n'est pas satisfaisant, réparer le faisceau ou le connecteur.

Non

FIN

FIN DE L'INSPECTION

Simpo PDF Merge and Split Unregistered Version - http://www.simpopdf.com

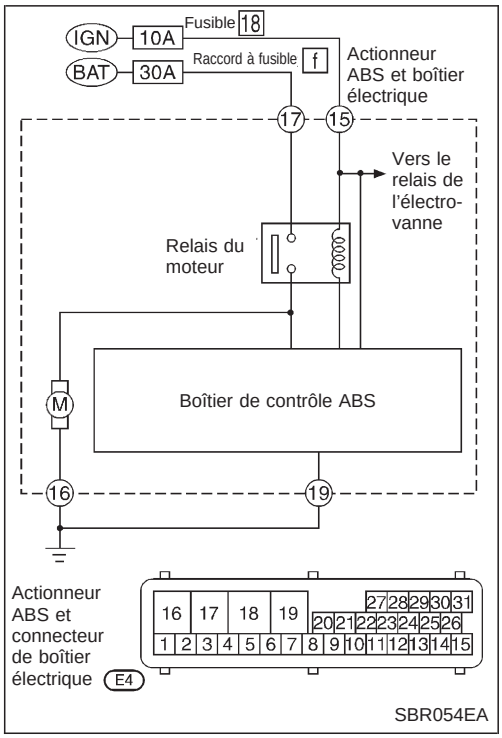

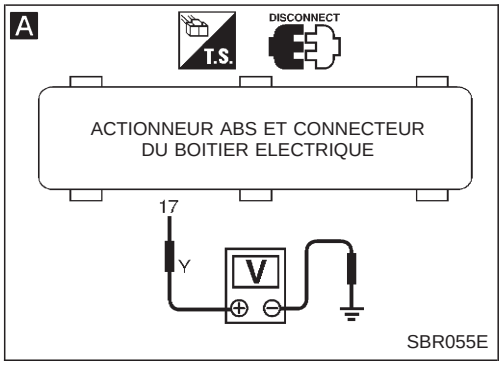

Procédure de diagnostic 3 (relais de moteur ou moteur)

Code de panne n° 61

VERIFIER LE RACCORD A FUSIBLE.

Vérifier le raccord à fusible f de 30 A. Pour la disposition des raccords à fusibles, se reporter au chapitre "DISPOSITION DE L'ALIMENTATION ELECTRIQUE" dans la section EL.

Mauvais → Ⓐ (passer à la page suivante).

Bon ↓

VERIFIER LE CONNECTEUR.

1. Débrancher l'actionneur de l'ABS et le connecteur du boîtier électrique. Vérifier les bornes pour voir s'il n'y a pas de dommages ou de connexions desserrées. Puis rebrancher le connecteur.
2. Effectuer de nouveau l'autodiagnostic.
   Est-ce que la lampe témoin s'allume à nouveau ?

Non → FIN DE L'INSPECTION

Oui ↓

A

VERIFIER LE CIRCUIT D'ALIMENTATION ELECTRIQUE DU RELAIS DE MOTEUR.

1. Débrancher l'actionneur de l'ABS et le connecteur du boîtier électrique.
2. Vérifier la résistance entre l'actionneur de l'ABS et la borne ⑰ du connecteur E4 (côté carrosserie) du boîtier électrique et la masse.
   Il doit y avoir tension de la batterie.

Mauvais → Vérifier les points suivants.
- Connecteur de faisceau E4
- Faisceau ouvert ou court-circuité entre l'actionneur de l'ABS, le boîtier électrique et le raccord à fusible

Si le résultat n'est pas satisfaisant, réparer le faisceau ou le connecteur.

Bon ↓

VERIFIER L'ACTIONNEUR ABS ET LA MISE A LA MASSE DU BOITIER ELECTRIQUE.

Se reporter à "ACTIONNEUR ABS ET MASSE DU BOITIER ELECTRIQUE" dans le chapitre "Vérification du circuit de mise à la masse". Se reporter à l'Edition Générale de ce Manuel de Réparation.

Mauvais → Réparer le faisceau et les bornes.

Bon ↓

REMPLACER.

Remplacer l'actionneur de l'ABS et le boîtier électrique.

Simpo PDF Merge and Split Unregistered Version - http://www.simpopdf.com

Procédure de diagnostic 3 (relais de moteur ou moteur) (suite)

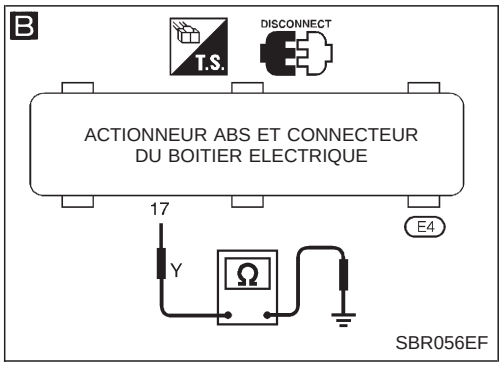

Ⓐ

REMPLACER.

Remplacer le raccord à fusible.
Le raccord à fusible saute-t-il lorsque le contact d'allumage est mis sur "ON" ?

Non → Fin de l'inspection

Oui

B

VERIFIER LE MOTEUR DE L'ACTIONNEUR ABS ET LE CIRCUIT DE L'ALIMENTATION ELECTRIQUE DU MOTEUR.

1. Débrancher le câble de la batterie, l'actionneur de l'ABS et le connecteur E4 du boîtier électrique.
2. Vérifier la continuité entre l'actionneur de l'ABS et la borne 17 du connecteur E4 (côté carrosserie) du boîtier électrique et la masse.
   Il ne doit pas y avoir continuité.

Mauvais → Vérifier les points suivants :
- Connecteur de faisceau E4
- Faisceau ouvert ou court-circuité entre l'actionneur de l'ABS, le boîtier électrique et le raccord à fusible

Si le résultat n'est pas satisfaisant, réparer le faisceau ou le connecteur.

Bon

VERIFIER LE CONNECTEUR DE FAISCEAU.

Vérifier si l'actionneur de l'ABS et les bornes à broche du boîtier électrique ne sont pas endommagés ou si les raccords de l'actionneur de l'ABS et du connecteur du faisceau du boîtier électrique sont correctement branchés.
Rebrancher l'actionneur de l'ABS et le connecteur du faisceau du boîtier électrique. Puis tester à nouveau.

Simpo PDF Merge and Split Unregistered Version - http://www.simpopdf.com

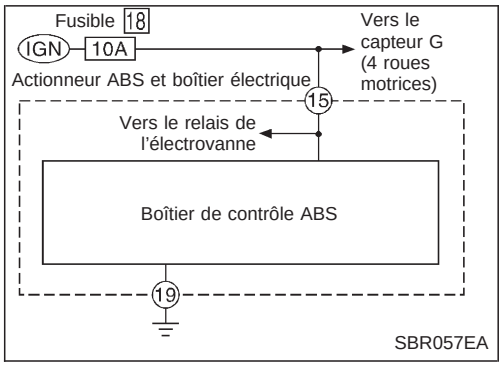

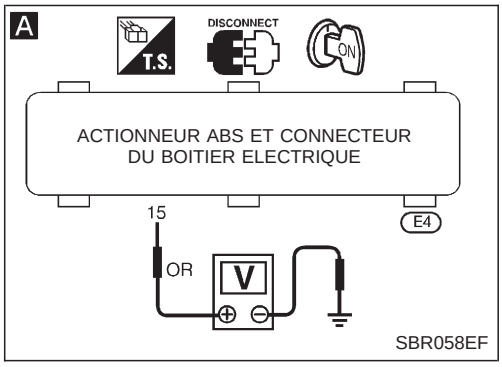

Procédure de diagnostic 4 (basse tension)

Code de panne n° 57

VERIFIER LE CONNECTEUR.

1. Débrancher l'actionneur de l'ABS et le connecteur du boîtier électrique. Vérifier les bornes pour voir s'il n'y a pas de dommages ou de connexions desserrées. Puis rebrancher le connecteur.
2. Effectuer de nouveau l'autodiagnostic.
   Est-ce que la lampe témoin s'allume à nouveau ?

Non → Fin de l'inspection

Oui ↓

A

VERIFIER L'ALIMENTATION ELECTRIQUE DU BOITIER DE CONTROLE ABS.

1. Débrancher l'actionneur de l'ABS et le connecteur du boîtier électrique.
2. Vérifier la résistance entre l'actionneur de l'ABS et la borne (15) du connecteur (E4) (côté carrosserie) du boîtier électrique et la masse.
   La tension de la batterie doit exister quand le contact d'allumage est mis sur ''ON''.

Mauvais → (A) (Passer à la page suivante).

Bon ↓

VERIFIER LA MISE A LA MASSE DU BOITIER DE CONTROLE ABS.

Se reporter à ''ACTIONNEUR ABS ET MASSE DU BOITIER ELECTRIQUE'' dans le chapitre ''Vérification du circuit de mise à la masse''. Se reporter à l'Edition Générale de ce Manuel de Réparation.

Mauvais → Réparer le faisceau et le connecteur.

Bon ↓

VERIFIER LE CONNECTEUR DE FAISCEAU.

Vérifier si l'actionneur de l'ABS et les bornes à broche du boîtier électrique ne sont pas endommagés ou si les raccords de l'actionneur de l'ABS et du connecteur du faisceau du boîtier électrique sont correctement branchés. Rebrancher l'actionneur de l'ABS et le connecteur du faisceau du boîtier électrique. Puis tester à nouveau.

Simpo PDF Merge and Split Unregistered Version - http://www.simpopdf.com

Procédure de diagnostic 4 (basse tension) (suite)

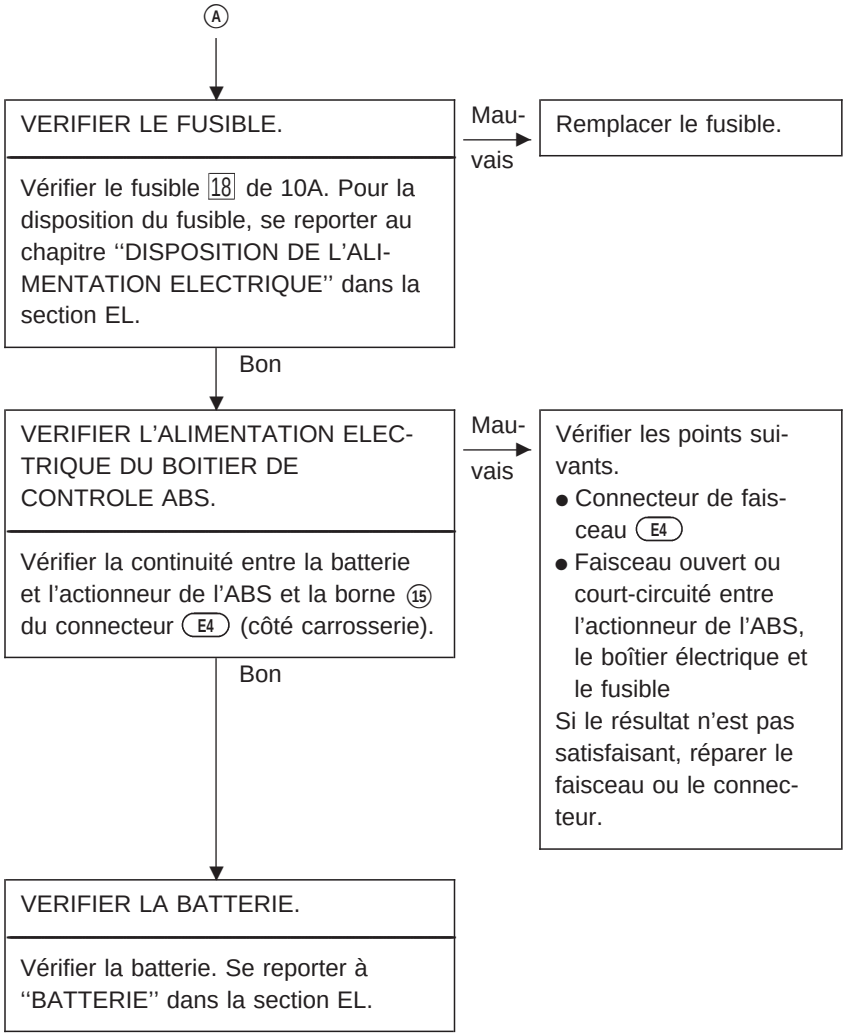

Simpo PDF Merge and Split Unregistered Version - http://www.simpopdf.com

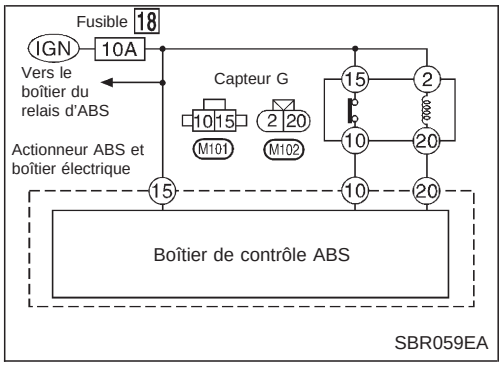

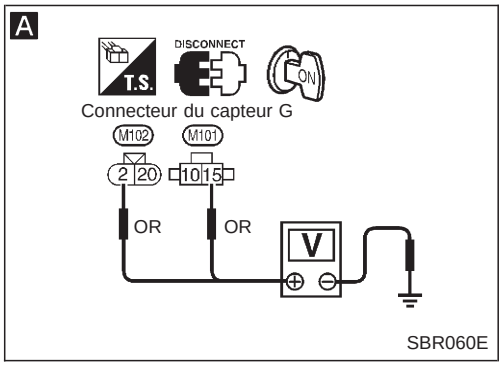

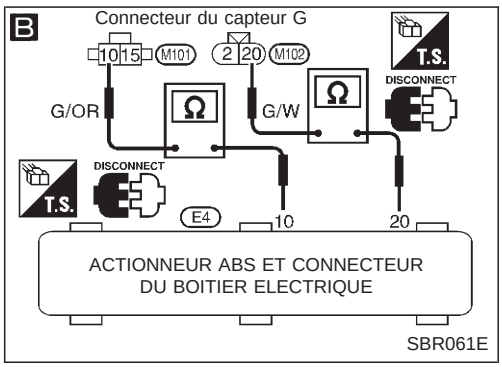

Procédure de diagnostic 5 (capteur G)

Code de panne n° 17

VERIFIER LE CIRCUIT DE L'ALIMENTATION ELECTRIQUE DU CAPTEUR G.

Vérifier le fusible 18 de 10A. Pour la disposition du fusible, se reporter au chapitre "DISPOSITION DE L'ALIMENTATION ELECTRIQUE" dans la section EL.

Mauvais → Remplacer le fusible.

Bon ↓

VERIFIER LE CONNECTEUR.

1. Débrancher l'actionneur de l'ABS et le connecteur du boîtier électrique. Vérifier les bornes pour voir s'il n'y a pas de dommages ou de connexions desserrées. Puis rebrancher le connecteur.
2. Effectuer de nouveau l'autodiagnostic.
   Est-ce que la lampe témoin s'allume de nouveau ?

Non → FIN DE L'INSPECTION

Oui ↓

VERIFIER LE CAPTEUR DE G.

Se reporter à CAPTEUR G dans l'Inspection des composants électriques, BR-2028.

Mauvais → Remplacer le capteur de G.

Bon ↓

A

VERIFIER LE CIRCUIT DE L'ALIMENTATION ELECTRIQUE DU CAPTEUR G.

1. Débrancher le connecteur du capteur G.
2. Vérifier la tension entre les bornes (2), (15) des connecteurs (côté carrosserie) (M101), (M102) du capteur G et la masse.
   Il doit y avoir tension de la batterie.

Mauvais → Vérifier les points suivants.
- Connecteurs de faisceau (M101), (M102) et (E4)
- Faisceau ouvert ou court-circuité entre le capteur G, l'actionneur de l'ABS et le boîtier électrique

Si le résultat est mauvais, réparer le faisceau ou les connecteurs.

Bon ↓

B

VERIFIER LA MASSE DU CAPTEUR G.

1. Débrancher l'actionneur de l'ABS, le connecteur du boîtier électrique et les connecteurs du capteur G.
2. Vérifier la continuité entre l'actionneur ABS et les bornes (10), (20) du connecteur (E4) du boîtier électrique (côté carrosserie) et les bornes (10), (20) des connecteurs (M101), (M102) du capteur G (côté carrosserie).
   Il doit y avoir continuité.

Mauvais → Vérifier les points suivants.
- Connecteurs de faisceau (M101), (M102) et (E4)
- Faisceau ouvert ou court-circuité entre le capteur G, l'actionneur de l'ABS et le boîtier électrique

Si le résultat est mauvais, réparer le faisceau ou les connecteurs.

Bon ↓

VERIFIER LE CONNECTEUR DE FAISCEAU.

Vérifier si l'actionneur de l'ABS et les bornes à broche du boîtier électrique ne sont pas endommagés ou si les raccords de l'actionneur de l'ABS et du connecteur du faisceau du boîtier électrique sont correctement branchés. Rebrancher l'actionneur de l'ABS et le connecteur du faisceau du boîtier électrique. Puis tester à nouveau.

Simpo PDF Merge and Split Unregistered Version - http://www.simpopdf.com

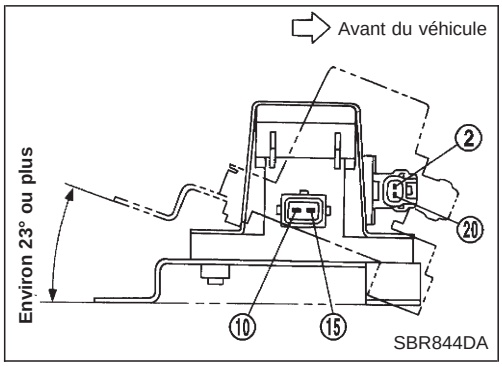

Procédure de diagnostic 5 (capteur G) (suite)

INSPECTION DES COMPOSANTS ELECTRIQUES

Capteur G

PRECAUTION :

Le capteur G est facilement abîmé s'il subit un impact. Veiller à ne pas le faire tomber ou le cogner.

1. Calculer la résistance entre les bornes ⑩ et ⑮ du connecteur de l'unité du capteur G.

Position du capteur G	Résistance entre les bornes ⑩ et ⑮	Position du contact du capteur G
Reposé dans le véhicule	1,4 - 1,6 kΩ	"ON"
Incliné comme indiqué ci-contre	4,7 - 5,5 kΩ	"OFF"

2. Calculer la résistance entre les bornes ② et ⑳ du connecteur de l'unité du capteur G.

Résistance :	70 - 124 Ω

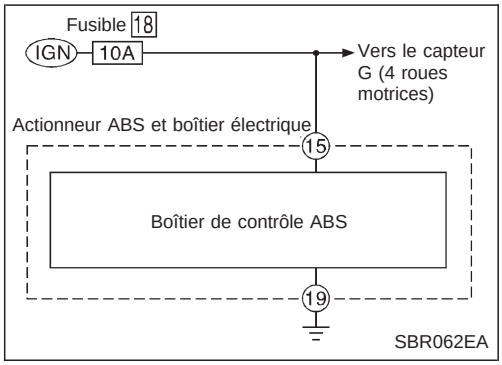

Procédure de diagnostic 6 (boîtier de contrôle)

Code de panne n° 71

VERIFIER LE CONNECTEUR.

1. Débrancher l'actionneur de l'ABS et le connecteur du boîtier électrique. Contrôler si les bornes ne sont pas endommagées ou les connexions débranchées. Puis rebrancher le connecteur.
2. Effectuer de nouveau l'autodiagnostic.
   Est-ce que la lampe témoin s'allume à nouveau ?

Non → FIN DE L'INSPECTION

Oui ↓

CONTROLE DE L'ALIMENTATION ELECTRIQUE DU BOITIER DE CONTROLE ABS

Vérifier la tension. Se reporter A à la procédure de diagnostic 4, BR-2025.

↓

VERIFIER LES RESULTATS DE L'AUTODIAGNOSTIC

Est-ce que le témoin indique à nouveau le code n° 71 ?

Oui → Remplacer l'actionneur de l'ABS et le boîtier électrique.

Non ↓

INSPECTION

Inspecter le système selon le n° de code.

Simpo PDF Merge and Split Unregistered Version - http://www.simpopdf.com

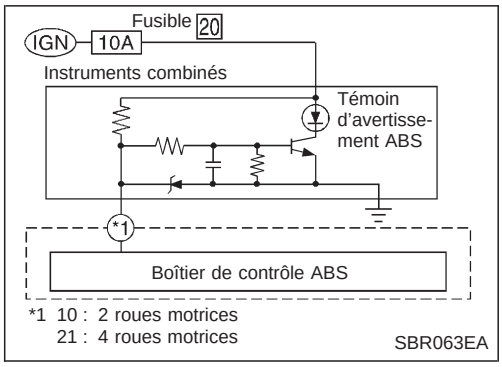

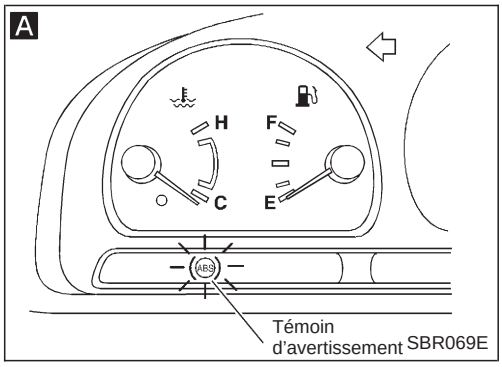

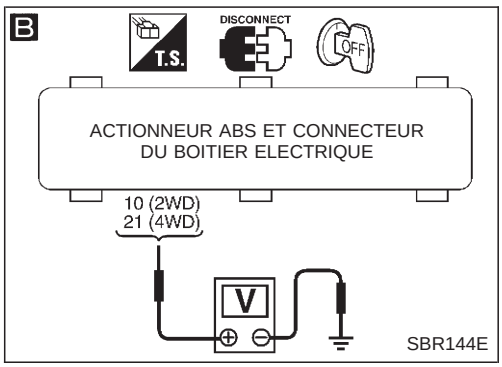

Procédure de diagnostic 12 (le témoin ne s'allume pas quand le contact d'allumage est sur ON.)

VERIFIER LE FUSIBLE.

Vérifier le fusible 20 de 10A. Pour la disposition du fusible, se reporter au chapitre ''DISPOSITION DE L'ALIMENTATION ELECTRIQUE'' dans la section EL.

Mauvais → Remplacer le fusible.

Bon ↓

A

VERIFIER SI LE TEMOIN LUMINEUX FONCTIONNE.

Débrancher l'actionneur de l'ABS et le connecteur du boîtier électrique.
La lampe témoin s'allume-t-elle ?

Oui → Ⓐ (passer à la page suivante).

No ↓

B

VERIFIER SI LE FAISCEAU N'EST PAS EN COURT-CIRCUIT.

1. Débrancher l'actionneur de l'ABS et le connecteur du boîtier électrique.
2. Vérifier la résistance entre l'actionneur de l'ABS et la borne ⑩ (2 roues motrices) ou ㉑ (4 roues motrices) du connecteur E4 (côté carrosserie) du boîtier électrique et la masse.
   Il ne doit pas y avoir tension de la batterie.

Mauvais → Réparer le faisceau ou le connecteur.

Bon ↓

VERIFIER LES INSTRUMENTS COMBINES.

Vérifier les instruments combinés. Se reporter à ''TEMOINS LUMINEUX'' dans la section EL.

Simpo PDF Merge and Split Unregistered Version - http://www.simpopdf.com

Procédure de diagnostic 12 (le témoin ne s'allume pas quand le contact d'allumage est sur ON.) (suite)

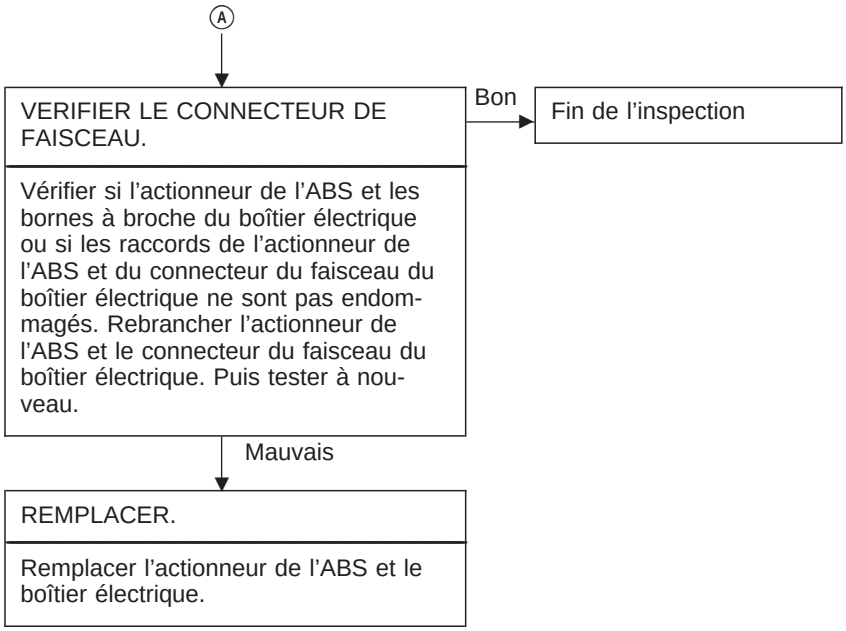

Simpo PDF Merge and Split Unregistered Version - http://www.simpopdf.com

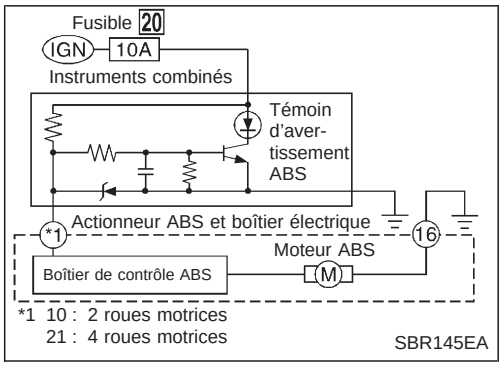

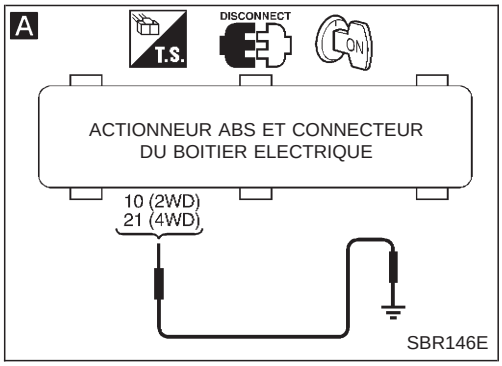

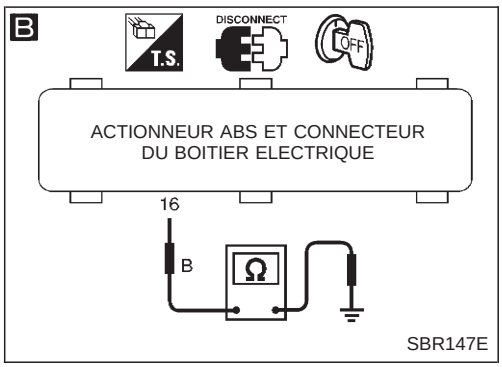

Procédure de diagnostic 13 (le témoin reste allumé lorsque le contact d'allumage est sur ON.)

A

CONTROLER LA LAMPE TEMOIN.

1. Débrancher l'actionneur de l'ABS et le connecteur du boîtier électrique.
2. Brancher le câble adéquat entre l'actionneur de l'ABS et la borne (10) (2 roues motrices) ou (21) (4 roues motrices) du connecteur (E4) (côté carrosserie) du boîtier électrique et la masse.
   Le témoin lumineux ne devrait pas fonctionner.

Mauvais → Réparer les instruments combinés. Vérifier les points suivants.
- Connecteur de faisceau (E4)
- Faisceau ouvert ou court-circuité entre l'actionneur de l'ABS, le boîtier électrique et le fusible

Si le résultat n'est pas satisfaisant, réparer le faisceau ou le connecteur.

Bon ↓

VERIFIER LE CONNECTEUR DE FAISCEAU.

Vérifier si l'actionneur de l'ABS et les bornes à broche du boîtier électrique ne sont pas endommagés ou si les raccords de l'actionneur de l'ABS et du connecteur du faisceau du boîtier électrique sont correctement branchés. Rebrancher l'actionneur de l'ABS et le connecteur du faisceau du boîtier électrique. Puis tester à nouveau.

Bon → Fin de l'inspection

Mauvais ↓

B

VERIFIER LA MISE A LA MASSE DE L'ABS.

1. Mettre le contact d'allumage sur "OFF".
2. Débrancher l'actionneur de l'ABS et le connecteur du boîtier électrique.
3. Vérifier la continuité entre l'actionneur de l'ABS et la borne (16) du connecteur (E4) du boîtier électrique (côté carrosserie) et la masse.
   Il doit y avoir continuité.

Mauvais → Vérifier les points suivants.
- Connecteur de faisceau (E4)
- Faisceau ouvert ou court-circuité entre l'actionneur de l'ABS, le boîtier électrique et la masse

Si le résultat n'est pas satisfaisant, réparer le faisceau ou le connecteur.

Bon ↓

REMPLACER.

Remplacer l'actionneur de l'ABS et le boîtier électrique.

Simpo PDF Merge and Split Unregistered Version - http://www.simpopdf.com

Caractéristiques générales

MODELES A 2 ROUES MOTRICES

Destination	Europe	
Modèle concerné	Avec ABS	Sans ABS
Frein avant		
Type	Frein à disque CL28VD	
Diamètre d'alésage du cylindre mm	42,8 x 2	
Dimension des plaquettes Longueur x largeur x épaisseur mm	146,6 x 48,5 x 10,0	
Diamètre extérieur du rotor x épaisseur mm	260 x 26	
Frein arrière		
Type	Frein à tambour LT26B	
Diamètre d'alésage du cylindre de roue mm	23,81	
Dimension de la garniture Longueur x largeur x épaisseur mm	249,6 x 50 x 5,5	
Diamètre intérieur du tambour mm	260	
Diamètre d'alésage du maître-cylindre mm	25,4	23,81
Vanne de commande		
Type	LSV (compensateur asservi)	
Point de rupture x rapport de réduction kPa (bar, kg/cm^2)	(Variable) x 0,15	
Assistance de frein		
Modèle	M195T	
Diamètre du diaphragme mm	Primaire : 205 Secondaire : 180	
Liquide de frein recommandé	DOT 4*	

* Ne jamais mélanger DOT 3 et DOT 4 (DOT 3 est rempli en atelier).

MODELES A 4 ROUES MOTRICES

Destination	Europe
Modèle concerné	Tous
Frein avant	
Type	Frein à disque CL28VD
Diamètre d'alésage du cylindre mm	42,8 x 2
Dimension des plaquettes Longueur x largeur x épaisseur mm	146,6 x 48,5 x 10
Diamètre extérieur du rotor x épaisseur mm	277 x 26
Frein arrière	
Type	Frein à tambour LT30A
Diamètre d'alésage du cylindre de roue mm	22,22
Dimension de la garniture Longueur x largeur x épaisseur mm	296,0 x 50,0 x 6,1
Diamètre intérieur du tambour mm	295
Diamètre d'alésage du maître-cylindre mm	23,81
Vanne de commande	
Type	LSV (compensateur asservi)
Point de rupture x rapport de réduction kPa (bar, kg/cm^2)	(Variable) x 0,15
Assistance de frein	
Modèle	M215T
Diamètre du diaphragme mm	Primaire : 230 Secondaire : 205
Liquide de frein recommandé	DOT 4*

* Ne jamais mélanger DOT 3 et DOT 4 (DOT 3 est rempli en atelier).

Simpo PDF Merge and Split Unregistered Version - http://www.simpopdf.com

<SUPPLEMENT-II>

CARROSSERIE ET GARNITURE

SECTION BT

AVIS DE MODIFICATION :

- Le tableau de bord a été modifié.
- La garniture latérale de la carrosserie a été changée.
- Le revêtement de plafond a été changé.
- Un strapontin a été ajouté.
- Une fonction anti-pincement a été ajoutée à la vitre conducteur.

TABLE DES MATIERES

PRECAUTIONS 2002
''COUSSIN GONFLABLE'' et ''PRETENSIONNEUR DE CEINTURE DE SECURITE'' du système de retenue supplémentaire (SRS) 2002
PORTES 2003
Réglage de l'interrupteur de limite de porte avant (côté conducteur seulement) 2003
TABLEAU DE BORD 2004
GARNITURE INTERIEURE 2007
Garniture latérale et garniture de plancher 2007
Garniture de toit 2010
SIEGES 2012
Strapontin - Modèle à grande cabine 2012

Simpo PDF Merge and Split Unregistered Version - http://www.simpopdf.com

‘‘COUSSIN GONFLABLE’’ et ‘‘PRETENSIONNEUR DE CEINTURE DE SECURITE’’ du système de retenue supplémentaire (SRS)

Utilisé conjointement avec une ceinture de sécurité, les systèmes de retenue supplémentaire tels que le ‘‘COUSSIN GONFLABLE’’ et le ‘‘PRETENSIONNEUR DE CEINTURE DE SECURITE’’ permettent de réduire les risques de blessures graves subies par le conducteur et le passager avant lors de collisions frontales. La composition du système de retenue supplémentaire disponible sur le MODELE D22 NISSAN est la suivante (la composition variera en fonction de la destination et de l’équipement optionnel) :
Un module de coussin gonflable côté conducteur (situé dans le moyeu du volant), un module de coussin gonflable côté passager avant (situé sur le tableau de bord, côté passager), un prétensionneur de ceintures de sécurité, un boîtier de capteurs de diagnostic, un témoin avertisseur, un faisceau de câblage et un câble spiralé.
Toute information nécessaire à l’entretien du système en toute sécurité est comprise dans le **section RS** de ce Manuel de Réparation.

ATTENTION :

- **Pour ne pas affecter le fonctionnement du SRS, ce qui augmenterait les risques de blessures graves ou mortelles en cas de collision entraînant le déploiement du coussin gonflable, toutes les opérations d’entretien doivent être effectuées par un concessionnaire NISSAN agréé.**
- **Un entretien incorrect, y compris une dépose et une repose incorrectes du système de retenue supplémentaire, peut être à l’origine de blessures provoquées par une activation involontaire du système. Pour la dépose du câble spiralé et du module de coussin gonflable, se reporter à la section RS.**
- **Ne pas utiliser d’équipement d’essai électrique sur les circuits connexes du SRS sauf si indiqué dans le Manuel de Réparation. Le câble spiralé et les faisceaux de câblage (à l’exception du ‘‘PRETENSIONNEUR DE CEINTURE DE SECURITE’’) recouverts d’une gaine d’isolation jaune placée juste avant les connecteurs de faisceau ou couvrant l’ensemble du faisceau sont reliés au SRS.**

Simpo PDF Merge and Split Unregistered Version - http://www.simpopdf.com

Réglage de l'interrupteur de limite de porte avant (côté conducteur seulement)

CONDITIONS DE REGLAGE

Après avoir effectué chacune des opérations suivantes, régler l'interrupteur de limite (avec moteur intégré).

- Dépose et repose du régulateur
- Dépose du moteur de régulateur
- Fonctionnement du régulateur comme un ensemble indépendant
- Dépose et repose de la vitre de la porte
- Dépose et repose de la glissière

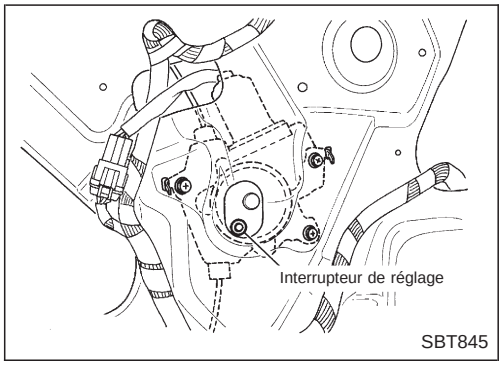

PROCEDURES DE REGLAGE

Après la repose des pièces, proceder comme suit :

1. Fermer la vitre complètement.
2. Appuyer sur l'interrupteur de réglage et ouvrir complètement la vitre.
3. Relâcher l'interrupteur de réglage. Après s'être assurer que l'interrupteur de réglage est revenu à sa position initiale, fermer la vitre complètement.
4. L'interrupteur de limite est desormais réglé.

PRECAUTION :

Faire attention d'ouvrir et de fermer manuellement la fenêtre. (Ne pas utiliser les procédures d'ouvertures automatiques.)

Simpo PDF Merge and Split Unregistered Version - http://www.simpopdf.com

PRECAUTION :

- **Débrancher les deux bornes de la batterie à l'avance.**
- **Débrancher à l'avance le connecteur du module de coussin gonflable.**
- **Veiller à ne pas érafler les garnitures et autres pièces.**
- **Ne pas altérer ou forcer l'ouverture du couvercle du coussin gonflable pour ne pas affecter les performances du coussin gonflable.**

DEPOSE — Tableau de bord

Tableau de bord	Instruments combinés	Commande audio	Chauffage et commande de C/A

Déposer le module de coussin gonflable côté conducteur et le volant de direction.
Se reporter à ''SYSTEME DE RETENUE SUPPLEMENTAIRE'' à la section RS pour plus de détails.

Incliner complètement la colonne de direction vers le bas

1. Couvercle de colonne de direction
   - Déposer les vis.
2. Tableau de bord inférieur côté conducteur. — A
   - Déposer les vis et boulons.
3. Couvercle de tableau de bord A — B
   - Déposer les vis.
4. Instruments combinés
   - Déposer les vis puis déconnecter les connecteurs de faisceau.
5. Ensemble de boîte à gants
   - Déposer les vis.
   - Puis débrancher le connecteur de module de coussin gonflable côté passager.
   - Puis enlever le support de module de coussin gonflable de passager.
     Se reporter à ''SYSTEME DE RETENUE SUPPLEMENTAIRE'' à la section RS pour plus de détails.
6. Déposer le cendrier.
7. Couvercle de tableau de bord C — C
   - Déposer les vis puis déconnecter les connecteurs de faisceau.
8. Système audio et magnétocassette de poche
   - Déposer les vis puis déconnecter les connecteurs de faisceau.
9. Chauffage et commande de C/A
   - Débrancher le câble de commande de la température et les connecteurs de faisceau.
10. Centre inférieur du couvercle de support de tableau de bord — D
    - Déposer les vis.
11. Grille de ventilateur côté conducteur — E
12. Grille de dégivreur — F

Déposer la garniture du montant avant.
Se reporter à l'Garniture latérale et garniture de plancher'' dans le chapître ''GARNITURE INTERIEURE'' pour plus de détails, BT-2007.

13. Tableau de bord
    - Déposer les vis et boulons.
14. Conduit d'air coté passager
    - Déposer les vis.
15. Module de coussin gonflable passager
    - Se reporter à ''SYSTEME DE RETENUE SUPPLEMENTAIRE'' à la section RS pour plus de détails.

Simpo PDF Merge and Split Unregistered Version - http://www.simpopdf.com

SEC. 272•280•680•685

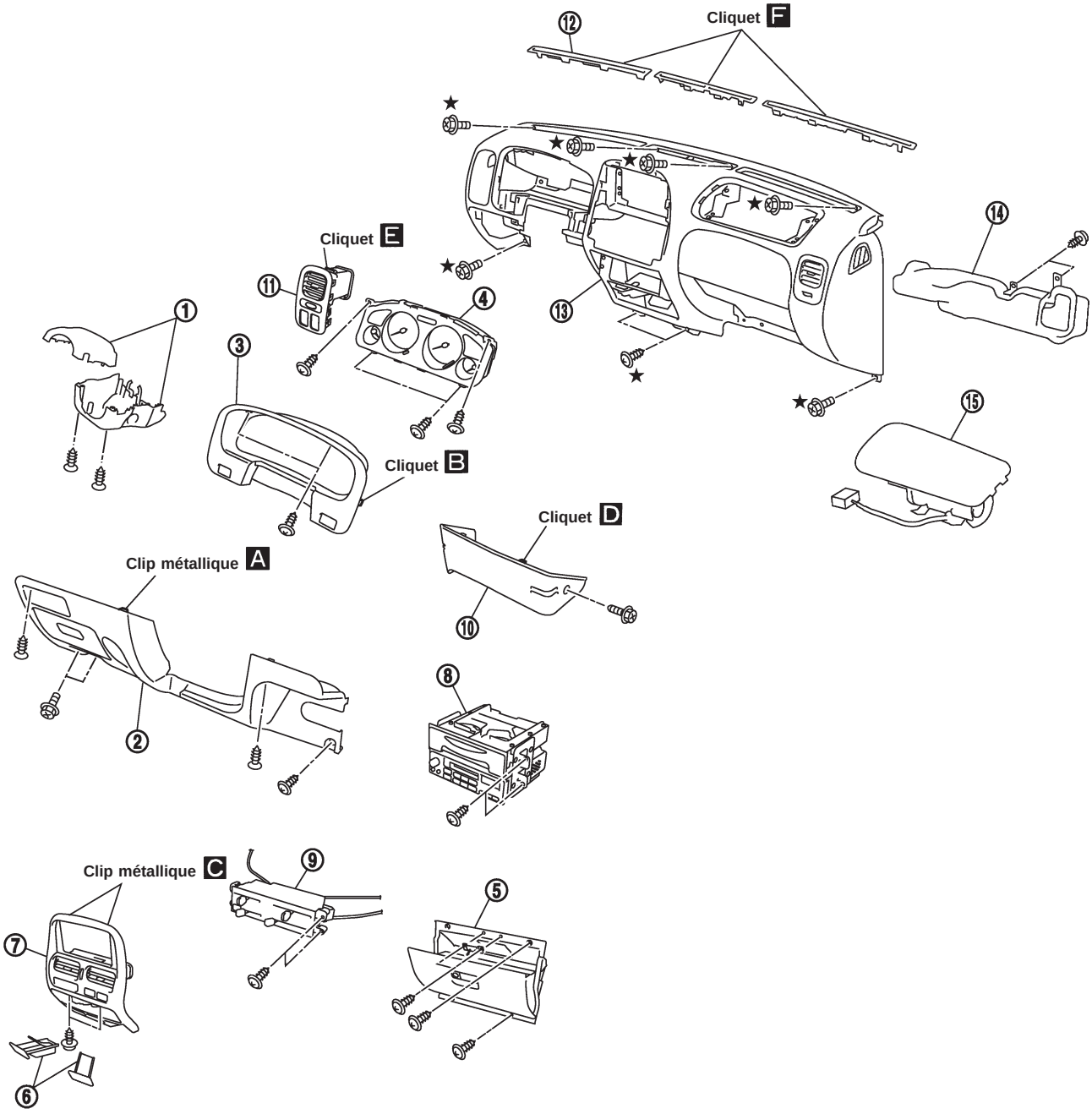

★ : Boulons et vis de montage du tableau de bord

SBT830

Simpo PDF Merge and Split Unregistered Version - http://www.simpopdf.com

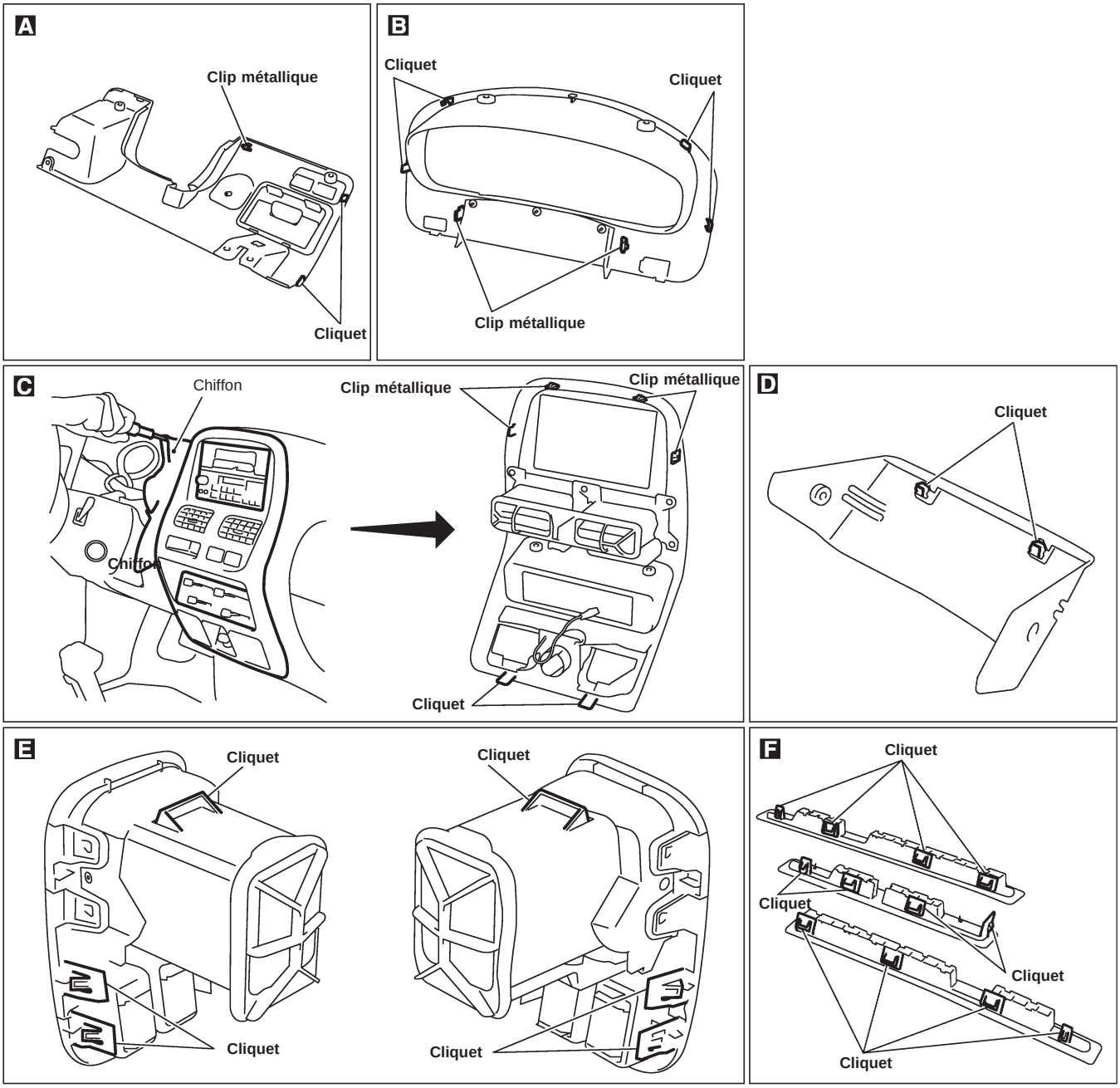

SBT831

Simpo PDF Merge and Split Unregistered Version - http://www.simpopdf.com

Garniture latérale et garniture de plancher

PRECAUTION :
Envelopper le bout du tournevis à lame plate avec un chiffon lors de la dépose des clips en métal des garnitures.

DEPOSE — Garniture latérale de carrosserie

① Déposer les sièges avant et arrière. Se reporter à ‘‘SIEGES’’ pour plus de détails, à la section BT de ce Manuel de Réparation. Publication N°SM8F-0D22E0E.
② Déposer les ceintures de sécurité avant et arrière. Se reporter à ‘‘CEINTURES DE SECURITE’’ à la section RS pour plus de détails.
③ Déposer le marchepied avant et arrière.
④ Déposer les garnitures inférieures latérales du tableau de bord. B
⑤ Déposer les plis latéraux de carrosserie avant et arrière.
⑥ Déposer les garnitures du montant avant. C
⑦ Déposer les garnitures inférieures de montant central. D
⑧ Déposer les garnitures supérieures de montant central. E
⑨ Déposer les garnitures du montant à serrure. F

Simpo PDF Merge and Split Unregistered Version - http://www.simpopdf.com

Garniture latérale et garniture de plancher (suite)

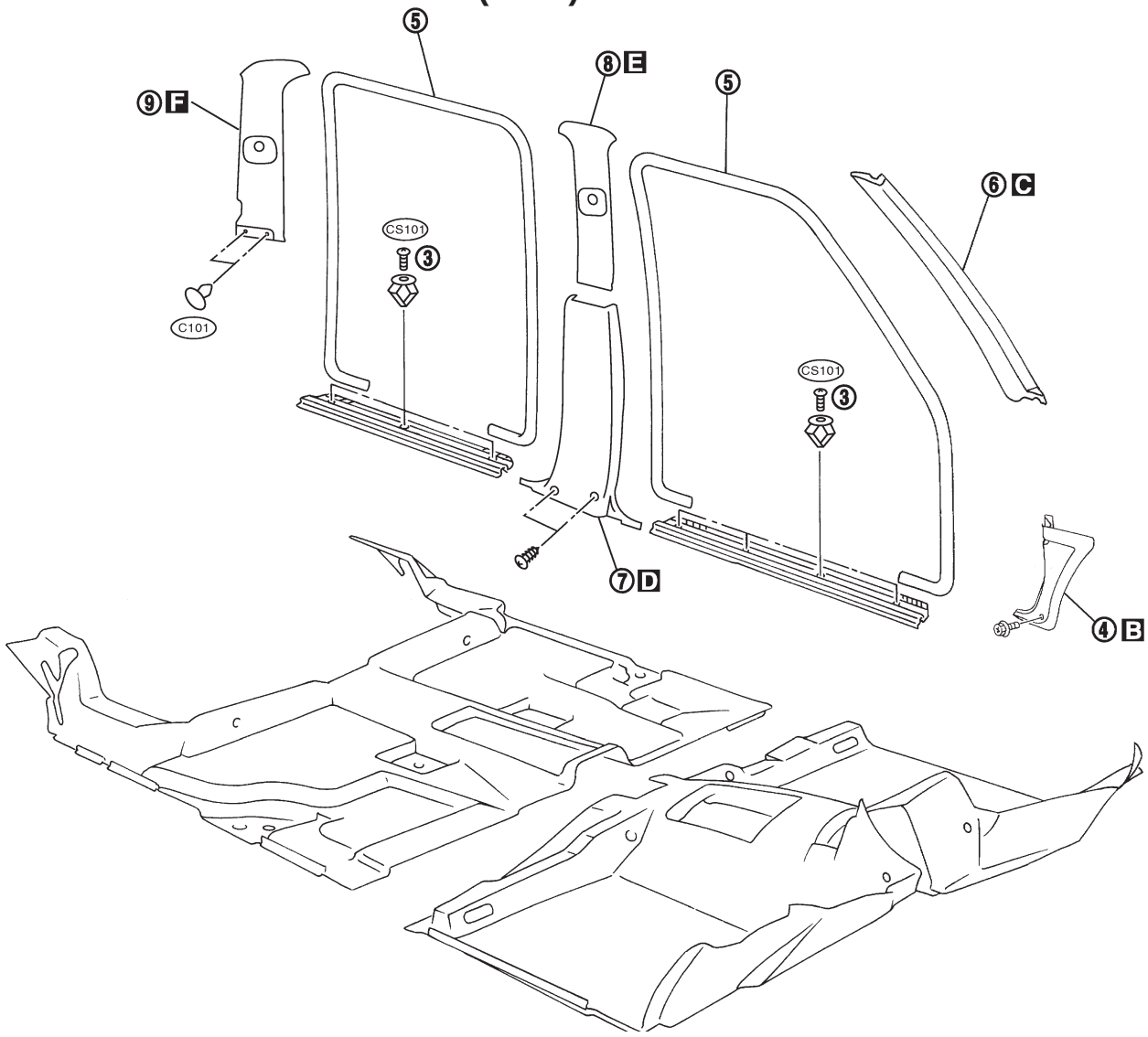

SBT832

Simpo PDF Merge and Split Unregistered Version - http://www.simpopdf.com

Garniture latérale et garniture de plancher (suite)

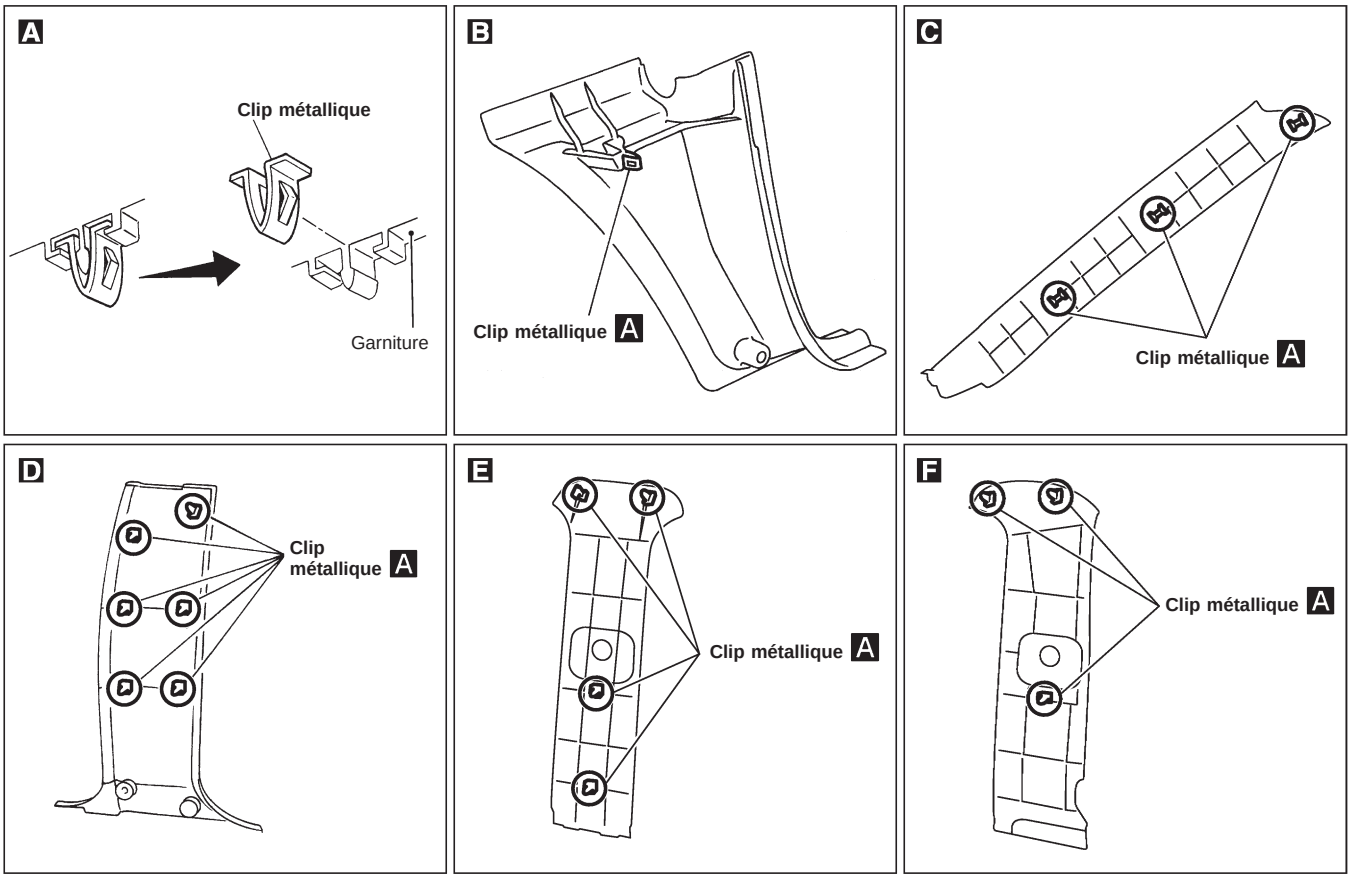

SBT833

Simpo PDF Merge and Split Unregistered Version - http://www.simpopdf.com

Garniture de toit

DEPOSE — Revêtement du plafond

① Déposer les sièges avant et arrière. Se reporter à ‘‘SIEGES’’ pour plus de détails, à la section BT de ce Manuel de Réparation. Publication N°SM8F-0D22E0E.
② Déposer les ceintures de sécurité avant et arrière. Se reporter à ‘‘CEINTURES DE SECURITE’’ à la section RS pour plus de détails.
③ Déposer la garniture latérale de carrosserie. Se reporter à ‘‘Garniture latérale et garniture de plancher’’ pour plus détails, BT-2007.
④ Déposer les pare-soleil.
⑤ Déposer l’ensemble de l’éclairage auxiliaire.
⑥ Déposer le rétroviseur intérieur.
⑦ Déposer l’ensemble de lampe de plafonnier. A
⑧ Déposer les poignées de maintien.
⑨ Déposer le bourrelet de lunette arrière et déposer la vitre de lunette arrière. B
⑩ Déposer les clips, puis enlever le revêtement.

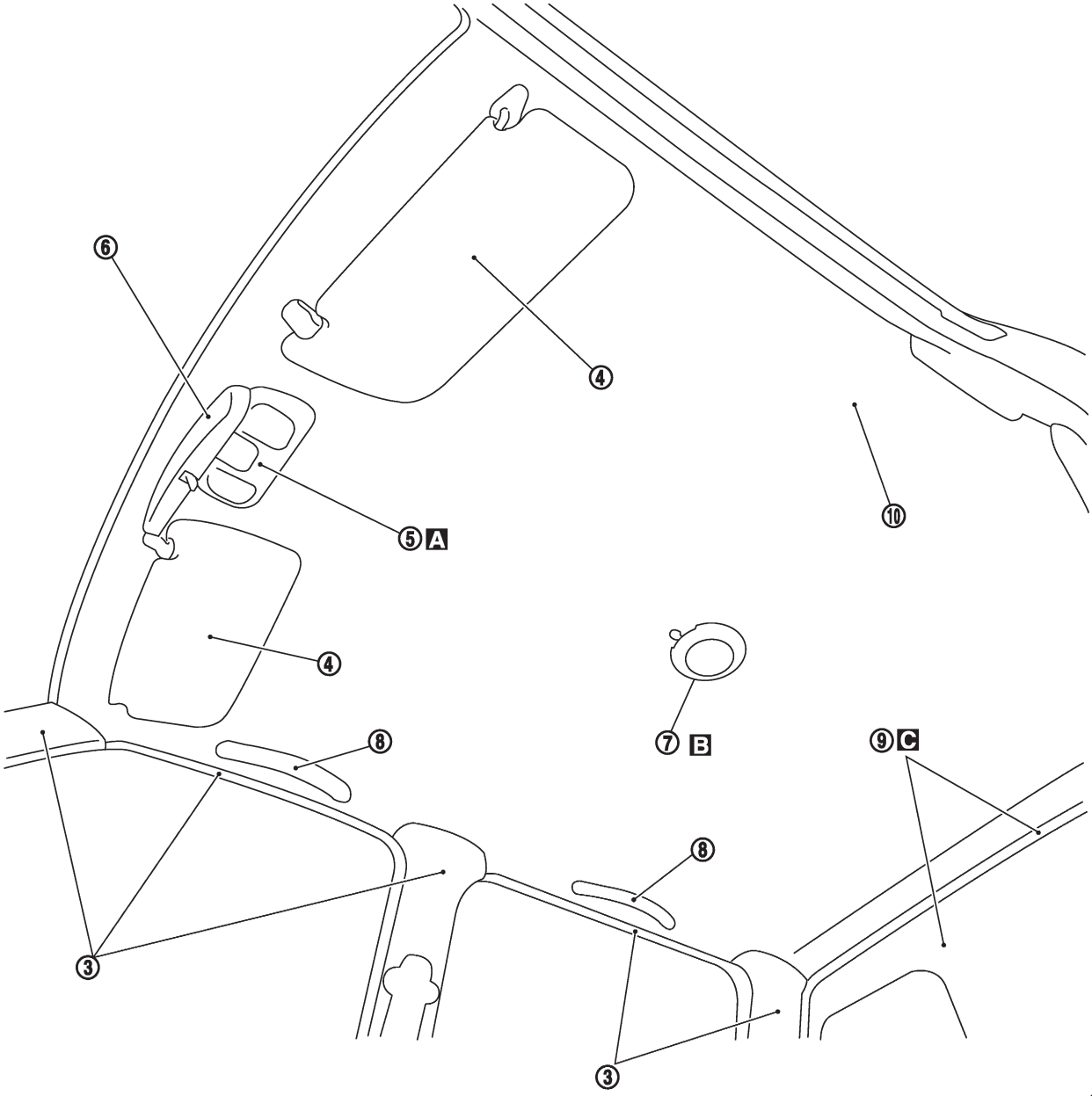

SBT834

Simpo PDF Merge and Split Unregistered Version - http://www.simpopdf.com

Garniture de toit (suite)

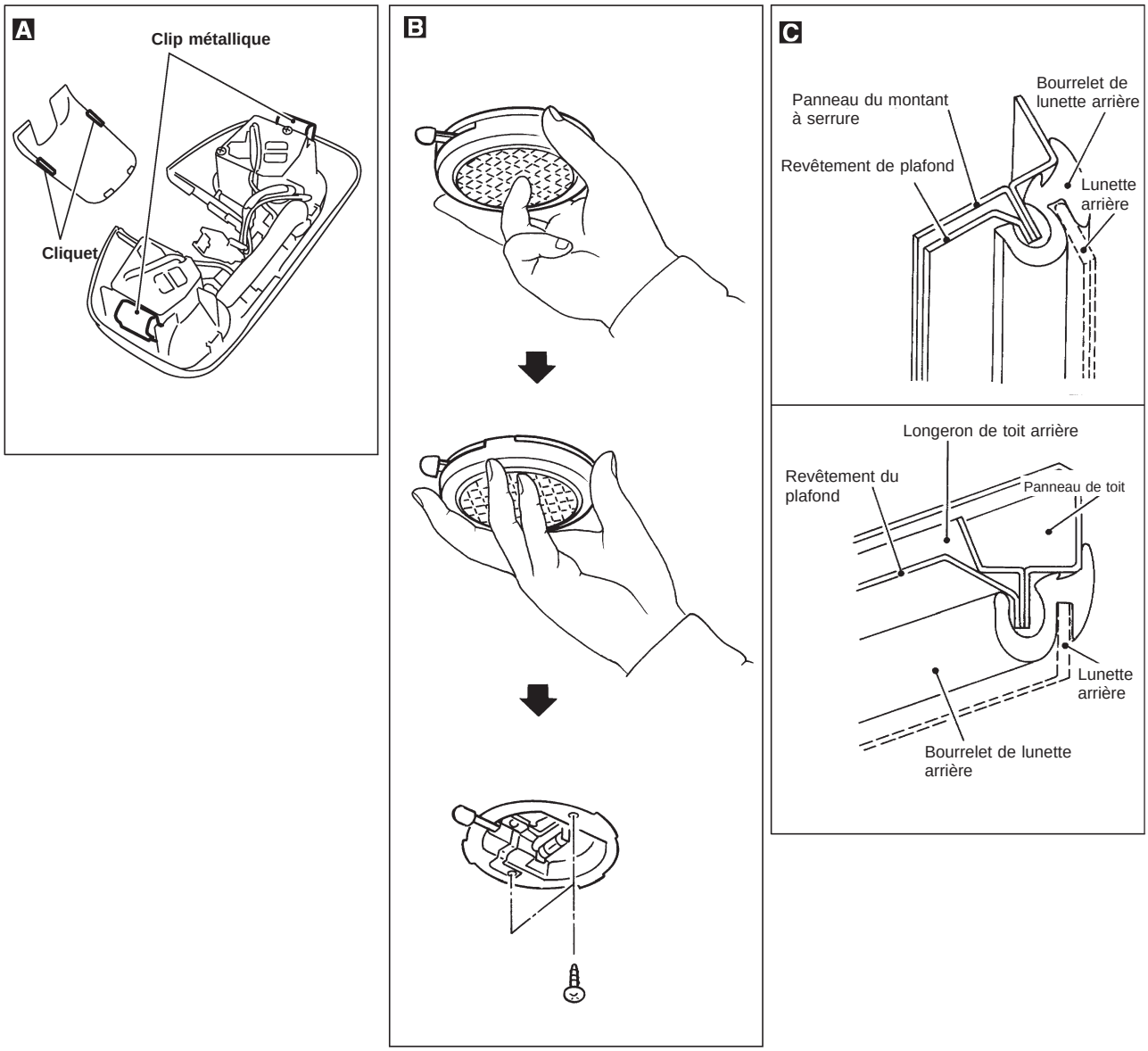

SBT835

Simpo PDF Merge and Split Unregistered Version - http://www.simpopdf.com

Strapontin — Modèle à grande cabine

SEC. 880

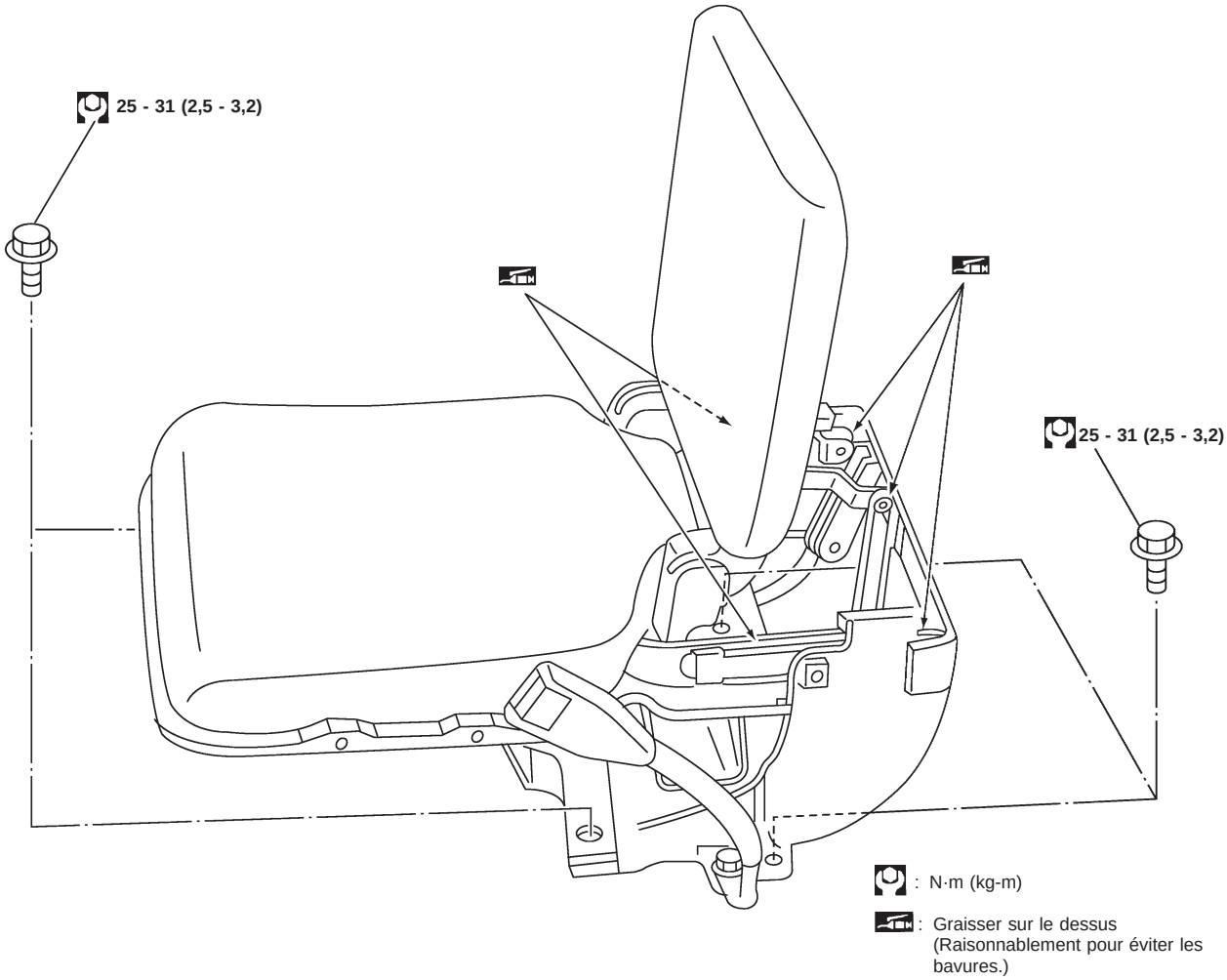

SBT836

Simpo PDF Merge and Split Unregistered Version - http://www.simpopdf.com

<SUPPLEMENT-II>

SYSTEME DE GESTION DU MOTEUR

SECTION EC

AVIS DE MODIFICATION :

Moteur à essence

Moteur diesel

- **Les schémas de câblage ont été modifiés.**

TABLE DES MATIERES

PRECAUTIONS ET PREPARATION 2003
''COUSSIN GONFLABLE'' (AIR BAG) et ''PRETENSIONNEUR DE CEINTURE DE SECURITE'' du système de retenue supplémentaire (SRS) 2003

KA24E

SYSTEME ENTIER DE COMMANDE DU MOTEUR ET DE CONTROLE ANTIPOLLUTION 2004
Schéma du circuit 2004
DIAGNOSTIC DES DEFAUTS POUR L'ALIMENTATION ELECTRIQUE 2005
Alimentation électrique principale et circuit de mise à la masse 2005
DIAGNOSTIC DES DEFAUTS DU ''CAP POS ARB CAM'' (DTC 11) 2007
Capteur d'angle d'arbre à cames (CMPS) 2007
DIAGNOSTIC DES DEFAUTS DU ''DEBITMETRE D'AIR'' (DTC 12) 2008
Débitmètre d'air (MAFS) 2008
DIAGNOSTIC DES DEFAUTS POUR ELEMENTS NON DETECTABLES 2009
Capteur de vitesse du véhicule (VSS) 2009
Sonde à oxygène chauffée (HO2S) - Conduite à gauche - 2010
Vanne de commande d'air de ralenti (IACV) - Vanne de commande d'air auxiliaire (AAC) 2011
Contact de position stationnement/point mort 2012
Electrovanne de commande de purge de cartouche EVAP 2013
Signal de démarrage 2014
Pompe d'alimentation 2015
Manocontact d'huile de direction assistée 2016
Electrovanne de contrôle de vanne de commande de tourbillon 2017
Electrovanne FICD 2018
Connecteurs du témoin (MIL) et de liaison des données 2019

TD

SYSTEME DE PRECHAUFFAGE RAPIDE 2020
Schéma du circuit 2020
Schéma de câblage 2021
SYSTEME EGR 2027
Schéma de câblage 2027
MINUTEUR DE SOLENOIDE 2031
Schéma de câblage 2031
SYSTEME DE DISPOSITIF DE CHAUFFAGE DE CARBURANT 2033
Schéma de câblage 2033
CIRCUIT DE COMMANDE DU RALENTI ACCELERE 2034
Schéma de câblage 2034

Simpo PDF Merge and Split Unregistered Version - http://www.simpopdf.com

Lecture des schémas de câblage :
- **Lire la section GI : ‘‘ COMMENT LIRE LES SCHEMAS DE CABLAGE’’**
- **Voir la section EL, ‘‘DISPOSITION DE L’ALIMENTATION ELECTRIQUE’’ pour connaître les circuits de distribution de l’alimentation électrique.**

Pour le diagnostic des pannes, lire la section GI ‘‘ COMMENT LIRE LES ORGANIGRAMMES DANS LES DIAGNOSTICS DES DEFAUTS‘ ET ‘‘COMMENT ACCOMPLIR UN DIAGNOSTIC EFFICACE EN CAS D’INCIDENT ELECTRIQUE‘

Simpo PDF Merge and Split Unregistered Version - http://www.simpopdf.com

‘‘COUSSIN GONFLABLE’’ (AIR BAG) et ‘‘PRETENSIONNEUR DE CEINTURE DE SECURITE’’ du système de retenue supplémentaire (SRS)

Utilisé conjointement avec une ceinture de sécurité, les systèmes de retenue supplémentaire tels que le ‘‘COUSSIN GONFLABLE’’ et le ‘‘PRETENSIONNEUR DE CEINTURE DE SECURITE’’ permettent de réduire les risques de blessures graves subies par le conducteur et le passager avant lors de collision frontale. La composition du système de retenue supplémentaire disponible sur le MODELE D22 NISSAN est la suivante (la composition variera en fonction de la destination et de l’équipement optionnel) :
Le système de retenue supplémentaire se compose d’un module de coussin gonflable côté conducteur (situé dans le moyeu du volant), d’un module de coussin gonflable côté passager (situé sur le tableau de bord, côté passager), de prétensionneurs de ceinture de sécurité, d’un boîtier de capteurs de diagnostic, d’un témoin d’avertissement, d’un faisceau de câblage et d’un câble spiralé.
Les informations nécessaires à l’entretien sans danger du système se trouvent à la **section RS** de ce Manuel de Réparation.

ATTENTION :

- **Afin de ne pas affecter le bon fonctionnement du SRS, ce qui augmenterait les risques de blessures graves ou mortelles en cas de collision entraînant le déploiement du coussin gonflable, toutes les opérations d’entretien devront être effectuées par un concessionnaire NISSAN agréé.**
- **Un entretien incorrect, y compris une dépose et une installation incorrectes du SRS, pourra entraîner des risques de blessures causées par le déploiement imprévu du système. Pour la dépose du câble spiralé et du module de coussin gonflable, se reporter à la section RS.**
- **Ne pas utiliser d’équipement d’essai électrique sur tout circuit connexe au SRS sauf si indiqué dans ce Manuel de Réparation. Le câble spiralé et les faisceaux de câblage (à l’exception du ‘‘PRETENSIONNEUR DE CEINTURE DE SECURITE’’) recouverts d’une gaine d’isolation jaune placée juste avant les connecteurs de faisceau ou couvrant l’ensemble du faisceau sont reliés au SRS.**

Simpo PDF Merge and Split Unregistered Version - http://www.simpopdf.com

Schéma du circuit

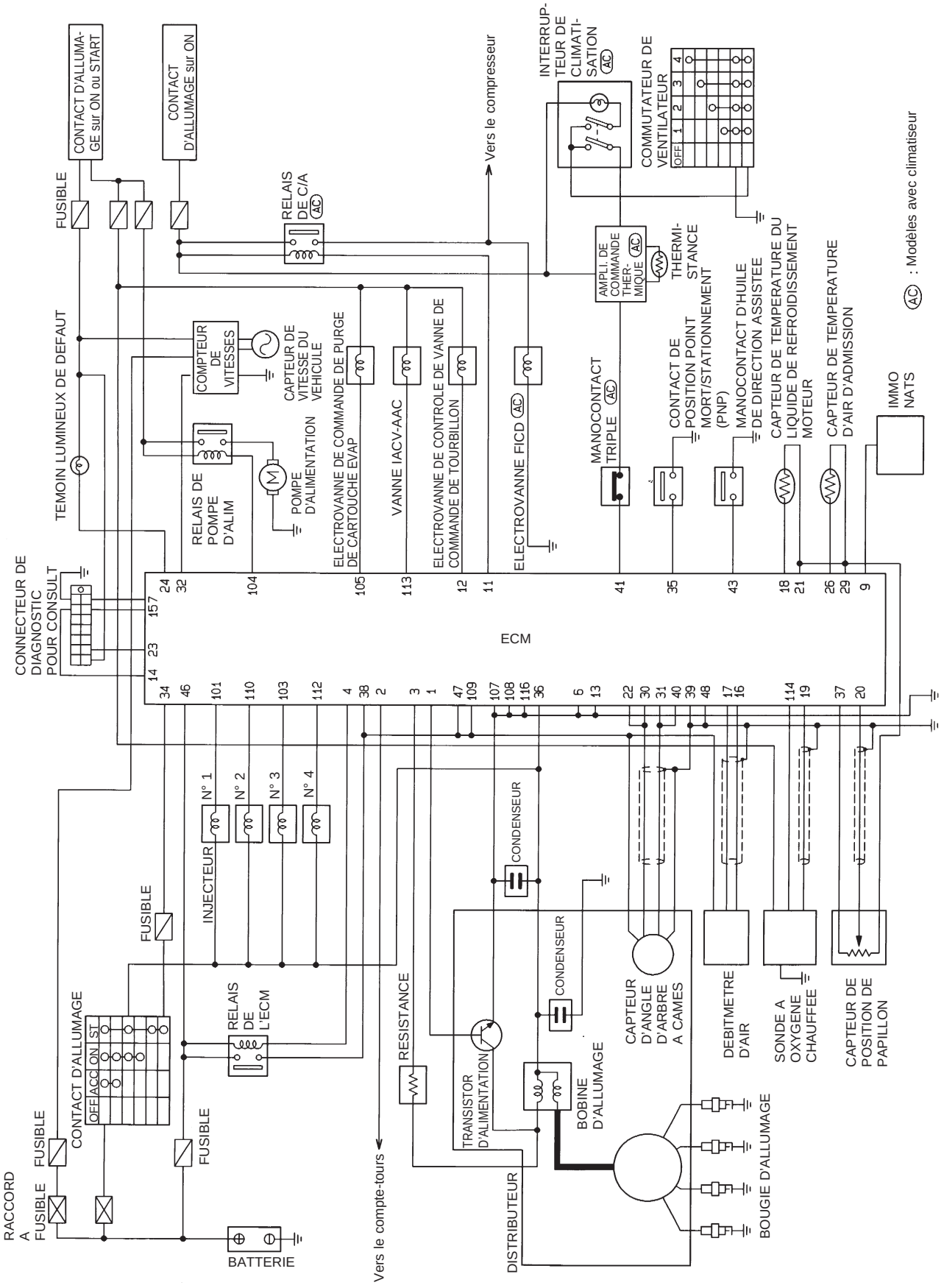

HEC631

Simpo PDF Merge and Split Unregistered Version - http://www.simpopdf.com

Alimentation électrique principale et circuit de mise à la masse

EC-MAIN-01

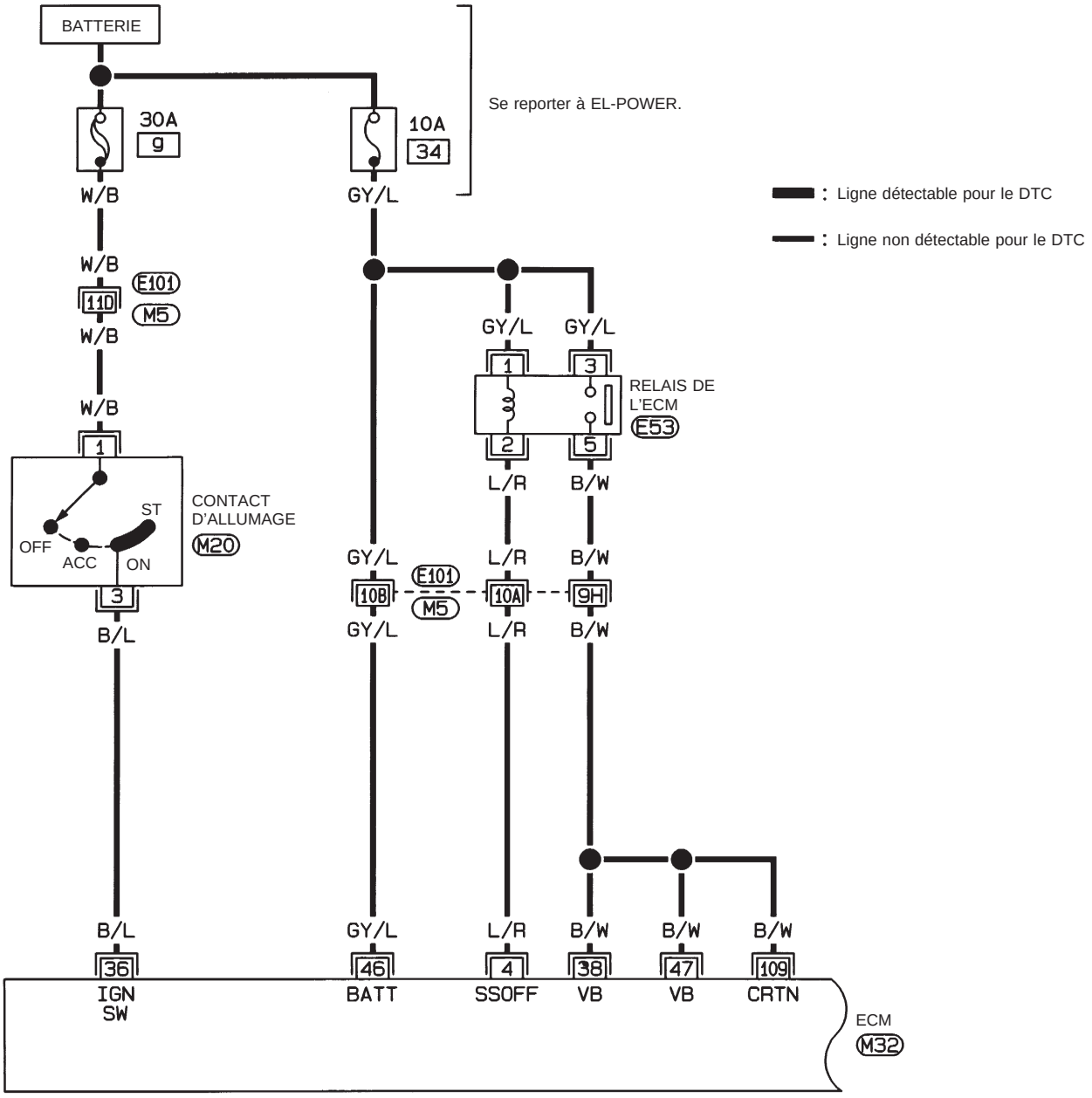



Consulter la dernière page dépliante.

M5 , E101

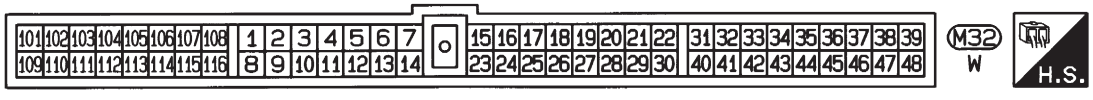

HEC632

Simpo PDF Merge and Split Unregistered Version - http://www.simpopdf.com

Alimentation électrique principale et circuit de mise à la masse (suite)

EC-MAIN-02

: Ligne détectable pour le DTC

: Ligne non détectable pour le DTC

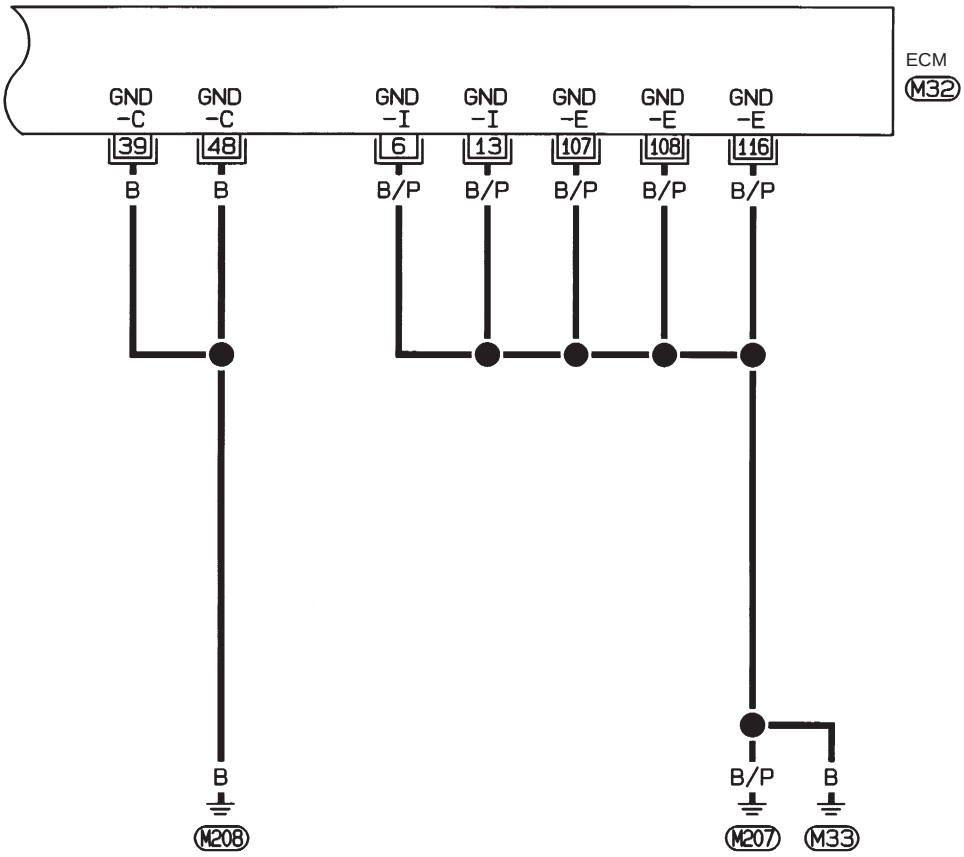

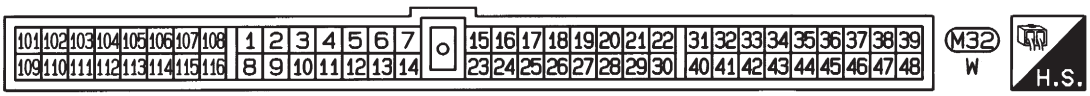

HEC633

Simpo PDF Merge and Split Unregistered Version - http://www.simpopdf.com

Capteur d'angle d'arbre à cames (CMPS)

EC-CMPS-01

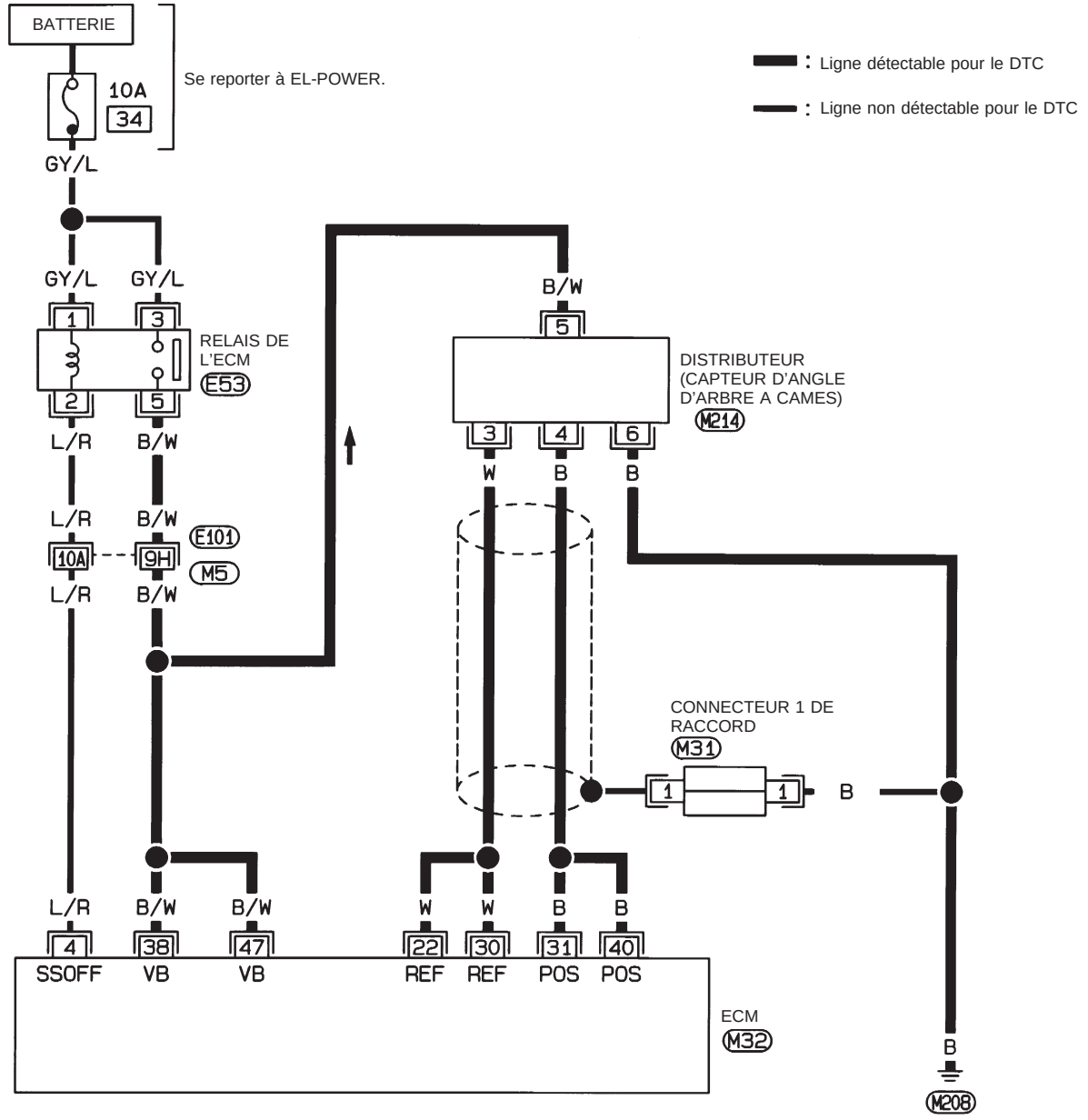

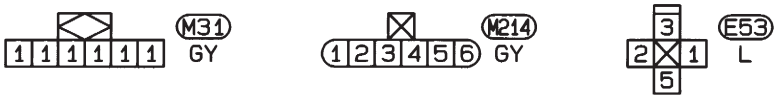

Consulter la dernière page dépliante.

M5 , E101

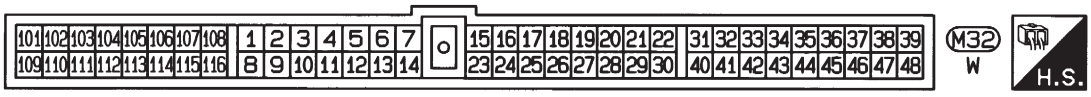

HEC634

Simpo PDF Merge and Split Unregistered Version - http://www.simpopdf.com

Débitmètre d'air (MAFS)

EC-MAFS-01

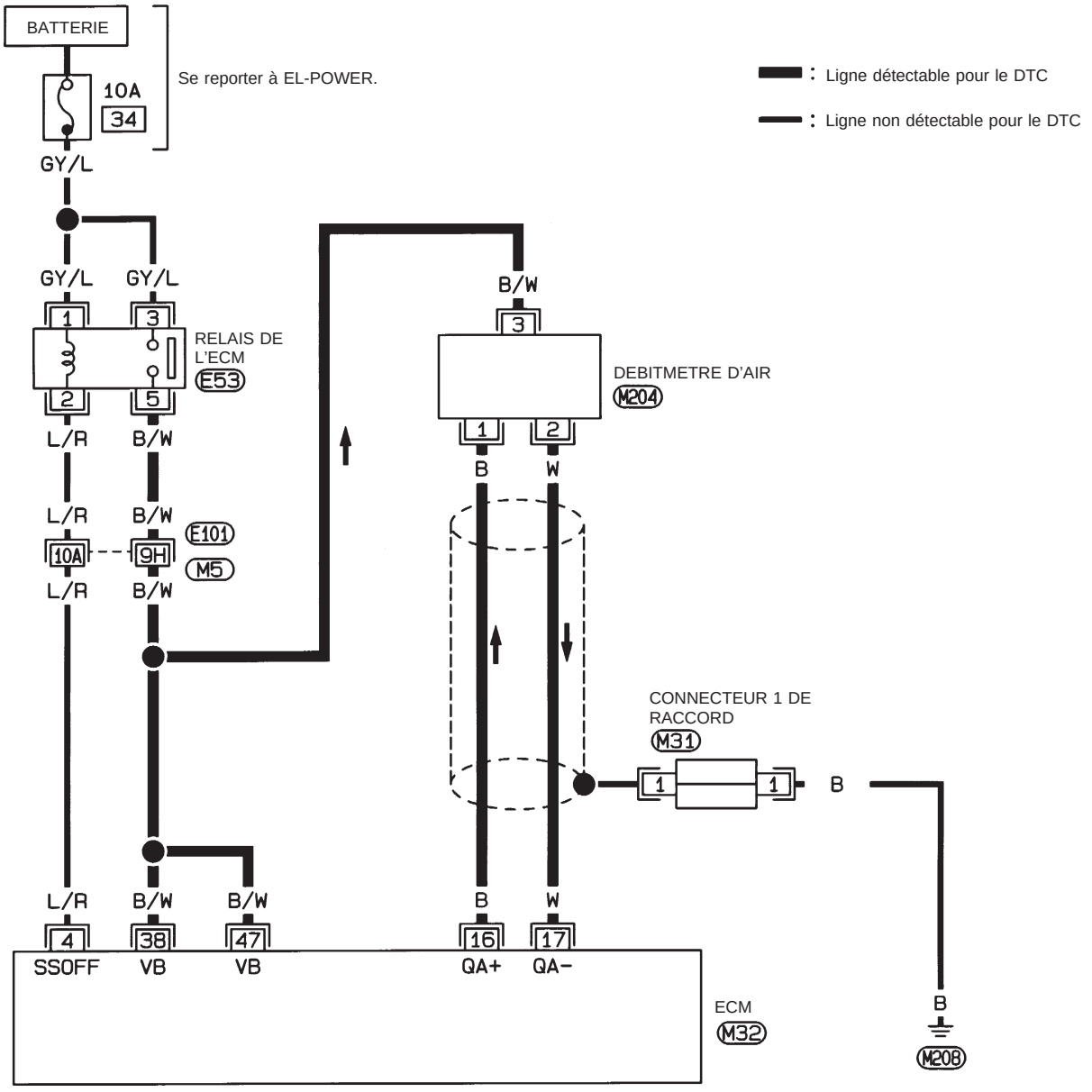





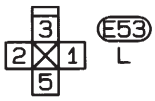

Consulter la dernière page dépliante.

M5, E101

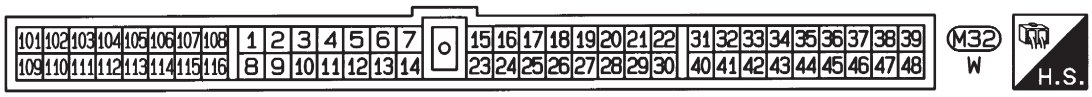

HEC635

Simpo PDF Merge and Split Unregistered Version - http://www.simpopdf.com

Capteur de vitesse du véhicule (VSS)

EC-VSS-01

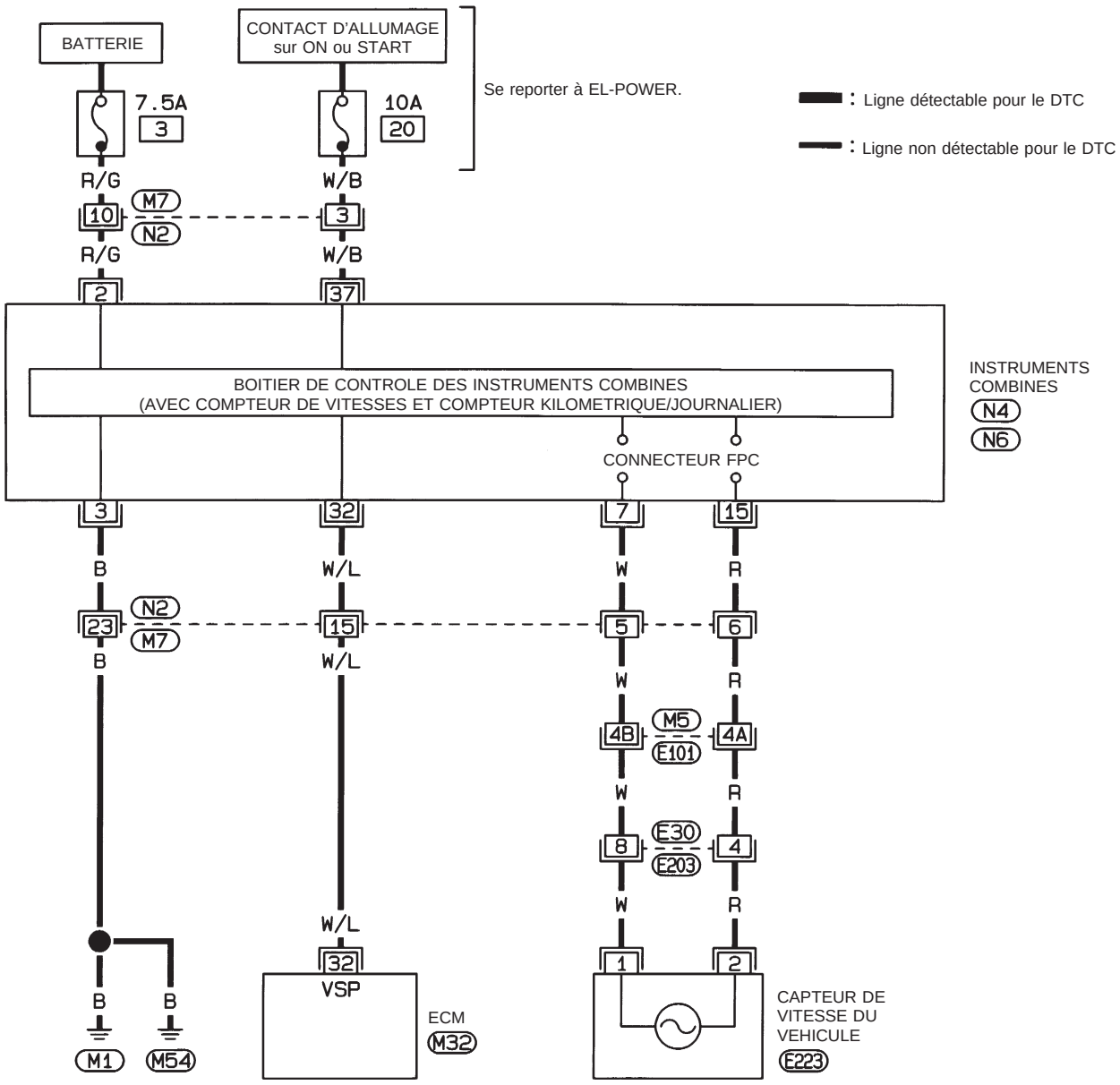

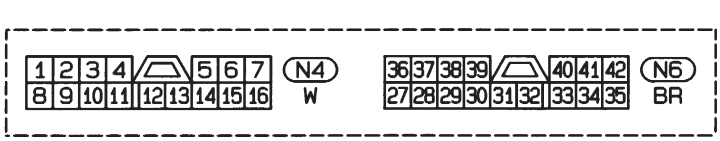

Consulter la dernière page dépliante.
M5, E101



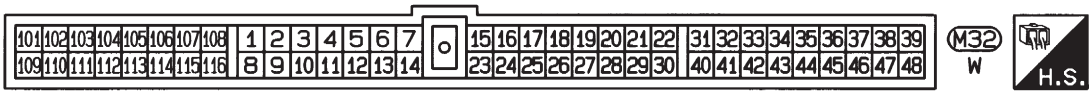

HEC636

Simpo PDF Merge and Split Unregistered Version - http://www.simpopdf.com

Sonde à oxygène chauffée (HO2S)
— Conduite à gauche —

EC-H02S-01

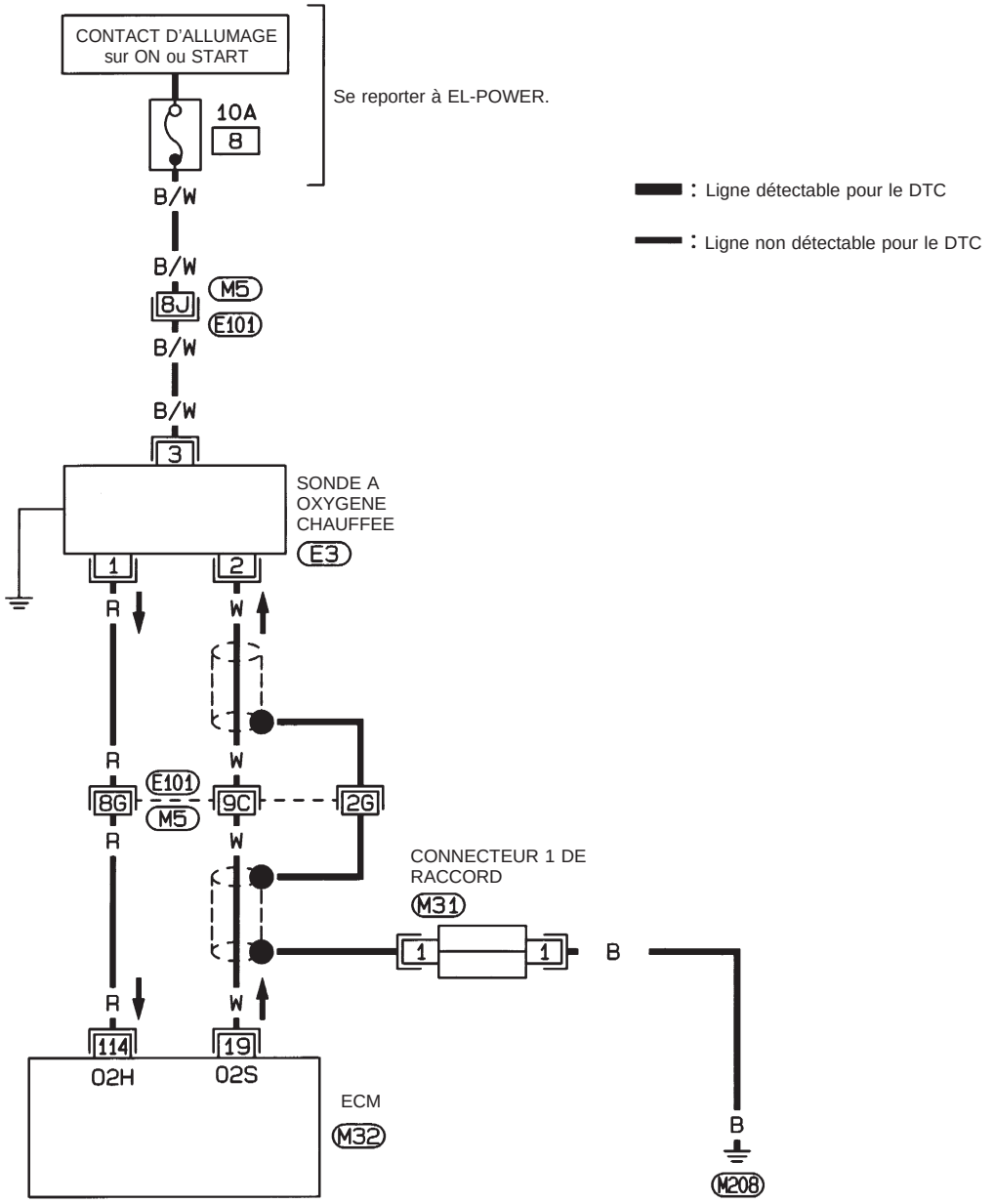



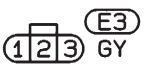

Consulter la dernière page dépliante.
M5, E101

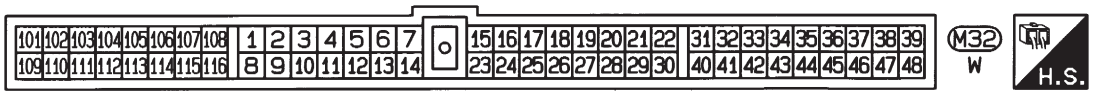

HEC637

Simpo PDF Merge and Split Unregistered Version - http://www.simpopdf.com

Vanne de commande d'air de ralenti (IACV) — Vanne de commande d'air auxiliaire (AAC)

EC-AAC/V-01

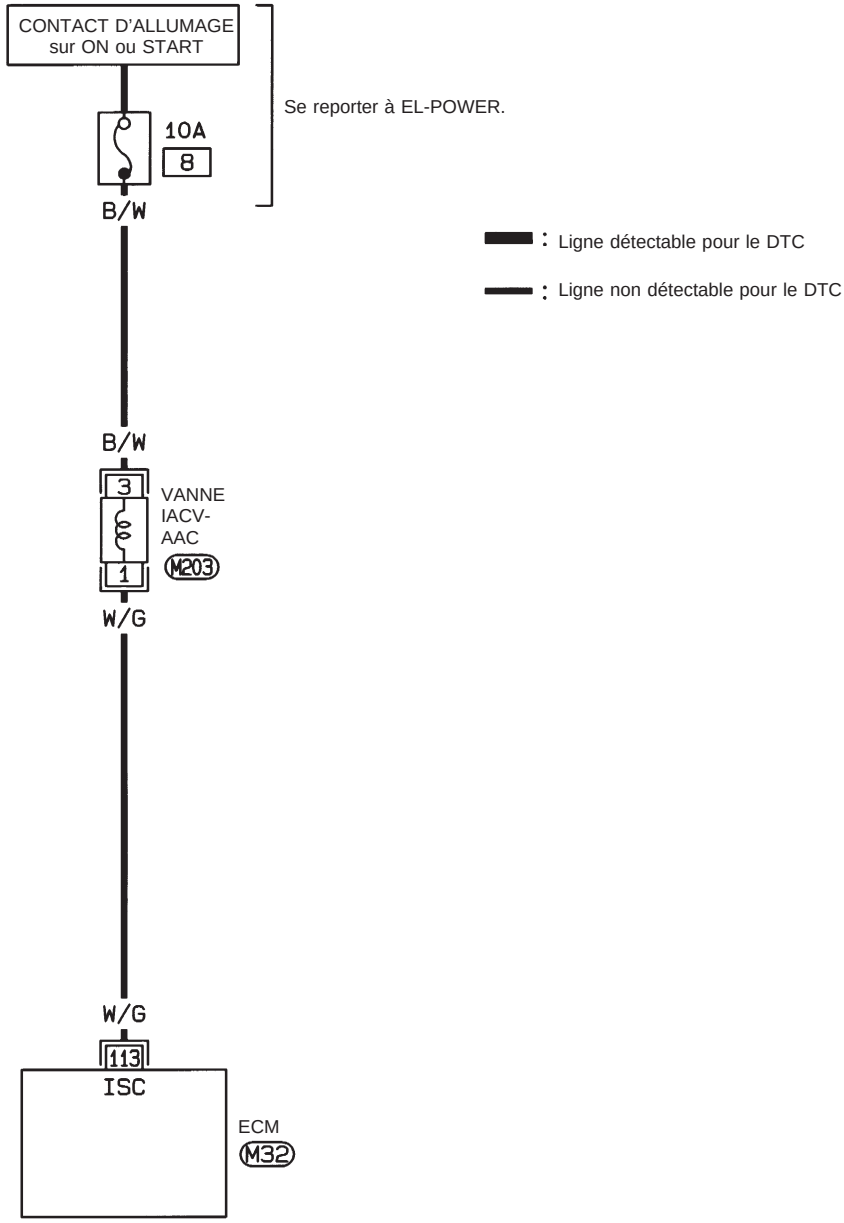



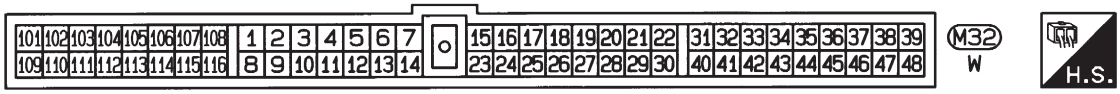

HEC638

Simpo PDF Merge and Split Unregistered Version - http://www.simpopdf.com

Contact de position stationnement/point mort

EC-PNP/SW-01

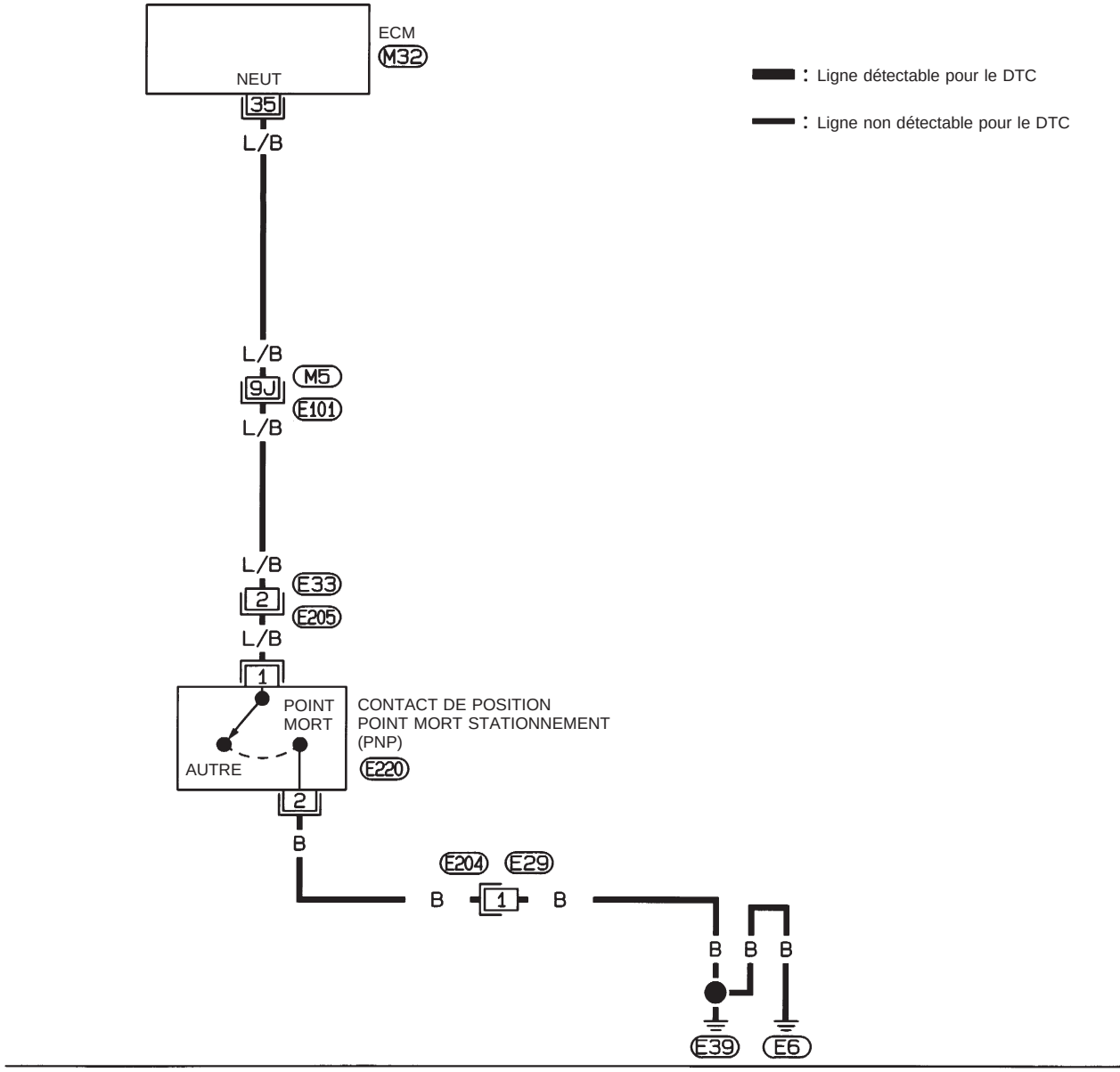

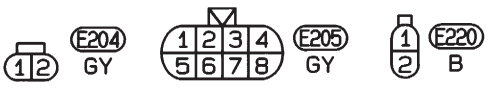

Consulter la dernière page dépliante.
M5 , E101

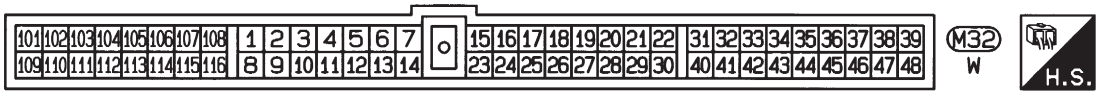

HEC639

Simpo PDF Merge and Split Unregistered Version - http://www.simpopdf.com

Electrovanne de commande de purge de cartouche EVAP

EC-PGC/V-01

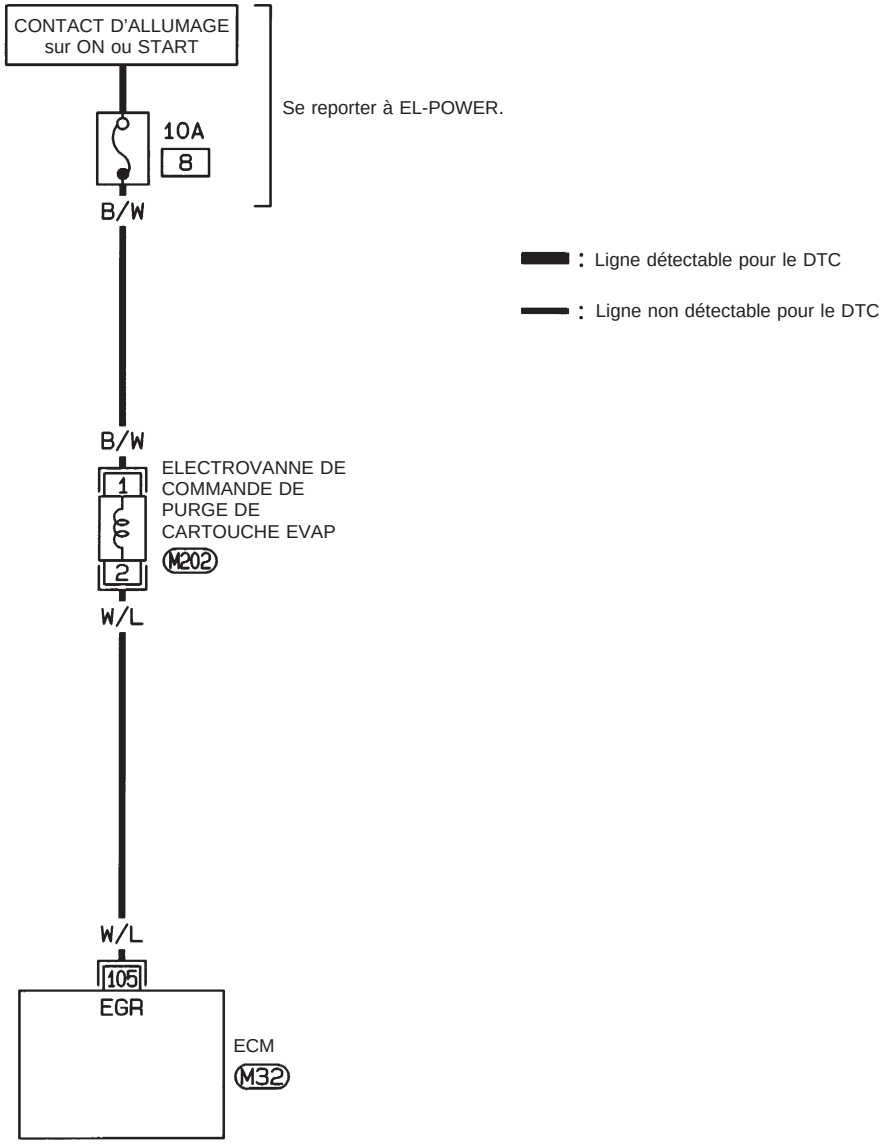



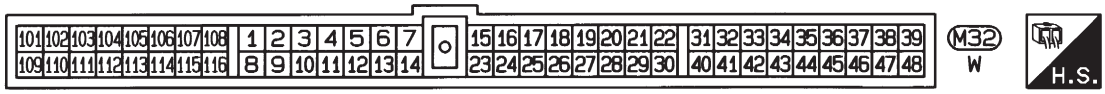

HEC640

Simpo PDF Merge and Split Unregistered Version - http://www.simpopdf.com

Signal de démarrage

EC-S/SIG-01

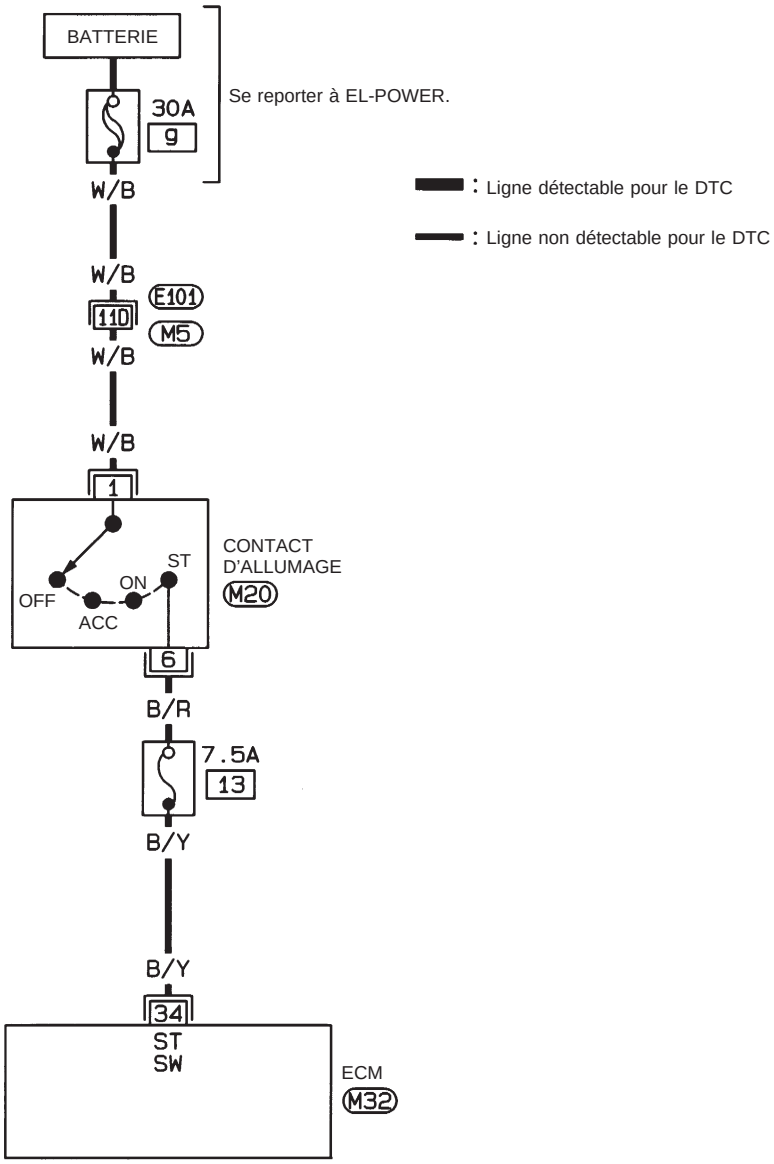

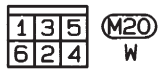

Consulter la dernière page dépliante.
M5 , E101

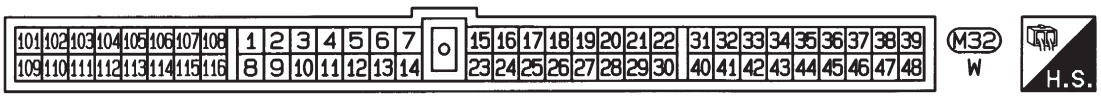

HEC641

Simpo PDF Merge and Split Unregistered Version - http://www.simpopdf.com

Pompe d'alimentation

EC-F/PUMP-01

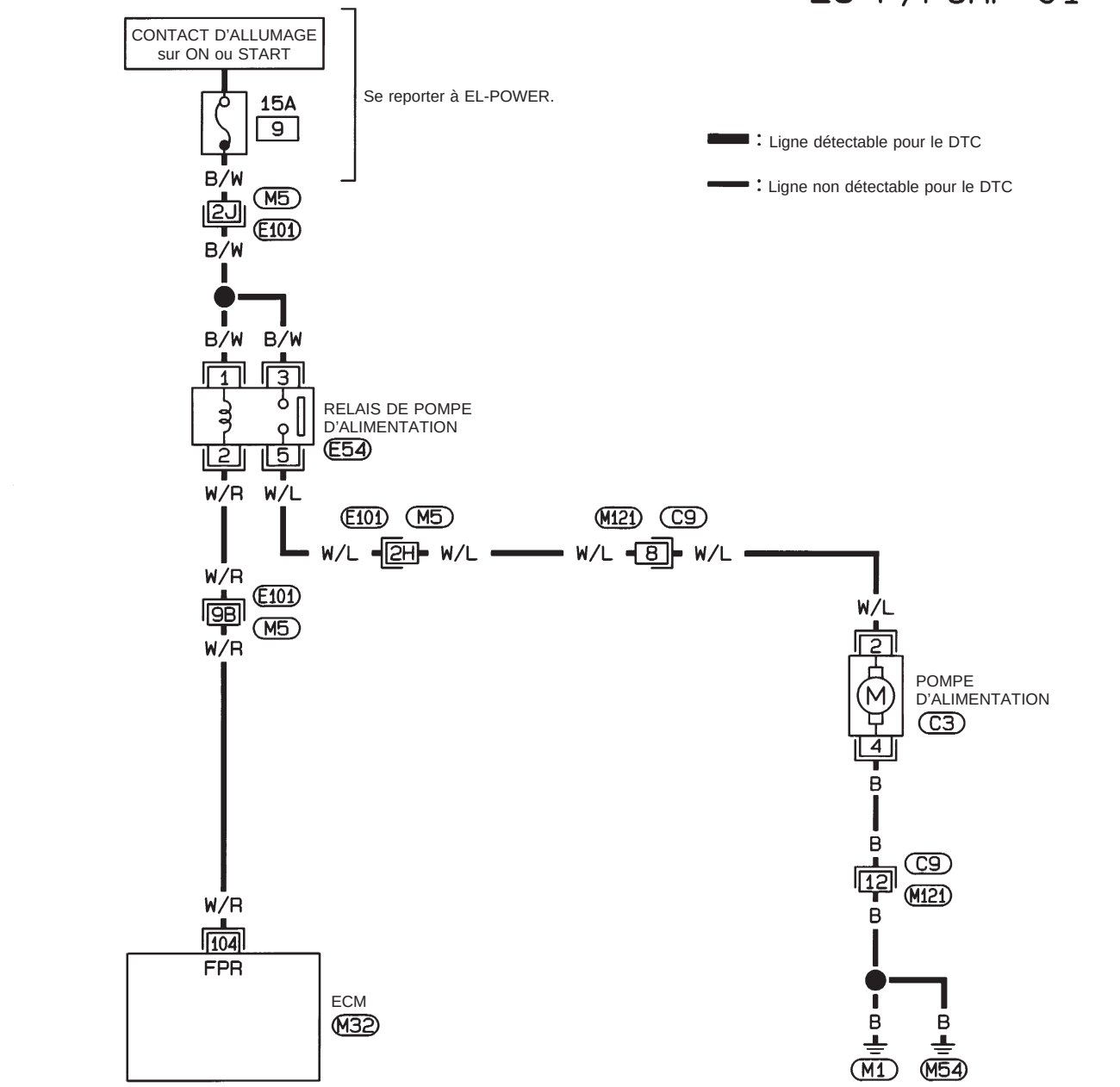

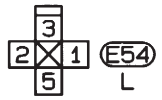





Consulter la dernière page dépliante.
M5, E101

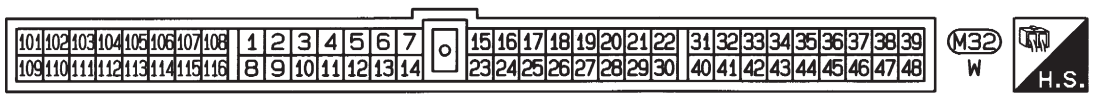

HEC642

Simpo PDF Merge and Split Unregistered Version - http://www.simpopdf.com

Manocontact d'huile de direction assistée

EC-PST/SW-01

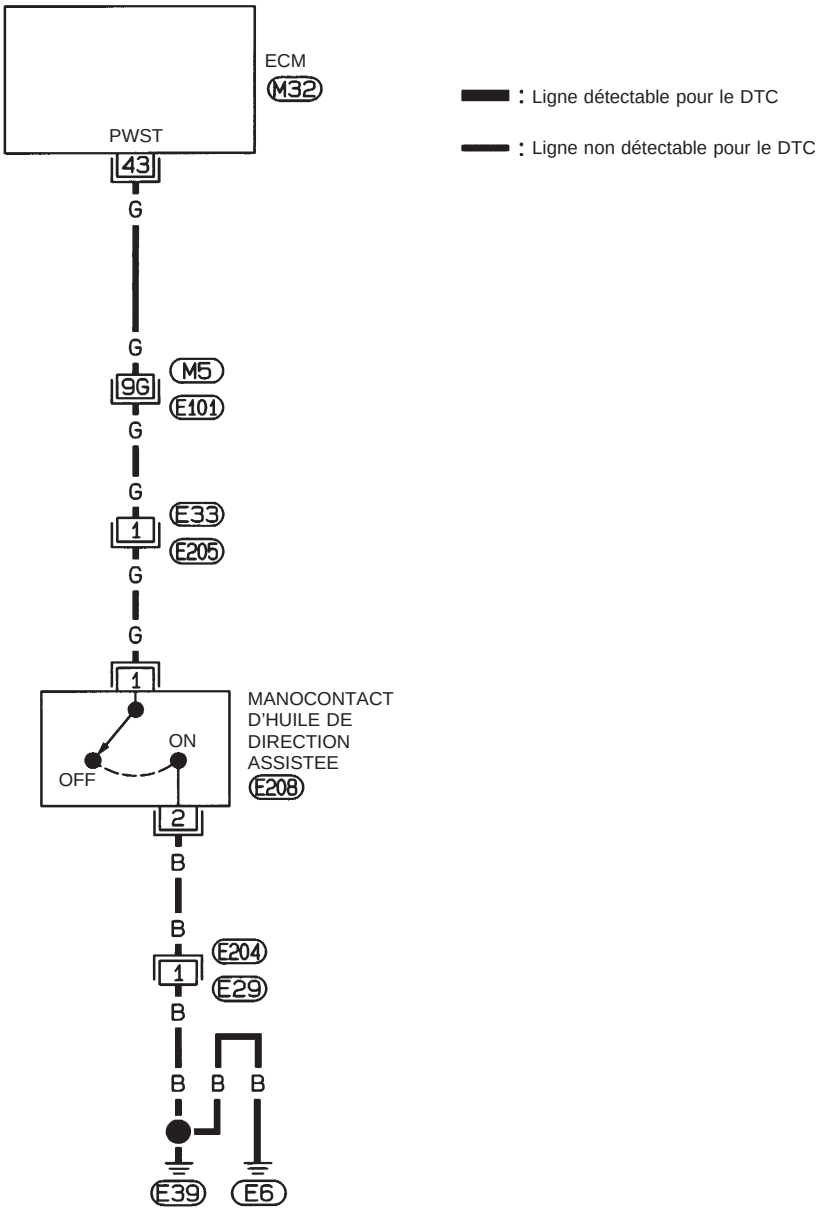

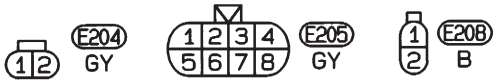

Consulter la dernière page dépliante.
M5, E101

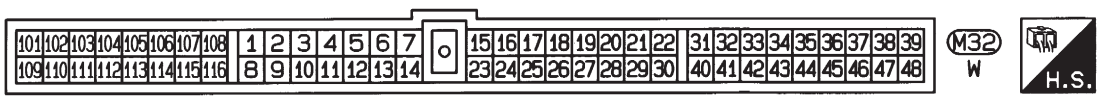

HEC643

Simpo PDF Merge and Split Unregistered Version - http://www.simpopdf.com

Electrovanne de contrôle de vanne de commande de tourbillon

EC-SWL/V-01

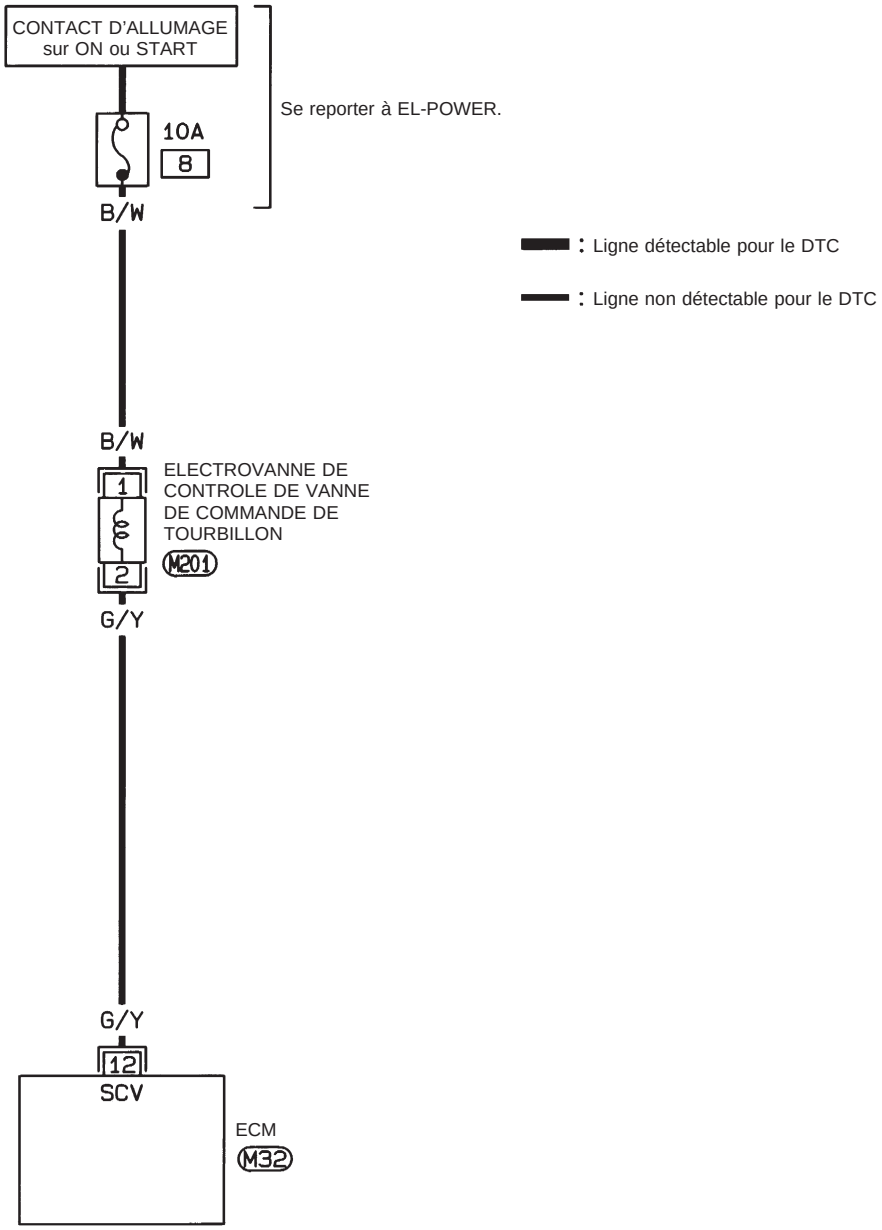



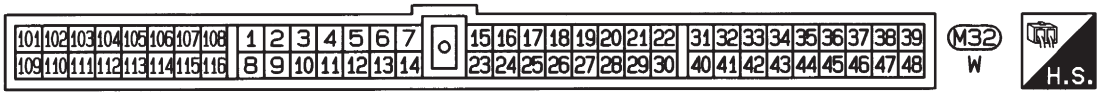

HEC644

Simpo PDF Merge and Split Unregistered Version - http://www.simpopdf.com

Electrovanne FICD

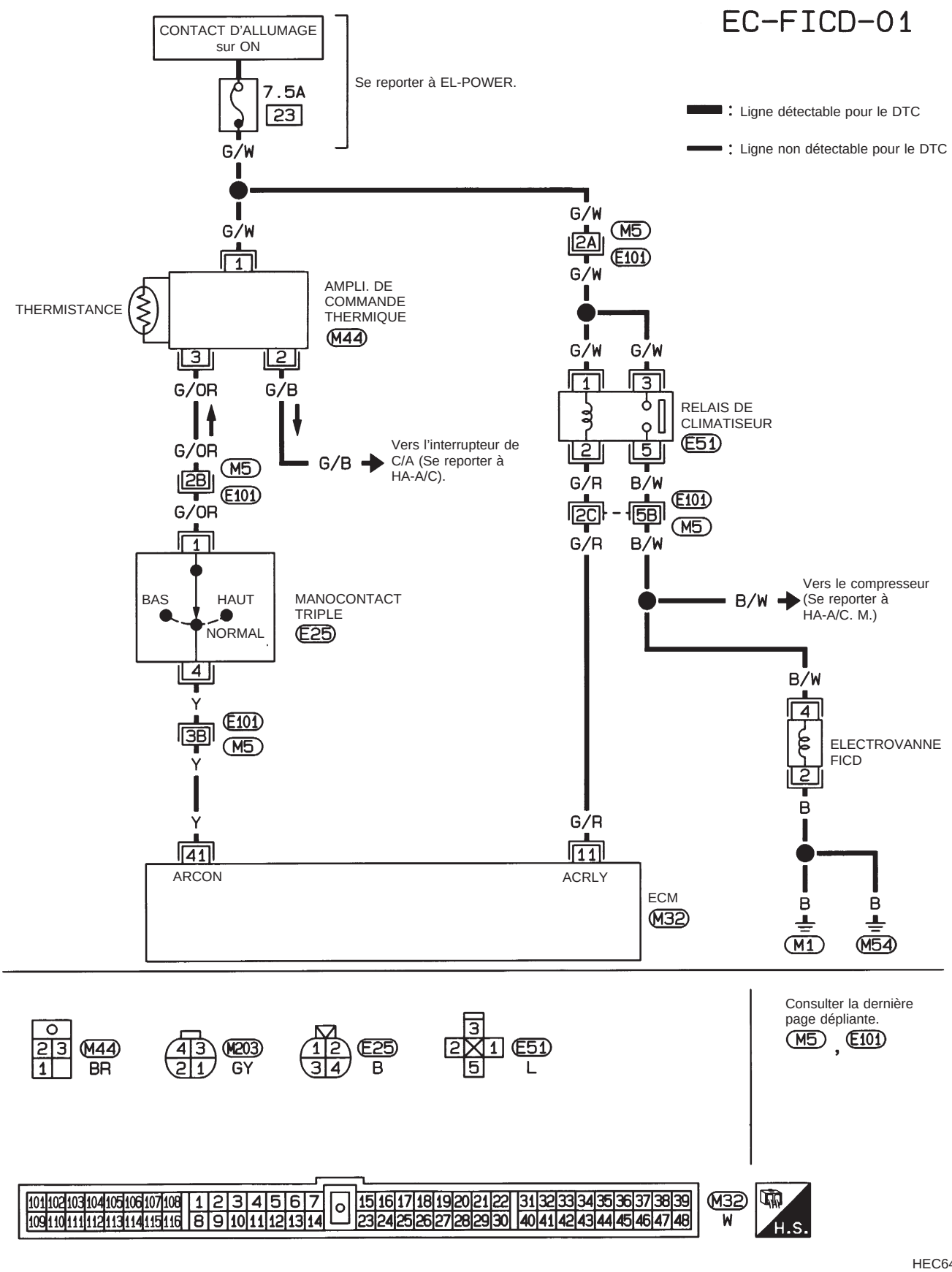

HEC645

Simpo PDF Merge and Split Unregistered Version - http://www.simpopdf.com

Connecteurs du témoin (MIL) et de liaison des données

EC-MIL/DL-01

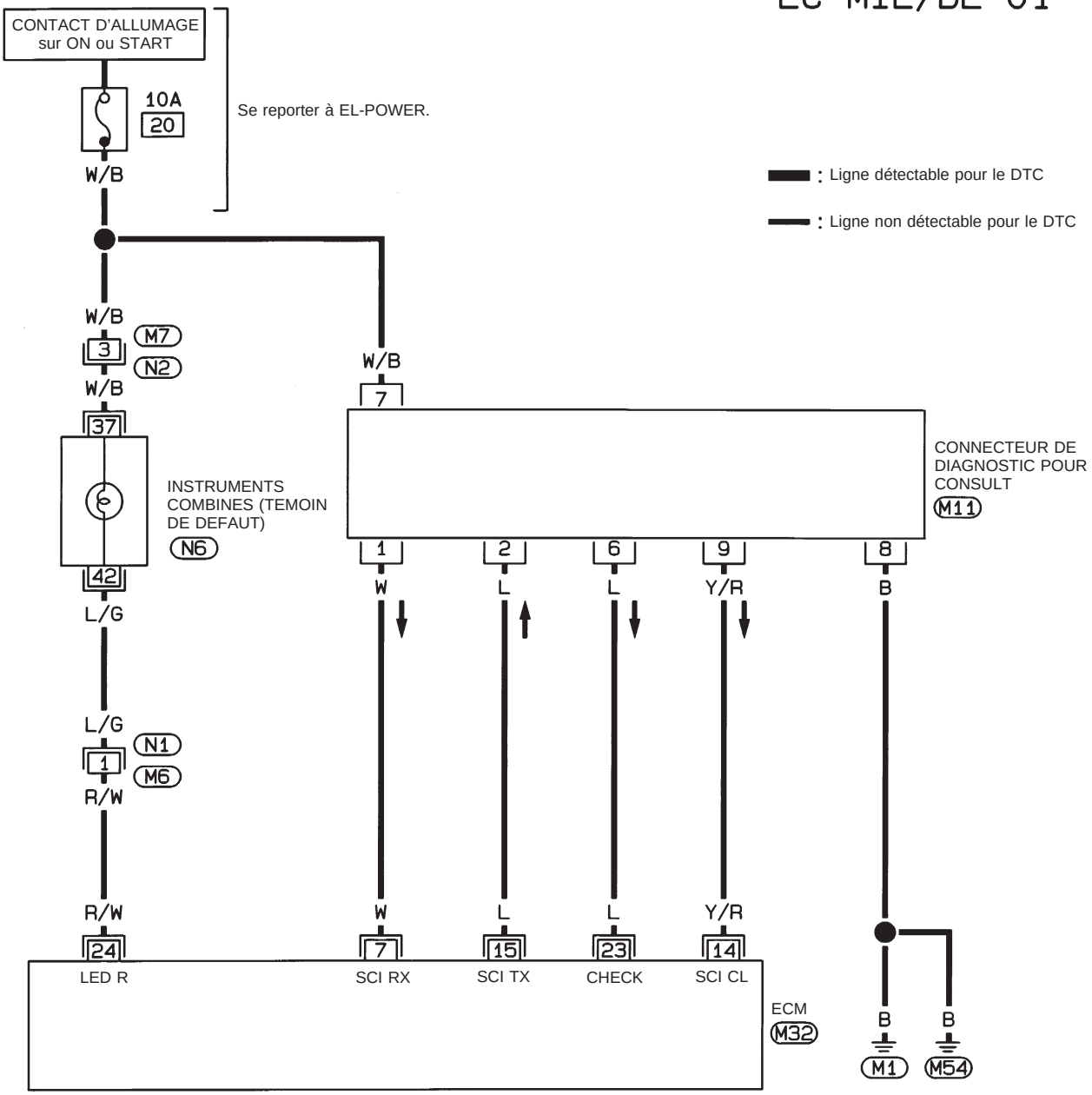

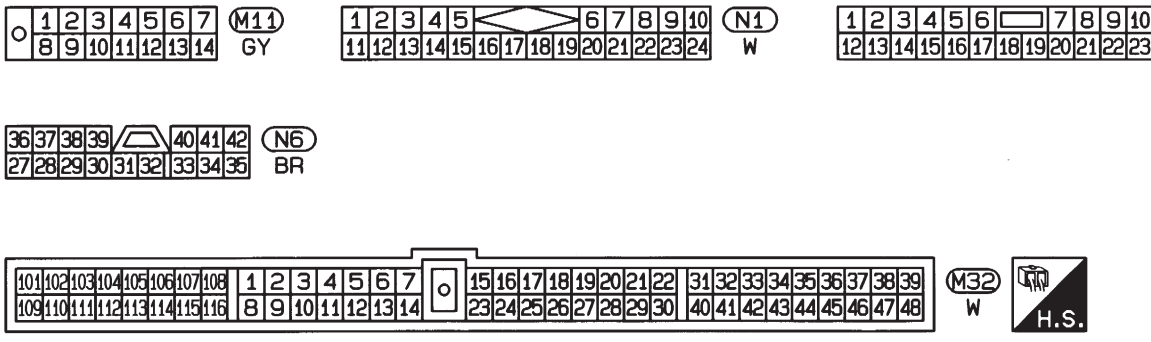

HEC646

Simpo PDF Merge and Split Unregistered Version - http://www.simpopdf.com

Schéma du circuit

MOTEURS TD25 ET TD25Ti

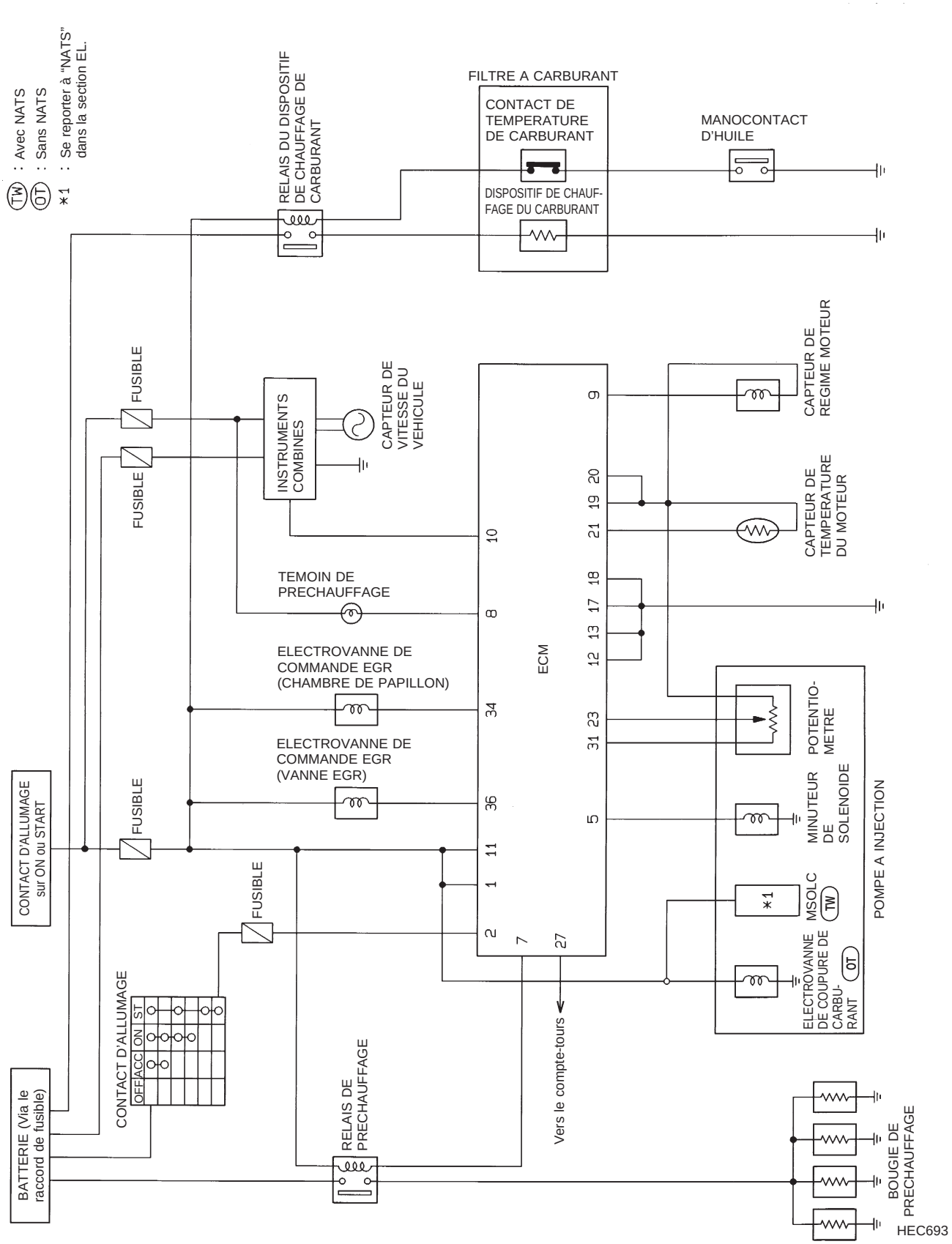

Schéma de câblage

EC-2020

Simpo PDF Merge and Split Unregistered Version - http://www.simpopdf.com

Schéma de câblage (suite)

CONDUITE A GAUCHE AVEC LES MOTEURS TD25 ET TD25Ti

EC-GLOW-13

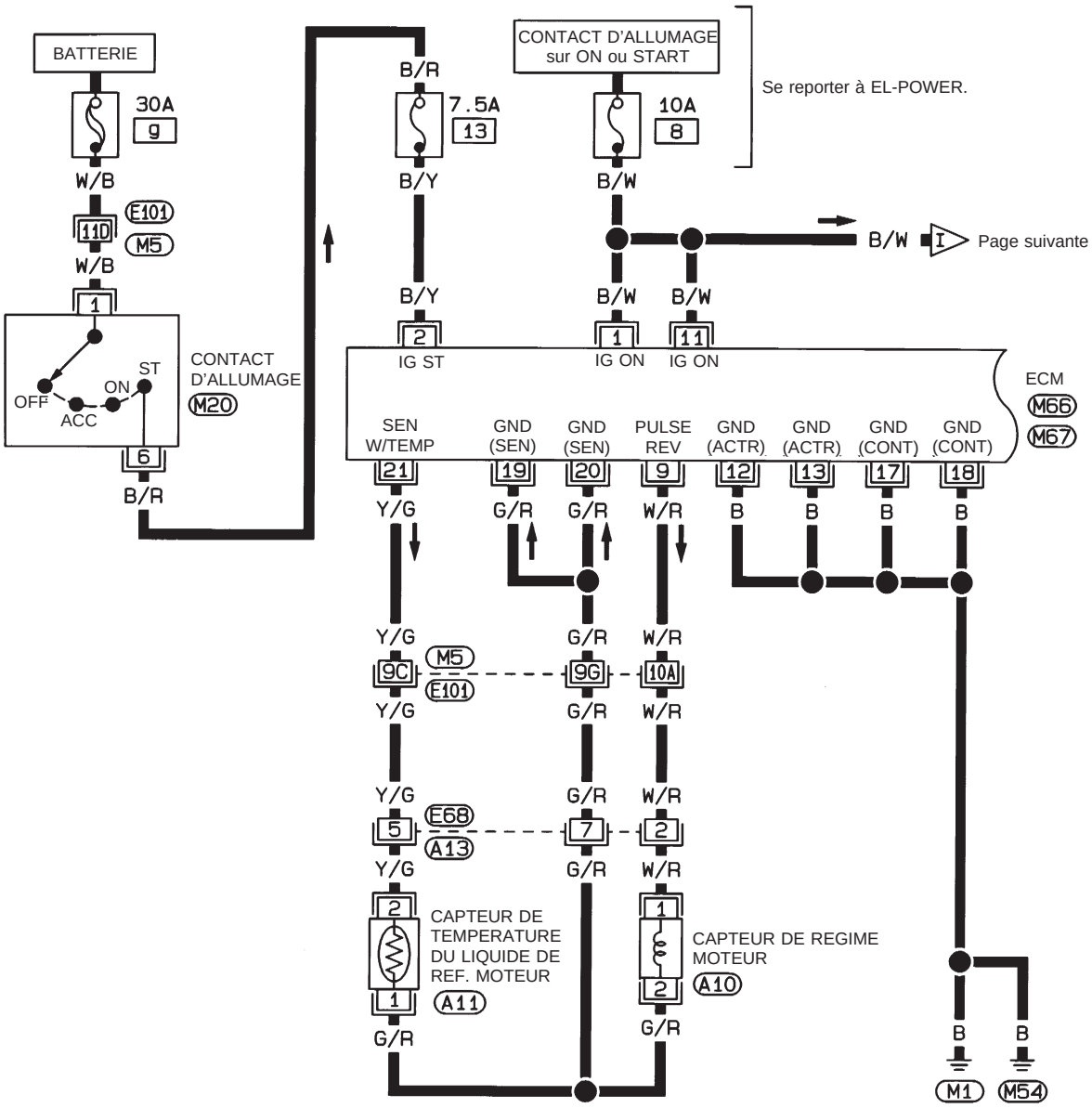

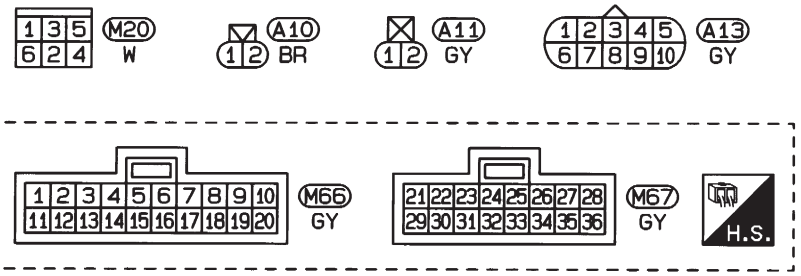

Consulter la dernière page dépliante.
M5, E101

HEC706

Simpo PDF Merge and Split Unregistered Version - http://www.simpopdf.com

Schéma de câblage (suite)

EC-GLOW-14

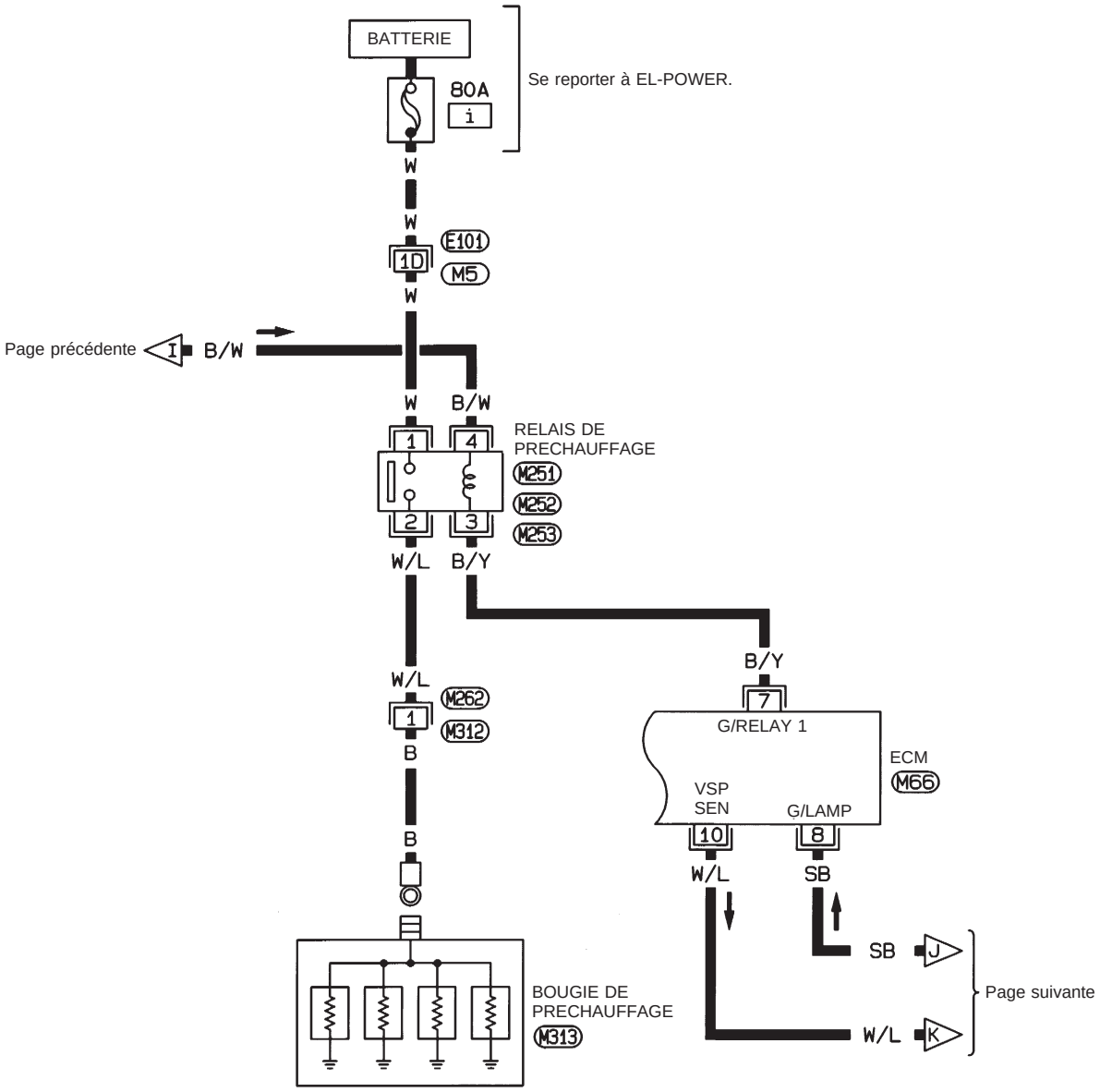

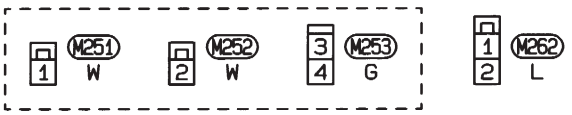

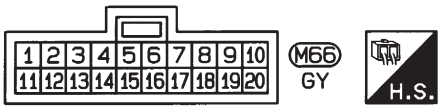

Consulter la dernière page dépliante.
M5, E101

HEC707

Simpo PDF Merge and Split Unregistered Version - http://www.simpopdf.com

Schéma de câblage (suite)

EC-GLOW-15

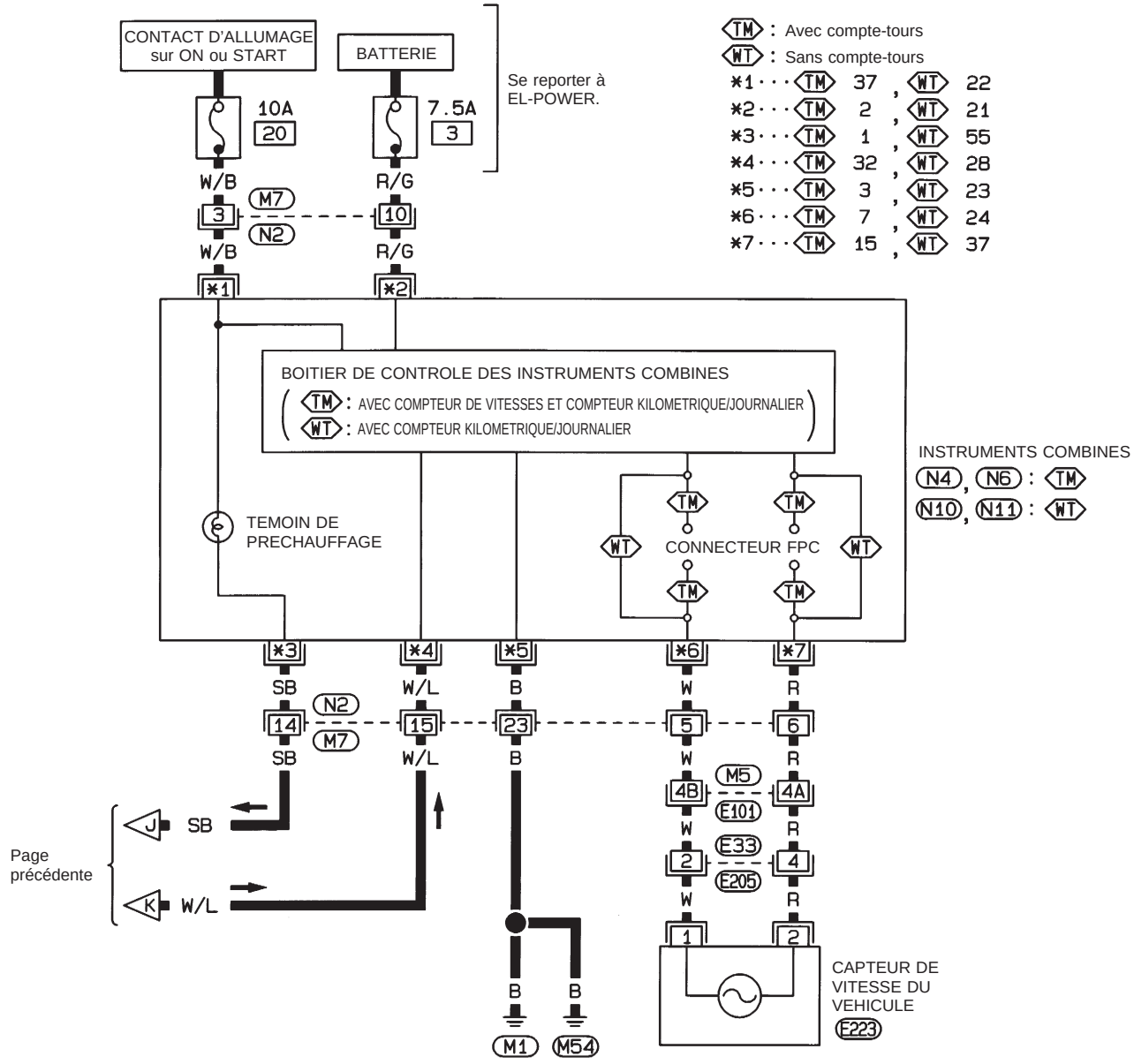

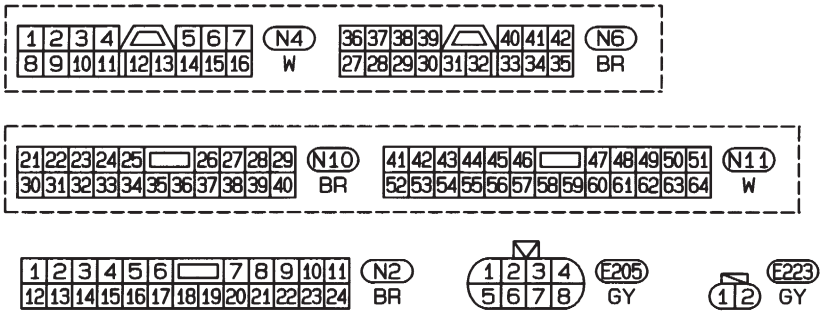

Consulter la dernière page dépliante.
M5, E101

HEC708

Simpo PDF Merge and Split Unregistered Version - http://www.simpopdf.com

Schéma de câblage (suite)

CONDUITE A DROITE AVEC LES MOTEURS TD25 ET TD25Ti

EC-GLOW-16

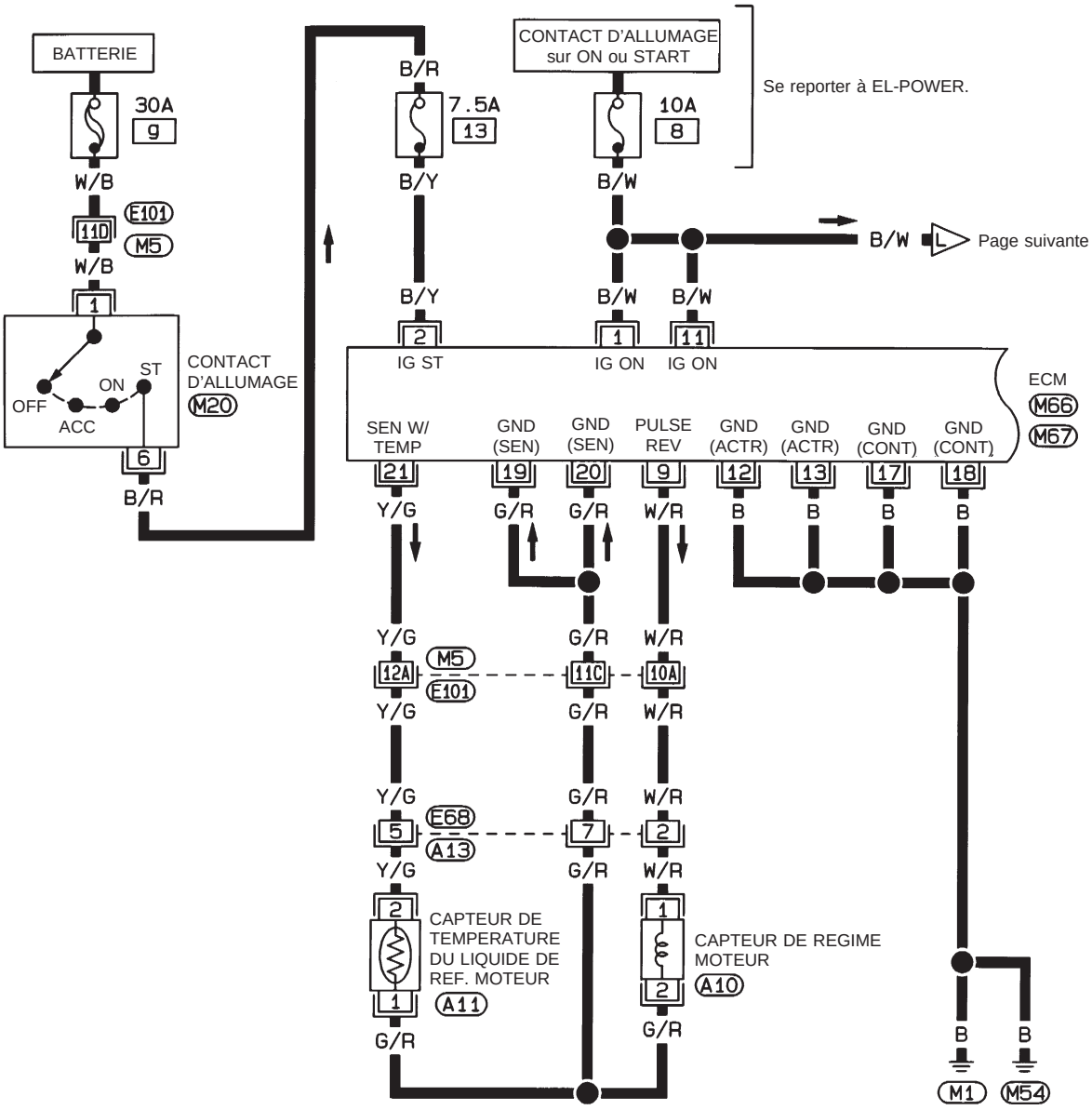

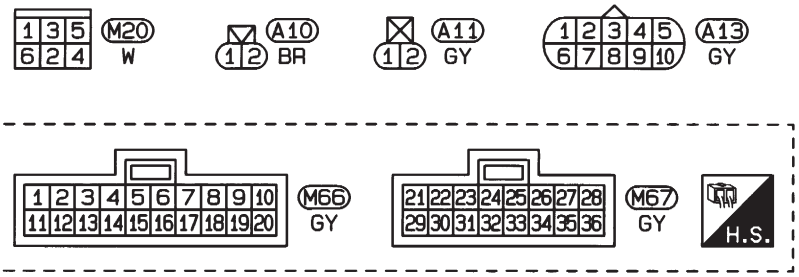

Consulter la dernière page dépliante.
M5, E101

HEC709

Simpo PDF Merge and Split Unregistered Version - http://www.simpopdf.com

Schéma de câblage (suite)

EC-GLOW-17

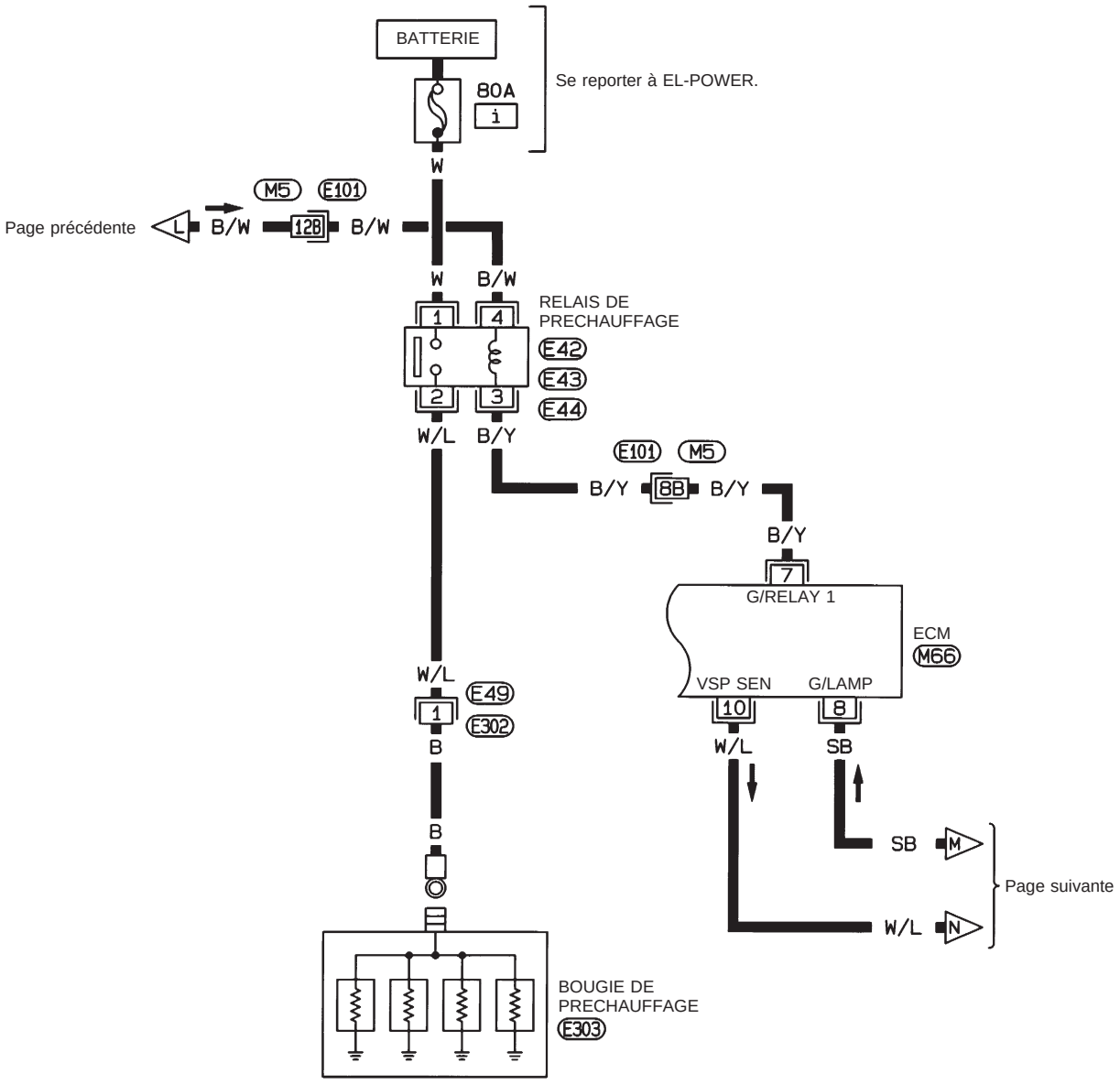

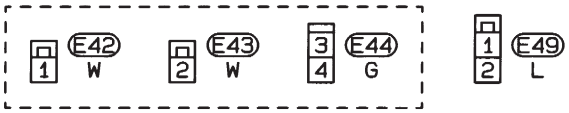

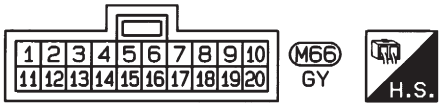

Consulter la dernière page dépliante.
M5, E101

HEC710

Simpo PDF Merge and Split Unregistered Version - http://www.simpopdf.com

Schéma de câblage (suite)

EC-GLOW-18

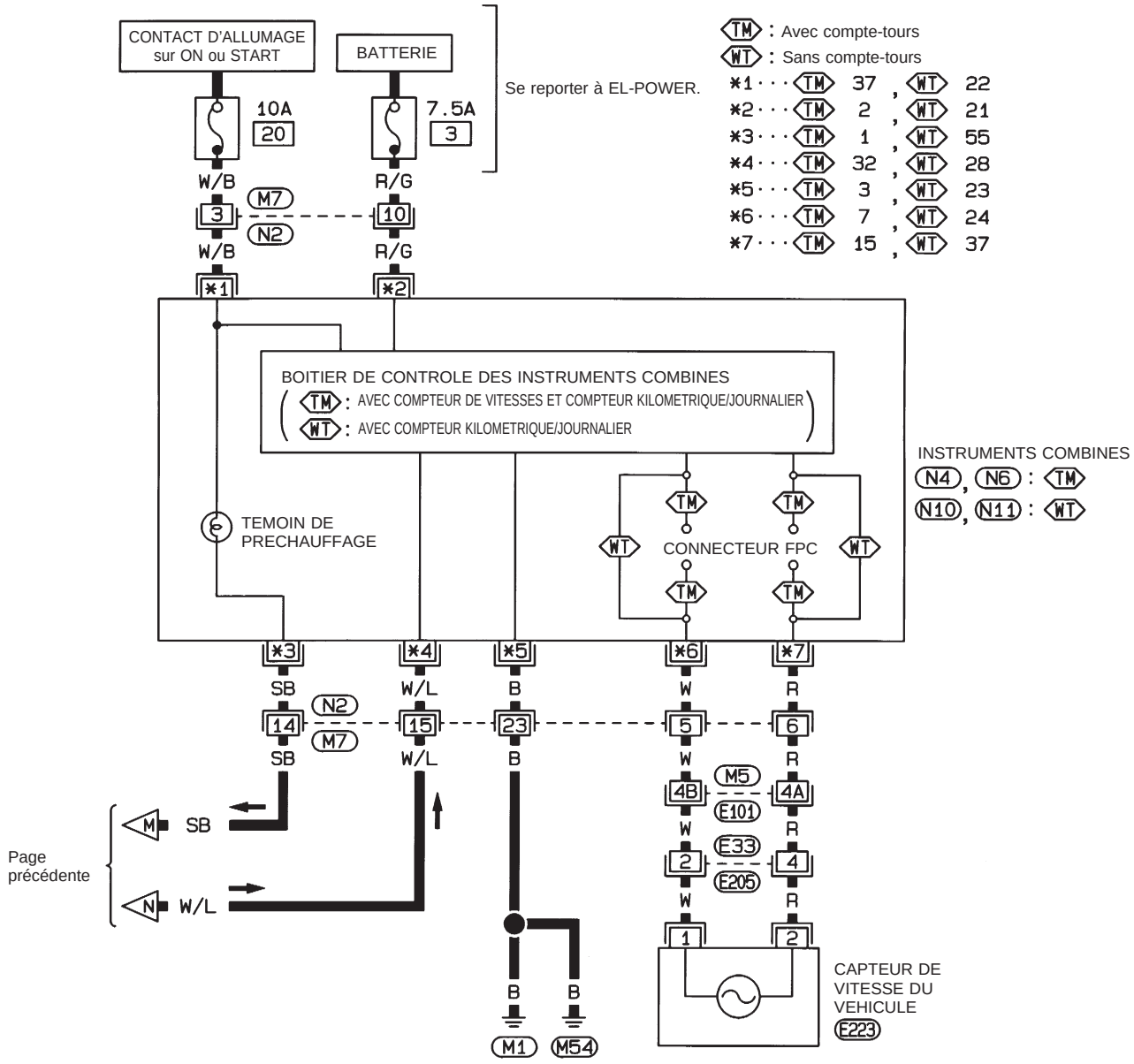

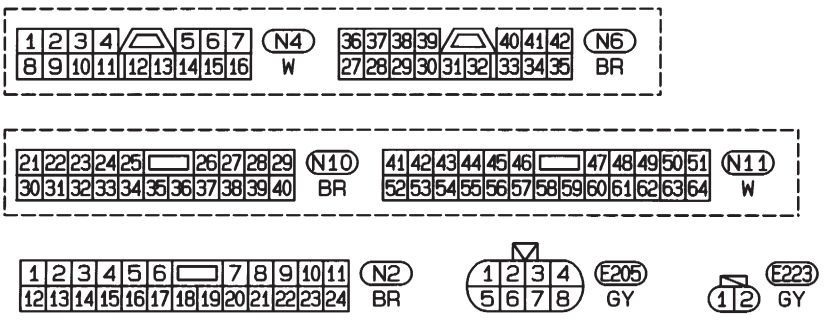

Consulter la dernière page dépliante.
M5, E101

HEC711

Simpo PDF Merge and Split Unregistered Version - http://www.simpopdf.com

Schéma de câblage

MOTEURS TD25 ET TD25Ti (CONDUITE A GAUCHE)

EC-EGRC/V-01

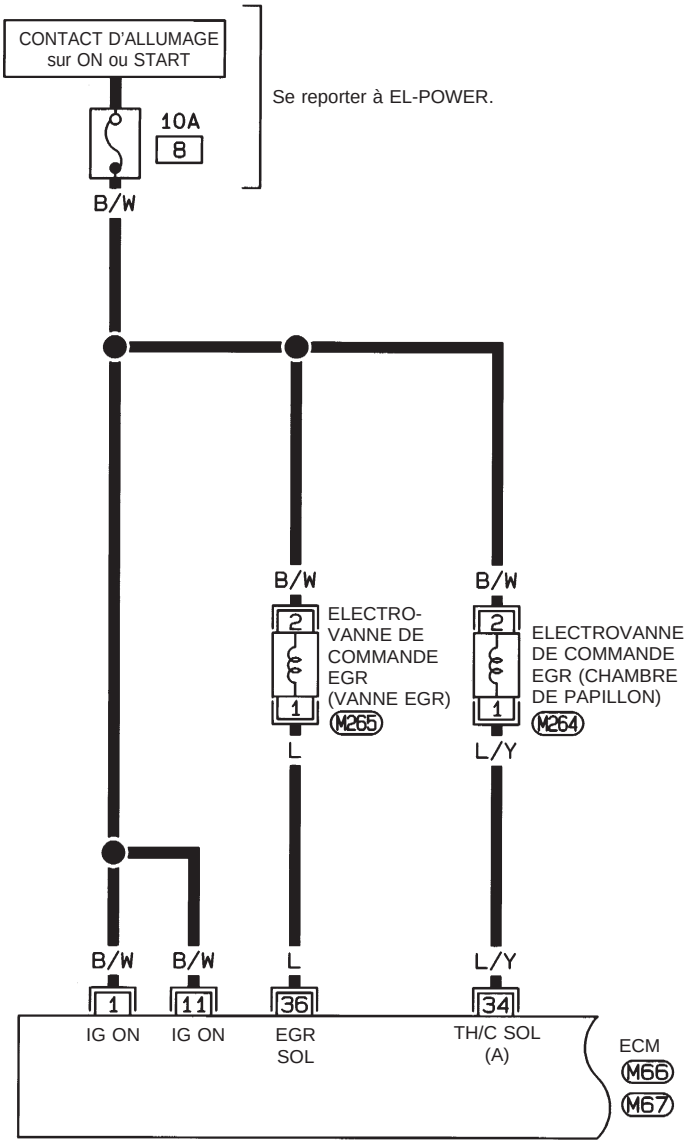



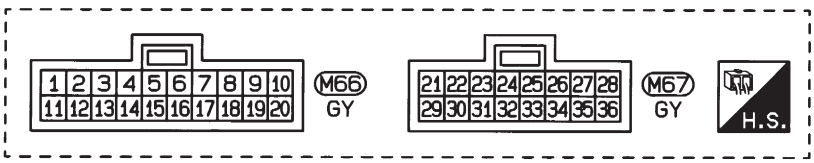

HEC712

Simpo PDF Merge and Split Unregistered Version - http://www.simpopdf.com

Schéma de câblage (suite)

EC-EGRC/V-02

TW : Avec NATS
OT : Sans NATS

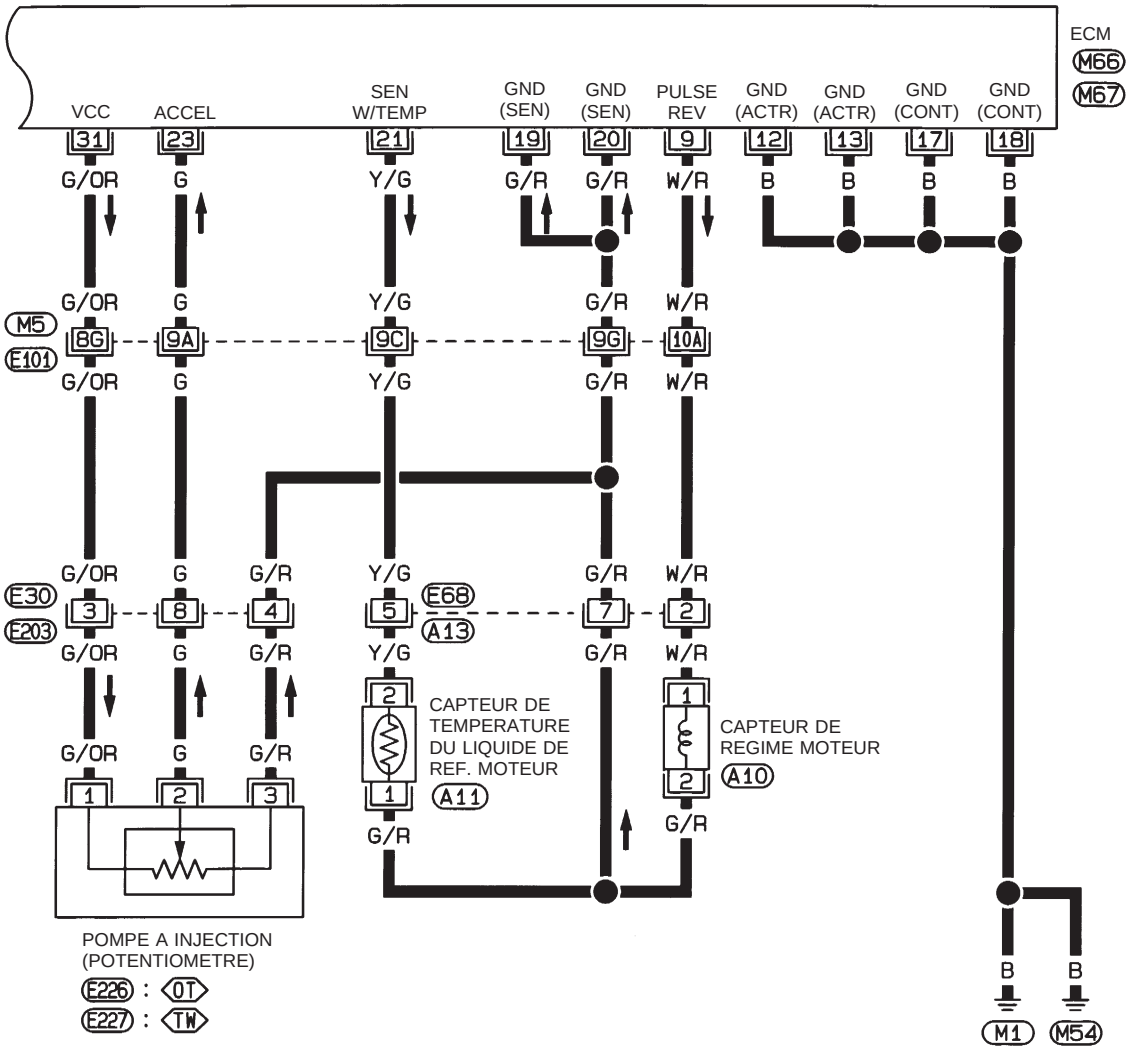

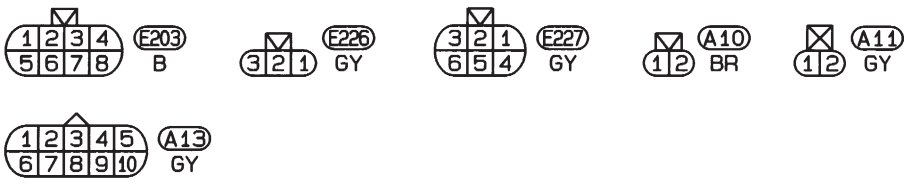

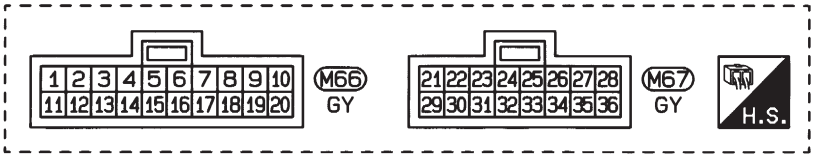

Consulter la dernière page dépliante.
M5, E101

HEC713

Simpo PDF Merge and Split Unregistered Version - http://www.simpopdf.com

Schéma de câblage (suite)

MOTEURS TD25 ET TD25Ti (CONDUITE A DROITE)

EC-EGRC/V-03

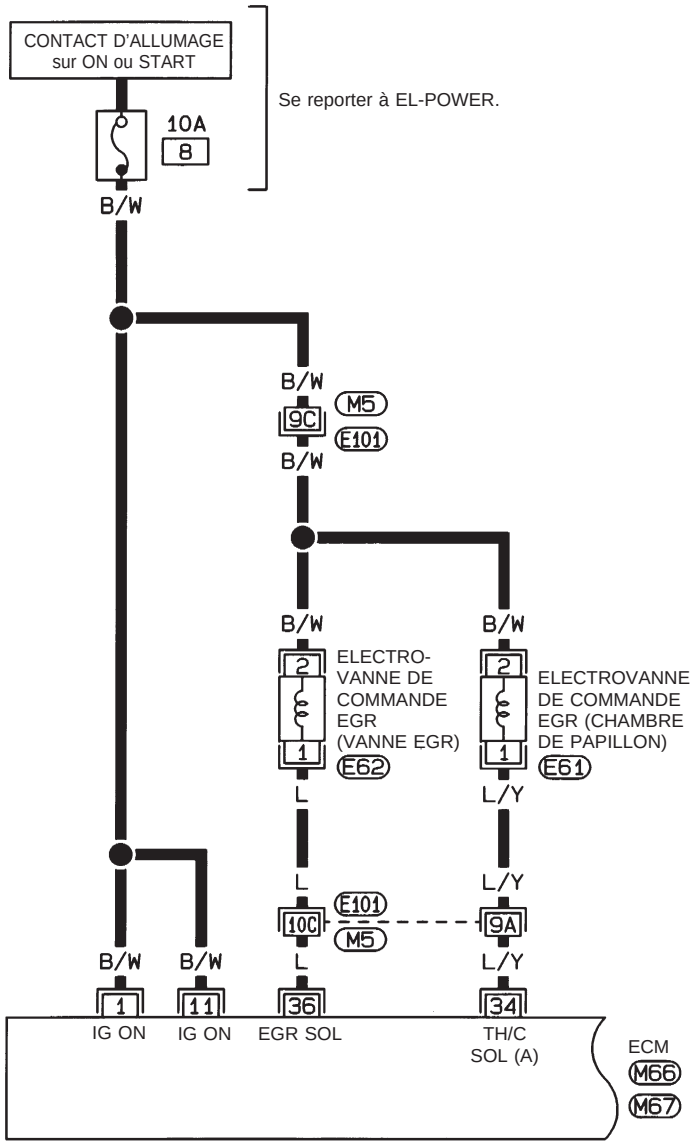

E61 (1 2) B, E62 BR

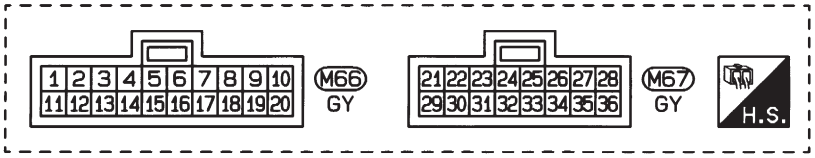

Consulter la dernière page dépliante.
M5, E101

HEC714

Simpo PDF Merge and Split Unregistered Version - http://www.simpopdf.com

Schéma de câblage (suite)

EC-EGRC/V-04

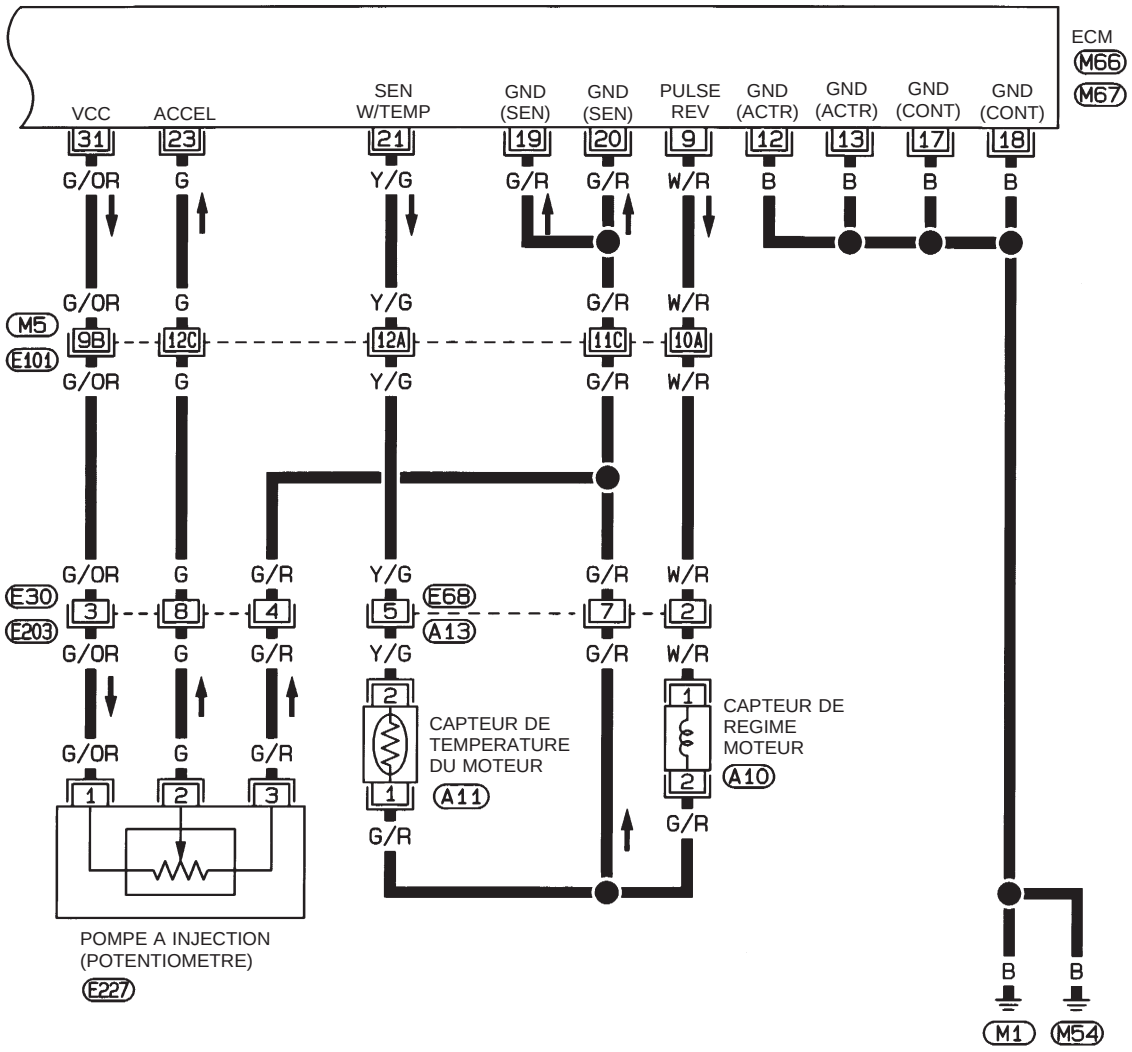



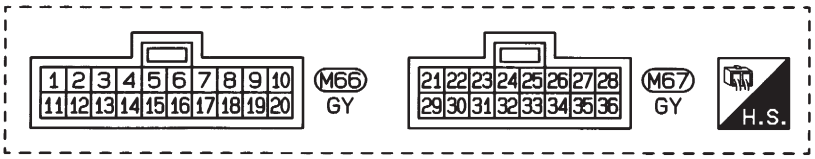

Consulter la dernière page dépliante.
M5, E101

HEC715

Simpo PDF Merge and Split Unregistered Version - http://www.simpopdf.com

Schéma de câblage

MOTEURS TD25 & TD25Ti (CONDUITE A GAUCHE)

EC-PLA-03

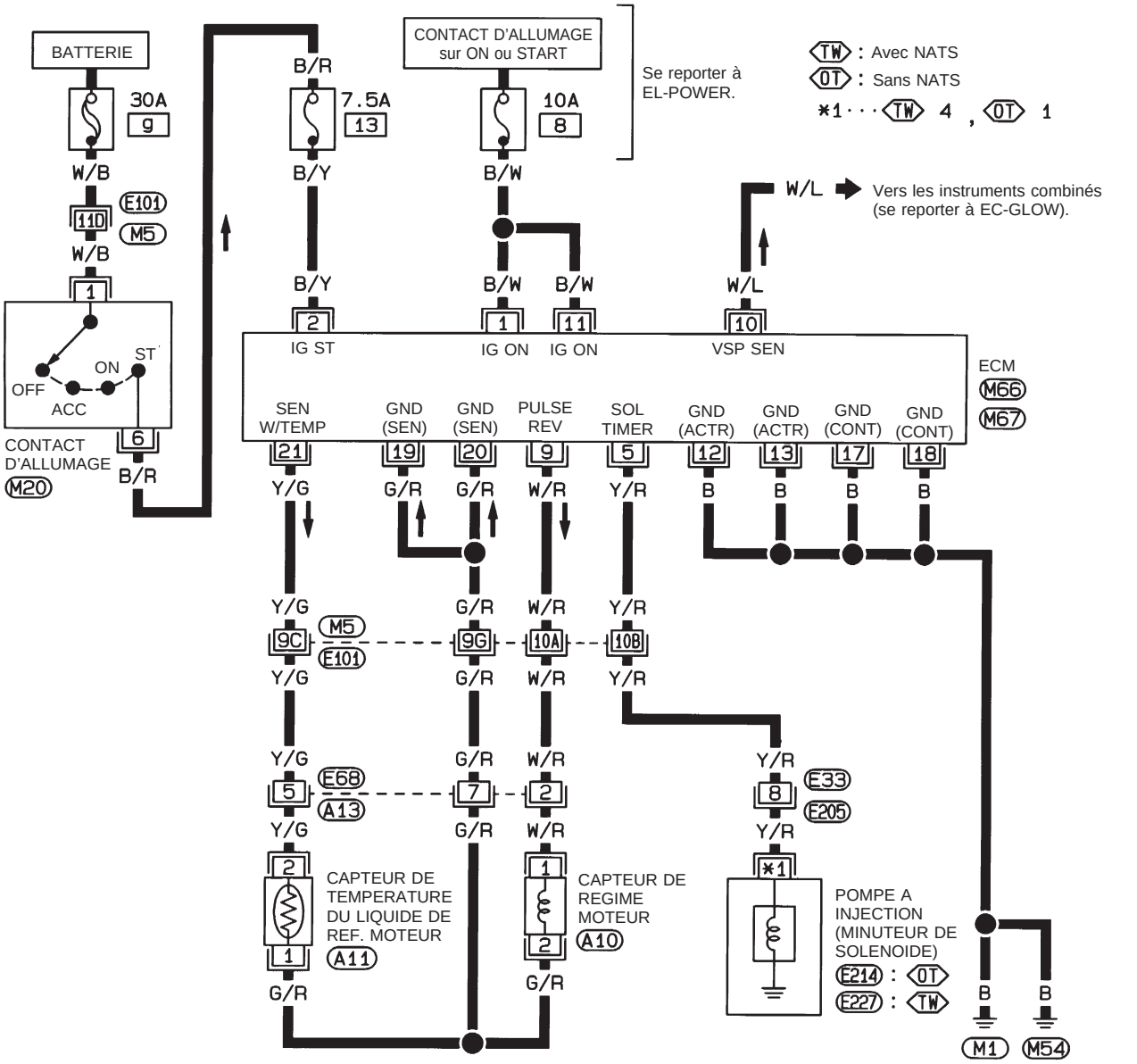

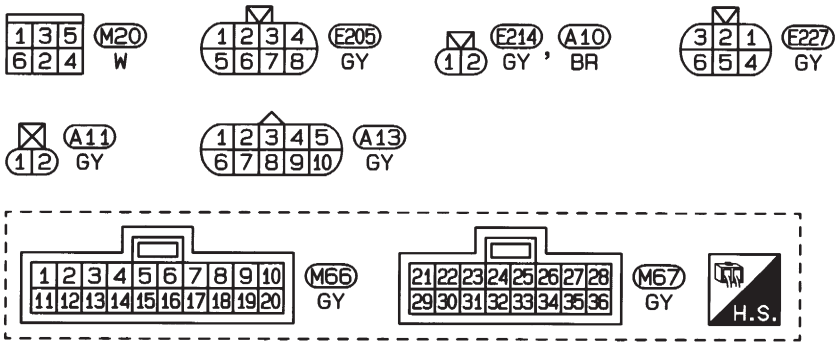

Consulter la dernière page dépliante.
M5 , E101

HEC718

Simpo PDF Merge and Split Unregistered Version - http://www.simpopdf.com

Schéma de câblage (suite)

MOTEURS TD25 ET TD25Ti (CONDUITE A DROITE)

EC-PLA-04

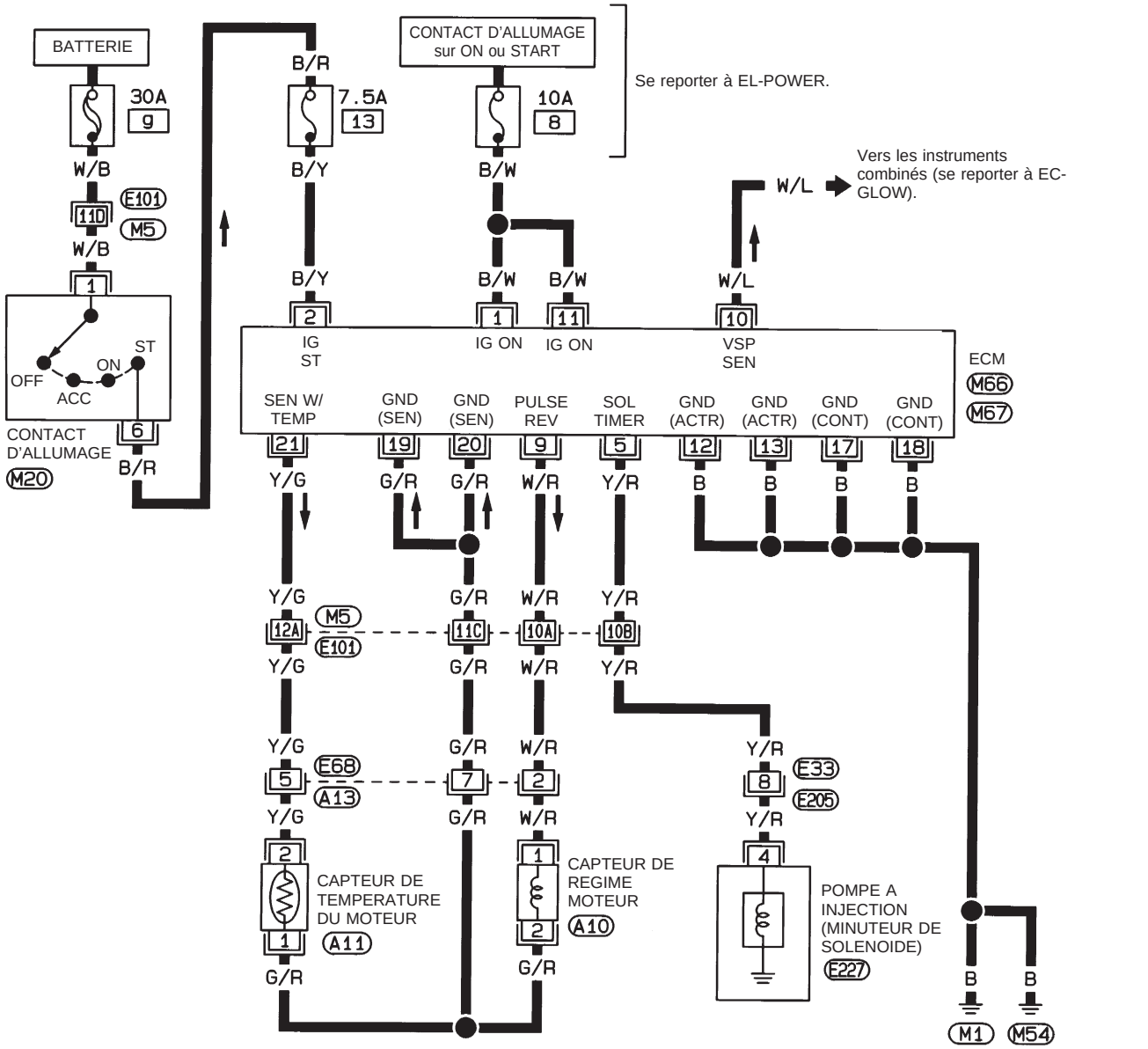

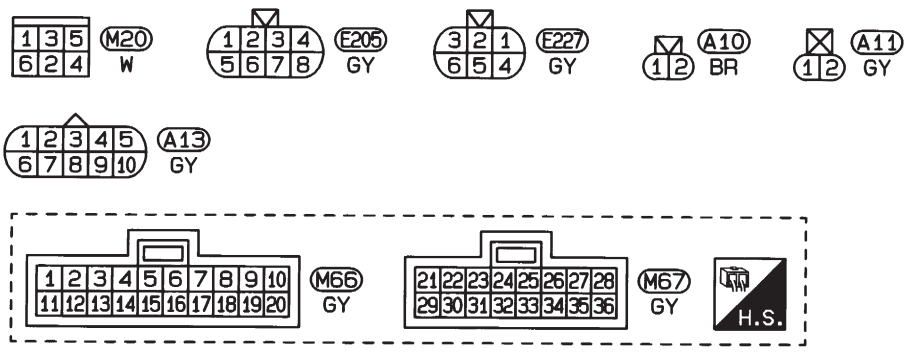

Consulter la dernière page dépliante.
M5, E101

HEC719

Simpo PDF Merge and Split Unregistered Version - http://www.simpopdf.com

Schéma de câblage

MOTEURS TD25 & TD25Ti (CONDUITE A DROITE)

EC-F/HEAT-01

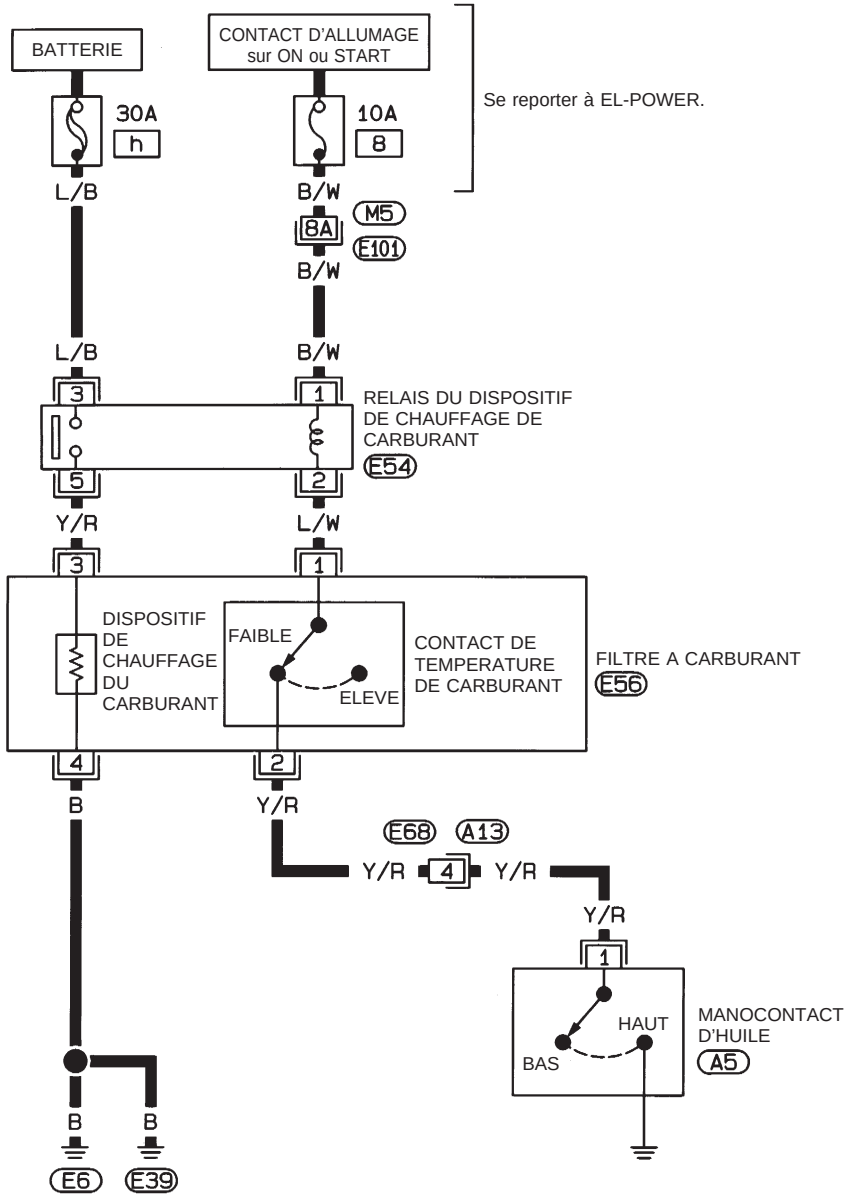

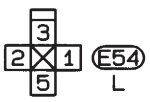





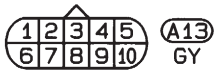

Consulter la dernière page dépliante.
M5, E101

HEC721

Simpo PDF Merge and Split Unregistered Version - http://www.simpopdf.com

Schéma de câblage

MOTEURS TD25 ET TD25Ti

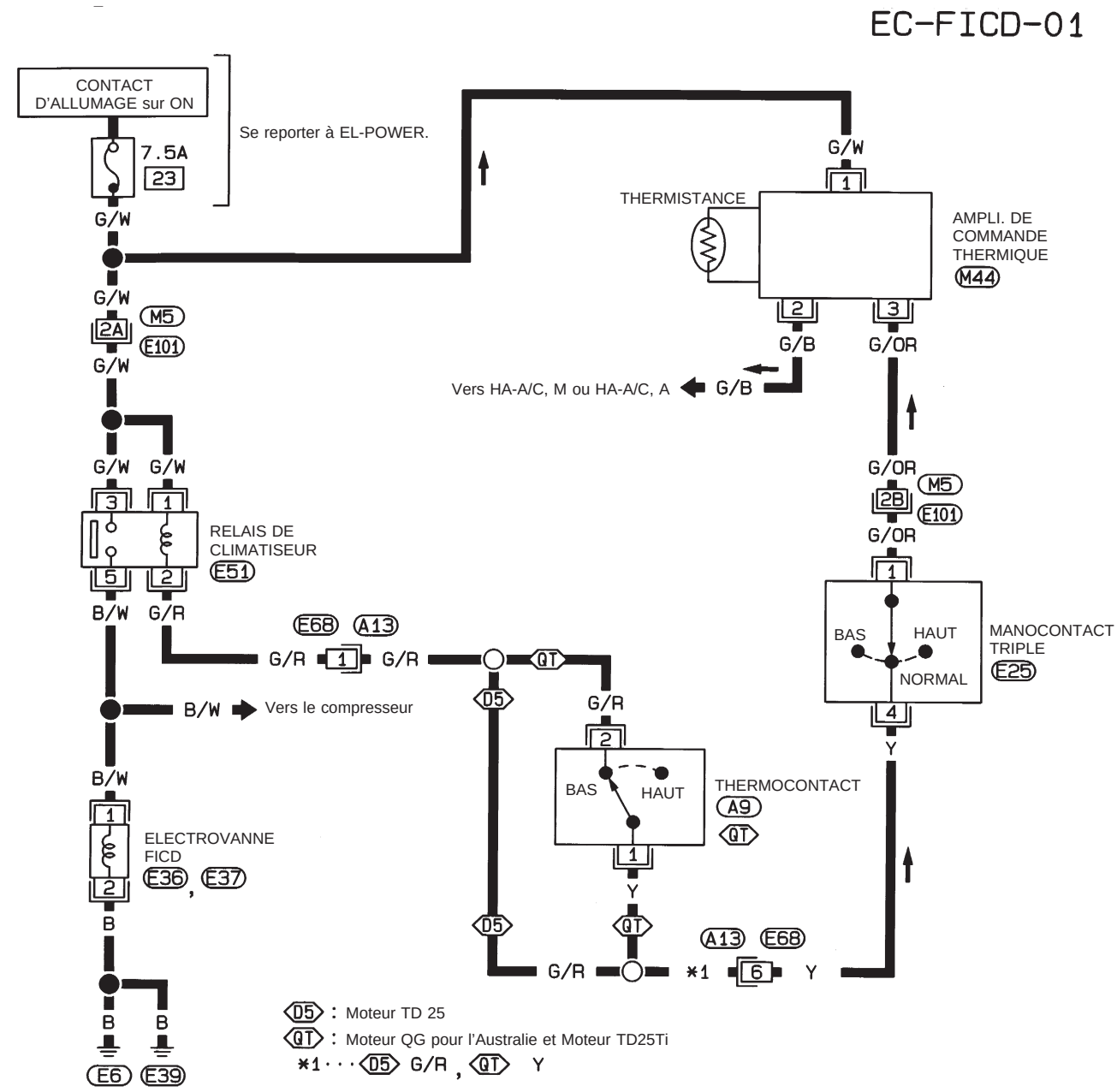

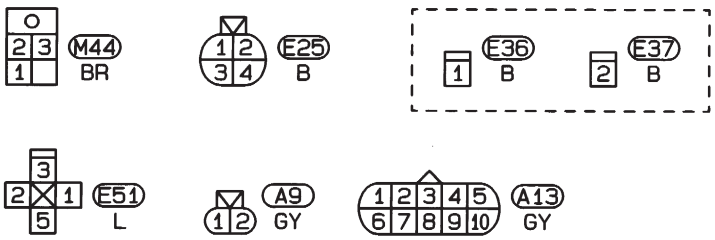

Consulter la dernière page dépliante.
M5 , E101

HEC722

Simpo PDF Merge and Split Unregistered Version - http://www.simpopdf.com

<SUPPLEMENT-II>

EQUIPEMENT ELECTRIQUE

SECTION EL

AVIS DE MODIFICATION :
Les schémas de câblage ont été modifiés.

TABLE DES MATIERES

PRECAUTIONS 2004
‘‘COUSSIN GONFLABLE’’ et ‘‘PRETENSIONNEUR DE CEINTURE DE SECURITE’’ du système de retenue supplémentaire (SRS) 2004
DISPOSITION DE L’ALIMENTATION ELECTRIQUE 2005
Schéma 2005
Schéma de câblage - POWER - 2006
CIRCUIT DE DEMARRAGE 2013
Schéma de câblage - START -/Modèles avec T/M 2013
CIRCUIT DE CHARGE 2014
Schéma de câblage - CHARGE -/Moteur à essence 2014
Schéma de câblage - CHARGE -/Moteur diesel 2015
Construction 2016
Caractéristiques et valeurs de réglage (SDS) . 2017
COMMANDE COMBINEE 2018
Vérification 2018
PHARES - Type conventionnel - 2019
Schéma de câblage - H/LAMP -/Conduite à gauche 2019
Schéma de câblage - H/LAMP -/Conduite à droite 2021
PHARES - Système d’éclairage de jour - 2023
Schéma de câblage - DTRL - 2023
PHARES - Système de mise en veilleuse des codes - 2026
Schéma de câblage - DIMDIP - 2026
PHARES - Commande de réglage des faisceaux - 2029
Schéma de câblage - H/AIM - 2029
FEUX DE STATIONNEMENT, ECLAIRAGE DE PLAQUE MINERALOGIQUE ET FEUX ARRIERE 2031
Schéma de câblage - TAIL/L -/Sauf conduite à gauche 2031
Schéma de câblage - TAIL/L -/Conduite à gauche 2033
FEUX DE STOP 2035
Schéma de câblage - STOP/L - 2035
FEUX DE MARCHE ARRIERE 2036
Schéma de câblage - BACK/L -/Modèles avec T/M 2036
FEU ANTIBROUILLARD ARRIERE 2037
Schéma de câblage - R/FOG -/Conduite à gauche 2037
Schéma de câblage - R/FOG -/Conduite à droite 2038
CLIGNOTANTS ET FEUX DE DETRESSE 2039
Schéma de câblage - TURN -/Type-1 2039
Schéma de câblage - TURN -/Type-2 2041
ECLAIRAGE 2044
Schéma de câblage - ILL -/Conduite à gauche 2044
Schéma de câblage - ILL -/Conduite à droite . 2046
PLAFONNIER 2048
Schéma de câblage - ROOM/L - 2048
SPOT DE LECTURE 2049
Schéma de câblage - INT/L - 2049
INSTRUMENTS ET JAUGES 2050
Instruments combinés 2050
Schéma de câblage - METER -/Moteur à essence avec compte-tours 2053

Simpo PDF Merge and Split Unregistered Version - http://www.simpopdf.com

Schéma de câblage - METER -/Moteur diesel avec compte-tours 2055
Schéma de câblage - METER -/Moteur à essence sans compte-tours 2057
Schéma de câblage - METER -/Moteur diesel sans compte-tours 2058
Description du système des instruments combinés 2059
Fonctionnement des instruments/jauges et contrôle des segments de compteur kilométrique/journalier en mode de Diagnostic. 2059
Circuit imprimé souple (FPC) (modèles avec compte-tours) 2060
Diagnostics des défauts/Modèles avec compte-tours 2061
Diagnostics des défauts/Modèles sans compte-tours 2067
Inspection des composants électriques 2073
TEMOINS D'AVERTISSEMENT 2075
Schéma 2075
Schéma de câblage - WARN -/Moteur à essence 2076
Schéma de câblage - WARN -/Moteur diesel . 2081
Inspection des composants électriques 2086
Schéma de câblage - CHIME -/Conduite à gauche 2087
Schéma de câblage - CHIME -/Conduite à droite 2088
ESSUIE-GLACE ET LAVE-GLACE AVANT 2089
Schéma de câblage - WIPER -/Conduite à gauche avec balayage intermittent 2089
Schéma de câblage - WIPER -/Conduite à gauche sans balayage intermittent 2090
Schéma de câblage - WIPER -/Conduite à droite et T/M avec balayage intermittent 2091
Schéma de câblage - WIPER -/Conduite à droite sans balayage intermittent 2093
LAVE-PHARES 2095
Schéma de câblage - HLC - 2095
AVERTISSEUR SONORE 2096
Schéma de câblage - HORN - 2096
ALLUME-CIGARE 2097
Schéma de câblage - CIGAR - 2097
MONTRE 2098
Schéma de câblage - CLOCK - 2098
DESEMBUAGE DE LUNETTE ARRIERE ET DE RETROVISEUR 2099
Schéma de câblage - DEF -/Conduite à gauche 2099
Schéma de câblage - DEF -/Conduite à droite 2100
Inspection des composants électriques 2101
AUDIO 2102
Schéma de câblage - AUDIO -/Conduite à gauche de type-2 2102
Schéma de câblage - AUDIO -/Conduite à gauche de type-3 2103
Schéma de câblage - AUDIO -/Conduite à droite 2105
ANTENNE AUDIO 2106
Antenne électrique/Schéma de câblage - P/ANT - 2106
RETROVISEUR ELECTRIQUE DE PORTE 2107
Schéma de câblage - MIRROR -/Conduite à gauche 2107
Schéma de câblage - MIRROR -/Conduite à droite 2108
SIEGE CHAUFFANT 2109
Schéma de câblage - H/SEAT - 2109
LEVE-GLACE ELECTRIQUE 2111
Schéma/Sans fonction de détection d'interruption 2111
Schéma de câblage - WINDOW -/Sans fonction de détection d'interruption 2112
Diagnostics des défauts/Sans fonction de détection d'interruption 2116
Description du système/Avec fonction de détection d'interruption 2117
Schéma/Avec fonction de détection d'interruption 2118
Schéma de câblage - WINDOW -/Avec fonction de détection d'interruption 2119
Diagnostics des défauts/Avec fonction de détection d'interruption 2123
VERROUILLAGE ELECTRIQUE DES PORTES 2125
Description du système 2125
Schéma de câblage - D/LOCK - 2126
Diagnostic des défauts 2128
SYSTEME DE MULTI-TELECOMMANDE 2132
Description du système 2132
Schéma 2133
Schéma de câblage - MULTI - 2134
Diagnostics des défauts 2138
Procédure d'entrée du code d'identification 2142
NATS (Système antivol NISSAN)/Modèles avec moteur KA24E 2143
Schéma de câblage - NATS - 2143
NATS (Système antivol NISSAN)/Moteur diesel 2144
Schéma de câblage - NATS -/Conduite à gauche 2144
Schéma de câblage - NATS -/Conduite à droite 2145
EMPLACEMENT DES DISPOSITIFS ELECTRIQUES 2146
Compartiment moteur 2146
Compartiment passager 2147
DISPOSITION DES FAISCEAUX 2149
Faisceau principal 2149

Simpo PDF Merge and Split Unregistered Version - http://www.simpopdf.com

Faisceau de compartiment moteur 2155
Faisceau de contrôle du moteur 2163
Faisceau d'alternateur 2167
Faisceau d'instruments 2168
Faisceau de plafonnier/Conduite à gauche 2169
Faisceau de plafonnier/Conduite à droite 2170
Faisceau de châssis et faisceau arrière 2171
Faisceau de porte avant (côté gauche) 2172
Faisceau de porte avant (côté droit) 2173

CODES DE SCHEMA DE CABLAGE (CODES DE CELLULES) 2174

TABLEAU DE REFERENCE DES SCHEMAS DE CABLAGE

VENTILATEUR DE REFROIDISSEMENT ..... SECTION LC
ECCS, SYSTEME DE COMMANDE D'ALLUMAGE, SYSTEME DE PRECHAUFFAGE RAPIDE, SYSTEME DE DISPOSITIF CHAUFFAGE DE CARBURANT. ..... SECTION EC
SYSTEME ANTI-ENRAYEUR DES FREINS ..... SECTION BR
'COUSSIN GONFLABLE'' (AIR BAG) du SRS ..... SECTION RS
CHAUFFAGE ET CLIMATISEUR ..... SECTION HA

Simpo PDF Merge and Split Unregistered Version - http://www.simpopdf.com

‘‘COUSSIN GONFLABLE’’ et ‘‘PRETENSIONNEUR DE CEINTURE DE SECURITE’’ du système de retenue supplémentaire (SRS)

Utilisés avec une ceinture de sécurité, le COUSSIN GONFLABLE et le PRETENSIONNEUR DE CEINTUREDE SECURITE du système de retenue supplémentaire contribuent à réduire les risques et la gravité des blessures subies par le conducteur et le passager avant lors de collisions frontales. La composition du système de retenue supplémentaire disponible sur le MODELE D22 NISSAN est la suivante (la composition variera en fonction de la destination et de l’équipement optionnel) :
Un module de coussin gonflable côté conducteur (situé dans le moyeu du volant), un module de coussin gonflable côté passager avant (situé sur le tableau de bord, côté passager), un prétensionneur de ceintures de sécurité, un boîtier de capteurs de diagnostic, un témoin d’avertissement, un faisceau de câblage et un câble spiralé.
Toute information nécessaire à l’entretien du système en toute sécurité est comprise dans le **section RS** de ce Manuel de Réparation.

ATTENTION :

- **Pour ne pas affecter le fonctionnement du SRS, ce qui augmenterait les risques de blessures graves ou mortelles en cas de collision entraînant le déploiement du coussin gonflable, toutes les opérations d’entretien doivent être effectuées par un concessionnaire NISSAN agréé.**
- **Un entretien incorrect, y compris une dépose et une repose incorrectes du système de retenue supplémentaire (SRS), peut être à l’origine de blessures provoquées par une activation involontaire du système. Pour la dépose du câble spiralé et du module de coussin gonflable, se reporter à la section RS.**
- **Ne pas utiliser d’équipement d’essai électrique sur les circuits connexes du SRS sauf si indiqué dans ce Manuel de Réparation. Le câble spiralé et les faisceaux de câblage (à l’exception du ‘‘PRETENSIONNEUR DE CEINTURE DE SECURITE’’) recouverts d’une gaine d’isolation jaune placée juste avant les connecteurs de faisceau ou couvrant l’ensemble du faisceau sont reliés au SRS.**

Simpo PDF Merge and Split Unregistered Version - http://www.simpopdf.com

Schéma

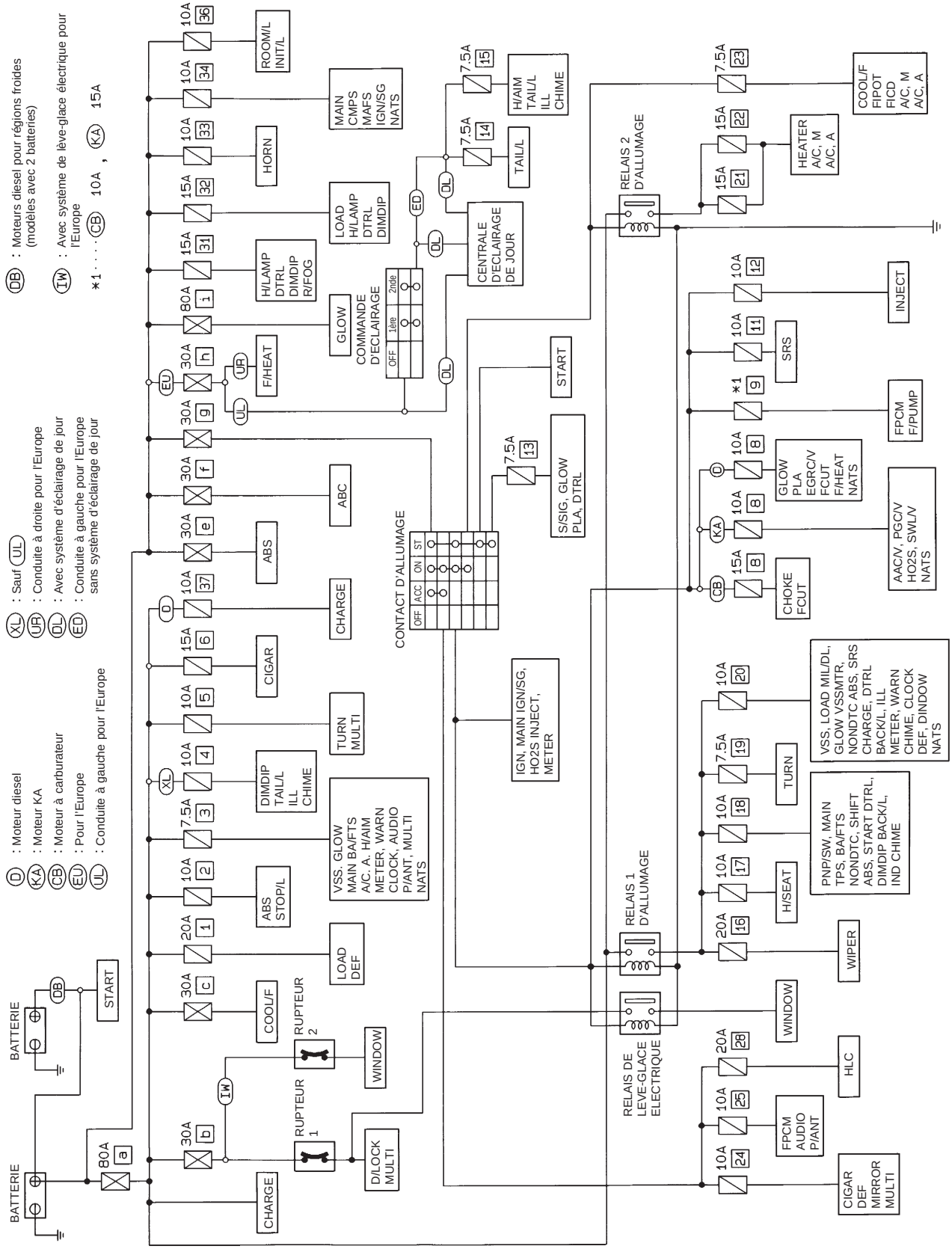

HEL669A

Simpo PDF Merge and Split Unregistered Version - http://www.simpopdf.com

Schéma de câblage — POWER —

ALIMENTATION ELECTRIQUE DE LA BATTERIE — CONTACT D'ALLUMAGE DANS N'IMPORTE QUELLE POSITION

EL-POWER-01

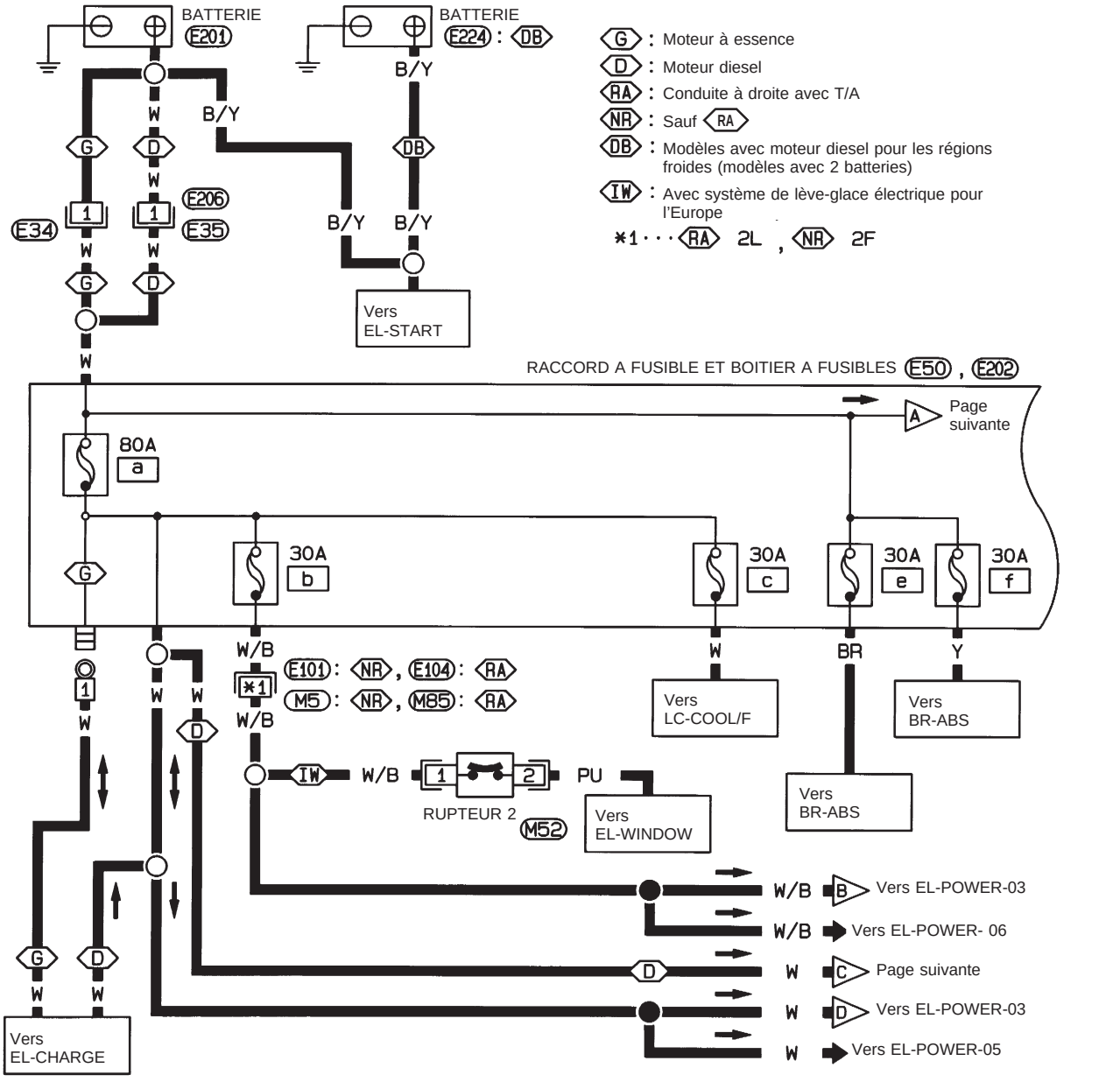

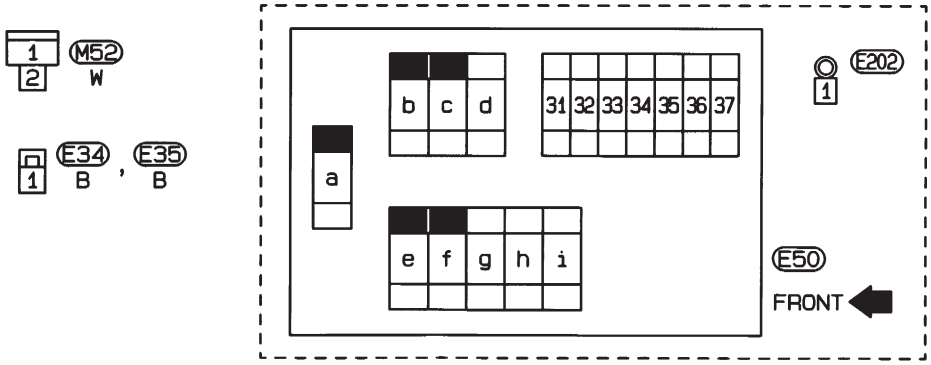

Consulter la dernière page dépliante.

M5 , E101
M85 , E104

HEL670A

Simpo PDF Merge and Split Unregistered Version - http://www.simpopdf.com

Schéma de câblage — POWER — (suite)

EL-POWER-02

D : Moteur diesel
UL : Conduite à gauche pour l'Europe
UR : Conduite à droite pour l'Europe

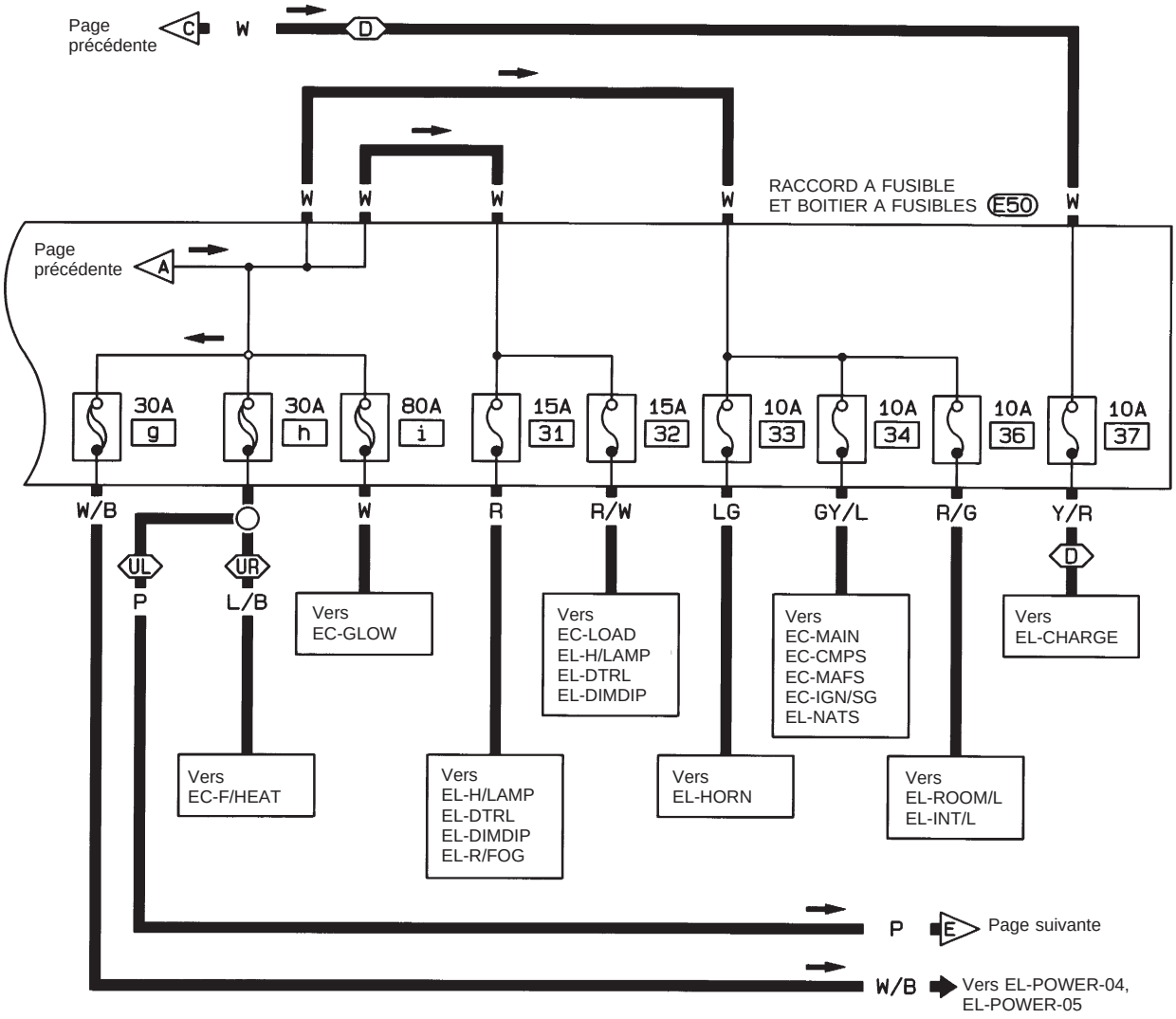

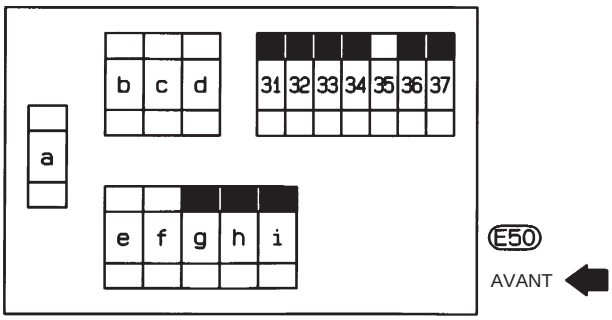

HEL671A

Simpo PDF Merge and Split Unregistered Version - http://www.simpopdf.com

Schéma de câblage — POWER — (suite)

EL-POWER-03

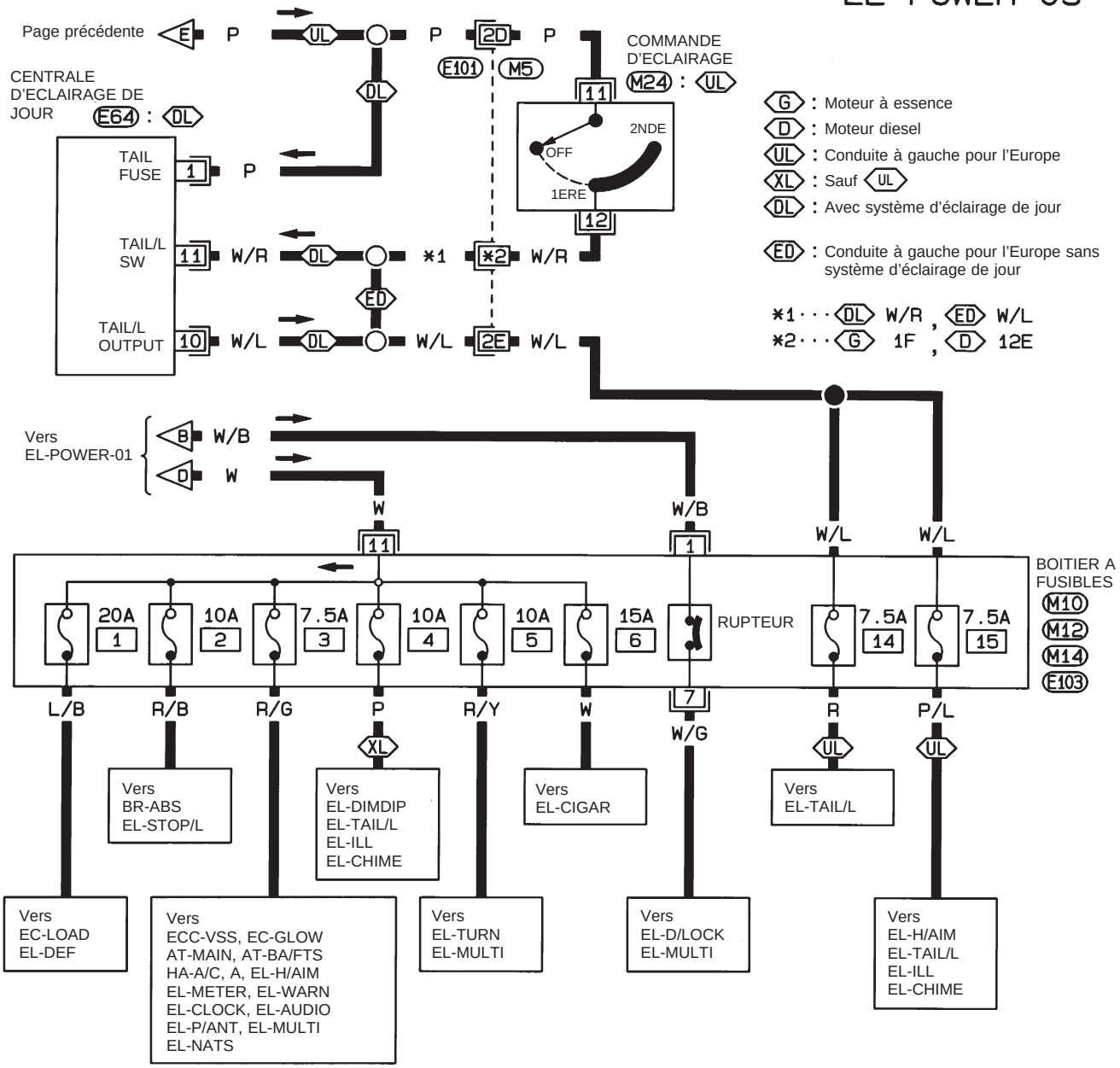

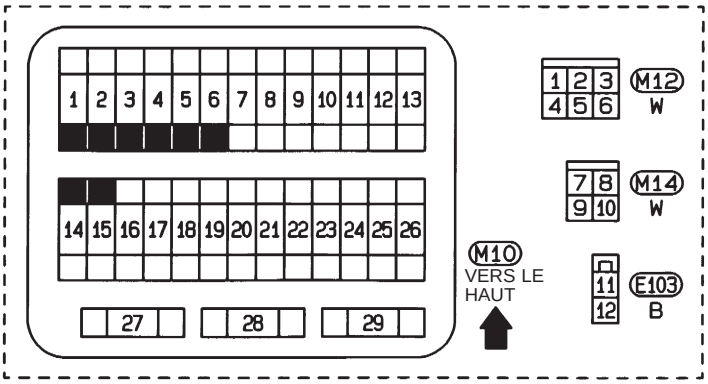

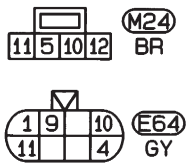

Consulter la dernière page dépliante.

M5 , E101

HEL672A

Simpo PDF Merge and Split Unregistered Version - http://www.simpopdf.com

Schéma de câblage — POWER — (suite)

ALIMENTATION ELECTRIQUE D'ACCESSOIRE - CONTACT D'ALLUMAGE SUR "ACC" OU "ON"

EL-POWER-04

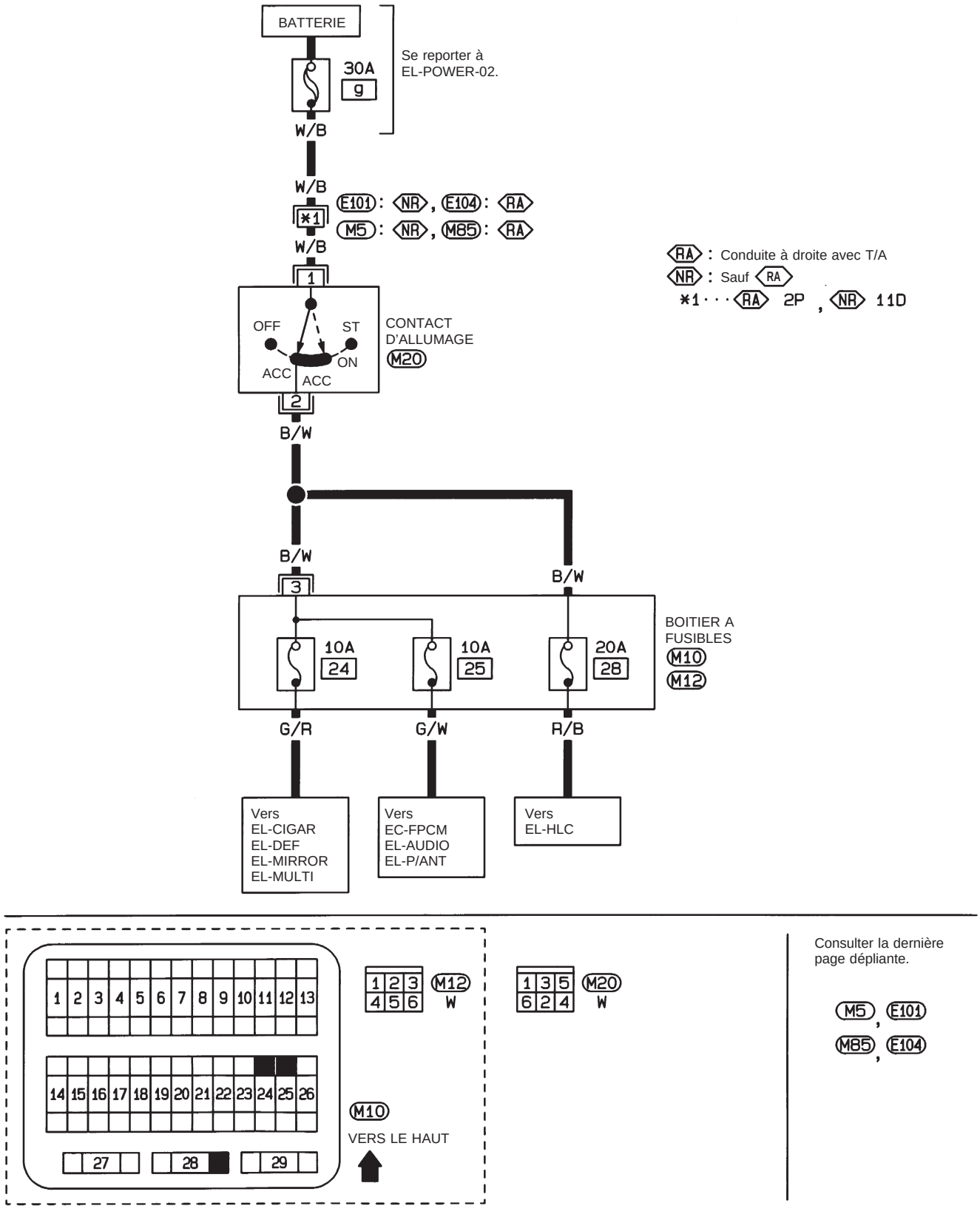

HEL673A

Simpo PDF Merge and Split Unregistered Version - http://www.simpopdf.com

Schéma de câblage — POWER — (suite)

ALIMENTATION ELECTRIQUE D'ALLUMAGE — CONTACT D'ALLUMAGE SUR "ON" ET/OU "START"

EL-POWER-05

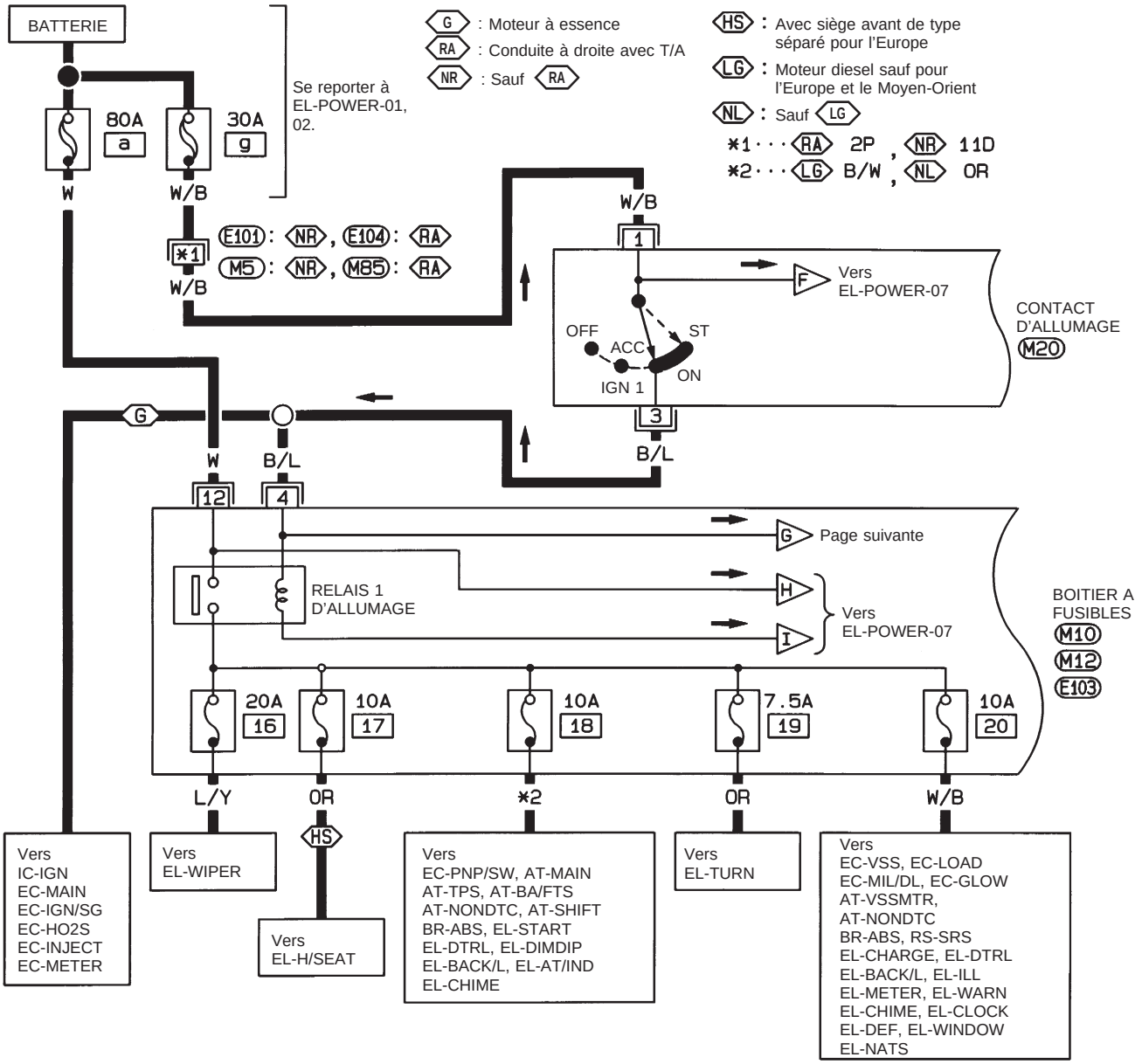

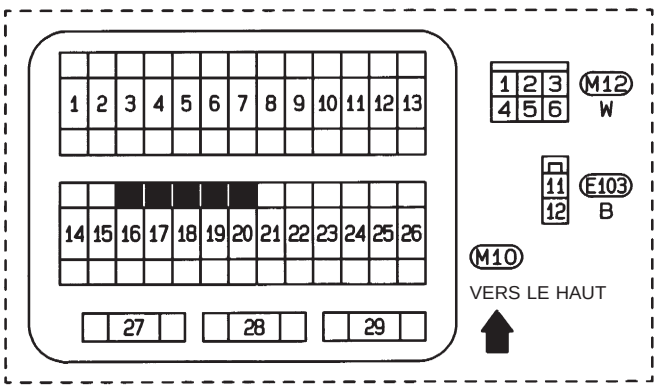



Consulter la dernière page dépliante.

M5, E101
M85, E104

HEL674A

Simpo PDF Merge and Split Unregistered Version - http://www.simpopdf.com

Schéma de câblage — POWER — (suite)

EL-POWER-06

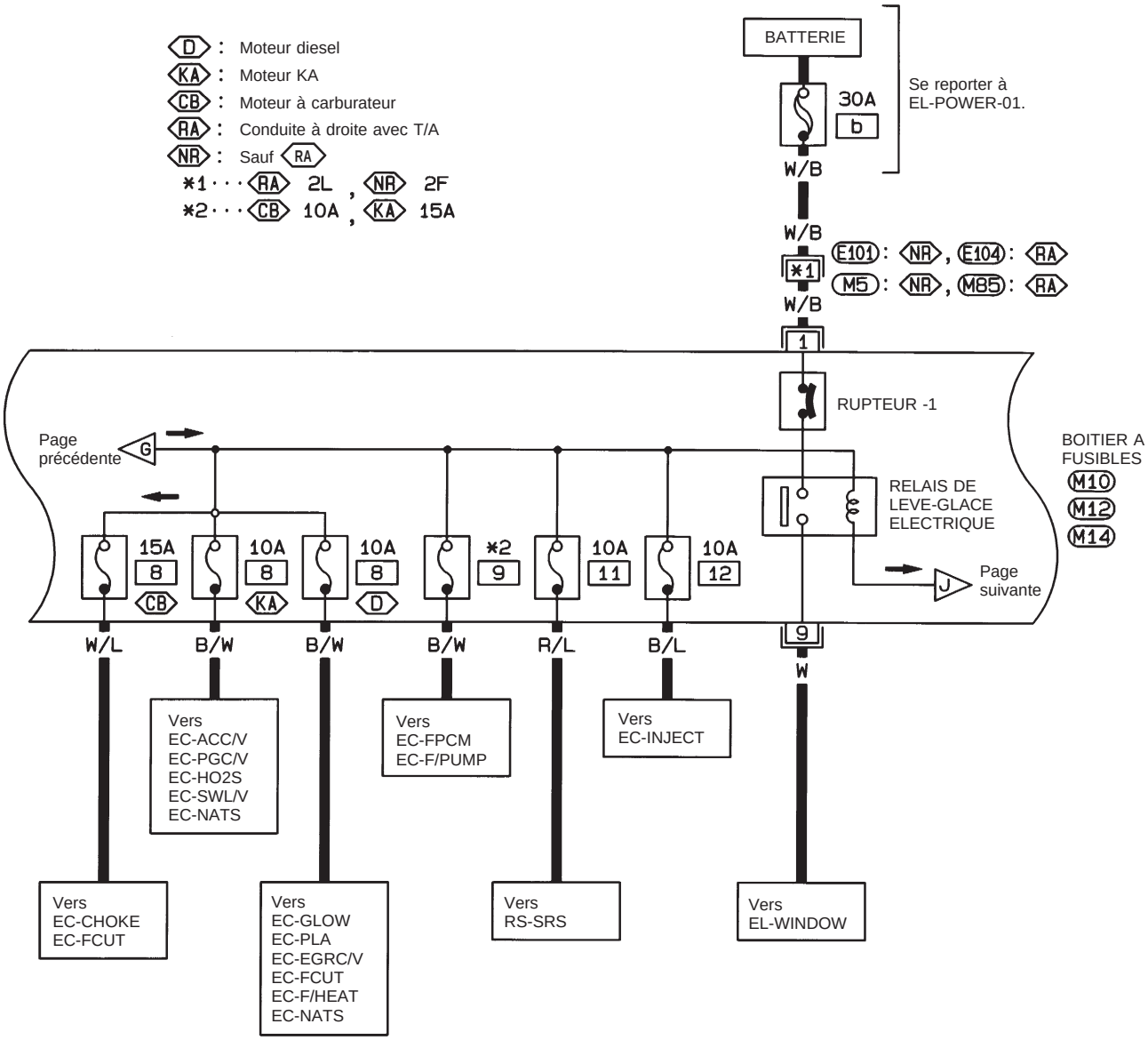

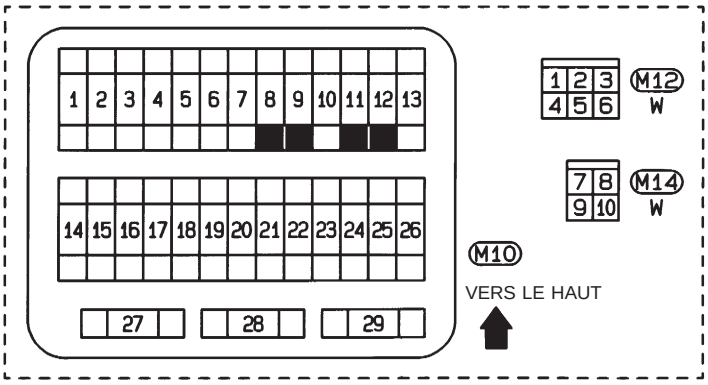

Consulter la dernière page dépliante.

M5 , E101
M85 , E104

HEL675A

Simpo PDF Merge and Split Unregistered Version - http://www.simpopdf.com

Schéma de câblage — POWER — (suite)

EL-POWER-07

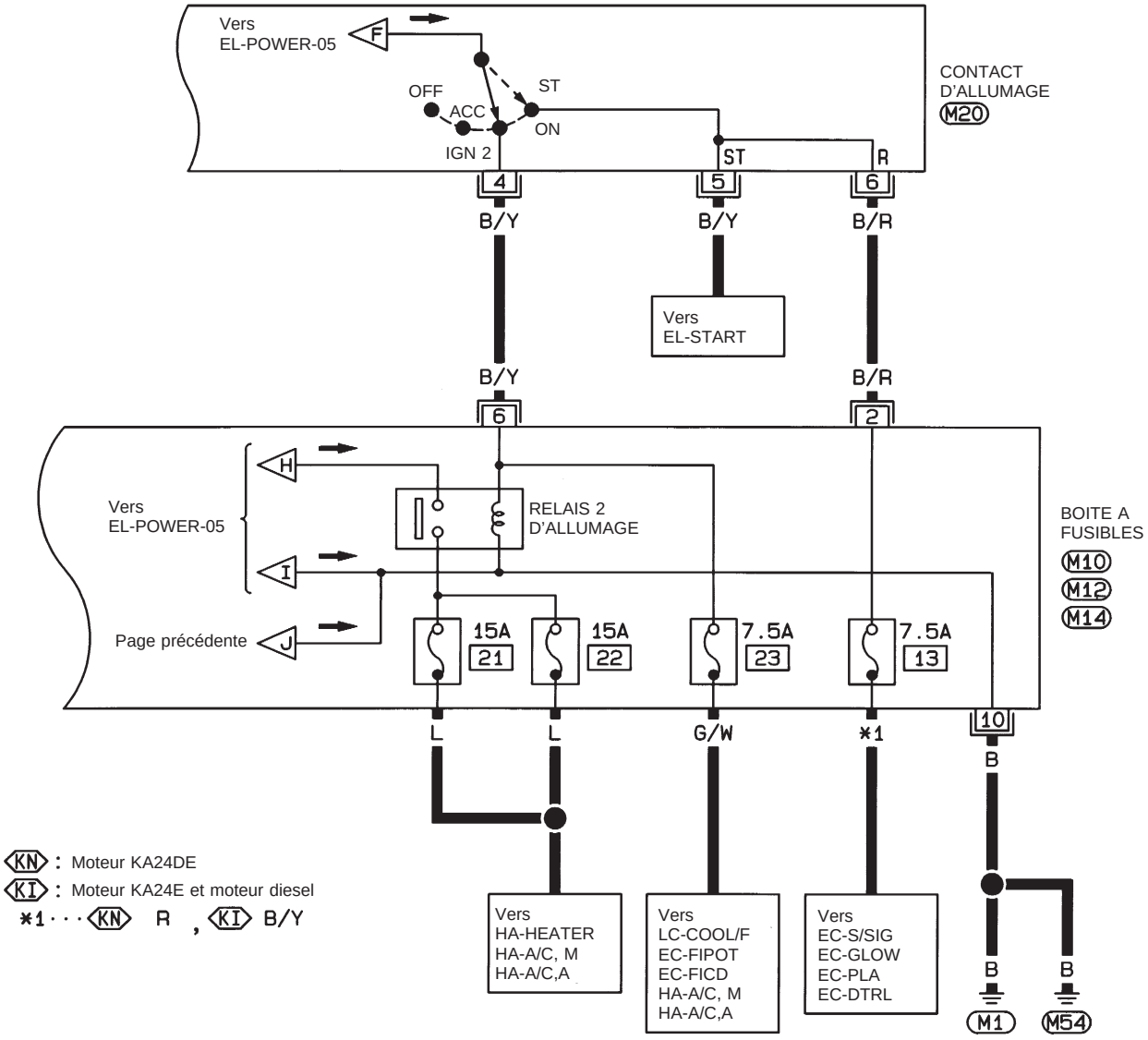

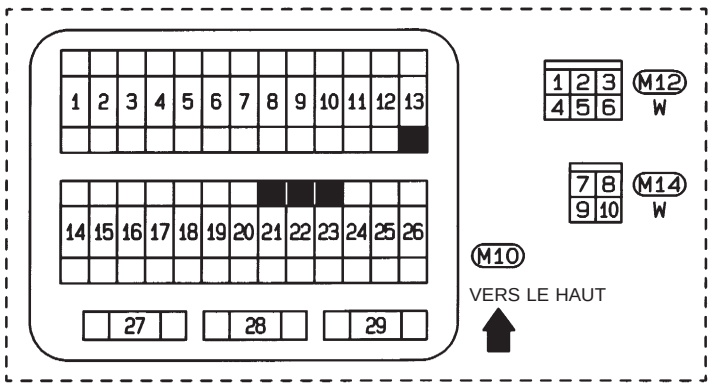

HEL676A

Simpo PDF Merge and Split Unregistered Version - http://www.simpopdf.com

Schéma de câblage — START —/Modèles avec T/M

EL-START-01

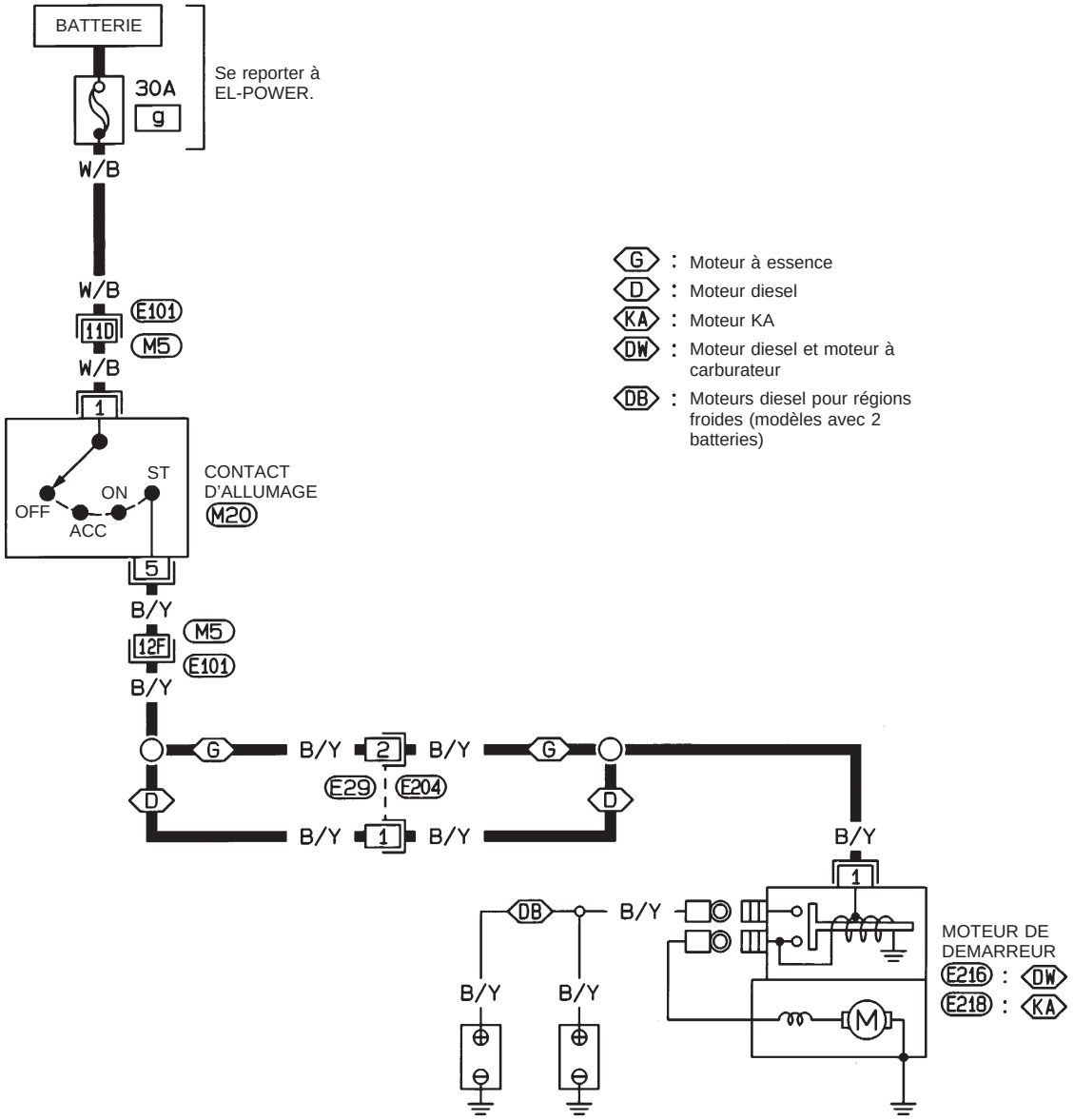

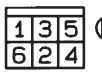

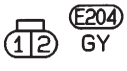

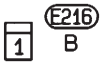



Consulter la dernière page dépliante.

M5, E101

HEL677A

Simpo PDF Merge and Split Unregistered Version - http://www.simpopdf.com

Schéma de câblage — CHARGE —/Moteur à essence

EL-CHARGE-01

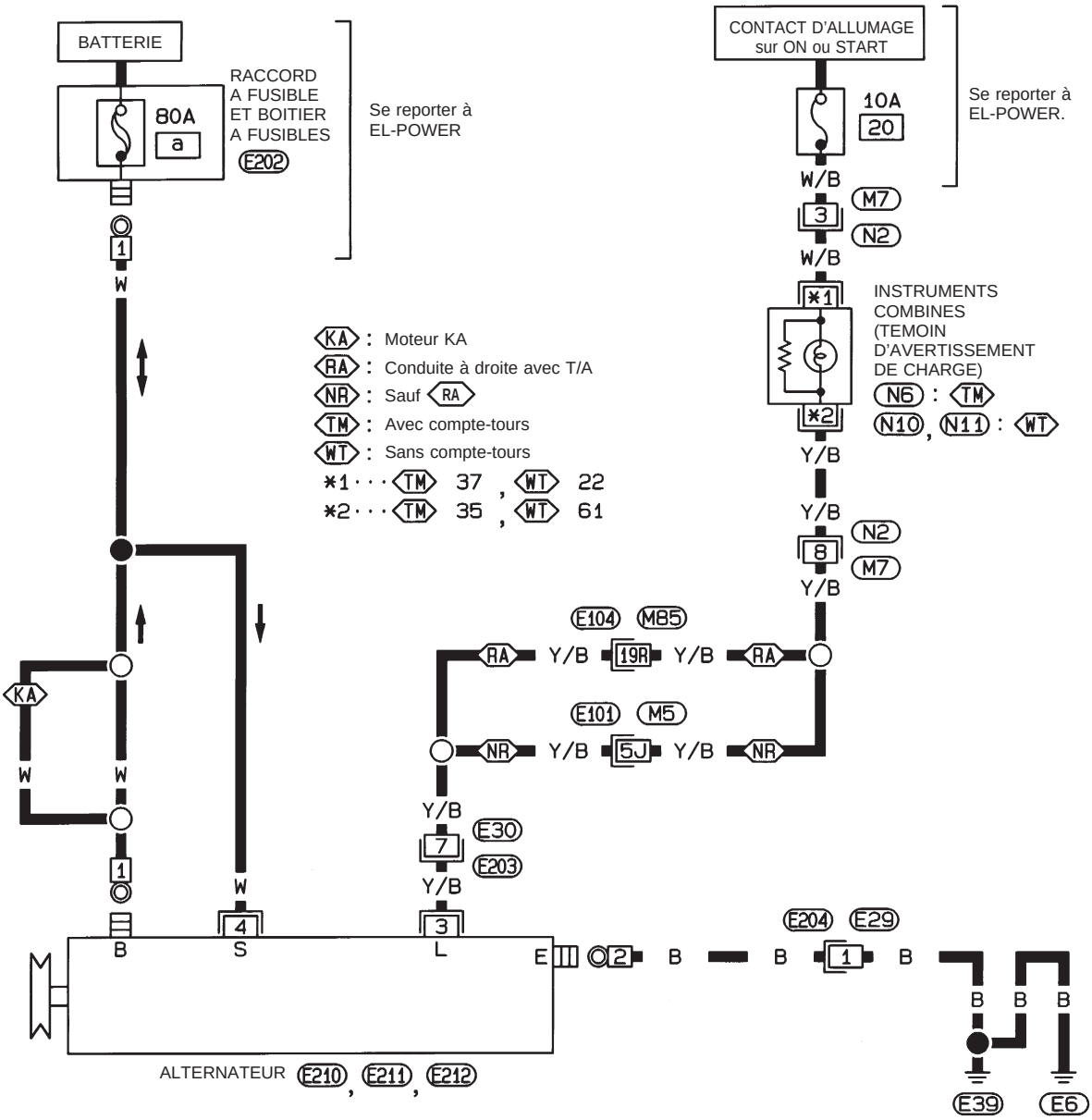

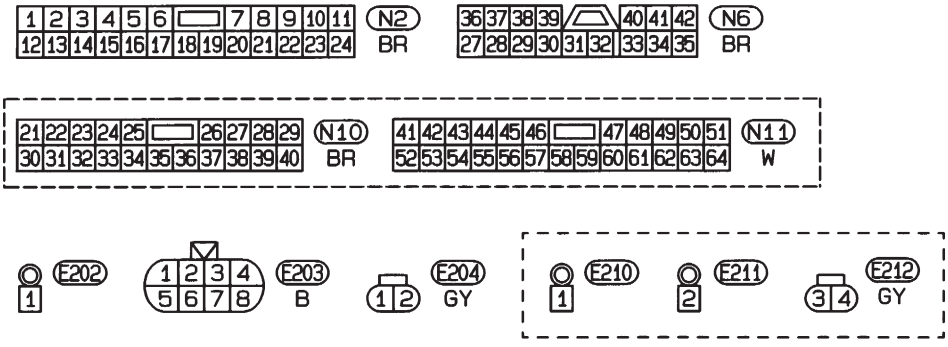

Consulter la dernière page dépliante.

M5, E101
M85, E104

HEL680A

Simpo PDF Merge and Split Unregistered Version - http://www.simpopdf.com

Schéma de câblage — CHARGE —/Moteur diesel

EL-CHARGE-02

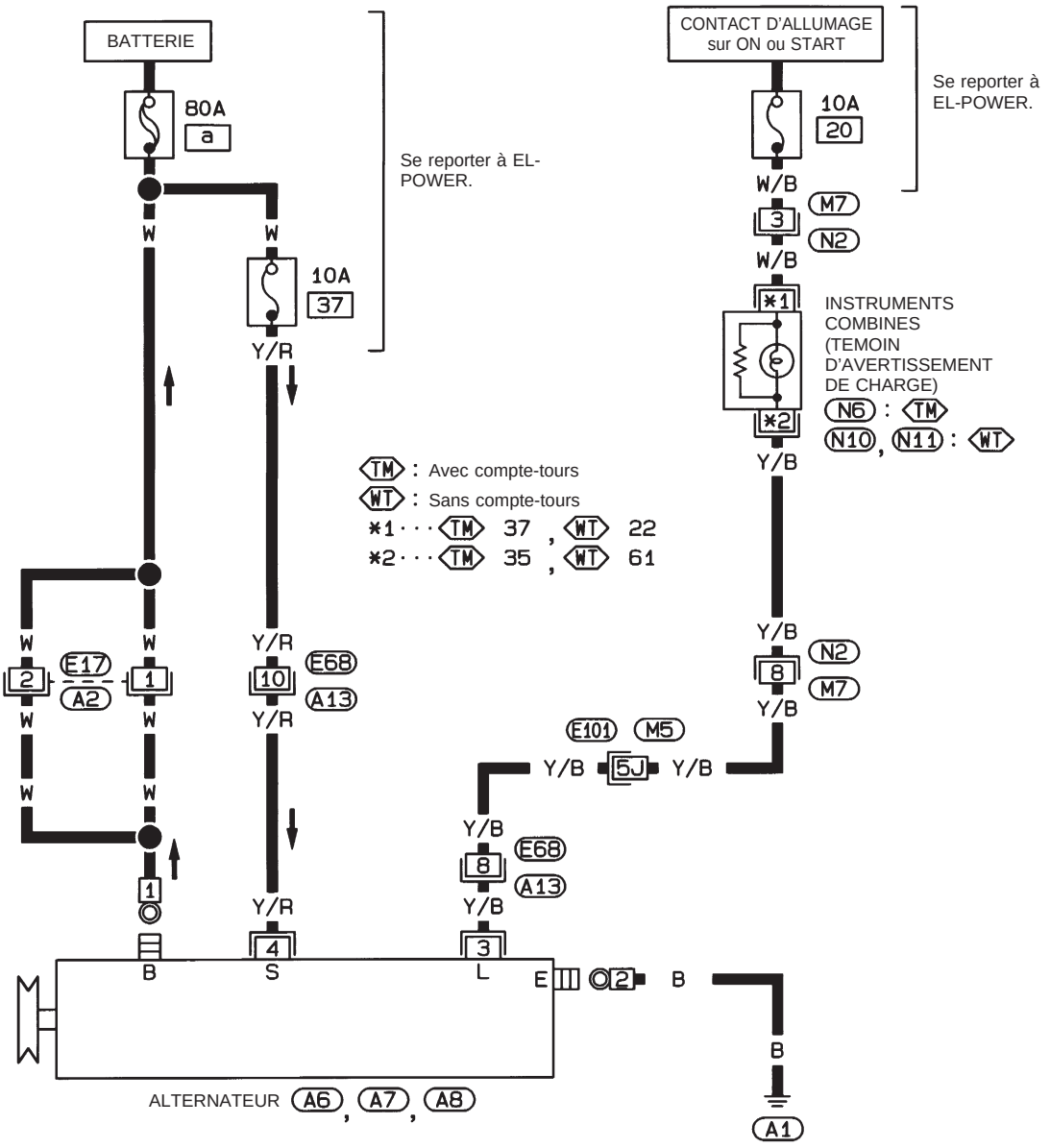

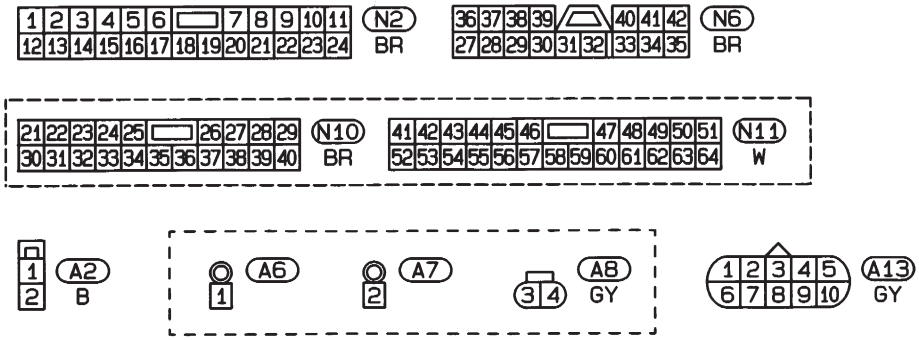

Consulter la dernière page dépliante.

M5, E101

HEL681A

Simpo PDF Merge and Split Unregistered Version - http://www.simpopdf.com

Construction

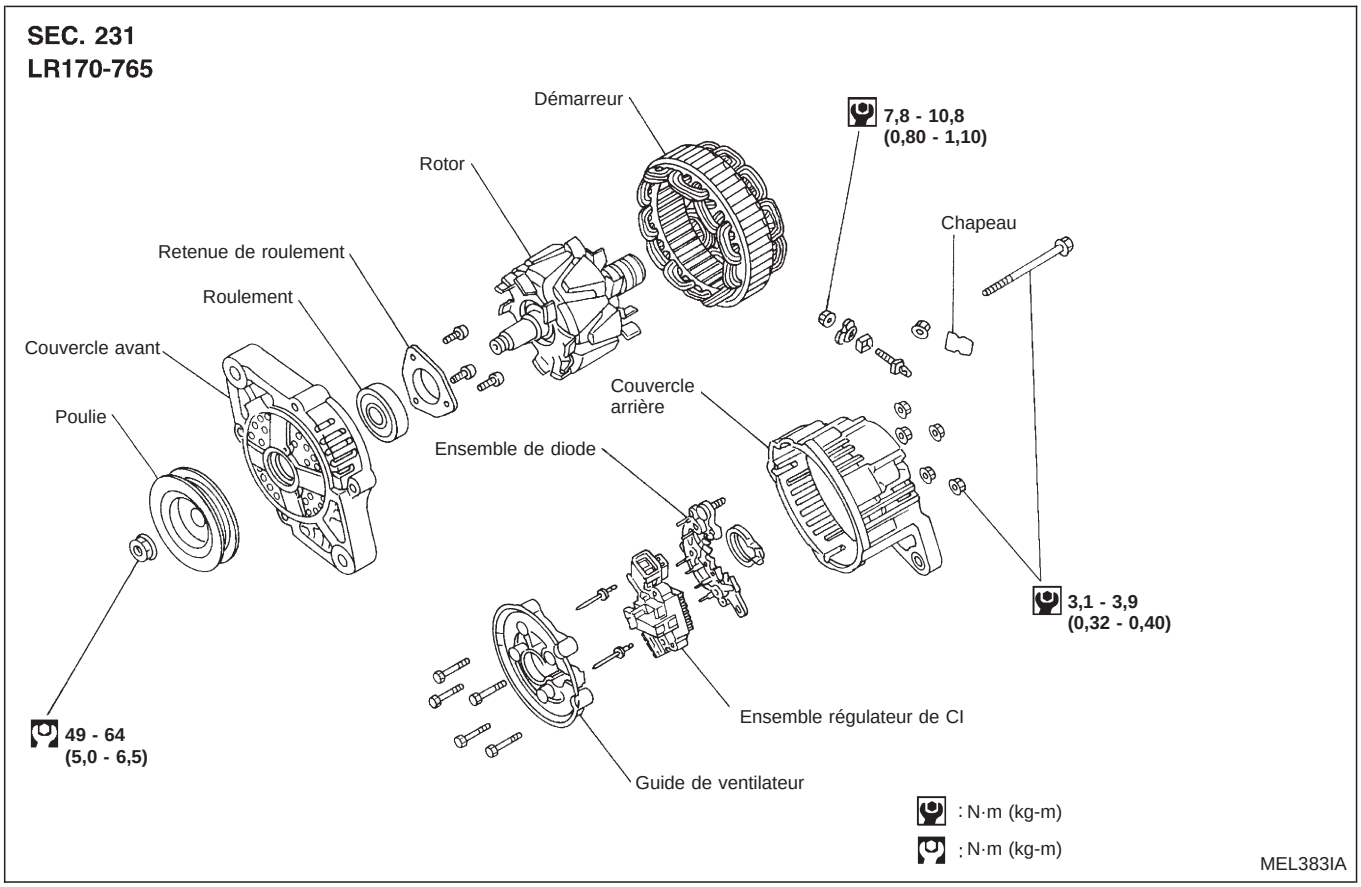

Simpo PDF Merge and Split Unregistered Version - http://www.simpopdf.com

Caractéristiques et valeurs de réglage (SDS)

ALTERNATEUR

Type	LR170-765	LR160-728F
	HITACHI	
Modèle concerné	KA24	TD25
Puissance nominale V-A	12-70	12-60
Polarité de masse	Négative	
Régime minimum à vide (avec une tension de 13,5V) tr/mn	Moins de 1 000	
Courant de sortie à chaud (avec une tension de 13,5V) Amp./tr/mn	Plus de 77/1 300 Plus de 54/2 500 Plus de 75/5 000	Plus de 77/1 300 Plus de 48/2 500 Plus de 57/5 000
Tension de sortie réglée V	14,1 - 14,7	
Longueur minimum des balais mm	6,0	
Pression du ressort de balai N (g)	1,0 - 3,43 (102 - 350)	
Diamètre extérieur minimum de l'anneau coulissant mm	26,0	
Résistance de rotor (bobine d'induction) Ω	2,58	

* : Modèles avec direction assistée et climatisation

Simpo PDF Merge and Split Unregistered Version - http://www.simpopdf.com

Vérification

CONDUITE A GAUCHE

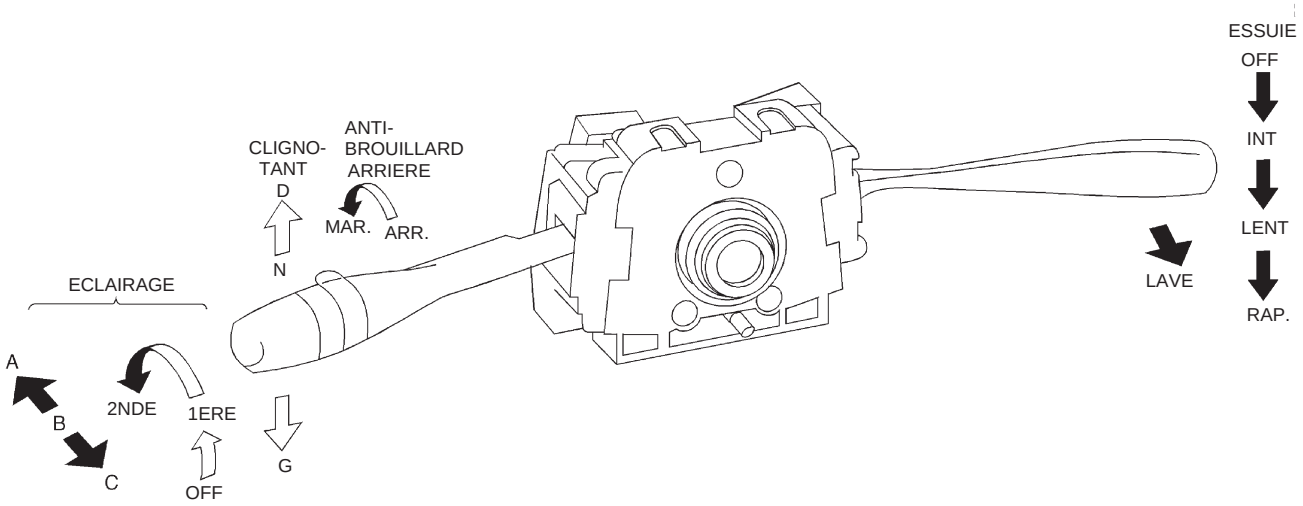

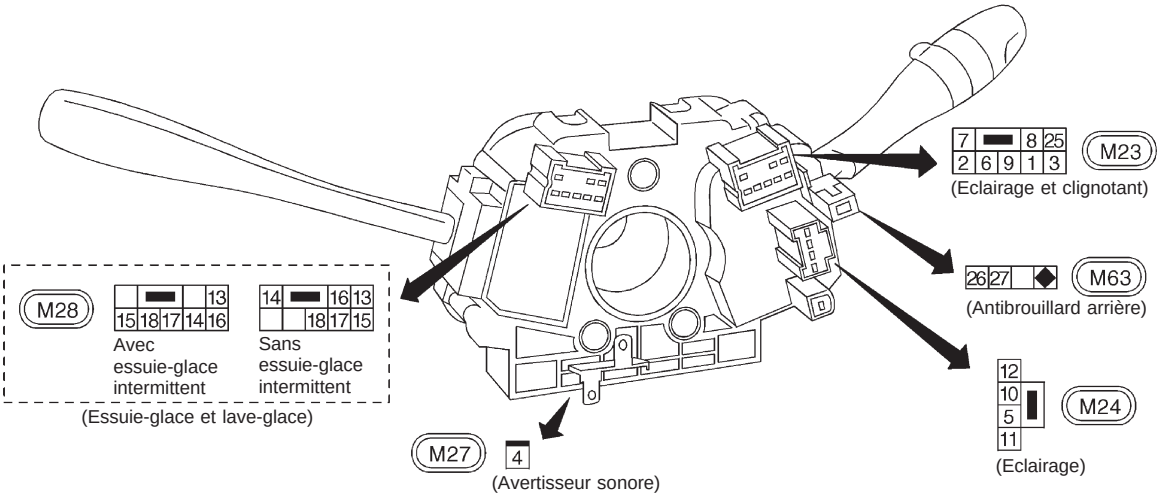

COMMANDE D'ECLAIRAGE

	OFF			1ERE			2NDE		
	A	B	C	A	B	C	A	B	C
5			○			○	○	○	○
6			○			○			
7								○	
8			○			○	○	○	○
9			○			○	○		○
10								○	
11				○	○	○	○	○	○
12				○	○	○	○	○	○
25							○	○	○

COMMANDE D'ESSUIE-GLACE ET LAVE-GLACE (Avec essuie-glace intermittent)

	OFF	INT	LENT	RAP.	LAVE
13				○	
14	○	○	○		
	○	○			
		○			
15				○	
16			○		
17		○	○	○	○
18					○

AMPLIFICATEUR D'ESSUIE-GLACE (dans la commande combinée)

COMMANDE D'ESSUIE-GLACE ET LAVE-GLACE (Sans essuie-glace intermittent)

	OFF	LENT	RAP.	LAVE
13	○			
14	○	○		
15				
16			○	
17		○	○	○
18				○

COMMANDE DE CLIGNOTANT

	G	N	D
1	○		○
2			○
3	○		

COMMANDE DE FEU ANTIBROUILLARD ARRIERE

	MAR.	ARR.
26		○
27		○

COMMANDE D'AVERTISSEUR SONORE (Sans coussin gonflable)

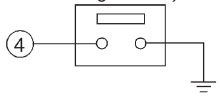

HEL682A

Simpo PDF Merge and Split Unregistered Version - http://www.simpopdf.com

Schéma de câblage — H/LAMP —/Conduite à gauche

EL-H/LAMP-01

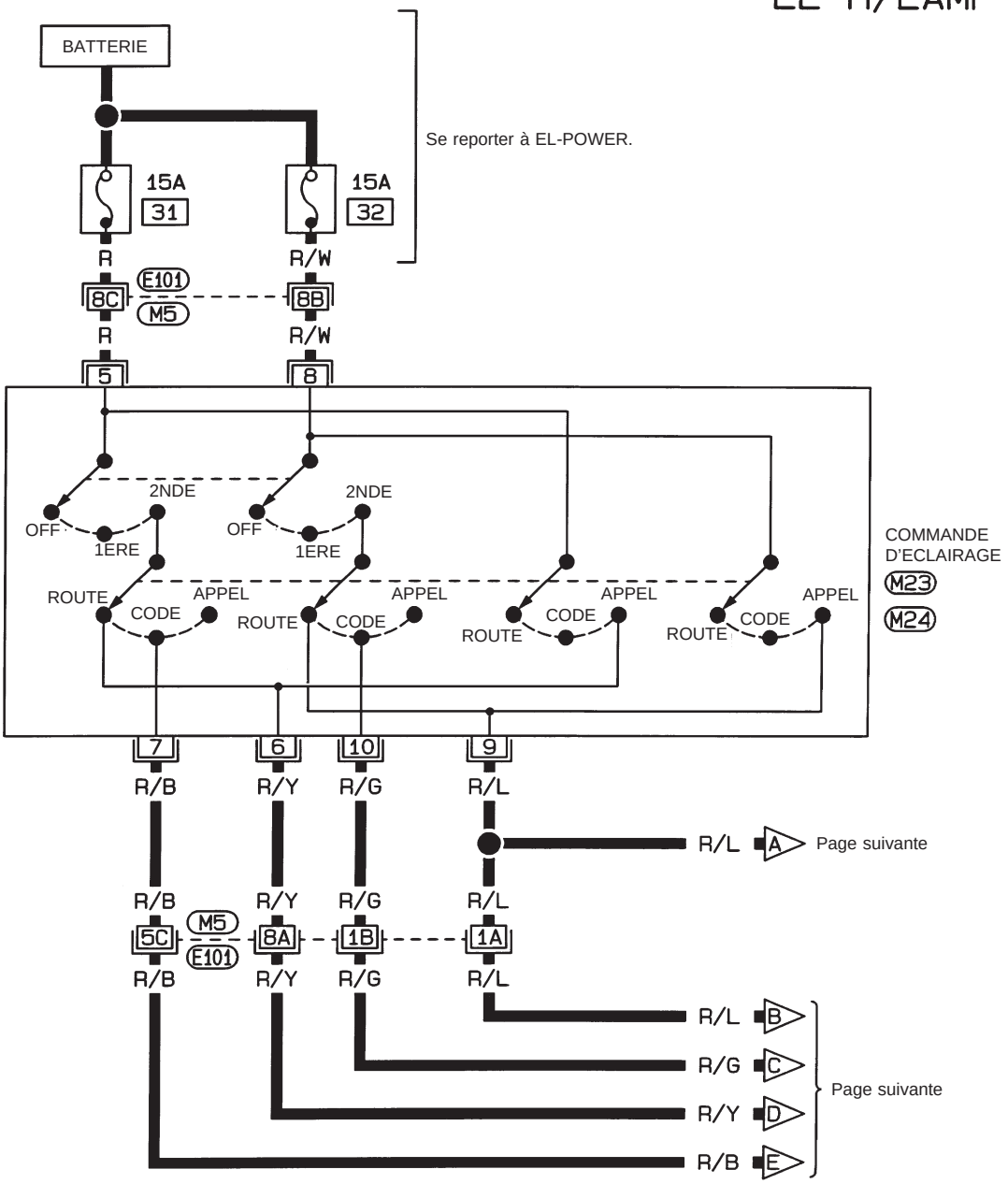



Consulter la dernière page dépliante.

M5 , E101

HEL898

Simpo PDF Merge and Split Unregistered Version - http://www.simpopdf.com

Schéma de câblage — H/LAMP —/Conduite à gauche (suite)

EL-H/LAMP-02

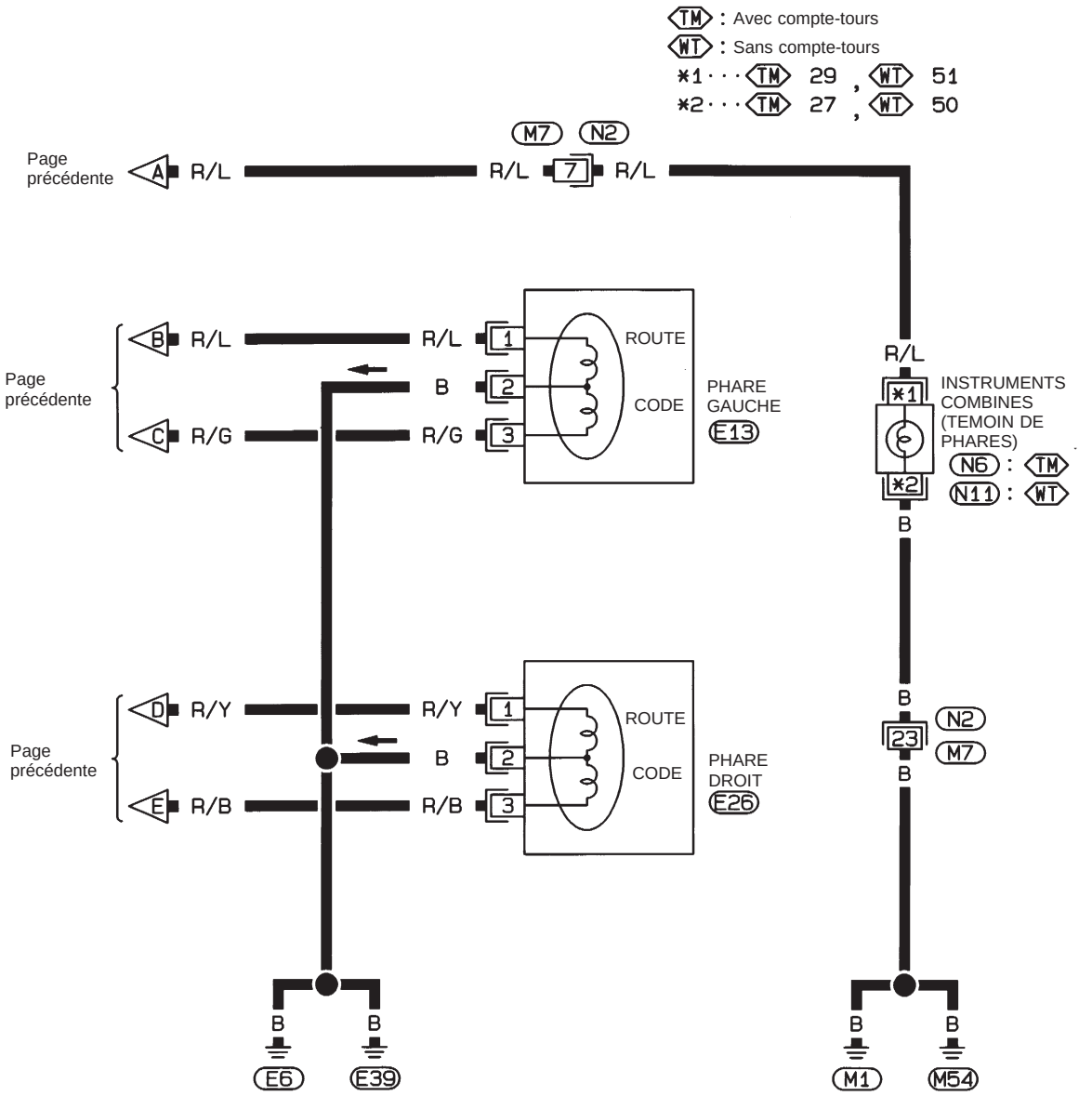





HEL684A

Simpo PDF Merge and Split Unregistered Version - http://www.simpopdf.com

Schéma de câblage — H/LAMP —/Conduite à droite

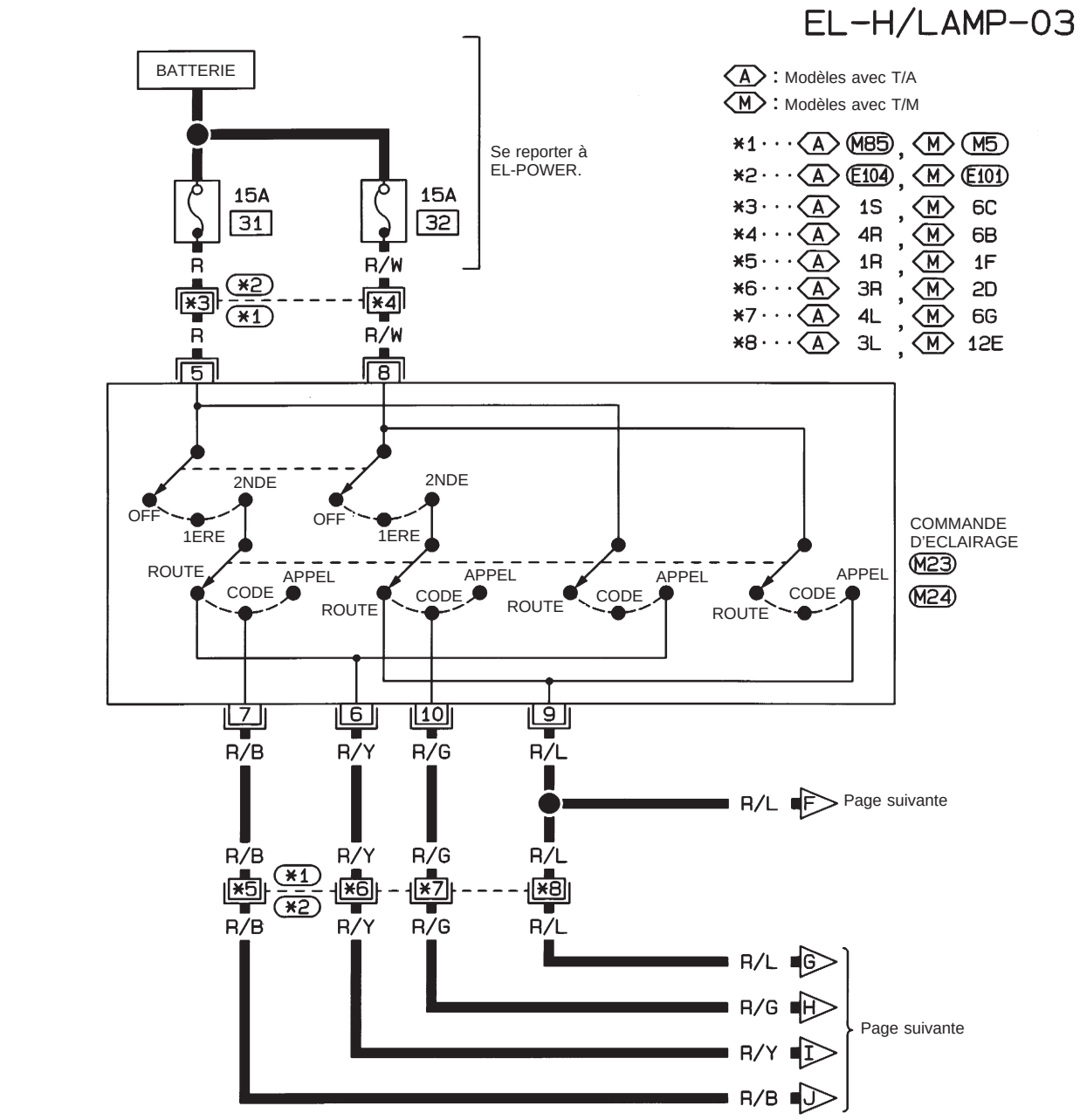



Consulter la dernière page dépliante.

M5 , E101
M85 , E104

HEL685A

Simpo PDF Merge and Split Unregistered Version - http://www.simpopdf.com

Schéma de câblage — H/LAMP —/Conduite à droite (suite)

EL-H/LAMP-04

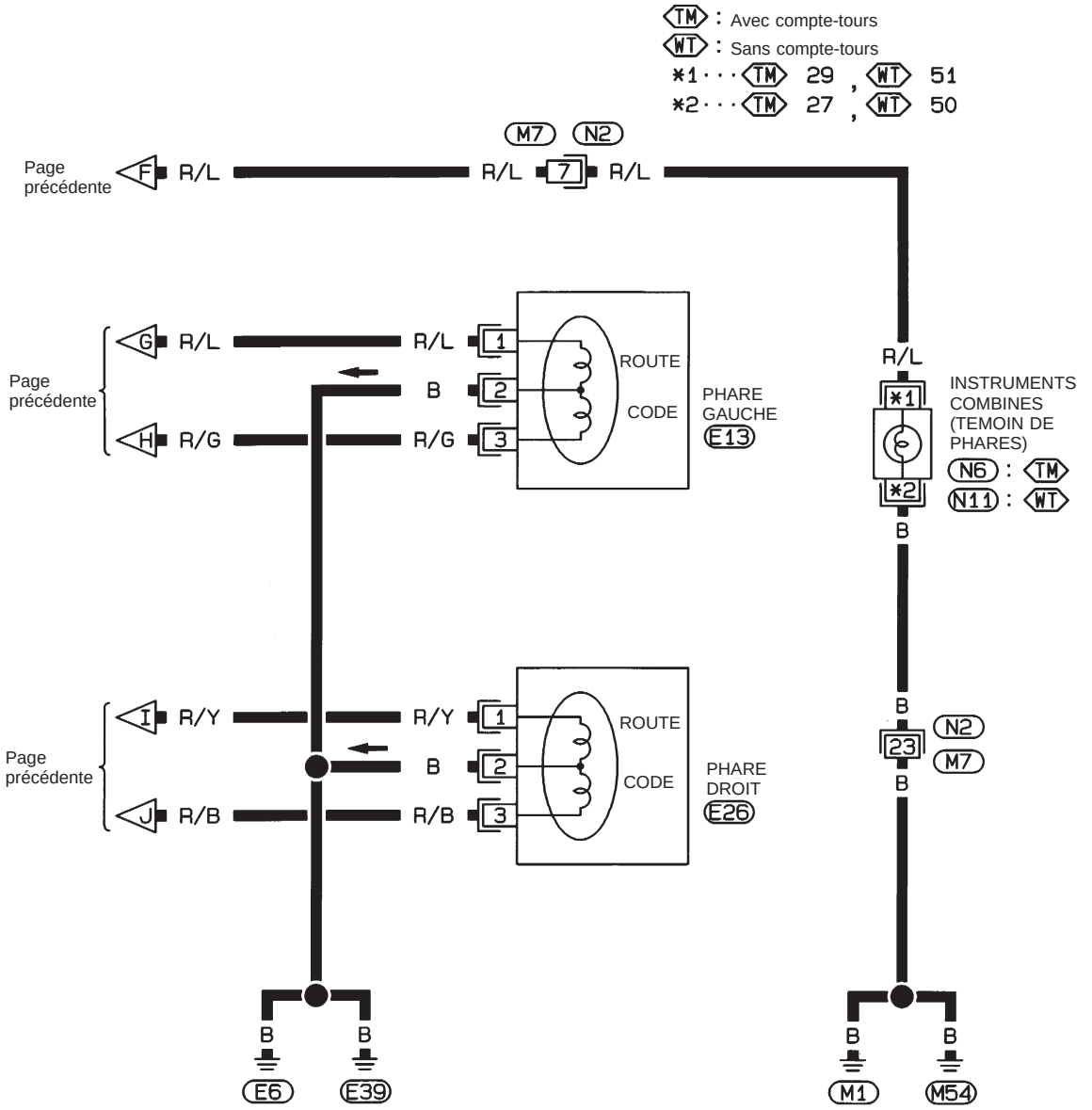





HEL686A

Simpo PDF Merge and Split Unregistered Version - http://www.simpopdf.com

Schéma de câblage — DTRL —

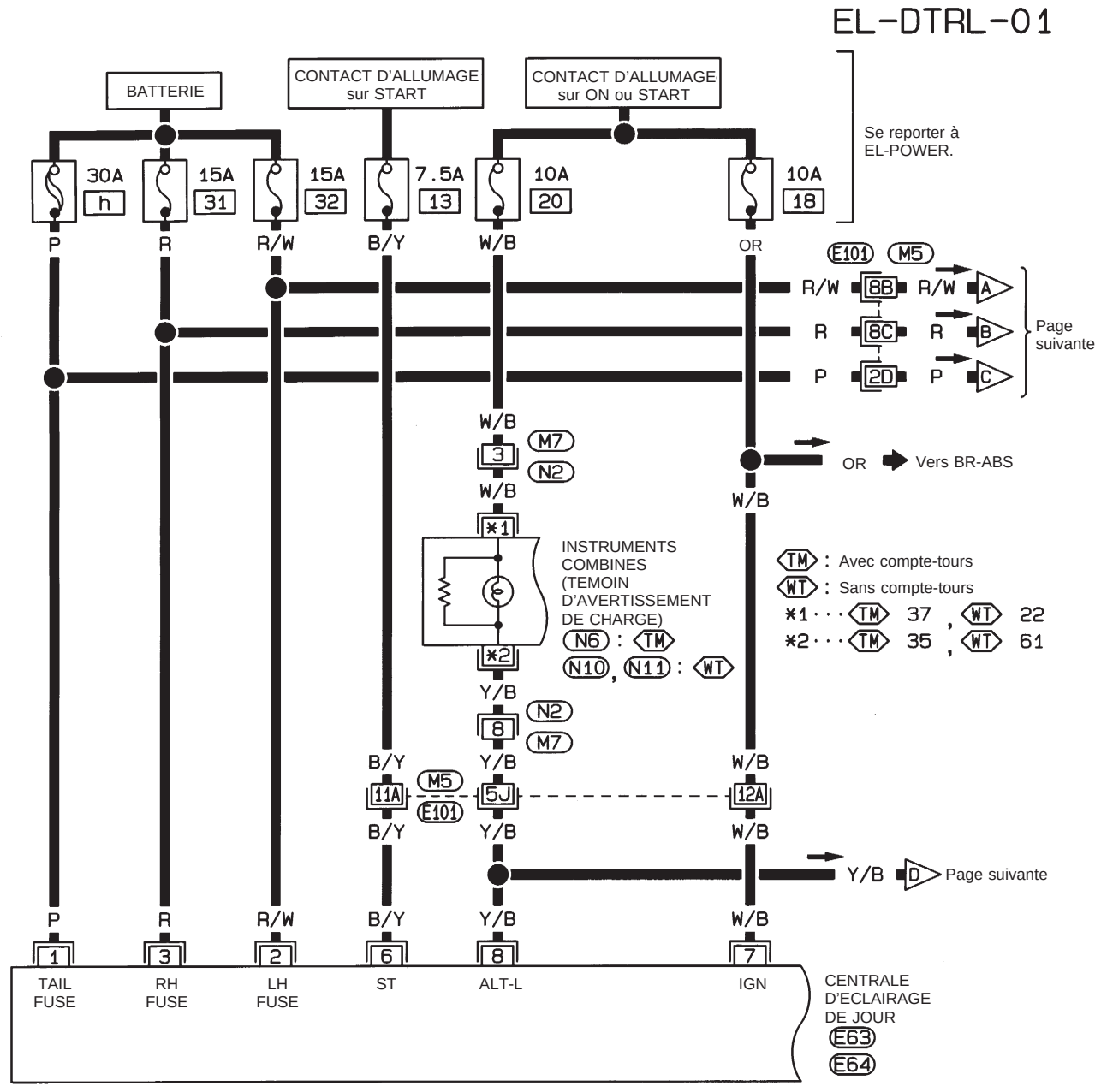

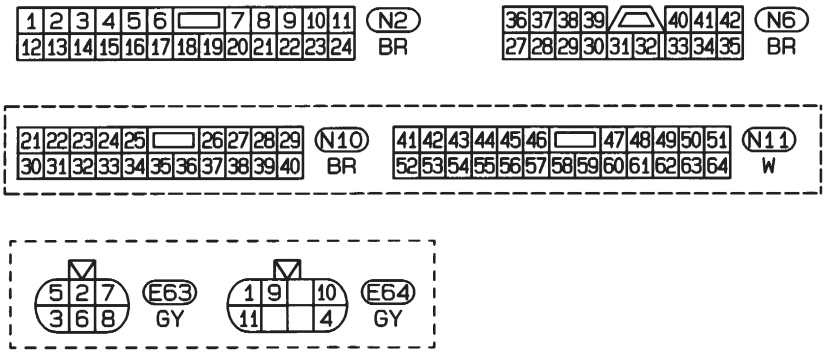

Consulter la dernière page dépliante.

M5, E101

HEL687A

Simpo PDF Merge and Split Unregistered Version - http://www.simpopdf.com

Schéma de câblage — DTRL — (suite)

EL-DTRL-02

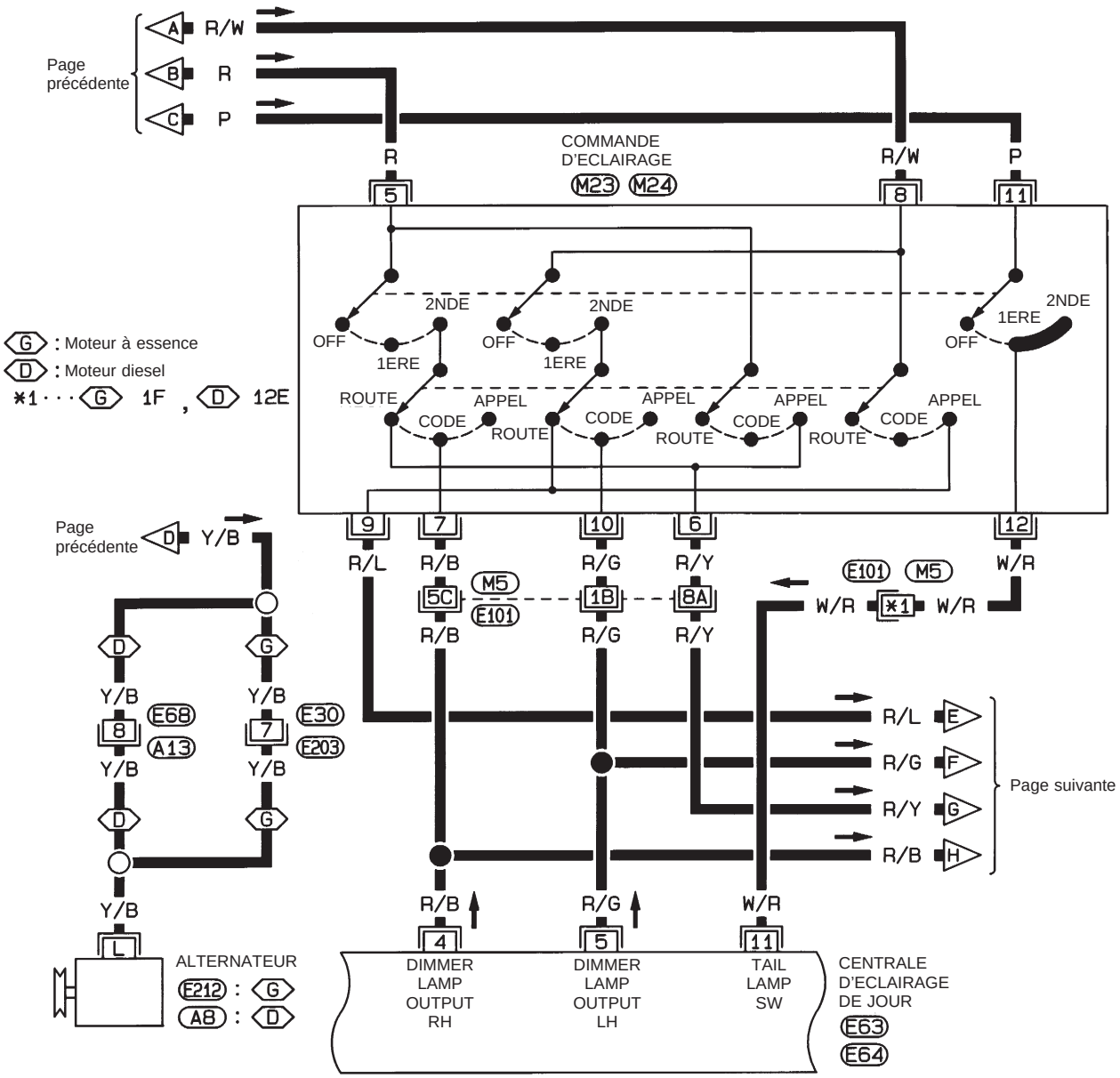

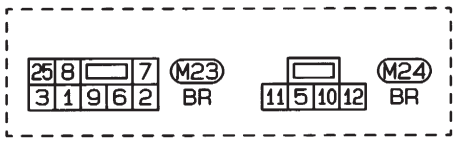

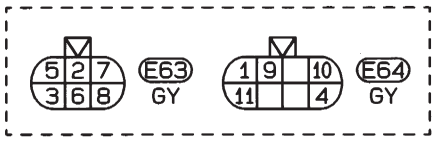





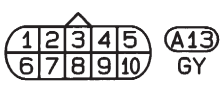

Consulter la dernière page dépliante.

M5 , E101

HEL688A

Simpo PDF Merge and Split Unregistered Version - http://www.simpopdf.com

Schéma de câblage — DTRL — (suite)

EL-DTRL-03

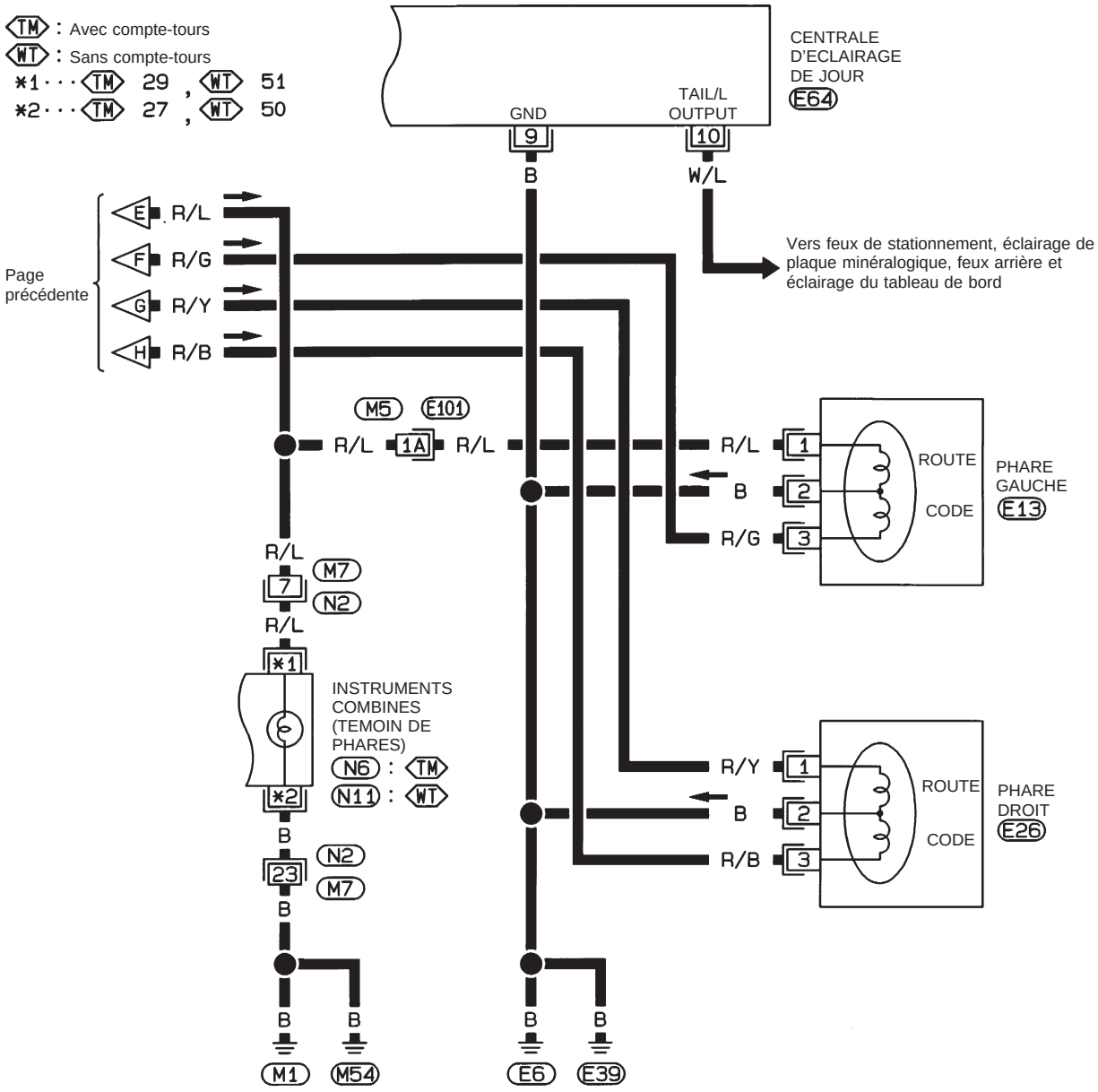

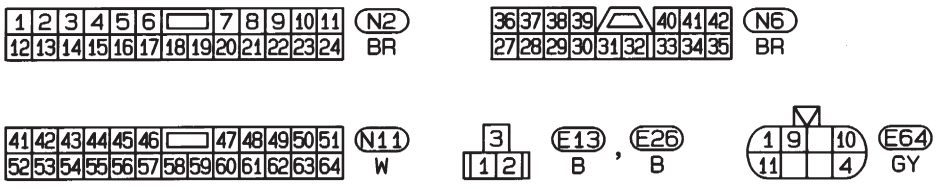

Consulter la dernière page dépliante.

M5, E101

HEL689A

Simpo PDF Merge and Split Unregistered Version - http://www.simpopdf.com

Schéma de câblage — DIMDIP —

EL-DIMDIP-01

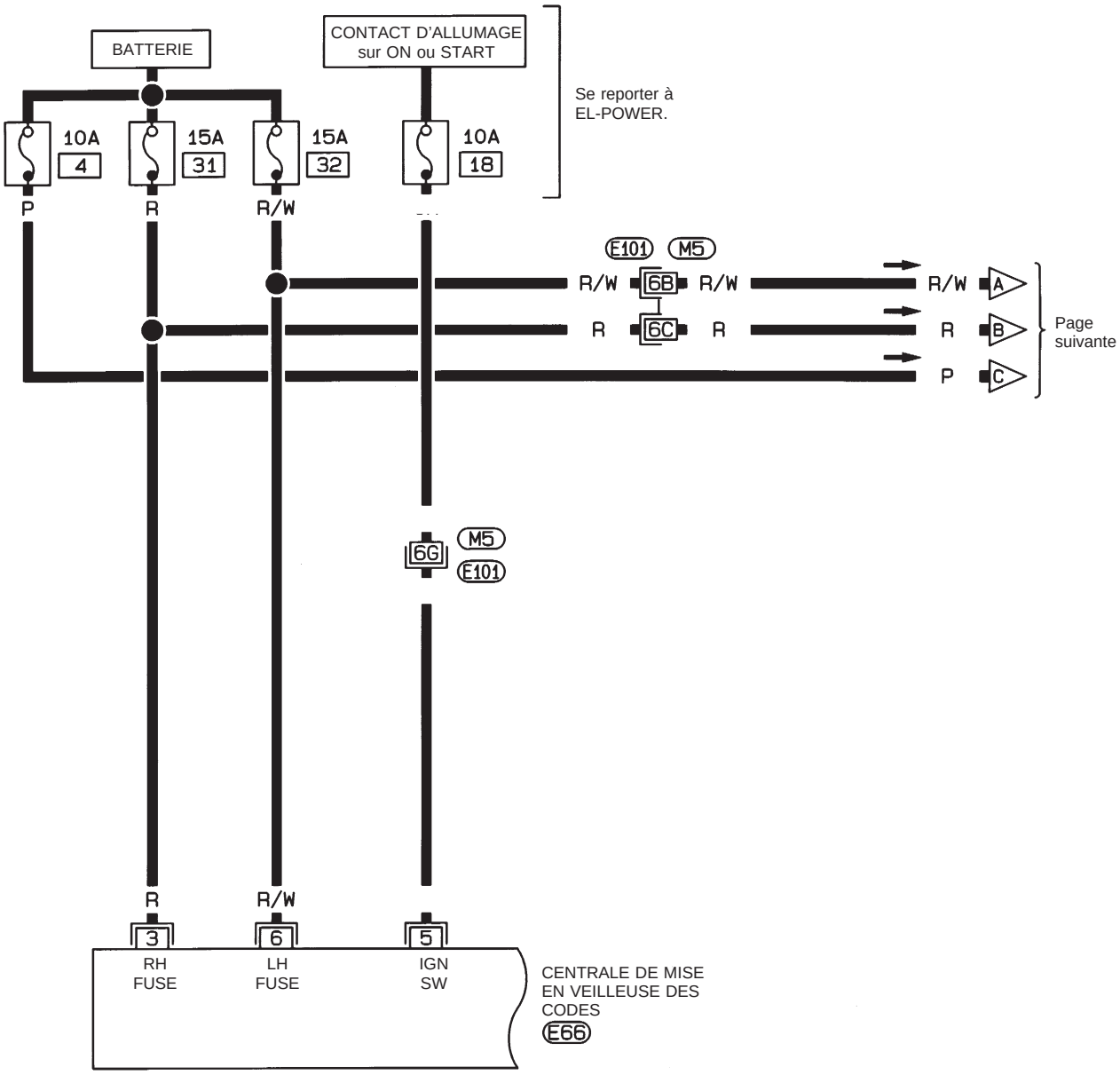

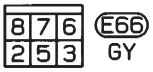

Consulter la dernière page dépliante.

M5, E101

HEL690A

Simpo PDF Merge and Split Unregistered Version - http://www.simpopdf.com

Schéma de câblage — DIMDIP — (suite)

EL-DIMDIP-02

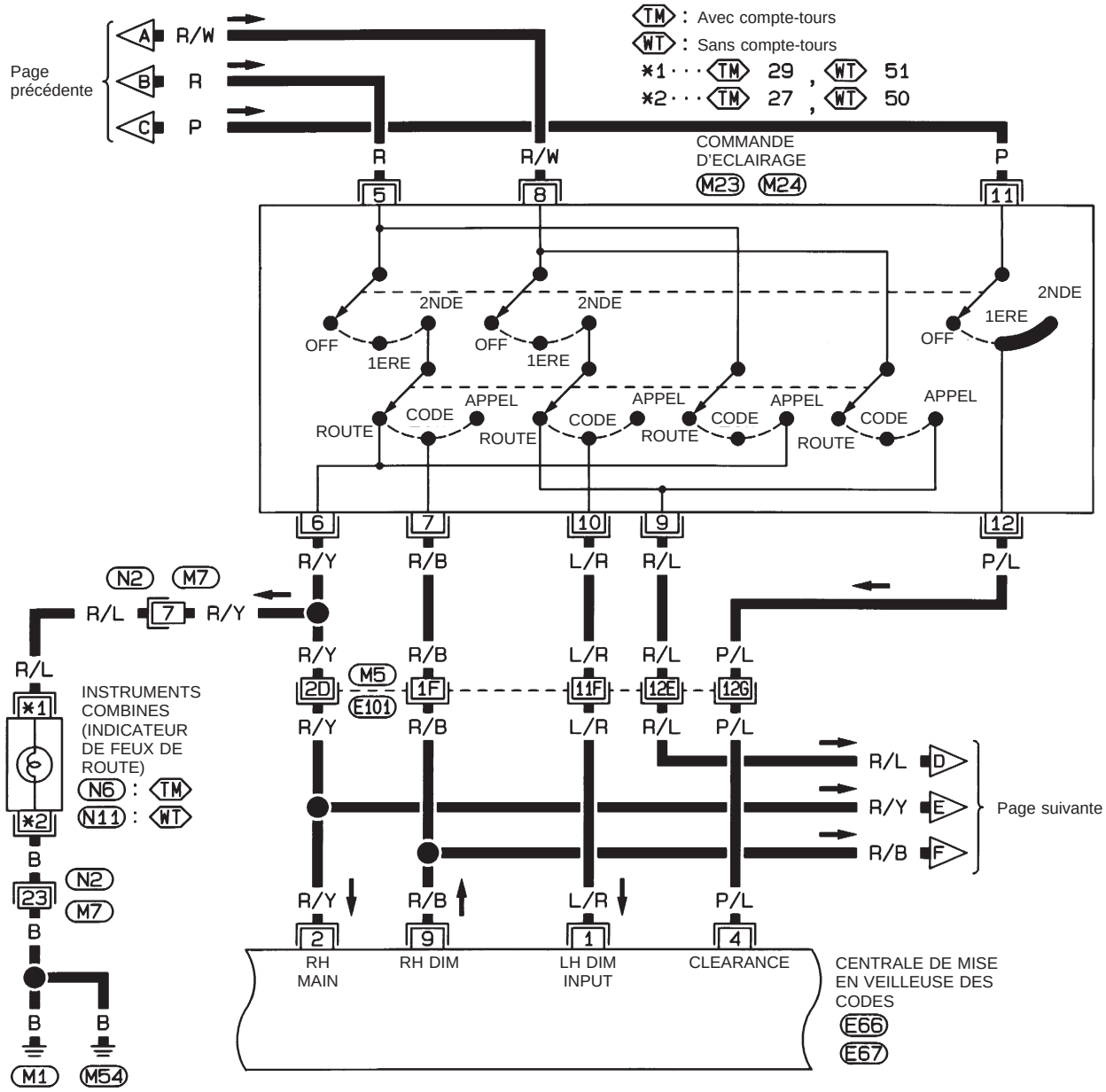

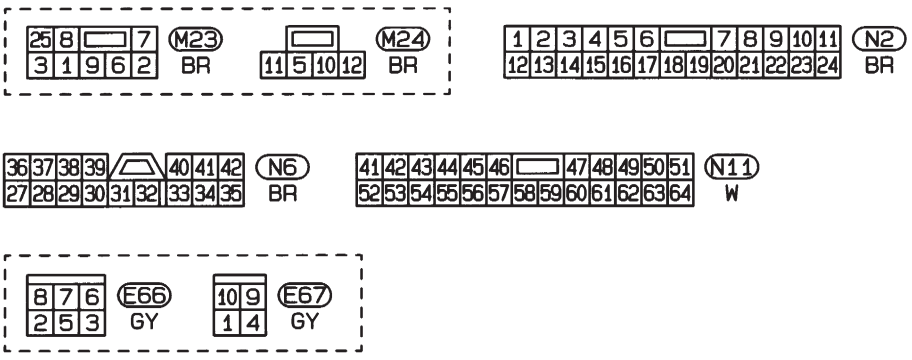

Consulter la dernière page dépliante.

M5 , E101

HEL691A

Simpo PDF Merge and Split Unregistered Version - http://www.simpopdf.com

Schéma de câblage — DIMDIP — (suite)

EL-DIMDIP-03

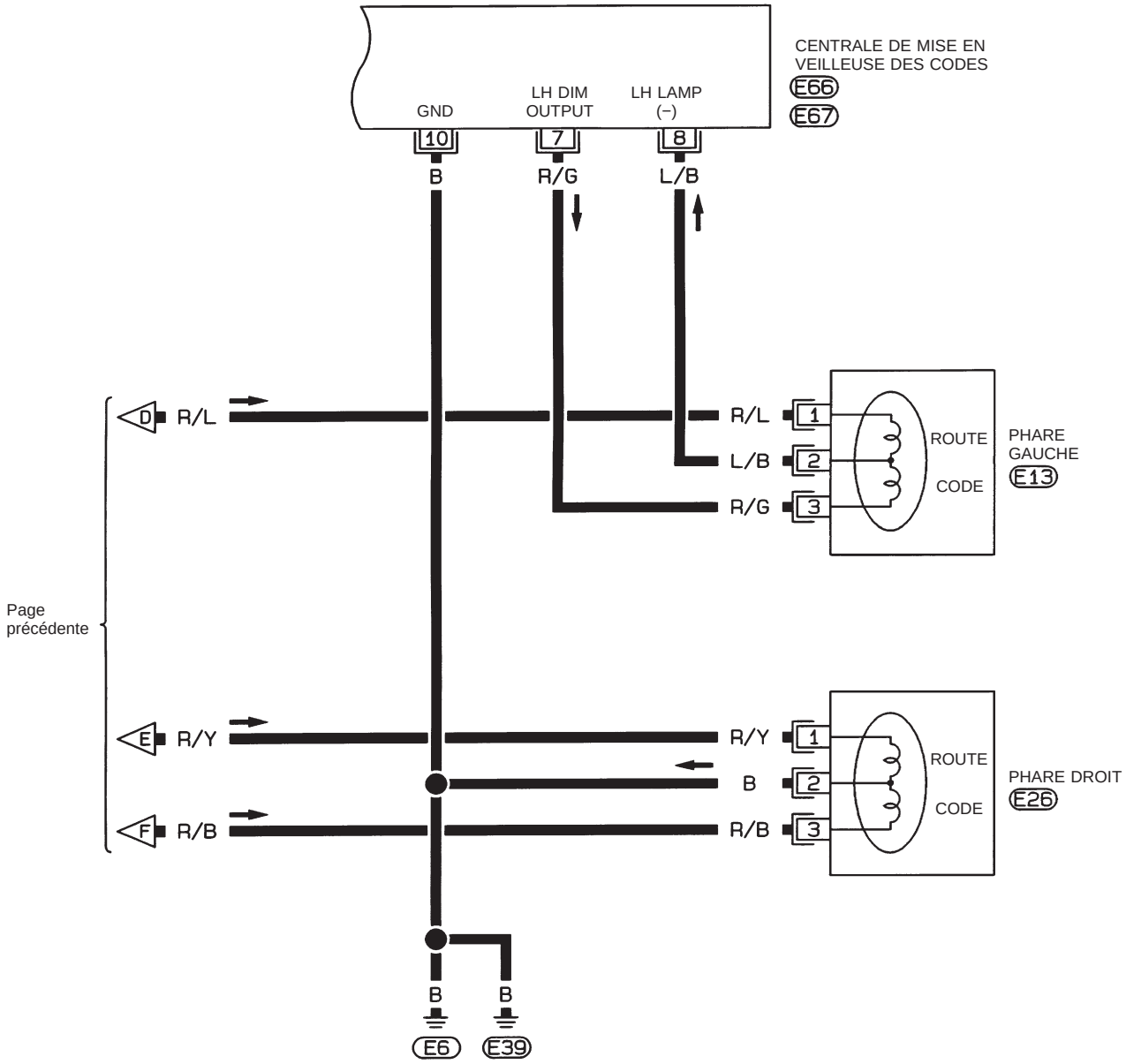

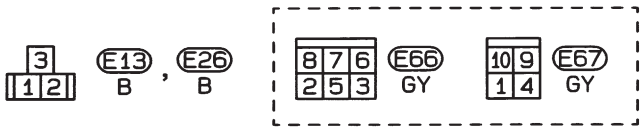

HEL329A

Simpo PDF Merge and Split Unregistered Version - http://www.simpopdf.com

Schéma de câblage — H/AIM —

EL-H/AIM-01

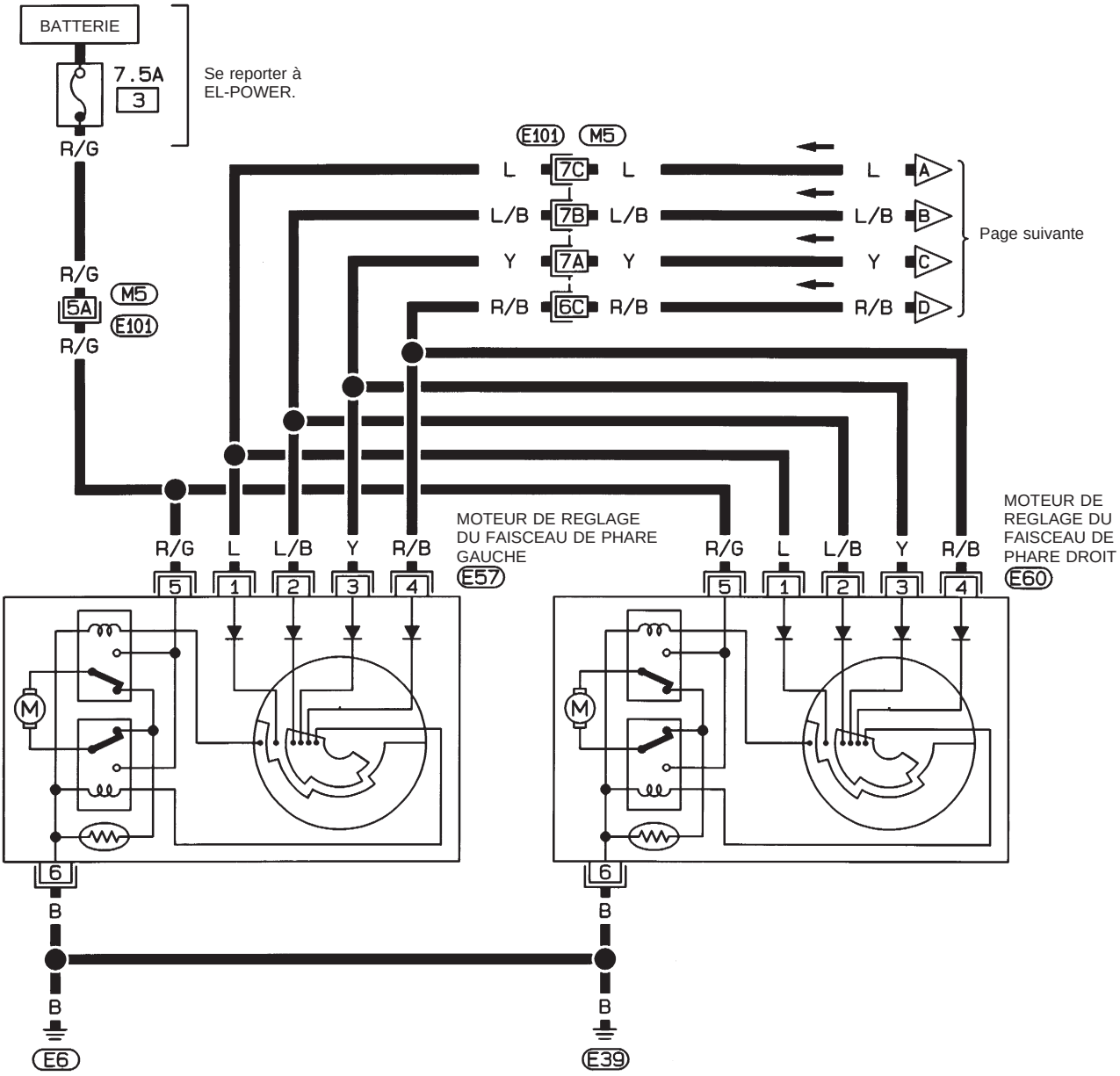

1 2 3
4 5 6
E57 GY , E60 GY

Consulter la dernière page dépliante.

M5 , E101

HEL692A

Simpo PDF Merge and Split Unregistered Version - http://www.simpopdf.com

Schéma de câblage — H/AIM — (suite)

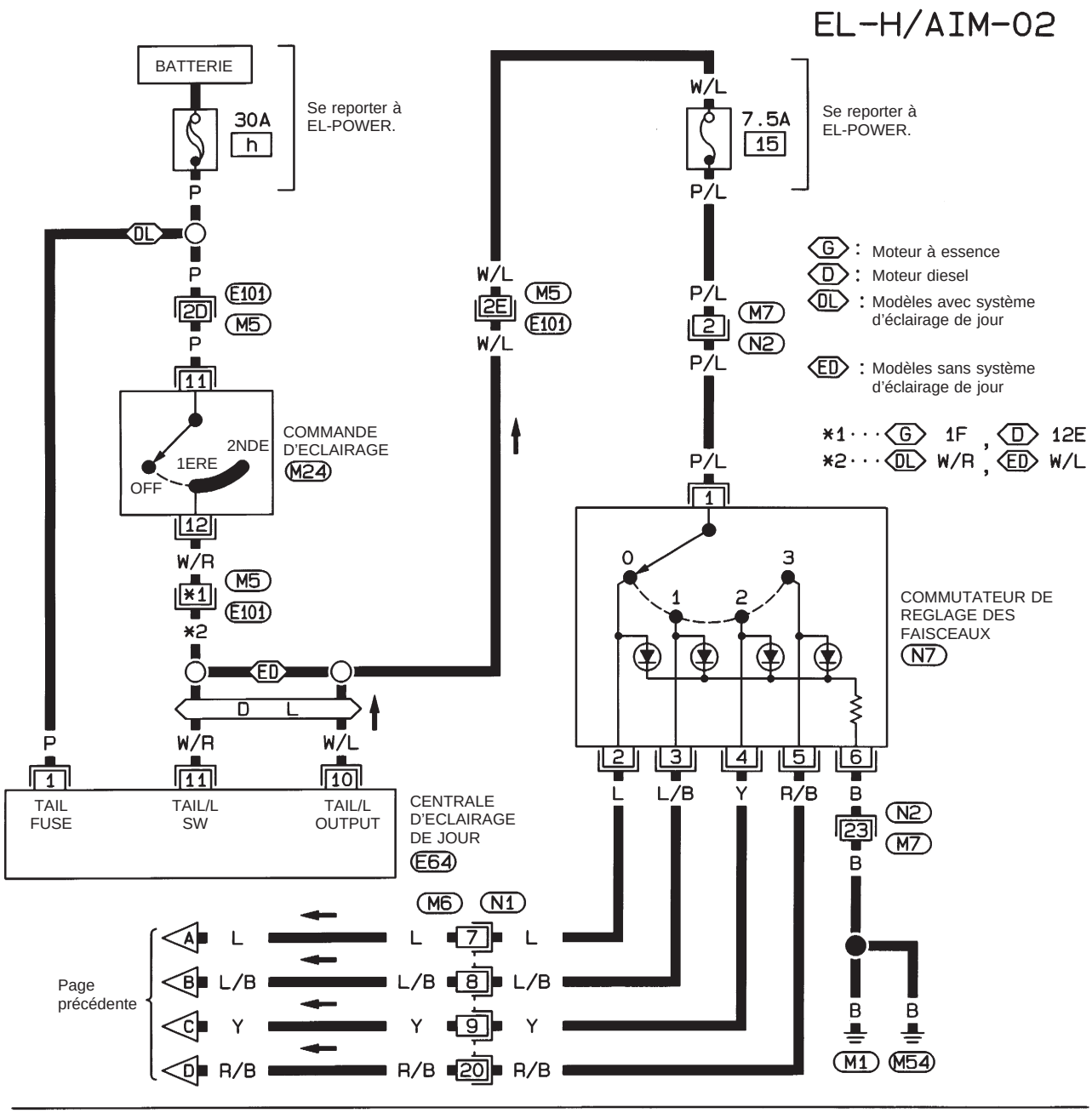

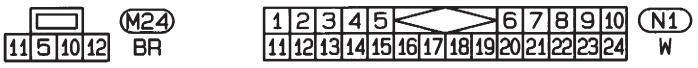



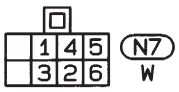



Consulter la dernière page dépliante.

M5, E101

HEL693A

Simpo PDF Merge and Split Unregistered Version - http://www.simpopdf.com

Schéma de câblage — TAIL/L —/Sauf conduite à gauche

EL-TAIL/L-01

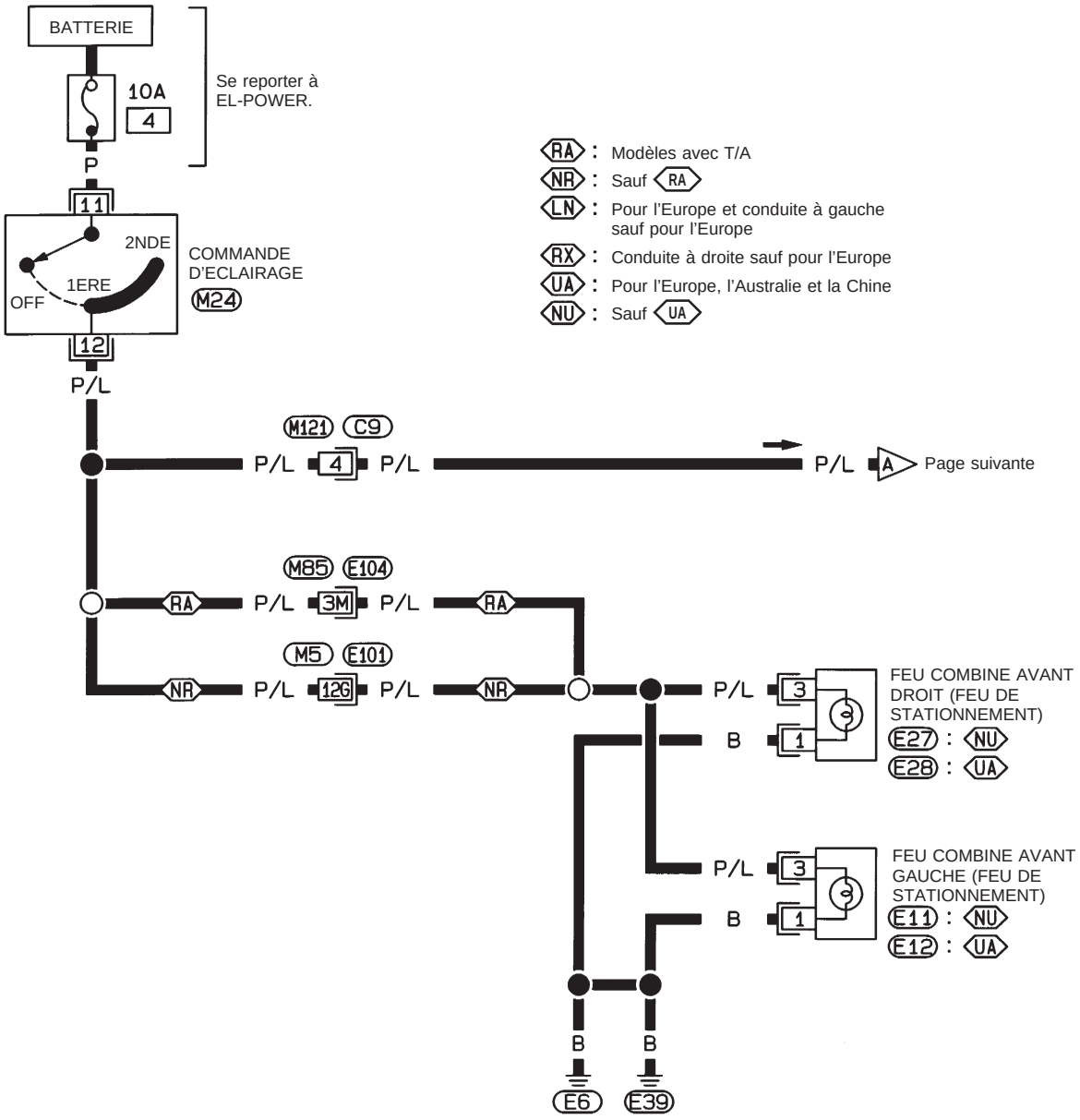

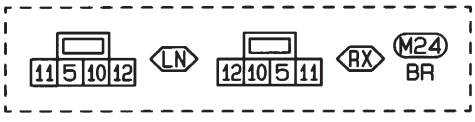





Consulter la dernière page dépliante.

M5, E101
M85, E104

HEL694A

Simpo PDF Merge and Split Unregistered Version - http://www.simpopdf.com

Schéma de câblage — TAIL/L —/Sauf conduite à gauche (suite)

EL-TAIL/L-02

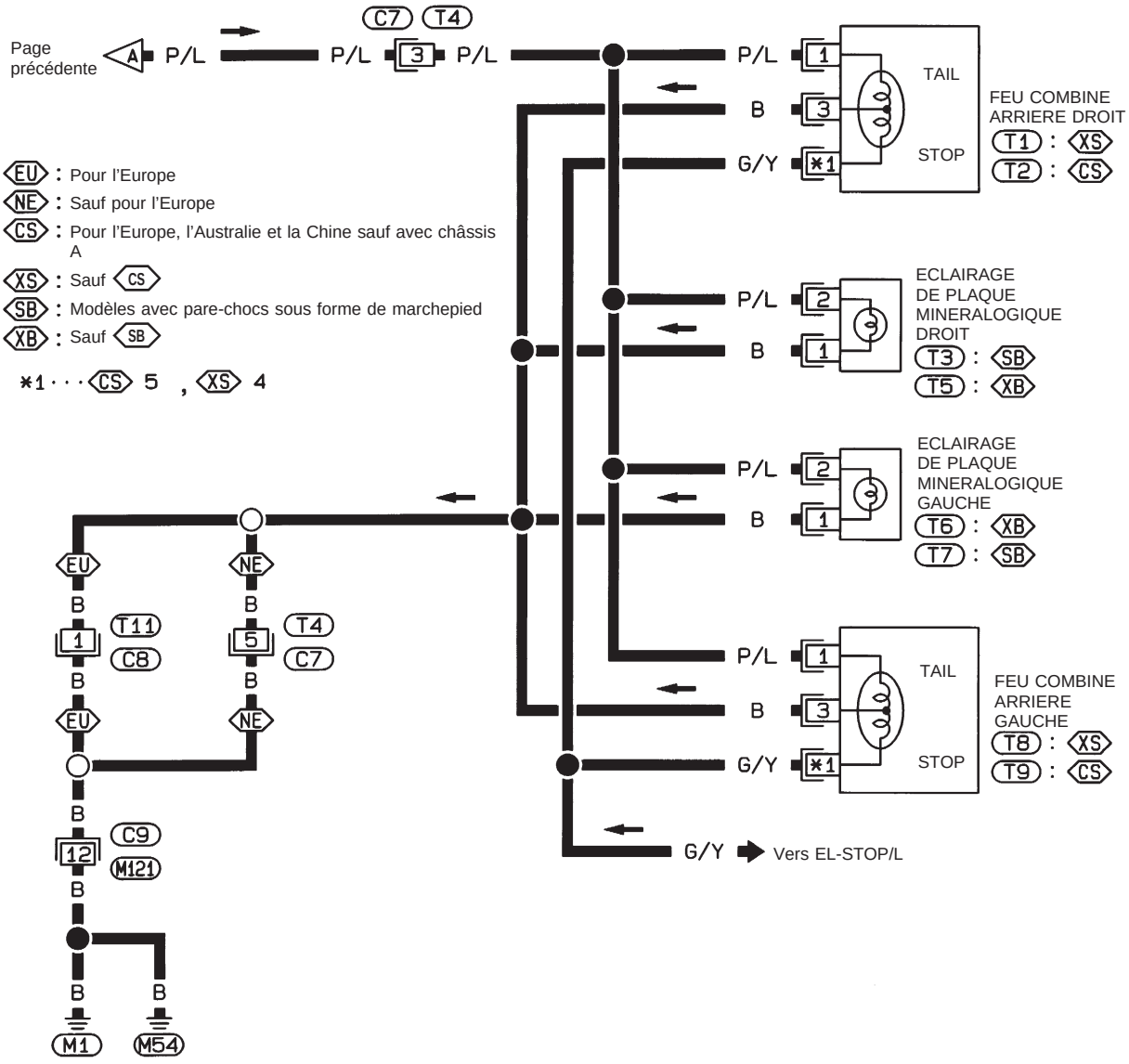

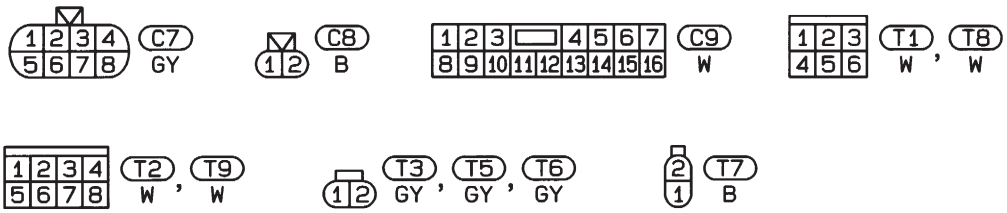

HEL695A

Simpo PDF Merge and Split Unregistered Version - http://www.simpopdf.com

Schéma de câblage — TAIL/L —/Conduite à gauche

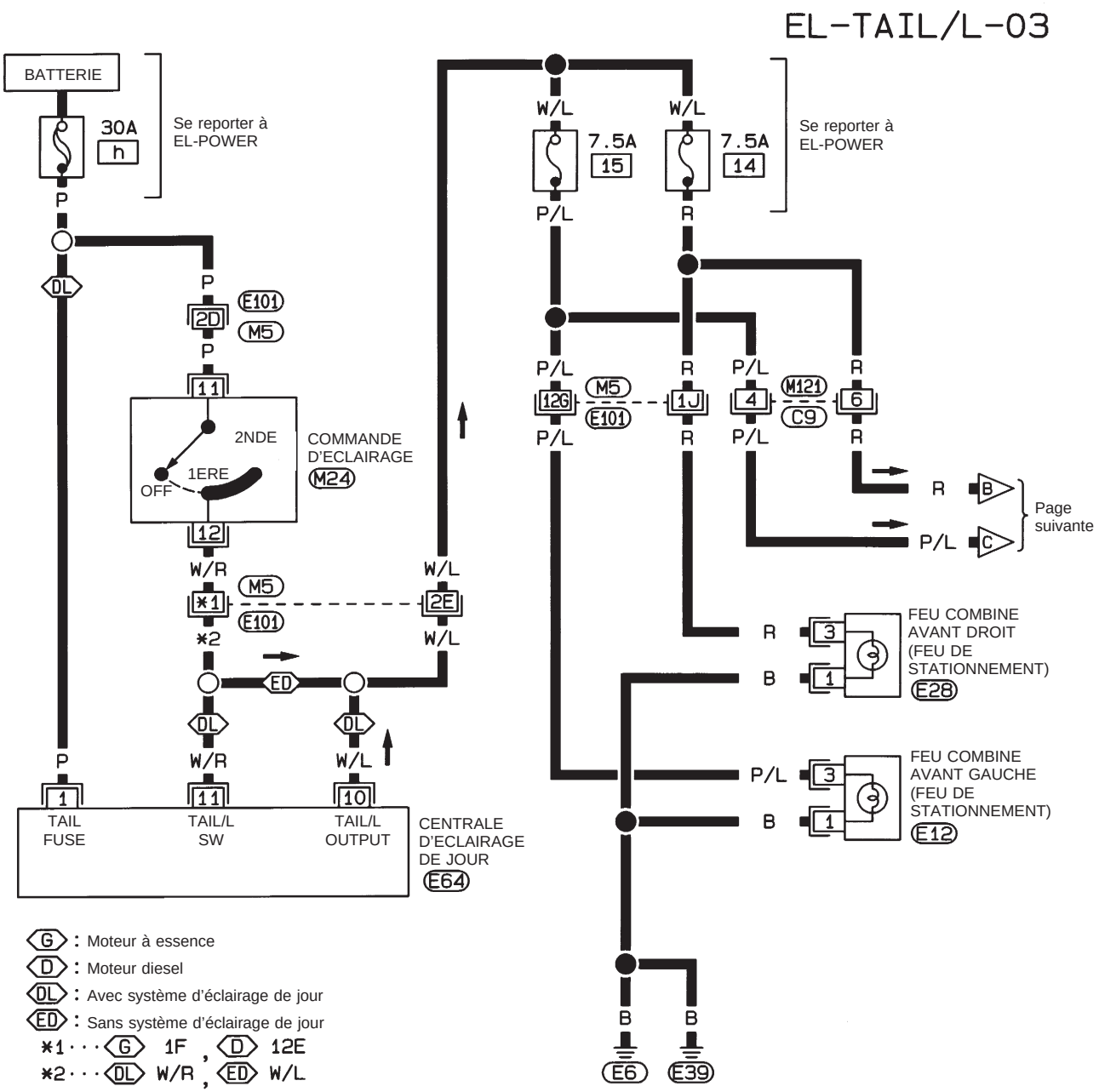





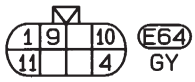



Consulter la dernière page dépliante.

M5 , E101

HEL696A

Simpo PDF Merge and Split Unregistered Version - http://www.simpopdf.com

Schéma de câblage — TAIL/L —/Conduite à gauche (suite)

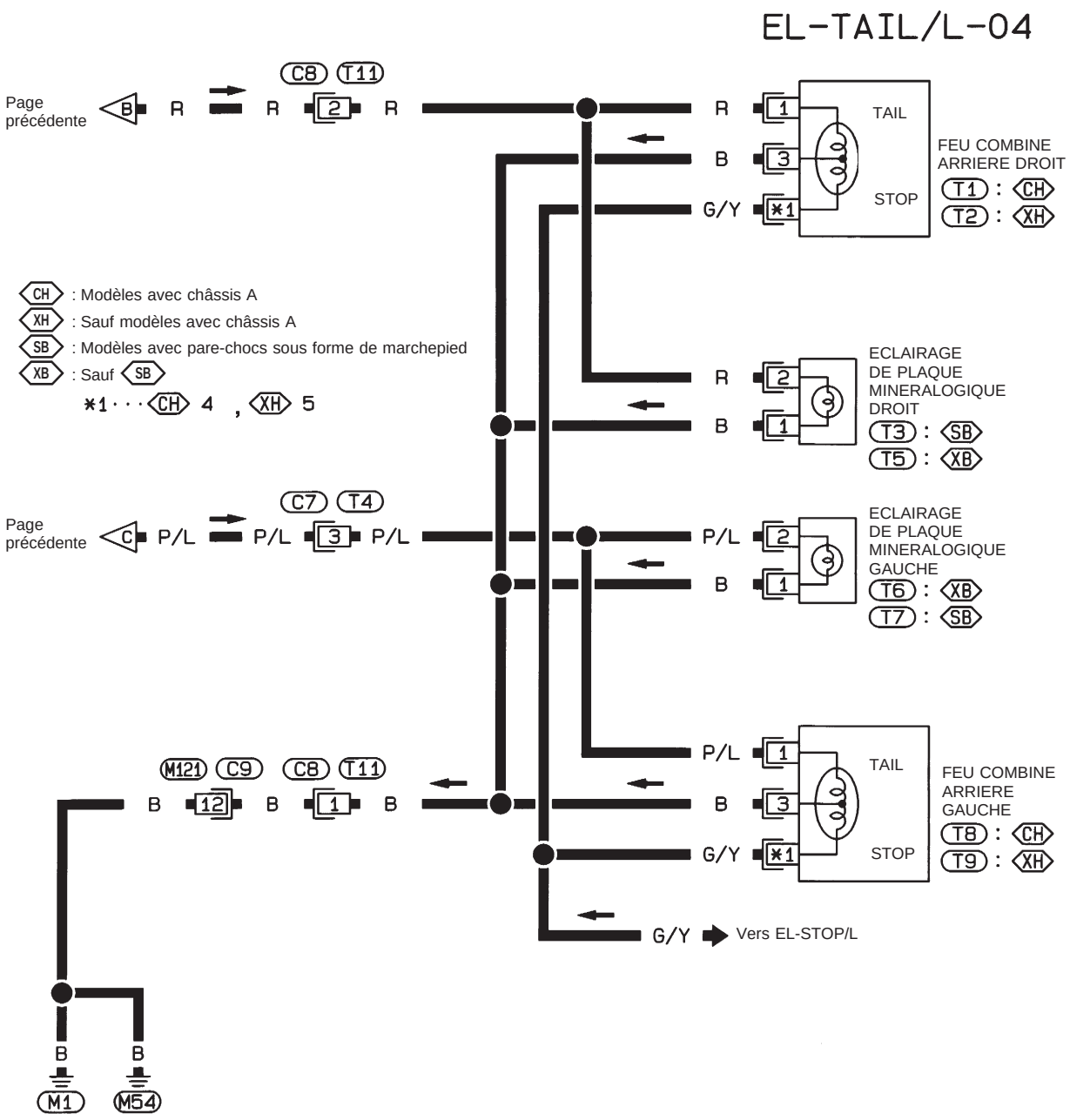

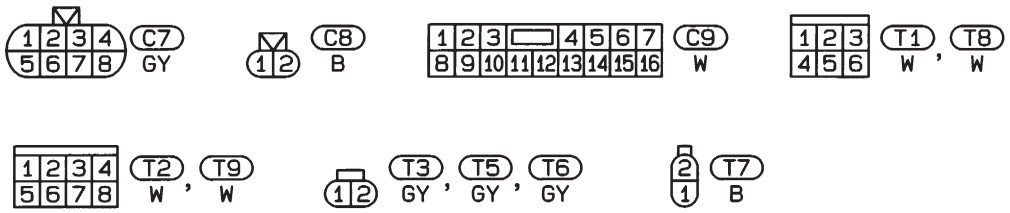

HEL697A

Simpo PDF Merge and Split Unregistered Version - http://www.simpopdf.com

Schéma de câblage — STOP/L —

EL-STOP/L-01

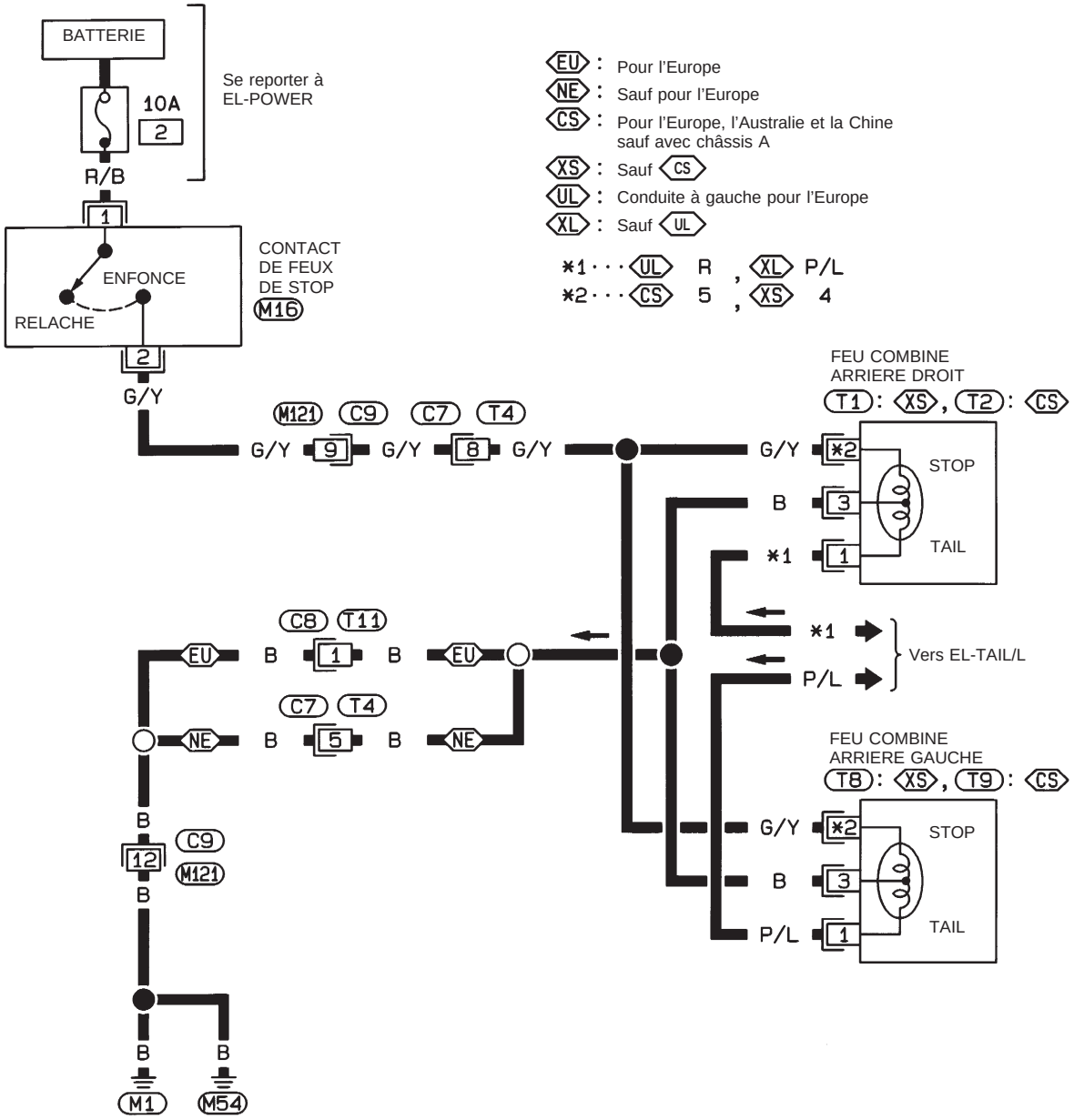

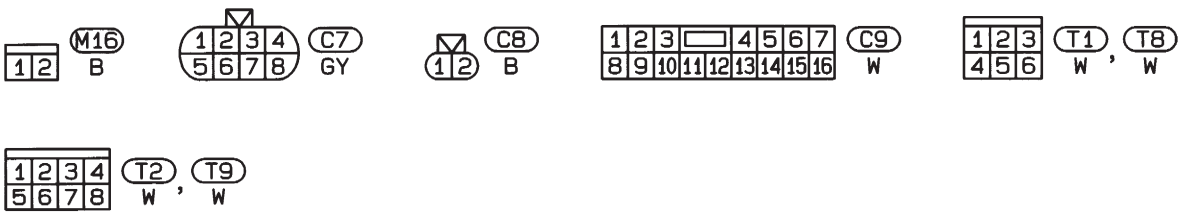

HEL698A

Simpo PDF Merge and Split Unregistered Version - http://www.simpopdf.com

Schéma de câblage — BACK/L —/Modèles avec T/M

EL-BACK/L-01

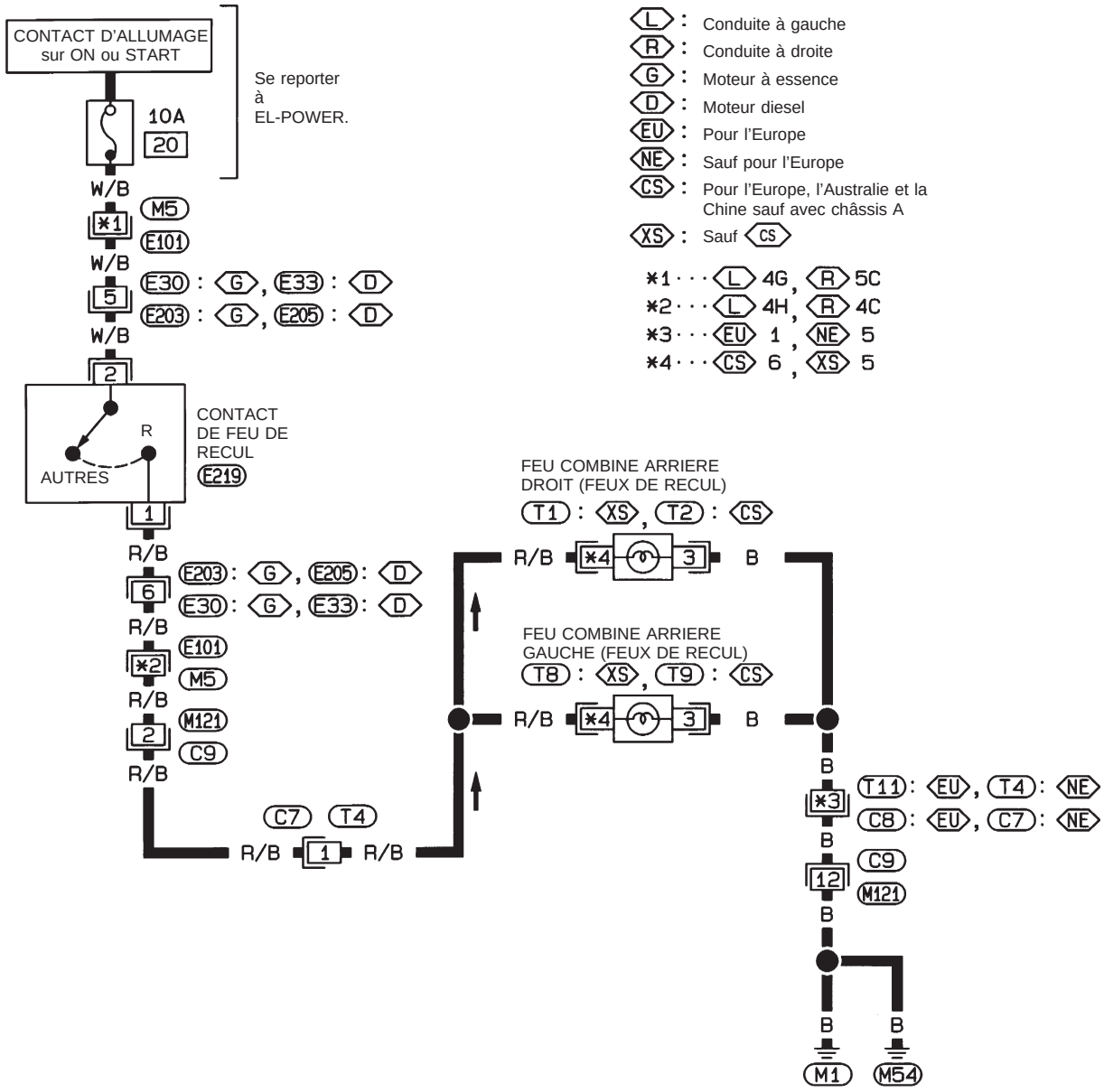

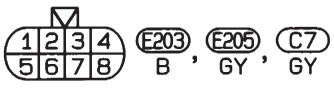

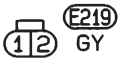



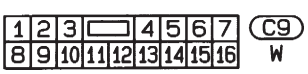



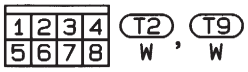

Consulter la dernière page dépliante.

M5, E101

HEL699A

Simpo PDF Merge and Split Unregistered Version - http://www.simpopdf.com

Schéma de câblage — R/FOG —/Conduite à gauche

EL-R/FOG-01

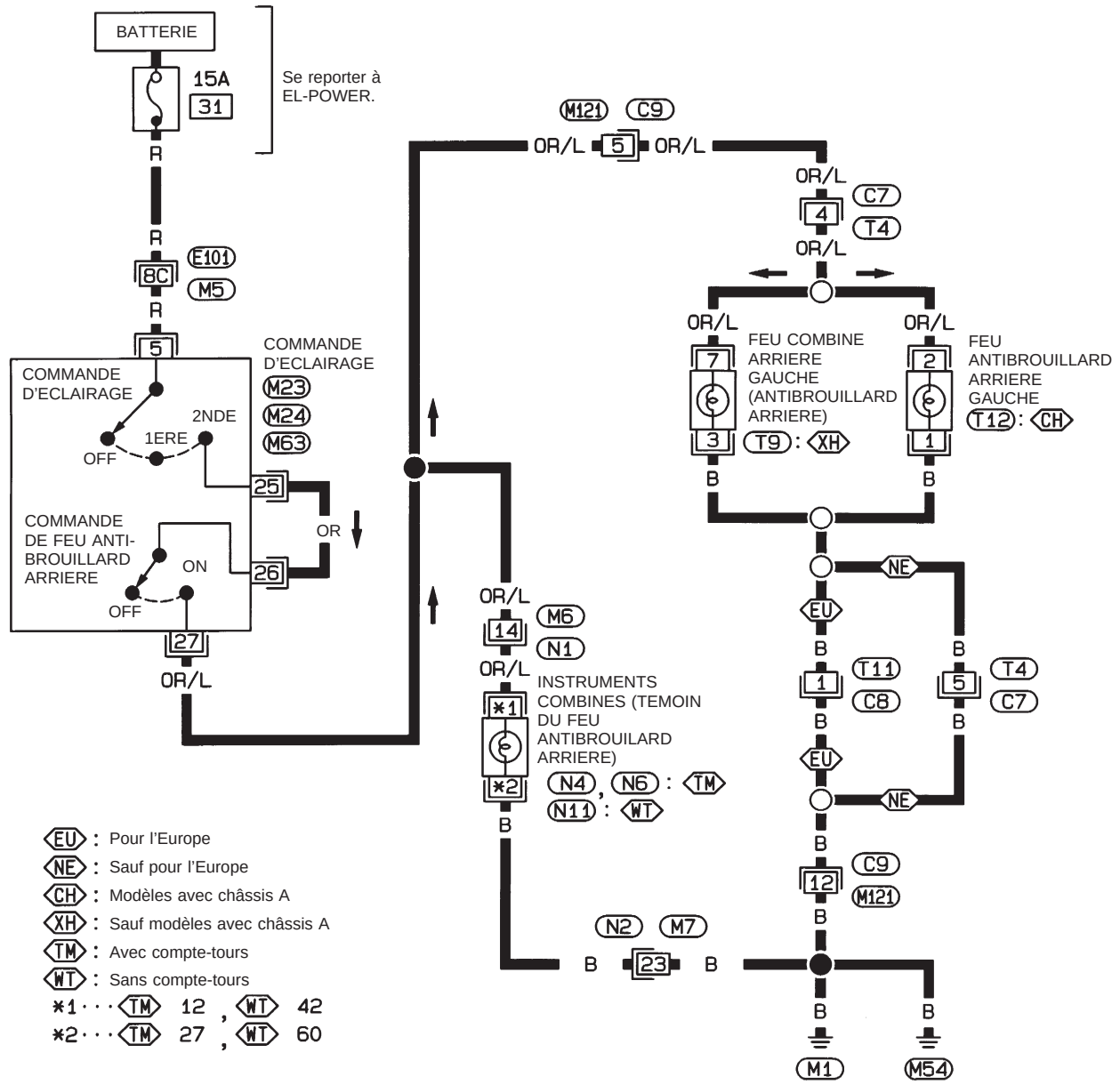

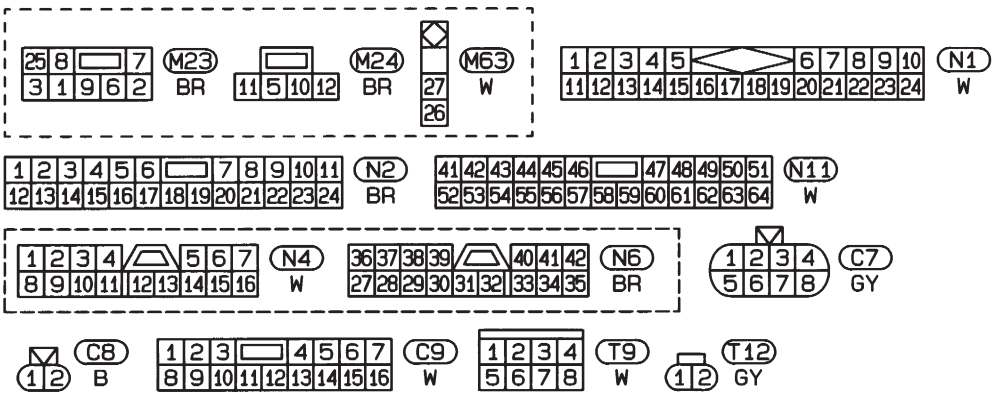

Consulter la dernière page dépliante.

M5 , E101

HEL701A

Simpo PDF Merge and Split Unregistered Version - http://www.simpopdf.com

Schéma de câblage — R/FOG —/Conduite à droite

EL-R/FOG-02

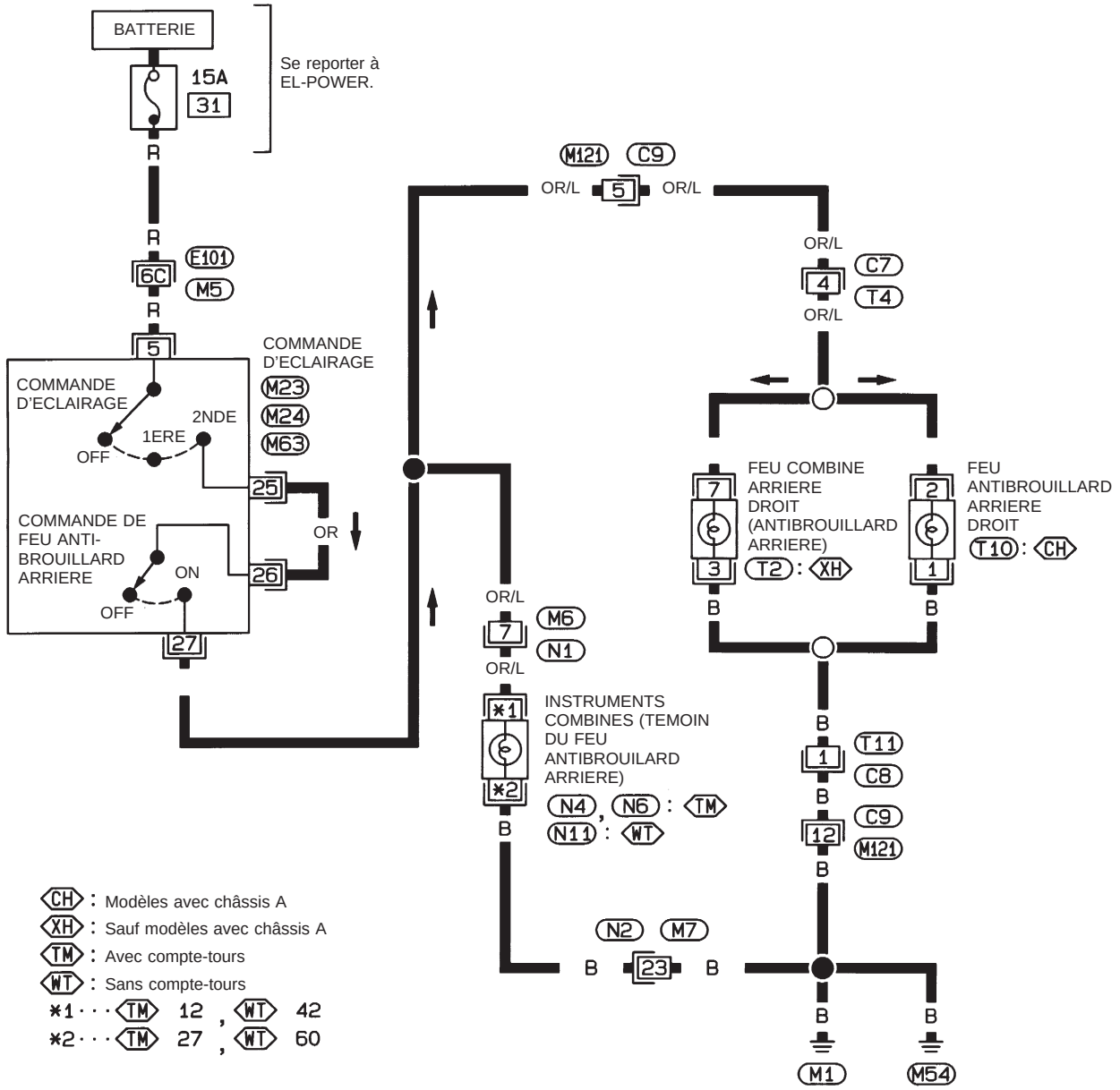

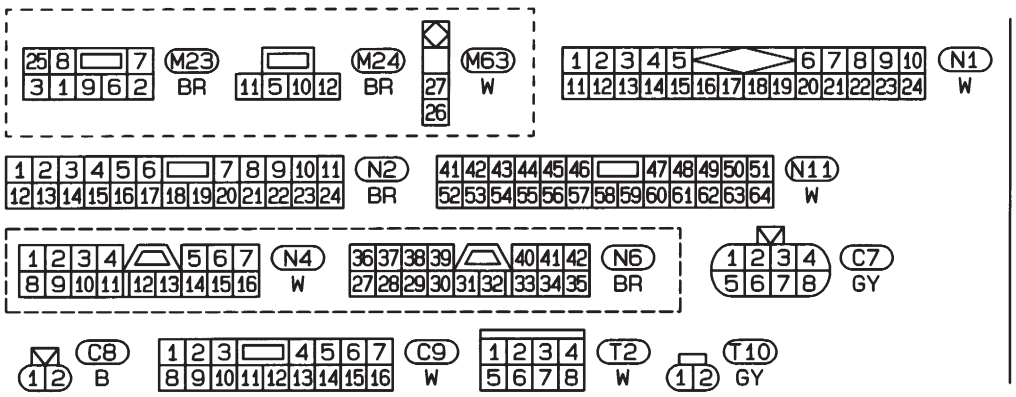

Consulter la dernière page dépliante.

M5 , E101

HEL702A

Simpo PDF Merge and Split Unregistered Version - http://www.simpopdf.com

Schéma de câblage — TURN —/Type-1

POUR L'EUROPE (Cabine simple)

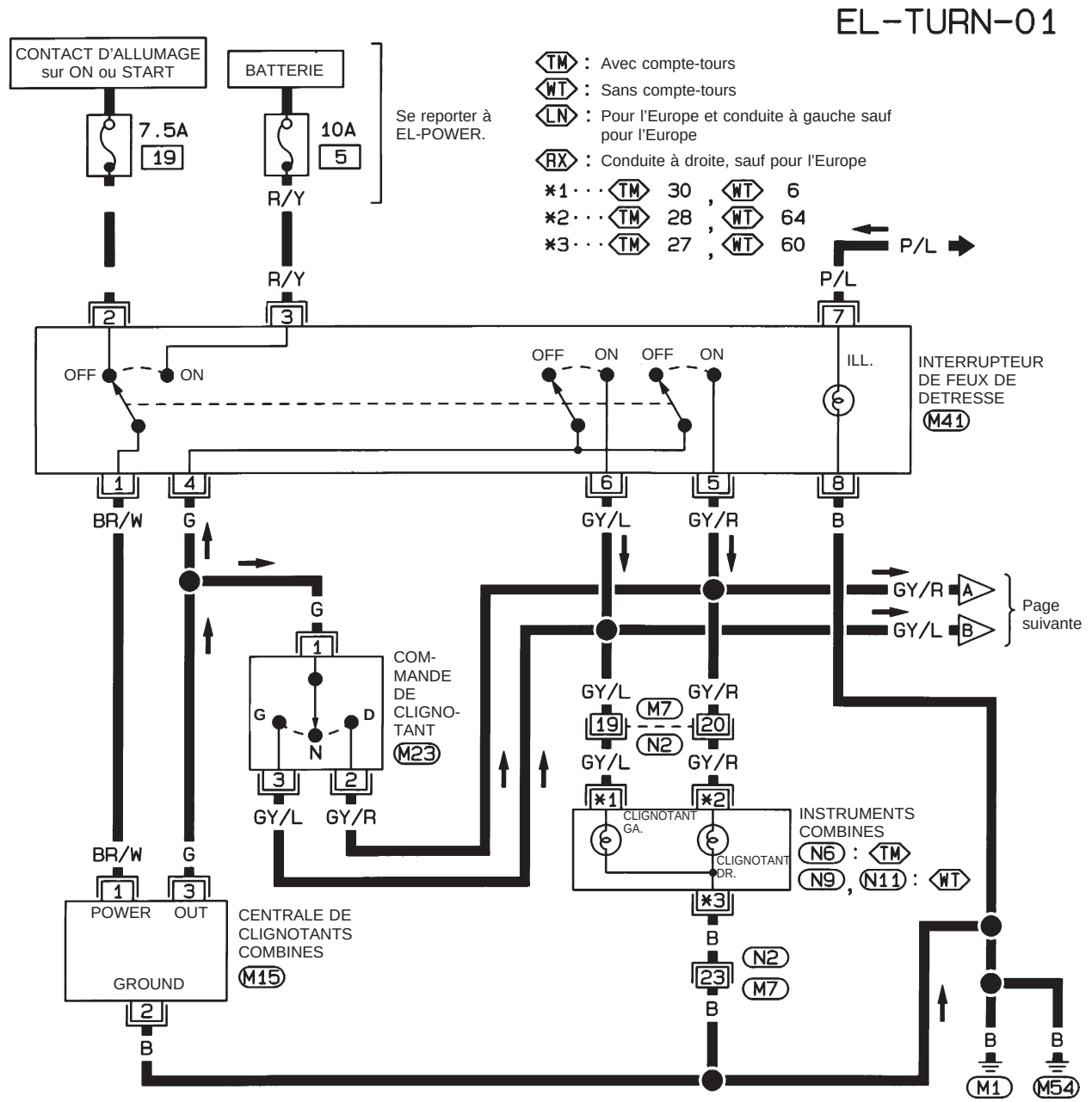

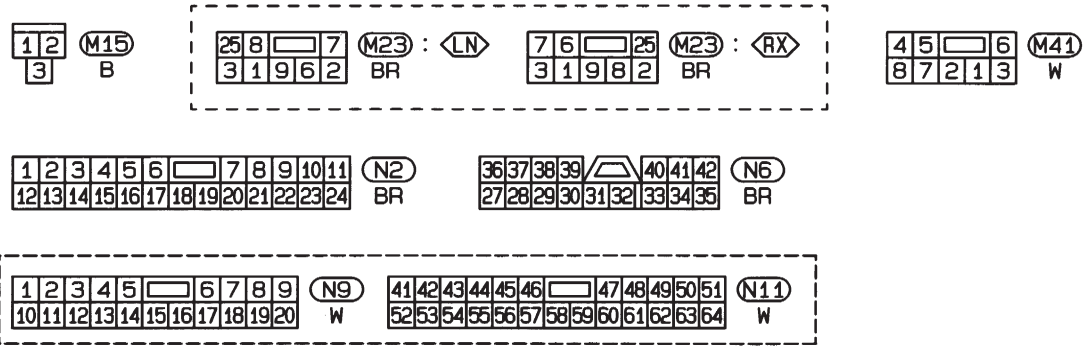

HEL703A

Simpo PDF Merge and Split Unregistered Version - http://www.simpopdf.com

Schéma de câblage — TURN —/Type-1 (suite)

EL-TURN-02

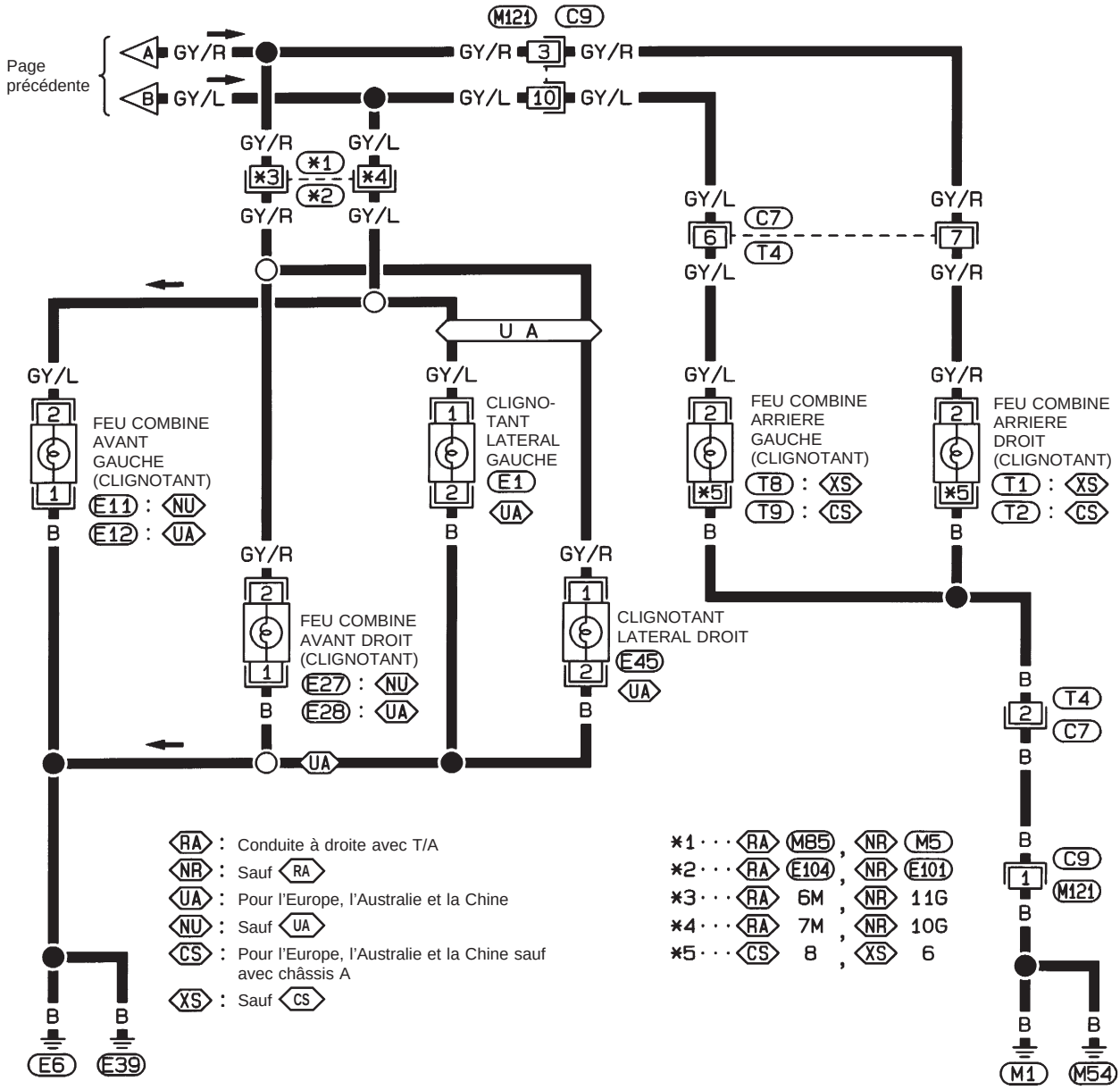

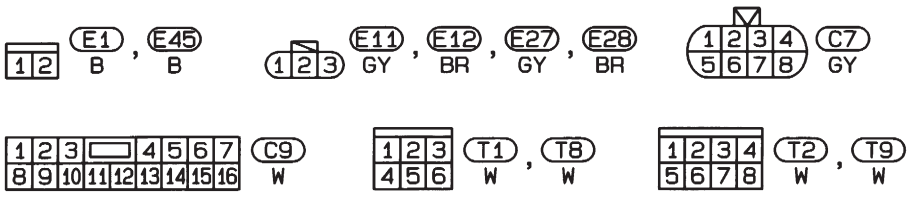

Consulter la dernière page dépliante.

M5 , E101
M85 , E104

HEL704A

Simpo PDF Merge and Split Unregistered Version - http://www.simpopdf.com

Schéma de câblage — TURN —/Type-2

POUR L'EUROPE (Grande cabine et cabine double)

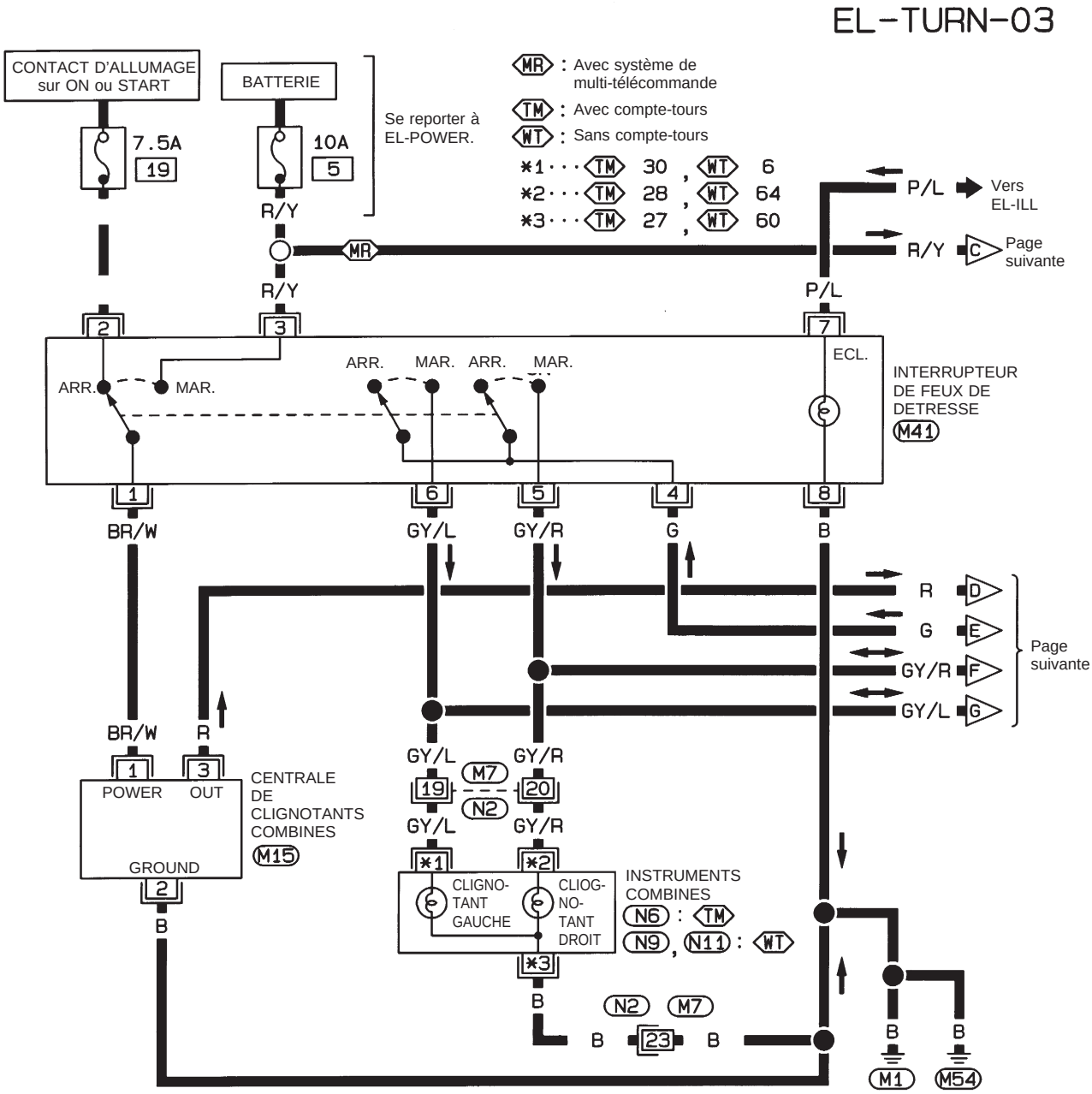

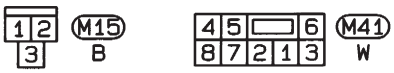







HEL705A

Simpo PDF Merge and Split Unregistered Version - http://www.simpopdf.com

Schéma de câblage — TURN —/Type-2 (suite)

EL-TURN-04

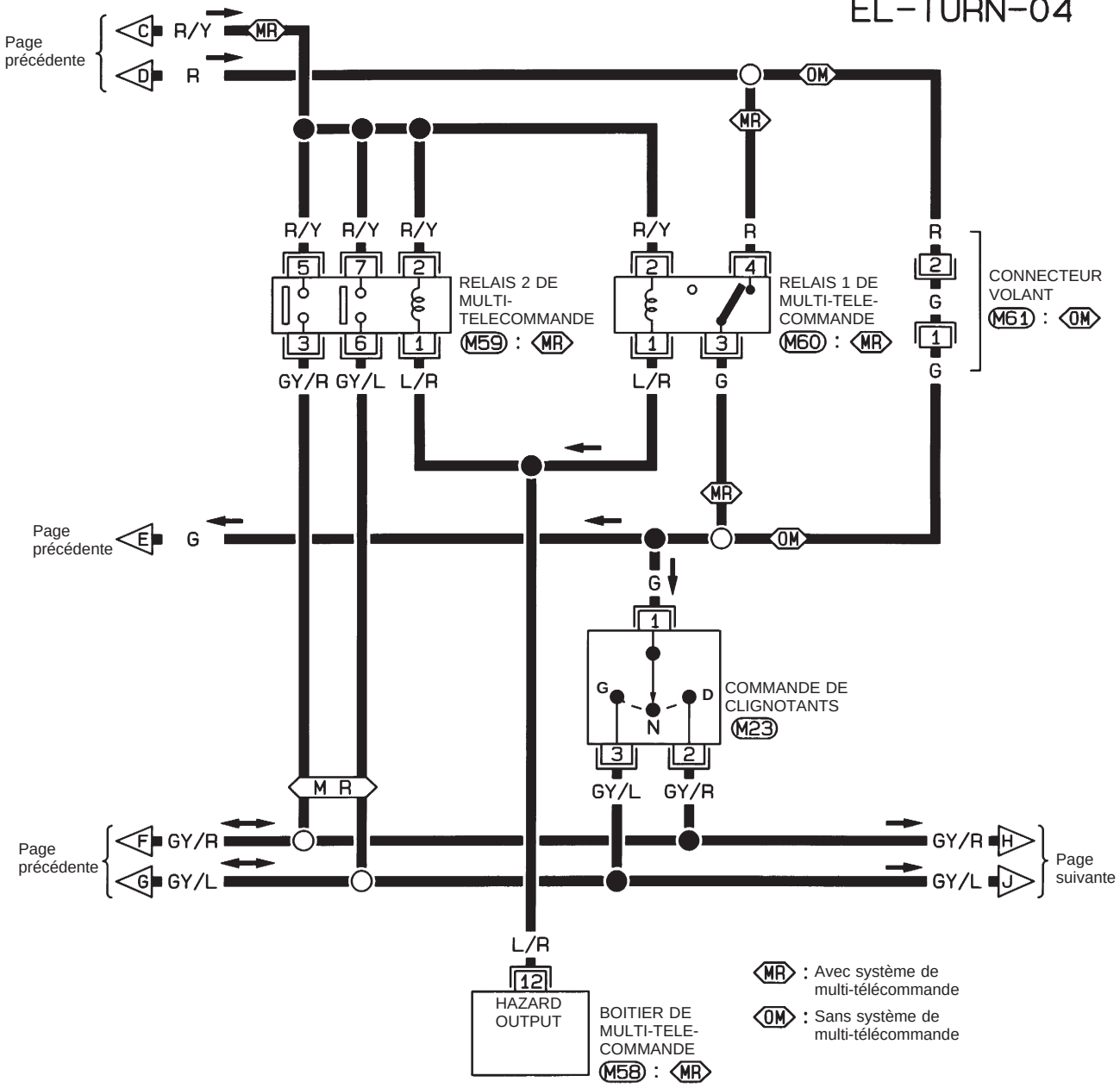

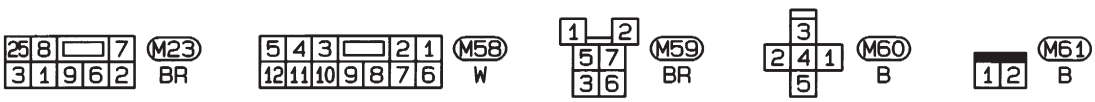

HEL706A

Simpo PDF Merge and Split Unregistered Version - http://www.simpopdf.com

Schéma de câblage — TURN —/Type-2 (suite)

EL-TURN-05

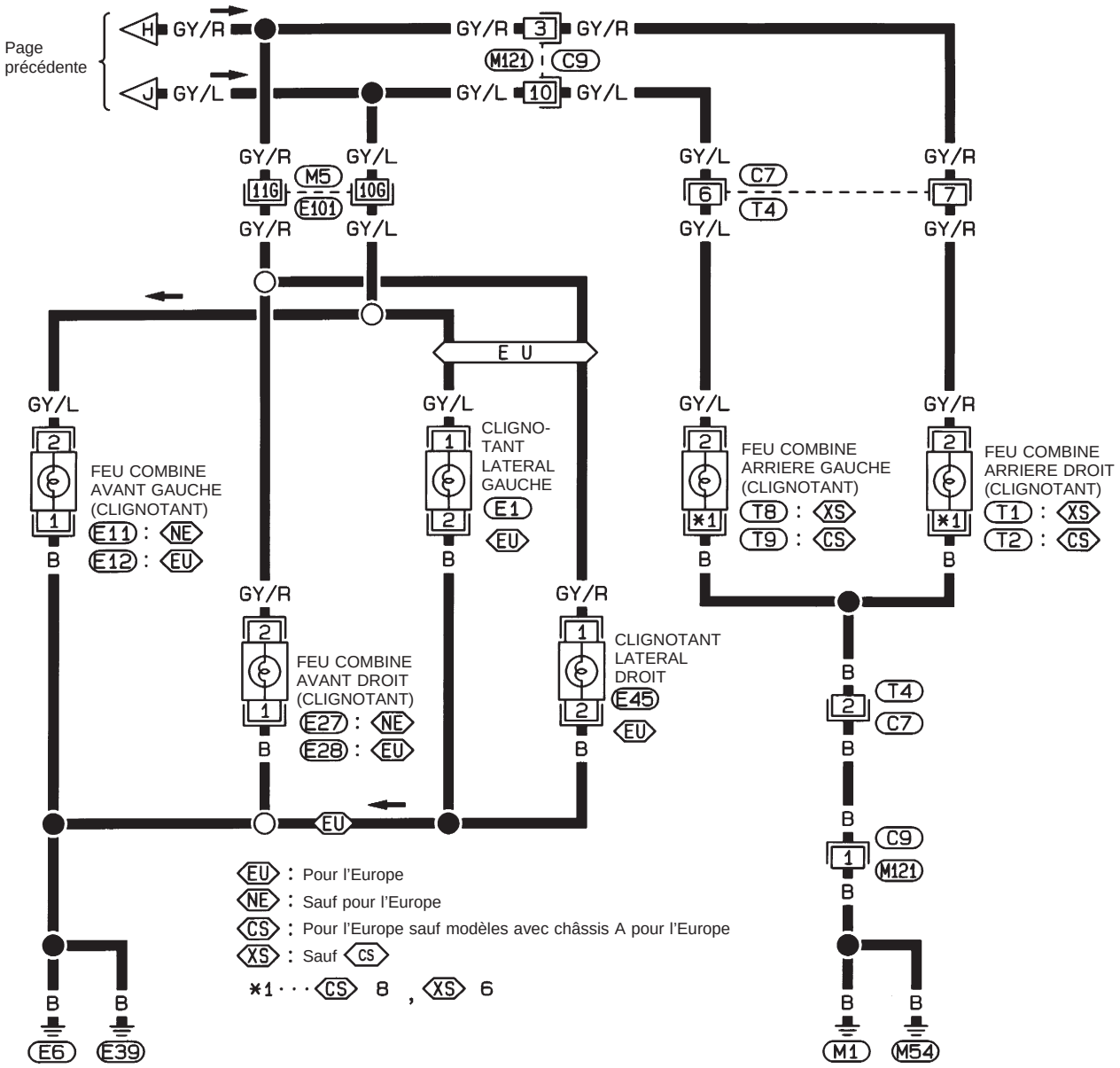

E1 B , E45 B

E11 GY , E12 BR , E27 GY , E28 BR

C7 GY

C9 W

T1 W , T8 W

T2 W , T9 W

Consulter la dernière page dépliante.

M5 , E101

HEL707A

Simpo PDF Merge and Split Unregistered Version - http://www.simpopdf.com

Schéma de câblage — ILL —/Conduite à gauche

EL-ILL-01

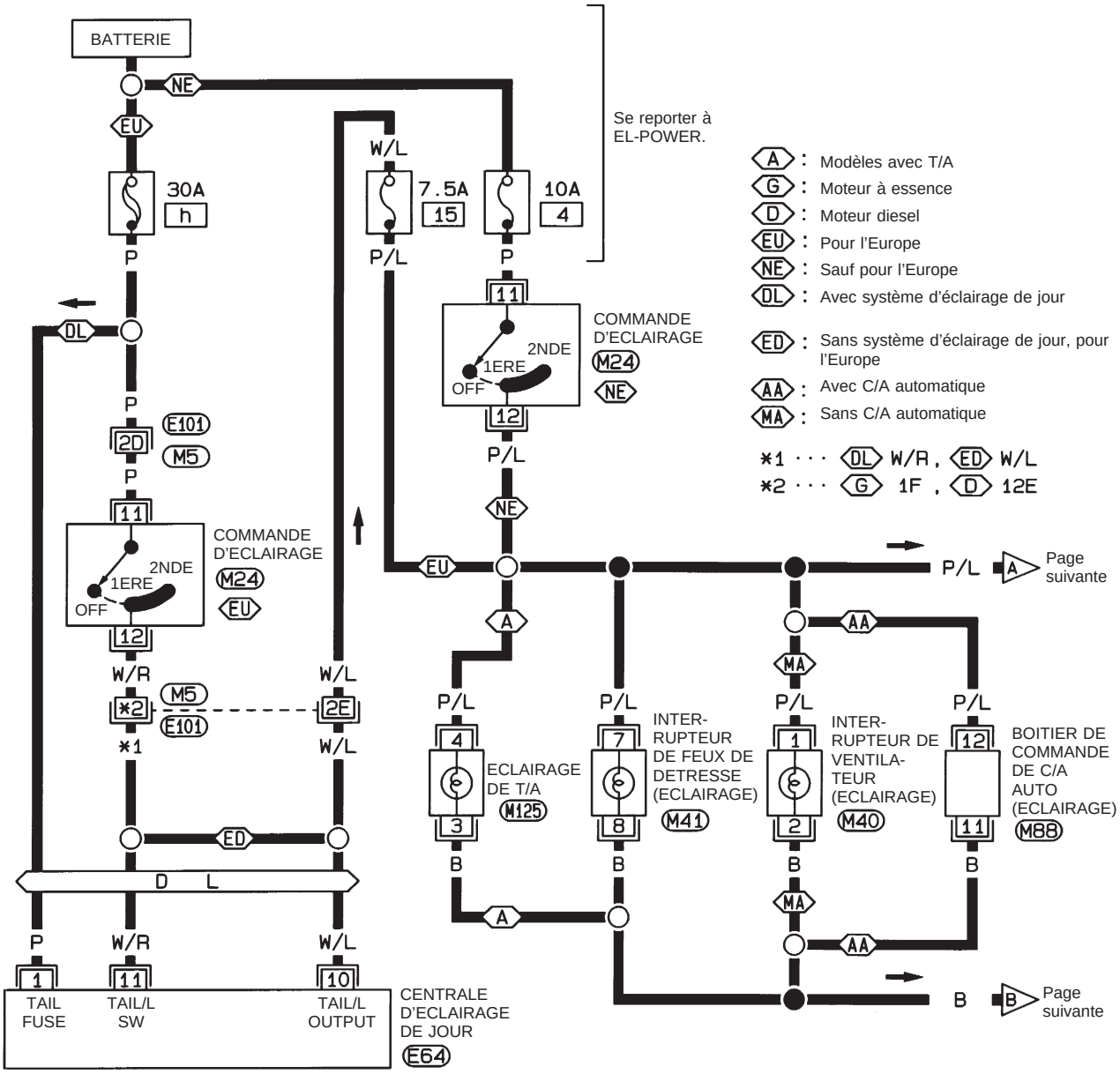

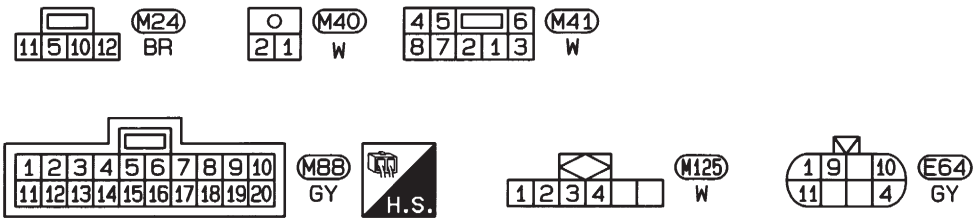

Consulter la dernière page dépliante.

M5, E101

HEL708A

Simpo PDF Merge and Split Unregistered Version - http://www.simpopdf.com

Schéma de câblage — ILL —/Conduite à gauche (suite)

EL-ILL-02

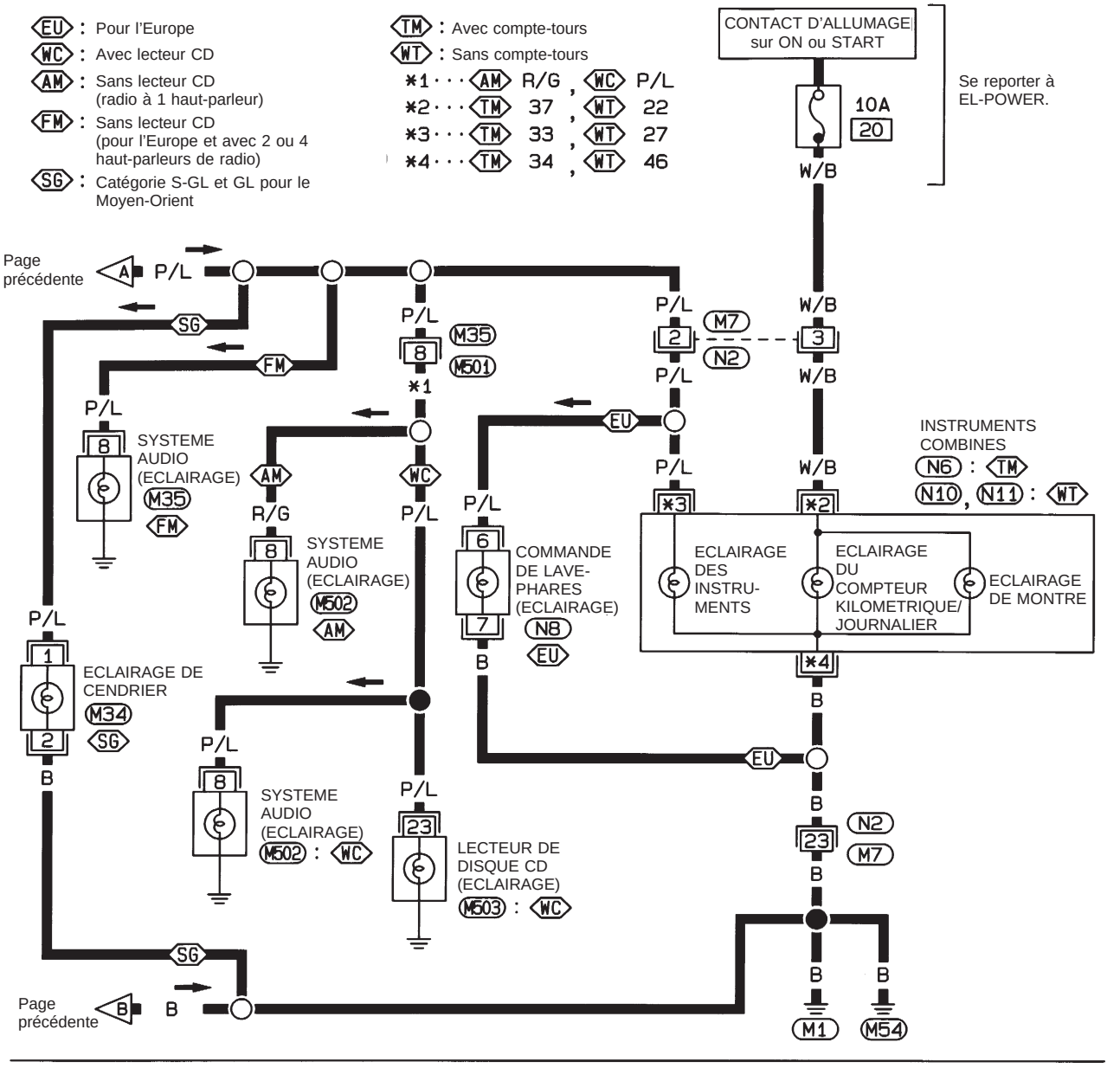

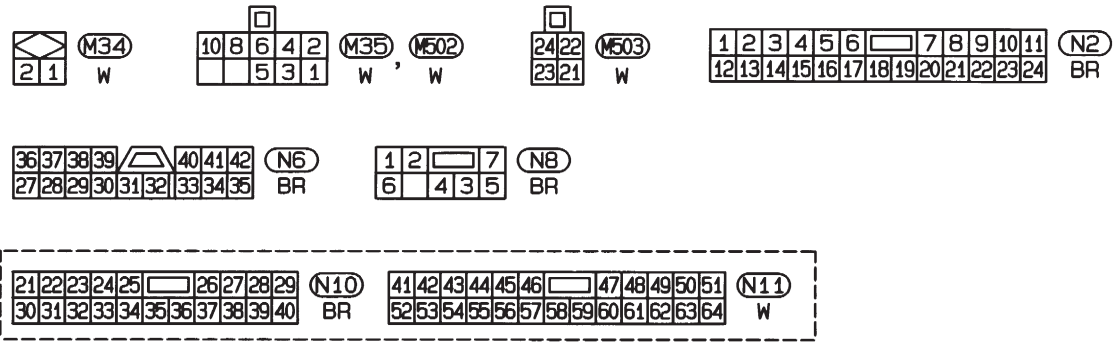

HEL709A

Simpo PDF Merge and Split Unregistered Version - http://www.simpopdf.com

Schéma de câblage — ILL —/Conduite à droite

EL-ILL-03

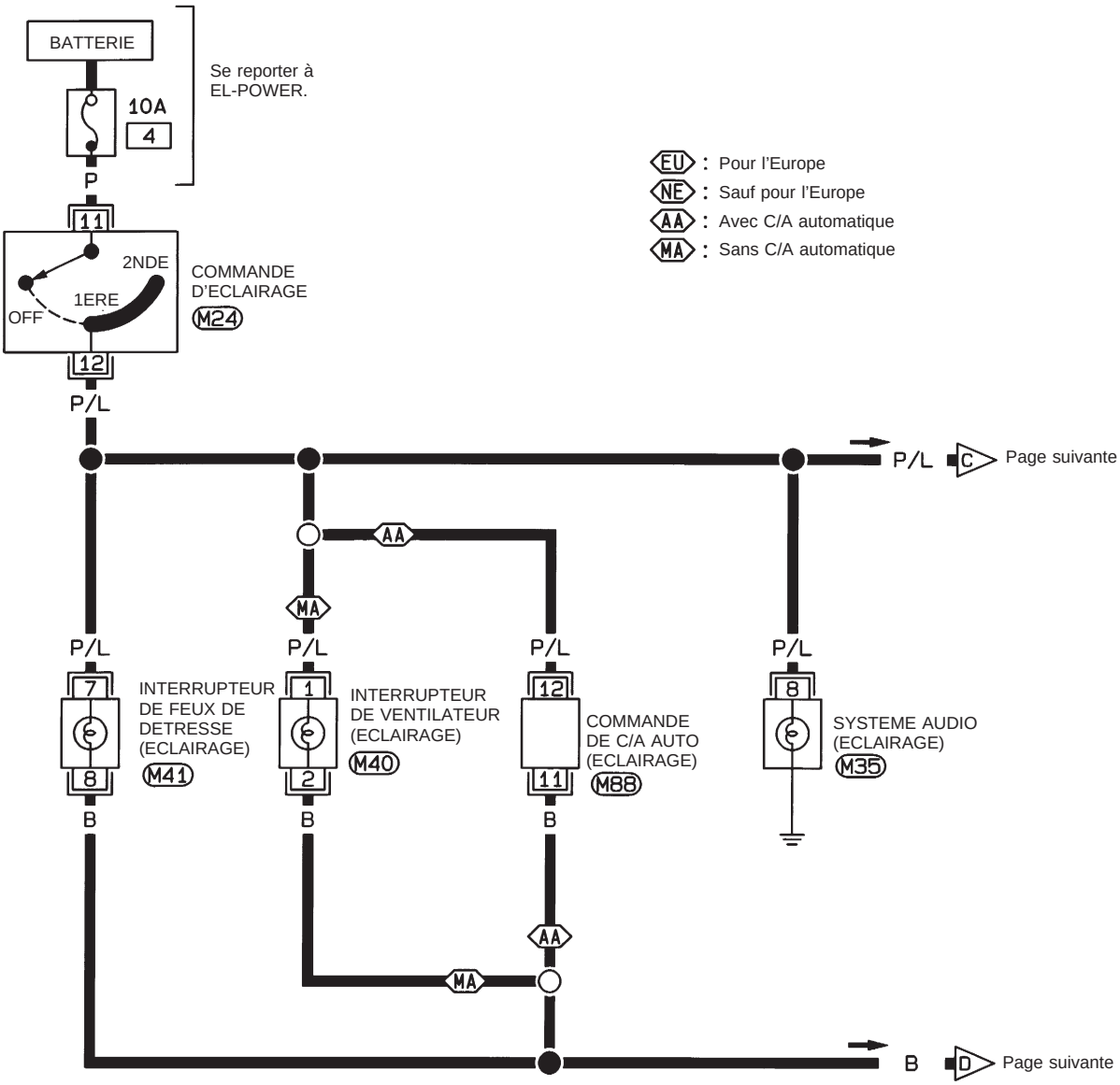

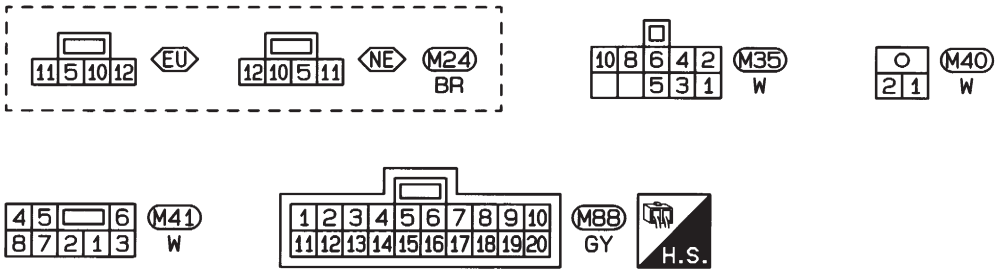

HEL710A

Simpo PDF Merge and Split Unregistered Version - http://www.simpopdf.com

Schéma de câblage — ILL —/Conduite à droite (suite)

EL-ILL-04

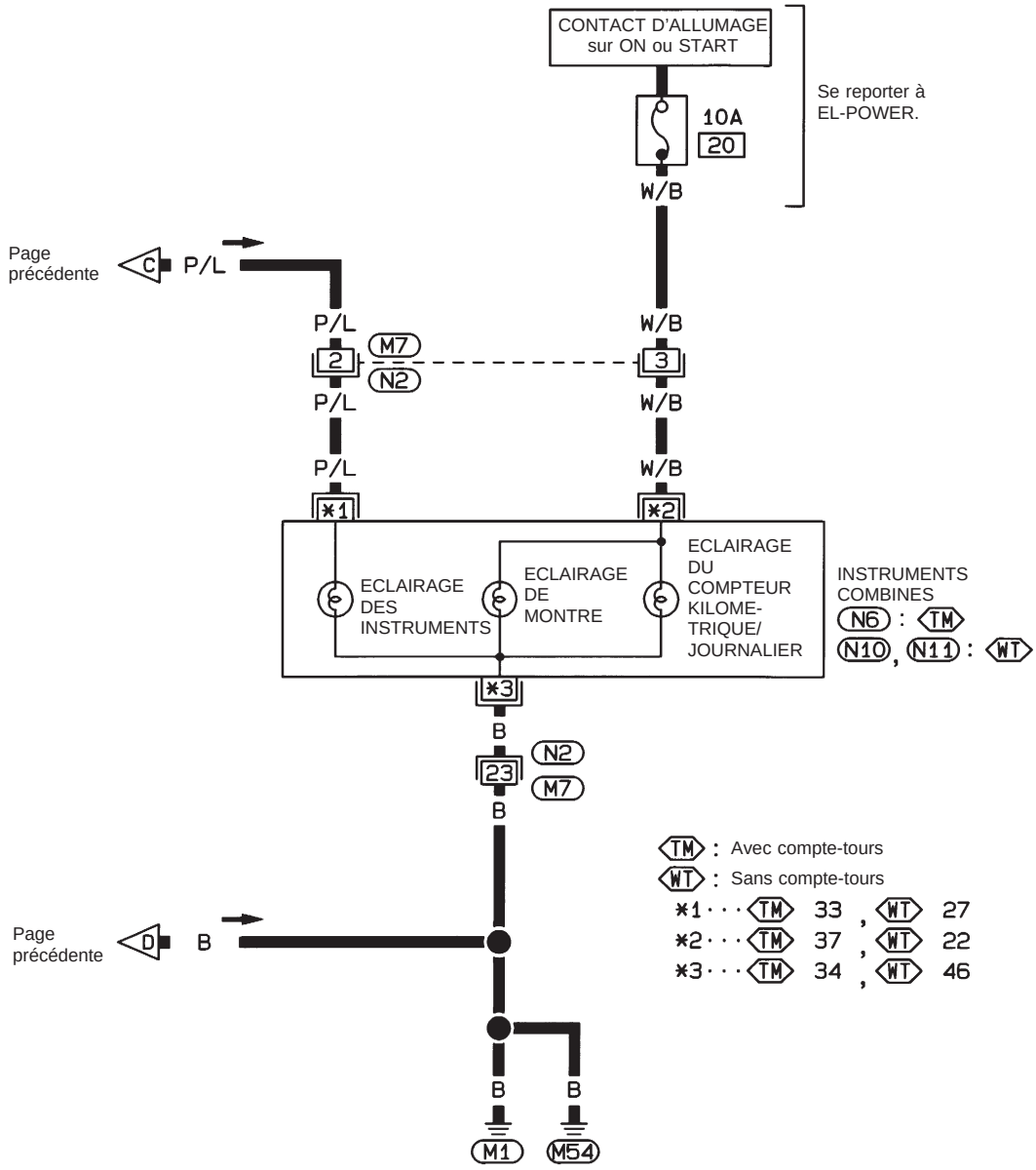





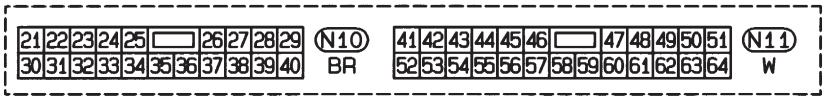

HEL711A

Simpo PDF Merge and Split Unregistered Version - http://www.simpopdf.com

Schéma de câblage — ROOM/L —

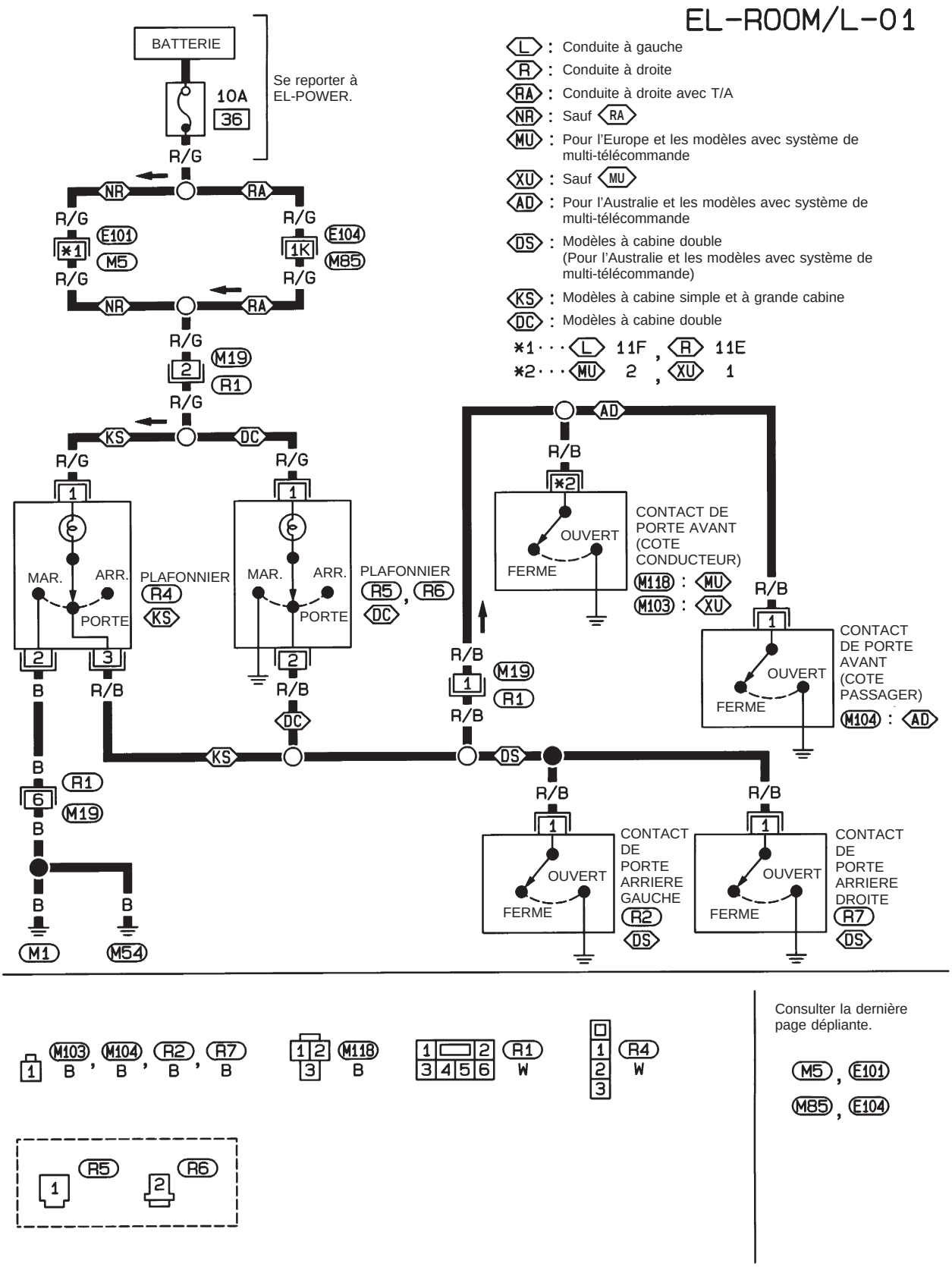

HEL712A

Simpo PDF Merge and Split Unregistered Version - http://www.simpopdf.com

Schéma de câblage — INT/L —

EL-INT/L-01

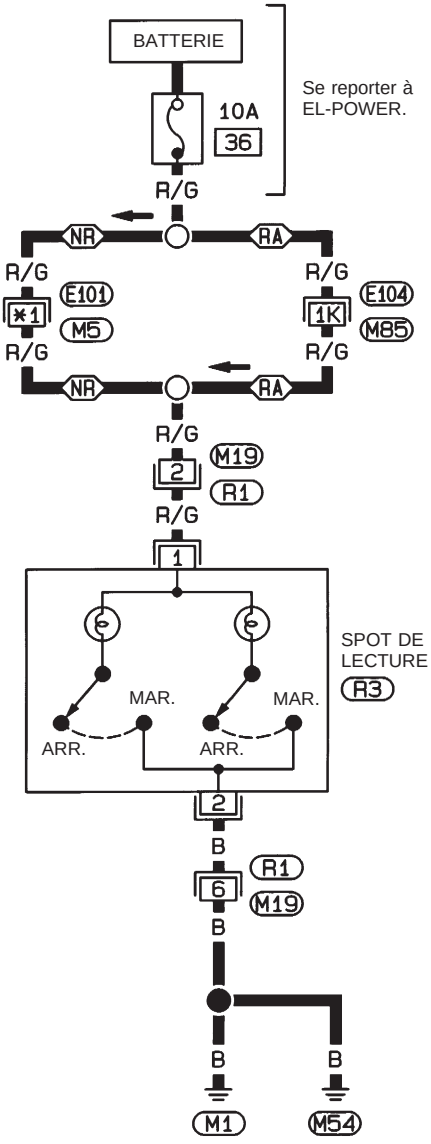

Ⓛ : Conduite à gauche
Ⓡ : Conduite à droite
Ⓡⓐ : Conduite à droite avec T/A
ⓃⓇ : Sauf Ⓡⓐ
*1 · · · Ⓛ 11F , Ⓡ 11E





Consulter la dernière page dépliante.

M5 , E101
M85 , E104

HEL713A

Simpo PDF Merge and Split Unregistered Version - http://www.simpopdf.com

Instruments combinés

AVEC COMPTE-TOURS

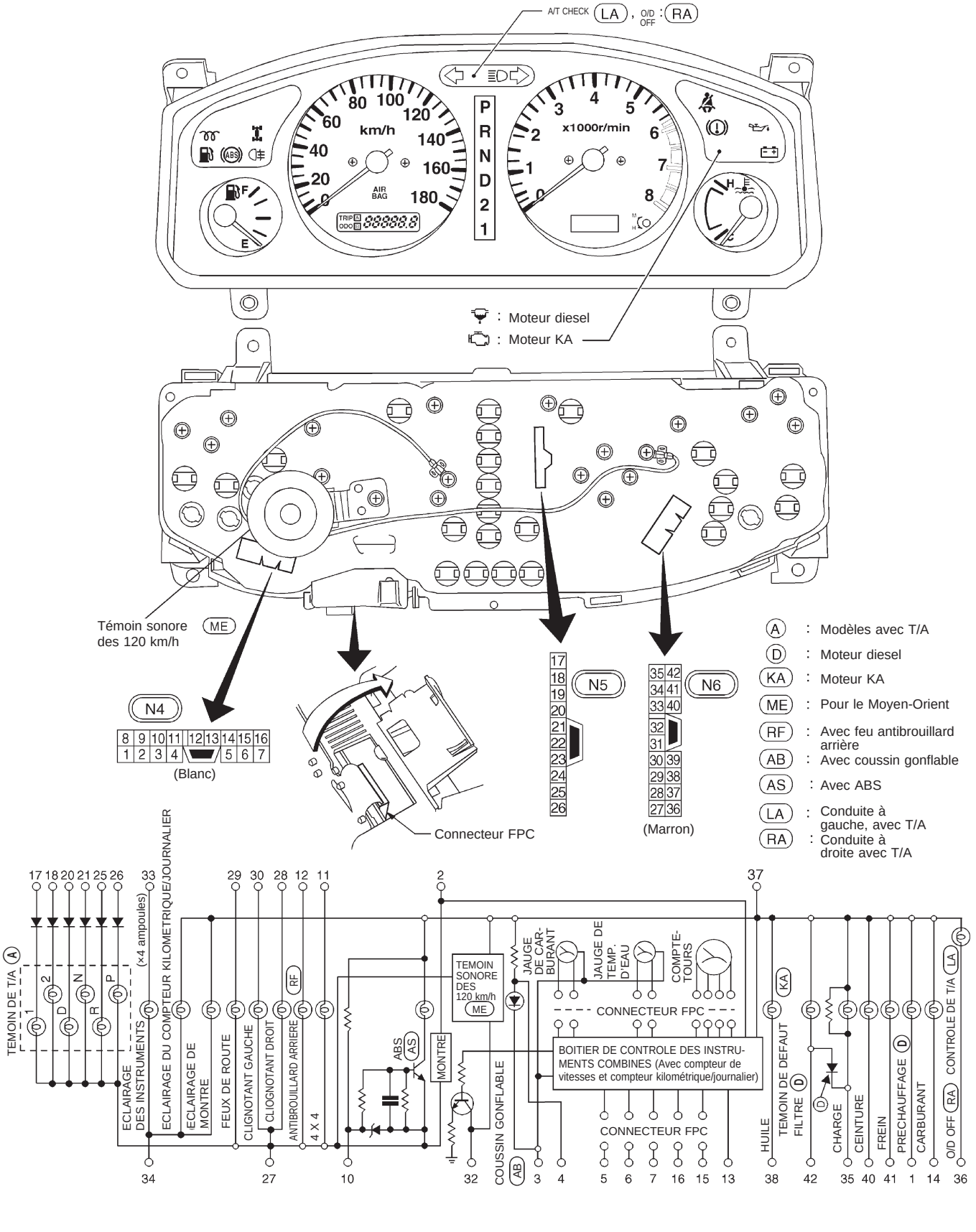

HEL714A

Simpo PDF Merge and Split Unregistered Version - http://www.simpopdf.com

Instruments combinés (suite)

SANS COMPTE-TOURS

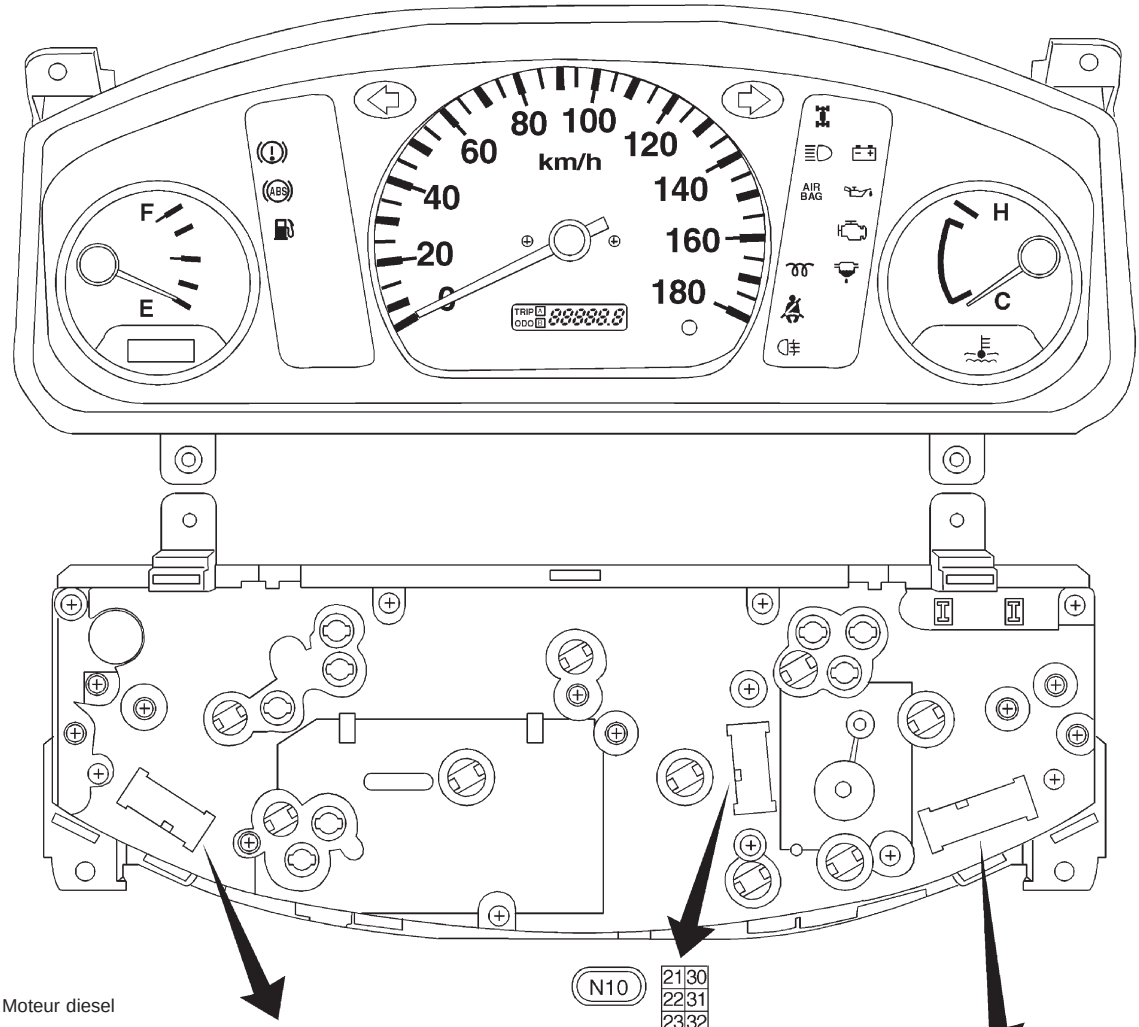

(D) : Moteur diesel
(KA) : Moteur KA
(ME) : Pour le Moyen-Orient
(RF) : Avec feu antibrouillard arrière
(AB) : Avec coussin gonflable
(AS) : Avec ABS

N9

10	11	12	13	14	15	16	17	18	19	20
1	2	3	4	5		6	7	8	9	

(Blanc)

N10

21	30
22	31
23	32
24	33
25	34
	35
	36
26	37
27	38
28	39
29	40

(Marron)

N11

51	50	49	48	47		46	45	44	43	42	41					
64	63	62	61	60	59	58	57	56	55	54	53	52				

(Blanc)

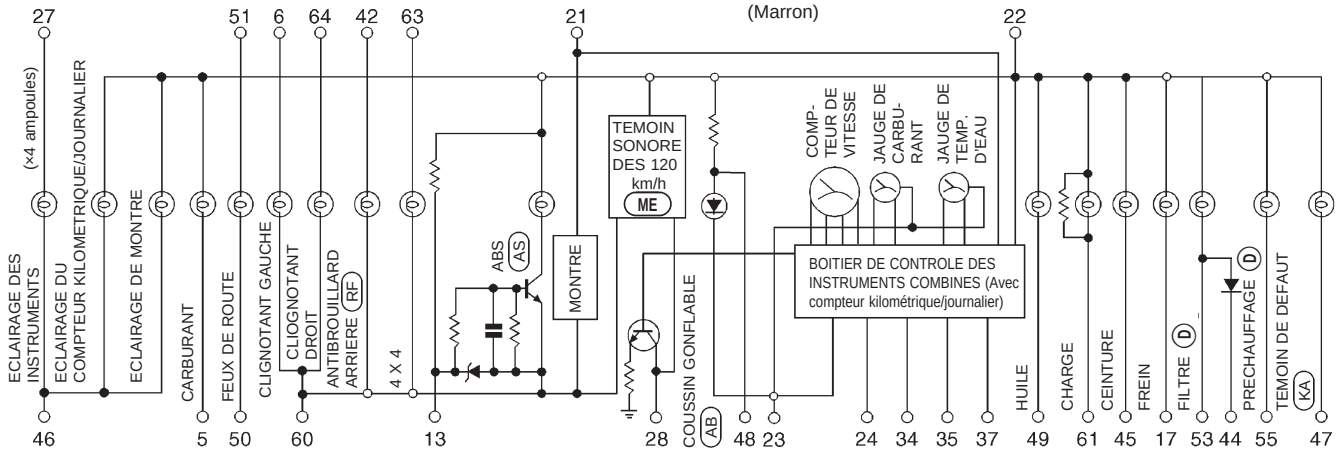

HEL715A

Simpo PDF Merge and Split Unregistered Version - http://www.simpopdf.com

Instruments combinés (suite)

CONSTRUCTION (sans compte-tours)

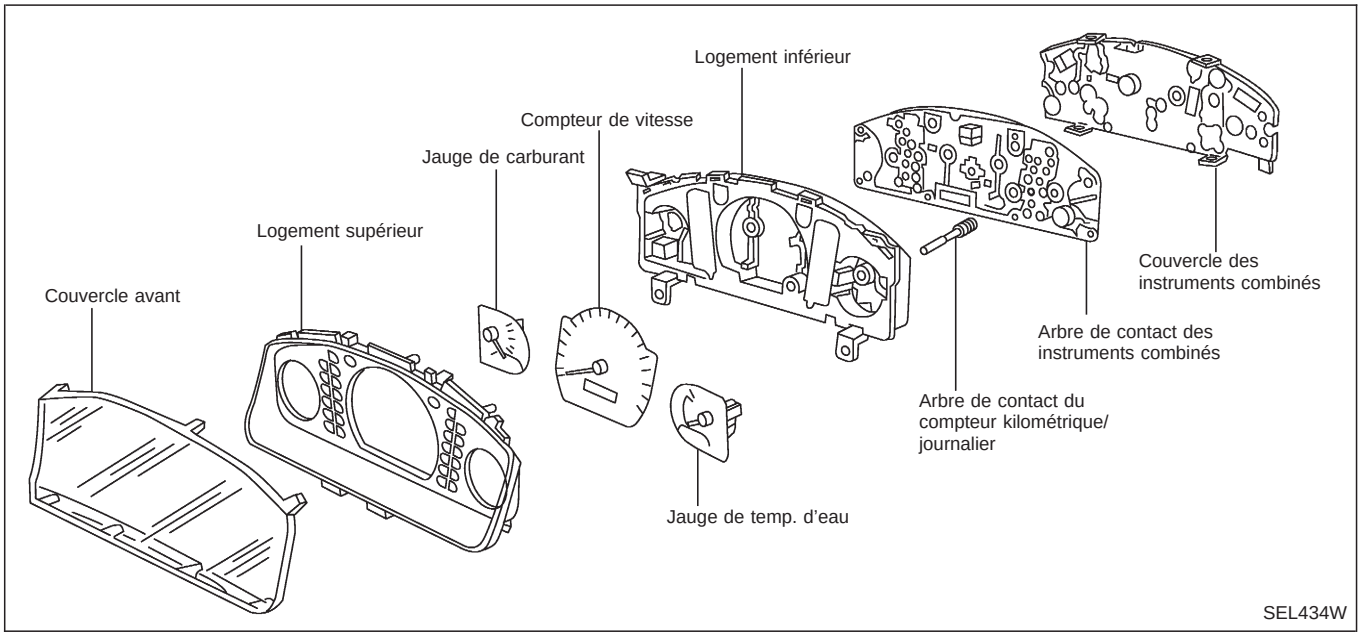

Simpo PDF Merge and Split Unregistered Version - http://www.simpopdf.com

Schéma de câblage — METER —/Moteur à essence avec compte-tours

EL-METER-01

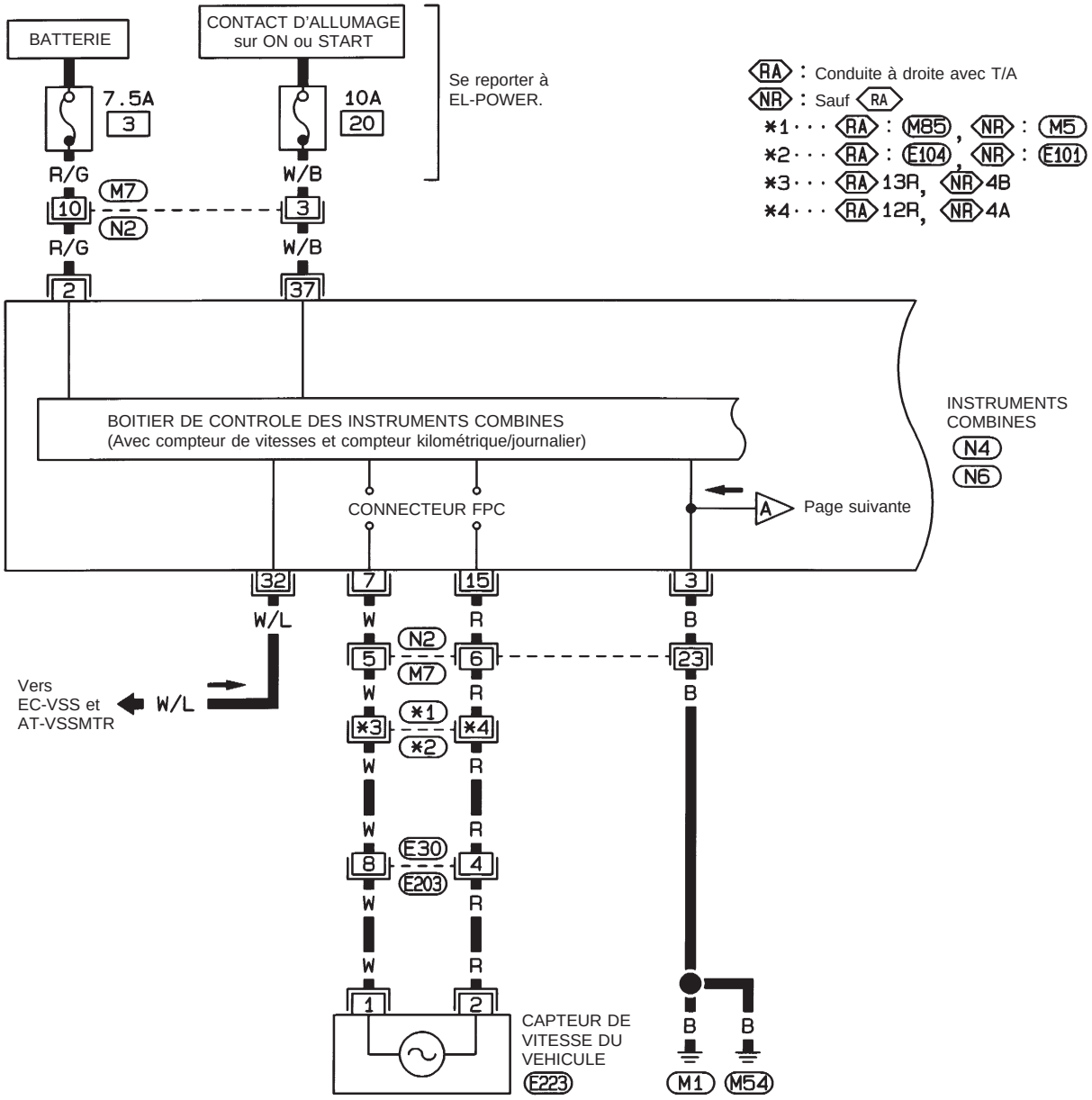

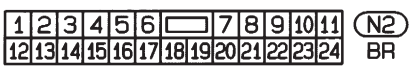

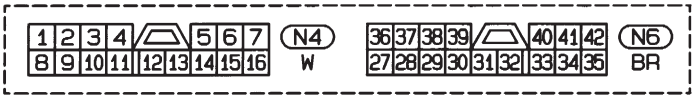



Consulter la dernière page dépliante.

M5, E101

M85, E104

HEL716A

Simpo PDF Merge and Split Unregistered Version - http://www.simpopdf.com

Schéma de câblage — METER —/Moteur à essence avec compte-tours (suite)

EL-METER-02

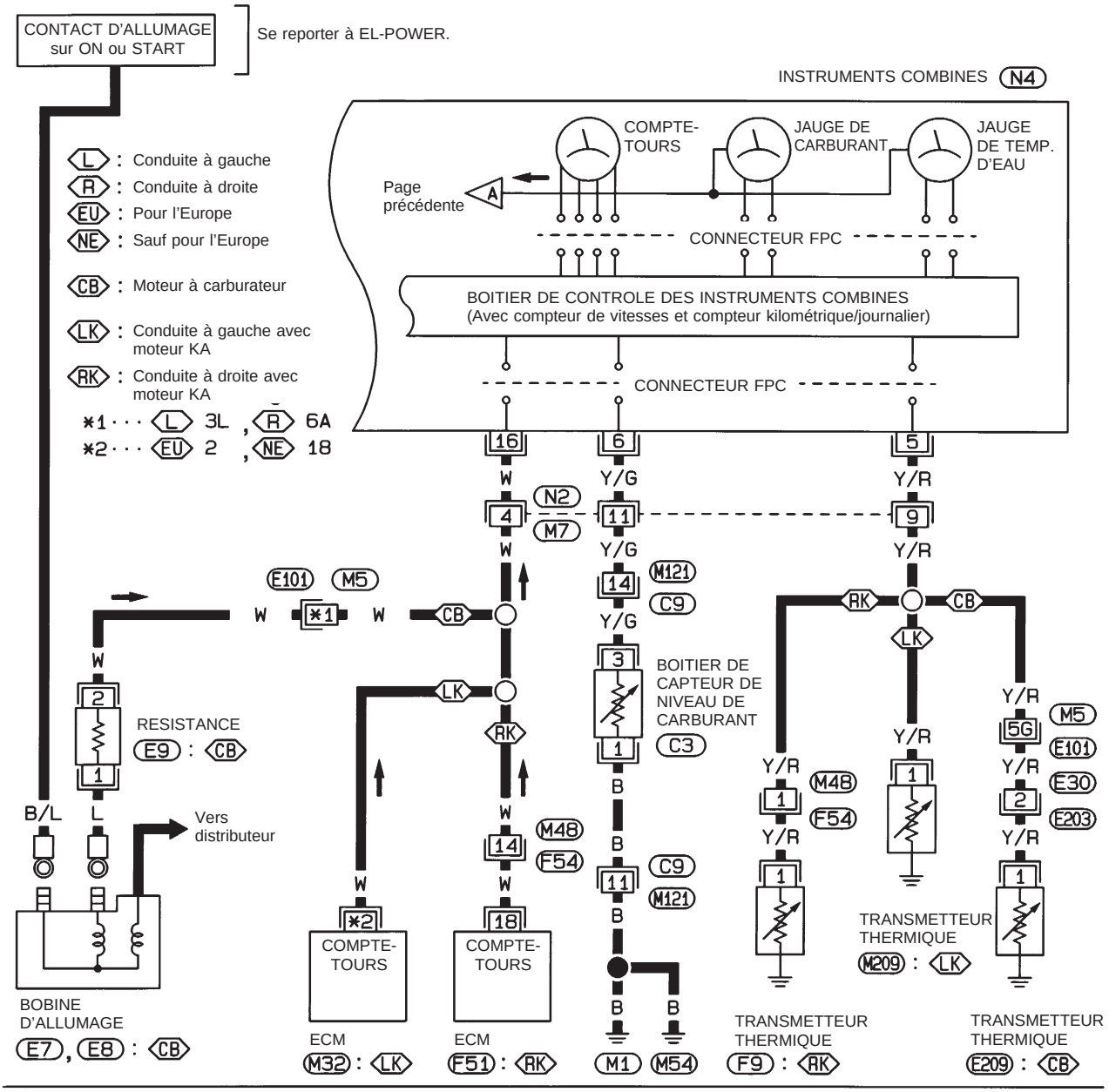

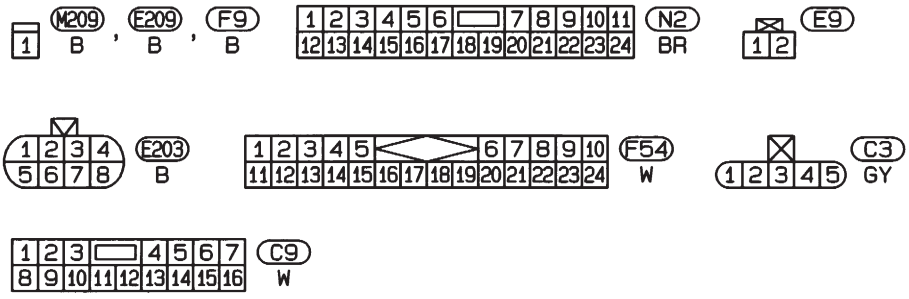

Consulter la dernière page dépliante.

M5 , E101
M32 , F51

HEL717A

Simpo PDF Merge and Split Unregistered Version - http://www.simpopdf.com

Schéma de câblage — METER —/Moteur diesel avec compte-tours

EL-METER-03

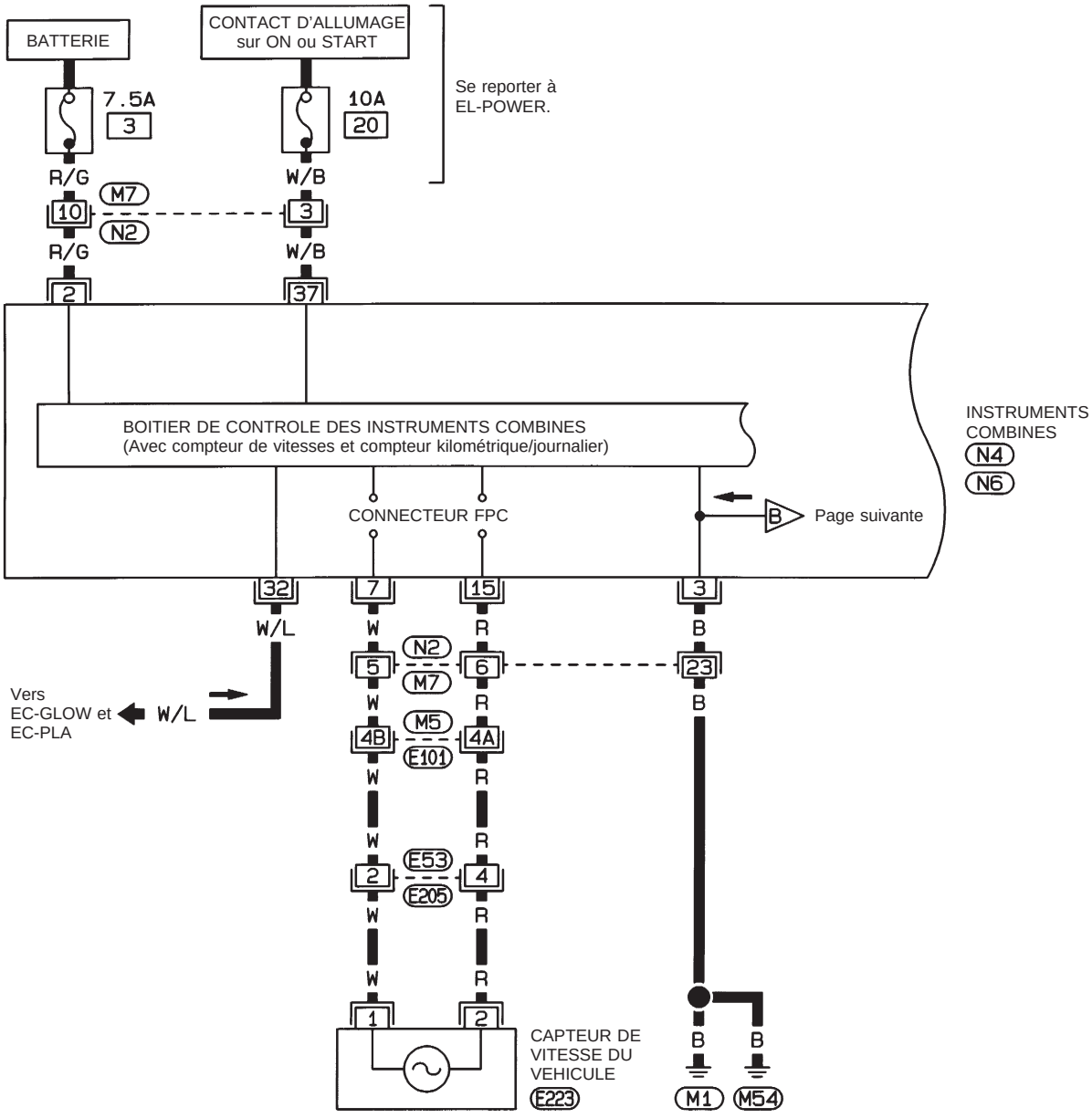



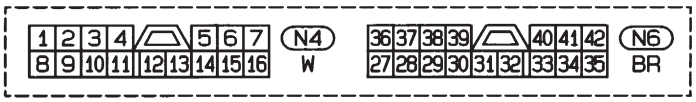



Consulter la dernière page dépliante.

M5 , E101

HEL718A

Simpo PDF Merge and Split Unregistered Version - http://www.simpopdf.com

Schéma de câblage — METER —/Moteur diesel avec compte-tours (suite)

EL-METER-04

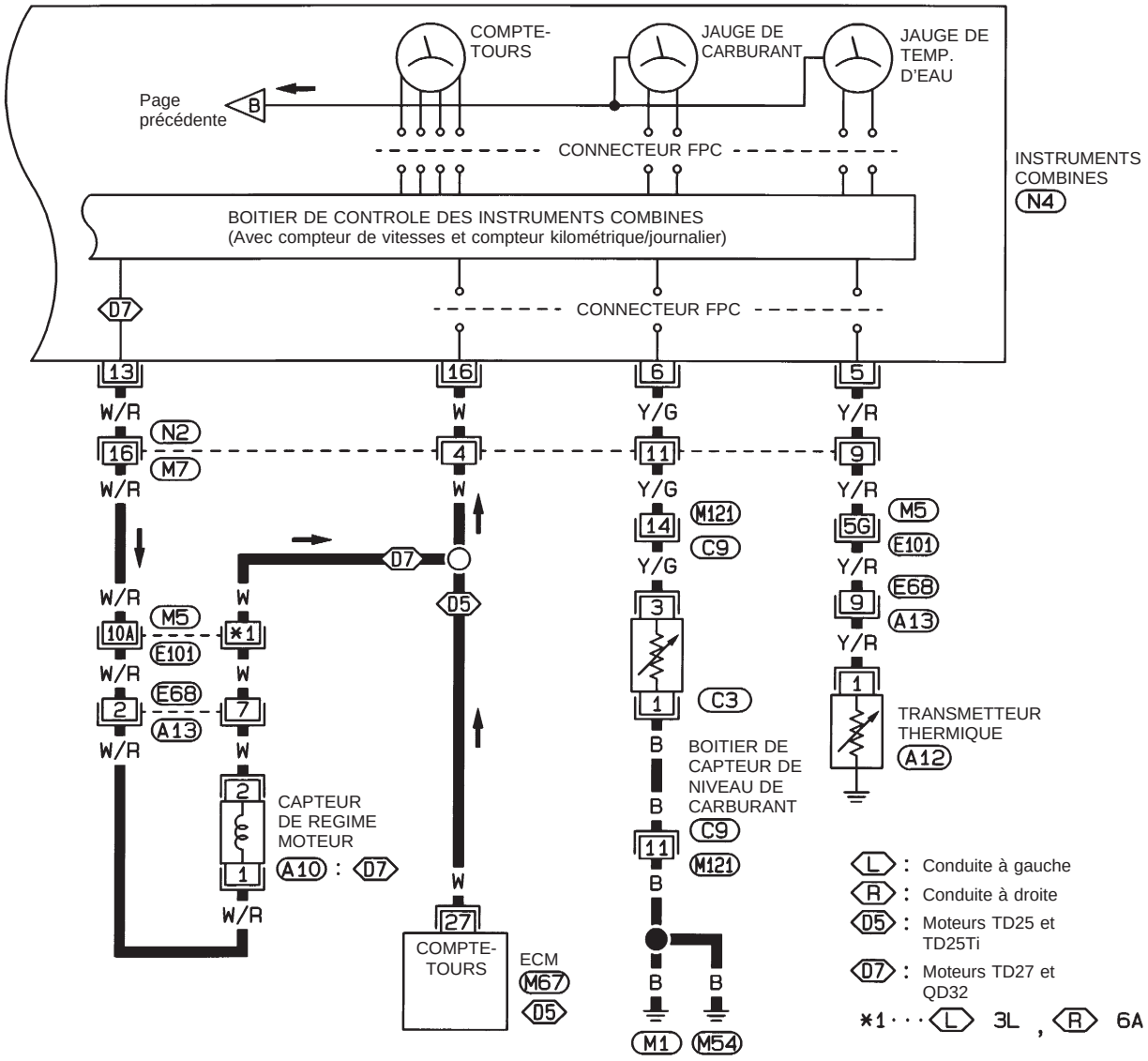

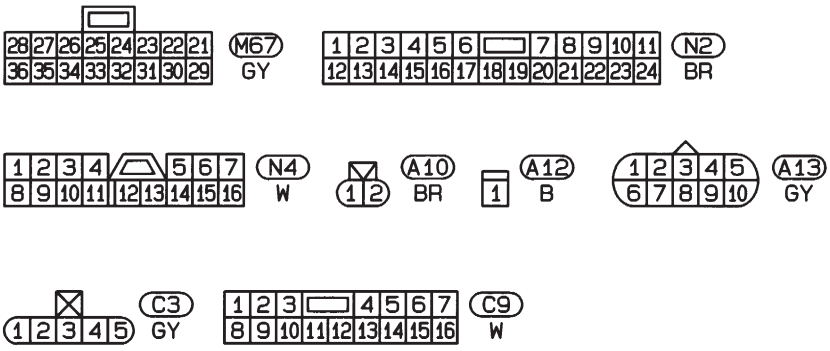

Consulter la dernière page dépliante.

M5 , E101

HEL719A

Simpo PDF Merge and Split Unregistered Version - http://www.simpopdf.com

Schéma de câblage — METER —/Moteur à essence sans compte-tours

EL-METER-05

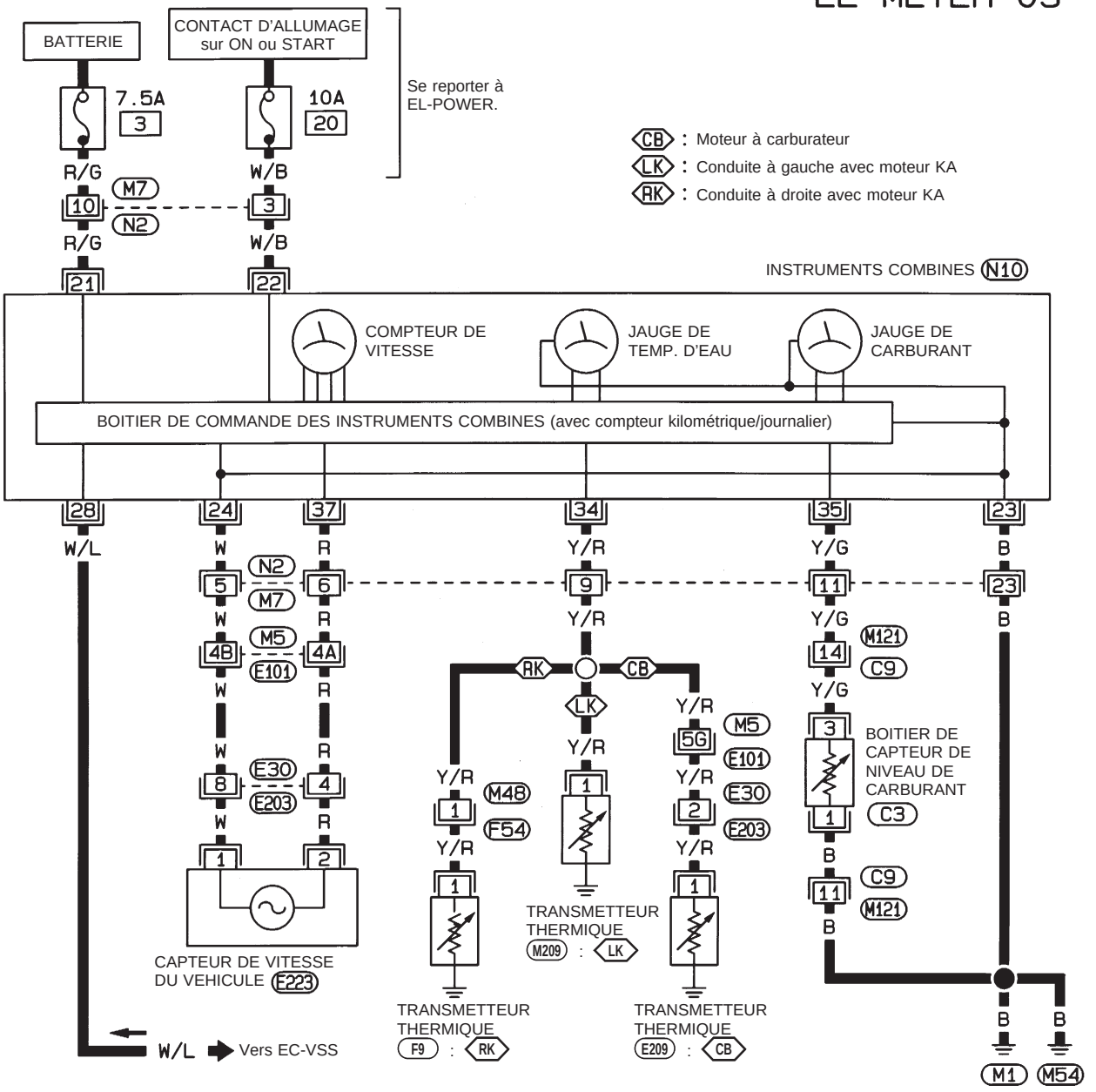

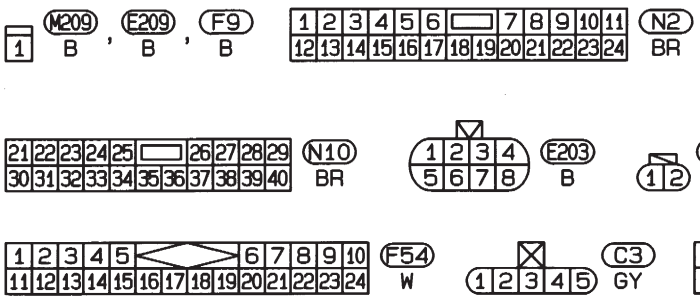

Consulter la dernière page dépliante.

M5 , E101

Simpo PDF Merge and Split Unregistered Version - http://www.simpopdf.com

Schéma de câblage — METER —/Moteur diesel sans compte-tours

EL-METER-06

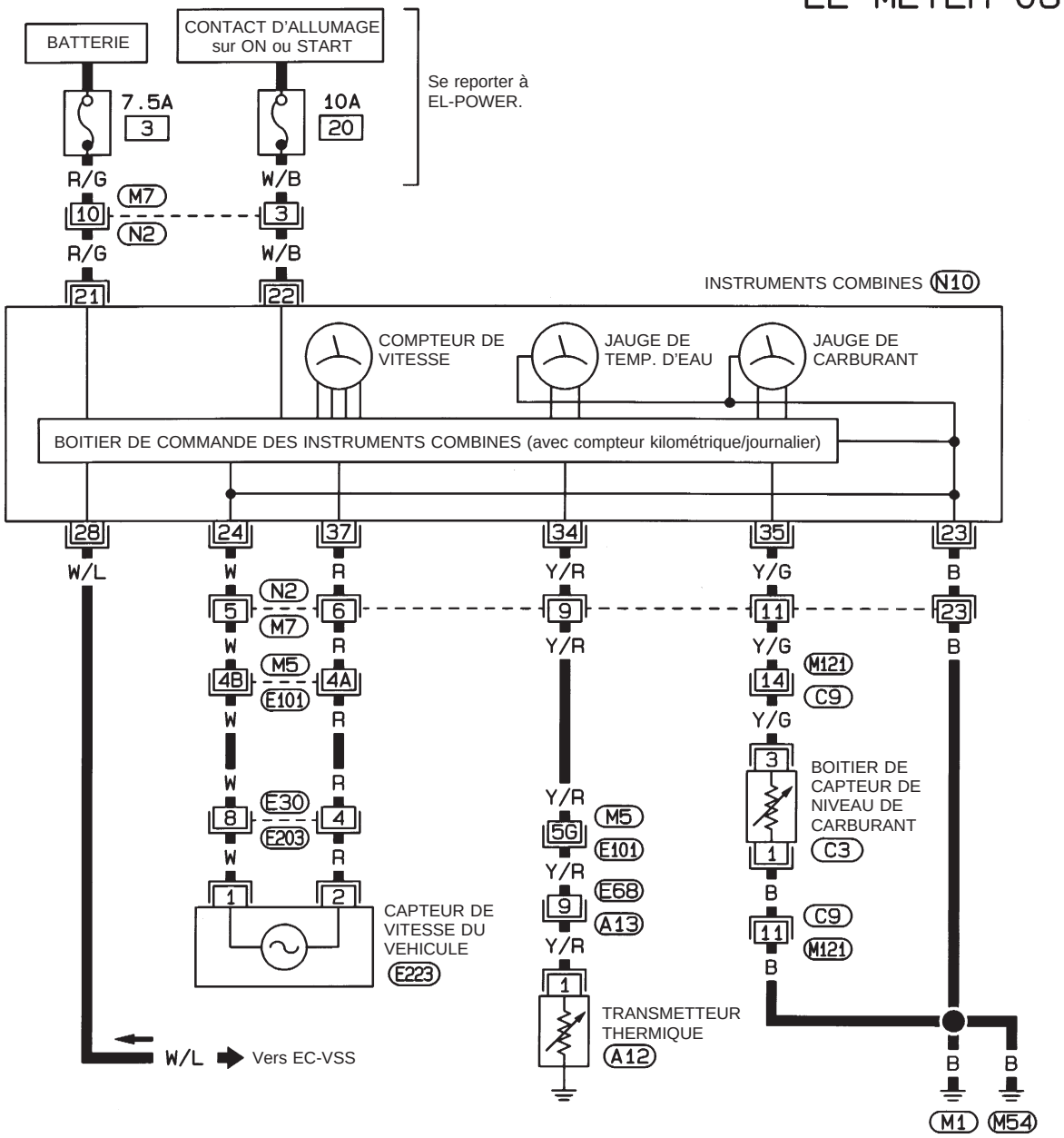





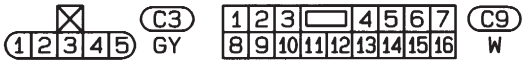

Consulter la dernière page dépliante.

M5 , E101

HEL721A

Simpo PDF Merge and Split Unregistered Version - http://www.simpopdf.com

Description du système des instruments combinés

INSTRUMENTS COMBINES

Le compteur de vitesse, le compteur kilométrique/journalier, le compte-tours, la jauge de réservoir à carburant et la jauge de température d'eau sont entièrement contrôlés par le boîtier de commande des instruments combinés.

Fonctionnement des instruments/jauges et contrôle des segments de compteur kilométrique/journalier en mode de Diagnostic.

FONCTION DE DIAGNOSTIC

- Les segments du compteur kilométrique/journalier peuvent être vérifiés en mode diagnostic.
- Les instruments/Jauges peuvent être vérifiés en mode de diagnostic.

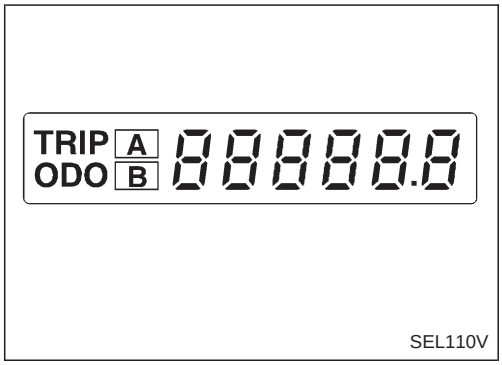

COMMENT PASSER EN MODE DE DIAGNOSTIC

1. Mettre le contact d'allumage sur ON et faire passer le compteur kilométrique/journalier en position ''TRIP A'' ou ''TRIP B''.
2. Couper le contact d'allumage.
3. Mettre le contact d'allumage sur ON tout en poussant sur le bouton de réglage du compteur kilométrique/journalier.
4. Vérifier que le compteur kilométrique journalier indique ''000,0''.
5. Appuyer sur le bouton de réglage du compteur kilométrique/journalier plus de trois fois en 5 secondes.
6. Tous les segments du compteur kilométrique/journalier numérique sont en marche.

NOTE : Si certains segments ne sont pas activés, le boîtier de commande des instruments combinés doit être remplacé.

A ce stade, les instruments combinés sont en mode de diagnostic.

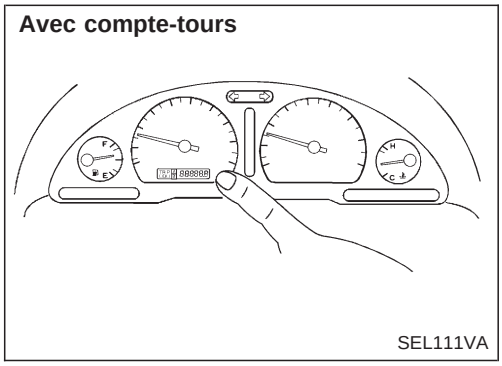

7. Appuyer sur le bouton de réglage du compteur kilométrique/journalier. Lorsque le bouton de réglage du compteur électrique/journalier est enclenché, l'indication de chaque instrument/jauge devrait être comme celle illustrée à gauche, s'il n'y a pas de défaut.

NOTE : Il faut environ 1 minute pour que l'indicateur de la jauge de réservoir à carburant se stabilise.

Simpo PDF Merge and Split Unregistered Version - http://www.simpopdf.com

Fonctionnement des instruments/jauges et contrôle des segments de compteur kilométrique/journalier en mode de Diagnostic. (suite)

Sans compte-tours

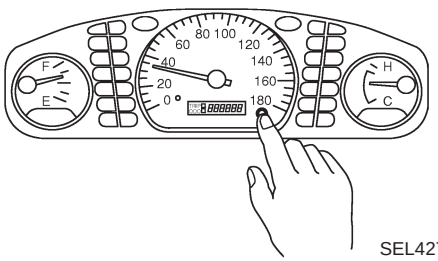

SEL427W

Circuit imprimé souple (FPC) (modèles avec compte-tours)

Le compte-tours, la jauge de réservoir à carburant et la jauge de température d'eau sont connectés au boîtier de commande des instruments combinés (compteur de vitesse) par le connecteur du circuit imprimé souple (FPC). Lors du remplacement ou de la dépose/repose des instruments combinés (compteur de vitesse), débrancher et rebrancher le connecteur FPC en procédant comme suit :

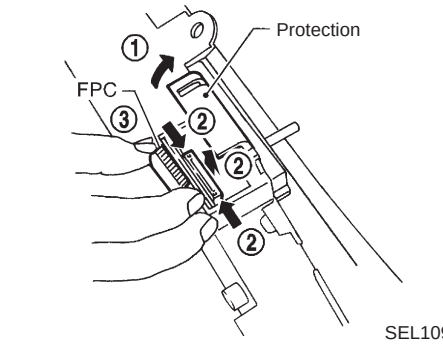

SEL109V

DEBRANCHER

1. Ouvrir la protection du connecteur.
2. Retirer le fermoir du connecteur en maintenant ses deux extrémités et en le tirant vers le haut.
3. Débrancher le FPC en le tirant vers le haut.

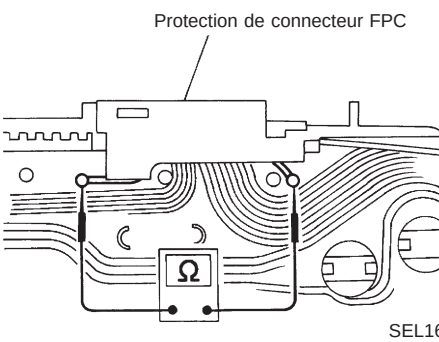

SEL162V

BRANCHER

1. Insérer le FPC dans le connecteur puis fermer le connecteur en poussant le FPC vers le bas.
2. Vérifier si le FPC est correctement branché.
3. Vérifier la continuité aux bornes de masse pour s'assurer que le FPC est fermement branché.
   Résistance : 0Ω
4. Fermer la protection du connecteur.

Simpo PDF Merge and Split Unregistered Version - http://www.simpopdf.com

Diagnostics des défauts/Modèles avec compte-tours

VERIFICATION PRELIMINAIRE

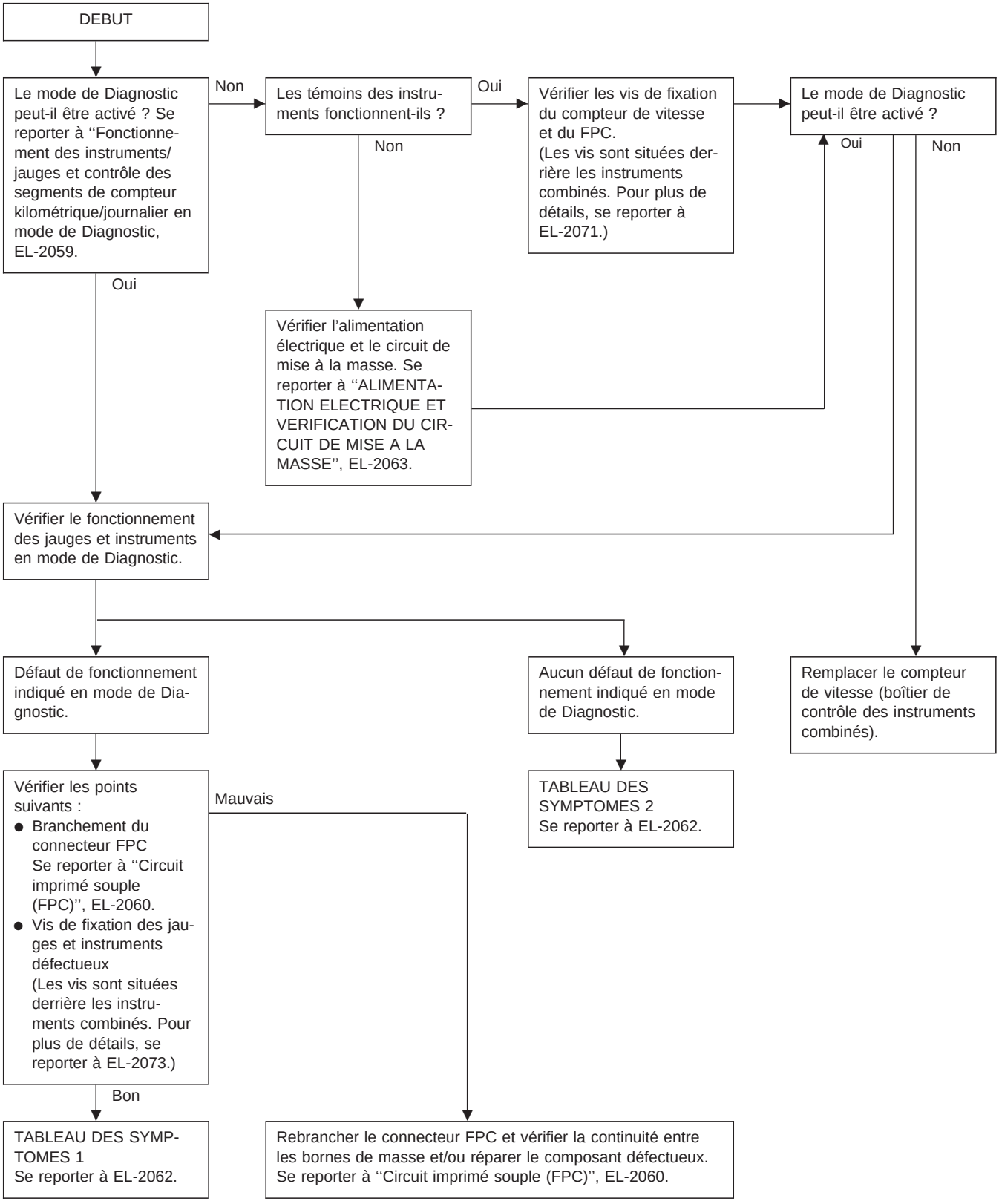

Simpo PDF Merge and Split Unregistered Version - http://www.simpopdf.com

Diagnostics des défauts/Modèles avec compte-tours (suite)

Avant de commencer les diagnostics de défaut ci-dessous, effectuer la VERIFICATION PRELIMINAIRE, EL-2061.

TABLEAU DES SYMPTOMES 1 (DEFAUT DE FONCTIONNEMENT INDIQUE EN MODE DE DIAGNOSTIC)

Symptôme	Causes possibles	Ordre de réparation
Le compteur de vitesse et/ou le compteur kilométrique/journalier indiquent un défaut en mode de Diagnostic.	● Compteur de vitesse (boîtier de contrôle des instruments combinés)	● Remplacer le compteur de vitesse (boîtier de contrôle des instruments combinés).
Instruments multiples/jauges présentent un défaut en mode de Diagnostic.		
Le compte-tours, la jauge de réservoir à carburant ou la jauge de température d'eau indique un défaut en mode de Diagnostic.	● Instruments/Jauges ● Compteur de vitesse (boîtier de contrôle des instruments combinés)	1. Vérifier la résistance des jauges et instruments défectueux. Si la résistance est mauvaise, remplacer la jauge/l'instrument. Se reporter à ''CONTROLE DE LA RESISTANCE DES INSTRUMENTS ET JAUGES'', EL-2073. 2. Si la résistance est correcte, remplacer le compteur de vitesses (boîtier de contrôle des instruments combinés).

TABLEAU DES SYMPTOMES 2 (AUCUN DEFAUT DE FONCTIONNEMENT INDIQUE EN MODE DE DIAGNOSTIC

Symptôme	Causes possibles	Ordre de réparation
Le compteur de vitesse et le compteur kilométrique/journalier sont défectueux.	1. Capteur - Compteur de vitesse et compteur kilométrique/journalier 2. Connecteur FPC 3. Compteur de vitesse (boîtier de contrôle des instruments combinés)	1. Vérifier le capteur de vitesse du véhicule. INSPECTION/CAPTEUR DE VITESSE DU VEHICULE (Se reporter à EL-2064.) 2. Vérifier le connecteur FPC. Se reporter à ''CIRCUIT IMPRIME SOUPLE (FPC)'', EL-2060. 3. Remplacer le compteur de vitesse (boîtier de contrôle des instruments combinés).
Plusieurs jauges/instruments sont défectueux (sauf le compteur de vitesse, le compteur kilométrique/journalier).	1. Connecteur FPC 2. Compteur de vitesse (boîtier de contrôle des instruments combinés)	1. Vérifier le connecteur FPC. Se reporter à ''CIRCUIT IMPRIME SOUPLE (FPC)'', EL-2060. 2. Remplacer le compteur de vitesse (boîtier de contrôle des instruments combinés).
Le compte-tours, la jauge de réservoir à carburant ou la jauge de température d'eau est défectueux.	1. Capteur/Signal de régime moteur - Compte-tours - Jauge de carburant - Jauge de temp. d'eau 2. Connecteur FPC 3. Compteur de vitesse (boîtier de contrôle des instruments combinés)	1. Vérifier le capteur de défauts des jauges et instruments. INSPECTION/SIGNAL DE REGIME MOTEUR (Se reporter à EL-2064.) INSPECTION/JAUGE DE RESERVOIR A CARBURANT (Se reporter à EL-102.) INSPECTION/TRANSMETTEUR THERMIQUE (Se reporter à EL-2066.) 2. Vérifier le connecteur FPC. Se reporter à ''CIRCUIT IMPRIME SOUPLE (FPC)'', EL-2060. 3. Remplacer le compteur de vitesse (boîtier de contrôle des instruments combinés).

Simpo PDF Merge and Split Unregistered Version - http://www.simpopdf.com

Diagnostics des défauts/Modèles avec compte-tours (suite)

CONTROLE DE L'ALIMENTATION ELECTRIQUE ET DU CIRCUIT DE MISE A LA MASSE

Vérification du circuit de l'alimentation électrique

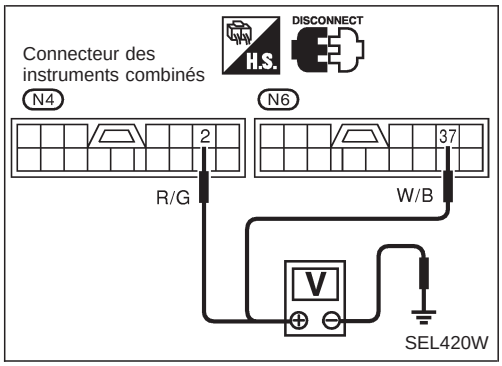

Bornes		Position du contact d'allumage		
⊕	⊖	OFF	ACC	ON
②	Masse	Tension de la batterie	Tension de la batterie	Tension de la batterie
㊲	Masse	0V	0V	Tension de la batterie

Si le résultat n'est pas satisfaisant, vérifier les points suivants ..

- Fusible de 7,5A [n° 3, situé dans le boîtier à fusibles (J/B)]
- Fusible de 10 A [n° 20, situé dans le boîtier à fusibles (J/B)]
- Faisceau ouvert ou court-circuité entre le fusible et les instruments combinés

Vérification du circuit de masse

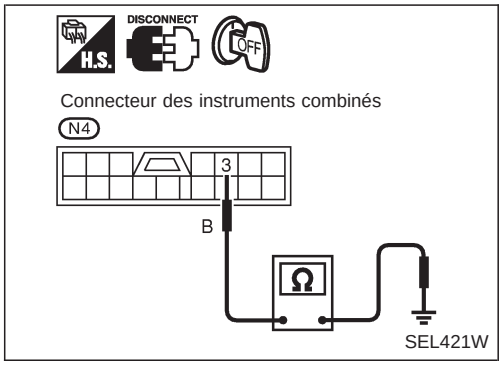

Bornes	Il y a continuité
③ - Masse	Oui

Simpo PDF Merge and Split Unregistered Version - http://www.simpopdf.com

Diagnostics des défauts/Modèles avec compte-tours (suite)

INSPECTION/CAPTEUR DE VITESSE DU VEHICULE

A

VERIFICATION DE LA SORTIE DU CAPTEUR DE VITESSE DU VEHICULE.
1. Déposer le capteur de vitesse du véhicule de la transmission.
2. Vérifier la tension entre les bornes ⑦ et ⑮ des instruments combinés tout en tournant rapidement le pignon du capteur de vitesse.
Tension : environ 0,5V

Bon → Le capteur de vitesse du véhicule fonctionne correctement.

Mauvais ↓

B

VERIFICATION DU CAPTEUR DE VITESSE DU VEHICULE.
Vérifier la résistance entre les bornes ① et ② du capteur de vitesse du véhicule.
Résistance : environ 250Ω

Mauvais → Remplacer le capteur de vitesse du véhicule.

Bon ↓

Vérifier le faisceau ou le connecteur entre le compteur de vitesse et le capteur de vitesse du véhicule.

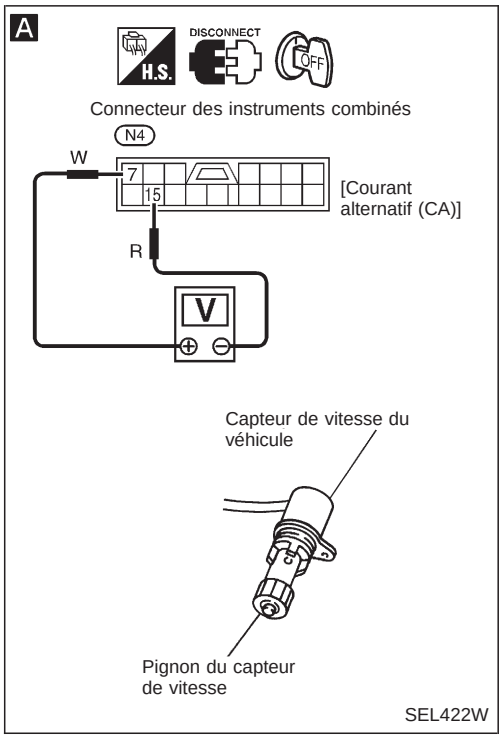

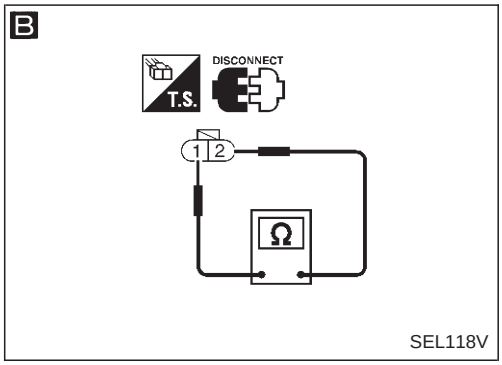

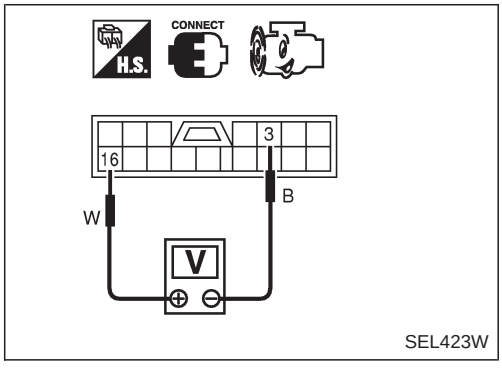

INSPECTION/SIGNAL DE REGIME MOTEUR (modèles avec compte-tours)

Moteur	Points à vérifier	Bornes ⊕	Bornes ⊖	Explication
Moteur contrôlé par l'ECM	Tension du courant continu	⑯	③	Tr/mn élevé = tension élevée Tr/mn faible = basse tension La tension variera en fonction du régime moteur.
Carburateur	Tension du courant alternatif			
Moteurs diesel TD27 et QD32				

Si le résultat n'est pas satisfaisant, vérifier les points suivants ..

Moteur	Points à vérifier
Moteur contrôlé par l'ECM	● Faisceau ouvert ou court-circuité et raccord
Carburateur	● Faisceau ouvert ou court-circuité et raccord ● Résistance etc.
Moteurs diesel TD27 et QD32	● Faisceau ouvert ou court-circuité et raccord ● Capteur de régime moteur etc.

Simpo PDF Merge and Split Unregistered Version - http://www.simpopdf.com

Diagnostics des défauts/Modèles avec compte-tours (suite)

INSPECTION/CAPTEUR DE NIVEAU DE CARBURANT

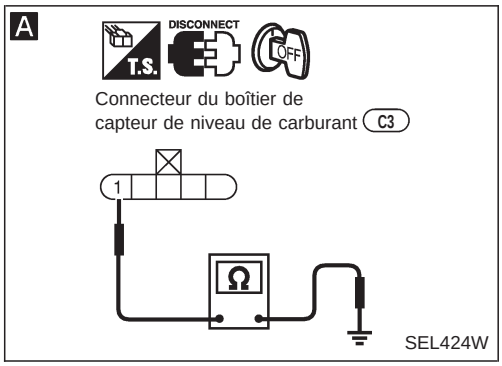

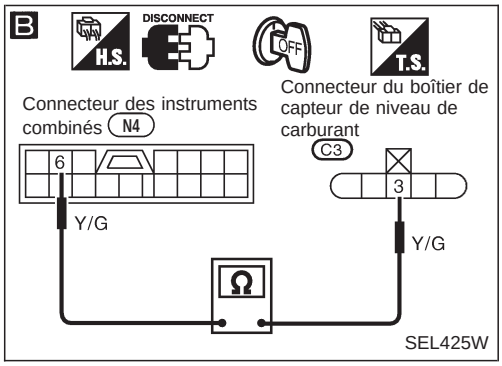

A

VERIFIER LE CIRCUIT DE MISE A LA MASSE DU BOITIER DU CAPTEUR DE NIVEAU DE CARBURANT.
Vérifier la continuité du faisceau entre la borne (1) du boîtier du capteur de niveau de carburant et la masse.
Il doit y avoir continuité.

Mauvais → Réparer le faisceau ou le connecteur.

Bon ↓

VERIFIER LES BOITIERS DE CAPTEUR DE NIVEAU DE CARBURANT.
Se reporter à ''CONTROLE DU BOITIER DU CAPTEUR DE NIVEAU DE CARBURANT'' (EL-2073).

Mauvais → Réparer ou remplacer. Se reporter à la section FE.

Bon ↓

B

VERIFIER LE FAISCEAU.
1. Débrancher le connecteur N4 des instruments combinés et le connecteur du boîtier du capteur de niveau de carburant.
2. Vérifier la continuité du faisceau entre la borne (6) des instruments combinés et la borne (3) du boîtier du capteur de niveau de carburant.

Il doit y avoir continuité.

3. Vérifier la continuité entre la borne (6) des instruments combinés et la masse.

Il ne doit pas y avoir continuité.

Mauvais → Réparer le faisceau ou le connecteur.

Bon ↓

Le capteur de niveau de carburant fonctionne correctement.

Simpo PDF Merge and Split Unregistered Version - http://www.simpopdf.com

Diagnostics des défauts/Modèles avec compte-tours (suite)

INSPECTION/TRANSMETTEUR THERMIQUE

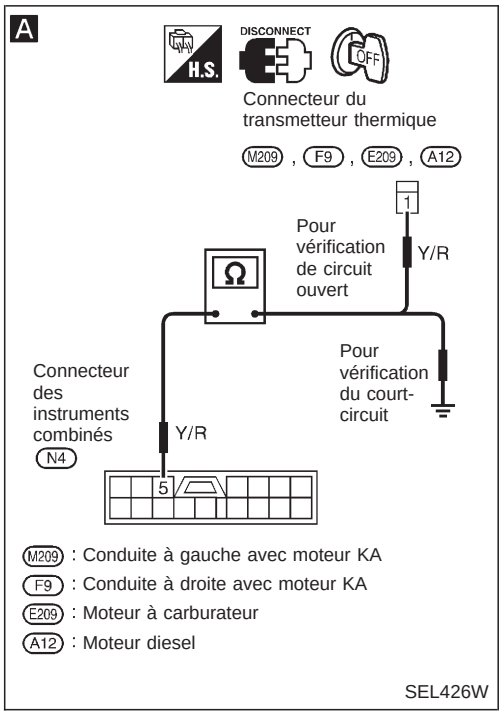

VERIFIER LE TRANSMETTEUR THERMIQUE.
Se reporter à "VERIFICATION DU TRANSMETTEUR THERMIQUE" (EL-2074).

Mauvais → Réparer ou remplacer.

Bon ↓

A

VERIFIER LE FAISCEAU.

1. Débrancher le connecteur N4 des instruments combinés ainsi que le connecteur du transmetteur thermique.
2. Vérifier la continuité du faisceau entre la borne 5 des instruments combinés et la borne 1 du transmetteur thermique.

Il doit y avoir continuité.

3. Vérifier la continuité entre la borne 5 des instruments combinés et la masse.

Il ne doit pas y avoir continuité.

Mauvais → Réparer le faisceau ou le connecteur.

Bon ↓

Le transmetteur thermique fonctionne correctement.

Simpo PDF Merge and Split Unregistered Version - http://www.simpopdf.com

Diagnostics des défauts/Modèles sans compte-tours

VERIFICATION PRELIMINAIRE

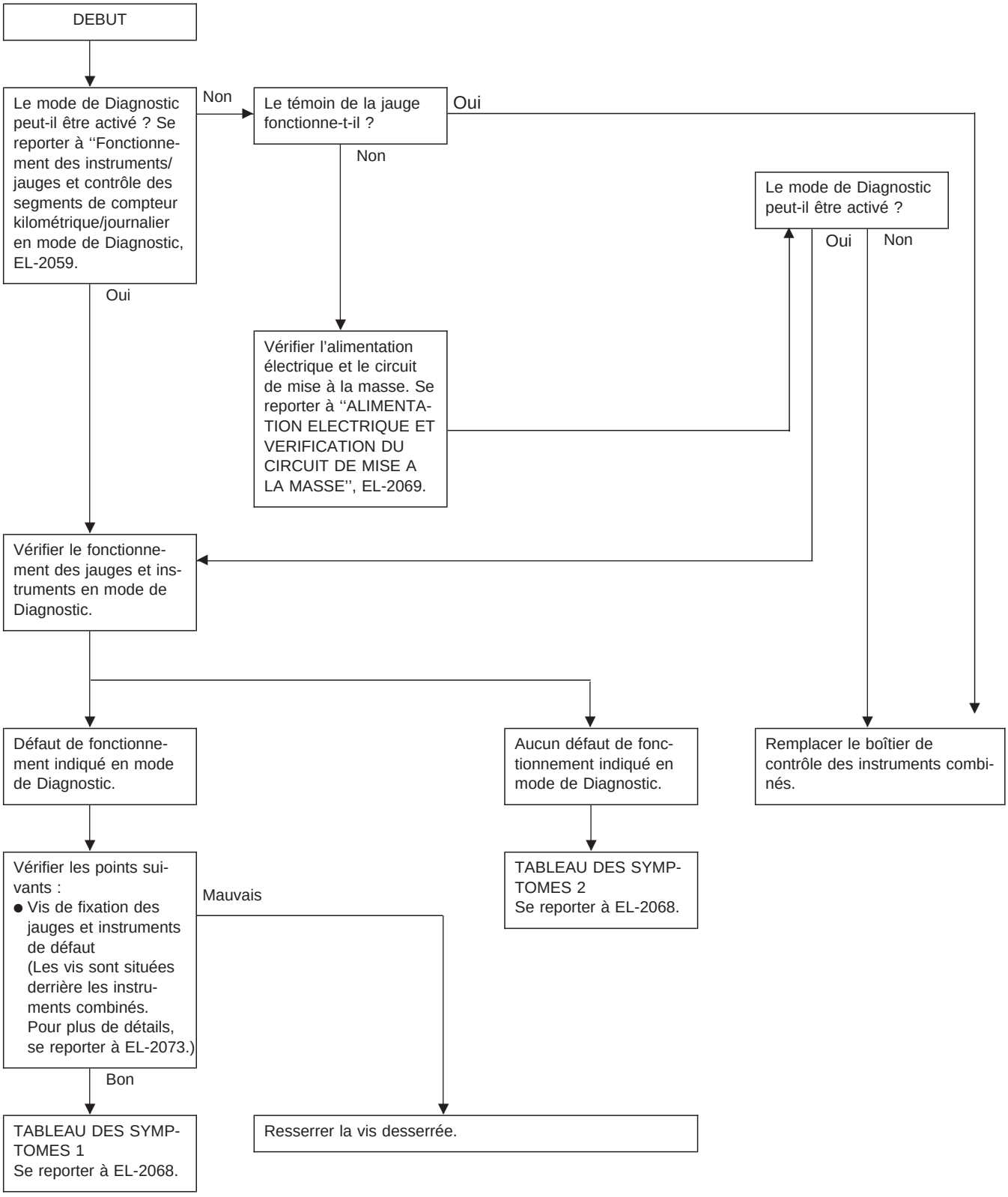

Simpo PDF Merge and Split Unregistered Version - http://www.simpopdf.com

Diagnostics des défauts/Modèles sans compte-tours (suite)

Avant de commencer les diagnostics de défaut ci-dessous, effectuer la VERIFICATION PRELIMINAIRE, EL-2067.

TABLEAU DES SYMPTOMES 1 (DEFAUT DE FONCTIONNEMENT INDIQUE EN MODE DE DIAGNOSTIC)

Symptôme	Causes possibles	Ordre de réparation
Le compteur kilométrique/ journalier indique(nt) un défaut en mode de Diagnostic.	● Boîtier de contrôle des instruments combinés	● Remplacer le boîtier de contrôle des instruments combinés.
Instruments multiples/jauges présentent un défaut en mode de Diagnostic.		
Le compteur de vitesse, le compte-tours, la jauge de réservoir à carburant ou la jauge de température d'eau indique un défaut en mode de Diagnostic.	● Instruments/Jauges ● Boîtier de contrôle des instruments combinés	1. Vérifier la résistance des jauges et instruments défectueux. Si la résistance est ne fonctionne pas, remplacer la jauge/l'instrument. Se reporter à ''CONTROLE DE LA RESISTANCE DES INSTRUMENTS/JAUGES'', EL-2073. 2. Si la résistance est correcte, remplacer le boîtier de contrôle des instruments combinés.

TABLEAU DES SYMPTOMES 2 (AUCUN DEFAUT DE FONCTIONNEMENT INDIQUE EN MODE DE DIAGNOSTIC)

Symptôme	Causes possibles	Ordre de réparation
Le compteur de vitesse, le compte-tours, la jauge de réservoir à carburant ou la jauge de température d'eau indique un défaut.	1. Capteur - Signal de vitesse du véhicule - Jauge de carburant - Jauge de temp. d'eau 2. Boîtier de contrôle des instruments combinés	1. Vérifier le capteur pour les jauges et instruments défectueux. INSPECTION/CAPTEUR DE VITESSE DU VEHICULE (Se reporter à EL-2070.) INSPECTION/CAPTEUR DE NIVEAU DE CARBURANT (Se reporter à EL-2065.) INSPECTION/TRANSMETTEUR THERMIQUE (Se reporter à EL-2072.) 2. Remplacer le boîtier de contrôle des instruments combinés.

Simpo PDF Merge and Split Unregistered Version - http://www.simpopdf.com

Diagnostics des défauts/Modèles sans compte-tours (suite)

CONTROLE DE L'ALIMENTATION ELECTRIQUE ET DU CIRCUIT DE MISE A LA MASSE

Vérification du circuit de l'alimentation électrique

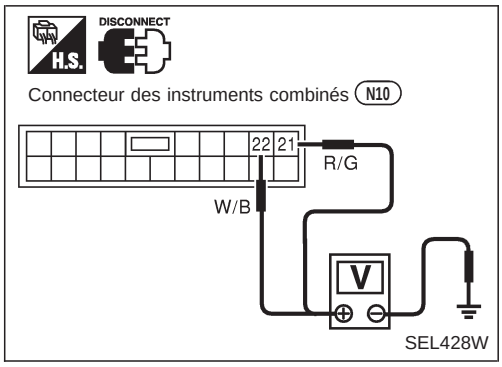

Bornes		Position du contact d'allumage		
⊕	⊖	OFF	Acc	ON
21	Masse	Tension de la batterie	Tension de la batterie	Tension de la batterie
22	Masse	0V	0V	Tension de la batterie

Si le résultat n'est pas satisfaisant, vérifier les points suivants ..

- Fusible de 7,5A [n° 3, situé dans le boîtier à fusibles (J/B)]
- Fusible de 10 A [n° 20, situé dans le boîtier à fusibles (J/B)]
- Faisceau ouvert ou court-circuité entre le fusible et les instruments combinés

Vérification du circuit de masse

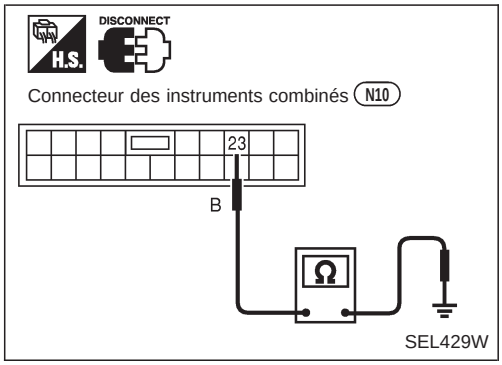

Bornes	Il y a continuité
23 - Masse	Oui

Simpo PDF Merge and Split Unregistered Version - http://www.simpopdf.com

Diagnostics des défauts/Modèles sans compte-tours (suite)

INSPECTION/CAPTEUR DE VITESSE DU VEHICULE

A

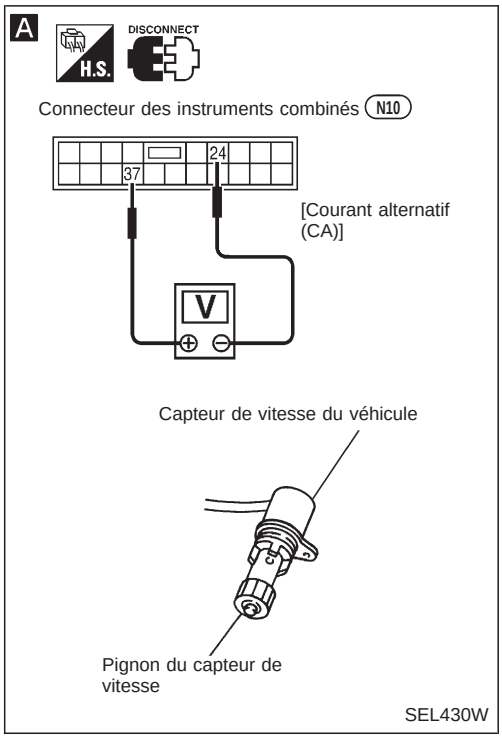

VERIFICATION DE LA SORTIE DU CAPTEUR DE VITESSE DU VEHICULE.

1. Déposer le capteur de vitesse du véhicule de la transmission.
2. Vérifier la tension entre les bornes ㉔ et ㊲ des instruments combinés tout en tournant rapidement le pignon du capteur de vitesse.
   Tension : environ 0,5V

Bon → Le capteur de vitesse du véhicule fonctionne correctement.

Mauvais ↓

B

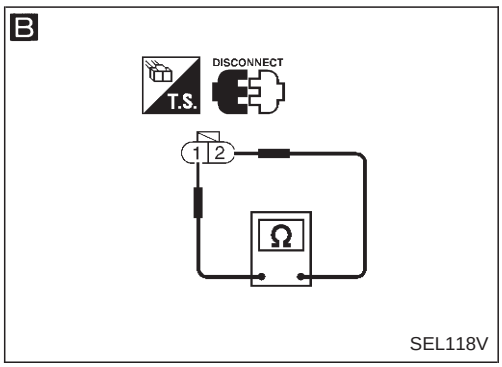

VERIFICATION DU CAPTEUR DE VITESSE DU VEHICULE.

Vérifier la résistance entre les bornes ① et ② du capteur de vitesse du véhicule.

Résistance : environ 250Ω

Mauvais → Remplacer le capteur de vitesse du véhicule.

Bon ↓

Vérifier le faisceau ou le connecteur entre le compteur de vitesse et le capteur de vitesse du véhicule.

Simpo PDF Merge and Split Unregistered Version - http://www.simpopdf.com

Diagnostics des défauts/Modèles sans compte-tours (suite)

INSPECTION/CAPTEUR DE NIVEAU DE CARBURANT

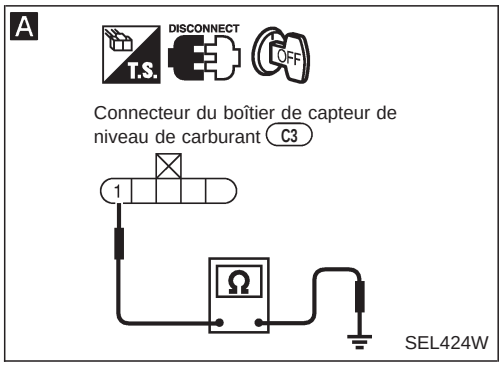

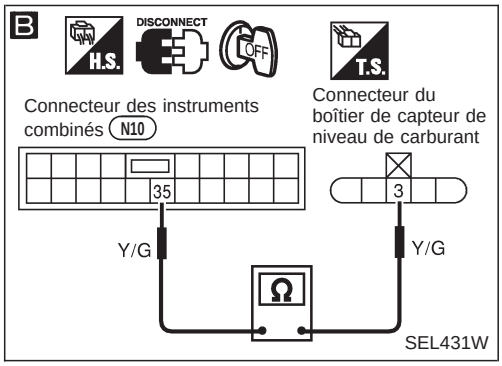

A

VERIFIER LE CIRCUIT DE MISE A LA MASSE DU BOITIER DU CAPTEUR DE NIVEAU DE CARBURANT.
Vérifier la continuité du faisceau entre la borne (1) du boîtier du capteur de niveau de carburant et la masse.
Il doit y avoir continuité.

Mauvais → Réparer le faisceau ou le connecteur.

Bon ↓

VERIFIER LE BOITIER DE CAPTEUR DE NIVEAU DE CARBURANT.
Se reporter à ''CONTROLE DU BOITIER DU CAPTEUR DE NIVEAU DE CARBURANT'' (EL-2073).

Mauvais → Réparer ou remplacer. Se reporter à la section FE.

Bon ↓

B

VERIFIER LE FAISCEAU.
1. Débrancher le connecteur (N10) des instruments combinés et le connecteur du boîtier du capteur de niveau de carburant.
2. Vérifier la continuité du faisceau entre la borne (35) des instruments combinés et la borne (3) du boîtier du capteur de niveau de carburant.

Il doit y avoir continuité.

3. Vérifier la continuité entre la borne (35) des instruments combinés et la masse.

Il ne doit pas y avoir continuité.

Mauvais → Réparer le faisceau ou le connecteur.

Bon ↓

Le capteur de niveau de carburant fonctionne correctement.

Simpo PDF Merge and Split Unregistered Version - http://www.simpopdf.com

Diagnostics des défauts/Modèles sans compte-tours (suite)

INSPECTION/TRANSMETTEUR THERMIQUE

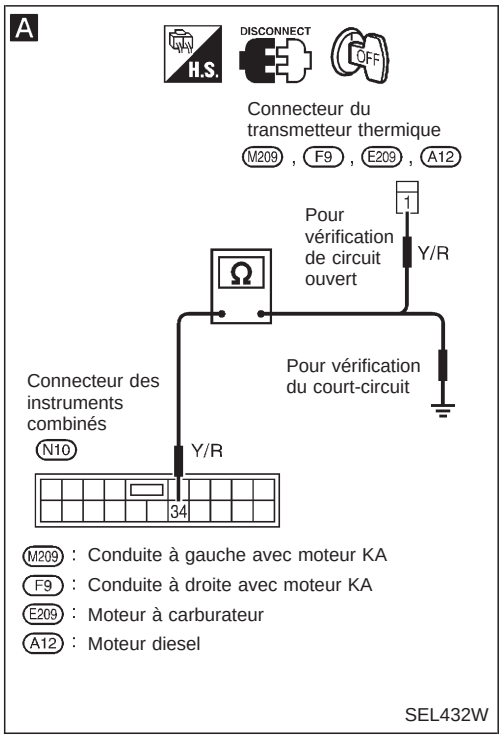

VERIFIER LE TRANSMETTEUR THERMIQUE.
Se reporter à "VERIFICATION DU TRANSMETTEUR THERMIQUE" (EL-(EL-2074).

Mauvais → Réparer ou remplacer.

Bon ↓

A

VERIFIER LE FAISCEAU.

1. Débrancher le connecteur N10 des instruments combinés ainsi que le connecteur du transmetteur thermique.
2. Vérifier la continuité du faisceau entre la borne 34 des instruments combinés et la borne 1 du transmetteur thermique.

Il doit y avoir continuité.

3. Vérifier la continuité entre la borne 34 des instruments combinés et la masse.

Il ne doit pas y avoir continuité.

Mauvais → Réparer le faisceau ou le connecteur.

Bon ↓

Le transmetteur thermique fonctionne correctement.

Simpo PDF Merge and Split Unregistered Version - http://www.simpopdf.com

Inspection des composants électriques

CONTROLE DE LA RESISTANCE DES INSTRUMENTS/JAUGES

1. Débrancher le connecteur FPC (Instruments combinés avec compte-tours). Se reporter à EL-2060.
2. Vérifier la résistance entre les bornes (points des vis de repose) des jauges/instruments après la dépose des jauges/instruments.

Vis		Résistance Ω
Compte-tours	Jauge Carburant/ Temp.	
A - C	A - C	Environ 140 - Environ 260
B - D	B - C	Environ 230 - Environ 310

Avec compte-tours

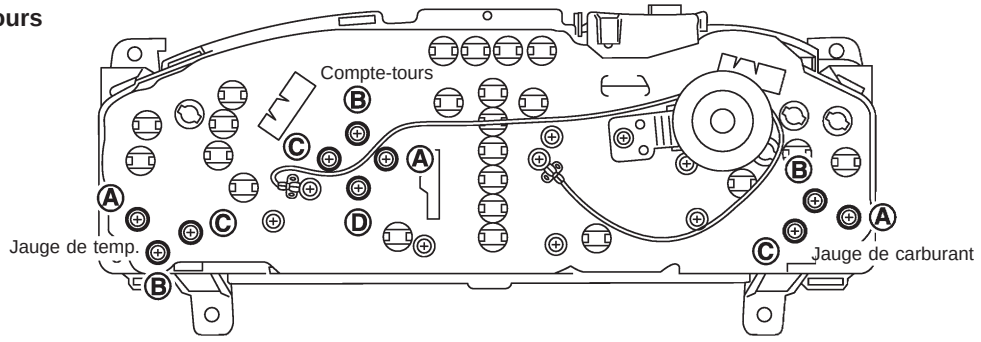

SEL638W

Sans compte-tours

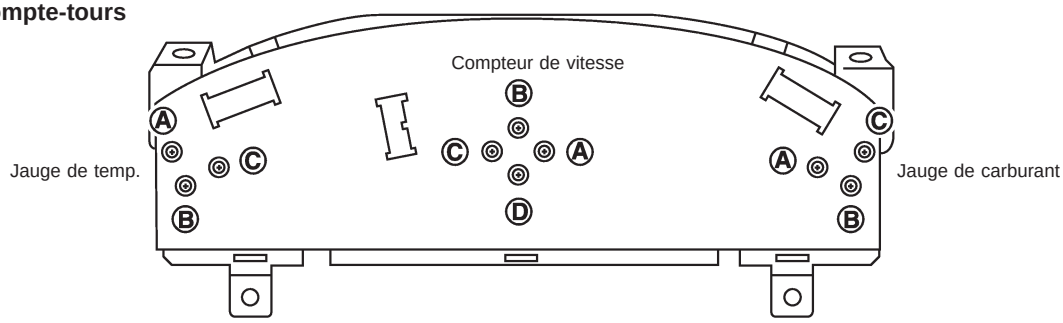

SEL433W

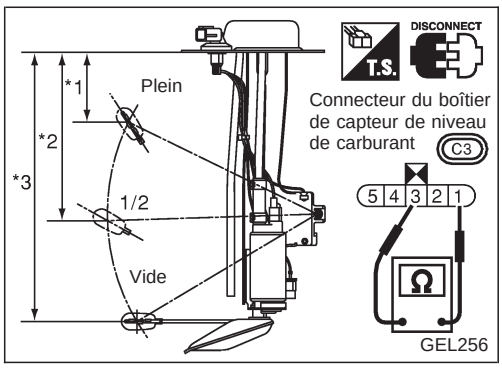

GEL256

CONTROLE DU BOITIER DE CAPTEUR DE NIVEAU DE CARBURANT

● Pour la dépose, consulter le chapitre FE.

Vérifier la résistance entre les bornes ① et ③.

Ohmmètre		Position de flottement mm				Valeur de résistance Ω
(+)	(−)			Réservoir à 60ℓ	Réservoir à 80ℓ	
③	①	*2	Plein	253	77	Environ 4 - 6
		*3	1/2	130	191	27 - 35
		*3	Vide	26	299	78 - 85

*1 et *3 : Lorsque la tige du flotteur est en contact avec la butée.

Simpo PDF Merge and Split Unregistered Version - http://www.simpopdf.com

Inspection des composants électriques (suite)

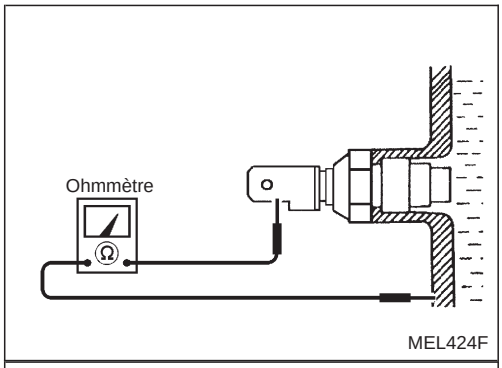

MEL424F

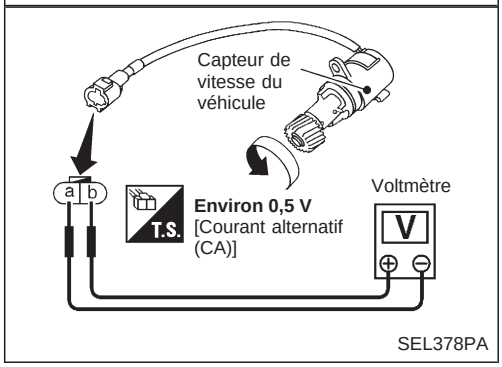

SEL378PA

VERIFICATION DU TRANSMETTEUR THERMIQUE

Vérifier la résistance entre les bornes du transmetteur thermique et la masse de carrosserie.

Temperature d'eau	Résistance
60°C	Environ 167 - 211Ω
100°C	Environ 47 - 53Ω

VERIFICATION DU SIGNAL DE CAPTEUR DE VITESSE DU VEHICULE

1. Déposer le capteur de vitesse du véhicule de la transmission.
2. Tourner rapidement le pignon du capteur de vitesse du véhicule et mesurer la tension entre les bornes ⓐ et ⓑ.

Simpo PDF Merge and Split Unregistered Version - http://www.simpopdf.com

Schéma

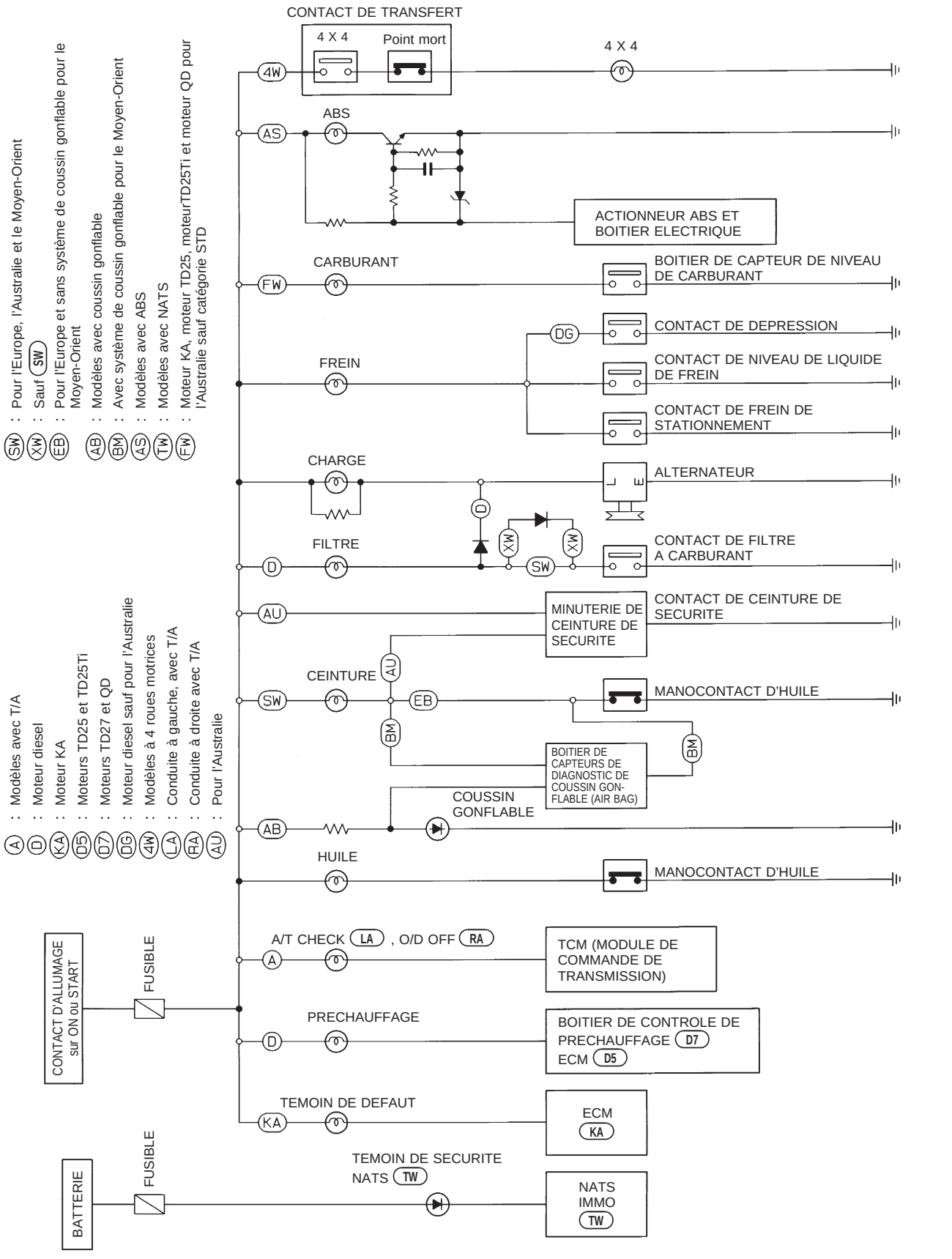

HEL722A

Simpo PDF Merge and Split Unregistered Version - http://www.simpopdf.com

Schéma de câblage — WARN —/Moteur à essence

EL-WARN-01

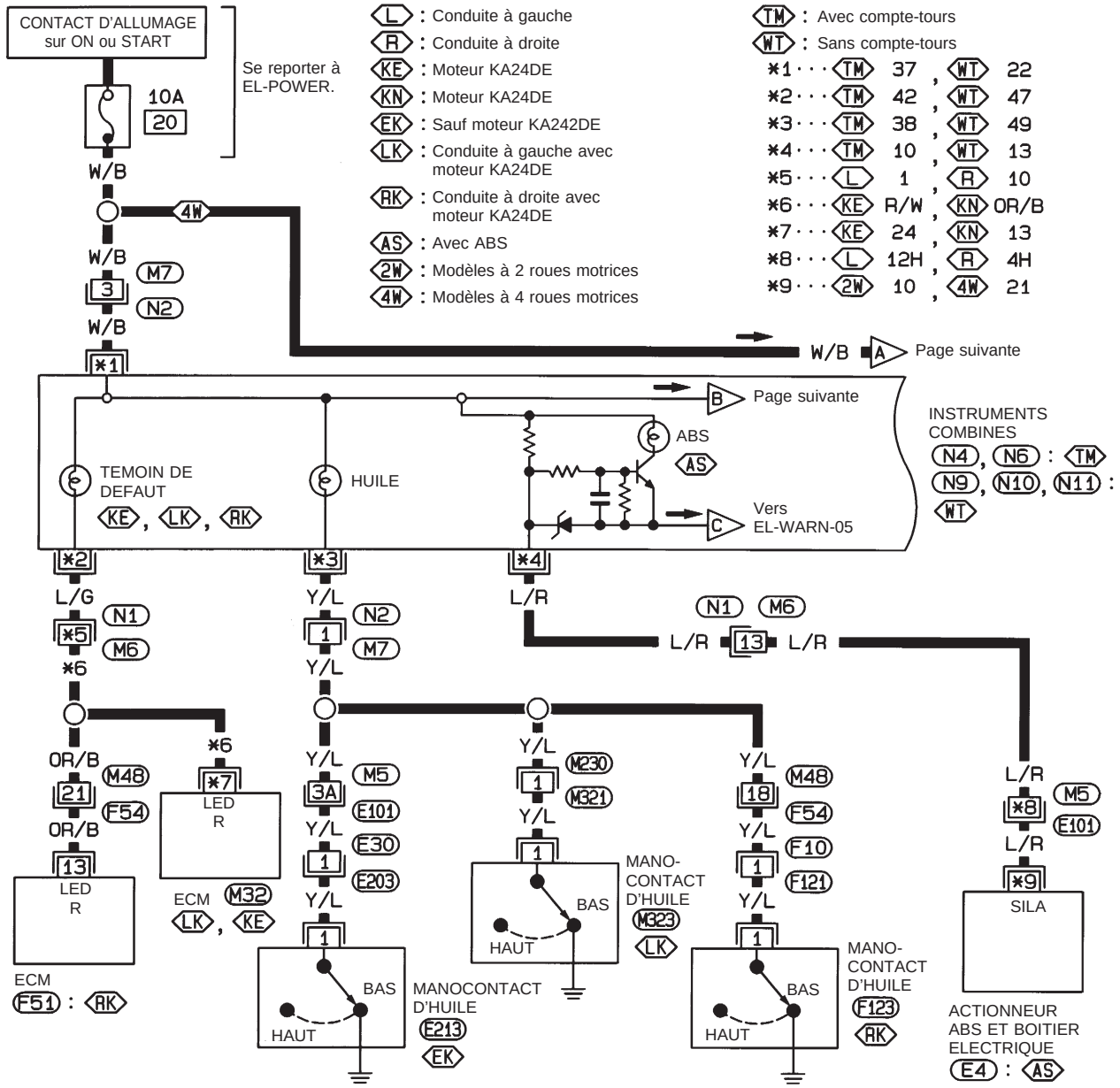

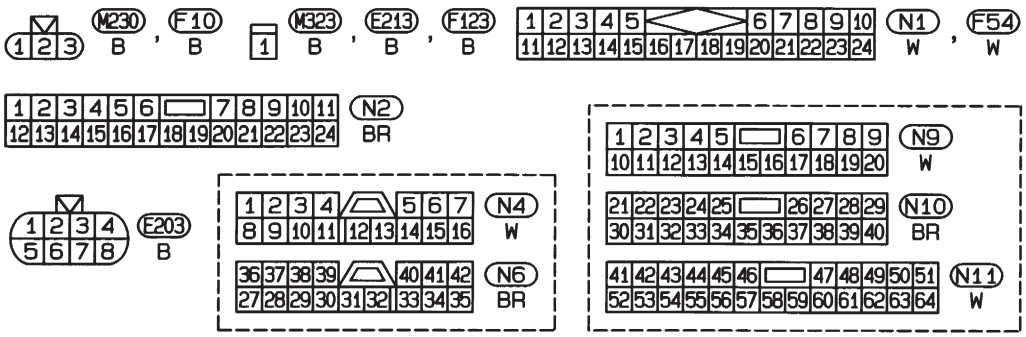

Consulter la dernière page dépliante.

M5 , E101
M32
F51
E4

HEL723A

Simpo PDF Merge and Split Unregistered Version - http://www.simpopdf.com

Schéma de câblage — WARN —/Moteur à essence (suite)

EL-WARN-02

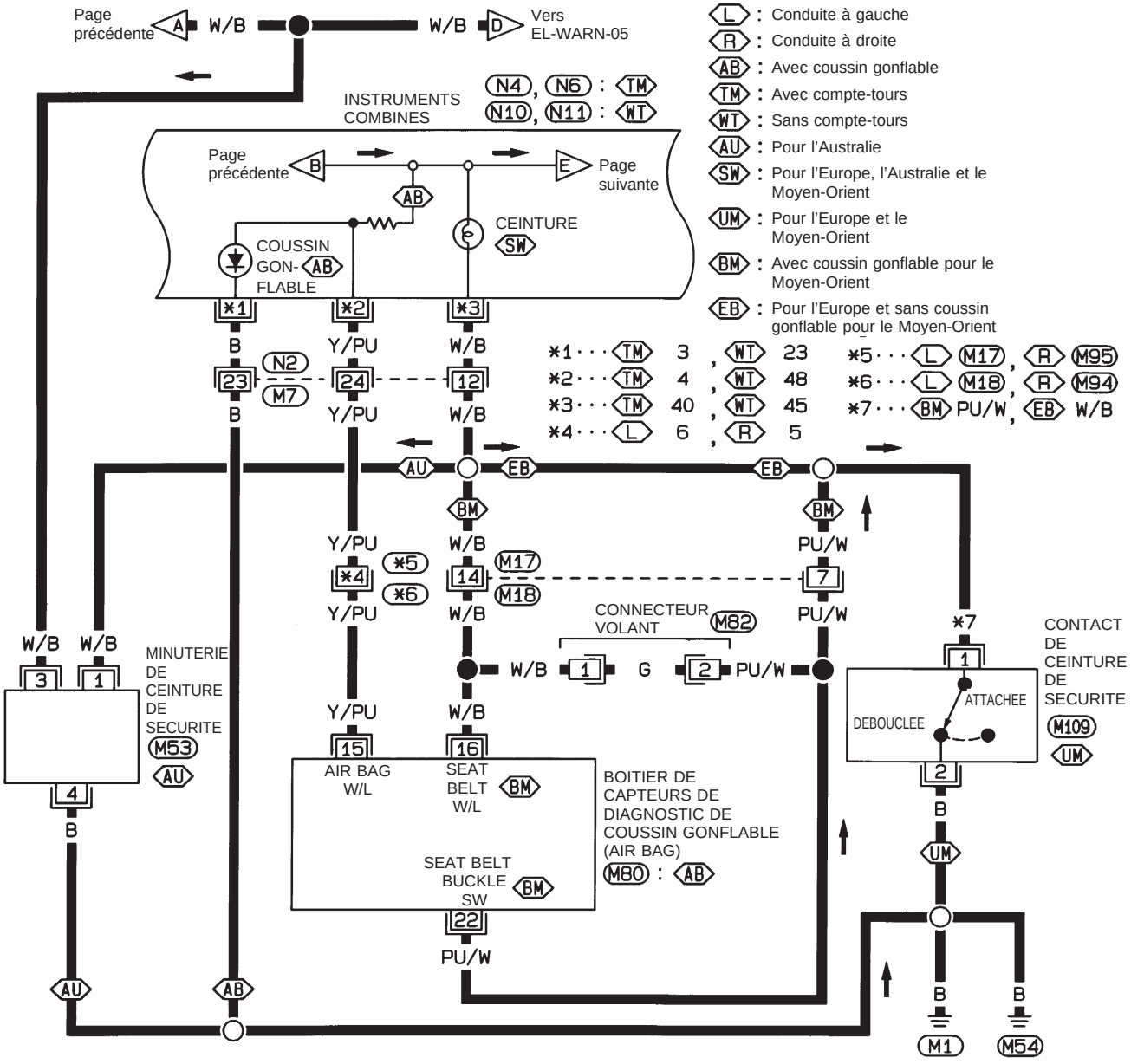

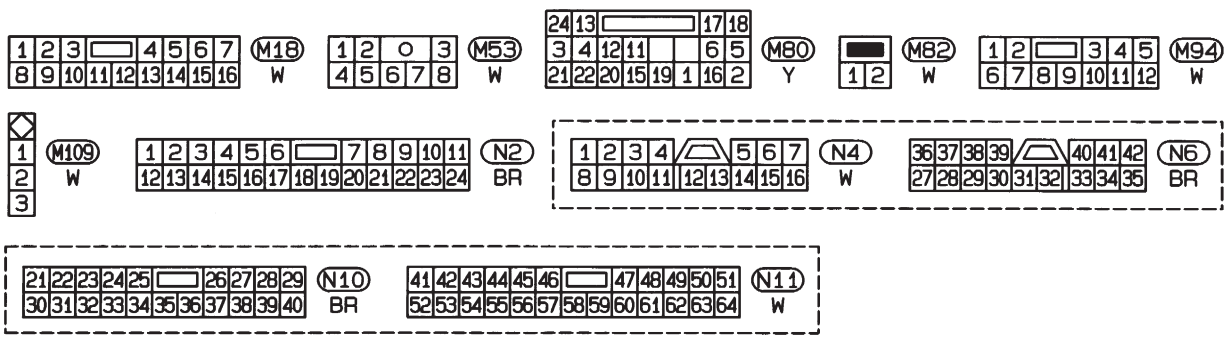

HEL724A

Simpo PDF Merge and Split Unregistered Version - http://www.simpopdf.com

Schéma de câblage — WARN —/Moteur à essence (suite)

EL-WARN-03

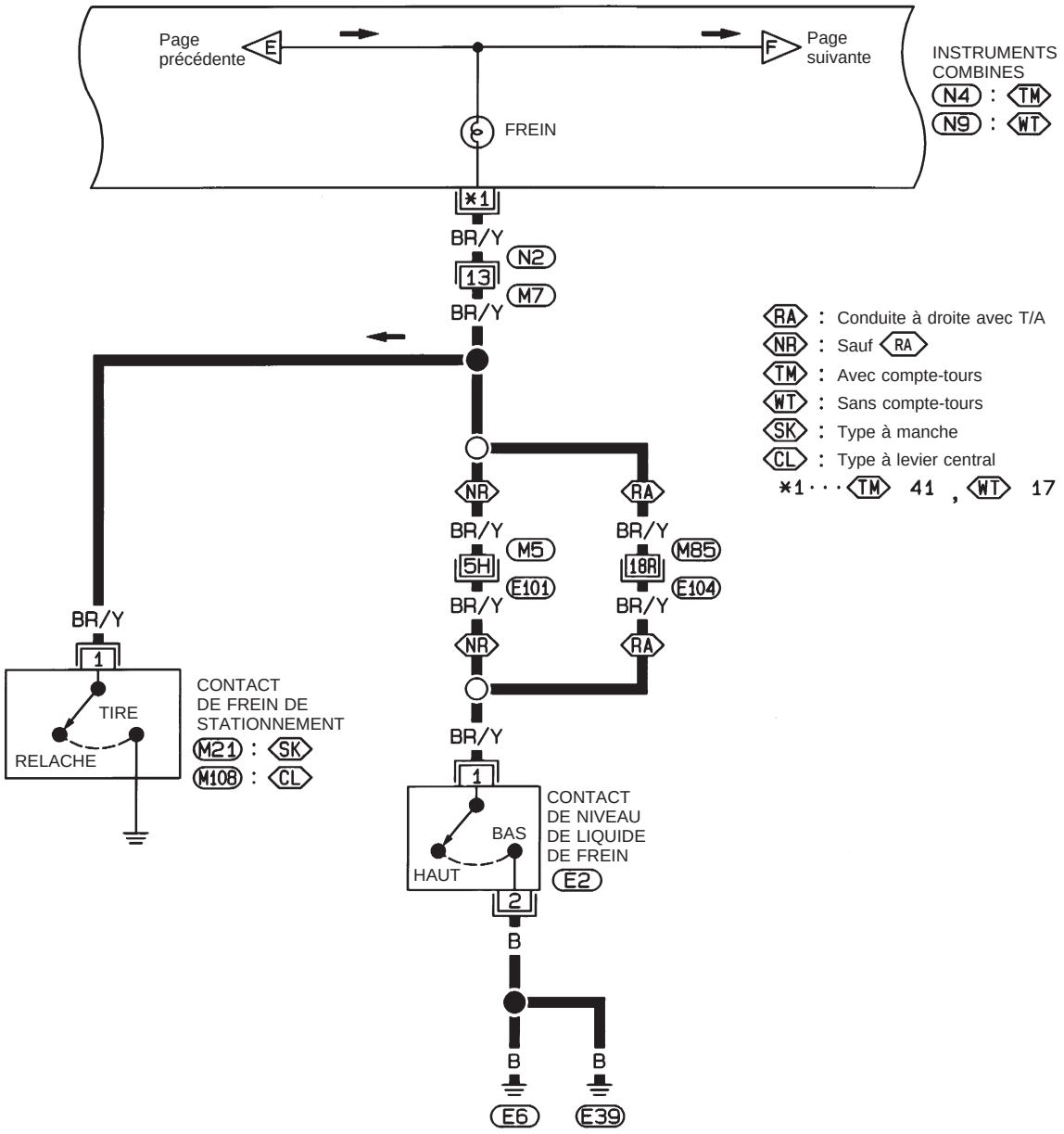

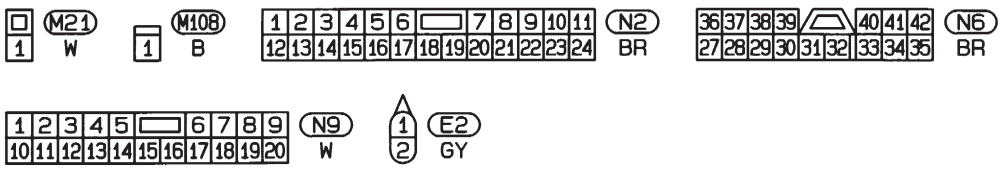

Consulter la dernière page dépliante.

M5 , E101
M85 , E104

HEL725A

Simpo PDF Merge and Split Unregistered Version - http://www.simpopdf.com

Schéma de câblage — WARN —/Moteur à essence (suite)

EL-WARN-04

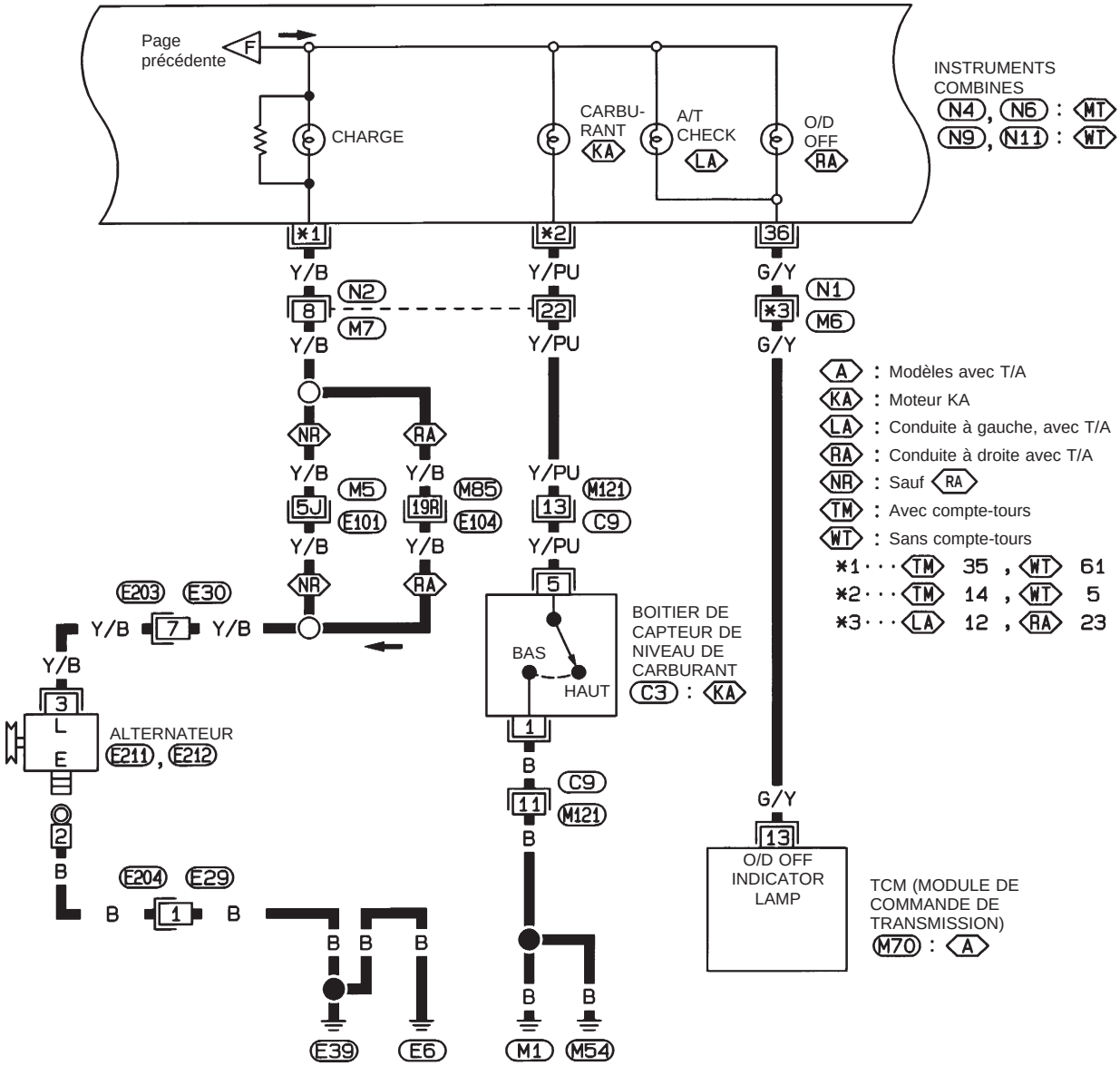

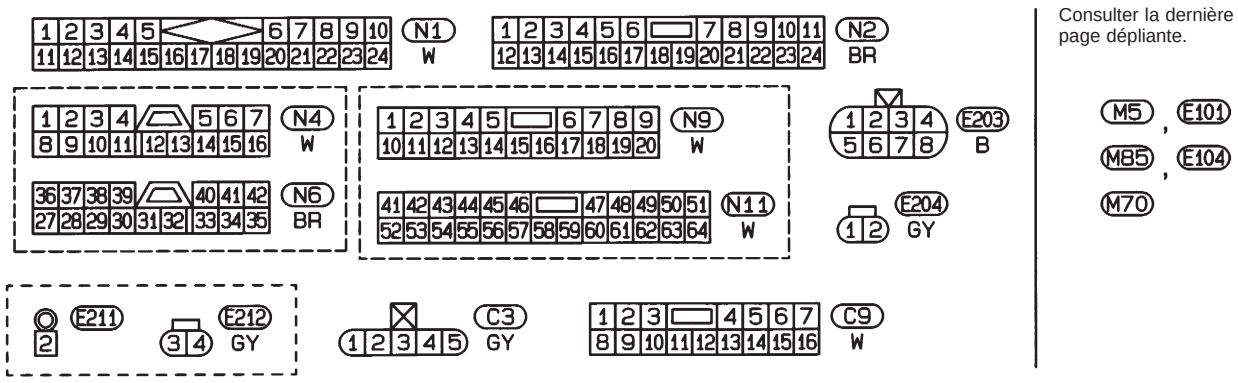

Consulter la dernière page dépliante.

M5, E101
M85, E104
M70

HEL726A

Simpo PDF Merge and Split Unregistered Version - http://www.simpopdf.com

Schéma de câblage — WARN —/Moteur à essence (suite)

EL-WARN-05

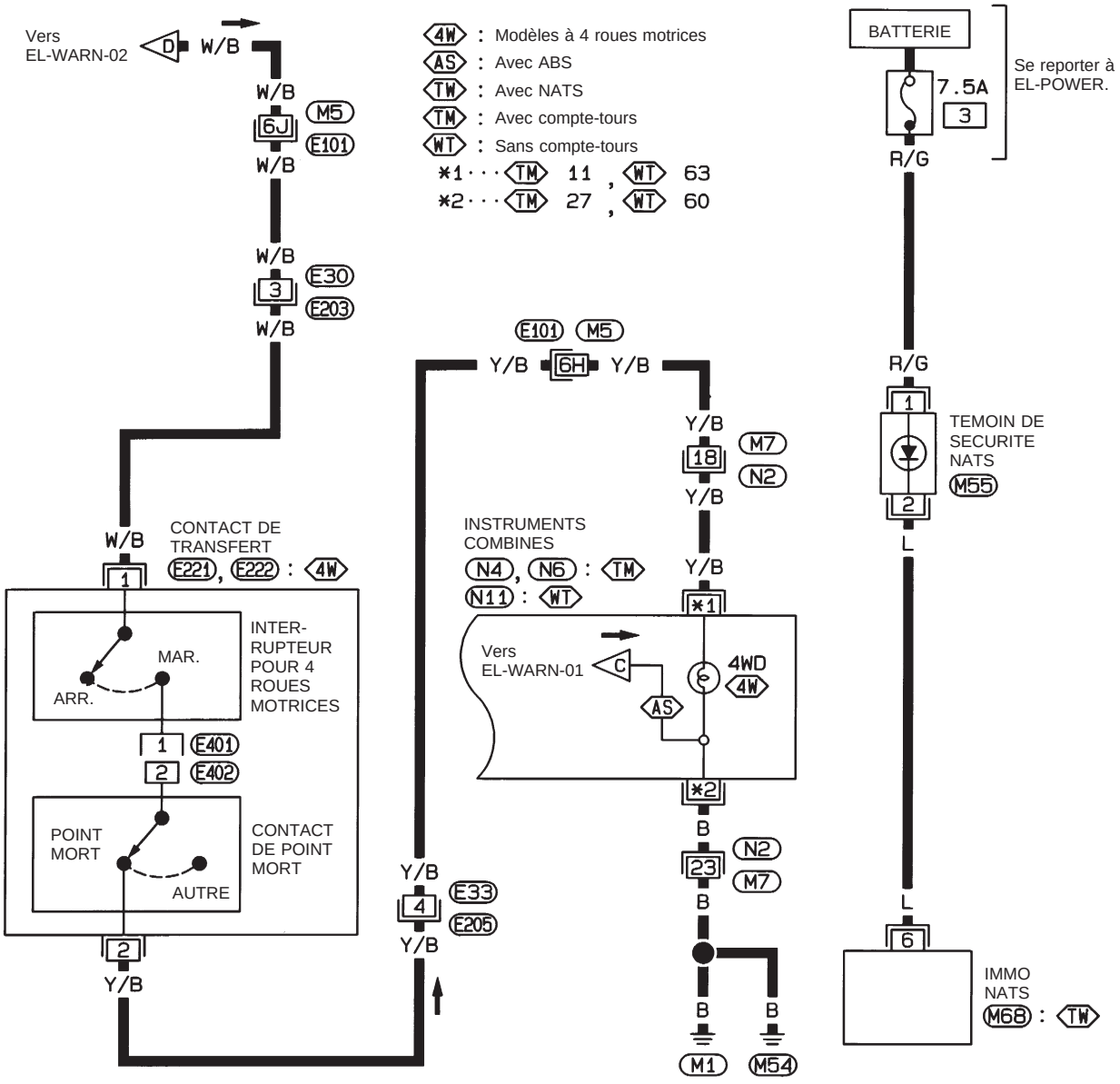

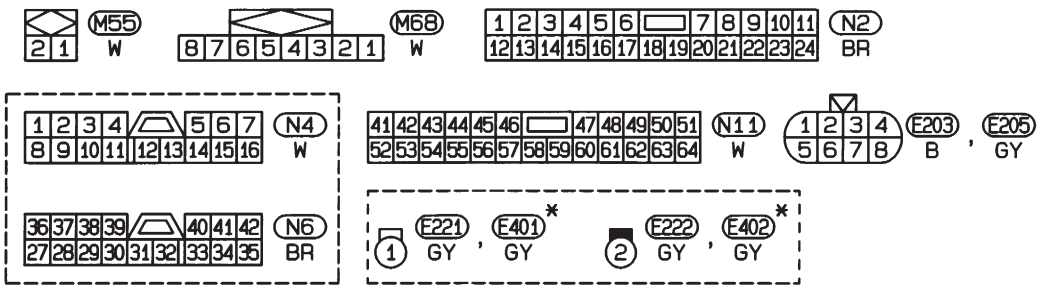

Consulter la dernière page dépliante.

M5 , E101

* : Ce connecteur n'est pas indiqué dans la "DISPOSITION DES FAISCEAUX".

HEL727A

Simpo PDF Merge and Split Unregistered Version - http://www.simpopdf.com

Schéma de câblage — WARN —/Moteur diesel

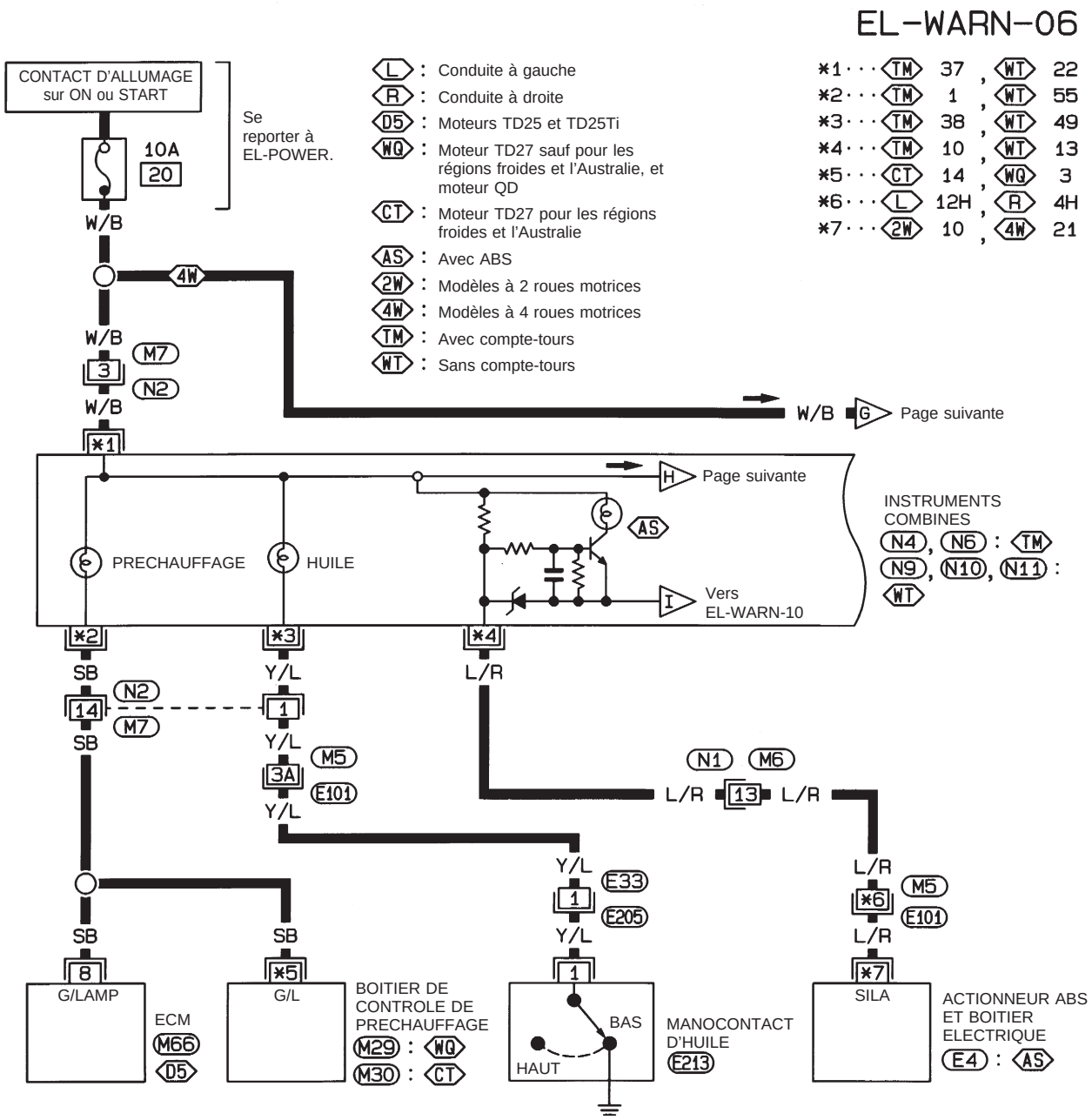

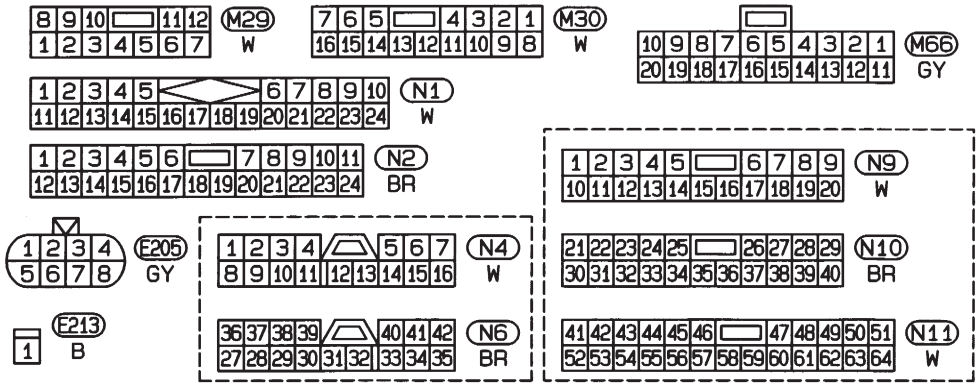

Consulter la dernière page dépliante.

M5 , E101

E4

HEL728A

Simpo PDF Merge and Split Unregistered Version - http://www.simpopdf.com

Schéma de câblage — WARN —/Moteur diesel (suite)

EL-WARN-07

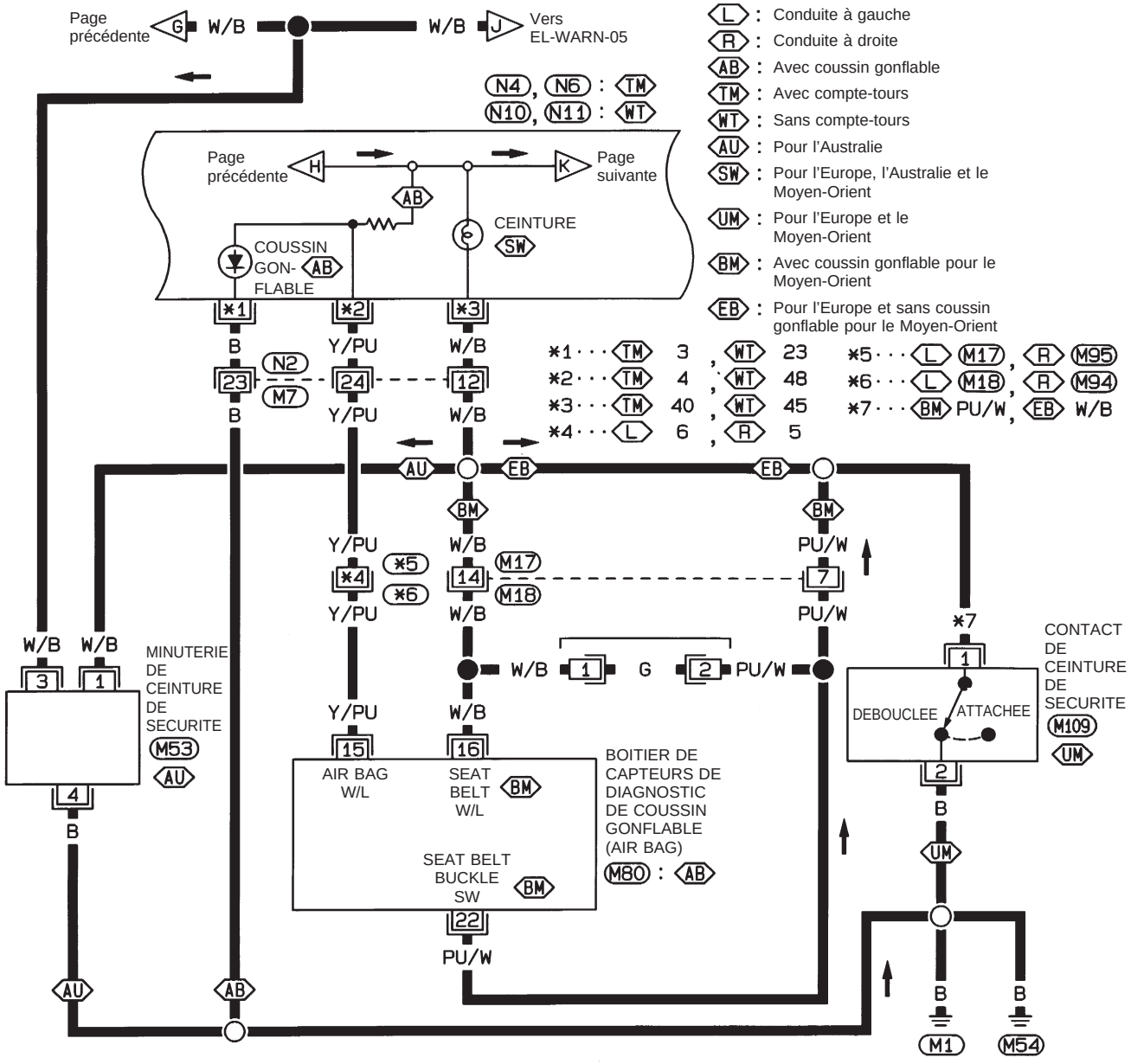

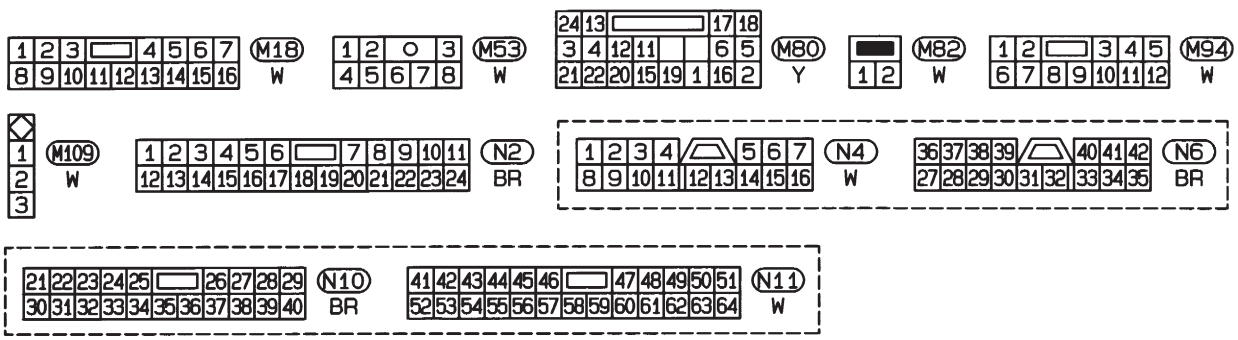

HEL729A

Simpo PDF Merge and Split Unregistered Version - http://www.simpopdf.com

Schéma de câblage — WARN —/Moteur diesel (suite)

EL-WARN-08

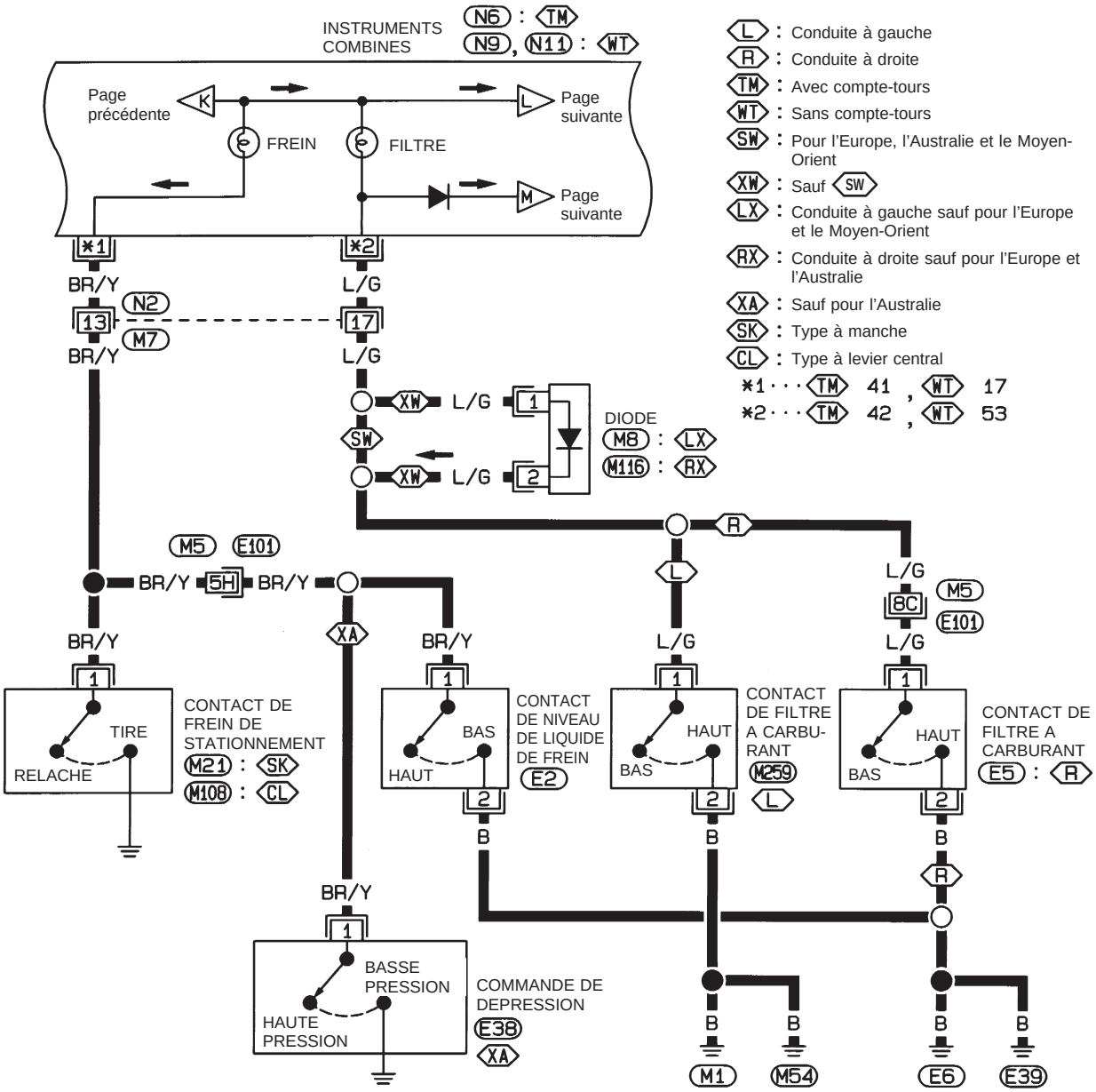

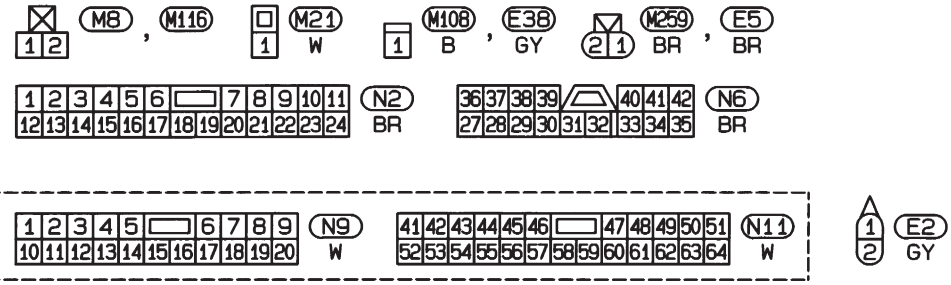

Consulter la dernière page dépliante.

M5 , E101

HEL730A

Simpo PDF Merge and Split Unregistered Version - http://www.simpopdf.com

Schéma de câblage — WARN —/Moteur diesel (suite)

EL-WARN-09

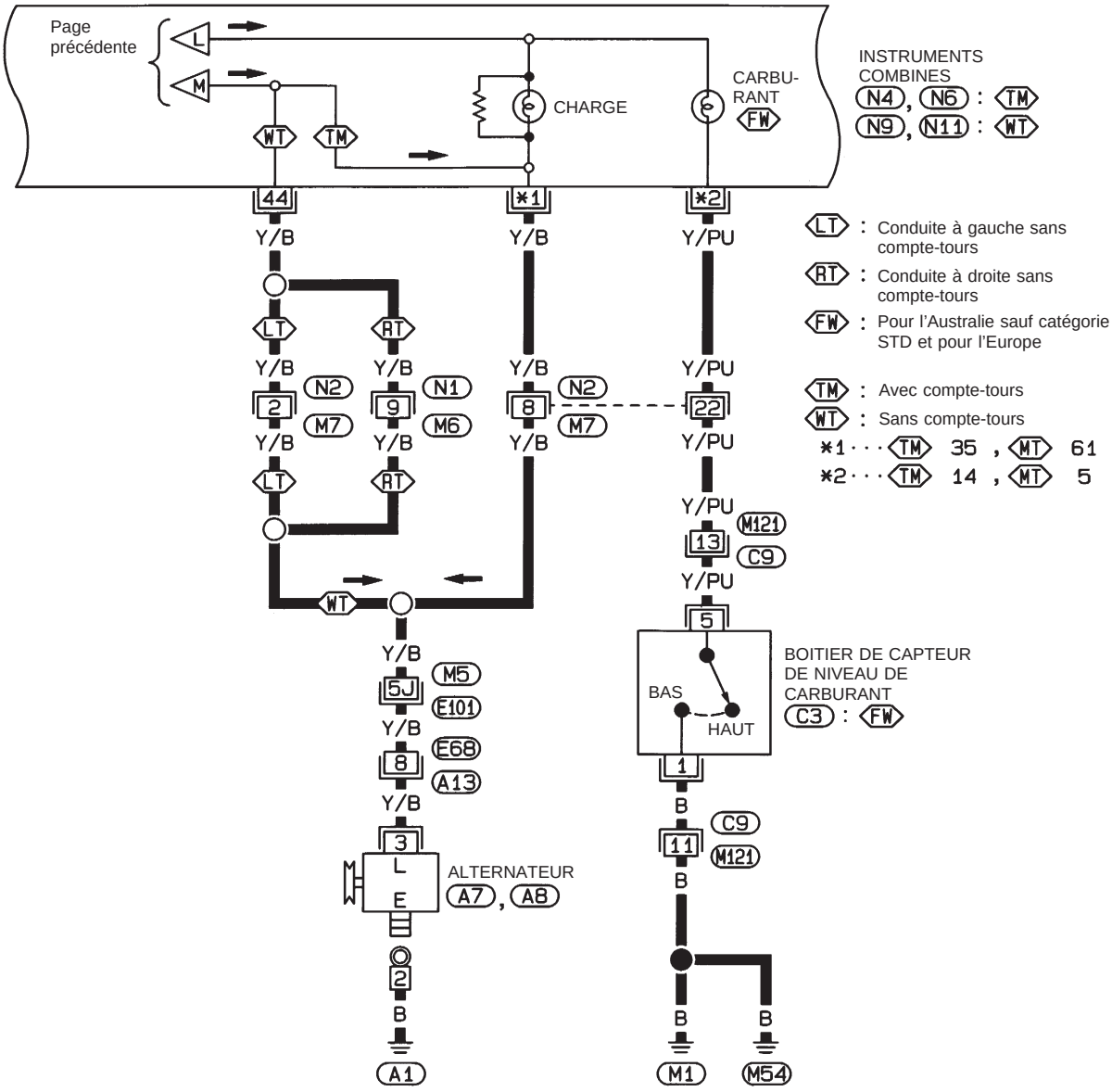

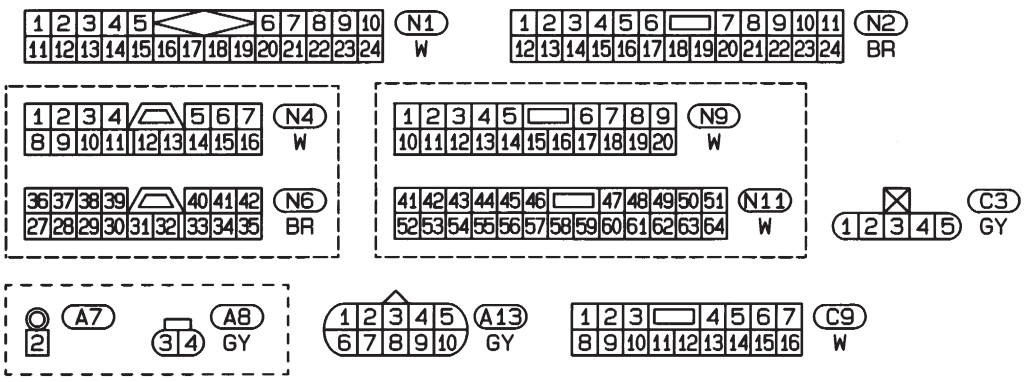

Consulter la dernière page dépliante.

M5 , E101

HEL731A

Simpo PDF Merge and Split Unregistered Version - http://www.simpopdf.com

Schéma de câblage — WARN —/Moteur diesel (suite)

EL-WARN-10

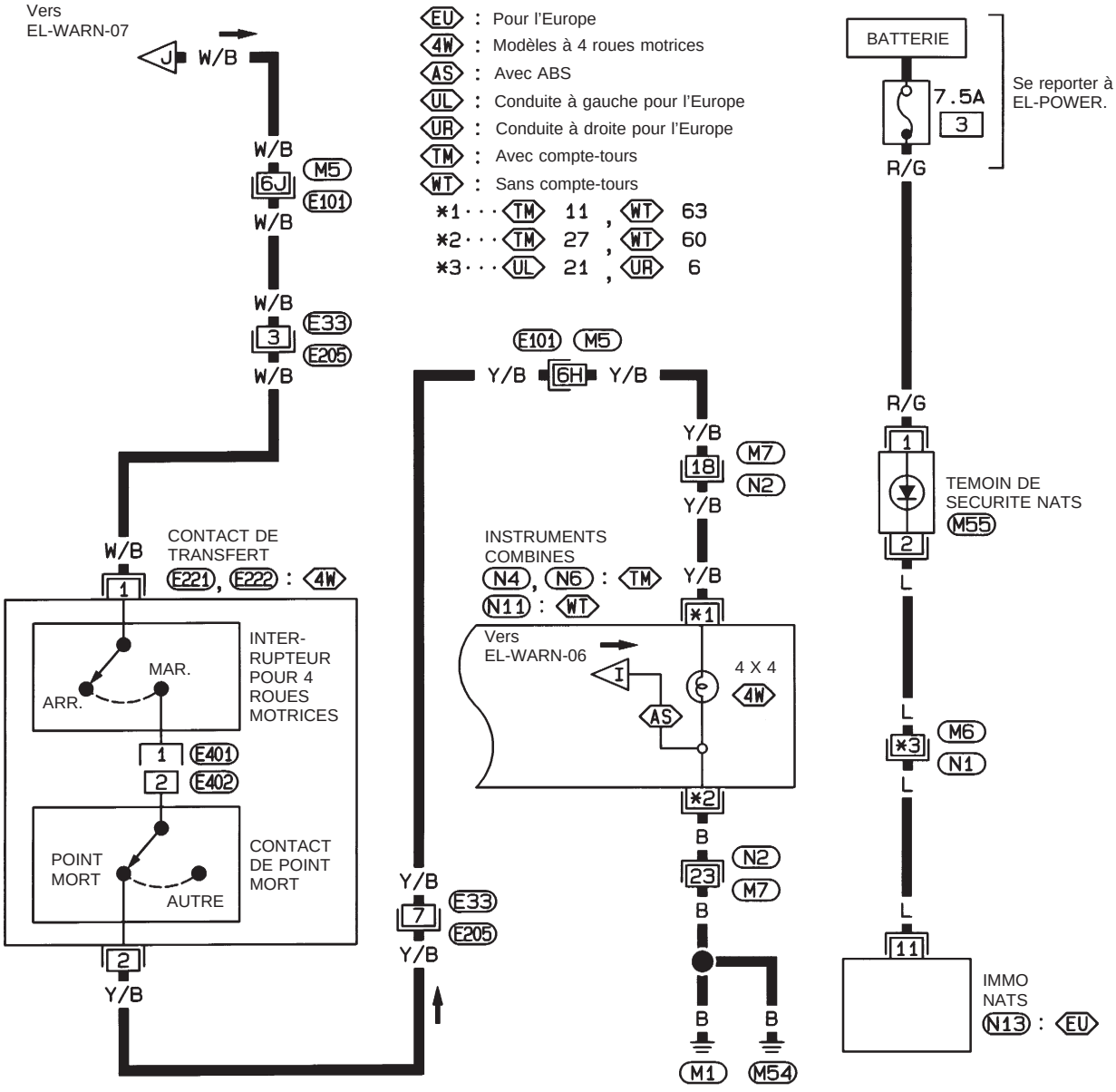

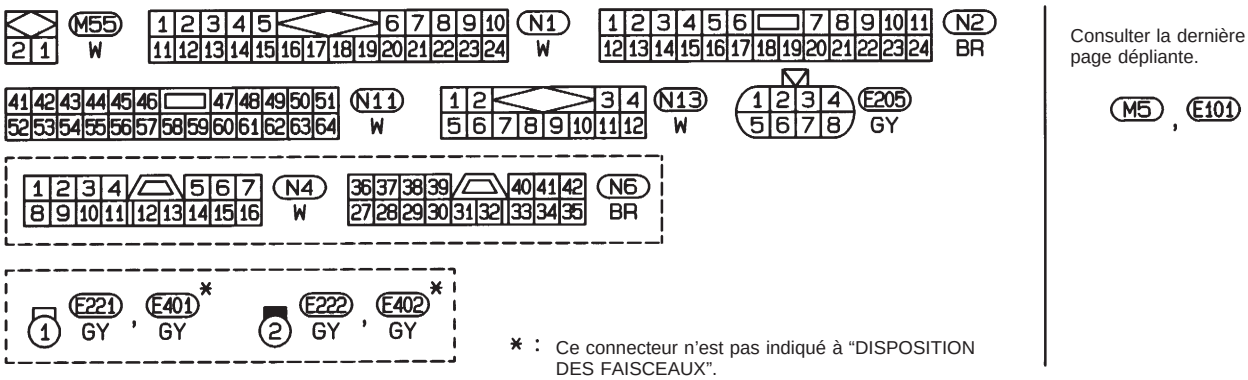

* : Ce connecteur n'est pas indiqué à "DISPOSITION DES FAISCEAUX".

Consulter la dernière page dépliante.

M5 , E101

HEL732A

Simpo PDF Merge and Split Unregistered Version - http://www.simpopdf.com

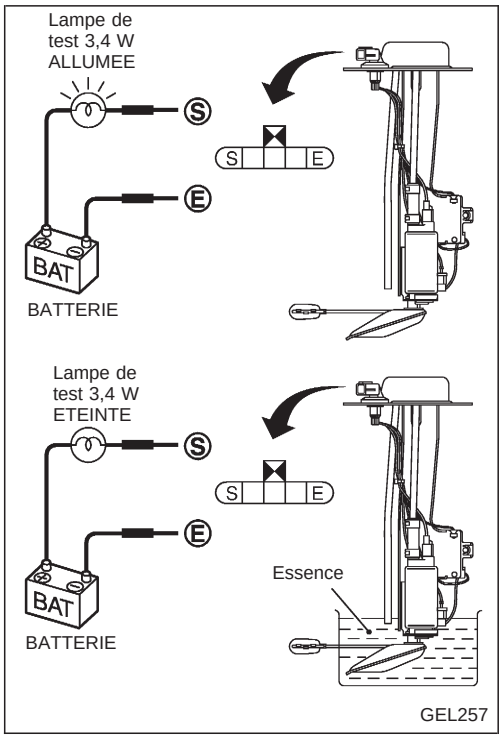

Inspection des composants électriques

CONTROLE DU CAPTEUR DE TEMOIN D’AVERTISSEMENT DE CARBURANT

- L’ampoule met quelques instants à s’éclairer.

Simpo PDF Merge and Split Unregistered Version - http://www.simpopdf.com

Schéma de câblage — CHIME —/Conduite à gauche

AVERTISSEUR SONORE D'ECLAIRAGE

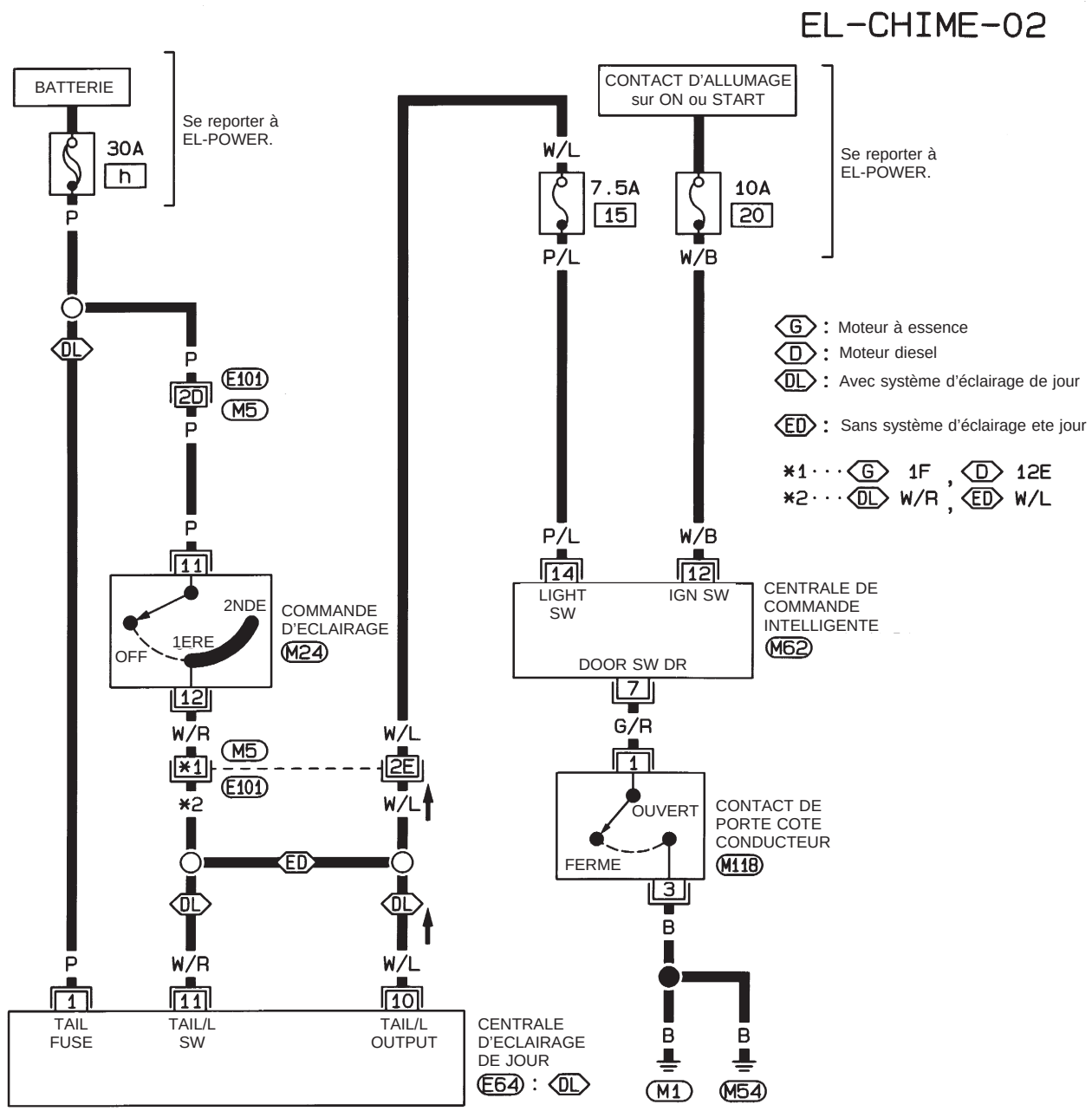

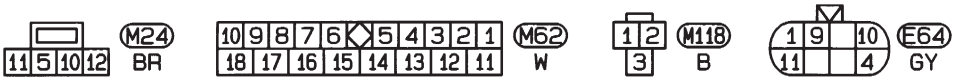

Consulter la dernière page dépliante.

M5 , E101

HEL734A

Simpo PDF Merge and Split Unregistered Version - http://www.simpopdf.com

Schéma de câblage — CHIME —/Conduite à droite

AVERTISSEUR SONORE D'ECLAIRAGE

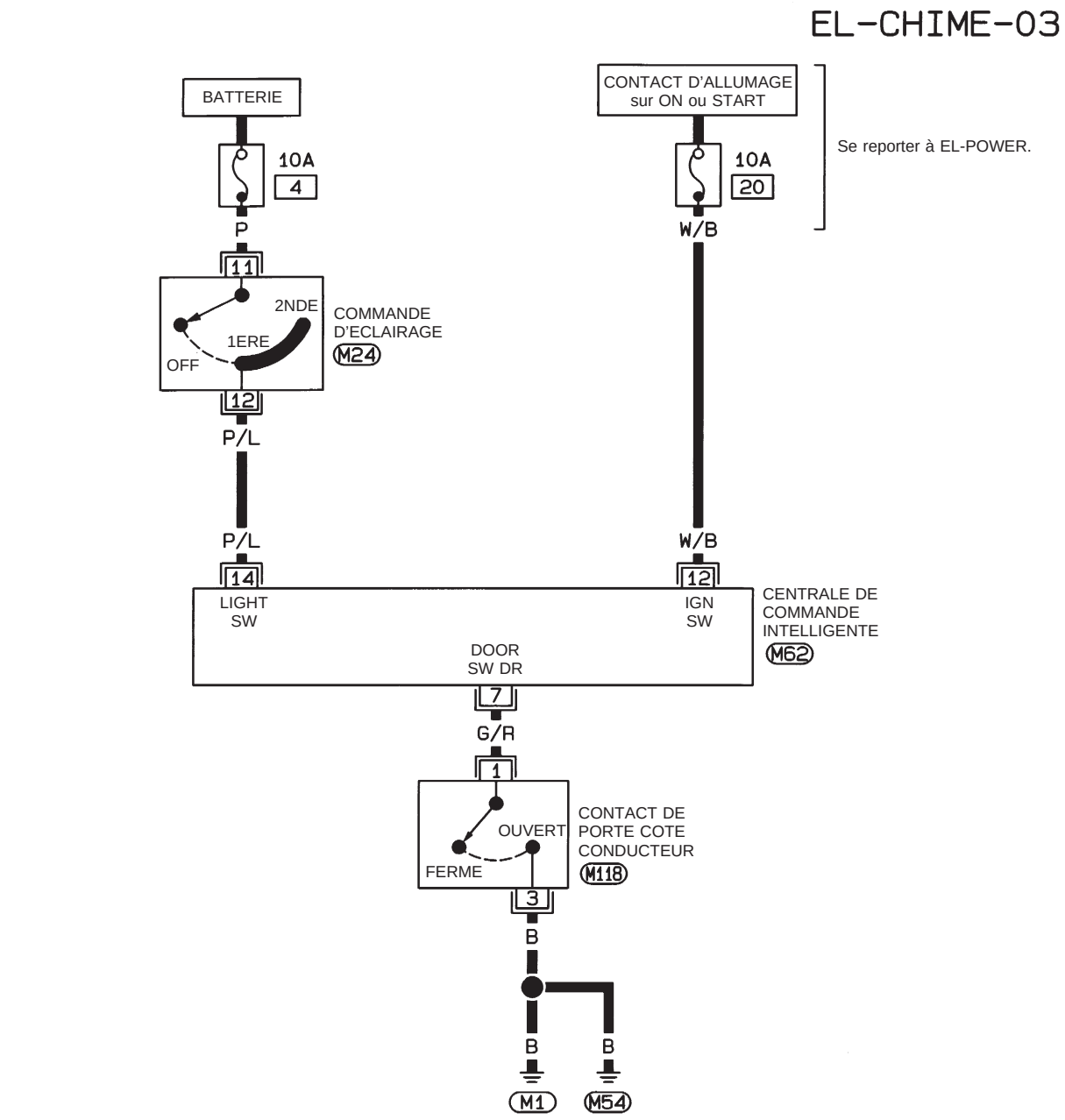

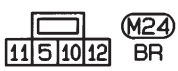



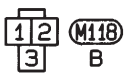

HEL735A

Simpo PDF Merge and Split Unregistered Version - http://www.simpopdf.com

Schéma de câblage — WIPER —/Conduite à gauche avec balayage intermittent

EL-WIPER-01

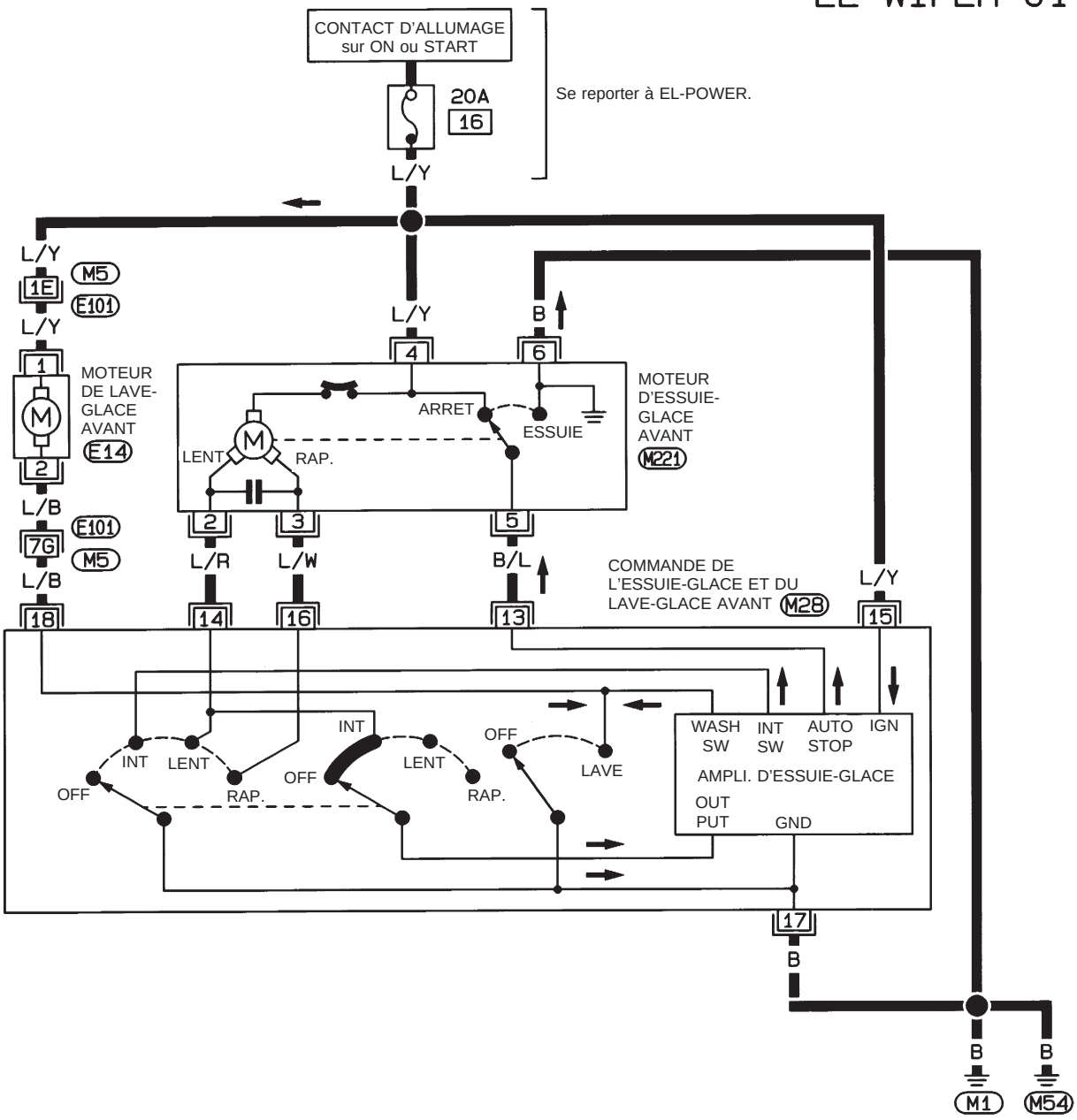



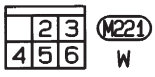

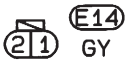

Consulter la dernière page dépliante.

M5 , E101

HEL737A

Simpo PDF Merge and Split Unregistered Version - http://www.simpopdf.com

Schéma de câblage — WIPER —/Conduite à gauche sans balayage intermittent

EL-WIPER-02

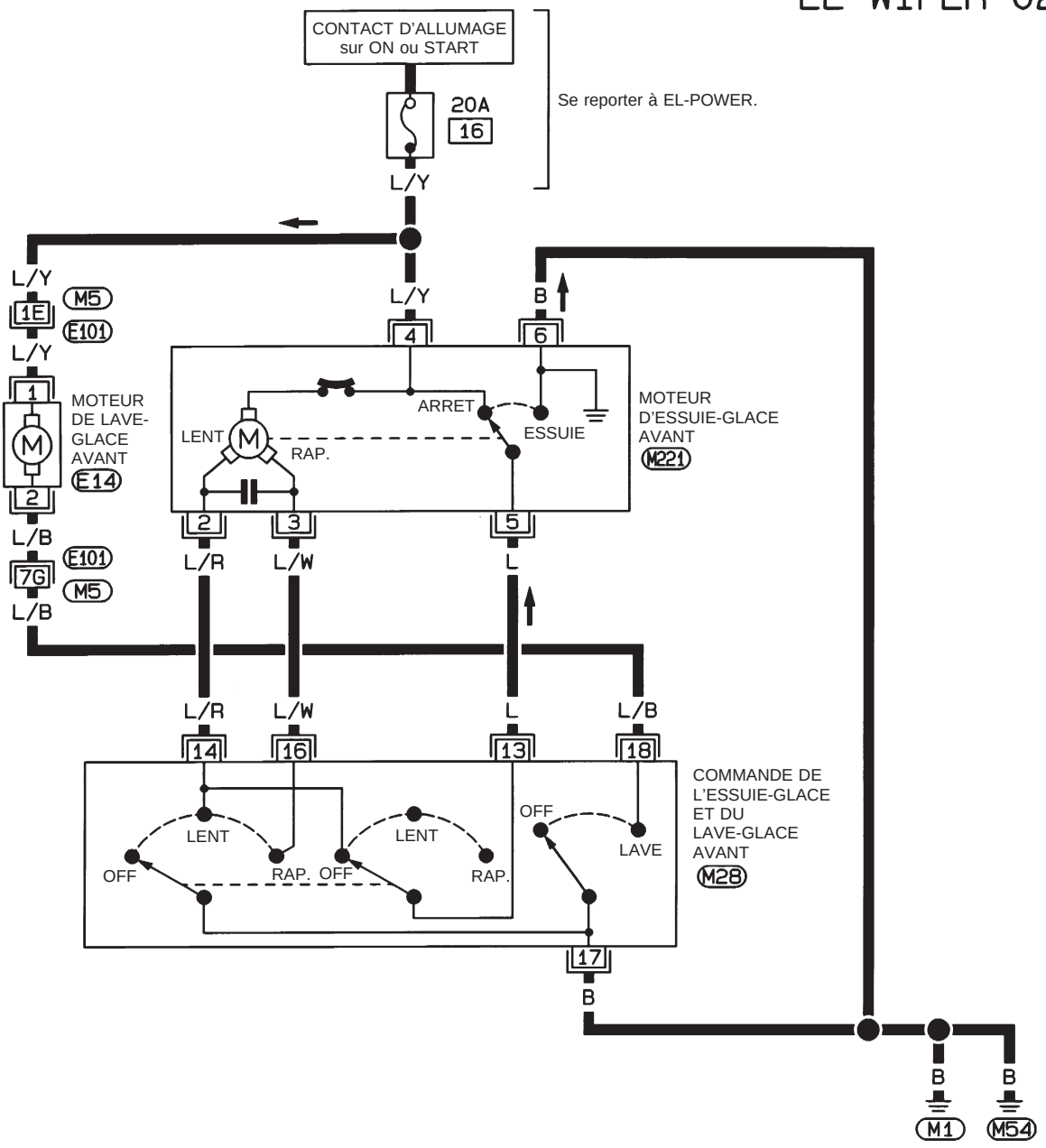

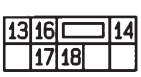

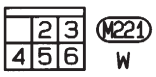

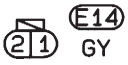

Consulter la dernière page dépliante.

M5 , E101

HEL738A

Simpo PDF Merge and Split Unregistered Version - http://www.simpopdf.com

Schéma de câblage — WIPER —/Conduite à droite et T/M avec balayage intermittent

EL-WIPER-03

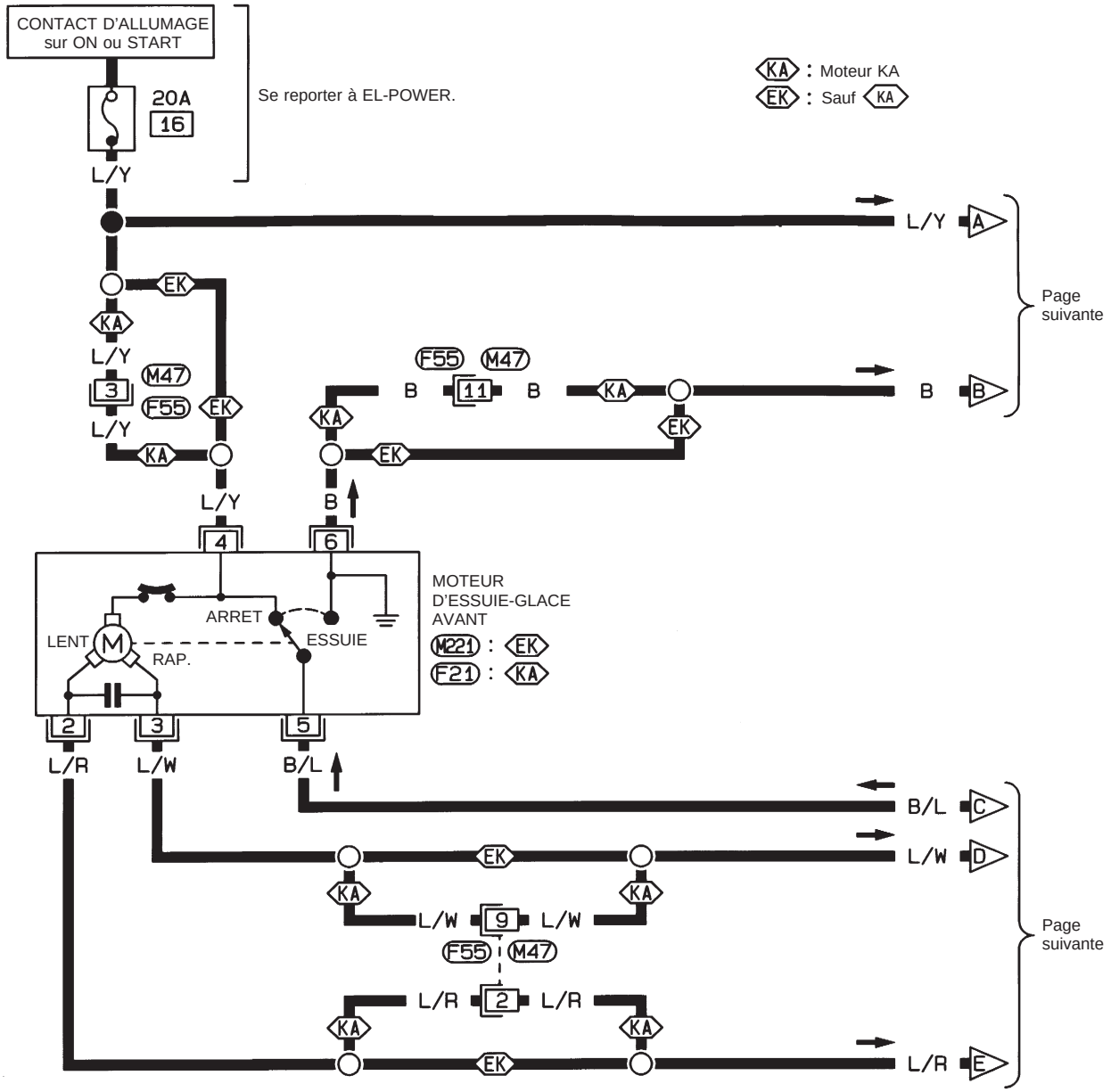



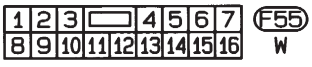

HEL739A

Simpo PDF Merge and Split Unregistered Version - http://www.simpopdf.com

Schéma de câblage — WIPER —/Conduite à droite et T/M avec balayage intermittent (suite)

EL-WIPER-04

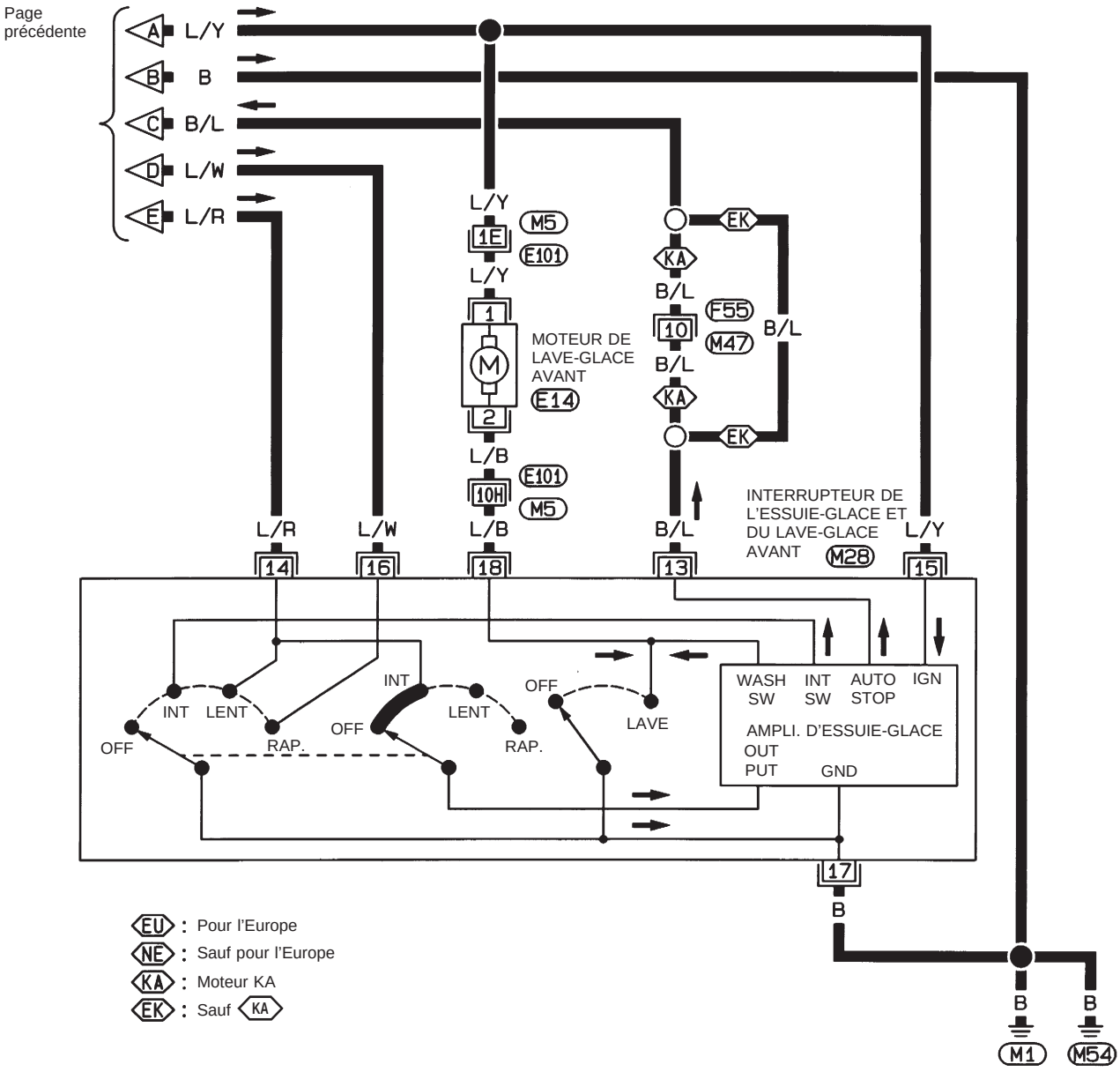

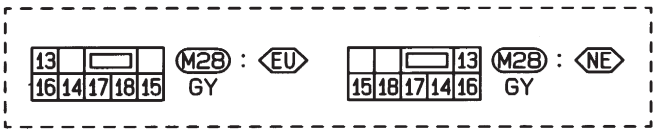

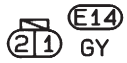



Consulter la dernière page dépliante.

M5 , E101

HEL740A

Simpo PDF Merge and Split Unregistered Version - http://www.simpopdf.com

Schéma de câblage — WIPER —/Conduite à droite sans balayage intermittent

EL-WIPER-07

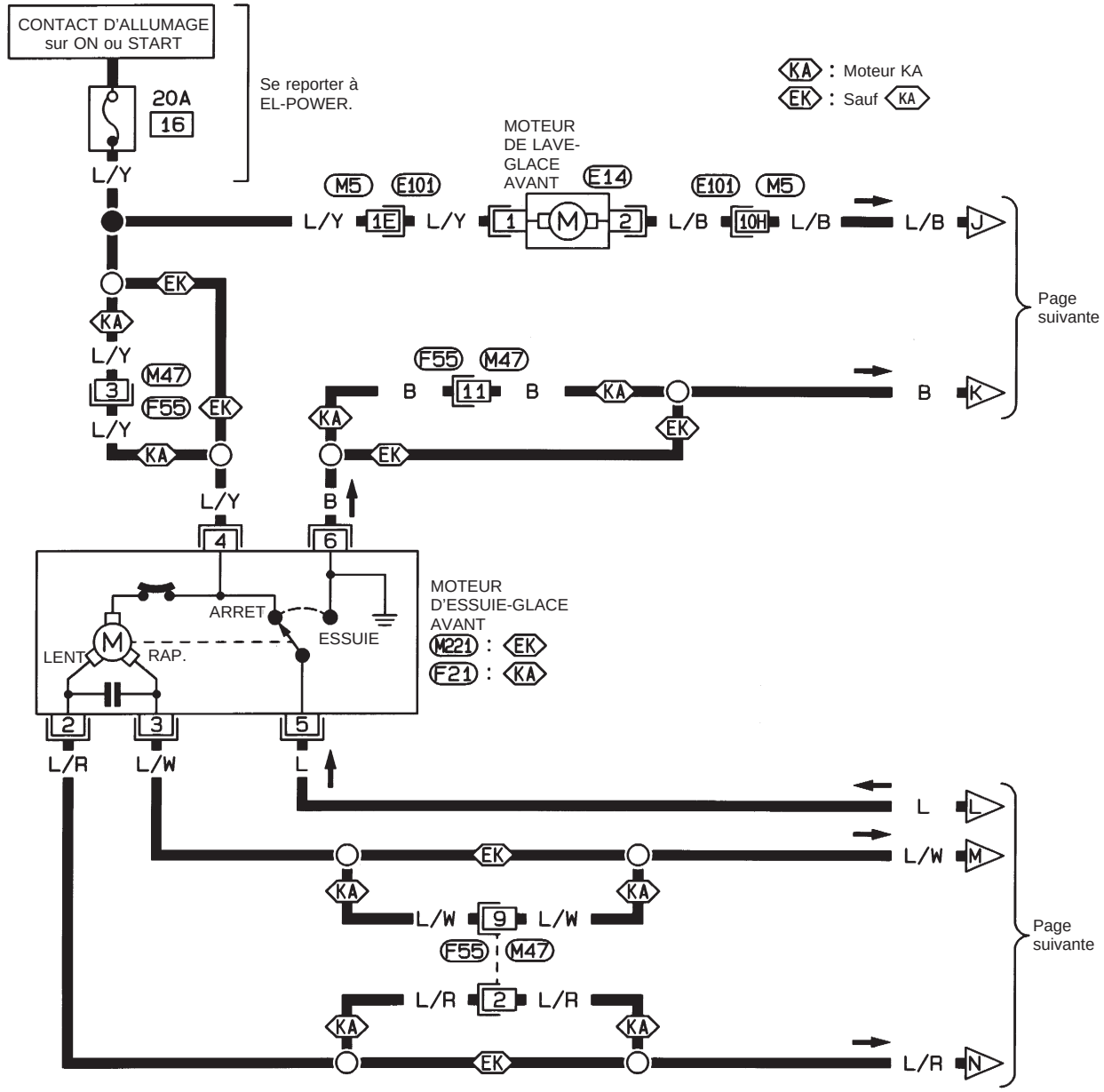

M221 W , F21 W

E14 GY

F55 W

Consulter la dernière page dépliante.

M5 , E101

HEL743A

Simpo PDF Merge and Split Unregistered Version - http://www.simpopdf.com

Schéma de câblage — WIPER —/Conduite à droite sans balayage intermittent (suite)

EL-WIPER-08

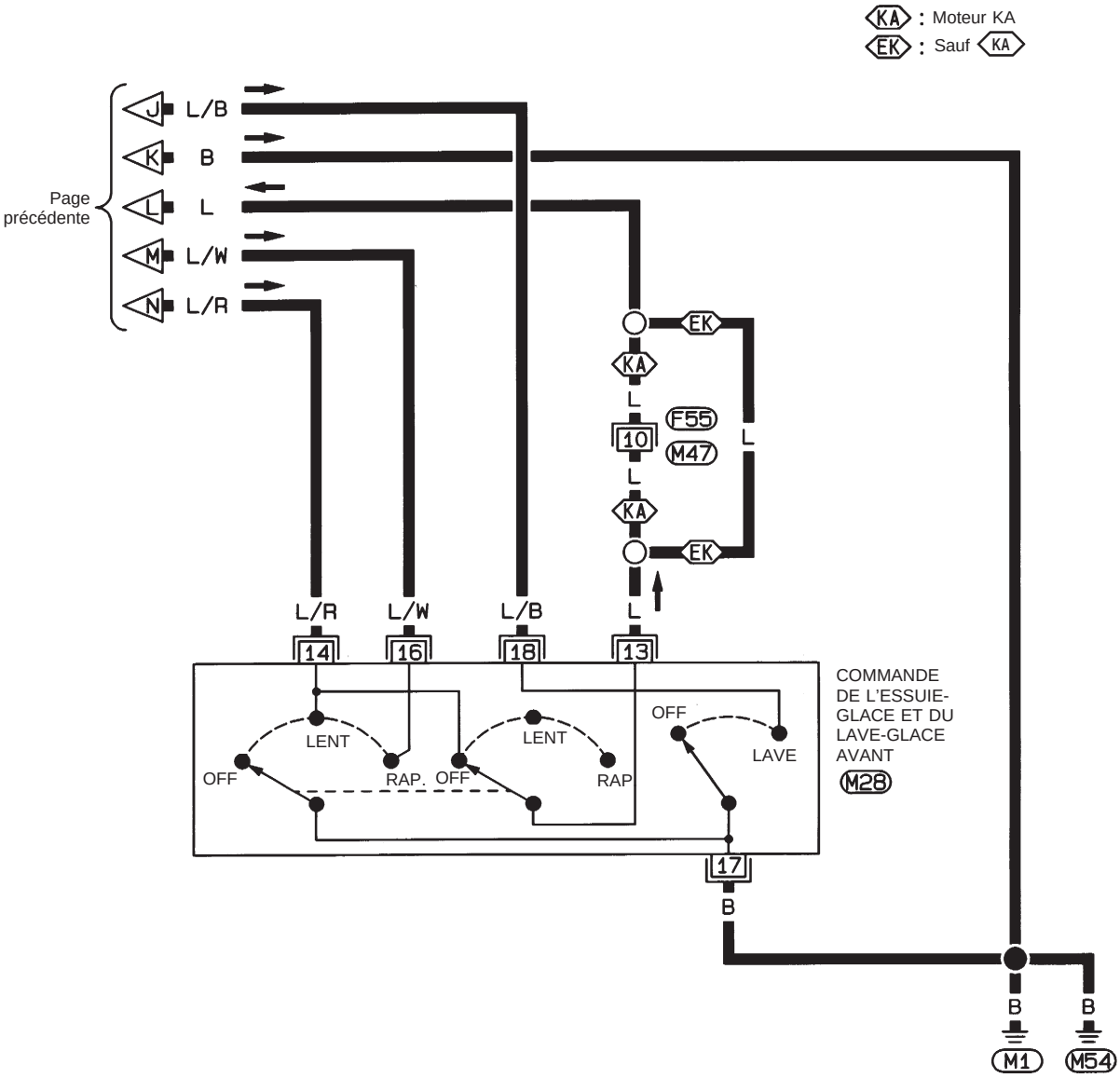

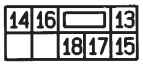



HEL744A

Simpo PDF Merge and Split Unregistered Version - http://www.simpopdf.com

Schéma de câblage — HLC —

EL-HLC-01

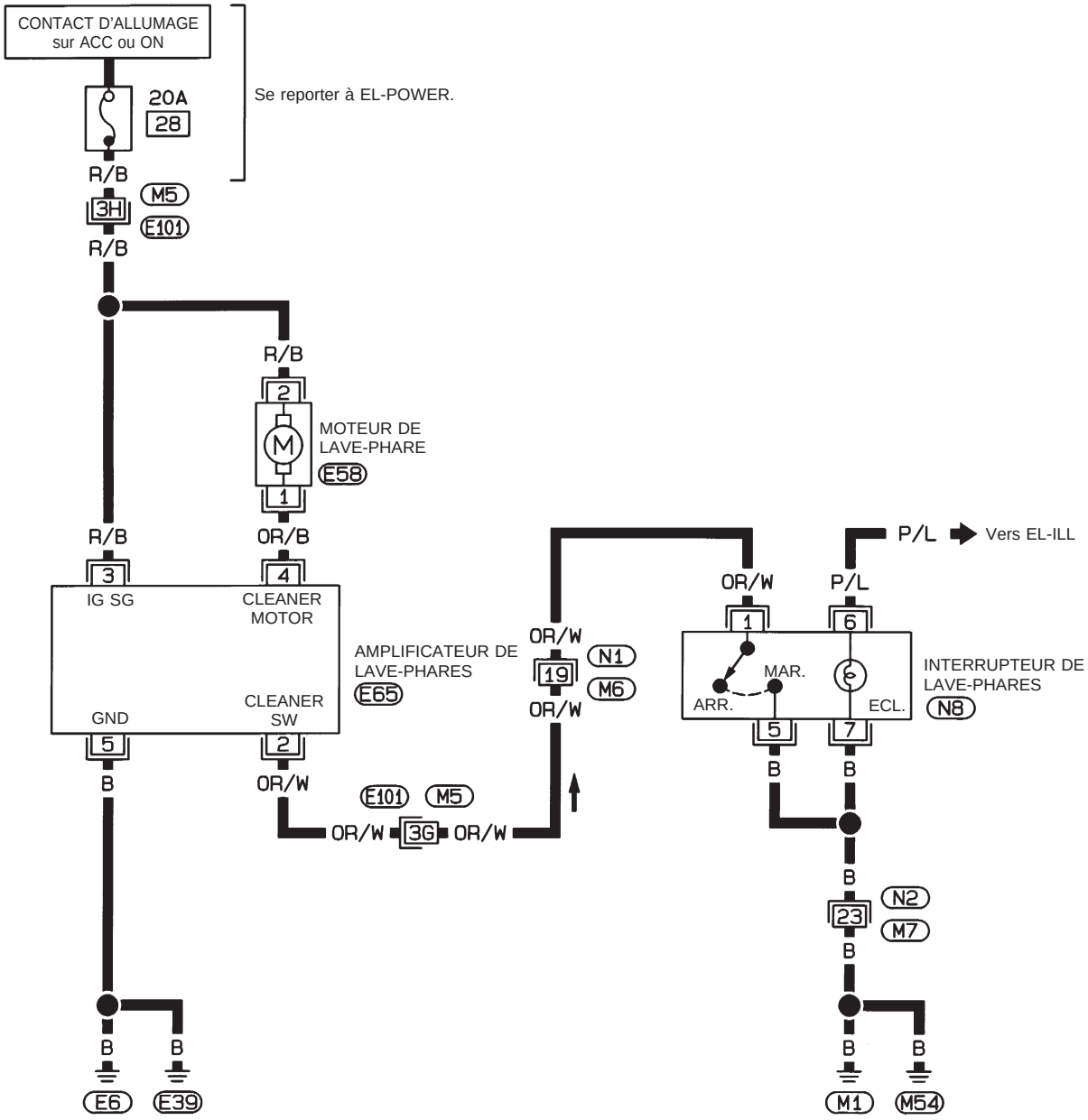

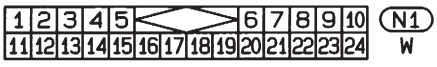



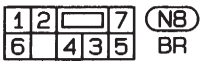



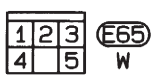

Consulter la dernière page dépliante.

M5 , E101

HEL745A

Simpo PDF Merge and Split Unregistered Version - http://www.simpopdf.com

Schéma de câblage — HORN —

EL-HORN-01

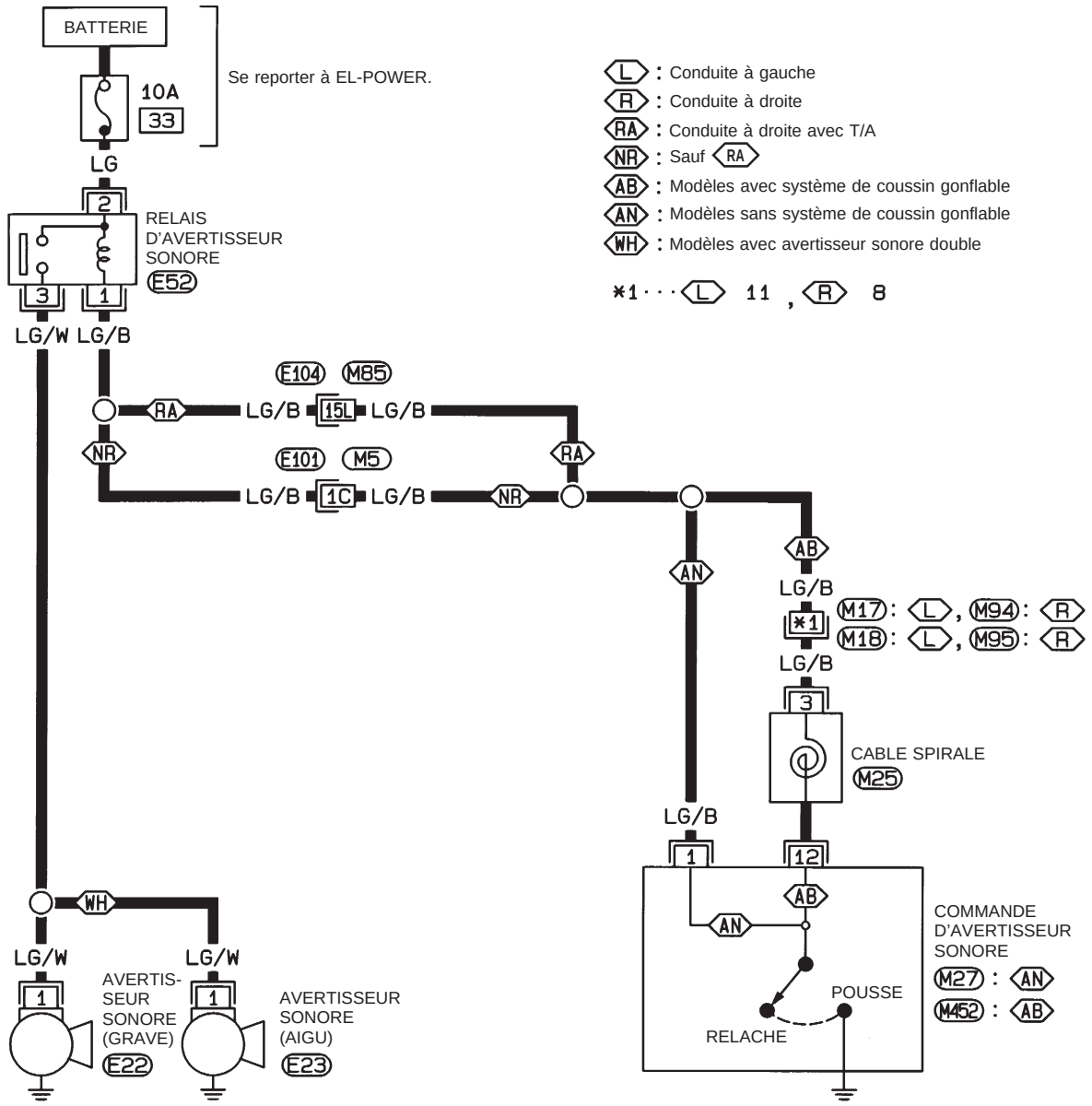

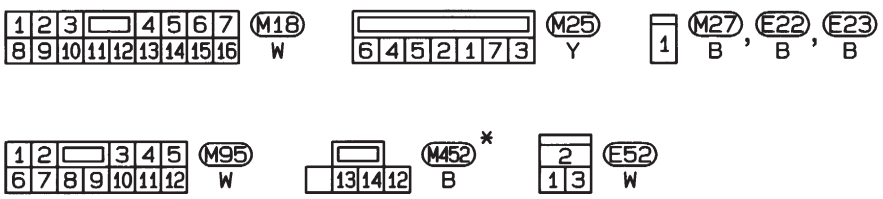

∗ : Ce connecteur n'est pas indiqué à "DISPOSITION DES FAISCEAUX"

Consulter la dernière page dépliante.
M5, E101
M85, E104

HEL746A

Simpo PDF Merge and Split Unregistered Version - http://www.simpopdf.com

Schéma de câblage — CIGAR —

EL-CIGAR-01

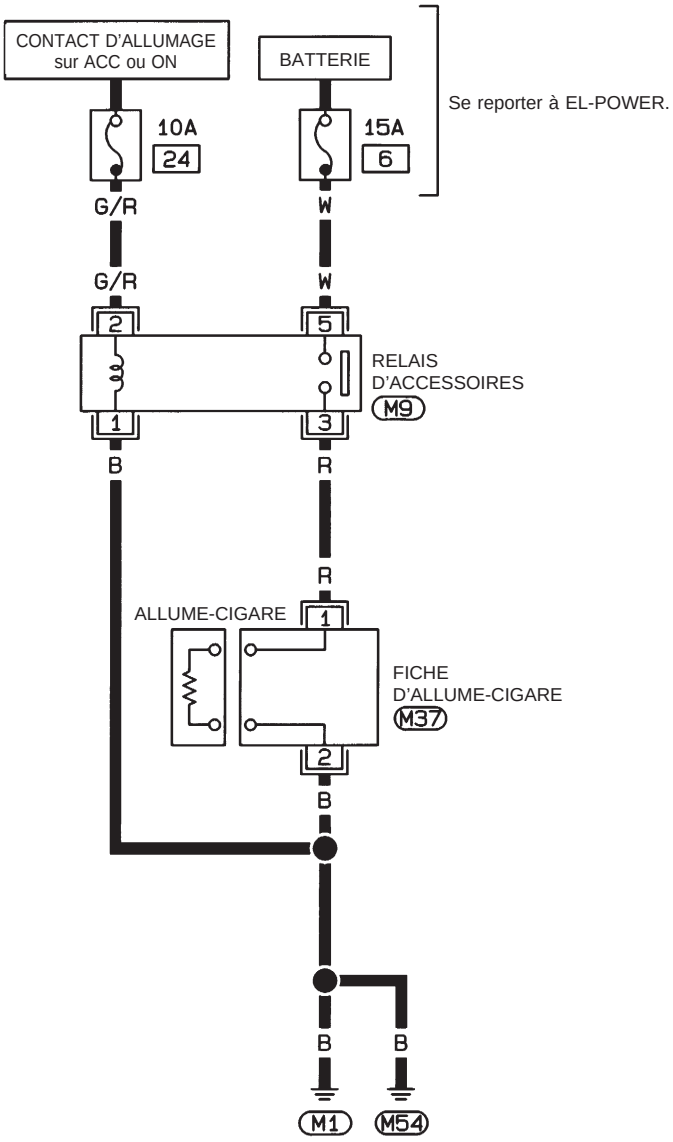



HEL747A

Simpo PDF Merge and Split Unregistered Version - http://www.simpopdf.com

Schéma de câblage — CLOCK —

EL-CLOCK-01

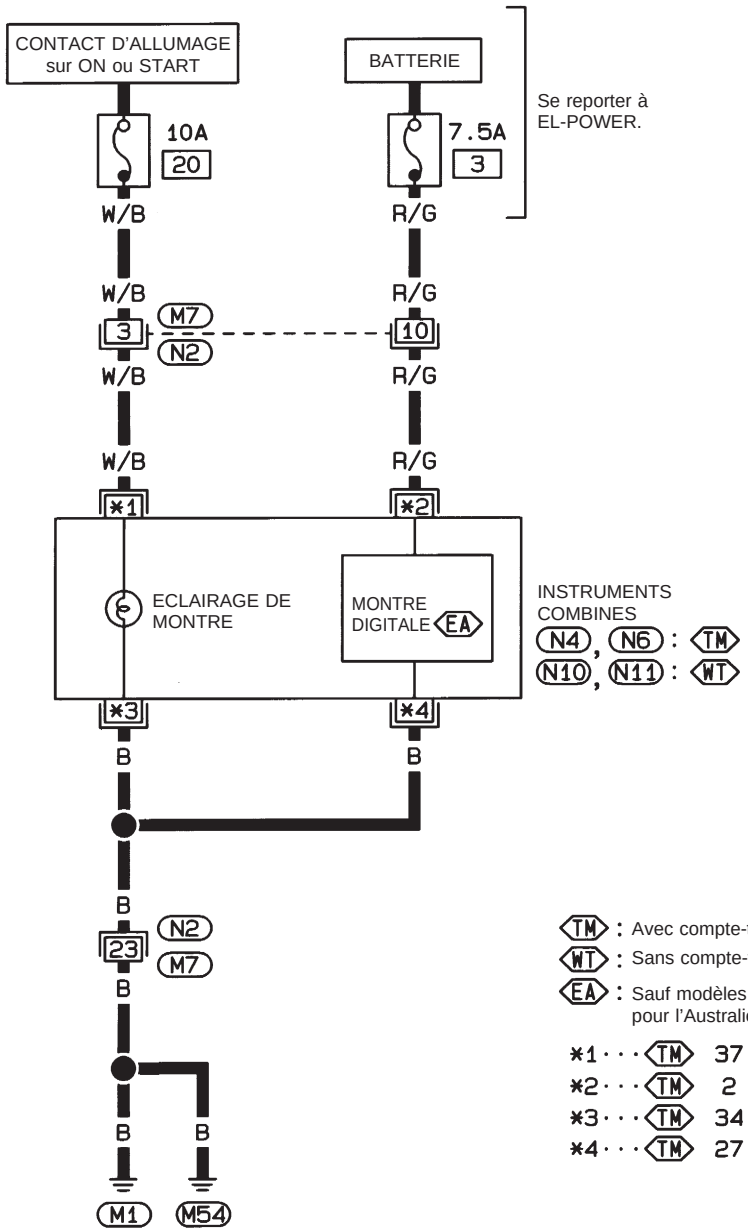

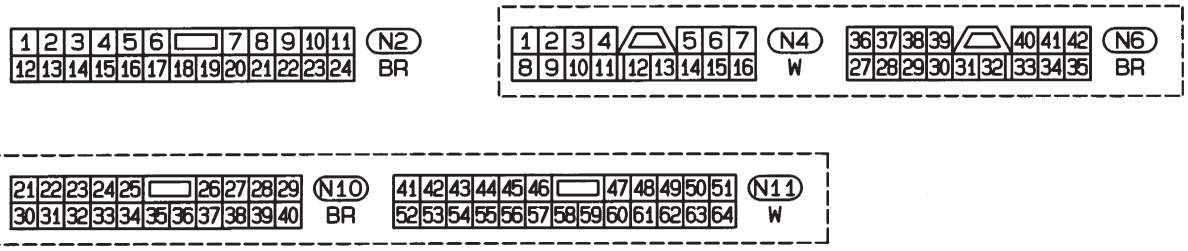

HEL748A

Simpo PDF Merge and Split Unregistered Version - http://www.simpopdf.com

Schéma de câblage — DEF —/Conduite à gauche

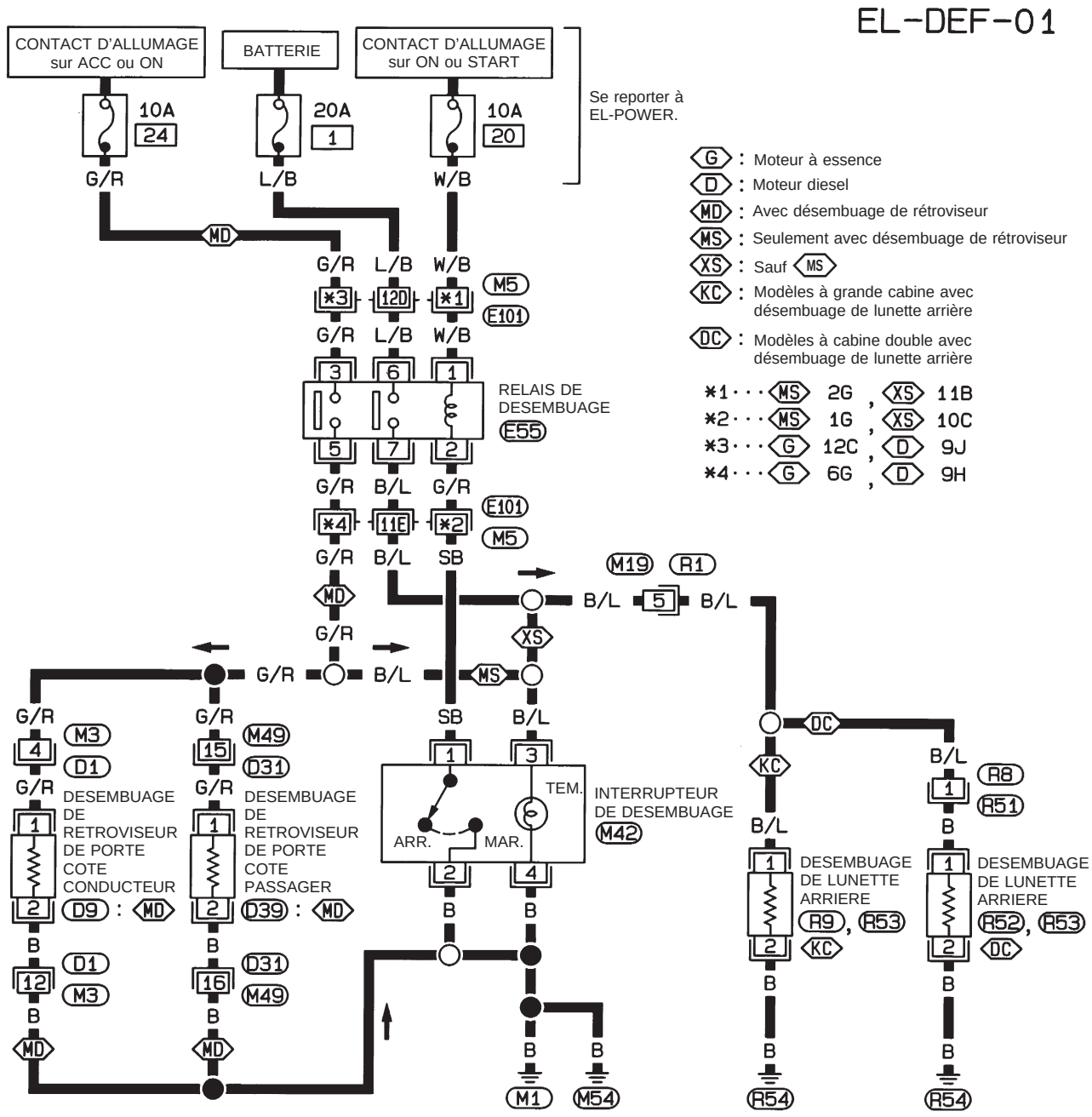

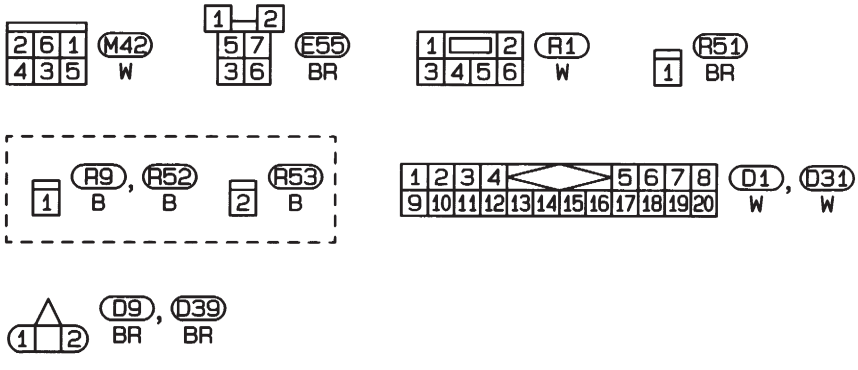

Consulter la dernière page dépliante.
M5 , E101

HEL749A

Simpo PDF Merge and Split Unregistered Version - http://www.simpopdf.com

Schéma de câblage — DEF —/Conduite à droite

EL-DEF-02

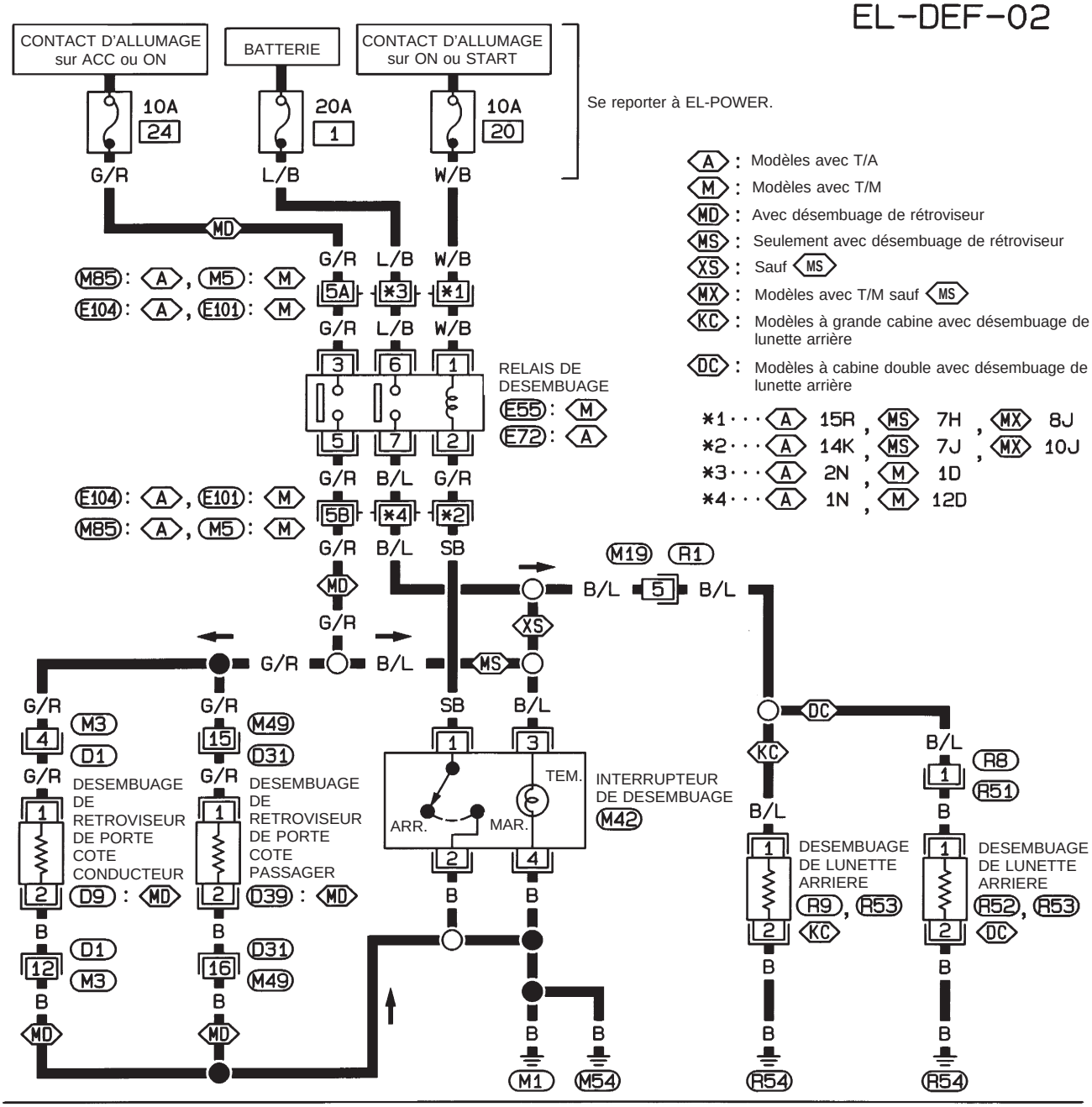

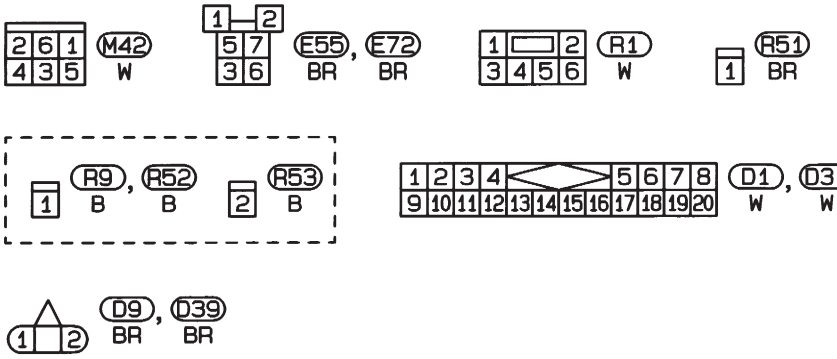

Consulter la dernière page dépliante.

M5 , E101
M85 , E104

HEL750A

Simpo PDF Merge and Split Unregistered Version - http://www.simpopdf.com

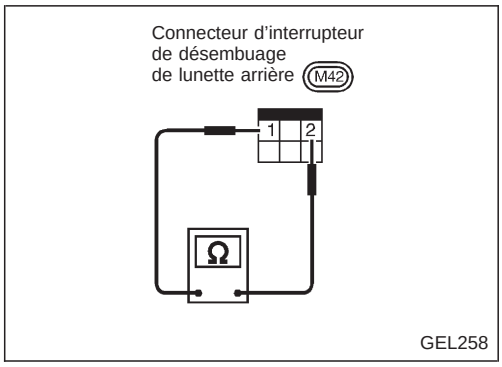

Inspection des composants électriques

INTERRUPTEUR DE DESEMBUAGE DE LUNETTE ARRIERE

Vérifier la continuité entre les bornes lorsque l'interrupteur de désembuage de lunette arrière est enclenché et déclenché.

Bornes	Condition	Il y a continuité
① - ②	L'interrupteur de désembuage de lunette arrière est enfoncé	Oui
	L'interrupteur de désembuage de lunette arrière est relâché	Non

Simpo PDF Merge and Split Unregistered Version - http://www.simpopdf.com

Schéma de câblage — AUDIO —/Conduite à gauche de type-2

AVEC 2 OU 4 HAUT-PARLEURS (sans lecteur de CD) ET AVEC 1 HAUT-PARLEUR

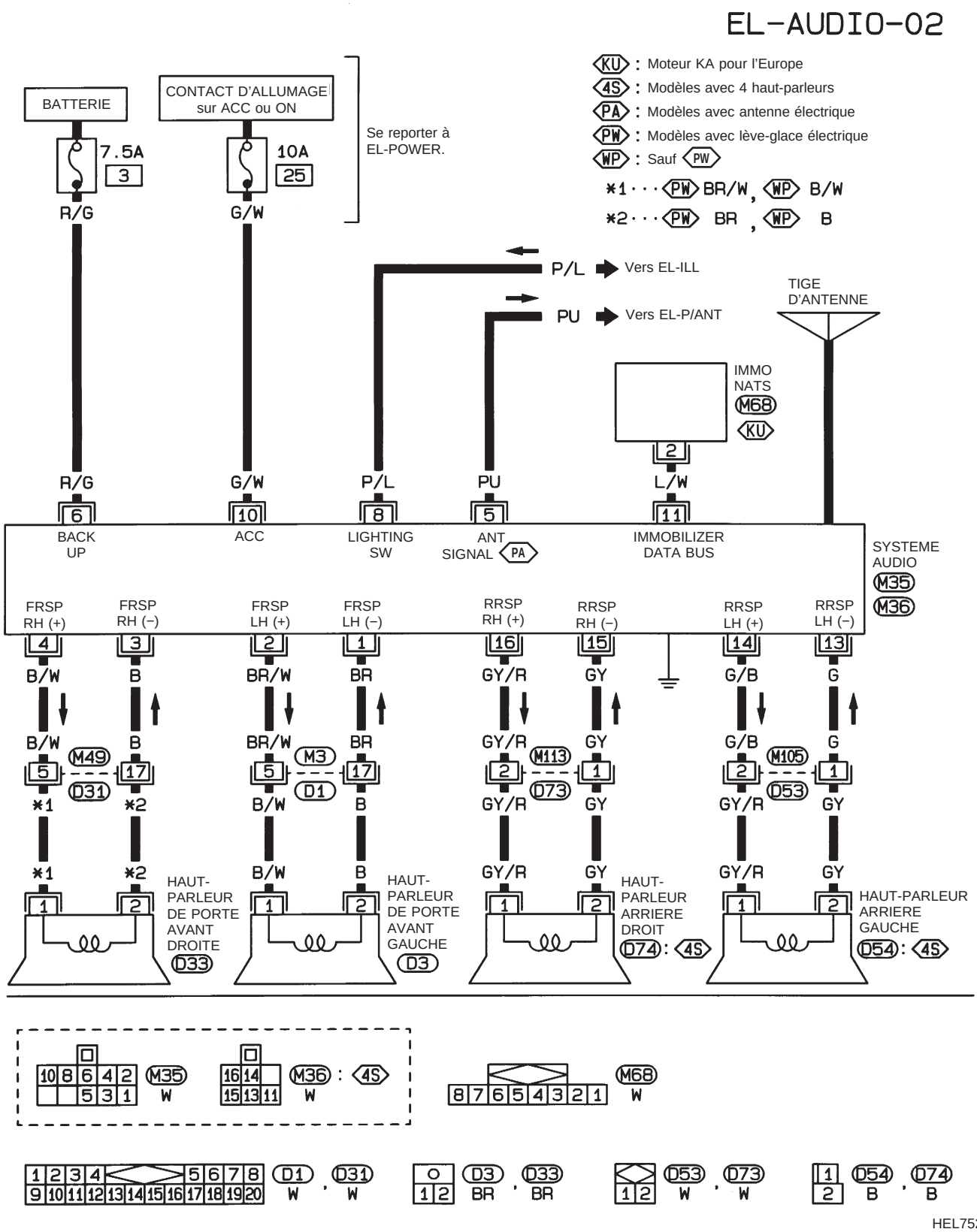

HEL752A

Simpo PDF Merge and Split Unregistered Version - http://www.simpopdf.com

Schéma de câblage — AUDIO —/Conduite à gauche de type-3

AVEC 4 HAUT-PARLEURS (avec lecteur de CD)

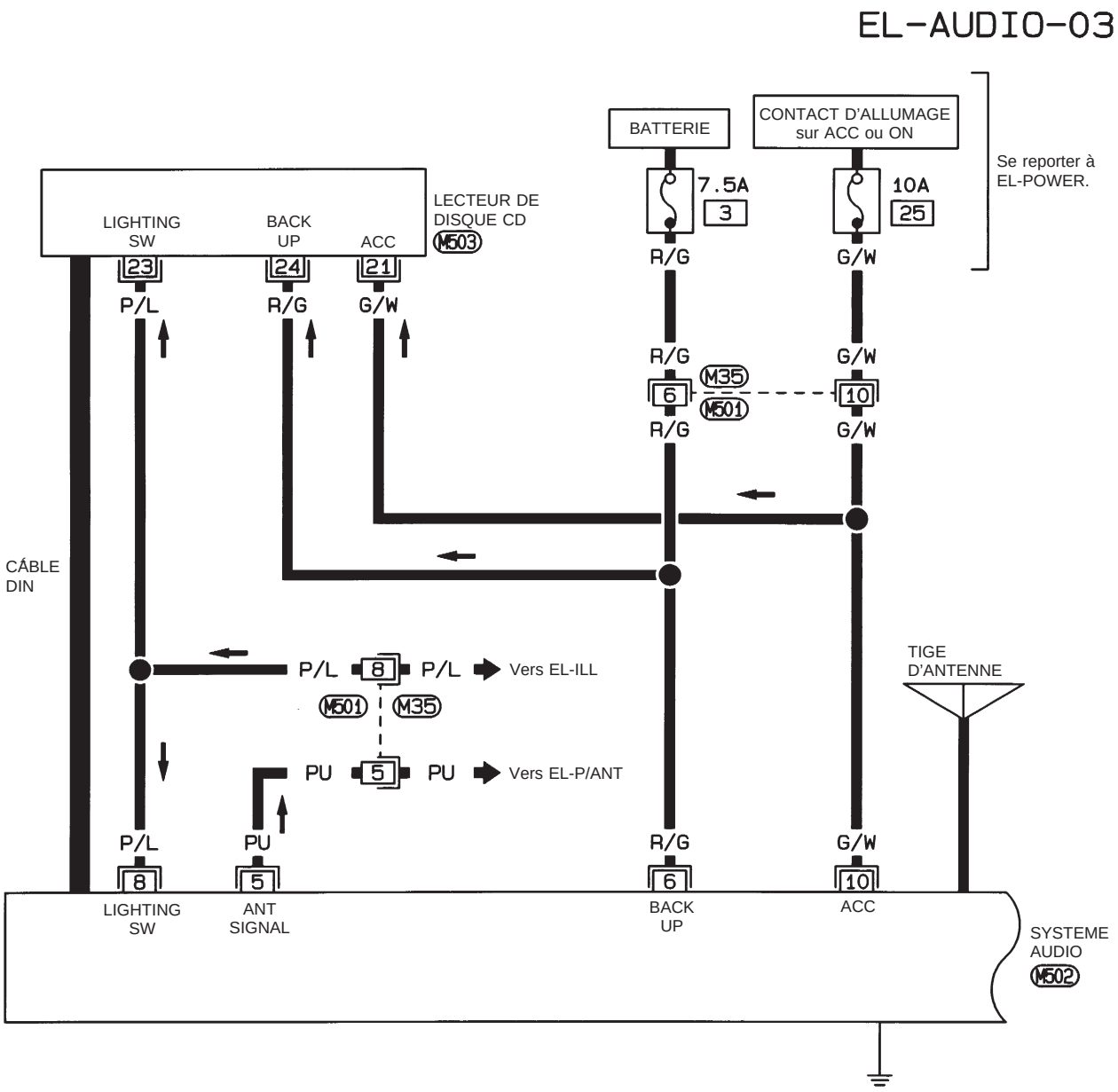

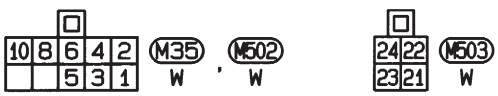

HEL753A

Simpo PDF Merge and Split Unregistered Version - http://www.simpopdf.com

Schéma de câblage — AUDIO —/Conduite à gauche de type-3 (suite)

EL-AUDIO-04

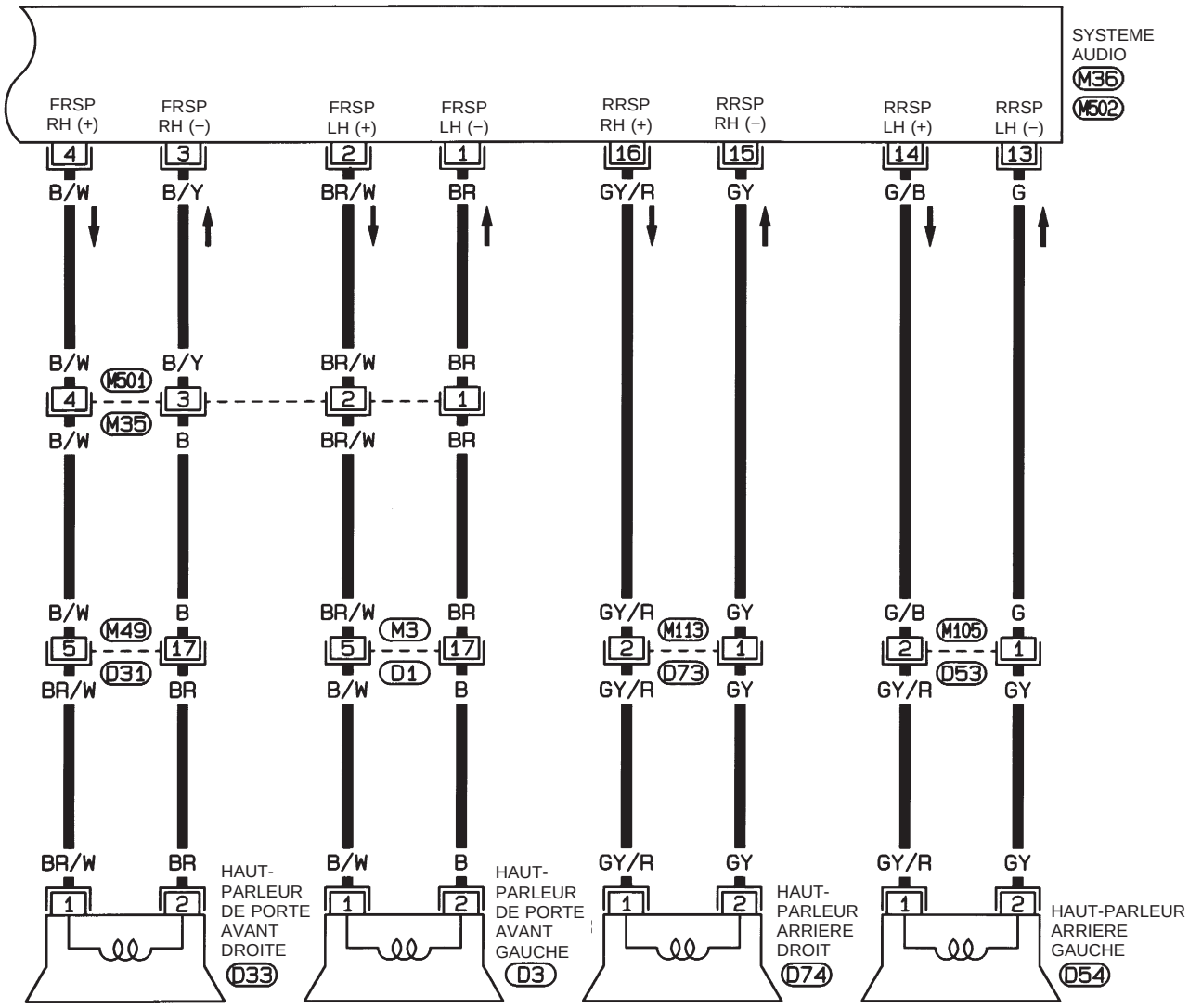

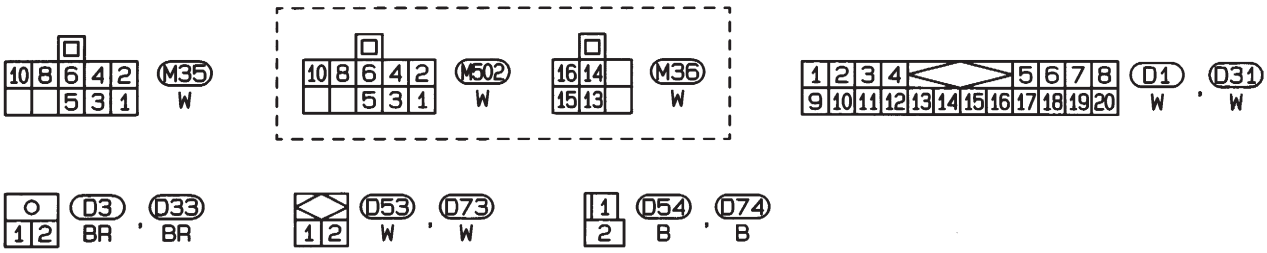

HEL754A

Simpo PDF Merge and Split Unregistered Version - http://www.simpopdf.com

Schéma de câblage — AUDIO —/Conduite à droite

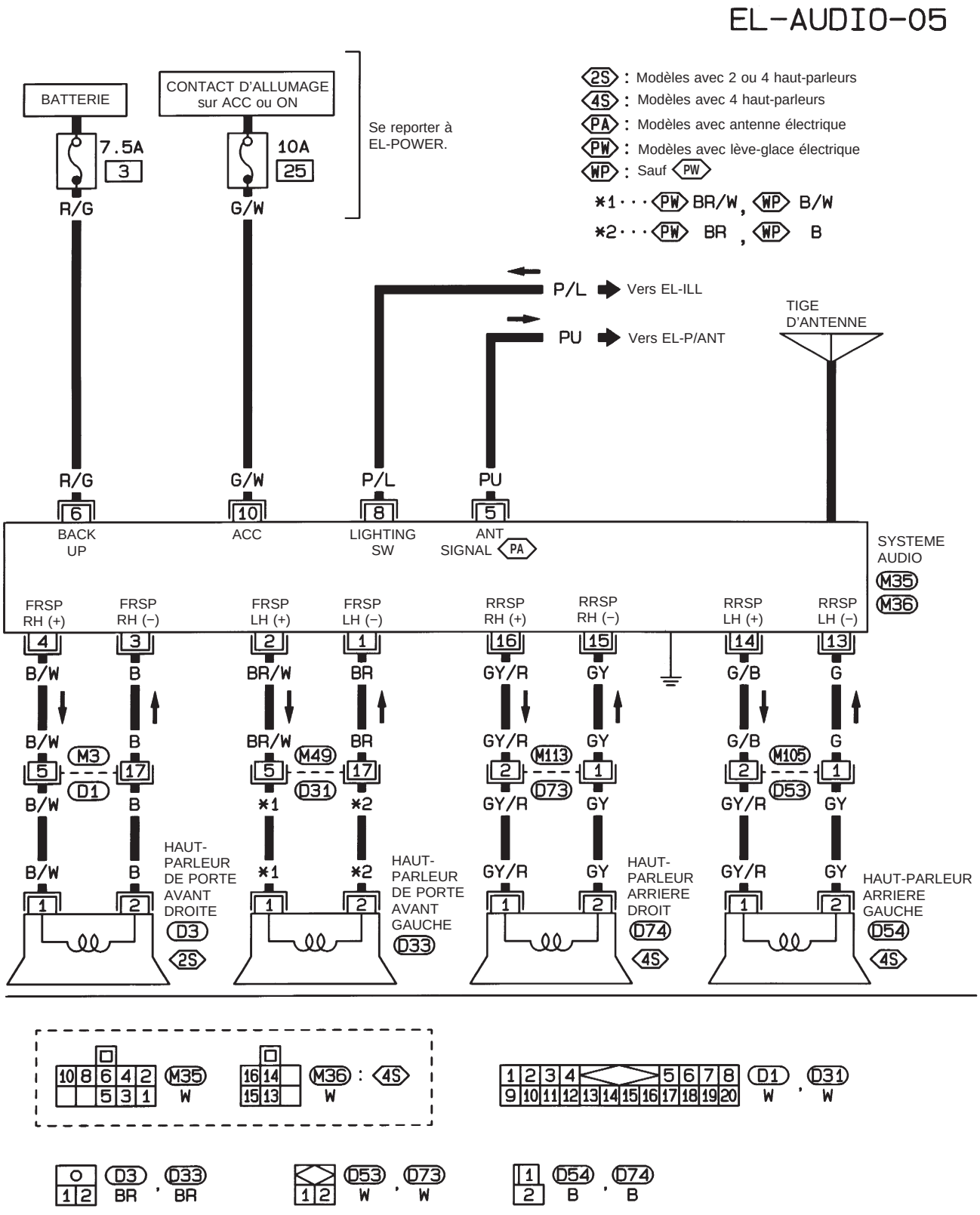

HEL755A

Simpo PDF Merge and Split Unregistered Version - http://www.simpopdf.com

Antenne électrique/Schéma de câblage — P/ANT —

EL-P/ANT-01

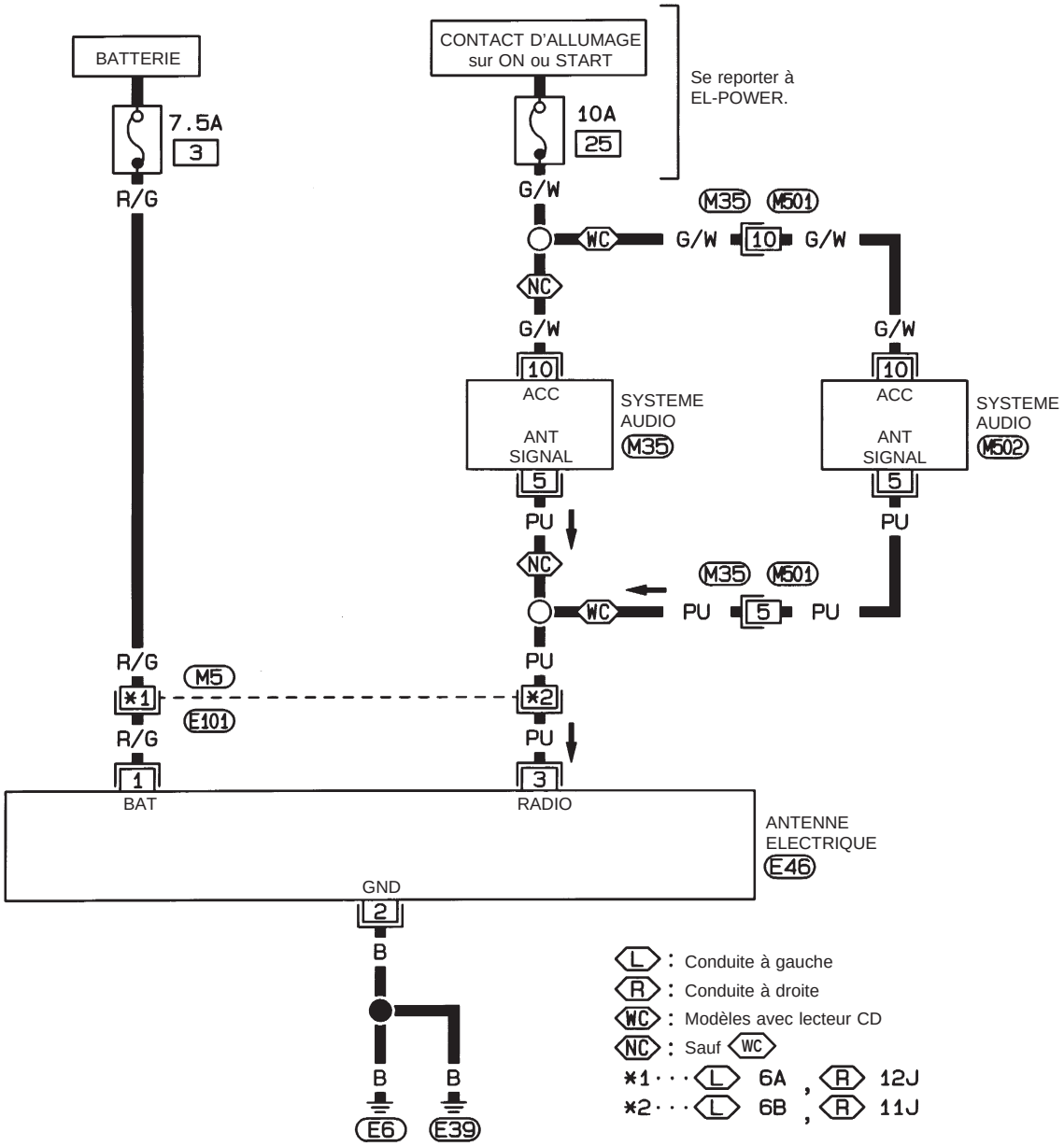

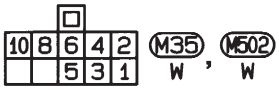

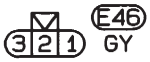

Consulter la dernière page dépliante.

M5 , E101

HEL756A

Simpo PDF Merge and Split Unregistered Version - http://www.simpopdf.com

Schéma de câblage — MIRROR —/Conduite à gauche

EL-MIRROR-01

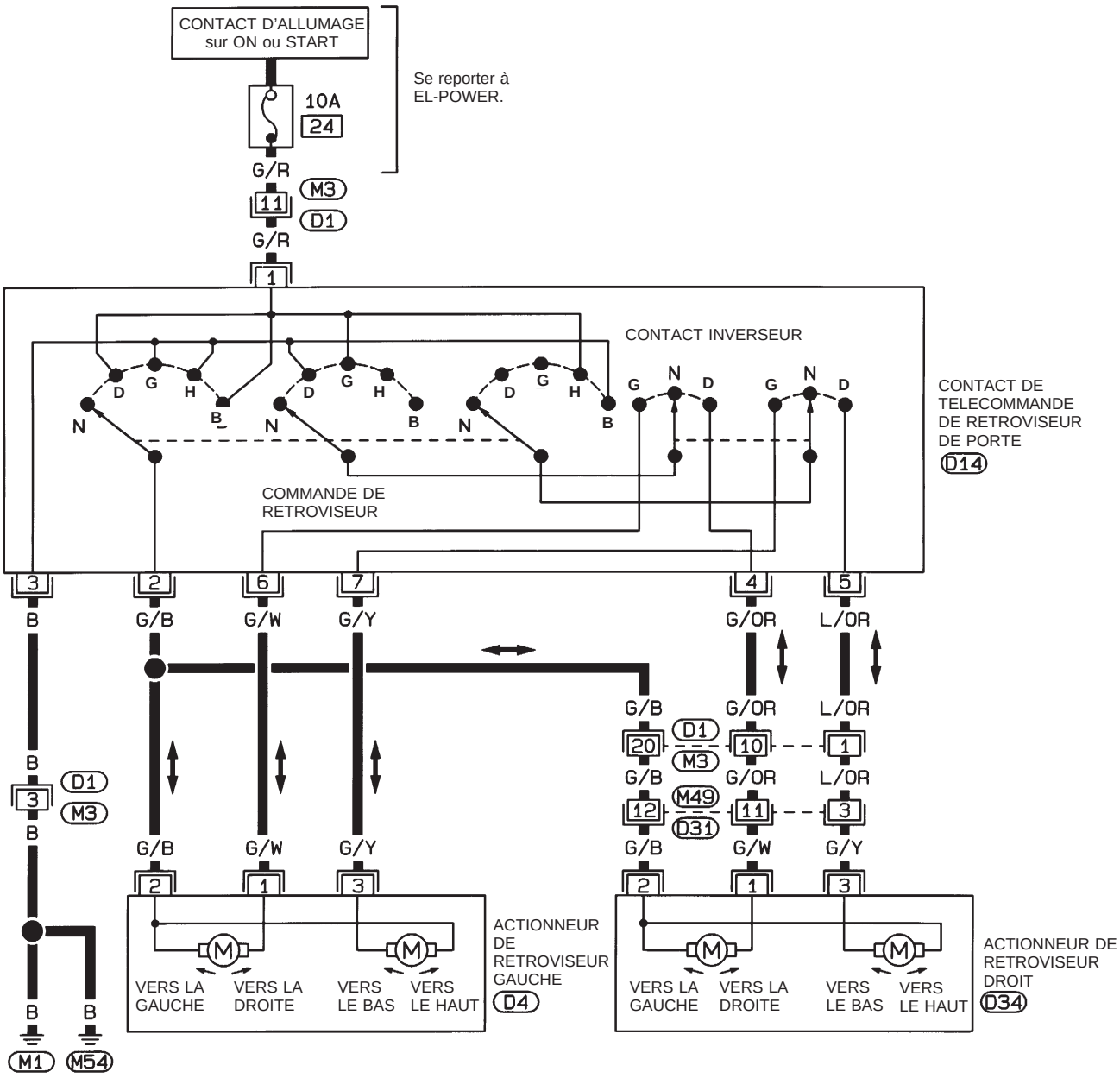

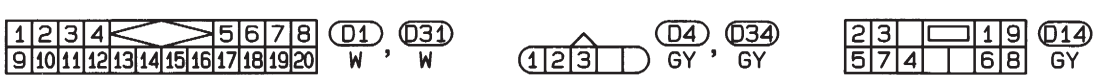

HEL757A

Simpo PDF Merge and Split Unregistered Version - http://www.simpopdf.com

Schéma de câblage — MIRROR —/Conduite à droite

EL-MIRROR-03

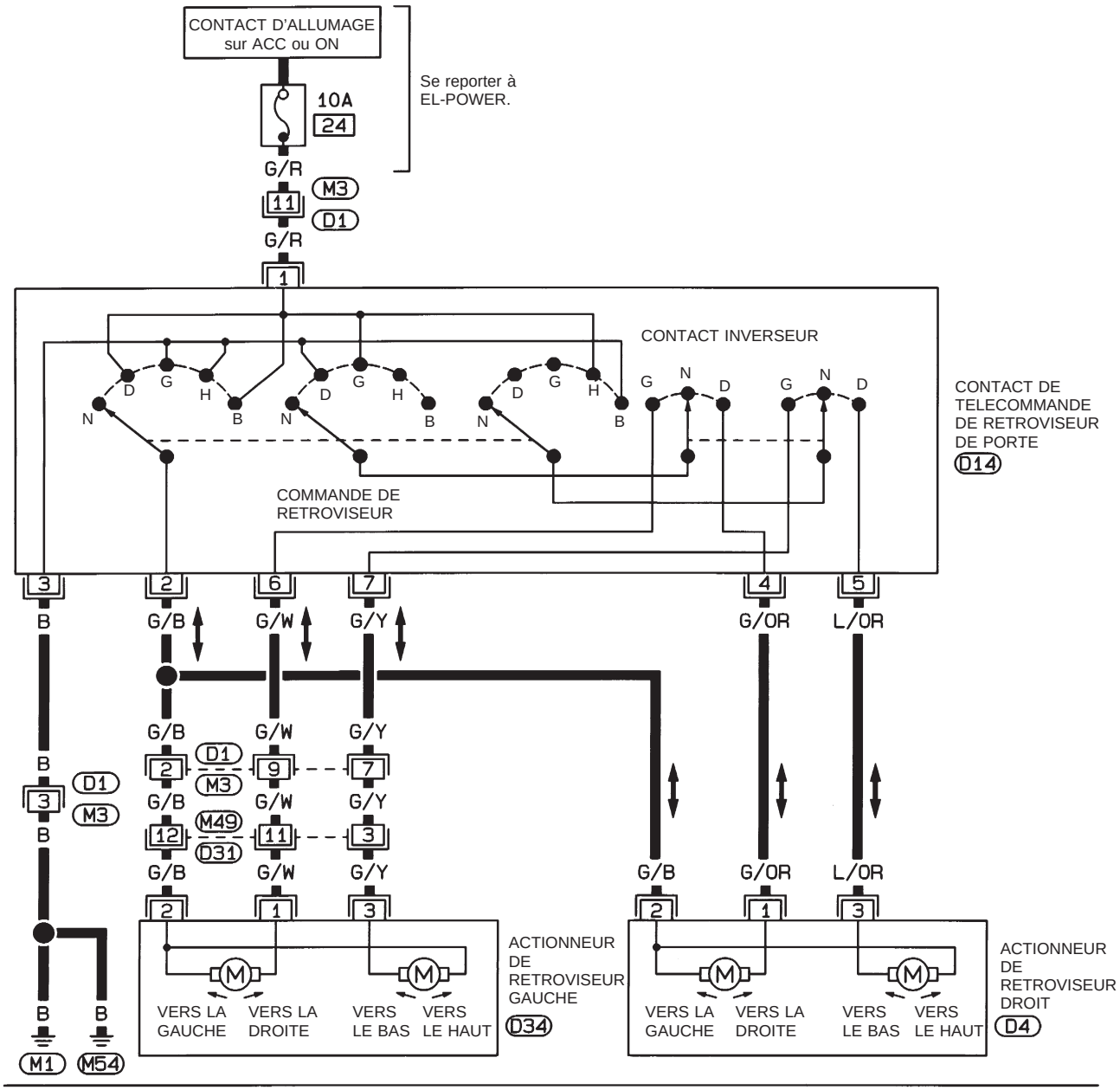



HEL818A

Simpo PDF Merge and Split Unregistered Version - http://www.simpopdf.com

Schéma de câblage — H/SEAT —

EL-H/SEAT-01

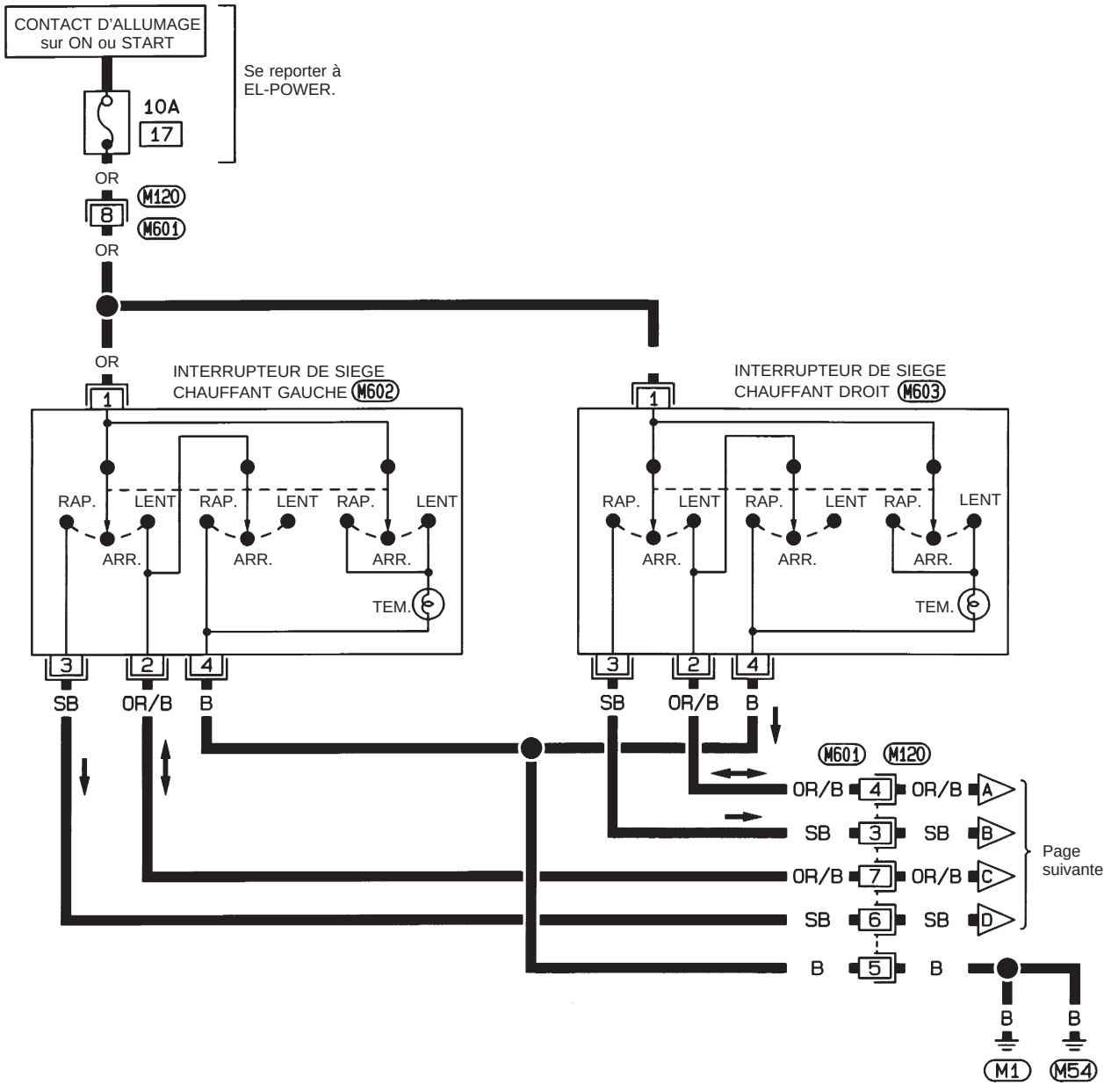



HEL759A

Simpo PDF Merge and Split Unregistered Version - http://www.simpopdf.com

Schéma de câblage — H/SEAT — (suite)

EL-H/SEAT-02

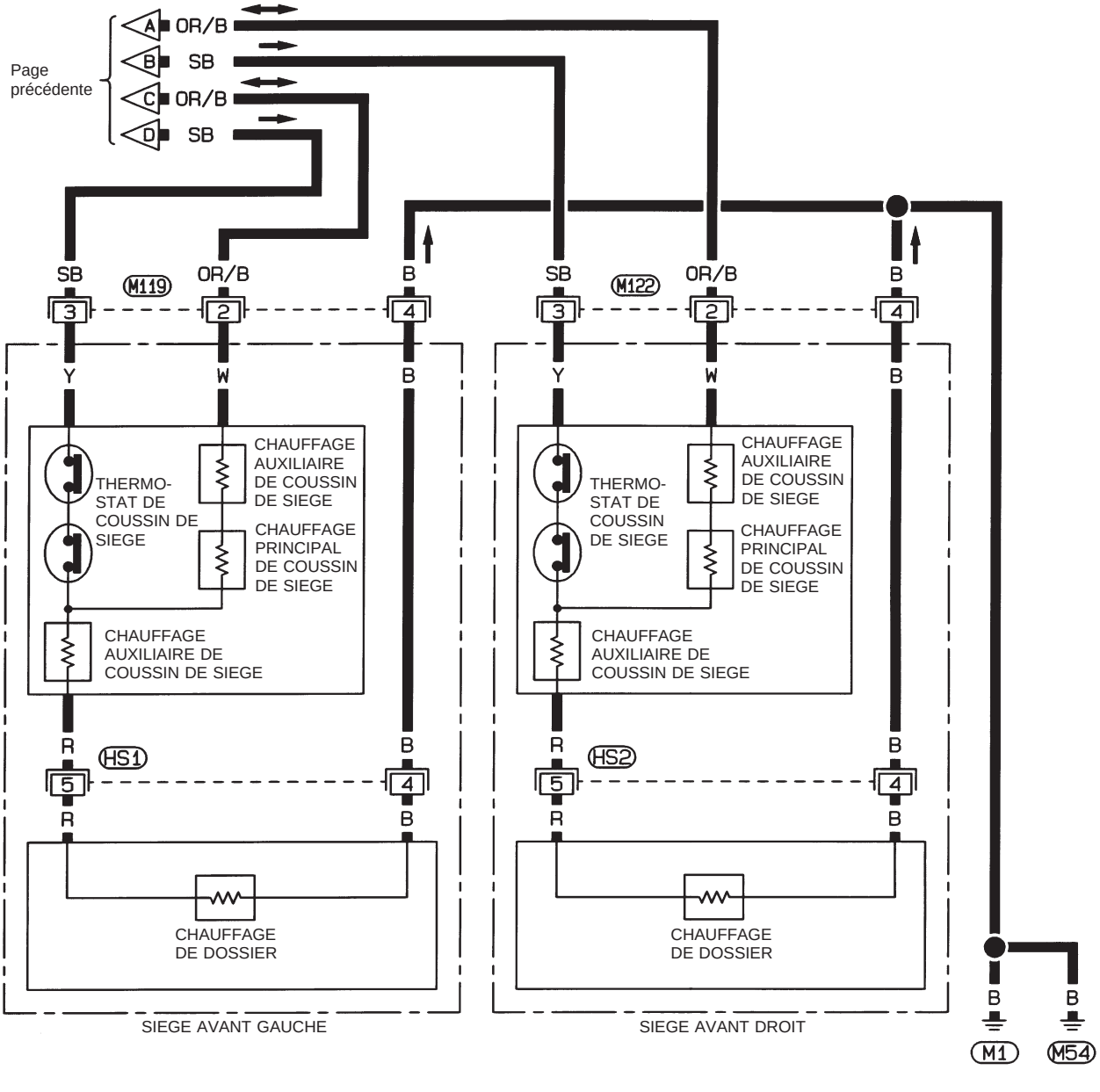



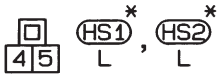

* : Ce connecteur n'est pas indiqué dans la "DISPOSITION DES FAISCEAUX".

HEL379A

Simpo PDF Merge and Split Unregistered Version - http://www.simpopdf.com

Schéma/Sans fonction de détection d'interruption

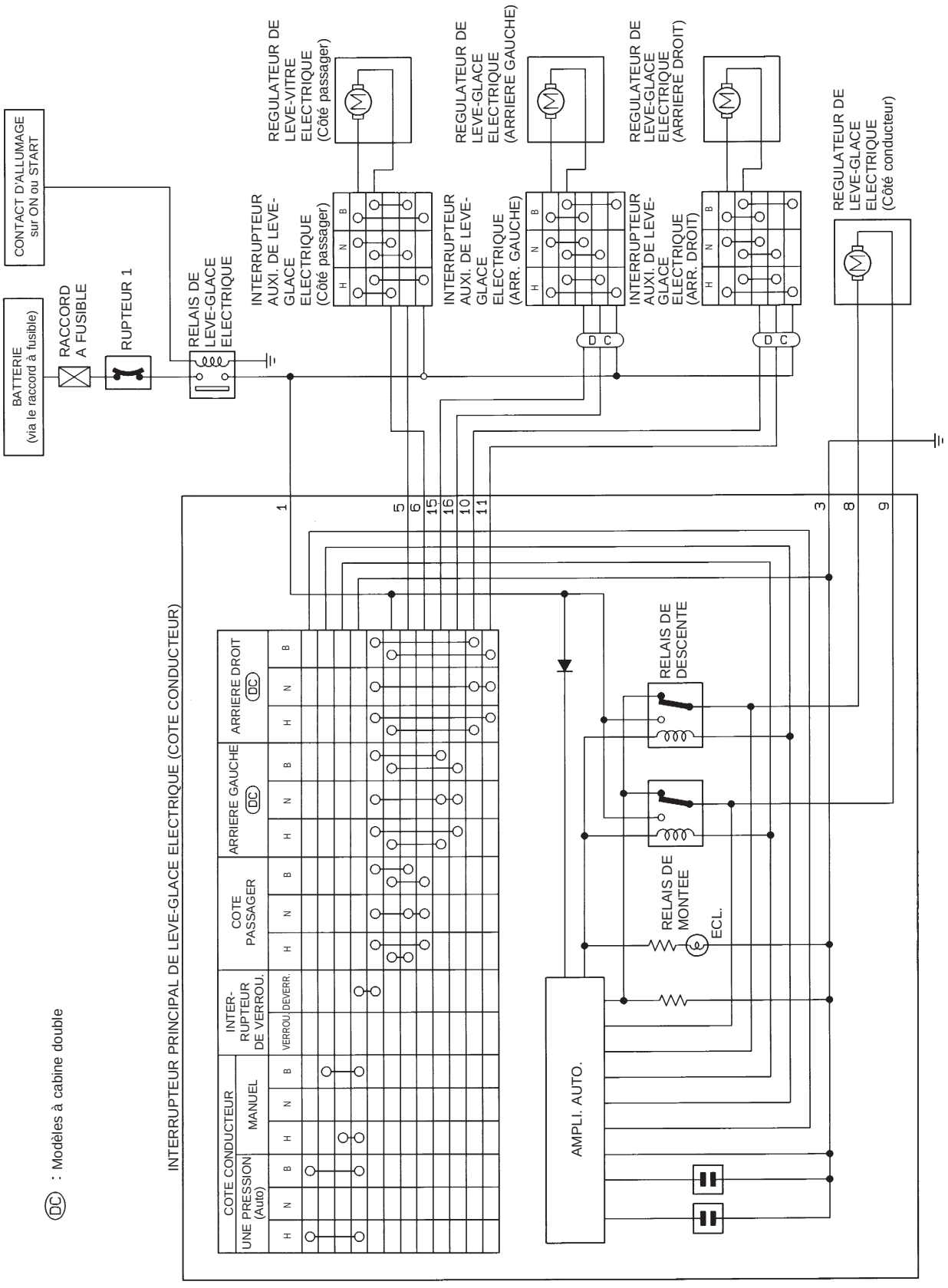

HEL760A

Simpo PDF Merge and Split Unregistered Version - http://www.simpopdf.com

Schéma de câblage — WINDOW —/Sans fonction de détection d'interruption

EL-WINDOW-01

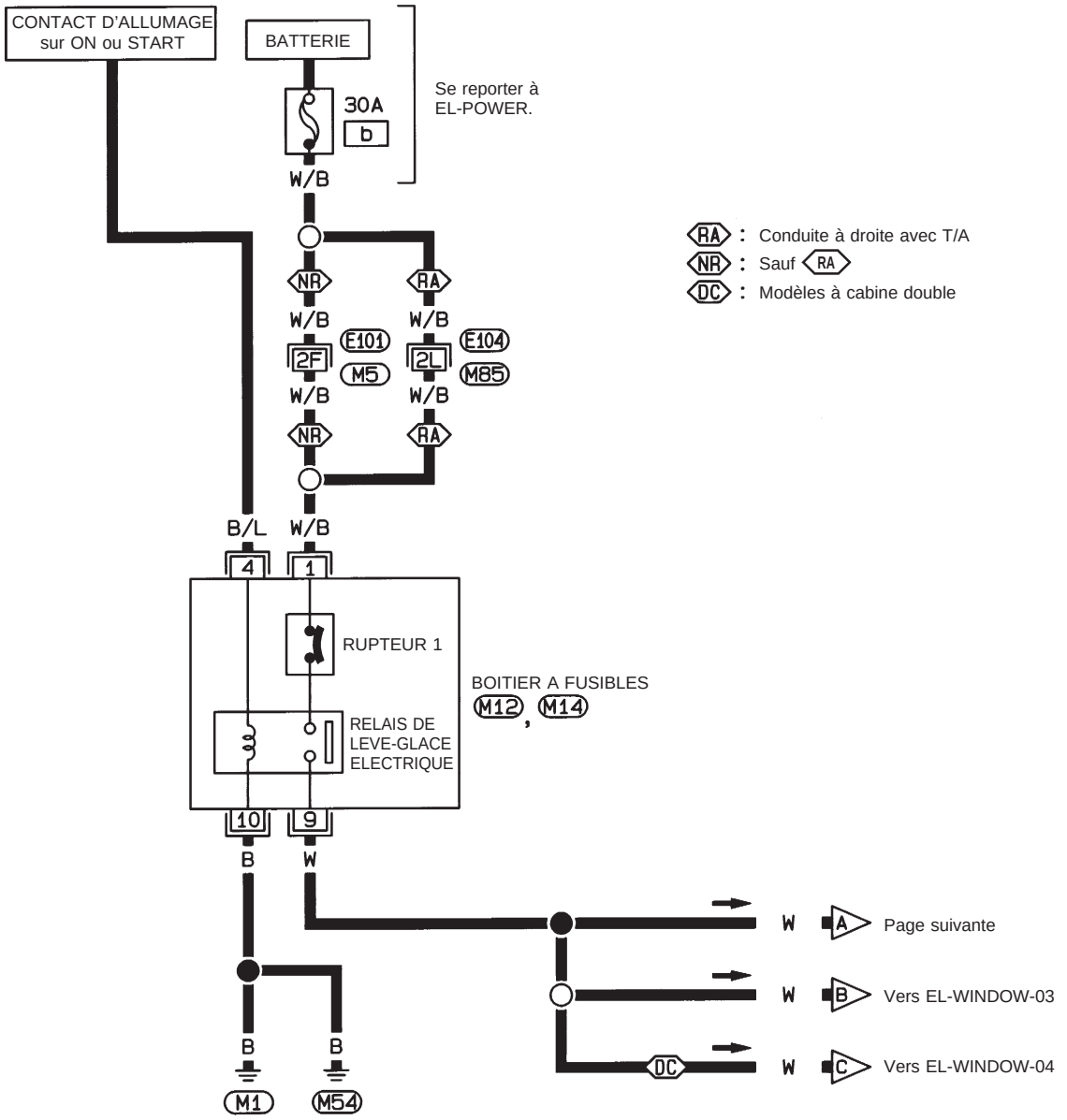

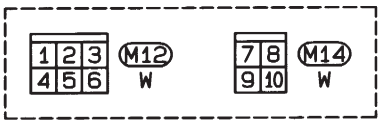

Consulter la dernière page dépliante.

M5, E101
M85, E104

HEL761A

Simpo PDF Merge and Split Unregistered Version - http://www.simpopdf.com

Schéma de câblage — WINDOW —/Sans fonction de détection d'interruption (suite)

EL-WINDOW-02

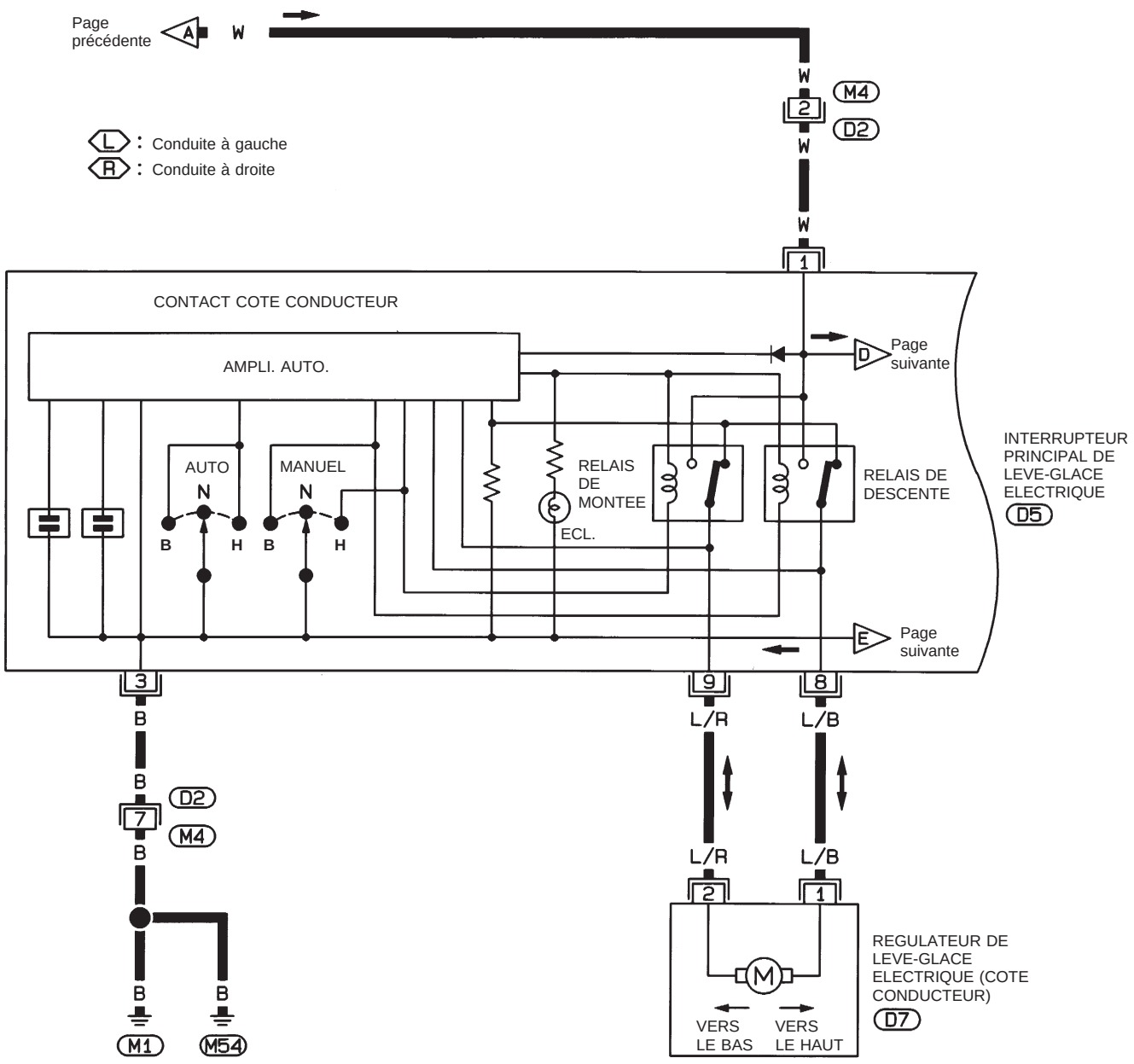

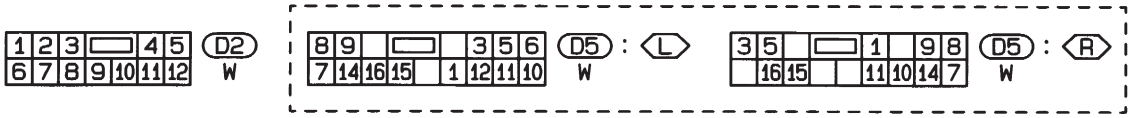



HEL762A

Simpo PDF Merge and Split Unregistered Version - http://www.simpopdf.com

Schéma de câblage — WINDOW —/Sans fonction de détection d'interruption (suite)

EL-WINDOW-03

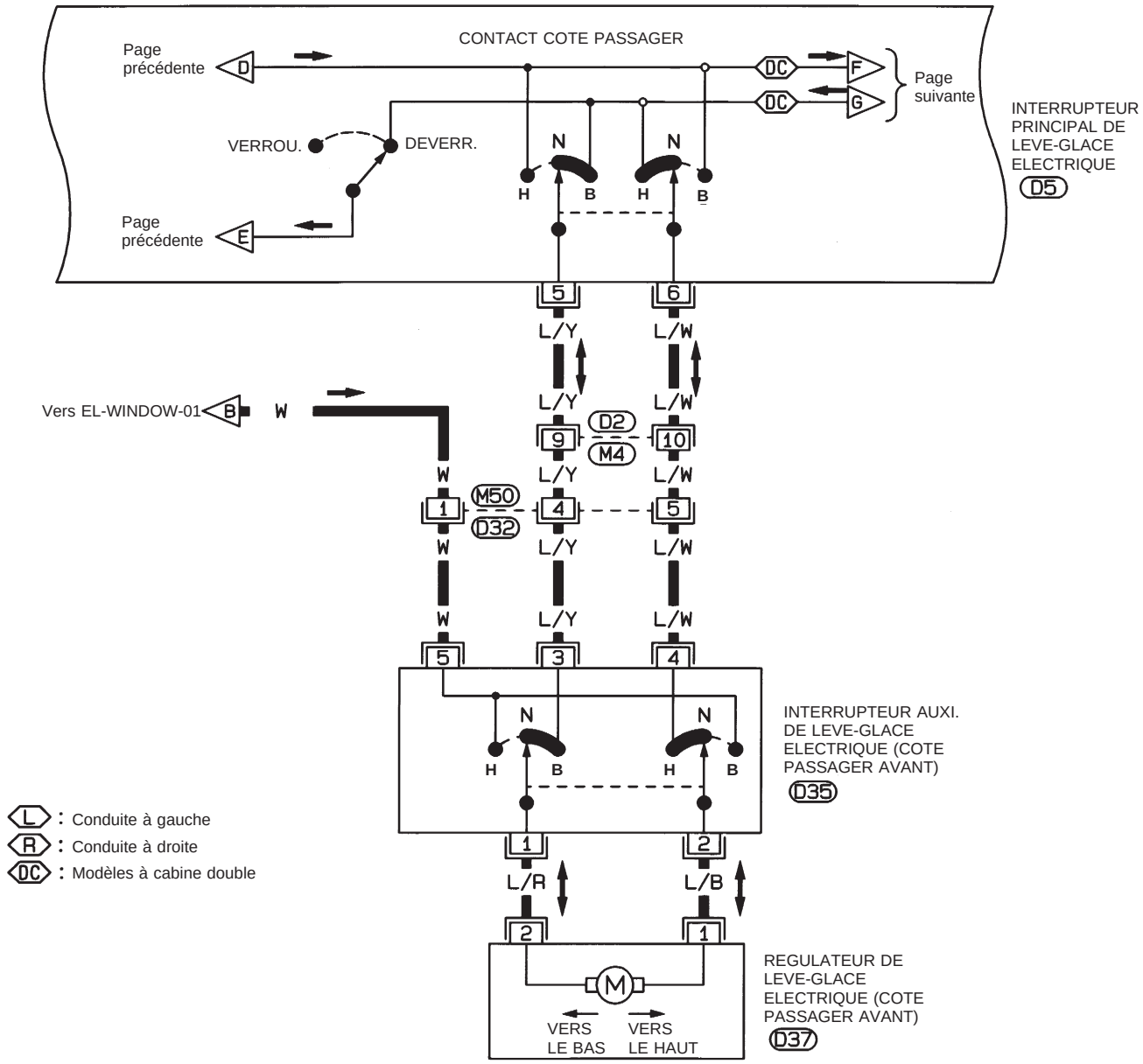

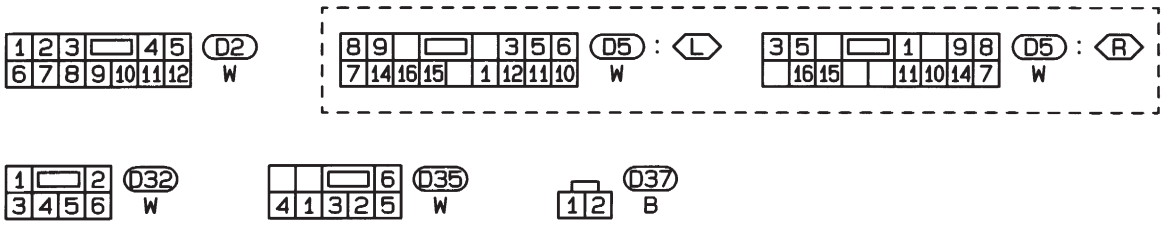

HEL763A

Simpo PDF Merge and Split Unregistered Version - http://www.simpopdf.com

Schéma de câblage — WINDOW —/Sans fonction de détection d'interruption (suite)

EL-WINDOW-04

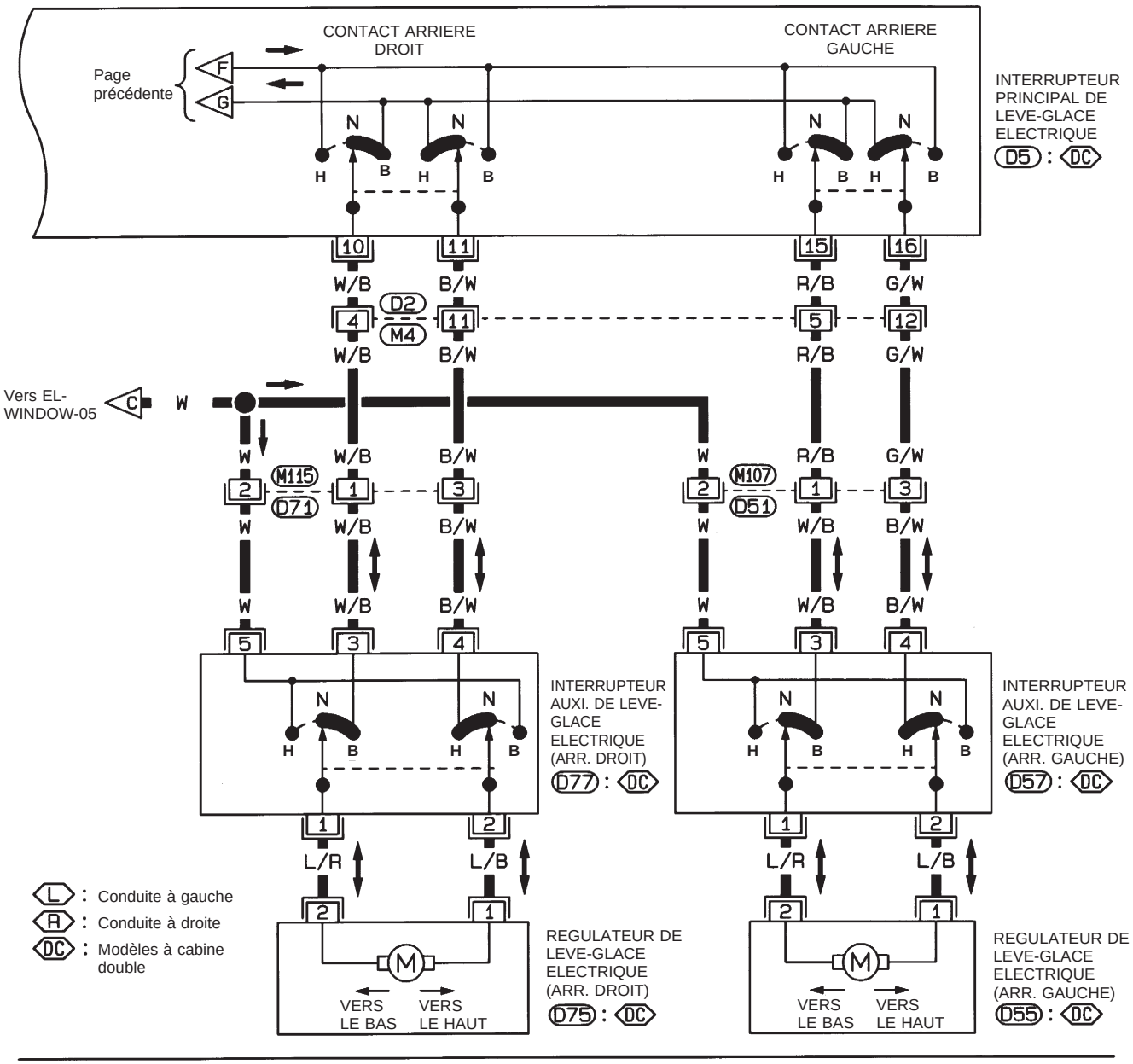

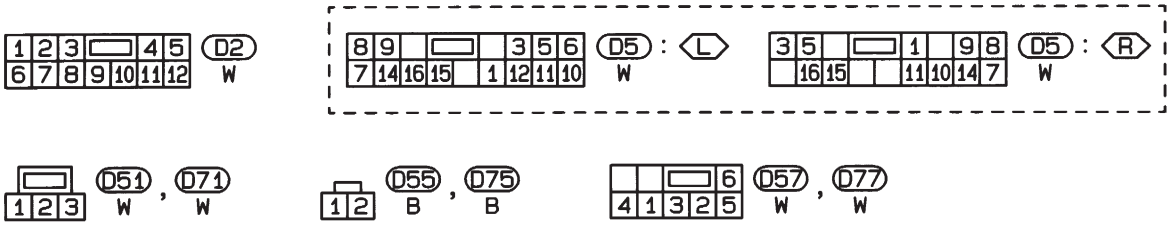

HEL764A

Simpo PDF Merge and Split Unregistered Version - http://www.simpopdf.com

Diagnostics des défauts/Sans fonction de détection d'interruption

Symptôme	Cause possible	Ordre de réparation
Aucun des lève-glaces électriques ne peut être actionné en utilisant n'importe quelle commande.	1. Raccord à fusible de 30A et rupteur 1 2. Masses (M1) et (M54) 3. Relais de lève-glace électrique 4. Circuit de l'interrupteur principal de lève-glace électrique ouvert ou en court-circuit	1. Vérifier le raccord à fusible de 30A (lettre [b], situé dans le raccord à fusible et le boîtier à fusibles) et le rupteur 1,situé dans le boîtier à fusibles. Mettre le contact d'allumage sur ON'' et vérifier qu'une tension positive de la batterie est appliquée à la borne (1) de l'interrupteur principal de lève-glace électrique et à la borne (5) des interrupteurs auxiliaires. 2. Vérifier les masses (M1) et (M54). 3. Vérifier le relais de lève-glace électrique. 4. Vérifier que le faisceau n'est pas ouvert ou court-circuité entre l'interrupteur principal et le relais de lève-glace électrique.
Le lève-glace électrique côté conducteur ne peut pas être actionné, mais les autres lève-glaces peuvent être actionnés.	1. Circuit du régulateur de lève-glace électrique du conducteur 2. Régulateur de lève-glace électrique du conducteur	1. Vérifier que le faisceau n'est pas ouvert ou court-circuité entre l'interrupteur principal et le régulateur de lève-glace électrique. 2. Vérifier le régulateur de lève-glace électrique côté conducteur.
Un ou plusieurs lève-glace électrique, sauf celui côté conducteur, ne peut pas être actionné.	1. Interrupteur auxiliaire de lève-glace électrique 2. Régulateur de lève-glace électrique du passager 3. Interrupteur principal de lève-glace électrique 4. Circuit de l'alimentation électrique	1. Vérifier les interrupteurs auxiliaires de lève-glace électrique. 2. Vérifier le régulateur du lève-glace électrique défectueux. 3. Vérifier l'interrupteur principal de lève-glace électrique. 4-1. Vérifier que les faisceaux ne sont pas ouverts ou court-circuités entre l'interrupteur principal et les interrupteurs auxiliaires de lève-glaces électriques. 4-2. Vérifier que les faisceaux ne sont pas ouverts ou court-circuités entre les interrupteurs auxiliaires et le régulateur de lève-glace électrique.
Le lève-glace électrique du passager ne peut pas être actionné à l'aide de l'interrupteur principal de lève-glace mais peut l'être à l'aide des interrupteurs auxiliaires.	1. Interrupteur principal de lève-glace électrique	1. Vérifier l'interrupteur principal de lève-glace électrique.
La fonction auto. du lève-glace électrique du conducteur ne peut être actionnée à l'aide de l'interrupteur principal de lève-glace électrique.	1. Interrupteur principal de lève-glace électrique	1. Vérifier l'interrupteur principal de lève-glace électrique.

Simpo PDF Merge and Split Unregistered Version - http://www.simpopdf.com

Description du système/Avec fonction de détection d'interruption

VUE D'ENSEMBLE

Le système de lève-glace électrique consiste en
- une unité centrale de traitement (combinée avec l'interrupteur principal de lève-glace électrique)
- quatre régulateurs de lève-glace électrique

Lorsque le contact d'allumage est sur la position ''ON'', le lève-glace électrique peut être actionné en fonction de la position de l'interrupteur principal/auxiliaire de lève-glace électrique.

CONDITION DE FONCTIONNEMENT

- Les lève-glaces électriques peuvent être baissés ou montés avec chacun des interrupteurs auxiliaires ou avec l'interrupteur principal situé dans la garniture de porte du conducteur avec le contact d'allumage sur ''ON'' et l'interrupteur de verrouillage de lève-glace électrique situé dans la garniture de porte du conducteur en position de déverrouillage.
- Lorsque l'interrupteur de verrouillage de lève-glace électrique est en position de verrouillage, aucune vitre ne peut être baissée ou montée à l'exception de la vitre du conducteur.
- Lorsque le contact d'allumage est sur la position ''ON'', appuyer ou tirer à fond l'interrupteur automatique (interrupteur principal) pour ouvrir ou fermer complètement la vitre du conducteur et le relâcher ; il est nécessaire de le tenir. La vitre s'ouvrira/se fermera complètement. Pour arrêter la vitre, tirer/appuyer sur l'interrupteur et le relâcher.
- Après avoir mis le contact d'allumage sur la position ''OFF'', la vitre côté conducteur peut être abaissée ou levée pendant 15 minutes. La commande de la minuterie qui alimente en courant après que le contact d'allumage a été mis sur la position ''OFF'' sera annulée lorsque la porte côté conducteur est fermée (sauf modèles pour l'Europe).

FONCTION DE DETECTION D'INTERRUPTION

L'unité centrale de traitement (CPU) (combinée avec l'interrupteur principal de lève-glace électrique) contrôle le fonctionnement du moteur du régulateur de lève-glace électrique et la position du lève-glace électrique (complètement fermée ou autre) de la vitre du conducteur par des signaux en provenance de l'encodeur et du contact de limite dans le régulateur du lève-glace électrique avant (côté conducteur).
Lorsque l'unité centrale de traitement (CPU) (combinée avec l'interrupteur principal de lève-glace électrique) détecte une interruption durant le fonctionnement suivant de fermeture de porte du conducteur,
- fonctionnement de fermeture automatique lorsque le contact d'allumage est sur ''ON''
- fonctionnement de fermeture automatique durant le fonctionnement de la minuterie de lève-glace électrique
- fonctionnement de fermeture manuelle durant le fonctionnement de la minuterie de lève-glace électrique

L'unité centrale de traitement (CPU) (combinée avec l'interrupteur principal de lève-glace électrique) contrôle le fonctionnement du moteur du régulateur de lève-glace électrique du conducteur pour l'ouverture et la vitre sera baissée d'environ 150 mm.

Simpo PDF Merge and Split Unregistered Version - http://www.simpopdf.com

Schéma/Avec fonction de détection d'interruption

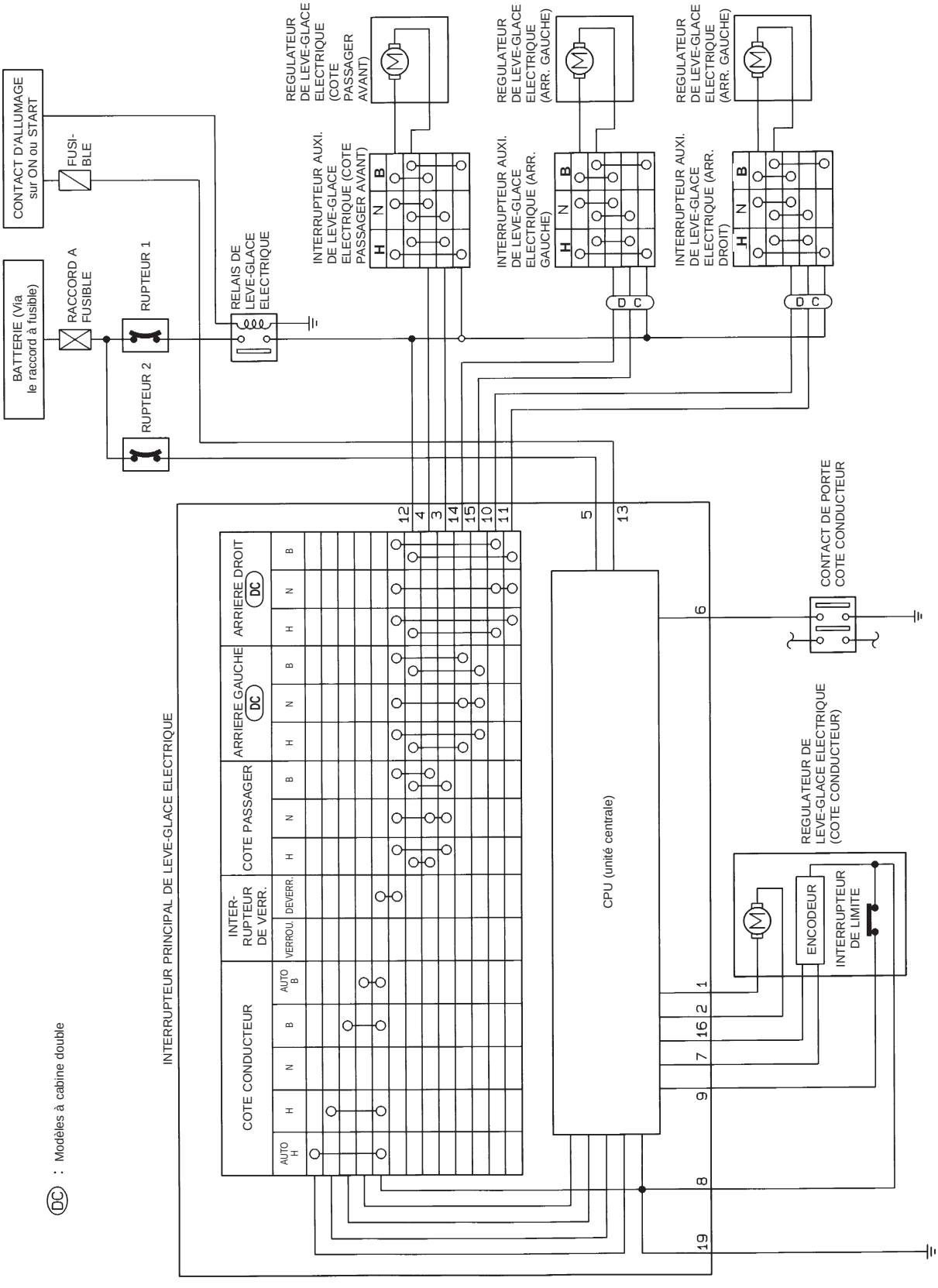

HEL765A

Simpo PDF Merge and Split Unregistered Version - http://www.simpopdf.com

Schéma de câblage — WINDOW —/Avec fonction de détection d'interruption

EL-WINDOW-05

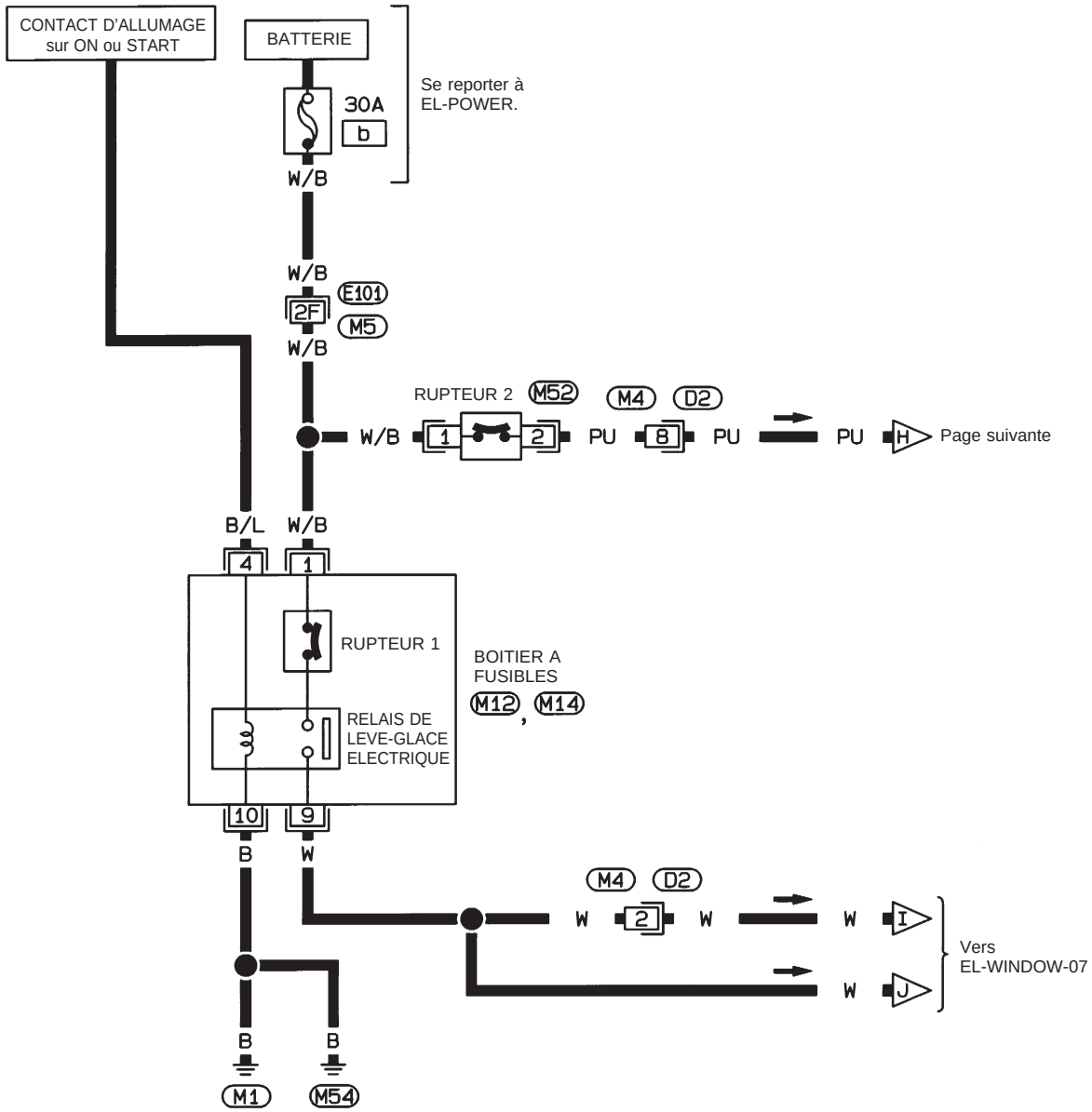

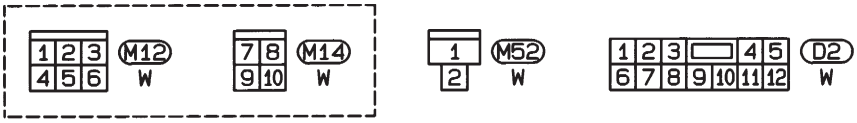

Consulter la dernière page dépliante.

M5, E101

HEL766A

Simpo PDF Merge and Split Unregistered Version - http://www.simpopdf.com

Schéma de câblage — WINDOW —/Avec fonction de détection d'interruption (suite)

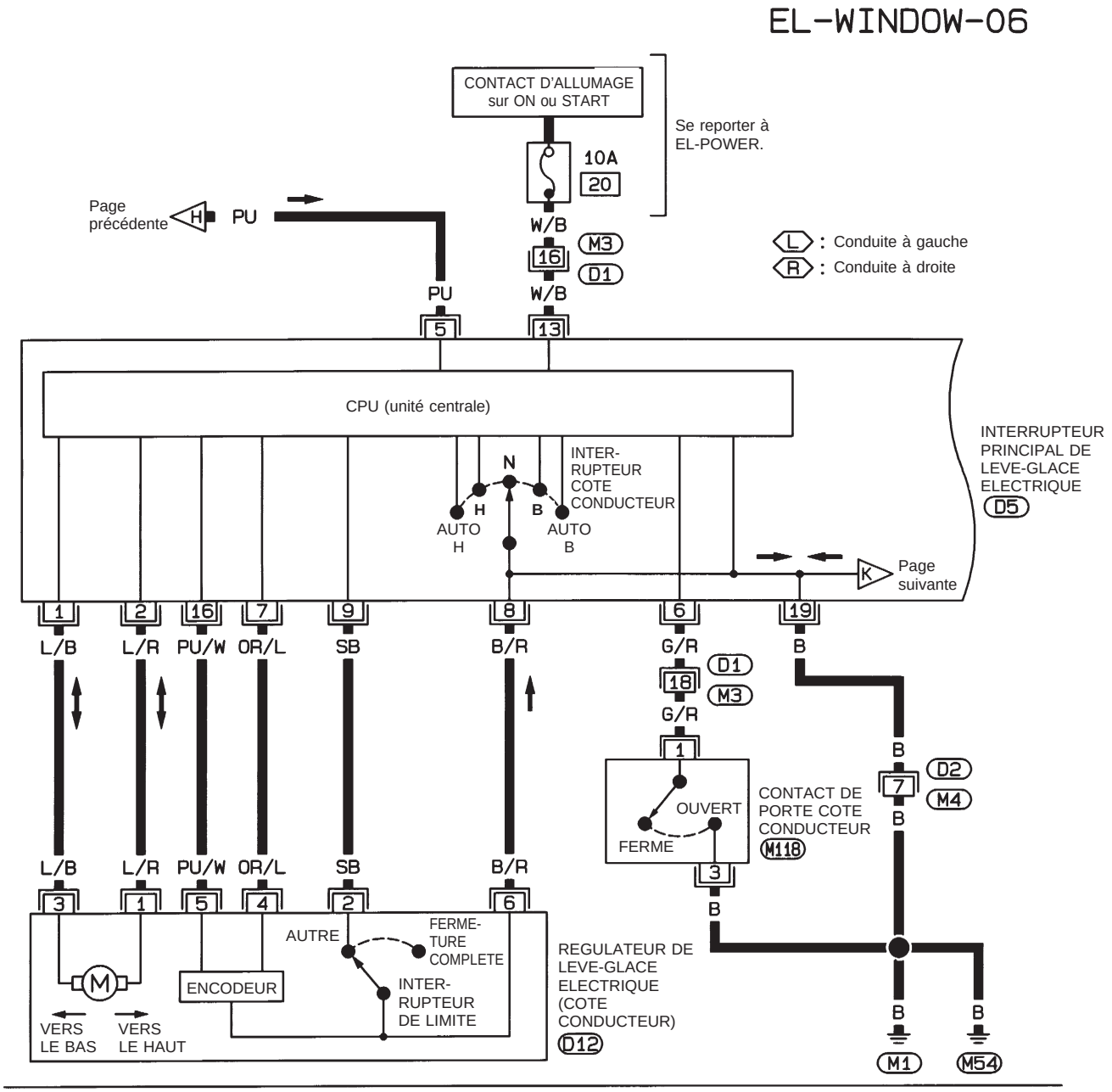

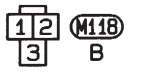

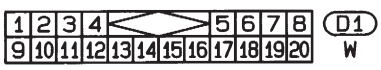

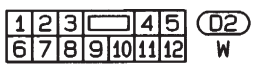

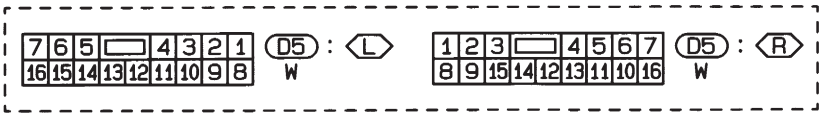

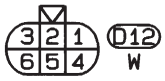

HEL767A

Simpo PDF Merge and Split Unregistered Version - http://www.simpopdf.com

Schéma de câblage — WINDOW —/Avec fonction de détection d'interruption (suite)

EL-WINDOW-07

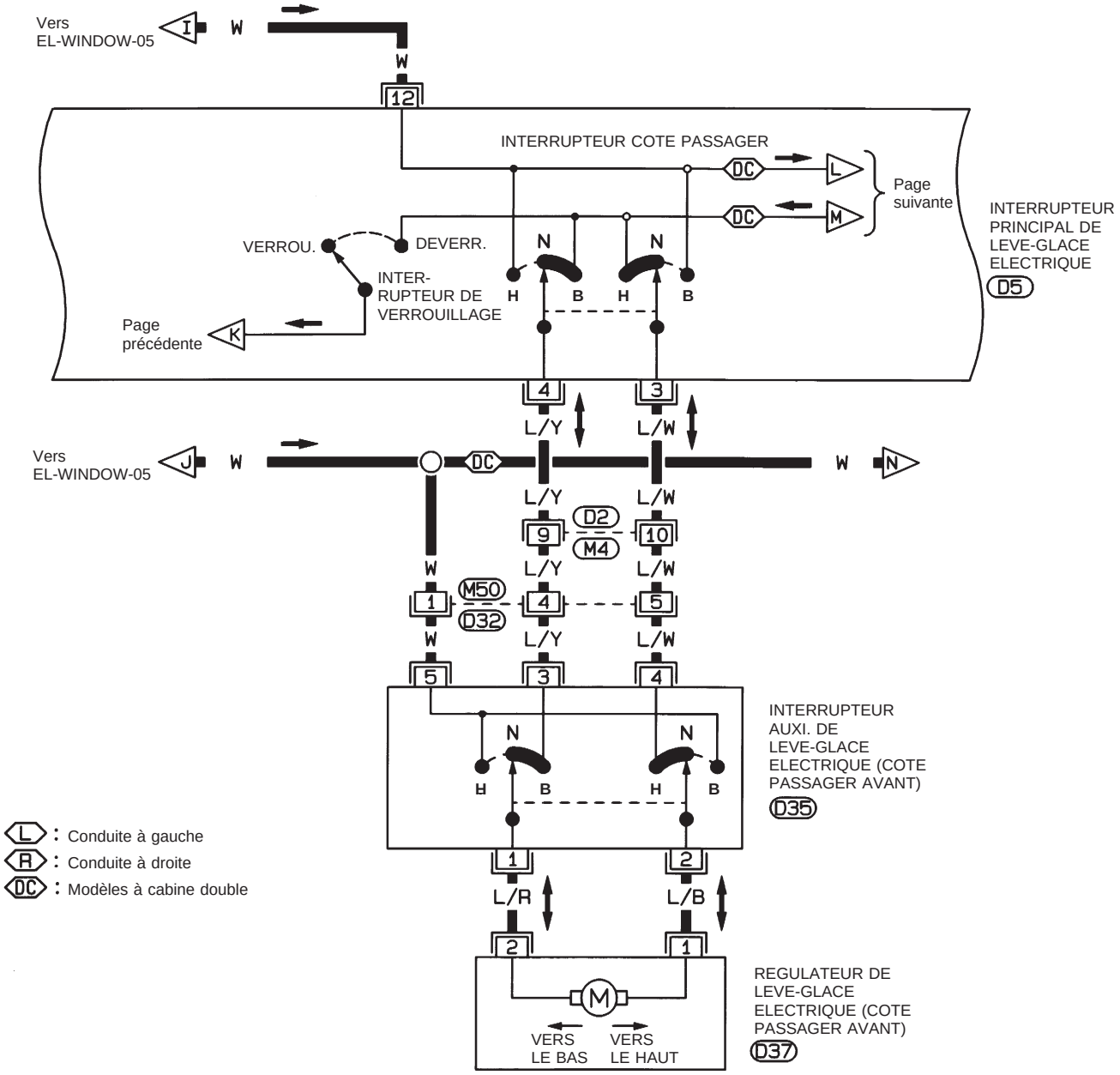

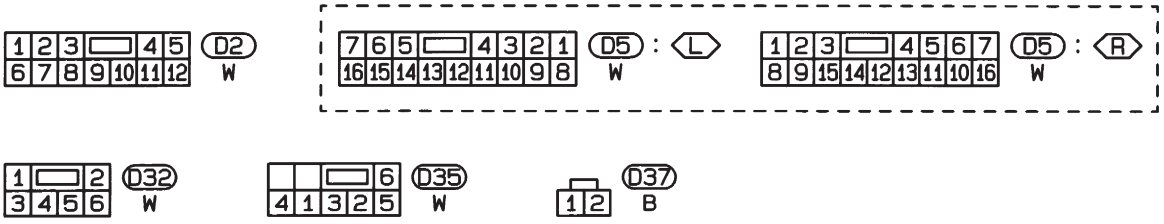

HEL768A

Simpo PDF Merge and Split Unregistered Version - http://www.simpopdf.com

Schéma de câblage — WINDOW —/Avec fonction de détection d'interruption (suite)

EL-WINDOW-08

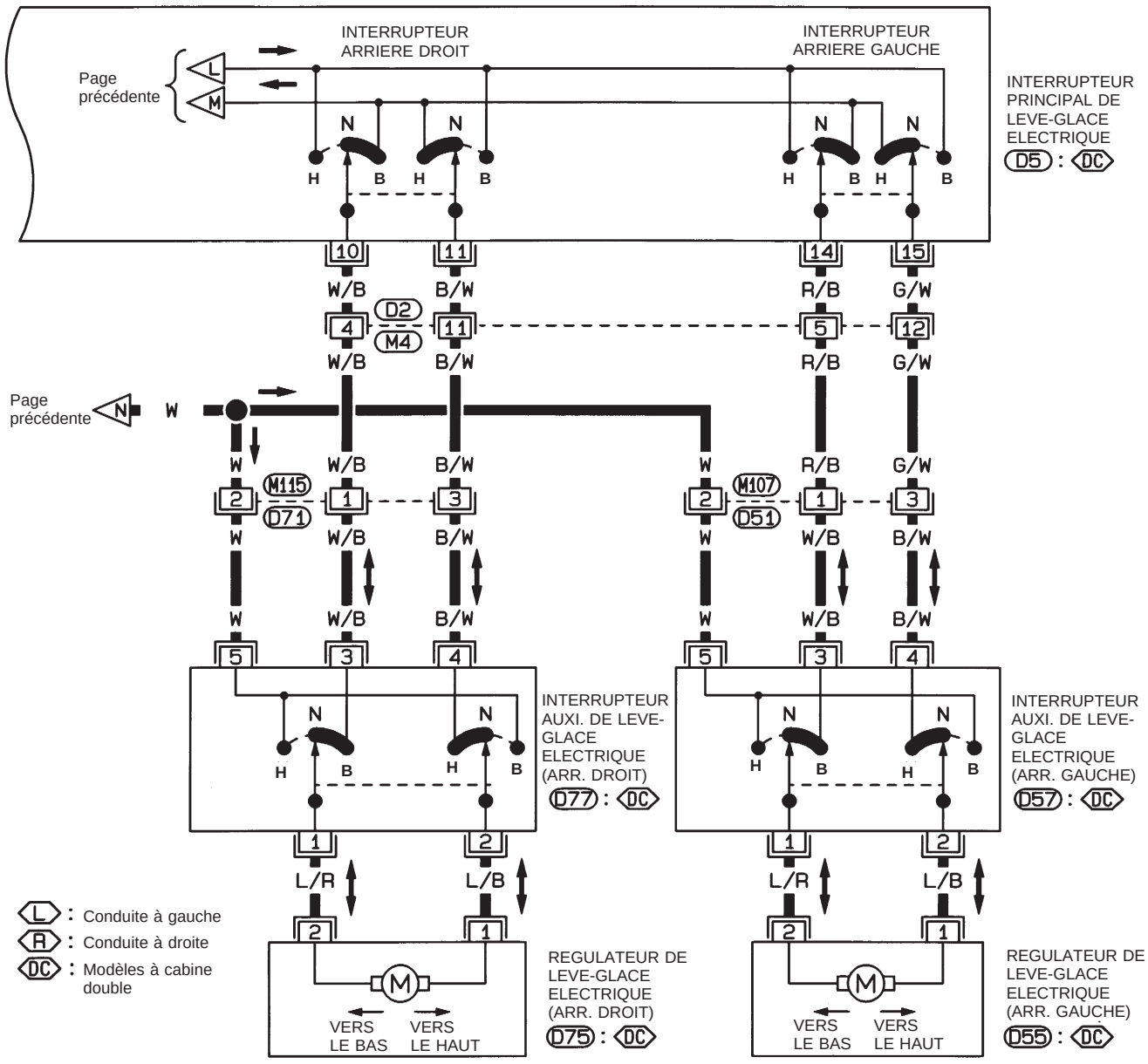

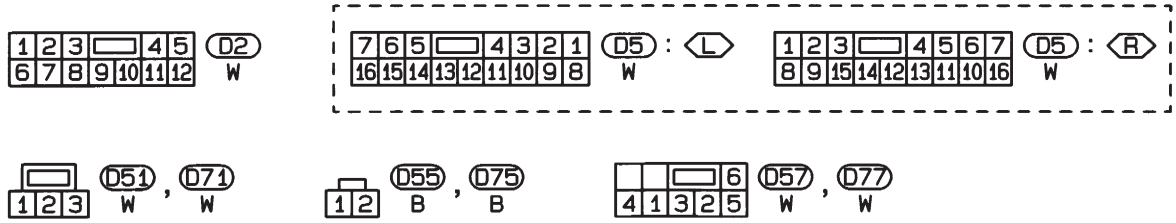

HEL769A

Simpo PDF Merge and Split Unregistered Version - http://www.simpopdf.com

Diagnostics des défauts/Avec fonction de détection d'interruption

Symptôme	Cause possible	Ordre de réparation
Aucun des lève-glaces électriques ne peut être actionné en utilisant n'importe quelle commande.	1. Fusible de 10A, raccord à fusible de 30A 2. Circuit de la masse 3. Interrupteur principal de lève-glace électrique	1. Vérifier le fusible de 10A [n° 20, situé dans le boîtier à fusibles (J/B)], le raccord à fusible de 30A (lettre b, situé dans le fusible et la boîte de raccord à fusible). 2. Vérifier le circuit de mise à la masse de la borne (19) de l'interrupteur principal de lève-glace électrique. 3. Vérifier l'interrupteur principal de lève-glace électrique.
Le lève-glace électrique côté conducteur ne peut pas être actionné, mais les autres lève-glaces peuvent être actionnés.	1. Circuit du régulateur de lève-glace électrique du conducteur 2. Régulateur de lève-glace électrique du conducteur 3. (M52) Rupteur 2 4. (M52) Circuit du rupteur 2 5. Circuit de l'interrupteur principal de lève-glace électrique	1. Vérifier que le faisceau n'est pas ouvert ou court-circuité entre l'interrupteur principal et le régulateur de lève-glace électrique côté conducteur. 2. Vérifier le régulateur de lève-glace électrique côté conducteur. 3. Vérifier le rupteur 2 (M52). 4. Vérifier le faisceau entre le rupteur 2 (M52) et le raccord à fusible de 30A (lettre b, situé dans le fusible et la boîte de raccord à fusible). 5-1. Vérifier le faisceau entre la borne (13) de l'interrupteur principal de lève-glace électrique et le fusible de 10A [n° 20, situé dans le boîtier à fusibles (J/B)]. 5-2. Vérifier le faisceau entre la borne (5) de l'interrupteur principal de lève-glace électrique et le rupteur (M52).
Un ou plusieurs lève-glace électrique, sauf celui côté conducteur, ne peut pas être actionné.	1. Interrupteurs auxiliaires de lève-glace 2. Régulateurs de lève-glace électrique 3. Interrupteur principal de lève-glace électrique 4. Circuit de lève-glace électrique	1. Vérifier les interrupteurs auxiliaires de lève-glace électrique. 2. Vérifier le régulateur de lève-glace électrique. 3. Vérifier l'interrupteur principal de lève-glace électrique. 4-1. Vérifier que les faisceaux ne sont pas ouverts ou court-circuités entre l'interrupteur principal et les interrupteurs auxiliaires de lève-glaces électriques. 4-2. Vérifier que les faisceaux ne sont pas ouverts ou court-circuités entre les interrupteurs auxiliaires et le régulateur de lève-glace électrique.
Les lève-glaces électriques, excepté celui du conducteur, ne peuvent pas être actionnés à l'aide de l'interrupteur principal de lève-glace mais peuvent l'être à l'aide des interrupteurs auxiliaires.	1. Interrupteur principal de lève-glace électrique	1. Vérifier l'interrupteur principal de lève-glace électrique.
La mise en marche automatique du lève-glace électrique côté conducteur ne fonctionne pas correctement.	1. Interrupteur principal de lève-glace électrique 2. Encodeur et interrupteur de limite	1. Vérifier l'interrupteur principal de lève-glace électrique. 2. Vérifier l'encodeur et l'interrupteur de limite. (EL-2124)
La commande de la minuterie qui alimente en courant après que le contact d'allumage a été mis sur la position OFF ne fonctionne pas correctement (sauf modèles pour l'Europe)	1. Circuit du contact de porte côté conducteur 2. Contact de porte côté conducteur 3. Circuit du signal du contact d'allumage ON 4. Interrupteur principal de lève-glace électrique	1. Vérifier le faisceau entre le contact de porte du conducteur et l'interrupteur principal de lève-glace électrique. 2. Vérifier le contact de porte côté conducteur. 3. Vérifier le circuit du signal ON du contact d'allumage à l'interrupteur principal de lève-glace électrique. 4. Vérifier l'interrupteur principal de lève-glace électrique.

Simpo PDF Merge and Split Unregistered Version - http://www.simpopdf.com

Diagnostics des défauts/Avec fonction de détection d'interruption (suite)

ENCODEUR ET INTERRUPTEUR DE LIMITE

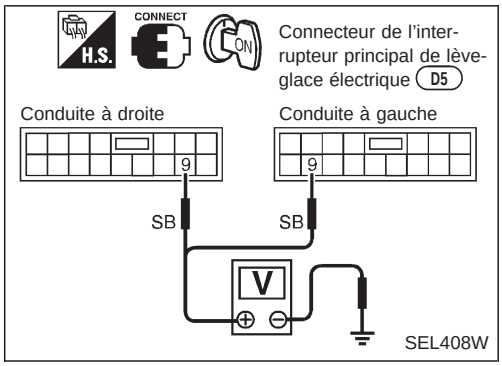

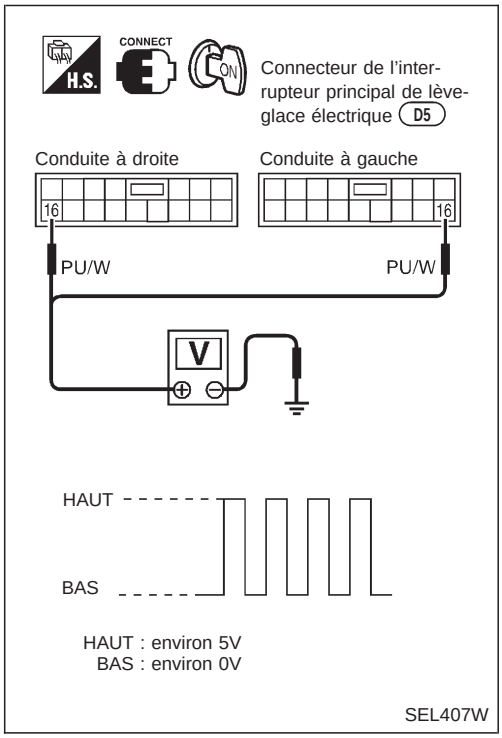

VERIFIER LE MECANISME DE COULISSEMENT DE VITRE DE PORTE
Vérifier les points suivants.
- Obstacles dans la vitre, moulure de la vitre, etc.
- Moulure de la vitre usée ou déformée
- Guillotine de porte trop penchée vers l'intérieur ou l'extérieur
- Régulateur de vitre de porte

Mauvais → Déposer les obstacles ou réparer le mécanisme de coulissement de vitre de porte.

Bon ↓

A

VERIFIER L'ALIMENTATION ELECTRIQUE DE L'INTERRUPTEUR DE LIMITE
1. Débrancher le connecteur du régulateur de lève-glace électrique côté conducteur.
2. Mettre le contact d'allumage sur ON.
3. Vérifier la tension entre la borne (9) de l'interrupteur principal de lève-glace électrique et la masse.
   Il doit y avoir une tension d'environ 5V.

Mauvais → Remplacer l'interrupteur principal de lève-glace électrique.

Bon ↓

VERIFIER LE FONCTIONNEMENT DE L'INTERRUPTEUR DE LIMITE
1. Couper le contact.
2. Brancher le connecteur du régulateur de lève-glace électrique côté conducteur.
3. Mettre le contact d'allumage sur ON.
4. Vérifier la tension entre la borne (9) de l'interrupteur principal de lève-glace électrique et la masse pendant l'opération de fermeture du lève-glace électrique.

N° de borne	Condition	Tension (DCV)
(9)	Environ 15 mm sous la position complètement fermée à la position complètement fermée	Environ 5
	Autres positions	Environ 0

Bon → B

VERIFIER L'ENCODEUR
Mesurer la tension entre la borne (16) de l'interrupteur principal de lève-glace électrique et la masse avec un oscilloscope alors que le lève-glace électrique est en position de fermeture automatique.
Si le résultat est mauvais, remplacer le moteur du régulateur de lève-glace électrique (côté conducteur).
Si le résultat est bon, remplacer l'interrupteur principal de lève-glace électrique.

Mauvais ↓

REGLER L'INTERRUPTEUR DE LIMITE
Régler l'interrupteur de limite. Se reporter à la section BT. Mesurer la tension entre la borne (9) de l'interrupteur principal de lève-glace électrique et la masse pendant l'opération de fermeture du lève-glace électrique au moins dix fois.

N° de borne	Condition	Tension (DCV)
(9)	Environ 15 mm sous la position complètement fermée à la position complètement fermée	Environ 5
	Autres positions	Environ 0

Mauvais → Remplacer le moteur du régulateur de lève-glace électrique (côté conducteur).

Bon ↓

B

VERIFIER L'ENCODEUR
Mesurer la tension entre la borne (16) de l'interrupteur principal de lève-glace électrique et la masse avec un oscilloscope alors que le lève-glace électrique est en position de fermeture automatique.

Mauvais → Remplacer le moteur du régulateur de lève-glace électrique (côté conducteur).

Bon ↓

Remplacer l'interrupteur principal de lève-glace électrique.

Simpo PDF Merge and Split Unregistered Version - http://www.simpopdf.com

Description du système

L'alimentation est permanente
- à travers le raccord à fusible de 30A (Lettre [b], situé dans le raccord à fusible et le boîtier à fusibles)
- vers le rupteur 1 (borne ① du boîtier à fusibles)
- à travers le rupteur 1 (borne ⑦ du boîtier à fusibles)
- à la borne ⑪ de la centrale de commande intelligente.

La masse est fournie à la borne ⑱ de la centrale de commande intelligente à travers les masses de carrosserie (M1) et (M54).

ENTREE

Lorsque le contact de verrou. et déverrou. de porte (interrupteur principal de lève-glace électrique) est sur la position ''LOCKED'' (VERR), le signal de masse est fourni
- à la borne ④ de la centrale de commande intelligente
- à travers la borne ⑭ du contact de verrou. et déverrou. de porte
- à la borne ③ du contact de verrou. et déverrou. de porte
- à travers les masses de carrosserie (M1) et (M54).

Lorsque le contact de verrou. et déverrou. de porte (interrupteur principal de lève-glace) est sur la position ''UNLOCKED'' (DEVERR), le signal de masse est fourni
- à la borne ⑤ de la centrale de commande intelligente
- à travers la borne ⑦ du contact de verrou. et déverrou. de porte
- à la borne ③ du contact de verrou. et déverrou. de porte
- à travers les masses de carrosserie (M1) et (M54).

Le cylindre de clé côté conducteur et le contact du bouton de verrouillage côté conducteur sont connectés au capteur de verrouillage au moyen d'une tige. Quand le contact du bouton de verrouillage est sur la position de contact ''UNLOCKED'' (DEVERR.), le signal de masse est fourni
- à la borne ② de la centrale de commande intelligente
- à travers la borne ② de contact du bouton de verrouillage
- à travers la borne ① de contact du bouton de verrouillage côté conducteur
- à travers les masses de carrosserie (M1) et (M54).

Quand le contact du bouton de verrouillage est sur la position ''LOCKED'' (VERR.), le signal de masse est interrompu.

Le verrouillage de porte fonctionne en fonction des conditions du contact de verrouillage et déverrouillage de porte (interrupteur principal de lève-glace) et du contact de bouton de verrouillage.

SORTIE

Déverrouillage

La masse est fournie
- vers l'actionneur de verrouillage de porte côté passager, vers la borne ① de l'actionneur de verr. des portes arrière gauche et droite (cabine double)
- à travers la borne ⑮ de la centrale de commande intelligente

L'alimentation est fournie
- vers l'actionneur de verrouillage de porte côté passager, vers la borne ② de l'actionneur de verr. des portes arrière gauche et droite (cabine double)
- à travers la borne ⑯ de la centrale de commande intelligente

Les portes sont alors déverrouillées.

Verrouillage

La masse est fournie
- vers l'actionneur de verrouillage de porte côté passager, vers la borne ② de l'actionneur de verr. des portes arrière gauche et droite
- à travers la borne ⑯ de la centrale de commande intelligente

L'alimentation est fournie
- vers l'actionneur de verrouillage de porte côté passager, vers la borne ① de l'actionneur de verr. des portes arrière gauche et droite
- à travers la borne ⑮ de la centrale de commande intelligente

Les portes sont alors verrouillées.

Simpo PDF Merge and Split Unregistered Version - http://www.simpopdf.com

Schéma de câblage — D/LOCK —

EL-D/LOCK-03

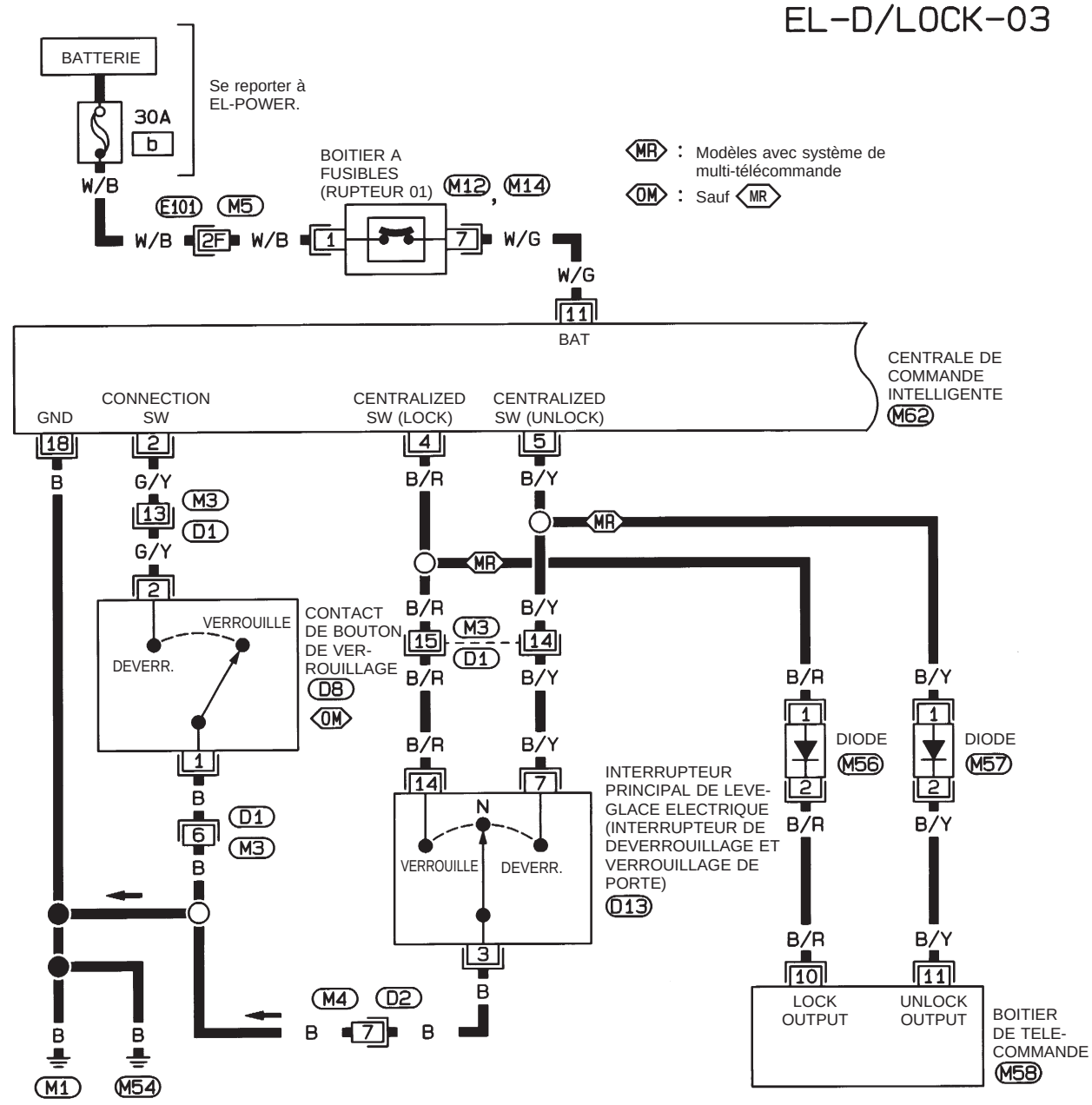

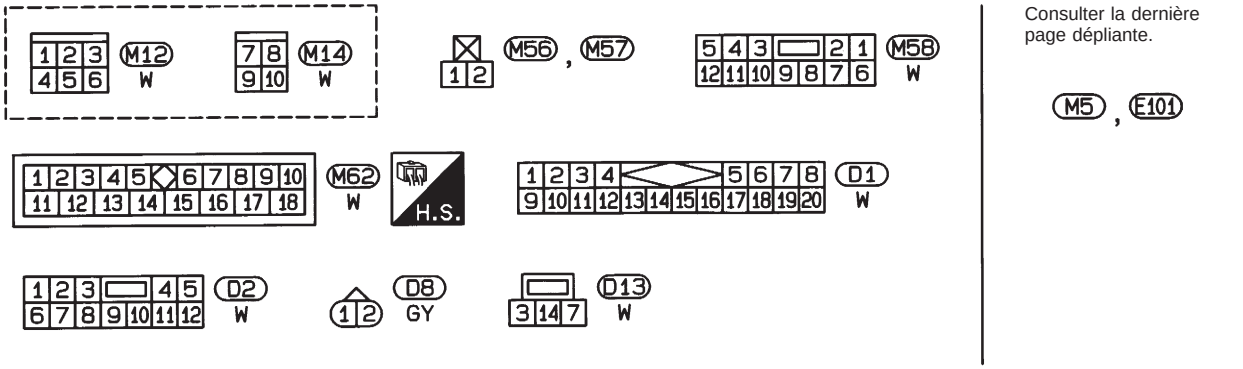

Consulter la dernière page dépliante.

M5, E101

HEL771A

Simpo PDF Merge and Split Unregistered Version - http://www.simpopdf.com

Schéma de câblage — D/LOCK — (suite)

EL-D/LOCK-04

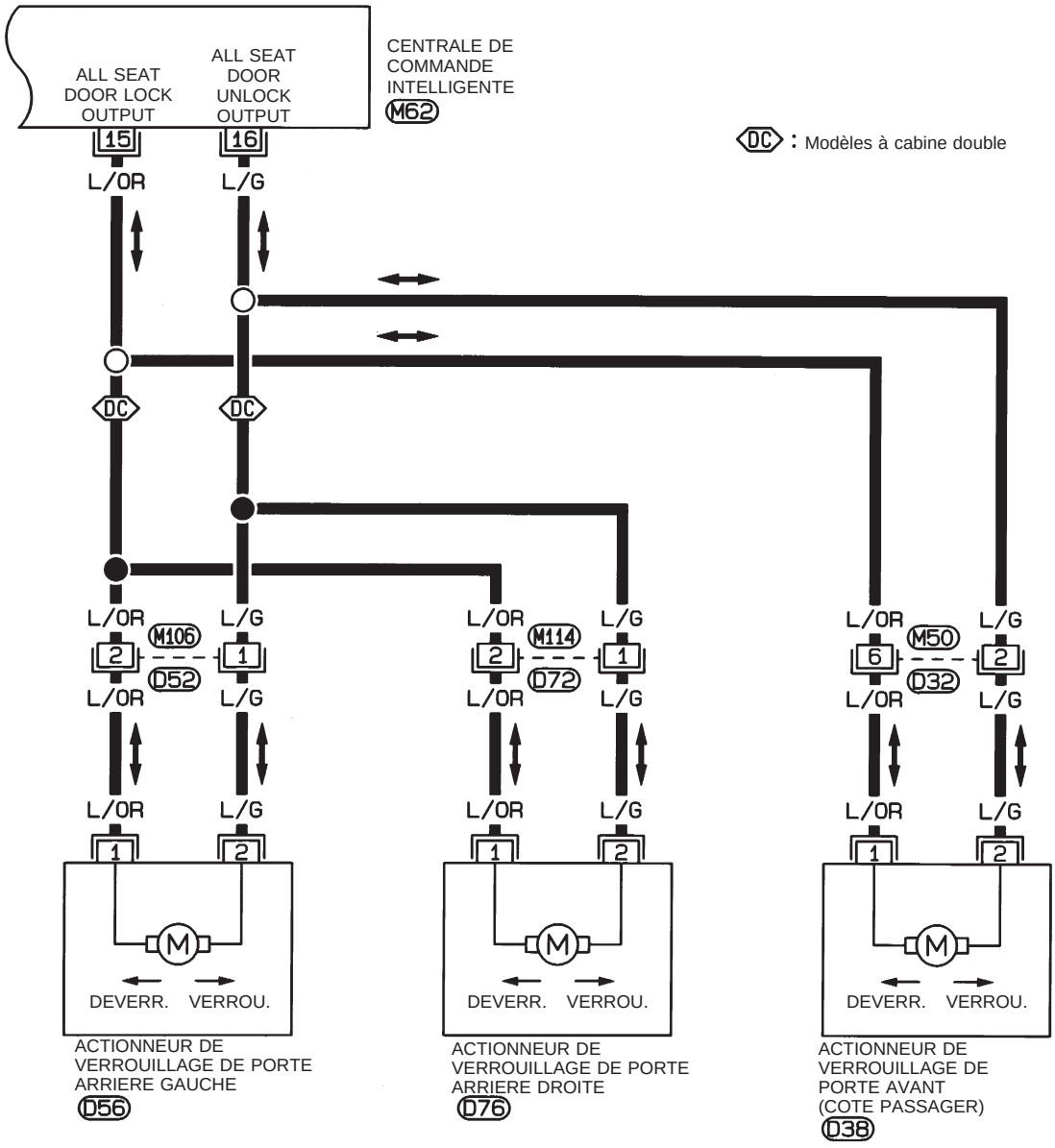

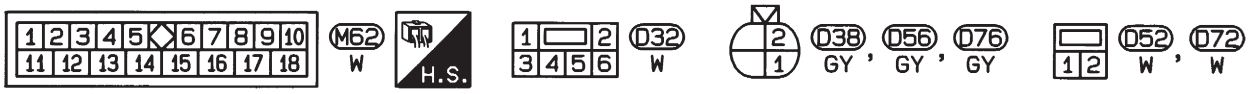

HEL772A

Simpo PDF Merge and Split Unregistered Version - http://www.simpopdf.com

Diagnostic des défauts

ORGANIGRAMME

PAGE DE REFERENCE	EL-2128	EL-2129	EL-2130	EL-2131
SYMPTOME	Vérification des circuits de l'alimentation électrique principale et de mise à la masse	Procédure de diagnostic 1 (vérification de la commande de verrouillage et de déverrouillage de portes)	Procédure de diagnostic 2 (Contrôle de l'actionneur de verrouillage de porte)	Procédure de diagnostic 3 (Vérification du contact du bouton de verrouillage, côté conducteur)
Aucune porte ne peut être verrouillée ou déverrouillée lorsque les commandes sont actionnées.	X		X	
Une porte ou plus n'est pas verrouillée et/ou déverrouillée.			X	
Le contact de verrouillage et de déverrouillage ne fonctionne pas.		X		
Le contact de bouton de verrouillage, côté conducteur, ne fonctionne pas.				X

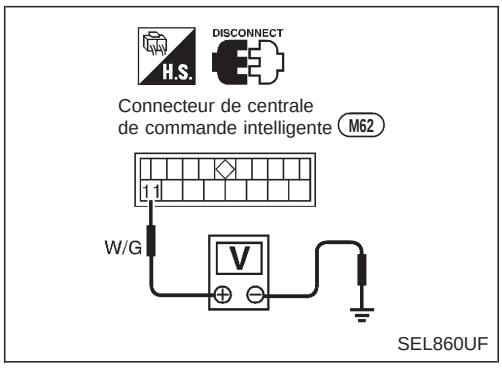

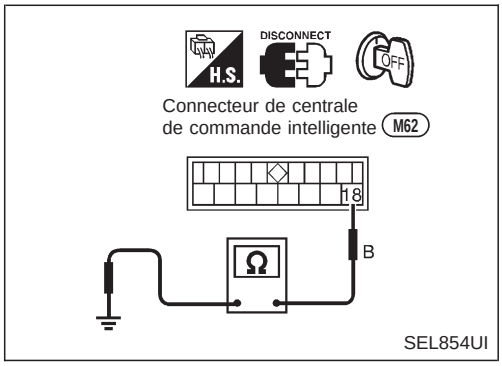

VERIFICATION DES CIRCUITS D'ALIMENTATION ELECTRIQUE PRINCIPALE ET DU CIRCUIT DE MASSE

Alimentation électrique principale de la minuterie de verrouillage de porte

Borne		Contact d'allumage		
⊕	⊖	OFF	ACC	ON
⑪	Masse	Tension de la batterie	Tension de la batterie	Tension de la batterie

Circuit de mise à la masse de la minuterie de verrouillage de porte

Bornes	Il y a continuité
⑱ - Masse	Oui

Simpo PDF Merge and Split Unregistered Version - http://www.simpopdf.com

Diagnostic des défauts (suite)

PROCEDURE DE DIAGNOSTIC 1

(Vérification de la commande de verrouillage et de déverrouillage de portes)

A

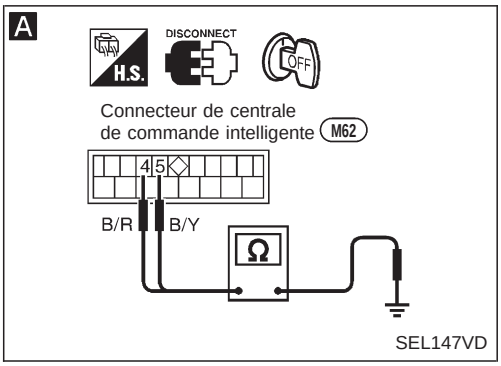

B

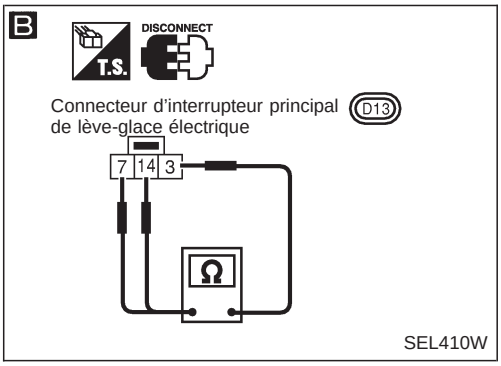

A

VERIFICATION DU SIGNAL D'ENTREE DE LA COMMANDE DE VERROUILLAGE ET DE DEVERROUILLAGE DE PORTES.

1. Débrancher le connecteur de la centrale de commande intelligente.
2. Vérifier la continuité entre la borne ④ ou ⑤ du boîtier de la centrale et la masse.

Bornes	Position du contact de verrouillage et de déverrouillage	Il y a continuité
④ - Masse	Verrou.	Oui
	N et Déverrouillage	Non
⑤ - Masse	Déverrou.	Oui
	N et Verrouillage	Non

Bon → Le contact de verrouillage et de déverrouillage fonctionne correctement.

Mauvais ↓

B

VERIFICATION DE LA COMMANDE DE VERROUILLAGE ET DE DEVERROUILLAGE DE PORTES

1. Débrancher le connecteur de contact de verrouillage et de déverrouillage de porte.
2. Vérifier la continuité entre les bornes de l'interrupteur principal de lève-glace (Contact de verrouillage/ déverrouillage de porte).

Condition	Bornes		
	3	7	14
Verrou.	○	—	○
N	Absence de continuité		
Déverrou.	○	— ○	

Mauvais → Remplacer le contact de verrouillage et déverrouillage de porte.

Bon ↓

Vérifier les points suivants.

- Circuit de mise à la masse pour le contact de verrouillage et de déverrouillage de porte
- Faisceau en circuit ouvert ou court-circuit entre le contact de verrouillage et déverrouillage de porte et le connecteur de la centrale de commande intelligente

Simpo PDF Merge and Split Unregistered Version - http://www.simpopdf.com

Diagnostic des défauts (suite)

PROCEDURE DE DIAGNOSTIC 2

(Contrôle de l'actionneur de verrouillage de porte)

A

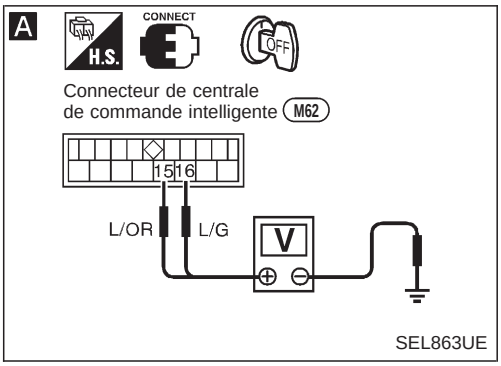

VERIFIER LE CIRCUIT DE L'ACTIONNEUR DE VERROUILLAGE DE PORTE.
Vérifier la tension de l'actionneur de verrouillage de porte.

Position du contact de bouton de verrouillage	Bornes ⊕	Bornes ⊖	Tension V
Verrou.	⑮	Masse	Tension de la batterie
Déverrou.	⑯	Masse	

Mauvais → Remplacer la minuterie de verrouillage des portes. (Avant de remplacer le boîtier de contrôle, effectuer la PROCEDURE DE DIAGNOSTIC 1.)

Bon ↓

B

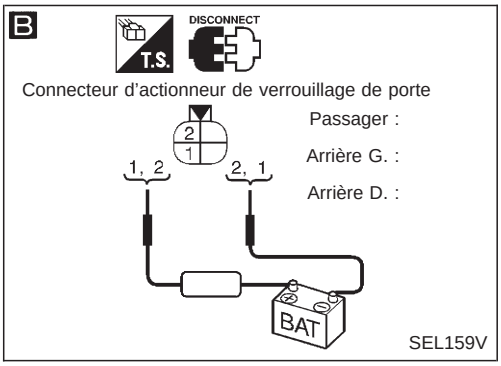

VERIFIER L'ACTIONNEUR DE VERROUILLAGE DE PORTE.
1. Débrancher le connecteur de l'actionneur de verrouillage de porte.
2. Appliquer une tension de 12V sur l'actionneur du dispositif de verrouillage, puis vérifier le fonctionnement.

Fonctionnement de l'actionneur de verrouillage de porte	Bornes ⊕	Bornes ⊖
Déverrou. → Verrou.	①	②
Verrou. → Déverrou.	②	①

Mauvais → Remplacer l'actionneur de verrouillage de porte.

Bon ↓

Réparer le faisceau entre le connecteur de la centrale de commande intelligente et l'actionneur de verrouillage de porte.

Simpo PDF Merge and Split Unregistered Version - http://www.simpopdf.com

Diagnostic des défauts (suite)

PROCEDURE DE DIAGNOSTIC 3

(Vérification du contact du bouton de verrouillage, côté conducteur)

A

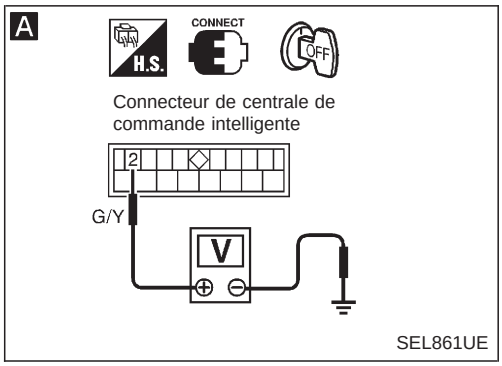

VERIFIER LE SIGNAL D'ENTREE DU CONTACT DU BOUTON DE VERROUILLAGE.
Vérifier la tension entre la borne ② de la centrale de commande intelligente et la masse.

Position du contact de bouton de verrouillage	Tension V
Verrou.	Environ 12
Déverrou.	0

Bon → Le bouton de verrouillage de porte du conducteur fonctionne correctement.

Mauvais ↓

B

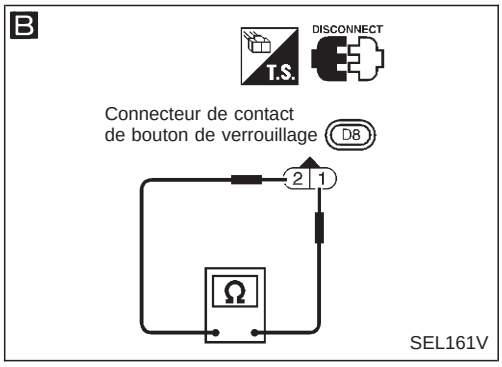

VERIFIER LE CONTACT DU BOUTON DE VERROUILLAGE.
1. Débrancher le connecteur de contact de bouton de verrouillage de porte côté conducteur.
2. Vérifier la continuité des bornes du contact du bouton de verrouillage.

Bornes	Condition	Il y a continuité
① - ②	Verrouillé	Non
	Déverrouillé	Oui

Mauvais → Remplacer le contact de bouton de verrouillage.

Bon ↓

Vérifier les points suivants.
- Circuit de mise à la masse pour le contact de bouton de verrouillage
- Faisceau en circuit ouvert ou court-circuit entre le contact de verrouillage de porte et la centrale de commande intelligente

Simpo PDF Merge and Split Unregistered Version - http://www.simpopdf.com

Description du système

FONCTION

Le système de contrôle de la multi-télécommande est doté des fonctions suivantes.
- Verrouillage de porte
- Déverrouillage de porte
- Rappel de feux de détresse

FONCTIONNEMENT DU VERROUILLAGE

Pour verrouiller la porte à l'aide de la multi-télécommande, il faut que les deux signaux suivants soient reçus.
- Contact de clé sur OFF (quand la clé d'allumage n'est pas dans le cylindre de contact d'allumage).
- Tous les contacts de portes FERMES

Quand le signal de ''LOCK'' (VERR.) est entré dans le boîtier de contrôle de la multi-télécommande (l'antenne du système est combinée avec le boîtier de contrôle de la multi-télécommande), la masse est fournie
- à travers la borne ⑩ de la multi-télécommande
- vers la borne ④ de la centrale de commande intelligente et
- vers la borne ⑥ du relais de verrouillage de porte.

La centrale de commande intelligente fonctionne alors pour verrouiller les portes (sauf celle du conducteur) et le relais de verrouillage de porte est alimenté en courant pour verrouiller la porte du conducteur.

FONCTIONNEMENT DU DEVERROUILLAGE

Pour déverrouiller la porte à l'aide de la multi-télécommande, il faut que les deux signaux suivants soient reçus.
- Contact de clé sur OFF (quand la clé d'allumage n'est pas dans le cylindre de contact d'allumage)

Quand le signal de ''UNLOCK'' (DEVERR.) est entré dans le boîtier de contrôle de la multi-télécommande (l'antenne du système est combinée avec le boîtier de contrôle de la multi-télécommande), la masse est fournie
- à travers la borne ⑪ de la multi-télécommande
- vers la borne ⑤ de la centrale de commande intelligente et
- vers la borne ⑤ du relais de verrouillage de porte.

La centrale de commande intelligente fonctionne alors pour déverrouiller les portes (sauf celle du conducteur) et le relais de verrouillage de porte est alimenté en courant pour déverrouiller la porte du conducteur.

RAPPEL DE FEUX DE DETRESSE

Quand les portes sont verrouillées ou déverrouillées par la multi-télécommande, la masse est fournie
- vers la borne ① du relais 1 et 2 de multi-télécommande
- à travers la borne ⑫ de la multi-télécommande.

Puis les relais sont activés et les feux de détresse clignotent comme suit
- Fonctionnement de verrouillage : clignote une fois
- Fonctionnement du déverrouillage : clignote deux fois

SAISIE DU CODE D'IDENTIFICATION DE LA MULTI-TELECOMMANDE

Un maximum de quatre télécommandes peut être enregistré. Toute tentative pour entrer la télécommande effacera les codes d'identification entrés précédemment. Il faut par conséquent s'assurer que le propriétaire du véhicule a remis toutes les multi-télécommandes lorsqu'une saisie de code d'identification est effectuée. Pour entrer la saisie du code d'identification, il faut que les signaux suivants soient intégrés au boîtier de contrôle de la multitélécommande.
- Signal ''LOCKED'' (FERME) côté conducteur (depuis le capteur de déverrouillage de porte du conducteur)
- Signal ''LOCKED'' (FERME) de contact de porte
- Signal de contact de clé (INSEREE/RETIREE)
- Alimentation électrique des accessoires
- Signal de la multi-télécommande

Pour connaître la procédure détaillée, se reporter à ''Procédure d'entrée du code d'identification'' dans la section EL-2142.

Simpo PDF Merge and Split Unregistered Version - http://www.simpopdf.com

Schéma

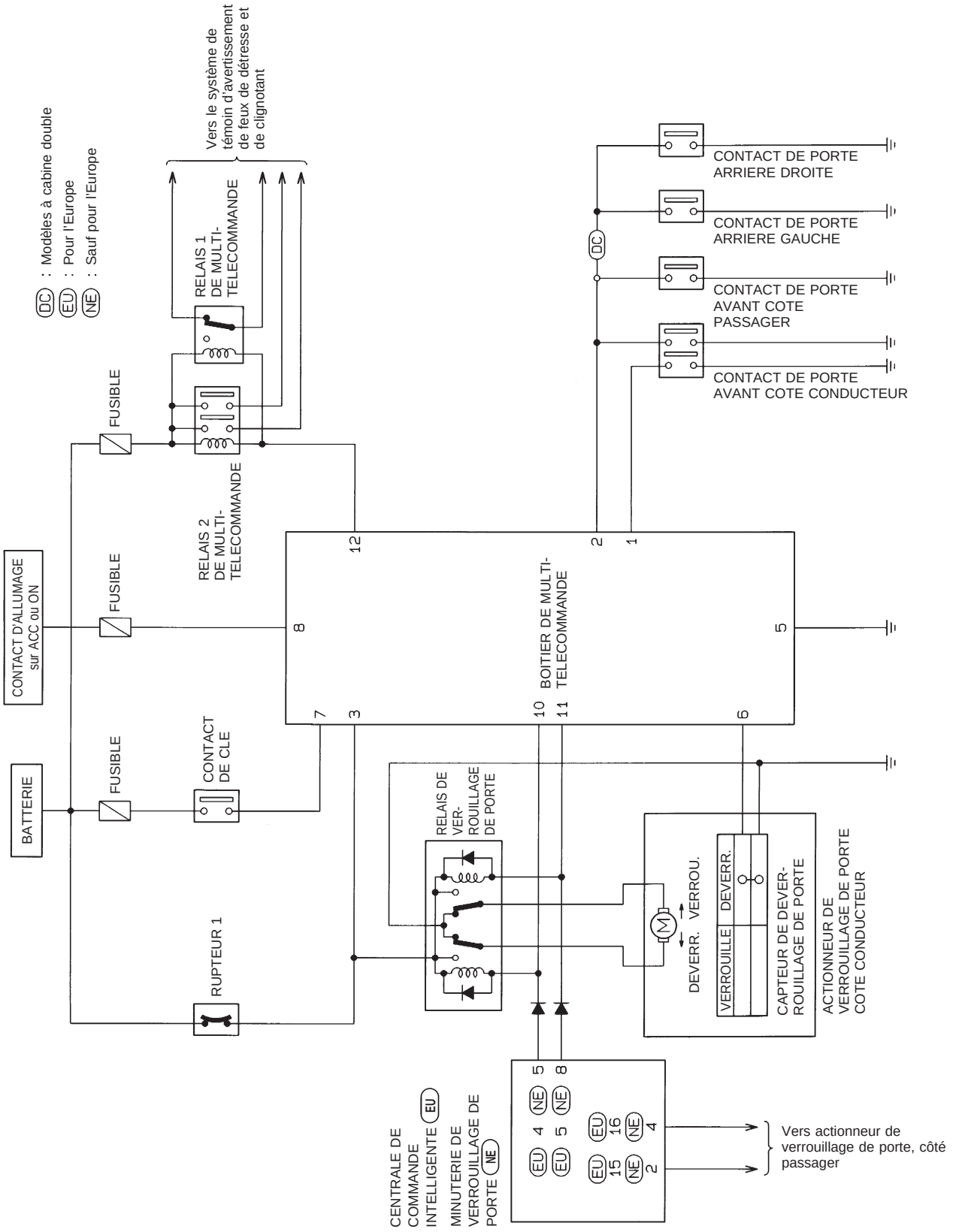

HEL773A

Simpo PDF Merge and Split Unregistered Version - http://www.simpopdf.com

Schéma de câblage — MULTI —

EL-MULTI-01

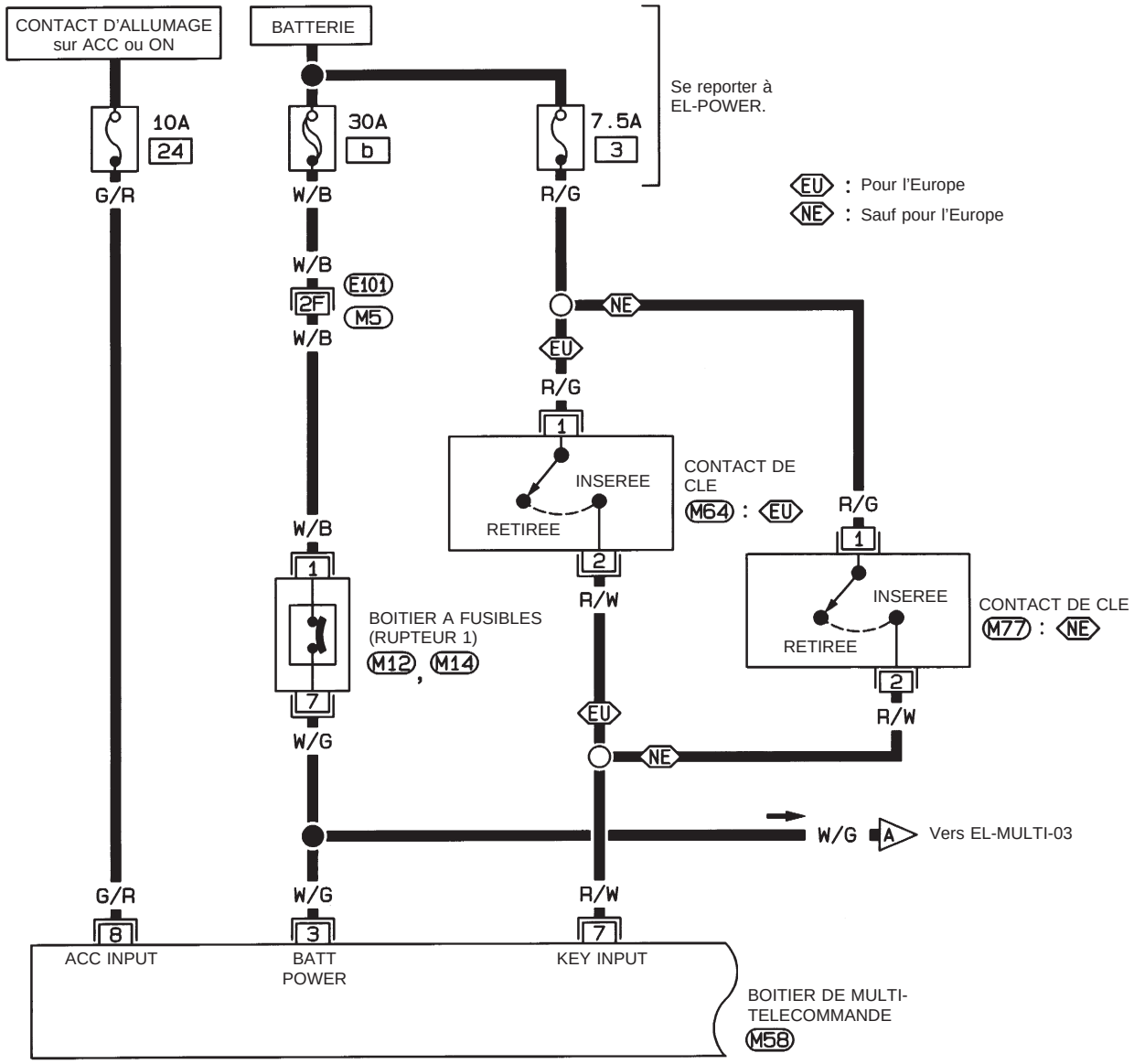

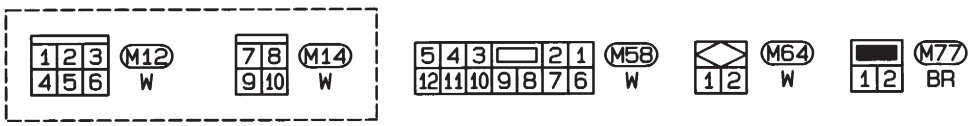

Consulter la dernière page dépliante.

M5, E101

HEL774A

Simpo PDF Merge and Split Unregistered Version - http://www.simpopdf.com

Schéma de câblage — MULTI — (suite)

EL-MULTI-02

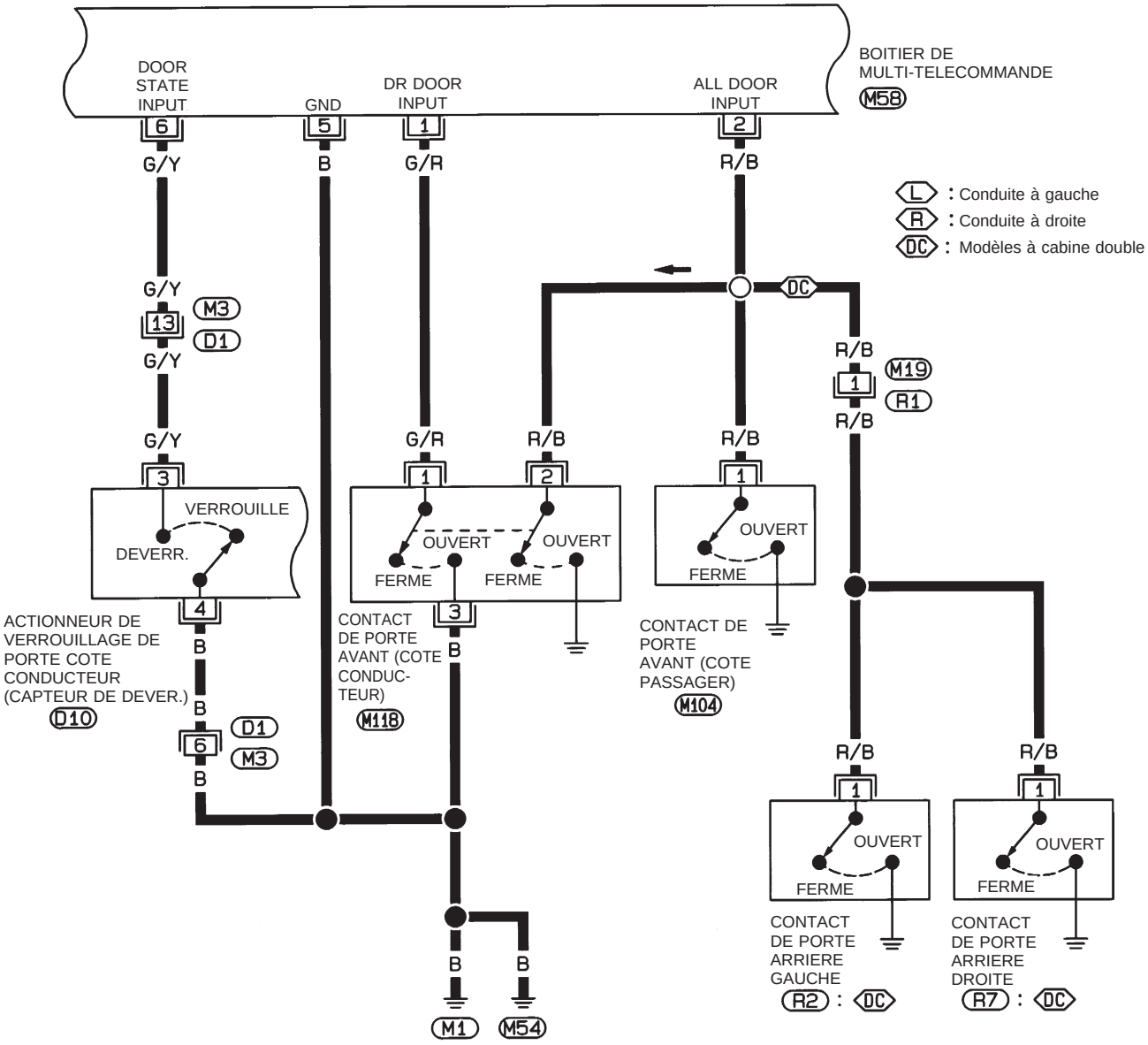





HEL775A

Simpo PDF Merge and Split Unregistered Version - http://www.simpopdf.com

Schéma de câblage — MULTI — (suite)

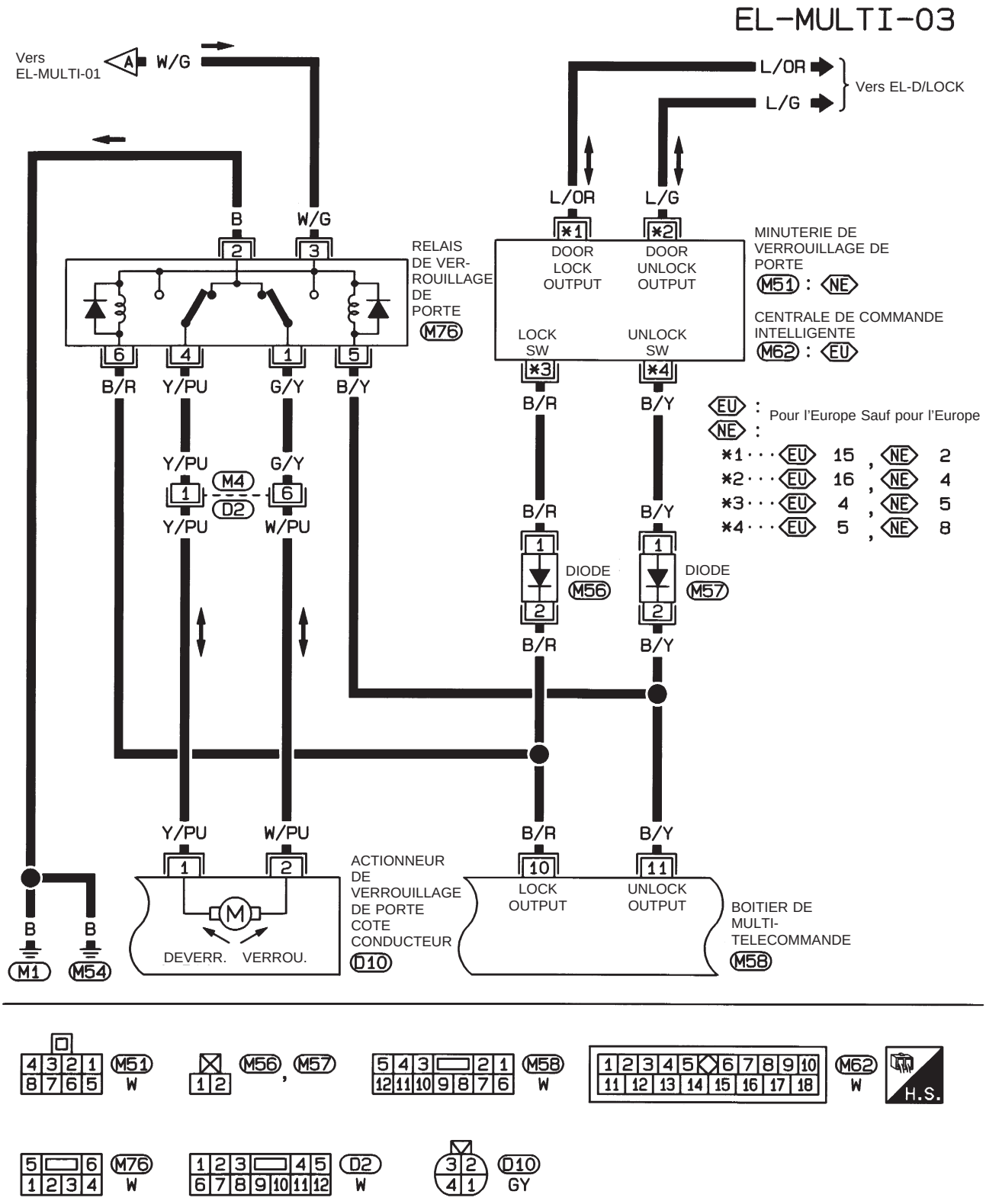

HEL776A

Simpo PDF Merge and Split Unregistered Version - http://www.simpopdf.com

Schéma de câblage — MULTI — (suite)

EL-MULTI-04

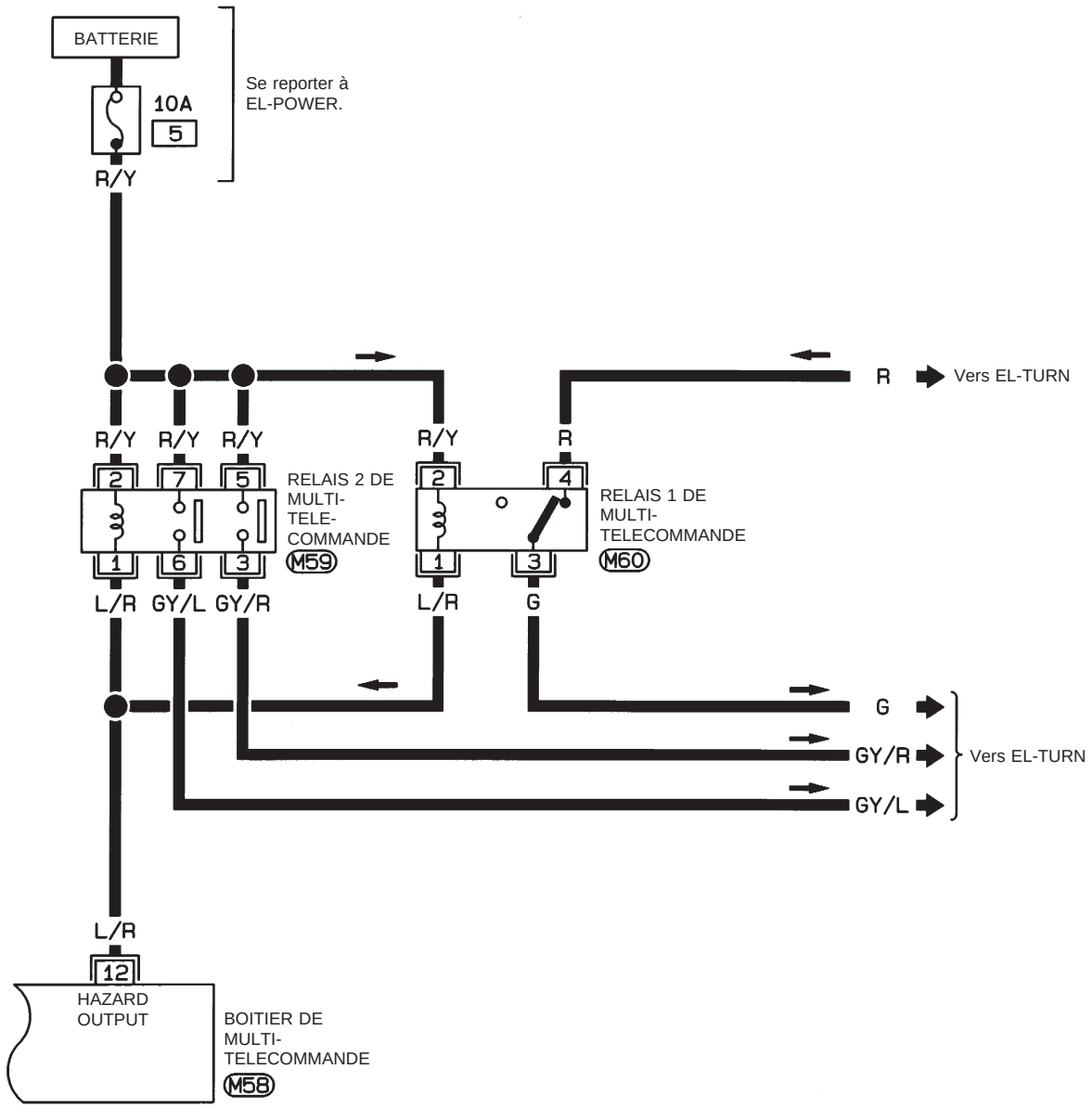

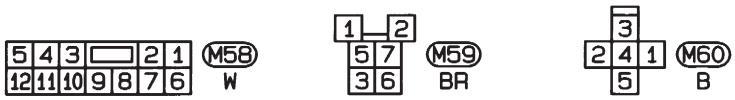

HEL777A

Simpo PDF Merge and Split Unregistered Version - http://www.simpopdf.com

Diagnostics des défauts

ORGANIGRAMME

Symptôme	Cause possible	Diagnostic/procédure d'entretien
Aucune porte ne peut être verrouillée ou déverrouillée par la multi-télécommande. (Voir NOTE).	1. Batterie de la télécommande 2. Contact de clé (insérer) 3. Contact de porte 4. Circuit d'alimentation électrique pour le boîtier de contrôle de la multi-télécommande 5. Circuit de masse du boîtier de contrôle de la multi-télécommande 6. Télécommande	1. Vérifier la pile de la télécommande. Se reporter à EL-2139. 2. Vérifier le signal du contact de clé (insérer) à la borne ⑦ du boîtier de la multi-télécommande. 3. Vérifier le signal du contact de porte aux bornes du boîtier de contrôle de multi-télécommande. 4. S'assurer qu'il y a une tension de la batterie à la borne ③ du boîtier de contrôle de multi-télécommande. 5. Vérifier la continuité entre la borne ⑤ du boîtier de contrôle de multi-télécommande et la masse. 6. Remplacer la multi-télécommande. Se reporter à EL-2142.
La porte du conducteur ne peut pas être verrouillée ou déverrouillée par l'actionnement de la multi-télécommande.	Circuit de l'actionneur de verrouillage de porte du conducteur	Vérifier le circuit de l'actionneur de verrouillage de porte latérale. Se reporter à EL-2140.
Les portes autres que celle du conducteur ne peuvent pas être verrouillées ou déverrouillées par l'actionnement de la multi-télécommande. (Si le système de verrouillage électrique de porte ne fonctionne pas correctement, vérifier le système de verrouillage électrique de porte.)	Signal de verr./déverr. de la centrale de commande intelligente	● Lorsque le verrouillage n'est pas possible : Vérifier la continuité entre la borne ⑩ du boîtier de commande de la multi-télécommande et la borne ④ de la centrale de commande intelligente. ● Quand le déverrouillage n'est pas possible : Vérifier la continuité entre la borne ⑪ du boîtier de commande de la multi-télécommande et la borne ⑤ de la centrale de commande intelligente.
Le rappel de feux de détresse ne fonctionne pas correctement.	1. Fusible de 10A 2. Relais 1 et 2 de la multi-télécommande 3. Circuit du rappel de feux de détresse	1. Vérifier le fusible de 10A (n° 5, situé dans le boîtier à fusibles). 2. Vérifier le relais 1 et 2 de multi-télécommande. 3. Vérifier si le faisceau est ouvert ou en court-circuit entre les relais et la borne ⑫ de la multi-télécommande.
Le nouveau code d'identification de la multi-télécommande ne peut pas être entré.	1. Batterie de la télécommande 2. Contact de clé (insérer) 3. Contact de porte 4. Capteur de déverrouillage de porte côté conducteur 5. Circuit d'alimentation électrique des accessoires du boîtier de contrôle de multi-télécommande 6. Télécommande	1. Vérifier la pile de la télécommande. Se reporter à EL-2139. 2. Vérifier le signal du contact de clé (insérer) à la borne ⑦ du boîtier de la multi-télécommande. 3. Vérifier le signal du contact de porte aux bornes ① et ② du boîtier de contrôle de multi-télécommande. 4. Vérifier le signal de capteur de déverrouillage de porte (côté conducteur) à la borne ⑥ du boîtier de contrôle de la multi-télécommande. 5. S'assurer qu'il y a une tension de la batterie à la borne ⑧ du boîtier de contrôle de multi-télécommande lorsque le contact d'allumage est sur la position ACC. 6. Remplacer la multi-télécommande. Se reporter à EL-2142.

Se reporter au ''TABLEAU D'INSPECTION DU BOITIER DE CONTROLE DE MULTI-TELECOMMANDE'' de la page suivante pour vérifier les signaux du boîtier de contrôle.

NOTE :

- Vérifier toujours la pile de la télécommande avant de remplacer la télécommande.
- Le fonctionnement de déverrouillage de la multi-télécommande ne fonctionne pas lorsque la clé est insérée dans le cylindre.
- Le fonctionnement du verrouillage de la multi-télécommande ne fonctionne pas quand la clé est insérée dans le cylindre ou si l'une des portes est ouverte.

Simpo PDF Merge and Split Unregistered Version - http://www.simpopdf.com

Diagnostics des défauts (suite)

TABLEAU D'INSPECTION DU BOITIER DE CONTROLE DE MULTI-TELECOMMANDE

N° de borne	Connexions	Condition		Tension V (valeurs approximatives)
1	Contact de porte côté conducteur	Porte côté conducteur	Ouverte	0
			Fermée	14
2	Contact de porte (toutes les portes)	L'une des portes est ouverte		0
		Toutes les portes sont fermées		12
3	Alimentation (BATT.)	—		12
5	Masse	—		—
6	Capteur de déverrouillage de porte côté conducteur	Porte côté conducteur	Verrouillée	5
			Déverrouillée	0
7	Contact de clé (insérer)	La clé est dans le cylindre de contact d'allumage		12
		La clé n'est pas dans le cylindre de contact d'allumage		0
8	Alimentation électrique des accessoires	Contact d'allumage	OFF	0
			ACC ou ON	12
10	Signal de verrouillage	Le bouton "LOCK" (VERR.) de la télécommande est enclenché (Toutes les portes sont fermées et la clé ne se trouve pas dans le cylindre de contact d'allumage)		0
		A l'exception des conditions ci-dessus.		12
11	Signal de déverrouillage	Le bouton "UNLOCK" (DEVERR.) de la télécommande est enclenché (la clé n'est pas dans le cylindre de contact d'allumage).		0
		A l'exception des conditions ci-dessus.		12
12	Relais 1, 2 de la multi-télécommande	Le bouton "LOCK/UNLOCK" (VERR./DEVERR.) de la télécommande est enclenché (Toutes les portes sont fermées et la clé ne se trouve pas dans le cylindre de contact d'allumage)		0
		A l'exception des conditions ci-dessus.		12

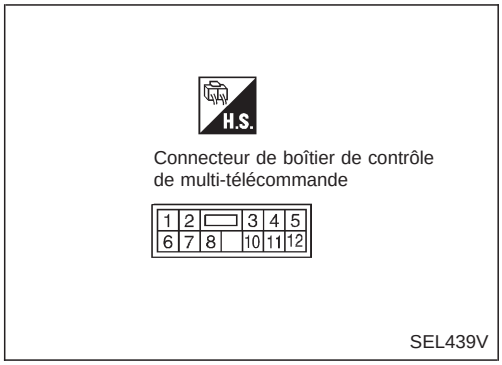

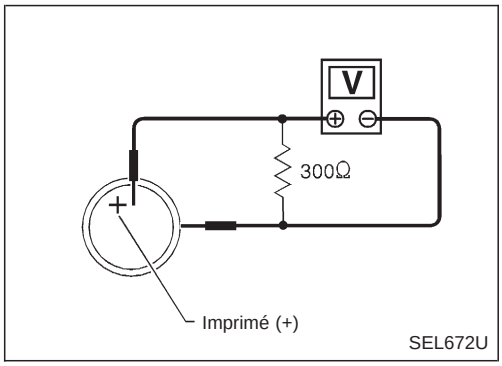

VERIFICATION DE LA PILE DE LA MULTI-TELECOMMANDE

Déposer la pile et mesurer la tension à travers les bornes positive et negative de la pile, ⊕ et ⊖.

Mesure aux bornes		Valeur (tension) standard
⊕	⊖	
Borne positive de la pile ⊕	Borne négative ⊖ de la pile	2,5 - 3,0V

Remarque :
La télécommande ne fonctionne pas si la pile n'est pas correctement installée.

Simpo PDF Merge and Split Unregistered Version - http://www.simpopdf.com

Diagnostics des défauts (suite)

VERIFICATION DE L'ACTIONNEUR DE VERROUILLAGE DE PORTE COTE CONDUCTEUR

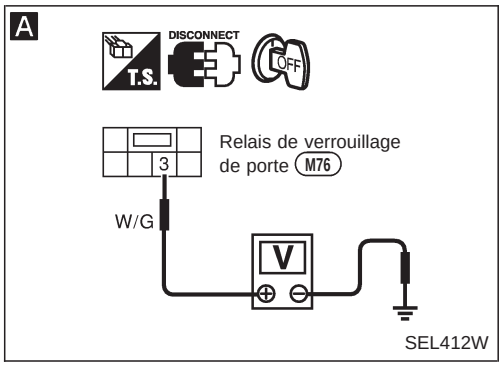

CONTROLER LE RELAIS DE VERROUILLAGE DE PORTE.
Se reporter à EL-2141.

Mauvais → Remplacer le relais.

Bon ↓

A

VERIFIER L'ALIMENTATION ELECTRIQUE DU RELAIS DE VERROUILLAGE DE PORTE.
Vérifier la tension entre la borne ③ du relais de verrouillage de porte et la masse.
La tension de la batterie devrait être présente.

Mauvais → Vérifier les points suivants.
- le raccord à fusible de 30A (lettre b, situé dans le raccord à fusible et la boîte à fusibles) (n° 3, situé dans le raccord à fusible et la boîte de raccord à fusible).
- Vérifier si le faisceau est ouvert ou en court-circuit entre le raccord à fusible et le relais.

Bon ↓

B

VERIFIER LE CIRCUIT DE MISE A LA MASSE DU RELAIS DE VERROUILLAGE DE PORTE.
Vérifier la continuité entre la borne ② du relais de verrouillage de porte et la masse.
Il doit y avoir continuité.

Mauvais → Réparer le faisceau.

Bon ↓

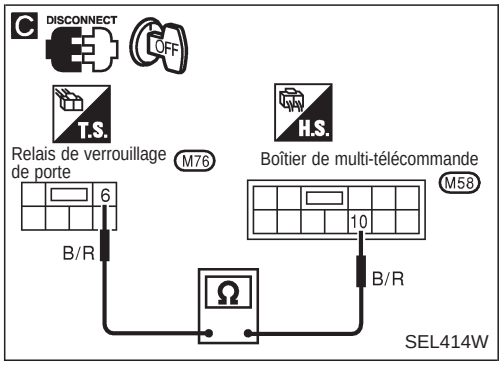

C

VERIFIER LE SIGNAL DE VERROUILLAGE DU RELAIS DE VERROUILLAGE DE PORTE.
Vérifier la continuité entre la borne ⑥ du relais de verrouillage de porte et la borne ⑩ du boîtier de contrôle de la multi-télécommande.
Il doit y avoir continuité.

Mauvais → Vérifier si le faisceau est ouvert ou en court-circuit entre le relais de verrouillage de porte et la multitélécommande.

Bon ↓

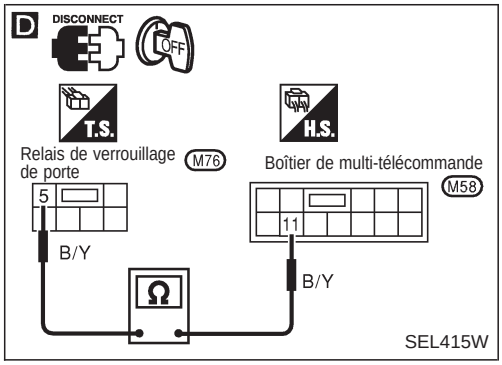

D

VERIFIER LE SIGNAL DE DEVERROUILLAGE DU RELAIS DE VERROUILLAGE DE PORTE.
Vérifier la continuité entre la borne ⑤ du relais de verrouillage de porte et la borne ⑪ du boîtier de contrôle de la multi-télécommande.
Il doit y avoir continuité.

Mauvais → Vérifier si le faisceau est ouvert ou en court-circuit entre le relais de verrouillage de porte et la multitélécommande.

Bon ↓

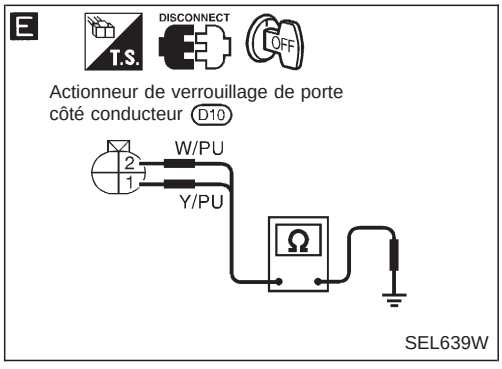

E

VERIFIER LE CIRCUIT DE LA COMMANDE DE VERROUILLAGE DE PORTE.
1. Brancher les relais.
2. Débrancher le connecteur de verrouillage de porte côté conducteur.
3. Vérifier la continuité entre l'actionneur de verrouillage de porte du conducteur et le relais de verrouillage de porte.
Il doit y avoir continuité.

Mauvais → Vérifier si le faisceau est ouvert ou en court-circuit entre le relais de verrouillage de porte et l'actionneur de verrouillage de porte.

Bon ↓

Remplacer l'actionneur de verrouillage de porte.

Simpo PDF Merge and Split Unregistered Version - http://www.simpopdf.com

Diagnostics des défauts (suite)

CONTROLE DU RELAIS DE VERROUILLAGE DE PORTE

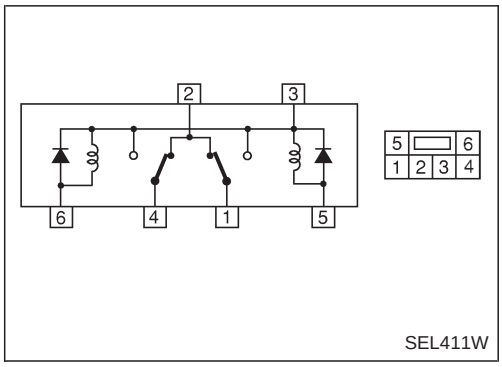

Condition		Continuité entre les bornes					
		1	2	3	4	5	6
Il n'y a pas tension de la batterie entre chaque borne.	③ et ⑤	○	○				
	③ et ⑥		○		○		
Il y a tension de la batterie entre chaque borne.	③ et ⑤	○		○			
	③ et ⑥			○	○		
Toujours				○		○	○

PRECAUTION :
Tout en appliquant une tension de la batterie aux bornes du relais, introduire le fusible dans le circuit.

Simpo PDF Merge and Split Unregistered Version - http://www.simpopdf.com

Procédure d’entrée du code d’identification

Remarque :
Un maximum de quatre télécommandes peut être entré. Toute tentative pour entrer la télécommande effacera les codes d’identification entrés précédemment. Il faut par conséquent s’assurer que le propriétaire du véhicule a remis toutes les multi-télécommandes lorsqu’une saisie de code d’identification est effectuée.

Entrer le code d’identification (ID) manuellement lorsque :
- la multi-télécommande ou le boîtier de contrôle est remplacé.
- une multi-télécommande supplémentaire est activée.

Pour entrer le code d’identification, suivre les procédures ci-dessous.

PROCEDURE

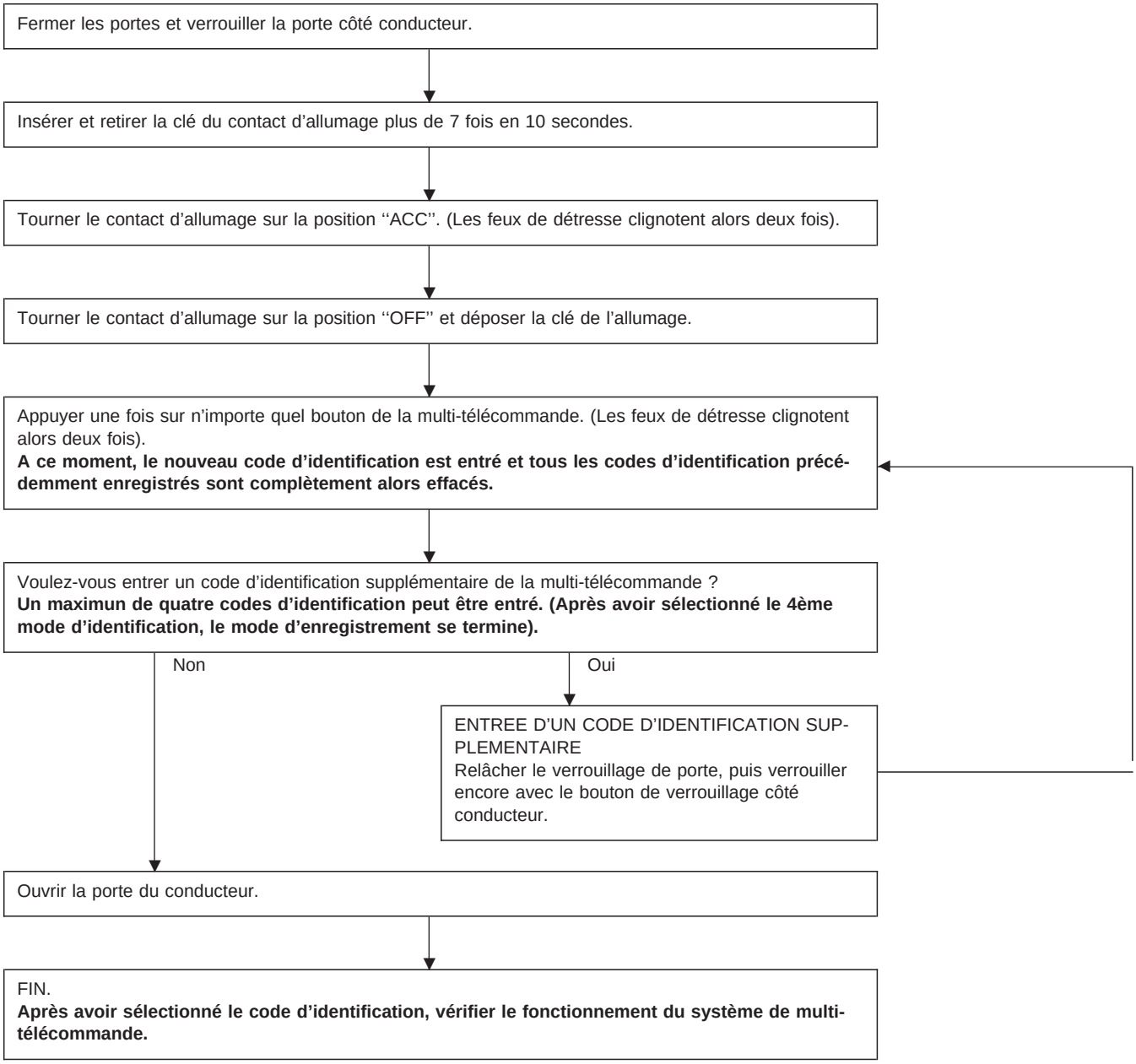

NOTE :
- **S’il est nécessaire d’activer plus de deux nouvelles télécommandes, répéter la ‘‘Procédure d’entrée de code d’identification supplémentaire’’ pour chaque nouvelle télécommande.**
- **Tout code d’identification entré après la désactivation du mode de ‘‘programmation’’ ne sera pas accepté.**

Simpo PDF Merge and Split Unregistered Version - http://www.simpopdf.com

Schéma de câblage — NATS —

EL-NATS-01

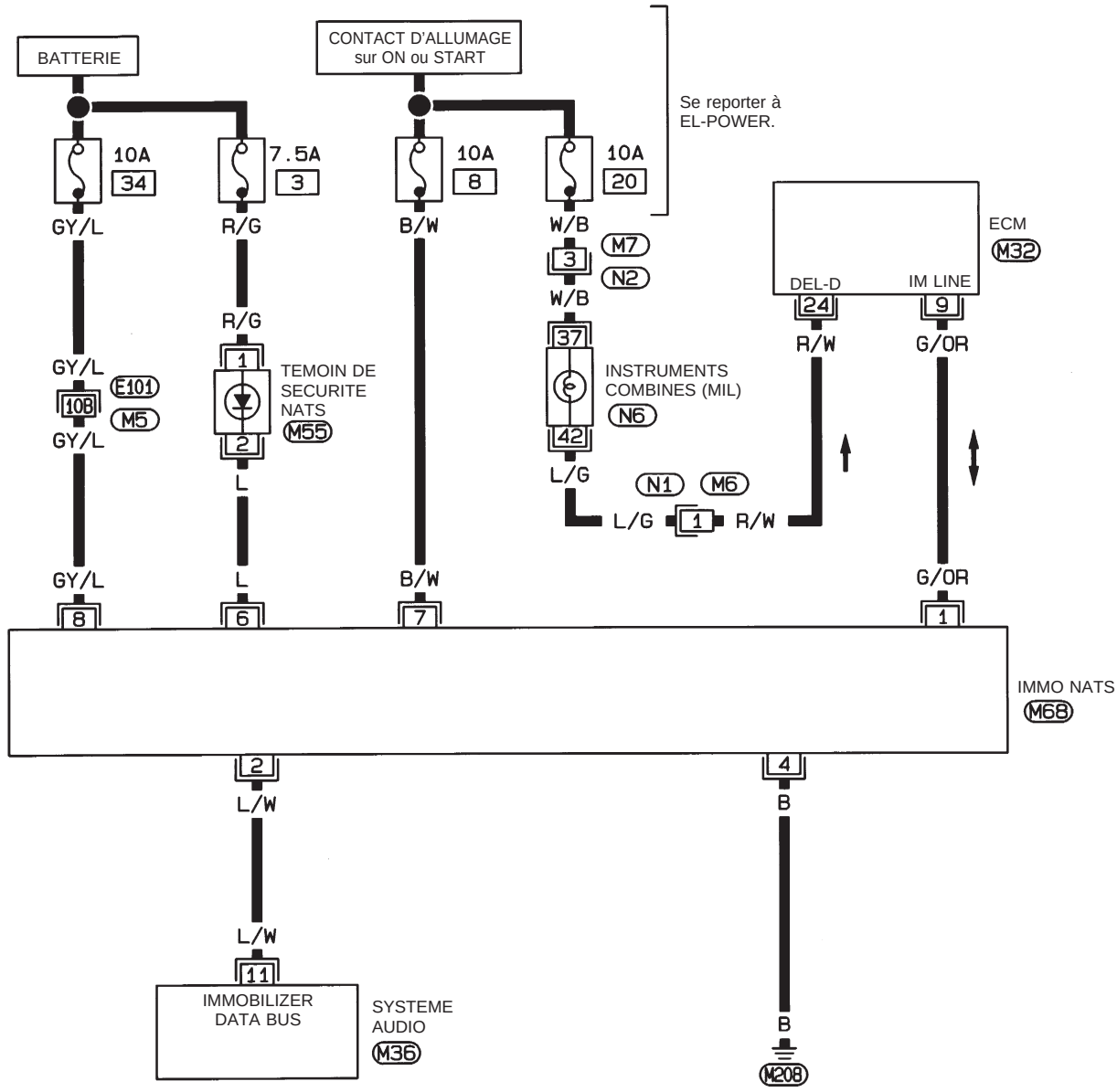











Consulter la dernière page dépliante.

M5, E101
M32

HEL778A

Simpo PDF Merge and Split Unregistered Version - http://www.simpopdf.com

Schéma de câblage — NATS —/Conduite à gauche

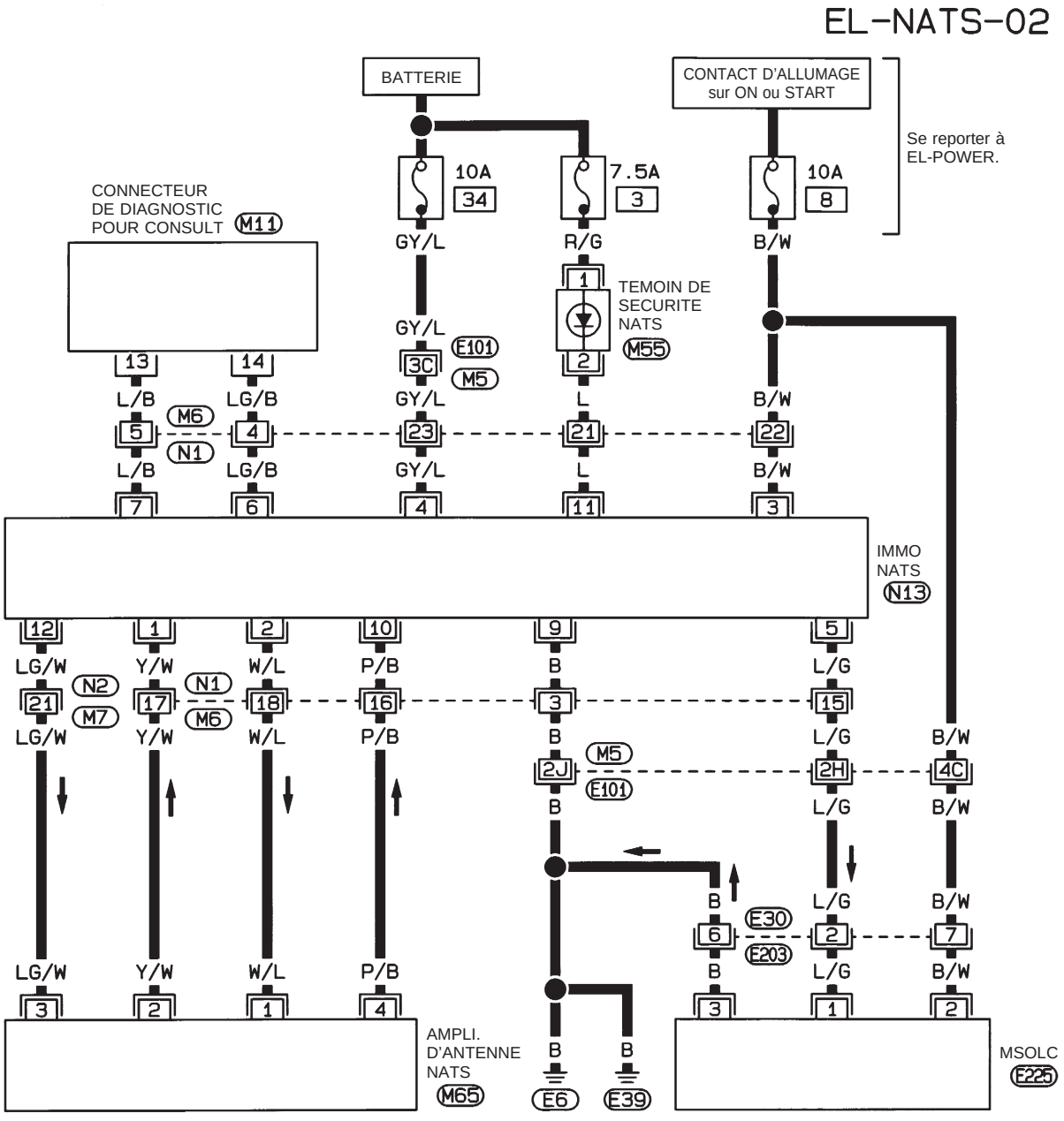

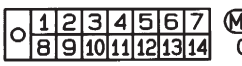
M11 GY


M55 W


M65 W


N1 W

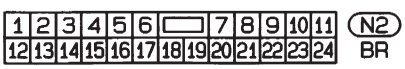
N2 BR


N13 W

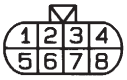
E203 B


E225 B

Consulter la dernière page dépliante.

M5, E101

HEL779A

Simpo PDF Merge and Split Unregistered Version - http://www.simpopdf.com

Schéma de câblage — NATS —/Conduite à droite

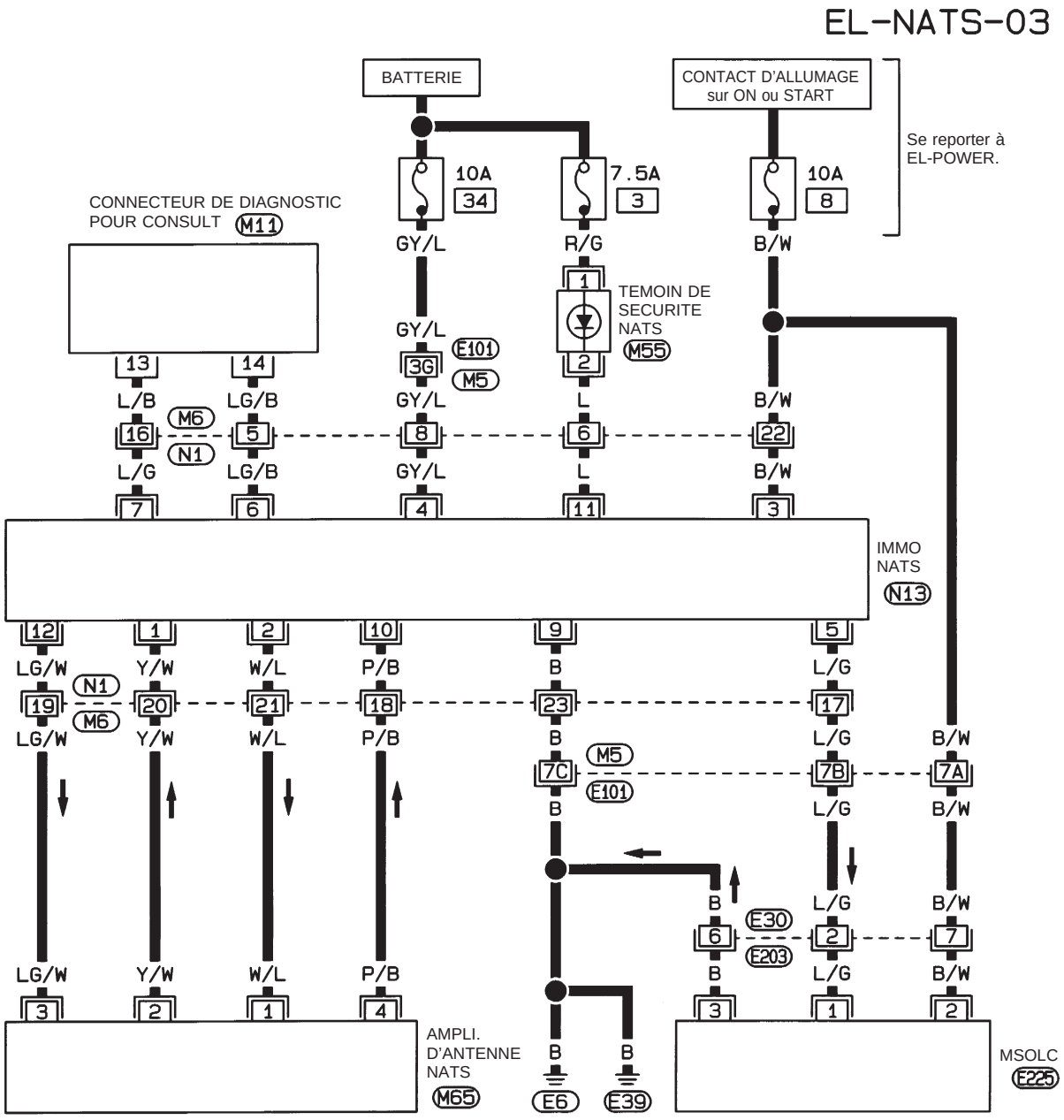







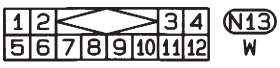



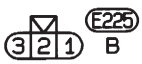

Consulter la dernière page dépliante.

M5, E101

HEL780A

Simpo PDF Merge and Split Unregistered Version - http://www.simpopdf.com

Compartiment moteur

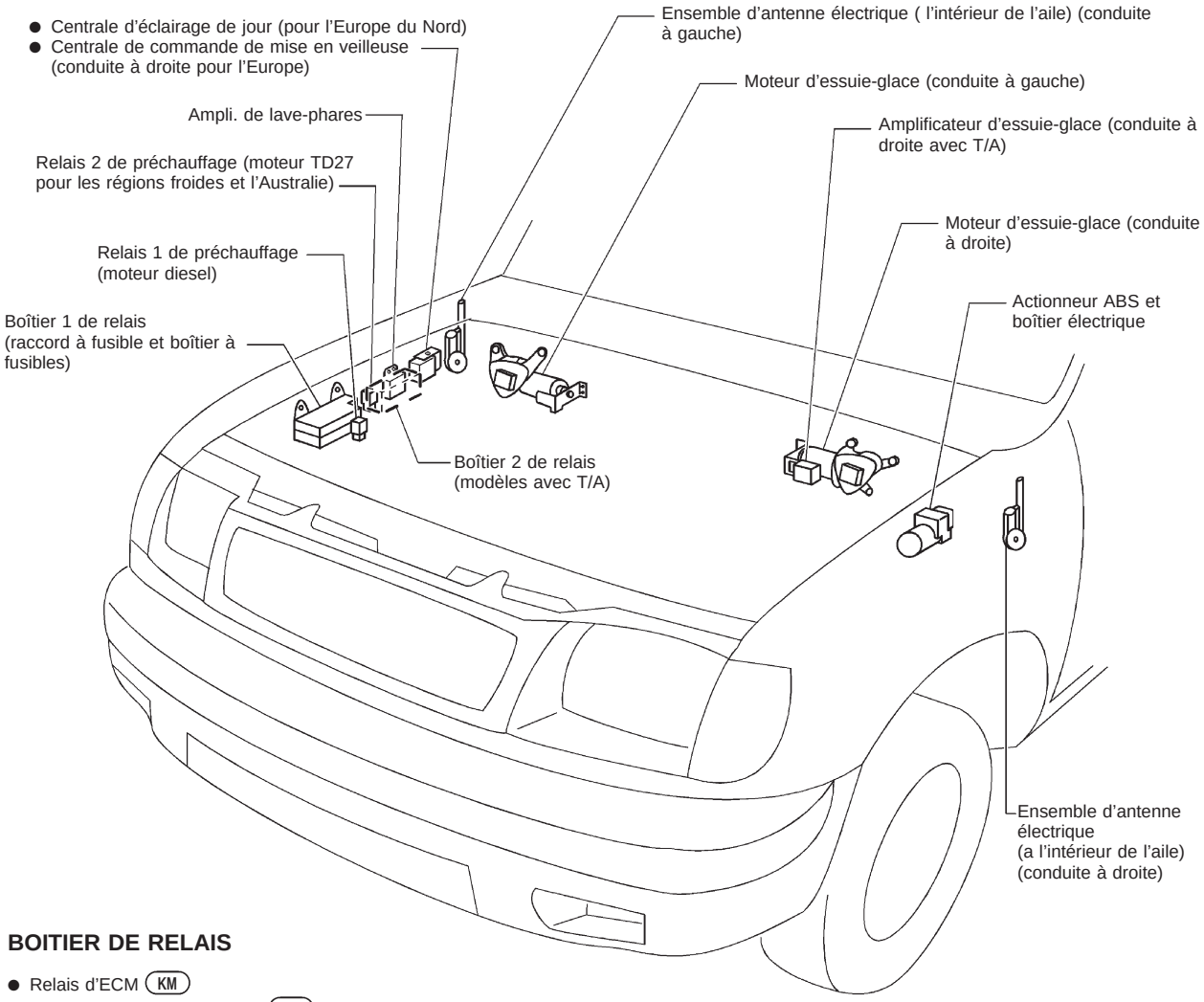

BOITIER DE RELAIS

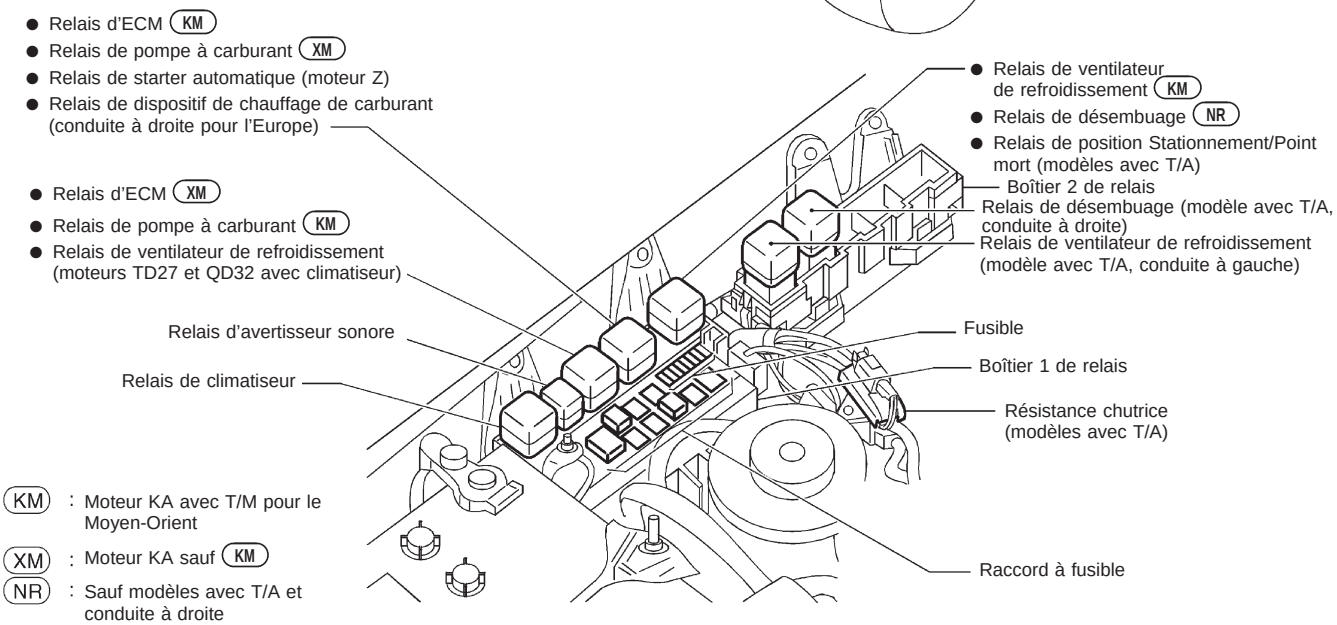

(KM) : Moteur KA avec T/M pour le Moyen-Orient
(XM) : Moteur KA sauf (KM)
(NR) : Sauf modèles avec T/A et conduite à droite

HEL783A

Simpo PDF Merge and Split Unregistered Version - http://www.simpopdf.com

Compartiment passager

CONDUITE A GAUCHE

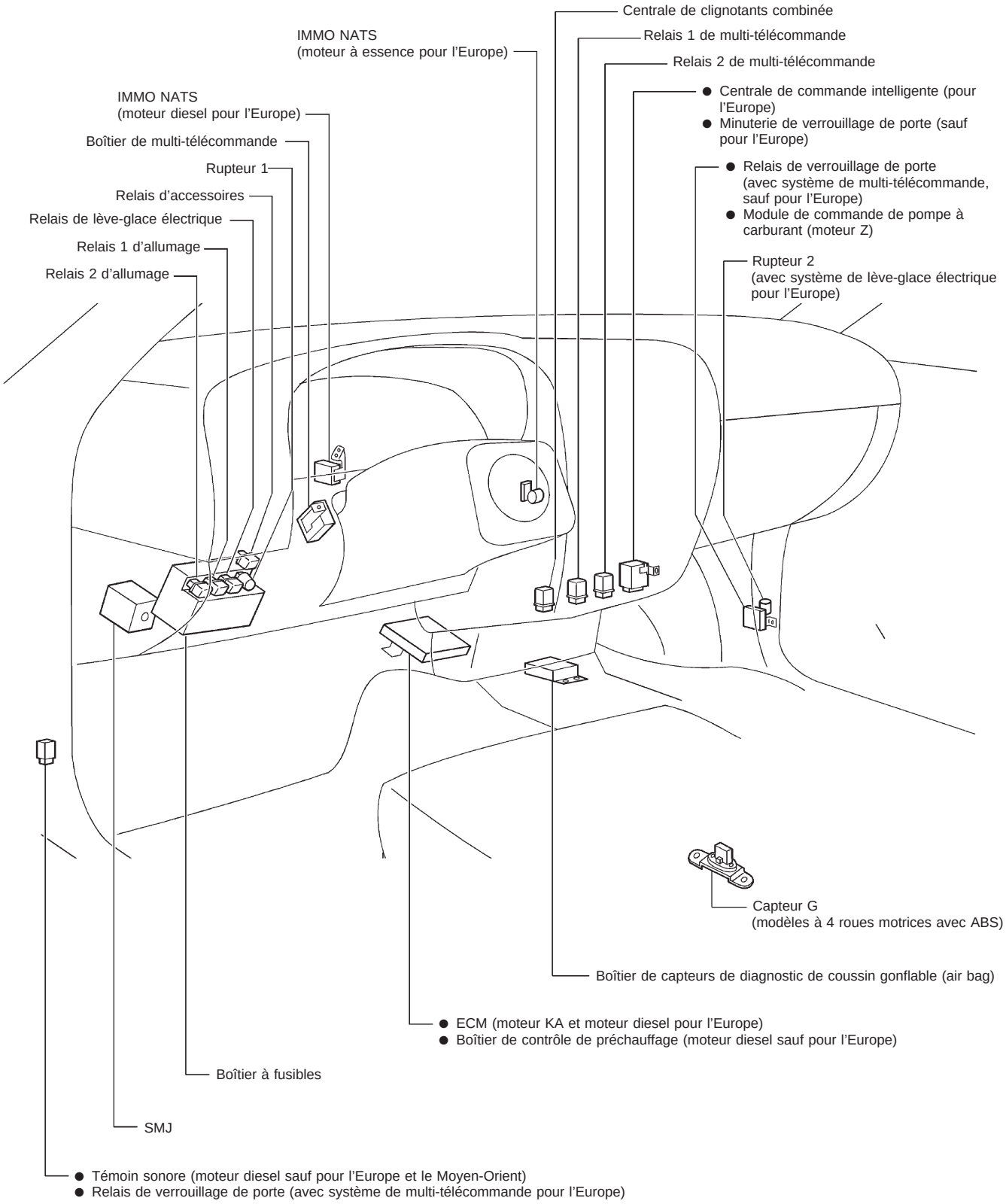

HEL784A

Simpo PDF Merge and Split Unregistered Version - http://www.simpopdf.com

Compartiment passager (suite)

CONDUITE A DROITE

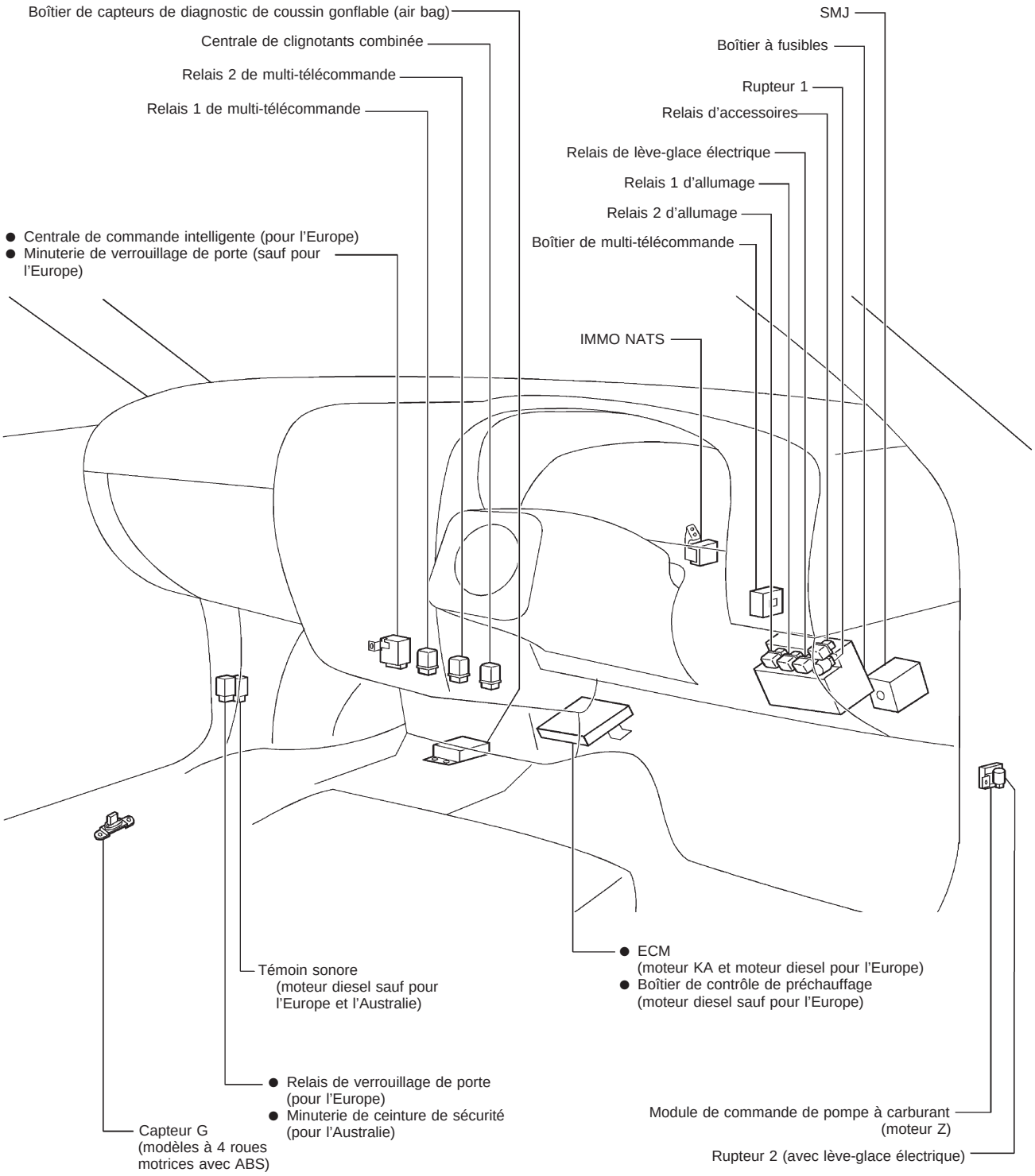

HEL785A

Simpo PDF Merge and Split Unregistered Version - http://www.simpopdf.com

Faisceau principal

TABLEAU DE BORD — CONDUITE A GAUCHE

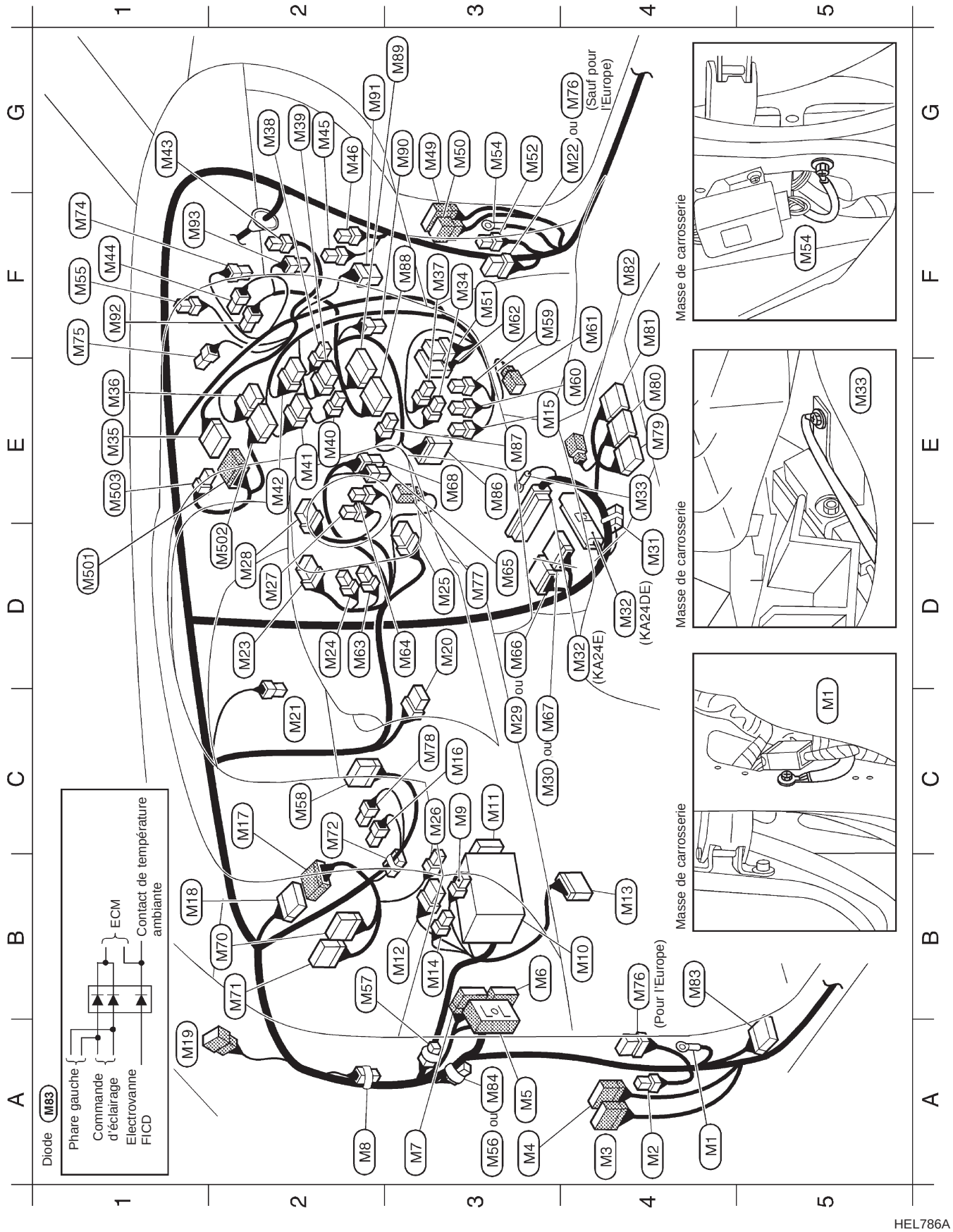

HEL786A

Simpo PDF Merge and Split Unregistered Version - http://www.simpopdf.com

Faisceau principal (suite)

A4 (M1) — : Masse de carrosserie
A4 (M2) W/2 : Témoin sonore (moteur diesel sauf pour l'Europe et le Moyen-Orient)
A4 (M3) W/20 : Vers (D1)
A3 (M4) W/12 : Vers (D2) (avec lève-glace électrique)
A3 (M5) SMJ : Vers (E101)
B3 (M6) W/24 : Vers (N1)
A3 (M7) : Vers (N2)
A2 (M8) –/2 : Diode (moteur diesel sauf pour l'Europe et le Moyen-Orient)
C3 (M9) L/4 : Relais d'accessoires
B4 (M10) — : Boîtier à fusibles
C3 (M11) GY/14 : Connecteur de diagnostic pour CONSULT (avec coussin gonflable, ABS ou ECM)
B3 (M12) W/6 : Boîtier à fusibles
B4 (M13) B/10 : Connecteur de contrôle (Z24S)
B3 (M14) W/4 : Boîtier à fusibles
E3 (M15) B/3 : Centrale de clignotants combinée
C3 (M16) B/2 : Contact de feu de stop
C2 (M17) W/16 : Vers (M18) (avec coussin gonflable)
B1 (M18) W/16 : Vers (M17) (avec coussin gonflable)
A1 (M19) W/6 : Vers (R1)
D3 (M20) W/6 : Contact d'allumage
C2 (M21) W/1 : Contact de frein de stationnement (type à manche)
G4 (M22) W6 : Module de commande de pompe à carburant (Z24S)
D2 (M23) BR/8 : Commande d'éclairage
● Commande de clignotants
D2 (M24) BR/4 : Commande d'éclairage
D3 (M25) Y/7 : Câble spiralé (avec coussin gonflable)
C3 (M26) L/2 : Contact "A/T check" (modèles avec T/A)
D2 (M27) B/1 : Commande d'avertisseur sonore (sans coussin gonflable)
D2 (M28) GY/8 : Commande de l'essuie-glace et lave-glace
C3 (M29) W/12 : Boîtier de contrôle de préchauffage (moteur TD27 sauf pour les régions froides et moteur QD)
C3 (M30) W/16 : Boîtier de contrôle de préchauffage (moteur TD 27 pour les régions froides)
D4 (M31) GY/6 : Connecteur 1 de raccord (moteur KA)
D4 (M32) W/64 : ECM (KA24E)
W/48 : ECM (KA24DE)
E4 (M33) — : Masse de carrosserie (KA24E)
F3 (M34) W/2 : Eclairage de cendrier (catégories S-GL et GL pour le Moyen-Orient)
E1 (M35) W/10 : Système audio
E1 (M36) W/6 : Système audio (KA24E et radio avec 4-haut-parleurs)

F3 (M37) B/2 : Allume-cigare
G2 (M38) W/3 : Interrupteur de climatiseur (sans C/A automatique)
G2 (M39) W/6 : Commutateur de ventilateur (sans C/A automatique)
E2 (M40) W/2 : Eclairage d'interrupteur de ventilateur (sans C/A automatique)
E2 (M41) W/8 : Interrupteur de feux de détresse
E2 (M42) W/6 : Interrupteur de désembuage (pour l'Europe et catégorie SE avec moteur diesel)
G1 (M43) Y/2 : Module de coussin gonflable, côté passager
F1 (M44) BR/4 : Amplificateur de commande thermique
G2 (M45) BR/4 : Résistance du ventilateur (sans C/A automatique)
G2 (M46) W/2 : Moteur de soufflerie
G3 (M49) W/20 : Vers (D31)
G3 (M50) W/6 : Vers (D32) (avec lève-glace électrique)
F3 (M51) W/8 : Minuterie de verrouillage de porte (avec système de lève-glace électrique pour l'Europe)
G3 (M52) W/2 : Rupteur 2 (pour l'Europe)
G3 (M54) — : Masse de carrosserie
F1 (M55) W/2 : Témoin de sécurité NATS (pour l'Europe)
A3 (M56) –/2 : Diode (*1)
B2 (M57) –/2 : Diode (*1)
C2 (M58) W/12 : Boîtier de multi-télécommande (*)
F3 (M59) BR/6 : Relais 2 de multi-télécommande (*1)
F4 (M60) B/5 : Relais 1 de multi-télécommande (*1)
F4 (M61) B/2 : Connecteur volant (*1)
F3 (M62) W/18 : Centrale de commande intelligente (pour l'Europe)
D2 (M63) W/3 : Interrupteur de feu antibrouillard arrière (pour l'Europe et la Chine)
D3 (M64) W/2 : Contact de clé (pour l'Europe sauf cabine simple)
D3 (M65) W/4 : Ampli. d'antenne NATS (moteur diesel pour l'Europe)
D3 (M66) GY/20 : ECM (moteur diesel pour l'Europe)
C3 (M67) GY/16 : ECM (moteur diesel pour l'Europe)
E3 (M68) W/8 : IMMO NATS (KA24E)
B2 (M70) W/24 : TCM (module de commande de transmission) (modèles avec T/A)
B2 (M71) GY/24 : TCM (module de commande de transmission) (modèles avec T/A)
C2 (M72) –/6 : Connecteur 2 de raccord (modèles avec T/A)
F1 (M74) W/2 : Capteur de température d'air d'admission (avec C/A automatique)
F1 (M75) B/2 : Capteur d'ensoleillement (avec C/A automatique)

B4•G4 (M76) W/6 : Relais de verrouillage de porte (*1)
D3 (M77) BR/2 : Contact de clé (pour la Turquie)
C3 (M78) L/2 : Contact de frein de verrouillage de passage (modèles avec T/A)
E4 (M79) Y/12 : Boîtier de capteurs de diagnostic de coussin gonflable (air bag) (avec prétensionneur de ceinture de sécurité)
E4 (M80) Y/20 : Boîtier de capteurs de diagnostic de coussin gonflable (air bag)
F4 (M81) Y/12 : Boîtier de capteurs de diagnostic de coussin gonflable (air bag) (avec prétensionneur de ceinture de sécurité)
F4 (M82) W/2 : Connecteur volant (avec prétensionneur de ceinture de sécurité)
B4 (M83) L/10 : Diode (KA24DE)
A3 (M84) BR/2 : Résistance (modèles avec T/A)
E3 (M86) BR/10 : Moteur de volet de mode (avec C/A automatique)
E3 (M87) W/2 : Capteur d'habitacle (avec C/A automatique)
F3 (M88) GY/20 : Ampli. automatique de C/A (avec C/A automatique)
G3 (M89) GY/4 : Ampli. automatique de C/A (avec C/A automatique)
G3 (M90) L/2 : Moteur d'aspiration (avec C/A automatique)
G2 (M91) B/6 : Moteur de volet de mélange d'air (avec C/A automatique)
F1 (M92) W/4 : Ampli. de commande de ventilateur (avec C/A automatique)
F1 (M93) W/4 : Moteur de volet d'admission (avec C/A automatique)

Faisceau auxiliaire

D1 (M501) W/10 : Vers (M35)
D2 (M502) W/10 : Système audio
E1 (M503) W/4 : Lecteur de disque CD

Diode (M8)

Témoin d'avertissement FILTER — Contact de filtre à carburant, Témoin sonore

Diode (M56), (M57)

Contact de verrouillage et de déverrouillage — *2 — (M56) — Relais de verrouillage de porte, Boîtier de multi-télécommande
*2 — (M57) — Relais de verrouillage de porte

*1 : Avec système de multi-télécommande
*2 : Pour l'Europe ... Centrale de commande intelligente
Sauf pour l'Europe .... Minuterie de verrouillage de porte

HEL787A

Simpo PDF Merge and Split Unregistered Version - http://www.simpopdf.com

Faisceau principal (suite)

TABLEAU DE BORD — CONDUITE A DROITE

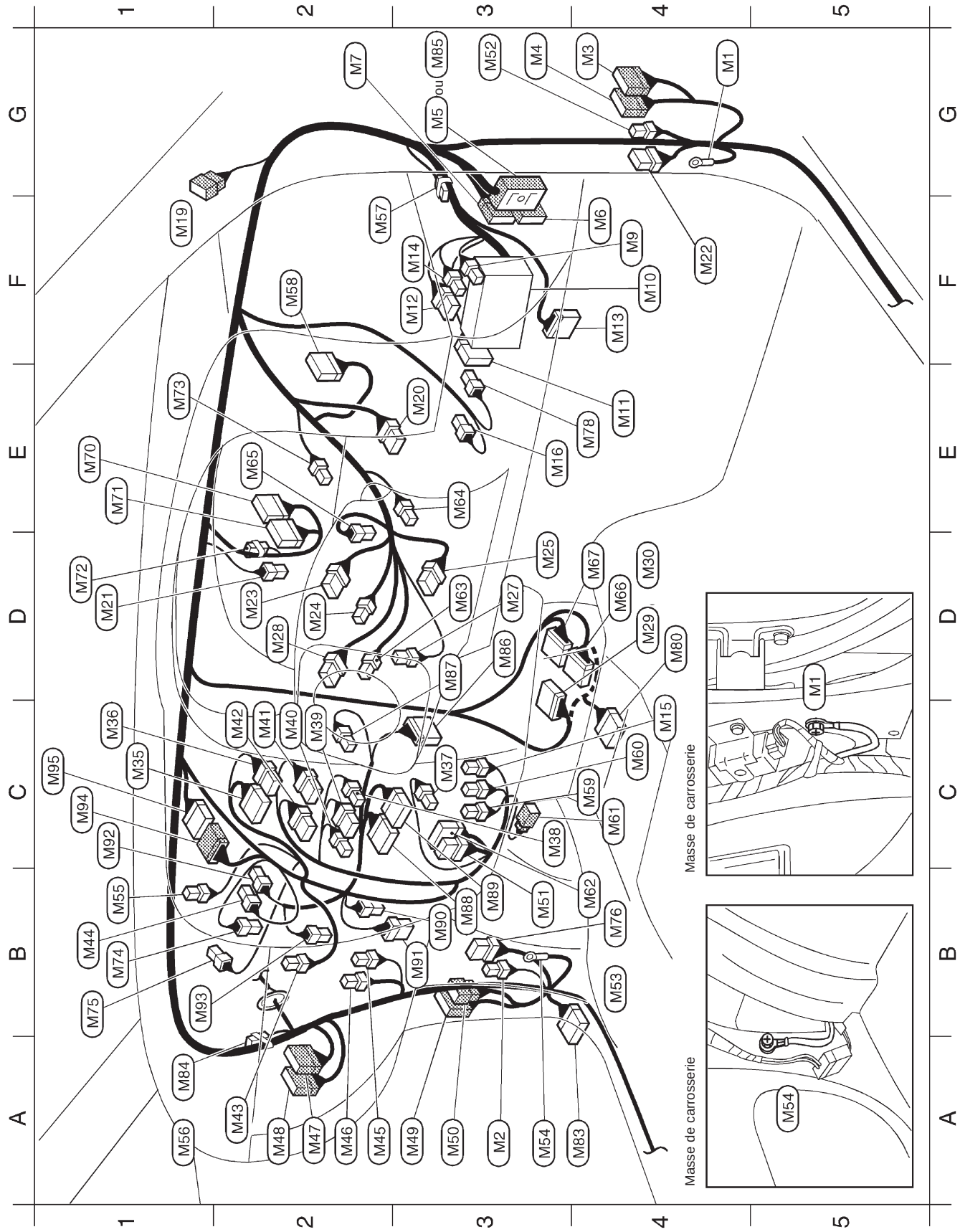

HEL788A

Simpo PDF Merge and Split Unregistered Version - http://www.simpopdf.com

Faisceau principal (suite)

G4 (M1) — : Masse de carrosserie
A3 (M2) W/2 : Témoin sonore (moteur diesel sauf pour l'Europe et l'Australie)
G4 (M3) W/20 : Vers (D1)
G3 (M4) W/12 : Vers (D2) (avec lève-glace électrique)
G3 (M5) SMJ : Vers (E101) (Modèles avec T/M)
F4 (M6) W/24 : Vers (N1)
G2 (M7) BR/24 : Vers (N2)
F4 (M9) L/4 : Relais d'accessoires
F4 (M10) — : Boîtier à fusibles
E4 (M11) GY/14 : Connecteur de diagnostic pour CONSULT (avec coussin gonflable, ABS ou ECM)
F3 (M12) W/6 : Boîtier à fusibles
F4 (M113) B/10 : Connecteur de contrôle (moteur Z)
F3 (M14) W/4 : Boîtier à fusibles
C4 (M15) B/3 : Centrale de clignotants combinée
E3 (M16) B/2 : Contact de feu de stop
F1 (M19) W/6 : Vers (R1)
E3 (M20) W/6 : Contact d'allumage
D1 (M21) W/1 : Contact de frein de stationnement (type à manche)
F4 (M22) W6 : Module de commande de pompe à carburant (moteur Z)
D2 (M23) BR/8 : Commande d'éclairage
● Commande de clignotants
D2 (M24) BR/4 : Commande d'éclairage
D3 (M25) Y/7 : Câble spiralé (avec coussin gonflable)
D3 (M27) B/1 : Commande d'avertisseur sonore (sans coussin gonflable)
D2 (M28) GY/8 : Commande de l'essuie-glace et de lave-glace
D4 (M29) W/12 : Boîtier de contrôle de préchauffage (moteur TD27 sauf pour l'Australie et moteur QD)
D4 (M30) W/16 : Boîtier de contrôle de préchauffage (moteur TD27 pour l'Australie)
C1 (M35) W/10 : Système audio
C1 (M36) W/6 : Système audio (modèles à cabine double)
C3 (M37) B/2 : Allume-cigare
C3 (M38) W/3 : Interrupteur de C/A (sans C/A automatique)
C2 (M39) W/6 : Commutateur de ventilateur (sans C/A automatique)
C2 (M40) W/2 : Eclairage de l'interrupteur de ventilateur (sans C/A automatique)
C2 (M41) W/8 : Interrupteur de feux de détresse
C2 (M42) W/6 : Interrupteur de désembuage (avec système de lève-glace électrique et pour l'Europe)
A2 (M43) Y/2 : Module de coussin gonflable côté passager

B1 (M44) BR/4 : Amplificateur de commande thermique
A2 (M45) BR/4 : Résistance de ventilateur (sans C/A automatique)
A2 (M46) W/2 : Moteur de soufflerie
A2 (M47) W/16 : Vers (F55) (moteur KA)
A2 (M48) W/24 : Vers (F54) (moteur KA)
A3 (M49) W/20 : Vers (D31)
A3 (M50) W/6 : Vers (D32) (avec lève-glace électrique)
B3 (M51) W/8 : Minuterie de verrouillage de porte (avec système de lève-glace électrique pour l'Europe)
G3 (M52) W/2 : Rupteur 2 (pour l'Europe)
B4 (M53) W/8 : Minuterie de ceinture de sécurité (pour l'Australie)
A3 (M54) — : Masse de carrosserie
B1 (M55) W/2 : Témoin de sécurité NATS (pour l'Europe)
A1 (M56) –/2 : Diode (pour système de multi-télécommande)
F2 (M57) –/2 : Diode (pour système de multi-télécommande)
F2 (M58) W/12 : Boîtier de multi-télécommande (pour l'Europe sauf cabine simple)
C4 (M59) BR/6 : Relais 2 de multi-télécommande
C4 (M60) B/5 : Relais 1 de multi-télécommande
C4 (M61) B/2 : Connecteur volant (pour l'Europe sauf cabine simple)
B4 (M62) W/18 : Centrale de commande intelligente (pour l'Europe)
D3 (M63) W/3 : Interrupteur de feu antibrouillard arrière (pour l'Europe)
E3 (M64) W/2 : Contact de clé (pour l'Europe sauf modèles avec cabine simple)
E2 (M65) W/4 : Ampli. d'antenne NATS (pour l'Europe)
D4 (M66) GY/20 : ECM (moteur diesel sauf pour l'Europe)
D4 (M67) GY/16 : ECM (moteur diesel sauf pour l'Europe)
E1 (M70) W/24 : TCM (module de commande de transmission) (modèles avec T/A)
E1 (M71) GY/24 : TCM (module de commande de transmission) (modèles avec T/A)
D1 (M72) –/6 : Connecteur 2 de raccord (modèles avec T/A)
E1 (M73) W/4 : Dispositif de commande T/A (modèles avec T/A)
B1 (M74) W/2 : Capteur de température d'air d'admission (avec C/A automatique)
B1 (M75) B/2 : Capteur d'ensoleillement (avec C/A automatique)
B4 (M76) W/6 : Relais de verrouillage de porte (pour l'Europe sauf cabine simple)
E4 (M78) L/2 : Contact de frein de verrouillage de passage (modèles avec T/A)

D4 (M80) Y/20 : Boîtier de capteurs de diagnostic de coussin gonflable (air bag)
A4 (M83) L/10 : Diode (moteur KA)
A1 (M84) BR/2 : Résistance (modèles avec T/A)
G3 (M85) SMJ : Vers (E104) (modèles avec T/A)
D3 (M86) BR/10 : Moteur de volet de mode (avec C/A automatique)
D3 (M87) W/2 : Capteur d'habitacle (avec C/A automatique)
B3 (M88) GY/20 : Ampli. automatique de C/A (avec C/A automatique)
B3 (M90) L/2 : Moteur d'aspiration (avec C/A automatique)
B3 (M91) B/6 : Moteur de volet de mélange d'air (avec C/A automatique)
C1 (M92) W/4 : Ampli. de commande de ventilateur (avec C/A automatique)
B1 (M93) W/4 : Moteur de volet d'admission (avec C/A automatique)
C1 (M94) W/12 : Vers (M95) (avec coussin gonflable)
C1 (M95) W/12 : Vers (M94) (avec coussin gonflable)

Compartiment moteur

M221 W/6 : Moteur de l'essuie-glace (sauf moteur KA)

Diode (M56), (M57)

Diode (M83)

HEL789A

Simpo PDF Merge and Split Unregistered Version - http://www.simpopdf.com

Faisceau principal (suite)

COTE CARROSSERIE — CONDUITE A GAUCHE

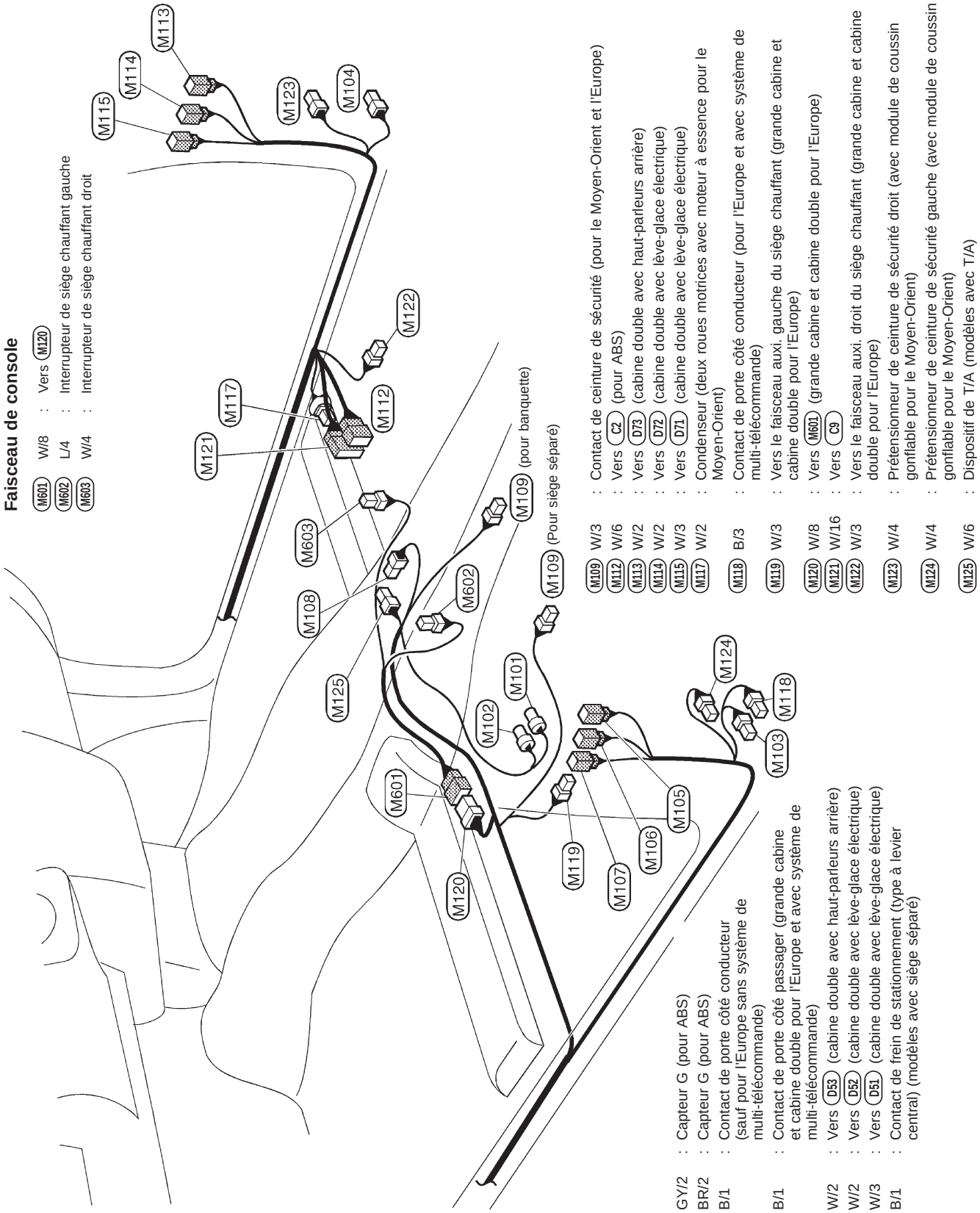

HEL790A

Simpo PDF Merge and Split Unregistered Version - http://www.simpopdf.com

Faisceau principal (suite)

COTE CARROSSERIE — CONDUITE A DROITE

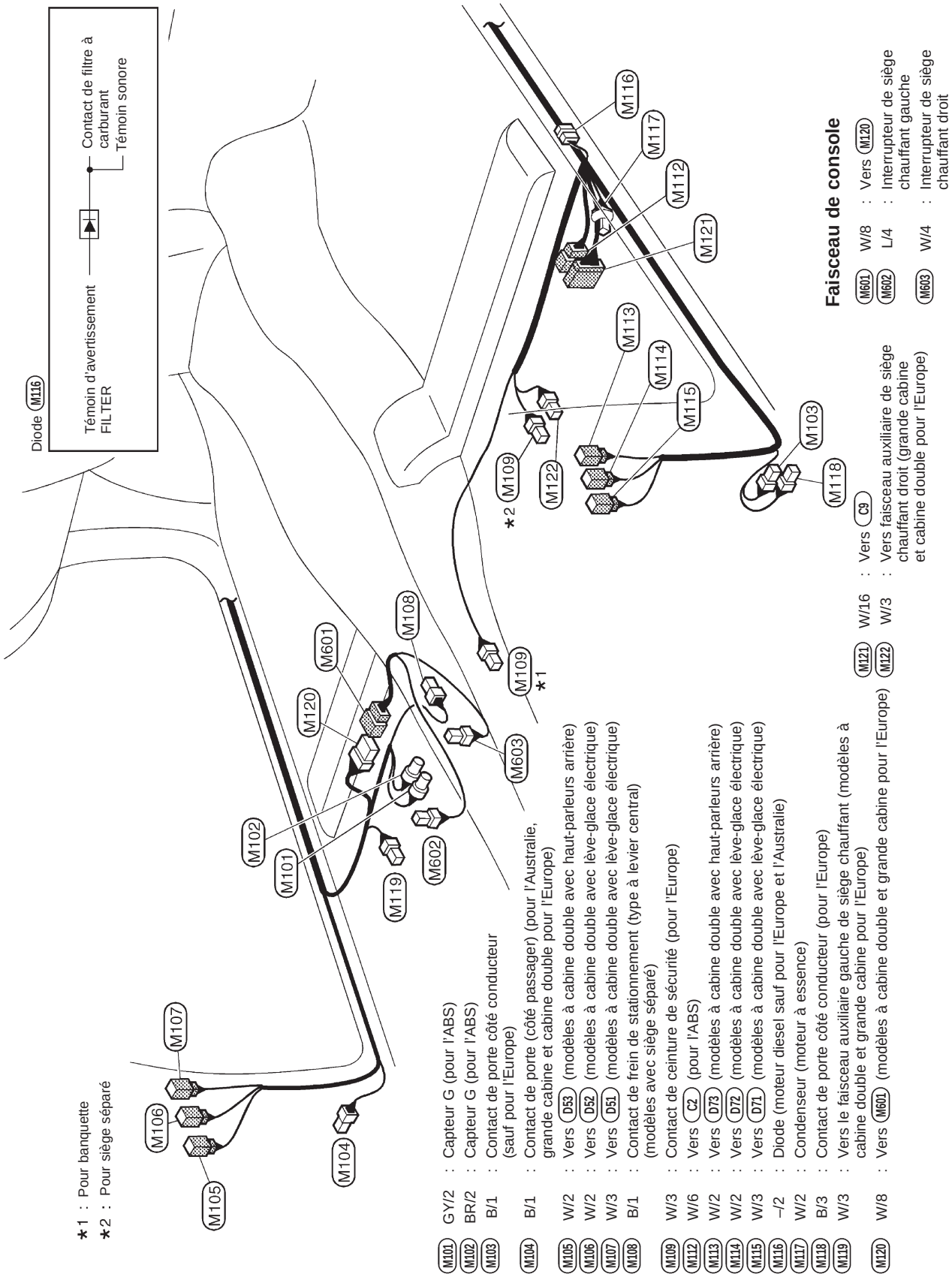

HEL791A

Simpo PDF Merge and Split Unregistered Version - http://www.simpopdf.com

Faisceau de compartiment moteur

CONDUITE A GAUCHE — MOTEUR A ESSENCE

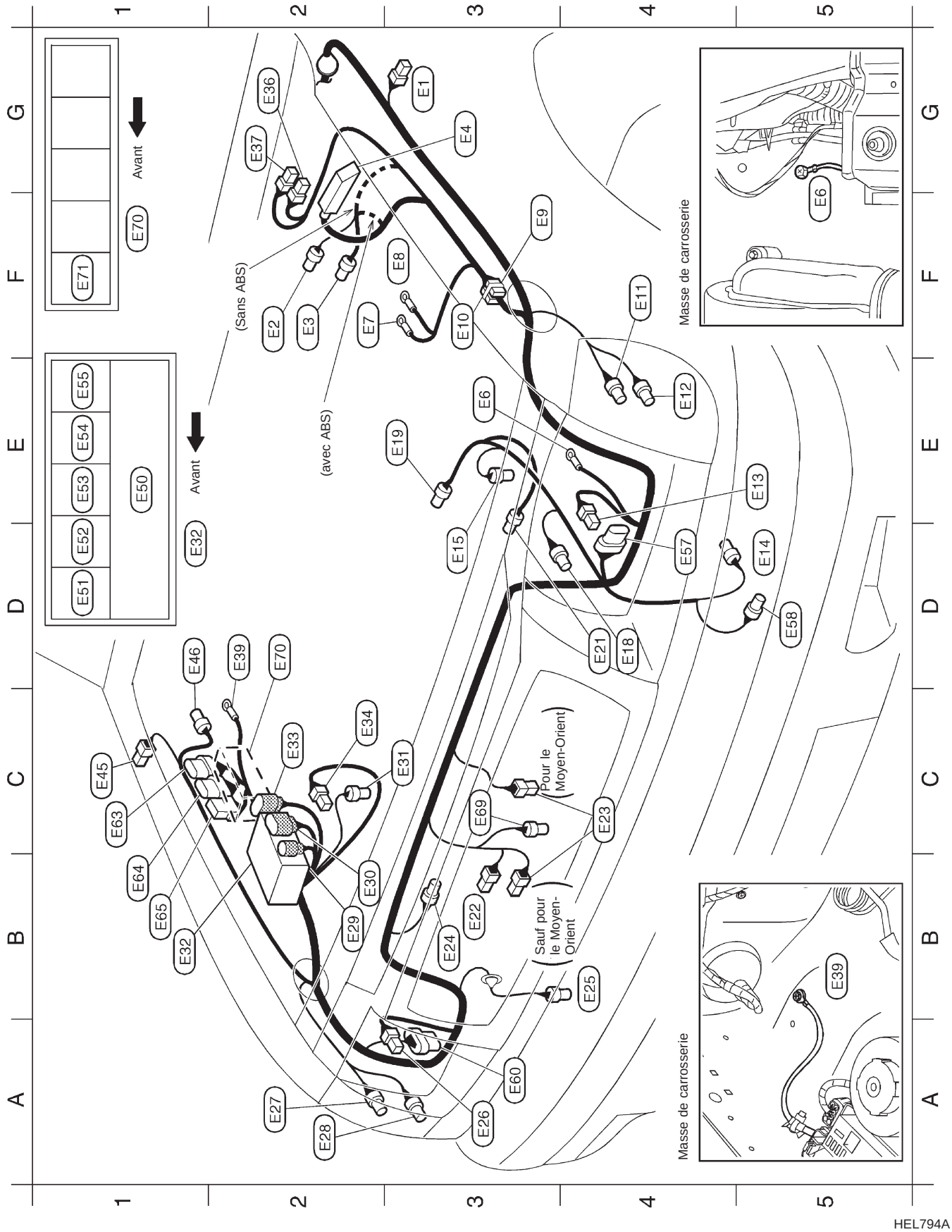

HEL794A

Simpo PDF Merge and Split Unregistered Version - http://www.simpopdf.com

G3 E1 B/2 : Clignotant latéral gauche (pour l'Europe et la Chine)
F2 E2 GY/2 : Contact de niveau de liquide de frein
F2 E3 GY/3 : Sonde à oxygène chauffée (moteur KA24E)
G3 E4 B/31 : Actionneur ABS et boîtier électrique (pour l'ABS)
E3 E6 — : Masse de carrosserie
F2 E7 — : Bobine d'allumage (moteur Z)
F3 E8 — : Bobine d'allumage (moteur Z)
F3 E9 –/2 : Résistance (moteur Z)
F3 E10 W/2 : Condenseur (moteur Z)
F4 E11 GY/3 : Feu combiné avant gauche (sauf pour l'Europe et la Chine)
E4 E12 BR/3 : Feu combiné avant gauche (pour l'Europe et la Chine)
E5 E13 B/3 : Phare gauche
D5 E14 GY/2 : Moteur de lave-glace
D3 E15 BR/2 : Capteur de roue avant gauche (pour l'ABS)
D4 E18 GY/2 : Pas utilisé (moteur KA pour le Moyen-Orient)
E3 E19 GY/3 : Distributeur (moteur Z)
D4 E21 B/1 : Compresseur (moteur Z)
B3 E22 B/1 : Avertisseur sonore (grave)
C4 E23 B/1 : Avertisseur sonore (aigu)
B3 E24 GY/2 : Moteur de ventilateur de refroidissement (moteur KA pour le Moyen-Orient)
B4 E25 B/4 : Manocontact triple
A3 E26 B/3 : Phare droit
A2 E27 GY/3 : Feu combiné avant droit (sauf pour l'Europe et la Chine)
A2 E28 BR/3 : Feu combiné avant droit (pour l'Europe et la Chine)
B2 E29 GY/2 : Vers E204
B2 E30 B/8 : Vers E203
C3 E31 GY/2 : Capteur de roue avant droite (pour l'ABS)
B1 E32 — : Boîtier 1 de relais (raccord à fusible et boîtier à fusibles)
C2 E33 GY/8 : Vers E205 (moteur KA)
C2 E34 B/1 : Batterie
G2 E36 B/1 : Electrovanne de commande du pot ISC-FI (moteur Z)
G2 E37 B/1 : Electrovanne de commande du pot ISC-FI (moteur Z)
D2 E39 — : Masse de carrosserie
C1 E45 B/2 : Clignotant latéral droit (pour l'Europe et la Chine)
D1 E46 GY/3 : Antenne électrique (pour le Moyen-Orient sauf modèles à 4 roues motrices avec ABS)
E1 E50 — : Boîtier à fusibles et de raccord à fusible
D1 E51 L/4 : Relais de climatiseur
D1 E52 W/3 : Relais d'avertisseur sonore
E1 E53 L/4 : Relais d'ECM (moteur KA pour l'Europe)
BR/6 : Relais d'ECM (moteur KA avec T/M sauf pour l'Europe et le Moyen-Orient, et modèles avec T/A)
L/4 : Relais de pompe à carburant (moteur KA, avec T/M pour le Moyen-Orient)
E1 E54 B/5 : Relais de starter automatique (moteur Z)
L/4 : Relais de pompe à carburant (moteur KA sauf modèles avec T/M pour le Moyen-Orient)
BR/6 : Relais d'ECM (moteur KA, avec T/M pour le Moyen-Orient)
E1 E55 L/4 : Relais de ventilateur de refroidissement (moteur KA, avec T/M pour le Moyen-Orient)
BR/6 : Relais de position de stationnement/point mort (PNP) (modèles avec T/A)
BR/6 : Relais de désembuage (pour l'Europe)
D4 E57 GY/6 : Moteur de réglage du faisceau de phare gauche (pour l'Europe)
D5 E58 GY/2 : Moteur de lave-phare (pour l'Europe)
A3 E60 GY/6 : Moteur de réglage du faisceau de phare droit (pour l'Europe)
C1 E63 GY/6 : Centrale d'éclairage de jour (avec système d'éclairage de jour)
B1 E64 GY/8 : Centrale d'éclairage de jour (avec système d'éclairage de jour)
B1 E65 W/6 : Amplificateur de lave-phare (pour l'Europe)
C3 E69 BR/2 : Contact de température ambiante (moteur KA24DE)
D2 E70 — : Boîtier 2 de relais (modèles avec T/A)
F1 E71 L/4 : Relais de ventilateur de refroidissement (modèles avec T/A)

COMPARTIMENT PASSAGER

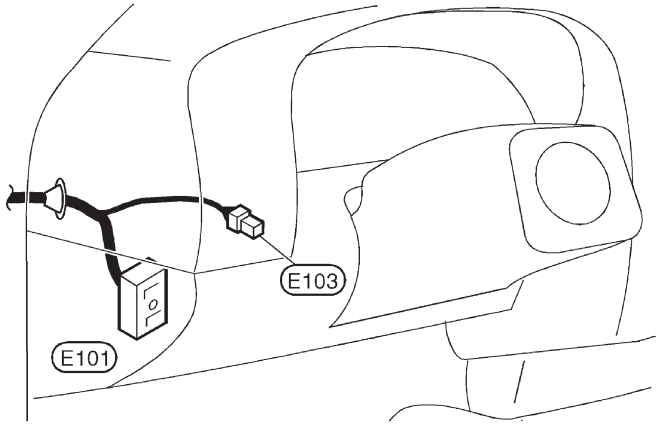

E101 SMJ : Vers M5
E103 B/2 : Boîtier à fusibles

Résistance E9

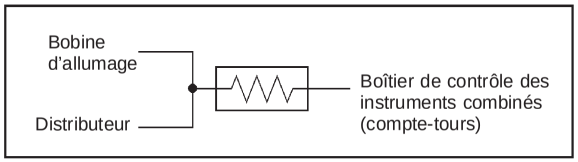

Simpo PDF Merge and Split Unregistered Version - http://www.simpopdf.com

Faisceau de compartiment moteur (suite)

CONDUITE A GAUCHE — MOTEUR DIESEL

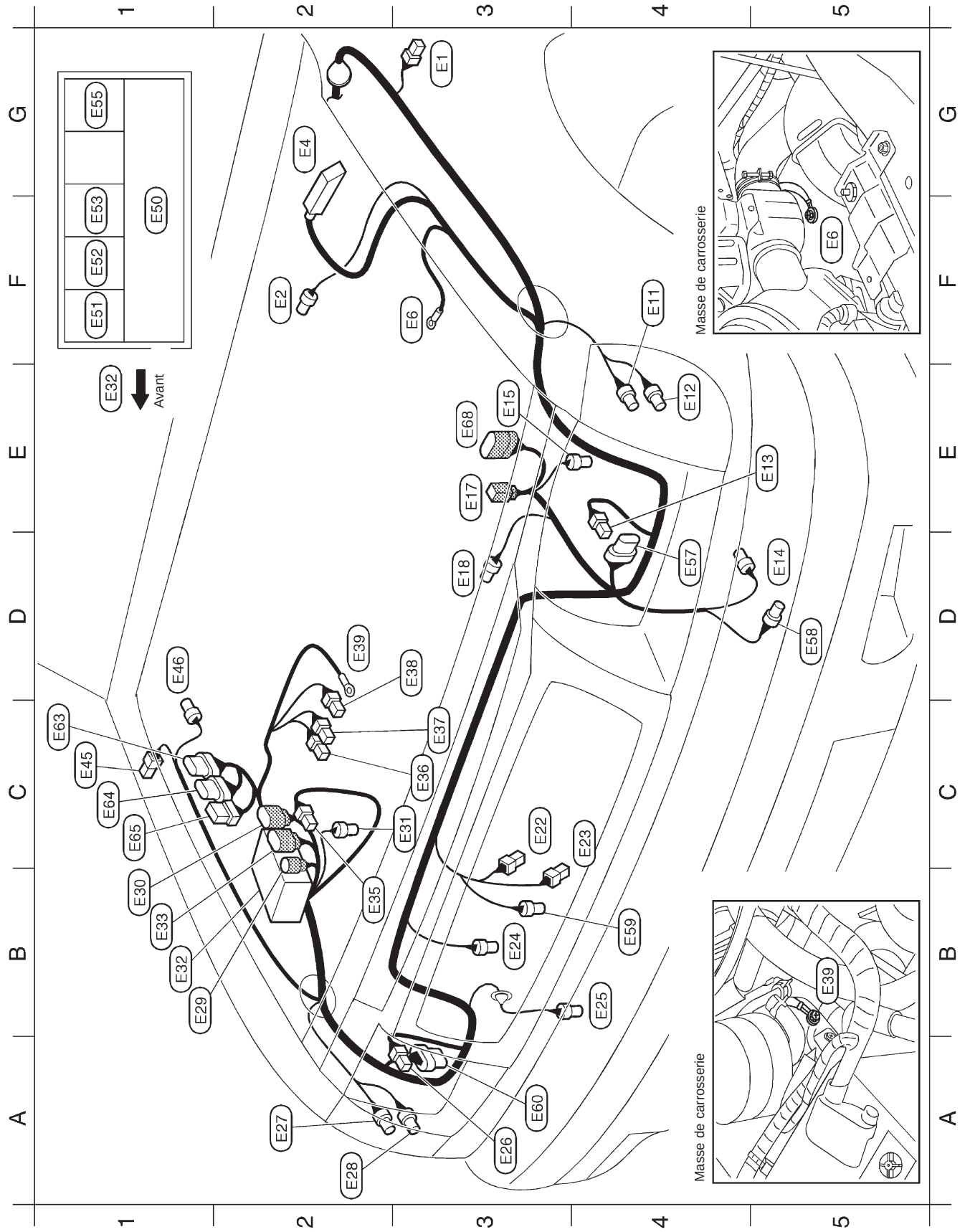

HEL796A

Simpo PDF Merge and Split Unregistered Version - http://www.simpopdf.com

Faisceau de compartiment moteur (suite)

G3 (E1) B/2 : Clignotant latéral gauche (pour l'Europe)
F2 (E2) GY/2 : Contact de niveau de liquide de frein
G2 (E4) B/31 : Actionneur ABS et boîtier électrique (pour l'ABS)
F3 (E6) — : Masse de carrosserie
F4 (E11) GY/3 : Feu combiné avant gauche (sauf pour l'Europe)
E4 (E12) BR/3 : Feu combiné avant gauche (pour l'Europe)
E5 (E13) B/3 : Phare gauche
D5 (E14) GY/2 : Moteur de lave-glace
E3 (E15) BR/2 : Capteur de roue avant gauche (pour ABS)
E3 (E17) B/2 : Vers (A2)
D3 (E18) GY/2 : Thermocontact (sauf moteur TD27 sauf pour le Moyen-Orient et moteur TD avec 2 roues motrices et ABS pour l'Europe)
C3 (E22) B/1 : Avertisseur sonore (grave)
C4 (E23) B/1 : Avertisseur sonore (aigu)
B3 (E24) GY/2 : Moteur de ventilateur de refroidissement (sauf moteur TD27 sauf pour le Moyen-Orient et moteur TD avec 2 roues motrices et ABS pour l'Europe)
B4 (E25) B/4 : Manocontact triple
A3 (E26) B/3 : Phare droit
A2 (E27) GY/3 : Feu combiné avant droit (sauf pour l'Europe)
A2 (E28) BR/3 : Feu combiné avant droit (pour l'Europe)
B2 (E29) GY/2 : Vers (E204)
B1 (E30) B/8 : Vers (E203) (pour l'Europe)
C3 (E31) GY/2 : Capteur de roue avant droite (pour ABS)
B1 (E32) — : Boîte à relais (raccord à fusible et boîtier à fusibles)
B1 (E33) GY/8 : Vers (E205)
B2 (E35) B/1 : Vers (E206)
C3 (E36) B/1 : Electrovanne FICD
C3 (E37) B/1 : Electrovanne FICD
D3 (E38) GY/1 : Contact à dépression
D2 (E39) — : Masse de carrosserie
C1 (E45) B/2 : Clignotant latéral droit (pour l'Europe)
D1 (E46) GY/3 : Antenne électrique (pour l'Europe sauf 2 roues motrices avec ABS)
F1 (E50) — : Boîtier à fusibles et de raccord à fusible
F1 (E51) L/4 : Relais de climatiseur
F1 (E52) W/3 : Relais d'avertisseur sonore
F1 (E53) L/4 : Relais de ventilateur de refroidissement (sauf moteur TD27 sauf pour le Moyen-Orient et moteur TD avec 2 roues motrices et ABS pour l'Europe)
G1 (E55) L/4 : Relais de désembuage (sauf pour le Moyen-Orient)
D4 (E57) GY/6 : Moteur de réglage du faisceau de phare gauche (pour l'Europe)
D5 (E58) GY/2 : Moteur de lave-phare (pour l'Europe)
B4 (E59) B/2 : Capteur de température ambiante. (pour C/A automatique) (pour l'Europe sauf 2 roues motrices avec ABS)
A3 (E60) GY/6 : Moteur de réglage du faisceau de phare droit (pour l'Europe)
C1 (E63) GY/6 : Centrale d'éclairage de jour (avec système d'éclairage de jour)
C1 (E64) GY/8 : Centrale d'éclairage de jour (avec système d'éclairage de jour)
C1 (E65) W/6 : Ampli. de lave-phares (pour l'Europe)
E3 (E68) GY/10 : Vers (A13)

COMPARTIMENT PASSAGER

(E101) SMJ : Vers (M5)
(E103) B/2 : Boîtier à fusibles

HEL797A

Simpo PDF Merge and Split Unregistered Version - http://www.simpopdf.com

Faisceau de compartiment moteur (suite)

CONDUITE A DROITE — MOTEUR A ESSENCE

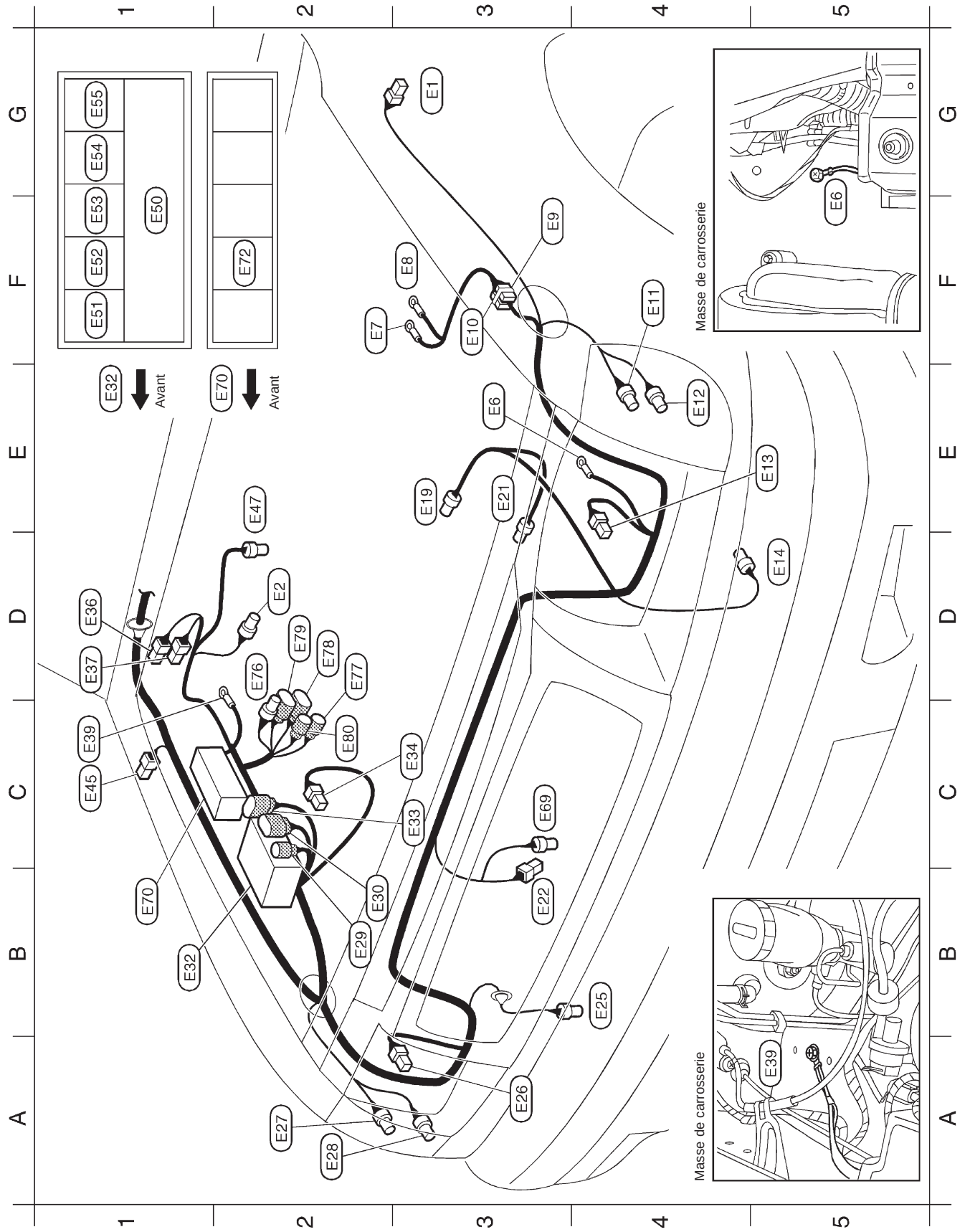

HEL798A

Simpo PDF Merge and Split Unregistered Version - http://www.simpopdf.com

G3 E1 B/2 : Clignotant latéral gauche (pour l'Australie)
D2 E2 GY/2 : Contact de niveau de liquide de frein
E3 E6 — : Masse de carrosserie
F2 E7 Bobine d'allumage (moteur Z)
F3 E8 — : Bobine d'allumage (moteur Z)
F3 E9 –/2 : Résistance (moteur Z)
F3 E10 W/2 : Condenseur (moteur Z)
F4 E11 GY/3 : Feu combiné avant gauche (sauf pour l'Australie)
E4 E12 BR/3 : Feu combiné avant gauche (pour l'Australie)
E5 E13 B/3 : Phare gauche
D5 E14 GY/2 : Moteur de lave-glace
E3 E19 GY/3 : Distributeur (moteur Z)
E3 E21 B/1 : Compresseur (moteur Z)
B3 E22 B/1 : Avertisseur sonore (grave)
B4 E25 B/4 : Manocontact triple
A3 E26 B/3 : Phare droit
A2 E27 GY/3 : Feu combiné avant droit (sauf pour l'Australie)
A2 E28 BR/3 : Feu combiné avant droit (pour l'Australie)
B2 E29 GY/2 : Vers E204
B2 E30 B/8 : Vers E203
B1 E32 — : Boîtier 1 de relais (raccord à fusible et boîtier à fusibles)
C3 E33 GY/8 : Vers E205 (moteur KA)
C3 E34 B/1 : Batterie
D1 E36 B/1 : Electrovanne de commande du pot ISC-FI (moteur Z)
D1 E37 B/1 : Electrovanne de commande du pot ISC-FI (moteur Z)
C1 E39 — : Masse de carrosserie
C1 E45 B/2 : Clignotant latéral droit (pour l'Australie)
E2 E47 GY/3 : Carburateur (moteur Z)
F1 E50 — : Boîtier à fusibles et de raccord à fusible
F1 E51 L/4 : Relais de climatiseur
F1 E52 W/3 : Relais d'avertisseur sonore
F1 E53 BR/6 : Relais d'ECM (moteur KA)
G1 E54 B/5 : Relais de starter automatique (moteur Z)
L/4 : Relais de pompe à carburant (moteur KA)
G1 E55 BR/6 : Relais de désembuage (modèle T/M pour l'Australie)
BR/6 : Relais de position de stationnement/point mort (PNP) (modèles avec T/A)
C3 E69 BR/2 : Contact de température ambiante (moteur KA)
B1 E70 — : Boîtier 2 de relais (modèles avec T/A)
F2 E72 BR/6 : Relais de désembuage (modèles avec T/A)
D2 E76 GY/2 : Résistance chutrice (modèles avec T/A)
D2 E77 GY/2 : Contact de stationnement/point mort (PNP) (modèles avec T/A)
D2 E78 GY/8 : Contact de stationnement/point mort (PNP) (modèles avec T/A)
D2 E79 BR/8 : Vers ensemble de câbles de bornes (modèles avec T/A)
C2 E80 GY/3 : Capteur de régime (modèles avec T/A)

COMPARTIMENT PASSAGER

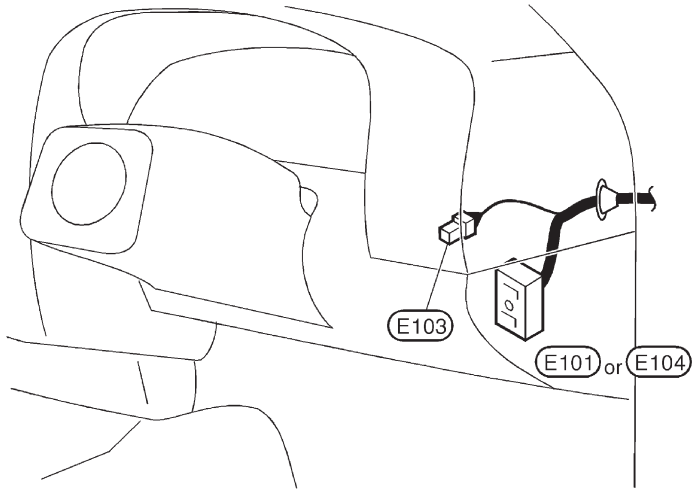

E101 SMJ : Vers M5 (modèles avec T/M)
E103 B/2 : Boîtier à fusibles
E104 SMJ : Vers M85 (modèles avec T/A)

Résistance E9

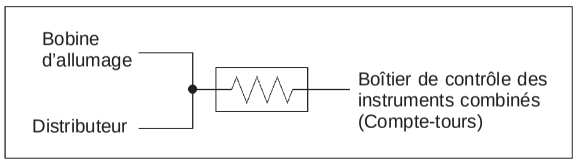

HEL799A

Simpo PDF Merge and Split Unregistered Version - http://www.simpopdf.com

Faisceau de compartiment moteur (suite)

CONDUITE A DROITE — MOTEUR DIESEL

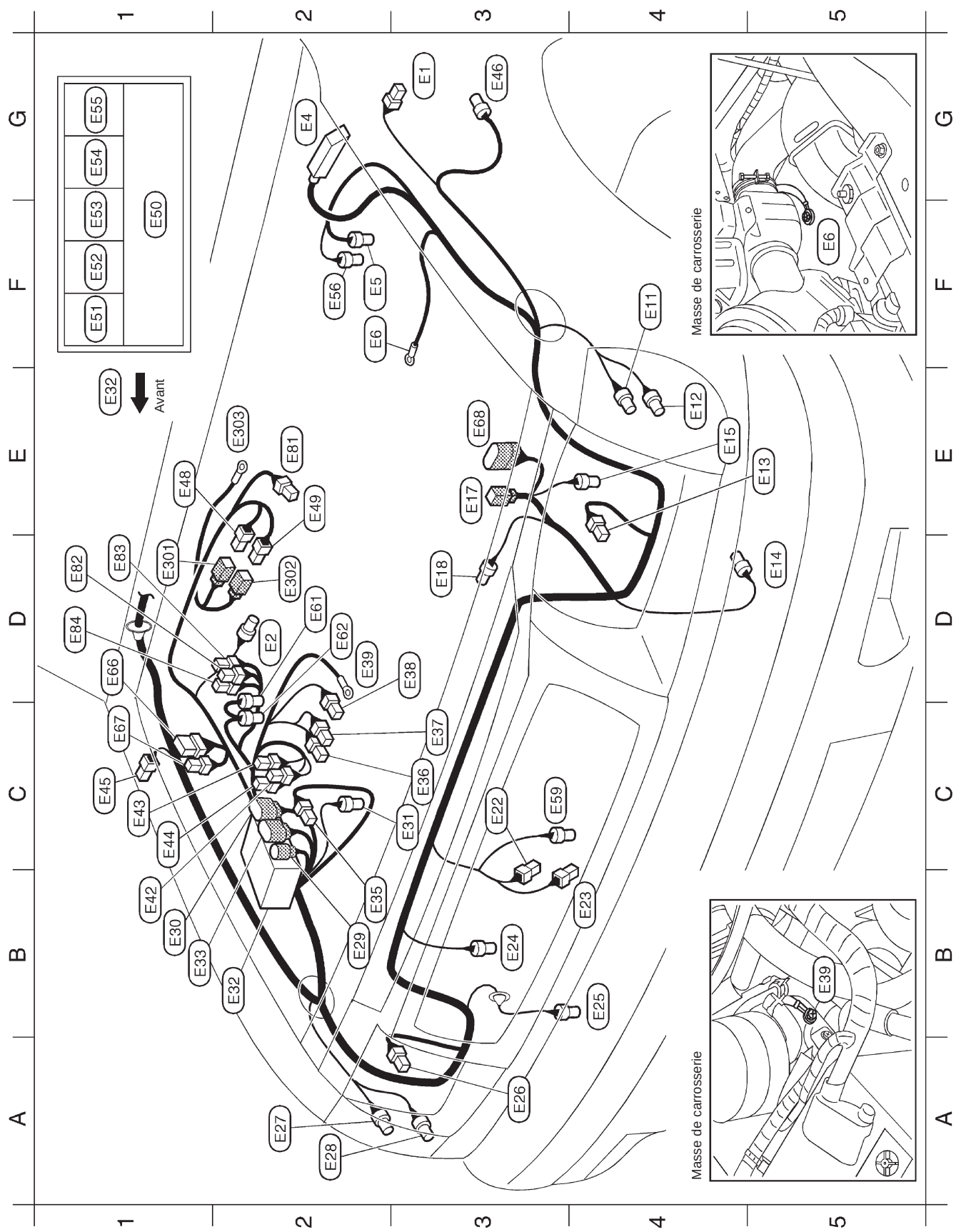

HEL800A

Simpo PDF Merge and Split Unregistered Version - http://www.simpopdf.com

G3	E1	B/2	:	Clignotant latéral gauche (pour l'Europe et l'Australie)
D2	E2	GY/2	:	Contact de niveau de liquide de frein
G2	E4	B/31	:	Actionneur ABS et boîtier électrique (pour l'ABS)
F2	E5	BR/2	:	Contact de filtre à carburant
F2	E6	—	:	Masse de carrosserie
F4	E11	GY/3	:	Feu combiné avant gauche (sauf pour l'Europe et l'Australie)
E4	E12	BR/3	:	Feu combiné avant gauche (pour l'Europe et l'Australie)
E5	E13	B/3	:	Phare gauche
D5	E14	GY/2	:	Moteur de lave-glace
E4	E15	BR/2	:	Capteur de roue avant gauche (pour l'ABS)
E3	E17	B/2	:	Vers A2
D3	E18	GY/2	:	Thermocontact (pour l'Europe sauf modèles avec 2 roues motrices et ABS, et moteur QD)
C3	E22	B/1	:	Avertisseur sonore (grave)
B4	E23	B/1	:	Avertisseur sonore (aigu) (pour l'Europe et moteur QD sauf pour l'Australie)
B3	E24	GY/2	:	Moteur de ventilateur de refroidissement (pour l'Europe sauf modèles avec 2 roues motrices et ABS, et moteur QD)
B4	E25	B/4	:	Manocontact triple
A3	E26	B/3	:	Phare droit
A2	E27	GY/3	:	Feu combiné avant droit (sauf pour l'Europe et l'Australie)
A2	E28	BR/3	:	Feu combiné avant droit (pour l'Europe et l'Australie)
B2	E29	GY/2	:	Vers E204
B1	E30	B/8	:	Vers E203 (pour l'Europe)
C3	E31	GY/2	:	Capteur de roue avant droite (pour l'ABS)
B2	E32	—	:	Boîtier 1 de relais (raccord à fusible et boîtier à fusibles)
B1	E33	GY/8	:	Vers E205
B2	E35	B/1	:	Vers E206
C3	E36	B/1	:	Electrovanne FICD
C3	E37	B/1	:	Electrovanne FICD
D3	E38	GY/1	:	Contact à dépression (sauf pour l'Australie)
D2	E39	—	:	Masse de carrosserie
B1	E42	W/1	:	Relais 1 de préchauffage
C1	E43	W/1	:	Relais 1 de préchauffage
C1	E44	G/2	:	Relais 1 de préchauffage
C1	E45	B/2	:	Clignotant latéral droit (pour l'Europe et l'Australie)
G3	E46	GY/3	:	Antenne électrique (pour l'Europe sauf modèles à 2 roues motrices avec ABS)
E1	E48	B/1	:	Vers E301 (moteur QD)
E2	E49	L/2	:	Vers E302 (moteur TD)
F1	E50	—	:	Boîtier à fusibles et de raccords à fusible
F1	E51	L/4	:	Relais de climatiseur
F1	E52	W/3	:	Relais d'avertisseur sonore
F1	E53	L/4	:	Relais de ventilateur de refroidissement (pour l'Europe sauf modèles avec 2 roues motrices et ABS, et moteur QD)
G1	E54	L/4	:	Relais de dispositif de chauffage de carburant (pour l'Europe)
G1	E55	BR/6	:	Relais de désembuage (moteur TD27 pour l'Australie et moteurs TD25, 25Ti et QD)
F2	E56	GY/4	:	Filtre à carburant (pour dispositif de chauffage de carburant) (pour l'Europe)
C3	E59	B/2	:	Capteur de température ambiante (pour C/A automatique)
D2	E61	B/2	:	Electrovanne de commande EGR (Chambre de papillon) (pour l'Europe)
D2	E62	BR/2	:	Electrovanne de commande EGR (vanne EGR) (pour l'Europe)
D1	E66	GY/6	:	Centrale de commande de mise en veilleuse (pour l'Europe)
C1	E67	GY/4	:	Centrale de commande de mise en veilleuse (pour l'Europe)
E3	E68	GY/10	:	Vers A13
E2	E81	B/2	:	Résistance chutrice (moteur TD pour l'Australie)
D1	E82	W/1	:	Relais 2 de préchauffage (moteur TD pour l'Australie)
D1	E83	W/1	:	Relais 2 de préchauffage (moteur TD pour l'Australie)
D1	E84	G/2	:	Relais 2 de préchauffage (moteur TD pour l'Australie)

COMPARTIMENT PASSAGER

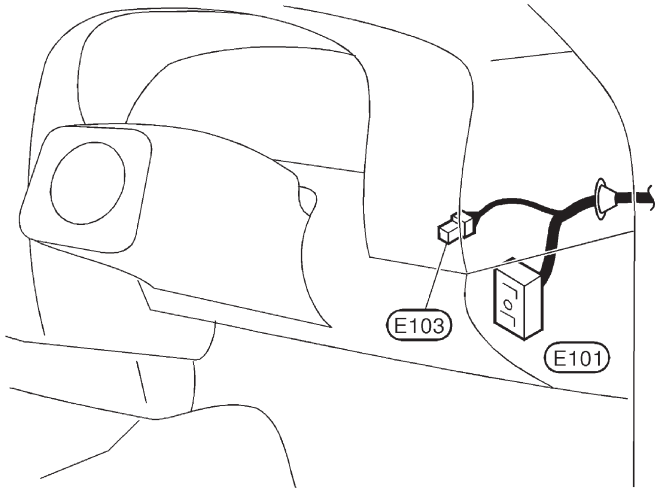

E101	SMJ	:	Vers M5	
E103	B/2	:	Boîtier à fusibles	

Faisceau auxiliaire

D1	E301	B/1	:	Vers E48 (moteur QD)
D2	E302	L/2	:	Vers E49 (moteur TD)
E2	E303	—	:	Bougie de préchauffage

Simpo PDF Merge and Split Unregistered Version - http://www.simpopdf.com

Faisceau de contrôle du moteur

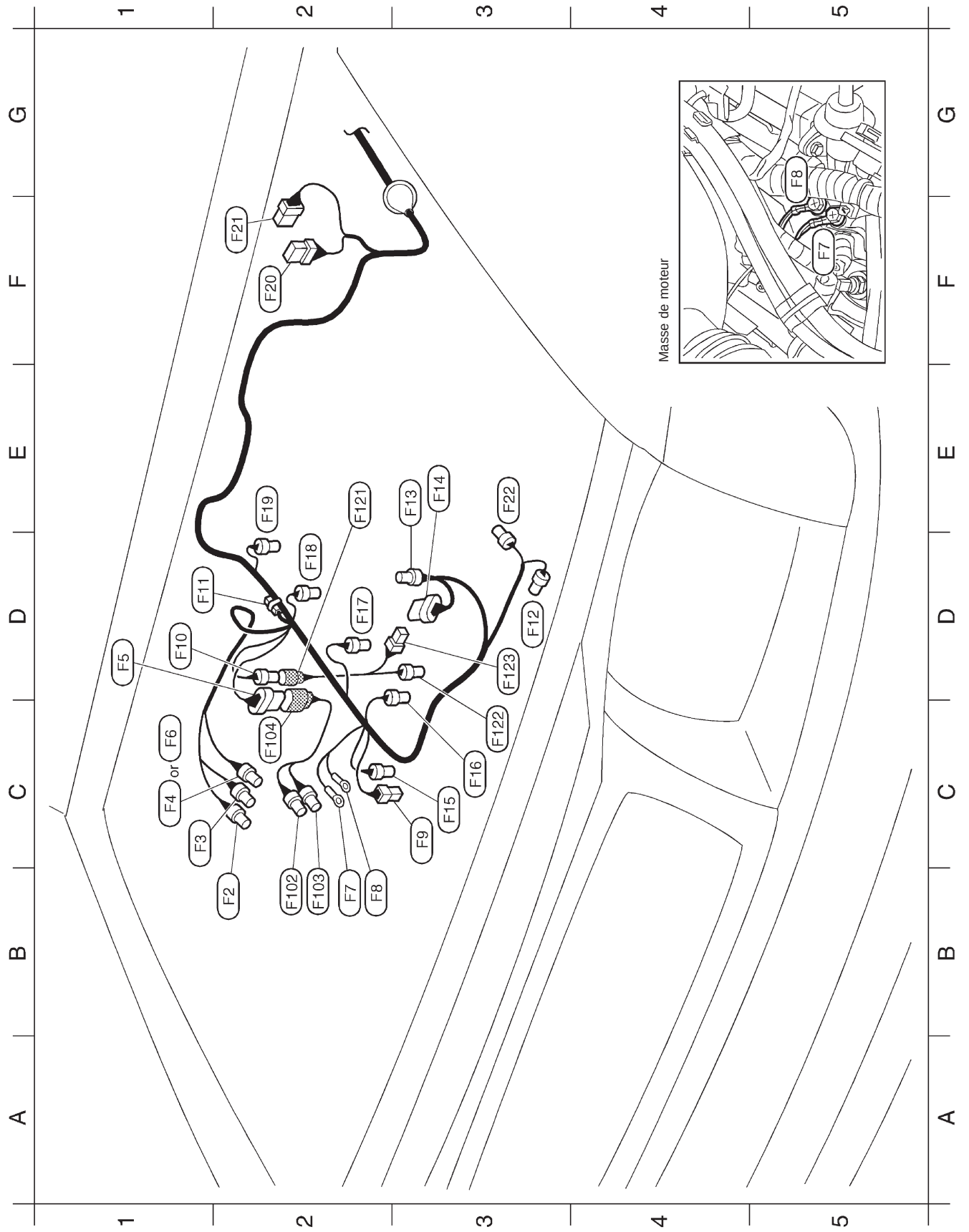

HEL802A

Simpo PDF Merge and Split Unregistered Version - http://www.simpopdf.com

Faisceau de contrôle du moteur (suite)

B2 (F2) B/2 : Electrovanne FICD
C1 (F3) BR/2 : Vanne IACV-AAC
C1 (F4) GY/3 : Débitmètre d'air (avec pot catalytique à trois voies)
D1 (F5) B/6 : Vers (F104)
C1 (F6) BR/4 : Débitmètre d'air (sans pot catalytique à trois voies)
B2 (F7) — : Masse de moteur
B2 (F8) — : Masse de moteur
C3 (F9) B/1 : Transmetteur thermique
D1 (F10) B/3 : Vers (F121)
D1 (F11) –/2 : Résistance
D3 (F12) B/1 : Compresseur
E3 (F13) GY/2 : Distributeur
E3 (F14) GY/6 : Distributeur
C3 (F15) GY/2 : Capteur de température du liquide de refroidissement moteur
C3 (F16) GY/2 : Injecteur n° 1
D2 (F17) GY/2 : Injecteur n° 2
D2 (F18) GY/2 : Injecteur n° 3
E2 (F19) GY/2 : Injecteur n° 4
F2 (F20) GY/8 : Ampli. de l'essuie-glace (modèles avec T/A)
F2 (F21) W/6 : Moteur de l'essuie-glace
E2 (F22) B/3 : Sonde à oxygène chauffée (avec pot catalytique à trois voies)

Faisceau auxiliaire

B2 (F102) BR/3 : Capteur de position de papillon
B2 (F103) GY/3 : Contact de position de papillon (modèles avec T/A)
C2 (F104) B/6 : Vers (F5)
E2 (F121) B/3 : Vers (10)
C3 (F122) –/2 : Capteur de détonation
D3 (F123) B/1 : Manocontact d'huile

(F51) W/48 ECM
(F53) GY/6 : Connecteur de raccord
(F54) W/24 : Vers (M48)
(F55) W/16 : Vers (M47)
(F56) –/2 : Diode

HEL803A

Simpo PDF Merge and Split Unregistered Version - http://www.simpopdf.com

Faisceau de contrôle du moteur (suite)

MOTEUR KA

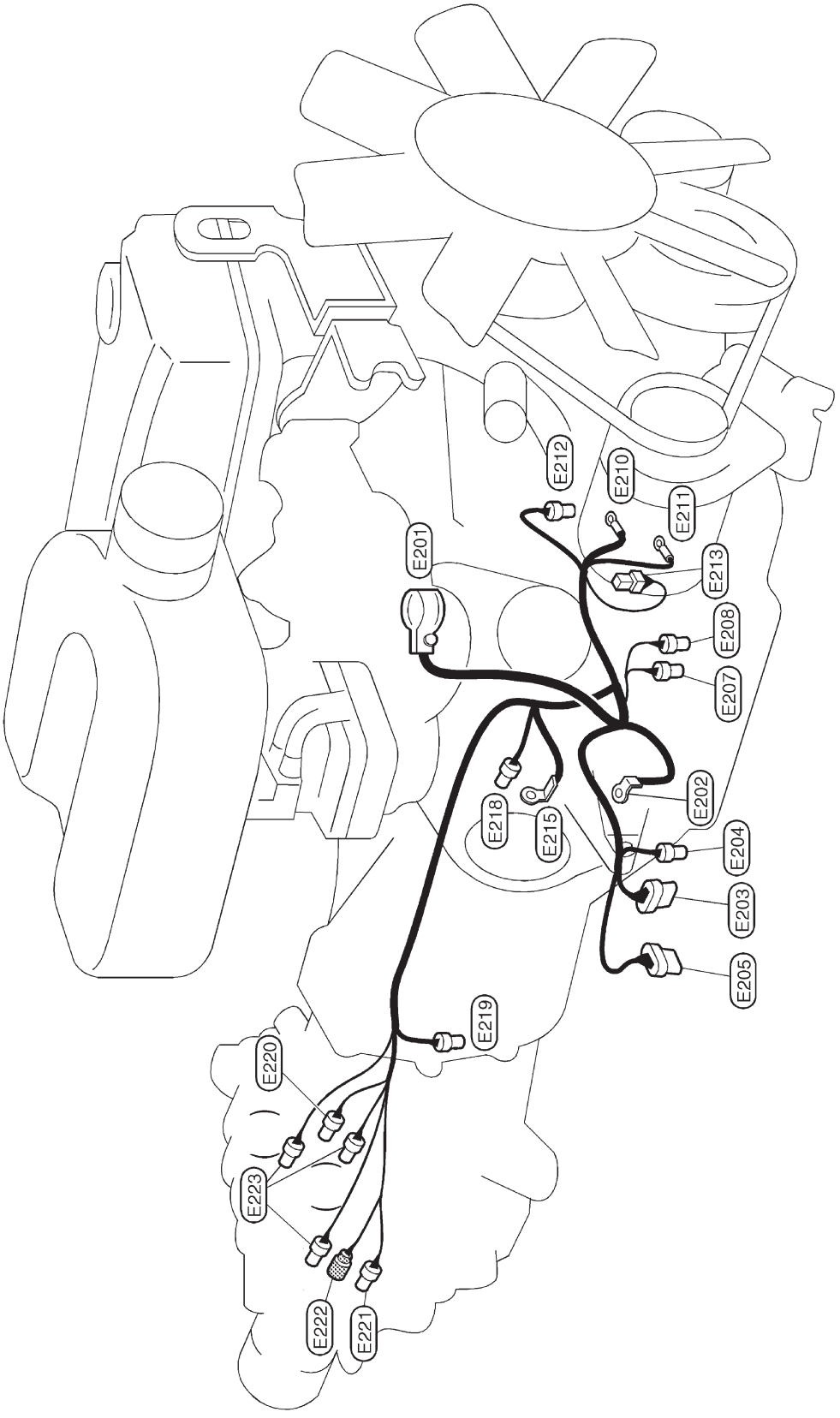

E201	—	: Batterie
E202	—	: Boîtier à fusibles et de raccords à fusible
E203	B/8	: Vers E30
E204	GY/2	: Vers E29
E205	GY/8	: Vers E33
E207	GY/2	: Manocontact d'huile de direction assistée (modèles à 4 roues motrices, c. à d.)
E208	B/2	: Manocontact d'huile de direction assistée (sauf modèles à 4 roues motrices, c. à d.)
E210	—	: Alternateur (B)
E211	—	: Alternateur (E)
E212	GY/2	: Alternateur (S, L)
E213	B/1	: Manocontact d'huile (KA24E)
E215	—	: Moteur de démarreur
E218	GY/1	: Démarreur
E219	GY/2	: Contact de feux de recul (modèles avec T/M)
E220	B/2	: Contact de stationnement/point mort (PNP) (modèles avec T/M)
E221	GY/1	: Contact de transfert (modèles à 4 roues motrices)
E222	GY/1	: Contact de transfert (modèles à 4 roues motrices)
E223	GY/2	: Capteur de vitesse du véhicule

HEL805A

Simpo PDF Merge and Split Unregistered Version - http://www.simpopdf.com

Faisceau de contrôle du moteur (suite)

MOTEUR DIESEL

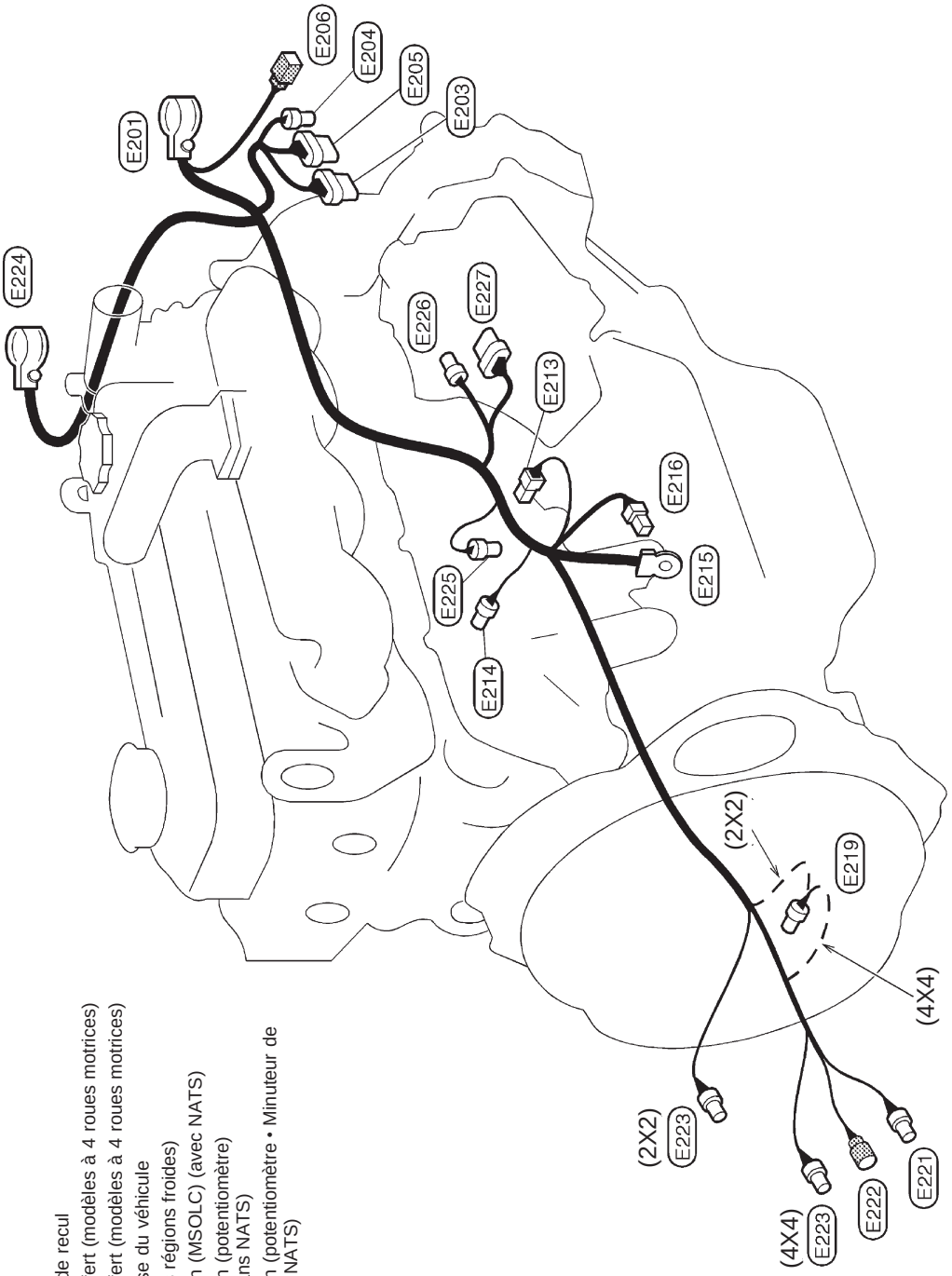

E201 — : Batterie
E203 B/8 : Vers E30 (pour l'Europe)
E204 GY/2 : Vers E29
E205 GY/8 : Vers E33
E206 B/1 : Vers E35
E213 B/1 : Manocontact d'huile (pour témoin d'avertissement)
E214 GY/2 : Pompe à injection (electrovanne de coupure d'alimentation • Minuterie du solénoïde) (sans NATS)
E215 — : Démarreur
E216 B/1 : Démarreur
E219 GY/2 : Contact de feux de recul
E221 GY/1 : Contact de transfert (modèles à 4 roues motrices)
E222 GY/1 : Contact de transfert (modèles à 4 roues motrices)
E223 GY/2 : Capteur de vitesse du véhicule
E224 — : Batterie (pour les régions froides)
E225 B/3 : Pompe à injection (MSOLC) (avec NATS)
E226 GY/3 : Pompe à injection (potentiomètre) (pour l'Europe sans NATS)
E227 GY/6 : Pompe à injection (potentiomètre • Minuteur de solénoïde) (avec NATS)

HEL806A

Simpo PDF Merge and Split Unregistered Version - http://www.simpopdf.com

Faisceau d'alternateur

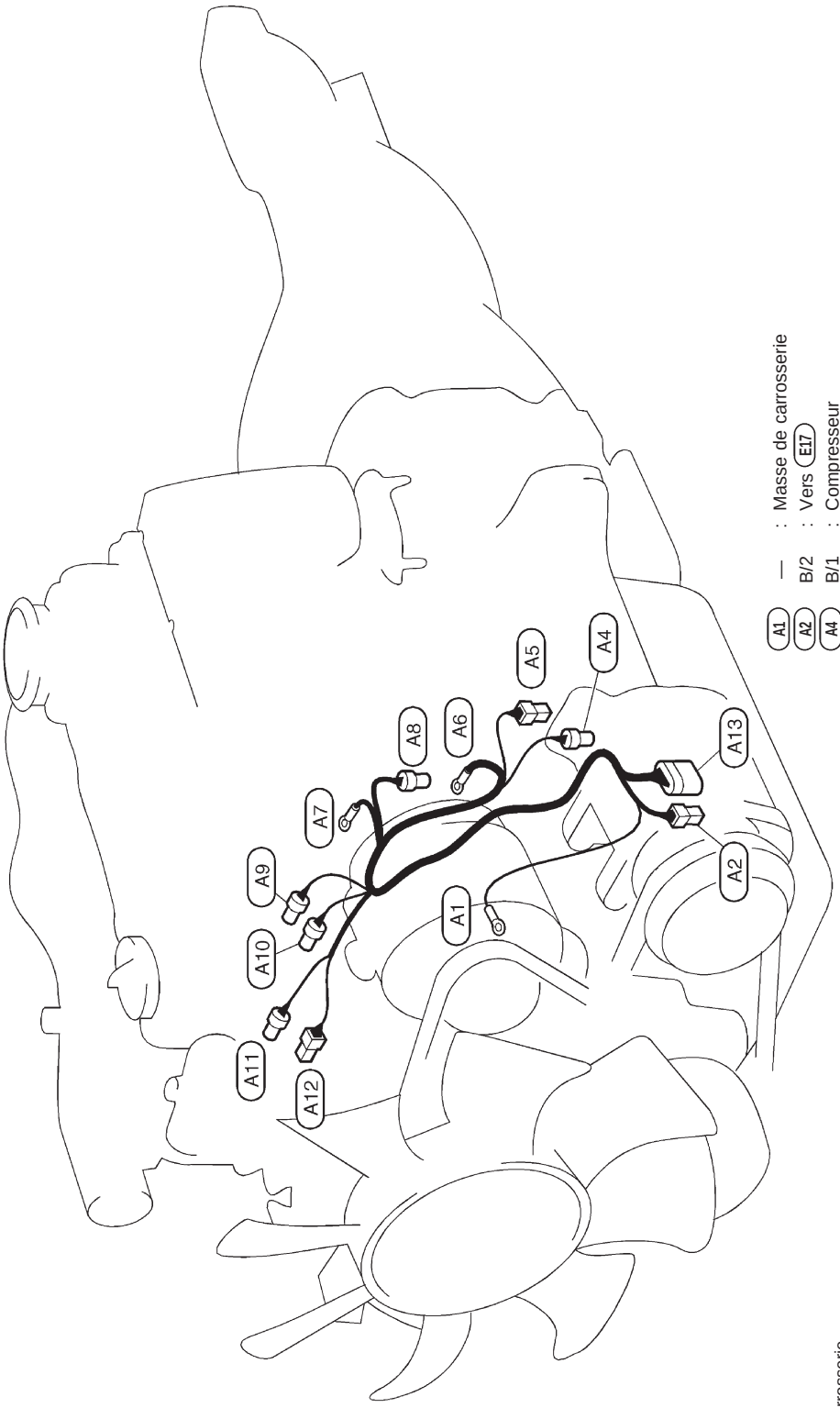

(A1) — : Masse de carrosserie
(A2) B/2 : Vers (E17)
(A4) B/1 : Compresseur
(A5) B/1 : Manocontact d'huile (pour dispositif de chauffage de carburant) (sauf moteur QD pour l'Australie)
(A6) — : Alternateur (B)
(A7) — : Alternateur (E)
(A8) GY/2 : Alternateur (S, L)
(A9) GY/2 : Thermocontact (modèles avec turbocompresseur et sauf pour l'Europe)
(A10) BR/2 : Capteur de régime
(A11) GY/2 : Capteur de température du liquide de refroidissement moteur
(A12) B/1 : Transmetteur thermique
(A13) GY/10 : Vers (E68)

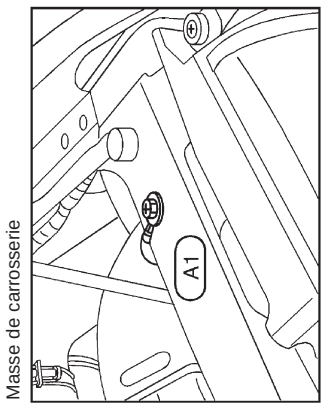

HEL807A

Simpo PDF Merge and Split Unregistered Version - http://www.simpopdf.com

Faisceau d'instruments

CONDUITE A GAUCHE

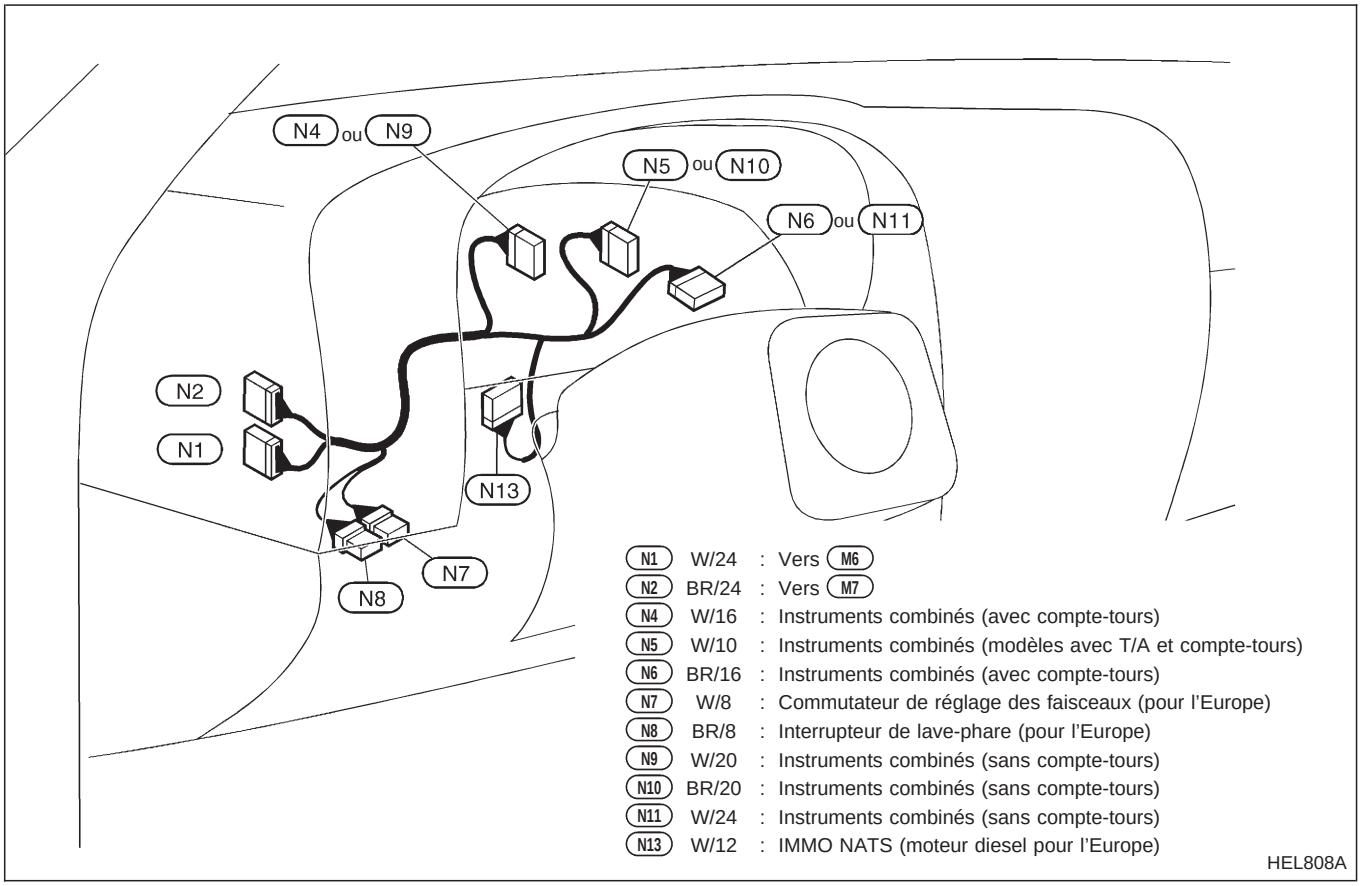

N1	W/24	:	Vers M6
N2	BR/24	:	Vers M7
N4	W/16	:	Instruments combinés (avec compte-tours)
N5	W/10	:	Instruments combinés (modèles avec T/A et compte-tours)
N6	BR/16	:	Instruments combinés (avec compte-tours)
N7	W/8	:	Commutateur de réglage des faisceaux (pour l'Europe)
N8	BR/8	:	Interrupteur de lave-phare (pour l'Europe)
N9	W/20	:	Instruments combinés (sans compte-tours)
N10	BR/20	:	Instruments combinés (sans compte-tours)
N11	W/24	:	Instruments combinés (sans compte-tours)
N13	W/12	:	IMMO NATS (moteur diesel pour l'Europe)

HEL808A

CONDUITE A DROITE

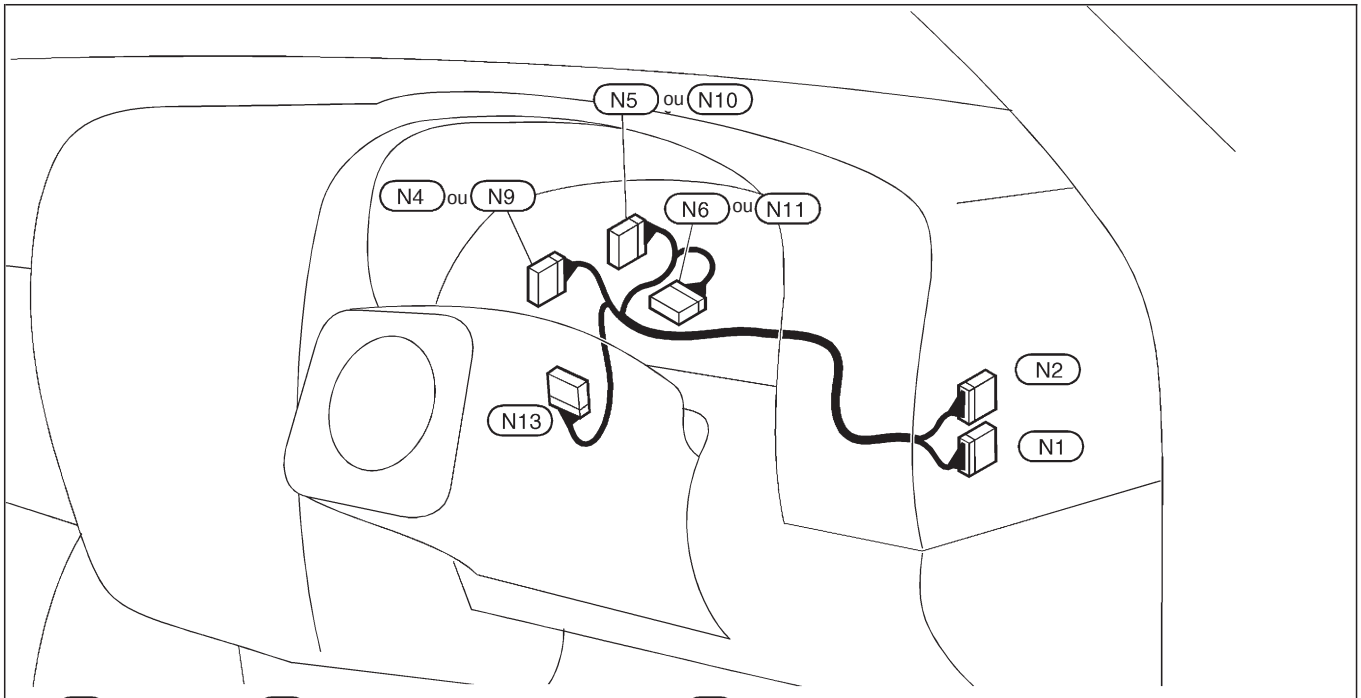

N1	W/24	:	Vers M6
N2	BR/24	:	Vers M7 (pour l'Europe)
N4	W/16	:	Instruments combinés (avec compte-tours)
N5	W/10	:	Instruments combinés (modèles avec T/A et compte-tours)
N6	BR/16	:	Instruments combinés (avec compte-tours)
N9	W/20	:	Instruments combinés (sans compte-tours)
N10	BR/20	:	Instruments combinés (sans compte-tours)
N11	W/24	:	Instruments combinés (sans compte-tours)
N13	W/12	:	IMMO NATS (moteur diesel pour l'Europe)

HEL809A

Simpo PDF Merge and Split Unregistered Version - http://www.simpopdf.com

Faisceau de plafonnier/Conduite à gauche

CABINE SIMPLE ET GRANDE CABINE

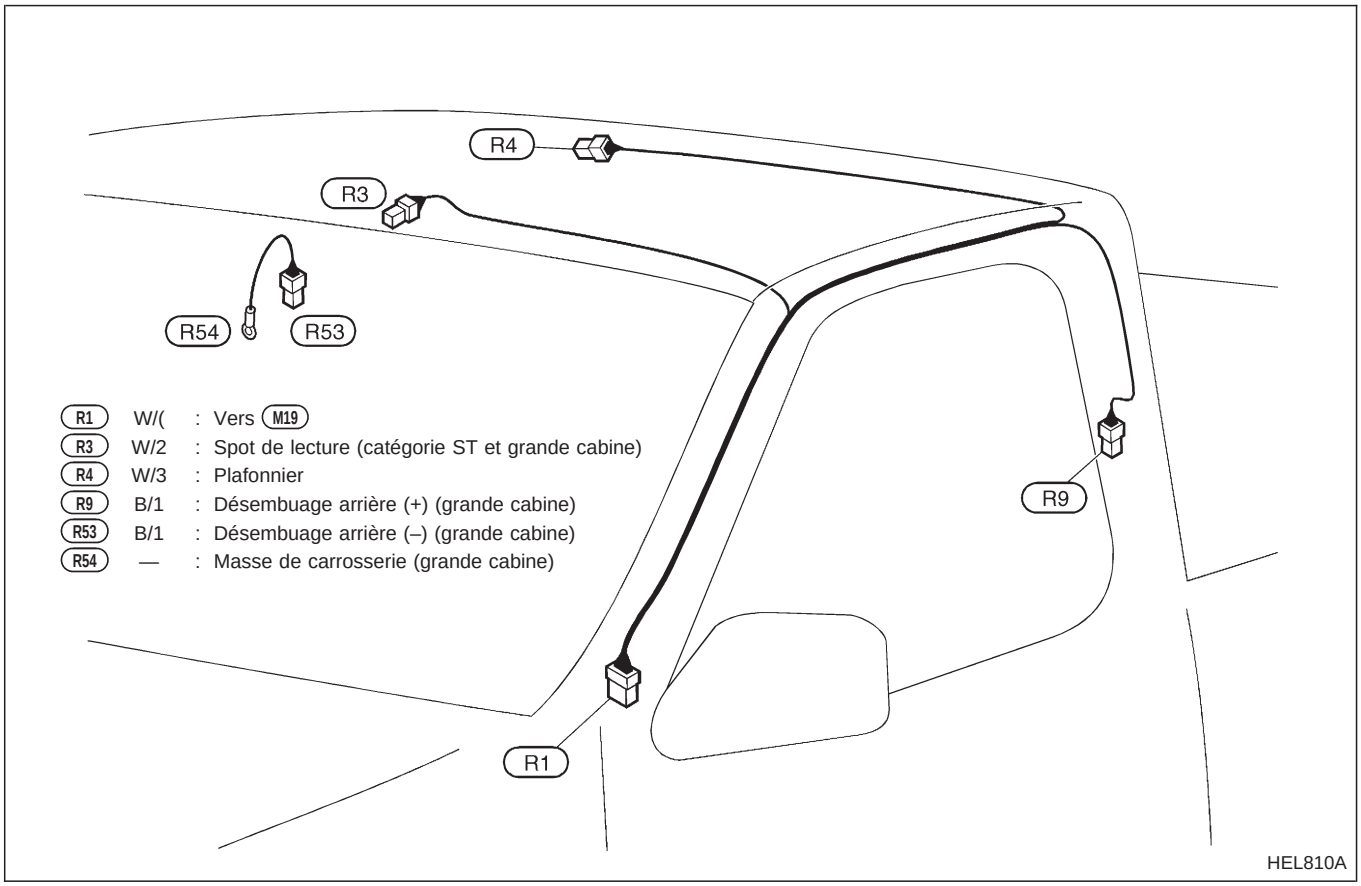

R1 W/(: Vers M19
R3 W/2 : Spot de lecture (catégorie ST et grande cabine)
R4 W/3 : Plafonnier
R9 B/1 : Désembuage arrière (+) (grande cabine)
R53 B/1 : Désembuage arrière (–) (grande cabine)
R54 — : Masse de carrosserie (grande cabine)

HEL810A

CABINE DOUBLE

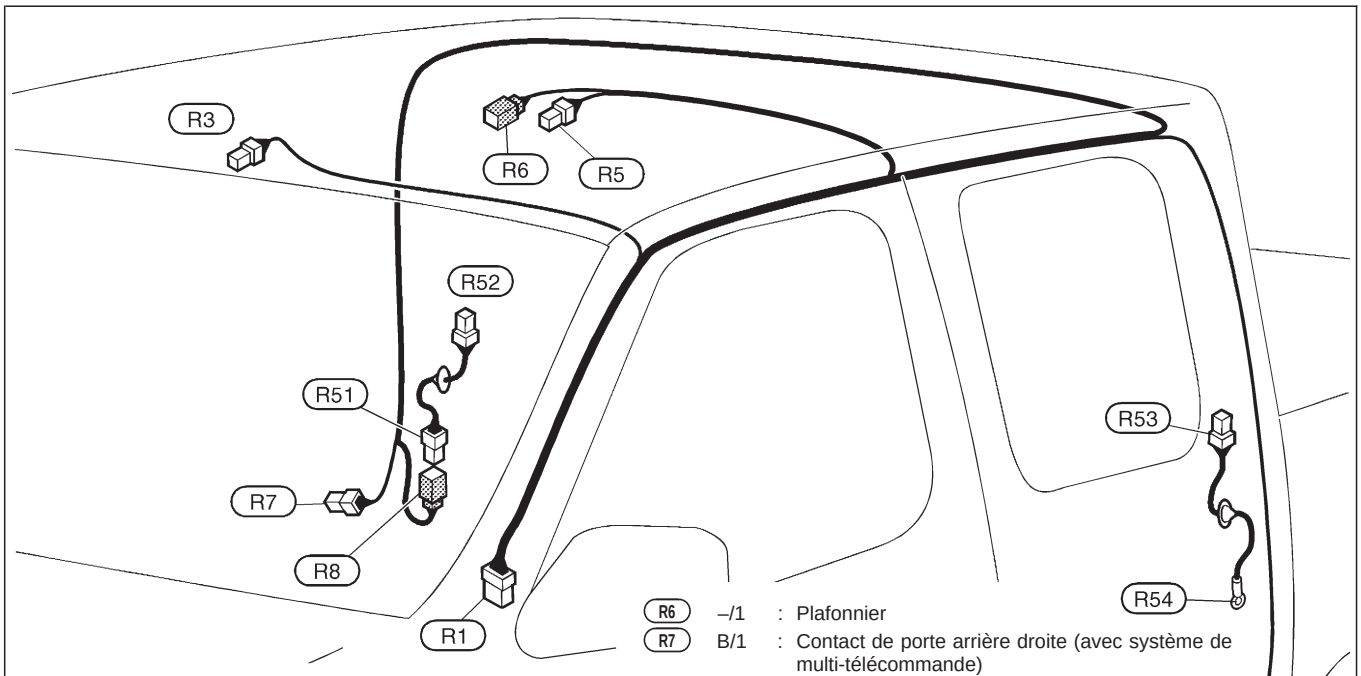

R1 W/6 : Vers M19
R2 B/1 : Contact de porte arrière gauche (avec système de multi-télécommande)
R3 W/2 : Spot de lecture (avec spot de lecture)
R5 –/1 : Plafonnier
R6 –/1 : Plafonnier
R7 B/1 : Contact de porte arrière droite (avec système de multi-télécommande)
R8 BR/1 : Vers R51 (avec désembuage de lunette arrière)
R51 BR/1 : Vers R8
R52 B/1 : Désembuage de lunette arrière (+)
R53 B/1 : Désembuage de lunette arrière (−)
R54 — : Masse de carrosserie

HEL811A

Simpo PDF Merge and Split Unregistered Version - http://www.simpopdf.com

Faisceau de plafonnier/Conduite à droite

CABINE DOUBLE

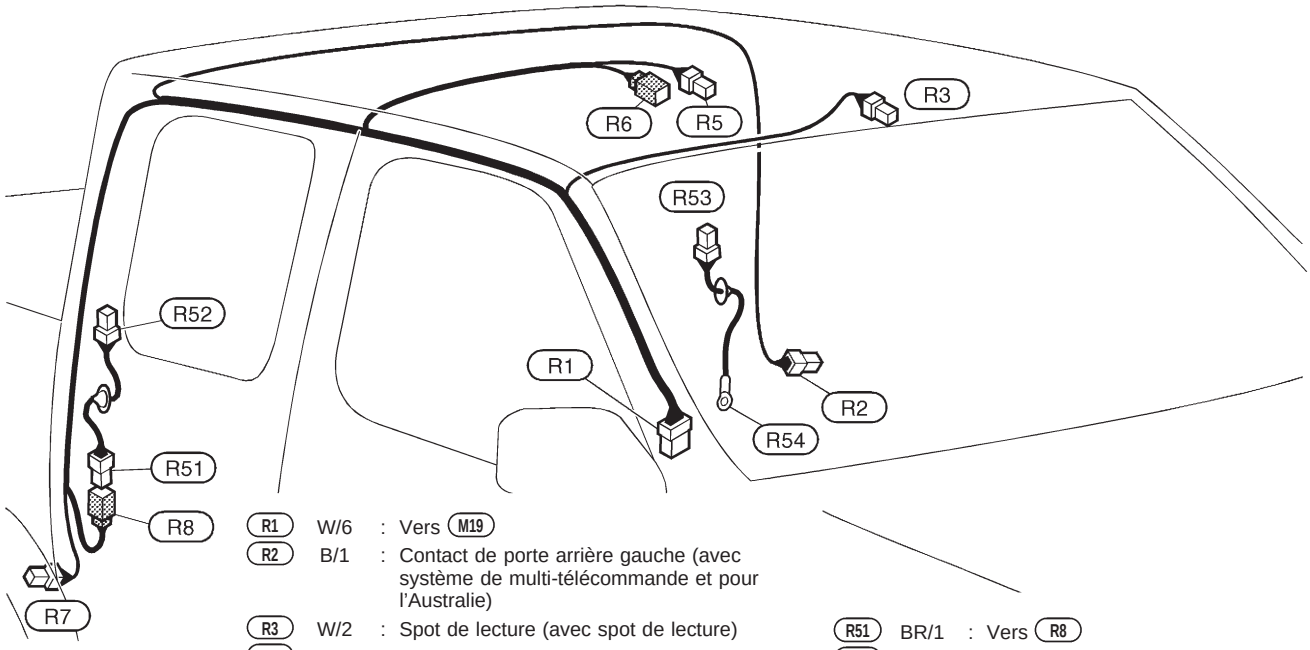

R1	W/6	:	Vers M19
R2	B/1	:	Contact de porte arrière gauche (avec système de multi-télécommande et pour l'Australie)
R3	W/2	:	Spot de lecture (avec spot de lecture)
R5	–/1	:	Plafonnier
R6	–/1	:	Plafonnier
R7	B/1	:	Contact de porte arrière droite (avec système de multi-télécommande et pour l'Australie)
R8	BR/1	:	Vers R51 (avec désembuage de lunette arrière)
R51	BR/1	:	Vers R8
R52	B/1	:	Désembuage de lunette arrière (+)
R53	B/1	:	Désembuage de lunette arrière (–)
R54	—	:	Masse de carrosserie

HEL812A

Simpo PDF Merge and Split Unregistered Version - http://www.simpopdf.com

Faisceau de châssis et faisceau arrière

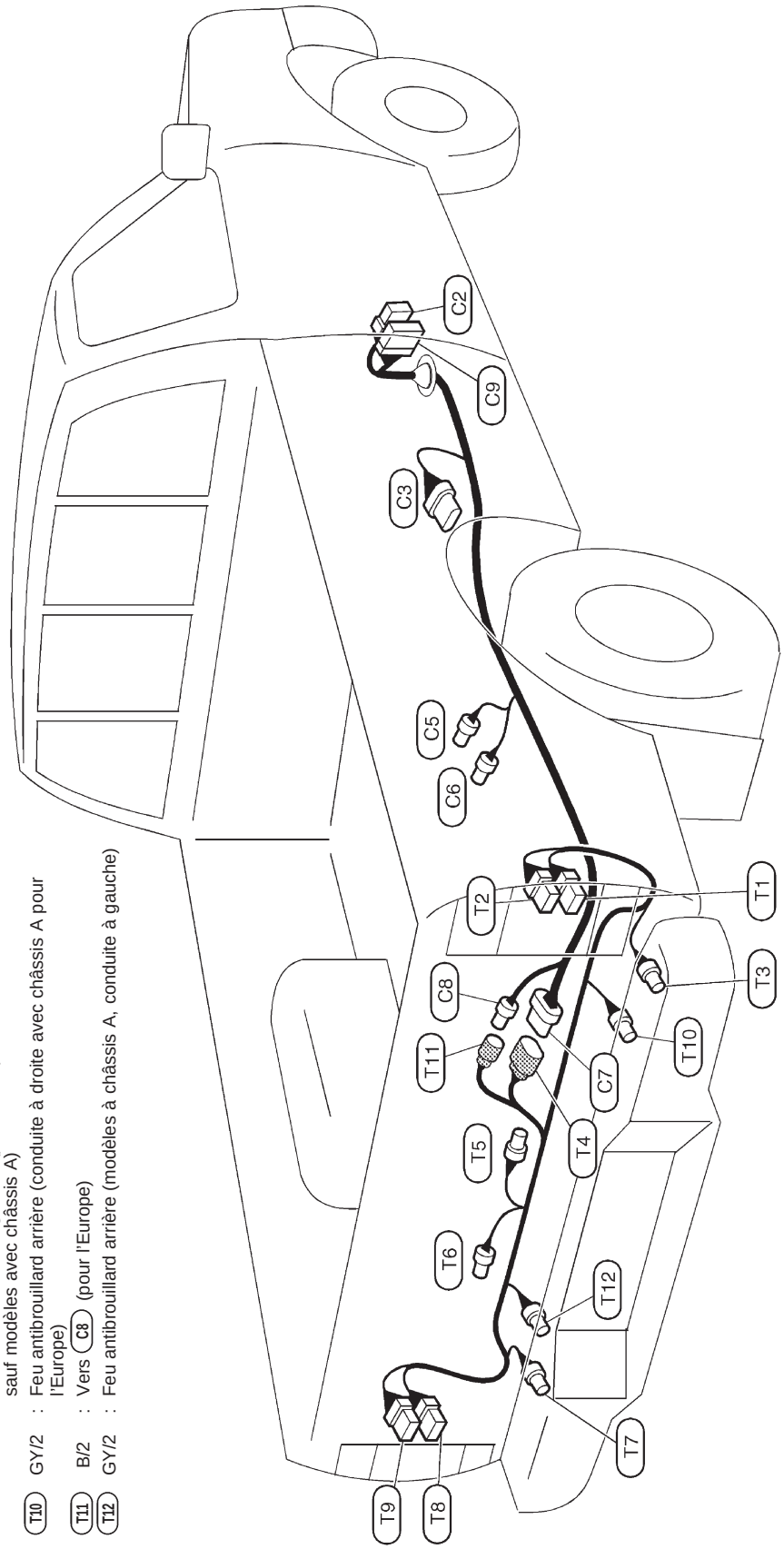

Faisceau arrière

T1	W/6	:	Feu combiné arrière droit (modèles à châssis A, et sauf pour l'Europe, l'Australie et la Chine)
T2	W/8	:	Feu combiné arrière droit (pour l'Europe, l'Australie et la Chine sauf modèles avec châssis A)
T3	GY/2	:	Eclairage de plaque minéralogique droit (avec protection de marchepied)
T4	GY/8	:	Vers C7
T5	GY/2	:	Eclairage de plaque minéralogique droit (sans protection de marchepied)
T6	GY/2	:	Eclairage de plaque minéralogique gauche (sans protection de marchepied)
T7	B/2	:	Eclairage de plaque minéralogique gauche (avec protection de marchepied)
T8	W/6	:	Feu combiné arrière gauche (modèles à châssis A, et sauf pour l'Europe, l'Australie et la Chine)
T9	W/8	:	Feu combiné arrière gauche (pour l'Europe, l'Australie et la Chine sauf modèles avec châssis A)
T10	GY/2	:	Feu antibrouillard arrière (conduite à droite avec châssis A pour l'Europe)
T11	B/2	:	Vers C8 (pour l'Europe)
T12	GY/2	:	Feu antibrouillard arrière (modèles à châssis A, conduite à gauche)

Faisceau de châssis

C2	W/6	:	Vers M112 (avec ABS)
C3	GY/6	:	Boîtier de capteur de niveau de carburant et pompe à carburant
C6	GY/4	:	Vers le faisceau auxiliaire de capteur de roue arrière (pour l'ABS) (modèles à 4 roues motrices)
C6	GY/2	:	Capteur de roue arrière (pour l'ABS) (modèles à 2 roues motrices)
C7	GY/8	:	Vers T4
C8	B/2	:	Vers T11 (pour l'Europe)
C9	W/16	:	Vers M121

HEL813A

Simpo PDF Merge and Split Unregistered Version - http://www.simpopdf.com

Faisceau de porte avant (côté gauche)

CONDUITE A GAUCHE

- D1 W/20 : Vers M3
- D2 W/12 : Vers M4 (avec lève-glace électrique)
- D3 BR/2 : Haut-parleur avant
- D5 GY/5 : Actionneur de rétroviseur de porte (avec rétroviseur électrique de porte sauf pour le Moyen-Orient)
- D5 W/16 : Interrupteur principal de lève-glace électrique
- D7 B/2 : Régulateur de lève-glace électrique (avec système de lève-glace électrique pour l'Europe)
- D8 GY/2 : Contact de bouton de verrouillage (avec système de verrouillage électrique des portes sans système de multi-télécommande)
- D9 BR/3 : Désembuage de rétroviseur de porte (avec système de lève-glace électrique pour l'Europe)
- D10 GY/4 : Actionneur de verrouillage de porte (avec système de multi-télécommande)
- D11 GY/3 : Actionneur de rétroviseur de porte (avec rétroviseur électrique de porte sauf pour le Moyen-Orient)
- D12 GY/6 : Régulateur de lève-glace électrique (avec système de lève-glace électrique pour l'Europe)
- D13 W/3 : Interrupteur principal de lève-glace électrique (avec système de lève-glace électrique pour l'Europe)
- D14 GY/12 : Contact de commande de réglage de rétroviseur de porte

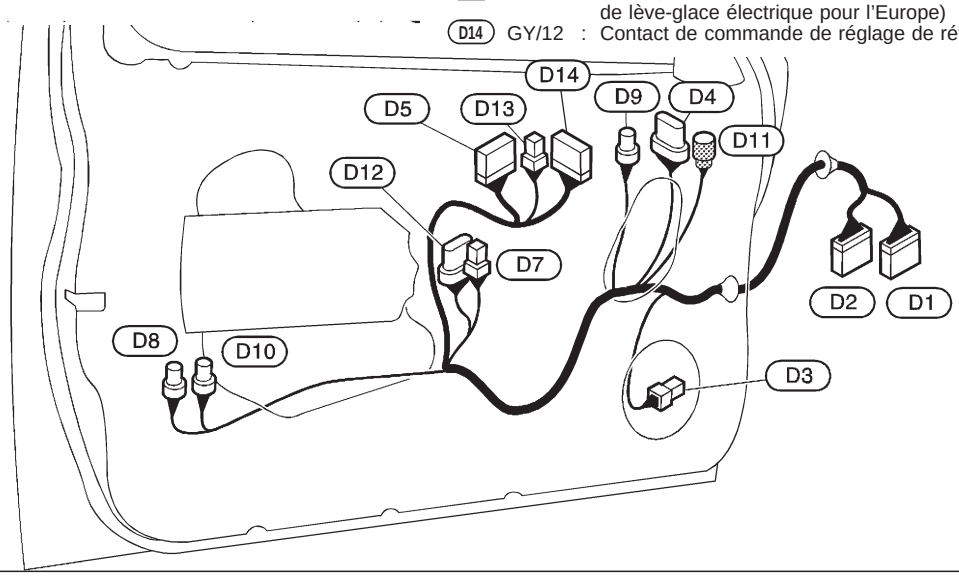

HEL814A

CONDUITE A DROITE

- D31 W/20 : Vers M49
- D32 W/6 : Vers M50 (avec lève-glace électrique)
- D33 BR/2 : Haut-parleur avant
- D34 GY/5 : Actionneur de rétroviseur de porte (avec rétroviseur électrique de porte)
- D35 W/8 : Interrupteur auxiliaire de lève-glace électrique (avec lève-glace électrique)
- D37 B/2 : Régulateur de lève-glace élec. (avec lève-glace électrique)
- D38 GY/4 : Actionneur de verrou. de porte (avec verrouillage élec. de porte)
- D39 BR/3 : Désembuage de rétroviseur de porte (avec rétroviseur électrique de porte)

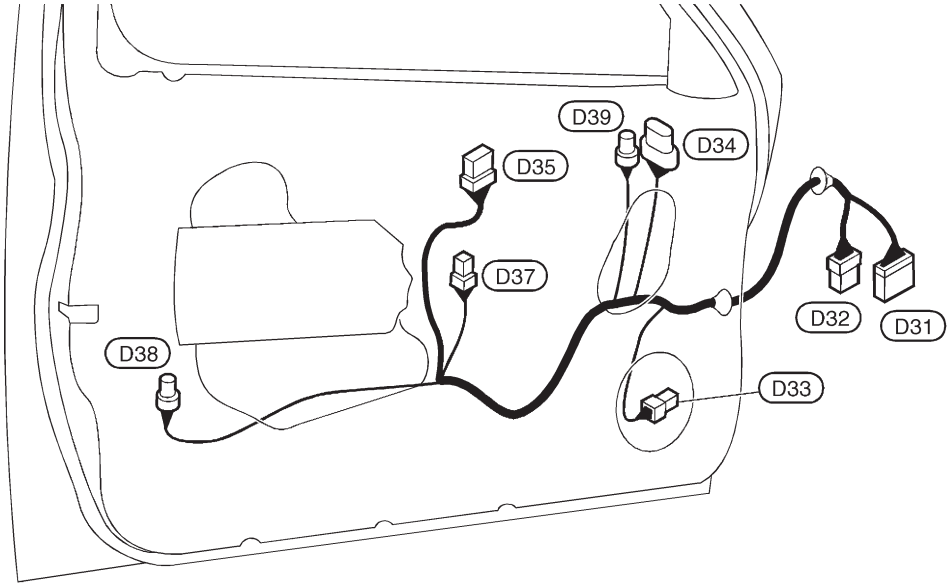

HEL815A

Simpo PDF Merge and Split Unregistered Version - http://www.simpopdf.com

Faisceau de porte avant (côté droit)

CONDUITE A GAUCHE

- D31 W/20 : Vers M49
- D32 W/6 : Vers M50 (avec lève-glace électrique)
- D33 BR/2 : Haut-parleur avant
- D34 GY/5 : Actionneur de rétroviseur de porte (avec rétroviseur électrique de porte sauf pour le Moyen-Orient)
- D35 W/8 : Interrupteur auxiliaire de lève-glace électrique (avec lève-glace électrique)
- D37 B/2 : Régulateur de lève-glace électrique (avec lève-glace électrique)
- D38 GY/4 : Actionneur de verrouillage de porte (avec système de verrouillage électrique des portes)
- D39 BR/3 : Désembuage de rétroviseur de porte (avec rétroviseur électrique de porte pour l'Europe)
- D41 BR/3 : Actionneur de rétroviseur de porte (avec rétroviseur électrique de porte sauf pour le Moyen-Orient)

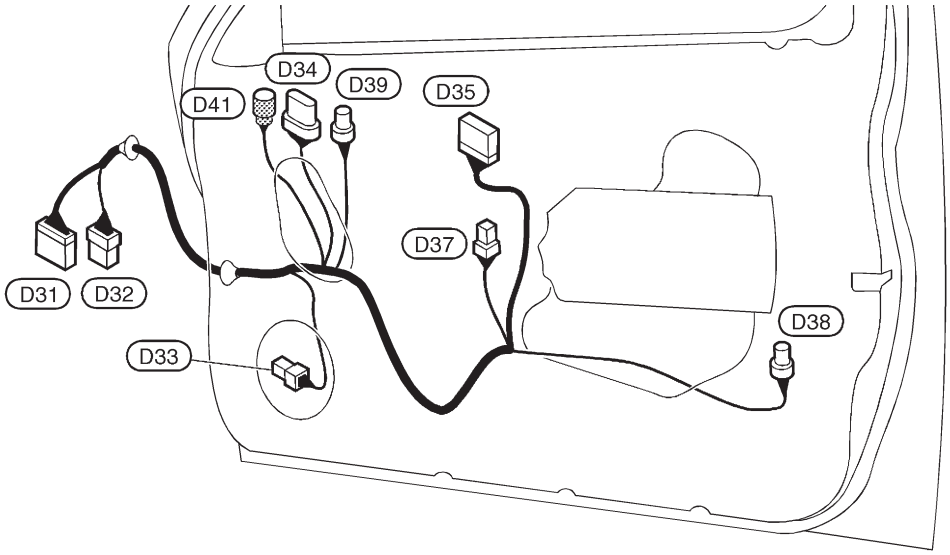

HEL816A

CONDUITE A DROITE

- D1 W/20 : Vers M3
- D2 W/12 : Vers M4 (avec lève-glace électrique)
- D3 BR/2 : Haut-parleur avant
- D5 GY/5 : Actionneur de rétroviseur de porte (avec lève-glace électrique)
- D5 W/16 : Interrupteur principal de lève-glace électrique
- D7 B/2 : Régulateur de lève-glace électrique (avec système de lève-glace électrique sauf pour l'Europe)
- D8 GY/2 : Contact de bouton de verrouillage (avec système de verrouillage électrique des portes sans système de multi-télécommande)
- D9 BR/3 : Désembuage de rétroviseur de porte (avec lève-glace électrique)
- D10 GY/4 : Actionneur de verrouillage de porte (avec système de multi-télécommande)
- D12 GY/6 : Régulateur de lève-glace électrique (avec système de lève-glace électrique pour l'Europe)
- D13 W/3 : Interrupteur principal de lève-glace électrique (avec système de lève-glace électrique pour l'Europe)
- D14 GY/12 : Contact de télécommande de rétroviseur de porte (avec lève-glace électrique)

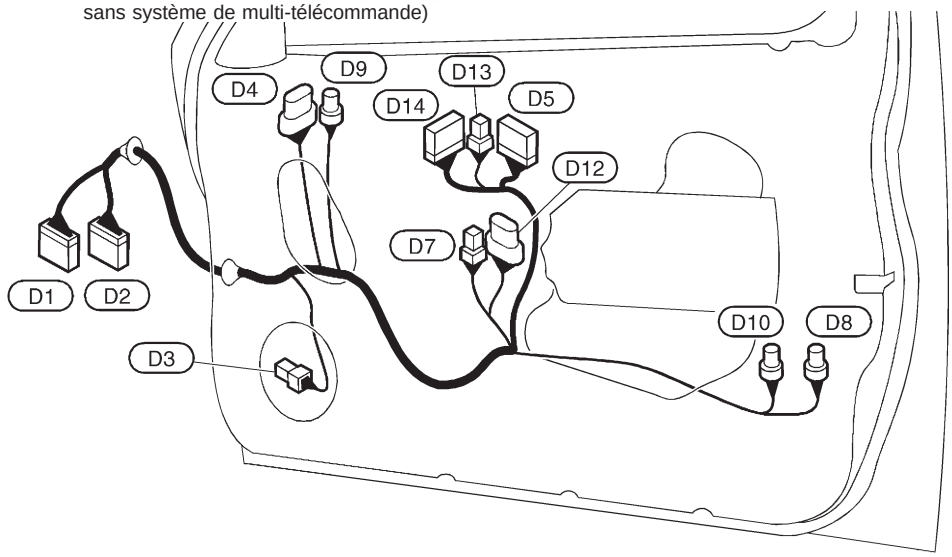

HEL817A

Simpo PDF Merge and Split Unregistered Version - http://www.simpopdf.com

Utiliser l'organigramme ci-dessous pour trouver chaque signification de code de schéma de câblage.
Consulter le code du schéma de câblage dans l'index alphabétique pour trouver l'emplacement (numéro de page) de chaque schéma de câblage.

Code	Section	Signification
AAC/V	EC	Vanne IACV-AAC
ABS	BR	Système anti-enrayeur des freins
A/C, M	HA	Climatiseur
A/C, A	HA	Climatiseur automatique
AT/IND	EL	Voyant de boîte auto
AUDIO	EL	Audio
BACK/L	EL	Feux de recul
BA/FTS	AT	BATT/Capteur de température de liquide de boîte automatique et alimentation électrique du module de commande de transmission (TCM)
CHARGE	EL	Système de charge
CHIME	EL	Carillon d'alarme
STAR-TER	EC	Starter automatique
CIGAR	EL	Allume-cigare
MONTRE	EL	Montre
CMPS	EC	Capteur d'angle d'arbre à cames
COOL/F	LC	Commande du ventilateur de refroidissement
DEF (DEG)	EL	Désembuage de lunette arrière et de rétroviseur
DIMDIP	EL	Phares — Avec système de mise en veilleuse des codes
D/LOCK	EL	Verrouillage élec. de porte
DTRL	EL	Phare — Avec système d'éclairage de jour
ECTS	EC	Capteur de température du moteur
EGRC/V	EC	EGRC — Electrovanne
ENGSS	T/A	Signal du régime moteur
FCUT	EC	Electrovanne de coupure de carburant
F/HEAT	EC	Système de chauffage de carburant
FICD	EC	Electrovanne FICD
FIPOT	EC	Pot ISC-FI
FPCM	EC	Module de commande de la pompe à carburant
F/PUMP	EC	Pompe d'alimentation
GLOW	EC	Système de préchauffage rapide

Code	Section	Signification
H/AIM	EL	Commande de réglage des faisceaux
CHAUF-FAGE	HA	Dispositif de chauffage
H/LAMP	EL	Phares
HLC	EL	Lave-phares
HO2S	EC	Sonde à oxygène chauffée
AVER-TISSEUR SONORE	EL	Avertisseur sonore
H/SEAT	EL	Siège chauffant
ALL	EC	Système d'allumage
IGN/SG	EC	Signal d'allumage
ILL	EL	Eclairage
INJECT	EC	Injecteur
INT/L	EL	Spot de lecture
KS	EC	Capteur de détonation
LOAD	EC	Signal de charge électrique
LPSV	T/A	Electrovanne de pression de canalisation
MAFS	EC	Débitmètre d'air
MAIN	EC, AT	Circuit d'alimentation électrique principal et de mise à la masse
METER	EL	Compteur de vitesse, compte-tours, jauges de température et de carburant
MIL/DL	EC	Témoin de défaut (MIL) et connecteur de diagnostic pour CONSULT
MIRROR	EL	Rétroviseur de porte électrique
MULTI	EL	Système de multitélécommande
NATS	EL	Système antivol Nissan
NONDTC	AT	Eléments non détectables
OVRCSV	AT	Electrovanne d'embrayage à roue libre
P/ANT	EL	Antenne électrique
PGC/V	EC	Electrovanne de commande de purge de cartouche EVAP
PLA	EC	Commande d'avance à charge partielle
PNP/SW	EC	Contact de position de stationnement/point mort

Simpo PDF Merge and Split Unregistered Version - http://www.simpopdf.com

Code	Section	Signification
POWER	EL	Disposition de l'alimentation électrique
PST/SW	EC	Manocontact d'huile de direction assistée
R/FOG	EL	Feu antibrouillard arrière
ROOM/L	EL	Plafonnier
SHIFT	AT	Système de verrouillage de passage de vitesse
SSV/A	AT	Electrovanne A de passage
SSV/B	AT	Electrovanne B de passage
SRS	RS	Système de retenue supplémentaire
S/SIG	EC	Signal de démarrage
START	EL	Système de démarrage
STOP/L	EL	Feu de stop
SWL/V	EC	Electrovanne de contrôle de vanne de commande de tourbillon

Code	Section	Signification
TAIL/L	EL	Feux de stationnement, éclairage de plaque minéralogique et feux arrière
TCV	AT	Electrovanne d'embrayage de convertisseur de couple
TPS	EC, AT	Capteur de position de papillon
TURN	EL	Clignotants et feux de détresse
VSS	EC	Capteur de vitesse du véhicule
VSSAT	AT	Capteur de vitesse du véhicule T/A (capteur de régime)
VSSMTR	T/A	Compteur du capteur de vitesse du véhicule
WARN	EL	Témoins d'avertissement
WINDOW	EL	Lève-glace électrique
WIPER	EL	Essuie-glace et lave-glace avant

Simpo PDF Merge and Split Unregistered Version - http://www.simpopdf.com

SECTION EM

TABLE DES MATIERES

TD KA24DE

Simpo PDF Merge and Split Unregistered Version - http://www.simpopdf.com

<SUPPLEMENT-II>

ELEMENTS DU MOTEUR

SECTION EM

AVIS DE MODIFICATION :

Moteur diesel :

- Le jeu du palier principal a été modifié.
- Le couple de serrage des boulons et écrous de l'œillet de levage de moteur, de la poulie de vilebrequin et du volant-moteur a été modifié.
- Une rondelle a été ajoutée entre la plaque et la bougie de préchauffage.

TABLE DES MATIERES

TD

COMPOSANTS EXTERNES 2002
CULASSE 2003
CARACTERISTIQUES ET VALEURS DE REGLAGE (SDS) 2004
Inspection et réglage 2004

Simpo PDF Merge and Split Unregistered Version - http://www.simpopdf.com

SEC. 135•140•185•186•213

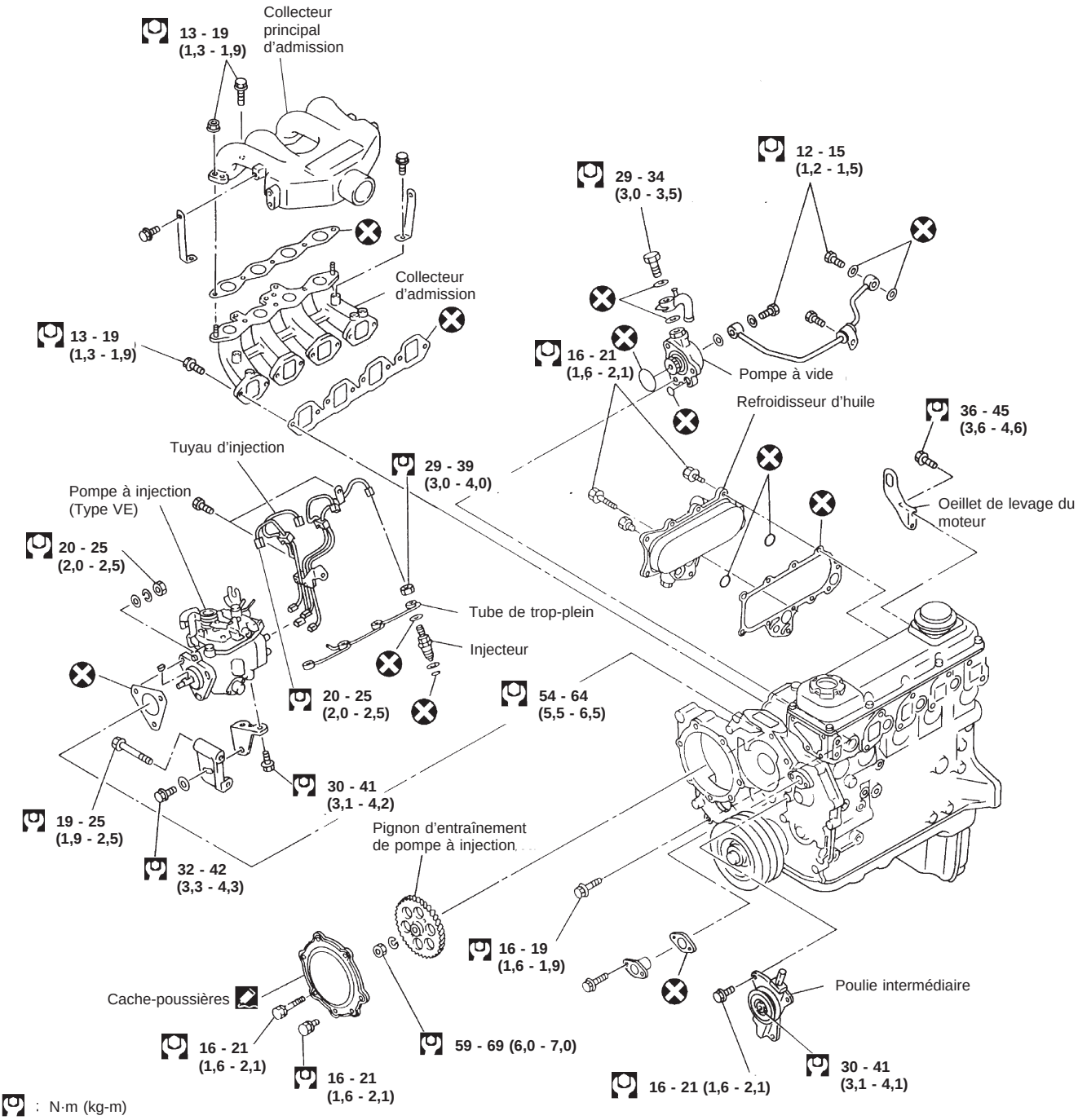

: N·m (kg-m)

: Appliquer le produit d'étanchéité recommandé (Pièce Nissan d'origine : KP610-00250) ou équivalent.

NEM342

Simpo PDF Merge and Split Unregistered Version - http://www.simpopdf.com

SEC. 111•130•185•220

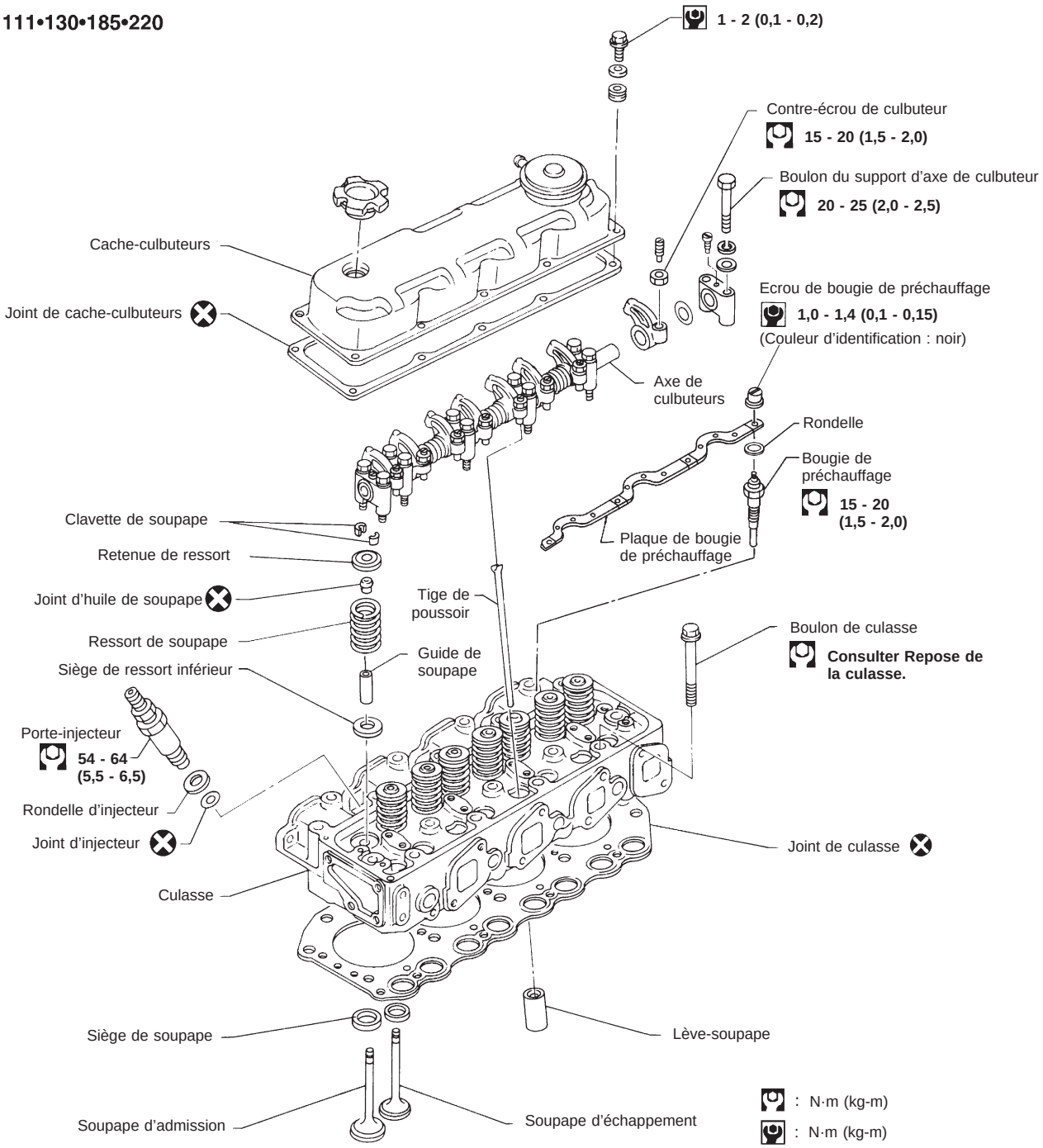

DEM144

Simpo PDF Merge and Split Unregistered Version - http://www.simpopdf.com

Inspection et réglage

PALIERS PRINCIPAUX DISPONIBLES

Jeu des paliers

Unité : mm

Jeu du palier principal	
Standard	0,035 - 0,083
Limite	0,15
Jeu du palier de bielle	
Standard	0,035 - 0,077
Limite	0,15

Simpo PDF Merge and Split Unregistered Version - http://www.simpopdf.com

ELEMENTS DU MOTEUR

SECTION EM

AVIS DE MODIFICATION :

Moteur à essence :

- Les informations relatives au moteur KA24DE ont été rajoutées.

TABLE DES MATIERES

KA24DE

PRECAUTIONS ET PREPARATION 2002
Pièces nécessitant un serrage angulaire 2002
Procédé d'application du joint liquide 2002
Outillage spécial 2003
Outils en vente dans le commerce 2006
COMPOSANTS EXTERNES 2007
PRESSION DE COMPRESSION 2010
Mesure de la pression de compression 2010
CARTER D'HUILE 2012
Dépose 2012
Repose 2013
CHAINE DE DISTRIBUTION 2014
Dépose 2016
Inspection 2019
Repose 2019
REMPLACEMENT DES JOINTS D'HUILE 2022
CULASSE 2025
Dépose 2026
Repose 2027
Démontage 2028
Inspection 2028
Remontage 2034
Jeu de la soupape 2035
DEPOSE DU MOTEUR 2038
Dépose 2039
Repose 2040
BLOC-CYLINDRES 2041
Démontage 2042
Inspection 2042
Remontage 2049
CARACTERISTIQUES ET VALEURS DE REGLAGE (SDS) 2053
Caractéristiques générales 2053
Inspection et réglage 2053

Simpo PDF Merge and Split Unregistered Version - http://www.simpopdf.com

Pièces nécessitant un serrage angulaire

- Utiliser une clé angulaire pour le serrage final des pièces suivantes :
  (1) Boulons de culasse
  (2) Ecrous de chapeau de bielle
- Ne pas utiliser une valeur de serrage pour le serrage final.
- Les valeurs de serrage de ces pièces s'appliquent à une étape préliminaire.
- S'assurer que le filetage et les surfaces de siège sont propres et enduits d'une couche d'huile-moteur.

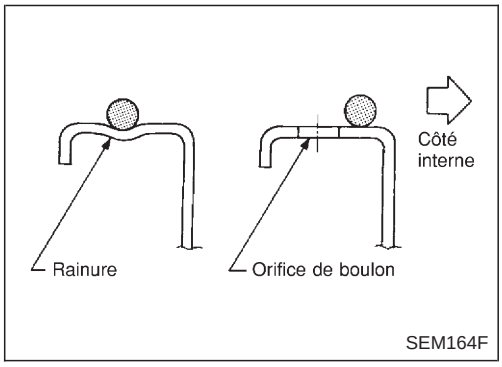

Procédé d'application du joint liquide

a. Retirer toute trace de joint liquide des surfaces de contact et des rainures à l'aide d'un grattoir. Veiller également à enlever toute trace d'huile.

b. Appliquer une couche régulière de joint liquide sur les surfaces de contact. (Utiliser du joint liquide d'origine ou un produit équivalent.
- **Pour le carter d'huile, veiller à ce que le diamètre du joint liquide se situe entre 3,5 et 4,5 mm.**
- **Pour les autres pièces, le joint liquide doit respecter un diamètre de 2,0 à 3,0 mm.**

c. Appliquer du joint liquide autour des surfaces intérieures des orifices de boulons (sauf indication contraire).

d. Le montage doit être fait dans les 5 minutes qui suivent l'application du joint.

e. Attendre au moins 30 minutes avant de faire le plein d'huile moteur et de liquide de refroidissement.

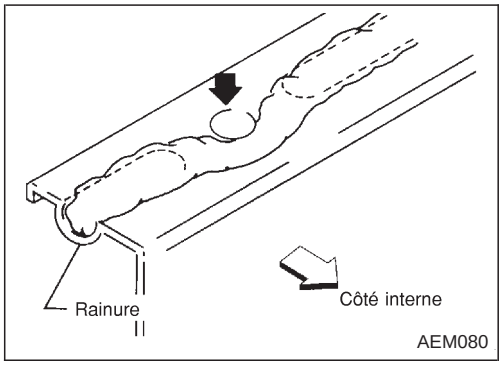

Simpo PDF Merge and Split Unregistered Version - http://www.simpopdf.com

Outillage spécial

* : outillage spécial ou équivalent en vente dans le commerce

Nom et numéro de l'outil	Description	
ST0501S000* Ensemble de support de moteur ① ST05011000 Support de moteur ② ST05012000 Base	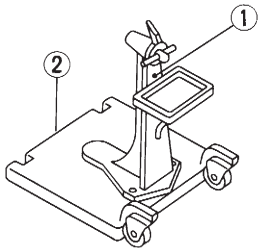 NT042	Dépose et repose
KV10105001* Fixation de moteur	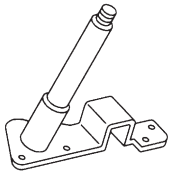 NT031	
KV101092S0* Compresseur de ressort de soupape ① KV10109210 Compresseur ② KV10109220 Adaptateur	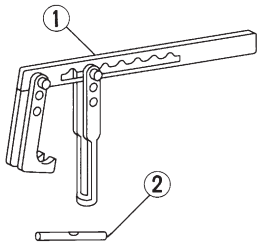 NT021	Démontage et remontage des composants de la soupape
KV10110300 Ensemble de support de presse d'axe de piston ① KV10110310 Chapeau ② KV10110330 Entretoise ③ ST13030020 Support de pression ④ ST13030030 Ressort ⑤ KV10110340 Chassoir ⑥ KV10110320 Axe central	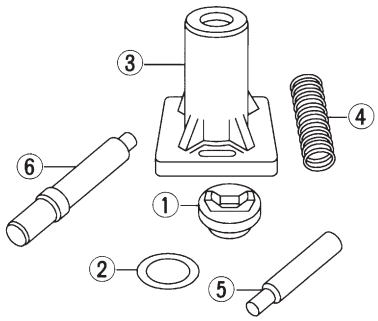 NT036	Démontage et remontage du piston avec la bielle
EM03470000* Compresseur de segment de piston	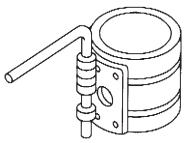 NT044	Repose du piston dans l'alésage du cylindre

Simpo PDF Merge and Split Unregistered Version - http://www.simpopdf.com

Outillage spécial (suite)

Nom et numéro de l'outil	Description	
ST16610001* Extracteur de bague pilote	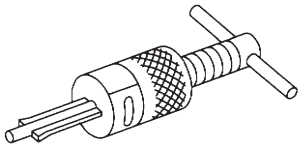 NT045	Dépose de la bague pilote de vilebrequin
KV10111100 Fraise pour joint	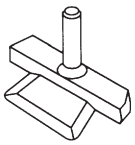 NT046	Dépose du carter d'huile
WS39930000* Presse-tube	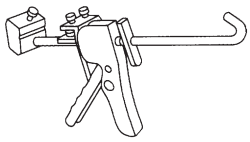 NT052	Pression du tube de joint liquide
KV10112100 Clé angulaire	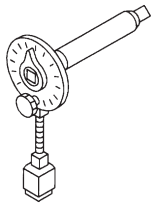 NT014	Serrage des boulons de chapeau de palier, de culasse, etc.
KV10116300 Chassoir de joint d'huile de soupape	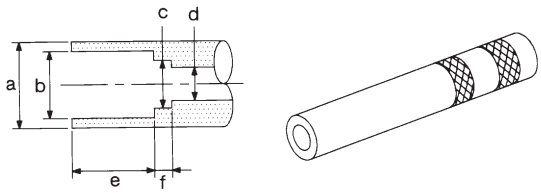 NT602	Repose du joint d'huile de soupape **a : 25 de dia.** **b : 14,4 de dia.** **c : 11,8 de dia.** **d : 10 de dia.** **e : 11 de dia.** **f : 9 de dia.** Unité : mm
ST10120000 Clé à boulon de culasse	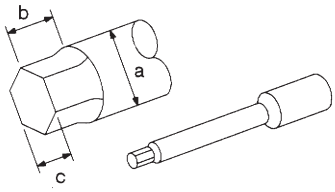 NT583	Desserrage et serrage des boulons de culasse **a : 13 de dia.** **b : 12 de dia.** **c : 10 de dia.** Unité : mm

Simpo PDF Merge and Split Unregistered Version - http://www.simpopdf.com

Outillage spécial (suite)

Nom et numéro de l'outil	Description	
KV101151S0 Jeu de butée de poussoir ① KV10115110 Pinces d'arbre à cames ② KV10115120 Butée de poussoir	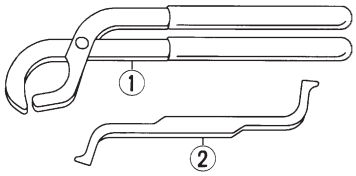 NT041	Changements des cales de lève-soupape
KV10105800* Butée de poussoir	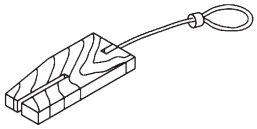 NT010	Dépose et repose de la roue dentée de renvoi

Simpo PDF Merge and Split Unregistered Version - http://www.simpopdf.com

Outils en vente dans le commerce

Nom de l'outil	Description
Clé pour bougie d'allumage	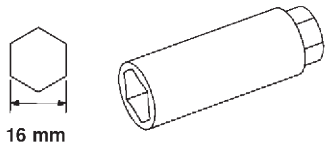 NT047 — Dépose et repose des bougies d'allumage
Outil d'immobilisation de poulie	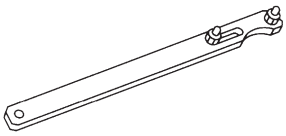 NT035 — Procéder au serrage et au desserrage du boulon de l'arbre à cames en maintenant la poulie
Jeu de fraises pour siège de soupape	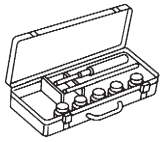 NT048 — Finition aux cotes du siège de soupape
Pinces d'écartement de segment de piston	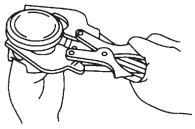 NT030 — Dépose et repose du segment de piston
Chassoir de guide de soupape	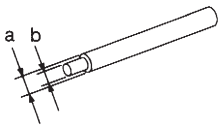 NT015 — Dépose et repose du guide de soupape Diamètre : mm Admission/échappement : a 10,5 ; b 6,6
Alésoir du guide de soupape	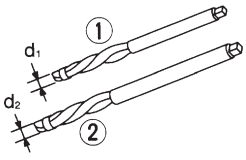 NT016 — Alésage du guide de soupape (①) ou de l'orifice du guide de soupape surdimensionné (②) Diamètre : mm Admission/échappement : d_1 7 ; d_2 11,175

Simpo PDF Merge and Split Unregistered Version - http://www.simpopdf.com

SEC. 120•140•147•150•163•164•210•220•221•230•231

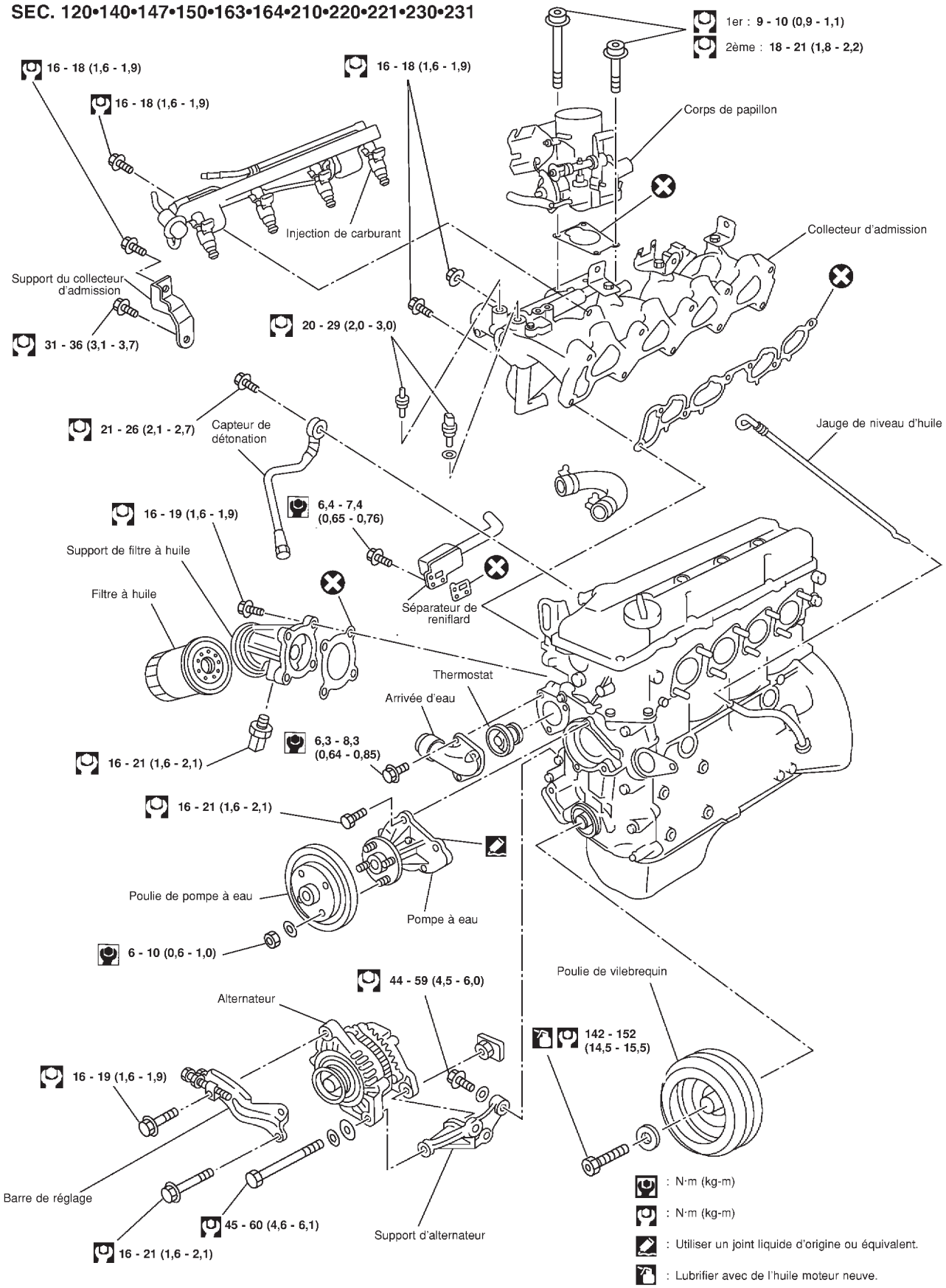

SEM012G

Simpo PDF Merge and Split Unregistered Version - http://www.simpopdf.com

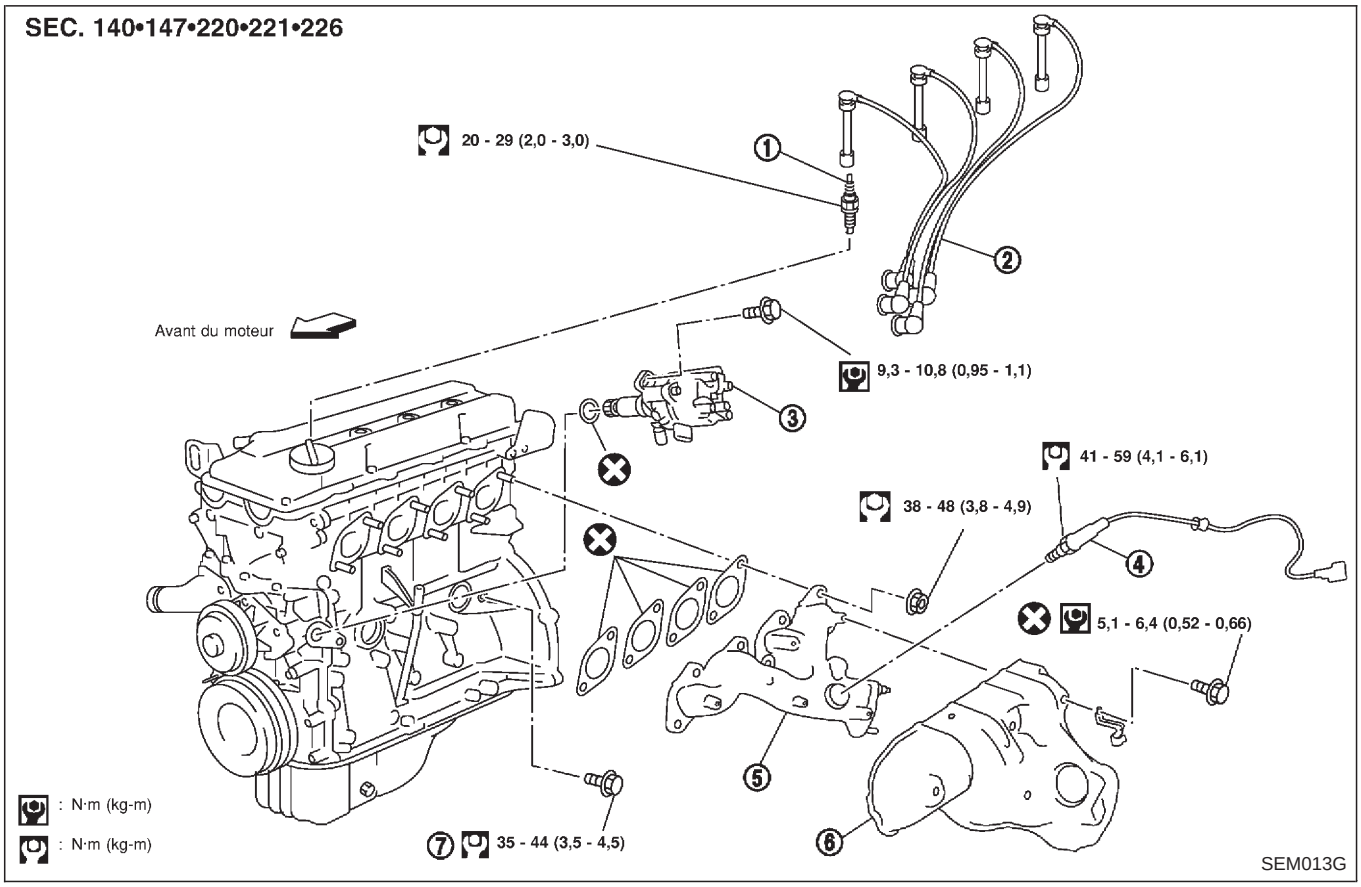

① Bougie d'allumage
② Câble d'allumage
③ Capteur d'angle d'arbre à cames intégré au distributeur
④ Sonde à oxygène chauffée
⑤ Collecteur d'échappement
⑥ Couvercle de collecteur d'échappement
⑦ Bouchon de vidange d'eau

Simpo PDF Merge and Split Unregistered Version - http://www.simpopdf.com

Collecteur d'admission

Avant du moteur

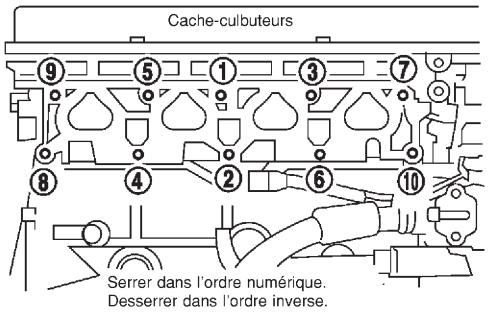

Serrer dans l'ordre numérique.
Desserrer dans l'ordre inverse.

15,7 - 18,6 (1,6 - 1,9)

Collecteur d'échappement

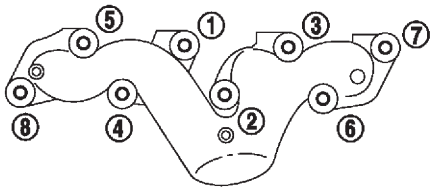

Serrer par ordre numérique. Desserrer dans le sens inverse.

37,3 - 48,0 (3,8 - 4,9)

: N·m(kg-m)

Corps de papillon

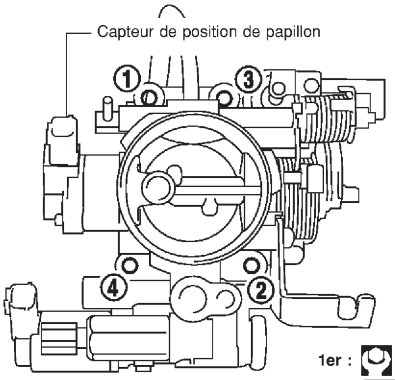

Serrer dans l'ordre numérique.
Desserrer dans l'ordre inverse.

1er : 9 - 11 (0,9 - 1,1)
2ème : 18 - 22 (1,8 - 2,2)

SEM976F

Simpo PDF Merge and Split Unregistered Version - http://www.simpopdf.com

Mesure de la pression de compression

1. Faire chauffer le moteur.
2. Mettre le contact d'allumage sur OFF.
3. Dépressuriser le carburant.
   Se reporter à la section EC (''Décharge de la pression d'alimentation'', PROCEDURE D'ENTRETIEN DE BASE).
4. Déposer toutes les bougies d'allumage.

- **Nettoyer la zone autour de la bougie à l'air comprimé avant de la retirer.**

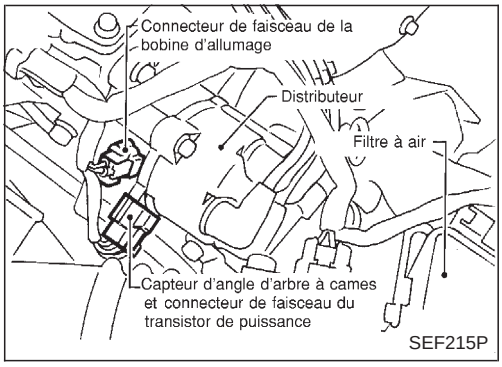

5. Débrancher le connecteur de faisceau du capteur d'angle d'arbre à cames du distributeur.
6. Débrancher la totalité des connecteurs de faisceau d'injecteur à carburant.

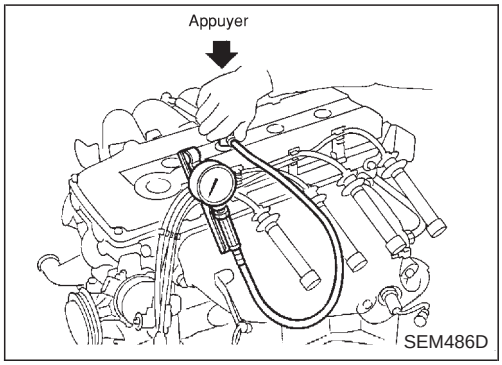

7. Adapter un compressiomètre au cylindre n°1.
8. Enfoncer à fond la pédale d'accélérateur de façon à ce que la soupape de papillon soit grand ouvert.
9. Faire démarrer le moteur et noter la valeur la plus haute enregistrée par la jauge.
10. Mesurer chaque cylindre comme indiqué ci-dessus.

- **Toujours utiliser une batterie ayant sa pleine charge pour obtenir le régime moteur spécifié.**

Pression de la compression : kPa (bar, kg/cm^2)/tr/min

Standard

1 226 (12,26, 12,5)/300

Minimum

1 030 (10,30, 10,5)/300

Limite de différence entre les cylindres

98 (0,98, 1,0)/300

11. En cas de compression basse dans l'un des cylindres :
    a. Déposer de l'huile moteur en petite quantité sur les cylindres à travers les orifices des bougies d'allumage.
    b. Tester à nouveau la compression.

- **Si le graissage améliore la compression du cylindre, il se peut que les segments de piston soient usés ou endommagés. Si tel est le cas, remplacer après vérification.**
- **Si la pression reste à un niveau bas, il se peut qu'une soupape accroche ou ait une mauvaise assise. Inspecter et réparer la soupape et le siège de soupape. (Se reporter aux SDS, EM-2053 et EM-2056.) En cas d'endommagement excessif de la soupape et du siège de soupape, remplacer.**
- **En cas de pression basse constante dans deux cylindres côte à côte :**
  a. Fuite possible du joint de culasse
  b. Endommagement des composants de la soupape des deux cylindre. Inspecter et réparer si nécessaire.

Simpo PDF Merge and Split Unregistered Version - http://www.simpopdf.com

Mesure de la pression de compression (suite)

12. Rebrancher le fusible de pompe à carburant, la totalité des connecteurs de faisceau des injecteurs à carburant, et le connecteur de faisceau du capteur de position d'arbre à cames sur le distributeur puis reposer les bougies d'allumage.

Simpo PDF Merge and Split Unregistered Version - http://www.simpopdf.com

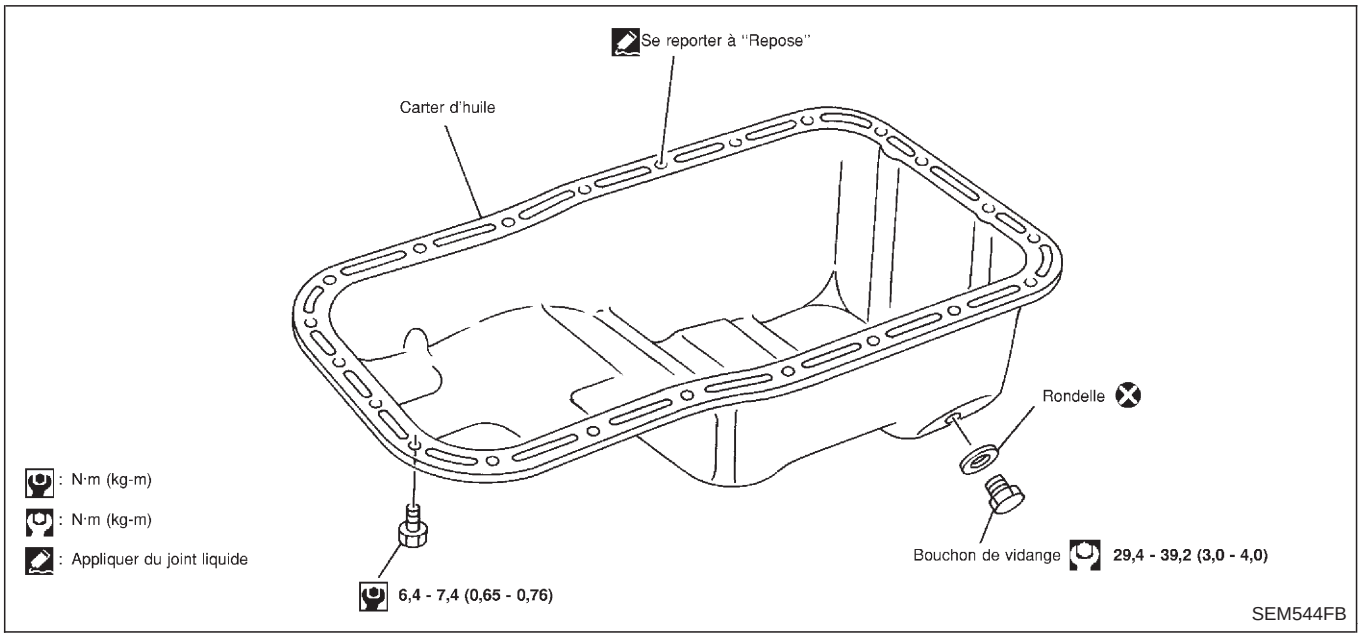

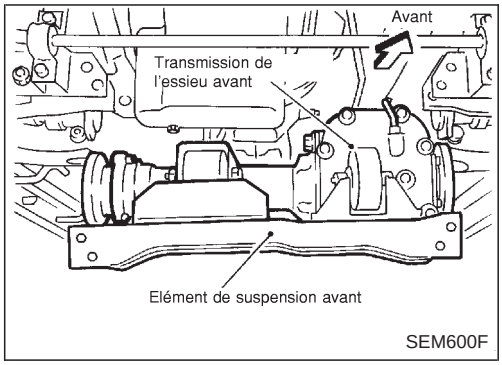

Dépose

1. Lever le véhicule et le poser sur des chandelles de sécurité.
2. Déposer le carénage inférieur du moteur.
3. Vidanger l'huile moteur.
4. Déposer la transmission de l'essieu avant en même temps que l'élément de fixation du différentiel. Se reporter à la section PD ("Dépose et repose", "Transmission de l'essieu avant")M pour les modèles 4x4 uniquement.
5. Déposer l'élément de suspension avant.

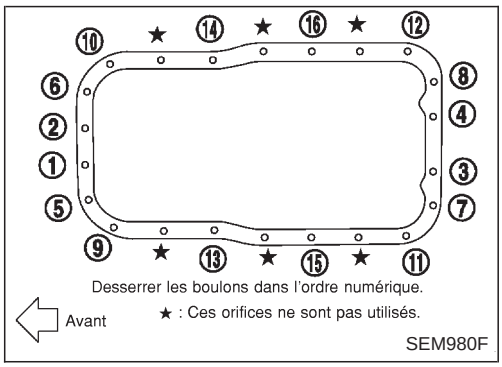

6. Déposer les boulons du carter d'huile.

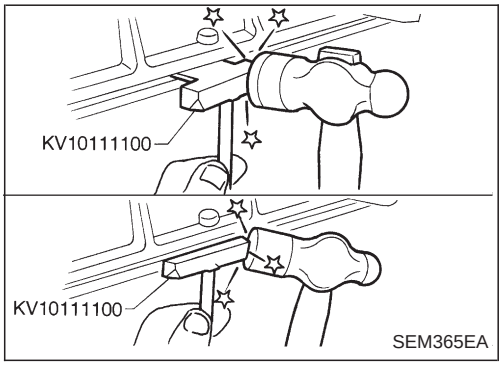

7. Déposer le carter d'huile.

a. Insérer l'outil entre le bloc-cylindres et le carter d'huile.

- **Veiller à ne pas endommager les surfaces de contact en aluminium.**
- **Ne pas insérer le tournevis au risque d'endommager le flasque du carter d'huile.**

b. Faire coulisser l'outil en tapant sur le côté à l'aide d'un marteau.

8. Retirer le carter d'huile de l'avant.

Simpo PDF Merge and Split Unregistered Version - http://www.simpopdf.com

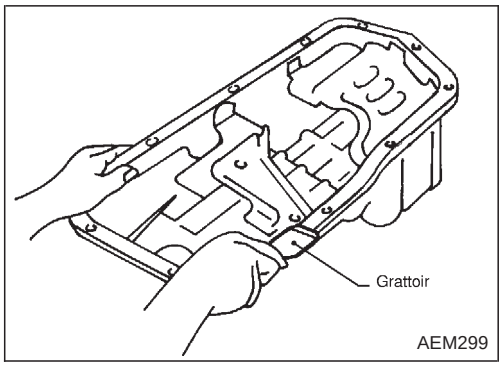

Repose

1. Utiliser un grattoir pour déposer toutes traces de joint liquide ancien des surfaces de contact du carter d'huile.

- **Enlever également toute trace de joint liquide de la surface de contact du bloc-cylindres.**

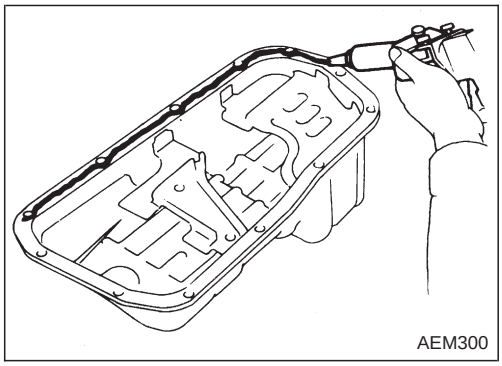

2. Appliquer un cordon uniforme de joint liquide sur la surface d'appui du carter d'huile (inférieur).

- **Utiliser le joint liquide d'origine ou un produit équivalent.**
- **Appliquer dans la rainure de la surface de contact.**
- **Tolérer un jeu de 7 mm autour de l'orifice de boulon.**

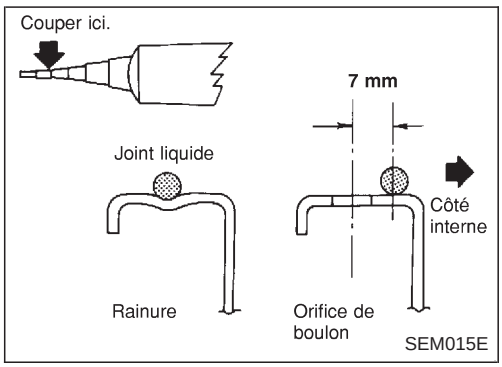

- **Veiller à ce que le diamètre du joint liquide se situe entre 3,5 et 4,5 mm.**
- **L'assemblage doit être effectué dans les 5 minutes qui suivent l'application du produit.**

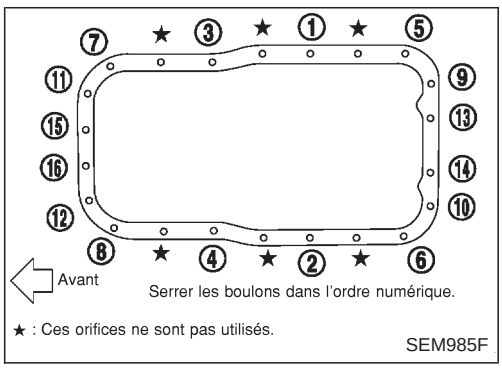

3. Reposer le carter d'huile.

- **Serrer les boulons du carter d'huile dans l'ordre numérique de l'illustration.**
  : 5,9 - 6,9 (0,6 - 0,7 kg-m)
- **Attendre au moins 30 minutes avant de faire le plein d'huile moteur.**

4. Reposer les pièces dans l'ordre inverse de la dépose.

Simpo PDF Merge and Split Unregistered Version - http://www.simpopdf.com

SEC. 120•130•135•210

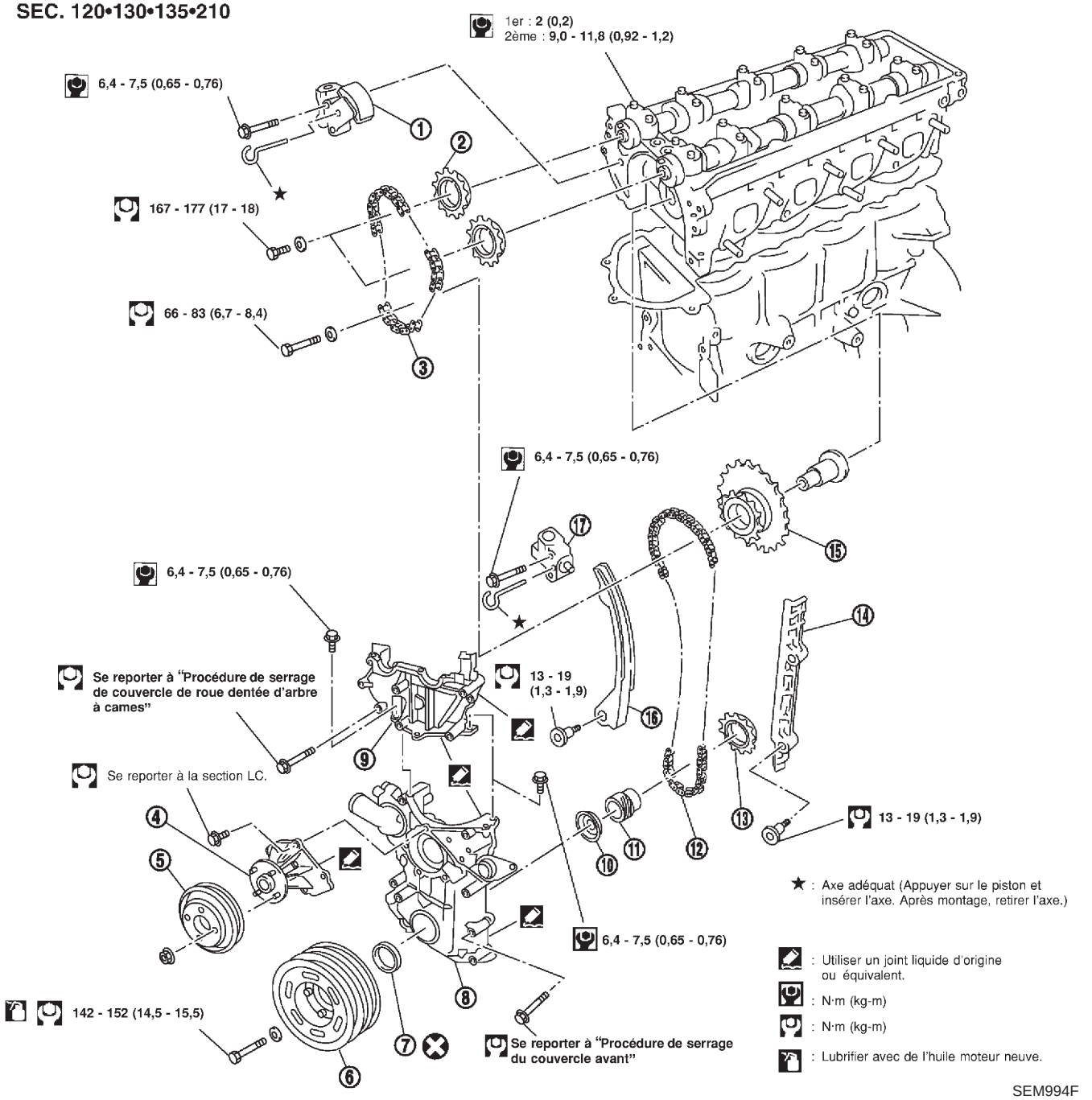

① Tendeur de chaîne de distribution supérieur
② Roue dentée de cames
③ Chaîne de distribution supérieure
④ Pompe à eau
⑤ Poulie de pompe à eau
⑥ Poulie de vilebrequin
⑦ Joint d'huile avant
⑧ Couvercle avant
⑨ Couvercle de roue dentée d'arbre à cames
⑩ Chicane d'huile
⑪ Pignon d'entraînement de pompe à huile
⑫ Chaîne de distribution inférieure
⑬ Roue dentée de vilebrequin
⑭ Guide-chaîne
⑮ Roue dentée de renvoi
⑯ Bras de tension de chaîne
⑰ Tendeur de chaîne de distribution inférieure

Simpo PDF Merge and Split Unregistered Version - http://www.simpopdf.com

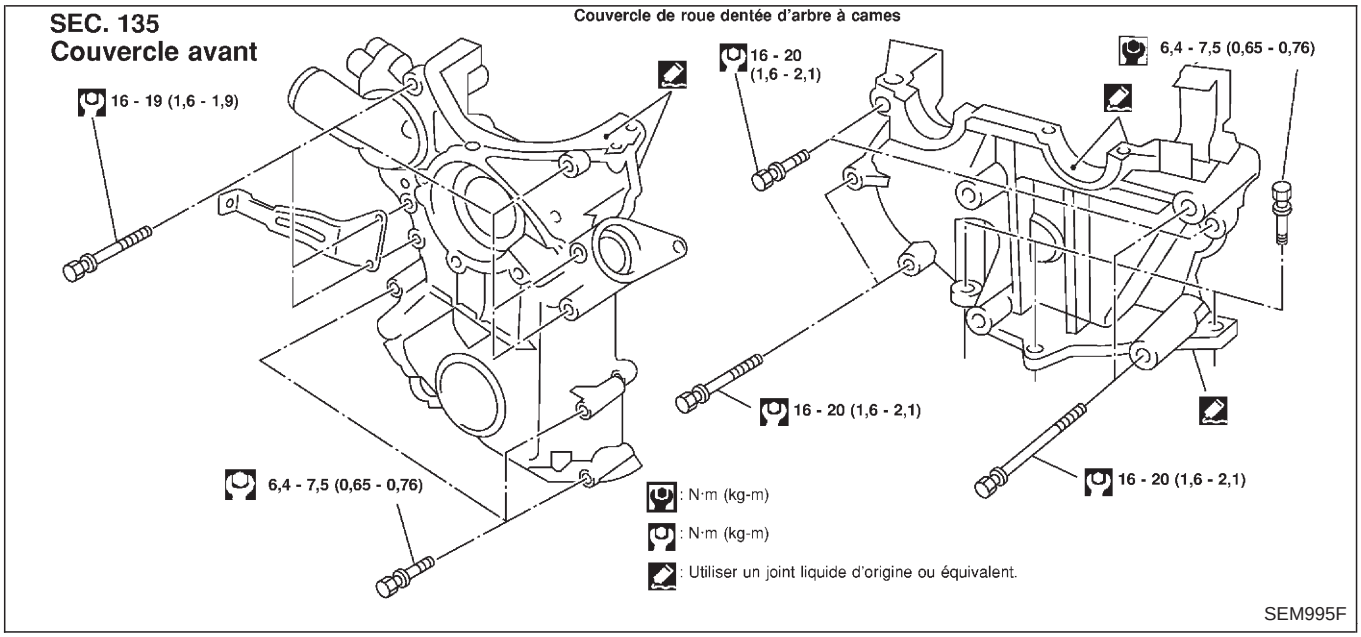

Zone d'application de joint liquide

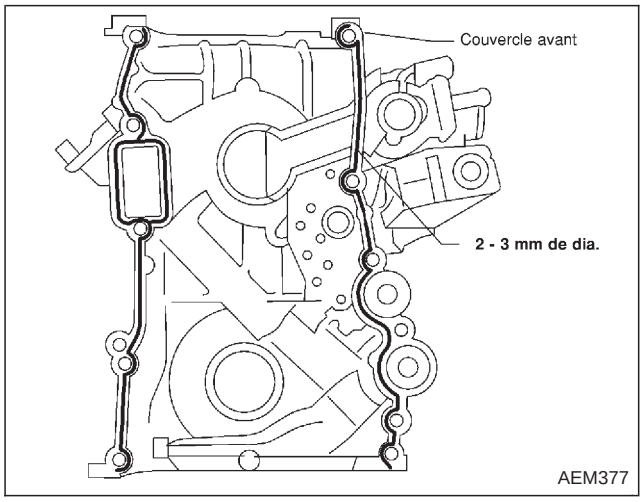

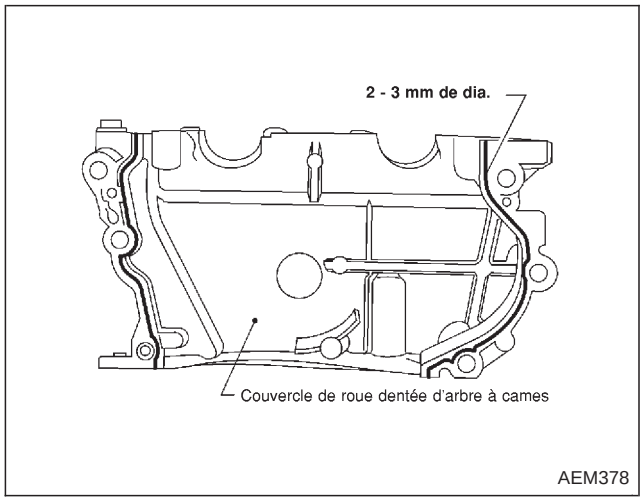

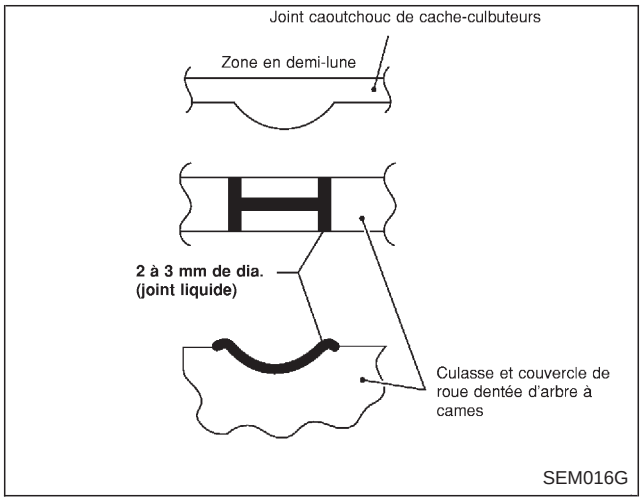

Simpo PDF Merge and Split Unregistered Version - http://www.simpopdf.com

Dépose

PRECAUTION :

- **Après avoir déposé la chaîne de distribution, ne pas faire pivoter le vilebrequin et l'arbre à cames séparément au risque d'endommager les têtes de piston avec les soupapes**
- **Lors de la repose des tendeurs de chaîne ou autres pièces coulissantes, lubrifier les surfaces de contact avec de l'huile moteur neuve.**
- **Enduire les filetages de boulon et les surfaces d'appui d'huile moteur lors de la repose des roues dentées d'arbre à cames et de la poulie de vilebrequin.**
- **Ne pas éclabousser la courroie d'entraînement de liquide de refroidissement.**

CHAINE DE DISTRIBUTION SUPERIEURE

1. Déposer l'ensemble du conduit d'air.
2. Retirer les flexibles à dépression, les connecteurs de faisceau électriques et les colliers des faisceaux.
3. Déposer la courroie d'entraînement de direction assistée.
4. Déposer la pompe de direction assistée et la mettre de côté.
5. Déposer le support de pompe de direction assistée.
6. Déposer également le support de poulie de tension.
7. Retirer les câbles et les bougies d'allumage.

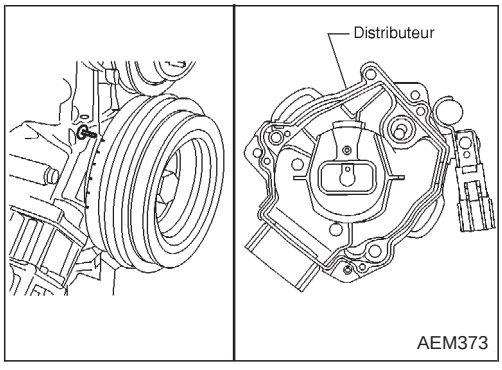

8. Régler le piston n°1 au PMH sur sa course de compression.

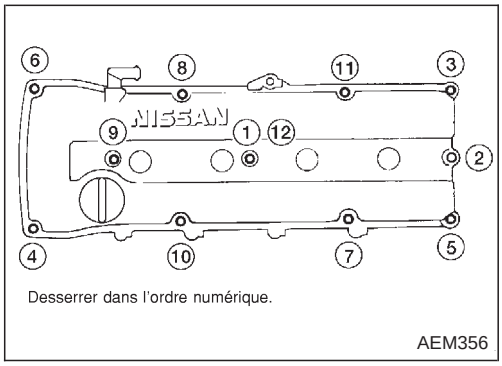

9. Déposer les cache-culbuteurs.

Déposer dans l'ordre numérique comme indiqué sur l'illustration.

Simpo PDF Merge and Split Unregistered Version - http://www.simpopdf.com

Dépose (suite)

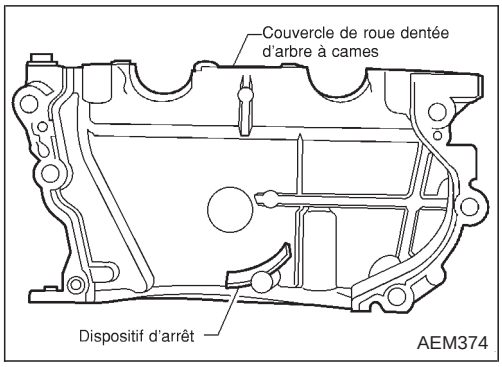

10. Déposer le couvercle de roue dentée d'arbre à cames.

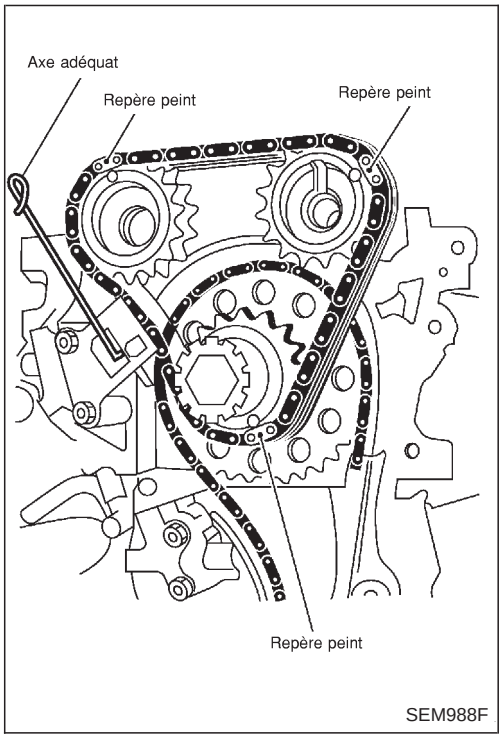

11. Déposer le tendeur de chaîne supérieure.
    (Enfoncer le piston et insérer une goupille adéquate dans l'orifice prévu à cet effet.)
12. Essuyer la timonerie de la chaîne de distribution près des repères de calage sur les roues dentées. Faire des repères à la peinture sur la chaîne de distribution pour les faire coïncider avec les repères de calage de la roue dentée de cames et de renvoi.
13. Retirer les boulons de la roue dentée de cames, la roue dentée de cames et la chaîne de distribution supérieure.

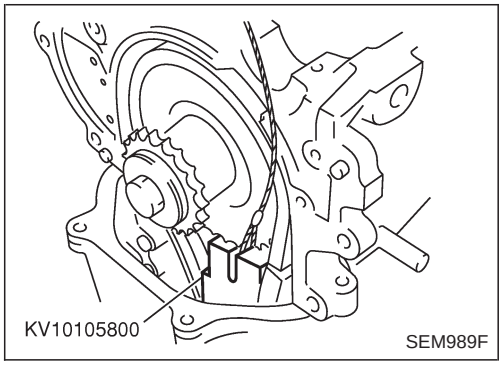

ROUE DENTEE DE RENVOI

1. Déposer la chaîne de distribution supérieure.
   Se reporter à ''Dépose'', ''Chaîne de distribution supérieure'', EM-2016.
2. Maintenir la chaîne de distribution inférieure avec un outil adéquat pour éviter que le ressort de la chaîne de distribution ne ressorte.

- **Exécuter cette étape uniquement si le couvercle inférieur n'est pas déposé.**

3. Déposer le roue dentée de renvoi.

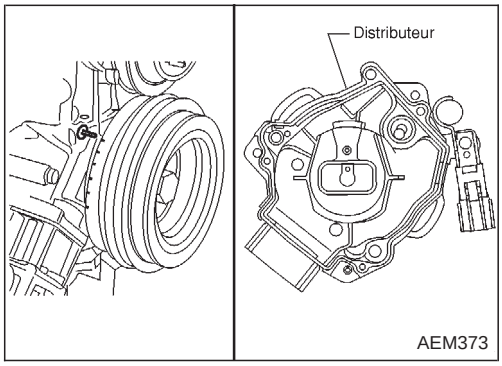

CHAINE DE DISTRIBUTION INFERIEURE

1. Pour vidanger le liquide, retirer le bouchon de vidange et ouvrir le robinet. Se reporter à la section MA du manuel de réparation.
2. Vidanger l'huile moteur du bouchon de vidange du carter d'huile.
3. Déposer les pièces suivantes :

- Courroie d'entraînement d'alternateur
- Courroie d'entraînement du compresseur d'A/C
- Ventilateur de refroidissement avec accouplement
- Capot de radiateur

Simpo PDF Merge and Split Unregistered Version - http://www.simpopdf.com

Dépose (suite)

4. Déposer et mettre de côté le compresseur d'A/C. Déposer également la poulie de tension et le support.
5. Régler le piston n°1 au PMH de sa course de compression.
6. Déposer le distributeur.
7. Déposer la poulie du vilebrequin.

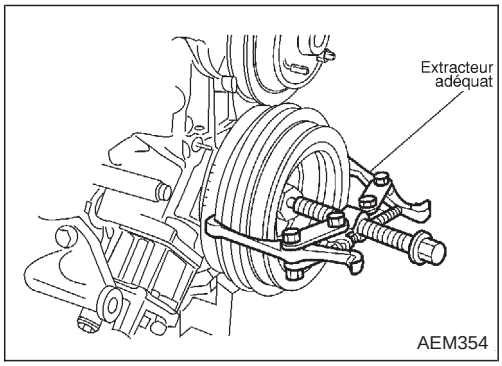

8. Déposer le carter d'huile.
- **Se reporter à ''Dépose'' dans CARTER D'HUILE (EM-2012).**

9. Déposer la pompe à huile et l'arbre de transmission du distributeur, puis la crépine d'huile du pick-up.
10. Déposer la couvercle avant.

PRECAUTION :
Veiller à ne pas fissurer ou endommager le joint de culasse.

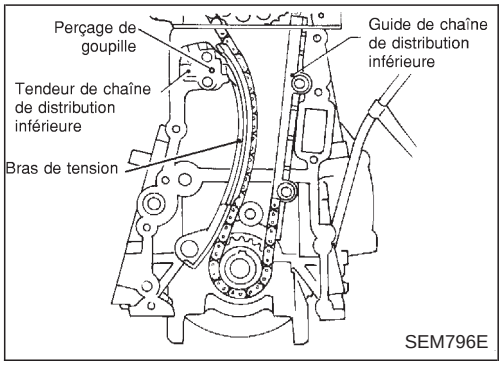

11. Déposer les pièces suivantes :
- Tendeur de chaîne de distribution inférieure (enfoncer le piston et insérer la goupille adéquate dans l'orifice).
- Bras de tension de chaîne
- Guide de chaîne de distribution inférieure

12. Déposer la chaîne de distribution supérieure et la roue dentée de renvoi.
- **Se reporter à CHAINE DE DISTRIBUTION SUPERIEURE (EM-2016) et ROUE DENTEE DE RENVOI (EM-2017) dans ''Dépose''.**

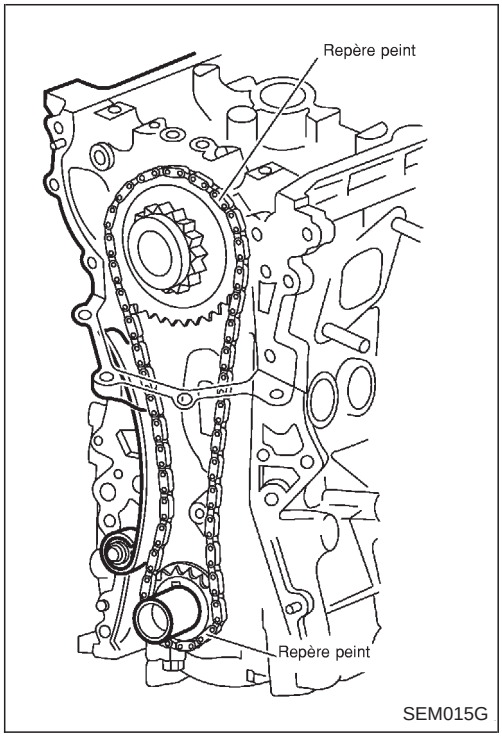

13. Essuyer la timonerie de la chaîne de distribution près des repères de calage sur les roues dentées. Faire des repères à la peinture sur la roue dentée de vilebrequin pour les faire coïncider avec les repères de calage de la roue dentée de cames et de renvoi.
14. Déposer la chaîne de distribution inférieure et la roue dentée de renvoi.

Simpo PDF Merge and Split Unregistered Version - http://www.simpopdf.com

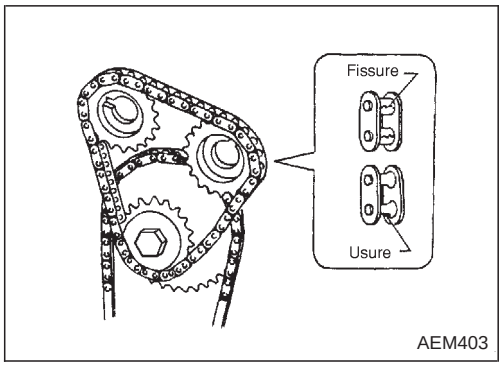

Inspection

Vérifier l'absence de fissures et d'usure excessive au niveau des chaînons. Remplacer la chaîne si nécessaire.

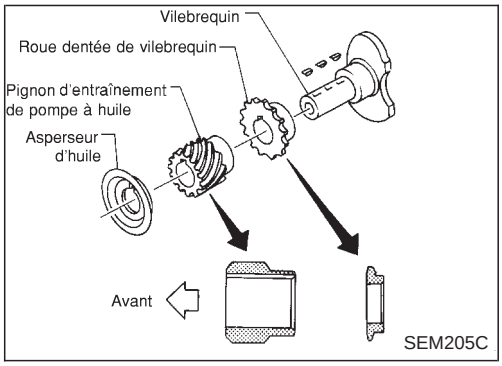

Repose

CHAINE DE DISTRIBUTION INFERIEURE

1. Reposer la roue dentée de vilebrequin, le pignon d'entraînement de pompe à huile et l'aspersoir d'huile.
- **Vérifier que les repères d'alignements de la roue dentée de vilebrequin sont dirigés vers l'avant du moteur.**
2. Reposer la roue dentée de renvoi et la chaîne de distribution inférieure en s'aidant des repères d'alignement et des repères peints placés lors de la procédure de dépose.

PRECAUTION :

Veiller à ne pas fissurer ou endommager le joint de culasse.

3. Reposer le guide-chaîne et le bras de tension de la chaîne.
4. Reposer le tendeur de chaîne inférieure et la goupille retenant le piston du corps du tendeur.

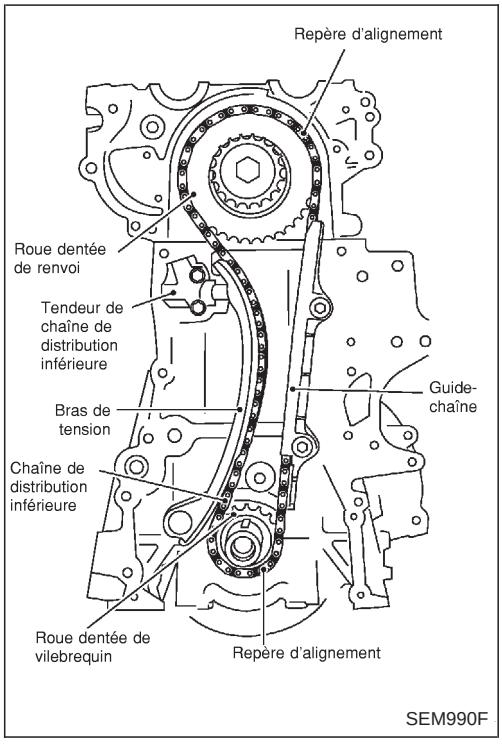

Simpo PDF Merge and Split Unregistered Version - http://www.simpopdf.com

Repose (suite)

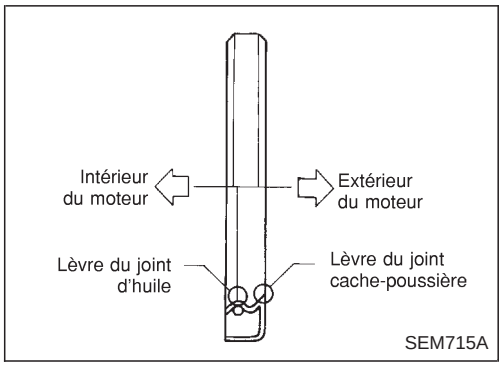

5. Reposer le couvercle avant.
- Retirer toute trace de joint liquide du bloc-cylindres et des surfaces de contact à l'aide d'un grattoir ou d'un autre outil adéquat.
- Reposer le joint d'huile avant neuf dans le couvercle avant.
- **Appliquer un cordon uniforme de joint liquide sur le couvercle avant. (Se reporter à EM-2015).**
- **Utiliser le joint liquide d'origine ou un produit équivalent.**
- **Veiller à bien reposer le joint d'huile avant neuf. Se reporter à EM-2022.**
- Enduire également le joint de culasse de joint liquide.
- Reposer le couvercle avant sur le moteur.

6. Reposer la crépine et le carter d'huile. Se reporter à ''Repose'' dans CARTER D'HUILE.

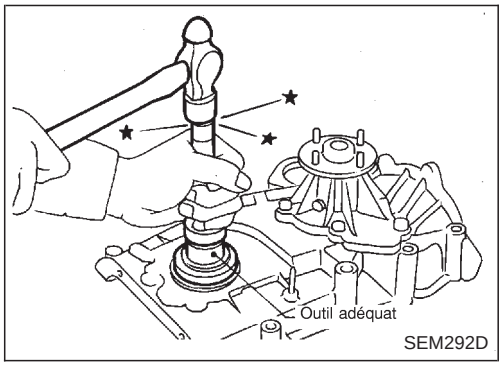

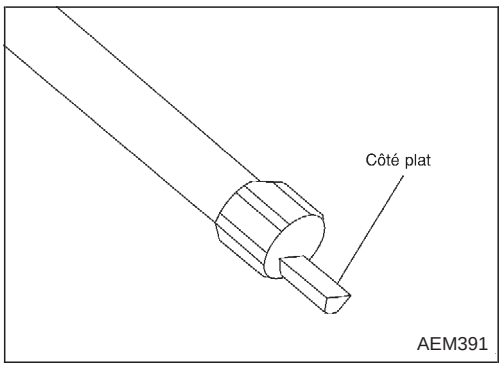

7. Reposer la pompe à huile et l'arbre de transmission du distributeur.
- **Veiller à ce que le côté plat de l'arbre de transmission du distributeur soit face au moteur. Dans le cas contraire le distributeur ne serait pas en phase.**

8. Reposer les pièces suivantes :
- Poulie de vilebrequin
- Compresseur d'A/C et support de poulie de tension

ROUE DENTEE DE RENVOI

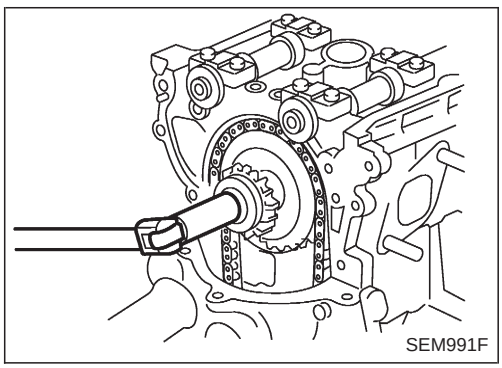

1. Reposer la chaîne de distribution inférieure.
- **Se reporter à CHAINE DE DISTRIBUTION INFERIEURE (EM-2019) dans''Repose''.**

2. Reposer la roue dentée de renvoi et le boulon.

CHAINE DE DISTRIBUTION SUPERIEURE

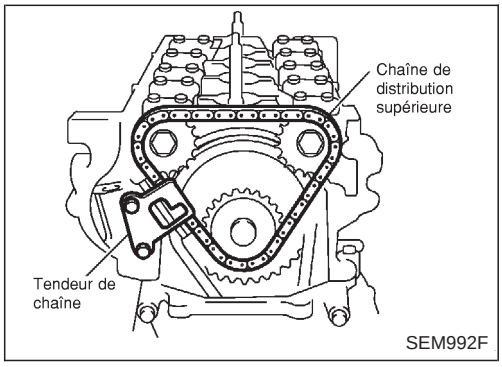

1. Reposer la chaîne de distribution inférieure et la roue dentée de renvoi.
- **Se reporter à CHAINE DE DISTRIBUTION INFERIEURE (EM-2019) dans ROUE DENTEE DE RENVOI (EM-2020) dans ''Repose''.**

2. Reposer la chaîne de distribution supérieure et les pignons, en respectant les repères peints lors de la dépose.
3. Reposer le tendeur de chaîne. Retirer la goupille de maintien du tendeur de piston dans l'alésage du tendeur.

Simpo PDF Merge and Split Unregistered Version - http://www.simpopdf.com

Repose (suite)

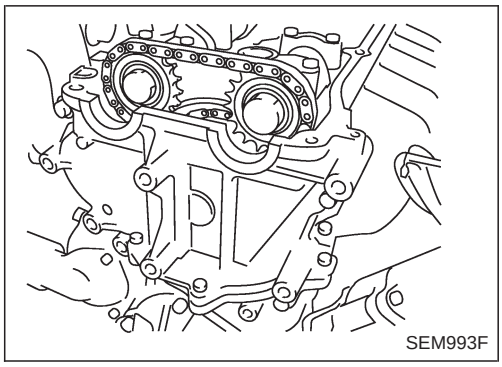
SEM993F

4. Reposer le couvercle de la roue dentée d'arbre à cames.
- Retirer toute trace de joint liquide des surfaces de contact du bloc moteur et du couvercle de roue dentée d'arbre à cames au moyen d'un grattoir.
- Appliquer un cordon uniforme de joint liquide sur le couvercle. Se reporter à EM-2015.
- Enduire également le joint de culasse de joint liquide.
- **Utiliser le joint liquide d'origine ou un produit équivalent.**

PRECAUTION :
- **Veiller à ne pas fissurer ou endommager le joint de culasse.**
- **Veiller à ce que la chaîne de distribution supérieure ne glisse ni ne saute lors de la repose du couvercle de roue dentée d'arbre à cames.**

5. Reposer le joint plat de cache-culbuteurs.
- Enduire la culasse et le couvercle de roue dentée d'arbres à cames de joint liquide. Se reporter à EM-2015.

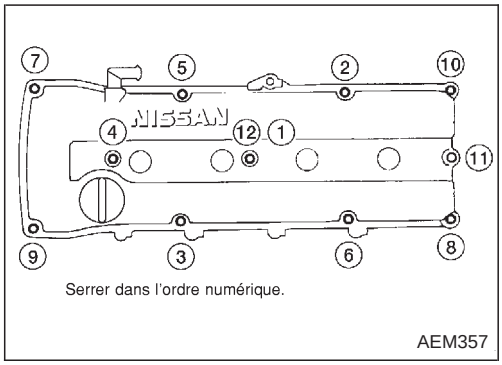

Serrer dans l'ordre numérique.
AEM357

6. Reposer le cache-culbuteurs. Serrer les boulons dans un ordre numérique.
: 8 - 11 (0,8 - 1,1 kg-m)

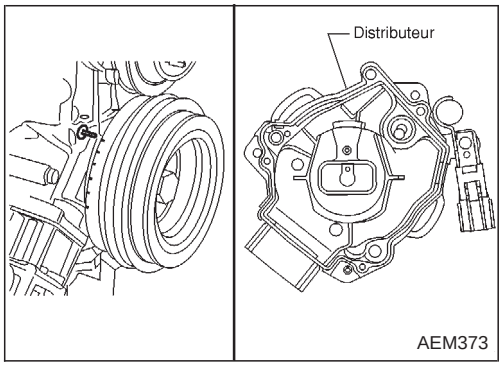

AEM373

7. Reposer le distributeur dans l'alignement suivant.
8. Reposer les flexibles à dépression, les connecteurs de faisceau électrique et les colliers de faisceau.
9. Reposer dans l'ordre inverse de la dépose.

Simpo PDF Merge and Split Unregistered Version - http://www.simpopdf.com

JOINT D'HUILE DE SOUPAPE

1. Déposer les cache-culbuteurs.
2. Déposer l'arbre à cames. Se reporter à CHAINE DE DISTRIBUTION (EM-2014).
3. Retirer le ressort de soupape ainsi que le joint d'huile de soupape à l'aide d'un outil spécialisé ou tout autre outil adéquat.

Le piston en question doit être réglé à son PMH pour éviter que la soupape ne tombe.

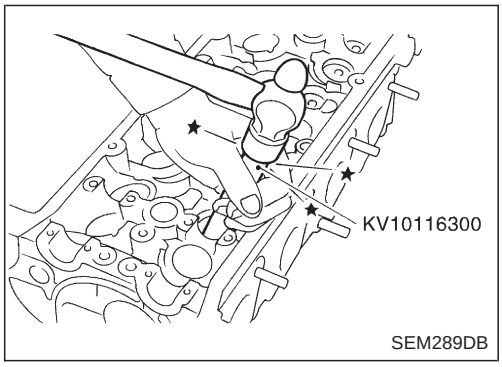

SEM289DB

4. Mettre de l'huile moteur sur le nouveau joint d'étanchéité de soupape et poser le joint à l'aide de l'outil spécial.

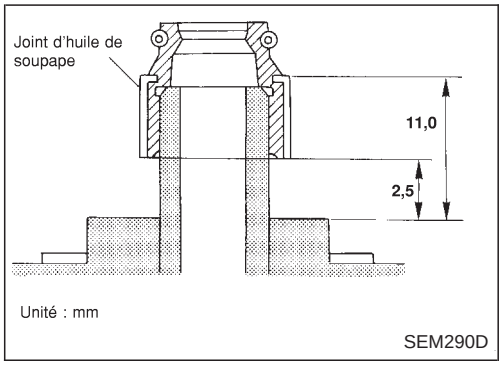

SEM290D

SENS DE MONTAGE DU JOINT D'ETANCHEITE D'HUILE

- Reposer le joint d'étanchéité d'huile neuf comme indiqué.

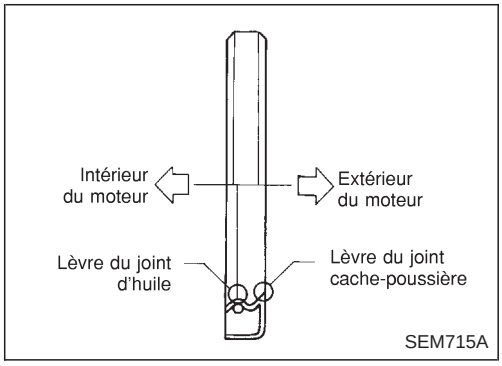

SEM715A

JOINT D'HUILE AVANT

1. Retirer la protection de radiateur et la poulie de vilebrequin.
2. Déposer le joint d'étanchéité d'huile avant.

- **Prendre garde à ne pas rayer le couvercle avant.**

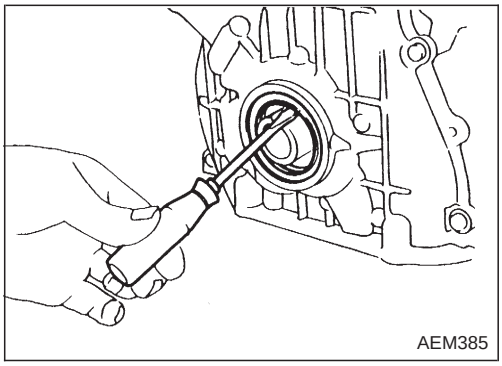
AEM385

Simpo PDF Merge and Split Unregistered Version - http://www.simpopdf.com

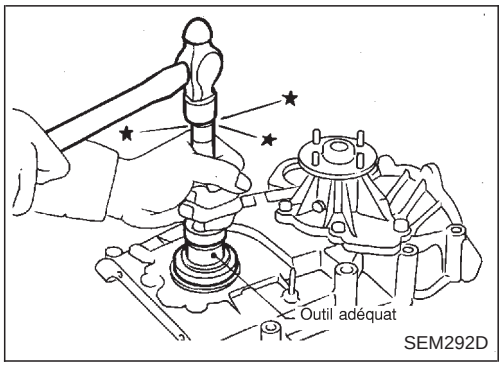

3. Appliquer de l'huile moteur sur le nouveau joint d'étanchéité d'huile et monter le joint à l'aide d'un outil adéquat.

JOINT D'HUILE ARRIERE

1. Déposer le volant-moteur ou le plateau d'entraînement.
2. Déposer la retenue de joint d'huile arrière.
3. Retirer le joint d'étanchéité d'huile arrière de la retenue.

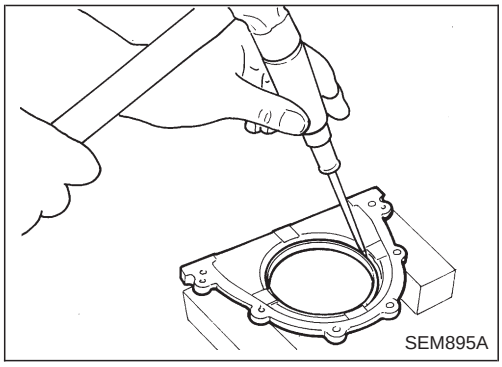

- **Veiller à ne pas érafler la retenue de joint d'huile arrière.**

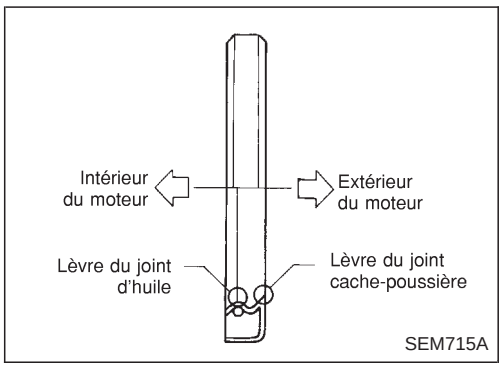

4. Appliquer de l'huile moteur sur le nouveau joint d'étanchéité d'huile et monter le joint à l'aide d'un outil adéquat.

- **Reposer le joint d'étanchéité d'huile neuf comme indiqué.**

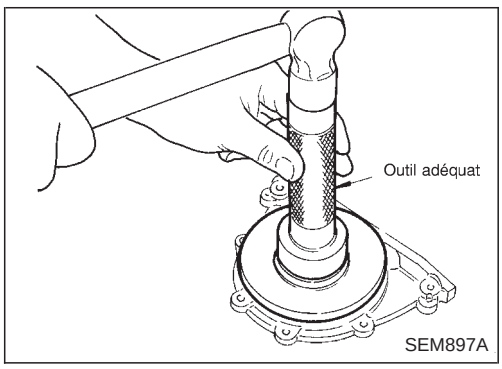

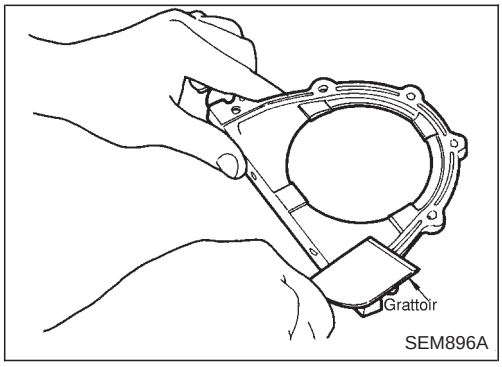

5. Reposer la bague de retenue arrière du joint d'huile.

a. Avant de procéder à la repose de la retenue de joint d'huile arrière, retirer toute trace de joint liquide de la surface de contact à l'aide d'un grattoir.

- **Enlever également toute trace de joint liquide de la surface de contact du bloc-cylindres.**

Simpo PDF Merge and Split Unregistered Version - http://www.simpopdf.com

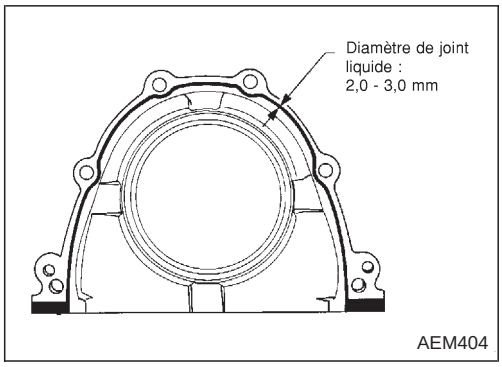

b. Appliquer un cordon régulier de joint liquide sur la surface de contact de la retenue de joint d'huile arrière.
- **Utiliser le joint liquide d'origine ou un produit équivalent.**
- **Enduire le périmètre intérieur des orifices de boulon.**

Simpo PDF Merge and Split Unregistered Version - http://www.simpopdf.com

SEC. 111•130

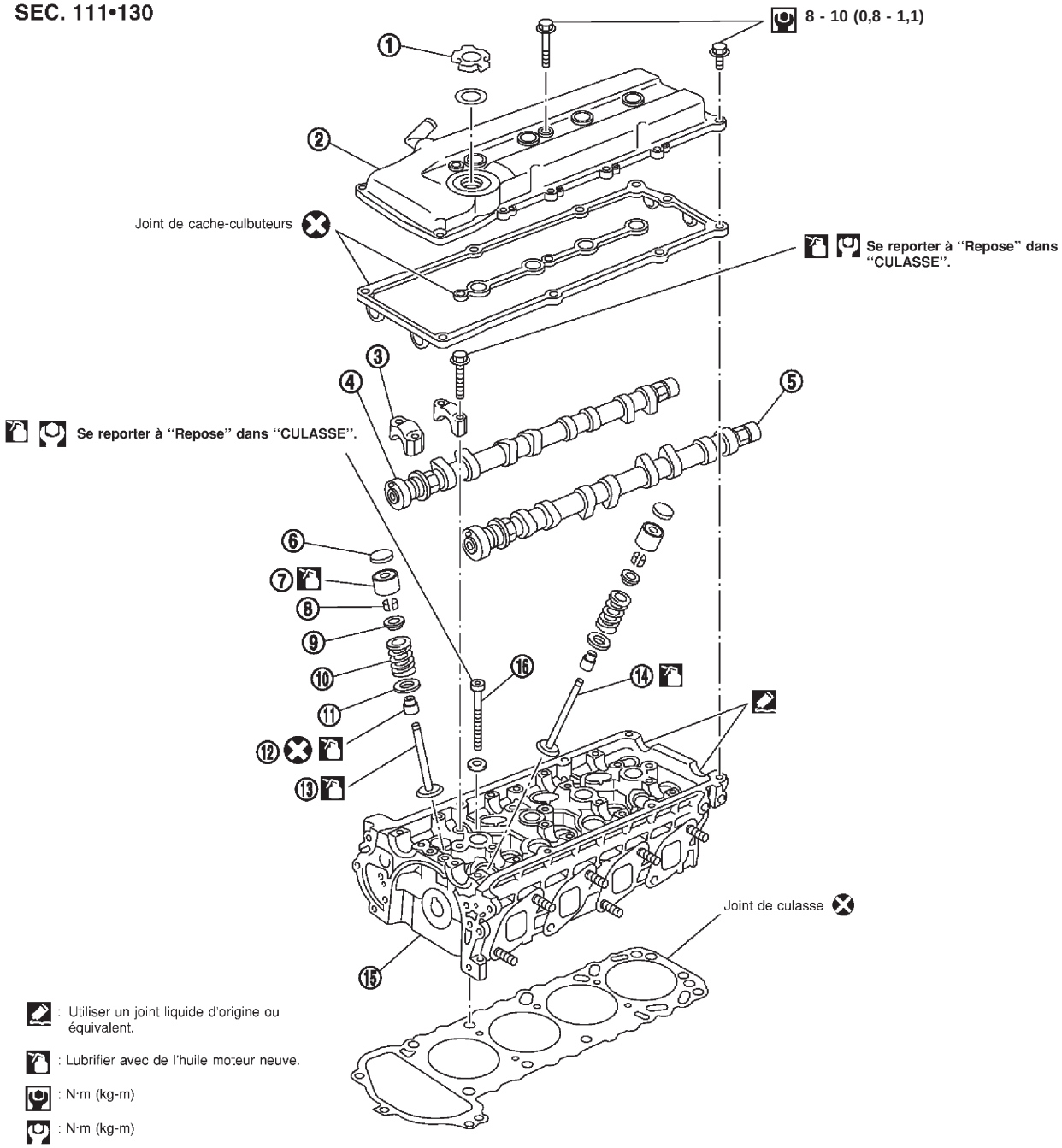

SEM996F

① Bouchon de remplissage d'huile
② Cache-culbuteurs
③ Support d'arbre à cames
④ Arbre à cames d'admission
⑤ Arbre à cames d'échappement
⑥ Cale
⑦ Poussoir de soupape
⑧ Clavette de soupape
⑨ Retenue de ressort
⑩ Ressort de soupape
⑪ Siège de ressort
⑫ Joint d'huile de soupape
⑬ Soupape d'admission
⑭ Soupape d'échappement
⑮ Culasse
⑯ Boulon de culasse

Simpo PDF Merge and Split Unregistered Version - http://www.simpopdf.com

PRECAUTION :

- **Lors de la repose des arbres à cames, tendeurs de chaîne, joints d'huile, ou d'autres pièces coulissantes, lubrifier les surfaces de contact avec de l'huile moteur neuve.**
- **Appliquer de l'huile moteur neuve sur les parties filetées et les surfaces d'appui lors de la repose de la culasse, de la roue dentée d'arbre à cames, de la poulie de vilebrequin et du support de l'arbre à cames.**
- **Attacher des étiquettes sur les poussoirs de soupapes afin de ne pas les mélanger par la suite.**
- **Avant de procéder à la dépose de l'arbre à cames et des roue dentées de renvoi, marquer les pièces à la peinture pour une synchronisation ultérieure.**

Dépose

1. Vidanger le liquide du radiateur et du bloc-cylindres. Se reporter à la section MA (''Remplacement du liquide de refroidissement du moteur'', ENTRETIEN DU MOTEUR).
2. Déposer la chaîne de distribution supérieure et la roue dentée de renvoi.

- **Se reporter à CHAINE DE DISTRIBUTION SUPERIEURE (EM-2016) et ROUE DENTEE DE RENVOI (EM-2017), ''Dépose'', CHAINE DE DISTRIBUTION.**
- **Pour tout réajustement lors de la dépose/repose de la culasse, identifier les roues dentées d'arbre à cames, la chaîne de distribution supérieure, la chaîne de distribution inférieure et les roues dentées d'arbre à cames à la peinture.**

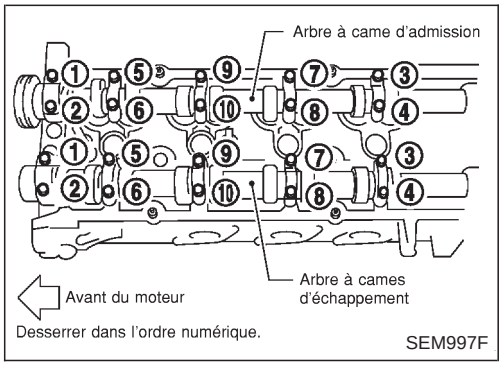

3. Déposer les supports d'arbre à cames et les arbre à cames.

- **Repérer les positions originales de chaque pièce en vue du remontage.**

Simpo PDF Merge and Split Unregistered Version - http://www.simpopdf.com

Dépose (suite)

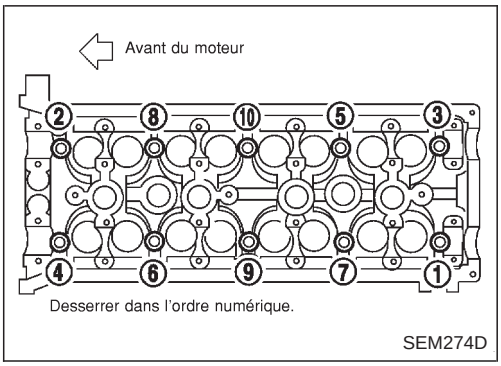

4. Déposer les boulons de culasse dans l'ordre numérique.
- **Un non respect de l'ordre de dépose des boulons pourrait voiler ou fissurer la culasse.**
- **Desserrer les boulons de culasse en 2 ou 3 étapes successives.**
5. Déposer la culasse et le joint de culasse.

Repose

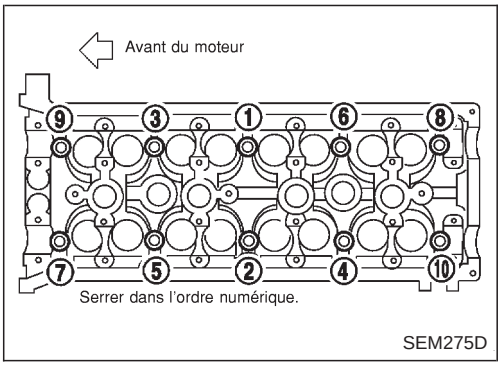

1. Serrer les boulons de culasse dans l'ordre numérique en respectant la procédure suivante :

a. Serrer tous les boulons de 29 N·m (3,0 kg-m).
b. Serrer tous les boulons de 79 N·m (8,1 kg-m).

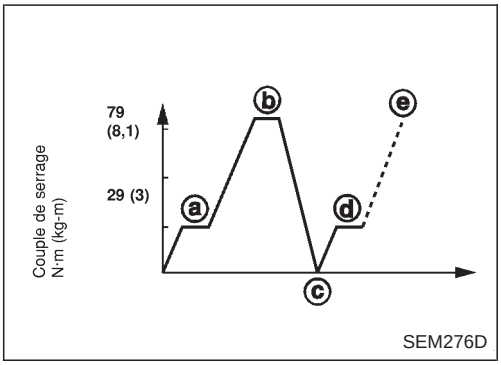

c. Desserrer entièrement tous les boulons.
d. Serrer tous les boulons de 25 à 34 N·m (2,5 à 3,5 kg-m).
e. Visser chaque boulon de 86 à 91° dans le sens des aiguilles d'une montre. Sans clé angulaire, repérer chaque boulon de culasse côté moteur. Visser ensuite chaque boulon de culasse de 86 à 91° dans le sens des aiguilles d'une montre.

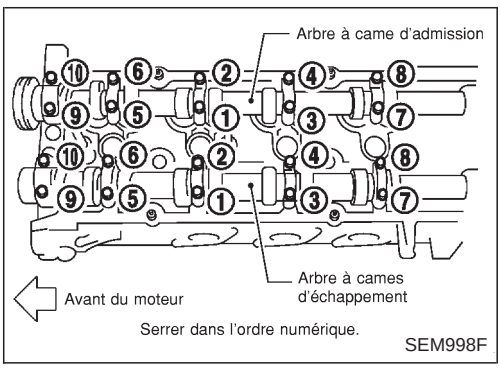

2. Reposer les arbres à cames et leurs supports dans l'ordre indiqué en respectant la procédure suivante :

a. Régler les arbres et les supports d'arbre à cames.
b. Serrer tous les boulons de 2 N·m (0,2 kg-m).
c. Serrer tous les boulons de 9,1 à 11,7 N·m (0,92 à 1,2 kg-m).
- Appliquer de l'huile moteur neuve sur les parties filetées des boulons et les surfaces d'appui.

3. Reposer la chaîne de distribution supérieure et la roue dentée de renvoi.
- Se reporter à CHAINE DE DISTRIBUTION SUPERIEURE (EM-2020) et ROUE DENTEE DE RENVOI (EM-2020), ''Repose'', CHAINE DE DISTRIBUTION.
4. Faire le plein de liquide de refroidissement. Se reporter à la section MA (''Remplacement du liquide de refroidissement moteur'', ENTRETIEN DU MOTEUR).

Simpo PDF Merge and Split Unregistered Version - http://www.simpopdf.com

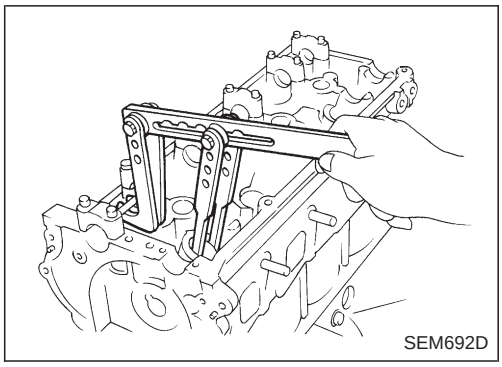
SEM692D

Démontage

1. Déposer la tubulure d'admission et le collecteur d'échappement. Se reporter à COMPOSANTS EXTERNES (EM-2007).
2. Déposer les divers éléments de la soupape.
3. Déposer le joint d'huile de soupape à l'aide d'un outil adéquat.

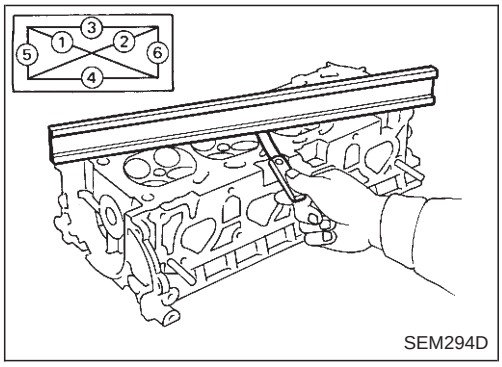

SEM294D

Inspection

DEFORMATION DE LA CULASSE

Nettoyer la surface de la culasse.
Utiliser une règle et une jauge d'épaisseur fiables pour contrôler la planéité de la surface de culasse.
Vérifier les 6 endroits indiqués sur l'illustration.

Planéité de la surface de la culasse :
Standard Inférieure à 0,03 mm
Limite 0,1mm

Si la valeur est au delà de la limite spécifiée, la rectifier ou la remplacer.

Limite de rectification :
La limite de la rectification de la culasse est déterminée par la rectification du bloc-cylindres.
L'étendue de la rectification de la culasse est A.
L'étendue de la rectification du bloc-cylindres est B.

La limite maximum est :
A + B = 0,2 mm

Après rectification de la culasse, vérifier manuellement la rotation de l'arbres à cames. En cas de résistance, remplacer la culasse.

Hauteur nominale de la culasse :
126,3 - 126,5 mm

VERIFICATION VISUELLE DE L'ARBRE DE CAMES

Vérifier que l'arbre à cames n'est pas éraflé, grippé ou rayé.

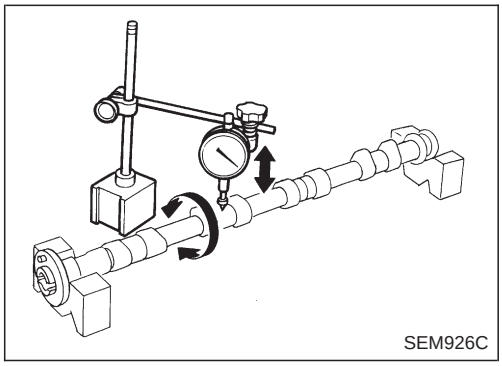
SEM926C

VOILE DE L'ARBRE A CAMES

1. Mesurer le voile du vilebrequin au tourillon central.
   Voile (indication totale de la jauge) :
   Standard
   Inférieure à 0,02 mm
   Limite
   0,04 mm
2. Si la valeur excède la limite, remplacer l'arbre à cames.

Simpo PDF Merge and Split Unregistered Version - http://www.simpopdf.com

Inspection (suite)

HAUTEUR DE CAMES DE L'ARBRE A CAMES

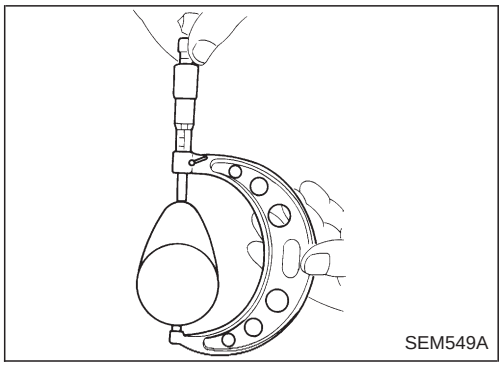
SEM549A

1. Mesurer la hauteur de cames de l'arbre à cames.
   Hauteur standard des cames :
   Admission 42,505 - 42,695 mm
   Echappement 40,905 - 41,095 mm
   Limite d'usure de hauteur de came
   Admission/échappement
   0,2 mm
2. Si l'usure dépasse la limite, remplacer l'arbre à cames.

JEU DU TOURILLON D'ARBRE A CAMES

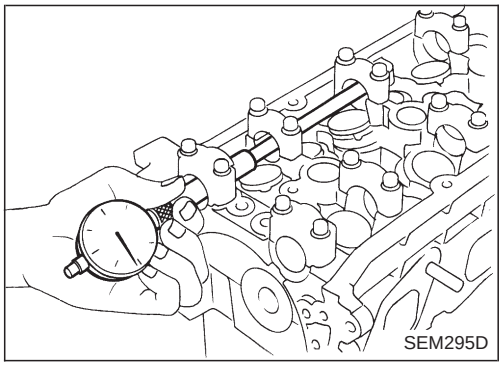
SEM295D

1. Reposer le support d'arbre à cames et serrer les boulons au couple spécifié.
2. Mesurer le diamètre interne du roulement d'arbre à cames.
   Diamètre interne standard :
   tourillons n°1 à 5
   28,000 - 28,025 mm

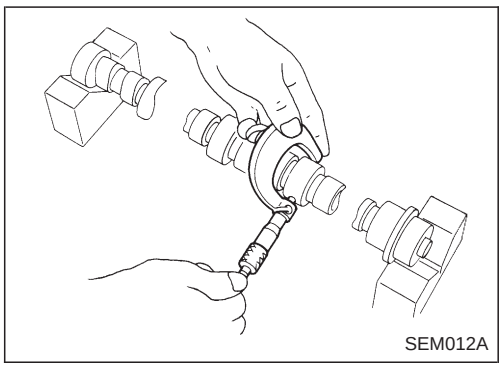
SEM012A

3. Mesurer le diamètre externe du tourillon d'arbre à cames.
   Diamètre externe standard :
   tourillons n°1 à 5
   27,935 - 27,955 mm
4. Si le jeu dépasse la limite, remplacer l'arbre de cames et/ou la culasse.
   Jeu du tourillon d'arbre à cames :
   Standard 0,045 - 0,090 mm
   Limite 0,12 mm

JEU AXIAL DE L'ARBRE A CAMES

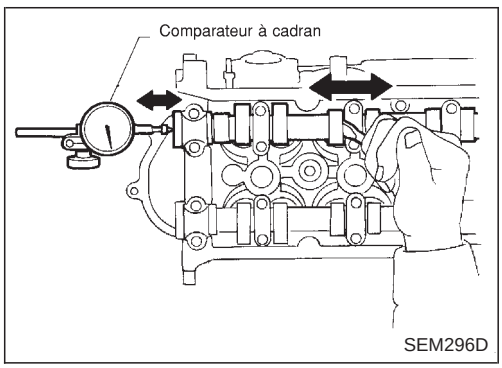

SEM296D

1. Reposer l'arbre à cames sur la culasse.
2. Mesurer le jeu axial de l'arbre à cames.
   Jeu axial de l'arbre à cames :
   Standard
   0,070 - 0,148 mm
   Limite
   0,2 mm
3. Si le jeu axial est supérieur à la limite, remplacer l'arbre à cames et mesurer de nouveau son jeu axial.
4. Si le jeu axial dépasse la limite après avoir remplacé l'arbre à cames, remplacer la culasse.

Simpo PDF Merge and Split Unregistered Version - http://www.simpopdf.com

Inspection (suite)

VOILE DE ROUE DENTEE D'ARBRE A CAMES

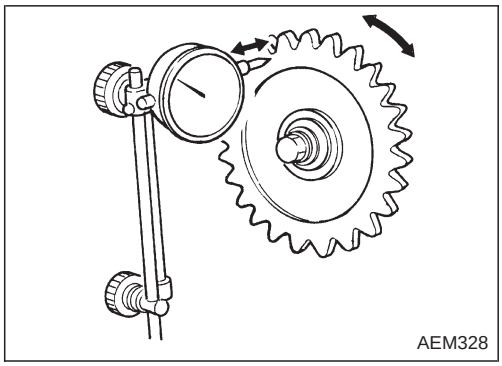
AEM328

1. Reposer la roue dentée sur l'arbre à cames.
2. Mesurer le voile de la roue dentée d'arbre à cames.
   Voile (indication totale de la jauge) :
   Limite 0,15 mm
3. Si la valeur excède la limite, remplacer la roue dentée d'arbre à cames.

JEU DU GUIDE DE SOUPAPE

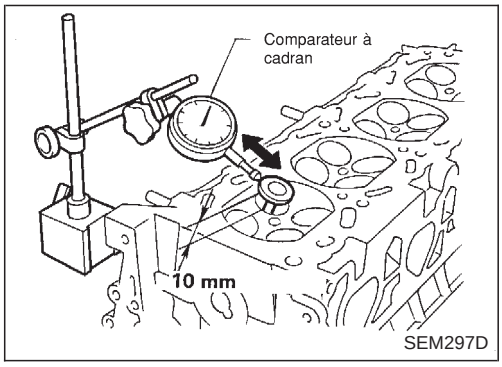

SEM297D

1. Mesurer la déflexion comme indiqué sur l'illustration. (Usure quasi-unidirectionnelle de la soupape et du guide de soupape.)
   Limite de déflexion de la soupape (indication du comparateur à cadran) :
   Admission/échappement
   0,2 mm

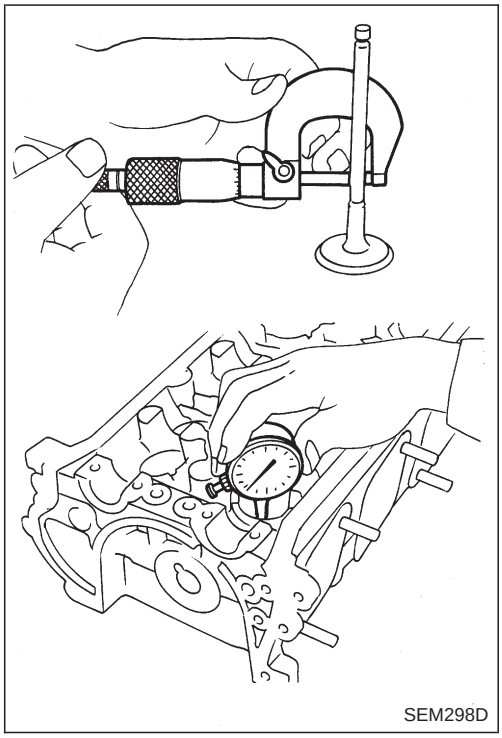
SEM298D

2. Si la valeur dépasse la limite, vérifier le jeu de guide de soupape à la soupape.

a. Mesurer le diamètre de la queue de soupape et le diamètre interne du guide de soupape.
b. Vérifier que le jeu est dans les spécifications.

Jeu entre la soupape et le guide de soupape = diamètre interne du guide de soupape - diamètre de queue de soupape :

Unité : mm

	Standard	Limite
Admission	0,020 - 0,053	0,08
Echappement	0,040 - 0,073	0,1

c. Si la valeur dépasse la limite, remplacer la soupape et mesurer le jeu à nouveau.

- Si le jeu continue à dépasser la limite après avoir remplacé la soupape, remplacer le guide de soupape.

REMPLACEMENT DU GUIDE DE SOUPAPE

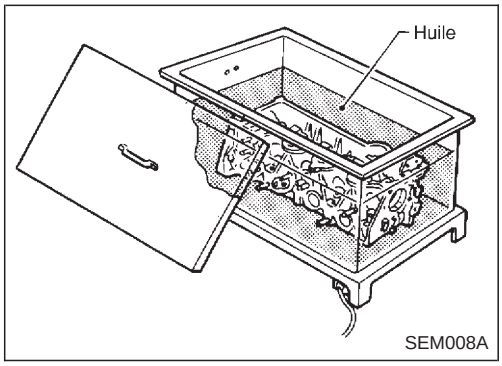

SEM008A

1. Pour déposer le guide de soupape, chauffer la culasse à une température comprise entre 120° et 140° en la plongeant dans de l'huile chauffée.

Simpo PDF Merge and Split Unregistered Version - http://www.simpopdf.com

Inspection (suite)

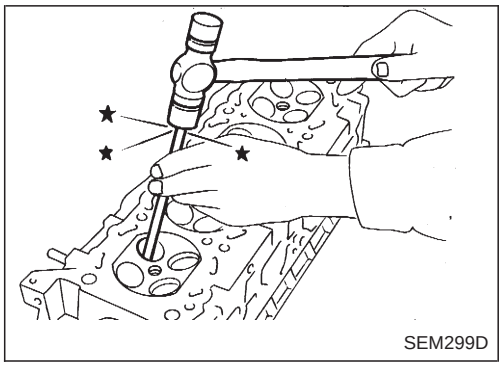
SEM299D

2. Chasser le guide de soupape à la presse [à une pression de 20 kN (2 tonnes)] ou avec un marteau et un outil approprié.

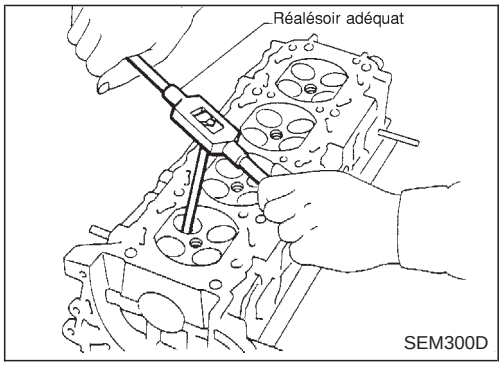

SEM300D

3. Aléser l'orifice du guide de soupape de la culasse.
   Diamètre de l'orifice de guide de soupape (pour les pièces de rechange) :
   Admission/échappement
   11,175 - 11,196 mm

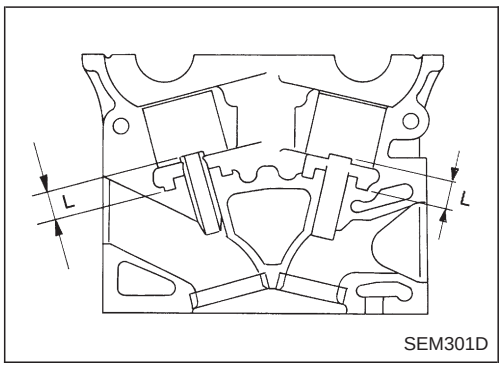

SEM301D

4. Chauffer la culasse à une température comprise entre 120° et 140° et enfoncer la soupape d'entretien dans la culasse.
   Saillie L :
   13,3 - 13,9 mm

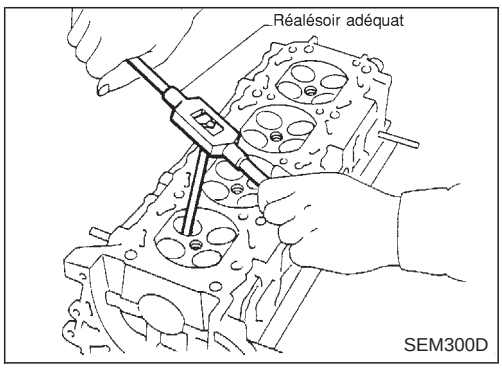

SEM300D

5. Aléser le guide de soupape.
   Dimensions de finition :
   Admission/échappement
   7,000 - 7,018 mm

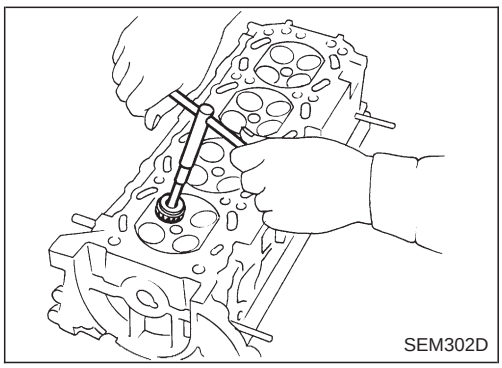
SEM302D

SIEGES DE SOUPAPE

Vérifier si les sièges de soupapes ne sont pas usés au niveau de la surface de contact. Rectifier ou remplacer si l'usure est excessive.

- **Avant de réparer les sièges de soupape, vérifier l'état de la soupape et du guide de soupape. Les remplacer s'ils sont usés. Puis rectifier le siège de soupape.**
- **Utiliser les deux mains afin de couper de manière uniforme.**

Simpo PDF Merge and Split Unregistered Version - http://www.simpopdf.com

Inspection (suite)

REMPLACEMENT DU SIEGE DE SOUPAPE POUR LES PIECES DE RECHANGE

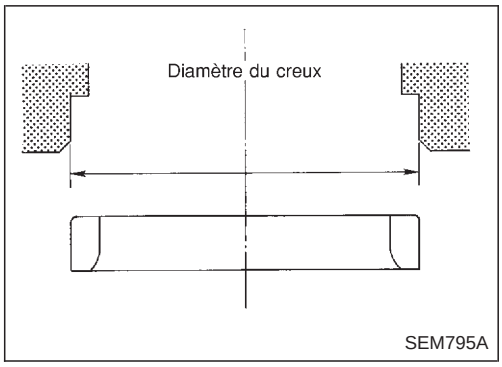

1. Aléser le siège usagé jusqu'à ce qu'il s'affaisse. Ne pas descendre au-delà du fond du creux de la culasse. Pour cela, régler la butée de profondeur de l'outil.
2. Aléser le creux de la culasse.
   Alésage le siège de la soupape
   Surdimension [0,5 mm] :
   Admission 38,000 - 38,016 mm
   Echappement 32,700 - 32,716 mm

Utiliser le centre du guide de soupape pour l'alésage afin de garantir le bon ajustage du siège de soupape.

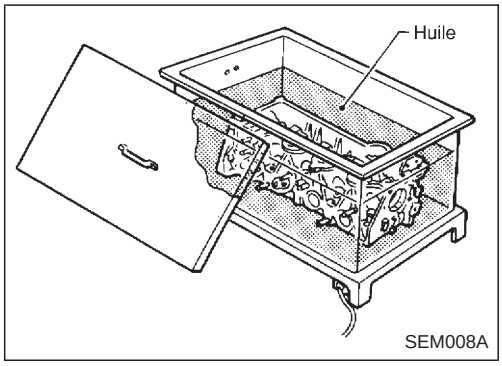

3. Chauffer la culasse à une température comprise entre 120° et 140°.
4. Emmancher le siège de soupape jusqu'à ce qu'il s'ajuste sur la partie supérieure.

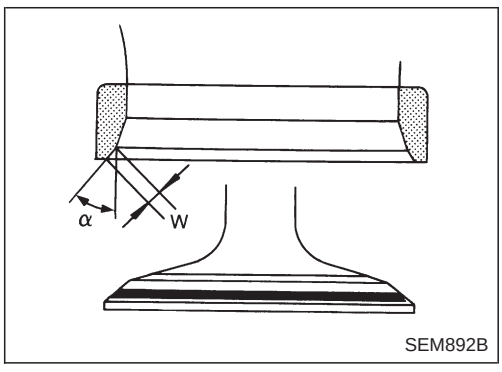

5. Couper ou affûter le siège de soupape à l'aide d'un outil adéquat aux dimensions spécifiées dans les SDS (caractéristiques et valeurs de réglage).
6. Après avoir coupé, recouvrir le siège de soupape d'une pâte abrasive.
7. Vérifier l'état d'assise de la soupape.
   Angle d'assise du siège "α" :
   45°15' - 45°45' degrés
   Largeur de contact W :
   Admission
   1,48 - 1,63 mm

Simpo PDF Merge and Split Unregistered Version - http://www.simpopdf.com

Inspection (suite)

Echappement
1,8 - 2,0 mm

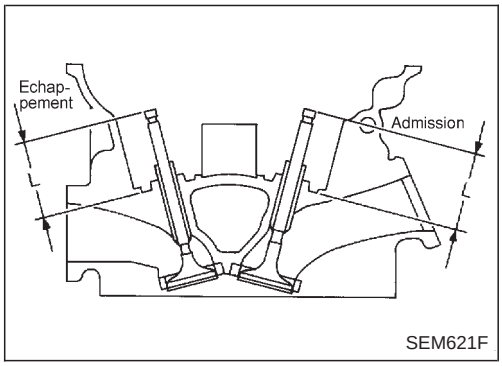

SEM621F

8. Utiliser une jauge de profondeur pour mesurer la distance entre la surface de fixation du siège de ressort de culasse et de l'extrémité de la queue de soupape. Si la distance est plus courte que celle spécifiée, effectuer à nouveau l'étape 5 décrite ci-dessus pour la régler. Si elle est plus longue, remplacer le siège de soupape par un siège neuf.
   Limite de rectification du siège de soupape L :
   Admission 42,02 - 42,52 mm
   Echappement 42,03 - 42,53mm

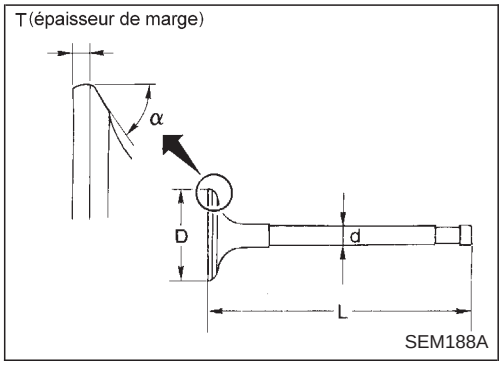

SEM188A

DIMENSIONS DE LA SOUPAPE

Vérifier les dimensions de chaque soupape. Pour les dimensions, se reporter aux SDS (caractéristiques et valeurs de réglage)(EM-2053).
Lorsque la tête de la soupape présente une usure de 0,5 mm en terme de marge d'épaisseur, remplacer la soupape.
La marge autorisée pour la queue de soupape est de 0,2 mm maximum.

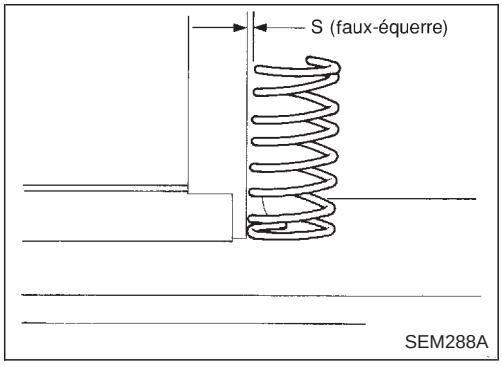

SEM288A

RESSORT DE SOUPAPE

Equerrage

1. Mesurer la dimension S.
   Faux-équerre S :
   maximum 2,2 mm
2. Si la valeur excède la limite, remplacer le ressort.

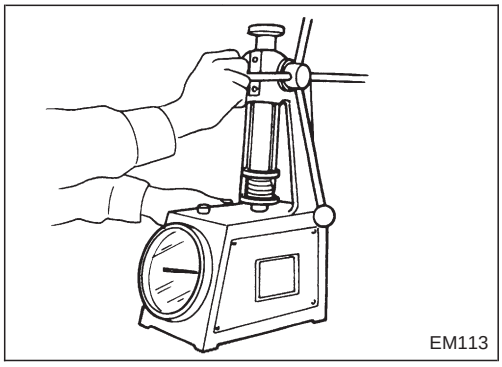
EM113

Pression

Vérifier la pression de la soupape de contrôle au niveau de la hauteur de ressort spécifiée.
Pression : N (kg) à la hauteur mm
Standard
418,0 (42,6) à 29,17
Limite
393,0 (40,1) à 29,17
Si la valeur excède la limite, remplacer le ressort.

Simpo PDF Merge and Split Unregistered Version - http://www.simpopdf.com

Inspection (suite)

LEVE-SOUPAPE ET CALE DE SOUPAPE

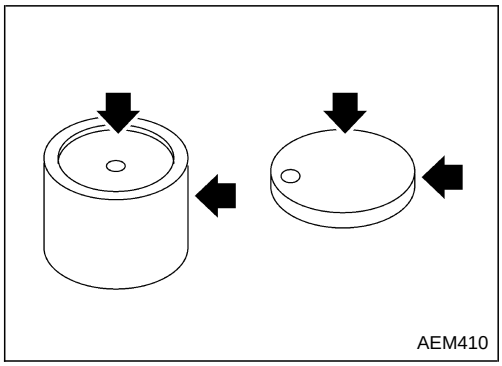
AEM410

1. Contrôler visuellement si les surfaces de contact et de glissement ne sont pas usées ou éraflées.

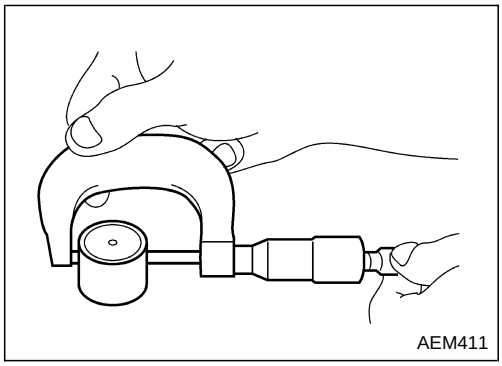
AEM411

2. Vérifier le diamètre du lève-soupape et de l'alésage du guide de lève-soupape.

Diamètre externe du lève-soupape :
33,960 - 33,975 mm

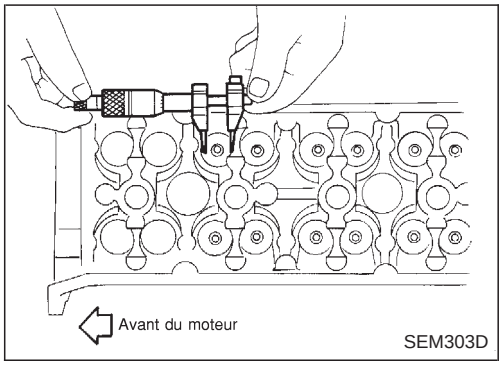

SEM303D

Diamètre de l'alésage du lève-soupape :
34,000 - 34,021 mm
Jeu entre le lève-soupape et le guide de lève-soupape: 0,025 - 0,061 mm
Si le diamètre ou le jeu dépasse la limite, remplacer le lève-soupape ou la culasse.

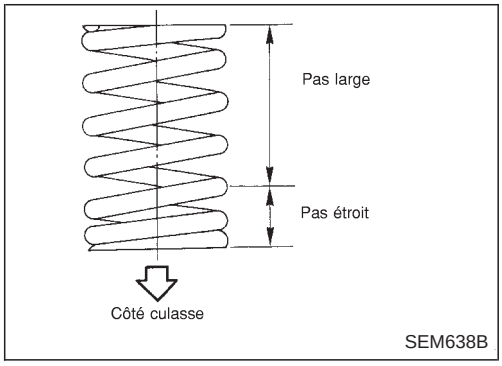

SEM638B

Remontage

1. Reposer les composants de la soupape.

- **Toujours utiliser un joint d'huile de soupape neuf. Se reporter à REMPLACEMENT DU JOINT D'ETANCHEITE D'HUILE (EM-2022).**
- **Avant de reposer le joint d'huile de soupape, reposer le siège du ressort de soupape.**
- **Reposer le ressort de soupape externe (type de pas irrégulier) avec le côté du pas étroit vers le côté culasse.**
- **Après avoir installé les composants de la soupape, taper l'alésage de la soupape avec un maillet à tête plastique pour garantir le bon ajustage.**

Simpo PDF Merge and Split Unregistered Version - http://www.simpopdf.com

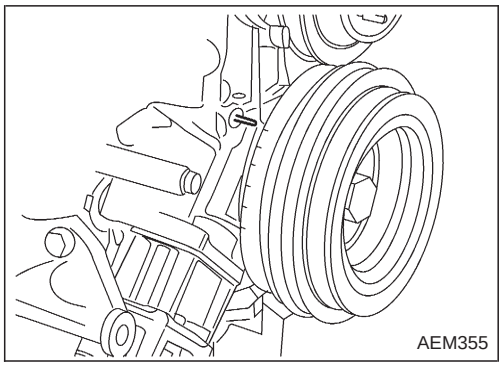

Jeu de la soupape

VERIFICATION

Vérifier le jeu de la soupape lorsque le moteur est chaud mais sans qu'il ne tourne.

1. Déposer le cache-culbuteurs et toutes les bougies d'allumage.
2. Engager le cylindre n°1 au PMH sur la course de compression.

- Aligner le pointeur avec le repère du TDC sur la poulie de vilebrequin.
- Vérifier que les lève-soupapes sur le cylindre n°1 sont desserrés et que les lève-soupapes sur le n°4 sont serrées.
  Si ce n'est pas le cas, tourner le vilebrequin d'un tour complet (360°) et l'aligner comme indiqué ci-dessus.

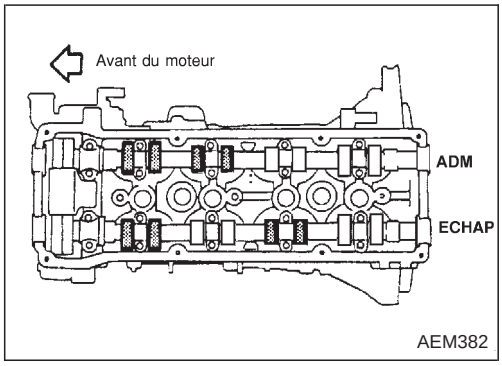

3. Vérifier uniquement ceux dont les soupapes sont indiquées sur l'illustration.

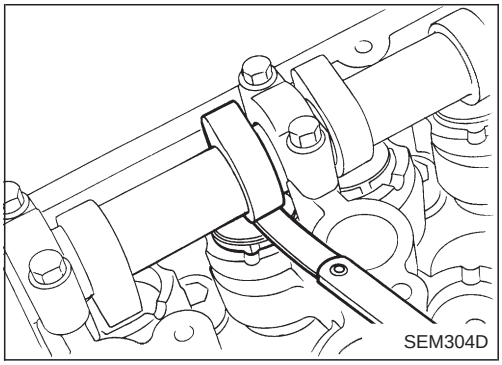

4. A l'aide d'une jauge d'épaisseur, mesurer le jeu entre le lève-soupape et l'arbre à cames.

- Enregistrer les mesures de jeu de la soupape qui ne sont pas conformes aux spécifications. Elles seront utilisées ultérieurement pour déterminer la cale de réglage de remplacement nécessaire.

Jeu de la soupape (à chaud) :

Admission

0,31 - 0,39 mm

Echappement

0,33 - 0,41 mm

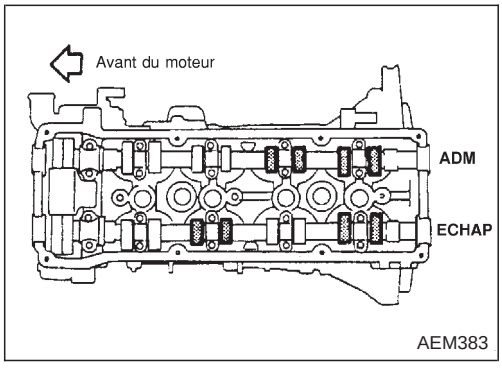

5. Tourner le vilebrequin d'un tour complet (360°) et aligner la marque sur la poulie du vilebrequin à l'aide d'un pointeur.
6. Vérifier ceux dont les soupapes sont indiquées sur l'illustration.

- Utiliser la même procédure que celle mentionnée dans l'étape 4.

7. Si tous les jeux de soupape sont conformes aux spécifications, reposer les pièces suivantes.

- Cache-culbuteurs
- Toutes les bougies d'allumage

Simpo PDF Merge and Split Unregistered Version - http://www.simpopdf.com

Jeu de la soupape (suite)

REGLAGE

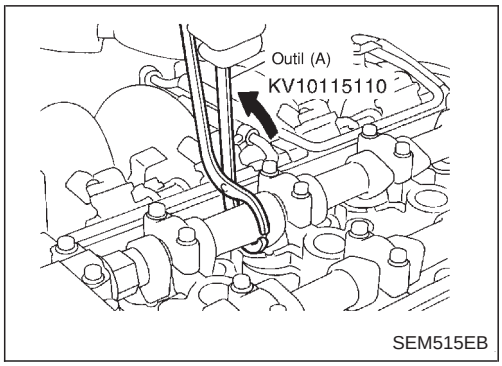

SEM515EB

Régler le jeu de la soupape lorsque le moteur est froid.

1. Tourner le vilebrequin pour positionner le bossage de cames sur l'arbre à cames de la soupape qui doit être réglée vers le haut.
2. Placer l'outil spécial (A) autour de l'arbre à cames comme indiqué sur l'illustration.
3. Faire tourner l'outil spécial (A) de telle sorte que le lève-soupape soit poussé vers le bas.

Avant de placer l'outil spécial (A), faire tourner l'encoche vers le centre de la culasse (voir l'illustration) afin de simplifier la dépose ultérieure de la cale.

PRECAUTION :

Veiller à ne pas endommager la surface de came avec l'outil spécial (A).

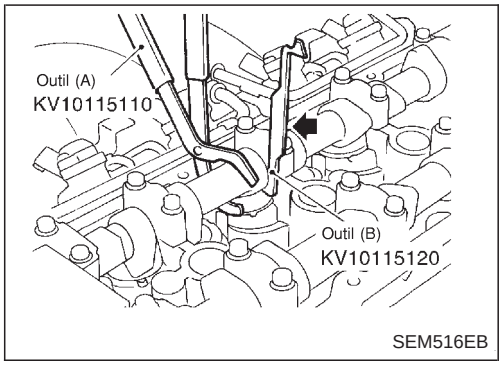

SEM516EB

4. Placer l'outil spécial (B) entre l'arbre à cames et le bord du lève-soupape pour retenir le lève-soupapes.

PRECAUTION :

- **L'outil spécial (B) doit être placé le plus près possible du support de l'arbre à cames.**
- **Veiller à ne pas endommager la surface de came avec l'outil spécial (B).**

5. Déposer l'outil spécial (A).

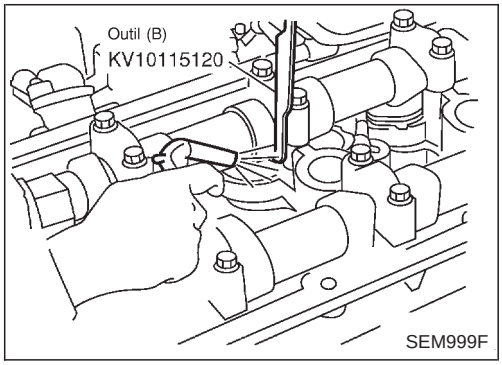

SEM999F

6. Faire tourner la cale de réglage jusqu'à ce que l'orifice soit visible. Insuffler de l'air dans l'orifice pour dissocier la cale de réglage du lève-soupape.

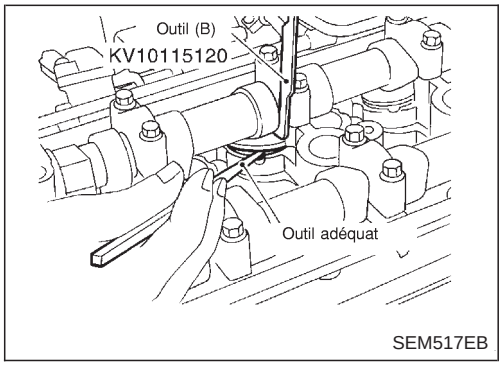

SEM517EB

7. Déposer la cale de réglage à l'aide d'un petit tournevis et d'un aimant.

Simpo PDF Merge and Split Unregistered Version - http://www.simpopdf.com

Jeu de la soupape (suite)

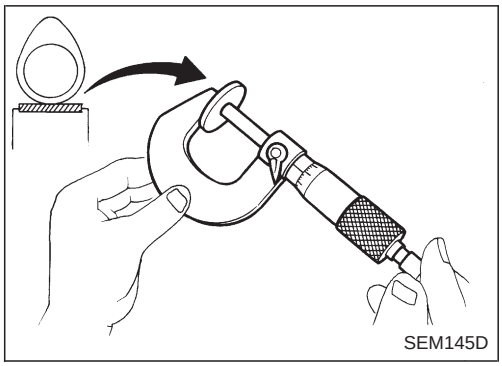
SEM145D

8. Déterminer la taille de la cale de réglage comme suit.
a. Déterminer l'épaisseur de la cale déposée à l'aide d'un micromètre.
b. Calculer l'épaisseur de la cale de réglage neuve, ainsi le jeu de la soupape sera conforme aux valeurs spécifiées.
R = épaisseur de la cale déposée N = épaisseur de la cale neuve M = valeur mesurée du jeu de la soupape

Admission et échappement :

N = R + [M - 0,37 mm]

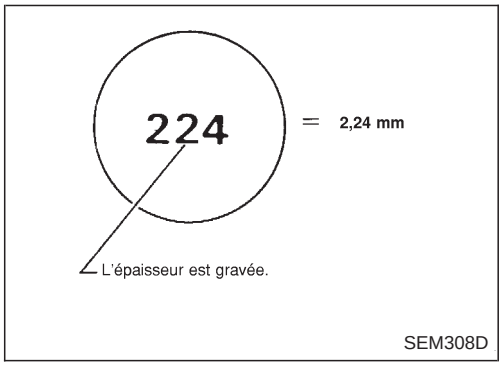

SEM308D

Les épaisseurs de cale disponibles vont de 1,96 mm à 2,68 mm, par incrémentations de 0,02 mm.

c. Sélectionner une cale neuve ayant une épaisseur la plus proche possible de la valeur calculée.
Se reporter aux SDS (caractéristiques et valeurs de réglage), EM-2055.

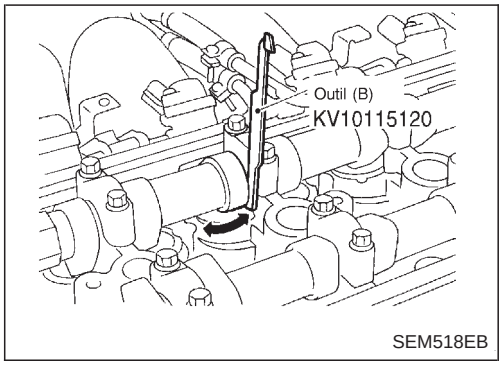

SEM518EB

9. Reposer la cale neuve à l'aide d'un outil adéquat.

- **Reposer en positionnant la surface sur laquelle l'épaisseur est poinçonnée vers le bas.**

10. Placer l'outil spécial (A) comme indiqué dans les étapes 2 et 3.
11. Déposer l'outil spécial (B).
12. Déposer l'outil spécial (A).
13. Vérifier à nouveau le jeu de la soupape.
Se reporter à VERIFICATION (EM-2035).

Simpo PDF Merge and Split Unregistered Version - http://www.simpopdf.com

SEC. 112

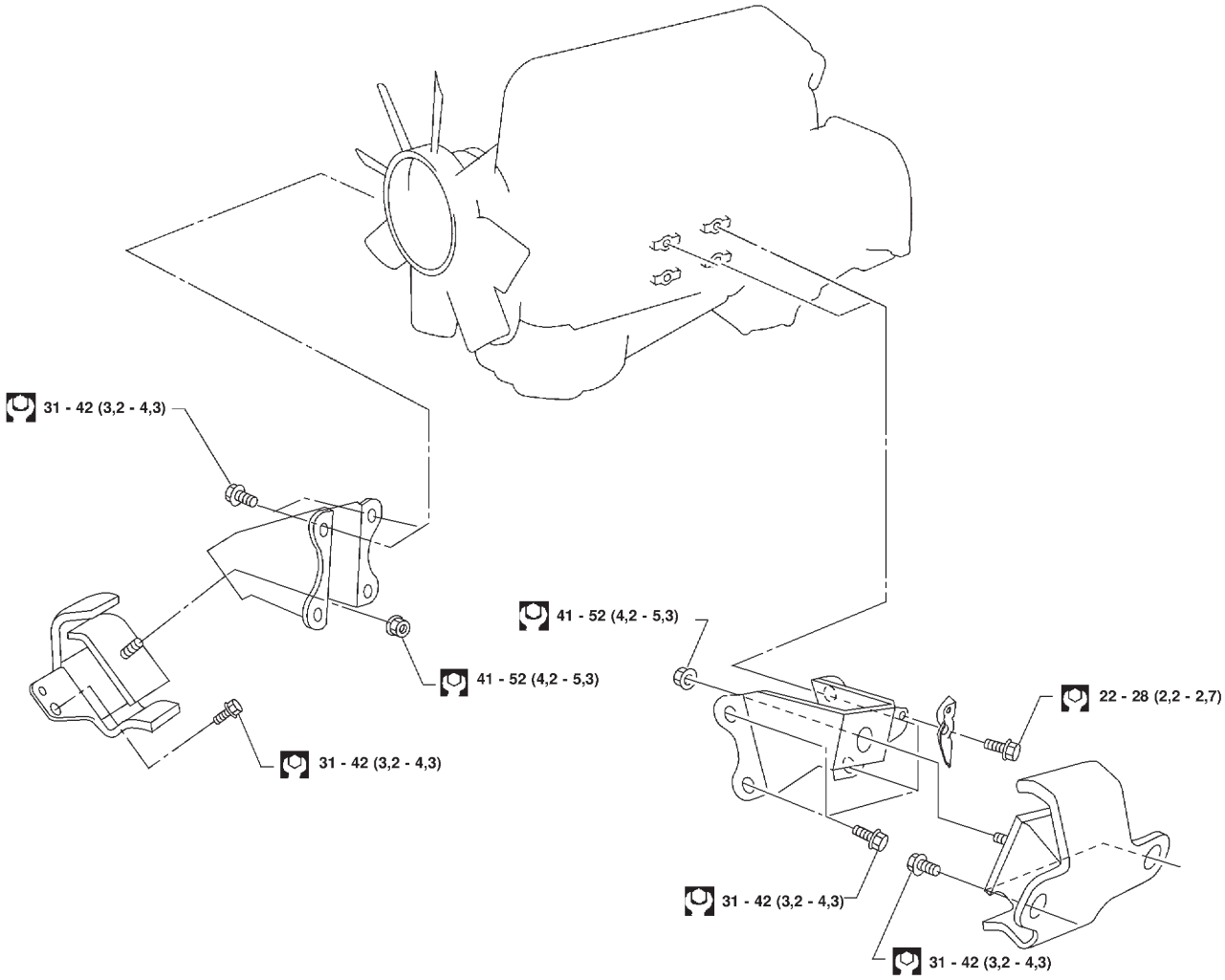

: N·m (kg-m)

AEM398

Simpo PDF Merge and Split Unregistered Version - http://www.simpopdf.com

ATTENTION :

- **Placer le véhicule sur une surface plane et dure.**
- **Placer des cales à l'avant et à l'arrière des roues arrière.**
- **Ne pas déposer le moteur jusqu'au refroidissement complet du système d'échappement.**
  Sinon, les risques de brûlure seraient élevées et/ou un incendie pourraient rompre les canalisations de carburant.
- **Avant de débrancher le flexible à carburant, dépressuriser le carburant. Se reporter à la section EC (Relâchement de la pression de carburant, PROCEDURE D'ENTRETIEN DE BASE).**
- **S'assurer de soulever le moteur et la transmission de manière sécurisée.**
- **Pour les moteurs qui ne sont pas équipés d'élingues de moteur, fixer les boulons et les élingues décrits dans le CATALOGUE DES PIECES DETACHEES.**

PRECAUTION :

- **Lors de la levée du moteur, s'assurer de nettoyer les pièces environnantes. Faire particulièrement attention au boîtier du câble d'accélérateur, aux conduites de frein et au maître-cylindre de frein.**
- **Lors de la levée du moteur, toujours utiliser les élingues de manière sécurisée.**
- **Pour les modèles 4x4, appliquer du produit d'étanchéité entre le moteur et la transmission. Se reporter à la section MT (''Dépose et repose'').**

Dépose

1. Déposer le liquide de refroidissement du bloc-moteur et du radiateur. Se reporter à la section MA (''Remplacement du liquide de refroidissement moteur'' , ENTRETIEN DU MOTEUR).
2. Dépressuriser le carburant. Se reporter à la section EC (''Dépressurisation du carburant'', PROCEDURE D'ENTRETIEN DE BASE).
3. Déposer le câble négatif de la batterie.
4. Déposer le capot. Se reporter à à la section BT.
5. Déposer le filtre à air et le conduit d'air.
6. Déposer le courroie d'entraînement de direction assistée, la courroie d'entraînement de l'alternateur et la courroie d'entraînement du compresseur de climatisation.
7. Déposer le radiateur. Se reporter à la section LC (''Radiateur'', SYSTEME DE REFROIDISSEMENT DU MOTEUR).
8. Déposer la protection thermique du collecteur d'échappement.
9. Débrancher le système d'échappement du collecteur d'échappement.
10. Déposer le compresseur de climatisation de son support. Se reporter à la section HA (Fixation du compresseur, PROCEDURES D'ENTRETIEN).
11. Débrancher le câble d'accélérateur, les flexibles à dépression, les connecteurs électriques, les flexibles de chauffage et le flexible d'assistance à dépression.

Simpo PDF Merge and Split Unregistered Version - http://www.simpopdf.com

Dépose (suite)

12. Déposer la pompe de direction assistée côté moteur.
13. Déposer la transmission. Se reporter à la section MT ou AT (“Dépose”,DEPOSE ET REPOSE).
14. Déposer les supports de moteur gauche et droit.
15. Déposer le moteur.

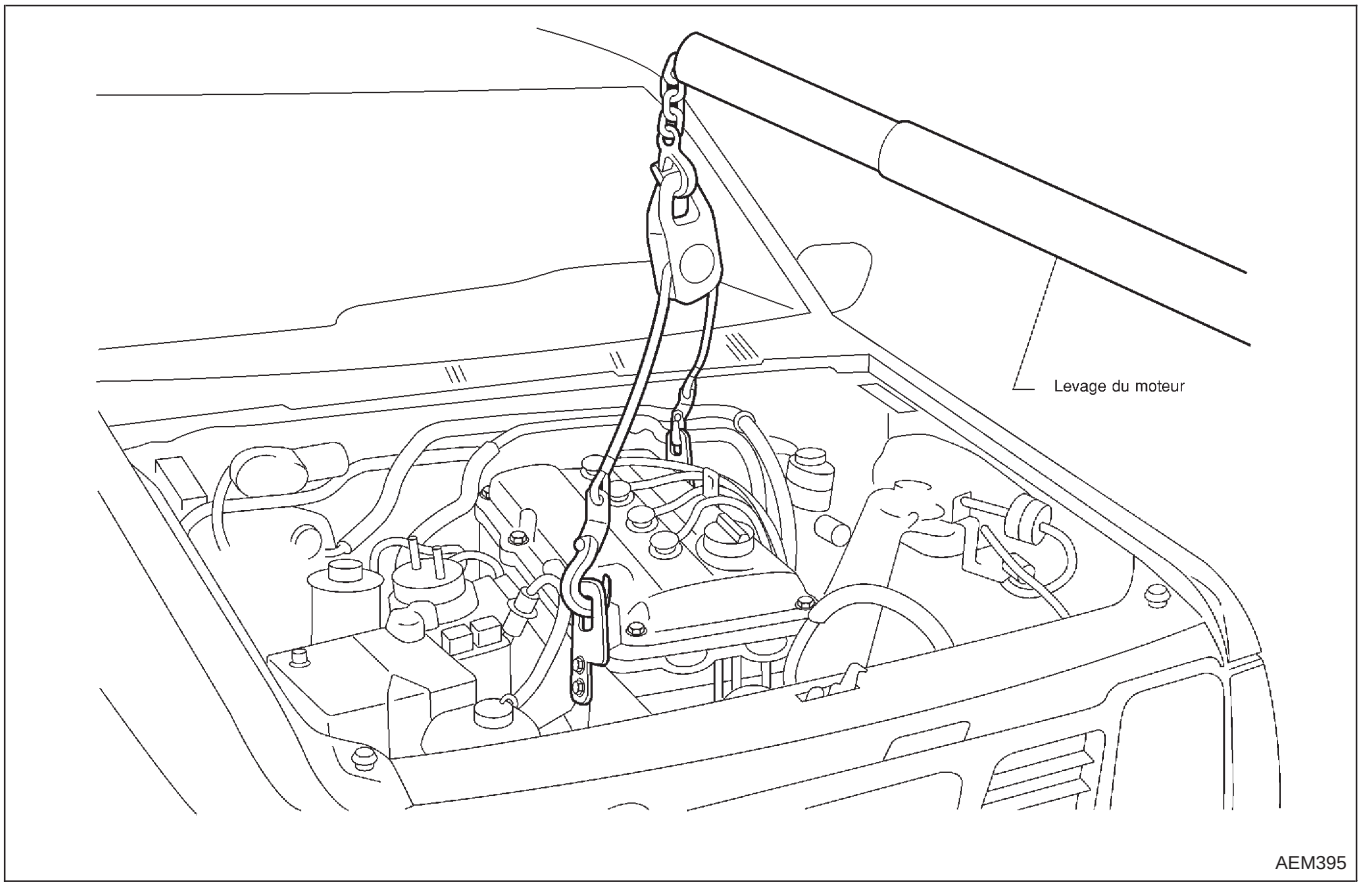

Repose

- Reposer dans l’ordre inverse de la dépose.

Simpo PDF Merge and Split Unregistered Version - http://www.simpopdf.com

SEC. 110•120•135•150•210

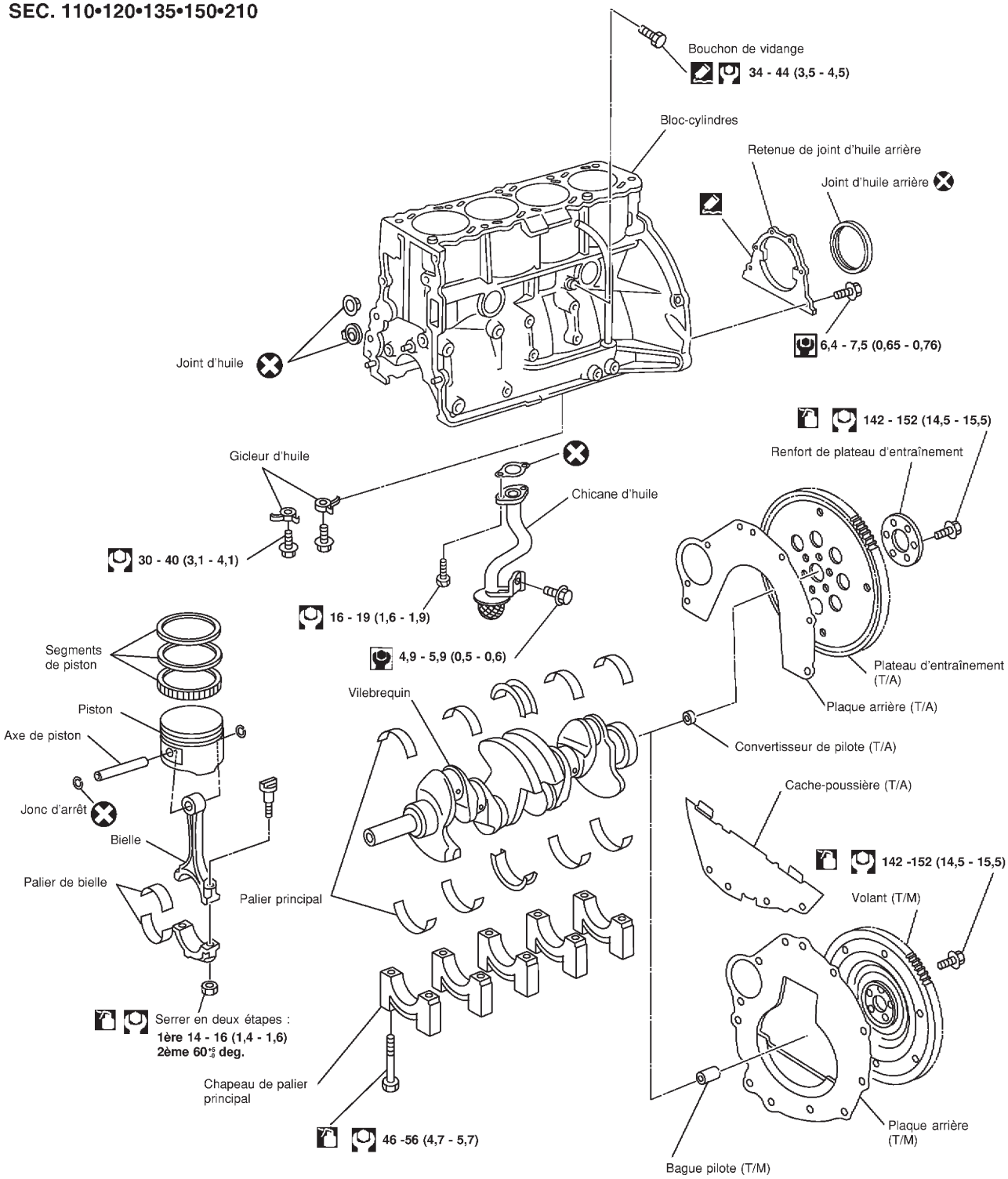

: Lubrifier avec de l'huile moteur neuve.

: Utiliser un joint liquide d'origine ou équivalent.

: N·m(kg-m)

: N·m (kg-m)

SEM014G

Simpo PDF Merge and Split Unregistered Version - http://www.simpopdf.com

PRECAUTION :

- **Lors de la repose des pièces mobiles (paliers, pistons, etc...), lubrifier les surfaces de contact avec de l'huile moteur neuve.**
- **Placer les pièces déposées telles que les roulements et les chapeaux de palier dans le bon ordre et dans le bon sens.**
- **Lors de la repose des écrous de bielle et des boulons de chapeau de palier principal, appliquer de l'huile moteur neuve aux filetages et à la surface d'assise.**
- **Ne laisser aucun matériel magnétique rentrer en contact avec les dents de la couronne dentée du volant ou du plateau d'entraînement.**

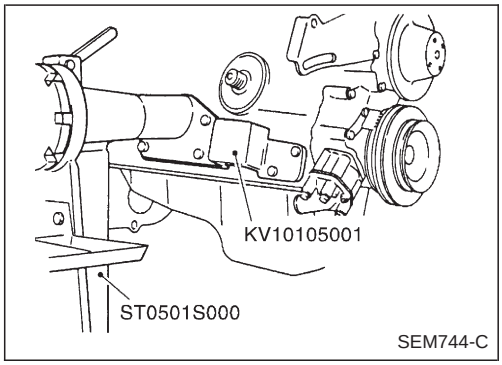

Démontage

PISTON ET VILEBREQUIN

1. Placer le moteur sur un plan de travail.
2. Vidanger le liquide de refroidissement et l'huile.
3. Déposer le carter d'huile.
4. Déposer la chaîne de distribution. Se reporter à ''Dépose'' dans CHAINE DE DISTRIBUTION (EM-2016).
5. Déposer la pompe à eau.
6. Déposer la culasse.
7. Déposer les pistons avec les bielles.

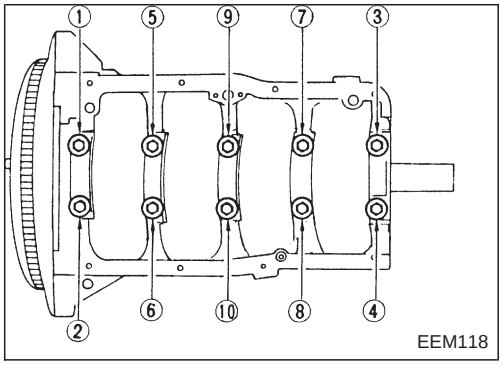

8. Déposer les chapeaux de palier et le vilebrequin.

- **Avant de déposer les chapeaux de palier, mesurer le jeu axial du vilebrequin. Se reporter à EM-.2051**
- **Les boulons doivent être desserrés en deux ou trois étapes.**

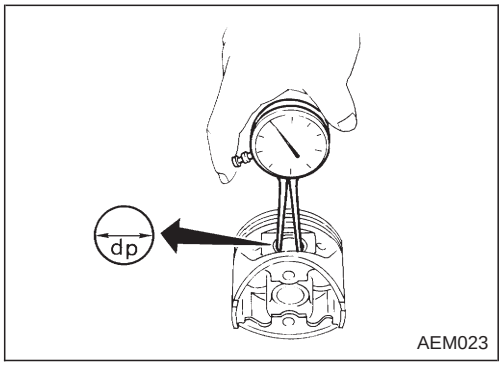

Inspection

JEU DU PISTON ET DE L'AXE DE PISTON

1. Mesurer le diamètre interne de l'orifice de l'axe de piston ''dp''.

Diamètre standard ''dp'' :
20,993 - 20,999 mm

Simpo PDF Merge and Split Unregistered Version - http://www.simpopdf.com

Inspection (suite)

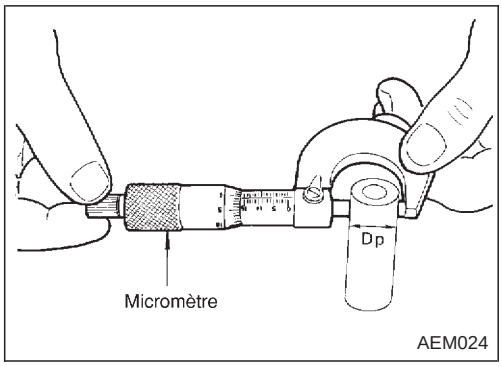

2. Mesurer le diamètre externe de l'axe de piston ''Dp''.
   Diamètre standard ''dp'' :
   20,989 - 21,001 mm
3. Calculer le jeu de l'axe de piston.
   dp - Dp = de -0,002 à 0,01 mm
   Si la valeur est supérieure à la valeur ci-dessus, remplacer l'ensemble de piston avec l'axe.

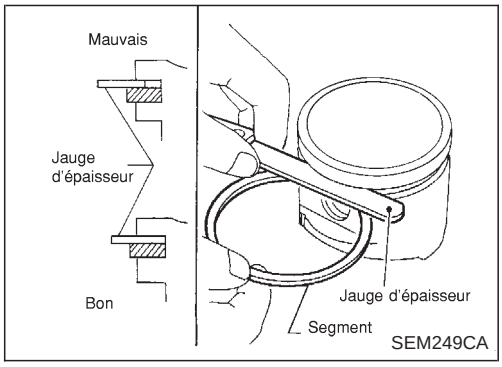

JEU LATERAL DES SEGMENTS DE PISTON

Jeu latéral :
Segment de feu 0,04 - 0,08 mm
Segment de compression 0,03 - 0,07 mm
Limite maxi. de jeu latéral : 0,1 mm

Si elle est en dehors des limites spécifiées, remplacer le segment de piston.
Si le jeu est supérieur à la limite maxi. avec un segment neuf, remplacer le piston.

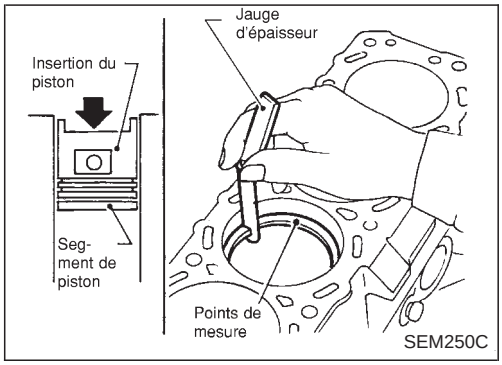

ECARTEMENT DE SEGMENT DE PISTON

Ecartement :
Segment de feu
0,28 - 0,52 mm
Segment de compression
0,45 - 0,69 mm
(R ou T est perforé sur l'anneau.)
0,55 - 0,70 mm
(N est perforé sur l'anneau.)
Segment racleur
0,20 - 0,69 mm
Limite maxi. d'écartement :
Se reporter aux SDS, EM-2059.

S'il est en dehors des limites spécifiées, remplacer le segment de piston. Si l'écartement dépasse la limite maxi. , aléser à nouveau le cylindre et utiliser le piston et les segments de piston surdimensionnés. Se reporter aux SDS, EM-2059.

- Lors du remplacement du piston, vérifier si le bloc-cylindre n'est pas éraflé ou grippé. Si des éraflures ou grippages sont détectés, remplacer le bloc-cylindre.

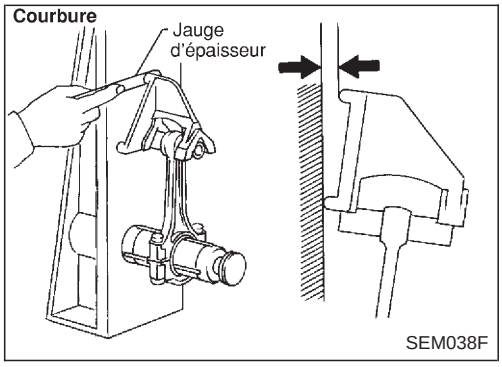

COURBURE ET TORSION DES BIELLES

Courbure :
Limite 0,15 mm
tous les 100 mm
Torsion :
Limite 0,30 mm
tous les 100 mm

En cas de dépassement de ces valeurs, remplacer l'ensemble de bielle

Simpo PDF Merge and Split Unregistered Version - http://www.simpopdf.com

Inspection (suite)

DEFORMATION ET USURE DU BLOC-CYLINDRE

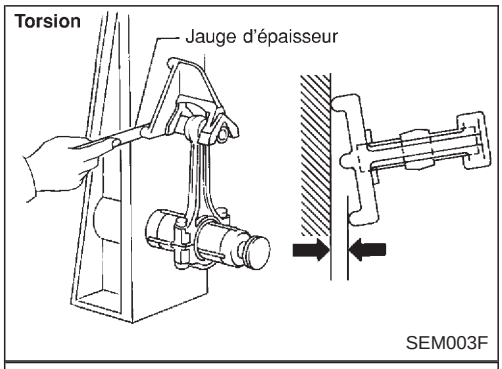

1. Nettoyer la partie supérieure du bloc-cylindre.
   Utiliser une règle fiable et une jauge d'épaisseur pour vérifier la planéité de la surface du bloc-cylindre. Vérifier les six positions indiquées sur l'illustration.
   Limite :
   0,1 mm
2. Si elle est en dehors des limites spécifiées, la rectifier.
   La limite pour la rectification du bloc-cylindre est déterminée par la rectification de la culasse.

La valeur à rectifier de la culasse est A
La valeur à rectifier de la culasse est B
La limite maxi. est comme suit :
A + B = 0,2 mm
Hauteur nominale du bloc-cylindre à partir du centre de vilebrequin :
246,95 - 247,05 mm

3. Remplacer le bloc-cylindre si nécessaire.

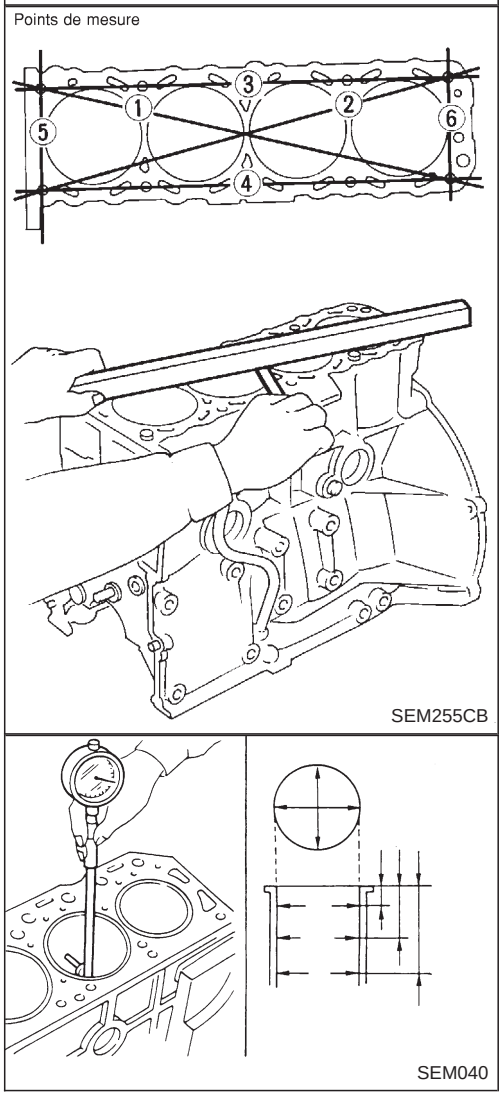

JEU DU PISTON A ALESER

1. A l'aide d'une jauge pour alésage, mesurer l'alésage de cylindre pour déterminer l'usure, l'ovalisation et la conicité.
   Diamètre interne standard :
   Se reporter aux SDS, EM-2057.
   Limite d'usure : 0,2 mm
   Ovalisation standard (X- Y) : 0,015 mm
   Conicité (A-B) standard : 0,010 mm
   Si elle dépasse la limite, aléser à nouveau tous les cylindres. Remplacer le bloc-cylindre si nécessaire.
2. Vérifier l'absence d'éraflures et de grippage. Si des grippages sont détectés, affûter le cylindre.

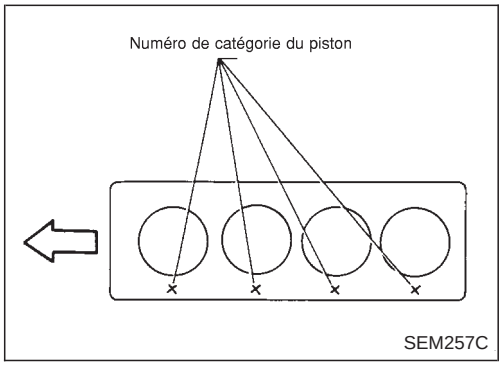

- **Si le bloc-cylindre et le piston sont remplacés, faire correspondre la catégorie du piston avec le numéro de catégorie situé sur la surface supérieure du bloc-cylindre.**

Simpo PDF Merge and Split Unregistered Version - http://www.simpopdf.com

Inspection (suite)

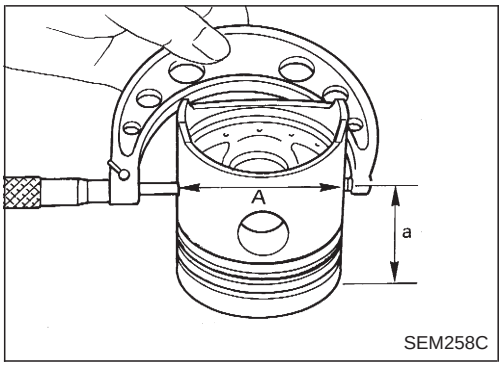

3. Mesurer le diamètre de la jupe de piston.
   Diamètre de piston A :
   Se reporter aux SDS, EM-2059.
   Point de mesure ''a'' (distance en partant du haut) :
   Environ 48 mm
4. Vérifier que le jeu du piston à aléser se trouve dans la fourchette spécifiée.
   Jeu du piston à aléser B :
   0,020 - 0,040 mm
5. Déterminer la surdimension du piston selon le degré d'usure du cylindre.

Pistons surdimensionnés pour entretien. Se reporter aux SDS, EM-2059.

6. La taille de l'alésage de cylindre est déterminée en ajoutant le jeu du piston à aléser au diamètre de piston A.
   Calcul de la taille de réalésage :
   D = A + B - C où,
   D : diamètre d'alésage
   A : diamètre de piston mesuré
   B : jeu du piston à aléser
   C : tolérance de finition 0,02 mm
7. Reposer les chapeaux de palier principal et serrer les boulons au couple spécifié. Cela empêchera la déformation des alésages de cylindre.
8. Couper les alésages de cylindres.

- **Lorsqu'un cylindre a besoin d'un réalésage, tous les autres cylindres doivent aussi être réalésés.**
- **Couper petit à petit l'alésage de cylindre. Couper par tranche de 0,05 mm.**

9. Affûter les cylindres pour obtenir le jeu spécifié du piston à aléser.
10. Mesurer l'alésage de finition du cylindre en recherchant s'il y a ovalisation ou conicité.

- **La mesure doit être prise une fois que l'alésage du cylindre est refroidi.**

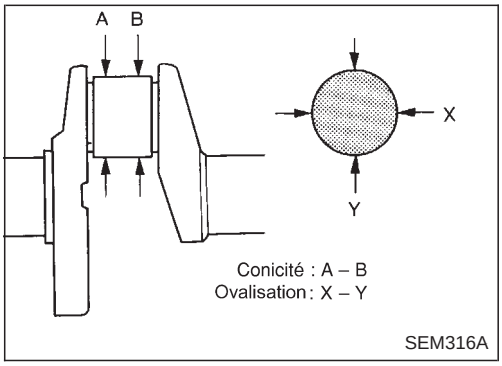

VILEBREQUIN

1. Vérifier si le vilebrequin principal et les manetons ne sont pas rayés, usés ou fendus.
2. Mesurer les tourillons pour vérifier la conicité et l'ovalisation avec un micromètre.
   Ovalisation (X- Y):
   Tourillon Inférieur à 0,01 mm
   Maneton Inférieur à 0,005 mm
   Conicité (A- B) :
   Tourillon Inférieur à 0,01 mm
   Maneton Inférieur à 0,005 mm

Simpo PDF Merge and Split Unregistered Version - http://www.simpopdf.com

Inspection (suite)

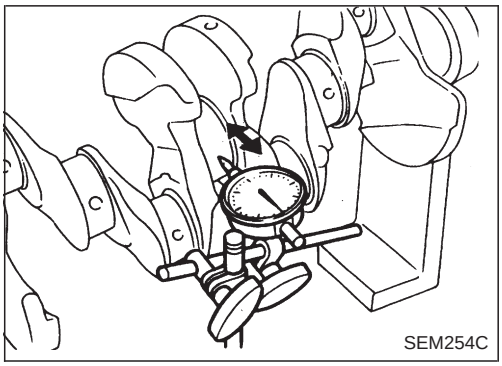
SEM254C

3. Mesurer le voile du vilebrequin.
   Voile (indication totale de la jauge) :
   Inférieur à 0,10 mm

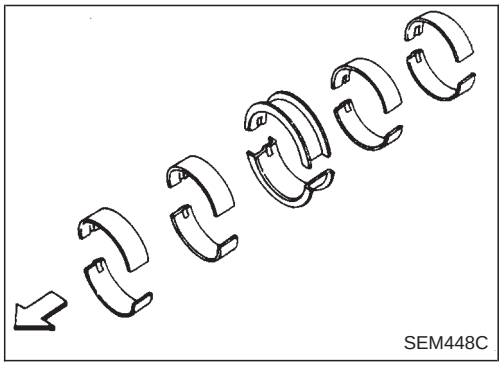
SEM448C

JEU DE PALIER

- Utiliser la méthode A ou la méthode B. La méthode A est préférable car c'est la plus précise.

Méthode A (à l'aide de la jauge pour alésage et du micromètre)

Palier principal

1. Engager les paliers principaux dans leur bonne position sur le bloc-cylindre et sur le chapeau de palier principal.

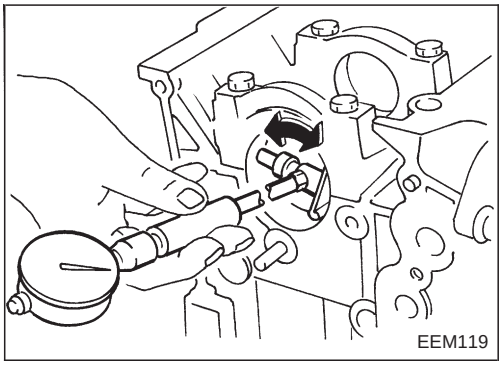
EEM119

2. Reposer le chapeau de palier principal sur le bloc-cylindre.
- **Serrer tous les boulons dans le bon ordre en deux ou trois étapes. Se reporter à EM-2041 et EM-2050.**
3. Mesurer le diamètre interne A de chaque palier principal.

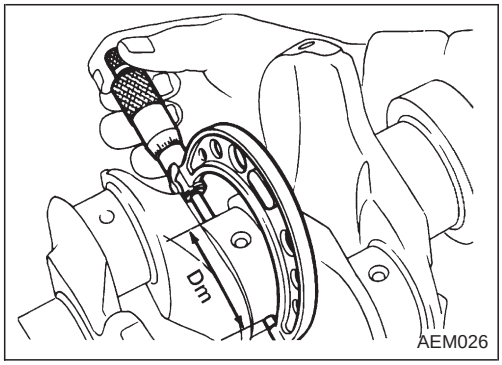

AEM026

4. Mesurer le diamètre externe ''Dm'' de chaque tourillon de vilebrequin.
5. Calculer le jeu de palier principal.
   Jeu du palier principal = A- Dm
   Standard :
   0,020 - 0,047 mm
   Limite :
   0,1 mm
6. Si la valeur excède la limite, remplacer le palier.
7. Si le jeu ne peut être réglé dans les valeurs standard de palier, affûter le tourillon de vilebrequin et utiliser une taille inférieure de palier.

Simpo PDF Merge and Split Unregistered Version - http://www.simpopdf.com

Inspection (suite)

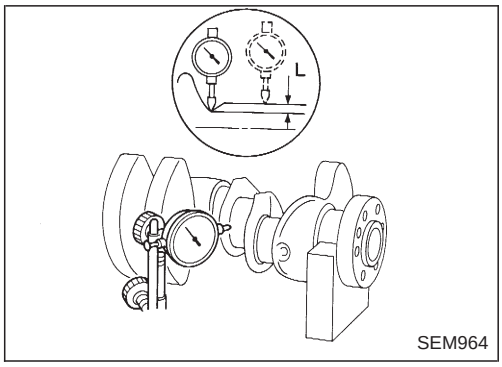

a. Lors de l'affûtage du tourillon de vilebrequin, confirmer que la dimension L est supérieure à la limite spécifié en le faisant rouler.
L : 0,1 mm
b. Se reporter aux SDS, EM-2060 et EM-2061 pour l'affûtage et les pièces de rechange disponibles pour le vilebrequin.

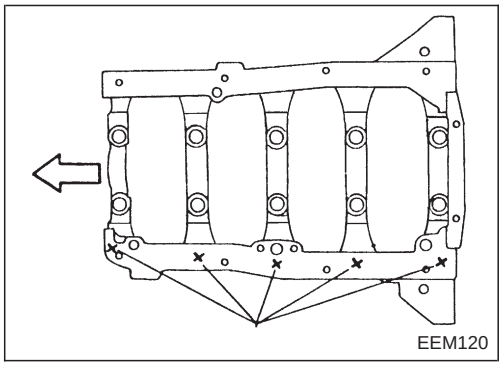

8. Si le vilebrequin est réutilisé, mesurer le jeu du palier principal et sélectionner l'épaisseur du palier principal.
Si le vilebrequin ou le bloc-cylindre est remplacé, sélectionner l'épaisseur des paliers principaux comme suit :
a. Le numéro de catégorie de chaque tourillon de bloc-cylindres est poinçonné sur le bloc-cylindre respectif. Ces numéros sont poinçonnés soi ten chiffres arabes soit en chiffres romains.

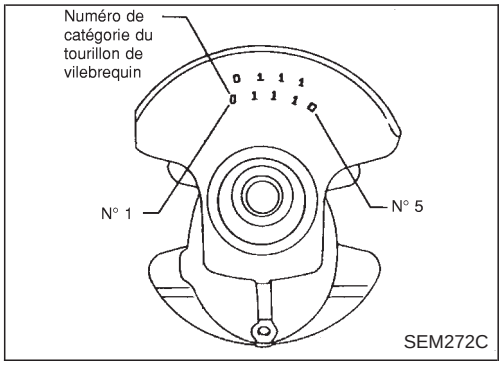

b. Le numéro de catégorie de chaque tourillon de vilebrequin est poinçonné sur le vilebrequin. Ces numéros sont poinçonnés soit en chiffres arabes soit en chiffres romains.
c. Sélectionner le palier principal avec l'épaisseur adéquate selon le tableau ou l'exemple suivant.

Par exemple :
Numéro de catégorie du tourillon sur le bloc-cylindre : 1
Numéro de catégorie du tourillon de vilebrequin : 2
Numéro de catégorie du palier principal= 1 + 2
= 3 (jaune)

Numéro de catégorie et couleur d'identification du palier principal :

		Numéro de catégorie du tourillon sur le bloc-cylindre		
		0	1	2
Numéro de catégorie du tourillon de vilebrequin	0	0 (noir)	1 (marron)	2 (vert)
	1 ou I	1 (marron)	2 (vert)	3 (jaune)
	2 ou II	2 (vert)	3 (jaune)	4 (bleu)

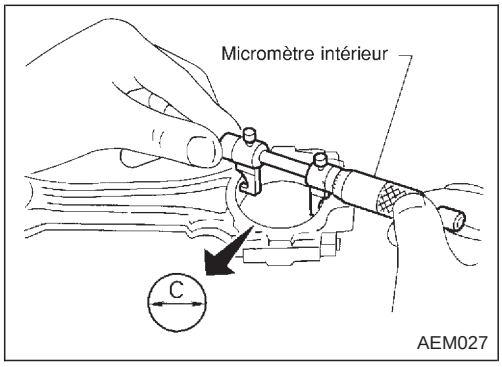

Palier de bielle (tête de bielle)

1. Reposer le palier de bielle sur la bielle et le chapeau de bielle.
2. Reposer le chapeau de bielle sur la bielle.
● **Serrer les boulons au couple spécifié.**
3. Mesurer le diamètre interne C de chaque palier.

Simpo PDF Merge and Split Unregistered Version - http://www.simpopdf.com

Inspection (suite)

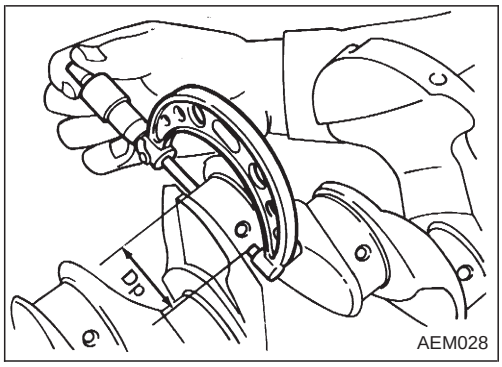

4. Mesurer le diamètre externe ‘‘Dp’’ de chaque tourillon de vilebrequin.
5. Calculer le jeu de palier de bielle.
   Jeu de palier de bielle = C - Dp:
   Standard
   0,010 - 0,035 mm
   Limite
   0,09 mm
6. Si la valeur excède la limite, remplacer le palier.
7. Si le jeu ne peut pas être réglé conformément aux valeurs standard d’un des paliers, affûter le tourillon de vilebrequin et utiliser un palier de taille inférieure. Se reporter à l’étape 5 de JEU DE ROULEMENT, EM-2046.

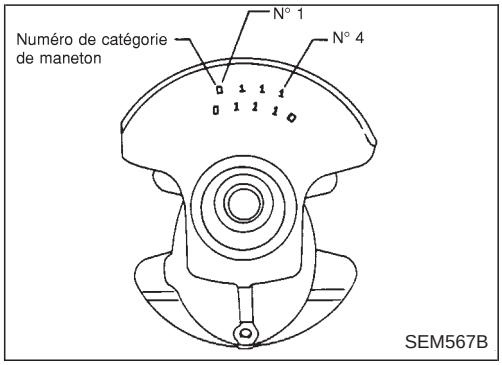

8. Si le vilebrequin est remplacé, sélectionner le palier de bielle selon le tableau suivant.

Numéro de catégorie de palier de bielle

Ces numéros sont poinçonnés soit en chiffres arabes soit en chiffres romains.

Numéro de catégorie de maneton	Numéro de catégorie de palier de bielle
0	0
1 ou I	1
12 ou II	2

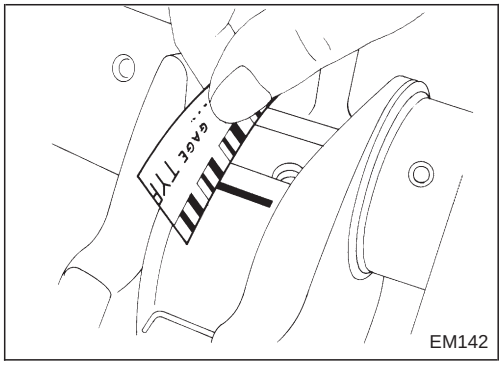

Méthode B (à l’aide d’une cale en plastique)

PRECAUTION :

- **Ne pas tourner le vilebrequin ou la bielle lorsque la cale en plastique est en phase d’insertion.**
- **Lorsque le jeu de palier dépasse les limites spécifiées, s’assurer que le palier correct a été reposé. Puis, si un jeu de palier excessif est détecté, utiliser un palier principal plus épais de telle sorte que le jeu de palier spécifié soit obtenu.**

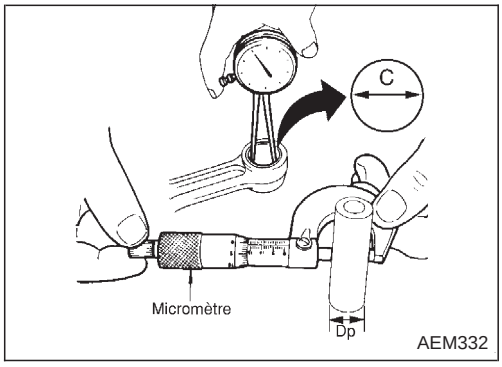

JEU DE BAGUE DE BIELLE (pied de bielle)

1. Mesurer le diamètre interne C de la bague.
2. Mesurer le diamètre externe de l’axe de piston ‘‘Dp’’.
3. Calculer le jeu de bague de bielle.
   C - Dp =
   0,005 - 0,017 mm (standard)
   0,023 mm (limite)
   Si la valeur n’est pas conforme aux spécifications, remplacer l’ensemble de bielle et/ou l’ensemble de pignon avec l’axe.

Simpo PDF Merge and Split Unregistered Version - http://www.simpopdf.com

Inspection (suite)

REMPLACEMENT DE LA BAGUE DE BIELLE (pied de bielle)

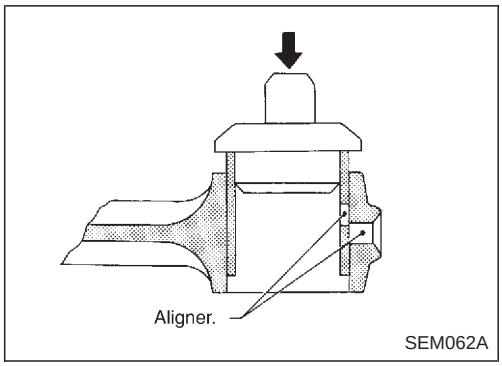

1. Enfoncer la bague de pied de bielle jusqu'à ce qu'il soit au même niveau que la surface d'extrémité de bielle.

S'assurer d'aligner les orifices d'huile.

2. Aléser la bague jusqu'à ce que le jeu avec l'axe de piston soit conforme aux spécifications.

Jeu entre la bague de bielle et l'axe de piston :
0,005 - 0,017 mm

VOLANT/VOILE DU PLATEAU D'ENTRAINEMENT

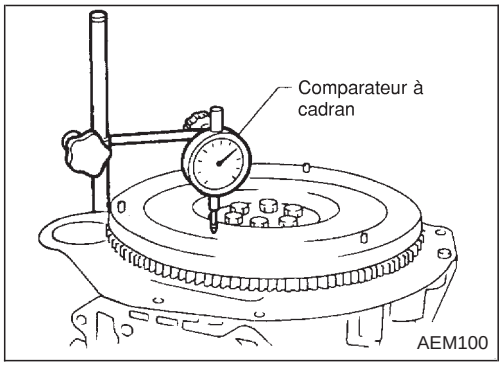

Voile (indication totale de la jauge) :
Volant (modèle à boîte manuelle)
Inférieure à 0,15 mm
Plateau d'entraînement (modèle avec T/A)
Inférieure à 0,15 mm

PRECAUTION :

- **Veiller à ne pas endommager les dents de la couronne dentée.**
- **Vérifier que le plateau d'entraînement n'est pas déformé et fendu.**
- **Ne laisser aucun matériel magnétique rentrer en contact avec les dents de la couronne dentée.**
- **Ne pas rectifier le volant. Remplacer si nécessaire.**

Remontage

PISTON

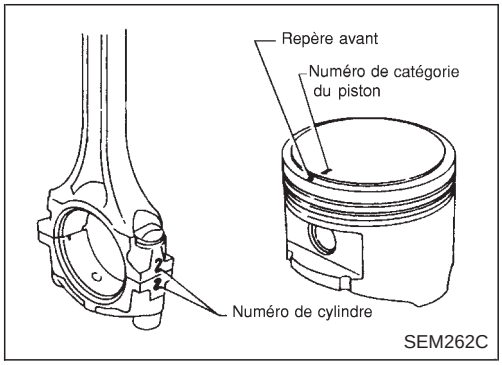

1. Chauffer le piston à une température comprise entre 60° et 70° et monter le piston, l'axe de piston et la bielle.

- **Aligner le sens du piston et de la bielle.**
- **Les numéros poinçonnés sur la bielle et le chapeau correspondent à chaque cylindre.**
- **Après le montage, s'assurer que la bielle bouge librement.**

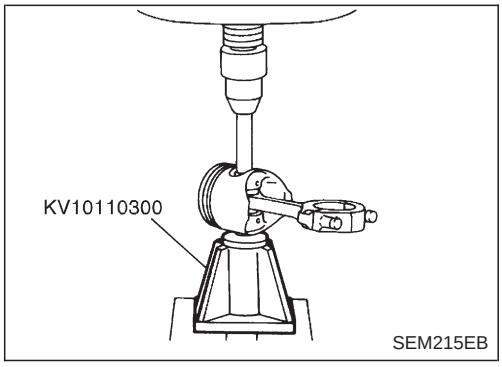

Simpo PDF Merge and Split Unregistered Version - http://www.simpopdf.com

Remontage (suite)

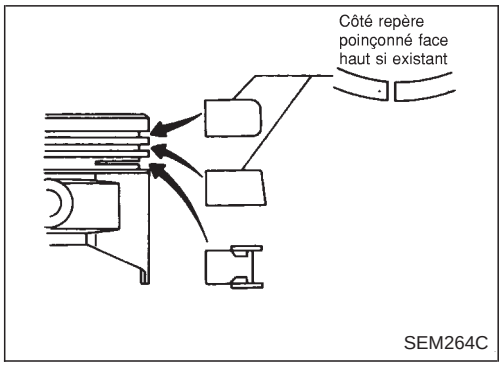

2. Engager les segments de piston tel que cela est indiqué.

PRECAUTION :

- **Lorsque les segments de piston ne sont pas remplacés, s'assurer que les segments de piston sont montés dans leurs positions d'origine.**
- **Lorsque des segments de piston sont en cours de remplacement et qu'il n'y a aucun repère poinçonné, les segments de piston peuvent être monté avec l'une ou l'autre face vers le haut.**

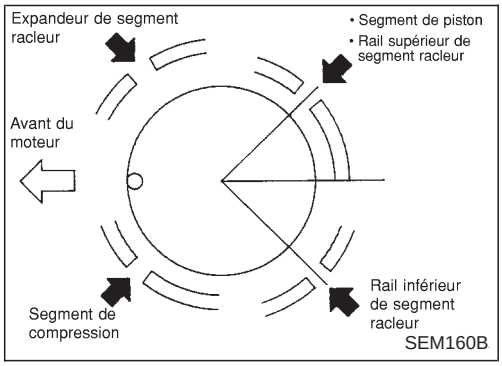

3. Aligner les segments de piston de telle sorte que les écartements soient dans la position indiquée.

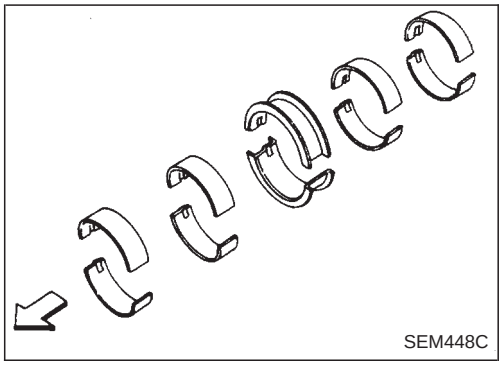

VILEBREQUIN

1. Engager les paliers principaux dans leur bonne position sur le bloc-cylindre et sur les chapeaux de palier principal.

- **Confirmer que les bons paliers principaux sont utilisés. EM-2046.**
- **Appliquer de l'huile moteur neuve aux surfaces de palier.**

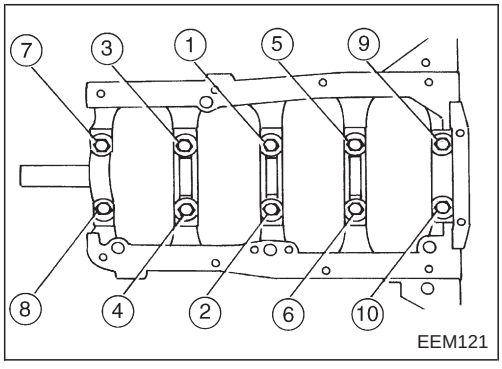

2. Reposer le vilebrequin et les chapeaux de palier principal et serrer les boulons au couple spécifié. Se reporter à EM-2041.

- **Appliquer de l'huile moteur neuve sur les parties filetées des boulons et les surfaces d'appui.**
- **Avant de serrer les boulons de chapeau de palier, placer le chapeau de palier dans sa position correcte en mettant le vilebrequin dans une position axiale.**
- **Serrer les boulons de chapeau de palier petit à petit en deux ou trois étapes. Commencer par le palier central et continuer vers l'extérieur comme indiqué sur l'illustration.**
- **Après avoir fixé les boulons de chapeau de palier, confirmer la rotation du vilebrequin en le faisant tourner légèrement à la main.**

Simpo PDF Merge and Split Unregistered Version - http://www.simpopdf.com

Remontage (suite)

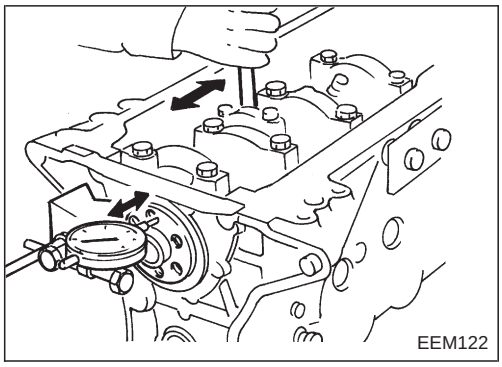
EEM122

3. Mesurer le jeu axial du vilebrequin.
   Jeu axial du vilebrequin :
   Standard
   0,05 - 0,18 mm
   Limite
   0,3 mm

Si la valeur est au-delà de la limite, remplacer le palier n°3 par un neuf.

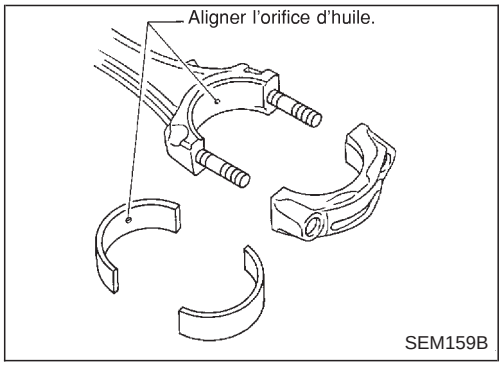

SEM159B

4. Reposer les paliers de bielle dans les bielles et les chapeaux de bielle.

- **Confirmer que les bons paliers sont utilisés. Se reporter à EM-2048.**
- **Reposer les paliers de telle sorte que l'orifice d'huile dans la bielle soit aligné avec l'orifice d'huile du palier.**
- **Appliquer de l'huile moteur neuve aux surfaces de palier, aux parties filetées des boulons et aux surfaces d'assise.**

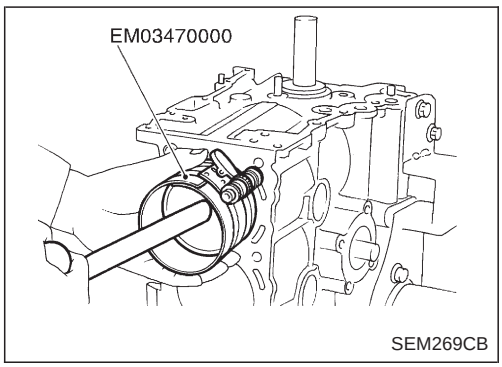

SEM269CB

5. Reposer les pistons avec les bielles.

a. Les reposer dans les cylindres correspondants avec l'outil spécial.

- **Disposer de telle sorte que le repère avant sur la tête de piston soit face à l'avant du moteur.**
- **S'assurer que la bielle n'érafle pas la paroi du cylindre.**
- **S'assurer que les boulons de bielle n'érafle pas les tourillons de vilebrequin.**
- **Appliquer de l'huile moteur neuve aux segments de piston et à la surface de glissement du piston.**

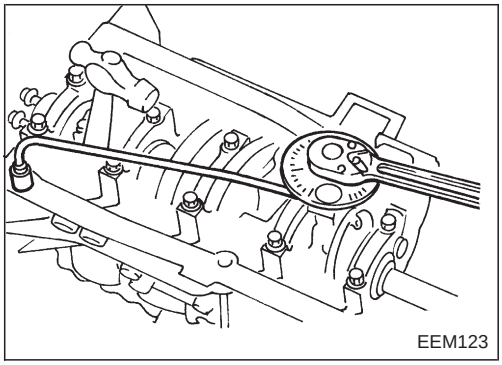
EEM123

b. Reposer les chapeaux de palier de bielle.
Serrer les écrous de chapeau de bielle en suivant la procédure suivante.
   Ecrou de palier de bielle :
   (1) Serrer entre 14 et 16 N·m (1,4 à 1,6 kg-m).
   (2) Serrer les boulons à 60^{+5}_{0} degrés dans le sens des aiguilles d'une montre avec une clé angulaire.
   S'il n'y a pas de clé angulaire disponible, les serrer entre 38 et 44 N·m (3,9 à 4,5 kg-m).

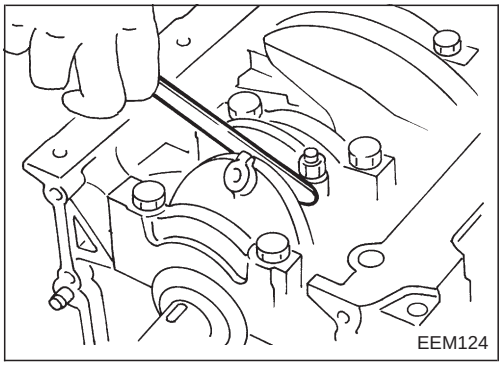
EEM124

6. Mesurer le jeu latéral de la bielle.
   Jeu latéral de la bielle :
   Standard
   0,2 - 0,4 mm
   Limite
   0,6 mm

Si la valeur est supérieure à la limite, remplacer la bielle et/ou le vilebrequin.

Simpo PDF Merge and Split Unregistered Version - http://www.simpopdf.com

Remontage (suite)

REMPLACEMENT DE LA BAGUE PILOTE

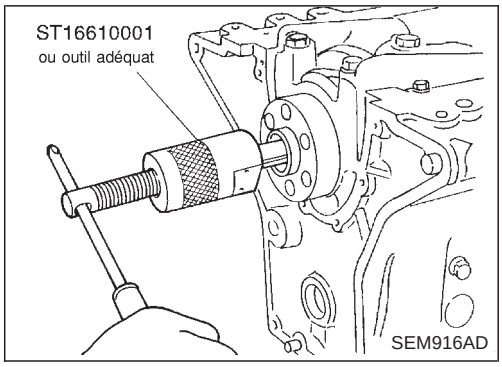

1. Déposer la bague pilote.

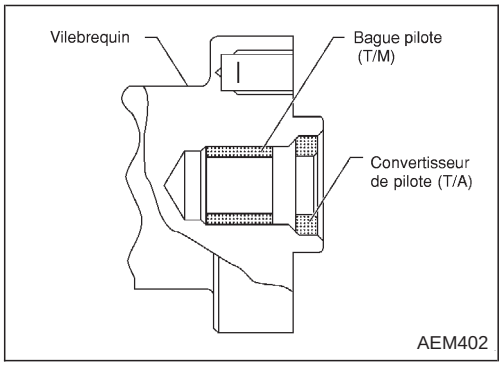

2. Reposer la bague pilote.

Simpo PDF Merge and Split Unregistered Version - http://www.simpopdf.com

Caractéristiques générales

Disposition des cylindres		4 en ligne
Cylindrée	cm^3	2 389
Alésage et course	mm	89 x 96
Disposition des soupapes		DOHC
Ordre d'allumage		1-3-4-2
Nombre de segments de piston		
Compression		2
Huile		1
Nombre de paliers principaux		5
Rapport de compression		9,2

PRESSION DE COMPRESSION

Unité : kPa (bar, kg/cm^2)/300 tr/min

Pression de compression	
Standard	1 226 (12,26, 12,5)
Minimum	1 030 (10,30, 10,5)
Limite de différence entre les cylindres	98 (0,98, 1,0)

Inspection et réglage

CULASSE

Unité : mm

	Standard	Limite
Déformation de la surface de culasse	Moins de 0,03	0,1

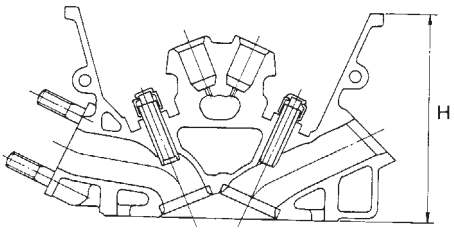

Hauteur nominale de culasse :
H = 126,3 - 126,5

SEM519E

SOUPAPE

Unité : mm

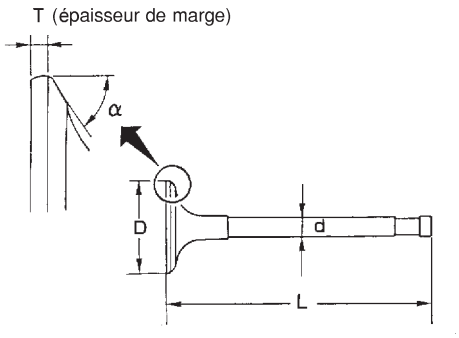

SEM188

Diamètre de la tête de soupape D	
Admission	36,5 - 36,7
Echappement	31,2 - 31,4
Longueur de soupape L	
Admission	101,02 - 102,65
Echappement	98,52 - 99,12
Diamètre de queue de soupape "d"	
Admission	6,965 - 6,980
Echappement	6,945 - 6,960
Angle de siège de soupape "α"	
Admission et échappement	45°15' - 45°45'
Marge de la soupape T	
Admission	1,15 - 1,45
Echappement	1,44 - 1,75
Limite T de marge de la soupape	Supérieure à 0,5
Limite d'affûtage de la surface d'extrémité de la queue de soupape	Inférieure à 0,2

Simpo PDF Merge and Split Unregistered Version - http://www.simpopdf.com

Inspection et réglage (suite)

Ressort de soupape

Hauteur libre	mm	50,37
Pression N (kg) à la hauteur mm		
Standard		418,0 (42,6) à 29,17
Limite		393,0 (40,1) à 29,17
Faux-équerre	mm	Moins de 2,2

Guide de soupape

Unité : mm

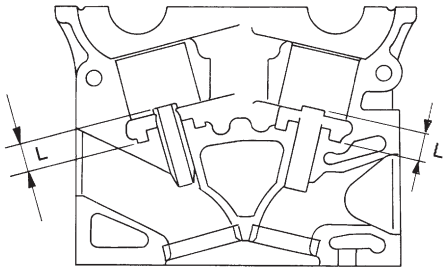

SEM301D

		Standard	Entretien
Guide de soupape Diamètre externe	Admission	11,023 -11,034	11,223 - 11,234
	Echappement	11,023 - 11,034	11,223 -11,234
Guide de soupape Diamètre interne (taille finie)	Admission	7,000 - 7,018	
	Echappement	7,000 - 7,018	
Diamètre de l'orifice de guide de soupape dans la culasse	Admission	10,975 - 10,996	11,175 -11,196
	Echappement	10,975 - 10,996	11,175 - 11,196
Ajustement serré du guide de soupape		0,027 - 0,059	
		Standard	Limite
Jeu entre queue de soupape et guide de soupape	Admission	0,020 - 0,053	0,08
	Echappement	0,040 - 0,073	0,1
Limite de déflexion de la soupape		0,2	
Longueur de saillie L		13,3 - 13,9	

Lève-soupape

Unité : mm

Diamètre externe du lève-soupape	33,960 - 33,975
Diamètre interne du guide de lève-soupape	34,000 - 34,021
Jeu entre le lève-soupape et le guide de filtre	0,025 -0,061

Simpo PDF Merge and Split Unregistered Version - http://www.simpopdf.com

Inspection et réglage (suite)

Réglage du jeu de soupape

Unité : mm

Jeu de la soupape (à chaud)	
Admission	0,31 - 0,39
Echappement	0,33 - 0,41

Cales disponibles

Epaisseur mm	Repère d'identification
1,96	196
1,98	198
2,00	200
2,02	202
2,04	204
2,06	206
2,08	208
2,10	210
2,12	212
2,14	214
2,16	216
2,18	218
2,20	220
2,22	222
2,24	224
2,26	226
2,28	228
2,30	230
2,32	232
2,34	234
2,36	236
2,38	238
2,40	240
2,42	242
2,44	244
2,46	246
2,48	248
2,50	250
2,52	252
2,54	254
2,56	256
2,58	258
2,60	260
2,62	262
2,64	264
2,66	266
2,68	268

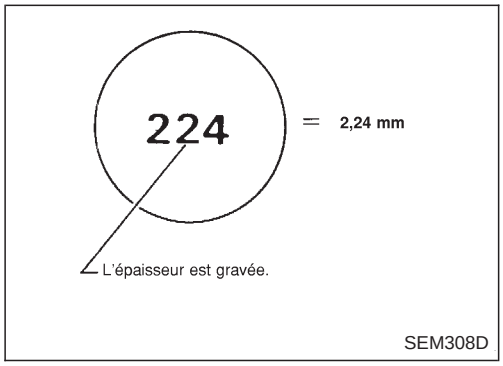

Simpo PDF Merge and Split Unregistered Version - http://www.simpopdf.com

Inspection et réglage (suite)

Siège de soupape

Unité : mm

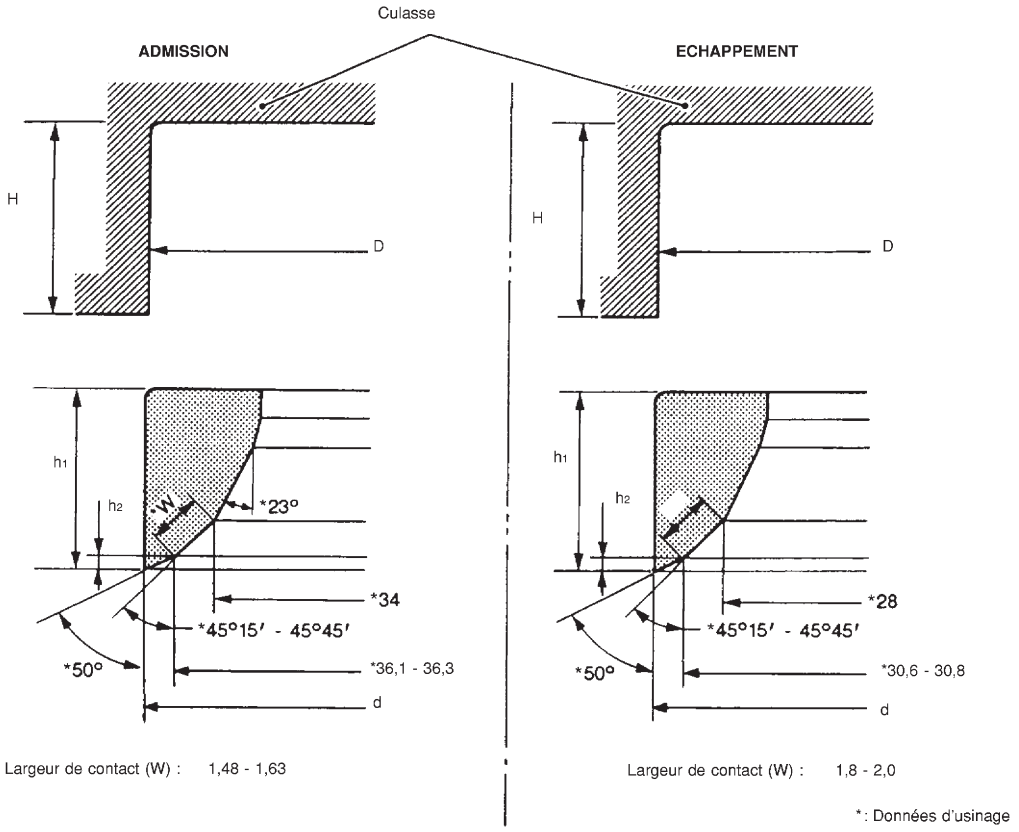

AEM456

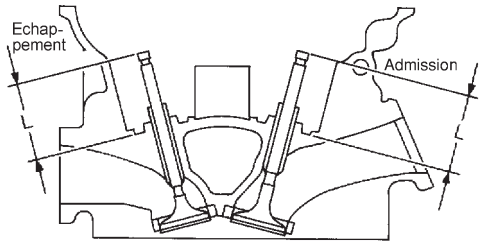

SEM621F

		Standard	Entretien
Diamètre de l'encoche du siège de culasse (D)	Adm.	37,500 - 37,516	38,000 - 38,016
	Echap.	32,200 - 32,216	32,700 - 32,716
Ajustement serré du siège de soupape	Adm.	0,064 - 0,096	
	Echap.	0,064 - 0,096	
Diamètre externe du siège de soupape (d)	Adm.	37,580 - 37,596	38,080 - 38,096
	Echap.	32,280 - 32,296	32,780 - 32,796
Profondeur(H)	Adm.	6,1 - 6,3	
	Echap.	6,1 - 6,3	
Hauteur (h_1)	Adm.	5,8 - 6,0	5,3 - 5,5
	Echap.	5,9 - 6,0	5,32 - 5,42
Hauteur (h_2)	Adm.	0,24 - 0,64	
	Echap.	0,43 - 0,73	
Profondeur (L)	Adm.	42,02 - 42,52	
	Echap.	42,03 - 42,53	

Simpo PDF Merge and Split Unregistered Version - http://www.simpopdf.com

Inspection et réglage (suite)

BLOC-CYLINDRES

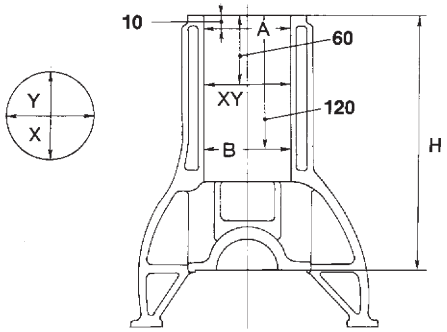

SEM400E

Unité : mm

			Standard	Limite
Déformation			—	0,1
Alésage de cylindre	Diamètre interne	Catégorie 1	89,000- 89,010	0,2*
		Catégorie 2	89,010 -89,020	
		Catégorie 3	89,020 - 89,030	
	Ovalisation (X - Y)		Moins de 0,015	—
	Conicité (A - B)		Moins de 0,010	—
Différence de diamètre interne entre les cylindres			Moins de 0,03	0,2
Jeu du piston au cylindre			0,020 - 0,040	—
Hauteur de bloc-cylindre (à partir du centre de vilebrequin)			246,95 - 247,05	0,2**

* Limite d'usure
** Valeur totale de rectification de culasse

Simpo PDF Merge and Split Unregistered Version - http://www.simpopdf.com

Inspection et réglage (suite)

ARBRE A CAMES ET PALIER DE L'ARBRE A CAMES

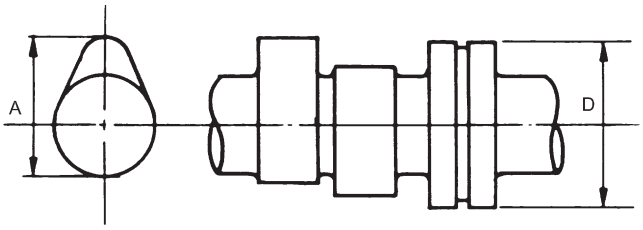

SEM568A

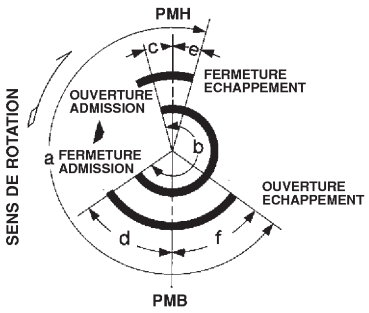

EM120

Unité : mm

		Standard	Limite
Hauteur de cames(A)	Admission	42,505 - 42,695	—
	Echappement	40,905 - 41,095	—
Limite d'usure de hauteur de cames		—	0,2
Jeu entre tourillon d'arbre à cames et palier		0,045 -0,090	0,12
Diamètre interne du palier d'arbre à cames	tourillons # 1 vers # 5	28,000 - 28,025	—
Diamètre externe du tourillon d'arbre à cames (D)	tourillons #1 vers # 5	27,935 - 27,955	—
Voile d'arbre à cames		Inférieur à 0,02	0,04
Jeu axial de l'arbre à cames		0,070 - 0,148	0,2
Distribution des soupapes (degré du vilebrequin)	a	216	—
	b	232	—
	c	-1	—
	d	53	—
	e	4	—
	f	32	—

* Indication totale de la jauge

Simpo PDF Merge and Split Unregistered Version - http://www.simpopdf.com

Inspection et réglage (suite)

PISTON, SEGMENT DE PISTON ET AXE DE PISTON

Piston

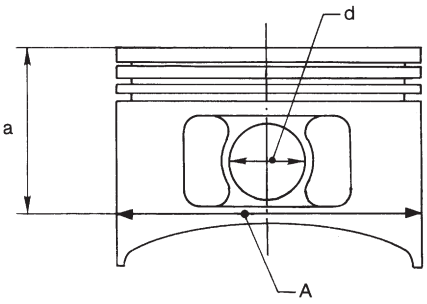

SEM804E

Unité : mm

Diamètre de jupe de piston (A)	Standard	Catégorie n°1	88,970 - 88,980
		Catégorie n°2	88,980 - 88,990
		Catégorie n°3	88,990 - 89,000
	Entretien (surdimension)	0,5	89,470 - 89,500
		1,0	89,970 - 90,000
Dimension (a)			Environ 48
Diamètre de l'orifice de l'axe de piston (d)			20,993 - 20,999
Jeu du piston à l'alésage du cylindre			0,020 - 0,040

Axe de piston

Unité : mm

	Standard	Limite
Diamètre externe de l'axe de piston	20,989 - 21,001	—
Ajustement serré entre l'axe de piston et l'alésage de piston	de -0,002 à 0,01	—
Jeu entre l'axe de piston et e palier de bielle	0,005 - 0,017	0,023

Segment de piston

Unité : mm

		Standard	Limite
Jeu latéral	Segment de feu	0,040 - 0,080	0,1
	Segment de compression	0,030 - 0,070	0,1
Ecartement du segment	Segment de feu	0,28 - 0,52	1,0
	Segment de compression	0,45 - 0,69	1,0
	Huile (segment racleur)	0,20 - 0,69	1,0

BIELLE

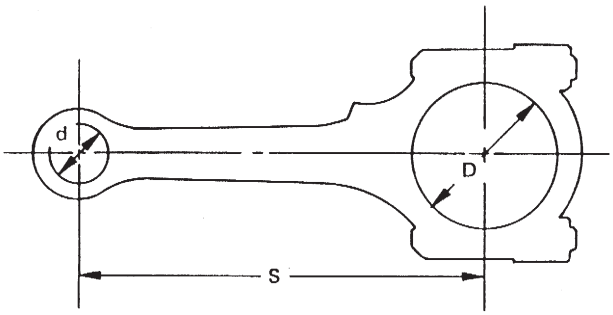

SEM570A

Unité : mm

	Standard	Limite
Distance de centre à centre (S)	164,95 -165,05	—
Courbure [tous les 100 mm]	—	0,15
Torsion [tous les 100 mm]	—	0,30
Diamètre interne du pied de bielle (d)*	23,987 - 24,000	—
Diamètre interne de la bague de l'axe du piston*	21,000 - 21,012	—
Diamètre interne de la tête de bielle (D)*	53,000 - 53,013	—
Jeu latéral	0,2 - 0,4	0,6

* Sans palier

Simpo PDF Merge and Split Unregistered Version - http://www.simpopdf.com

Inspection et réglage (suite)

VILEBREQUIN

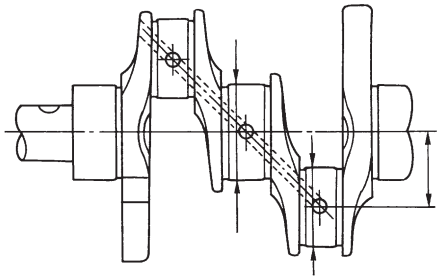

SEM394

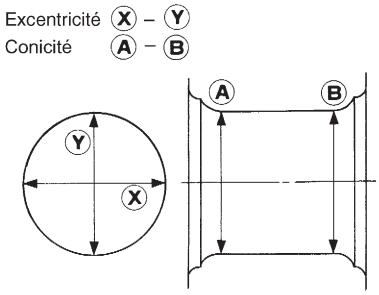

EM715

Unité : mm

Diamètre du tourillon (Dm)	Catégorie	n°0	59,967 - 59,975
		n°1	59,959 - 59,967
		n°2	59,951 - 59,959
Diamètre de maneton (Dp)	Catégorie	n°0	49,968 - 49,974
		n°1	49,962 - 49,968
		n°2	49,956 - 49,962
Distance de centre à centre (r)			47,95 - 48,05

		Standard	Limite
Conicité du tourillon et de l'axe [Ⓐ — Ⓑ]	Tourillon	—	0,01
	Axe	—	0,005
Ovalisation du tourillon et de l'axe [Ⓧ — Ⓨ]	Tourillon	—	0,01
	Axe	—	0,005
Voile [TIR]*		—	0,10
Jeu axial		0,05 - 0,18	0,3
Roulette		Plus de 1,0	

* Indication totale de la jauge

JEU DE PALIER

Unité : mm

	Standard	Limite
Jeu du palier principal	0,020 - 0,047	0,1
Jeu du palier de bielle	0,010 - 0,035	0,09

Simpo PDF Merge and Split Unregistered Version - http://www.simpopdf.com

Inspection et réglage (suite)

PALIER PRINCIPAL DISPONIBLE

Standard

Numéro de catégorie	Epaisseur mm	Couleur d'identification
0	1,821 - 1,825	Noir
1	1,825 - 1,829	Marron
2	1,829 - 1,833	Vert
3	1,833 - 1,837	Jaune
4	1,837 - 1,841	Bleu

Taille inférieure (entretien)

Unité : mm

	Epaisseur	Diamètre de tourillon "Dm"
0,25	1,952 -1,960	Affûter jusqu'à ce que le jeu soit conforme aux valeurs spécifiées.

PALIER DE BIELLE DISPONIBLE

Standard

Numéro de catégorie	Epaisseur mm	Couleur d'identification
	01,505 - 1,508	—
1	1,508 - 1,511	Marron
2	1,511 - 1,514	Vert

Taille inférieure (entretien)

Unité : mm

	Epaisseur	Diamètre de tourillon de maneton "Dp"
0,08	1,540 -1,548	Affûter jusqu'à ce que le jeu soit conforme aux valeurs spécifiées.
0,12	1,560 - 1,568	
0,25	1,625 - 1,633	

COMPOSANTS DIVERS

Unité : mm

Voile de la roue dentée d'arbre à cames [TIR]*	Inférieur à 0,15
Voile du volant [TIR]*	Inférieur à 0,15
Voile du plateau d'entraînement [TIR]*	Inférieur à 0,15

* Indication totale de la jauge

Simpo PDF Merge and Split Unregistered Version - http://www.simpopdf.com

<SUPPLEMENT-II>

ESSIEU ET SUSPENSION AVANT

SECTION FA

AVIS DE MODIFICATION :

- Les couples de serrage ont été modifiés.
- L'alignement des roues a été modifié.

TABLE DES MATIERES

SUSPENSION AVANT 2002
CARACTERISTIQUES ET VALEURS DE REGLAGE (SDS) 2004
Inspection et réglage 2004

Simpo PDF Merge and Split Unregistered Version - http://www.simpopdf.com

2 roues motrices

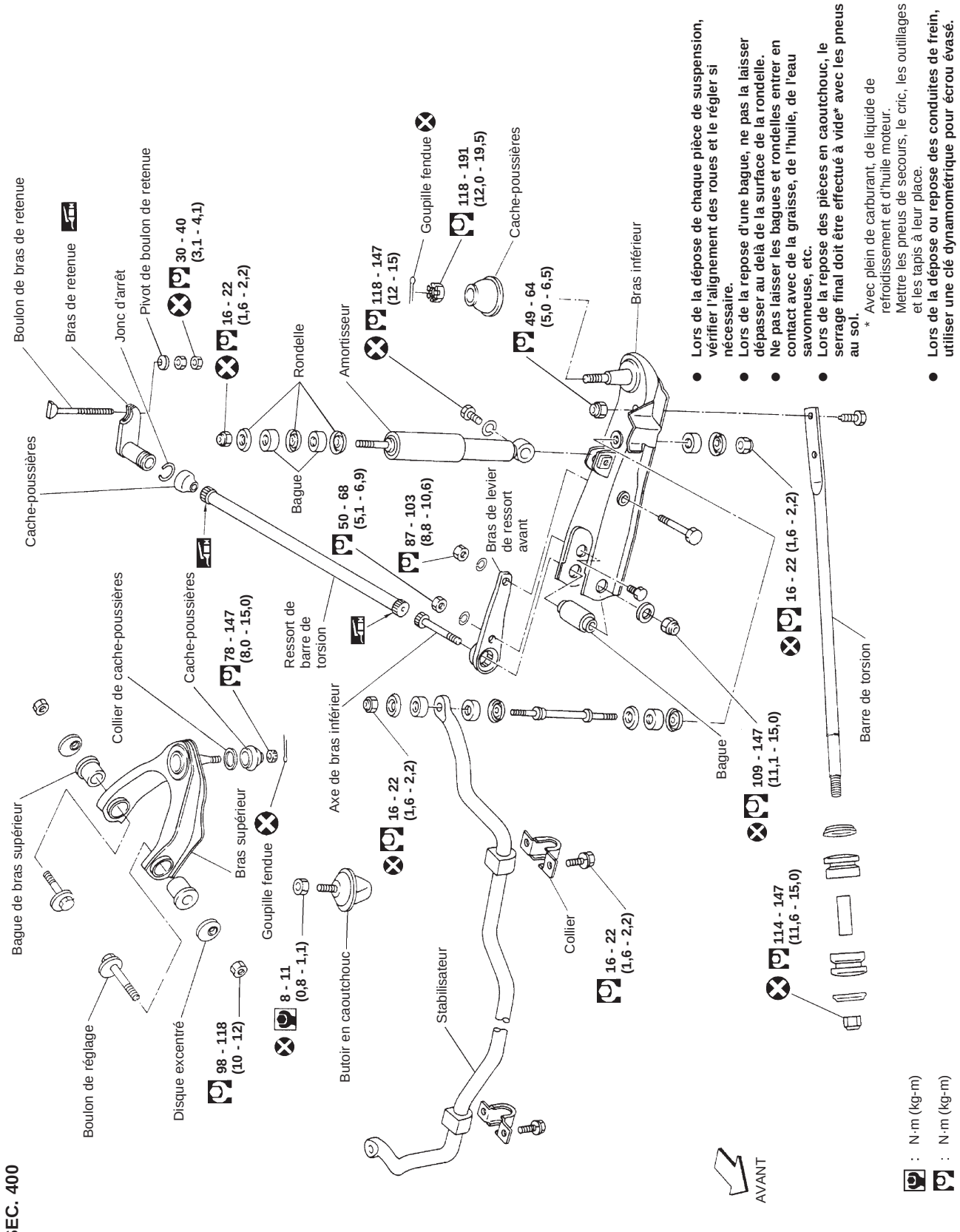

SEC. 400

SFA982B

Simpo PDF Merge and Split Unregistered Version - http://www.simpopdf.com

4 roues motrices

SEC. 401

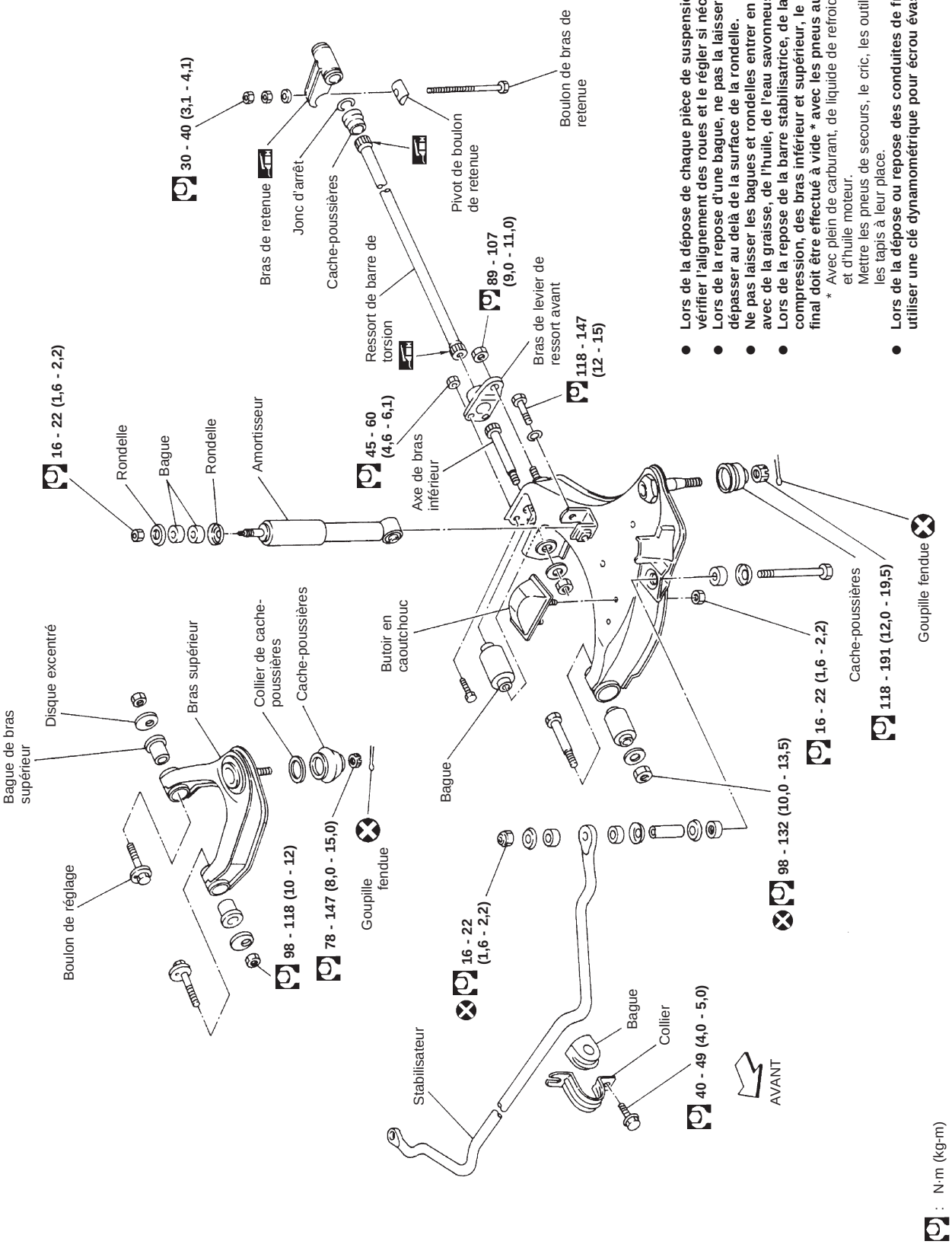

SFA835BB

Simpo PDF Merge and Split Unregistered Version - http://www.simpopdf.com

Inspection et réglage

ALIGNEMENT DES ROUES (A vide*1)

2 roues motrices

Modèle concerné				Europe
Carrossage	Degré minute (Degré décimal)	Minimum		−0°05′ (-0,08°)
		Nominal		0°25′ (0,42°)
		Maximum		0°55′ (0,92°)
		Différence à gauche et à droite		45′ ou moins (0,75°)
Chasse	Degré minute (Degré décimal)	Minimum		−0°08′ (-0,13°)
		Nominal		0°22′ (0,37°)
		Maximum		0°52′ (0,87°)
		Différence à gauche et à droite		45′ ou moins (0,75°)
Inclinaison des pivots de fusée	Degré minute (Degré décimal)	Minimum		8°35′ (8,58°)
		Nominal		9°05′ (9,08°)
		Maximum		9°35′ (9,58°)
Pincement total Distance (A - B) mm		Pneu radial	Minimum	2
			Nominal	3
			Maximum	4
		Pneu diagonal	Minimum	4
			Nominal	5
			Maximum	6
Angle (gauche plus droite)	Degré minute (Degré décimal)	Pneu radial	Minimum	10′ (0,17°)
			Nominal	15′ (0,25°)
			Maximum	20′ (0,33°)
		Pneu diagonal	Minimum	20′ (0,33°)
			Nominal	25′ (0,42°)
			Maximum	30′ (0,50°)
Angle de braquage des roues Braquage total*2	Intérieur Degré minute (Degré décimal)	Minimum		36°00′ (36,00°)
		Nominal		38°00′ (38,00°)
		Maximum		38°00′ (38,00°)
	Extérieur Degré minute (Degré décimal)	Minimum		32°36′ (32,60°)
		Nominal		34°36′ (34,60°)
		Maximum		34°36′ (34,60°)
Hauteur de véhicule Hauteur de pivot de bras inférieur (H) mm				111 - 115

2WD

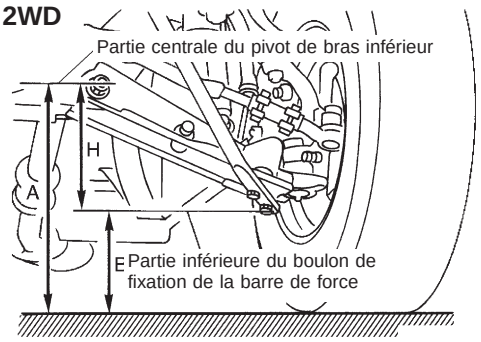

SFA815B

*1 : Avec plein de carburant, de liquide de refroidissement et d'huile moteur, pneu de secours, cric, outillage à main et tapis dans la position spécifiée.

*2 : Pour les modèles avec direction assistée, la force de rotation du volant, (à la circonférence du volant) est de 98 N à 147 N (10à 15 kg) le moteur tournant au ralenti.

Simpo PDF Merge and Split Unregistered Version - http://www.simpopdf.com

Inspection et réglage (suite)

4 roues motrices

Modèle concerné				Europe	
				Pneu 255/70R15	Sauf pneus 255/70R15
Carrossage		Minimum		0°06′ (0,10°)	
		Nominal		0°36′ (0,60°)	
	Degré minute (Degré décimal)	Maximum		1°06′ (1,10°)	
		Différence à gauche et à droite		45′ ou moins (0,75°)	
Chasse		Minimum		1°40′ (1,67°)	
		Nominal		2°10′ (2,17°)	
	Degré minute (Degré décimal)	Maximum		2°40′ (2,67°)	
		Différence à gauche et à droite		45′ ou moins (0,75°)	
Inclinaison des pivots de fusée		Minimum		10°18′ (10,30°)	
	Degré minute (Degré décimal)	Nominal		10°48′ (10,80°)	
		Maximum		11°18′ (11,30°)	
Pincement total		Pneu radial	Minimum	3	
			Nominal	4	
	Distance (A - B) mm		Maximum	5	
		Pneu diagonal	Minimum	4	
			Nominal	5	
			Maximum	6	
	Angle (gauche plus droite) Degré minute (Degré décimal)	Pneu radial	Minimum	15′ (0,25°)	
			Nominal	20′ (0,33°)	
			Maximum	25′ (0,42°)	
		Pneu diagonal	Minimum	20′ (0,33°)	
			Nominal	25′ (0,42°)	
			Maximum	30′ (0,50°)	
Angle de braquage des roues		Minimum		31°00′ (31,00°)	33°06′ (33,10°)
Braquage total*2	Intérieur Degré minute (Degré décimal)	Nominal		33°00′ (33,00°)	35°06′ (35,10°)
		Maximum		33°00′ (33,00°)	35°06′ (35,10°)
	Extérieur Degré minute (Degré décimal)	Minimum		29°00′ (29,00°)	31°12′ (31,20°)
		Nominal		31°00′ (31,00°)	33°12′ (33,20°)
		Maximum		31°00′ (31,00°)	33°12′ (33,20°)
Hauteur de véhicule					
Hauteur de pivot de bras inférieur (H) mm				45,5 - 49,5	

4WD

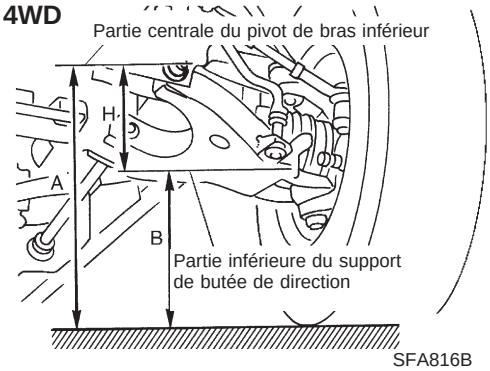

SFA816B

*2 : Pour les modèles avec direction assistée, la force de rotation du volant, (á la circonférence du volant) est de 98 á 147 N (10 à 15 kg), le moteur tournant au ralenti.

Simpo PDF Merge and Split Unregistered Version - http://www.simpopdf.com

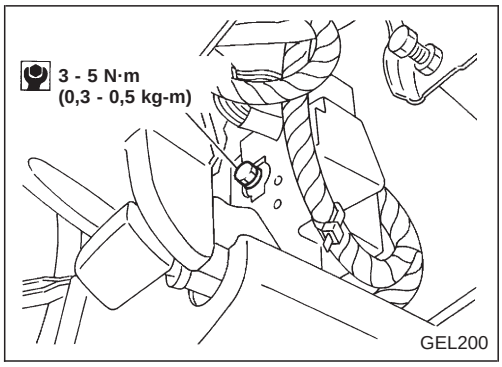

REPOSE

Pour remonter le super raccord multiple, serrer les boulons ‘‘à fond’’ jusqu’à ce que le repère orange apparaisse, puis resserrer au couple spécifié selon les besoins.

: 3 - 5 N·m
(0,3 - 0,5 kg-m)

PRECAUTION :

Ne pas trop serrer les boulons car cela pourrait les endommager.

Simpo PDF Merge and Split Unregistered Version - http://www.simpopdf.com

Disposition des bornes

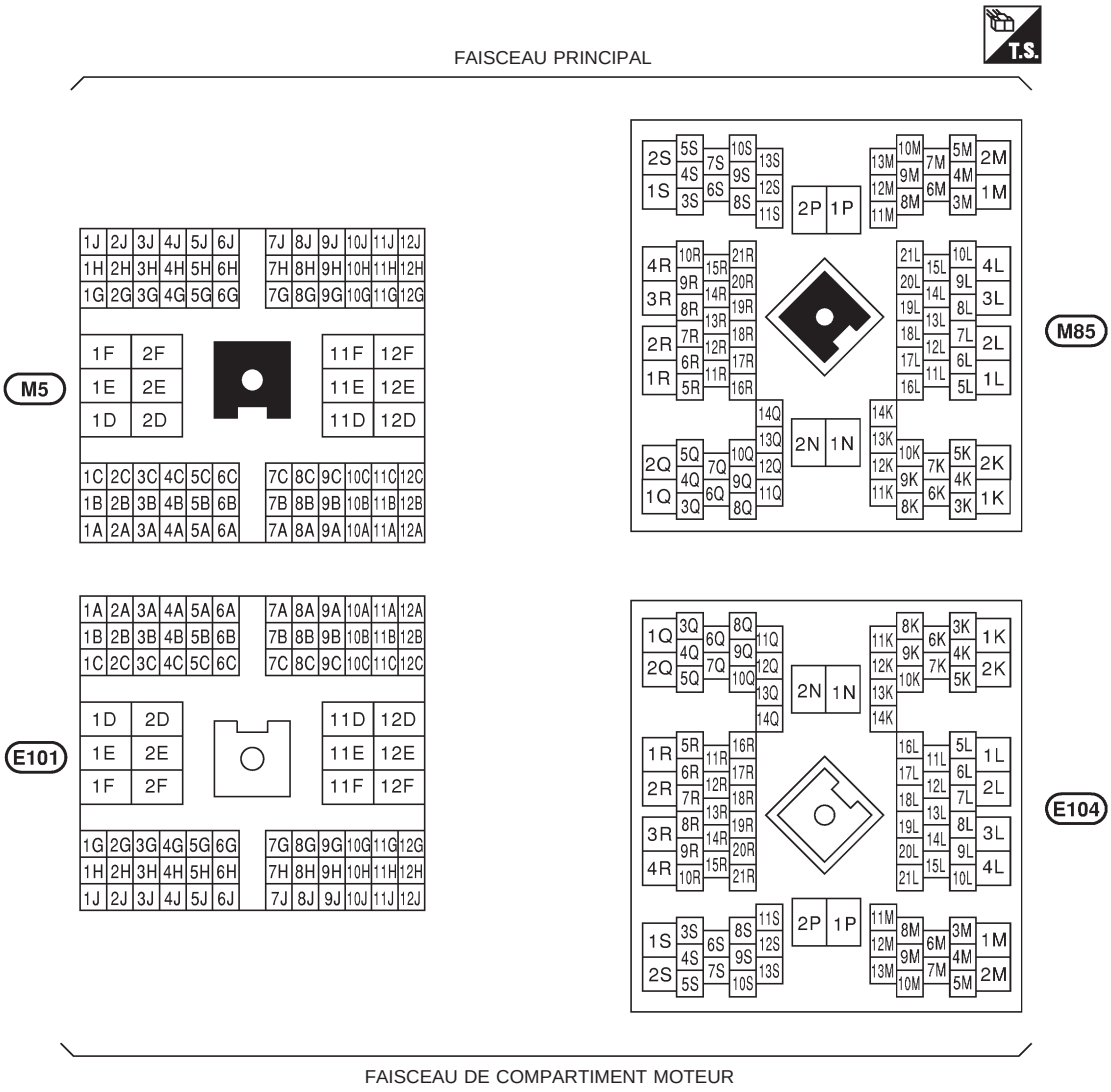

Simpo PDF Merge and Split Unregistered Version - http://www.simpopdf.com

Disposition des bornes

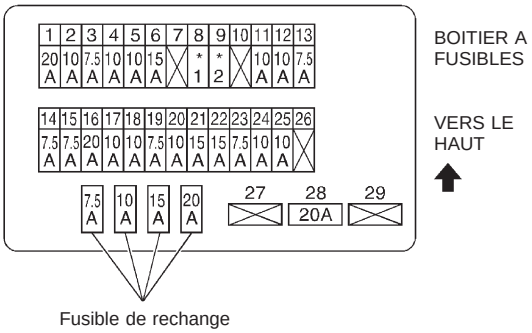

*1 : 10A.... Moteurs KA, TD et QD
15A.... Moteur Z

*2 : 10A.... Moteur Z
15A.... Moteur KA

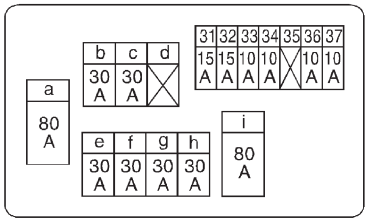

N° 31 - 37 : Fusible a - i : Raccord à fusible

Simpo PDF Merge and Split Unregistered Version - http://www.simpopdf.com

Disposition des bornes

ECM M32 (Moteur KA 24E)

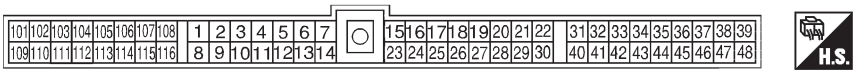

ECM M32 (Conduite à gauche avec moteur KA24DE), F51 (Conduite à droite avec moteur KD24DE)

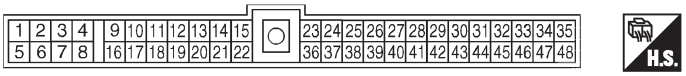

TCM (module de commande de transmission)

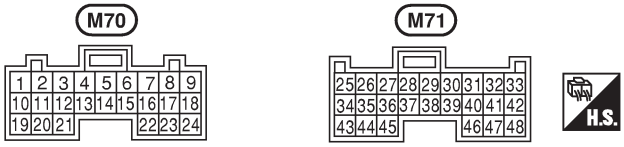

(Blanc) (Gris)

Ensemble d'actionneur ABS E4

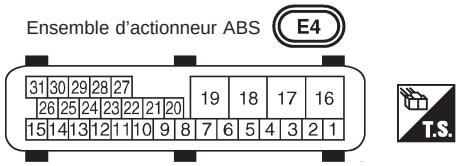

BOITIER DE COMMANDE DE C/A AUTO

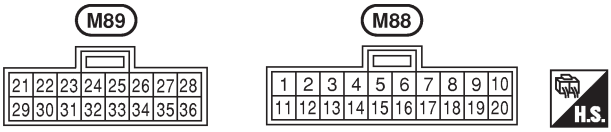

(Gris) (Gris)

CENTRALE DE COMMANDE INTELLIGENTE M62

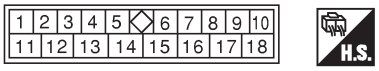

(Blanc)

Connecteur de raccord 1

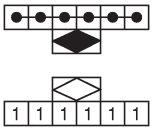

M31 (Conduite à gauche)
F53 (Conduite à droite)

(Gris)

Connecteur de raccord 2

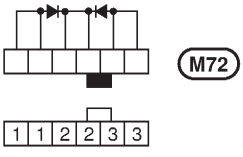

Simple PDF Merge and Split Unregistered Version - http://www.simpopdf.com

NISSAN

PICKUP

SERIE DES MODELES D22

AVANT-PROPOS

Ce supplément contient des informations sur les opérations d'entretien nécessaires, ainsi que les caractéristiques qui se rapportent à la nouvelle version des séries D22.

Toutes les informations, illustrations et caractéristiques contenues dans ce supplément sont basées sur les derniers renseignements disponibles au moment de la publication. Si le véhicule NISSAN ne répond pas aux caractéristiques indiquées dans ce supplément, consulter son concessionnaire NISSAN.

Nous nous réservons tous droits d'effectuer des changements dans les caractéristiques et les méthodes, à tout moment et sans préavis.

TABLE DE REFERENCE RAPIDE

GENERALITES	GI
ENTRETIEN	MA
ELEMENTS DU MOTEUR	EM
CIRCUIT DE LUBRIFICATION DU MOTEUR ET CIRCUIT DE REFROIDISSEMENT	LC
SYSTEME DE GESTION MOTEUR	EC
SYSTEMES DE COMMANDE D'ACCELERATEUR, D'ALIMENTATION ET D'ECHAPPEMENT	FE
EMBRAYAGE	CL
BOITE DE VITESSES MANUELLE	MT
BOITE DE TRANSFERT	TF
ARBRE DE TRANSMISSION ET PORTE-DIFFERENTIEL	PD
ESSIEU ET SUSPENSION AVANT	FA
ESSIEU ET SUSPENSION ARRIERE	RA
SYSTEME DE FREINAGE	BR
DIRECTION	ST
SYSTEME DE RETENUE	RS
CARROSSERIE ET GARNITURE	BT
CHAUFFAGE ET CLIMATISEUR	HA
EQUIPEMENT ELECTRIQUE	EL
TABLE ALPHABETIQUE	IDX

Edition : Juillet 1999
Imprimé : Aôut 1999 (01)
Numéro de Publication : SM9F-D22BE0E

NISSAN EUROPE S.A.S.

© 1999 NISSAN EUROPE S.A.S. Imprimé aux Pays-Bas
Cette publication ne peut être reproduite, que ce soit en tout ou en partie, sans la permission préalable écrite de Nissan Europe S.A.S., Paris, France.

Simpo PDF Merge and Split Unregistered Version - http://www.simpopdf.com

AVANT-PROPOS

Ce manuel contient les travaux d'entretien et de réparation concernant les véhicules NISSAN PICKUP, série des modèles D22.

A des fins de sécurité et pour que le rendement des véhicules concernés soit optimal, prière de lire ce manuel complètement. Avant de commencer à entreprendre des travaux, il est particulièrement important d'avoir parfaitement assimilé les PRECAUTIONS signalées dans la section GI.

Toutes les informations contenues dans ce manuel sont basées sur les données de production les plus récentes au moment de la réalisation du manuel. Nous nous réservons le droit de modifier les caractéristiques et les méthodes de travail à n'importe quel moment et sans avis préalable.

NOTE IMPORTANTE DE SECURITE

Un entretien correctement effectué est essentiel, aussi bien pour la sécurité des mécaniciens que pour le fonctionnement adéquat du moteur. Les méthodes d'entretien reprises dans ce manuel de réparation sont décrites de telle manière que le travail puisse être effectué en sécurité et avec précision. Les entretiens varient selon les procédures, les connaissances du technicien et l'outillage, ainsi que les pièces disponibles. Dès lors, toute personne utilisant les procédures d'entretien, un outillage ou des pièces qui ne sont pas spécifiquement recommandées par NISSAN doit auparavant être absolument certain que ceci n'entraîne de danger ni pour sa propre sécurité, ni pour celle du moteur.

NISSAN EUROPE S.A.S.

Service Engineering Section

Paris, France

Simpo PDF Merge and Split Unregistered Version - http://www.simpopdf.com

<SUPPLEMENT-II>

SECTION GI

AVIS DE MODIFICATION :

Circuit électrique

TABLE DES MATIERES

PRECAUTIONS 2002
''COUSSIN GONFLABLE'' et ''PRETENSIONNEUR DE CEINTURE DE SECURITE'' du système de retenue supplémentaire (SRS) 2002
COMMENT LIRE LES SCHEMAS DE CABLAGE 2003
Codes de schéma de câblage (codes de cellule) 2003
IDENTIFICATIONS 2004
Variantes de modèles 2004
Numéro d'identification 2006
Dimensions 2007
Roues et pneus 2007

Simpo PDF Merge and Split Unregistered Version - http://www.simpopdf.com

Pour que l'entretien puisse être exécuté en toute sécurité et de manière correcte, il importe que les précautions suivantes soient rigoureusement prises. Ces précautions ne sont pas indiquées dans chaque section.


SGI646

''COUSSIN GONFLABLE'' et ''PRETENSIONNEUR DE CEINTURE DE SECURITE'' du système de retenue supplémentaire (SRS)

Utilisé conjointement avec une ceinture de sécurité, les systèmes de retenue supplémentaire tels que le ''COUSSIN GONFLABLE'' et le ''PRETENSIONNEUR DE CEINTURE DE SECURITE'' permettent de réduire les risques de blessures graves subies par le conducteur et le passager avant lors de collision frontale. La composition du système de retenue supplémentaire disponible sur le MODELE D22 NISSAN est la suivante (la composition variera en fonction de la destination et de l'équipement optionnel) :

Le système de retenue supplémentaire se compose d'un module de coussin gonflable côté conducteur (situé dans le moyeu du volant), d'un module de coussin gonflable côté passager (situé sur le tableau de bord, côté passager), de prétensionneurs de ceinture de sécurité, d'un boîtier de capteurs de diagnostic, d'un témoin d'avertissement, d'un faisceau de câblage et d'un câble spiralé.

Les informations nécessaires à l'entretien sans danger du système se trouvent à la **section RS** de ce Manuel de Réparation.

ATTENTION :

- **Pour ne pas affecter le fonctionnement du SRS, ce qui augmenterait les risques de blessures graves ou mortelles en cas de collision entraînant le déploiement du coussin gonflable (air bag), toutes les opérations d'entretien doivent être effectuées par un concessionnaire NISSAN agréé.**
- **Un entretien incorrect, y compris une mauvaise dépose ou repose du SRS, peut entraîner des risques de blessures dus au déploiement accidentel du système. Pour la dépose du câble spiralé et du module de coussin gonflable, se reporter à la section RS.**
- **Ne pas utiliser d'équipement d'essai électrique sur les circuits connexes du SRS sauf sur indication de ce manuel de réparation. Le câble spiralé et les faisceaux de câblage (à l'exception du ''PRETENSIONNEUR DE CEINTURE DE SECURITE'') recouverts d'une gaine d'isolation jaune placée juste avant les connecteurs de faisceau ou couvrant l'ensemble du faisceau sont reliés au SRS.**

Simpo PDF Merge and Split Unregistered Version - http://www.simopdf.com

Codes de schéma de câblage (codes de cellule)

Utiliser l'organigramme ci-dessous pour trouver chaque signification de code de schéma de câblage.
Consulter le code du schéma de câblage dans l'index alphabétique pour trouver l'emplacement (numéro de page) de chaque schéma de câblage.

Code	Section	Nom du schéma de câblage
AAC/V	EC	Soupape IACV-AAC
ABS	BR	Système anti-enrayeur des freins
A/C	HA	Climatiseur
AUDIO	EL	Système Audio
BACK/L	EL	Feux de recul
BUZZER	EL	Témoin sonore
CHARGE	EL	Système de charge
STAR-TER	EC	Starter automatique
CMPS	EC	Capteur d'angle d'arbre à cames
COOL/F	LC	Commande du ventilateur de refroidissement
DEF	EL	Désembuage de lunette arrière
D/LOCK	EL	Verrouillage électrique de porte
ECTS	EC	Capteur de température du moteur
PGC/V	EC	Electrovanne de commande de purge de cartouche
FCUT	EC	Electrovanne de coupure de carburant
FICD	EC	Electrovanne FICD
FIPOT	EC	Pot ISC-FI
FPCM	EC	Module de commande de la pompe à carburant
F/PUMP	EC	Pompe d'alimentation
F/RTN	EC	Electrovanne de commande de retour de carburant
GLOW	EC	Système de préchauffage rapide
H/LAMP	EL	Phares
HEAT	HA	Chauffage
HO2S	EC	Sonde à oxygène chauffée
HORN	EL	Avertisseur sonore, allume-cigare, montre
IATS	EC	Capteur de température d'air d'admission
IDLE	EC	Commande IACV-montée en ralenti
IGN	EC	Système d'allumage
IGN/SG	EC	Signal d'allumage

Code	Section	Nom du schéma de câblage
ILL	EL	Eclairage
INJECT	EC	Injecteur
INT/L	EL	Eclairages intérieur et auxiliaire
MAFS	EC	Débitmètre d'air
MAIN	EC	Circuit d'alimentation électrique principal et de mise à la masse
METER	EL	Compteur de vitesse, compte-tours et capteur de température et jauge de carburant
MIL/DL	EC	Témoin de défaut (MIL) et connecteur de diagnostic pour CONSULT
MIRROR	EL	Rétroviseur de porte électrique
P/ANT	EL	Antenne électrique
PLA	EC	Commande d'avance à charge partielle
PNP/SW	EC	Contact de position de stationnement/point mort
POWER	EL	Disposition de l'alimentation électrique
PST/SW	EC	Manocontact d'huile de direction assistée
SRS	RS	Système de retenue supplémentaire
S/SIG	EC	Signal de démarrage
START	EL	Système de démarrage
STOP/L	EL	Feu de stop
SWL/V	EC	Electrovanne de commande de vanne de tourbillon
TAIL/L	EL	Feux de stationnement, éclairage de plaque minéralogique et feux arrière
TPS	EC	Capteur de position de papillon
TURN	EL	Clignotant et feux de détresse
VSS	EC	Capteur de vitesse du véhicule
WARN	EL	Témoins d'avertissement
WINDOW	EL	Lève-glace électrique
WIPER	EL	Essuie-glace et lave-glace avant

Simpo PDF Merge and Split Unregistered Version - http://www.simpopdf.com

PICKUP (2 roues motrices)

Destination	Catégorie			Modèle		Moteur	Boîte de vitesses	Porte-différentiel
	Empattement	Cabine	Classe	Conduite à gauche	Conduite à droite			
Europe	Long	Cabine simple	STD	AVNGLCF-NQL	AVNGRCF-NQL	TD25	FS5W71C	C200
			DX	AVNGLDF-NQL	AVNGRDF-NQL			
		Grande cabine		BVNGLDF-NQN	BVNGRDF-NQN			
				BBFGLDF-EQN	—	KA24E		
		Cabine double		CVNGLDF-NQN	—	TD25		

PICKUP (4 roues motrices)

Destination	Catégorie			Modèle		Moteur	Boîte de vitesses	Porte-différentiel		Boîte de transfert
	Empattement	Cabine	Classe	Conduite à gauche	Conduite à droite			Avant	Arrière	
Europe	Long	Cabine simple	STD	AVNULCF-UQL	AVNURCF-UQL	TD25Ti	FS5R30A	R180A	H233B	TX10A
			DX	AVNULDF-UQL	AVNURDF-UQL					
		Grande cabine	ST	BVNULEF-UQL	—					
			DX	BVNULDF-UQL	BVNURDF-UQN					
				BBFULDF-EQN	—	KA24E	FS5W71C		C200	
		Cabine double	ST	CVNULEF-UQN	—	TD25Ti	FS5R30A		H233B	
			DX	CVNULDF-UQN	CVNURDF-UQN					
				CBFULDF-EQN	—	KA24E	FS5W71C		C200	

Simpo PDF Merge and Split Unregistered Version - http://www.simpopdf.com

Variantes de modèles (suite)

Significations des préfixes et des suffixes (Pickup)

A BE A L C F D22 S W L

L : Carrosserie arrière normale
N : Carrosserie arrière régulière

W : Sauf pour le Moyen-Orient et l'Australie
Q : Europe

S : Moteur à carburateur
E : Moteur à injection de carburant multipoint
N : Moteur diesel

F : Boîte de vitesse manuelle à 5 vitesses avec commande au plancher
B : Transmission automatique à 4 vitesses avec levier à colonne
A : Transmission automatique à 4 vitesses avec levier au plancher

C : Modèle STD D : Modèle DX E : Modèles ST, GL F : Modèles SGL, AX

L : Conduite à gauche R : Conduite à droite

A : Empattement standard (2 roues motrices) G : Empattement long (2 roues motrices)
U : Empattement long (4 roues motrices)

BF : Moteur KA24E
VN : Moteur TD25, TD25Ti

A : Cabine simple C : Cabine double B : Grande cabine

Simpo PDF Merge and Split Unregistered Version - http://www.simpopdf.com

Numéro d’identification

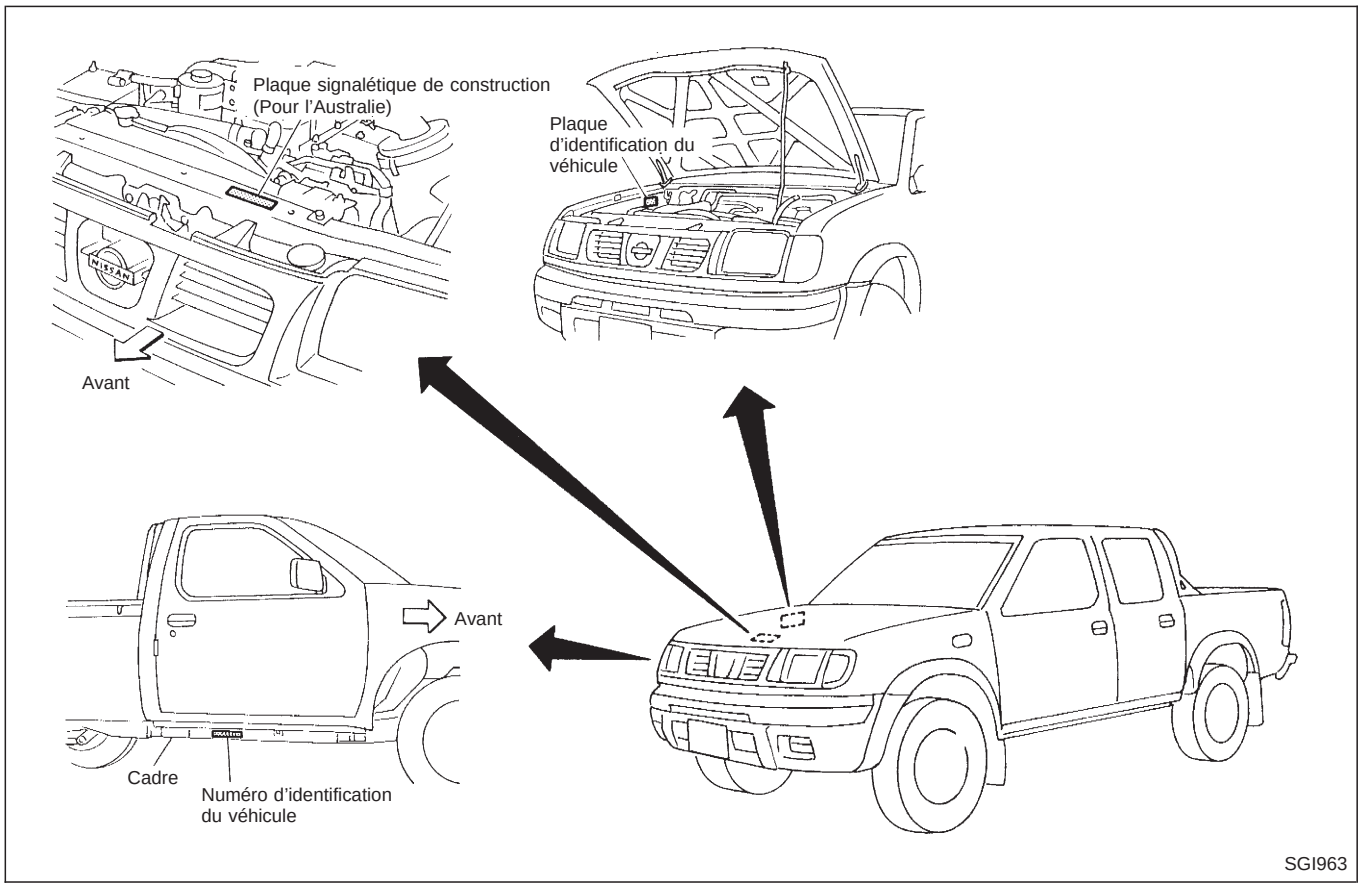

NUMERO D’IDENTIFICATION DU VEHICULE (numéro de châssis)

Significations des préfixes et des suffixes

Pour l’Europe

JN1 B C U D22 U O XXXXXX

- XXXXXX : Numéro de série du véhicule
- O : Bouche-trou (pas de signification)
- U : Pour l’Europe
- D22 : Modèle
- U : Empattement long (4 roues motrices)
- G : Empattement long (2 roues motrices)
- C : Moteur KA24E
- G : Moteur TD25, TD25Ti
- B : Grande cabine
- C : Cabine double
- A : Cabine simple
- JN1 : Véhicule produit au Japon

Simpo PDF Merge and Split Unregistered Version - http://www.simpopdf.com

Dimensions

Destination			Europe					
Type de véhicule			Modèle à 2 roues motrices			Modèle à 4 roues motrices		
Empattement			Long			Long		
Type à cabine complète ou plateau			Cabine simple	Grande cabine	Cabine double	Cabine simple	Grande cabine	Cabine double
Longueur hors tout*		mm	4,975	4 975	4 885	4 975	4 975	4 885
Largeur hors tout		mm	1 690	1 690	1 690	1 820	1 820	1 820
Hauteur hors tout		mm	1 600 1 610*2	1 600 1 610*2	1 620 1 630*2	1 700	1 700 1 690*2	1 720 1 710*2
Empattement		mm	2 950	2 950	2 950	2 950	2 950	2 950
Voie	Avant	mm	1 395	1 395	1 395	1 525	1 525	1 525
	Arrière	mm	1 390	1 390	1 390	1 505	1 505	1 505
Garde au sol minimum		mm	190 200*2	190	190 200*2	215	215 230*3 210*2	215 230*3 210

*1 : Sur les modelès équipés de pare-chocs en forme de marche, le pare-chocs ajoute une longueur de 155 mm à la longueur hors tout donnée ci-dessus.
*2 : Avec pneu en option
*3 : Avec moteur KA24E

Roues et pneus

PICKUP (2 roues motrices)

Pneu	Roue	Modèle		
		Europe		
		Cabine simple	Grande cabine	Cabine double
6,00/6,50-14-6/8PR*1	5J-14	—	—	—
6,50-14-8/8PR	5J-14	—	—	—
185R14-8PR	5J-14	X	X	X
195R14-8PR	5J-14	X*2	X*2	X*2
195R15-8PR	6JJ-15	—	—	—

X : S'applique
— : Ne s'applique pas
*1 : 6,00-14-6 pour l'avant/6,50-14-8 pour l'arrière
6 plis pour l'avant/8 plis pour l'arrière
*2 : Option

PICKUP (4 roues motrices)

Pneu	Roue	Modèle
		Europe
6,50-15-6/8PR*1	5J-1/2K-15	—
215R15-8PR	5J-1/2K-15	—
205R16-8PR	6J-16	X
255/70R15	7JJ-15	X*2

X : S'applique
— : Ne s'applique pas
*1 : 6 plis pour l'avant/8 plis pour l'arrière
*2 : Option

Simpo PDF Merge and Split Unregistered Version - http://www.simpopdf.com

<SUPPLEMENT-II>

CHAUFFAGE ET CLIMATISATION

SECTION HA

AVIS DE MODIFICATION :

- Les schémas de câblage de la climatisation manuelle ont été modifiés.
- Un climatiseur automatique a été ajouté pour les modèles européens avec conduite à droite.
- Le climatiseur automatique pour les modèles européens avec conduite à gauche a été modifié.

TABLE DES MATIERES

MANUEL ET AUTO

PRECAUTIONS ET PREPARATION 2003
- ‘‘COUSSIN GONFLABLE’’ (AIR BAG) et ‘‘PRETENSIONNEUR DE CEINTURE DE SECURITE’’ du Système de retenue supplémentaire (SRS) 2003

MANUEL

DIAGNOSTICS DES DEFAUTS 2004
- Schéma de câblage - HEATER - 2004
- Schéma de circuit - Climatiseur 2005
- Schéma de câblage - A/C, M -/Sauf pour les moteurs KA 2006
- Schéma de câblage - A/C, M -/Moteur KA avec conduite à gauche 2009
- Schéma de câblage - A/C, M -/Moteur KA avec conduite à droite 2012
- Embrayage magnétique 2015

AUTO

DESCRIPTION 2024
- Introduction 2024
- Caractéristiques 2024
- Aperçu général du système de commande 2025
- Fonctionnement des commandes 2025

DIAGNOSTICS DES DEFAUTS 2027
- Emplacement des composants 2027
- Schéma du circuit 2028
- Schéma de câblage - A/C, A - 2029
- Bornes de l’amplificateur automatique et valeurs de référence 2033
- Autodiagnostic 2035
- Comment effectuer les diagnostics des défauts permettant une réparation rapide et efficace 2041
- Vérification du fonctionnement 2042
- Système C/A 2046
- Moteur de volet de mode 2048
- Moteur de volet de mélange d’air 2053
- Moteur de volet d’admission 2059
- Moteur de soufflerie 2063
- Embrayage magnétique 2069
- REFROIDISSEMENT INSUFFISANT 2076
- Chauffage insuffisant 2077
- Bruit 2078
- Autodiagnostic 2079
- Fonction de mémoire 2080
- Capteur de température ambiante 2081
- Capteur d’habitacle 2083
- Moteur d’aspiration 2085
- Capteur d’ensoleillement 2085
- Capteur d’admission d’air 2088

Simpo PDF Merge and Split Unregistered Version - http://www.simpopdf.com

Lecture des schémas de câblage :
Lire la section GI : '' COMMENT LIRE LES SCHEMAS DE CABLAGE''
Voir la section EL, ''DISPOSITION DE L'ALIMENTATION ELECTRIQUE'' pour connaître les circuits de distribution de l'alimentation électrique.
Se reporter aux chapitres '' COMMENT LIRE LES ORGANIGRAMMES DANS LES DIAGNOSTICS DES DEFAUTS' ET ''COMMENT EFFECTUER UN DIAGNOSTIC EFFICACE EN CAS D'INCIDENT ELECTRIQUE' à la section GI pour effectuer le diagnostic des défauts.

Simpo PDF Merge and Split Unregistered Version - http://www.simpopdf.com

‘‘COUSSIN GONFLABLE’’ (AIR BAG) et ‘‘PRETENSIONNEUR DE CEINTURE DE SECURITE’’ du Système de retenue supplémentaire (SRS)

Utilisé conjointement avec une ceinture de sécurité, les systèmes de retenue supplémentaire tels que le ‘‘COUSSIN GONFLABLE’’ et le ‘‘PRETENSIONNEUR DE CEINTURE DE SECURITE’’ permettent de réduire les risques de blessures graves subies par le conducteur et le passager avant lors de collisions frontales. La composition du système SRS disponible pour le MODELE NISSAN D22 est la suivante (la composition varie selon les pays et l’équipement optionnel) :
Un module de coussin gonflable côté conducteur (situé dans le moyeu du volant), un module de coussin gonflable côté passager avant (situé sur le tableau de bord, côté passager), un prétensionneur de ceintures de sécurité, un boîtier de capteurs de diagnostic, un témoin d’avertissement, un faisceau de câblage et un câble spiralé.
Les informations nécessaires pour entretenir le système en toute sécurité sont fournies dans la **section RS** de ce manuel de réparation.

ATTENTION :

- **Pour ne pas affecter le fonctionnement du SRS, ce qui augmenterait les risques de blessures graves ou mortelles en cas de collision entraînant le déploiement du coussin gonflable, toutes les opérations d’entretien doivent être effectuées par un concessionnaire NISSAN agréé.**
- **Un entretien incorrect, y compris une dépose et une repose incorrectes du système de retenue supplémentaire (SRS), peut être à l’origine de blessures provoquées par une activation involontaire du système. Pour la dépose du câble spiralé et du module de coussin gonflable, se reporter à la section RS.**
- **Ne pas utiliser d’équipement d’essai électrique sur les circuits connexes du SRS sauf si indiqué dans le Manuel de Réparation. Le câble spiralé et les faisceaux de câblage (à l’exception du ‘‘PRETENSIONNEUR DE CEINTURE DE SECURITE’’) recouverts d’une gaine d’isolation jaune placée juste avant les connecteurs de faisceau ou couvrant l’ensemble du faisceau sont reliés au SRS.**

Simpo PDF Merge and Split Unregistered Version - http://www.simpopdf.com

Schéma de câblage — HEATER —

SAUF POUR L'AUSTRALIE

HA-HEATER-01

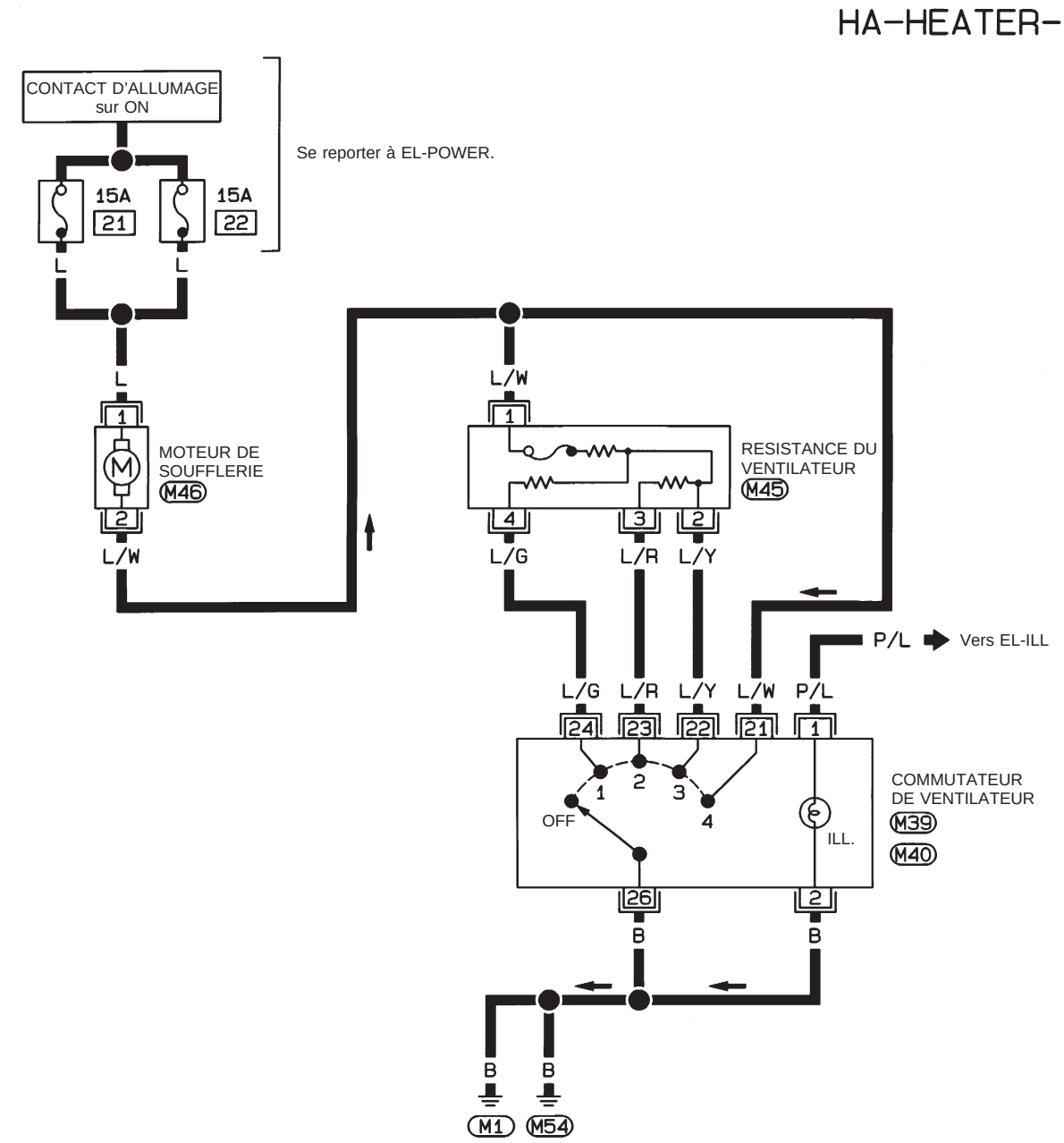



HHA176

Simpo PDF Merge and Split Unregistered Version - http://www.simpopdf.com

Schéma de circuit — Climatiseur

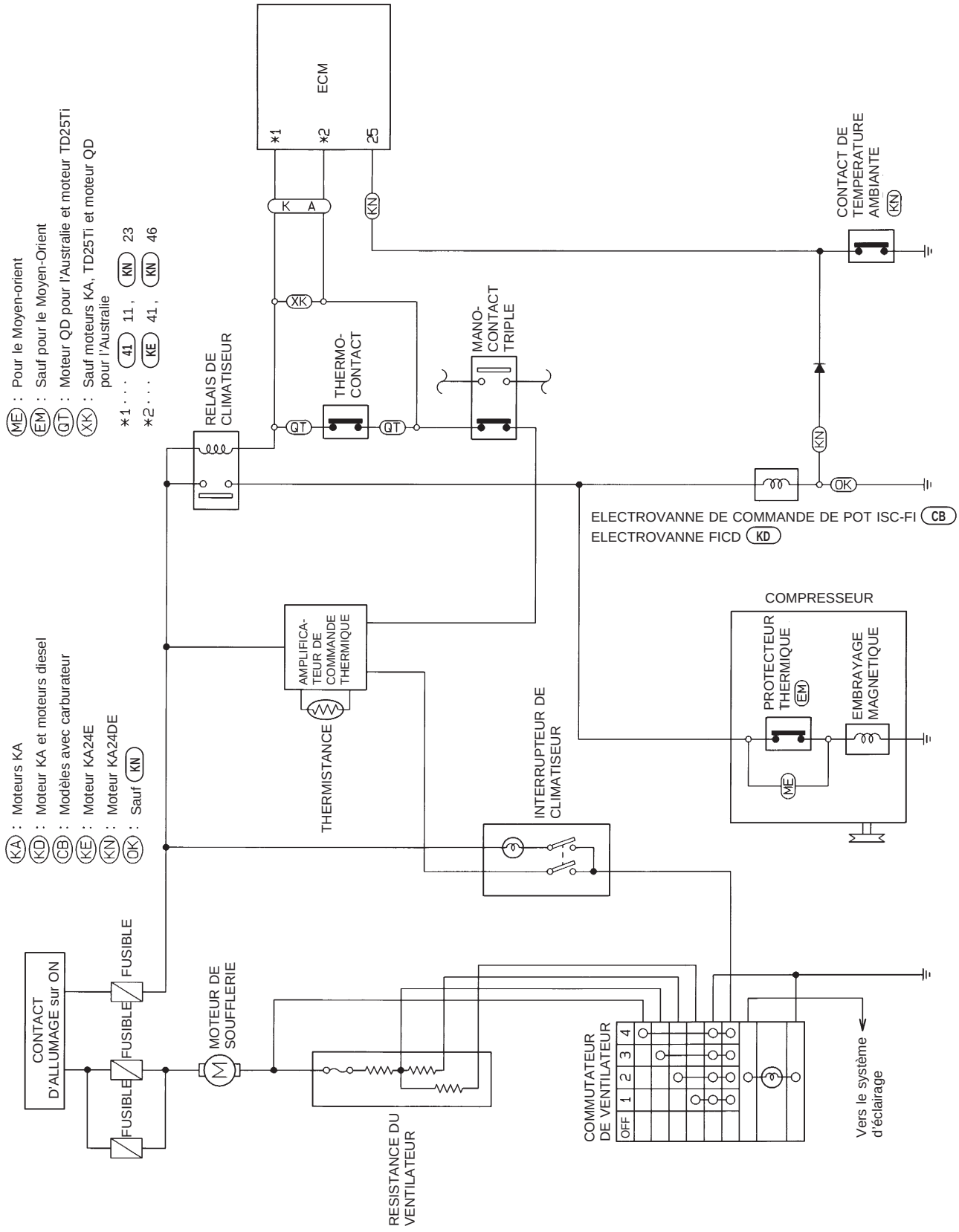

HHA177

Simpo PDF Merge and Split Unregistered Version - http://www.simpopdf.com

Schéma de câblage — A/C, M —/Sauf pour les moteurs KA

HA-A/C, M-01

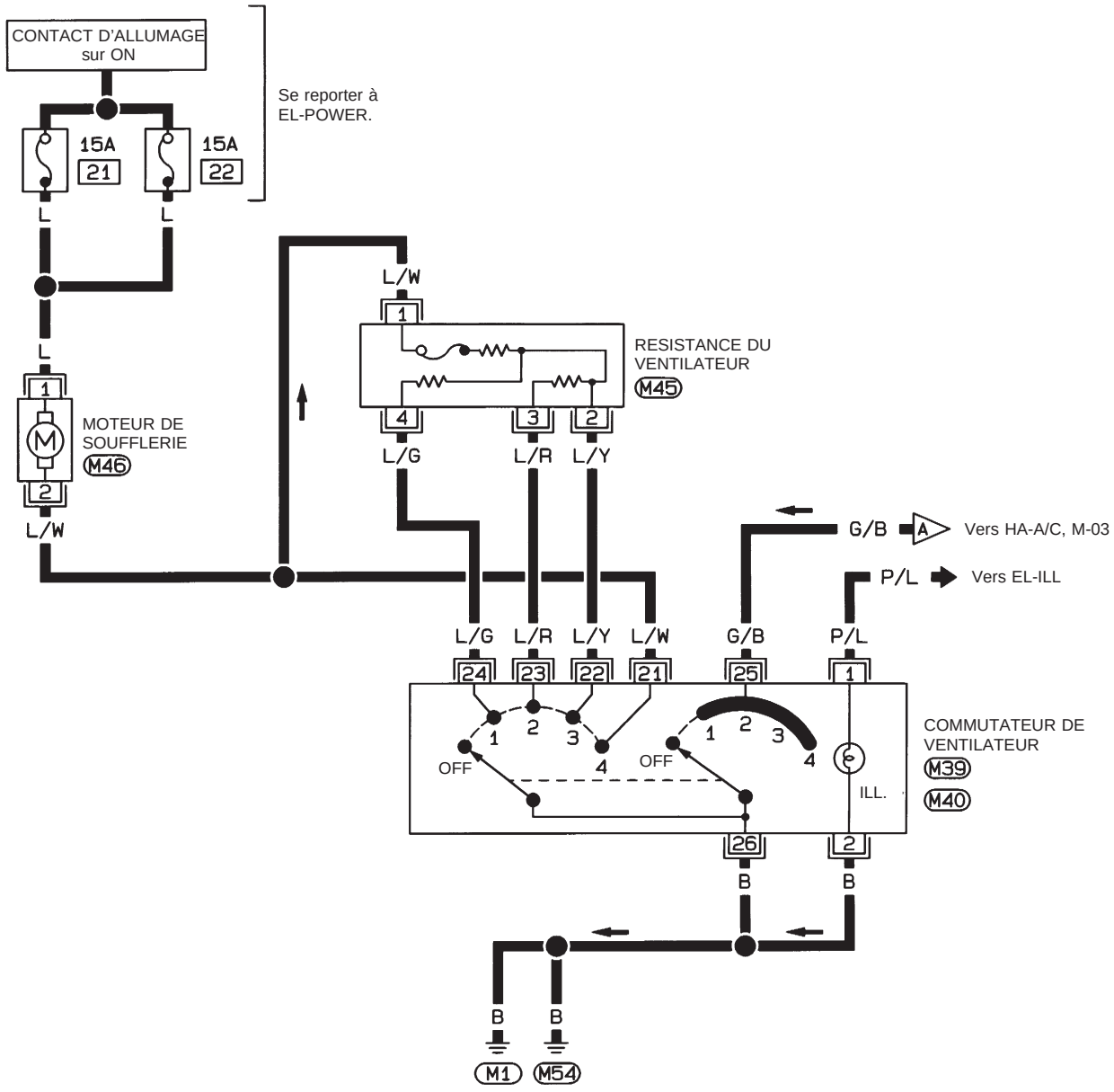



HHA178

Simpo PDF Merge and Split Unregistered Version - http://www.simpopdf.com

Schéma de câblage — A/C, M —/Sauf pour les moteurs KA (suite)

HA-A/C, M-02

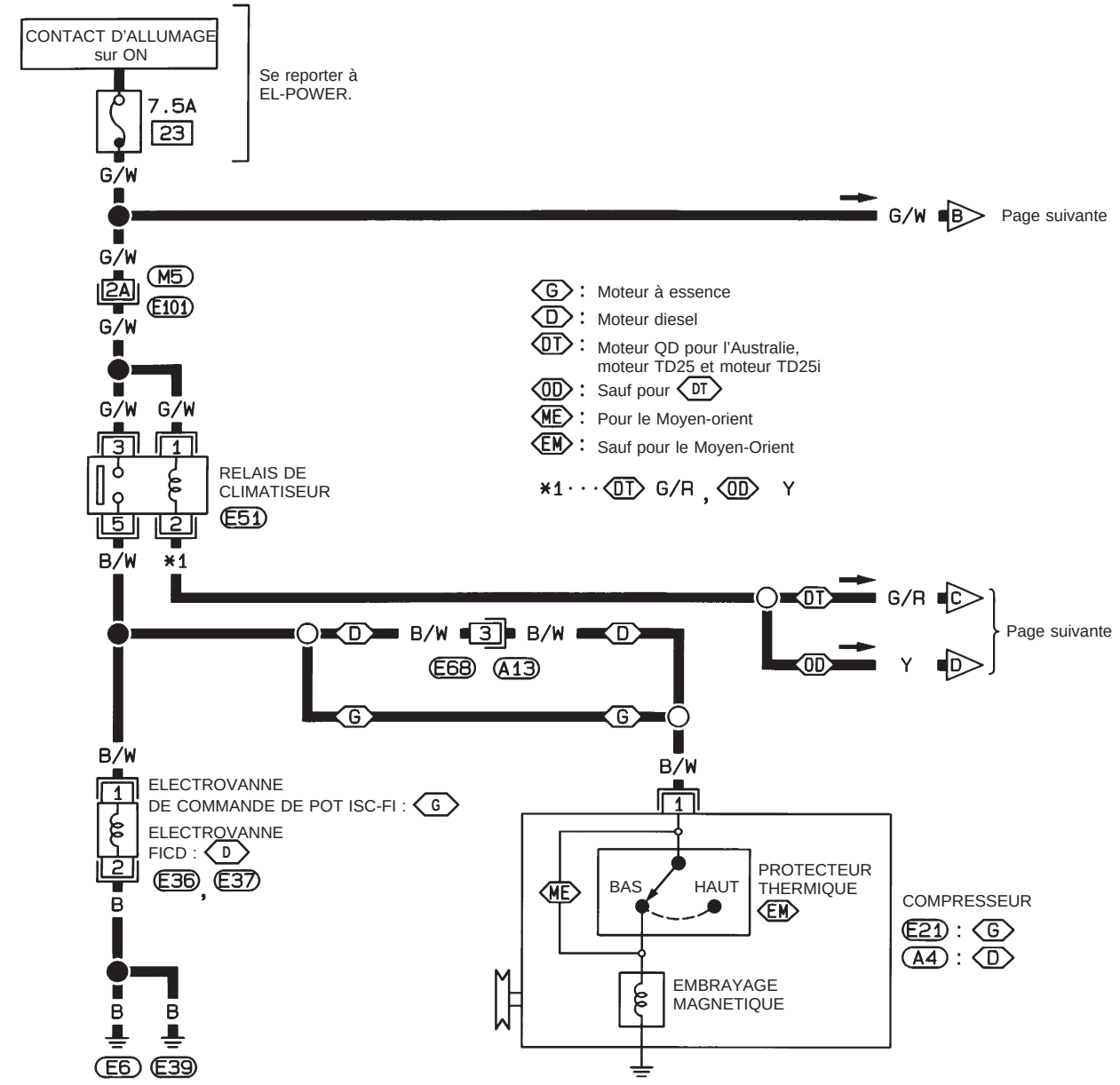

HHA179

Simpo PDF Merge and Split Unregistered Version - http://www.simpopdf.com

Schéma de câblage — A/C, M —/Sauf pour les moteurs KA (suite)

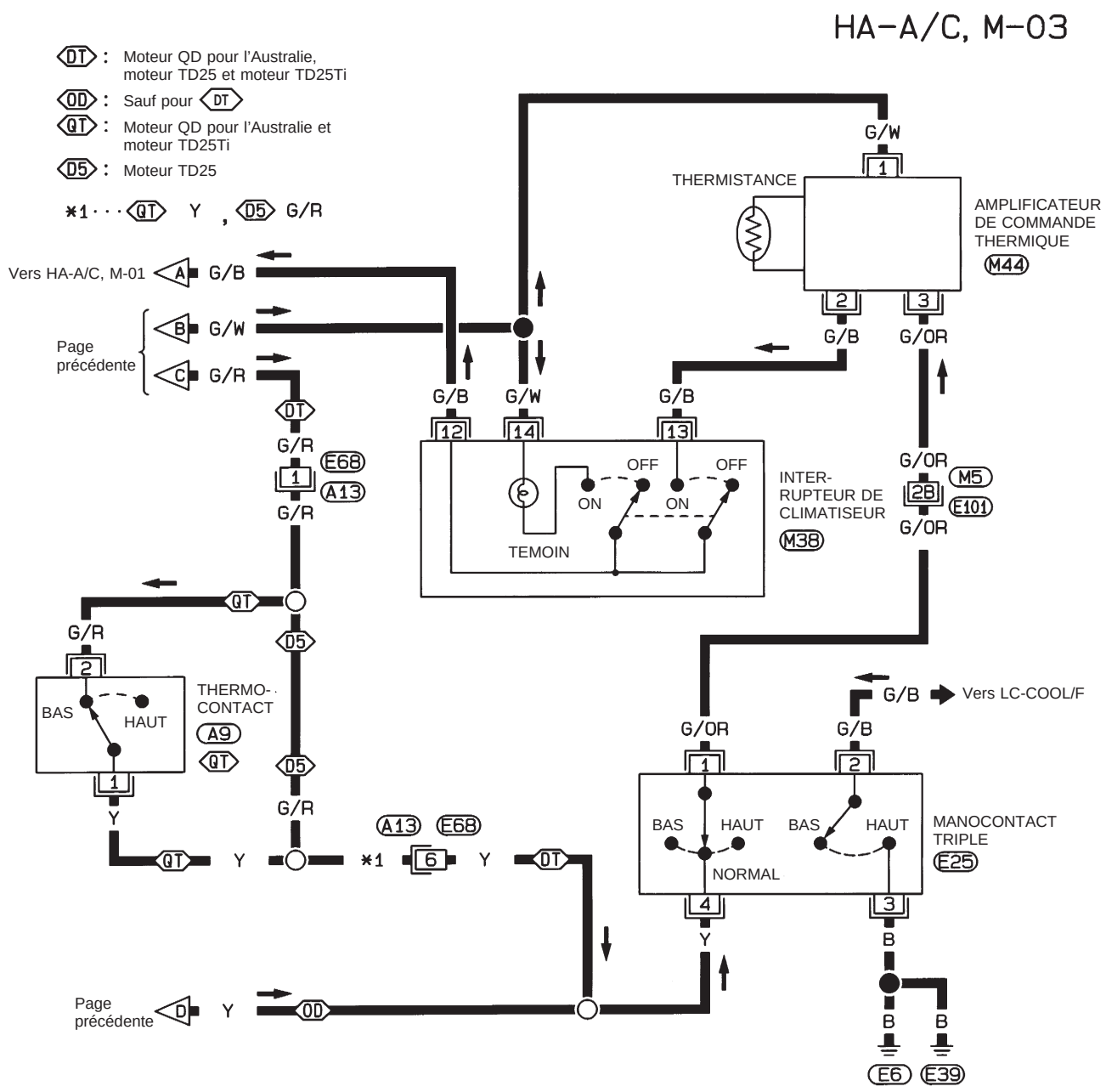

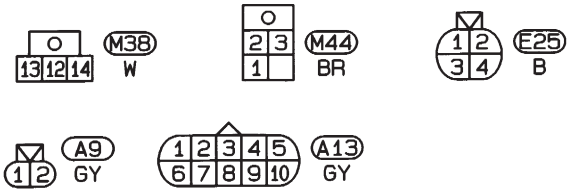

Consulter la dernière page dépliante.
M5 , E101

HHA180

Simpo PDF Merge and Split Unregistered Version - http://www.simpopdf.com

Schéma de câblage — A/C, M —/Moteur KA avec conduite à gauche

HA-A/C, M-04

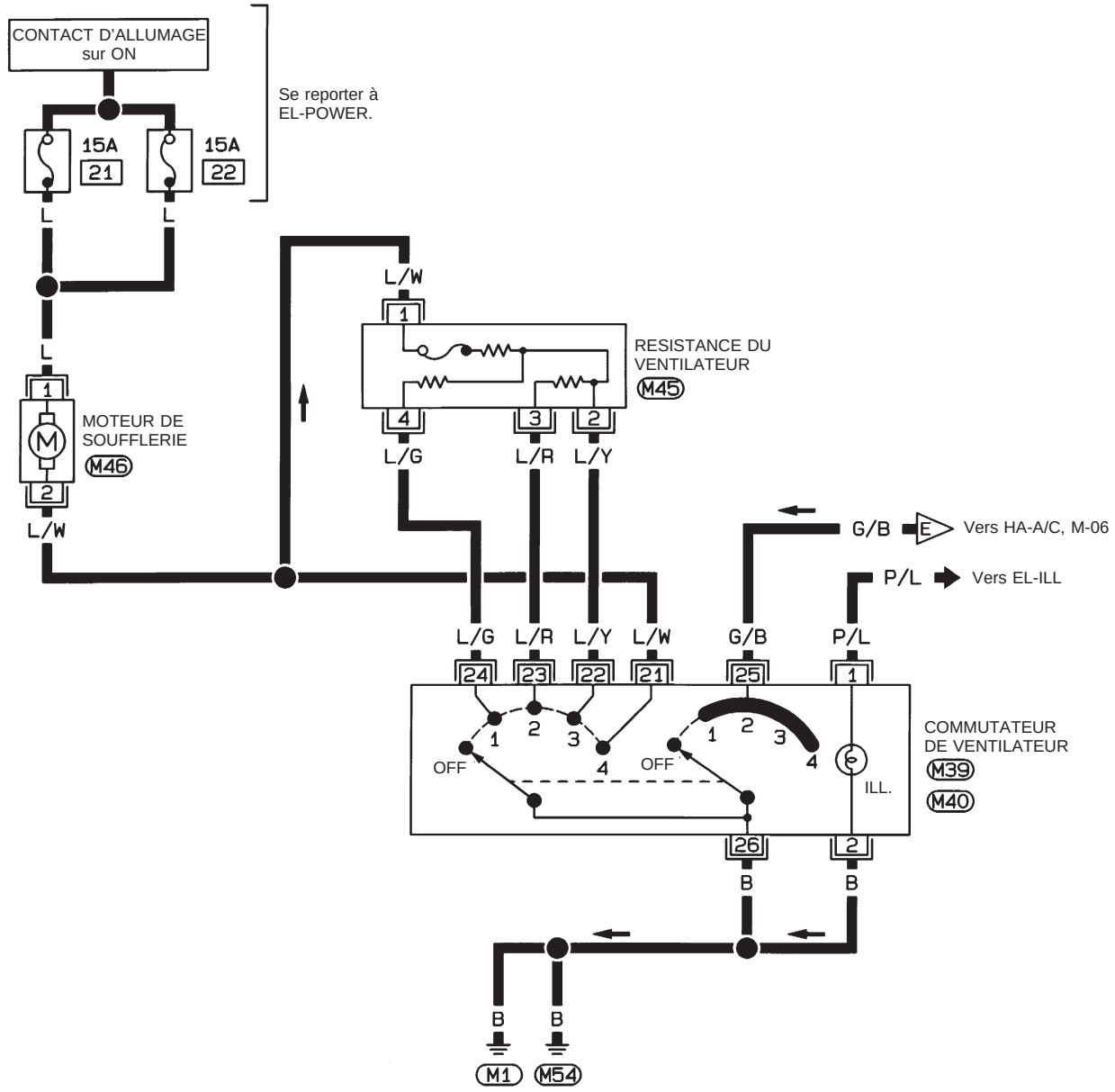



HHA181

Simpo PDF Merge and Split Unregistered Version - http://www.simpopdf.com

Schéma de câblage — A/C, M —/Moteur KA avec conduite à gauche (suite)

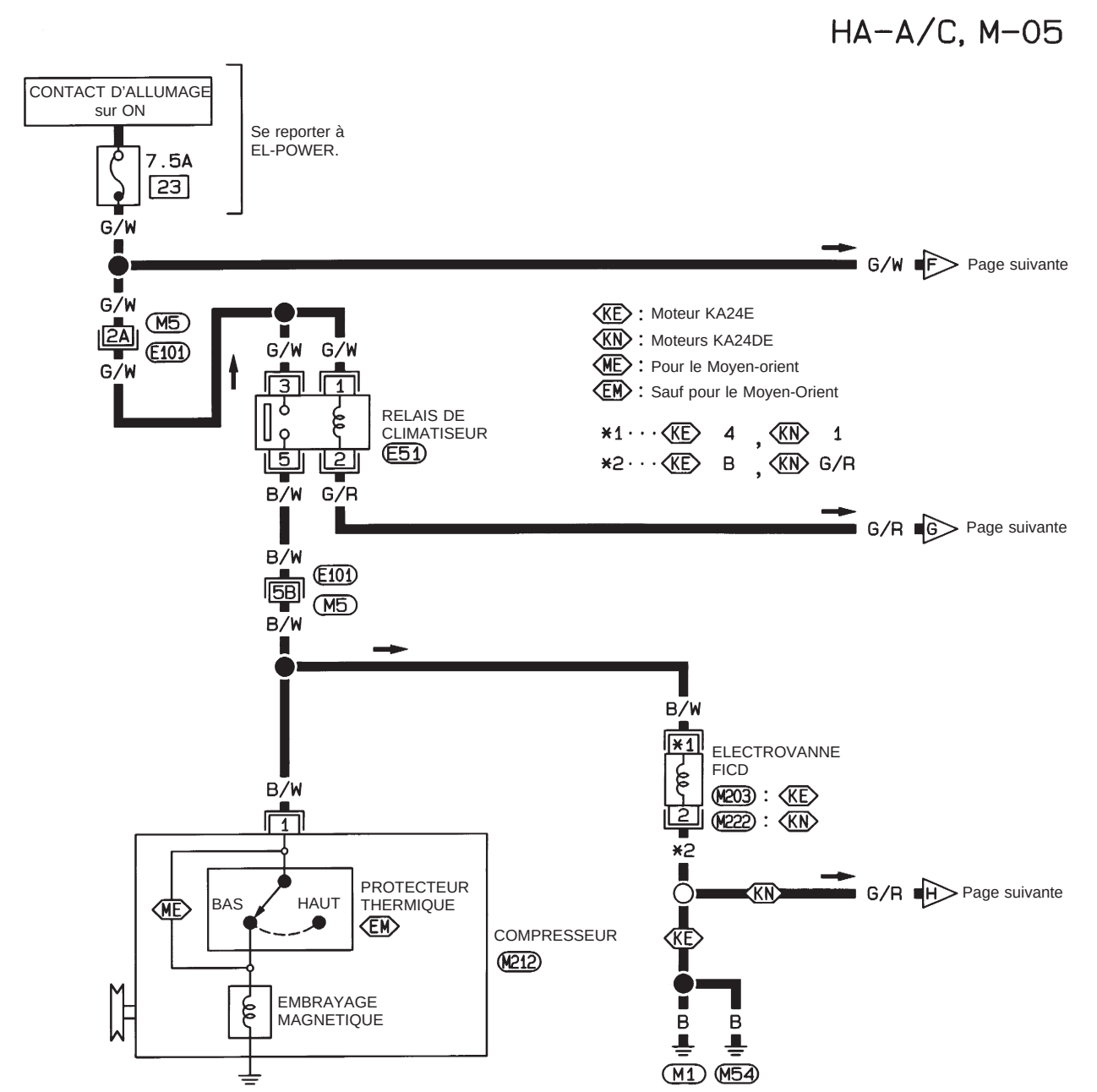



Consulter la dernière page dépliante.
M5, E101

HHA182

Simpo PDF Merge and Split Unregistered Version - http://www.simpopdf.com

Schéma de câblage — A/C, M —/Moteur KA avec conduite à gauche (suite)

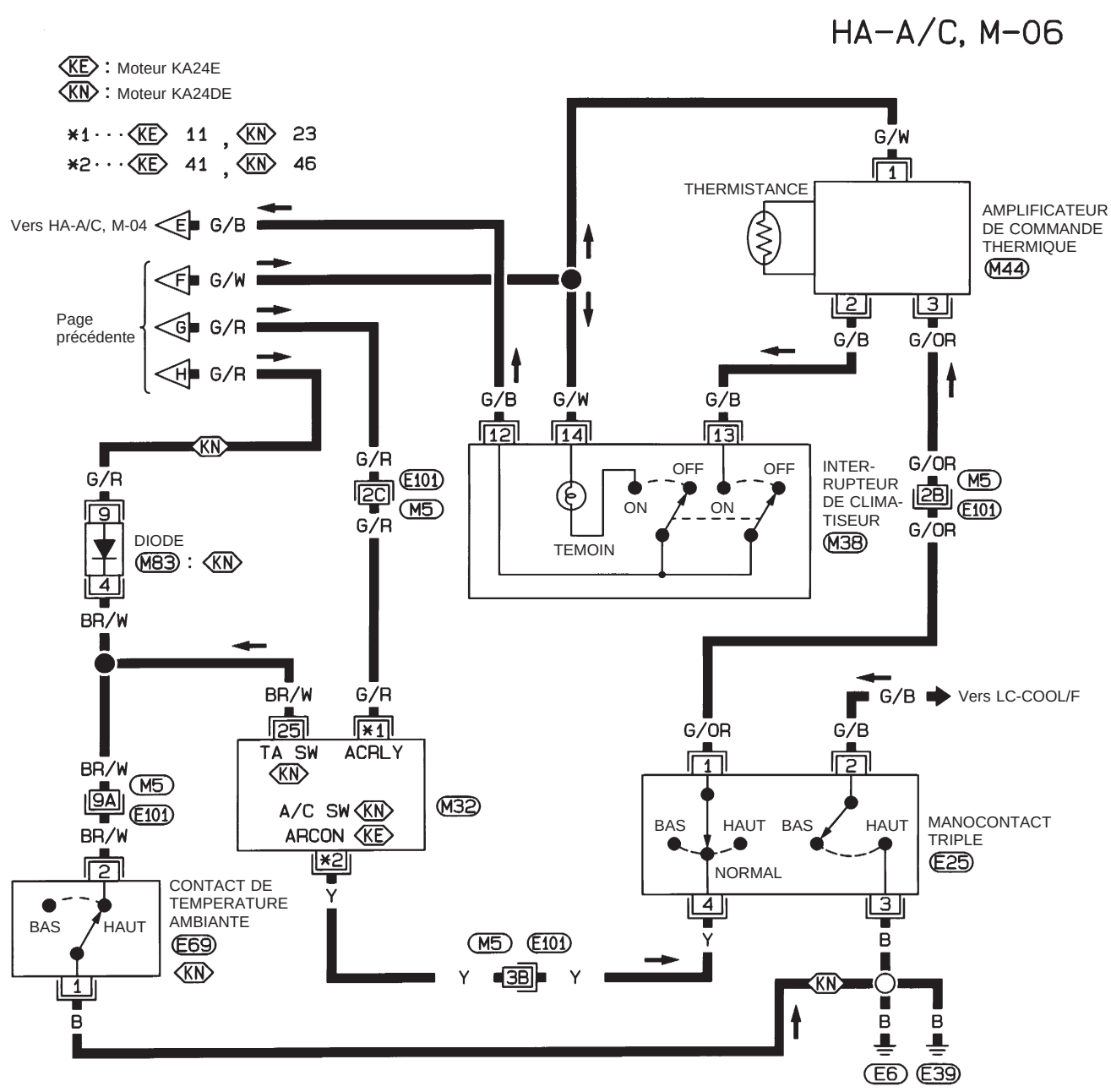

M38 W

M44 BR

M83 L

E25 B

E69 BR

Consulter la dernière page dépliante.

M5, E101

M32

HHA183

Simpo PDF Merge and Split Unregistered Version - http://www.simpopdf.com

Schéma de câblage — A/C, M —/Moteur KA avec conduite à droite

HA-A/C, M-07

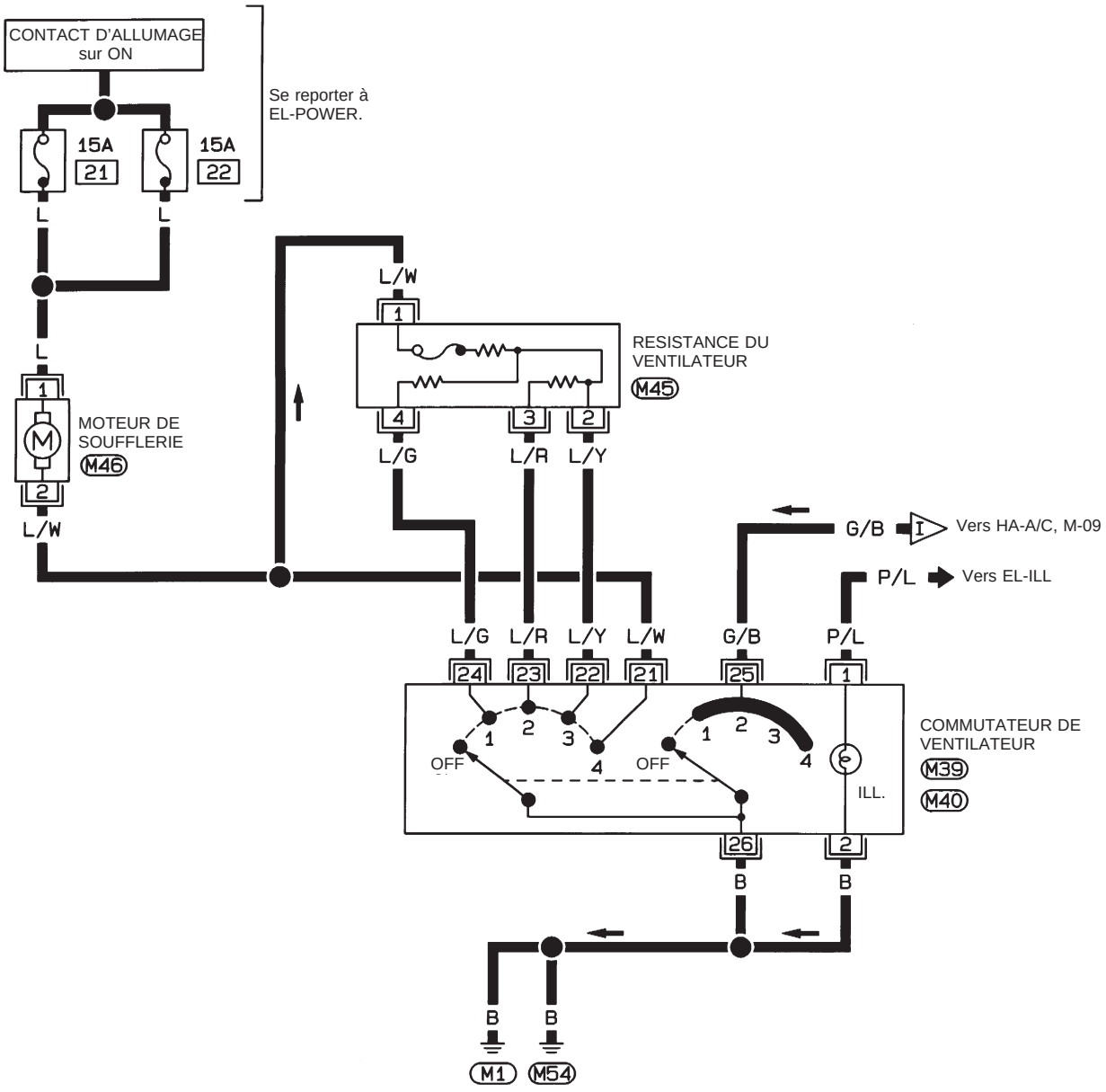

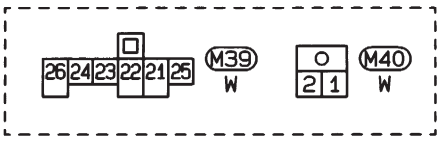



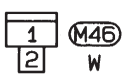

HHA184

Simpo PDF Merge and Split Unregistered Version - http://www.simpopdf.com

Schéma de câblage — A/C, M —/Moteur KA avec conduite à droite (suite)

HA-A/C, M-08

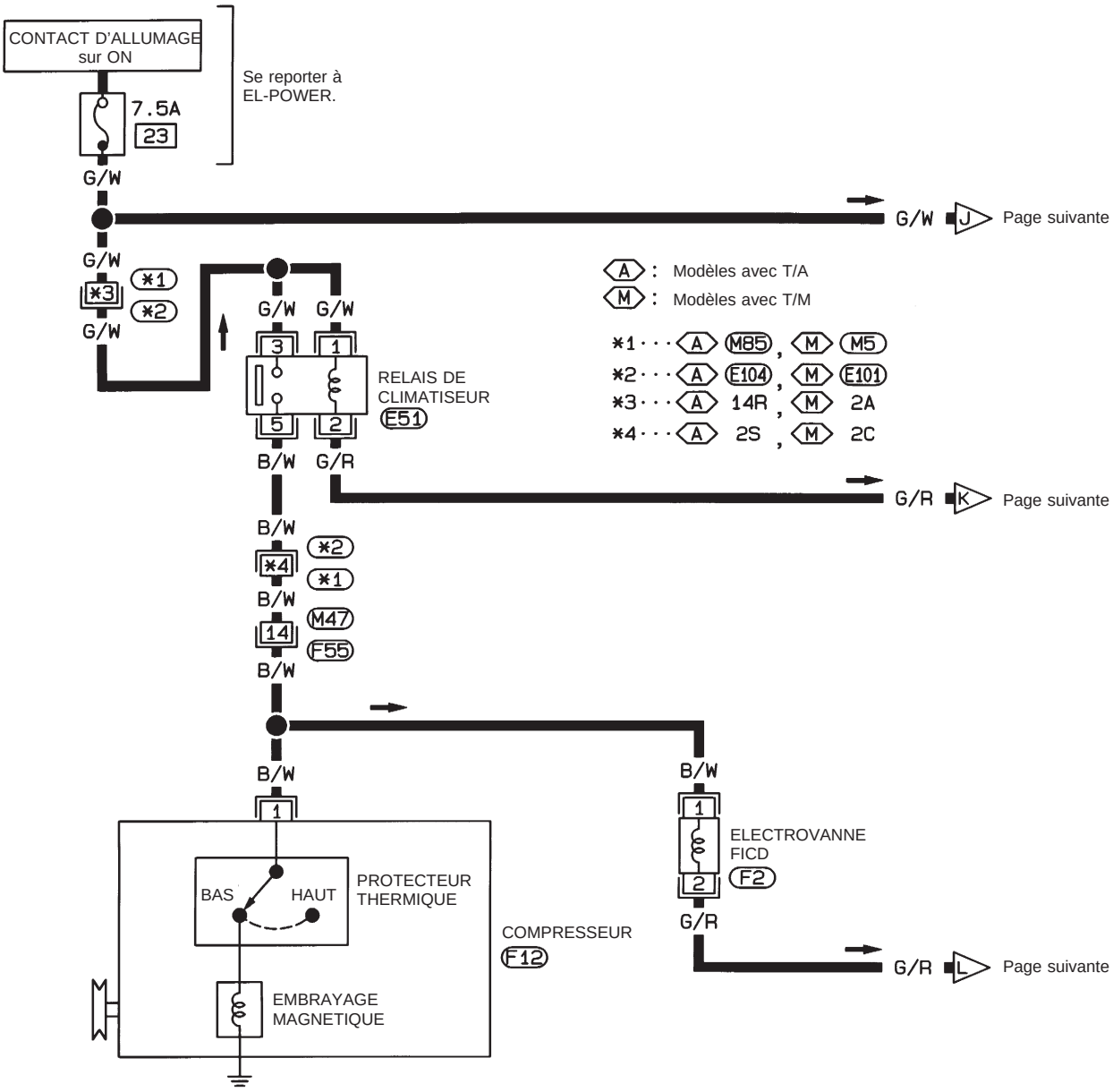

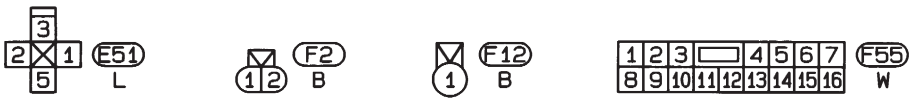

Consulter la dernière page dépliante.

M5, E101

M85, E104

HHA185

Simpo PDF Merge and Split Unregistered Version - http://www.simpopdf.com

Schéma de câblage — A/C, M —/Moteur KA avec conduite à droite (suite)

HA-A/C, M-09

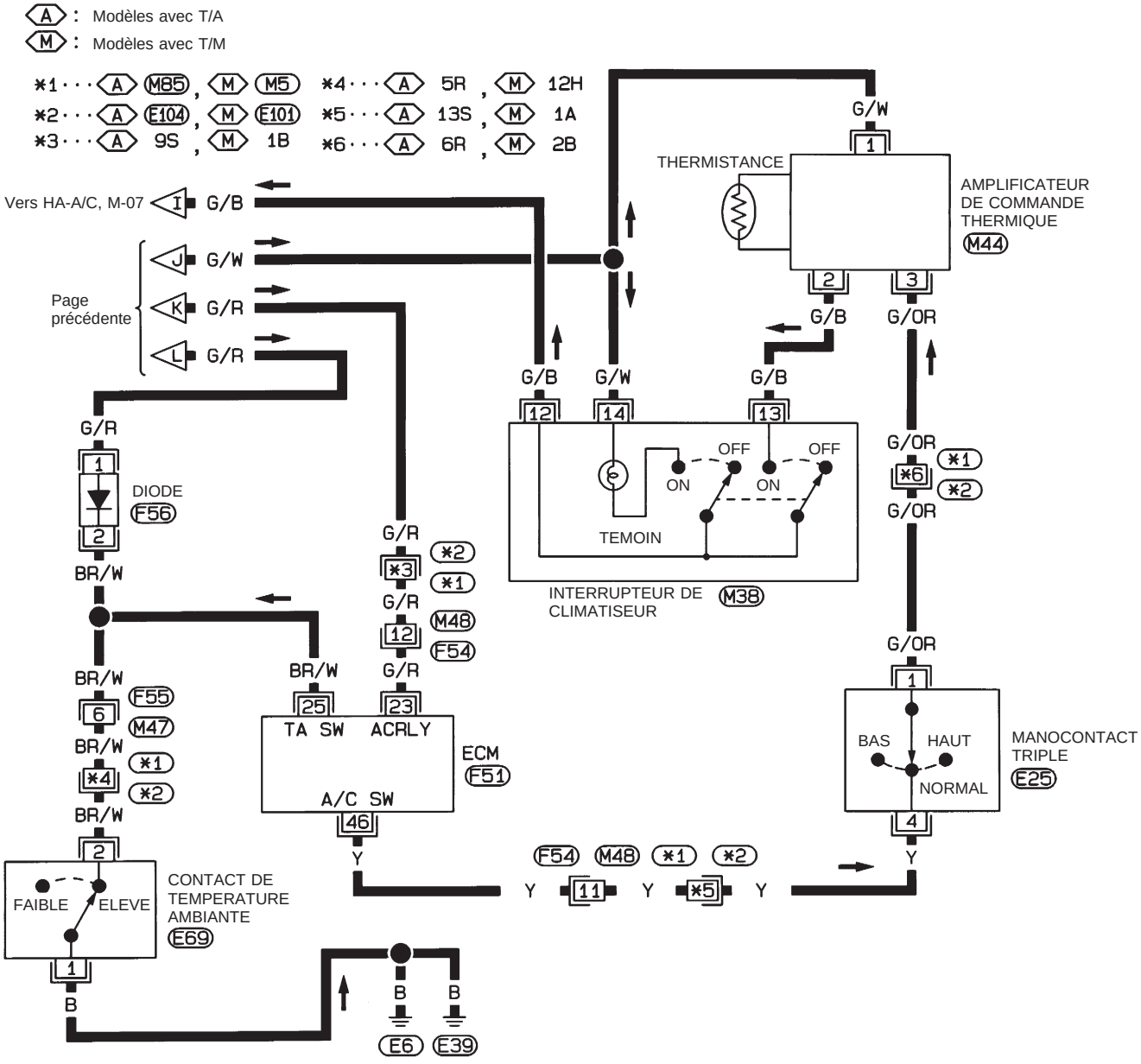

HHA186

Simpo PDF Merge and Split Unregistered Version - http://www.simpopdf.com

A

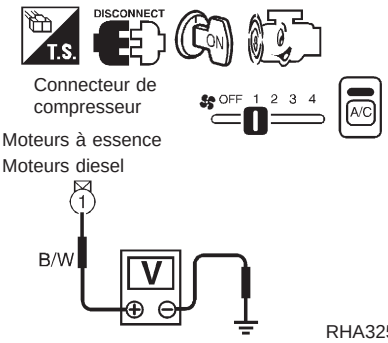

RHA325G

B

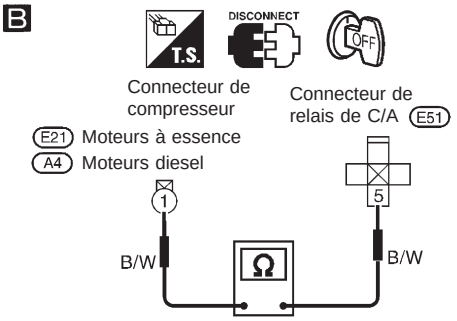

RHA748FD

C

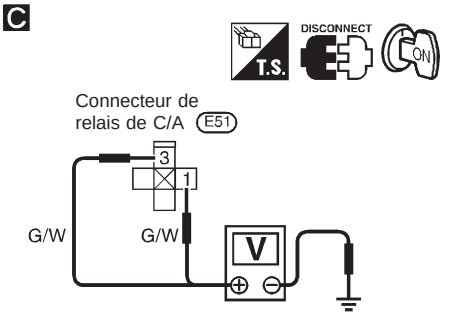

RHA464H

D

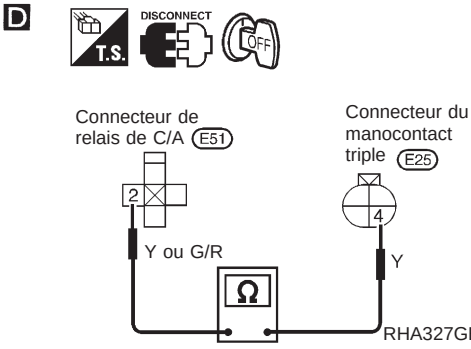

RHA327GB

Embrayage magnétique

PROCEDURE DE DIAGNOSTIC

Sauf pour les moteurs KA

SYMPTOME : L'embrayage magnétique ne s'enclenche pas lorsque l'interrupteur de climatiseur et le commutateur de ventilateur sont enclenchés.

A

VERIFIER L'ALIMENTATION ELECTRIQUE DU COMPRESSEUR.
Débrancher le connecteur de faisceau du compresseur.
Y a-t-il une tension d'environ 12 volts entre la borne (1) du faisceau de compresseur et la masse de carrosserie ?

Oui → Vérifier les points suivants.
- Bobine d'embrayage magnétique
- Protecteur thermique (sauf pour le Moyen-Orient)

Mauvais → Remplacer l'embrayage magnétique. Se reporter à la page HA-1091 du MANUEL DE REPARATION D22 n° de publication SM8F-0D22EOE.

Non

B

Remarque

Vérifier la continuité du circuit entre la borne (5) du faisceau de relais de climatiseur et la borne (1) du faisceau de compresseur.
Il doit y avoir continuité.
Si le résultat est bon, vérifier si le faisceau n'est pas court-circuité.

Bon

C

VERIFIER L'ALIMENTATION ELECTRIQUE DU RELAIS DE CLIMATISEUR.
Y a-t-il une tension d'environ 12 volts entre les bornes (1), (3) du faisceau de relais de C/A et la masse de carrosserie ?

Non → Vérifier le circuit de l'alimentation électrique et le fusible de 7,5A (n° 23, situé dans le boîtier à fusibles).
Se reporter à "DISPOSITION DE L'ALIMENTATION ELECTRIQUE" à la section EL et au schéma de câblage.

Oui

VERIFIER LE RELAIS DE CLIMATISEUR APRES L'AVOIR DECONNECTE.
Se reporter à la page HA-2022.

Mauvais → Remplacer le relais de climatiseur.

Bon

Reconnecter le relais de climatiseur.

Moteurs TD25 et TD25Ti → (A) (Passer à la page suivante).

Sauf pour les moteurs TD25 et TD25Ti

D

Remarque

Vérifier la continuité du circuit entre la borne (2) du faisceau de relais C/A et la borne (4) du faisceau de manocontact triple.
Il doit y avoir continuité.
Si le résultat est bon, vérifier si le faisceau n'est pas court-circuité.

Bon

(B) (Passer à la page suivante).

Remarque :
Si le résultat est mauvais ou "Non" après la vérification de la continuité du circuit, réparer le faisceau ou le connecteur.

Simpo PDF Merge and Split Unregistered Version - http://www.simpopdf.com

Embrayage magnétique (suite)

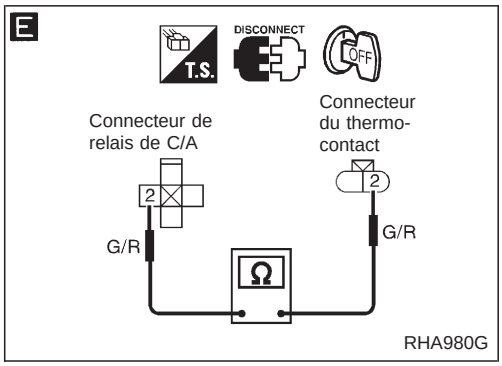

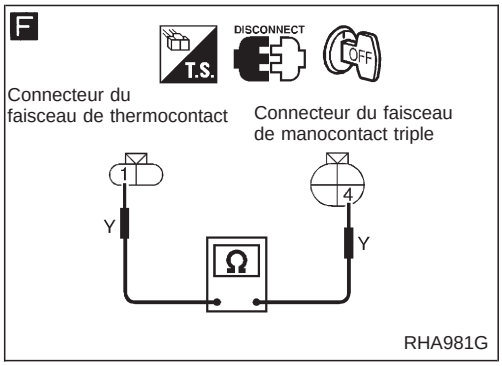

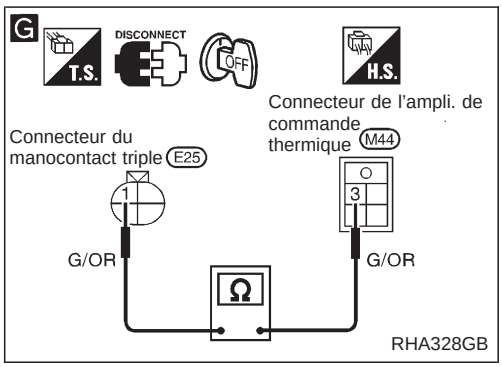

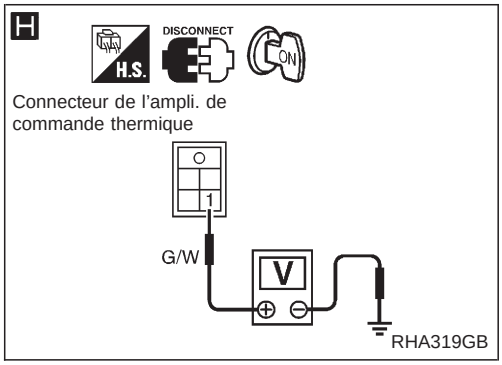

Ⓐ

E Remarque

Vérifier la continuité du circuit entre la borne n° ② du faisceau de relais de C/A et la borne n° ② du faisceau de thermocontact.
Il doit y avoir continuité.
Si le résultat est bon, vérifier si le faisceau n'est pas court-circuité.

Bon ↓

VERIFIER LE THERMOCONTACT. Se reporter à la page HA-2023. → Mauvais → Remplacer le thermocontact.

Bon ↓

F Remarque

Vérifier la continuité du circuit entre la borne n° ① du faisceau du thermocontact et la borne n° ④ du faisceau de manocontact triple.
Il doit y avoir continuité.
Si le résultat est bon, vérifier si le faisceau n'est pas court-circuité.

Bon ↓

Ⓑ Non ↓

VERIFIER LE MANOCONTACT TRIPLE. Se reporter à la page HA-2023. → Mauvais → Vérifier la quantité de remplissage de réfrigérant. → Bon → Remplacer le manocontact triple.

Bon ↓

G Remarque

Vérifier la continuité du circuit entre la borne n° ① du faisceau du manocontact triple et la borne n° ③ du faisceau de l'ampli. de commande thermique.
Il doit y avoir continuité.
Si le résultat est bon, vérifier si le faisceau n'est pas court-circuité.

Bon ↓

H

VERIFIER L'ALIMENTATION ELECTRIQUE DE L'AMPLI. DE COMMANDE THERMIQUE.
Y a-t-il une tension d'environ 12 volts entre la borne ① du faisceau de l'ampli. de commande thermique et la masse de carrosserie ?

Non → Vérifier le circuit de l'alimentation électrique et le fusible de 7,5A (n° 23, situé dans le boîtier à fusibles).
(Se reporter à "DISPOSITION DE L'ALIMENTATION ELECTRIQUE" dans la section EL et au schéma de câblage.)

Oui ↓

Ⓒ
(Passer à la page suivante).

Remarque :
Si le résultat est mauvais ou "Non" après la vérification de la continuité du circuit, réparer le faisceau ou le connecteur.

Simpo PDF Merge and Split Unregistered Version - http://www.simpopdf.com

Embrayage magnétique (suite)

I

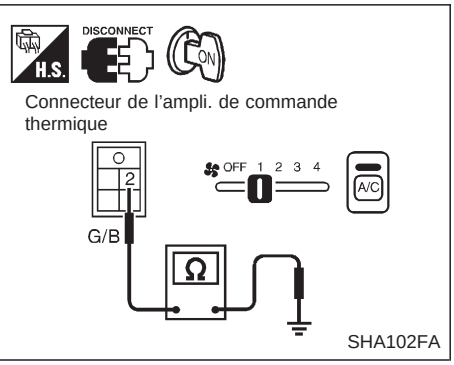

Connecteur de l'ampli. de commande thermique

SHA102FA

J

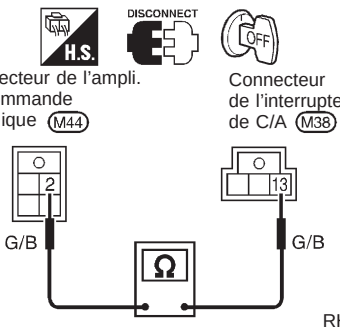

Connecteur de l'ampli. de commande thermique (M44)

Connecteur de l'interrupteur de C/A (M38)

RHA465H

K

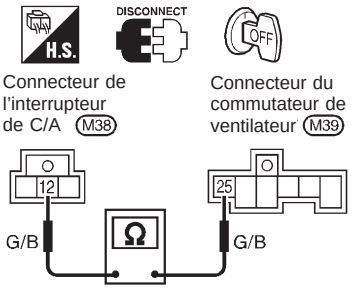

Connecteur de l'interrupteur de C/A (M38)

Connecteur du commutateur de ventilateur (M39)

RHA466H

L

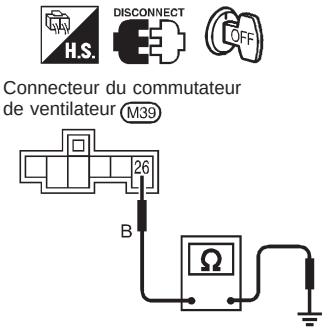

Connecteur du commutateur de ventilateur (M39)

RHA322GA

Ⓒ

I

Vérifier la continuité du circuit entre la borne ② du faisceau de l'ampli. de commande thermique et la masse de carrosserie.
Il doit y avoir continuité.
Si le résultat est bon, vérifier si le faisceau n'est pas court-circuité.

Bon → Remplacer l'ampli. de commande thermique.

Mauvais ↓

J — Remarque

Vérifier la continuité du circuit entre la borne ② du faisceau de l'ampli. de commande thermique et la borne ⑬ du faisceau de l'interrupteur de climatiseur.
Il doit y avoir continuité.
Si le résultat est bon, vérifier si le faisceau n'est pas court-circuité.

Bon ↓

VERIFIER L'INTERRUPTEUR DE CLIMATISEUR.
Se reporter à la page HA-2022.

Mauvais → Remplacer l'interrupteur de climatiseur.

Bon ↓

K — Remarque

Vérifier la continuité du circuit entre la borne ⑫ du faisceau de l'interrupteur de climatiseur et la borne ㉕ du faisceau de commutateur de ventilateur.
Il doit y avoir continuité.
Si le résultat est bon, vérifier si le faisceau n'est pas court-circuité.

Bon ↓

VERIFIER LE COMMUTATEUR DE VENTILATEUR.
Se reporter à la page HA-2022.

Mauvais → Remplacer le commutateur de ventilateur.

Bon ↓

L — Remarque

Vérifier la continuité du circuit entre la borne ㉖ du faisceau de commutateur de ventilateur et la masse de carrosserie.
Il doit y avoir continuité.
Si le résultat est bon, vérifier si le faisceau n'est pas court-circuité.

Remarque :
Si le résultat est mauvais ou ''Non'' après la vérification de la continuité du circuit, réparer le faisceau ou le connecteur.

Simpo PDF Merge and Split Unregistered Version - http://www.simpopdf.com

Embrayage magnétique (suite)

Pour moteurs KA

SYMPTOME : L'embrayage magnétique ne s'enclenche pas lorsque l'interrupteur de climatiseur et l'interrupteur de ventilateur sont enclenchés.

A

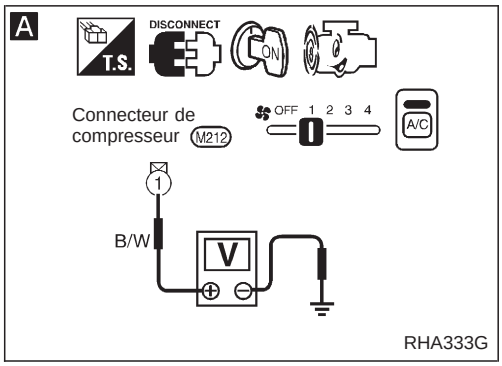

VERIFIER L'ALIMENTATION ELECTRIQUE DU COMPRESSEUR.
Débrancher le connecteur de faisceau du compresseur.
Y a-t-il une tension d'environ 12 volts entre la borne ① du faisceau de compresseur et la masse de carrosserie ?

Oui → Vérifier les points suivants.
- Bobine d'embrayage magnétique
- Protecteur thermique

Se reporter à la page HA-2022.

Mauvais → Remplacer l'embrayage magnétique. Se reporter à la page HA-1091 du MANUEL DE REPARATION D22 n° de publication SM8F-0D22EOE.

Non ↓

B

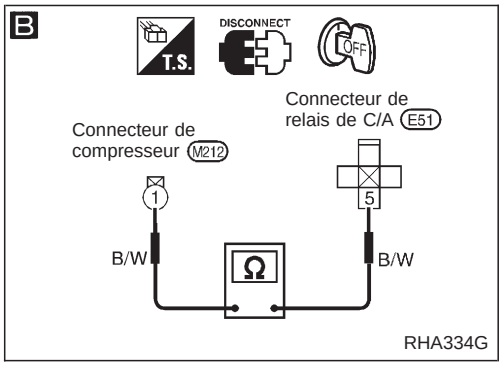

Remarque

Vérifier la continuité du circuit entre la borne ⑤ du faisceau de relais de climatiseur et la borne ① du faisceau de compresseur.
Il doit y avoir continuité.
Si le résultat est bon, vérifier si le faisceau n'est pas court-circuité.

Bon ↓

C

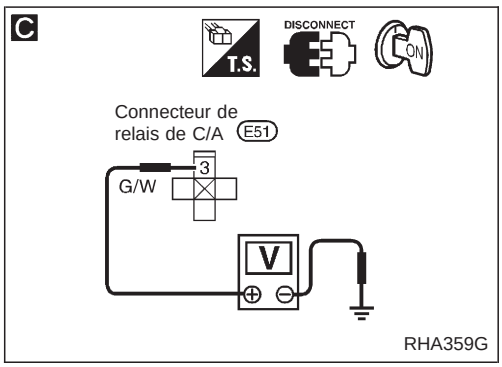

VERIFIER L'ALIMENTATION ELECTRIQUE DU RELAIS DE CLIMATISEUR.
Y a-t-il une tension d'environ 12 volts entre la borne ③ du faisceau de relais de climatiseur et la masse de carrosserie ?

Non → Vérifier le circuit de l'alimentation électrique et le fusible de 7,5A (n° 23, situé dans le boîtier à fusibles).
Se reporter à "DISPOSITION DE L'ALIMENTATION ELECTRIQUE" à la section EL et au schéma de câblage.

Oui ↓

D

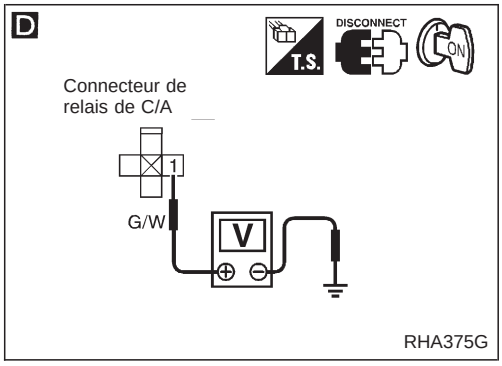

VERIFIER L'ALIMENTATION ELECTRIQUE DU RELAIS DE CLIMATISEUR.
Y a-t-il une tension d'environ 12 volts entre la borne ① du faisceau de relais de climatiseur et la masse de carrosserie ?

Non → Vérifier le circuit de l'alimentation électrique et le fusible de 7,5A (n° 23, situé dans le boîtier à fusibles).
Se reporter à "DISPOSITION DE L'ALIMENTATION ELECTRIQUE" à la section EL et au schéma de câblage.

Oui ↓

VERIFIER LE RELAIS DE CLIMATISEUR APRES L'AVOIR DECONNECTE.
Se reporter à la page HA-2022.

Mauvais → Remplacer le relais de climatiseur.

Bon ↓

Reconnecter le relais de climatiseur.

Ⓐ
(Passer à la page suivante).

Remarque :
Si le résultat est mauvais ou "Non" après la vérification de la continuité du circuit, réparer le faisceau ou le connecteur.

Simpo PDF Merge and Split Unregistered Version - http://www.simpopdf.com

Embrayage magnétique (suite)

E

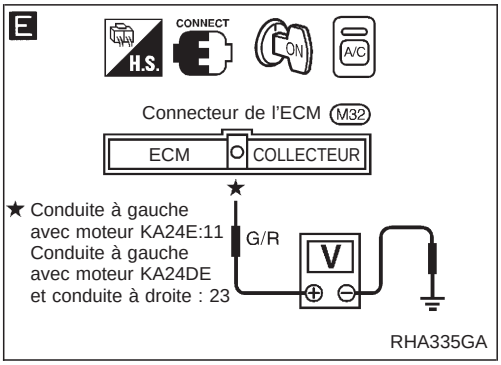

F

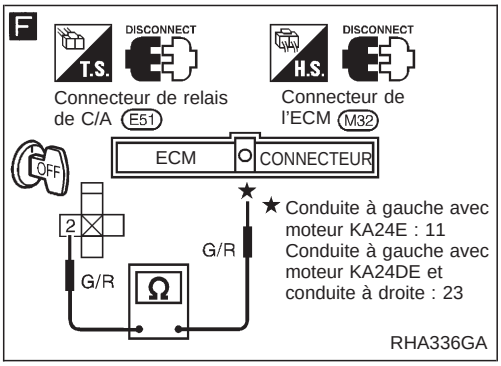

G

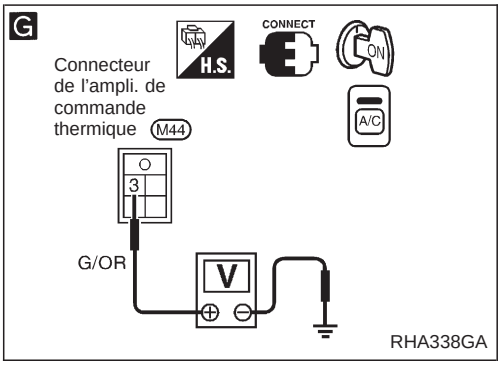

H

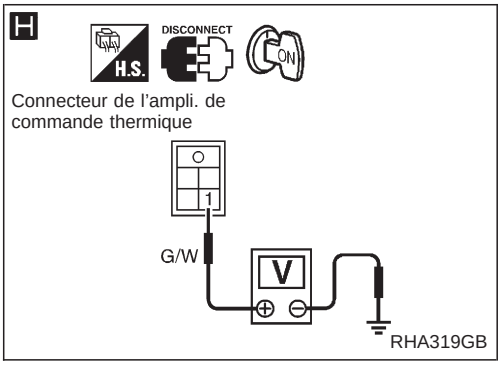

I

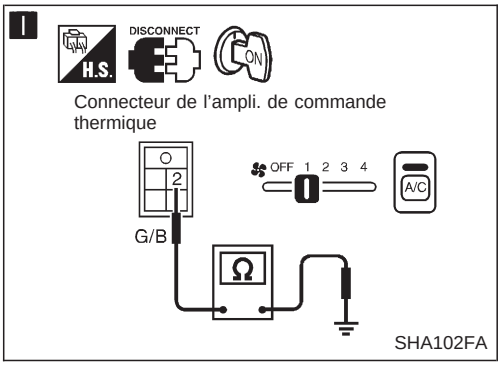

Ⓐ

E Remarque

VERIFIER LE CIRCUIT COTE BOBINE DU RELAIS DE CLIMATISEUR.
Est-ce qu'il y a une tension d'environ 12 volts entre la borne ⑪ ou ㉓ du faisceau de l'ECM et la masse de carrosserie ?

Non → **F** Remarque

Vérifier la continuité du circuit entre la borne ② du faisceau de relais de climatiseur et la borne ⑪ ou ㉓ du faisceau de l'ECM.
Il doit y avoir continuité.
Si le résultat est bon, vérifier si le faisceau n'est pas court-circuité.

Oui ↓

G Remarque

VERIFIER LA TENSION DE L'AMPLI. DE COMMANDE THERMIQUE.
Y a-t-il une tension d'environ 12 volts entre la borne ③ du faisceau de l'ampli. de commande thermique et la masse de carrosserie ?

Non → Ⓒ (Passer à HA-2021.)

Oui ↓

H

VERIFIER L'ALIMENTATION ELECTRIQUE DE L'AMPLI. DE COMMANDE THERMIQUE.
Y a-t-il une tension d'environ 12 volts entre la borne ① du faisceau de l'ampli. de commande thermique et la masse de carrosserie ?

Non → Vérifier le circuit de l'alimentation électrique et le fusible de 7,5A (n° 23, situé dans le boîtier à fusibles).
(Se reporter à "DISPOSITION DE L'ALIMENTATION ELECTRIQUE" dans la section EL et au schéma de câblage).

Oui ↓

I Remarque

Vérifier la continuité du circuit entre la borne ② du faisceau de l'ampli. de commande thermique et la masse de carrosserie.
Il doit y avoir continuité.
Si le résultat est bon, vérifier si le faisceau n'est pas court-circuité.

Bon → Remplacer l'ampli. de commande thermique.

Mauvais ↓

J Remarque

Vérifier la continuité du circuit entre la borne ② du faisceau de l'ampli. de commande thermique et la borne ⑬ du faisceau de l'interrupteur de climatiseur.
Il doit y avoir continuité.
Si le résultat est bon, vérifier si le faisceau n'est pas court-circuité.

Bon ↓

Ⓑ
(Passer à la page suivante).

Remarque :
Si le résultat est mauvais ou "Non" après la vérification de la continuité du circuit, réparer le faisceau ou le connecteur.

Simpo PDF Merge and Split Unregistered Version - http://www.simpopdf.com

Embrayage magnétique (suite)

J

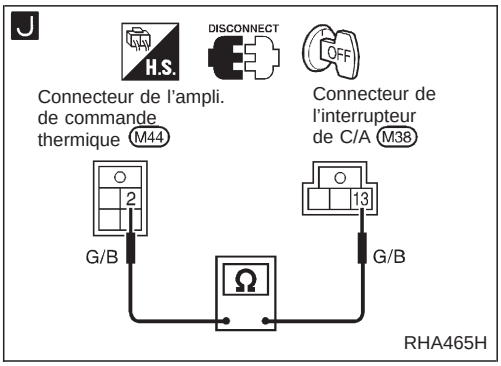

K

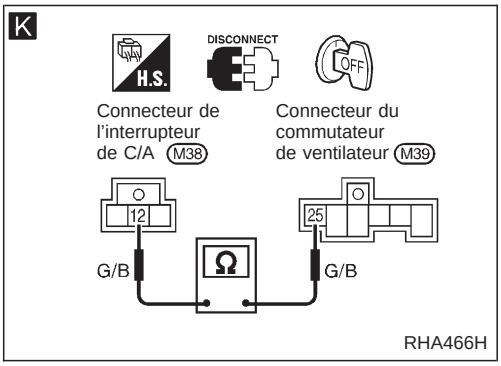

L

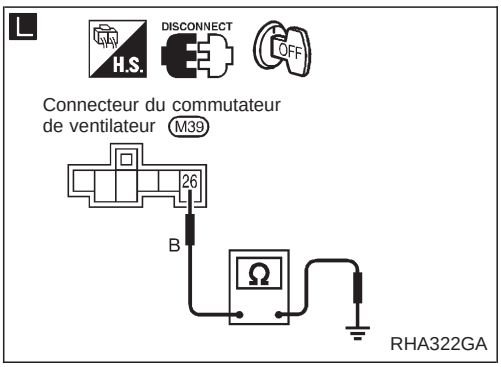

Ⓑ

VERIFIER L'INTERRUPTEUR DE CLIMATISEUR.
Se reporter à la page HA-2022.

Mauvais → Remplacer l'interrupteur de climatiseur.

Bon

K Remarque

Vérifier la continuité du circuit entre la borne ⑫ du faisceau de commutateur de climatiseur et la borne ㉕ du faisceau de commutateur de ventilateur.
Il doit y avoir continuité.
Si le résultat est bon, vérifier si le faisceau n'est pas court-circuité.

Bon

VERIFIER LE COMMUTATEUR DE VENTILATEUR
Se reporter à la page HA-2022.

Mauvais → Remplacer le commutateur de ventilateur.

Bon

L Remarque

Vérifier la continuité du circuit entre la borne ㉖ du faisceau de commutateur de ventilateur et la masse de carrosserie.
Il doit y avoir continuité.
Si le résultat est bon, vérifier si le faisceau n'est pas court-circuité.

Remarque :
Si le résultat est mauvais ou ''Non'' après la vérification de la continuité du circuit, réparer le faisceau ou le connecteur.

Simpo PDF Merge and Split Unregistered Version - http://www.simpopdf.com

Embrayage magnétique (suite)

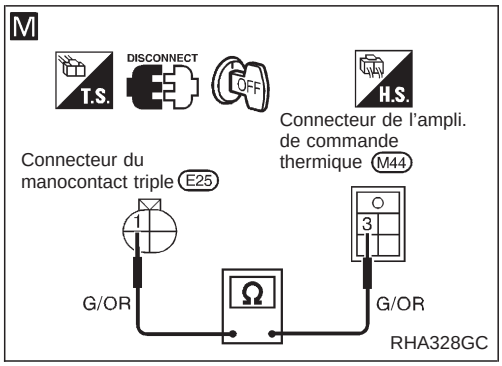

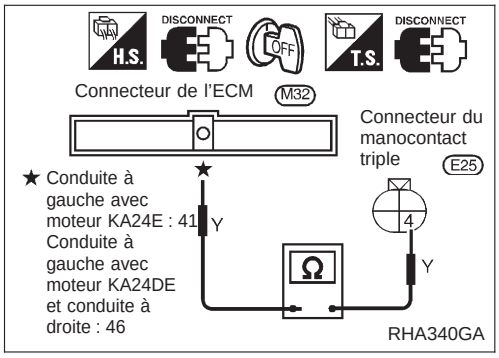

Ⓒ

M — Remarque

Vérifier la continuité du circuit entre la borne ③ du faisceau de l'ampli. de commande thermique et la borne ① du faisceau de manocontact triple.
Il doit y avoir continuité.
Si le résultat est bon, vérifier si le faisceau n'est pas court-circuité.

Bon

VERIFIER LE MANOCONTACT TRIPLE.
Se reporter à la page HA-2023.

Mauvais → Remplacer le manocontact triple.

Bon

N — Remarque

Vérifier la continuité du circuit entre la borne n° ④ du faisceau du manocontact triple et la borne n° ㊶ ou ㊻ du faisceau de l'ECM.
Il doit y avoir continuité.
Si le résultat est bon, vérifier si le faisceau n'est pas court-circuité.

Bon

Remplacer l'ECM.

Remarque :
Si le résultat est mauvais ou ''Non'' après la vérification de la continuité du circuit, réparer le faisceau ou le connecteur.

Simpo PDF Merge and Split Unregistered Version - http://www.simpopdf.com

Embrayage magnétique (suite)

INSPECTION DES COMPOSANTS ELECTRIQUES

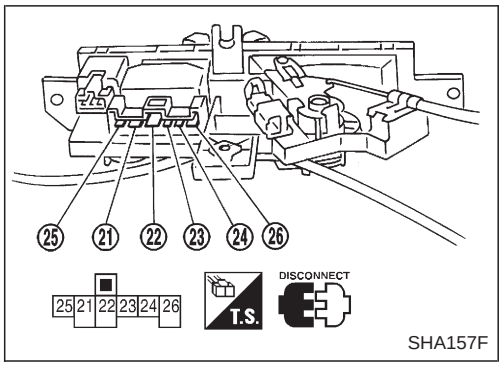

Commutateur de ventilateur

Vérifier la continuité entre les bornes à chaque position de la commande.

Position du commutateur	Continuité entre les bornes
OFF	
1	㉔ — ㉖ — ㉕
2	㉓ — ㉖ — ㉕
3	㉒ — ㉖ — ㉕
4	㉑ — ㉖ — ㉕

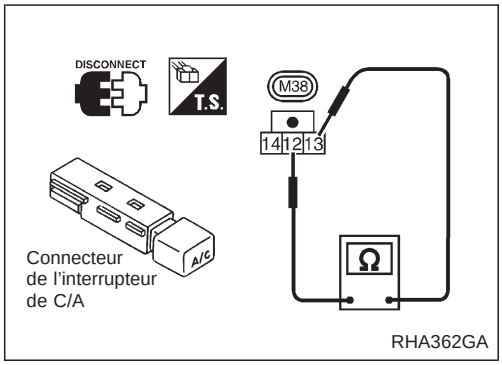

Interrupteur de climatiseur

Vérifier la continuité entre les bornes à chaque position de la commande.

Position de l'interrupteur	N° de borne		Il y a continuité
C/A	⊕	⊖	
ON	⑬	⑫	Oui
OFF			Non

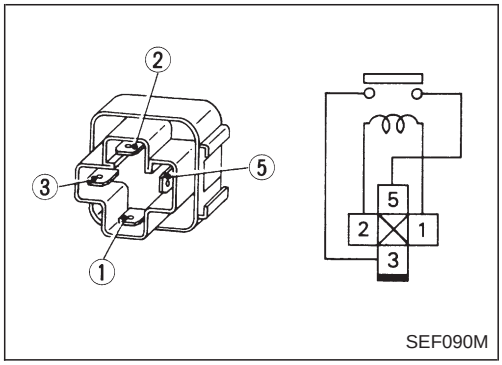

Relais de climatiseur

Vérifier la continuité entre les bornes n° ③ et ⑤.

Conditions	Il y a continuité
Alimentation en courant continu de 12 volts entre les bornes ① et ②.	Oui
Aucune alimentation électrique	Non

Si le résultat n'est pas satisfaisant, remplacer le relais.

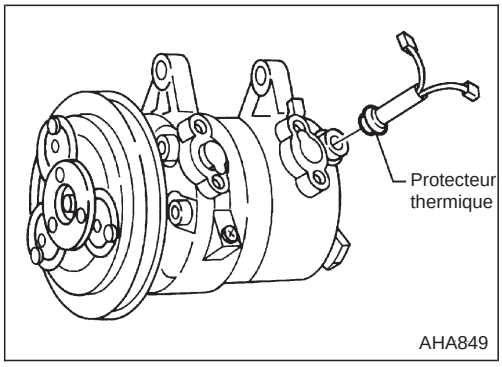

Protecteur thermique (pour DKV-14C)

Température du compresseur °C	Fonctionnement
Augmentant jusqu'à 145 - 155 environ	Mettre sur ARRET
Diminuant jusqu'à 130 - 140 environ	Mettre sur MARCHE

Simpo PDF Merge and Split Unregistered Version - http://www.simpopdf.com

Embrayage magnétique (suite)

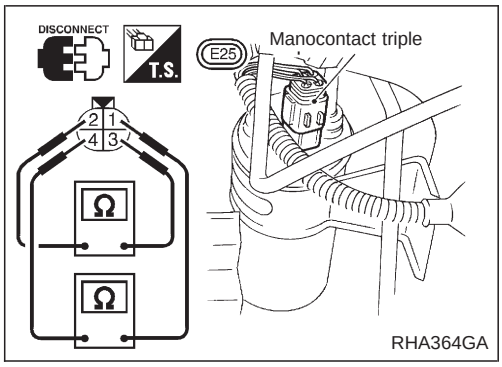

Manocontact triple

	Bornes	Pression de canalisation côté haute pression kPa (bar, kg/cm^2)	Fonctionnement	Il y a continuité
Côté basse pression	① - ④	Augmentant jusqu'à 152,0 - 201,0 (1,520 - 2,010, 1,55 - 2,05)	ON	Existe.
		Diminuant jusqu'à 152,0 - 201,0 (1,520 - 2,010, 1,55 - 2,05)	OFF	N'existe pas.
Côté pression moyenne*	② - ③	Augmentant jusqu'à 1 422 - 1 618 (14,22 - 16,18, 14,5 - 16,5)	ON	Existe.
		Diminuant jusqu'à 1 128 - 1 422 (11,28 - 14,22, 11,5 - 14,5)	OFF	N'existe pas.
Côté haute pression	① - ④	Diminuant jusqu'à 2 059 - 2 256 (20,6 - 22,6, 21 - 23)	ON	Existe.
		Augmentant jusqu'à 2 648 - 2 844 (26,5 - 28,4, 27 - 29)	OFF	N'existe pas.

* : Pour le fonctionnement du moteur de ventilateur de refroidissement

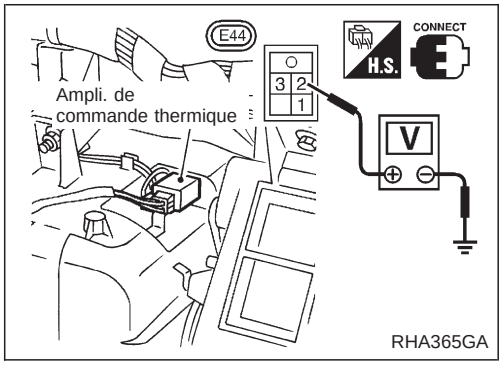

Ampli. de commande thermique

Température de l'air de sortie de l'évaporateur °C	Fonctionnement de l'ampli. thermique	Vérificateur
Diminuant jusqu'à 0,1 à 0,9	Mettre sur ARRET	Environ 12V
Augmentant jusqu'à 2,5 à 3,5	Mettre sur MARCHE	Environ 0V

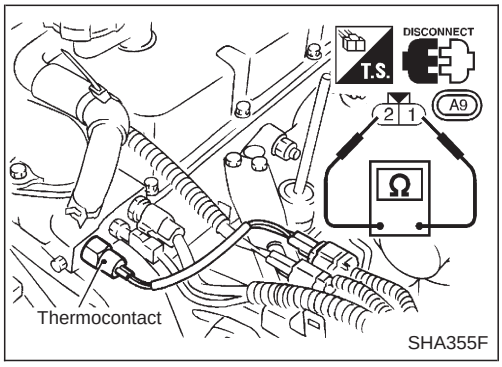

Thermocontact

Temperature d'eau °C	N° de borne		Il y a continuité
	⊕	⊖	
Au-dessus de 105	①	②	Non
Inférieur à 100			Oui

Simpo PDF Merge and Split Unregistered Version - http://www.simpopdf.com

Introduction

Le système de contrôle de température automatique (ATC) régule automatiquement la température intérieure du véhicule. L'utilisateur choisit une ''température de référence'' qui sert de base au mode de régulation indépendamment des variations de la température extérieure. Ceci est possible grâce à l'utilisation d'un micro-ordinateur, appelé également amplificateur automatique, qui reçoit les signaux d'entrée émis par différents capteurs. L'ampli. auto. utilise ces signaux d'entrée (y compris celui de la température de référence) pour contrôler automatiquement le volume d'air de sortie ainsi que la température et la distribution de l'air du système ATC.

Caractéristiques

Commande de volet de mélange d'air

Le volet de mélange d'air est contrôlé automatiquement afin que la température de l'habitacle soit atteinte et maintenue à la température réglée par l'utilisateur. Pour une température de référence donnée, la position du volet de mélange d'air dépendra de : la température ambiante, la température de l'habitacle, l'importance de l'ensoleillement et la température d'air d'admission.

Contrôle de la vitesse du ventilateur

La vitesse de la soufflerie est automatiquement régulée en fonction de la température de référence, de la température ambiante, de la température de l'habitacle, de la température d'air d'admission, de la quantité d'ensoleillement et de la position du volet de mélange d'air.

Lorsque l'on règle l'interrupteur de ventilateur sur ''AUTO'', le moteur de soufflerie augmente progressivement le volume du débit d'air.

Lorsque la température du liquide de refroidissement moteur est basse, le fonctionnement du moteur de soufflerie est retardé pour empêcher l'air frais de circuler.

Commande de volet d'admission d'air

La position du volet d'admission sera déterminée par : la température ambiante, la température de l'habitacle et par l'état de marche ou d'arrêt du compresseur.

Commande du volet de sortie

La position du volet de sortie sera déterminée par : la température ambiante, la température de l'habitacle, la température d'air d'admission et la quantité d'ensoleillement.

Commande d'embrayage magnétique

Le fonctionnement du compresseur (MAR.-ARR.) est automatiquement contrôlé par le capteur de température ambiante pour empêcher le compresseur d'être endommagé sous des températures ambiantes très froides.

Système d'autodiagnostic

Le système d'autodiagnostic consiste en cinq étapes. On peut accéder à chaque étape en poussant les contacts de l'amplificateur automatique.

Fonction de mémoire

Lorsque le contact d'allumage est sur OFF, l'amplificateur automatique met en mémoire la température de référence et les entrées des différents contacts. Lorsque le contact d'allumage est sur ON, le système commence à fonctionner avec les informations enregistrées. Le système compense alors immédiatement pour les conditions de fonctionnement réelles.

Simpo PDF Merge and Split Unregistered Version - http://www.simpopdf.com

Aperçu général du système de commande

Le système de commande se compose de capteurs d'admission, de contacts, d'un amplificateur automatique (micro-ordinateur), et de composants de sortie. La relation entre ces composants est décrite sur le schéma ci-dessous :

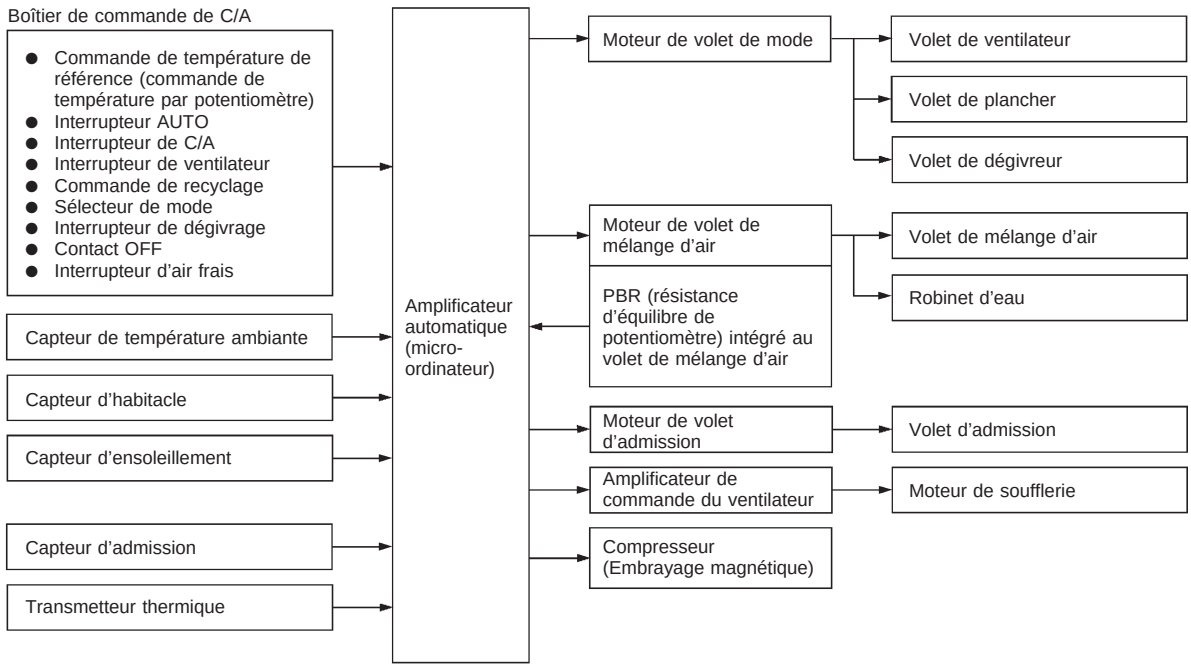

RHA467H

Fonctionnement des commandes

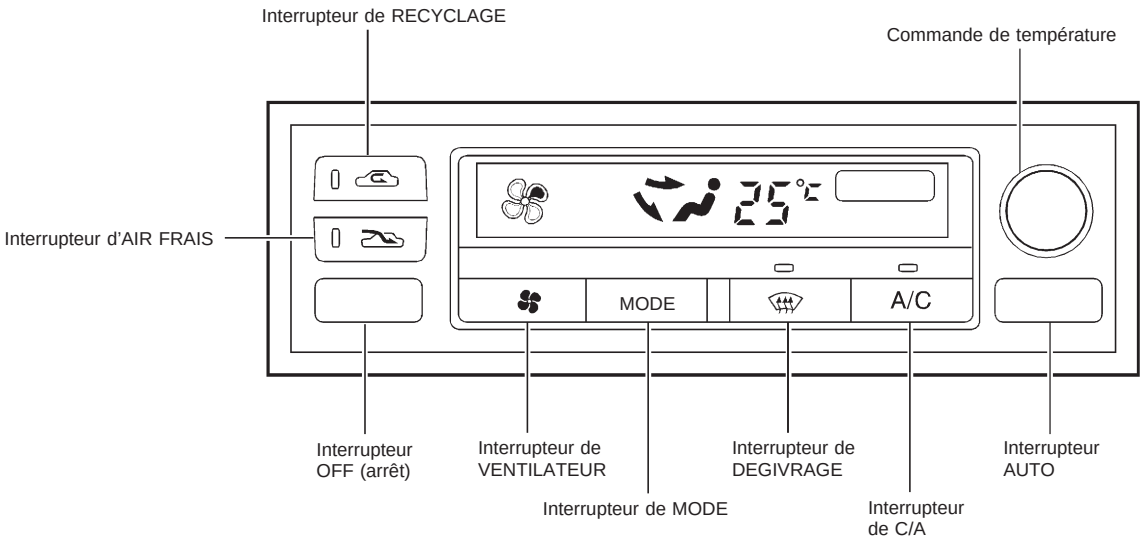

RHA468H

Simpo PDF Merge and Split Unregistered Version - http://www.simpopdf.com

Fonctionnement des commandes (suite)

Ecran d'affichage

Affiche la position de fonctionnement du système.

Interrupteur AUTO

Le compresseur, les volets d'admission, le volet de mélange d'air, les volets de sortie et la vitesse de la soufflerie sont contrôlés automatiquement afin d'atteindre et de maintenir la température de l'habitacle sur la température de référence sélectionnée par l'opérateur.

Commande de temperature (commande de température par potentiomètre)

Augmente ou réduit la température de référence.

Interrupteur OFF (arrêt)

Le compresseur et la soufflerie sont éteints, les volets d'admission sont réglés sur la position d'air de sortie et les volets de sortie d'air sont mis sur la position ''plancher'' (80% plancher et 20% dégivrage).

Interrupteur de VENTILATEUR

Commande manuelle de la vitesse de soufflerie. Quatre vitesses sont disponibles pour la commande manuelle (comme indiqué sur l'écran d'affichage) :
lent , mi-lent , mi-rapide , rapide

Interrupteur de RECYCLAGE

Position ARRET : reprise de commande automatique.
Position MARCHE : l'air intérieur circule à nouveau dans le véhicule.

Interrupteur de DEGIVRAGE

Positionne les volets de sortie d'air sur la position de dégivrage. Règle également les volets d'admission sur la position d'air extérieur.

Interrupteur de MODE

Commande les sorties de décharge d'air.

Interrupteur d'AIR FRAIS

Position ARRET : reprise de commande automatique.
Position MARCHE : l'air extérieur est aspiré à l'intérieur du compartiment passager.

Interrupteur de climatiseur (C/A)

Commande manuelle du fonctionnement du compresseur. Quand le témoin de l'interrupteur de C/A s'allume, cela signifie que le compresseur est en train de fonctionner.

Simpo PDF Merge and Split Unregistered Version - http://www.simpopdf.com

Emplacement des composants

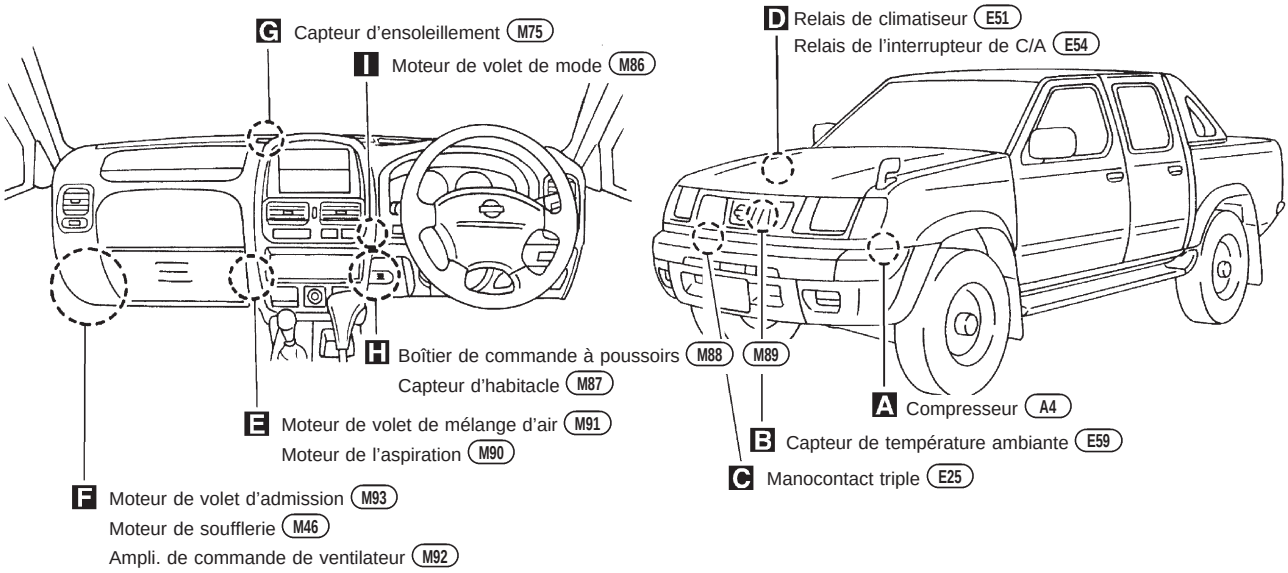

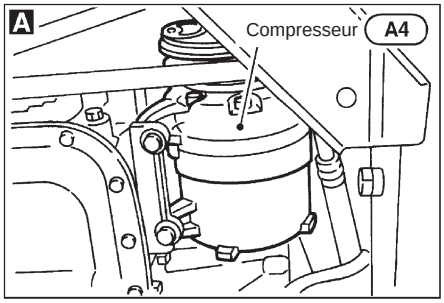

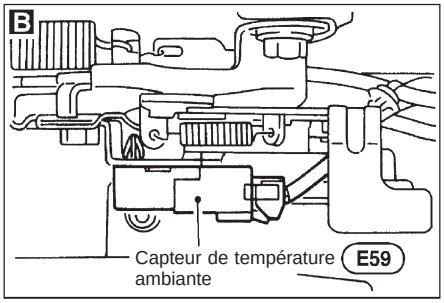

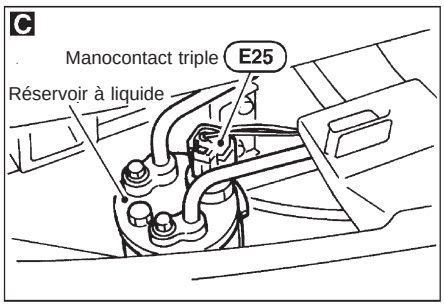

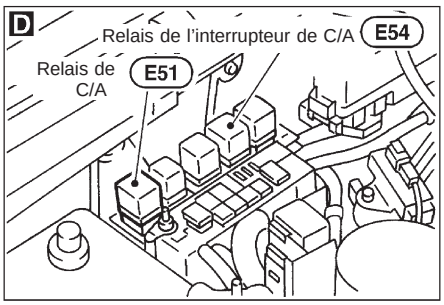

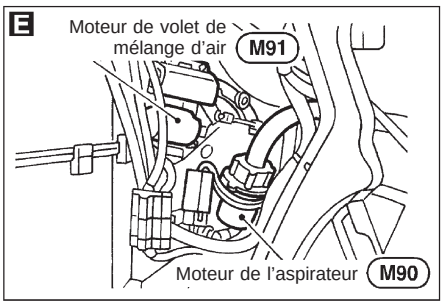

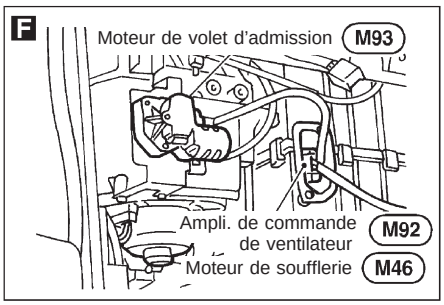

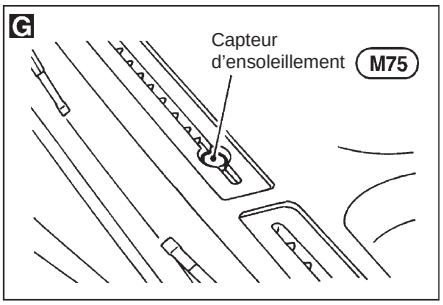

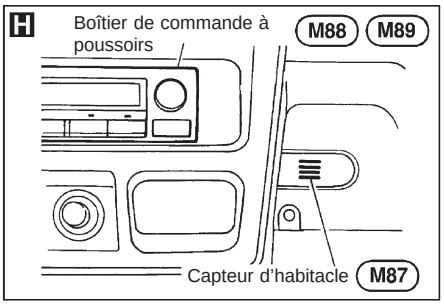

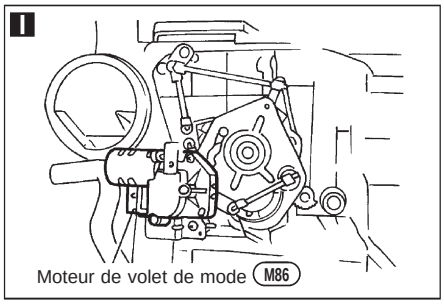

RHA469H

Simpo PDF Merge and Split Unregistered Version - http://www.simpopdf.com

Schéma du circuit

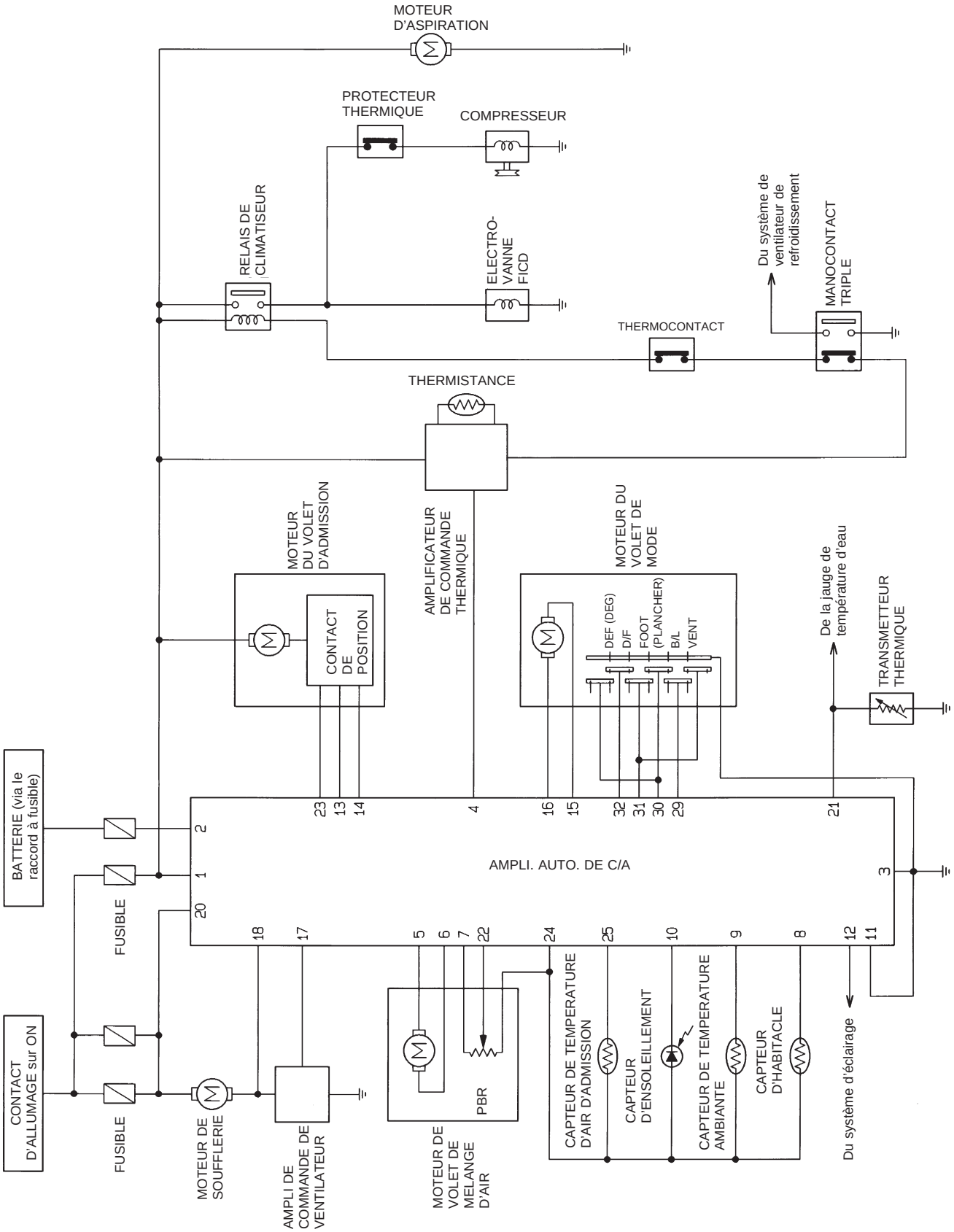

HHA187

Simpo PDF Merge and Split Unregistered Version - http://www.simpopdf.com

Schéma de câblage — A/C, A —

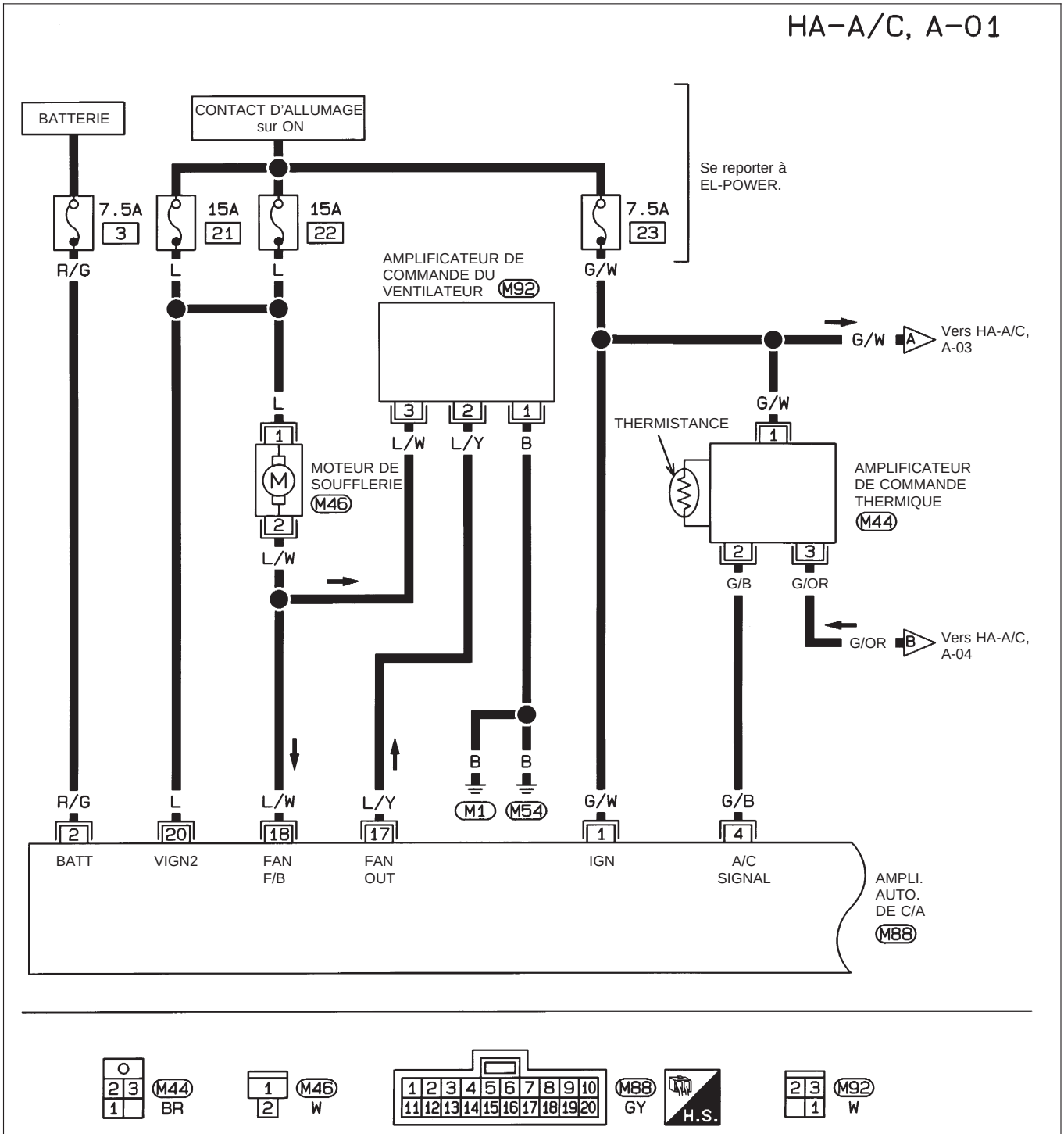

Simpo PDF Merge and Split Unregistered Version - http://www.simpopdf.com

Schéma de câblage — A/C, A — (suite)

HA-A/C, A-02

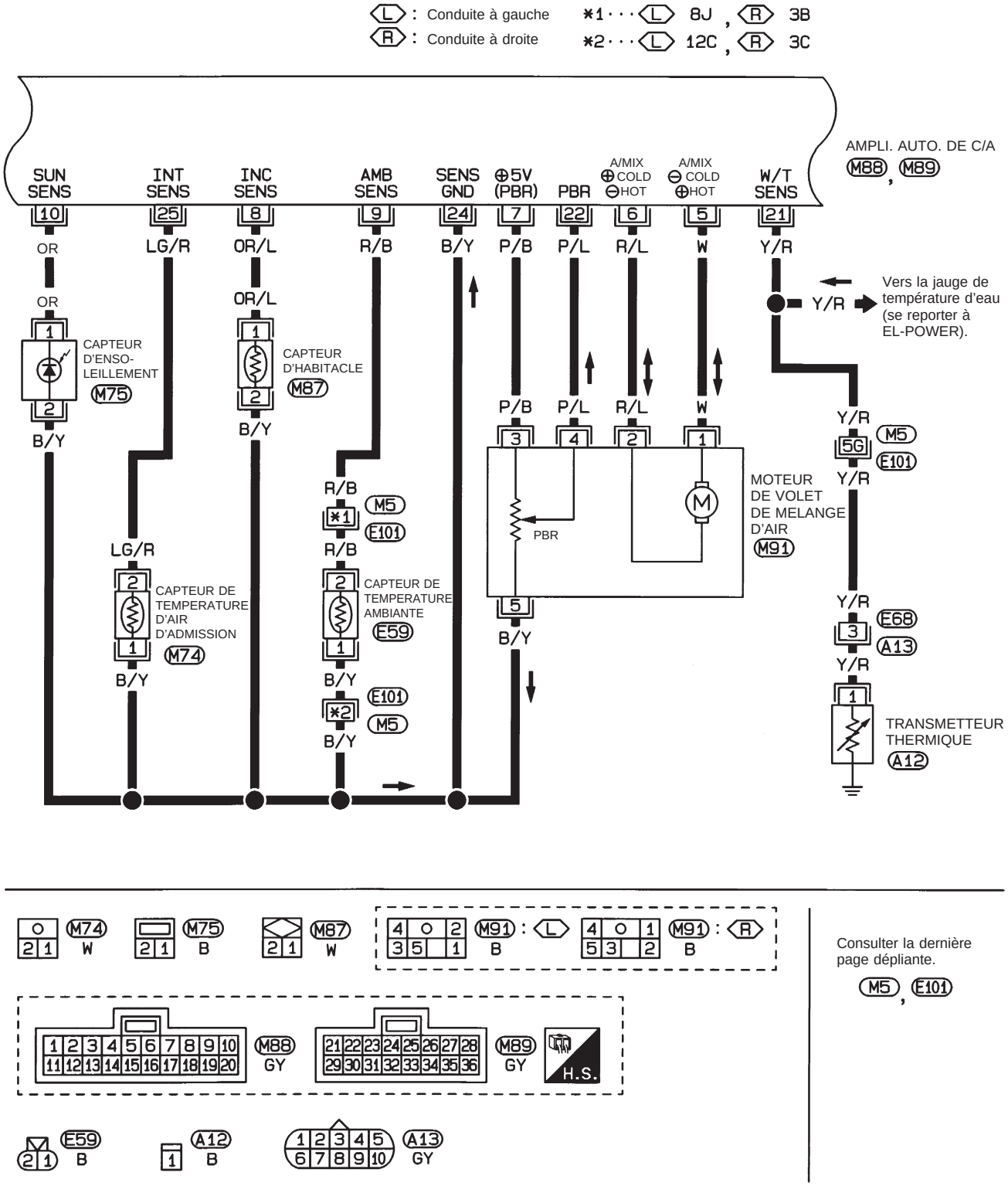

Consulter la dernière page dépliante.
M5, E101

HHA189

Simpo PDF Merge and Split Unregistered Version - http://www.simpopdf.com

Schéma de câblage — A/C, A — (suite)

HA-A/C, A-03

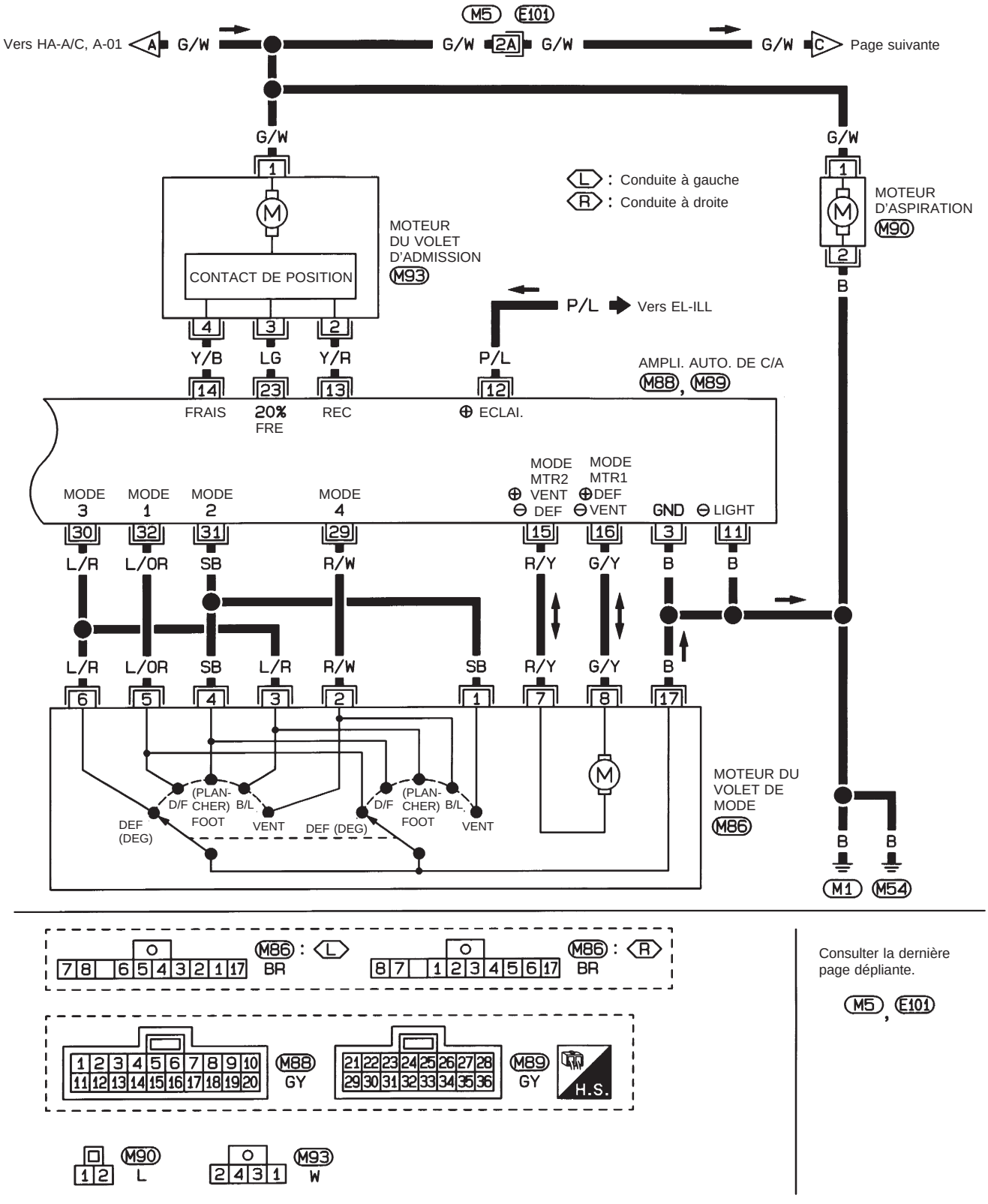

Consulter la dernière page dépliante.
M5, E101

HHA190

Simpo PDF Merge and Split Unregistered Version - http://www.simpopdf.com

Schéma de câblage — A/C, A — (suite)

HA-A/C, A-04

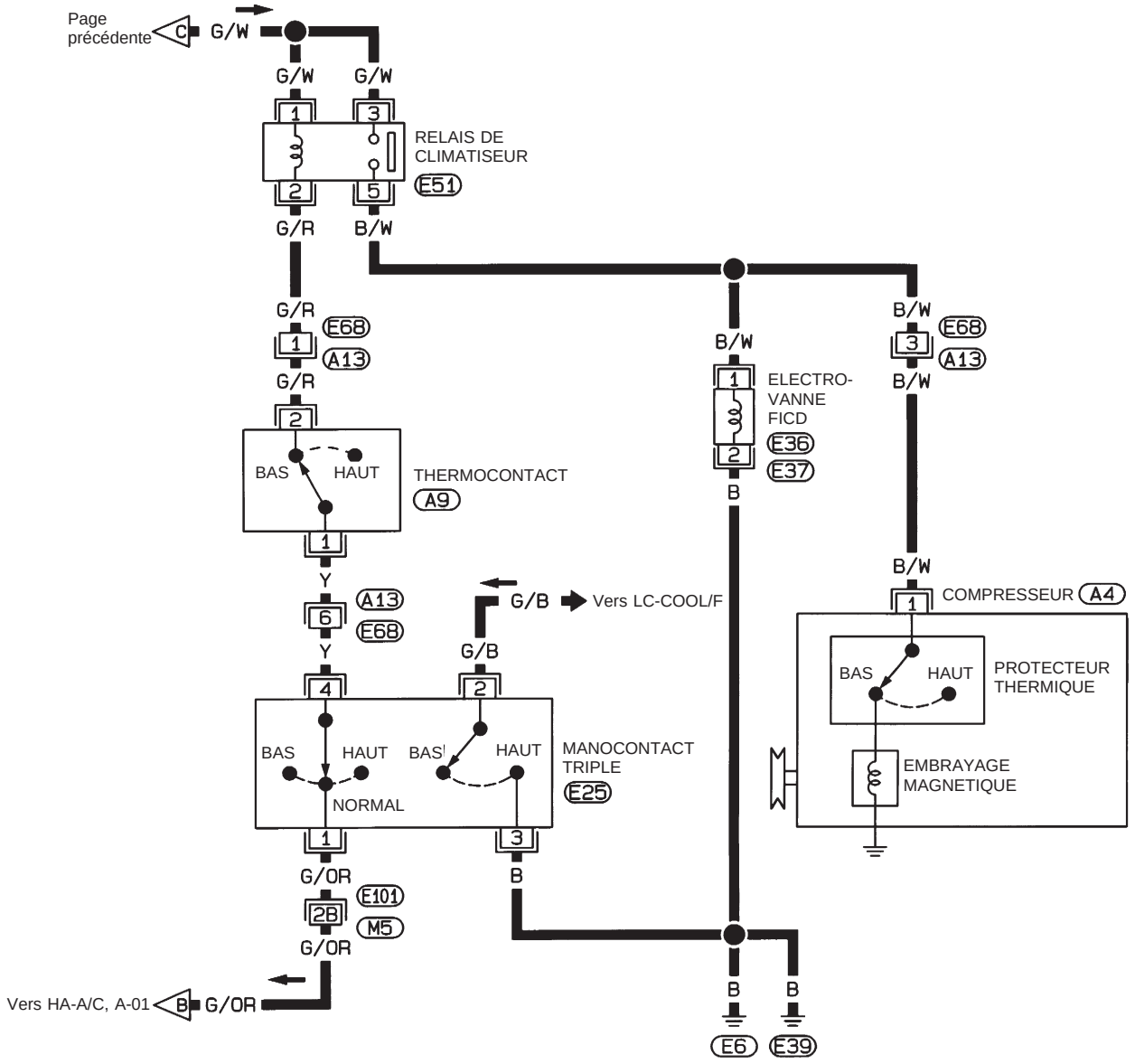





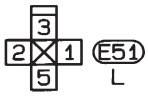





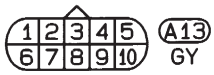

Consulter la dernière page dépliante.

M5, E101

HHA191

Simpo PDF Merge and Split Unregistered Version - http://www.simpopdf.com

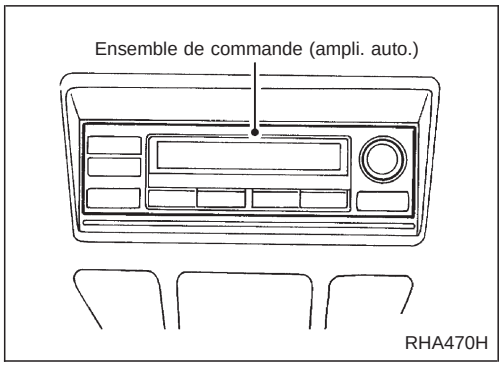

Bornes de l’amplificateur automatique et valeurs de référence

INSPECTION DE L’AMPLI. AUTO

- Mesurer la tension entre chaque borne et la masse de carrosserie en suivant le ‘‘TABLEAU D’INSPECTION DE L’AMPLI. AUTO’’.

- Disposition des bornes de connecteur à broches

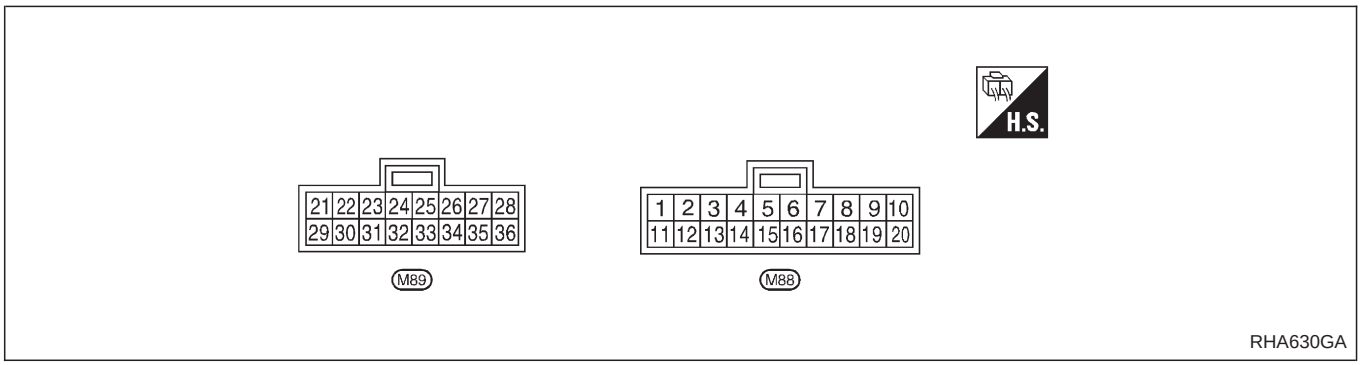

Simpo PDF Merge and Split Unregistered Version - http://www.simpopdf.com

Bornes de l'amplificateur automatique et valeurs de référence (suite)

TABLEAU D'INSPECTION DE L'AMPLI. AUTO

N° DE BORNE	ELEMENT	CONDITION			Tension V
1	Alimentation électrique pour IGN		—		Environ 12
2	Alimentation électrique pour BAT		—		Environ 12
3	Masse	—			—
4	Signal MAR. de compresseur		Compresseur	ON	Environ 0
				OFF	Environ 12
5	Alimentation électrique du moteur de volet de mélange d'air		Température de référence	32°C	Environ 12
				18°C	Environ 0
6	Alimentation électrique du moteur de volet de mélange d'air		Température de référence	32°C	Environ 0
				18°C	Environ 12
7	Alimentation électrique pour PBR				Environ 5
8	Capteur d'habitacle	—			—
9	Capteur de température ambiante	—			—
10	Capteur d'ensoleillement	—			—
11	Masse	—			—
12	Alimentation électrique pour l'éclairage		Commande d'éclairage sur ON		Environ 12
13	Contact de position de volet d'admission d'air		Recyclage		Environ 0
			Frais ou 20% frais		*
14	Contact de position de volet d'admission d'air		Frais		Environ 0
			Recyclage ou 20% frais		*
15	Alimentation électrique pour le moteur de mode		DEF → VENT		Environ 12
			VENT → DEF		Environ 0
16	Alimentation électrique pour le moteur de mode		DEF → VENT		Environ 0
			VENT → DEF		Environ 12
17	Signal de contrôle d'ampli. de commande de ventilateur		Vitesse de ventilateur	Lent, Mi-lent, Mi-rapide	Environ 2,5 - 3,0
				Rapide	Environ 9,0
18	Réaction du moteur de soufflerie		Vitesse de ventilateur	Lent	Environ 8
19	Signal ON du moteur de ventilateur de soufflerie		Ventilateur de soufflerie : ON		Environ 0
			Ventilateur de soufflerie : OFF		Environ 5
20	Alimentation électrique pour IGN		—		Environ 12
21	Transmetteur thermique	—			—
22	Signal PBR du moteur de volet de mélange d'air		Température de référence	32°C	Environ 4,5
				18°C	Environ 0,5
23	Contact de position du moteur de volet d'admission		20% frais		Environ 0
			Recyclage ou frais		*
24	Masse	—			—
25	Capteur d'admission	—			—
27	Signal ON de FICD		Compresseur ON	Température ambiante : 20,5°C ou moins	Environ 0
				Température ambiante : 23,5°C ou plus	Environ 12
29	Signal de position de moteur de volet de mode		VENT, B/L		Environ 0
			FOOT, D/F, DEF		Environ 5
30	Signal de position de moteur de volet de mode		B/L, FOOT		Environ 0
			VENT, D/F, DEF		Environ 5
31	Signal de position de moteur de volet de mode		VENT, FOOT, D/F		Environ 0
			B/L, DEF		Environ 5
32	Signal de position de moteur de volet de mode		D/F, DEF		Environ 0
			VENT, B/L, FOOT		Environ 5

* : Lorsque le moteur est en marche, environ 0V sera indiqué. Lorsque le moteur est arrêté, il existera une tension de 12V.

Simpo PDF Merge and Split Unregistered Version - http://www.simpopdf.com

Autodiagnostic

INTRODUCTION ET DESCRIPTION GENERALE

Le système d'autodiagnostic effectue un diagnostic des capteurs, des moteurs de volet, du moteur de soufflerie, etc, par ligne de système. Pour de plus amples détails, se reporter aux sections applicables (composants). Passer du contrôle normal au système d'autodiagnostic se fait en démarrant le moteur (tourner le contact d'allumage de ''OFF'' à ''ON'') et appuyer sur l'interrupteur '' OFF '' pendant au moins 5 secondes. L'interrupteur '' OFF '' doit être actionné dans les 5 secondes après avoir démarré le moteur (contact d'allumage sur ''ON''). Ce système pourra être annulé soit en appuyant sur l'interrupteur AUTO (AUTO), soit en coupant le contact d'allumage. On peut passer d'une étape à l'autre en tourant la commande de température dans le sens des aiguilles d'une montre ou dans le sens inverse des aiguilles d'une montre, selon le souhait.
En outre, pour passer de l'ETAPE 4 au mode MECANISME AUXILIAIRE, appuyer sur l'interrupteur (ventilateur).

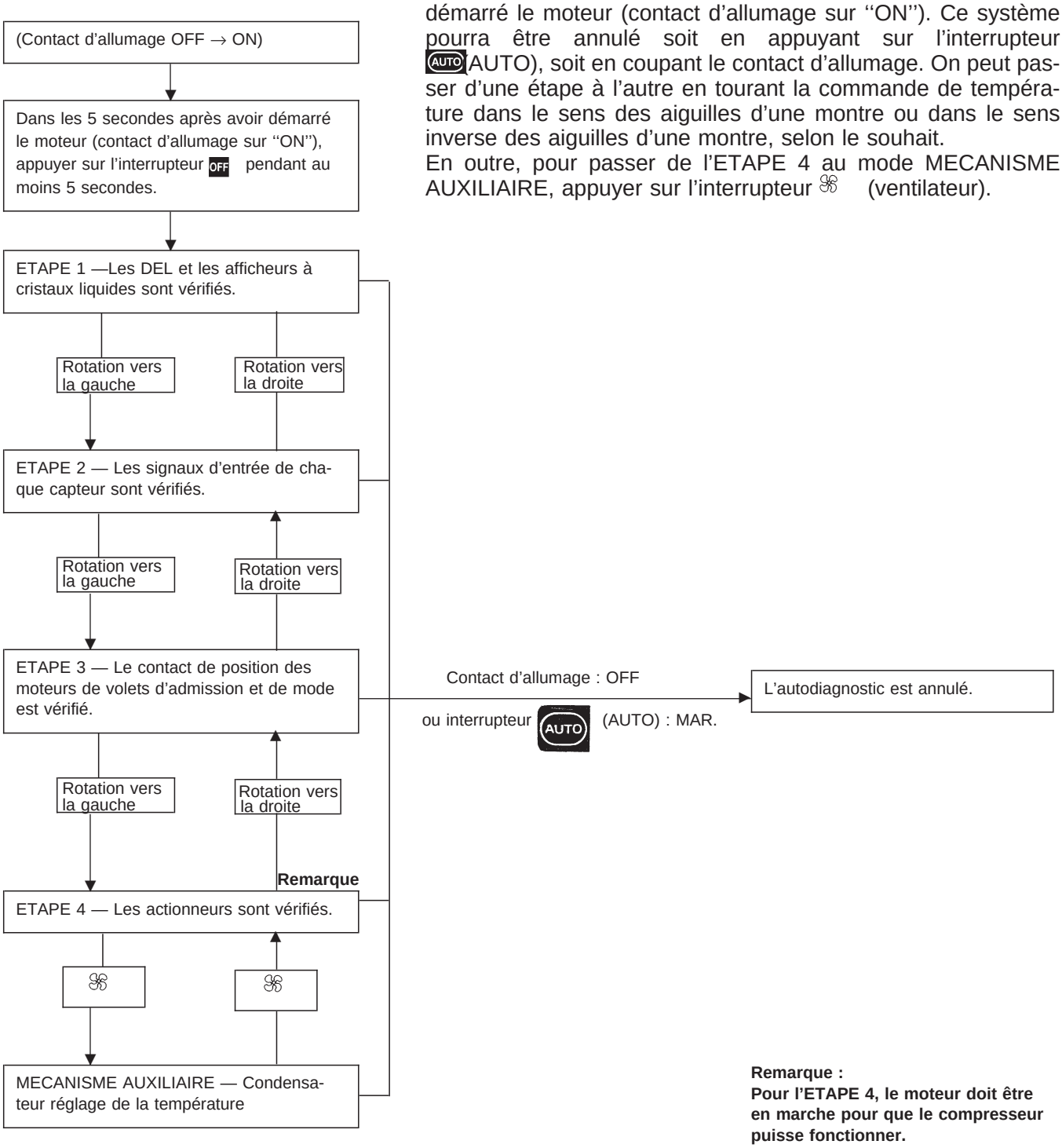

Remarque :
Pour l'ETAPE 4, le moteur doit être en marche pour que le compresseur puisse fonctionner.

Simpo PDF Merge and Split Unregistered Version - http://www.simpopdf.com

Autodiagnostic (suite)

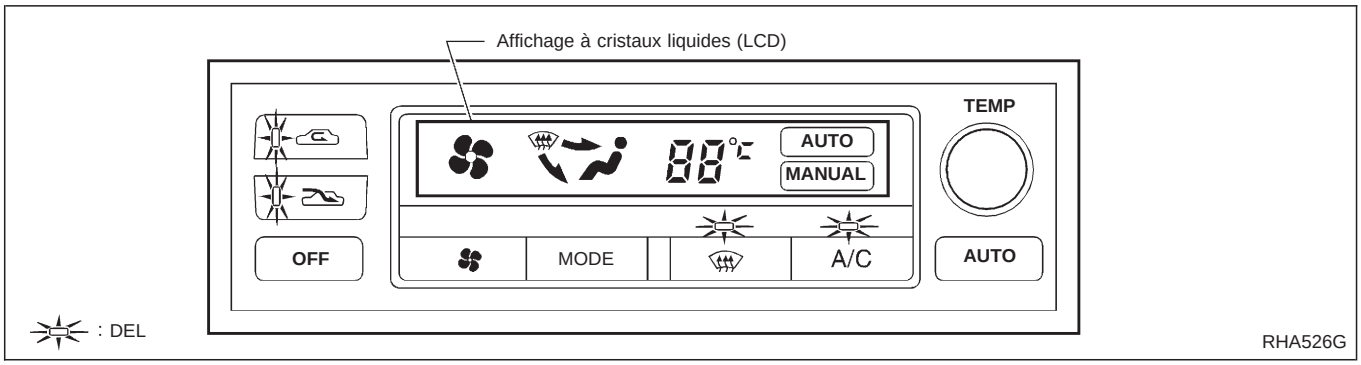

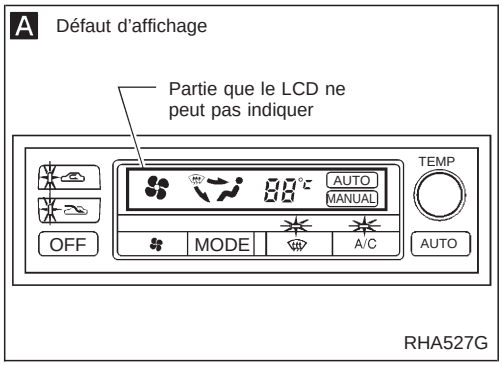

PROCEDURE ETAPE PAR ETAPE

Mettre le contact d'allumage sur ON.

↓

Passer en mode autodiagnostic. Dans les 5 secondes après avoir démarré le moteur (contact d'allumage sur "ON"), appuyer sur l'interrupteur OFF pendant au moins 5 secondes.

↓

A

ETAPE 1 - LES DEL ET LES LCD SONT VERIFIES.
Les DEL et les afficheurs à cristaux liquides s'allument-ils ?

Non → L'interrupteur OFF, DEL ou les afficheurs à cristaux liquides sont défectueux. Remplacer l'ampli. auto. (C/A).

Oui ↓

Tourner la commande de température dans le sens des aiguilles d'une montre.

↓

L'autodiagnostic passe-t-il à l'ETAPE 2 ?

Non → Commande de température défectueuse. Remplacer l'ampli. auto. (C/A).

Oui ↓

Tourner la commande de température dans le sens inverse des aiguilles d'une montre.

↓

L'autodiagnostic retourne t-il à l'ETAPE 1 ?

Non → Commande de température défectueuse. Remplacer l'ampli. auto. (C/A).

Oui ↓

Tourner la commande de température dans le sens des aiguilles d'une montre.

↓

Ⓐ
(Passer à la page suivante).

Simpo PDF Merge and Split Unregistered Version - http://www.simpopdf.com

Autodiagnostic (suite)

B Affichage (lorsque tous les capteurs sont dans le bon ordre)

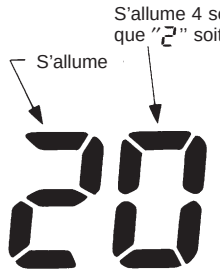

RHA970DA

Affichage (lorsque le capteur est défectueux)

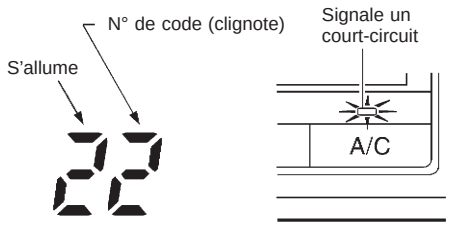

RHA528G

C

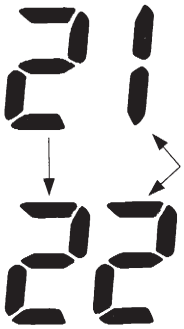

Chaque n° de code clignote deux fois.

RHA501A

Ⓐ

B

ETAPE 2 - VERIFIER SI LES CIRCUITS DE CHAQUE CAPTEUR NE SONT PAS OUVERTS OU COURT-CIRCUITES.
Le n° de code 20 apparait-il sur l'affichage ?

Non → **C**

Oui ↓

Tourner la commande de température dans le sens des aiguilles d'une montre.

Ⓑ
(Passer à la page suivante).

C

Se reporter au tableau suivant pour connaître le n° de code de défaut.
(Si deux ou plus de deux capteurs fonctionnent mal, les numéros de code correspondants clignotent chacun deux fois).

N° de code	Capteur défectueux (y compris les circuits)	Page de référence
21 / 21 A/C LED	Capteur de température ambiante	HA-2081
22 / 22 A/C LED	Capteur d'habitacle	HA-2083
25 / 25 A/C LED	Capteur d'ensoleillement*1	HA-2085
26 / 26 A/C LED	Moteur de volet de mélange d'air (PBR)	HA-2056

***1 : Effectuer l'ETAPE 2 de l'autodiagnostic au soleil.**
Si l'on effectue cette étape à l'intérieur, diriger une lumière directe (plus de 60 W) sur le capteur d'ensoleillement. Dans le cas contraire, le code n° 25 s'affichera même si le capteur d'ensoleillement fonctionne correctement.

Simpo PDF Merge and Split Unregistered Version - http://www.simpopdf.com

Autodiagnostic (suite)

D Affichage (lorsque tous les volets sont en bon état)



RHA869DC

E Affichage (lorsque un volet ne fonctionne pas)

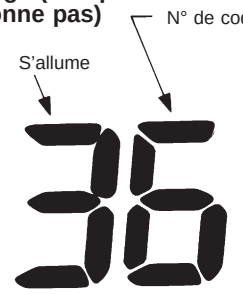

RHA168DA

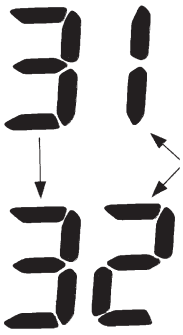

RHA498A

Ⓑ

D

ETAPE 3 - LES POSITIONS DE VOLET DE MODE SONT VERIFIES.
Le n° de code 30 apparait-il sur l'affichage ?

Non → **E**

Oui

Tourner la commande de température dans le sens des aiguilles d'une montre.

Ⓒ
(Passer à la page suivante).

E

Le contact de position du moteur de volet de mode est défectueux.
(Si deux ou plus de deux volets de mode sont hors service, les numéros de code correspondants clignotent chacun deux fois).

N° de code*1	Position du volet de mode	Page de référence
31	VENT	HA-2050
32	B/L	
34	FOOT (PLANCHER)	
35	D/F	
36	DEF (DEG)	

*1 :Si le connecteur de faisceau du moteur de volet de mode est déconnecté, la séquence suivante s'affichera.

→ 31 → 32 → 34 → 35 → 36 –

Simpo PDF Merge and Split Unregistered Version - http://www.simpopdf.com

Autodiagnostic (suite)

F

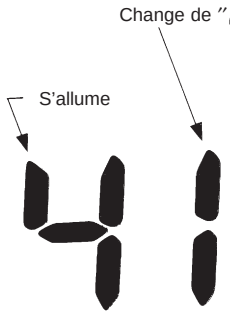

RHA495A

G

Débit d'air de décharge

Position du volet de mode	Sortie/distribution d'air		
	Visage	Plancher	Dégivreur
	100% (100%)	–	–
	60% (55%)	40% (45%)	–
	–	80% (100%)	20% (–)
	–	60% (65%)	40% (35%)
	–	–	100% (100%)

( ): Pour conduite à droite

RHA654FG

Ⓒ

F

ETAPE 4 - VERIFICATION DU FONCTIONNEMENT DE CHAQUE ACTIONNEUR.
Le moteur est en marche.
Appuyer sur l'interrupteur DEF, le n° de code de chaque test d'actionneur est indiqué sur l'affichage.

G

Se reporter au tableau suivant et confirmer le débit d'air de décharge, la température de l'air, la tension du moteur de soufflerie et le fonctionnement du compresseur.
Effectuer les contrôles visuellement et en recherchant les bruits suspects ou en touchant les sorties d'air de la main etc. afin de vérifier que le système fonctionne correctement.

N° de code	Programme d'essai des actionneurs					
	Volet de mode	Volet d'admission	Volet de mélange d'air	Moteur de soufflerie	Compresseur	FICD
41	VENT	REC	Froid maxi.	4 - 5V	ON	ON
42	B/L	REC	Froid maxi	9 - 11V	ON	ON
43	B/L	20% FRE	Chaud maxi.	7 - 9V	ON	OFF
44	FOOT (PLANCHER)	FRE	Chaud maxi.	7 - 9V	OFF	OFF
45	D/F	FRE	Chaud maxi.	7 - 9V	OFF	OFF
46	DEF (DEG)	FRE	Chaud maxi.	10 - 12 V	ON	OFF

Mauvais →
- La sortie d'air ne change pas.
  Passer à HA-2048.
- Le volet d'admission d'air ne change pas.
  Passer à HA-2059.
- La température de l'air de décharge ne change pas.
  Passer à HA-2053.
- L'embrayage magnétique ne s'enclenche pas.
  Passer à HA-2069.
- Le fonctionnement du moteur de soufflerie est défectueux.
  Passer à HA-2063.

Bon ↓

Mettre le contact d'allumage sur OFF ou l'interrupteur AUTO sur MARCHE.

FIN

Simpo PDF Merge and Split Unregistered Version - http://www.simpopdf.com

Autodiagnostic (suite)

MECANISME AUXILIAIRE : Condensateur de réglage de la température

Ce condensateur ajustable compense les différences de ±3°C entre la température de référence (affichée numériquement) et la température ressentie par le conducteur.
Le condensateur ajustable fonctionne comme suit :

- Commencer l'ETAPE 4 du mode d'autodiagnostic.
- Appuyer sur l'interrupteur (ventilateur) pour mettre le système en mode auxiliaire.
- Tourner la commande de température dans le sens des aiguilles d'une montre ou dans le sens inverse des aiguilles d'une montre, selon le souhait. La température varie de 1°C à chaque fois que l'un des interrupteurs est actionné.

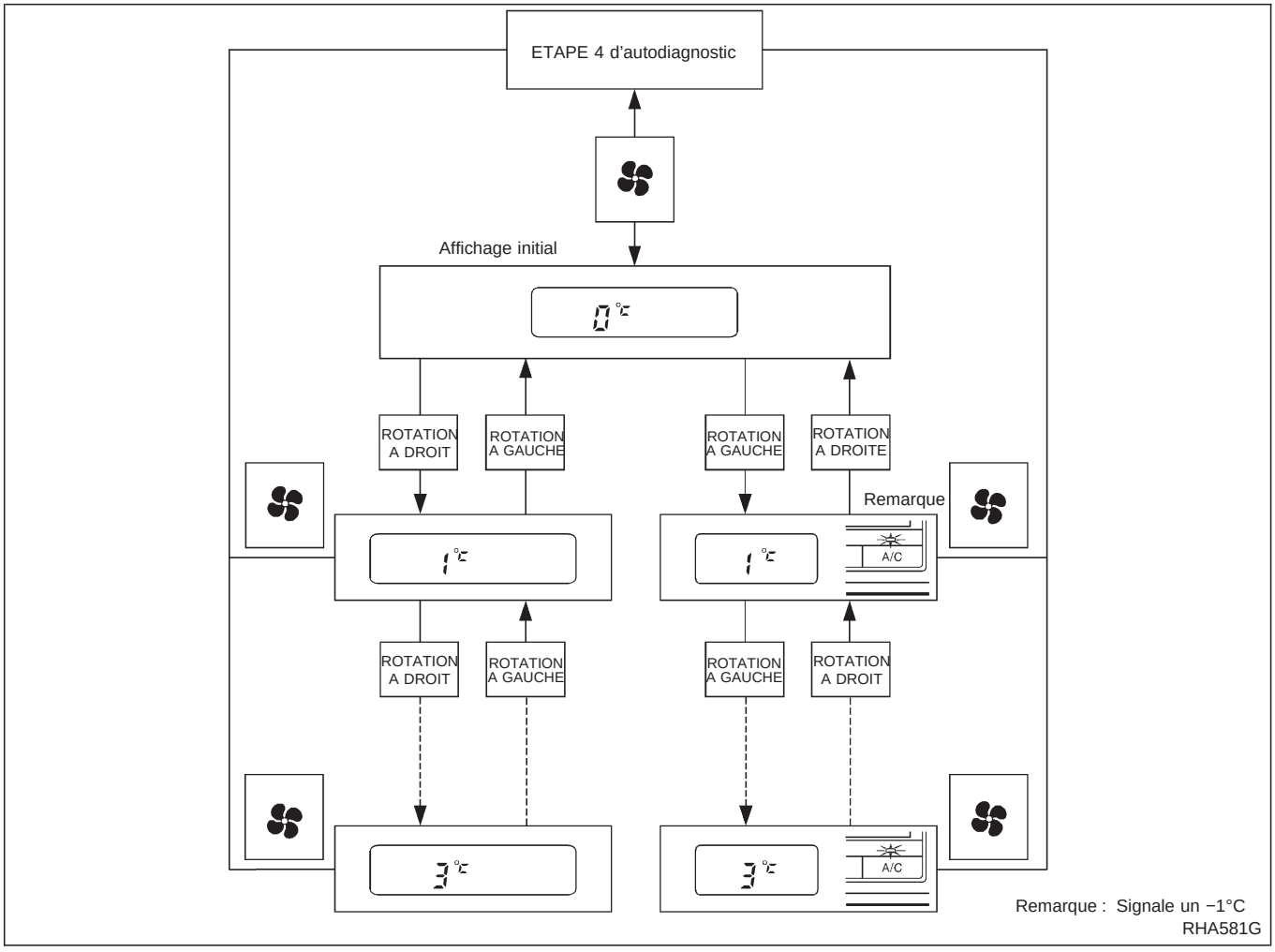

Lorsque le câble de la batterie est débranché, le fonctionnement du condensateur ajustable est annulé. La température de référence devient celle de la situation initiale, par ex. 0°C.

Simpo PDF Merge and Split Unregistered Version - http://www.simpopdf.com

Comment effectuer les diagnostics des défauts permettant une réparation rapide et efficace

MARCHE A SUIVRE

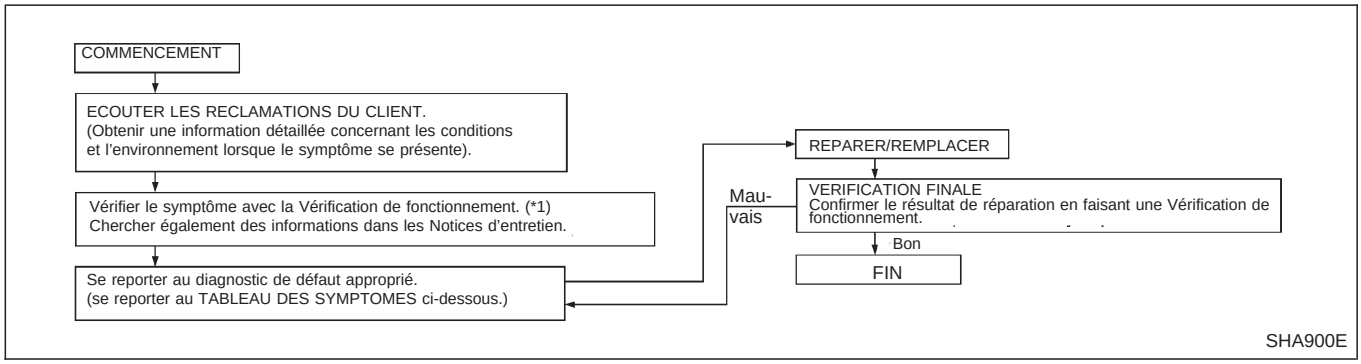

*1 : Vérification du fonctionnement (HA-2042)

TABLEAU DES SYMPTOMES

Symptôme	Page de référence	
● Le système de C/A ne s'allume pas.	● Aller à la Procédure de diagnostic de défaut concernant le système de C/A.	HA-2046
● La sortie d'air ne change pas. ● Le moteur de volet de mode ne fonctionne pas normalement.	● Aller à la Procédure de diagnostic de défaut concernant le moteur de volet de mode.	HA-2050
La température de l'air de décharge ne change pas. ● Le moteur de volet de mélange d'air ne fonctionne pas normalement.	● Aller à la Procédure de diagnostic de défaut concernant le moteur de volet de mélange d'air.	HA-2056
● Le volet d'admission ne change pas. ● Le moteur de volet d'admission ne fonctionne pas normalement.	● Aller à la Procédure de diagnostic de défaut concernant le moteur de volet d'admission.	HA-2061
● Le fonctionnement du moteur de soufflerie est défectueux. ● Le moteur de soufflerie ne fonctionne pas bien lorsqu'il est hors de commande de vitesse du ventilateur au démarrage.	● Aller à la Procédure de diagnostic de défaut concernant le moteur de soufflerie.	HA-2066
● L'embrayage magnétique ne s'enclenche pas.	● Aller à la Procédure de diagnostic de défaut concernant l'embrayage magnétique.	HA-2071
● Refroidissement insuffisant.	● Aller à la Procédure de diagnostic de défaut concernant le refroidissement insuffisant.	HA-2076
● Chauffage insuffisant.	● Aller à la Procédure de diagnostic de défaut concernant le chauffage insuffisant.	HA-2077
● Bruit.	● Aller à la Procédure de diagnostic de défaut concernant le bruit.	HA-2078
● Il n'est pas possible d'effectuer l'autodiagnostic.	● Aller à la Procédure de diagnostic de défaut concernant l'autodiagnostic.	HA-2079
● La fonction de mémoire ne fonctionne pas.	● Aller à la Procédure de diagnostic de défaut concernant la fonction de mémoire.	HA-2080

Simpo PDF Merge and Split Unregistered Version - http://www.simpopdf.com

Vérification du fonctionnement

L'objet du contrôle de fonctionnement est de confirmer que le système fonctionne correctement.

CONDITIONS

- **Moteur en marche et à température normale de fonctionnement.**

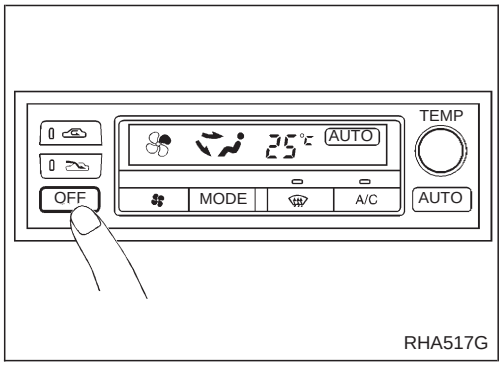

RHA517G

PROCEDURE

1. Vérifier la fonction de mémoire.

a. Régler la température à 25°C.
b. Appuyer sur l'interrupteur OFF (ARRET).
c. Mettre le contact d'allumage sur OFF.
d. Mettre le contact d'allumage sur ON.
e. Appuyer sur l'interrupteur AUTO.
f. Vérifier que la température de référence ne varie pas par rapport à la température précédente.
g. Appuyer sur l'interrupteur OFF (ARRET).

Si le résultat n'est pas satisfaisant, aller à la procédure de diagnostic de défaut qui concerne la fonction de mémoire (HA-2080).
Si le résultat est bon, poursuivre avec le contrôle suivant.

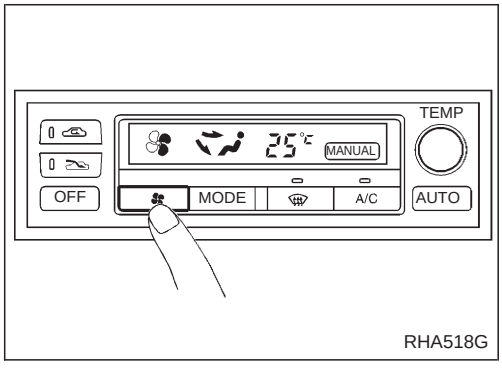

RHA518G

2. Vérifier la soufflerie.

a. Appuyer une fois sur l'interrupteur de ventilateur.
La soufflerie doit fonctionner à basse vitesse.
L'une des pales du symbole de ventilateur doit être allumée .
b. Appuyer sur l'interrupteur de ventilateur une nouvelle fois, et continuer à vérifier la vitesse de la soufflerie ainsi que le symbole du ventilateur jusqu'à ce que toutes les vitesses soient contrôlées.
c. Laisser la soufflerie sur vitesse MAXI .

Si le résultat n'est pas satisfaisant, aller à la procédure de diagnostic de défaut qui concerne le moteur de soufflerie (HA-2066).
Si le résultat est bon, poursuivre avec le contrôle suivant.

Simpo PDF Merge and Split Unregistered Version - http://www.simpopdf.com

Vérification du fonctionnement (suite)

3. Vérifier l'air de décharge

a. Appuyer à quatre reprises sur le sélecteur de mode puis sur le bouton DEF (dégivrage).

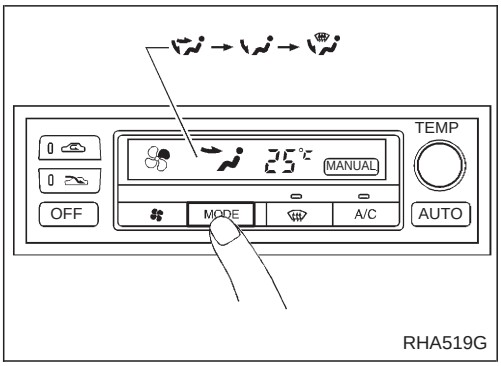

RHA519G

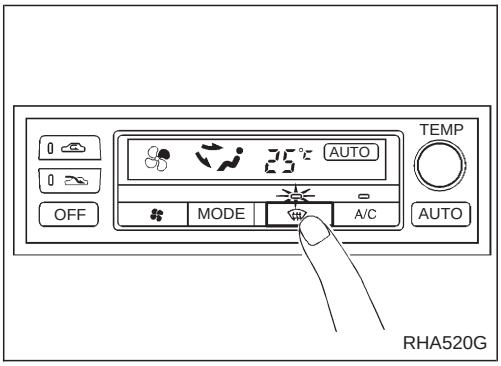

RHA520G

Débit d'air de décharge

Sélecteur de mode	Sortie/distribution d'air		
	Visage	Plancher	Dégivreur
	100% (100%)	–	–
	60% (55%)	40% (45%)	–
	–	80% (100%)	20% (–)
	–	60% (65%)	40% (35%)
	–	–	100% (100%)

( ): Pour conduite à droite

RHA654FH

b. S'assurer que l'air de décharge sort en conformité avec le tableau de distribution d'air ci-à gauche.

Se reporter à ''Débit d'air de décharge'' (HA-15 dans le Manuel de Réparation D22, n° de Publication SM8F-0D22E0E).

NOTE :

Vérifier que l'embrayage de compresseur est engagé (inspection visuelle) et que le volet d'admission est sur FRESH lorsque l'interrupteur DEF est actionné.

La position du volet d'admission d'air sera vérifiée à l'étape suivante.

Si le résultat n'est pas satisfaisant, aller à la procédure de diagnostic de défaut qui concerne le moteur de volet de mode (HA-2050).

Si le résultat est bon, poursuivre avec le contrôle suivant.

4. Vérifier le recyclage

a. Appuyer sur l'interrupteur REC .
Le voyant de recyclage doit s'allumer.

b. Etre attentif au changement de position du volet d'admission d'air (le bruit de la soufflerie doit se modifier légèrement).

Si le résultat n'est pas satisfaisant, aller à la procédure de diagnostic de défaut qui concerne le moteur de volet d'admission (HA-2061).

Si le résultat est bon, poursuivre avec le contrôle suivant.

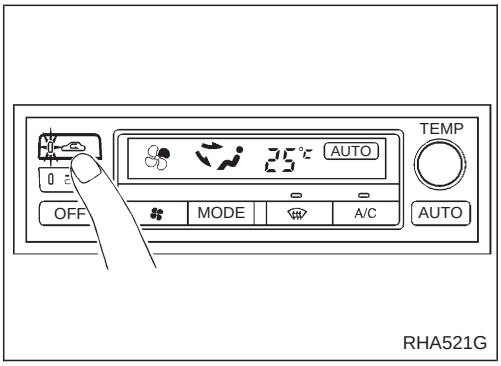

RHA521G

Simpo PDF Merge and Split Unregistered Version - http://www.simpopdf.com

Vérification du fonctionnement (suite)

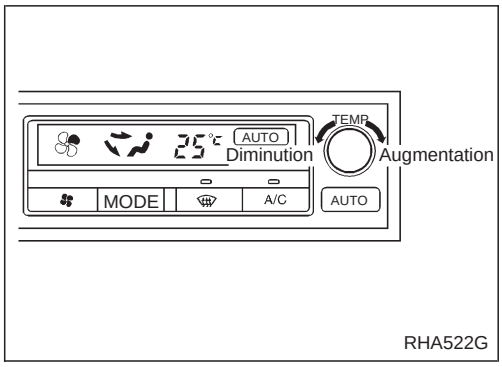

5. Vérifier la commande de température

a. Tourner la commande de température dans le sens inverse des aiguilles d'une montre jusqu'à ce que 18°C soit affiché.
b. Vérifier la présence d'air froid aux sorties d'air de décharge.

Si le résultat n'est pas satisfaisant, aller à la procédure de diagnostic de défaut qui concerne le refroidissement insuffisant (HA-2076).
Si le résultat est bon, poursuivre avec le contrôle suivant.

c. Tourner la commande de température dans le sens des aiguilles d'une montre jusqu'à ce que 32°C soit affiché.
d. Vérifier la présence d'air chaud aux sorties d'air de décharge.

Si le résultat n'est pas satisfaisant, aller à la procédure de diagnostic de défaut qui concerne le chauffage insuffisant (HA-2077).
Si le résultat est bon, poursuivre avec le contrôle suivant.

Simpo PDF Merge and Split Unregistered Version - http://www.simpopdf.com

Vérification du fonctionnement (suite)

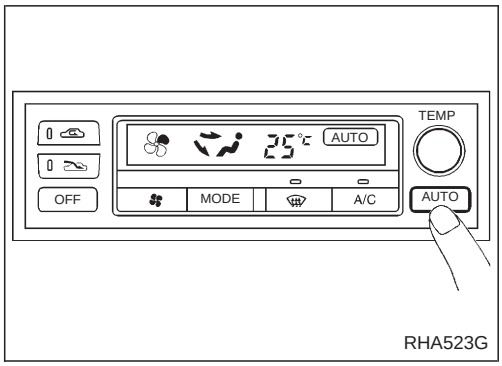

RHA523G

6. Vérifier le mode AUTO

a. Appuyer sur l'interrupteur AUTO.
b. L'affichage doit indiquer AUTO.
Vérifier que l'embrayage du compresseur s'engage (inspection auditive ou visuelle).
(L'air de décharge et la vitesse de soufflerie dépendront des températures ambiante, de l'habitacle et de référence).

Si le résultat n'est pas satisfaisant, aller à la procédure de diagnostic de défaut qui concerne le système de C/A (HA-2046).
Si le résultat est bon, poursuivre avec le contrôle suivant.
Puis si nécessaire, aller à la procédure de diagnostic de défaut qui concerne l'embrayage magnétique (HA-2069).

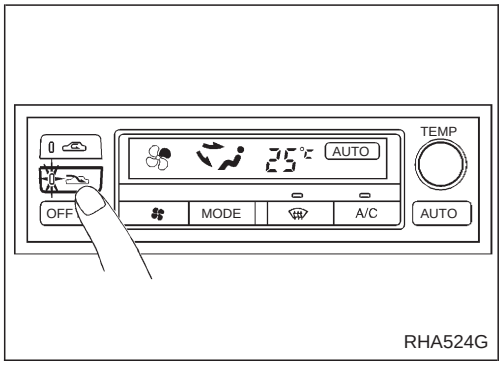

RHA524G

7. Vérifier l'interrupteur FRESH (FRAIS)

a. Appuyer sur l'interrupteur FRE.
Le voyant FRESH doit s'allumer.
b. Etre attentif au changement de position du volet d'admission d'air (le bruit de la soufflerie doit se modifier légèrement).

Si le résultat n'est pas satisfaisant, aller à la procédure de diagnostic de défaut qui concerne le moteur de volet d'admission (HA-2061).
Si le résultat est bon, poursuivre avec le contrôle suivant.

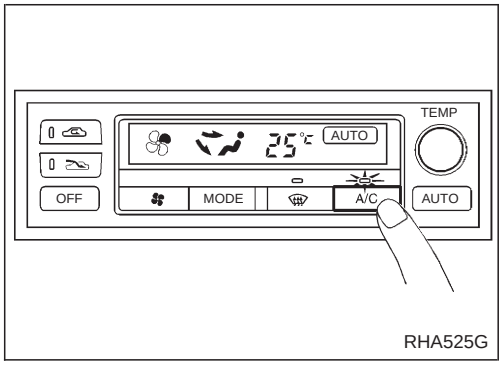

RHA525G

8. Vérifier l'interrupteur de climatisation.

a. Appuyer sur l'interrupteur C/A.
Le voyant A/C doit s'allumer.
b. Vérifier que l'embrayage du compresseur est engagé.

Si le résultat n'est pas satisfaisant, aller à la procédure de diagnostic de défaut qui concerne le système de C/A (HA-2046).
Si le résultat est bon, poursuivre avec le contrôle suivant.
Si tous les contrôles de fonctionnement sont satisfaisants (le symptôme ne peut pas être répété), aller à ''Essai de simulation des problèmes'' (section GI) et effectuer un test comme décrit dans l'environnement des conditions de conduite simulées. Si le symptôme apparaît, se reporter au ''TABLEAU DES SYMPTOMES'' (HA-2041) et effectuer les procédures de diagnostic de défaut correspondantes.

Simpo PDF Merge and Split Unregistered Version - http://www.simpopdf.com

Système C/A

PROCEDURE DE DIAGNOSTIC DE DEFAUT DU SYSTEME DE C/A

SYMPTOME :

- **Le système de C/A ne s'allume pas.**

Ordre de l'inspection

1. Confirmer la présence du symptôme en exécutant la vérification de fonctionnement suivante.

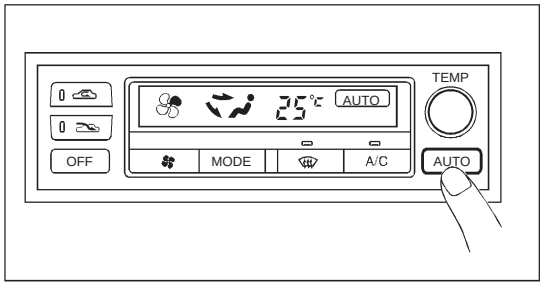

VERIFICATION DE FONCTIONNEMENT – Mode AUTO

a. Appuyer sur l'interrupteur AUTO.
b. L'affichage doit indiquer AUTO.
Vérifier que l'embrayage du compresseur s'engage (inspection auditive ou visuelle).
(L'air de décharge et la vitesse de soufflerie dépendront des températures ambiante, de l'habitacle et de la commande de température).

Si le résultat est bon (le symptôme ne peut pas être répété), effectuer une vérification complète du fonctionnement. (*2).
Si le résultat est mauvais (le symptôme est confirmé), continuer avec l'ETAPE 2 suivante.

2. Rechercher les bulletins d'entretien.
3. Vérifier l'alimentation électrique principale et le circuit de masse. (*1)
   Bon
4. Aller à la PROCEDURE DE DIAGNOSTIC du SYSTEME DE C/A (*3)
   Bon
5. Remplacer l'amplificateur automatique.

SHA354F

*1 : HA-2047 *2 :HA-2042 *3 :HA-2047

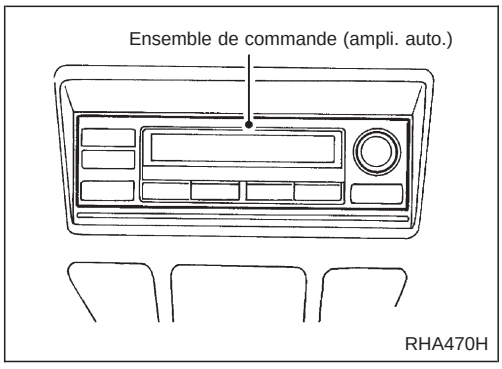

RHA470H

DESCRIPTION DES COMPOSANTS

Amplificateur automatic (Amp. auto)

L'ampli. auto. est équipé d'un micro-ordinateur qui traite les données transmises par les différents capteurs et qui sont nécessaires au bon fonctionnement de la climatisation. Le moteur de volet de mélange d'air, moteur de volet de mode, moteur de volet d'admission, moteur de soufflerie et le compresseur sont alors commandés.
L'ampli. auto. est intégré aux mécanismes de commande. Les signaux venant de plusieurs contacts et la commande de température par le potentiomètre (PTC) sont envoyés directement à l'amplificateur auto.
Les fonctions d'autodiagnostic sont également intégrées dans l'amplificateur automatique afin de permettre un contrôle rapide des pannes du système de climatisation.

Commande de temperature par potentiomètre (PTC)

Le PTC est intégré dans l'amplificateur auto. de C/A. Il peut être réglé à un intervalle de 1°C dans la gamme de température de18°C à 32°C en tournant la commande de température. La température de référence est affichée sur l'écran numérique.

Simpo PDF Merge and Split Unregistered Version - http://www.simpopdf.com

Système C/A (suite)

VERIFICATION DU CIRCUIT D'ALIMENTATION ELECTRIQUE PRINCIPALE ET DU CIRCUIT DE MASSE

Vérification du circuit de l'alimentation électrique

Vérifier le circuit d'alimentation électrique du système de climatiseur.

Se reporter à la section EL (''Schéma de câblage'', ''DISPOSITION DE L'ALIMENTATION ELECTRIQUE'').

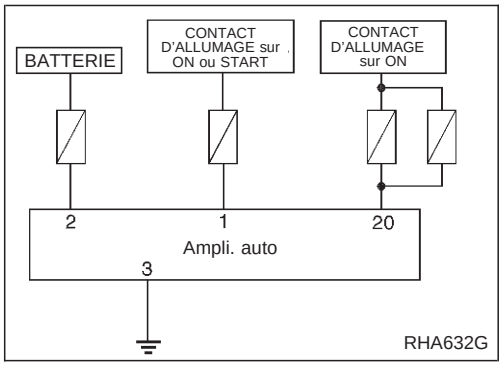

PROCEDURE DE DIAGNOSTIC

SYMPTOME : le système ne C/A ne s'allume pas.

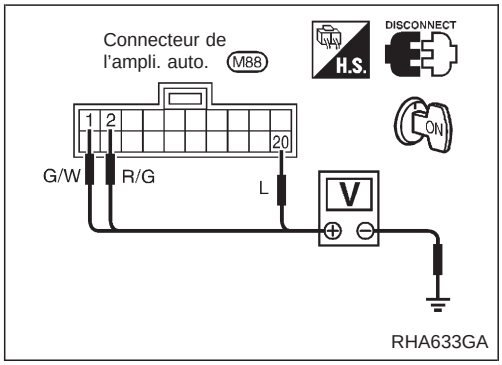

Vérification de l'amplificateur automatique

Vérifier le circuit d'alimentation électrique de l'ampli. auto., après avoir mis le contact d'allumage sur ON.

Mesurer la tension entre les bornes ①, ② et ⑳ et la masse de carrosserie.

Borne du voltmètre		Tension
⊕	⊖	
①	Masse de carrosserie	Environ 12V
②		
⑳		

Simpo PDF Merge and Split Unregistered Version - http://www.simpopdf.com

Moteur de volet de mode

PROCEDURE DE DIAGNOSTIC DE DEFAUT DU MOTEUR DE VOLET DE MODE

SYMPTOME :

- **La sortie d'air ne change pas.**
- **Le moteur de volet de mode ne fonctionne pas normalement.**

Ordre de l'inspection

1. Confirmer la présence du symptôme en exécutant la vérification de fonctionnement suivante.

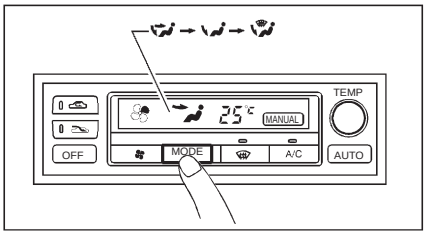

VERIFICATION DE FONCTIONNEMENT – Air de décharge

a. Appuyer à quatre reprises sur le sélecteur de mode puis sur le bouton DEF (dégivrage).
b. Chaque témoin de position doit changer de forme.

Débit d'air de décharge

Sélecteur de mode	Sortie/distribution d'air		
	Visage	Plancher	Dégivreur
	100% (100%)	–	–
	60% (55%)	40% (45%)	–
	–	80% (100%)	20% (–)
	–	60% (65%)	40% (35%)
	–	–	100% (100%)

c. S'assurer que l'air de décharge sort en conformité avec le tableau de distribution d'air ci-à gauche.
Se reporter ''Débit d'air de décharge'' (*1).

NOTE :

- **Si le résultat est bon (le symptôme ne peut pas être répété), effectuer une vérification complète du fonctionnement. (*2).**
  Si le résultat est mauvais (le symptôme est confirmé), continuer avec l'ETAPE 2 suivante.
- **Vérifier que l'embrayage de compresseur est engagé (inspection visuelle) et que le volet d'admission est sur FRESH (FRAIS) lorsque l'interrupteur DEF est actionné.**

( ): Pour conduite à droite

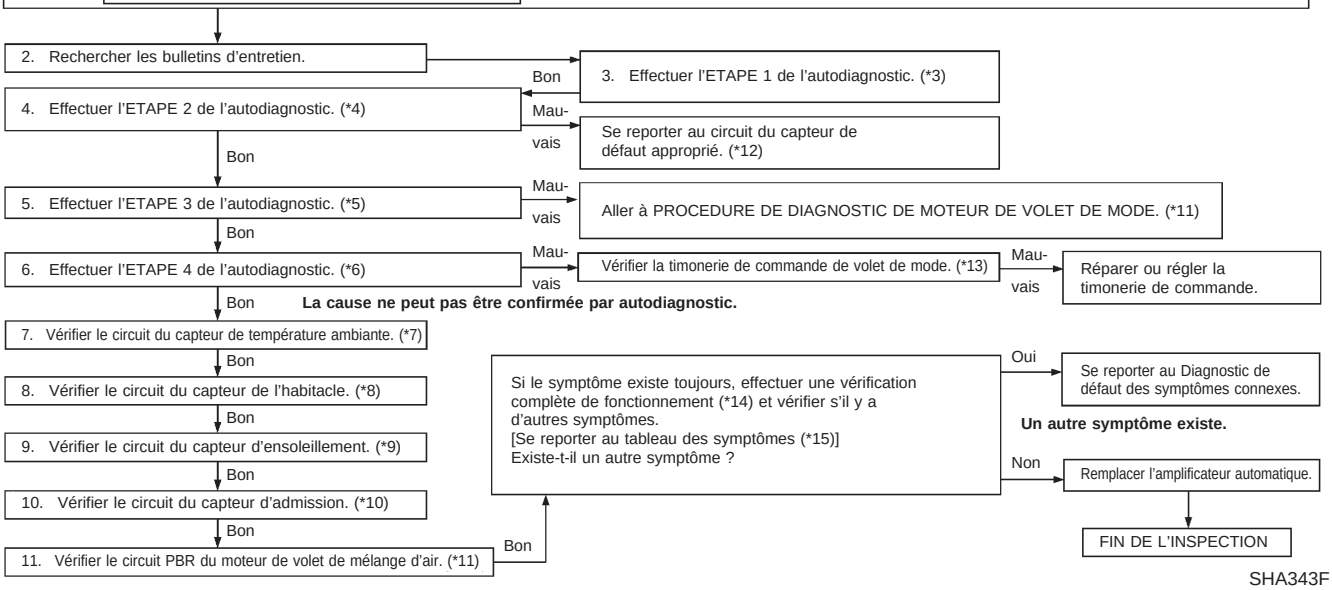

SHA343F

*1 :HA-15 dans le Manuel de Réparation D22
N° de Publication SM8F-0D22EOE
*2 : HA-2042
*3 : HA-2036
*4 : HA-2037
*5 : HA-2038
*6 : HA-2039
*7 : HA-2082
*8 : HA-2084
*9 : HA-2086
*10 : HA-2088
*11 : HA-2050
*12 : HA-2037
*13 : HA-2052
*14 : HA-2042
*15 : HA-2041

Simpo PDF Merge and Split Unregistered Version - http://www.simpopdf.com

Moteur de volet de mode (suite)

DESCRIPTION DU SYSTEME

Composants

Les composants du système de commande de volet de mode sont :

1) Amplificateur automatique
2) Moteur de volet de mode
3) Capteur d'habitacle
4) Capteur de température ambiante
5) Capteur d'ensoleillement
6) Capteur d'admission

Fonctionnement du système

L'ampli. auto. calcule les conditions de sortie de l'air en fonction de la température ambiante et de la température de l'habitacle. Les conditions de sortie calculées sont alors corrigées pour l'ensoleillement afin de déterminer la sortie d'air par laquelle l'air est déchargé dans l'habitacle.

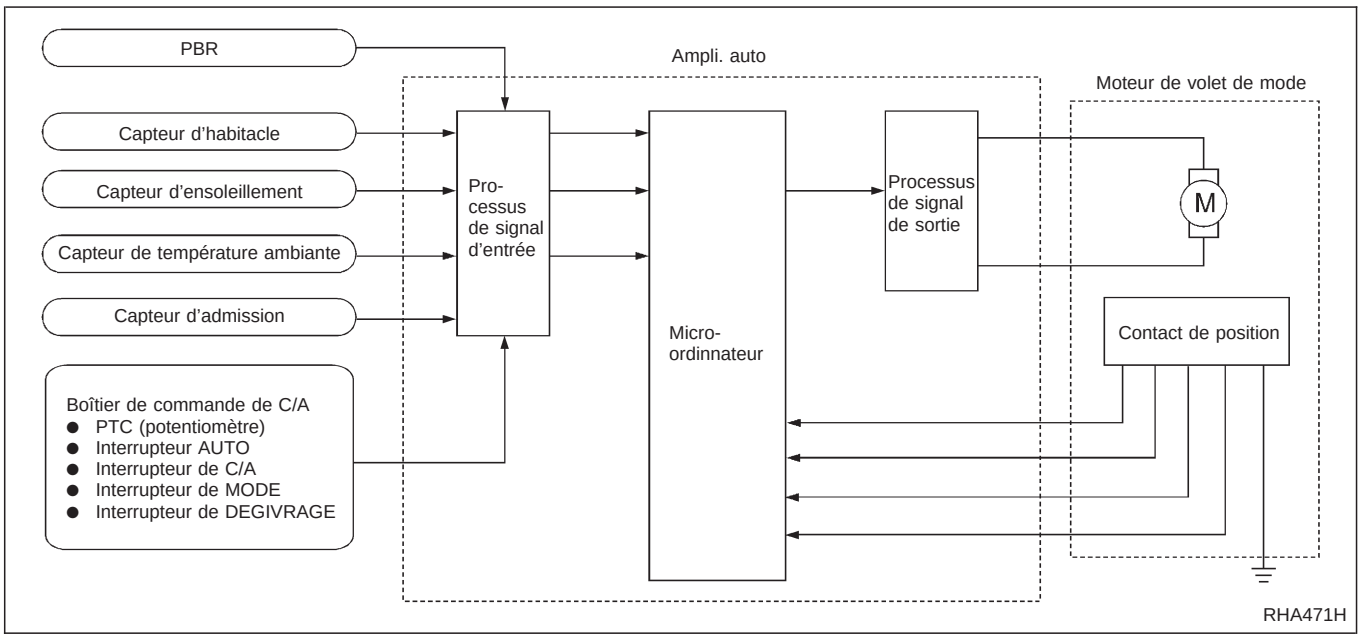

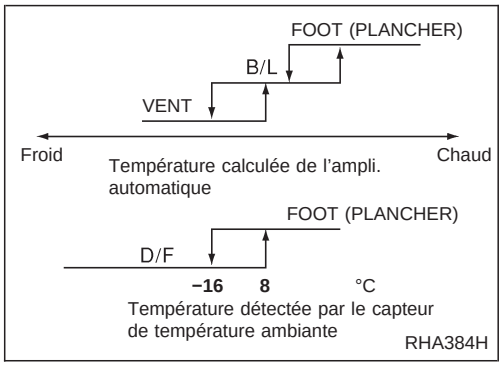

Caractéristique de la commande de volet de mode

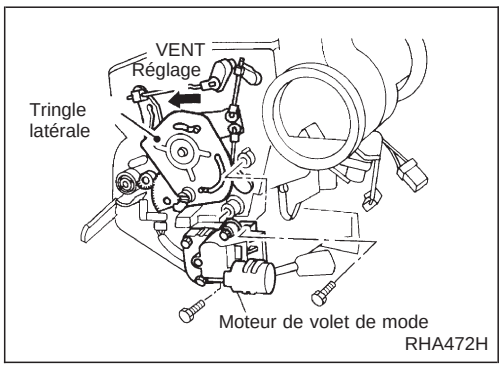

DESCRIPTION DES COMPOSANTS

Le moteur du volet de mode est fixé au dispositif de chauffage. Le moteur tourne de façon à assurer l'écoulement de l'air à travers la bouche d'air déterminée par l'amplificateur auto. La rotation du moteur est transmise à une tringle qui active le volet de mode.

Simpo PDF Merge and Split Unregistered Version - http://www.simpopdf.com

Moteur de volet de mode (suite)

PROCEDURE DE DIAGNOSTIC

SYMPTOME : le moteur de volet de mode ne fonctionne pas normalement.

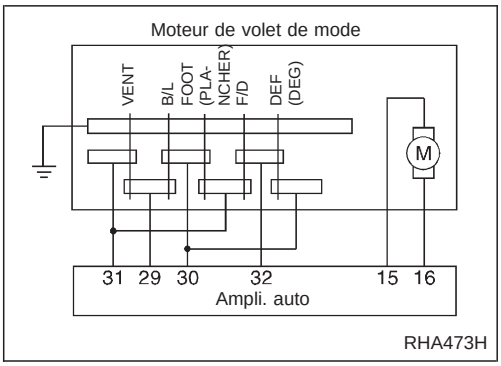

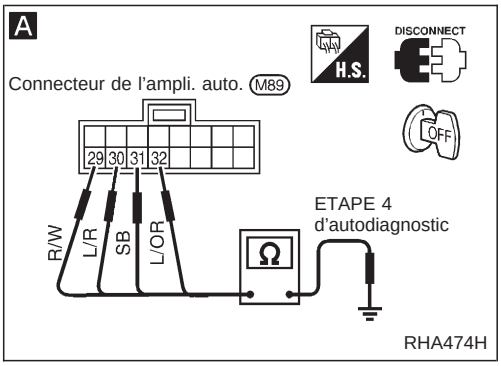

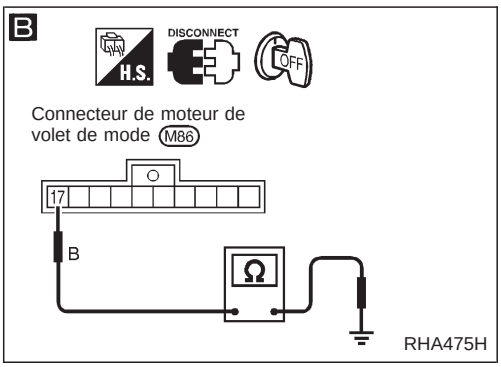

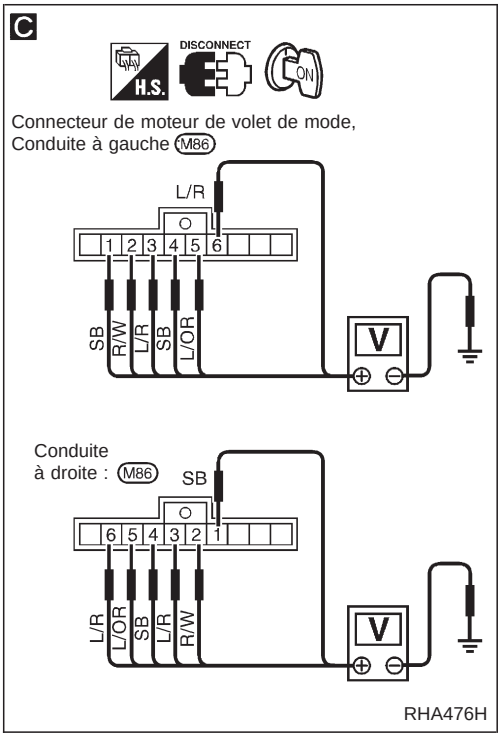

A

VERIFIER LE CONTACT DE POSITION DU MOTEUR DE VOLET DE MODE.

1. Passer au code n° 41 de l'ETAPE 4 de l'autodiagnostic.
2. Débrancher le connecteur de faisceau de l'ampli. auto après avoir mis le contact d'allumage sur "OFF".
3. Vérifier si la continuité existe entre les bornes (29), (31) du connecteur du faisceau d'ampli. automatique et la masse de carrosserie.
4. A l'aide de la procédure ci-dessus, vérifier la continuité en d'autres modes, comme indiqué dans le tableau.

N° de code	Condition	N° de borne ⊕	N° de borne ⊖	Il y a continuité
41	VENT	(29) ou (31)	Masse de carrosserie	Oui
42 ou 43	B/L	(29) ou (30)		
44	FOOT (PLANCHER)	(30) ou (31)		
45	D/F	(31) ou (32)		
46	DEF (DEG)	(30) ou (32)		

Mauvais → Débrancher le connecteur de faisceau du moteur de volet de mode.

Bon → FIN DE L'INSPECTION

B

Remarque

VERIFIER LE CIRCUIT DE MASSE DE CARROSSERIE DU MOTEUR DE VOLET DE MODE.
Y a-t-il continuité entre la borne n° (17) du faisceau du moteur de volet de mode et la masse de carrosserie ?

Oui → Reconnecter le connecteur de faisceau de l'ampli. auto.

C

VERIFIER LA SOURCE D'ALIMENTATION DU CIRCUIT DE COMMANDE DE MOTEUR DE VOLET DE MODE.
Y a-t-il une tension d'environ 5 V. entre les bornes du faisceau de moteur de volet de mode et la masse de carrosserie ?

N° de borne ⊕	N° de borne ⊖	Tension
(1)	Masse de carrosserie	Environ 5V
(2)		
(3)		
(4)		
(5)		
(6)		

Oui → Reconnecter le connecteur de faisceau du moteur de volet de mode.

Non → (B)

(A) (Passer à la page suivante).

Remarque :
Si le résultat est mauvais ou "Non" après la vérification de la continuité du circuit, réparer le faisceau ou le connecteur.

Simpo PDF Merge and Split Unregistered Version - http://www.simpopdf.com

Moteur de volet de mode (suite)

D

Connecteur de l'ampli. auto. (M89)

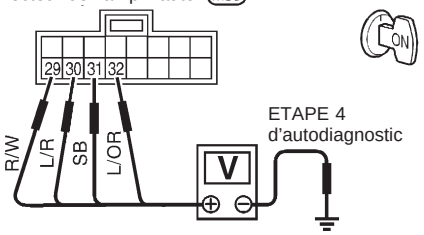

RHA477H

E



Connecteur de moteur de volet de mode avec conduite à gauche : (M86)

Connecteur de l'ampli. auto. (M89)

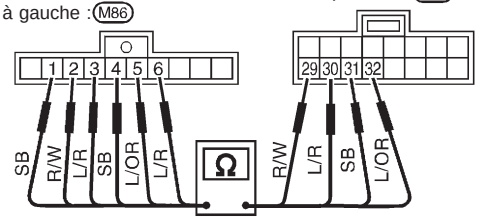

Connecteur de moteur de volet de mode avec conduite à droite : (M86)

Connecteur de l'ampli. auto. (M89)

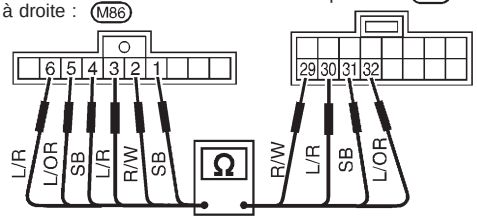

RHA478H

F



ETAPE 4
d'autodiagnostic

Connecteur de l'ampli. auto. (M88)

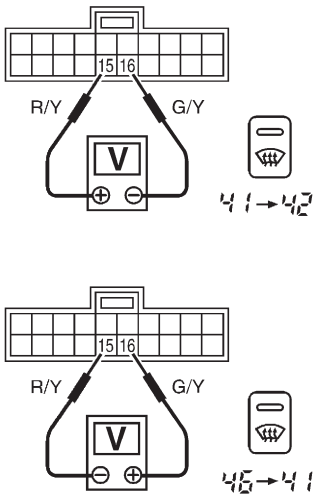

RHA479H

Ⓐ

D

VERIFIER LE CONTACT DE POSITION DU MOTEUR DE VOLET DE MODE.
Régler sur l'ETAPE 4 de l'autodiagnostic.
Mesurer la tension à travers les bornes de faisceau de l'ampli. auto et la masse de carrosserie.

N° de code	Condition	N° de borne ⊕				N° de borne ⊖
		(29)	(30)	(31)	(32)	
41	VENT	0V	5V	0V	5V	Masse de carrosserie
43 ou 42	B/L	0V	0V	5V	5V	
44	FOOT (PLANCHER)	5V	0V	0V	5V	
45	D/F	5V	5V	0V	0V	
46	DEF (DEG)	5V	0V	5V	0V	

0V : Environ 0V
5V : Environ 5V

Bon

Mauvais

Remplacer le moteur de volet de mode.

F

VERIFIER LA SORTIE DE L'AMPLIFICATEUR AUTOMATIQUE.
Y a-t-il une tension d'environ 10,5 V entre les bornes (15) et (16) du faisceau de l'ampli. auto. lorsque le n° de code est passé de "41" à "42" ou si le n° de code est passé de "46" à "41"?

N° de code	Fonctionnement du moteur de volet de mode	N° de borne (15)	N° de borne (16)	Tension V
41→42	VENT → B/L	⊕	⊖	Environ 10,5
46→41	DEF → VENT	⊖	⊕	
–	Arrêt	–	–	0

Non → Remplacer l'amplificateur automatique.

Oui

Remplacer le moteur de volet de mode.

Ⓑ

E

Remarque

Vérifier la continuité du circuit entre chaque borne de l'ampli. auto. et du moteur de volet de mode.

N° de borne ⊕	N° de borne ⊖	Il y a continuité
Ampli. auto	Moteur de volet de mode	
(29)	(2)	Oui
(30)	(3) ou (6)	
(31)	(1) ou (4)	
(32)	(5)	

Si le résultat est bon, vérifier si le faisceau n'est pas court-circuité.

Bon

Remplacer l'amplificateur automatique.

Remarque :
Si le résultat est mauvais ou "Non" après la vérification de la continuité du circuit, réparer le faisceau ou le connecteur.

Simpo PDF Merge and Split Unregistered Version - http://www.simpopdf.com

Moteur de volet de mode (suite)

INSPECTION DES COMPOSANTS

Moteur de volet de mode

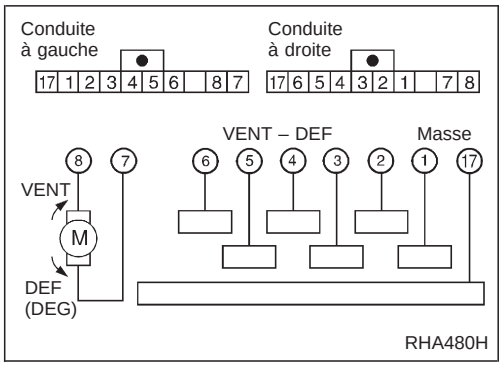

N° de borne		Fonctionnement du volet de mode	Sens de rotation de la tringle latérale
⑧	⑦		
⊕	⊖	VENT → DEF	Sens inverse des aiguilles d'une montre
–	–	ARRET	ARRET
⊖	⊕	DEF → VENT	Sens des aiguilles d'une montre

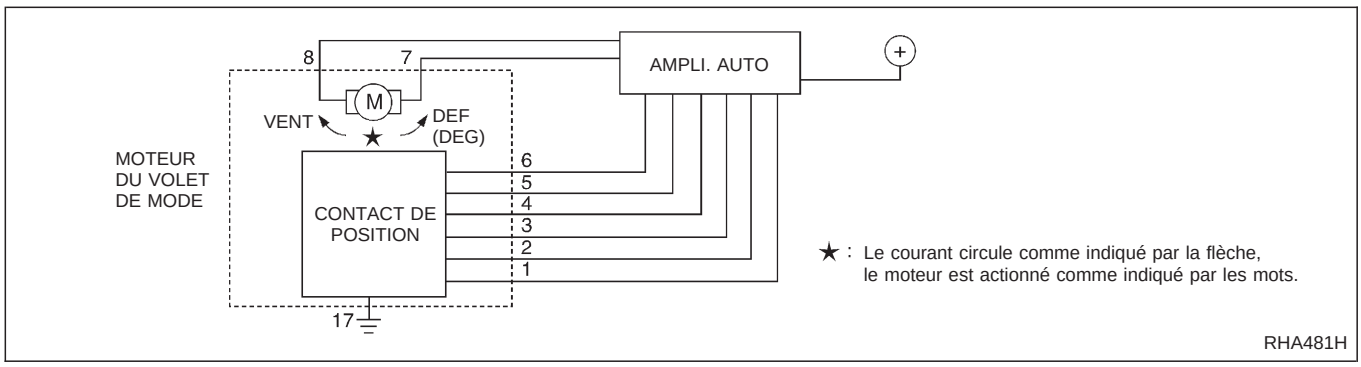

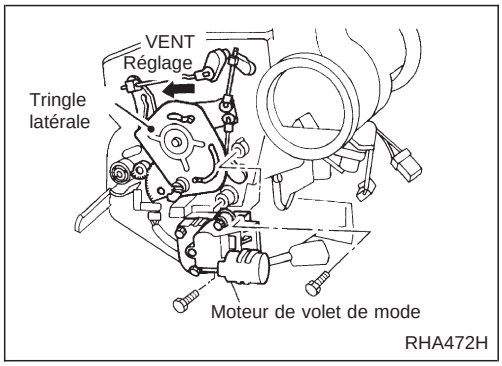

REGLAGE DE LA TIMONERIE DE COMMANDE

Volet de mode

1. Reposer le moteur de volet de mode sur l'unité de chauffage et le connecter sur le faisceau principal.
2. Passer au code n° 46 de l'ETAPE 4 de l'autodiagnostic. Se reporter à la page HA-2039.
3. Déplacer manuellement la tringle latérale et maintenir le volet de mode en mode DEF.
4. S'assurer que le volet de mode fonctionne correctement lorsqu'on passe du code N° 41 au code N° 46 en actionnant l'interrupteur DEF.

41	42	43	44	45	46
VENT	B/L	B/L	FOOT (PLANCHER)	D/F	DEF (DEG)

Simpo PDF Merge and Split Unregistered Version - http://www.simpopdf.com

Moteur de volet de mélange d'air

PROCEDURE DE DIAGNOSTIC DE DEFAUT DU VOLET DE MELANGE D'AIR

SYMPTOME :

- **La température de l'air de décharge ne change pas.**
- **Le moteur de volet de mélange d'air ne fonctionne pas.**

Ordre de l'inspection

1. Confirmer la présence du symptôme en exécutant la vérification de fonctionnement suivante.

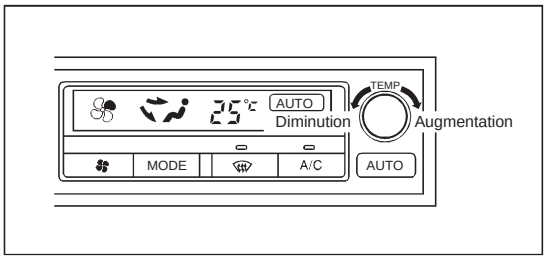

VERIFICATION DE FONCTIONNEMENT

Augmentation de la température

a. Tourner la commande de hausse de température jusqu'à ce que 32°C soit affiché.
b. Vérifier la présence d'air chaud aux sorties d'air de décharge.

Diminution de la température

a. Tourner le bouton de commande de baisse de température jusqu'à ce que 18°C soit affiché.
b. Vérifier la présence d'air froid aux sorties d'air de décharge.

Si le résultat est bon (le symptôme ne peut pas être répété), effectuer une vérification complète du fonctionnement. (*12).
Si le résultat est mauvais (le symptôme est confirmé), continuer avec l'ETAPE 2 suivante.

2. Rechercher les bulletins d'entretien.
3. Effectuer l'ETAPE 1 de l'autodiagnostic. (*1)
   - Bon
4. Effectuer l'ETAPE 2 de l'autodiagnostic. (*2)
   - Mauvais → Se reporter au circuit du capteur de défaut approprié. (*2)
   - Bon
5. Effectuer l'ETAPE 4 de l'autodiagnostic. (*3)
   - Bon **La cause ne peut pas être confirmée par autodiagnostic.**
   - Mauvais → Vérifier la timonerie du volet de mélange d'air. (*11)
     - Bon → Aller à la PROCEDURE DE DIAGNOSTIC DU MOTEUR DE VOLET DE MELANGE D'AIR. (*10)
     - Mauvais → Réparer ou régler la timonerie de commande. (*11)
6. Vérifier le circuit du capteur de température ambiante. (*4)
   - Bon
7. Vérifier le circuit du capteur de l'habitacle. (*5)
   - Bon
8. Vérifier le circuit du capteur d'ensoleillement. (*5)
   - Bon
9. Vérifier le circuit du capteur d'admission. (*6)
   - Bon
10. Vérifier le circuit PBR du moteur de volet de mélange d'air. (*8)

Si le symptôme existe toujours, effectuer une vérification complète de fonctionnement (*12) et vérifier s'il y a d'autres symptômes. [Se reporter au tableau de symptômes, (*9)] Existe-t-il un autre symptôme ?

- Oui → Se reporter au Diagnostic de défaut de symptômes connexes.
  Un autre symptôme existe.
- Non → Remplacer l'amplificateur automatique. → FIN DE L'INSPECTION

SHA338F

*1 : HA-2036
*2 : HA-2037
*3 : HA-2039
*4 : HA-2082
*5 : HA-2084
*6 : HA-2086
*7 : HA-2088
*8 : HA-2056
*9 : HA-2041
*10 : HA-2056
*11 : HA-2058
*12 : HA-2042

Simpo PDF Merge and Split Unregistered Version - http://www.simpopdf.com

Moteur de volet de mélange d'air (suite)

DESCRIPTION DU SYSTEME

Composants

Les composants du système de commande du volet de mélange d'air sont :
1) Amplificateur automatique
2) Moteur de volet de mélange d'air (PBR)
3) Capteur d'habitacle
4) Capteur de température ambiante
5) Capteur d'ensoleillement
6) Capteur d'admission

Fonctionnement du système

La température de référence par la commande de température par potentiomètre (PTC) est compensée par le circuit de correction de température de façon à déterminer une température de référence.
L'ampli. auto actionnera le moteur de volet de mélange d'air et règle le système de climatisation d'air à la position HOT ou COLD, selon la relation entre les conditions (température ciblée, charge solaire, température d'habitacle et température ambiante) et les conditions (position du volet de mélange d'air et température d'air d'admission).
Lorsque la température souhaitée est réglée à 18°C ou 32°C, la position d'ouverture du volet de mélange d'air reste en position de froid maxi. ou de chaud maxi.

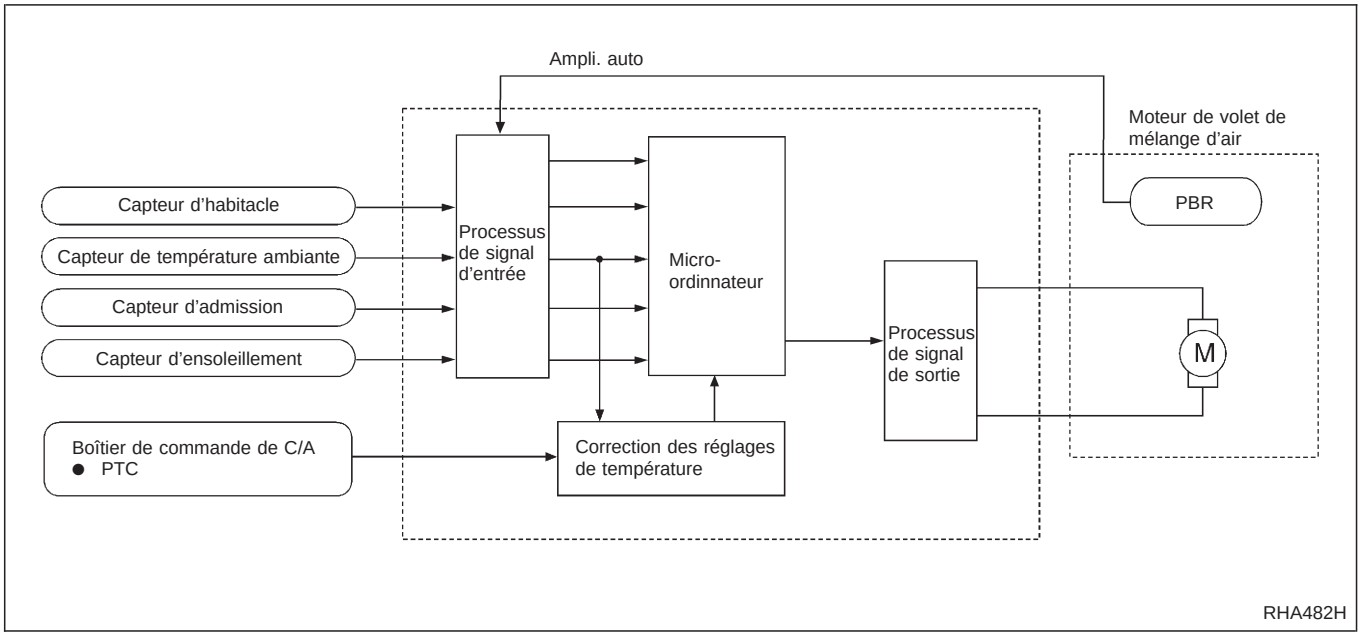

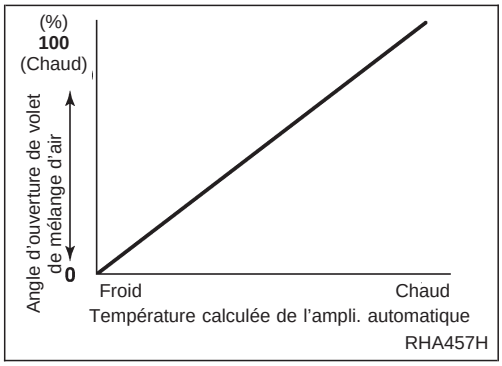

Caractéristique de la commande de volet de mélange d'air

Simpo PDF Merge and Split Unregistered Version - http://www.simpopdf.com

Moteur de volet de mélange d’air (suite)

DESCRIPTION DES COMPOSANTS

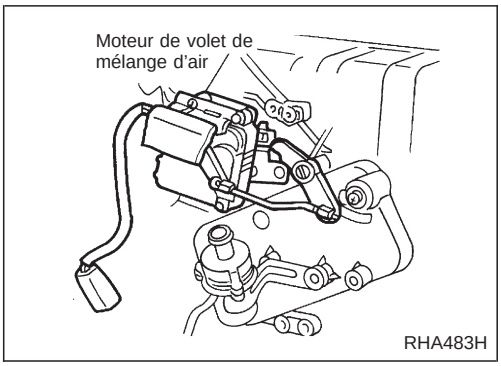

Le moteur de volet de mélange d’air est attaché au dispositif de chauffage. La rotation permet au volet de mélange d’air de s’ouvrir ou de se fermer à la position déterminée par l’amplificateur auto. La rotation du moteur est alors transmise via un arbre et la position du volet de mélange d’air est alors transmise en retour à l’amplificateur auto. via le PBR intégré au moteur du volet de mélange d’air PBR.

Simpo PDF Merge and Split Unregistered Version - http://www.simpopdf.com

Moteur de volet de mélange d'air (suite)

PROCEDURE DE DIAGNOSTIC

SYMPTOME : le moteur de volet de mélange d'air ne fonctionne pas normalement.

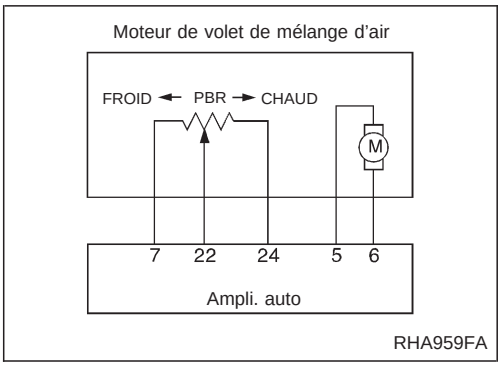

EST-CE QUE LE PBR FONCTIONNE NORMALEMENT ?
Se reporter à ETAPE 2 de l'autodiagnostic.

Non → Ⓐ (Passer à la page suivante).

Oui ↓

A

VERIFIER LA SORTIE DE L'AMPLIFICATEUR AUTOMATIQUE.
Régler sur l'ETAPE 4 de l'autodiagnostic.
Y a-t-il une tension d'environ 10,5 V entre les bornes ① et ② du faisceau du moteur de volet de mélange d'air lorsque le n° de code est passé de "42" à "43" ou de "46" à "41" ?

N° de code	Fonctionnement du volet de mélange d'air	N° de borne ①	N° de borne ②	Tension V
42 → 43	Froid → Chaud	⊕	⊖	Environ 10,5
46 → 41	Chaud → Froid	⊖	⊕	
–	Arrêt.	–	–	0

Non → Débrancher les connecteurs de faisceau de l'ampli. auto et du moteur de volet de mélange d'air.

B

Remarque
Vérifier la continuité du circuit entre la borne n° ⑤ (⑥) du faisceau de l'ampli. auto et la borne n° ① (②) du faisceau de moteur de volet de mélange d'air.
Il doit y avoir continuité.
Si le résultat est bon, vérifier si le faisceau n'est pas court-circuité.

Bon ↓

Remplacer l'amplificateur automatique.

Oui ↓

Remplacer le moteur de volet de mélange d'air.

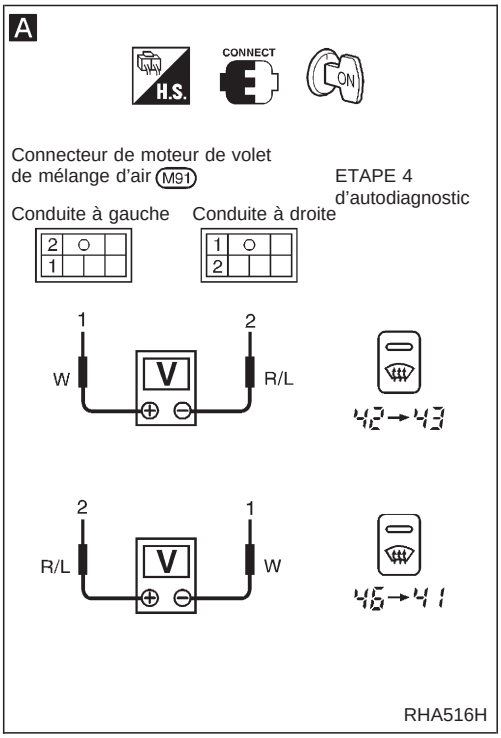

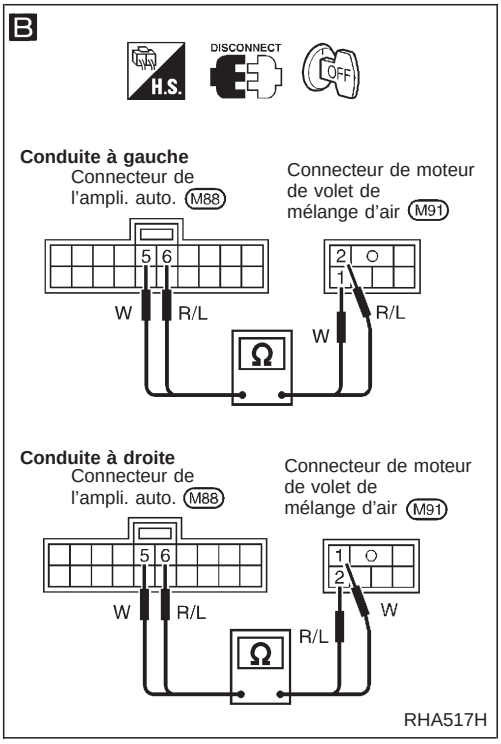

Remarque :
Si le résultat est mauvais ou "Non" après la vérification de la continuité du circuit, réparer le faisceau ou le connecteur.

Simpo PDF Merge and Split Unregistered Version - http://www.simpopdf.com

Moteur de volet de mélange d'air (suite)

C

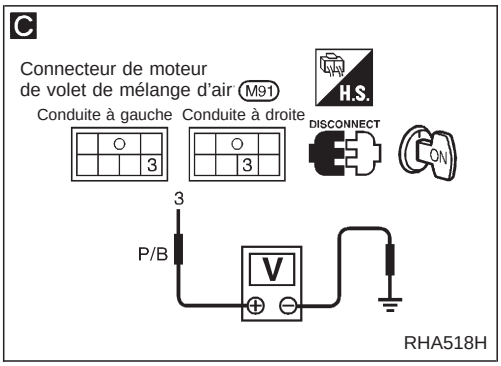

D

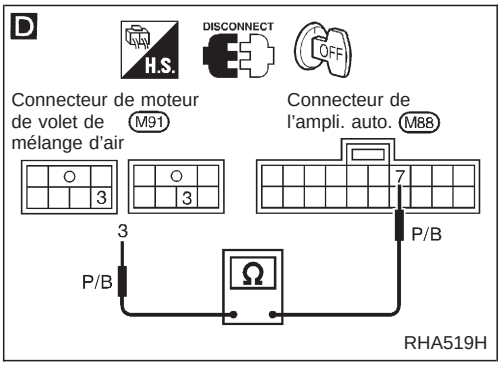

E

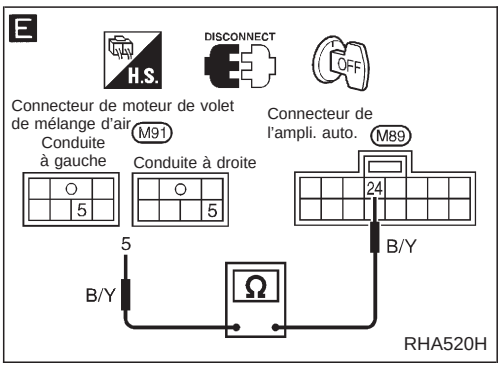

F

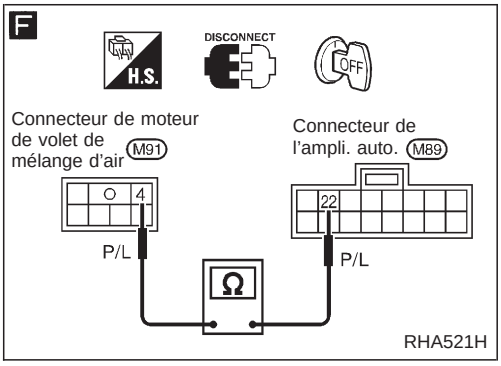

Ⓐ

C

VERIFIER LE CIRCUIT PBR ENTRE LE PBR ET L'AMPLI. AUTO.
Débrancher le connecteur de faisceau du moteur de volet de mélange d'air.
Y a-t-il une tension d'environ 5V entre la borne ③ du faisceau du moteur de volet de mélange d'air et la masse de carrosserie ?

No → Débrancher le connecteur de faisceau de l'amplificateur automatique.

Oui → Débrancher le connecteur de faisceau de l'amplificateur automatique.

E Remarque

Vérifier la continuité du circuit entre la borne n° ㉔ du faisceau de l'ampli. auto et la borne n° ⑤ du faisceau de moteur de volet de mélange d'air.
Il doit y avoir continuité.
Si le résultat est bon, vérifier si le faisceau n'est pas court-circuité.

Bon →

F Remarque

Vérifier la continuité du circuit entre la borne n° ㉒ du faisceau de l'ampli. auto et la borne n° ④ du faisceau de moteur de volet de mélange d'air.
Il doit y avoir continuité.
Si le résultat est bon, vérifier si le faisceau n'est pas court-circuité.

Bon →

VERIFIER LE PBR.
(Se reporter à HA-2058).

Mauvais → Remplacer le moteur de volet de mélange d'air (PBR).

Bon →

Remplacer l'amplificateur automatique.

D Remarque

Vérifier la continuité du circuit entre la borne n° ⑦ du faisceau de l'ampli. auto et la borne n° ③ du faisceau de moteur de volet de mélange d'air.
Il doit y avoir continuité.
Si le résultat est bon, vérifier si le faisceau n'est pas court-circuité.

Bon →

Remplacer l'amplificateur automatique.

Remarque :
Si le résultat est mauvais ou ''Non'' après la vérification de la continuité du circuit, réparer le faisceau ou le connecteur.

Simpo PDF Merge and Split Unregistered Version - http://www.simpopdf.com

Moteur de volet de mélange d'air (suite)

INSPECTION DES COMPOSANTS

Rhéostat (PBR)

Mesurer la tension entre les bornes ③ et ④ côté faisceau du véhicule.

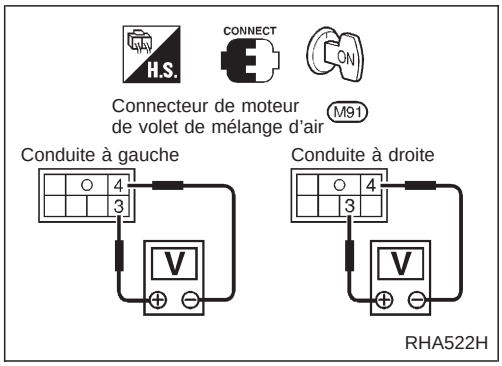

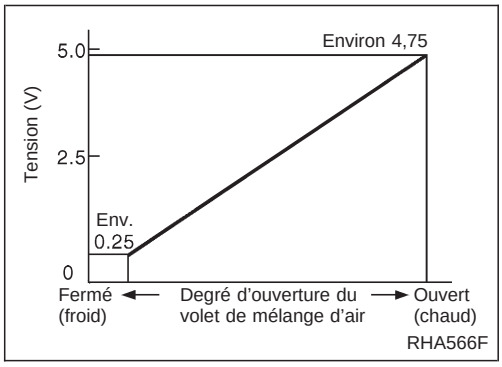

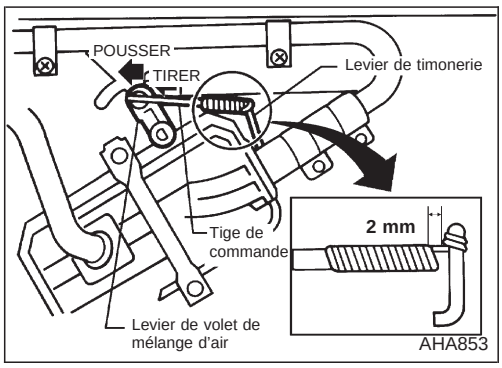

REGLAGE DE LA TIMONERIE DE COMMANDE

Volet de mélange d'air (Robinet d'eau)

1. Reposer le moteur de volet de mélange d'air sur le dispositif de chauffage et le connecter sur le faisceau principal.
2. Passer au code n° 41 de l'ETAPE 4 de l'autodiagnostic. Se reporter à la page HA-2039.
3. Déplacer le curseur de volet de mélange d'air à la main et le maintenir sur la position froid maxi.
4. Fixer le curseur de volet de mélange d'air au support de tige.
5. S'assurer que le volet de mélange d'air fonctionne correctement lorsqu'on passe du code n° 41 au code n° 46 en actionnant l'interrupteur DEF.

41	42	43	44	45	46
Froid maxi.		Chaud maxi.			

6. Passer au code n° 41 de l'ETAPE 4 de l'autodiagnostic.
7. Attacher le câble du robinet d'eau à la timonerie de volet de mélange d'air et le fixer à l'aide d'un clip.
8. Tourner et maintenir la plaque ET le levier du robinet d'eau dans la position de froid maxi. (complètement DANS LE SENS DES AIGUILLES D'UNE MONTRE).
9. Attacher le câble du robinet d'eau à la plaque et le fixer à l'aide d'un clip (le repère blanc sur le logement du câble doit être centré sous le clip de retenue).
10. S'assurer que le robinet d'eau fonctionne correctement lorsqu'on passe du n° de code 41 au n° de code 46 en appuyant sur l'interrupteur DEF. (Après plusieurs cycles, le levier du robinet d'eau doit être à la moitié de l'ouverture de la plaque lorsque le code n° 41 est sélectionné.)

Simpo PDF Merge and Split Unregistered Version - http://www.simpopdf.com

Moteur de volet d'admission

PROCEDURE DE DIAGNOSTIC DE DEFAUT DU VOLET D'ADMISSION

SYMPTOME :

- **Le volet d'admission ne change pas.**
- **Le moteur de volet d'admission ne fonctionne pas normalement.**

Ordre de l'inspection

1. Confirmer la présence du symptôme en exécutant la vérification de fonctionnement suivante.

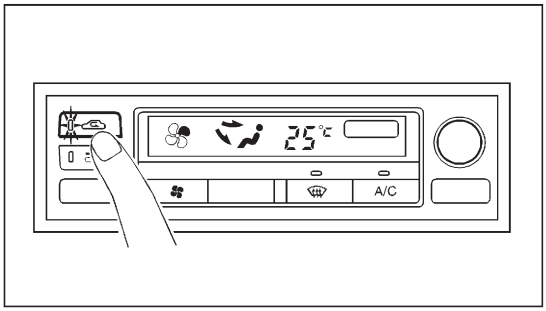

VERIFICATION DE FONCTIONNEMENT – Recyclage

a. Appuyer sur l'interrupteur REC .
Le voyant de recyclage doit s'allumer.
b. Appuyer sur l'interrupteur FRE .
Le voyant FRESH doit s'allumer.
c. Etre attentif au changement de position du volet d'admission d'air (le bruit de la soufflerie doit se modifier légèrement).

Si le résultat est bon (le symptôme ne peut pas être répété), effectuer une vérification complète du fonctionnement. (*11).
Si le résultat est mauvais (le symptôme est confirmé), continuer avec l'ETAPE 2 suivante.

2. Rechercher les bulletins d'entretien.
3. Effectuer l'ETAPE 1 de l'autodiagnostic. (*1)
   - Bon →
4. Effectuer l'ETAPE 2 de l'autodiagnostic. (*2)
   - Mauvais → Se reporter au circuit du capteur de défaut approprié. (*2)
   - Bon →
5. Effectuer l'ETAPE 4 de l'autodiagnostic. (*3)
   - Mauvais → Vérifier la timonerie de commande de volet d'admission. (*10)
     - Mauvais → Réparer ou régler la timonerie de commande.
     - Bon → Aller à PROCEDURE DE DIAGNOSTIC DU MOTEUR DE VOLET D'ADMISSION. (*9)
   - Bon **La cause ne peut pas être confirmée par autodiagnostic.**
6. Vérifier le circuit du capteur de température ambiante. (*4)
   - Bon →
7. Vérifier le circuit du capteur de l'habitacle. (*5)
   - Bon →
8. Vérifier le circuit du capteur d'ensoleillement. (*6)
   - Bon →
9. Vérifier le circuit du capteur d'admission. (*7)
   - Bon →
10. Vérifier le circuit PBR du moteur de volet de mélange d'air. (*8)
    - Bon →

Si le symptôme existe toujours, effectuer une vérification complète de fonctionnement (*11) et vérifier s'il y a d'autres symptômes. Existe-t-il un autre symptôme ?

- Oui → Suivre les instructions dans le ''Tableau du système''.
  Un autre symptôme existe.
- Non → Remplacer l'amplificateur automatique.
  - FIN DE L'INSPECTION

SHA339F

*1 : HA-2036
*2 : HA-2037
*3 : HA-2039
*4 : HA-2082
*5 : HA-2084
*6 : HA-2086
*7 : HA-2088
*8 : HA-2056
*9 : HA-2061
*10 : HA-2062
*11 : HA-2042
*12 : HA-2041

Simpo PDF Merge and Split Unregistered Version - http://www.simpopdf.com

Moteur de volet d'admission (suite)

DESCRIPTION DU SYSTEME

Composants

Les composants du système de commande de volet d'admission sont :
1) Ampli. auto
2) Moteur de volet d'admission
3) Moteur de volet de mode
4) Capteur d'habitacle
5) Capteur de température ambiante
6) Capteur d'ensoleillement
7) Capteur d'admission

Fonctionnement du système

La commande de volet d'admission détermine la position du volet d'admission à partir de la température ambiante, de la température d'air d'admission et de la température à l'intérieur du véhicule. Lorsque les interrupteurs A/C, DEGIVRAGE ou OFF sont enfoncés, l'ampli auto. règle le volet d'admission sur ''Fresh'' (Frais).

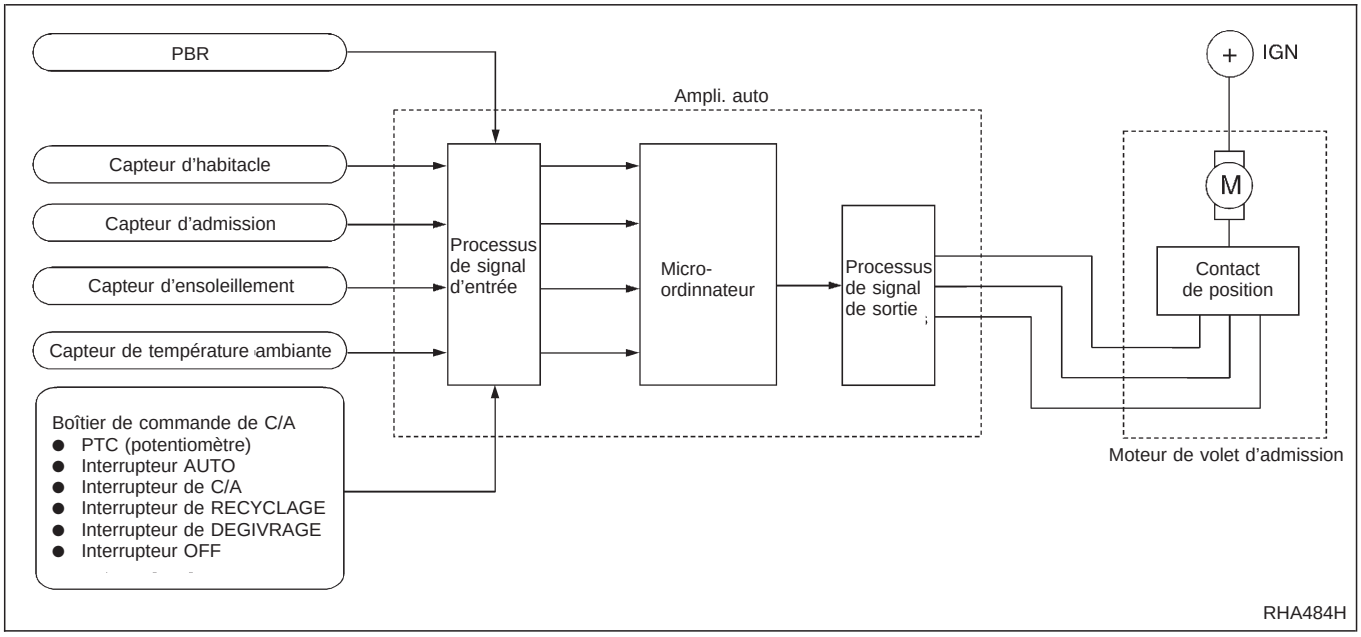

Caractéristique de la commande de volet d'admission

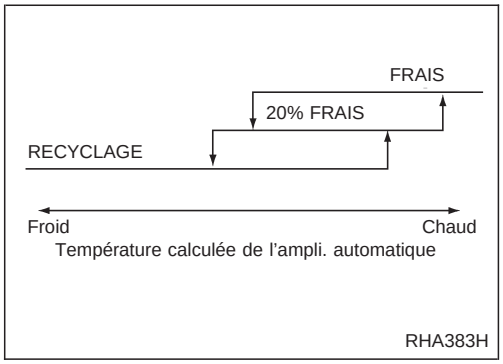

DESCRIPTION DES COMPOSANTS

Le moteur de volet d'admission est monté sur le boîtier d'admission. Il tourne de façon à assurer l'admission de l'air à travers les bouches d'air déterminées par l'amplificateur auto. La rotation du moteur est transmise à un curseur qui active le volet d'admission.

Simpo PDF Merge and Split Unregistered Version - http://www.simpopdf.com

Moteur de volet d'admission (suite)

PROCEDURE DE DIAGNOSTIC

SYMPTOME : le moteur de volet d'admission ne fonctionne pas normalement.

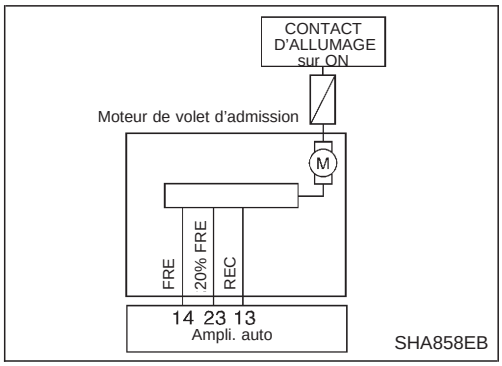

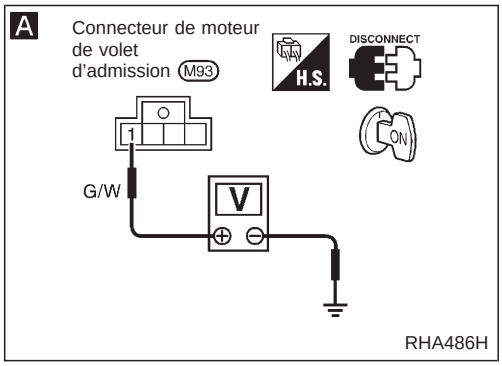

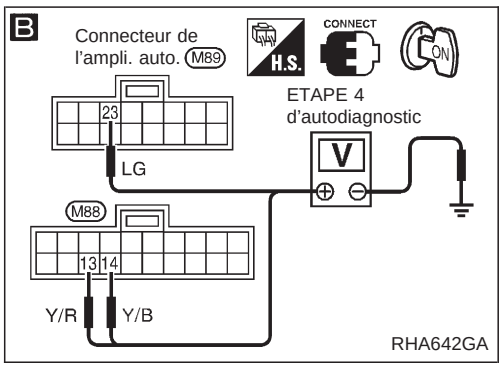

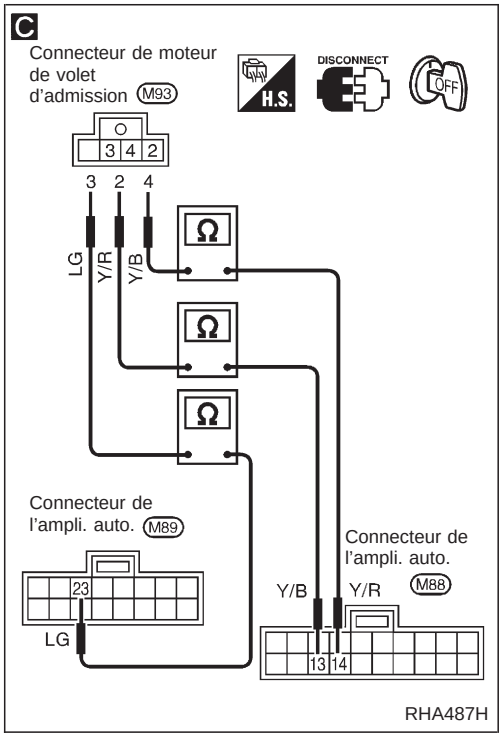

A

VERIFIER L'ALIMENTATION ELECTRIQUE DU MOTEUR DE VOLET D'ADMISSION.
Débrancher le connecteur de faisceau du moteur du volet d'admission.
Y a-t-il une tension d'environ 12 volts entre la borne n° ① du faisceau du moteur de volet d'admission et la masse de carrosserie ?

Non → Vérifier le circuit de l'alimentation électrique et le fusible de 7,5A (n° 23, situé dans le boîtier à fusibles).

Oui ↓

B

VERIFIER LA SORTIE DE L'AMPLI. AUTO.
Régler sur l'ETAPE 4 de l'autodiagnostic.
Mesurer la tension à travers les bornes de faisceau de l'ampli. auto et la masse de carrosserie.

N° de code	N° de borne ⊕	N° de borne ⊖	Condition	Tension V
41 42	⑬	Masse de carrosserie	REC	0
	㉓			12
	⑭			12
43	⑬		20% FRE	12
	㉓			0
	⑭			12
44 45 46	⑬		FRE	12
	㉓			12
	⑭			0

0V : Environ 0V
12V : Environ 12V

Mauvais → **C**

Vérifier la continuité du circuit entre chaque borne de l'ampli. auto. et du moteur de volet d'admission.

N° de borne ⊕	N° de borne ⊖	
Ampli. auto	Moteur de volet d'admission	Il y a continuité
⑬	②	Oui
㉓	③	
⑭	④	

Bon → Remplacer l'amplificateur automatique.

Bon ↓

Remplacer le moteur du volet d'admission.

Remarque :
Si le résultat est mauvais ou ''Non'' après la vérification de la continuité du circuit, réparer le faisceau ou le connecteur.

Simpo PDF Merge and Split Unregistered Version - http://www.simpopdf.com

Moteur de volet d'admission (suite)

REGLAGE DE LA TIMONERIE DE COMMANDE

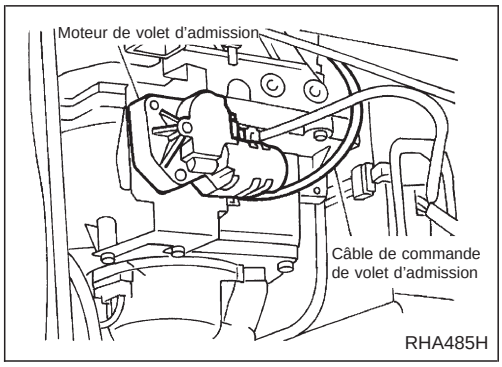

Volet d'admission

1. Reposer le moteur de volet d'admission sur le boîtier d'admission et le connecter sur le faisceau principal.
2. Passer au code n° 41 de l'ETAPE 4 de l'autodiagnostic. Se reporter à la page HA-2039.
3. Déplacer la timonerie du volet d'admission à la main et la maintenir en position REC.
4. Fixer le câble de commande du volet d'admission. Se reporter à la page HA-54 du MANUEL DE REPARATION D22, n° de publication SM8F-0D22E0E.
5. S'assurer que le volet d'admission fonctionne correctement lorsqu'on passe du code n° 41 au code n° 46 en actionnant l'interrupteur DEF.

41	42	43	44	45	46
REC		20% FRE	FRE		

Simpo PDF Merge and Split Unregistered Version - http://www.simpopdf.com

Moteur de soufflerie

PROCEDURE DE DIAGNOSTIC DE DEFAUT DU MOTEUR DE SOUFFLERIE

SYMPTOME :

- **Le fonctionnement du moteur de soufflerie est défectueux.**
- **Le moteur de soufflerie ne fonctionne pas bien lorsqu'il est hors du démarrage de la commande de vitesse du ventilateur.**

Ordre de l'inspection

1. Confirmer la présence du symptôme en exécutant la vérification de fonctionnement suivante.

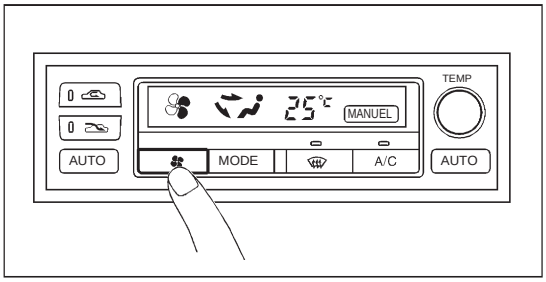

VERIFICATION DE FONCTIONNEMENT – Soufflerie

a. Appuyer une fois sur l'interrupteur de ventilateur.
La soufflerie doit fonctionner à basse vitesse.
L'une des pales du symbole de ventilateur doit être allumée.

b. Appuyer sur l'interrupteur de ventilateur une nouvelle fois, et continuer à vérifier la vitesse de la soufflerie ainsi que le symbole du ventilateur jusqu'à ce que toutes les vitesses soient contrôlées.

c. Laisser la soufflerie en vitesse MAX.

Si le résultat est bon (le symptôme ne peut pas être répété), effectuer une vérification complète du fonctionnement. (*10).
Si le résultat est mauvais (le symptôme est confirmé), continuer avec l'ETAPE 2 suivante.

2. Rechercher les bulletins d'entretien.
3. Effectuer l'ETAPE 1 de l'autodiagnostic. (*1)
Bon
4. Effectuer l'ETAPE 2 de l'autodiagnostic. (*2)
Mauvais → Se reporter au circuit du capteur de défaut approprié. (*2)
Bon
5. Effectuer l'ETAPE 4 de l'autodiagnostic. (*3)
La vitesse du moteur se soufflerie change-t-elle selon chaque n° de code?
Non → Aller à la PROCEDURE DE DIAGNOSTIC DU MOTEUR DE SOUFFLERIE. (*4)

N° de code	41	42	43	44	45	46
Régime de moteur de soufflerie	Lent	Mi-rapide	Mi-lent			Rapide

Oui
6. La température du liquide de refroidissement moteur est-elle inférieure à 50°C et la température ambiante inférieure à15°C?
Non → Le fonctionnement du moteur de soufflerie est normal.
Oui
7. Le moteur de soufflerie fonctionne-t-il au démarrage de la commande de vitesse de soufflerie?
Non → Aller à la PROCEDURE DE DIAGNOSTIC DU MOTEUR DE SOUFFLERIE. (*4)
Oui
La cause ne peut pas être confirmée par autodiagnostic.
8. Vérifier le circuit du capteur de température ambiante. (*5)
Bon
9. Vérifier le circuit du capteur de l'habitacle. (*6)
Bon
10. Vérifier le circuit du capteur d'ensoleillement. (*7)
Bon
11. Vérifier le circuit du capteur d'admission. (*8)
Bon
12. Vérifier le circuit PBR du moteur de volet de mélange d'air. (*9)
Bon
Si le symptôme existe toujours, effectuer une vérification (*10) de fonctionnement complète et vérifier s'il y a d'autres symptômes. [Se reporter au Tableau des symptômes, (*11)]. Existe-t-il un autre symptôme ?
Oui → Se reporter au Diagnostic de défaut de symptômes connexes.
Non
Remplacer l'amplificateur automatique. → FIN DE L'INSPECTION

Bon → Vérifier le circuit de commande du transmetteur thermique.
Se reporter à la section EL (''Contrôle du transmetteur thermique '', ″INSTRUMENTS ET JAUGES'').

Un autre symptôme existe.

SHA340F

*1 : HA-2036
*2 : HA-2037
*3 : HA-2039
*4 : HA-2067
*5 : HA-2082
*6 : HA-2084
*7 : HA-2086
*8 : HA-2088
*9 : HA-2056
*10 : HA-2042
*11 : HA-2041

Simpo PDF Merge and Split Unregistered Version - http://www.simpopdf.com

Moteur de soufflerie (suite)

DESCRIPTION DU SYSTEME

Composants

Les composants du système de commande de vitesse du ventilateur sont :
1) Ampli. auto
2) Ampli. de commande de ventilateur
3) PBR
4) Capteur d'habitacle
5) Capteur de température ambiante
6) Capteur d'ensoleillement
7) Capteur d'admission

Fonctionnement du système

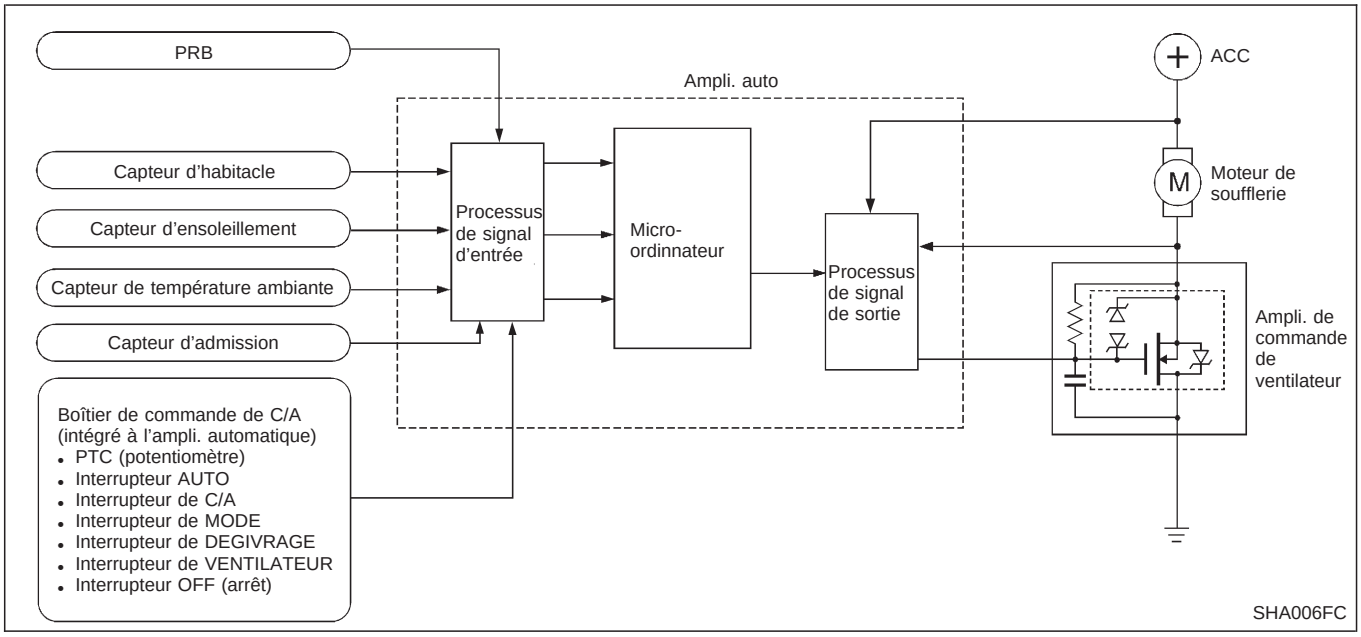

Mode automatique

En mode automatique, le régime du moteur de soufflerie est calculé par l'ampli. auto sur la base des entrées venant du PBR, du capteur d'habitacle, du capteur d'ensoleillement, du capteur d'admission et du capteur de température ambiante. La tension appliquée au moteur de soufflerie est approximativement comprise entre 5 V. (vitesse minimum) et 12 V. (vitesse maximum).
Pour réguler la vitesse de la soufflerie (dans une gamme de 5 V. à 12 V.), l'ampli. auto. adresse un signal à l'amplificateur de commande de ventilateur. En fonction de cette tension, l'amplificateur de commande de ventilateur contrôle la tension du moteur de soufflerie.

Commande de vitesse de ventilateur au démarrage

Démarrage ''A FROID'' (mode automatique)

En cas de démarrage à froid (température du liquide de refroidissement moteur inférieure à 50°C), la soufflerie ne fonctionnera pas pendant une brève période de temps (jusqu'à 150 secondes). La durée exacte de ce délai initial dépend de la température ambiante et de la température du liquide de refroidissement moteur.
Dans les cas les plus extrêmes (température ambiante très basse), le délai initial de soufflerie sera de 150 secondes, comme décrit ci-dessus. Après ce délai, la soufflerie fonctionnera à vitesse lente jusqu'à ce que la température du liquide de refroidissement moteur augmente au-dessus de 55°C ; c'est à ce moment que le régime de la soufflerie augmentera jusqu'au régime désiré

Démarrage dans des conditions normales ou ''A CHAUD'' (mode automatique)

La soufflerie fonctionnera immédiatement après que l'interrupteur AUTO a été enfoncé. La soufflerie atteindra progressivement la vitesse voulue en 3 secondes ou moins (le temps réel dépend de la vitesse de la soufflerie voulue).

Simpo PDF Merge and Split Unregistered Version - http://www.simpopdf.com

Moteur de soufflerie (suite)

Compensation de la vitesse de soufflerie

Niveau d'ensoleillement

Lorsque la température à l'intérieur du véhicule et la température de référence sont très proches, la soufflerie fonctionnera à vitesse réduite. La vitesse réduite varie en fonction du niveau d'ensoleillement. En cas d'ensoleillement élevé, la vitesse à bas régime de la soufflerie sera la vitesse lente ''normale'' (environ 6 V.). En cas d'ensoleillement faible ou inexistant, la vitesse de la soufflerie chutera en mode de basse vitesse ''lente'' (environ 5 V).

Température ambiante

Lorsque la température ambiante est dans la plage ''modérée'' [10 - 15°C], la tension de la soufflerie calculée sera compensée (réduite) par 3,5 V. (en fonction de la vitesse de la soufflerie). Dans les plages de température ambiante ''extrême'' [en-dessous de 0°C et au-dessus de 20°C], la tension de la soufflerie calculée et souhaitée n'est pas du tout compensée). Dans les plages de température ambiante situées entre les plages ''modérée'' et ''extrême'' [0 - 10°C et 15 - 20°C], la quantité de compensation (pour une vitesse de soufflerie donnée) varie en fonction de la température ambiante.

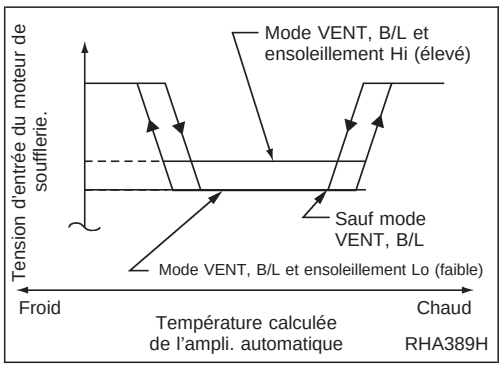

Caractéristiques de la commande de vitesse de ventilateur

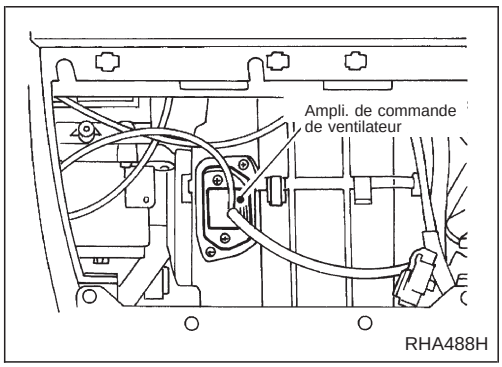

DESCRIPTION DES COMPOSANTS

Amplificateur de commande du ventilateur

L'amplificateur de commande du ventilateur est situé sur l'ensemble de refroidissement. L'ampli. de commande de ventilateur reçoit une tension positive à la grille en provenance de l'ampli. auto. afin de maintenir continuellement la tension du moteur de ventilateur de soufflerie dans une plage de 5 à 12 V. (environ).

Simpo PDF Merge and Split Unregistered Version - http://www.simpopdf.com

Moteur de soufflerie (suite)

PROCEDURE DE DIAGNOSTIC

SYMPTOME : le moteur de soufflerie ne fonctionne pas bien au démarrage de la commande de vitesse du ventilateur.

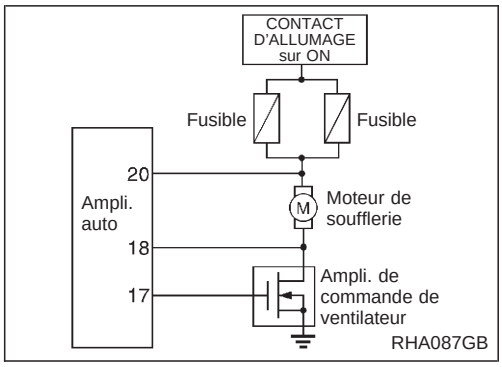

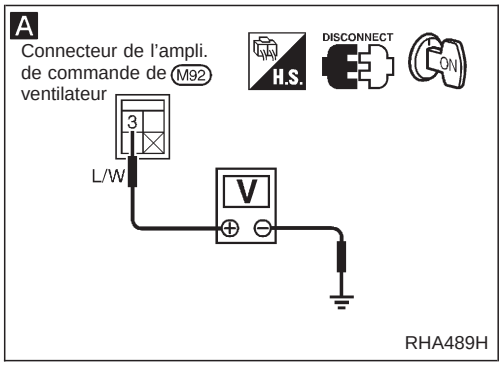

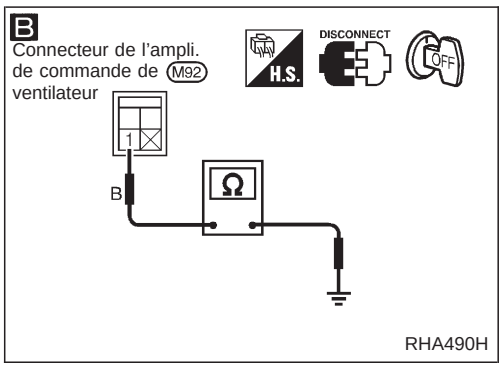

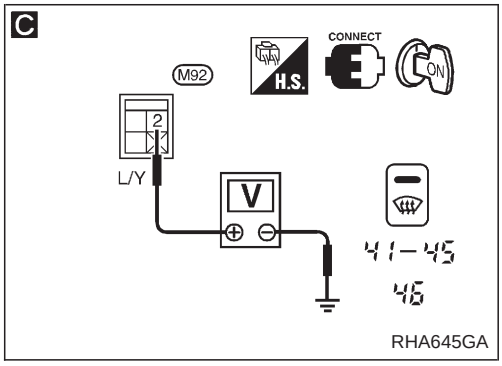

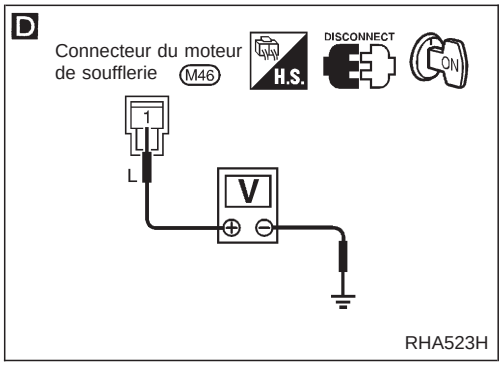

A

VERIFIER L'ALIMENTATION ELECTRIQUE DE L'AMPLIFICATEUR DE COMMANDE DU VENTILATEUR.
Débrancher le connecteur de faisceau de l'ampli. de commande de ventilateur.
Y a-t-il une tension d'environ 12 volts entre la borne ③ du faisceau de l'ampli. de commande de ventilateur et la masse de carrosserie?

Non → **D**

Oui ↓

B

Remarque

VERIFIER LE CIRCUIT DE MASSE DE CARROSSERIE DE L'AMPLIFICATEUR DE COMMANDE DU VENTILATEUR.
Y a-t-il continuité entre la borne n° ① de l'ampli. de commande de ventilateur et la masse de carrosserie ?

Oui ↓

Reconnecter le connecteur de faisceau de l'ampli. de commande de ventilateur.

C

VERIFIER LA SORTIE DE L'AMPLI. AUTO.
Régler sur l'ETAPE 4 de l'autodiagnostic.
Mesurer la tension à travers la borne ② du faisceau de l'ampli. de commande de ventilateur et la masse de carrosserie.

N° de code	N° de borne ⊕	N° de borne ⊖	Tension
41 - 45	②	Masse de carrosserie	Env. 2,5 - 3V
46	②	Masse de carrosserie	Env. 9 - 10V

Mauvais → Ⓐ (Passer à la page suivante).

Bon ↓

Remplacer l'amplificateur de commande du ventilateur.

D

VERIFIER L'ALIMENTATION ELECTRIQUE DU MOTEUR DE SOUFFLERIE.
Débrancher le connecteur de faisceau du moteur de soufflerie.
Y a-t-il une tension d'environ 12 volts entre la borne n° ① du faisceau du moteur de soufflerie et la masse de carrosserie ?

Oui → **E**

Non → Vérifier le circuit d'alimentation électrique et les fusibles de 15 A (N° 21 et 22, situés dans le boîtier à fusibles).

E

Remarque

Vérifier la continuité du circuit entre la borne ② du faisceau du moteur de soufflerie et la borne ③ du faisceau d'ampli. de commande de ventilateur.

Bon ↓

VERIFIER LE MOTEUR DE SOUFFLERIE.
(Se reporter à HA-2068.)

Mauvais ↓

Remplacer le moteur de soufflerie.

Remarque :
Si le résultat est mauvais ou ''Non'' après la vérification de la continuité du circuit, réparer le faisceau ou le connecteur.

Simpo PDF Merge and Split Unregistered Version - http://www.simpopdf.com

Moteur de soufflerie (suite)

E

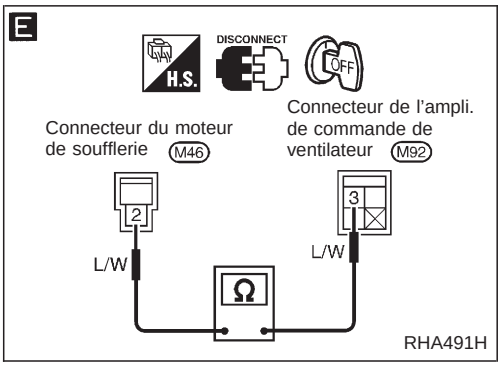

F

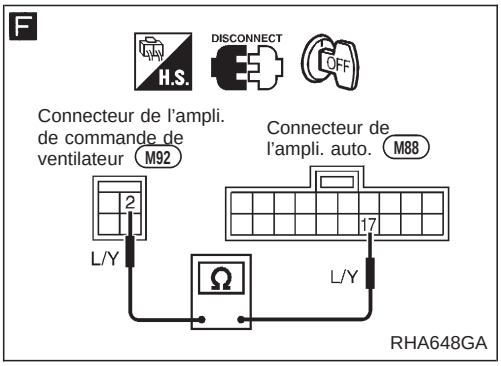

G

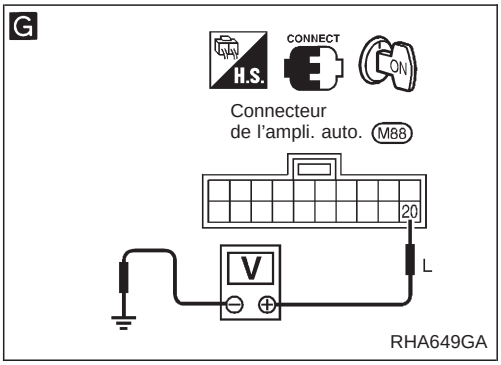

H

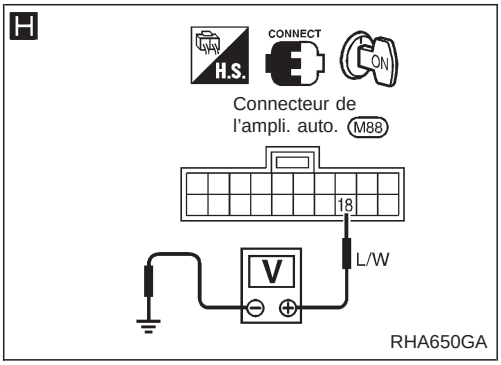

I

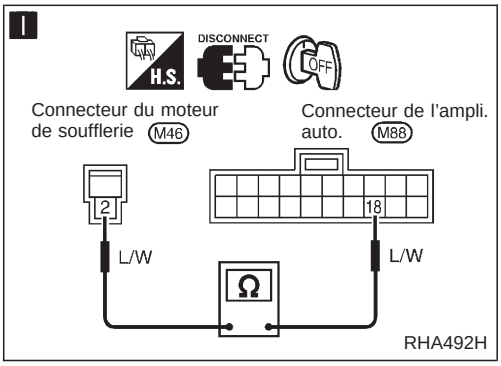

Ⓐ

Débrancher le connecteur de faisceau de l'ampli. auto et de l'ampli. de commande de ventilateur.

F

Remarque

Y a-t-il continuité entre la borne ⑰ du faisceau de l'ampli. auto. et la borne ② du faisceau de l'ampli. de commande de ventilateur ?
Il doit y avoir continuité.
Si le résultat est bon, vérifier si le faisceau n'est pas court-circuité.

Oui

G

VERIFIER LE CIRCUIT DE REACTION DU VENTILATEUR.
Y a-t-il une tension d'environ 12 V entre la borne n° ⑳ du faisceau de l'ampli. auto. et la masse de carrosserie ?

Non → Vérifier le circuit d'alimentation et les fusibles de 15 A (N° 21 et 22, situés dans le boîtier à fusibles). Se reporter à la section EL (''Schéma de câblage'', ''DISPOSITION DE L'ALIMENTATION ELECTRIQUE'').

Oui

H

Y a-t-il une tension d'environ 12 V entre la borne n° ⑱ du faisceau de l'ampli. auto. et la masse de carrosserie ?

Non →

I

Remarque

Vérifier la continuité du circuit entre la borne ② du faisceau du moteur de soufflerie et la borne ⑱ du faisceau d'ampli. auto.
Il doit y avoir continuité.
Si le résultat est bon, vérifier si le faisceau n'est pas court-circuité.

Oui

Remplacer l'amplificateur automatique.

Remarque :
Si le résultat est mauvais ou ''Non'' après la vérification de la continuité du circuit, réparer le faisceau ou le connecteur.

Simpo PDF Merge and Split Unregistered Version - http://www.simpopdf.com

Moteur de soufflerie (suite)

INSPECTION DES COMPOSANTS

Moteur de soufflerie

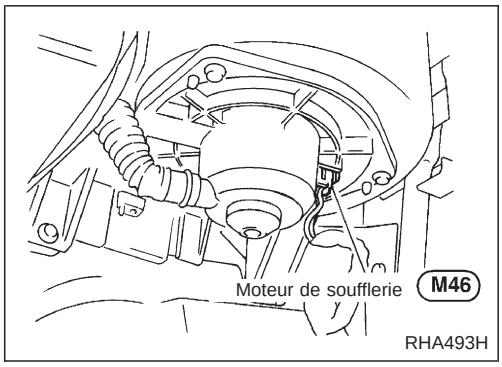

S’assurer que le moteur de soufflerie tourne librement.

- S’assurer que l’intérieur du boîtier d’admission ne contient aucune particule étrangère.

Simpo PDF Merge and Split Unregistered Version - http://www.simpopdf.com

Embrayage magnétique

PROCEDURE DE DIAGNOSTIC DE DEFAUT DE L'EMBRAYAGE MAGNETIQUE

SYMPTOME :

- **L'embrayage magnétique ne s'enclenche pas.**

Ordre de l'inspection

1. Confirmer la présence du symptôme en exécutant la vérification de fonctionnement.

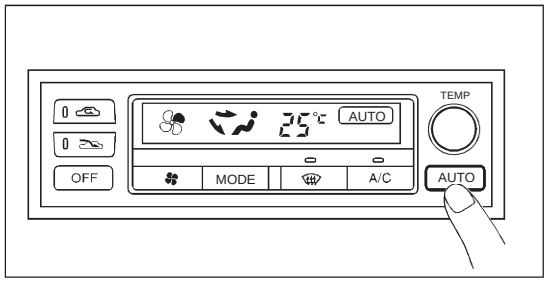

VERIFICATION DE FONCTIONNEMENT – Mode AUTO

a. Appuyer sur l'interrupteur AUTO.
b. L'affichage doit indiquer AUTO.
Vérifier que l'embrayage du compresseur s'engage (inspection auditive ou visuelle).
(L'air de décharge et la vitesse de soufflerie dépendront des températures ambiante, de l'habitacle et de référence).

Si le résultat est bon (le symptôme ne peut pas être répété), effectuer une vérification complète du fonctionnement. (*10).
Si le résultat est mauvais (le symptôme est confirmé), continuer avec l'ETAPE 2 suivante.

2. Rechercher les bulletins d'entretien.
3. Effectuer l'ETAPE 1 de l'autodiagnostic. (*1)
Bon
4. Effectuer l'ETAPE 2 de l'autodiagnostic. (*2)
Mauvais → Se reporter au circuit du capteur de défaut approprié. (*2)
Bon
5. Effectuer l'ETAPE 4 de l'autodiagnostic. (*3)
Mauvais → Vérifier le mécanisme de l'embrayage magnétique.
Bon → Aller à PROCEDURE DE DIAGNOSTIC DE L'EMBRAYAGE MAGNETIQUE. (*4)
Bon
La cause ne peut pas être confirmée par autodiagnostic.
Mauvais → Vérifier la pression de réfrigérant. (*12)
6. Vérifier le circuit du capteur de température ambiante. (*5)
Bon
7. Vérifier le circuit du capteur de l'habitacle. (*6)
Bon
8. Vérifier le circuit du capteur d'ensoleillement. (*7)
Bon
9. Vérifier le circuit du capteur d'admission. (*8)
Bon
10. Vérifier le circuit PBR du moteur de volet de mélange d'air. (*9)
Bon
Si le symptôme existe toujours, effectuer une vérification (*10) de fonctionnement complète et vérifier s'il y a d'autres symptômes. [Se reporter au tableau des symptômes, (*11)]. Existe-t-il un autre symptôme ?
Oui → Se reporter au Diagnostic de défaut de symptômes connexes.
Un autre symptôme existe.
Non
Remplacer l'amplificateur automatique. → FIN DE L'INSPECTION

SHA341F

*1 : HA-2036
*2 : HA-2037
*3 : HA-2039
*4 : HA-2071
*5 : HA-2082
*6 : HA-2084
*7 : HA-2086
*8 : HA-2088
*9 : HA-2056
*10 : HA-2042
*11 : HA-2041
*12 : HA-28 dans le Manuel de Réparation D22, N° de Publication SM8F-0D22E0E

Simpo PDF Merge and Split Unregistered Version - http://www.simpopdf.com

Embrayage magnétique (suite)

DESCRIPTION DU SYSTEME

L'amplificateur auto. contrôle le fonctionnement du compresseur par la température ambiante et les signaux reçus de l'ECM.

Commande de protection de basse température

L'amplificateur auto. détermine le fonctionnement ''MARCHE'' ou''ARRET'' du compresseur en fonction du signal détecté par le capteur de température ambiante.
Le compresseur fonctionne lorsque la température ambiante est supérieure à 1°C. Le compresseur ne fonctionne pas lorsque la température ambiante est inférieure à −2°C.

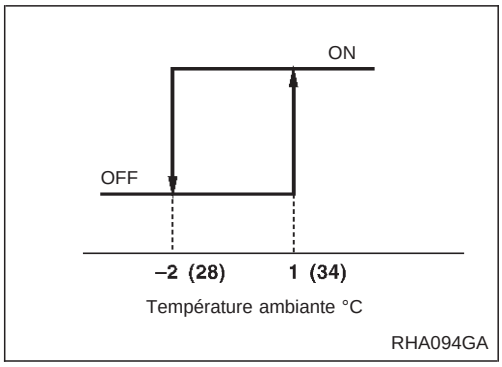

Simpo PDF Merge and Split Unregistered Version - http://www.simpopdf.com

Embrayage magnétique (suite)

PROCEDURE DE DIAGNOSTIC

SYMPTOME : l'embrayage magnétique ne s'enclenche pas lorsque les interrupteurs de climatiseur et de ventilateur sont sur ''ON''.

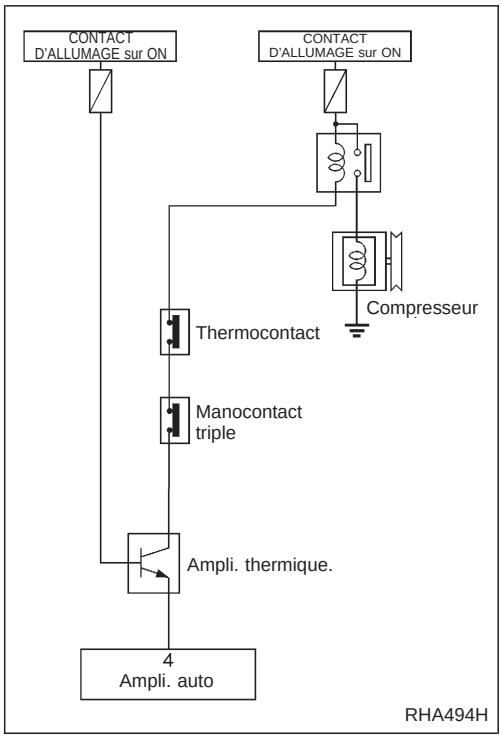

A

VERIFIER L'ALIMENTATION ELECTRIQUE DU COMPRESSEUR.
Débrancher le connecteur de faisceau du compresseur.
Y a-t-il une tension d'environ 12 volts entre la borne ① du faisceau de compresseur et la masse de carrosserie ?

Oui → Vérifier la bobine de l'embrayage magnétique.
Mauvais → Remplacer l'embrayage magnétique. Se reporter à la page HA-1091 du MANUEL DE REPARATION D22, n° de Publication SM8F-0D22E0E.

Non → Déconnecter le relais de climatiseur.

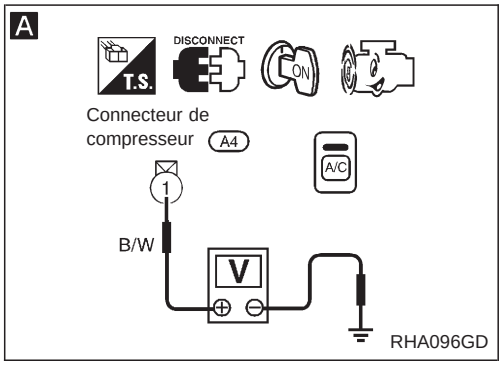

B Remarque

VERIFIER LA CONTINUITE DU CIRCUIT ENTRE LA BORNE ⑤ DU FAISCEAU DE RELAIS DE C/A ET LA BORNE ① DU FAISCEAU DE COMPRESSEUR.
Il doit y avoir continuité.
Si le résultat est bon, vérifier si le faisceau n'est pas court-circuité.

Bon →

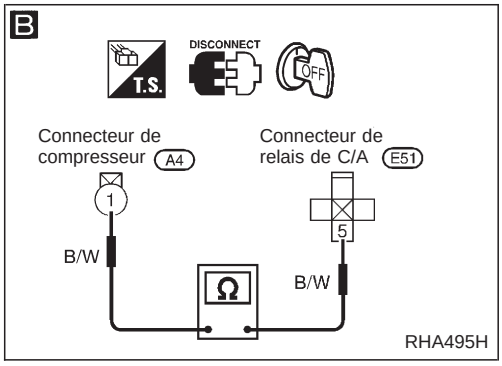

C

VERIFIER L'ALIMENTATION ELECTRIQUE DU RELAIS DE CLIMATISEUR.
Déconnecter le relais de climatiseur.
Y a-t-il une tension d'environ 12 volts entre les bornes ①, ③ du faisceau de relais de C/A et la masse de carrosserie ?

Non → VERIFIER LE CIRCUIT D'ALIMENTATION ELECTRIQUE ET LE FUSIBLE DE 7,5A (N° 23) DANS LE BOITIER A FUSIBLE. Se reporter à la section EL (''Schéma de câblage'', ''DISPOSITION DE L'ALIMENTATION ELECTRIQUE'').

Oui →

VERIFIER LE RELAIS DE CLIMATISEUR APRES L'AVOIR DECONNECTE.
Se reporter à la page HA-2074.

Mauvais → Remplacer le relais de climatiseur.

Bon →

Ⓐ
(Passer à la page suivante).

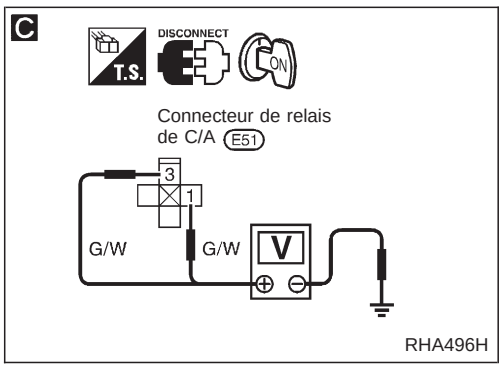

Remarque :
Si le résultat est mauvais ou ''Non'' après la vérification de la continuité du circuit, réparer le faisceau ou le connecteur.

Simpo PDF Merge and Split Unregistered Version - http://www.simpopdf.com

Embrayage magnétique (suite)

D

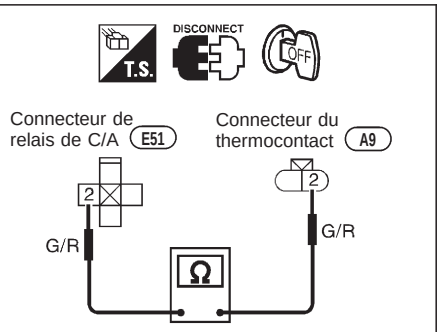

E

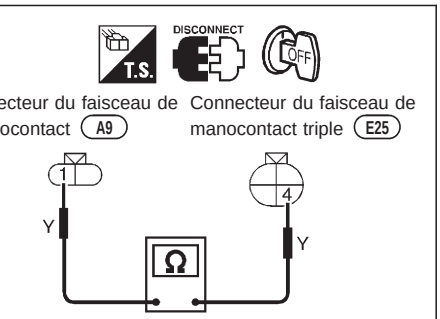

F

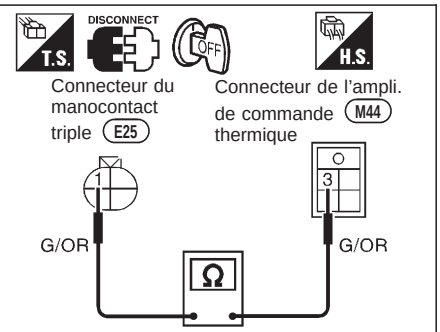

G

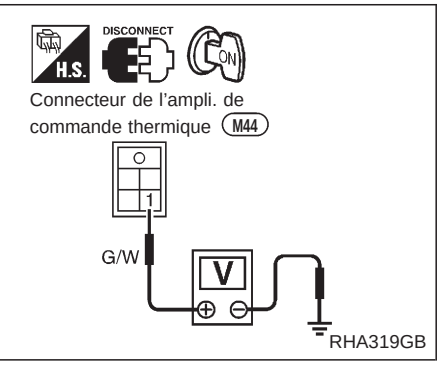

Ⓐ

D Remarque

Vérifier la continuité du circuit entre la borne n° ② du faisceau de relais de C/A et la borne n° ② du faisceau de thermocontact.
Il doit y avoir continuité.
Si le résultat est bon, vérifier si le faisceau n'est pas court-circuité.

Bon

VERIFIER LE THERMOCONTACT.
Se reporter à la page HA-2075.

Mau-vais → Remplacer le thermocontact.

Bon

E Remarque

Vérifier la continuité du circuit entre la borne n° ① du faisceau du thermocontact et la borne n° ④ du faisceau de manocontact triple.
Il doit y avoir continuité.
Si le résultat est bon, vérifier si le faisceau n'est pas court-circuité.

Bon

VERIFIER LE MANOCONTACT TRIPLE.
Se reporter à la page HA-2074.

Mau-vais → Vérifier la quantité de remplissage réfrigérant.

Bon → Remplacer le manocontact triple.

Bon

F Remarque

Vérifier la continuité du circuit entre la borne n° ① du faisceau du manocontact triple et la borne n° ③ du faisceau de l'ampli. de commande thermique.
Il doit y avoir continuité.
Si le résultat est bon, vérifier si le faisceau n'est pas court-circuité.

Bon

G

VERIFIER L'ALIMENTATION ELECTRIQUE DE L'AMPLI. DE COMMANDE THERMIQUE.
Y a-t-il une tension d'environ 12 volts entre la borne ① du faisceau de l'ampli. de commande thermique et la masse de carrosserie ?

Non → Vérifier le circuit de l'alimentation électrique et le fusible de 7,5A (n° 23, situé dans le boîtier à fusibles).
(Se reporter à "DISPOSITION DE L'ALIMENTATION ELECTRIQUE" dans la section EL et au schéma de câblage).

Oui

Ⓑ

(Passer à la page suivante).

Remarque :
Si le résultat est mauvais ou "Non" après la vérification de la continuité du circuit, réparer le faisceau ou le connecteur.

Simpo PDF Merge and Split Unregistered Version - http://www.simpopdf.com

Embrayage magnétique (suite)

H

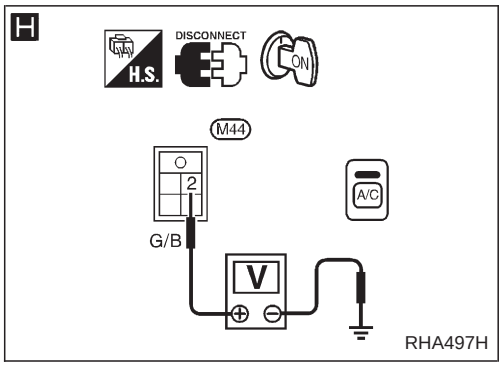

I

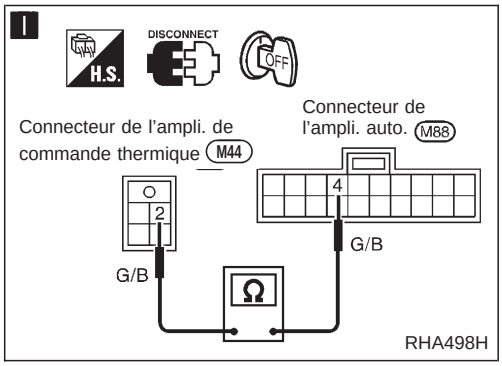

Ⓑ

H

Y a-t-il une tension d'environ 12 volts entre la borne ② du faisceau de l'ampli. de commande thermique et la masse de carrosserie ?

Non → Remplacer l'ampli. de commande thermique.

Oui

I

Remarque

Vérifier la continuité du circuit entre la borne ② du faisceau de l'ampli. de commande thermique et la borne ④ du faisceau de l'ampli. auto.
Il doit y avoir continuité.
Si le résultat est bon, vérifier si le faisceau n'est pas court-circuité.

Bon

Remplacer l'amplificateur automatique.

Remarque :
Si le résultat est mauvais ou ''Non'' après la vérification de la continuité du circuit, réparer le faisceau ou le connecteur.

Simpo PDF Merge and Split Unregistered Version - http://www.simpopdf.com

Embrayage magnétique (suite)

INSPECTION DES COMPOSANTS

Relais de climatiseur

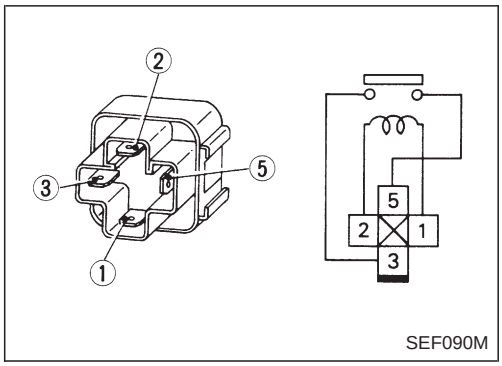

SEF090M

Vérifier la continuité entre les bornes n° ③ et ⑤.

Conditions	Il y a continuité
Alimentation en courant continu de 12 volts entre les bornes ① et ②.	Oui
Aucune alimentation électrique	Non

Si le résultat n'est pas satisfaisant, remplacer le relais.

Manocontact triple

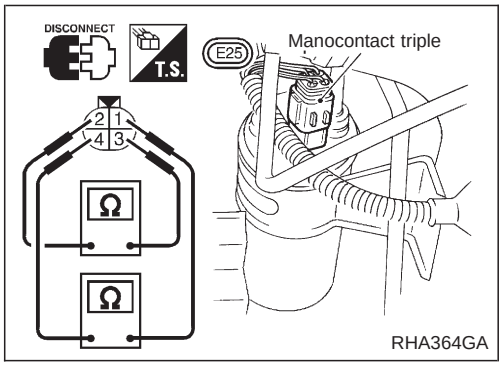

RHA364GA

	Bornes	Pression de canalisation côté haute pression kPa (bar, kg/cm²)	Fonctionnement	Il y a continuité
Côté basse pression	① - ④	Augmentant jusqu'à 152,0 - 201,0 (1,520 - 2,010, 1,55 - 2,05)	ON	Existe.
		Diminuant jusqu'à 152,0 - 201,0 (1,520 - 2,010, 1,55 - 2,05)	OFF	N'existe pas.
Côté pression moyenne*	② - ③	Augmentant jusqu'à 1 422 - 1 618 (14,22 - 16,18, 14,5 - 16,5)	ON	Existe.
		Diminuant jusqu'à 1 128 - 1 422 (11,28 - 14,22, 11,5 - 14,5)	OFF	N'existe pas.
Côté haute pression	① - ④	Diminuant jusqu'à 2 059 - 2 256 (20,6 - 22,6, 21 - 23)	ON	Existe.
		Augmentant jusqu'à 2 648 - 2 844 (26,5 - 28,4, 27 - 29)	OFF	N'existe pas.

* : Pour le fonctionnement du moteur de ventilateur de refroidissement

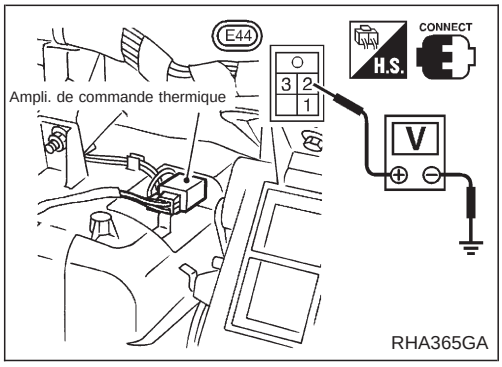

RHA365GA

Ampli. de commande thermique

Température de l'air de sortie de l'évaporateur °C	Fonctionnement de l'ampli. thermique	Vérificateur
Diminuant jusqu'à 0,1 à 0,9	Mettre sur ARRET	Environ 12V
Augmentant jusqu'à 2,5 à 3,5	Mettre sur MARCHE	Environ 0V

Simpo PDF Merge and Split Unregistered Version - http://www.simpopdf.com

Embrayage magnétique (suite)

Thermocontact

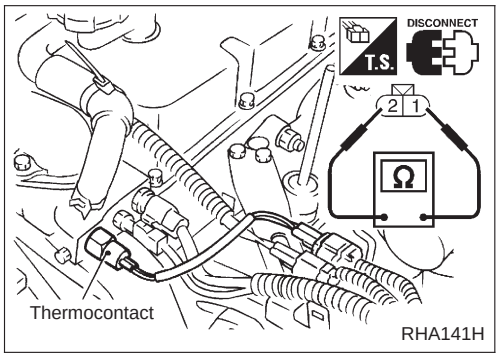

Thermocontact
RHA141H

Temperature d'eau °C	N° de borne		Il y a continuité
	⊕	⊖	
Au-dessus de 105	①	②	Non
Inférieur à 100			Oui

Simpo PDF Merge and Split Unregistered Version - http://www.simpopdf.com

Refroidissement insuffisant

PROCEDURE DE DIAGNOSTIC DE DEFAUT DU REFROIDISSEMENT INSUFFISANT

SYMPTOME :

- **Refroidissement insuffisant.**

Ordre de l'inspection

1. Confirmer la présence du symptôme en exécutant la vérification de fonctionnement suivante.

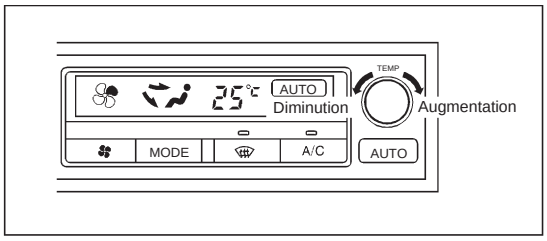

VERIFICATION DE FONCTIONNEMENT – Diminution de la température
a. Tourner la commande de température jusqu'à ce que 18°C soit affiché.
b. Vérifier la présence d'air froid aux sorties d'air de décharge.

Si le résultat est bon (le symptôme ne peut pas être répété), effectuer une vérification complète du fonctionnement. (*11).
Si le résultat est mauvais (le symptôme est confirmé), continuer avec l'ETAPE 2 suivante.

2. Rechercher les bulletins d'entretien.
3. Effectuer l'ETAPE 1 de l'autodiagnostic. (*1)

Bon

4. Effectuer l'ETAPE 2 de l'autodiagnostic. (*2)
   - Mauvais → Se reporter au circuit du capteur de défaut approprié. (*2)

Bon

5. Effectuer l'ETAPE 4 de l'autodiagnostic. (*3)
   - Mauvais → **Se reporter aux éléments défectueux approriés.**
     - Vérifier le circuit de moteur de volet de mode (*12) et de moteur de volet de mélange d'air. (*4)
     - Vérifier le circuit du volet d'admission. (*5)
     - Vérifier le circuit du moteur de soufflerie. (*6)
     - Vérifier le circuit d'embrayage magnétique. (*7)

Bon

6. Vérifier la tension de la courroie de compresseur. Se reporter à la section MA (''Vérification des courroies d'entraînement'', ''ENTRETIEN DU MOTEUR'').
   - Mauvais → Régler ou remplacer la courroie de compresseur.

Bon

7. Vérifier le fonctionnement du volet de mélange d'air. (*8)
   - Mauvais → Régler ou remplacer la timonerie de commande de volet de mélange d'air.

Bon

8. Vérifier le fonctionnement du moteur du ventilateur de refroidissement.
   - Mauvais → Se reporter à la section EC.

Bon

9. Vérifier la pression du cycle de réfrigération avec manomètre de collecteur branché.
   - Mauvais → Effectuer les Diagnostics d'essai de rendement. Se reporter à (*9).

Bon

10. Vérifier la présence de givre sur la bobine de l'evaporateur.
    - Mauvais (Gel). → Remplacer le compresseur.

(Ne gèle pas).

Bon

11. Vérifier s'il y a des fuites d'air dans les conduites.
    - Mauvais → Réparer les fuites d'air.

Bon

12. Effectuer le réglage du condensateur de la tempéraure. (*10)
    (1) Régler sur MECANISME AUXILIAIRE en mode d'autodiagnostic.
    (2) Tourner la commande de température dans le sens inverse des aiguilles d'une montre, selon le souhait.

Bon

FIN DE L'INSPECTION

SHA347F

*1 : HA-2036
*2 : HA-2037
*3 : HA-2039
*4 : HA-2056
*5 : HA-2061
*6 : HA-2066
*7 : HA-2071
*8 : HA-2053
*9 : Se reporter à la page HA-27 du MANUEL DE REPARATION D22, n° de publication SM8F-0D22E0E.
*10 : HA-2040
*11 : HA-2042
*12 : HA-2050

Simpo PDF Merge and Split Unregistered Version - http://www.simpopdf.com

Chauffage insuffisant

PROCEDURE DE DIAGNOSTIC DE DEFAUT DU CHAUFFAGE INSUFFISANT

SYMPTOME :

- **Chauffage insuffisant.**

Ordre de l'inspection

1. Confirmer la présence du symptôme en exécutant la vérification de fonctionnement.

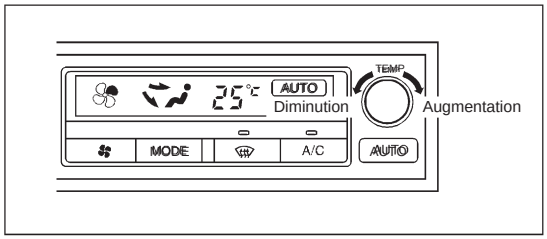

VERIFICATION DE FONCTIONNEMENT – Diminution de la température

a. Tourner la commande de température jusqu'à ce que 18°C soit affiché.
b. Vérifier la présence d'air froid aux sorties d'air de décharge.

Si le résultat est bon (le symptôme ne peut pas être répété), effectuer une vérification complète du fonctionnement. (*1).
Si le résultat est mauvais (le symptôme est confirmé), continuer avec l'ETAPE 2 suivante.

2. Rechercher les bulletins d'entretien.
3. Effectuer l'ETAPE 1 de l'autodiagnostic. (*2)

Bon

4. Effectuer l'ETAPE 2 de l'autodiagnostic. (*3)

Mauvais → Se reporter au circuit du capteur de défaut approprié. (*3)

Bon

5. Effectuer l'ETAPE 4 de l'autodiagnostic. (*4)

Mauvais → **Se reporter aux éléments défectueux appropriés.**
- Vérifier le circuit de moteur de volet de mode (*11) et de moteur de volet de mélange d'air. (*5)
- Vérifier le circuit de volet d'admission. (*6)
- Vérifier le circuit du moteur de soufflerie. (*7)

Bon

6. Vérifier les points suivants:
   - Niveau de liquide de refroidissement (se reporter à la section MA).
   - Présence de fuites ou de nœuds sur les flexibles.
   - Bouchon de radiateur. Se reporter à la section LC. (''CIRCUIT DE REFROIDISSEMENT DU MOTEUR'').
   - Air dans le circuit de refroidissement.

Mauvais → Réparer ou remplacer si nécessaire.

Bon

7. Vérifier le fonctionnement du volet de mélange d'air et du robinet d'eau. Se reporter à (*8).

Mauvais → Aller à la PROCEDURE DE DIAGNOSTIC DE DEFAUT DU MOTEUR DE VOLET DE MELANGE D'AIR. (*9)

Bon

8. Vérifier s'il y a des fuites d'air dans les conduites.

Mauvais → Réparer les fuites.

Bon

9. Vérifier au toucher les températures d'entrée et de sortie du chauffage.

Entrée très chaude
Sortie chaude

Vérifier la repose du thermostat.
(Se reporter à la section LC)

Mauvais → Vérifier si les flexibles de chauffage sont correctement installés.

Mauvais → Réparer ou remplacer si nécessaire. Effectuer un nouvel essai.

Bon

Remarque

Remplacer le thermostat. Se reporter à la section LC. (''Thermostat'', ''CIRCUIT DE REFROIDISSEMENT DU MOTEUR''). Effectuer un nouvel essai.

Entrée très chaude
Sortie chaude → Le système est BON

Les deux flexibles sont chauds

Bon

Remarque

Purger le noyau de chauffage, vidanger et remplir avec du liquide de refroidissement.
(Se reporter à la section MA). Effectuer un nouvel essai.

Entrée très chaude
Sortie chaude → Le système est BON

Les deux flexibles sont chauds

Remplacer le noyau du chauffage. Faire le plein de liquide de refroidissement moteur.
(Se reporter à la section MA). Effectuer un nouvel essai.

Entrée très chaude
Sortie chaude → Le système est BON

Remarque : Pour éviter un entretien inutile du système de chauffage, effectuer d'abord le REGLAGE DE LA TEMPERATURE A L'AIDE DU CONDENSATEUR AJUSTABLE.
Se reporter ''MECANISME AUXILIAIRE'', ''Autodiagnostic''. (*10)

SHA346F

*1 : HA-2042
*2 : HA-2036
*3 : HA-2037
*4 : HA-2039
*5 : HA-2056
*6 : HA-2061
*7 : HA-2066
*8 : HA-2058
*9 : HA-2056
*10 : HA-2040
*11 : HA-2050

Simpo PDF Merge and Split Unregistered Version - http://www.simpopdf.com

Bruit

PROCEDURE DE DIAGNOSTIC DE DEFAUT DU BRUIT

SYMPTOME :

- **Bruit**

Ordre de l'inspection

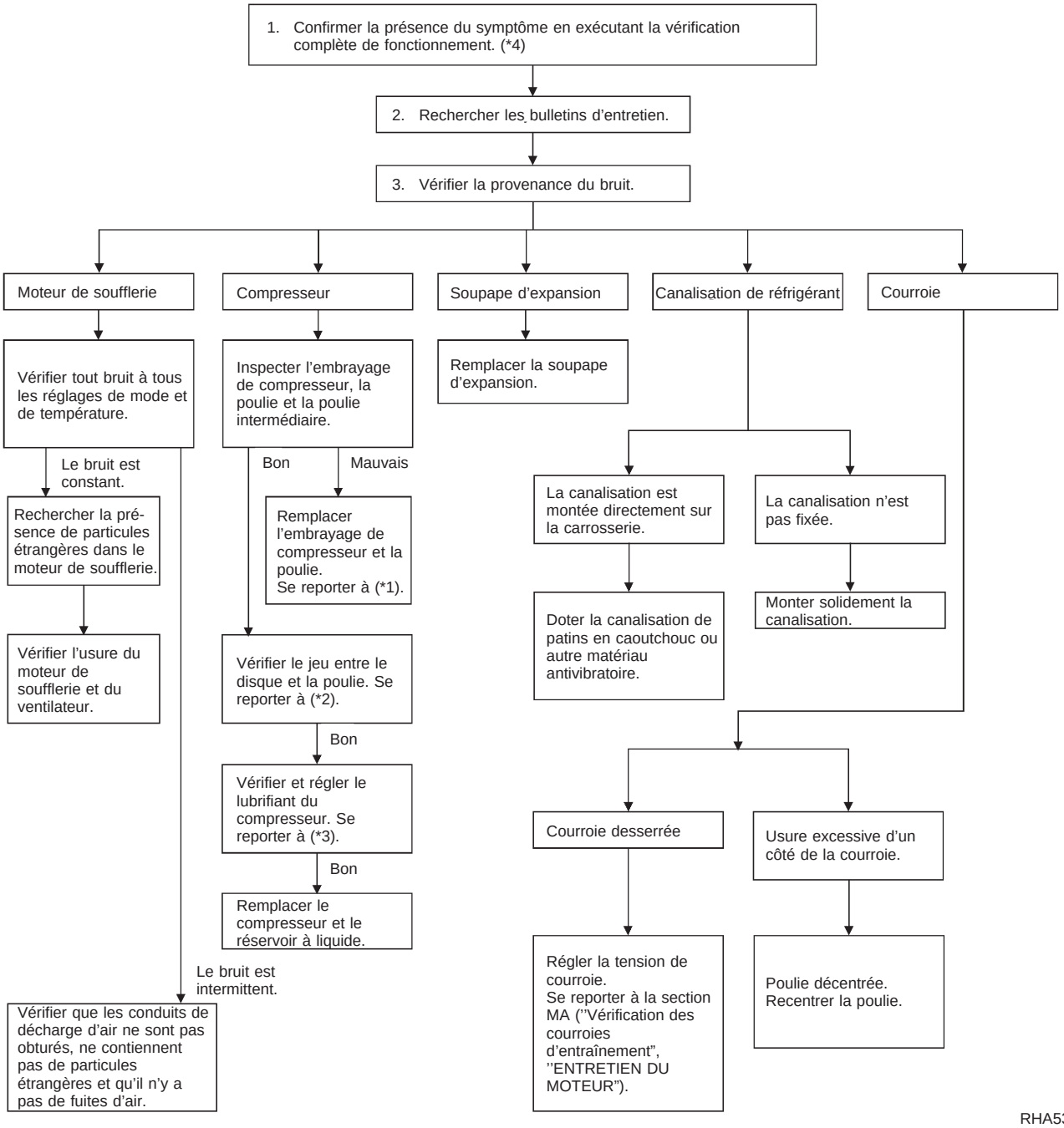

RHA539H

*1 :HA-62 dans le Manuel de Réparation D22, n° de Publication SM8F-0D22E0E

*2 :HA-65 dans le Manuel de Réparation D22, n° de Publication SM8F-0D22E0E

*3 :HA-59 dans le Manuel de Réparation D22, n° de Publication SM8F-0D22E0E

*4 : HA-2042

Simpo PDF Merge and Split Unregistered Version - http://www.simpopdf.com

Autodiagnostic

PROCEDURE DE DIAGNOSTIC DE DEFAUT DE L'AUTODIAGNOSTIC

SYMPTOME :

- **Il n'est pas possible d'effectuer l'autodiagnostic.**

Ordre de l'inspection

1. Confirmer la présence du symptôme en exécutant la vérification de fonctionnement.

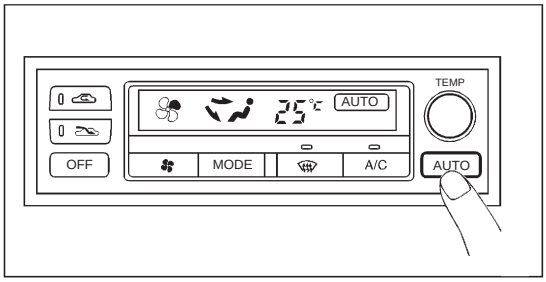

VERIFICATION DE FONCTIONNEMENT – Mode AUTO

a. Appuyer sur l'interrupteur AUTO.
b. L'affichage doit indiquer AUTO.
Vérifier que l'embrayage du compresseur s'engage (inspection auditive ou visuelle).
(L'air de décharge et la vitesse de soufflerie dépendront des températures ambiante, de l'habitacle et de référence). **Si le résultat est bon (le symptôme ne peut pas être répété), effectuer une vérification complète du fonctionnement. (*7).**
Si le résultat est mauvais (le symptôme est confirmé), continuer avec l'ETAPE 2 suivante.

2. Rechercher les bulletins d'entretien.
3. Vérifier l'alimentation électrique principale et le circuit de masse. (*1)

Bon — **La cause ne peut pas être confirmée par autodiagnostic.**

4. Vérifier le circuit du capteur de température ambiante. (*2)

Bon

5. Vérifier le circuit du capteur de l'habitacle. (*3)

Bon

6. Vérifier le circuit du capteur d'ensoleillement. (*4)

Bon

7. Vérifier le circuit du capteur d'admission d'air. (*5)

Bon

8. Vérifier le circuit PBR du moteur de volet de mélange d'air. (*6)

Bon

Si le symptôme existe toujours, effectuer une vérification complète de fonctionnement (*7) et vérifier s'il y a d'autres symptômes. [Se reporter au tableau des symptômes, (*8)].
Existe-t-il un autre symptôme ?

Non

Remplacer l'amplificateur automatique.

FIN DE L'INSPECTION

Oui

Se reporter au Diagnostic de défaut de symptômes connexes.

Un autre symptôme existe.

SHA352F

*1 : HA-2047
*2 : HA-2082
*3 : HA-2084
*4 : HA-2086
*5 : HA-2088
*6 : HA-2056
*7 : HA-2042
*8 : HA-2041

Simpo PDF Merge and Split Unregistered Version - http://www.simpopdf.com

Fonction de mémoire

PROCEDURE DE DIAGNOSTIC DE DEFAUT DE LA FONCTION DE MEMOIRE

SYMPTOME :

- **La fonction de mémoire ne fonctionne pas.**

Ordre de l'inspection

1. Confirmer la présence du symptôme en exécutant la vérification de fonctionnement suivante.

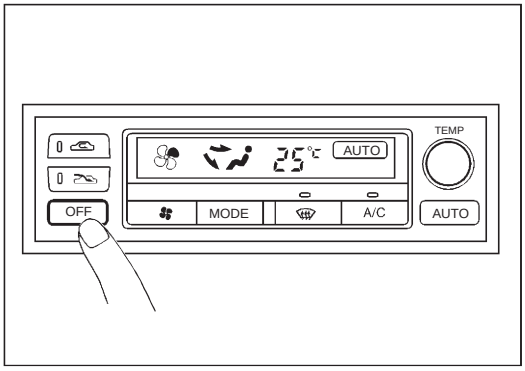

VERIFICATION DE FONCTIONNEMENT – Fonction de mémoire

a. Régler la température à 25°C.
b. Appuyer sur l'interrupteur OFF (ARRET).
c. Mettre le contact d'allumage sur ''OFF''.
d. Mettre le contact d'allumage sur ''ON''.
e. Appuyer sur l'interrupteur AUTO.
f. Vérifier que la température de référence ne varie pas par rapport à la température précédente.
g. Appuyer sur l'interrupteur OFF (ARRET).

Si le résultat est bon (le symptôme ne peut pas être répété), effectuer une vérification complète du fonctionnement. (*2).
Si le résultat est mauvais (le symptôme est confirmé), continuer avec l'ETAPE 2 suivante.

2. Rechercher les bulletins d'entretien.
3. Vérifier l'alimentation électrique principale et le circuit de masse. (*1)

Bon

4. Remplacer l'amplificateur automatique.
5. VERIFICATION FINALE
   Se reporter à la procédure étape par étape de l'autodiagnostic (*3) et effectuer l'ETAPE 2 d'autodiagnostic.
   S'assurer que le code n° 20 est affiché.

SHA027F

*1 : HA-2047 *2 : HA-2042 *3 : HA-2036

Simpo PDF Merge and Split Unregistered Version - http://www.simpopdf.com

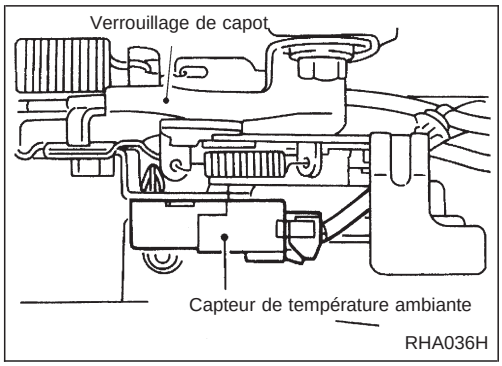

Capteur de température ambiante

DESCRIPTION DES COMPOSANTS

Le capteur de température ambiante est fixé devant le condenseur côté conducteur. Il détecte la température ambiante et la convertit en une valeur de résistance qui est ensuite entrée dans l'amplificateur auto.

TRAITEMENT DES ENTREES DE TEMPERATURE AMBIANTE

L'ampli. auto. comprend un ''circuit de traitement'' des entrées provenant du capteur de température ambiante. Cependant, lorsque la température détectée par le capteur de température ambiante augmente rapidement, le circuit de traitement retarde le fonctionnement de l'ampli. auto. Il permet à l'amplificateur auto. de détecter une augmentation de température de 0,33°C pour 100 secondes seulement.
Imaginons par exemple que l'on s'arrête pour prendre une tasse de café après avoir conduit à grande vitesse. Même si la température ambiante n'a pas changée, la température détectée par le capteur de température ambiante augmentera. C'est parce que la chaleur du compartiment moteur peut passer à travers la grille avant, où se situe le capteur de température ambiante.

Simpo PDF Merge and Split Unregistered Version - http://www.simpopdf.com

Capteur de température ambiante (suite)

PROCEDURE DE DIAGNOSTIC

SYMPTOME : le circuit du capteur de température ambiante est ouvert ou court-circuité. (21 ou 21 A/C LED est indiqué par l'ampli. automatique comme un résultat de l'ETAPE 2 de l'autodiagnostic.)

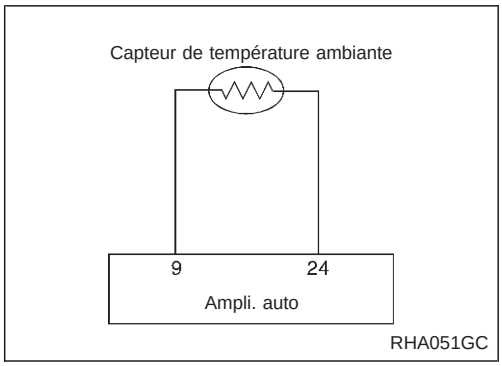

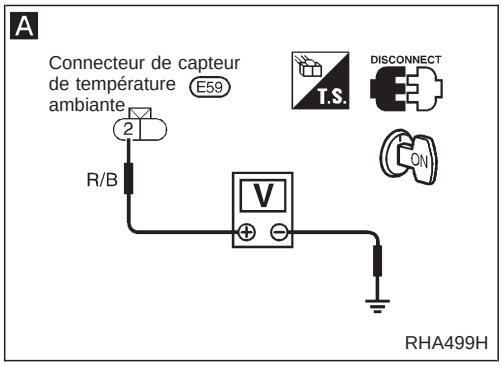

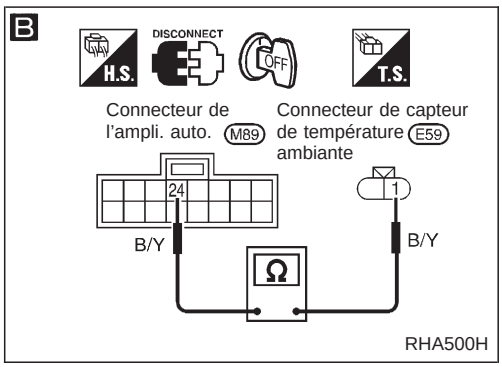

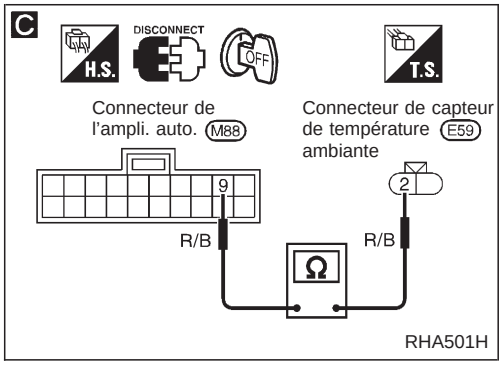

A

VERIFIER LE CIRCUIT DU CAPTEUR DE TEMPERATURE AMBIANTE ENTRE LE CAPTEUR ET L'AMPLIFICATEUR AUTOMATIQUE.
Débrancher le connecteur de faisceau du capteur de température ambiante.
Y a-t-il une tension d'environ 5 V entre la borne n° ② du faisceau du capteur de température ambiante et la masse de carrosserie ?

Non → Débrancher le connecteur de faisceau de l'amplificateur automatique.

C

Remarque

Vérifier la continuité du circuit entre la borne n° ② du faisceau du capteur de température ambiante et la borne n° ⑨ du faisceau de l'ampli. auto.

Bon → Remplacer l'amplificateur automatique.

Oui

Débrancher le connecteur de faisceau de l'amplificateur automatique.

B

Remarque

Vérifier la continuité du circuit entre la borne n° ① du faisceau du capteur de température ambiante et la borne n° ㉔ du faisceau de l'ampli. auto.

Bon

VERIFIER LE CAPTEUR DE TEMPERATURE AMBIANTE.
(Se reporter à HA-2083).

Mauvais → Remplacer le capteur de température ambiante.

Bon

Remplacer l'amplificateur automatique.

Remarque :
Si le résultat est mauvais ou ''Non'' après la vérification de la continuité du circuit, réparer le faisceau ou le connecteur.

Simpo PDF Merge and Split Unregistered Version - http://www.simpopdf.com

Capteur de température ambiante (suite)

INSPECTION DES COMPOSANTS

Capteur de température ambiante

Après avoir déconnecté le connecteur de faisceau du capteur de température ambiante, mesurer la résistance entre les bornes ① et ② côté faisceau du capteur, en se référant au tableau ci-dessous.

Température °C	Résistance kΩ
−20	9,98
−10	5,57
0	3,26
10	1,98
20	1,25
25	1,00
30	0,81
40	0,54

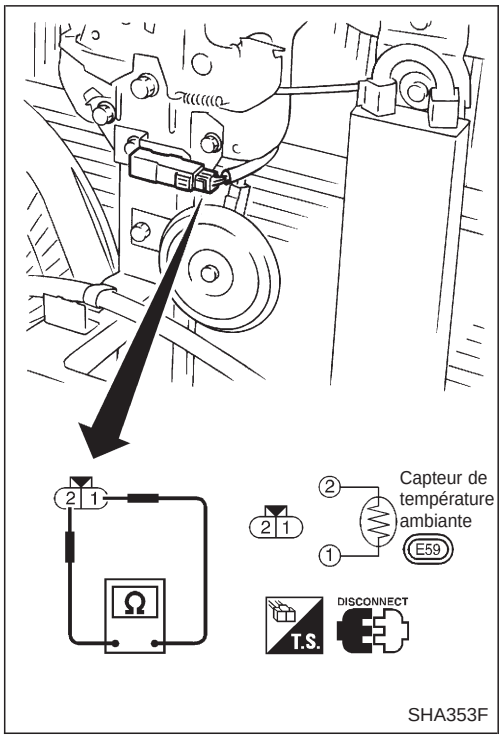

SHA353F

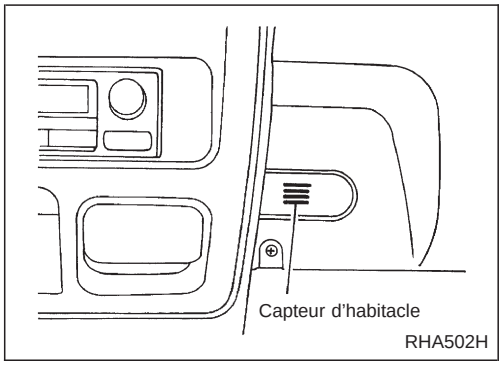

RHA502H

Capteur d'habitacle

DESCRIPTION DES COMPOSANTS

Le capteur d'habitacle est situé dans le panneau inférieur des instruments. Il convertit les variations de température de l'air du compartiment dispensé depuis l'aspiration. Celle-ci est ensuite entrée dans l'amplificateur auto.

Simpo PDF Merge and Split Unregistered Version - http://www.simpopdf.com

Capteur d'habitacle (suite)

PROCEDURE DE DIAGNOSTIC

SYMPTOME : le circuit du capteur d'habitacle est ouvert ou court-circuité. (22 ou 22 A/C LED est indiqué par l'ampli. automatique comme un résultat de l'ETAPE 2 de l'autodiagnostic.)

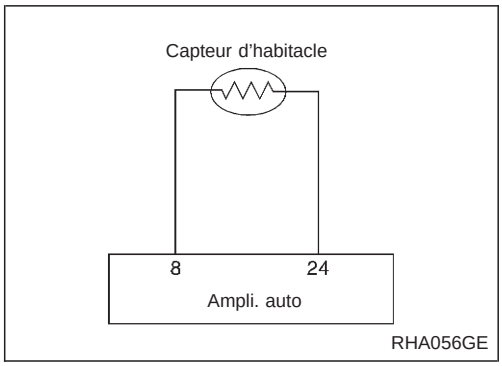

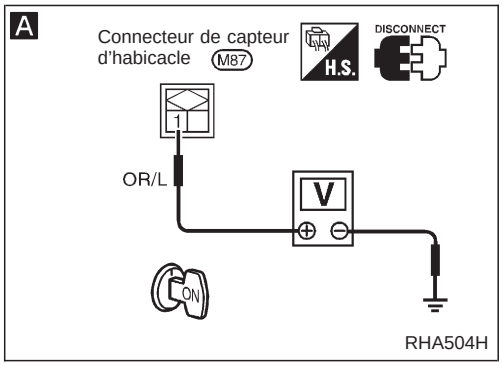

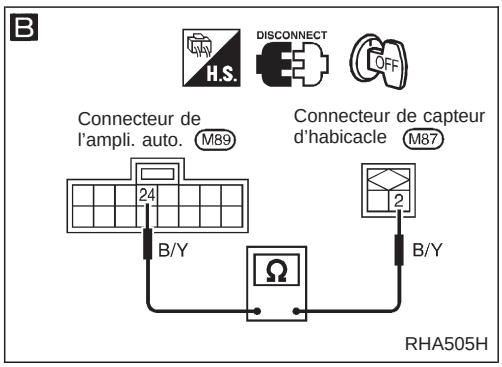

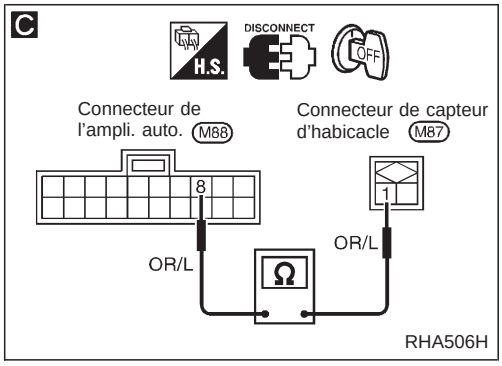

A

VERIFIER LE CIRCUIT DU CAPTEUR D'HABITACLE ENTRE LE CAPTEUR D'HABITACLE ET L'AMPLI. AUTO.
Débrancher le connecteur de faisceau du capteur d'habitacle.
Y a-t-il une tension d'environ 5 V entre la borne n° ① du faisceau du capteur d'habitacle et la masse de carrosserie ?

Non → Débrancher le connecteur de faisceau de l'amplificateur automatique.

Oui → Débrancher le connecteur de faisceau de l'amplificateur automatique.

C

Remarque

Vérifier la continuité du circuit entre la borne n° ① du faisceau du capteur d'habitacle et la borne n° ⑧ du faisceau de l'ampli. auto.

Bon → Remplacer l'amplificateur automatique.

B

Remarque

Vérifier la continuité du circuit entre la borne n° ② du faisceau du capteur d'habitacle et la borne n° ㉔ du faisceau de l'ampli. auto.

Bon → VERIFIER LE CAPTEUR D'HABITACLE.
(Se reporter à HA-2085).

Mauvais → Remplacer le capteur d'habitacle.

Bon → Remplacer l'amplificateur automatique.

Remarque :
Si le résultat est mauvais ou ''Non'' après la vérification de la continuité du circuit, réparer le faisceau ou le connecteur.

Simpo PDF Merge and Split Unregistered Version - http://www.simpopdf.com

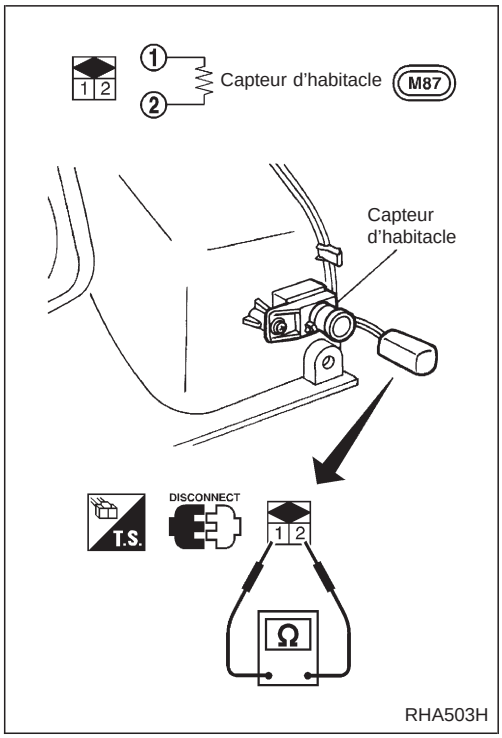

RHA503H

Capteur d'habitacle (suite)

INSPECTION DES COMPOSANTS

Capteur d'habitacle

Après avoir débranché le connecteur du faisceau du capteur d'habitacle, mesurer la résistance entre les bornes ① et ② du côté du faisceau du capteur, à l'aide du tableau ci-dessous.

Température °C	Résistance kΩ
0	6,0
5	4,95
10	3,99
15	3,24
20	2,65
25	2,19
30	1,81
35	1,51
40	1,27

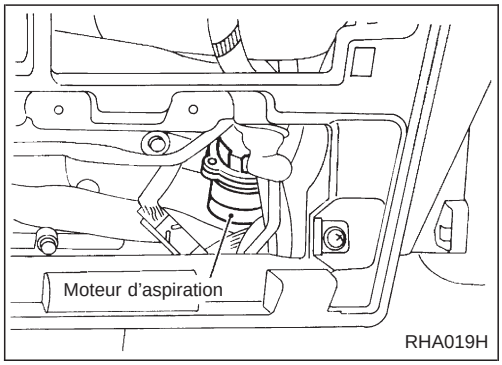

RHA019H

Moteur d'aspiration

DESCRIPTION DES COMPOSANTS

Le moteur d'aspirateur est situé à l'avant du dispositif de chauffage. Le moteur d'aspirateur fait circuler l'air du compartiment en continu dans le capteur d'habitacle lorsque le contact d'allumage est sur ON.
Vérifier si la fumée est correctement aspirée dans le capteur d'habitacle lorsqu'une cigarette allumée est déplacée près du capteur.

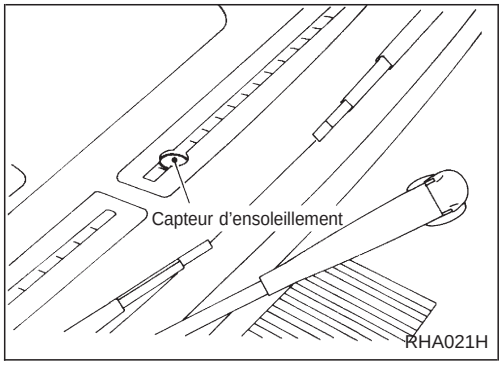

RHA021H

Capteur d'ensoleillement

DESCRIPTION DES COMPOSANTS

Le capteur d'ensoleillement est situé sur la grille du dégivreur central. Il détecte le niveau d'ensoleillement pénétrant à travers le pare-brise à l'aide d'une photodiode et le convertit en une valeur courante qui est ensuite entrée dans l'amplificateur auto.

Simpo PDF Merge and Split Unregistered Version - http://www.simpopdf.com

Capteur d'ensoleillement (suite)

PROCEDURE DE DIAGNOSTIC

SYMPTOME : le circuit du capteur d'ensoleillement est ouvert ou court-circuité. (25 ou 25 A/C LED est indiqué par l'ampli. automatique comme un résultat de l'ETAPE 2 de l'autodiagnostic.)

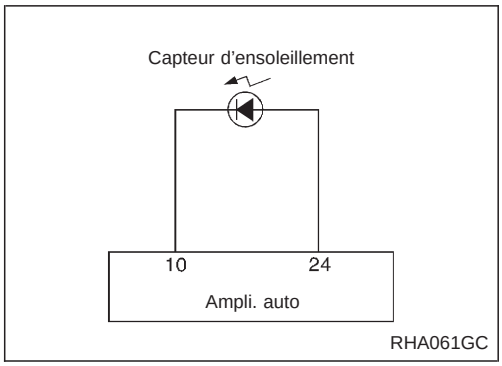

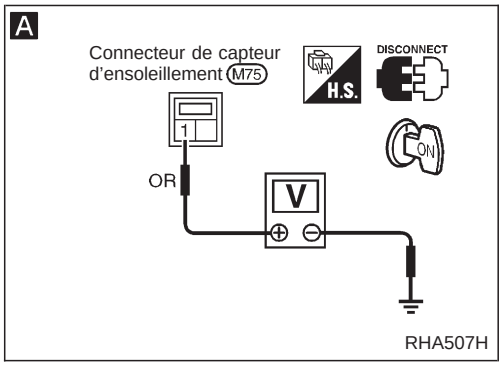

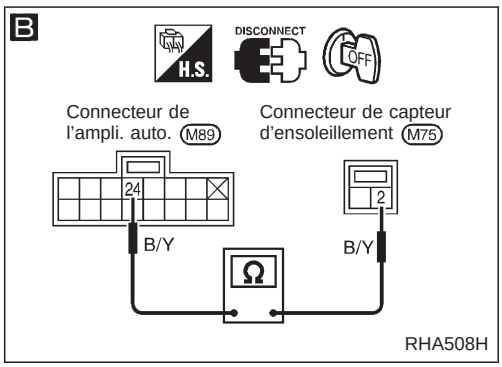

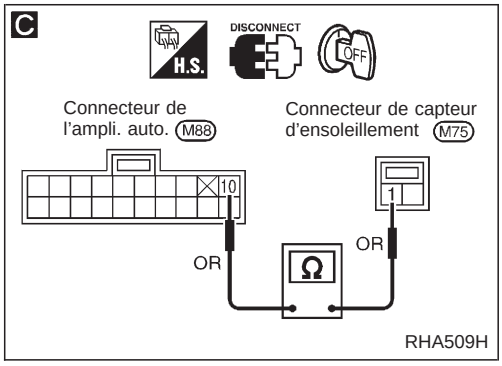

A

VERIFIER LE CIRCUIT DU CAPTEUR D'ENSOLEILLEMENT ENTRE LE CAPTEUR ET L'AMPLIFICATEUR AUTOMATIQUE.
Débrancher le connecteur de faisceau du capteur d'ensoleillement.
Y a-t-il une tension d'environ 5 V entre la borne n° ① du faisceau du capteur d'ensoleillement et la masse de carrosserie ?

Non → Débrancher le connecteur de faisceau de l'amplificateur automatique.

Débrancher le connecteur de faisceau de l'amplificateur automatique.

C

Remarque

Vérifier la continuité du circuit entre la borne n° ① du faisceau du capteur d'ensoleillement et la borne n° ⑩ du faisceau de l'ampli. auto.

Bon → Remplacer l'amplificateur automatique.

Oui

B

Remarque

Vérifier la continuité du circuit entre la borne n° ② du faisceau du capteur d'ensoleillement et la borne n° ㉔ du faisceau de l'ampli. auto.

Bon

VERIFIER LE CAPTEUR D'ENSOLEILLEMENT.
(Se reporter à HA-2087.)

Mauvais → Remplacer le capteur d'ensoleillement.

Bon

Remplacer l'amplificateur automatique.

Remarque :
Si le résultat est mauvais ou ''Non'' après la vérification de la continuité du circuit, réparer le faisceau ou le connecteur.

Simpo PDF Merge and Split Unregistered Version - http://www.simpopdf.com

Capteur d'ensoleillement (suite)

INSPECTION DES COMPOSANTS

Capteur d'ensoleillement

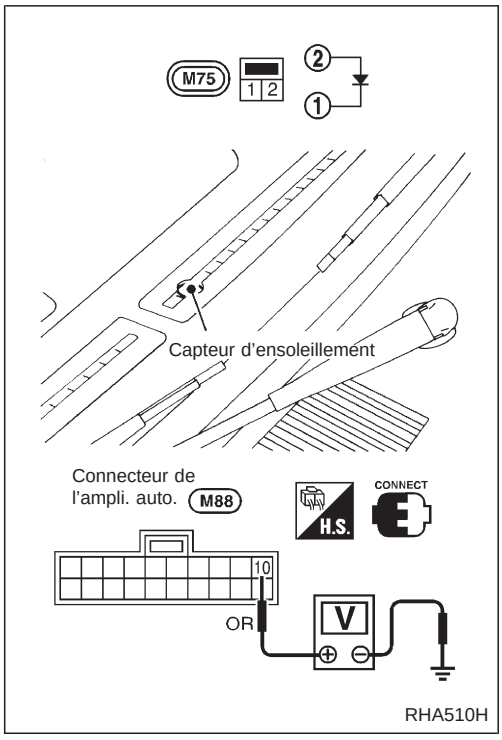

Mesurer la tension entre la borne ⑩ de l'ampli. auto. et la masse de carrosserie.

- **Vérifier le fonctionnement du capteur d'ensoleillement en s'assurant qu'il est directement exposé aux rayons du soleil.**

Simpo PDF Merge and Split Unregistered Version - http://www.simpopdf.com

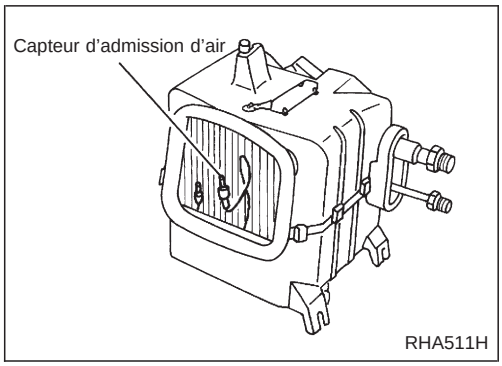

Capteur d'admission d'air

DESCRIPTION DES COMPOSANTS

La capteur d'admission d'air est placé sur l'unité de refroidissement. Il convertit la température de l'air après son passage dans l'évaporateur en une valeur de résistance. Cette valeur est alors entrée dans l'ampli. auto.

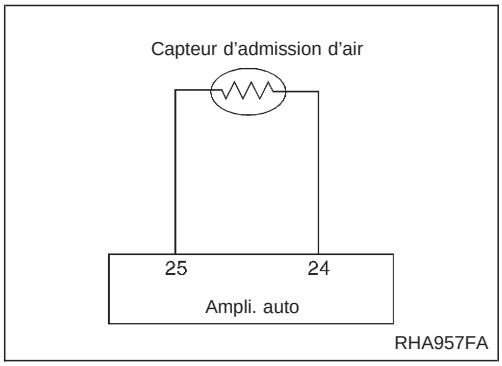

PROCEDURE DE DIAGNOSTIC

SYMPTOME : le circuit du capteur d'admission d'air est ouvert ou court-circuité.

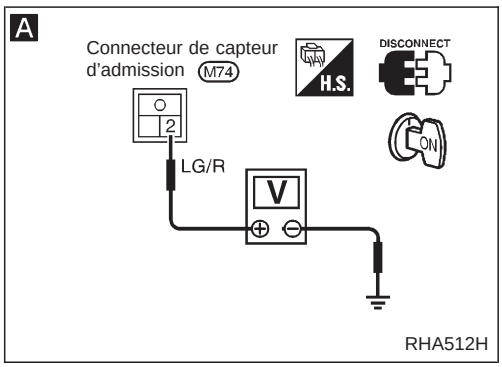

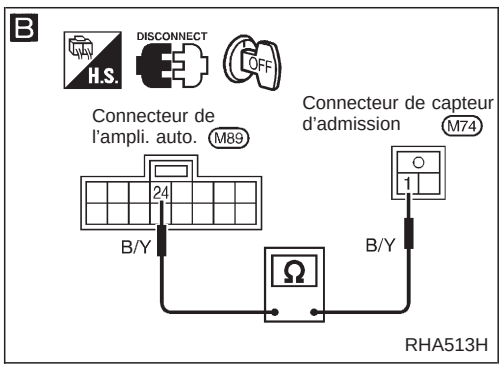

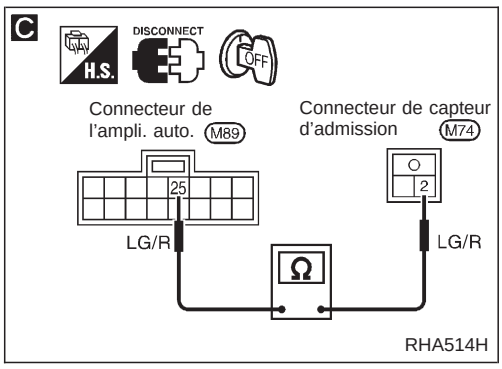

A

VERIFIER LE CIRCUIT DU CAPTEUR D'ADMISSION D'AIR ENTRE LE CAPTEUR D'ADMISSION ET L'AMPLI. AUTO.
Débrancher le connecteur de faisceau du capteur d'admission d'air.
Y a-t-il une tension d'environ 5 V entre la borne (2) du faisceau du capteur d'admission d'air et la masse de carrosserie ?

Non → Débrancher le connecteur de faisceau de l'amplificateur automatique.

C

Remarque

Vérifier la continuité du circuit entre la borne n° (2) du faisceau du capteur d'admission d'air et la borne n° (25) du faisceau de l'ampli. auto.
Il doit y avoir continuité.
Si le résultat est bon, vérifier si le faisceau n'est pas court-circuité.

Bon → Remplacer l'amplificateur automatique.

Oui → Débrancher le connecteur de faisceau de l'amplificateur automatique.

B

Remarque

Vérifier la continuité du circuit entre la borne n° (1) du faisceau du capteur d'admission d'air et la borne n° (24) du faisceau de l'ampli. auto.
Il doit y avoir continuité.
Si le résultat est bon, vérifier si le faisceau n'est pas court-circuité.

Bon → VERIFIER LE CAPTEUR D'ADMISSION D'AIR.
(Se reporter à HA-2089).

Mauvais → Remplacer le capteur d'admission d'air.

Bon → Remplacer l'amplificateur automatique.

Remarque :
Si le résultat est mauvais ou ''Non'' après la vérification de la continuité du circuit, réparer le faisceau ou le connecteur.

Simpo PDF Merge and Split Unregistered Version - http://www.simpopdf.com

Capteur d'admission d'air (suite)

INSPECTION DES COMPOSANTS

Capteur d'admission d'air

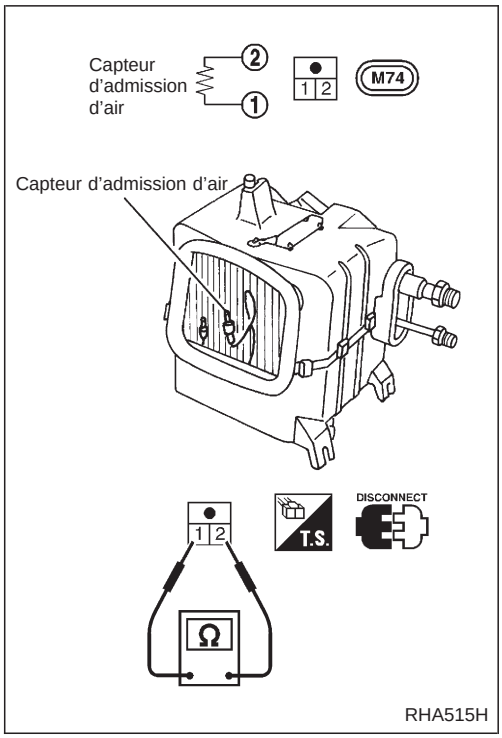

Après avoir déconnecté le connecteur de faisceau du capteur d'admission d'air, mesurer la résistance entre les bornes ㉕ et ㉔ côté faisceau du capteur, en se reportant au tableau ci-dessous.

Température °C	Résistance kΩ
−20	16,2
−10	9,8
0	6,0
10	3,94
20	2,64
25	2,12
30	1,82
40	1,27

Simpo PDF Merge and Split Unregistered Version - http://www.simpopdf.com

TABLE ALPHABETIQUE

SECTION IDX

Simpo PDF Merge and Split Unregistered Version - http://www.simpopdf.com

A

Allume-cigare.....EL-2097
Alternateur.....EL-2017
Amplificateur de commande de ventilateur.....HA-2064
Amplificateur de commande thermique.....HA-2022, 2073
Amplificateur automatique.....HA-2032, 2045
Anneau de synchronisateur (T/M).....MT-2003
Antenne.....EL-2106
Arbre de renvoi de marche arrière (T/M).....MT-2003
Arbre de transmission.....PD-2004
Arbre secondaire (T/M).....MT-2003
Autodiagnostics du C/A (C/A auto.).....HA-2034
Avertisseur sonore.....EL-2096
Axe de fourchette (T/M).....MT-2006

B

Boîtier à fusibles.....EL-2179
Boîtier de capteur de diagnostic.....RS-2007

C

Câble spiralé.....RS-2008
Capteur ambiant.....HA-2080
Capteur d'admission.....HA-2088
Capteur d'angle d'arbre à cames (CMPS).....EC-2007
Capteur d'angle de vilebrequin (POS).....EC-2007
Capteur d'angle de vilebrequin (REF).....EC-2007
Capteur de vitesse du véhicule (VSS).....EC-2009
Capteur d'habitacle.....HA-2082
Carter de transmission (T/M).....MT-2002, 2005
Centrales de commande (disposition des bornes).....EL-Dépliant
Circuit de charge.....EL-2014
Circuit de démarrage.....EL-2013
Circuit du témoin de défaut (MIL) et de liaison des données.....EC-2019
Clignotant.....EL-2039
Commande combinée.....EL-2018
Commutateur de ventilateur.....HA-2021
Composants externes du moteur.....EM-2002
Composants de la commande de passage (T/M).....MT-2006
Composants du pignon (T/M).....MT-2003
Contact de feux de recul (T/M) - Voir Contact de feux de recul (T/M).....MT-2002
Contact de feux de recul (T/M).....MT-2002
Contact de point mort (T/M).....MT-2002
Contact de point mort.....EC-2012
Coussin gonflable (air bag).....RS-2004
Coussin gonflable côté passager avant.....RS-2004
Culasse.....EM-2003

D

Débitmètre d'air (MAFS).....EC-2008
Démontage du roulement central (arbre de transmission).....PD-2006
Dépose et repose des instruments combinés - Voir Tableau de bord.....BT-2004
Dépose et repose du système audio et de la commande C/A - Voir Tableau de bord.....BT-2004
Description du système de C/A (C/A auto.).....HA-2023
Désembuage de lunette arrière.....EL-2099
Diagnostic de collision.....RS-2044
Diagnostics des défauts du C/A (C/A manuel).....HA-2003
Dimensions.....GI-2007
Disposition de l'alimentation électrique.....EL-2005
Disposition des faisceaux du C/A (C/A auto.).....HA-2026
Disposition des faisceaux.....EL-2149

E

Eclairage.....EL-2044
Eclairage de plaque minéralogique.....EL-2031
Electrovanne de commande de purge de cartouche EVAP.....EC-2013
Electrovanne de contrôle de vanne de commande de tourbillon.....EC-2017
Empattement (dimensions).....GI-2007
Emplacement des dispositifs électriques.....EL-2146
Essuie-glace avant.....EL-2089

F

Feu antibrouillard arrière.....EL-2037
Feux arrière.....EL-2031
Feux de détresse.....EL-2039
Feux de marche arrière.....EL-2036
Feu de stationnement.....EL-2031
Feux de stop.....EL-2035
Fourchette de passage (T/M).....MT-2006

G

Garde au sol.....GI-2007
Garniture de plancher.....BT-2007
Garniture de toit.....BT-2010
Garniture latérale.....BT-2007

Simpo PDF Merge and Split Unregistered Version - http://www.simpopdf.com

H

Hauteur (dimensions).....GI-2007

I

Instruments.....EL-2050
Intérieur BT-2007
Interrupteur de climatiseur HA-2021

J

Jauges EL-2050

L

Largeur (dimensions) GI-2007
Lave-glace, avant EL-2089
Lave-phare.....EL-2095
Lève-glace électrique EL-2111
Levier de passage de vitesses.....MT-2006
Liste (code de cellule) des schémas de câblage EL-2174
Longueur (dimensions) GI-2007
Lubrifiants MA-2003

M

Manchon d'accouplement (T/M) MT-2003
Manocontact triple.....HA-2022
Manocontact triple.....HA-2073
Mise au rebut du coussin gonflable.....RS-2013
Montage du support de différentiel.....PD-2008
Montage du roulement central (arbre de transmission).....PD-2006
Montre.....EL-2098
Moteur de volet de mode.....HA-2051
Moteur de volet de mélange d'air.....HA-2052

N

Numéro d'identification du véhicule.....GI-2006

P

Phares EL-2019
Pignon auxiliaire (T/M).....MT-2003
Pignon d'entraînement principal (T/M) MT-2003
Pignon de marche arrière (T/M) MT-2003
Pignon de renvoi (T/M).....MT-2003
Plafonnier.....EL-2048
Pompe d'alimentation EC-2015
Porte avant.....BT-2003
Prétensionneur de ceinture de sécurité.....RS-2004
Protecteur thermique HA-2027

R

Réglage de la timonerie de commande de volet de mélange d'air HA-2069
Réglage de la timonerie de commande du volet d'admission HA-2061
Réglage de la timonerie de commande du volet de mode HA-2051
Relais de climatiseur HA-2021, 2073
Relais de l'ECCS EC-2005
Relais de pompe d'alimentation EC-2015
Rétroviseur électrique de porte EL-2107
Revêtement de plafond - Voir Garniture de toit BT-2010
Révision T/M.....MT-2002

S

Schéma de câblage - ABS..... BR-2004, 2007
Schéma de câblage - A/C, A - HA-2028
Schéma de câblage - A/C, M -.....HA-2005
Schéma de câblage - AAC/V - EC-2011
Schéma de câblage - CHARGE - EL-2014
Schéma de câblage - CIGAR.....EL-2097
Schéma de câblage - CLOCK.....EL-2098
Schéma de câblage - CMPS -.....EC-2007
Schéma de câblage - DEF - EL-2099
Schéma de câblage - EGRC/V - EC-2027
Schéma de câblage - F/PUMP - EC-2015
Schéma de câblage - FICD - EC-2018, 2034
Schéma de câblage - H/AIM -.....EL-2029
Schéma de câblage - H/LAMP - EL-2019
Schéma de câblage - HEATER - HA-2003
Schéma de câblage - HLC - EL-2095
Schéma de câblage - HO2S - EC-2010
Schéma de câblage - HORN -.....EL-2096
Schéma de câblage - HSEAT -.....EL-2109
Schéma de câblage - ILL -.....EL-2044
Schéma de câblage - INT/L -.....EL-2049
Schéma de câblage - MAFS -.....EC-2008
Schéma de câblage - MAIN -.....EC-2005
Schéma de câblage - METER -.....EL-2050
Schéma de câblage - MULTI -.....EL-2134
Schéma de câblage - NATS -.....EL-2144
Schéma de câblage - P/ANT -.....EL-2106
Schéma de câblage - PGC/V -.....EC-2013
Schéma de câblage - PNP/SW -.....EC-2012
Schéma de câblage - POWER -.....EL-2006
Schéma de câblage - PST/SW - EC-2016
Schéma de câblage - R/FOG - EL-2037
Schéma de câblage - ROOM/L - EL-2048
Schéma de câblage - S/SIG - EC-2014
Schéma de câblage - SRS - RS-2022, 2025
Schéma de câblage - START -.....EL-2013

Simpo PDF Merge and Split Unregistered Version - http://www.simpopdf.com

Schéma de câblage - STOP/L -.....EL-2035
Schéma de câblage - SWL/V -.....EC-2017
Schéma de câblage - TAIL/L -.....EL-2031
Schéma de câblage - VSS -.....EC-2009
Schéma de câblage - WINDOW -.....EL-2112
Schéma de câblage - WIPER -.....EL-2089
Schéma du circuit de commande du moteur EC-2004
Signal de démarrage EC-2014
Siège chauffant.....EL-2109
SMJ (super raccord multiple) .....EL-Dépliant
Sonde d'ensoleillement.....HA-2084
Sonde à oxygène chauffée (HO2S) EC-2010
SRS - Voir Système de retenue supplémentaire RS-2004
Strapontin BT-2012
Suspension avant.....FA-2002
Synchronisateur (T/M) MT-2003
Système d'entrée sans clé - Voir Système de multi-télécommande EL-2132
Système d'éclairage de jour.....EL-2023
Système de commande du ventilateur de refroidissement LC-2002
Système de mise en veilleuse des codes EL-2026
Système de multi-télécommande EL-2132
Système de retenue supplémentaire.....RS-2004

T

Tableau de bord BT-2004
Taille de pneu GI-2007
Taille de roue GI-2007
Témoins d'avertissement.....EL-2075
Thermocontact HA-2022, 2074
Tige de passage des vitesses (T/M) MT-2006

V

Vanne de commande d'air auxiliaire (AAC) EC-2011
Vanne IACV-AAC.....EC-2011
Vérification du fonctionnement du C/A HA-2041
Vidange de l'huile (contenance).....MA-2003
Voie-Av Dr & Ar Dr (dimensions).....GI-2007
Volant et colonne de direction ST-2002

Simpo PDF Merge and Split Unregistered Version - http://www.simpopdf.com

<SUPPLEMENT-II>

CIRCUIT DE LUBRIFICATION DU MOTEUR ET CIRCUIT DE REFROIDISSEMENT

SECTION LC

AVIS DE MODIFICATION :

Moteur diesel :

Les données concernant l'inspection de la pompe à huile ont changé.

TABLE DES MATIERES

TD

CIRCUIT ELECTRIQUE DU MOTEUR DE VENTILATEUR DE COMPARTIMENT MOTEUR 2002
Schéma de câblage 2002

CARACTERISTIQUES ET VALEURS DE REGLAGE (SDS) 2003
Circuit de lubrification du moteur (TD) 2003

Simpo PDF Merge and Split Unregistered Version - http://www.simpopdf.com

Schéma de câblage

LC-COOL/F-01

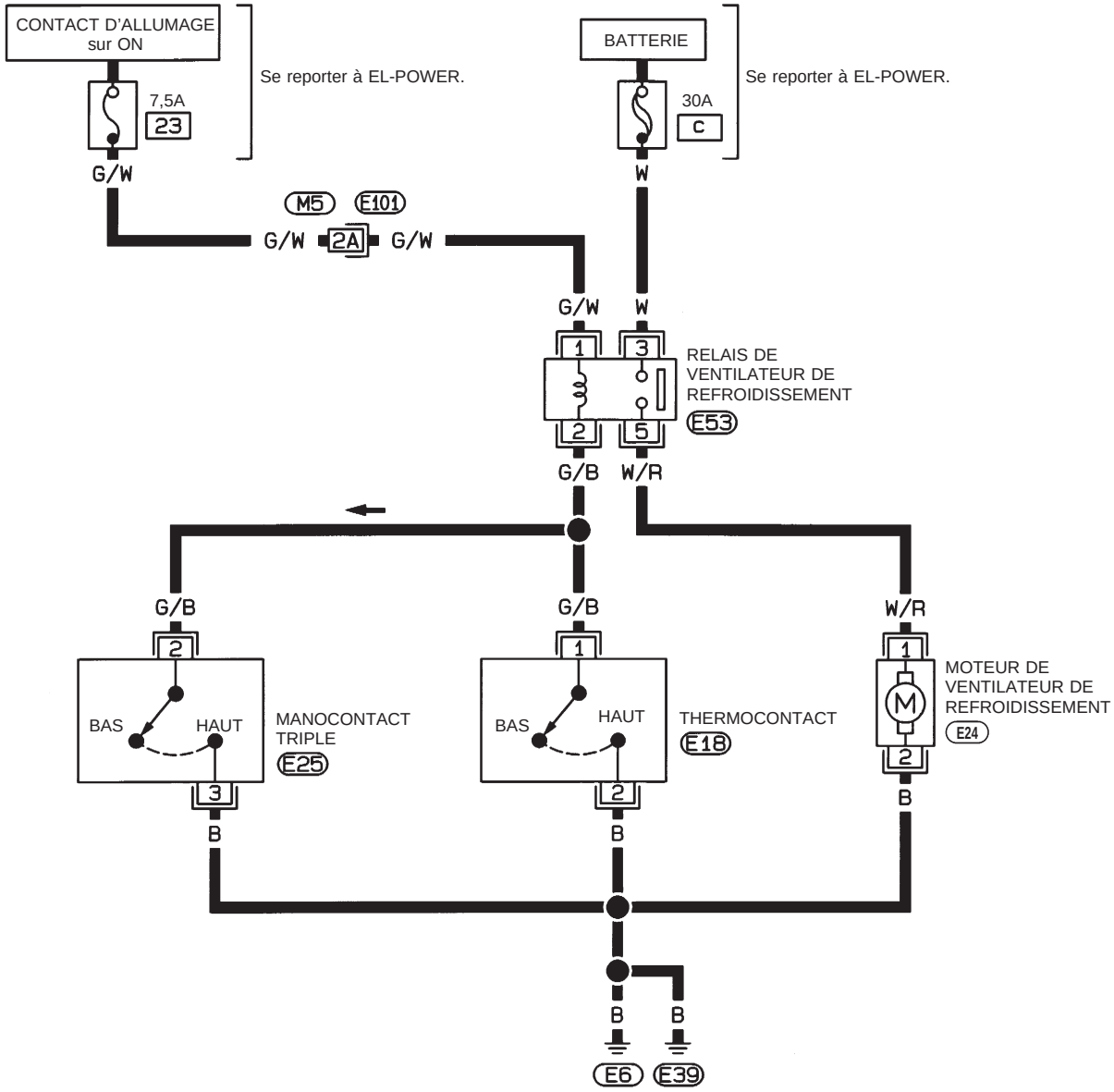

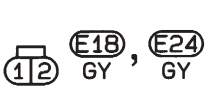



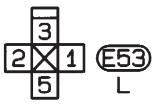

Consulter la dernière page dépliante.
M5, E101

HLC011

Simpo PDF Merge and Split Unregistered Version - http://www.simpopdf.com

Circuit de lubrification du moteur (TD)

Inspection de la pompe à huile

Unité : mm

Jeu latéral de pignon	Moins de 0,16
Battement de pignon	Moins de 0,43
Jeu de bague de pompe à huile	Moins de 0,15
Diamètre intérieur de bague de pompe à huile	13,012 - 13,106
Diamètre extérieur d'arbre de pignon d'entraînement	12,981 - 12,992

Simpo PDF Merge and Split Unregistered Version - http://www.simpopdf.com

<SUPPLEMENT-II>

TABLE DES MATIERES

PRECAUTIONS ET PREPARATION 2002
"COUSSIN GONFLABLE" (AIR BAG) et "PRETENSIONNEUR DE CEINTURE DE SECURITE" du système de retenue supplémentaire (SRS) 2002

LIQUIDES ET LUBRIFIANTS CONSEILLES 2003
Liquides et lubrifiants 2003
Indice de viscosité SAE 2004

Simpo PDF Merge and Split Unregistered Version - http://www.simpopdf.com

‘‘COUSSIN GONFLABLE’’ (AIR BAG) et ‘‘PRETENSIONNEUR DE CEINTURE DE SECURITE’’ du système de retenue supplémentaire (SRS)

Utilisé conjointement avec une ceinture de sécurité, les systèmes de retenue supplémentaire tels que le ‘‘COUSSIN GONFLABLE’’ et le ‘‘PRETENSIONNEUR DE CEINTURE DE SECURITE’’ permettent de réduire les risques de blessures graves subies par le conducteur et le passager avant lors de collisions frontales. La composition du système de retenue supplémentaire disponible sur le MODELE D22 NISSAN est la suivante (la composition variera en fonction de la destination et de l’équipement optionnel) :
Le système de retenue supplémentaire se compose d’un module de coussin gonflable côté conducteur (situé dans le moyeu du volant), d’un module de coussin gonflable côté passager (situé sur le tableau de bord, côté passager), de prétensionneurs de ceinture de sécurité, d’un boîtier de capteurs de diagnostic, d’un témoin d’avertissement, d’un faisceau de câblage et d’un câble spiralé.
Les informations nécessaires à l’entretien sans danger du système se trouvent à la **section RS** de ce Manuel de Réparation.

ATTENTION :

- **Afin de ne pas affecter le bon fonctionnement du SRS, ce qui augmenterait les risques de blessures graves ou mortelles en cas de collision entraînant le déploiement du coussin gonflable, toutes les opérations d’entretien devront être effectuées par un concessionnaire NISSAN agréé.**
- **Un entretien incorrect, y compris une dépose et une installation incorrectes du SRS, pourra entraîner des risques de blessures causées par le déploiement imprévu du système. Pour la dépose du câble spiralé et du module de coussin gonflable, se reporter à la section RS.**
- **Ne pas utiliser d’équipement d’essai électrique sur tout circuit connexe au SRS sauf si indiqué dans ce Manuel de Réparation. Le câble spiralé et les faisceaux de câblage (à l’exception du ‘‘PRETENSIONNEUR DE CEINTURE DE SECURITE’’) recouverts d’une gaine d’isolation jaune placée juste avant les connecteurs de faisceau ou couvrant l’ensemble du faisceau sont reliés au SRS.**

Simpo PDF Merge and Split Unregistered Version - http://www.simpopdf.com

Liquides et lubrifiants

		Contenance (approximative) Litre	Liquides et lubrifiants recommandés
Huile moteur (remplissage)			
Avec filtre à huile			
	TD25	6,0	Moteur à essence : API SG, SH ou SJ* Moteur diesel : API CD*
	TD25Ti	6,7	
Sans filtre à huile			
	TD25	5,3	
	TD25Ti	6,0	
Circuit de refroidissement (avec réservoir)			
	TD25	9,5	Liquide de refroidissement antigel (à base d'éthylène glycol)
	TD25Ti	10,6	
Huile pour boîte de vitesses manuelle	FS5R30A	4 roues motrices 5,1	API GL-4, Viscosité SAE 75W-90 uniquement
	FS5W71C	2 roues motrices 2,0 4 roues motrices 4,9	
Huile de boîte de différentiel			
Avant :	R180A	1,3	Différentiel standard : API GL-5*1 Pignon de différentiel à glissement limité (LSD) : huile pour engrenages hypoïdes LSD (N° de pièce : KLD31-14002) ou équivalent*2
Arrière :	C200	1,3	
	H233B	2,8	
Liquide pour direction assistée		—	Type DEXRON™ IIE, DEXRON™ III ou équivalent
Liquide de frein et d'embrayage		—	DOT 3 ou DOT 4 (US FMVSS N°116)*3
Graisse pour arbre de transmission		—	NLGI N° 2 (à base de savon de lithium comprenant du bisulfure de molybdène)
Graisse à usage multiple		—	NLGI N° 2 (à base de savon de lithium)

*1 : Pour de plus amples détails, se reporter à ''Indice de viscosité SAE''.
*2 : API GL-5, SAE 140 et 10% de la quantité de modificateur de friction de LSD (n° de pièce : 38469-C6000) sont des équivalents.
*3 : Ne jamais mélanger DOT 3 et DOT 4. (DOT 3 est rempli en usine.)

Simpo PDF Merge and Split Unregistered Version - http://www.simpopdf.com

Indice de viscosité SAE

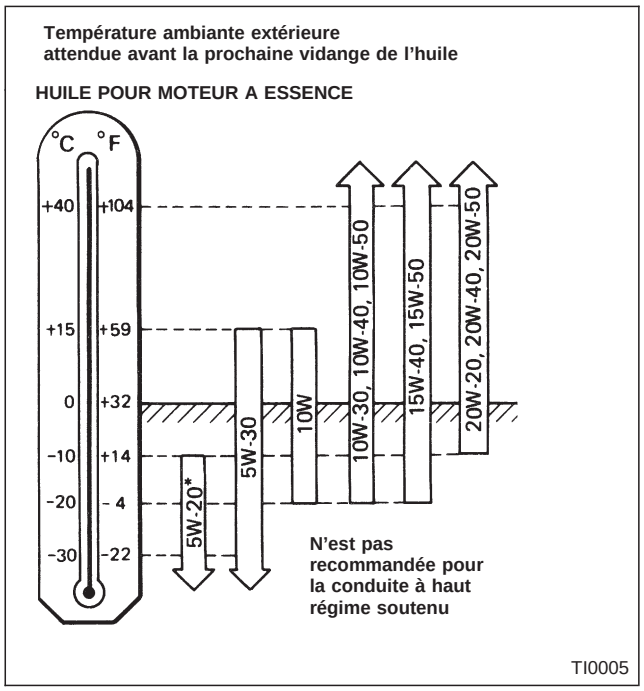

- **Pour les pays tempérés et froids : l'huile 10W-30 convient, avec une température ambiante supérieure à −20°C.**
- **Pour des régions très chaudes : les huiles 20W-20, 20W-40 et 20W-50 conviennent.**

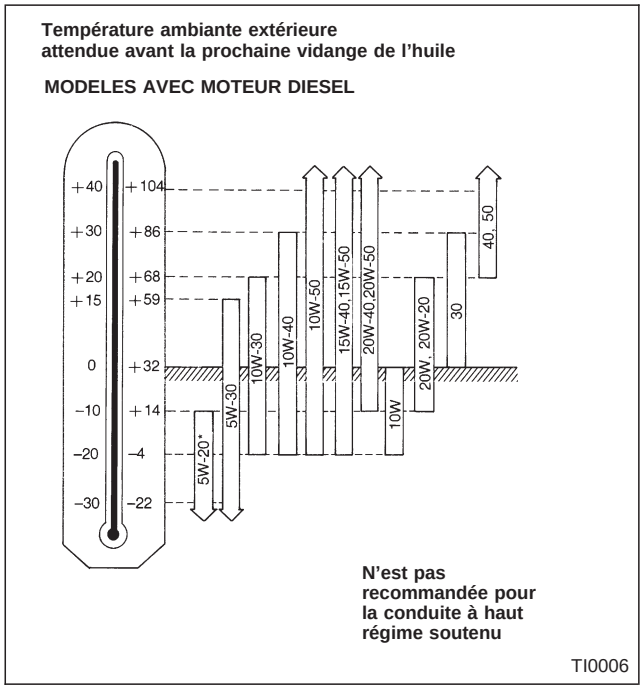

- **Pour les pays froids : l'huile 10W-30 est préférable.**
  Pour les modèles équipés d'un turbocompresseur, l'huile 5W-20 n'est pas recommandée et l'huile 5W-30 ne doit être utilisée qu'en dessous de 0°.
- **Pour les pays tempérés et très chauds : les huiles 20W-40 et 20W-50 conviennent.**

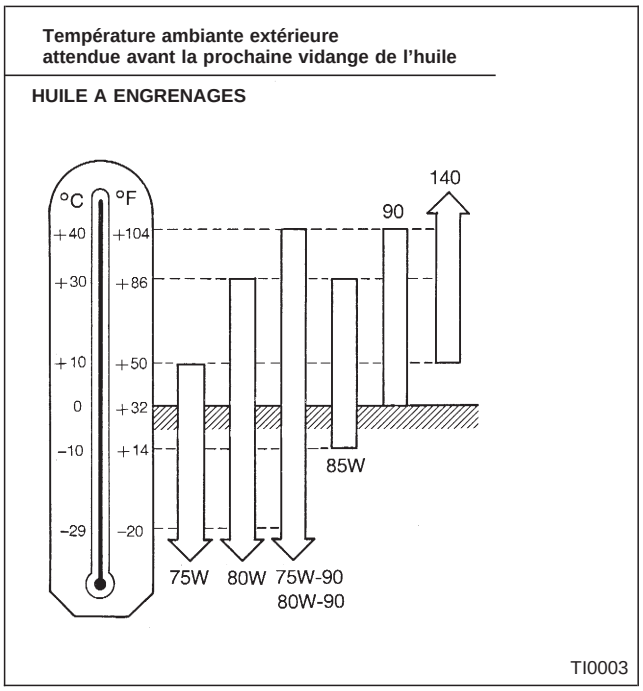

- **Pour des régions tempérées et froides : l'huile 75W-90 pour la boîte de transfert et l'huile 80W-90 pour le différentiel conviennent.**
- **Pour les pays très chauds : l'huile 90 convient à une température ambiante inférieure à 40°C.**

Simpo PDF Merge and Split Unregistered Version - http://www.simpopdf.com

<SUPPLEMENT-II>

BOITE DE VITESSES MANUELLE

SECTION MT

TABLE DES MATIERES

FS5W71C

INTERVENTION MAJEURE 2002
- Composants du carter 2002
- Composants de la boîte - Modèles à 2 roues motrices 2003
- Composants de la boîte - Modèles à 4 roues motrices 2004

FS5R30A

INTERVENTION MAJEURE 2005
- Composants du carter 2005
- Composants de la commande de passage des vitesses 2006

FS5W71C et FS5R30A

CARACTERISTIQUES ET VALEURS 2008
- Caractéristiques générales 2008

Simpo PDF Merge and Split Unregistered Version - http://www.simpopdf.com

Composants du carter

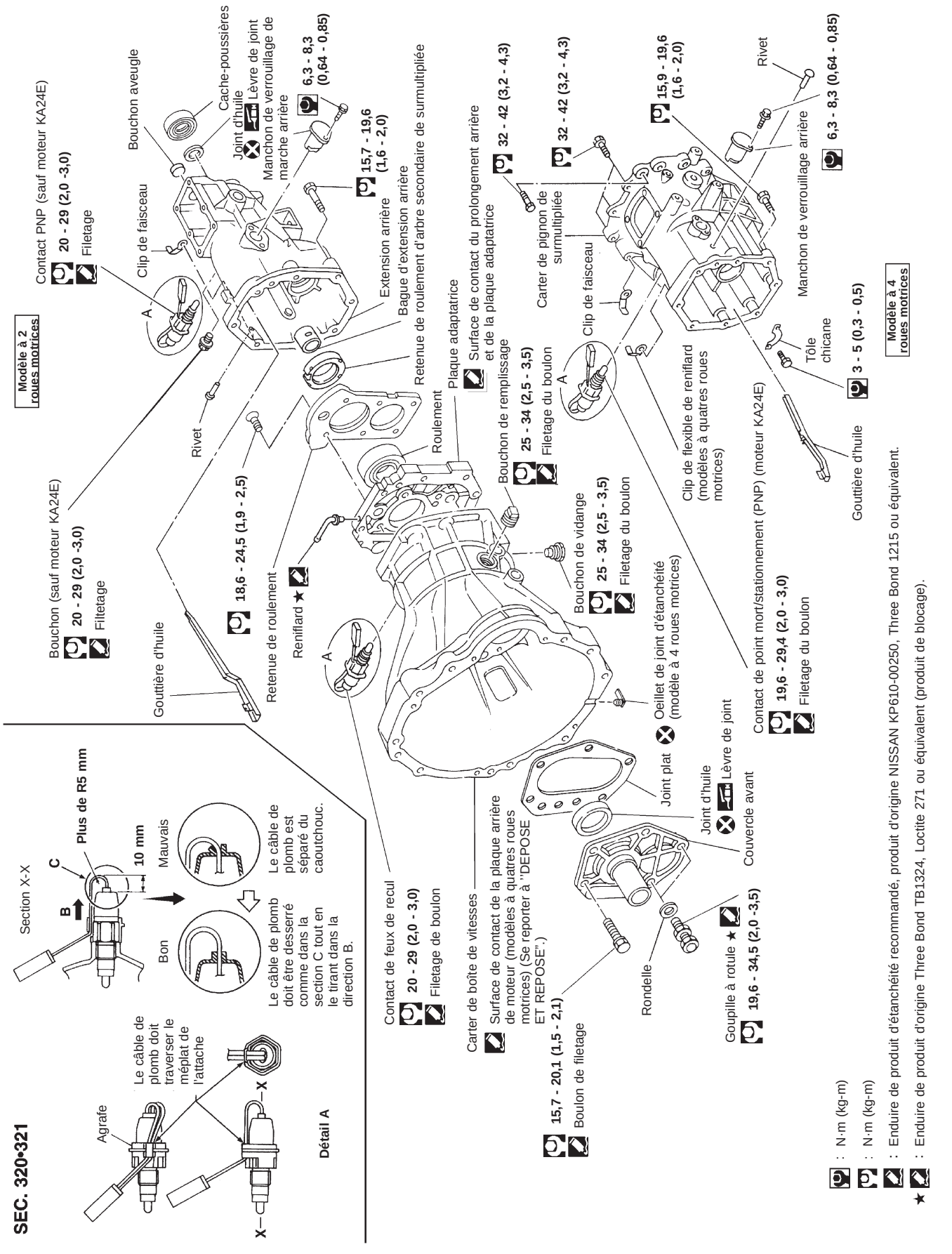

SEC. 320•321

SMT894D

Simpo PDF Merge and Split Unregistered Version - http://www.simpopdf.com

Composants de la boîte — Modèles à 2 roues motrices

SEC. 322

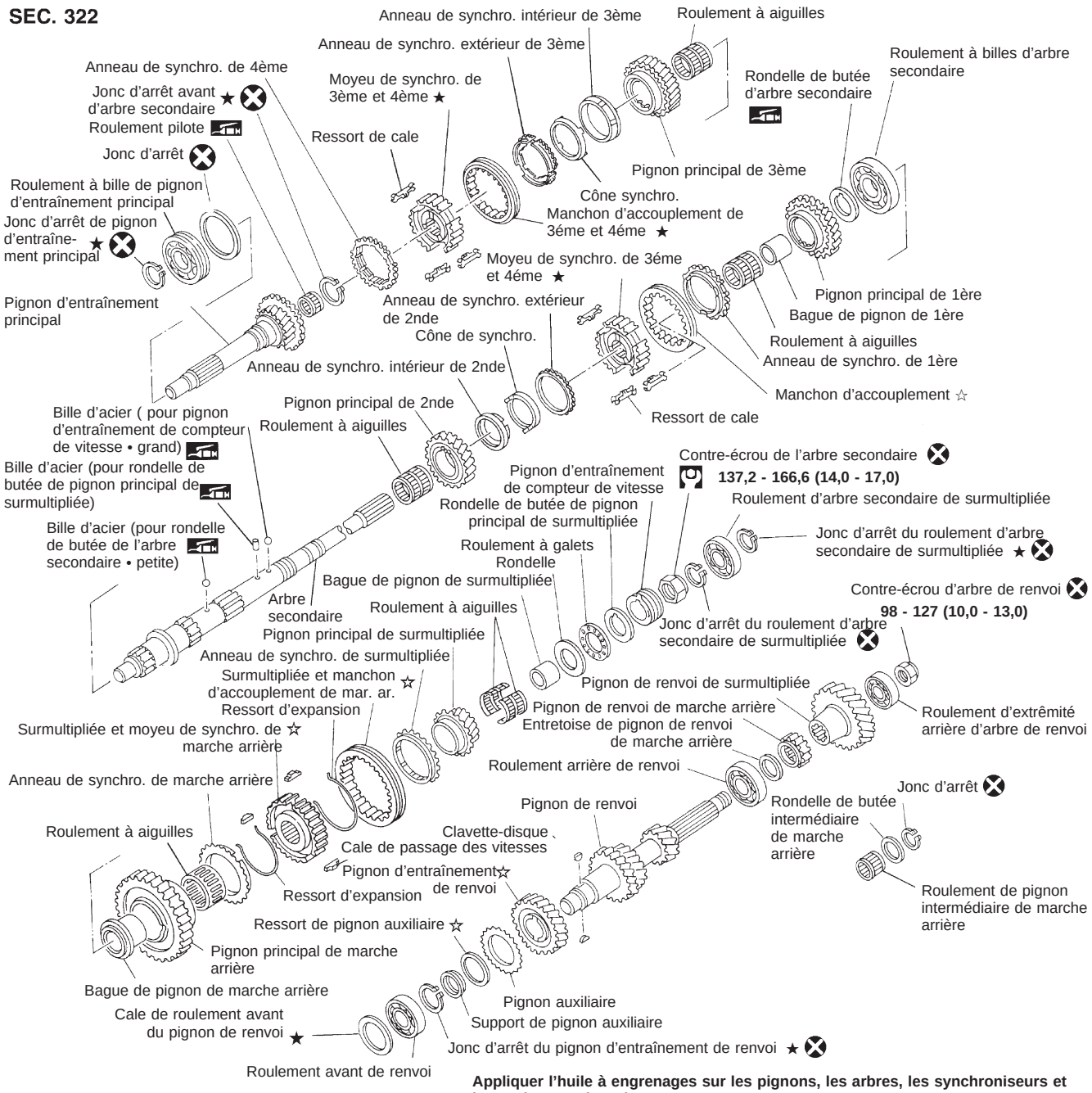

Appliquer l'huile à engrenages sur les pignons, les arbres, les synchroniseurs et les roulements lors du montage.

★ : Sélectionner l'épaisseur adéquate.
☆ : Veiller au sens de montage.
: N·m (kg-m)
: Enduire de graisse.

Composants de pignon intermédiaire de marche arrière	
Moteur KA24E	MOTEUR TD25
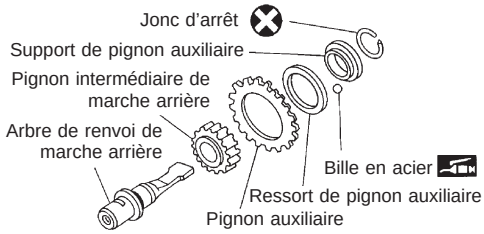	

NMT096

Simpo PDF Merge and Split Unregistered Version - http://www.simpopdf.com

Composants de la boîte — Modèles à 4 roues motrices

SEC. 322

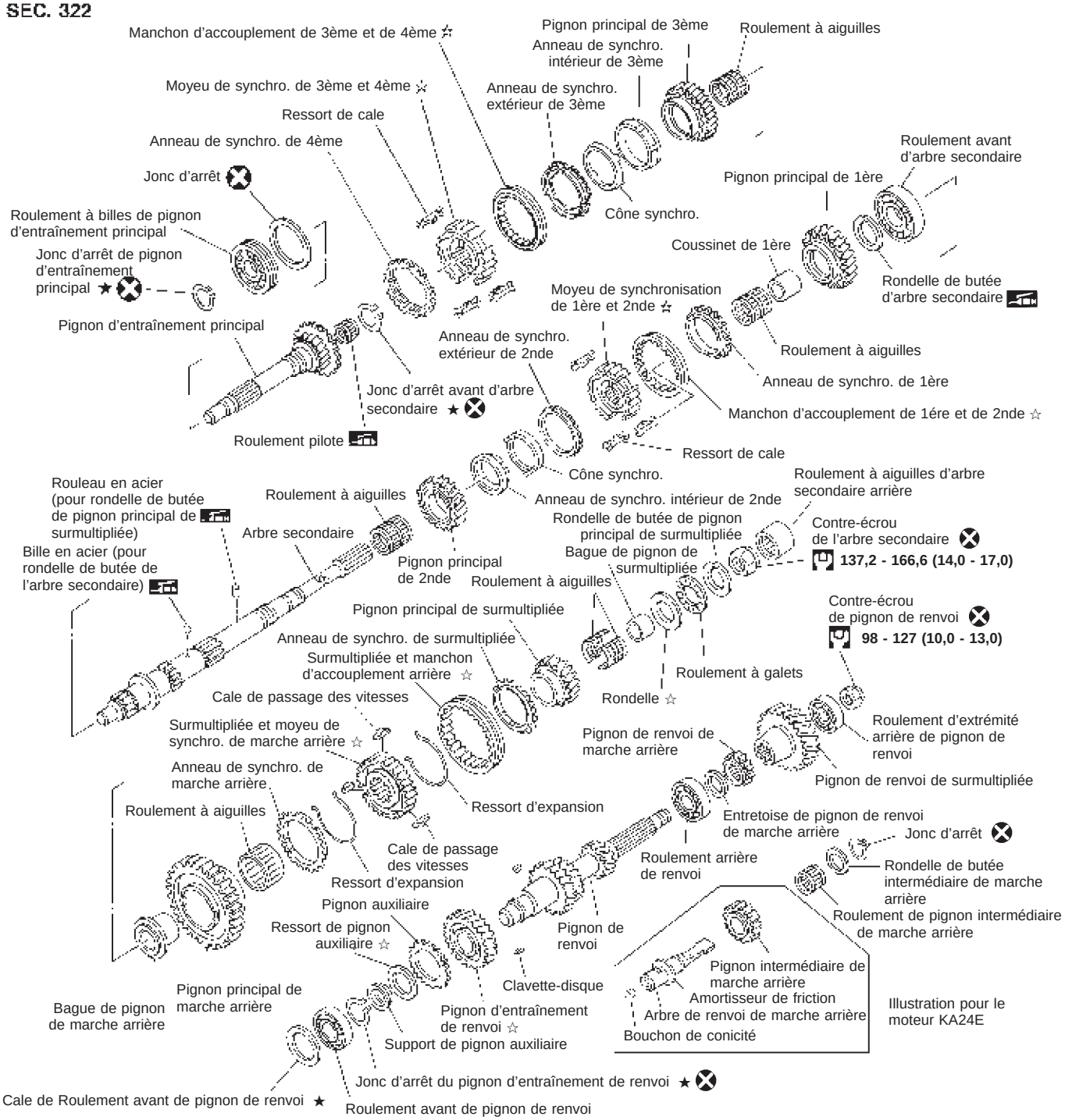

Appliquer l'huile à engrenages sur les pignons, les arbres, les synchroniseurs et les roulements lors du montage.

★ : Sélectionner l'épaisseur adéquate.

☆ : Veiller au sens de montage.

; N·m (kg-m)

: Enduire de graisse.

NMT095

Simpo PDF Merge and Split Unregistered Version - http://www.simpopdf.com

Composants du carter

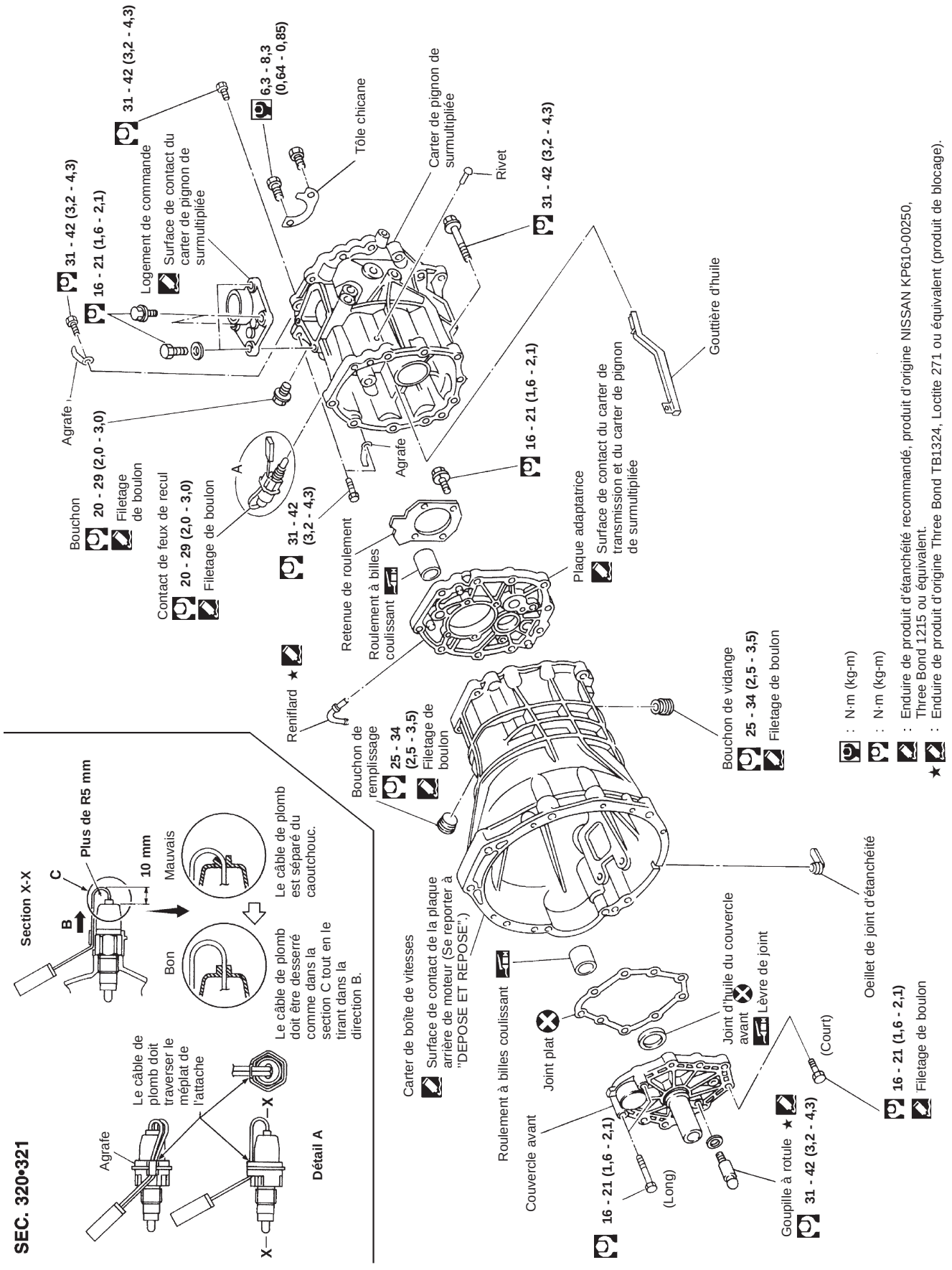

SMT897D

Simpo PDF Merge and Split Unregistered Version - http://www.simpopdf.com

Composants de la commande de passage des vitesses

PRECAUTION :
Pour éviter tout dommage lors du remplacement du pommeau de levier, déposer le levier de passage avec le pommeau, comme un ensemble.

Simpo PDF Merge and Split Unregistered Version - http://www.simpopdf.com

Composants de la commande de passage des vitesses (suite)

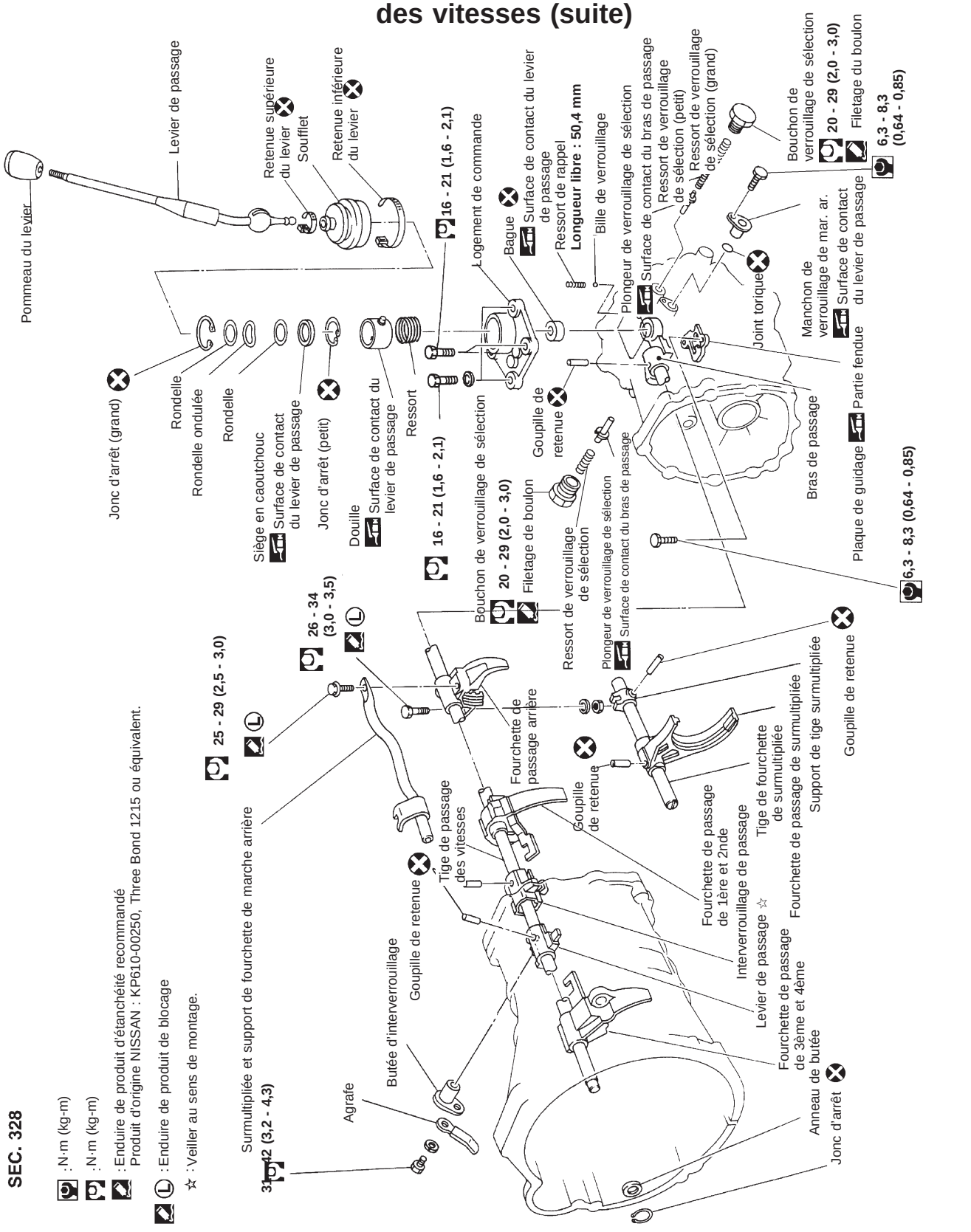

SEC. 328

: N·m (kg-m)
: N·m (kg-m)
: Enduire de produit d'étanchéité recommandé Produit d'origine NISSAN : KP610-00250, Three Bond 1215 ou équivalent.
Ⓛ : Enduire de produit de blocage
☆ : Veiller au sens de montage.

SMT898D

Simpo PDF Merge and Split Unregistered Version - http://www.simpopdf.com

Caractéristiques générales

Modèle concerné	2 roues motrices		4 roues motrices	
	KA24E	TD25	KA24E	TD25T
Boîte de vitesses	FS5W71C			FS5R30A
Nombre de vitesses	5			
Disposition des vitesses				
Type de synchronisation	Warner			
Rapport de démultiplication				
1ère	3,592	3,985	3,592	3,580
2nde	2,246	2,246	2,246	2,077
3ème	1,415	1,415	1,415	1,360
4ème	1,000	1,000	1,000	1,000
Surmultipliée	0,821	0,821	0,821	0,811
Marche arrière	3,657	3,657	3,657	3,636
Nombre de dents				
Arbre secondaire				
Conduite	21	21	21	22
1ère	33	34	33	32
2nde	28	28	28	30
3ème	26	26	26	29
Surmultipliée	21	21	21	24
Marche arrière	36	36	36	30
Arbre de renvoi				
Conduite	32	32	32	32
1ère	14	13	14	13
2nde	19	19	19	21
3ème	28	28	28	31
Surmultipliée	39	39	39	43
Marche arrière	15	15	15	12
Pignon intermédiaire de marche arrière	21			22
Contenance en huile ℓ	2,0		4,9	5,1

Remarques	Pignon auxiliaire	Pignon d'entraînement de renvoi	Posé
		Pignon intermédiaire de marche arrière	Non posé
	Synchro. de type à double anneau de synchro.	2nde et 3ème vitesses	
	Synchro. de marche arrière	Reposé	

Synchro. de type anneau de synchro. double de 2ème et 3ème

Simpo PDF Merge and Split Unregistered Version - http://www.simpopdf.com

<SUPPLEMENT-II>

ARBRE DE TRANSMISSION ET PORTE-DIFFERENTIEL

SECTION **PD**

AVIS DE MODIFICATION :

- La fourchette de flasque de l'arbre de transmission a été changée.
- La transmission de l'essieu arrière (C200) a été changée.
- Les caractéristiques et valeurs de reglage (SDS) ont été changées.

TABLE DES MATIERES

PREPARATION 2002
Outillage spécial 2002

Arbre de transmission

ARBRE DE TRANSMISSION 2004
Démontage 2006
Remontage 2006

C200

PONT ARRIERE 2007
REMONTAGE 2008
Support de différentiel 2008
CARACTERISTIQUES ET VALEURS DE REGLAGE (SDS) 2012
Arbre de transmission 2012

Simpo PDF Merge and Split Unregistered Version - http://www.simpopdf.com

Outillage spécial

Numéro de l'outil Nom de l'outil	Description		Modèle concerné C200
ST3127S000 Jauge de précharge ① GG91030000 Clé dynamométrique ② HT62940000 Adaptateur à douille ③ HT62900000 Adaptateur de douille	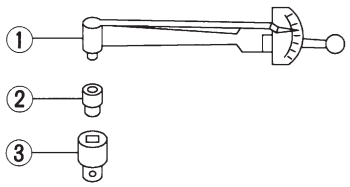 NT124	Mesure de la précharge de roulement du pignon et de la précharge totale	X
KV38108300 Clé de flasque de pignon d'attaque	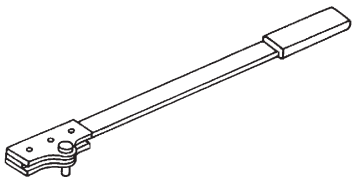 NT771	Dépose et repose du contre-écrou de l'arbre de transmission et du contre-écrou du pignon d'attaque	X
ST3090S000 Jeu d'extracteur de cuvette interne arrière de pignon d'attaque ① ST30031000 Extracteur ② ST30901000 Base	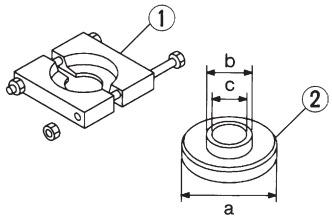 NT527	Dépose et repose du cône interne arrière du pignon d'attaque (tous) Dépose du rotor de capteur de roue arrière. **a : 79 mm de dia.** **b : 45 mm de dia.** **c : 35 mm de dia.**	X
KV38100600 Chassoir d'entretoise de roulement latéral	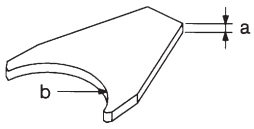 NT528	Repose de l'entretoise de roulement latéral **a : 8 mm** **b : R42,5 mm**	X
ST30611000 Chassoir	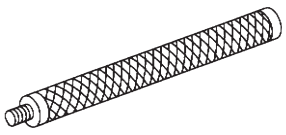 NT090	Repose de la cuvette externe de roulement arrière de pignon	X
ST30621000 Chassoir	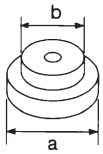 NT073	Repose de la cuvette externe de roulement arrière de pignon **a : 79 mm de dia.** **b : 59 mm de dia.**	X

Simpo PDF Merge and Split Unregistered Version - http://www.simpopdf.com

Outillage spécial (suite)

Numéro de l'outil Nom de l'outil	Description		Modèle concerné
			C200
ST30613000 Chassoir	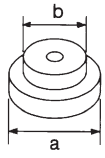 NT073	Repose de la cuvette externe de roulement avant de pignon **a : 72 mm de dia.** **b : 48 mm de dia.**	X
KV381025S0 Outil de montage de joint d'huile ① ST30720000 Tête de chassoir ② KV38102510 Chassoir	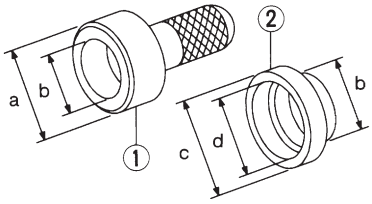 NT525	Repose du joint d'huile avant (R180A, H233B) Repose du rotor de capteur de roue arrière. **a : 77 mm de dia.** **b : 55 mm de dia.** **c : 71 mm de dia.** **d : 65 mm de dia.**	X
KV38100500 Chassoir de joint d'huile de carter de pignon	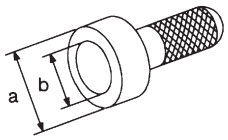 NT115	Repose du joint d'huile avant **a : 85 mm de dia.** **b : 60 mm de dia.**	X

Simpo PDF Merge and Split Unregistered Version - http://www.simpopdf.com

Arbre de transmission avant (modèles 2F63H et 2F71H)

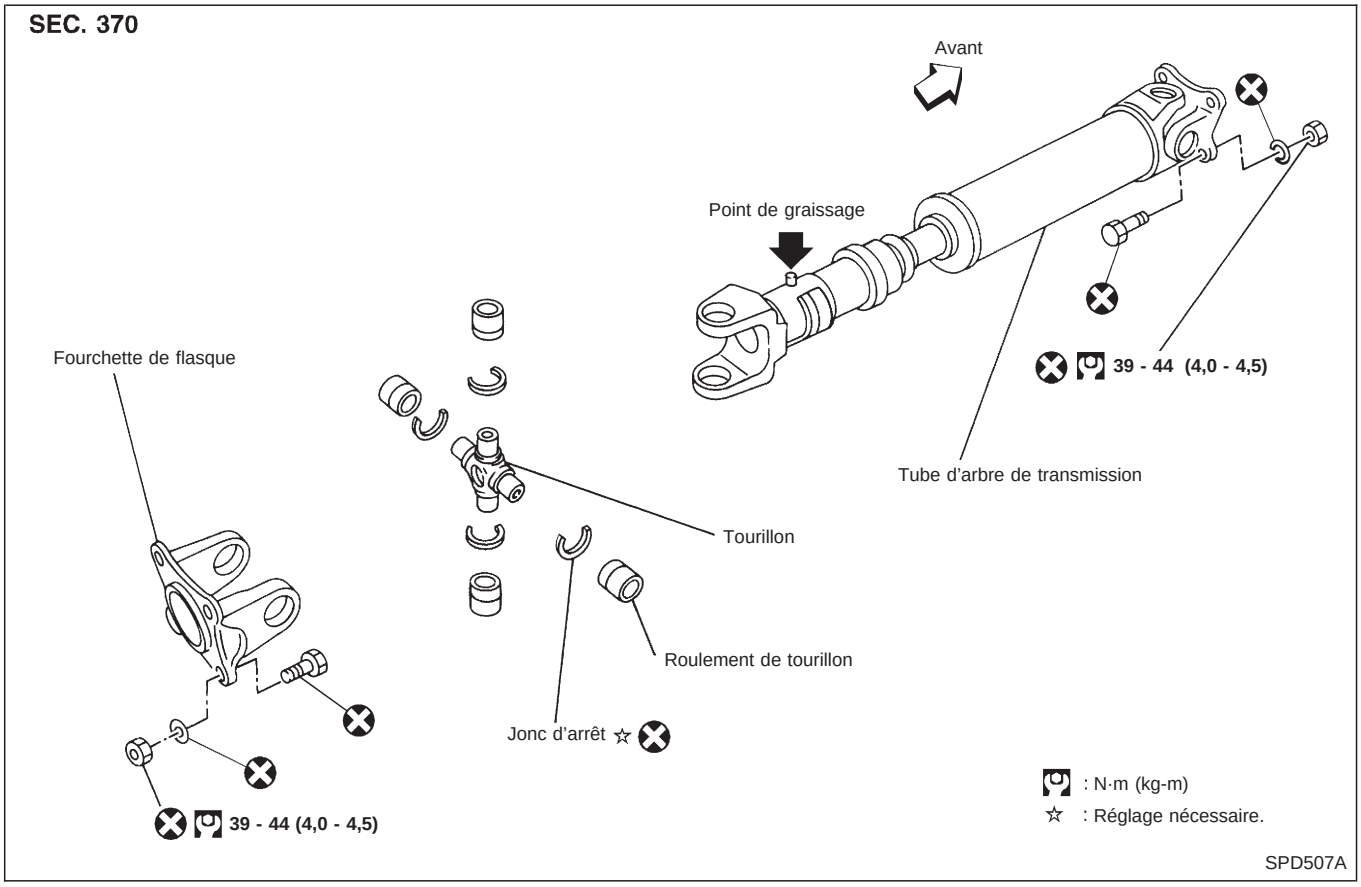

Arbre de transmission arrière (modèles à 2 roues motrices)

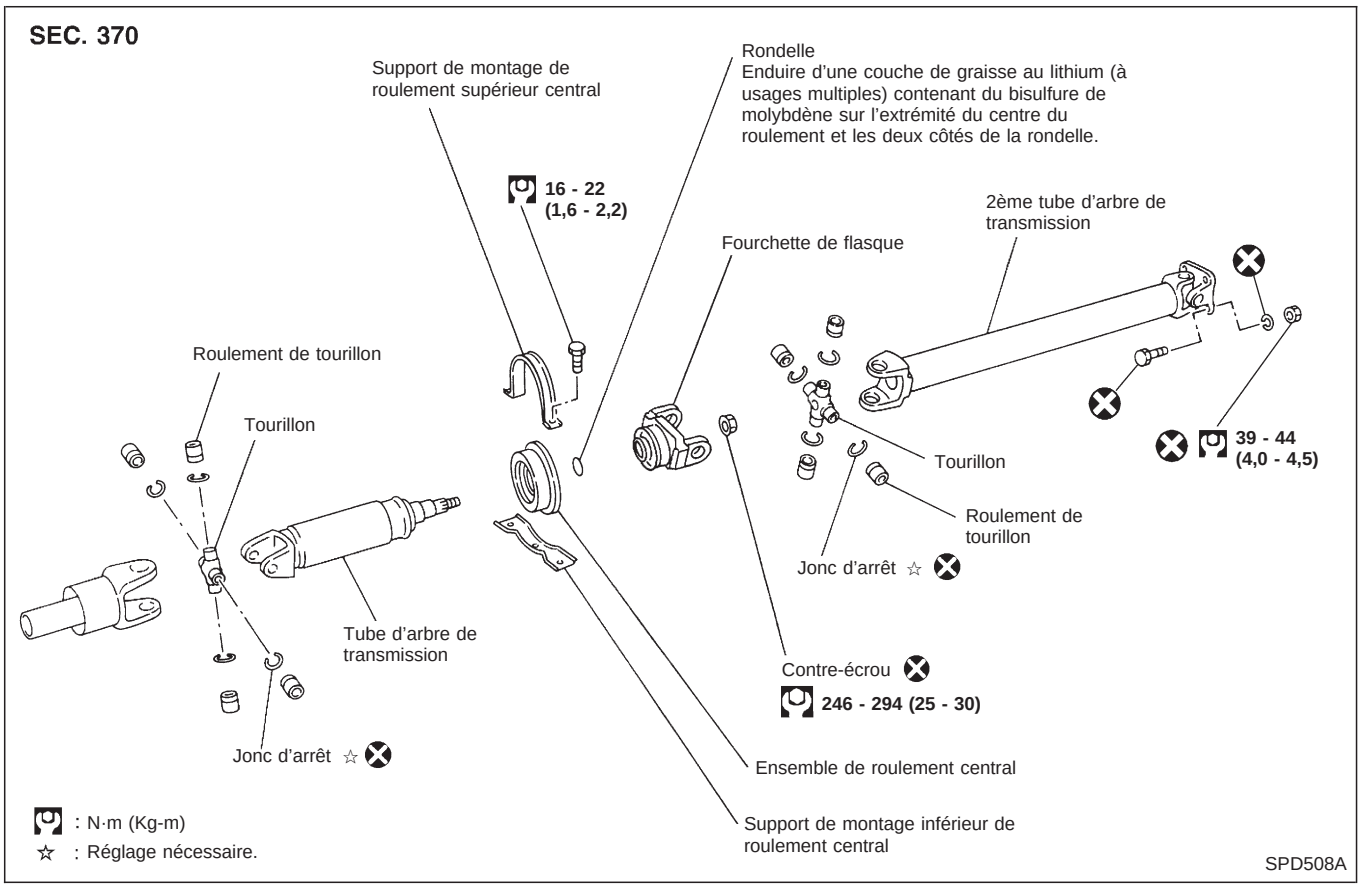

Simpo PDF Merge and Split Unregistered Version - http://www.simpopdf.com

Arbre de transmission arrière (modèles à 4 roues motrices)

SEC. 370

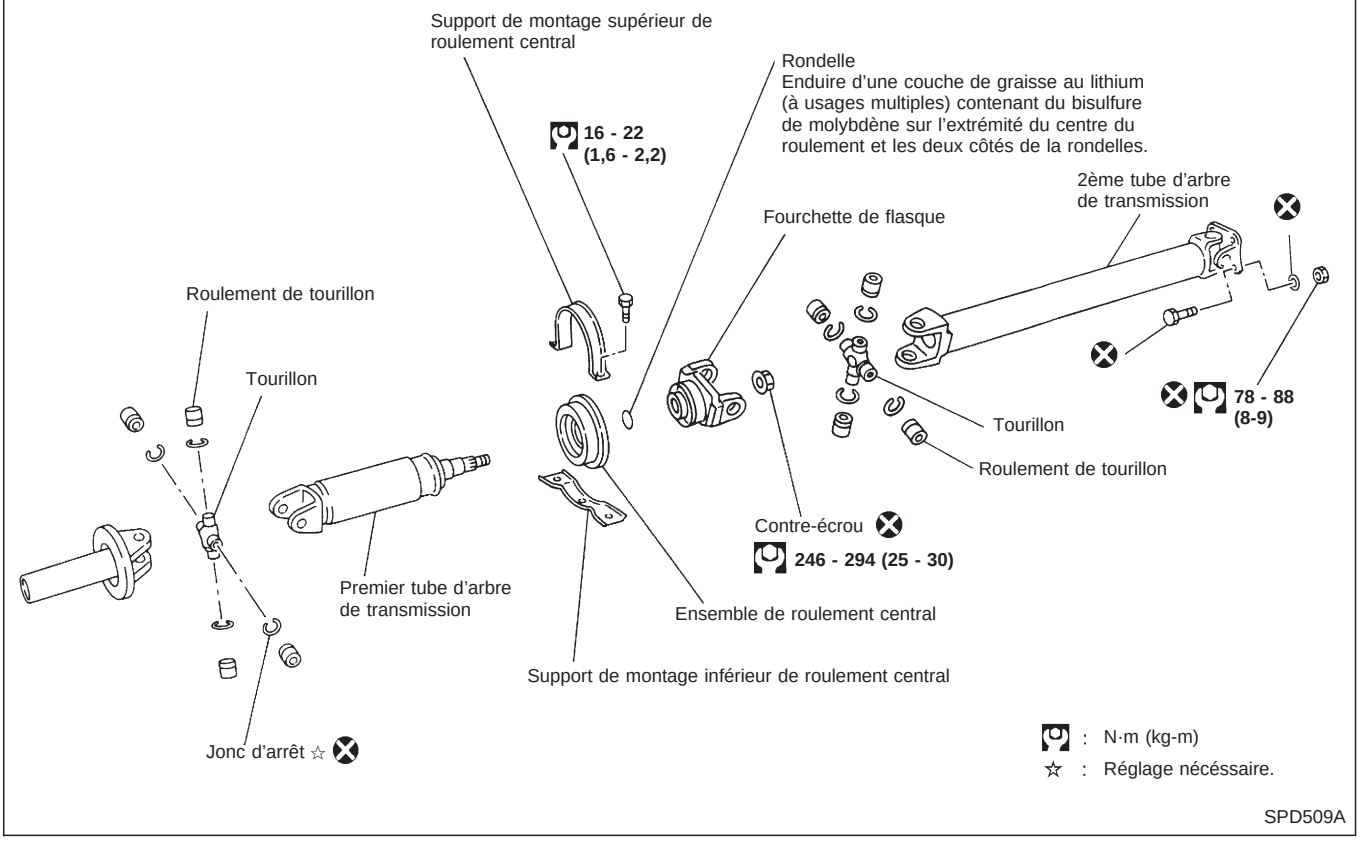

SPD509A

Simpo PDF Merge and Split Unregistered Version - http://www.simopdf.com

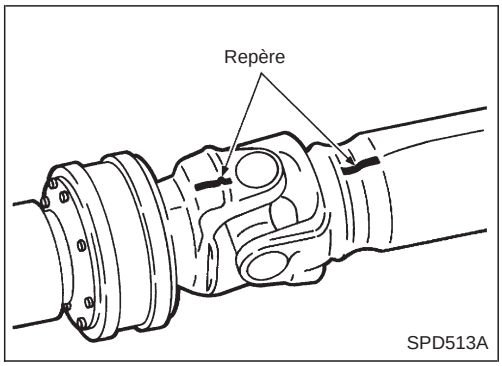

Démontage

ROULEMENT CENTRAL

1. Placer les marques de repères sur les flasques, puis séparer le second tube du premier tube.

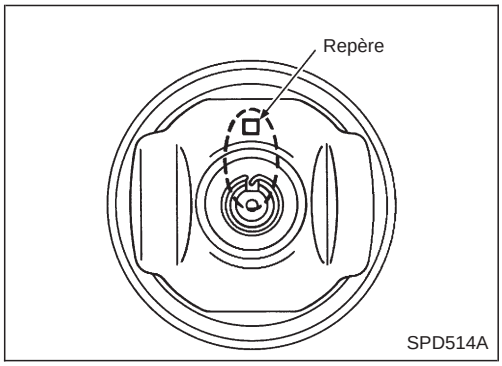

2. Placer les marques de repères sur le flasque et l'arbre.
3. Fixer la fourchette de flasque avec un étau et déposer le contre-écrou.
4. Déposer la fourchette de flasque à l'aide d'un extracteur.

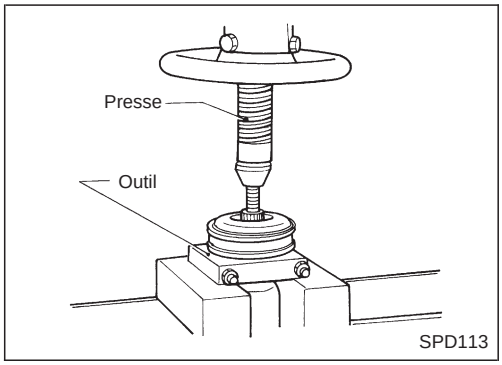

5. Déposer le roulement central à l'aide d'un outil spécial et d'une presse.
   Numéro de l'outil : ST30031000

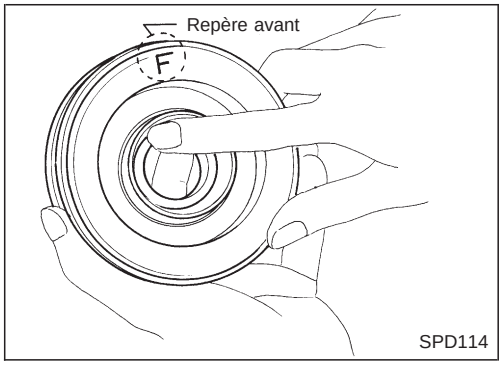

Remontage

ROULEMENT CENTRAL

- Lors de la repose du roulement central, disposer la marque ''F'' située au centre du roulement vers l'avant du véhicule.
- **Enduire d'une couche de graisse au lithium (à usages multiples) contenant du bisulfure de molybdène sur l'extrémité du centre du roulement et les deux cotés de la rondelles.**
- Estamper l'écrou. Toujours utiliser un écrou neuf.
- Aligner les marques de repères lors de l'assemblage des tubes.

Simpo PDF Merge and Split Unregistered Version - http://www.simpopdf.com

Modèle à 2 satéllites

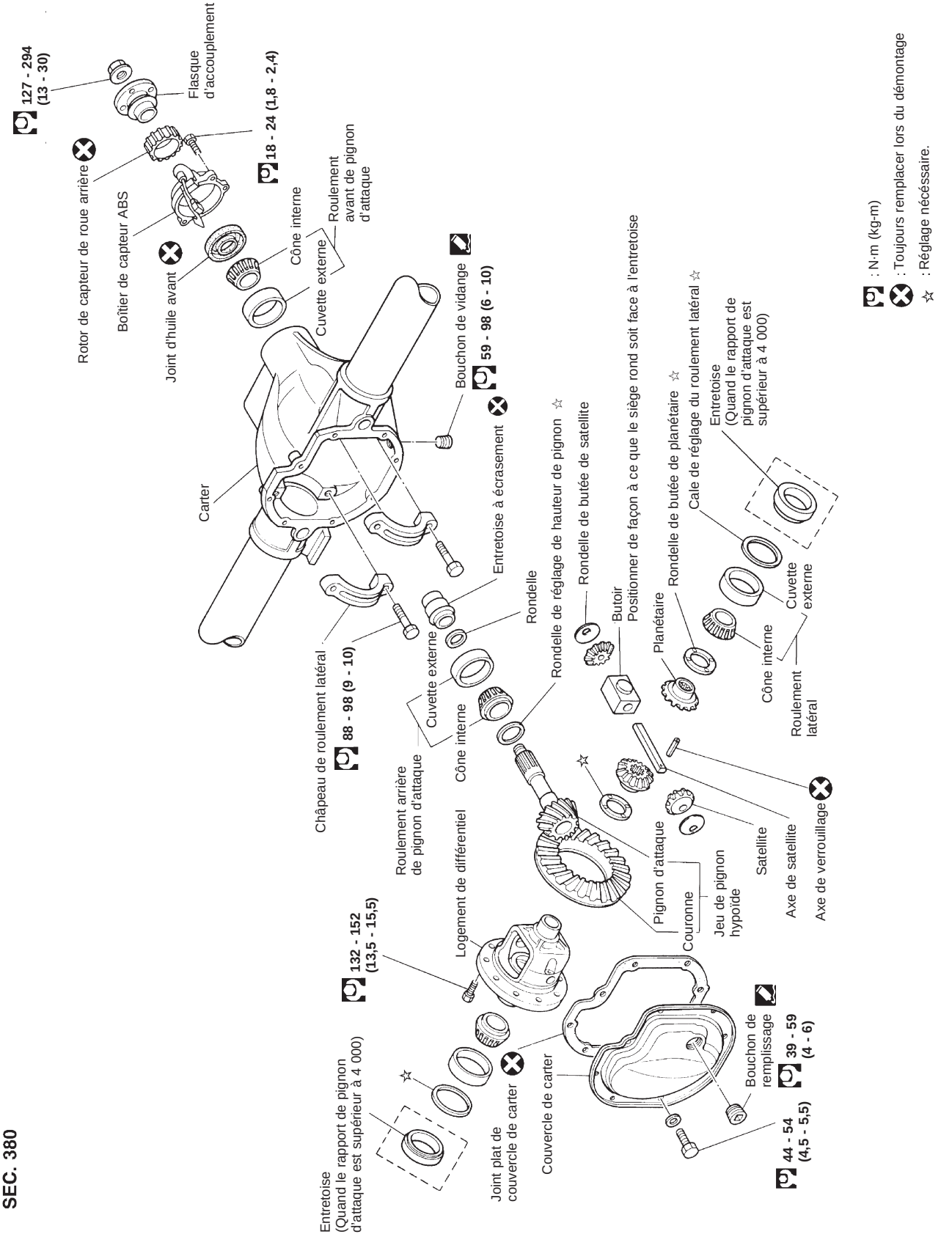

SEC. 380

SPD510A

Simpo PDF Merge and Split Unregistered Version - http://www.simpopdf.com

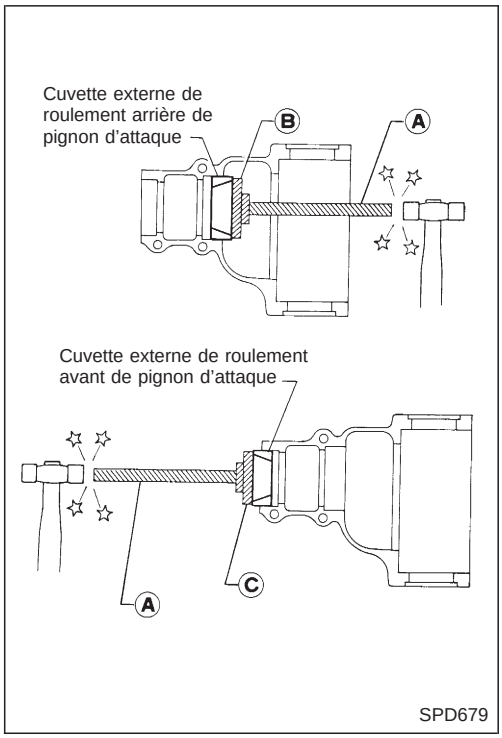

Support de différentiel

1. Enfoncer à la presse les cuvettes externes de roulement avant et arrière à l'aide des outils spéciaux.
   Numéro des outils :
   - Ⓐ **ST30611000**
   - Ⓑ **ST30621000**
   - Ⓒ **ST30613000**

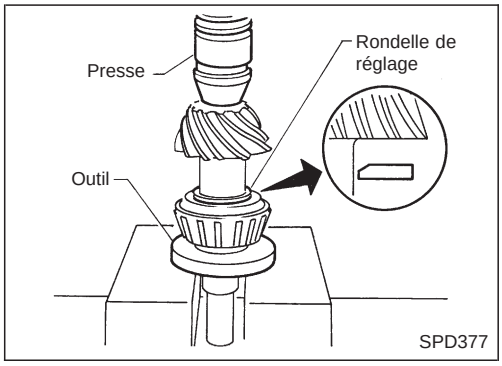

2. Selectionner une rondelle de réglage de hauteur de pignon. Se reporter à ''REGLAGE'' dans le Manuel de Réparation de l'édition générale.
3. Reposer la rondelle de réglage de hauteur de pignon sur le pignon d'attaque, monter à la presse le cône interne de roulement, à l'aide de la presse et de l'outil spécial.
   Numéro de l'outil : ST30031000

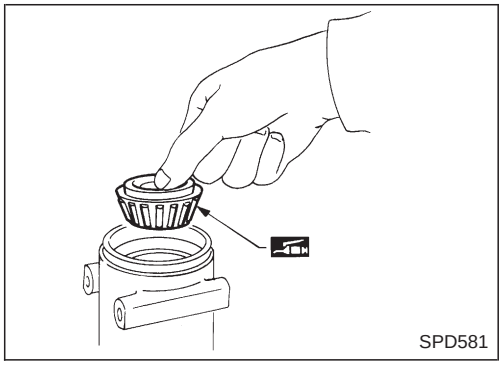

4. Placer le cône interne de roulement avant de pignon d'attaque dans le carter de pont.

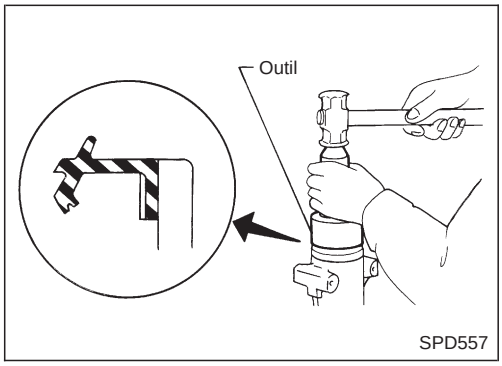

5. Remplir les creux entre les lèvres du joint d'huile de graisse à usages multiples. Repose du joint d'huile avant
   Numéro de l'outil : KV38100500

Simpo PDF Merge and Split Unregistered Version - http://www.simpopdf.com

Support de différentiel (suite)

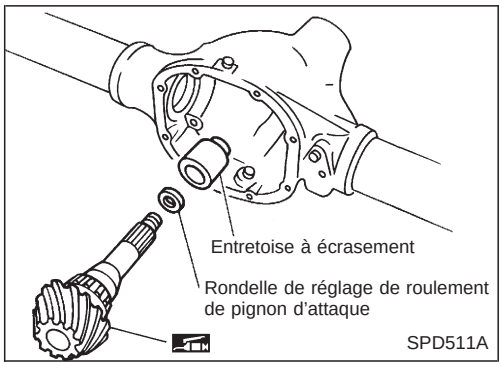

6. Placer l'entretoise de roulement de pignon d'attaque, la rondelle de réglage de roulement de pignon d'attaque et le pignon d'attaque dans le carter de pont.

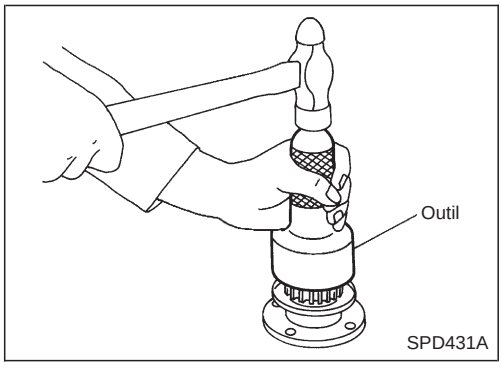

7. Introduire le rotor de capteur dans le flasque d'accouplement à l'aide de l'outil.
   Numéro de l'outil : ST30720000
8. Repose du boîtier de capteurs d'ABS dans le carter de pont.

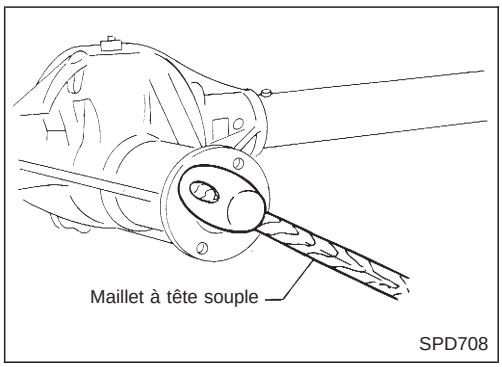

9. Introduire le flasque d'accouplement dans le pignon d'attaque en le tapant légèrement avec un maillet à tête souple.

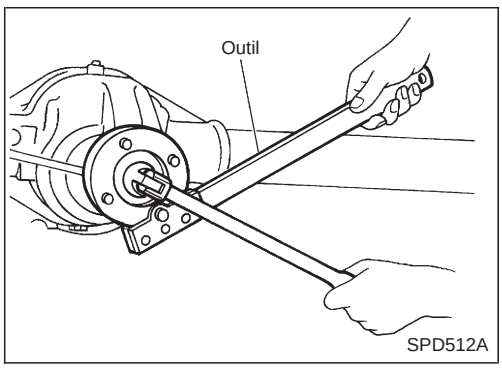

10. Serrer l'écrou de pignon à 127 N·m (13 kg-m).
Eliminer toutes traces d'huile ou de graisse du filetage de pignon d'attaque et de l'écrou de pignon.
Outil numéro : KV38108300

Simpo PDF Merge and Split Unregistered Version - http://www.simpopdf.com

Support de différentiel (suite)

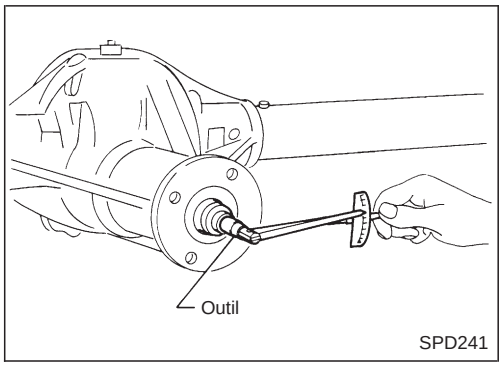

11. Tourner le pignon d'attaque de plusieurs tours dans les deux sens et mesurer la précharge de roulement de pignon.
    Numéro de l'outil : ST3127S000
    Précharge de roulement du pignon (avec le joint avant) :
    1,1 - 1,4 N·m
    (11 - 14 kg-cm)
    Précharge de roulement du pignon (sans le joint avant) :
    1,0 - 1,3 N·m
    (10 - 13 kg-cm)

Si la précharge de roulement du pignon est hors des spécifications, remplacer la rondelle de réglage de roulement du pignon et l'entretoise avec des pièces d'épaisseur différentes.

12. Selectionner une rondelle de réglage de roulement latéral. Se reporter à ''REGLAGE'' dans le Manuel de Réparation de l'édition générale.
13. Monter l'ensemble du logement différentiel avec les cages extérieures de roulement dans le carter de pont.

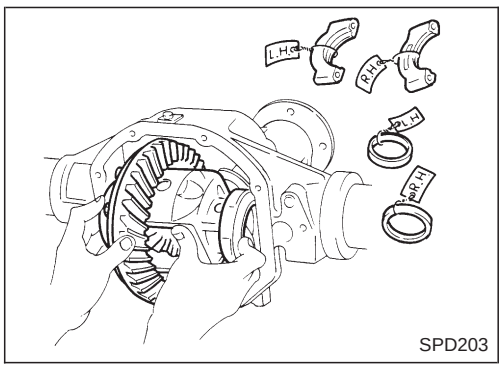

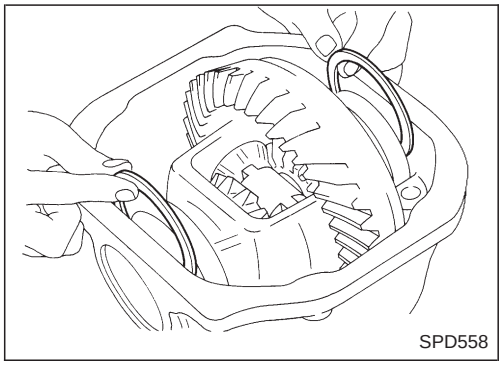

14. Monter les rondelles de réglage de roulement du côté gauche et droit situées entre le roulement latéral et le carter.

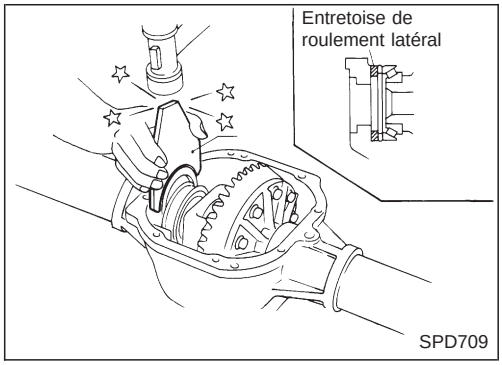

15. Guider l'entretoise dans le roulement à l'aide de l'outil.
    Numéro de l'outil : KV38100600

PRECAUTION :
L'entretoise se place différement selon les modèles. Se reporter à PD-2007.

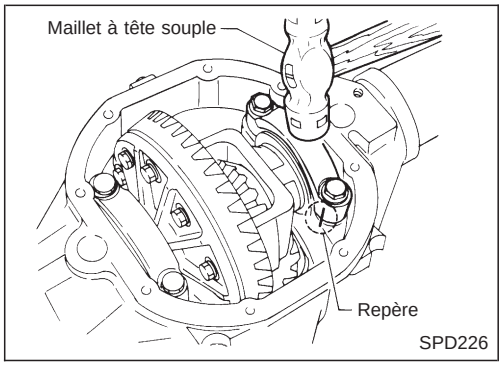

16. Aligner les repères sur le chapeau de roulement latéral avec ceux situés sur le carter de pont et monter le chapeau de roulement sur le carter de pont.

Simpo PDF Merge and Split Unregistered Version - http://www.simpopdf.com

Support de différentiel (suite)

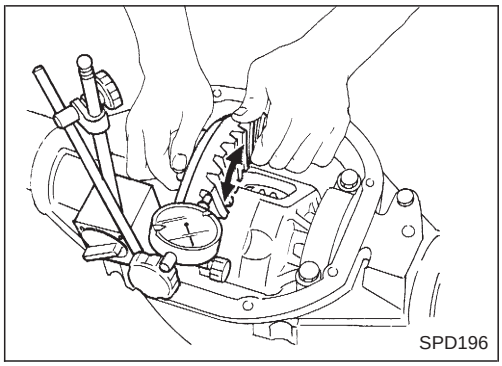
SPD196

17. Mesurer le battement entre la couronne et le pignon d'attaque à l'aide d'un comparateur à cadran.
    Battement entre le pignon d'attaque et la couronne :
    0,13 - 0,18 mm
- Si le battement est trop petit, diminuer l'épaisseur de la cale de droite et augmenter l'épaisseur de la cale de gauche de la même valeur.
  Si le battement est trop grand, procéder de manière inverse.

Ne jamais changer le nombre de cales car cela changerait la précharge de roulement.

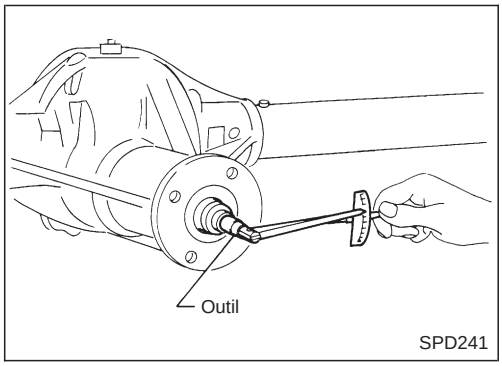

SPD241

18. Vérifier la précharge totale avec l'outil.

Lors de la vérification, tourner le pignon d'attaque plusieurs fois dans les deux sens pour asseoir les rouleaux de roulement correctement.

Précharge totale :
P_1 + [0,3 à 1,5 N·m (3 à 15 kg-cm)]
P_1 : Précharge de roulement de pignon
Se reporter aux SDS, PD-2014.
Numéro de l'outil : ST3127S000

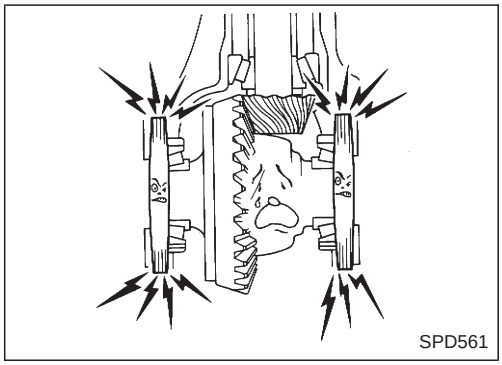
SPD561

- Si la précharge est trop grande, enlever le même nombre de cale de chaque coté.
- Si la précharge est trop petite, ajouter le même nombre de cale de chaque coté.

Ne jamais ajouter ou enlever un nombre différent de câles de chaque côté car cela changerait le battement entre la couronne et le pignon d'attaque.

19. Vérifier à nouveau le battement entre la couronne et le pignon d'attaque car celui-ci peut changer avec l'augmentation ou la diminution de l'épaisseur de cales.

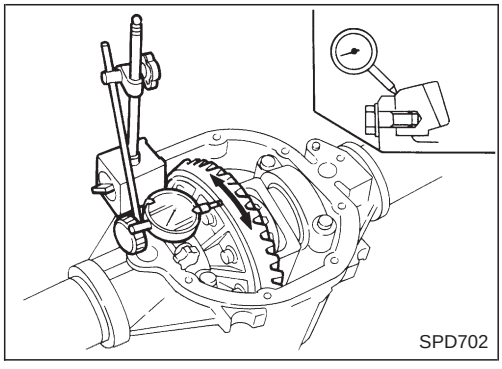
SPD702

20. Contrôler le voile de la couronne à l'aide d'un comparateur.
    Limite de voile :
    0,05 mm
- Si le battement varie de manière excessive en plusieurs endroits, les variations proviennent parfois de la présence de corps étrangers entre la couronne et le logement de differentiel.
- Si le battement varie fortement alors que le voile de la couronne se trouve dans les limites spécifiées, il faut remplacer le jeu de pignon hypoïdes ou le logement de différentiel.

21. Contrôler le contact entre les dents.
    Se reporter à ''REGLAGE'' dans le Manuel de Réparation initial.
22. Remonter le couvercle arrière et le joint plat.

Simpo PDF Merge and Split Unregistered Version - http://www.simpopdf.com

Arbre de transmission

CARACTERISTIQUES GENERALES

MODELES A 2 ROUES MOTRICES

Modèle concerné		Carrosserie courte		Carrosserie longue	
		Sans ABS	Avec ABS	Sans ABS	Avec ABS
Modèle d'arbre de transmission		3S71H			
Nombre de joints		3			
Méthode d'accouplement avec la boîte		Type à manchon			
Type de roulements de tourillons		Type solidaire (type démontable)			
Longueur d'arbre(entre croisillons) mm	1ère	641			
	2nde	704	678	1 004	978
Diamètre extérieur de l'arbre mm	1ère	75			
	2nde	65			

MODELES A 4 ROUES MOTRICES

Emplacement		Avant	Arrière
Modèle concerné		KA24E	KA24E
Modèle d'arbre de transmission		2F63H	3S71H
Nombre de joints		2	3
Méthode d'accouplement avec la boîte		Type à flasque	Type à manchon
Type de roulements de tourillons		Type solidaire(type démontable)	
Longueur d'arbre (entre croisillons) mm	1ère	546	396
	2nde	—	866
Diamètre extérieur de l'arbre mm	1ère	50,8	75,0
	2nde	—	65,0

Simpo PDF Merge and Split Unregistered Version - http://www.simpopdf.com

Arbre de transmission (suite)

INSPECTION ET REGLAGE

Arbre de transmission avant

Unité : mm

Modèle d'arbre de transmission	2F63H	2F71H
Limite de jeu axial de tourillon	0,02	
Limite de voile de l'arbre de transmission	0,6	
Point de mesure A	134	137,5

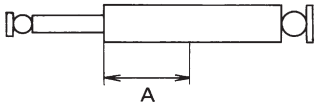

SPD996

Arbre de transmission arrière

Unité : mm

Modèle d'arbre de transmission	3S71H	3S80B
Limite de jeu axial de tourillons	0,02	
Limite de voile de l'arbre de transmission	0,6	
Point de mesure		
A	162	
B	172	
C	192	

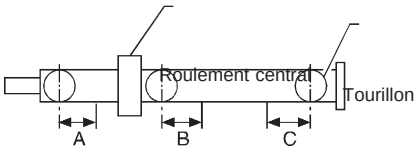

SPD418A

Simpo PDF Merge and Split Unregistered Version - http://www.simpopdf.com

Arbre de transmission (suite)

CARACTERISTIQUE GENERALES INSPECTION ET REGLAGE (C200)

Réglage de la précharge du pignon d'attaque

Méthode de réglage de la précharge de roulement du pignon d'attaque	Entretoise à écrasement
Précharge du pignon d'attaque [P_1] N·m (kg-cm)	
Avec le joint avant	1,1 - 1,4 (11-14)
Sans le joint avant	1,0 - 1,3 (10-13)

Réglage de la précharge totale

Précharge totale N·m (kg-cm)	P_1* + [0,3 à 1,5 (3 à 15)]
Battement de la couronne mm	0,13 - 0,18

*: P_1 : Précharge du pignon d'attaque

— Entretien supplémentaire pour les modèles avec LSD —

Réglage du couple différentiel

Couple différentiel N·m (kg-m)	88 - 108 (9,0 - 11)
Nombre de disques et plateaux Disque de friction Plateau de friction Plaque à ressort	 12 12 2
Limite d'usure du plateau et du disque mm	0,1
Tolérance de voile des diques et plateaux de friction mm	0,08
Epaisseur totale mm	18,24 - 20,36

Disques et plateaux disponibles

Nom de pièce	Epaisseur mm	Numéro de pièce
Disque de friction	1,5	38433-C6002 (Type standard)
	1,6	38433-C6003 (Type réglable)
Plateau de friction	1,5	38432-C6001
Plaque à ressort	1,5	38435-C6011

INSPECTION ET REGLAGE (H233B)

Réglage de la précharge du pignon d'attaque

Méthode de réglage de la précharge de roulement du pignon d'attaque	Cale de réglage et entretoise
Précharge du pignon d'attaque [P_2] N·m (kg-cm)	
Avec le joint avant	1,4 - 2,2 (14 - 22)
Sans le joint avant	1,2 - 2,0 (12 - 20)

Cales de réglage de précharge du pignon d'attaque disponibles

Epaisseur mm	Numéro de pièce
2,31	38125-82100
2,33	38126-82100
2,35	38127-82100
2,37	38128-82100
2,39	38129-82100
2,41	38130-82100
2,43	38132-82100
2,45	38133-82100
2,47	38134-82100
2,49	38135-82100
2,51	38136-82100
2,53	38137-82100
2,55	38138-82100
2,57	38139-82100
2,59	

Entretoises de réglage de précharge du pignon d'attaque disponibles

Longueur mm	Numéro de pièce
4,50	38165-76000
4,75	38166-76000
5,00	38167-76000
5,25	38166-01J00
5,50	38166-01J10

Réglage de la précharge totale

Précharge totale avec joint d'huile avant N·m (kg-cm)		P_2* + [0,3 à 0,4 (3 à 4)]
Battement de la couronne mm	Rapport de démultiplication	
	4 636	0,10 - 0,15
	4 875 5 143	0,13 - 0,18

* : P_2 : Précharge du pignon d'attaque

Simpo PDF Merge and Split Unregistered Version - http://www.simpopdf.com

ESSIEU ET SUSPENSION ARRIERE

SECTION RA

AVIS DE MODIFICATION :

Le couple de serrage des boulons montés sur la goupille avant de ressort arrière a été changé.

TABLE DES MATIERES

SUSPENSION ARRIERE..... 2002

Simpo PDF Merge and Split Unregistered Version - http://www.simpopdf.com

2 roues motrices

SEC. 431

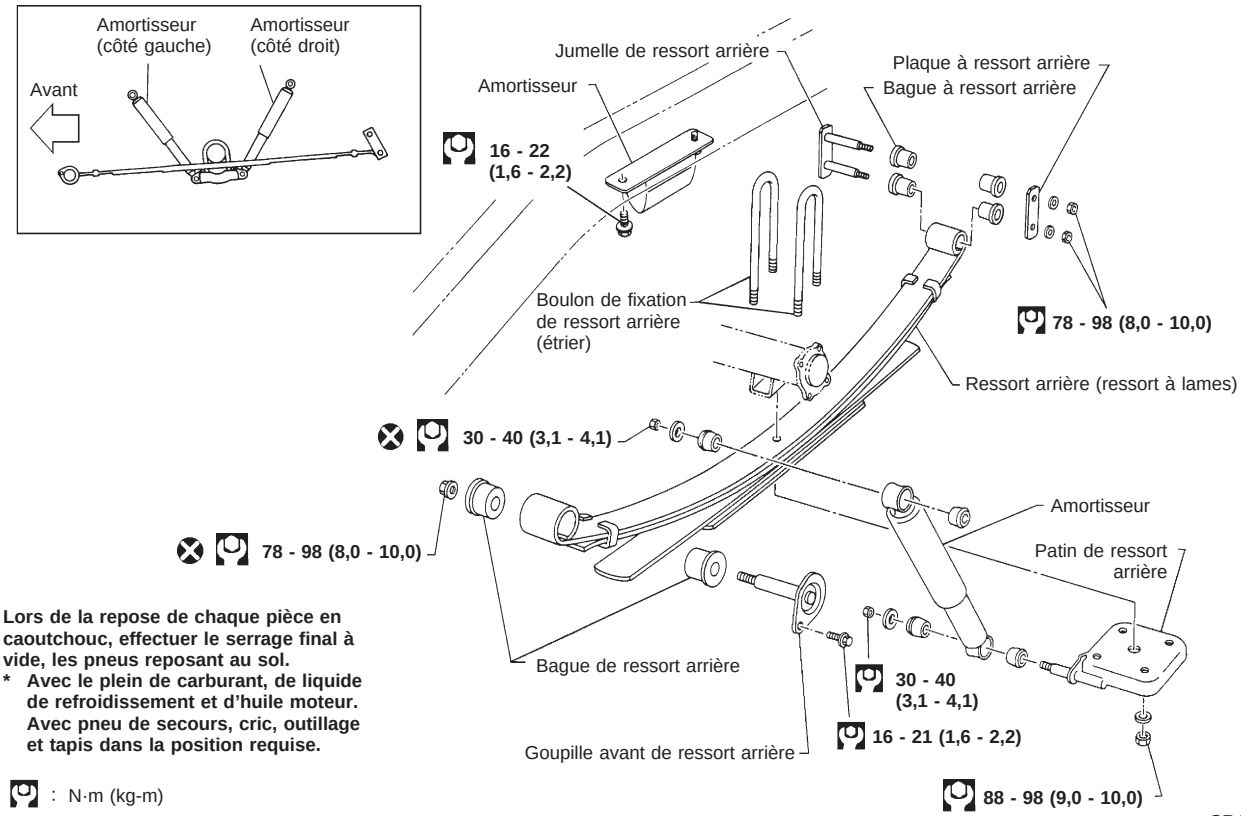

Lors de la repose de chaque pièce en caoutchouc, effectuer le serrage final à vide, les pneus reposant au sol.

*** Avec le plein de carburant, de liquide de refroidissement et d'huile moteur. Avec pneu de secours, cric, outillage et tapis dans la position requise.**

: N·m (kg-m)

SRA593CB

Simpo PDF Merge and Split Unregistered Version - http://www.simpopdf.com

<SUPPLEMENT-II>

SYSTEME DE RETENUE

SECTION RS

AVIS DE MODIFICATION :

- Le coussin gonflable du passager a été adopté comme équipement optionnel.
- Le boîtier de capteurs de diagnostic a été modifié.
- Le système de coussin gonflable avec le boîtier de capteurs de diagnostic situés dans le volant ont été suprimés.

TABLE DES MATIERES

PRECAUTION 2002
''COUSSIN GONFLABLE'' du système de retenue supplémentaire (SRS) 2002
CEINTURES DE SECURITE 2003
Precautions pour l'entretien des ceintures de sécurité 2003
SYSTEME DE RETENUE SUPPLEMENTAIRE (SRS) 2004
Précautions pour l'entretien du ''COUSSIN GONFLABLE'' (AIR BAG) et du ''PRETENSIONNEUR DE CEINTURE DE SECURITE'' du système de retenue supplémentaire (SRS) 2004
Outillage spécial 2004
Outillage en vente dans le commerce 2005
Description 2005
Disposition des composants du SRS 2006
Points d'entretien 2006
Dépose et repose - Boîtier de capteurs de diagnostic 2007
Dépose - Module de coussin gonflable et câble spiralé 2008
Repose - Module de coussin gonflable du conducteur et câble spiralé 2010
Dépose - Module de coussin gonflable du passager avant 2011
Repose - Module de coussin gonflable du passager avant 2012
Mise au rebut du module de coussin gonflable 2013
DIAGNOSTICS DES DEFAUTS - Système de retenue supplémentaire (SRS) 2017
Introduction des diagnostics de défauts 2017
Comment effectuer les diagnostics des défauts pour une réparation rapide et correcte 2019
Schéma 2021
Schéma de câblage - SRS -/Conduite à gauche 2022
Schéma de câblage - SRS -/Conduite à droite 2025
Autodiagnostic 2027
Diagnostics des défauts du témoin d'avertissement ''AIR BAG'' 2042
DIAGNOSTIC DE COLLISION 2044

Simpo PDF Merge and Split Unregistered Version - http://www.simpopdf.com

‘‘COUSSIN GONFLABLE’’ du système de retenue supplémentaire (SRS)

Utilisé avec une ceinture de sécurité, le ‘‘Coussin gonflable’’ du système de retenue supplémentaire contribue à réduire les risques et la gravité des blessures subies par le conducteur et le passager avant en cas de collisions frontales. La composition du SRS disponible pour le MODELE D22 est la suivante (la composition varie selon les pays et l’équipement en option) :
Un système de retenue supplémentaire du côté conducteur (situé dans le moyeu du volant), un système de retenue supplémentaire du côté passager (situé sur le tableau de bord, côté passager), un boîtier de capteurs de diagnostic, un témoin d’avertissement, d’un faisceau de câblage et d’un câble spiralé.

ATTENTION :

- **Pour ne pas affecter le fonctionnement du SRS, ce qui augmenterait les risques de blessures graves ou mortelles en cas de collision entraînant le déploiement du coussin gonflable, toutes les opérations d’entretien doivent être effectuées par un concessionnaire NISSAN agréé.**
- **Un entretien incorrect, y compris une dépose et une repose incorrectes du système de retenue supplémentaire (SRS), pourra entraîner des blessures dues au déploiement accidentel du système.**
- **Ne pas utiliser d’équipement d’essai électrique sur les circuits connexes du SRS sauf si indiqué dans le Manuel de Réparation. Le câble spiralé et les faisceaux de câblage équipés d’une gaine d’isolation jaune soit juste devant les connecteurs de faisceau, soit sur le faisceau tout entier, sont reliés au SRS.**

Simpo PDF Merge and Split Unregistered Version - http://www.simpopdf.com

Precautions pour l'entretien des ceintures de sécurité

PRECAUTION :

- **Ne pas démonter la boucle ou l'ensemble de la ceinture de sécurité.**
- **Remplacer les boulons d'ancrage s'ils sont déformés ou usés.**
- **Ne pas huiler la languette et la boucle.**
- **Ne pas réparer les composants de l'ensemble de ceinture de sécurité dont l'état est suspect. Remplacer l'ensemble complet de ceinture de sécurité.**
- **Si les sangles sont coupées, usées ou endommagées, remplacer l'ensemble de ceinture de sécurité.**
- **Lors du remplacement de l'ensemble de ceinture de sécurité, utiliser un ensemble de ceinture de sécurité d'origine.**

APRES UNE COLLISION

ATTENTION :

Après chaque collision, inspecter toutes les ceintures de sécurité ainsi que les enrouleurs et toutes les autres pièces connexes.

NISSAN recommande que toutes les ceintures de sécurité en service lors d'une collision soient remplacées à moins que la collision soit mineure et que les ceintures de sécurité ne montrent aucun dommage et continuent de fonctionner correctement. Le non-respect de ces consignes peut entraîner de graves blessures lors d'une collision. Les ceintures de sécurité non-utilisées lors d'une collision doivent être aussi remplacées si un quelconque dommage ou un fonctionnement incorrect est remarqué.

Remplacer les ceintures de sécurité si :

- La ceinture de sécurité était utilisée lors d'une collision (sauf pour les accidents mineurs et les ceintures, enrouleurs et boucles qui ne montrent aucun dommage et qui continuent de fonctionner correctement).
- La ceinture de sécurité est endommagée dans un accident (par ex. sangle vrillée, guide ou enrouleur tordu, etc.)
- Les points d'attache des ceintures de sécurité sont endommagés dans un accident. Inspecter les zones de point d'attache pour vérifier s'il n'ya pas de dommages ou de distorsions et réparer si nécéssaire avant la repose d'un nouvel ensemble de ceinture de sécurité.
- Les boulons d'ancrages sont déformés ou usés.

Simpo PDF Merge and Split Unregistered Version - http://www.simpopdf.com

Précautions pour l'entretien du ''COUSSIN GONFLABLE'' (AIR BAG) et du ''PRETENSIONNEUR DE CEINTURE DE SECURITE'' du système de retenue supplémentaire (SRS).

- Ne pas utiliser d'équipement d'essai électrique pour vérifier le SRS, sauf instructions contraires données dans ce Manuel de Réparation.
- Avant de procéder à l'entretien du SRS, couper le contact, débrancher les deux câbles de la batterie et attendre au moins 3 minutes.
  Le coussin gonflable peut encore se déployer pendant un délai de 3 minutes environ après que les câbles ont été débranchés. Attendre par conséquent au moins 3 minutes avant de travailler sur les connecteurs ou les câbles du SRS.
- Le boîtier de capteurs de diagnostic doit toujours être installé en prenant soin d'orienter les flèches ''⇦'' vers l'avant du véhicule. Vérifier également que le boîtier de capteurs de diagnostic ne présente pas de fissures, déformations ou traces de rouille avant de le reposer. Le remplacer le cas échéant.
- Le câble spiralé doit être aligné avec le point mort car le nombre de tours qu'il peut faire est limité. Ne pas tenter de tourner le volant ou la colonne de direction après la dépose du pignon de direction.
- Manipuler le module de coussin gonflable avec précaution. Toujours placer les modules de coussin gonflable conducteur et passager avec le côté rembourré dirigé vers le haut.
- Exécuter l'autodiagnostic pour contrôler que l'ensemble du SRS fonctionne normalement après avoir remplacé n'importe quel composants.
- Après le déploiement du coussin gonflable, l'ensemble de tableau de bord avant devra être remplacé s'il est endommagé.

Outillage spécial

Numéro de l'outil Nom de l'outil	Description	
KV99106400 Outil de déploiement	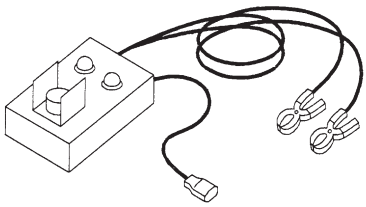 NT357	Mise au rebut du module de coussin gonflable
KV99105300 Support de module de coussin gonflable.	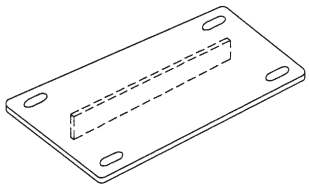 NT354	Plaque d'ancrage du module de coussin gonflable
HT61961000 et HT62152000 combiné *Embout Torx spécial	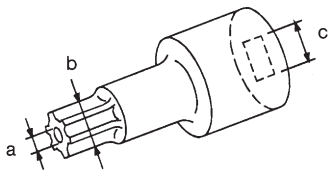 NT361	A utiliser pour les boulons spéciaux. [EMBOUT TORX DE SECURITE (Taille T50)]. **a : 3,5 (0,138) de dia.** **b : 8,5 - 8,6 de dia.** **c : environ 10 mm²** Unité : mm
KV99108300 Adaptateurs de l'outil de déploiement pour coussin gonflable passager	Pour le module de coussin gonflable passager. 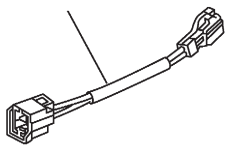 NT776	

* : Outil spécial ou équivalent en vente dans le commerce

Simpo PDF Merge and Split Unregistered Version - http://www.simpopdf.com

Outillage en vente dans le commerce

Nom de l'outil	Description	Caractéristiques
Douille Torx de sécurtité	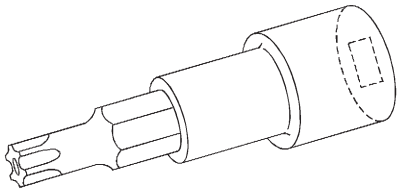 NT757	Taille : T30

Description

Le coussin gonflable se déploie lorsque le boîtier de capteurs de diagnostic est activé alors que le contact d'allumage est sur la position ''ON'' ou ''START''.

Les configurations du système SRS varie selon les équipements optionnels du véhicule et sa destination.

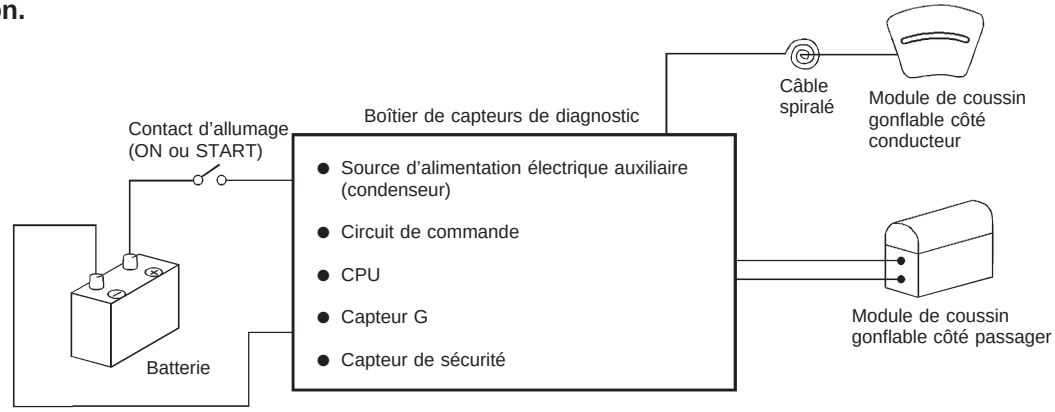

NRS087

Simpo PDF Merge and Split Unregistered Version - http://www.simpopdf.com

Disposition des composants du SRS

SEC. 240•251•253•484•680

Les configurations du système SRS varie selon les équipements optionnels du véhicule et sa destination.

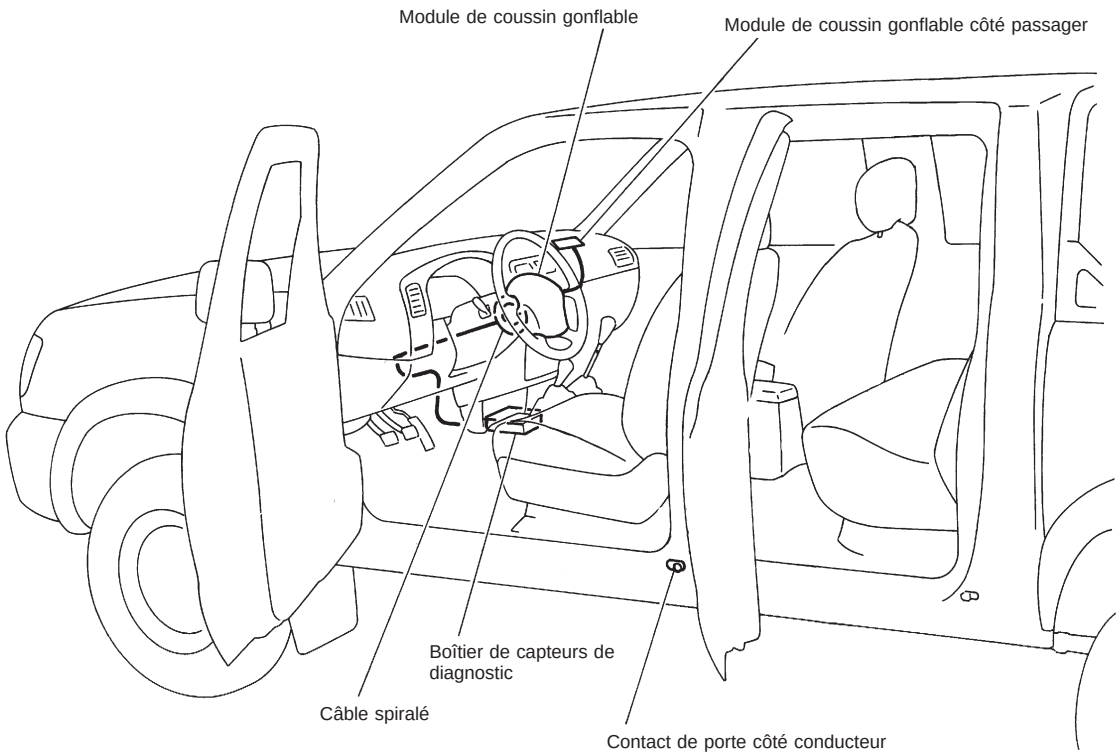

NRS088



SRS296

Points d'entretien

PRECAUTION :

Ne pas utiliser d'équipement d'essai électrique sur les circuits connexes au SRS.

1. Vérifier le fonctionnement du témoin d'avertissement ''AIR BAG''.
   Après avoir tourné la clé de contact sur ''ON'', le témoin d'avertissement ''AIR BAG'' s'allume. Le témoin d'avertissement ''AIR BAG'' s'éteindra après environ 7 secondes si aucun défaut n'est détecté. Si l'une des conditions suivantes affectant le témoin d'avertissement ''AIR BAG'' se produit, vérifier immédiatement le système de coussin gonflable. Se reporter à RS-2031 pour plus de détails.
- Le témoin d'avertissement ''AIR BAG'' ne s'allume pas lorsque le contact d'allumage est mis sur ''ON''.
- Le témoin d'avertissement ''AIR BAG'' ne s'éteint pas dans les 7 secondes après que le contact d'allumage est mis sur ''ON''.
- La lampe témoin d'avertissement ''AIR BAG'' clignote après environ 7 secondes après la mise sur ''ON'' du contact d'allumage.

2. Contrôler visuellement les composants du SRS.

(1) Boîtier de capteurs de diagnostic
- Vérifier que le boîtier de capteurs de diagnostic et le support ne sont pas bosselés, fissurés ou déformés.

Simpo PDF Merge and Split Unregistered Version - http://www.simpopdf.com

Points d'entretien (suite)

- Vérifier que les connecteurs ne sont pas endommagés et les bornes déformées.

(2) Module de coussin gonflable et volant de direction
- Déposer le module de coussin gonflable du volant de direction, du tableau de bord ou du dossier de siège. Vérifier que le cache du faisceau et les connecteurs ne sont pas endommagés, les bornes déformées et le faisceau coincé.
- Reposer le module de coussin gonflable côté conducteur sur le volant pour vérifier s'il est correctement monté ou aligné sur le volant.
- Vérifier que le volant ne présente pas un jeu excessif.
- Reposer le module de coussin gonflable passager sur le tableau de bord pour vérifier s'il est correctement monté ou aligné sur le tableau de bord.

(3) Câble spiralé
- Vérifier que le câble spiralé n'est pas bosselé, fissuré ou déformé.
- Vérifier que les connecteurs et la bande de protection ne sont pas endommagés.
- Vérifier que le volant est exempt de tout bruit, point de force et qu'il tourne librement.

(4) Faisceau principal et faisceau de coussin gonflable
- Vérifier que les connecteurs ne sont pas desserrés ou endommagés et que les bornes ne sont pas déformées.
- Vérifier que les faisceaux ne coincent pas et qu'ils ne sont pas usés par le frottement ou coupés.

PRECAUTION :
Remplacer les boulons usagés et le boulon de masse par des neufs.

Dépose et repose — Boîtier de capteurs de diagnostic

PRECAUTION :
- **Avant d'effectuer l'entretien du SRS, couper le contact d'allumage (''OFF''), débrancher les deux câbles de la batterie et attendre au moins trois minutes.**
- **Ne pas utiliser de boulons et écrous enduits d'agent adhésif usagés pour le remontage ; remplacer les avec des neufs.**
- **Vérifier que le boîtier de capteurs de diagnostic est reposé correctement.**
- **Vérifier que le boîtier de capteurs de diagnostic n'est pas déformé, bosselé, fissuré ou rouillé. S'il est visiblement endommagé, le remplacer par un neuf.**
- **Vérifier que les supports du boîtier de capteurs de diagnostic ne sont pas déformés ou rouillés.**
- **Après avoir remplacé le boîtier de capteurs de diagnostic, vérifier le fonctionnement du SRS et effectuer son autodiagnostic. Se reporter au chapitre ''Autodiagnostic'' pour plus de détails.2027**
- **Ne pas essayer de démonter le boîtier de capteurs de diagnostic.**
- **Remplacer le boîtier de capteurs de diagnostic, s'il est tombé ou a subi un choc.**

Simpo PDF Merge and Split Unregistered Version - http://www.simpopdf.com

Dépose et repose — Boîtier de capteurs de diagnostic (suite)

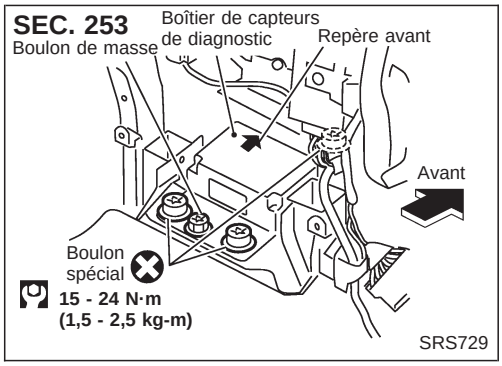

DEPOSE DU BOITIER DE CAPTEURS DE DIAGNOSTIC

1. Débrancher les connecteurs de module de coussin gonflable côté conducteur et côté passager.
2. Déposer le tableau de bord. Se reporter à ‘‘TABLEAU DE BORD’’ dans la section BT.
3. Déposer la conduite d’air.
4. Débrancher le connecteur du boîtier de capteurs de diagnostic.
5. Déposer le boulon de masse et les boulons spéciaux du boîtier de capteurs de diagnostic à l’aide de l’EMBOUT TORX DE SECURITE (Taille T50).
   Puis déposer le boîtier de capteurs de diagnostic.

NOTE :

- **Pour la repose, procéder dans l’ordre inverse de la dépose.**
- **Après remplacement, effectuer l’autodiagnostic du SRS. Se reporter à ‘‘Autodiagnostic’’ pour plus de détails (RS-2027).**

PRECAUTION :

- **Ne pas réutiliser les boulons spéciaux et le boulon de masse une fois déposés ; les remplacer par des boulons spéciaux et un boulon de masse neufs enduits d’agent d’adhésivité.**

Dépose — Module de coussin gonflable et câble spiralé

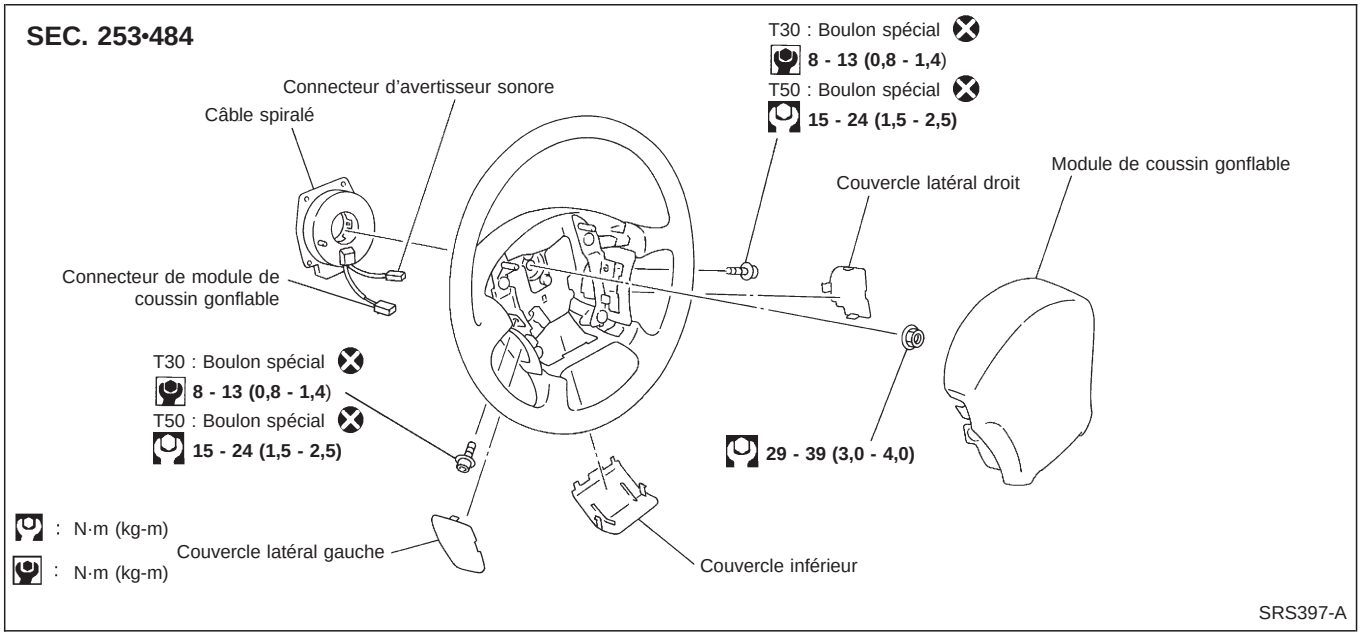

Simpo PDF Merge and Split Unregistered Version - http://www.simpopdf.com

Dépose — Module de coussin gonflable et câble spiralé (suite)

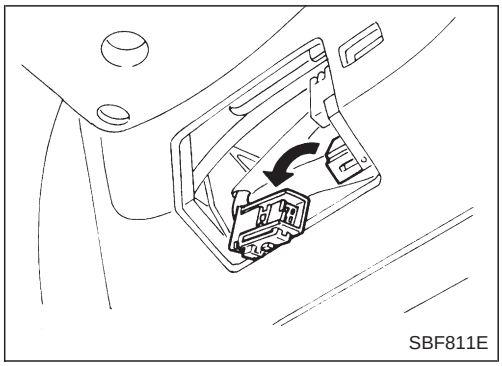
SBF811E

PRECAUTION :

- **Avant de procéder à l'entretien du SRS, couper le contact, débrancher les deux câbles de la batterie et attendre au moins 3 minutes.**
- **Toujours se positionner sur le côté du module de coussin gonflable.**

1. Déposer le couvercle inférieur du volant de direction et débrancher le connecteur du module de coussin gonflable.

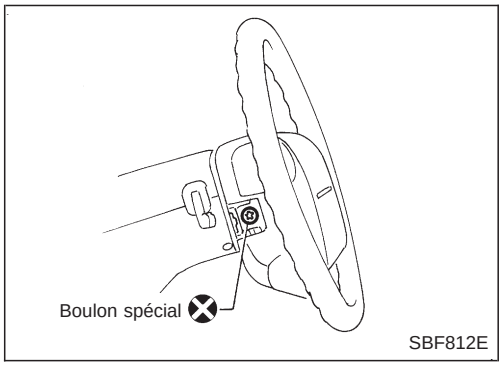

SBF812E

2. Déposer le couvercle latéral. Déposer les boulons de droit et de gauche à l'aide de l'EMBOUT TORX DE SECURITE (Taille T50) ou de la DOUILLE TORX DE SECURITE (Taille T30). Le module de coussin gonflable peut alors être déposé.

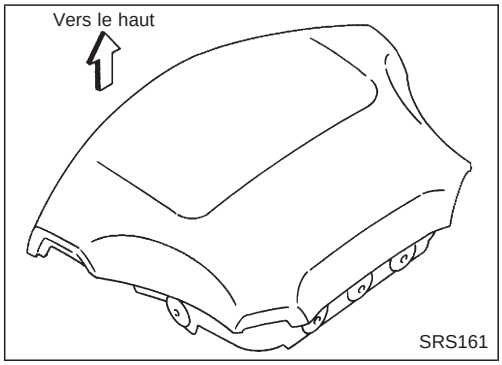

SRS161

PRECAUTION :

- **Toujours poser le module de coussin gonflable avec la garniture dirigée vers le haut.**
- **Ne pas tenter de démonter le module de coussin gonflable.**
- **Les boulons spéciaux sont revêtus d'une couche d'agent d'adhésivité. Ne pas réutiliser les boulons une fois déposés ; les remplacer par des neufs.**
- **Ne pas introduire d'objets (tournevis, etc.) dans le connecteur du module de coussin gonflable.**

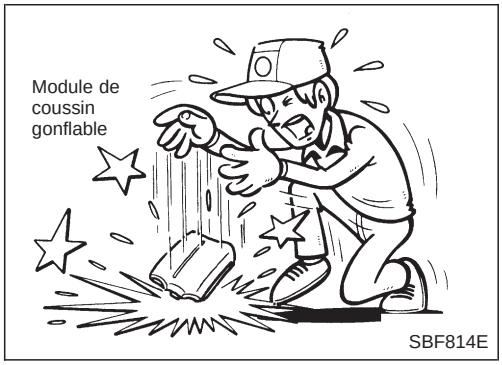

SBF814E

- **Remplacer le module de coussin gonflable s'il est tombé ou s'il a subi un impact.**
- **Ne pas exposer le module de coussin gonflable à des températures supérieures à 90°C.**
- **Ne pas laisser de l'huile, de la graisse ou de l'eau venir en contact avec le module de coussin gonflable.**

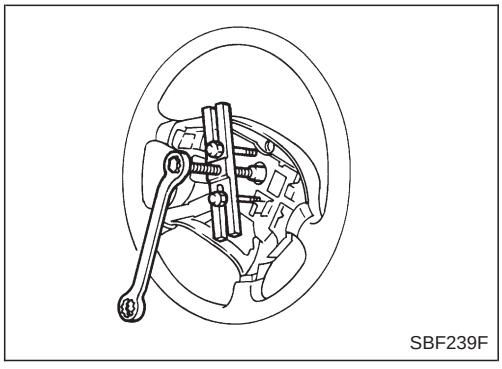
SBF239F

3. Régler le volant en position neutre.
4. Débrancher le connecteur d'avertisseur sonore et retirer les écrous.
5. A l'aide d'un extracteur de volant, déposer le volant. Veiller à ne pas trop serrer le boulon de l'extracteur sur le volant.

PRECAUTION :

- **Ne pas taper ou heurter le volant de direction.**

6. Déposer le cache de colonne de direction.

Simpo PDF Merge and Split Unregistered Version - http://www.simpopdf.com

Dépose — Module de coussin gonflable et câble spiralé (suite)

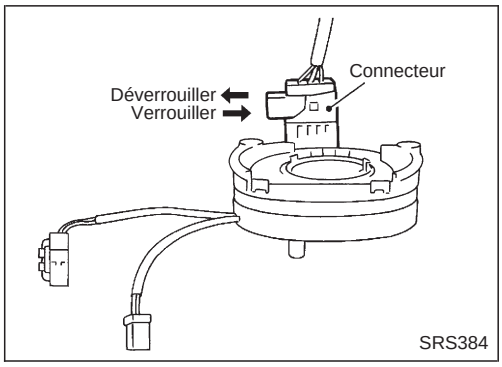

7. Démonter les quatres vis. Puis déverrouiller le connecteur de câble spiralé et le déconnecter. Le câble spiralé peut alors être déposé.

PRECAUTION :

- **Ne pas essayer de démonter le câble spiralé.**
- **Ne pas lubrifier le câble spiralé.**

Repose — Module de coussin gonflable du conducteur et câble spiralé

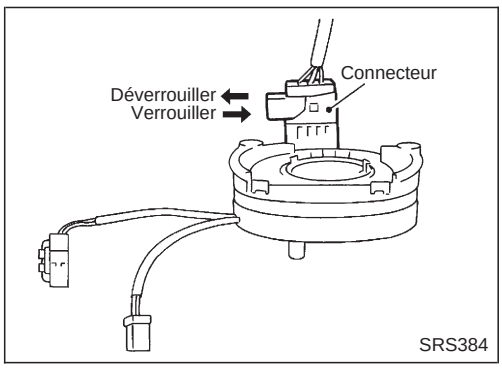

1. Positionner les roues avant en ligne droite.
2. Brancher le connecteur du câble spiralé. Puis verrouiller le connecteur et resserrer les vis. Reposer le cache de colonne de direction.

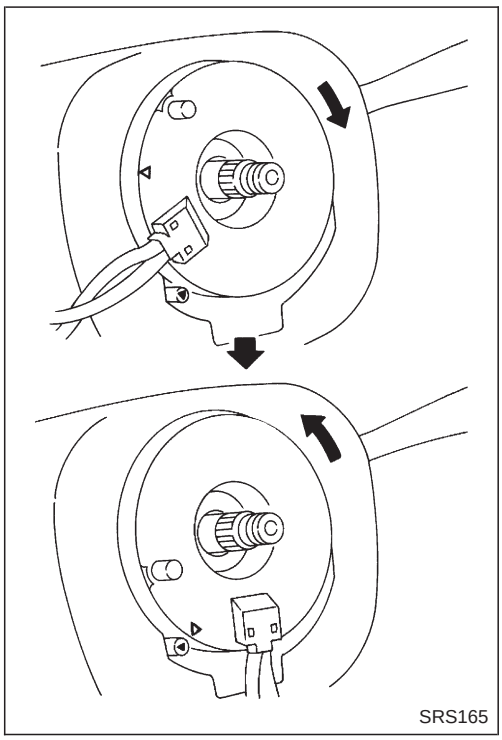

3. S'assurer que le câble spiralé est sur la position neutre. Pour obtenir la position neutre, le tourner d'environ 2,5 tours vers la gauche à partir de la position de butée droite. Aligner les deux repères( ).

PRECAUTION :

- **Un câble spiralé mal monté risque de se rompre lorsque le volant est tourné.**
  Par ailleurs, la timonerie de direction étant déconnectée, le câble risquera de se rompre si l'on tourne le volant au delà d'un nombre limité de tours.
  Le câble spiralé peut effectuer jusqu'à 2,5 tours vers la droite et la gauche depuis la position neutre.

4. Brancher le connecteur de câble spiralé et serrer les vis. Reposer le cache de colonne de direction.

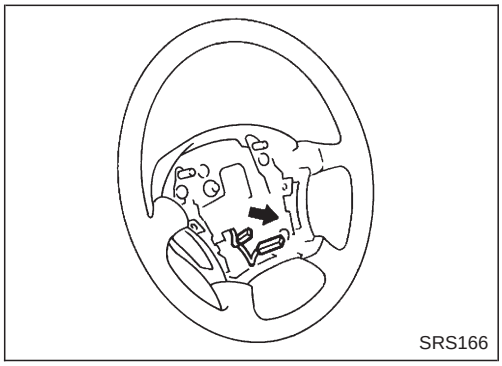

5. Reposer le volant, les goupilles de guidage du câble spiralé de réglage du volant, puis tirer le câble spiralé à travers celles-ci.
6. Brancher le connecteur d'avertisseur sonore et engager le câble spiralé dans les cliquets du volant. Ecarter le connecteur du module de coussin gonflable de l'orifice du couvercle inférieur du volant.
7. Serrer l'écrou.
   : 29 - 39 (3,0 - 4,0 kg-m)

Simpo PDF Merge and Split Unregistered Version - http://www.simpopdf.com

Repose — Module de coussin gonflable du conducteur et câble spiralé (suite)

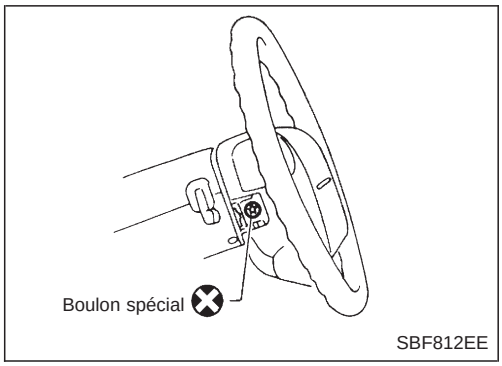

8. Mettre le module de coussin gonflable en position et le fixer avec des boulons spéciaux neufs.
- **Toujours effectuer l'entretien du module de coussin gonflable depuis le côté.**
9. Brancher le connecteur du module de coussin gonflable.
10. Reposer tous les couvercles.
11. Exécuter l'autodiagnostic afin de s'assurer du fonctionnement normal du SRS (utiliser CONSULT ou contrôler le témoin d'avertissement). Se reporter à RS-2027
    Avant d'effectuer l'autodiagnostic, brancher les deux câbles de batterie.
12. Braquer le volant à fond vers la gauche, puis vers la droite pour s'assurer que le câble spiralé est en position neutre.
    Si le témoin d'avertissement de coussin gonflable clignote ou reste allumé (en mode Utilisateur), cela signifie que le câble spiralé peut se rompre en raison de sa position incorrecte. Effectuer l'autodiagnostic de nouveau (en utilisant le CONSULT ou le témoin d'avertissement). Si un défaut est trouvé, remplacer le câble spiralé par un neuf.
13. Procéder à un nouvel autodiagnostic pour s'assurer qu'aucun défaut de fonctionnement n'est détecté.

Dépose — Module de coussin gonflable du passager avant

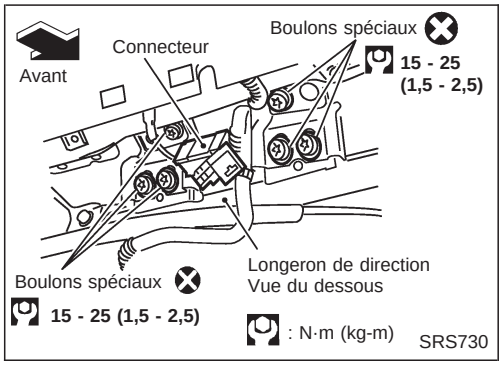

PRECAUTION :
- **Avant de procéder à l'entretien du SRS, couper le contact d'allumage, déconnecter les deux câbles de la batterie et attendre au moins 3 minutes.**
- **Toujours se positionner sur le côté du module de coussin gonflable ou en dessous de celui-ci.**
1. Déposer la boîte à gants. Se reporter à ''TABLEAU DE BORD'' dans la section BT pour plus de détails.
2. Déconnecter le connecteur du module de coussin gonflable du passager.
3. Déposer les boulons et les boulons spéciaux du module de coussin gonflable côté passager avant à l'aide d'un EMBOUT TORX DE SECURITE (taille 50).
4. Déposer l'ensemble de tableau de bord. Se reporter à ''TABLEAU DE BORD'' dans la section BT pour plus de détails.
5. Déposer le conduit d'air du tableau de bord.
6. Déposer les boulons des côtés droit et gauche du module de coussin gonflable du passager avant. Puis enlever le module de coussin gonflable de l'ensemble du tableau de bord.
- Le module de coussin gonflable est lourd et doit être saisi des deux mains lors de la dépose.

Simpo PDF Merge and Split Unregistered Version - http://www.simpopdf.com

Dépose — Module de coussin gonflable du passager avant (suite)

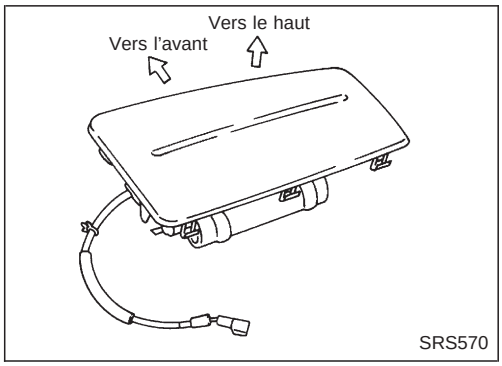

PRECAUTION :

- **Toujours poser le module de coussin gonflable avec la garniture dirigée vers le haut.**
- **Ne pas tenter de démonter le module de coussin gonflable.**
- **Les boulons spéciaux sont revêtus d'une couche d'agent d'adhésivité. Ne pas réutiliser les boulons usés après la dépose : les remplacer par de nouveaux boulons à revêtement.**
- **Ne pas introduire d'objets (tournevis, etc.) dans le connecteur du module de coussin gonflable.**

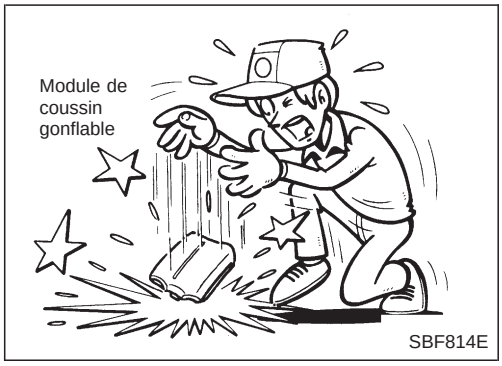

- **Remplacer le module de coussin gonflable s'il est tombé ou s'il a subi un impact.**
- **Ne pas exposer le module de coussin gonflable à des températures supérieures à 90°C.**
- **Ne pas laisser de l'huile, de la graisse ou de l'eau venir en contact avec le module de coussin gonflable.**

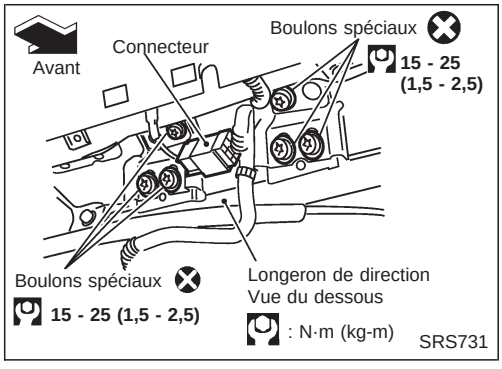

Repose — Module de coussin gonflable du passager avant

- **Toujours se positionner sur le côté du module de coussin gonflable ou en dessous de celui-ci.**

1. Reposer le module de coussin gonflable du passager avant dans le tableau de bord.
2. Reposer le conduit d'air sur le tableau de bord.
3. Reposer le tableau de bord.

- S'assurer que le faisceau n'est pas coincé entre la partie arrière du module de coussin gonflable et le longeron de direction.

4. Monter le module de coussin gonflable côté passager avant sur le longeron de direction.
5. Brancher le connecteur du module de coussin gonflable.
6. Reposer la boîte à gants.

Simpo PDF Merge and Split Unregistered Version - http://www.simpopdf.com

Mise au rebut du module de coussin gonflable

- Avant de mettre au rebut le module de coussin gonflable, ou des véhicules équipés de tels systèmes, déployer lesdits systèmes. S'ils ont déjà été déployés lors d'un accident, les mettre au rebut en se reportant au chapitre ''MISE AU REBUT DU MODULE DE COUSSIN GONFLABLE (AIR BAG)'' (RS-2016).
- Lors du déploiement du module de coussin gonflable, toujours utiliser l'outil spécial ; outil de déploiement KV99106400.
- Se tenir à une distance minimum de 5 m lors du déploiement du module de coussin gonflable.
- Le déploiement du module de coussin gonflable s'accompagne d'une détonation bruyante et d'un dégagement de fumée. La fumée n'est pas nocive, mais on veillera toutefois à ne pas l'inhaler en raison de ses propriétés irritantes pouvant être à l'origine d'un étouffement.
- Ne jamais déployer plus d'un module de coussin gonflable à la fois.
- En raison de la température élevée des composants du module de coussin gonflable, ne pas toucher le module pendant au moins 30 minutes après le déploiement.
- Veiller à porter des gants lors de la manipulation d'un module de coussin gonflable déployé.
- Ne jamais asperger d'eau un module de coussin gonflable.
- Se nettoyer les mains correctement une fois le travail fini.
- Garer le véhicule à l'extérieur dans un espace libre d'au moins 6 mètres de rayon avant de déployer un module de coussin gonflable monté sur le véhicule.
- Utiliser un voltmètre pour s'assurer que la batterie du véhicule est chargée à fond.
- Ne pas mettre au rebut le module de coussin gonflable non déployé.

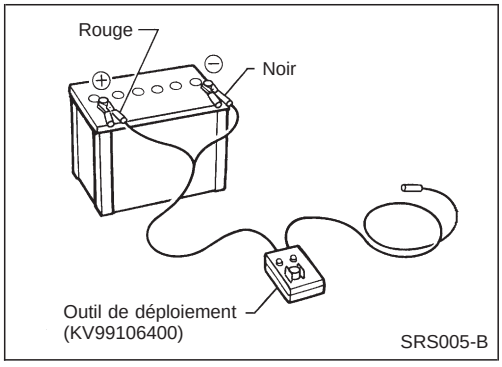

VERIFICATION DE L'OUTIL DE DEPLOIEMENT

Branchement sur la batterie

PRECAUTION :

La batterie doit débiter 9,6 V ou plus.

Sortir la batterie du véhicule et la placer sur une cale en bois dur à environ 5 m du véhicule.

- Débrancher la batterie du véhicule et attendre 3 minutes avant toute opération.
- Brancher le clip rouge de l'outil de déploiement à la borne positive de batterie et le clip noir à la borne négative.

Veiller à respecter les polarités. Le témoin à la droite de l'outil, sur lequel est indiqué ''alimentation de l'outil de déploiement'', doit s'allumer en vert. Si le témoin de droite s'allume en rouge, inverser les polarités à la batterie.

Simpo PDF Merge and Split Unregistered Version - http://www.simpopdf.com

Mise au rebut du module de coussin gonflable (suite)

Vérification de l'outil de déploiement

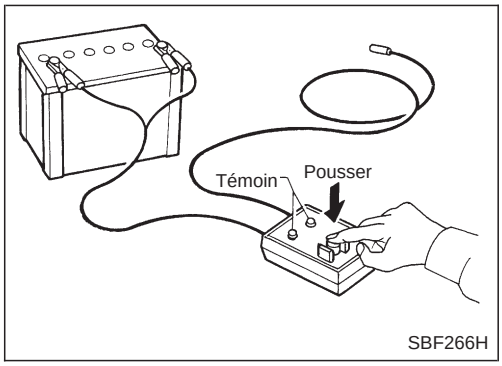

SBF266H

Appuyer sur l'interrupteur de l'outil de déploiement pour l'amener en position ''MARCHE''. Le témoin à la gauche de l'outil, sur lequel est indiqué ''tension du connecteur de coussin gonflable'' doit s'allumer. S'il ne s'allume pas, remplacer l'outil.

Tableau de fonctionnement des témoins de l'outil de déploiement de coussin gonflable (batterie branchée)

Position de la commande	Témoin gauche, vert* ''TENSION DU CONNECTEUR DE COUSSIN GONFLABLE (AIR BAG)''.	Témoin de droite, vert* ''OUTIL DE DEPLOIEMENT SOUS TENSION''
OFF	OFF	ON
ON	ON	ON

* : Si ce témoin s'allume en rouge, l'outil est mal connecté à la batterie. Inverser le sens des polarités et s'assurer que le témoin s'allume en vert.

Déploiement du module de coussin gonflable côté passager (hors du véhicule)

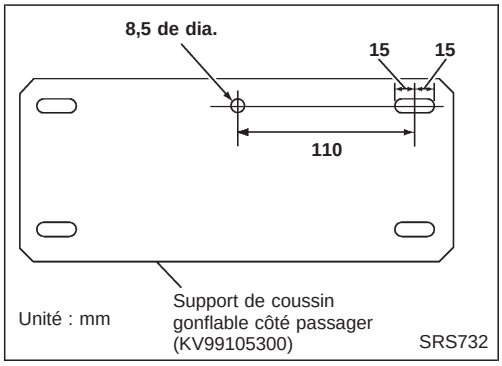

SRS732

1. Faire un orifice de 8,5 mm de diamètre dans le support de coussin gonflable passager (outil spécial : KV99105300) à l'endroit signalé par l'illustration de gauche.

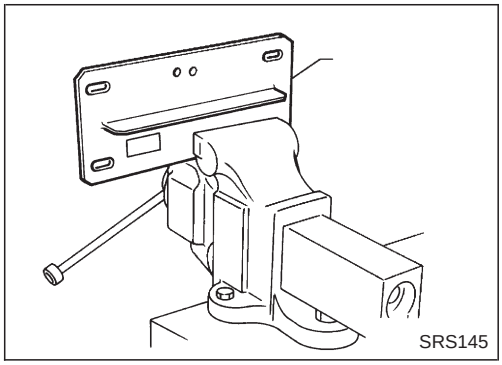
SRS145

2. Fixer fermement le support de coussin gonflable côté passager (SST : KV99105300) dans un étau.

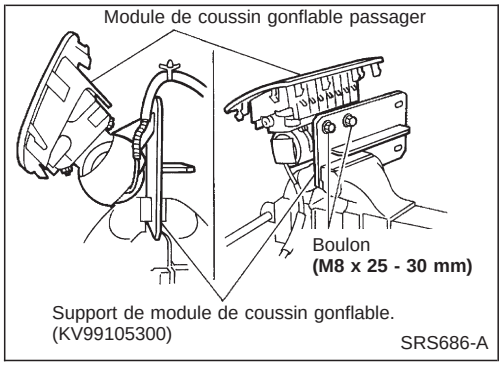

SRS686-A

3. Aligner les deux trous du support du coussin gonflable passager (maintenu dans un étau) et du module de coussin gonflable passager et les fixer avec des boulons (M8 x 25 - 30 mm).

PRECAUTION :
Si un jeu subsiste entre le module de coussin gonflable passager et le support de coussin gonflable passager, insérer une cale de bois afin de stabiliser le module de coussin gonflable.

Simpo PDF Merge and Split Unregistered Version - http://www.simpopdf.com

Mise au rebut du module de coussin gonflable (suite)

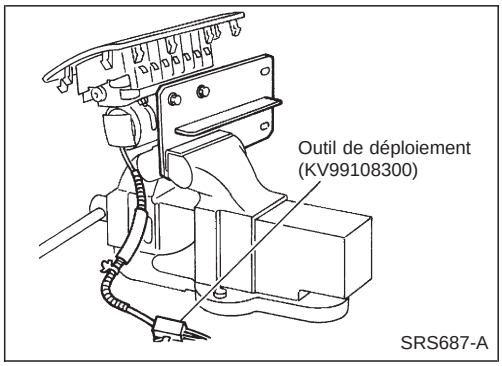

4. Connecter l'adaptateur de l'outil de deploiement (SST : KV99108300) sur le connecteur de l'outil de déploiement (SST : KV99106400) et sur les deux cotés du module de coussin gonflable.
5. Brancher le clip rouge de l'outil de déploiement à la borne positive de batterie et le clip noir à la borne négative.
6. Le témoin à la droite de l'outil, sur lequel est indiqué ''outil de déploiement sous tension'', doit s'allumer en vert et non en rouge.
7. Appuyer sur l'interrupteur de l'outil de déploiement. Le témoin à la gauche de l'outil, sur lequel est indiqué ''tension du connecteur de coussin gonflable'' doit s'allumer et le module de coussin gonflable se déployer.

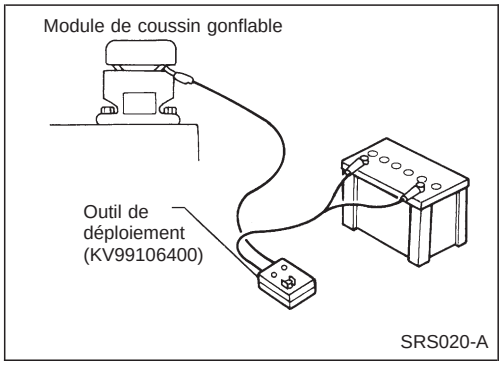

PRECAUTION :

- **Ne pas se tenir face au module de coussin gonflable lors du déploiement.**
- **Rester éloigner du module de coussin gonflable d'au moins cinq mètres.**

Simpo PDF Merge and Split Unregistered Version - http://www.simpopdf.com

Mise au rebut du module de coussin gonflable (suite)

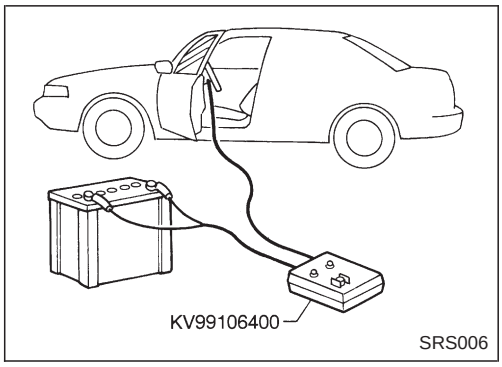

DEPLOIEMENT DU MODULE DE COUSSIN GONFLABLE (AIR BAG) INSTALLE SUR LE VEHICULE

Lors de la mise au rebut du véhicule, déployer les modules de coussins gonflables alors qu'ils sont toujours installés dans le véhicule.

PRECAUTION :

Lors du déploiement du module de coussin gonflable, s'assurer que le véhicule est vide.

1. Débrancher les deux câbles de batterie du véhicule et attendre 3 minutes.
2. Débrancher le connecteur des modules de coussin gonflable.
3. Brancher l'outil de déploiement (outil spécial : KV99106400) sur le module de coussin gonflable.
   Pour le module de coussin gonflable du passager avant, fixer l'adaptateur de l'outil de déploiement [outil spécial : KV99108300] sur le connecteur de l'outil.
4. Brancher le clip rouge de l'outil de déploiement à la borne positive de batterie et le clip noir à la borne négative.
5. Le témoin à la droite de l'outil, sur lequel est indiqué ''outil de déploiement sous tension'', doit s'allumer en vert et non en rouge.
6. Appuyer sur l'interrupteur de l'outil de déploiement. Le témoin à la gauche de l'outil, sur lequel est indiqué ''tension du connecteur de coussin gonflable'' doit s'allumer et le module de coussin gonflable se déployer.

PRECAUTION :

Ne jamais déployer plus d'un module de coussin gonflable ou prétensionneur de ceinture de sécurité à la fois.

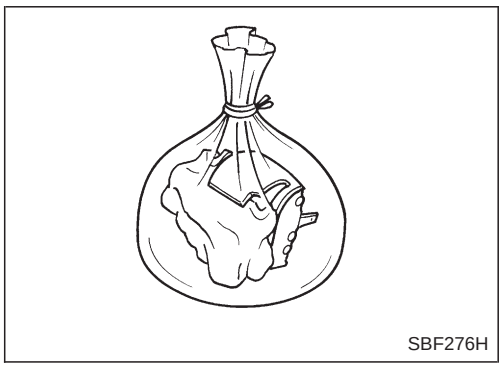

MISE AU REBUT DU MODULE DE COUSSIN GONFLABLE (AIR BAG)

Les modules de coussin gonflable déployés sont très chauds. Avant de mettre le module de coussin gonflable au rebut, attendre au moins 30 minutes. Les placer dans des sacs en plastique hermétiques avant de les mettre au rebut.

PRECAUTION :

- **Ne jamais asperger d'eau un module de coussin gonflable déployé.**
- **Veiller à porter des gants lors de la manipulation d'un module de coussin gonflable déployé.**
- **Le déploiement du coussin gonflable ne dégage pas de gaz nocifs. Toutefois veiller à ne pas inhaler le gaz en raison de ses propriétés irritantes pouvant être à l'origine d'un étouffement.**
- **Ne pas tenter de démonter le module de coussin gonflable.**
- **Un module de coussin gonflable ne peut pas être réutilisé.**
- **Se nettoyer les mains correctement une fois le travail fini.**

Simpo PDF Merge and Split Unregistered Version - http://www.simpopdf.com

Introduction des diagnostics de défauts

PRECAUTION :

- **Ne pas utiliser d'équipement d'essai électrique pour vérifier les connecteurs de faisceau du SRS, sauf instructions contraires données dans ce Manuel de Réparation. Les faisceaux de câblage du SRS sont facilement identifiables grâce à une gaine de protection de faisceau jaune ou à une bande d'isolation jaune placée sur les connecteurs de faisceau.**
- **Ne pas essayer de réparer, épisser ou modifier le faisceau de câblage du SRS. Si le faisceau est endommagé, le remplacer par un neuf.**
- **Maintenir le circuit de masse dans un état de propreté satisfaisant.**

FONCTION DE DIAGNOSTIC

Les résultats de l'autodiagnostic du SRS peuvent être lus à l'aide du témoin d'avertissement ''AIR BAG'' et/ou de CONSULT. La lecture de ces résultats peut avoir lieu grâce aux deux modes suivants — ''Mode utilisateur'' et ''Mode de diagnostic''.
Le mode Utilisateur est exclusivement conçu pour le client (conducteur). Ce mode avertit le conducteur de la présence d'un défaut dans le système en actionnant le témoin d'avertissement ''AIR BAG''.
Le mode de Diagnostic permet au technicien de localiser et d'inspecter la pièce défectueuse.
Les applications des modes témoin d'avertissement ''AIR BAG'' et CONSULT sont comme suit :

	Mode utilisateur	Mode de diagnostic	Type d'affichage
Témoin d'avertissement ''AIR BAG''	X	X	Fonctionnement MAR/ ARR.

MODE DE DIAGNOSTIC POUR CONSULT

- ''AUTO-DIAG [COURANT]''
  Un résultat d'autodiagnostic courant (également indiqué par le clignotement du témoin en mode de Diagnostic) s'affiche en temps réel sur l'écran de CONSULT. Cela signifie qu'une pièce défectueuse doit être réparée.
  ''AUTO-DIAG [PASSE]''
  Les résultats de diagnostic précédemment mémorisés sont affichés sur l'écran de CONSULT. Les résultats enregistrés sont gardés en mémoire tant que celle-ci n'a pas été effacée.
- ''ENREG DIAG DEFAUT''
  Avec ''ENREG DIAG DEFAUT'', les résultats de diagnostic précédemment effacés peuvent être rappelés et affichés à nouveau sur l'écran CONSULT.
- ''No IDENT BOIT CONTR''

Pour chaque modèle, le boîtier de capteurs de diagnostic est assorti d'un numéro de classification propre et individuel. Ce numéro s'affichera sur l'écran CONSULT, comme illustré sur la figure de gauche. Lors du remplacement du boîtier de capteurs de diagnostic, se reporter au numéro de pièce pour une bonne compatibilité. Après la repose, il est possible de vérifier si le boîtier de remplacement est approprié en confirmant ce numéro de classification sur l'écran CONSULT. La codification du boîtier de capteurs de diagnostic dépend de la configuration du SRS.

Pour le MODELE D22, les numéros de la codification du boîtier de capteur de diagnostic se présente de la manière suivante.

MODELE	No IDENT BOIT CONT EL
Coussin gonflable simple	5A0B
Coussin gonflable double	5A0A

Simpo PDF Merge and Split Unregistered Version - http://www.simpopdf.com

Introduction des diagnostics de défauts (suite)

COMMENT CHANGER LE MODE D'AUTODIAGNOSTIC

Avec CONSULT

Du mode Utilisateur au mode de Diagnostic.

Le système passe automatiquement du mode Utilisateur en mode de Diagnostic lorsque l'on sélectionne l'option AIRBAG sur l'écran ''SELECTION SYSTEME''.

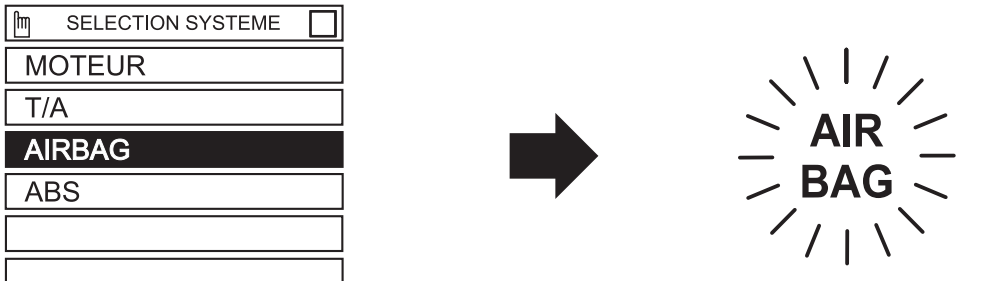

Le mode Diagnostic est indiqué par le témoin d'avertissement ''AIR BAG''.

FCXSS03

Du mode de Diagnostic au mode Utilisateur.

Pour revenir sur le mode Utilisateur à partir du mode de Diagnostic, appuyer sur la touche ''BACK'' (RETOUR) de CONSULT, jusqu'à ce que ''SELECTION SYSTEME'' s'affiche.

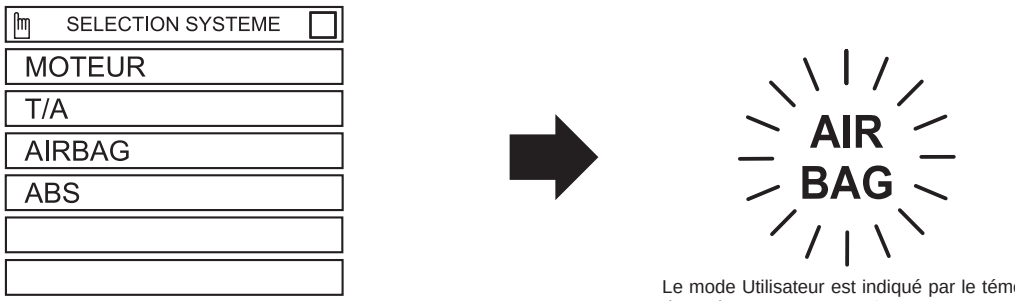

Le mode Utilisateur est indiqué par le témoin d'avertissement ''AIR BAG''.

FCXSS04



SRS168

Sans CONSULT

Du mode Utilisateur au mode de Diagnostic.

Le mode de Diagnostic est activé uniquement lorsqu'un défaut est détecté, en appuyant au moins 5 fois dans un délai de 7 secondes sur le contact de la porte du conducteur après avoir mis le contact d'allumage sur ''ON''. Le SRS ne passera pas en mode de Diagnostic si aucun défaut n'est détecté.

Du mode de Diagnostic au mode Utilisateur.

Une fois le défaut réparé, couper le contact d'allumage pendant au moins 1 seconde avant de le rétablir . Le mode de Diagnostic retourne au mode Utilisateur. Si l'on doit passer du mode de Diagnostic au mode Utilisateur pendant la procédure de détection du défaut, couper le contact d'allumage, puis le rétablir et appuyer au moins 5 fois dans un délai de 7 secondes sur le contact de la porte du conducteur.

Simpo PDF Merge and Split Unregistered Version - http://www.simpopdf.com

Introduction des diagnostics de défauts (suite)

COMMENT EFFACER LES RESULTATS DE L'AUTODIAGNOSTIC

Avec CONSULT

''AUTO-DIAG [COURANT]''.
Le résultat d'autodiagnostic courant s'affiche en temps réel sur l'écran de CONSULT. Une fois le défaut complètement éliminé, aucun défaut de fonctionnement n'est plus détecté sur l'écran ''AUTO-DIAG [COURANT]''.

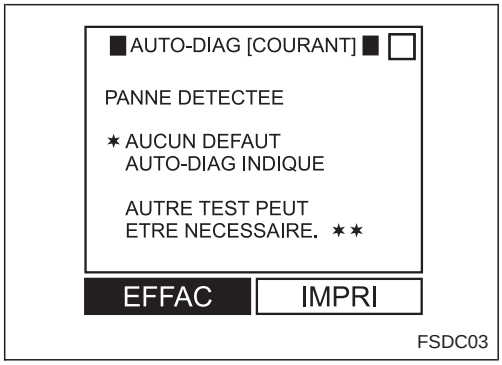

- ''AUTO-DIAG'' [PASS]''
  Revenir sur l'écran CONSULT ''AUTO-DIAG [COURANT]'' en appuyant sur la touche ''BACK'' (RETOUR) de CONSULT et en sélectionnant ''AUTO-DIAG [COURANT]'' dans ''SELECTION MODE DIAG''. Appuyer sur ''EFFAC'' en mode ''AUTO-DIAG [COURANT]''.

NOTE :
Si le défaut mémorisé en mode ''AUTO-DIAG [PASSE]'' n'est pas effacé, le mode Utilisateur indiquera un défaut de système par le biais du témoin d'avertissement, même si le défaut a été complètement éliminé.

- ''ENREG DIAG DEFAUT''
  La mémoire du mode ''ENREGIS DIAG DEFAUT'' ne peut pas être effacée.

Sans CONSULT

Une fois le défaut éliminé, passer du mode de Diagnostic au mode Utilisateur en coupant le contact pendant au moins 1 seconde avant de le rétablir. Le résultat de l'autodiagnostic est alors effacé.

Comment effectuer les diagnostics des défauts pour une réparation rapide et correcte

Une bonne compréhension des conditions de mauvais fonctionnement peut permettre de localiser la panne plus rapidement et avec plus de précision.
En général, chaque client appréhende différemment une panne. Il est indispensable de bien comprendre les symptômes ou les conditions de la plainte d'un client.

INFORMATIONS FOURNIES PAR LE CLIENT

QUOI	Modèle de véhicule
QUAND	Date, fréquences
OU	Etat de la route
COM-MENT	Conditions de fonctionnement, symptômes

VERIFICATION PRELIMINAIRE

Vérifier que les pièces suivantes sont en bon état.
- Batterie [se reporter à la section EL (''BATTERIE'') du Manuel de Réparation].
- Fusible [se reporter à la section EL (''Fusible'', ''DISPOSITION DE L'ALIMENTATION ELECTRIQUE'') du Manuel de Réparation].
- Connexions des composants du système au faisceau

Simpo PDF Merge and Split Unregistered Version - http://www.simpopdf.com

Comment effectuer les diagnostics des défauts pour une réparation rapide et correcte (suite)

MARCHE A SUIVRE

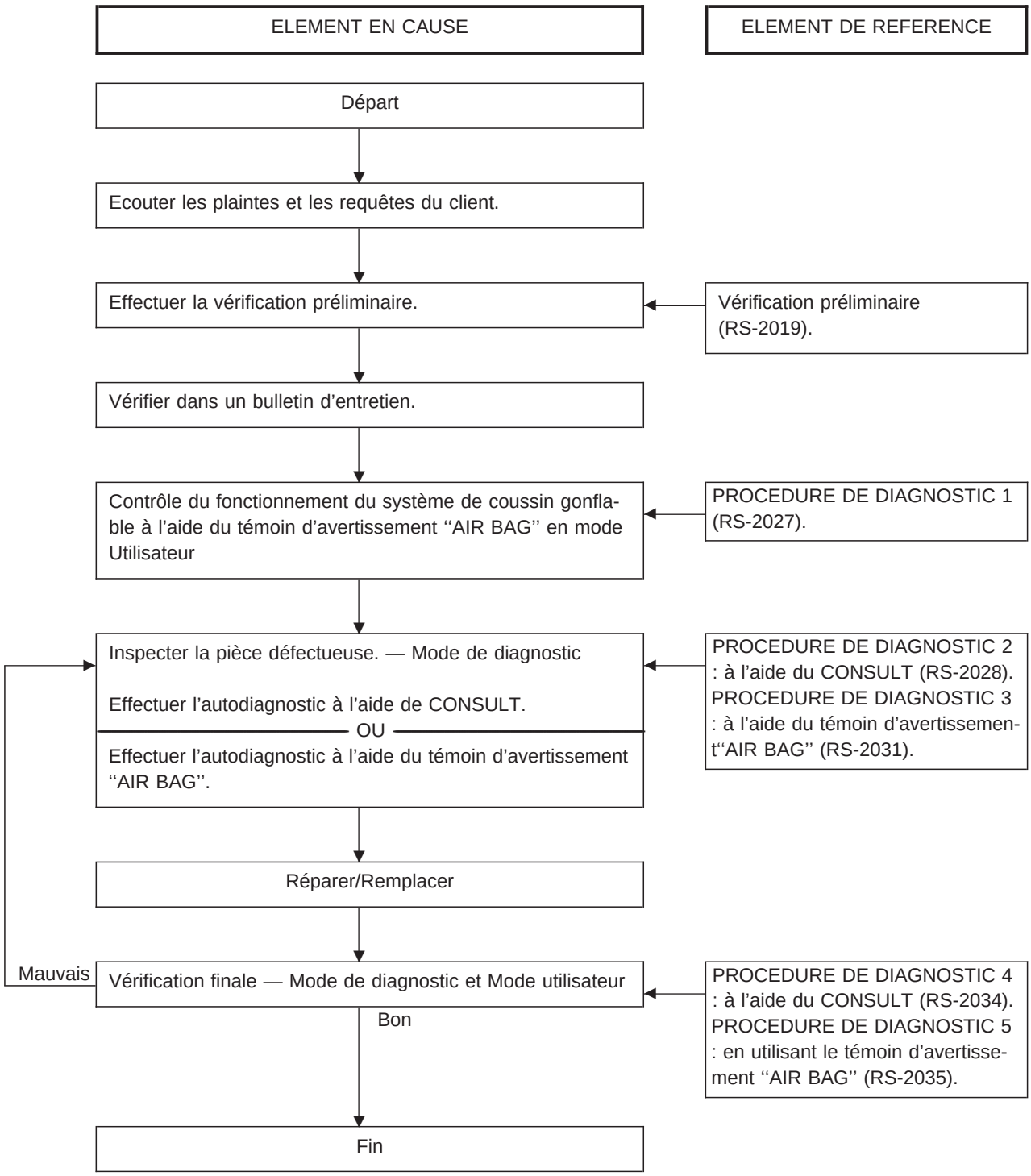

Simpo PDF Merge and Split Unregistered Version - http://www.simpopdf.com

Schéma

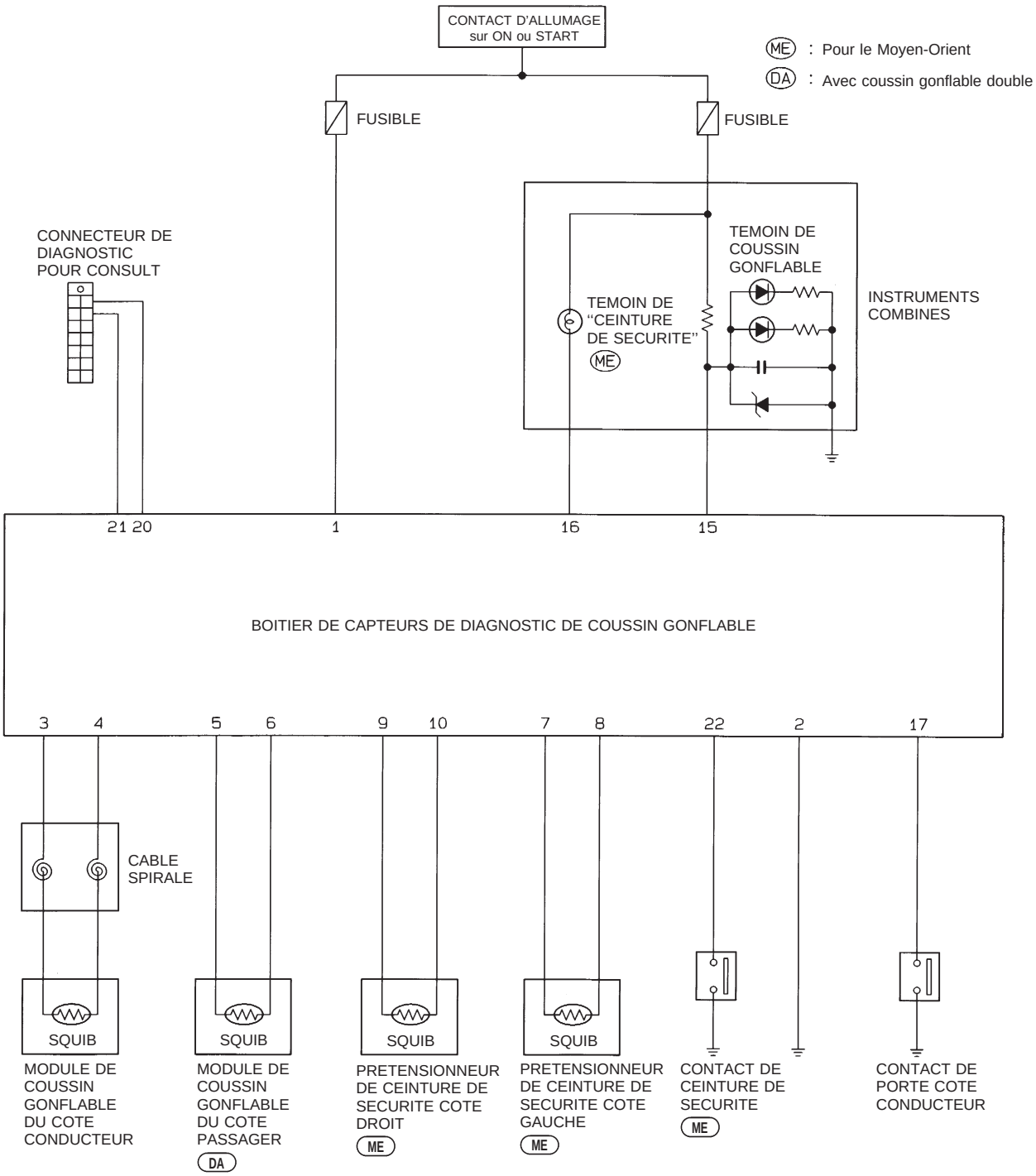

HRS048

Simpo PDF Merge and Split Unregistered Version - http://www.simpopdf.com

Schéma de câblage — SRS —/Conduite à gauche

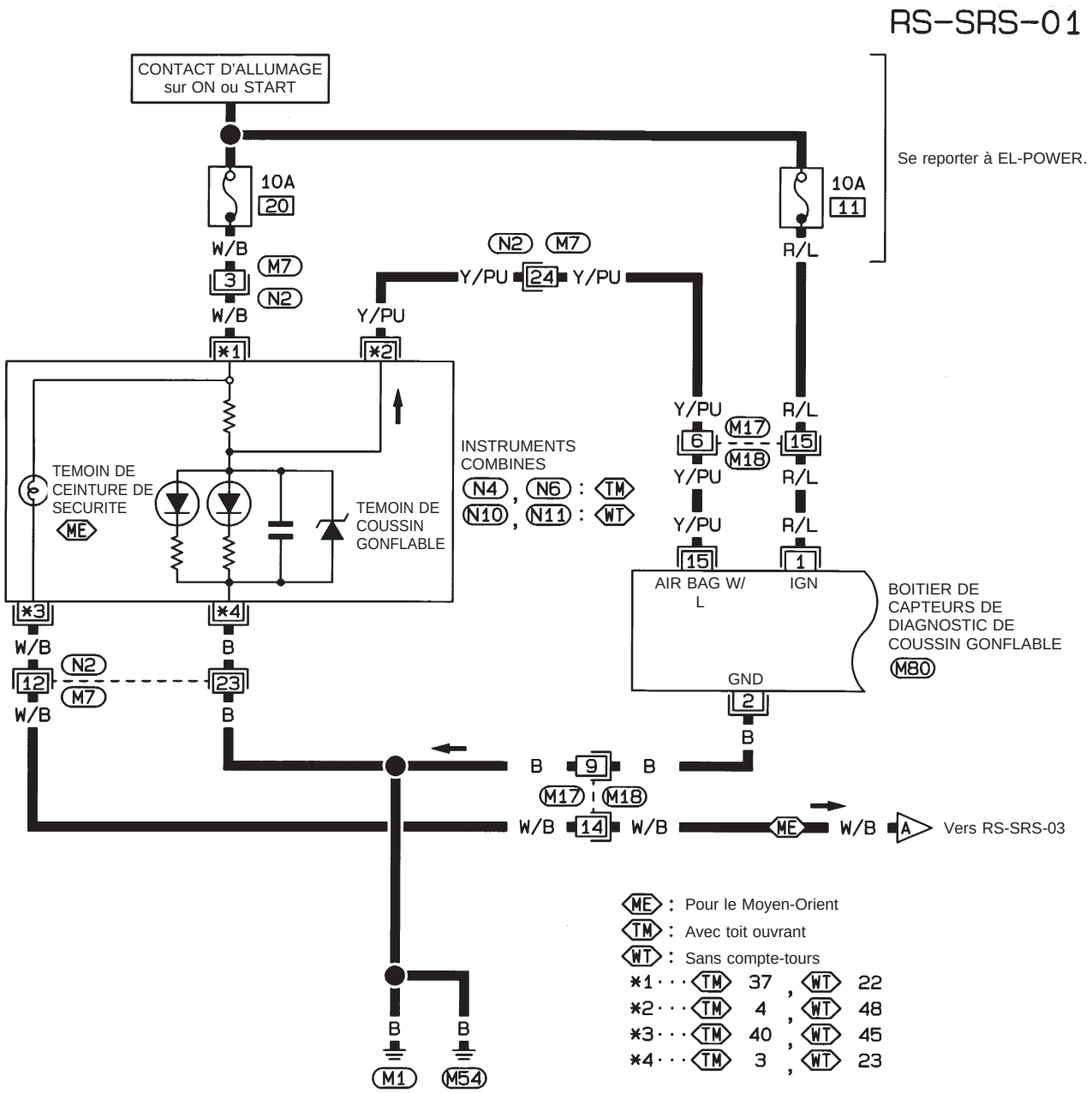

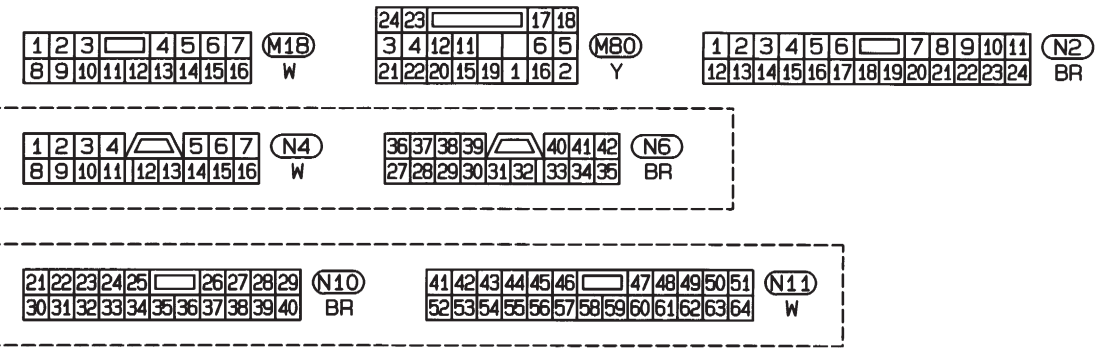

HRS049

Simpo PDF Merge and Split Unregistered Version - http://www.simpopdf.com

Schéma de câblage — SRS —/Conduite à gauche (suite)

RS-SRS-02

ER : Pour l'Europe et modèles munis d'un système de multi-télécommande
OR : Sauf ER

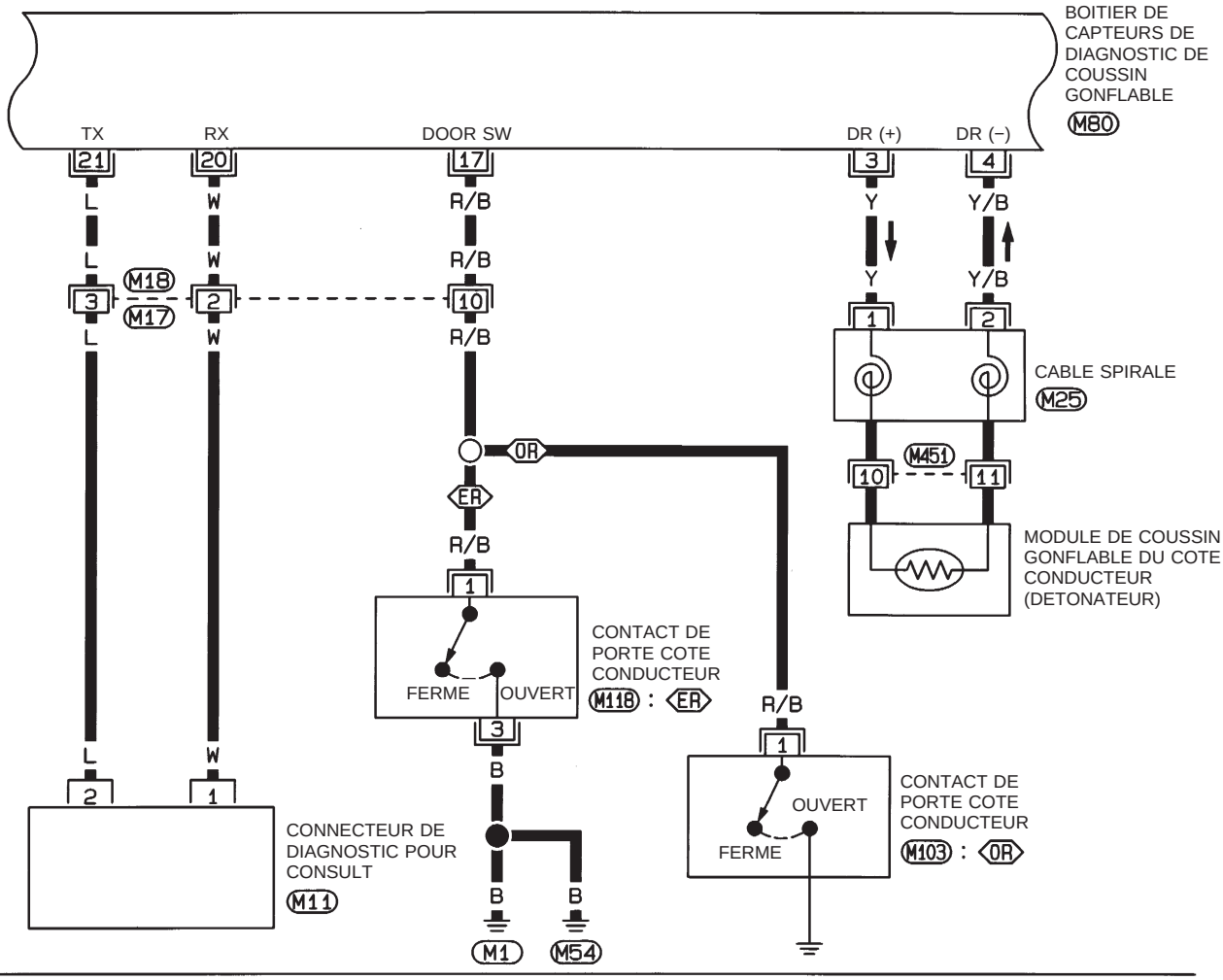

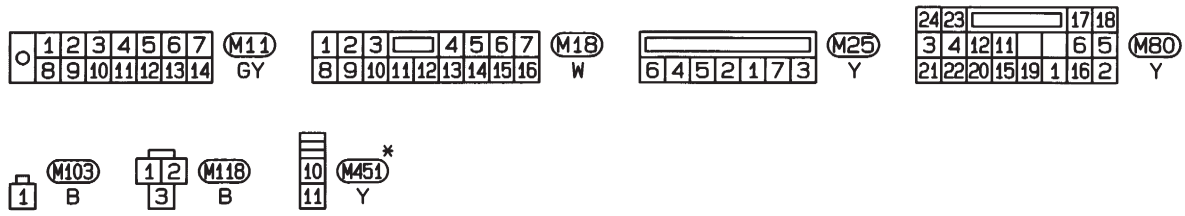

✱ : Ce connecteur n'est pas indiqué dans le chapitre "DISPOSITION DES FAISCEAUX", à la section EL.

HRS050

Simpo PDF Merge and Split Unregistered Version - http://www.simpopdf.com

Schéma de câblage — SRS —/Conduite à gauche (suite)

RS-SRS-03

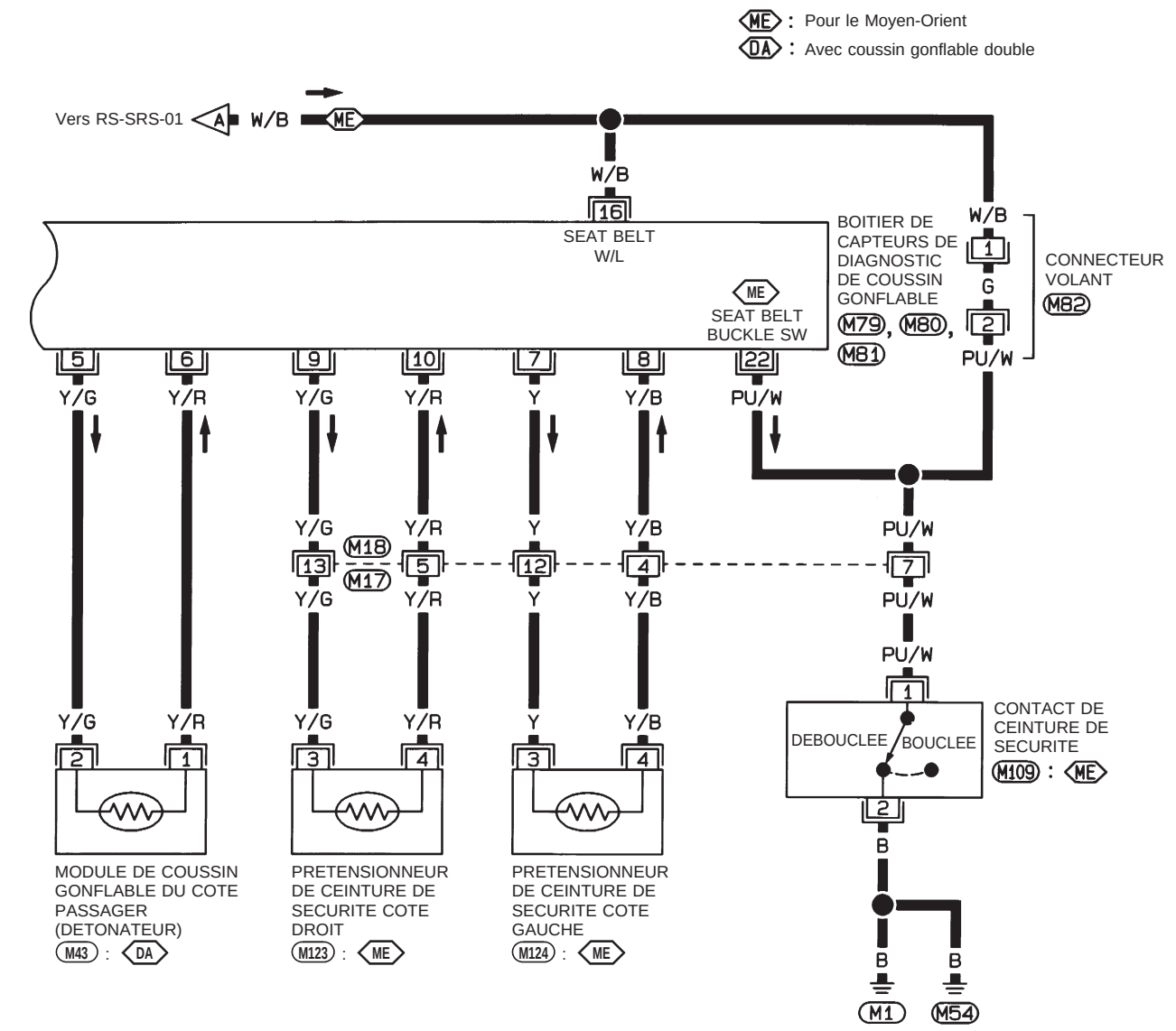

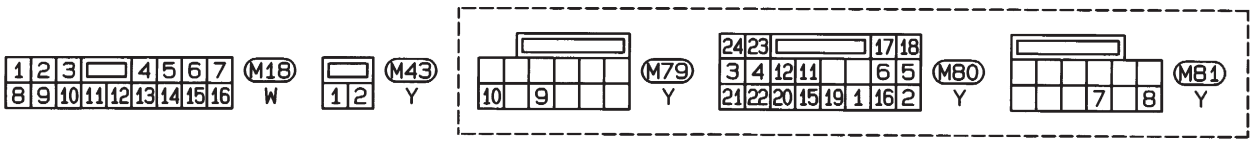

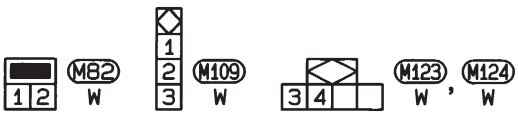

HRS051

Simpo PDF Merge and Split Unregistered Version - http://www.simpopdf.com

Schéma de câblage — SRS —/Conduite à droite

RS-SRS-04

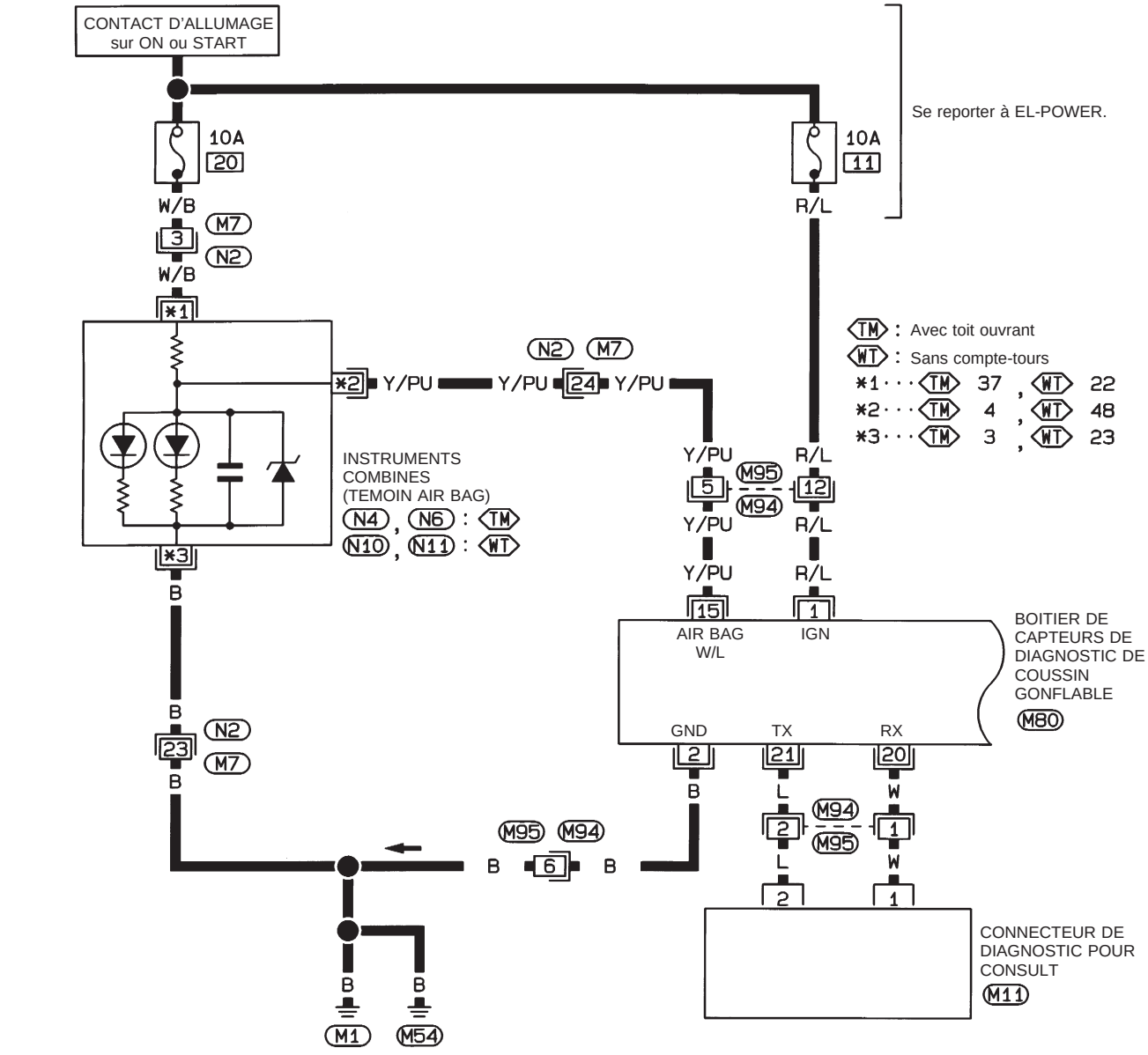

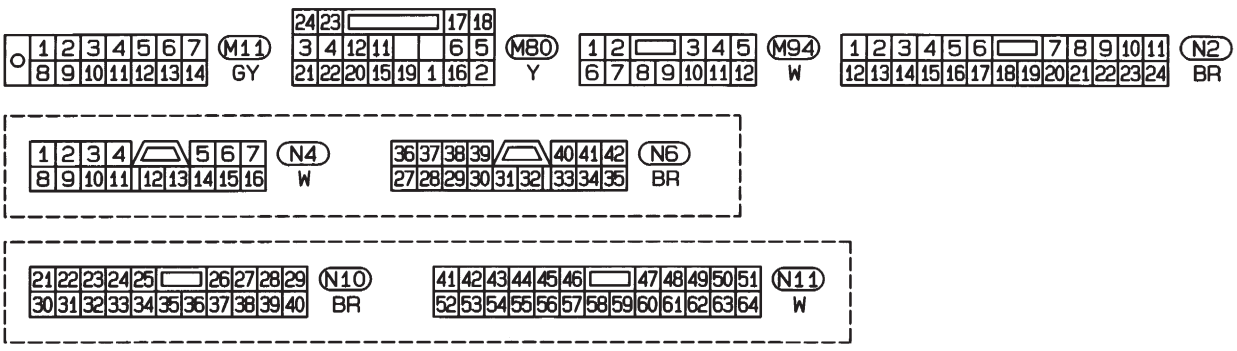

HRS052

Simpo PDF Merge and Split Unregistered Version - http://www.simpopdf.com

Schéma de câblage — SRS —/Conduite à droite (suite)

RS-SRS-05

EU : Pour l'Europe
NE : Sauf pour l'Europe
DA : Equipé du système de coussin gonflable double

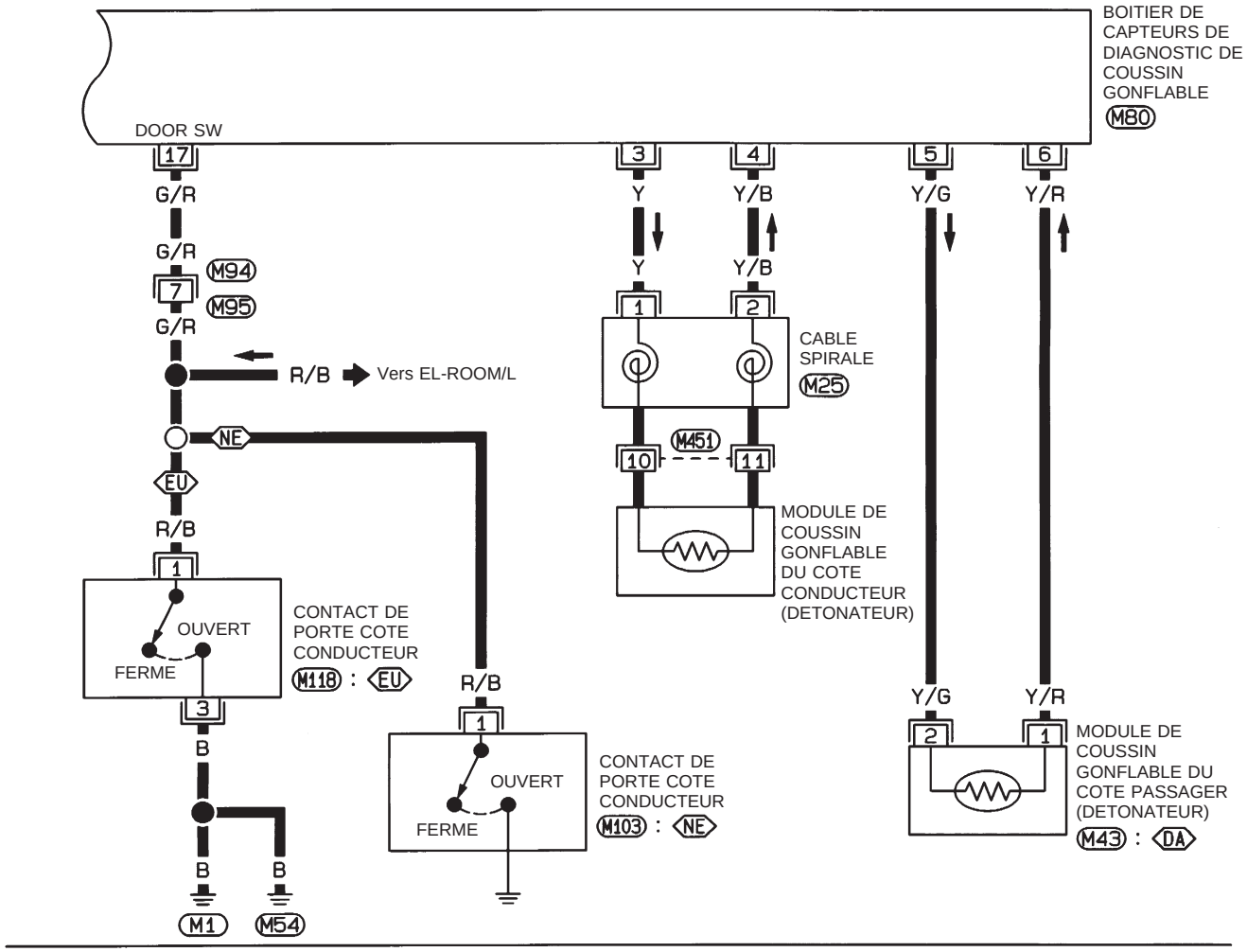

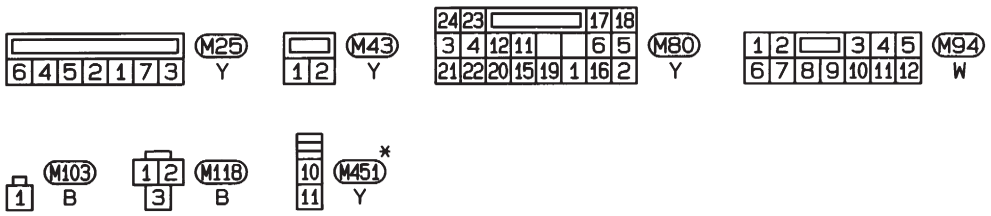

* : Ce connecteur n'est pas indiqué dans le chapitre "DISPOSITION DES FAISCEAUX" à la section EL.

HRS053

Simpo PDF Merge and Split Unregistered Version - http://www.simpopdf.com

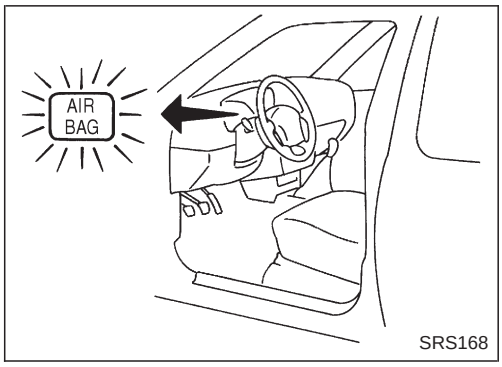

Autodiagnostic

PROCEDURE DE DIAGNOSTIC 1 (sans CONSULT)

Vérifier le fonctionnement du SRS à l'aide du témoin d'avertissement ''AIR BAG'' — Mode Utilisateur

1. Le témoin d'avertissement ''AIR BAG'' s'allume lorsque l'on tourne le contact d'allumage de la position ''OFF'' sur ''ON''.
2. Comparer le fonctionnement du témoin ''AIR BAG'' au tableau ci-dessous.

Fonctionnement du témoin d'avertissement ''AIR BAG'' — Mode utilisateur —	Conditions du SRS	Elément de référence
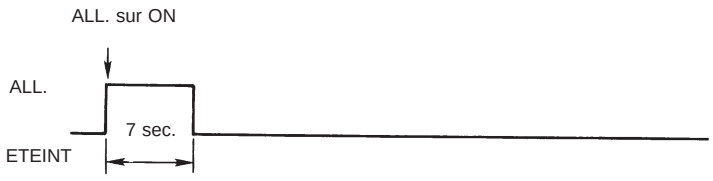 MRS095A	Aucun défaut n'est détecté. Aucune démarche supplémentaire n'est nécessaire.	—
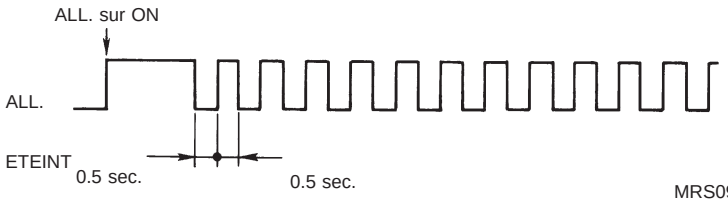 MRS096A	Le système est défectueux et a besoin d'être réparé comme indiqué.	Aller à PROCEDURE DE DIAGNOSTIC 2, ou 3 (RS-2028 ou 2031).
 MRS097A	Le coussin gonflable est déployé.	Voir à DIAGNOSTIC DE COLLISION (RS-2044).
	Le fusible de coussin gonflable, le boîtier de capteurs de diagnostic ou le faisceau est défectueux et doit être réparé.	Aller à la PROCEDURE DE DIAGNOSTIC 9 (RS-2042).
 MRS098A	Un des défauts suivants s'est manifesté et doit être réparé. ● Le fusible des instruments combinés est grillé. ● Le circuit du témoin d'avertissement ''AIR BAG'' est ouvert ou en court-circuit. ● Le boîtier de capteurs de diagnostic est défectueux.	Aller à la PROCEDURE DE DIAGNOSTIC 10 (RS-2042).

NOTE :
Si le fonctionnement du témoin d'avertissement ''AIR BAG'' diffère du fonctionnement spécifié plus haut, se reporter à Fonctionnement du témoin d'avertissement ''AIR BAG'' — Mode de diagnostic —, PROCEDURE DE DIAGNOSTIC 3 (étape 4), RS-2031

Simpo PDF Merge and Split Unregistered Version - http://www.simpopdf.com

Autodiagnostic (suite)

PROCEDURE DE DIAGNOSTIC 2 (avec CONSULT)

Inspection des pièces défectueuses du SRS à l'aide de CONSULT — Mode de diagnostic

1. Mettre le contact d'allumage sur ''OFF''.
2. Brancher ''CONSULT'' au connecteur de liaison des données.

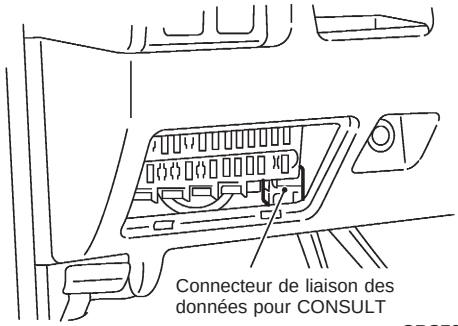

SRS733

3. Mettre le contact d'allumage sur ''ON''.
4. Appuyer sur ''DEPART''.

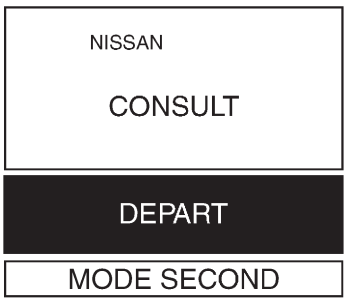

FCNCS01A

5. Appuyer sur ''AIR BAG''.

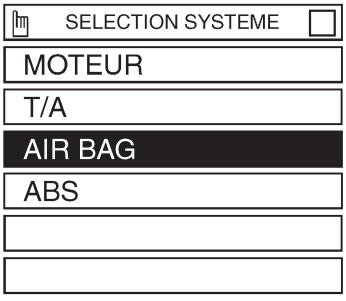

FCSSE01A

6. Appuyer sur ''AUTO-DIAG [COURANT]''.

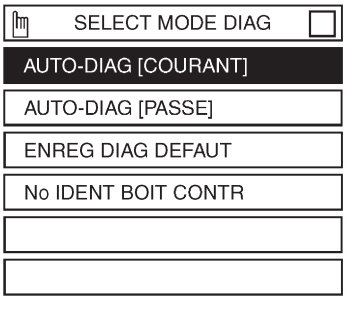

FCSDM01

7. Les codes de diagnostic sont affichés dans ''AUTO-DIAG [COURANT]''.

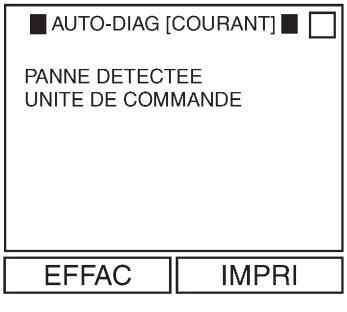

FCSDC02

SimpoPDF Merge and Split Unregistered Version - http://www.simpopdf.com

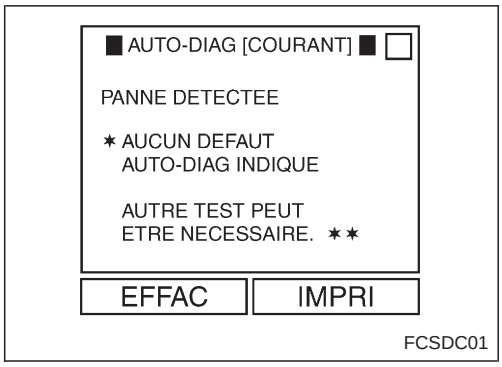

Autodiagnostic (suite)

Si aucun défaut de fonctionnement n'est détecté en ''AUTO-DIAG [COURANT]'', même si un défaut de fonctionnement est détecté par le témoin d'avertissement ''AIR BAG'', vérifier la tension de la batterie.

Si la tension de la batterie est inférieure à 9 V, recharger la batterie. Puis aller à la PROCEDURE DE DIAGNOSTIC 4 pour effectuer un contrôle final, page RS-2034.

Si la tension de la batterie est normale, aller à la PROCEDURE DE DIAGNOSTIC 6, page RS-2038 afin d'effectuer le diagnostic des cas suivants :

- Le résusltat d'autodiagnostic (précédemment mémorisé) n'a pas été effacé après réparation.
- Défaut de fonctionnement intermittent du SRS.

8. Appuyer sur ''IMPRI''.
9. Comparer les codes de diagnostic au TABLEAU DES CODES DE DIAGNOSTIC CONSULT, page RS-2030.
10. Pour revenir sur le mode Utilisateur à partir du mode de Diagnostic, appuyer sur la touche ''BACK'' (RETOUR) de CONSULT, jusqu'à ce que ''SELECTION SYSTEME'' s'affiche, puis éteindre CONSULT.
11. Couper le contact, puis débrancher le CONSULT ainsi que les deux câbles de la batterie.
12. Réparer le système comme indiqué dans ''Ordre de réparation'' dans le TABLEAU DE CODE DE DIAGNOSTIC DU CONSULT, qui correspond au résultat de l'autodiagnostic. Pour la procédure de remplacement des pièces, se reporter à RS-2007.
13. Après avoir réparé le système, aller à la PROCEDURE DE DIAGNOSTIC 4 pour effectuer un contrôle final, page RS-2034.

Simpo PDF Merge and Split Unregistered Version - http://www.simpopdf.com

Autodiagnostic (suite)

TABLEAU DES CODES DE DIAGNOSTIC CONSULT (''AUTO-DIAG [COURANT]'')

Elément de diagnostic	Explication		Ordre de réparation **Vérifier le système SRS à chaque remplacement de pièce.**
AUCUN DEFAUT AUTO-DIAG INDIQUE	Lorsque le défaut de fonctionnement est indiqué par le témoin d'avertissement ''AIR BAG'' en mode Utilisateur.	● Tension de la batterie basse (moins de 9 V).	● Voir à PROCEDURE DE DIAGNOSTIC 4 (RS-2034) après avoir chargé la batterie.
		● Le résusltat d'autodiagnostic (''AUTO-DIAG [PASSE]'') (précédemment mémorisé) n'a pas été effacé après réparation. ● Un défaut intermittent a été détecté dans le passé.	● Aller à la PROCEDURE DE DIAGNOSTIC 6 (RS-2038).
	● Aucun défaut n'est détecté.		● Aller à la PROCEDURE DE DIAGNOSTIC 4 (RS-2034).
MODULE AIR BAG [OUVERT]	● Le circuit du module de coussin gonflable du coté conducteur est ouvert (y compris le câble spiralé).		1. Inspecter visuellement la connexion du faisceau de câblage. 2. Remplacer le faisceau s'il est visiblement endommagé. 3. Remplacer le câble spiralé. 4. Remplacer le module de coussin gonflable côté conducteur. (Il doit être déployé avant la mise au rebut). 5. Remplacer le boîtier de capteurs de diagnostic. 6. Remplacer le faisceau correspondant.
MODULE AIR BAG [COURT TENS BATT]	● Le circuit du module de coussin gonflable du coté conducteur est court-circuité à un circuit d'alimentation électrique (y compris le câble spiralé).		
MODULE AIR BAG [COURT-CIRC MASSE]	● Le circuit du module de coussin gonflable côté conducteur est en court-circuit à la masse (y compris le câble spiralé).		
MODULE AIR BAG [COURT-CIRC]	● Les circuits du module de coussin gonflable côté conducteur sont court-circuités les uns avec les autres.		
MODULE A/B PASSAG [COURT TENS BATT]	● Le circuit du module de coussin gonflable côté passager avant est court-circuité à un circuit d'alimentation électrique.		1. Inspecter visuellement la connexion du faisceau de câblage. 2. Remplacer le faisceau s'il est visiblement endommagé. 3. Remplacer le module de coussin gonflable côté passager avant. (Il doit être déployé avant la mise au rebut). 4. Remplacer le boîtier de capteurs de diagnostic. 5. Remplacer le faisceau correspondant.
MODULE A/B PASSAG [OUVERT]	● Le circuit du module de coussin gonflable côté passager avant est ouvert.		
MODULE A/B PASSAG [COURT-CIRC-MASSE]	● Le circuit du module de coussin gonflable côté passager avant est court-circuité à la masse.		
MODULE A/B PASSAG [COURT-CIRC]	● Les circuits du module de coussin gonflable avant côté passager sont court-circuités les uns avec les autres.		
UNITE DE COMMANDE	● Le boîtier de capteurs de diagnostic est défectueux.		1. Vérifier visuellement les connexions de faisceau de câblage. 2. Remplacer le faisceau s'il est visiblement endommagé. 3. Remplacer le boîtier de capteurs de diagnostic. 4. Remplacer le faisceau correspondant.

*** Suivre les procédures dans l'ordre numérique lors de la réparation des pièces défectueuses. Vérifier que le défaut de fonctionnement est éliminé à l'aide du témoin d'avertissement de coussin gonflable ou de CONSULT après chaque réparation. Si le défaut subsiste, passer à l'étape suivante. Aucune réparation supplémentaire n'est requise si le défaut a disparu.**

Simpo PDF Merge and Split Unregistered Version - http://www.simpopdf.com

Autodiagnostic (suite)

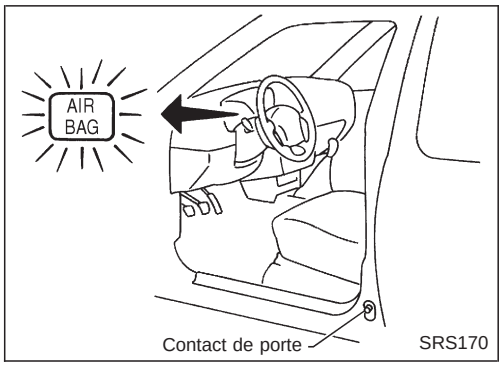

PROCEDURE DE DIAGNOSTIC 3 (⊗ sans CONSULT)

Inspection des pièces défectueuses du SRS à l'aide du témoin d'avertissement ''AIR BAG'' — Mode de diagnostic

NOTE :

Le SRS ne passera pas en mode de Diagnostic si aucun défaut n'est détecté en mode Utilisateur.

1. Ouvrir la portière du conducteur.
2. Mettre le contact d'allumage de la position ''OFF'' sur ''ON''.
3. Appuyer sur le contact de porte côté conducteur au moins 5 fois en 7 secondes après avoir mis le contact d'allumage sur ''ON''.
   Le SRS est maintenant en mode de Diagnostic.
4. Le témoin d'avertissement ''AIR BAG'' fonctionne en mode de Diagnostic comme suit :

NOTE :

Si le SRS ne passe pas en mode de Diagnostic même si un défaut a été detecté en mode Utilisateur, se reporter à PROCEDURE DE DIAGNOSTIC 11, à la page RS-2043.

Simpo PDF Merge and Split Unregistered Version - http://www.simpopdf.com

Autodiagnostic (suite)

N°	Séquence de clignotement du témoin d'avertissement ''AIR BAG'' — Mode de Diagnostic —		Conditions du SRS
1	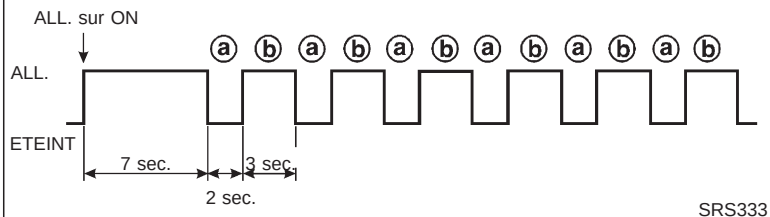 SRS333	⓪a à ⓪b sont répétés.	● Les résultats de diagnostic (précédemment mémorisés) n'ont pas été effacés, même après que le système a été réparé. ● Un défaut intermittent a été détecté dans le passé. Aller à la PROCEDURE DE DIAGNOSTIC 7 (RS-2038).
2	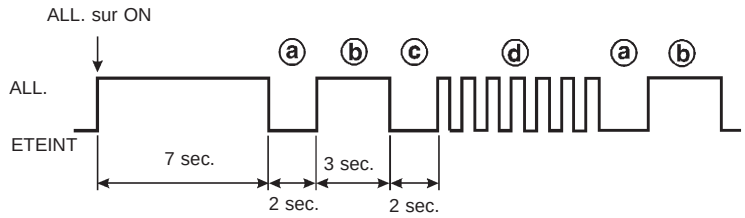 SRS341	⓪a à ⓪d sont répétés. ⓪b — Signal de coussin gonflable côté conducteur et passager (permet d'identifier les défauts de fonctionnement du coussin gonflable côté conducteur et/ou passager). ⓪d — Indique le composant défectueux. Le nombre de clignotements varie selon le composant défectueux (0,5 sec. ALLUME et 0,5 sec. ETEINT. L'état ETEINT représente un clignotement).	Le système est défectueux et a besoin d'être réparé.

5. La pièce défectueuse est identifiée par le nombre de clignotements (partie ⓪d). Comparer le nombre de clignotements au TABLEAU DE CODES DE CLIGNOTEMENT DU TEMOIN D'AVERTISSEMENT ''AIR BAG'', page RS-2033, et localiser le composant défectueux.
6. Couper le contact et débrancher les deux câbles de masse de la batterie.
7. Réparer le système selon l'''Ordre de réparation'' du TABLEAU DE CODES DE CLIGNOTEMENT DU TEMOIN D'AVERTISSEMENT ''AIR BAG'' correspondant au code de clignotement. Pour la procédure de remplacement des pièces, se reporter à RS-2007.
8. Après avoir réparé le système, aller à la PROCEDURE DE DIAGNOSTIC 5, page RS-2035.

Simpo PDF Merge and Split Unregistered Version - http://www.simpopdf.com

Autodiagnostic (suite)

TABLEAU DE CODES DE CLIGNOTEMENT DU TEMOIN D'AVERTISSEMENT ''AIR BAG'' (MODE DE DIAGNOSTIC)

Témoin d'avertissement	Code de clignotement ⓪d (nombre de clignotements)	Explication	Ordre de réparation **Vérifier le système SRS à chaque remplacement.**
Témoin d'avertissement ''AIR BAG''	0	● Les résultats de diagnostic (précédemment mémorisés) n'ont pas été effacés, même après que le système a été réparé. ● Un défaut intermittent a été détecté dans le passé.	Aller à la PROCEDURE DE DIAGNOSTIC 7 (RS-2038).
	2	Défaut de fonctionnement du circuit du module de coussin gonflable côté conducteur.	1. Vérifier visuellement les connexions de faisceau de câblage. 2. Remplacer le faisceau s'il est visiblement endommagé. 3. Remplacer le câble spiralé. 4. Remplacer le module de coussin gonflable côté conducteur. (Avant de le mettre au rebut, il est nécessaire de le déployer). 5. Remplacer le boîtier de capteurs de diagnostic. 6. Remplacer le faisceau correspondant.
	7	Défaut de fonctionnement du boîtier de capteurs de diagnostic.	1. Vérifier visuellement les connexions de faisceau de câblage. 2. Remplacer le faisceau s'il est visiblement endommagé. 3. Remplacer le boîtier de capteurs de diagnostic. 4. Remplacer le faisceau correspondant.
	8	Défaut de fonctionnement du circuit du module de coussin gonflable côté passager.	1. Vérifier visuellement les connexions de faisceau de câblage. 2. Remplacer le faisceau s'il est visiblement endommagé. 3. Remplacer le module de coussin gonflable côté passager. (Avant de le mettre au rebut, il est nécessaire de le déployer). 4. Remplacer le boîtier de capteurs de diagnostic. 5. Remplacer le faisceau correspondant.

*** Suivre les procédures dans l'ordre numérique lors de la réparation des pièces défectueuses. Vérifier que le défaut de fonctionnement est éliminé à l'aide du témoin d'avertissement de coussin gonflable ou de CONSULT après chaque réparation. Si le défaut subsiste, passer à l'étape suivante. Aucune réparation supplémentaire n'est requise si le défaut a disparu.**

Simpo PDF Merge and Split Unregistered Version - http://www.simpopdf.com

Autodiagnostic (suite)

PROCEDURE DE DIAGNOSTIC 4 (avec CONSULT)

Vérification finale après réparation du SRS à l'aide de CONSULT — mode de Diagnostic

1. Après avoir réparé le SRS, brancher les deux câbles de la batterie.
2. Brancher CONSULT au connecteur de liaison de données.
3. Mettre le contact d'allumage de la position ''OFF'' sur ''ON''.

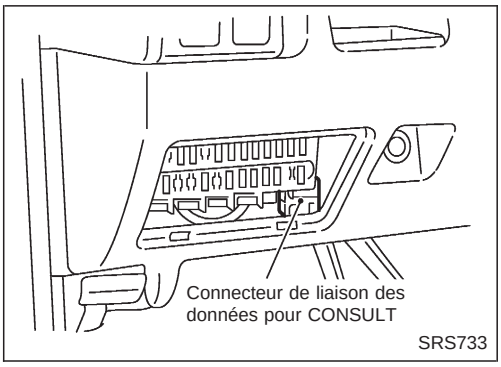

4. Appuyer sur ''DEPART''.

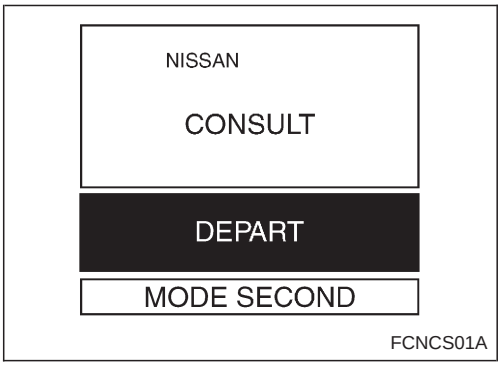

5. Appuyer sur ''AIR BAG''.

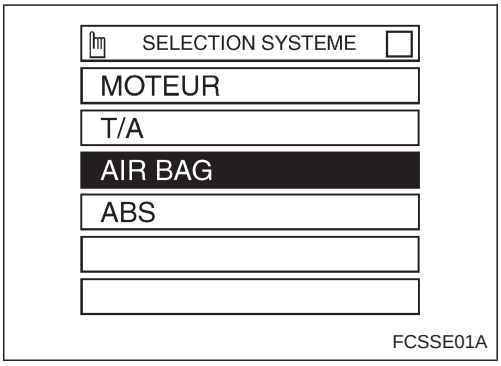

6. Appuyer sur ''AUTO-DIAG [COURANT]''.

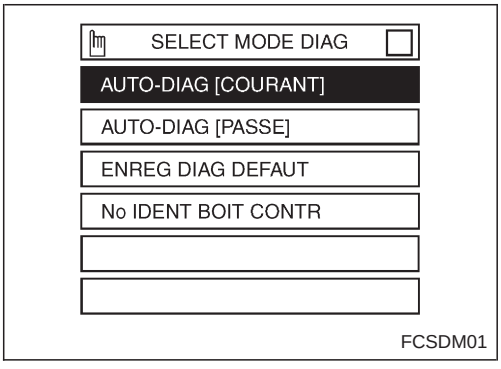

7. Si aucun défaut n'est détecté dans ''AUTO-DIAG [COURANT]'', cela signifie que la réparation du SRS est achevée. Passer à l'étape 8.
(Lorsque le défaut n'apparaît pas que dans le système de prétensionneur de coussin gonflable, aller à l'étape 11).

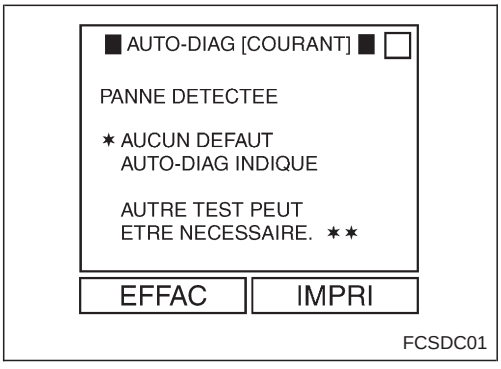

Si un défaut est détecté dans ''AUTO-DIAG [COURANT]'', le composant défectueux n'a pas été complètement réparé ou un autre composant défectueux a été détecté. Voir à PROCEDURE DE DIAGNOSTIC 2, à la page RS-2028, et réparer complètement la pièce défectueuse.

Simpo PDF Merge and Split Unregistered Version - http://www.simpopdf.com

Autodiagnostic (suite)

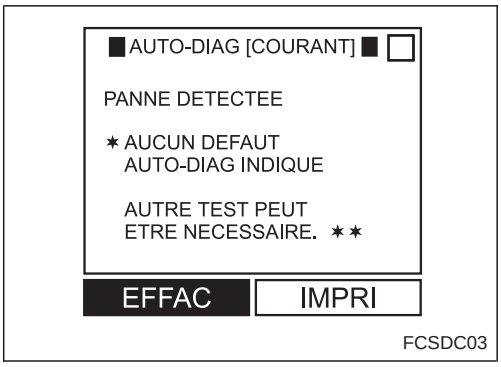

8. Appuyer sur ‘‘EFFAC’’.

NOTE :

Appuyer sur ‘‘EFFAC’’ pour effacer le défaut de la mémoire (‘‘AUTO-DIAG [PASSE]’’).

Si le défaut mémorisé en mode ‘‘AUTO-DIAG [PASSE]’’ n’est pas effacé, le mode Utilisateur indiquera un défaut de système par le biais du témoin d’avertissement, même si le défaut a été complètement éliminé.

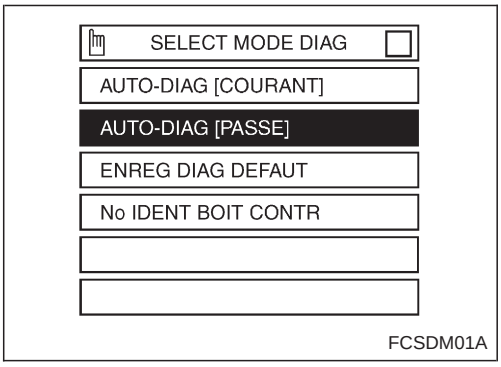

9. Appuyer sur la touche ‘‘BACK’’ (RETOUR) de CONSULT pour sélectionner ‘‘AUTO-DIAG [PASSE]’’ sur l’écran ‘‘SELECT MODE DIAG’’. Appuyer sur ‘‘AUTO-DIAG [PASSE]’’.

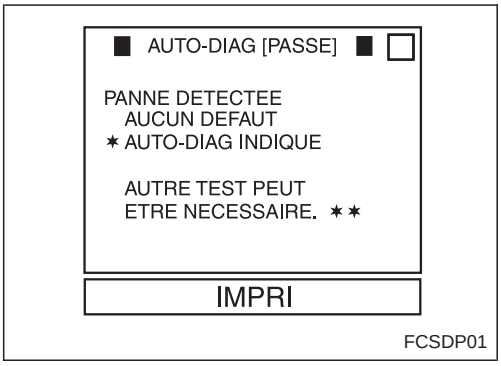

10. S’assurer qu’aucun défaut de fonctionnement n’est détecté en ‘‘AUTO-DIAG [PASSE]’’.
11. Appuyer sur la touche ‘‘RETOUR’’ du CONSULT jusqu’à ce que ‘‘SELECTION SYSTEME’’ apparaisse, puis éteindre et débrancher le CONSULT.
12. Mettre le contact d’allumage sur ‘‘OFF’’.
13. Aller à PROCEDURE DE DIAGNOSTIC 1, à la page RS-2027 pour vérifier le fonctionnement du SRS à l’aide du témoin d’avertissement ‘‘AIR BAG’’ en mode Utilisateur.

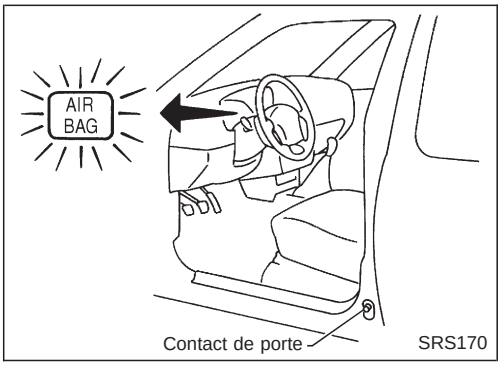

PROCEDURE DE DIAGNOSTIC 5 (⊗ sans CONSULT)

Vérification finale après réparation du SRS à l’aide du témoin d’avertissement ‘‘AIR BAG’’ — Mode de Diagnostic et mode Utilisateur

1. Après avoir réparé le SRS, brancher les deux câbles de la batterie.
2. Ouvrir la portière du conducteur.
3. Mettre le contact d’allumage de la position ‘‘OFF’’ sur ‘‘ON’’.
4. Le témoin d’avertissement ‘‘AIR BAG’’ fonctionne en mode de Diagnostic comme suit :

Simpo PDF Merge and Split Unregistered Version - http://www.simpopdf.com

Autodiagnostic (suite)

N°	Séquence de clignotement du témoin d'avertissement ''AIR BAG'' — Mode de Diagnostic —	Conditions du SRS
1	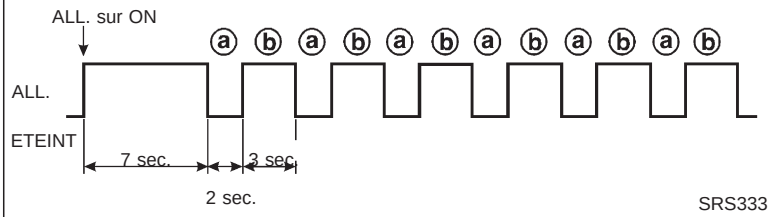 SRS333 ⓪a à ⓪b sont répétés.	Aucun défaut n'est détecté ou la réparation est achevée. Aucune démarche supplémentaire n'est nécessaire.
2	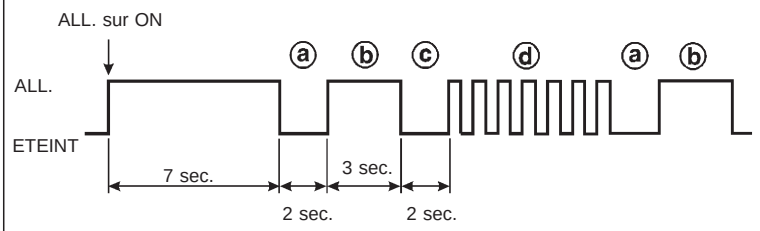 SRS341 ⓪a à ⓪d sont répétés. ⓪b — Signal de coussin gonflable côté conducteur et passager (permet d'identifier les défauts de fonctionnement du coussin gonflable côté conducteur et/ou passager). ⓪d — Indique le composant défectueux. Le nombre de clignotements varie selon le composant défectueux (0,5 sec. ALLUME et 0,5 sec. ETEINT. L'état ETEINT représente un clignotement).	Le système est défectueux et a besoin d'être réparé.

NOTE :
Si le boîtier de capteurs de diagnostic est remplacé par un boîtier neuf, le témoin d'avertissement ''AIR BAG'' fonctionnera en mode Utilisateur. La vérification du fonctionnement du témoin d'avertissement ''AIR BAG'' en mode de Diagnostic n'est pas nécessaire. Passer à l'étape 6.

5. Si le témoin d'avertissement ''AIR BAG'' fonctionne conformément à la séquence n° 1 du tableau précédent, couper le contact d'allumage pour passer du mode de Diagnostic en mode Utilisateur et pour effacer le défaut de la mémoire. Puis passer à l'étape 6.

   Si le témoin ''AIR BAG'' fonctionne de la façon indiquée au point 2 du tableau ci-avant, cela signifie que la pièce défectueuse n'est pas complètement réparée ou qu'un autre défaut est détecté. Voir à PROCEDURE DE DIAGNOSTIC 3, à la page RS-2031, et réparer complètement la pièce défectueuse.
6. Tourner le contact d'allumage sur ''ON''. Le témoin d'avertissement ''AIR BAG'' fonctionne en mode Utilisateur. Comparer le fonctionnement du témoin d'avertissement ''AIR BAG'' au tableau ci-dessous.

NOTE :
S'il est nécessaire de passer du mode de Diagnostic au mode Utilisateur quand un défaut est détecté, tourner le contact d'allumage de ''OFF'' sur ''ON''. Puis appuyer sur le contact de porte côté conducteur au moins 5 fois en 7 secondes après avoir mis le contact d'allumage sur ''ON''. Le SRS est maintenant en mode Utilisateur.

SimpoPDF Merge and Split Unregistered Version - http://www.simpopdf.com

Autodiagnostic (suite)

Fonctionnement du témoin d'avertissement ''AIR BAG'' — Mode utilisateur —	Conditions du SRS	Elément de référence
	Aucun défaut n'est détecté. Aucune démarche supplémentaire n'est nécessaire.	—
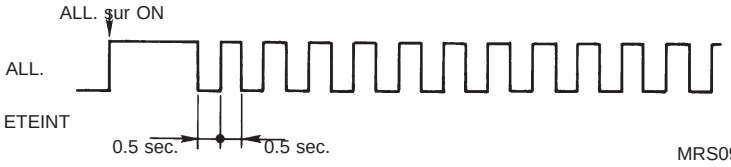	Le système est défectueux et a besoin d'être réparé comme indiqué.	Aller à la PROCEDURE DE DIAGNOSTIC 2 ou 3 (RS-2028 ou 2031).
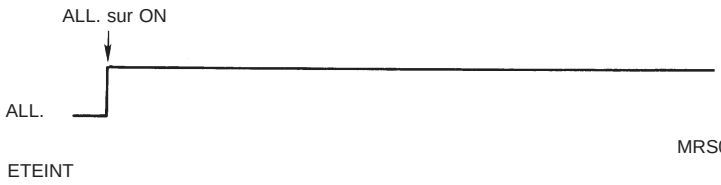	Le coussin gonflable est déployé.	Aller à DIAGNOSTIC DE COLLISION (RS-2044)
	Le fusible de coussin gonflable, le boîtier de capteurs de diagnostic ou le faisceau est défectueux et doit être réparé.	Aller à PROCEDURE DE DIAGNOSTIC 9 (RS-2042)
	Un des défauts suivants s'est manifesté et doit être réparé. ● Le fusible des instruments combinés est grillé. ● Le circuit du témoin d'avertissement ''AIR BAG'' est ouvert ou en court-circuit. ● Le boîtier de capteurs de diagnostic est défectueux.	Aller à la PROCEDURE DE DIAGNOSTIC 10 (RS-2042).

Simpo PDF Merge and Split Unregistered Version - http://www.simpopdf.com

Autodiagnostic (suite)

PROCEDURE DE DIAGNOSTIC 6 (suite de la PROCEDURE DE DIAGNOSTIC 2)

Inspection d'un défaut enregistré du SRS

Est-ce le premier entretien du SRS ? — Non → Le message ''AUTO-DIAG [PASSE]'' (entré précédemment) est toujours présent dans la mémoire. Aller à la PROCEDURE DE DIAGNOSTIC 4 (RS-2034).

Oui → **Aller à la PROCEDURE DE DIAGNOSTIC 8 (RS-2038).**

PROCEDURE DE DIAGNOSTIC 7 (suite de la PROCEDURE DE DIAGNOSTIC 3) (sans CONSULT)

Inspection d'un défaut enregistré du SRS

Est-ce le premier entretien du SRS ? — Non → Les résultats de diagnostic (précédemment mémorisés) n'ont pas été effacés, même après que le système a été réparé. Aller à la PROCEDURE DE DIAGNOSTIC 5, étape 5 (RS-2035).

Oui → **Aller à la PROCEDURE DE DIAGNOSTIC 8 (RS-2038).** L'inspection ne peut pas être poursuivie sans CONSULT.

PROCEDURE DE DIAGNOSTIC 8 (avec CONSULT)

Inspection d'un défaut intermitent du SRS à l'aide de CONSULT — Mode de diagnostic

1. Mettre le contact d'allumage sur ''OFF''.
2. Brancher ''CONSULT'' au connecteur de liaison des données.

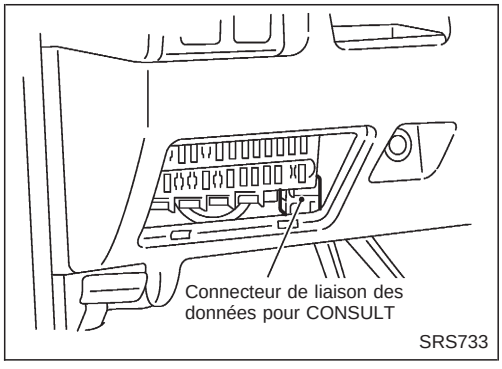

3. Mettre le contact d'allumage sur ''ON''.
4. Appuyer sur ''DEPART''.

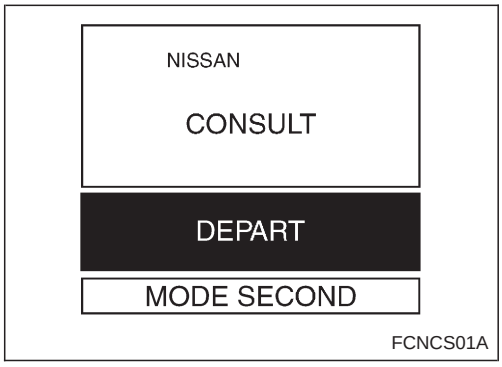

Simpo PDF Merge and Split Unregistered Version - http://www.simpopdf.com

Autodiagnostic (suite)

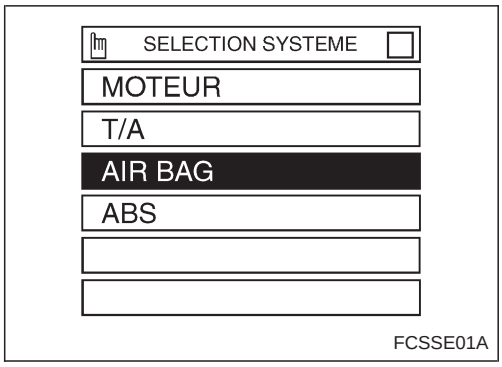

5. Appuyer sur ‘‘AIR BAG’’.

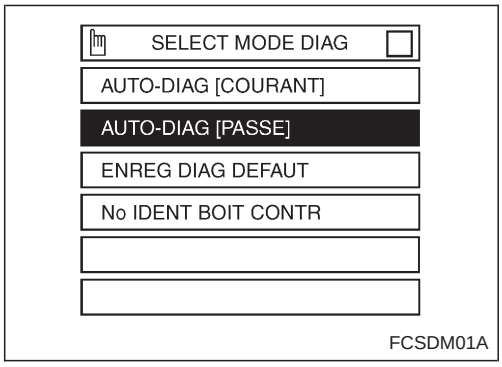

6. Appuyer sur ‘‘AUTO-DIAG [PASSE]’’.

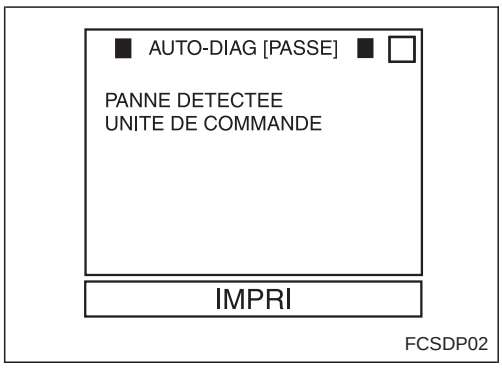

7. Si les codes de diagnostic s’affichent dans ‘‘AUTO-DIAG [PASSE]’’, passer à l’étape 10.

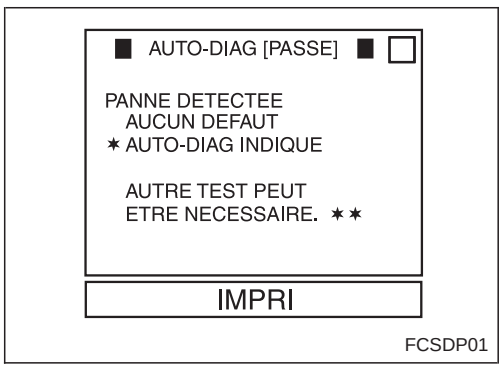

Si aucun défaut de fonctionnement n’est détecté en ‘‘AUTO-DIAG [PASSE]’’, appuyer sur ‘‘RETOUR’’ et revenir à ‘‘SELECT MODE DIAG’’.

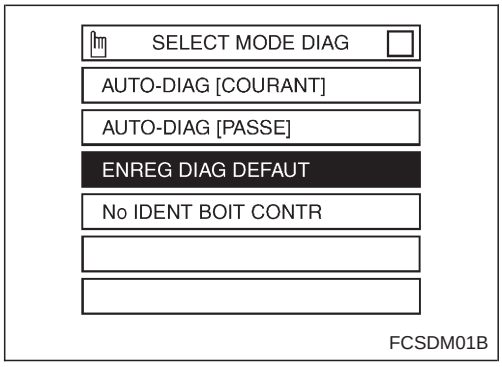

8. Appuyer sur ‘‘ENREG DIAG DEFAUT’’.

NOTE :
La fonction ‘‘ENREGIST DIAG DEFAUT’’ permet d’afficher sur l’écran CONSULT les résultats de diagnostic précédemment effacés lors de la remise à zéro du système.

Simpo PDF Merge and Split Unregistered Version - http://www.simpopdf.com

Autodiagnostic (suite)

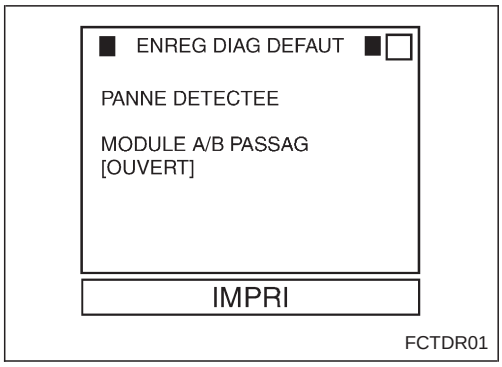

9. Le code de diagnostic est affiché dans ‘‘ENREG DIAG DEFAUT’’.
10. Appuyer sur ‘‘IMPRI’’.
11. Comparer les codes de diagnostic avec le TABLEAU DES CODES DE DIAGNOSTIC DE DEFAUT DE FONCTIONNEMENT INTERMITTENT, RS-2041.
12. Appuyer sur la touche ‘‘RETOUR’’ du CONSULT jusqu’à ce que l’écran ‘‘SELECTION SYSTEM’’ apparaisse, puis éteindre le CONSULT.
13. Couper le contact, puis débrancher le CONSULT ainsi que les deux câbles de la batterie.
14. Réparer le système comme indiqué dans ‘‘Ordre de réparation’’ dans le TABLEAU DES CODES DE DIAGNOSTIC POUR PROBLEMES INTERMITTENTS, qui correspond au résultat d’autodiagnostic. Pour la procédure de remplacement des pièces, se reporter à RS-2007.
15. Aller à PROCEDURE DE DIAGNOSTIC 4, RS-2034.

Simpo PDF Merge and Split Unregistered Version - http://www.simpopdf.com

Autodiagnostic (suite)

TABLEAU DES CODES DE DIAGNOSTIC DE DEFAUT DE FONCTIONNEMENT INTERMITTENT (''AUTO-DIAG [PASSE]'' ou ''ENREGIST DIAG DEFAUT'')

Elément de diagnostic	Explication		Ordre de réparation
AUCUN DEFAUT AUTO-DIAG INDIQUE.	Lorsque le défaut de fonctionnement est indiqué par le témoin d'avertissement ''AIR BAG'' en mode Utilisateur.	● Tension de la batterie basse (moins de 9V)	● Voir à PROCEDURE DE DIAGNOSTIC 4 (RS-2034) après avoir chargé la batterie.
	● Aucun défaut n'est détecté.		● Aller à la PROCEDURE DE DIAGNOSTIC 4 (RS-2034).
MODULE AIR BAG [OUVERT]	● Le circuit du module de coussin gonflable est ouvert (y compris le câble spiralé).		1. Inspecter visuellement la connexion du faisceau de câblage. 2. Remplacer le faisceau s'il est visiblement endommagé. 3. Si les résultats de la vérification du faisceau sont bons, remplacé le câble spiralé, le boîtier de capteurs de diagnostic et le module de coussin gonflable du coté conducteur (avant de le déposer, il doit être déployé)
MODULE AIR BAG [COURT TENS BATT]	● Le circuit du module de coussin gonflable du coté conducteur est court-circuité à un circuit d'alimentation (y compris le câble spiralé).		
MODULE AIR BAG [COURT-CIRC MASSE]	● Le circuit du module de coussin gonflable du coté conducteur est court-circuit à la masse (y compris le câble spiralé).		
MODULE AIR BAG [COURT-CIRC]	● Les circuits du module de coussin gonflable côté conducteur sont court-circuités les uns avec les autres.		
MODULE A/B PASSAG [COURT TENS BATT]	● Le circuit du module de coussin gonflable côté passager avant est court-circuité à un circuit d'alimentation électrique.		1. Inspecter visuellement la connexion du faisceau de câblage. 2. Remplacer le faisceau s'il est visiblement endommagé. 3. Si les résultats de la vérification sont bons, remplacer le boîtier de capteurs de diagnostic et le module de coussin gonflable du coté passager (avant de le déposer, il doit être déployé)
MODULE A/B PASSAG [OUVERT]	● Le circuit du module de coussin gonflable côté passager avant est ouvert.		
MODULE A/B PASSAG [COURT-CIRC MASSE]	● Le circuit du module de coussin gonflable côté passager avant est court-circuité à la masse.		
MODULE A/B PASSAG [COURT-CIRC]	● Les circuits du module de coussin gonflable avant côté passager sont court-circuités les uns avec les autres.		
UNITE DE COMMANDE	● Le boîtier de capteurs de diagnostic est défectueux.		1. Inspecter visuellement la connexion du faisceau de câblage. 2. Remplacer le faisceau s'il est visiblement endommagé. 3. Si la connexion du faisceau est normale, remplacer le boîtier de capteurs de diagnostic.

* Suivre les procédures dans l'ordre numérique lors de la réparation des pièces défectueuses, puis procéder au contrôle final du système.

Simpo PDF Merge and Split Unregistered Version - http://www.simpopdf.com

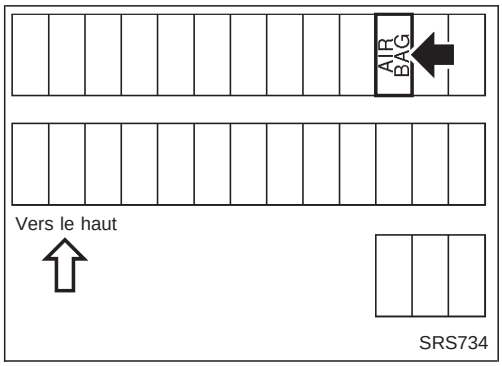

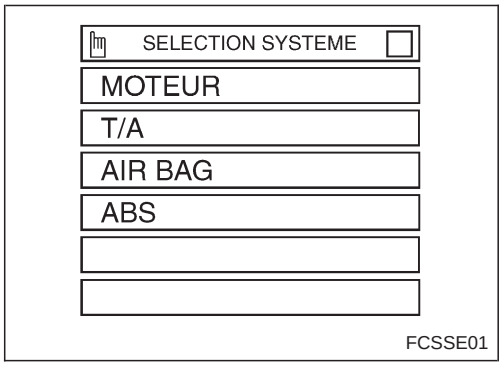

Diagnostics des défauts du témoin d'avertissement ''AIR BAG''

PROCEDURE DE DIAGNOSTIC 9

SYMPTOME : le témoin d'avertissement ''AIR BAG'' ne s'éteint pas.

Le module de coussin gonflable est-il déployé ?
- Oui → Remplacer le module de coussin gonflable et le boîtier de capteurs de diagnostic. Se reporter à DIAGNOSTIC DE COLLISION, (RS-2044).
- Non ↓

Le fusible (''AIR BAG'') du SRS fonctionne-t-il correctement ?
- Non → Remplacer le fusible et mettre le contact d'allumage sur ON. Si le fusible ''AIR BAG'' du SRS est à nouveau grillé, réparer le faisceau connexe.
- Oui ↓

Brancher CONSULT et appuyer sur ''DEPART''.
● Est-ce que ''AIRBAG'' s'affiche sur l'écran CONSULT ?
- Non → Remplacer le boîtier de capteurs de diagnostic.
- Oui ↓

Est-ce que la connexion de faisceau entre le témoin et le boîtier de capteurs de diagnostic est bonne ?
- Non → Brancher le connecteur du témoin et du boîtier de capteurs de diagnostic correctement. Si le témoin ne s'éteint toujours pas, remplacer le faisceau.
- Oui ↓

Remplacer le boîtier de capteurs de diagnostic.

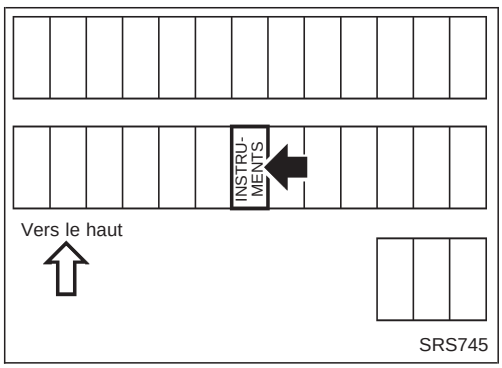

PROCEDURE DE DIAGNOSTIC 10

SYMPTOME : le témoin d'avertissement ''AIR BAG'' ne s'allume pas.

Le fusible des instruments combinés fonctionne-t-il correctement ?
- Non → Remplacer le fusible et mettre le contact d'allumage sur ON. Si le fusible des instruments combinés, réparer le faisceau correspondant.
- Oui ↓

Est-ce que la DEL du témoin d'avertissement fonctionne correctement ?
- Non → Remplacer la DEL du témoin d'avertissement.
- Oui ↓

1. Débrancher le connecteur du boîtier de capteurs de diagnostic.
2. Mettre le contact d'allumage sur ON.

● Le témoin d'avertissement s'allume-t-il ?
- Non → Brancher le connecteur du témoin d'avertissement et du boîtier de capteurs de diagnostic correctement. Si le témoin ne s'allume toujours pas, remplacer le faisceau.
- Oui ↓

Remplacer le boîtier de capteurs de diagnostic.

Simpo PDF Merge and Split Unregistered Version - http://www.simpopdf.com

Diagnostics des défauts du témoin d'avertissement ''AIR BAG'' (suite)

PROCEDURE DE DIAGNOSTIC 11 (Modèles pour l'Europe et munis d'un système de multi-télécommande)

SYMPTOME : le SRS ne passe pas en mode de Diagnostic.

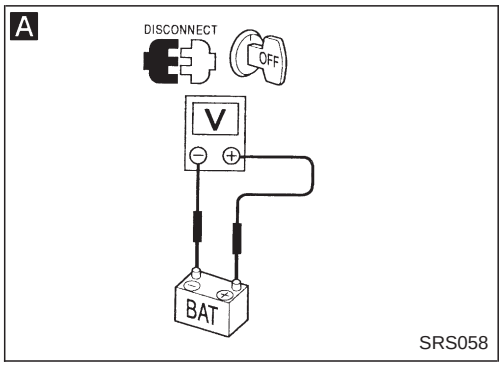

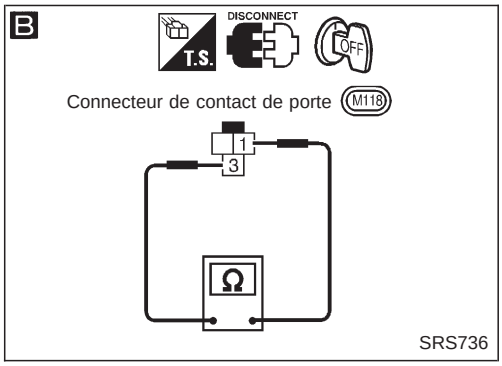

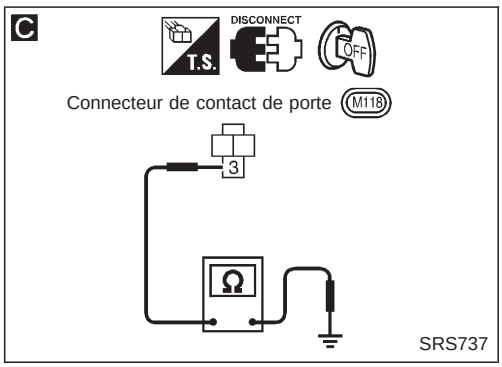

A

Débrancher les deux câbles de la batterie et contrôler la tension de cette dernière à l'aide du multimètre.
- Est-ce que la tension de la batterie est de plus de 9V ?

Non → Charger la batterie.

Oui ↓

B

Déposer le contact de porte côté conducteur et vérifier la continuité entre les bornes ⑴ et ⑶ du connecteur de contact de porte côté conducteur dans les conditions suivantes.

Condition	Il y a continuité
Le contact de porte est enfoncé (la porte est fermée).	NON
Le contact de porte est relâché (la porte est ouverte).	OUI

Non → Remplacer le contact de porte côté conducteur.

Oui ↓

C

Vérifier la continuité du faisceau entre la borne ⑶ du connecteur du contact de porte côté conducteur et la masse de carrosserie.
- Y a-t-il continuité ?

Non → Remplacer ou réparer le faisceau.

Oui ↓

Remplacer le boîtier de capteurs de diagnostic.

↓

Aller à la PROCEDURE DE DIAGNOSTIC 1 (RS-2027).

Simpo PDF Merge and Split Unregistered Version - http://www.simpopdf.com

COLLISION FRONTALE

Procéder de la façon suivante pour réparer le SRS en cas de collision frontale.

Lorsque le SRS est activé lors d'une collision :

⑪ Remplacer le boîtier de capteurs de diagnostic.
⑫ Déposer les modules de coussins gonflables.
⑬ Contrôler les composants du SRS à l'aide du tableau ci-dessous :
- Remplacer les composants du SRS qui montrent des signes visibles de dommages (bosses, fissures, déformation).

⑭ Monter des modules de coussins gonflables neufs.
⑮ Effectuer un autodiagnostic à l'aide de CONSULT et du témoin d'avertissement ''AIR BAG''. Se reporter à ''Autodiagnostic'' pour plus de détails (RS-2027). S'assurer que l'ensemble du SRS fonctionne correctement.

Lorsque le SRS n'est pas activé lors d'une collision :

⑪ Contrôler les composants du SRS à l'aide du tableau ci-dessous :
- Remplacer les composants du SRS qui montrent des signes visibles de dommages (bosses, fissures, déformation).

⑫ Effectuer un autodiagnostic à l'aide de CONSULT et du témoin d'avertissement ''AIR BAG''. Se reporter à ''Autodiagnostic'' pour plus de détails (RS-2027). S'assurer que l'ensemble du SRS fonctionne correctement.

Inspection du SRS

Pièce	Le SRS est activé.	Le SRS n'est PAS activé.
Module de coussin gonflable (côté conducteur et passager)	REMPLACER Reposer le module de coussin gonflable en utilisant des boulons neufs.	1. Déposer le module de coussin gonflable. Vérifier que le cache du faisceau et les connecteurs ne sont pas endommagés, les bornes déformées et le faisceau coincé. 2-1. Reposer le module de coussin gonflable côté conducteur sur le volant et vérifier s'il est correctement monté et aligné sur le volant. 2-2. Reposer le module de coussin gonflable côté passager sur le tableau de bord et vérifier s'il est correctement monté sur le tableau de bord. 3. Si l'on ne constate aucun dommage, reposer le composant en utilisant des boulons neufs enduits d'agent d'adhésivité. 4. En cas de dommage — REMPLACER. Le coussin gonflable doit être déployé avant d'être mis au rebut.
Boîtier de capteurs de diagnostic	REMPLACER Reposer le boîtier de capteurs de diagnostic en utilisant des boulons neufs.	1. Vérifier que le boîtier et son support ne sont pas bosselés, fissurés ou déformés. 2. Vérifier que les connecteurs ne sont pas endommagés et les bornes déformées. 3. Si aucun dommage n'est trouvé, reposer l'ensemble avec des boulons neufs. 4. En cas de dommage — REMPLACER. Reposer le boîtier de capteurs de diagnostic en utilisant des boulons neufs enduits d'agent d'adhésivité.
Volant	1. Vérifier visuellement si le volant de direction n'est pas déformé. 2. Vérifier que le faisceau (intégré au volant) et les connecteurs ne sont pas endommagés et les bornes déformées. 3. Monter le module de coussin gonflable pour en contrôler l'alignement avec le volant. 4. Vérifier que le volant ne présente pas un jeu excessif. 5. Si l'on ne constate aucun dommage, reposer le volant. 6. En cas de dommage — REMPLACER.	
Câble spiralé	1. Contrôler visuellement que le câble spiralé et la commande combinée ne sont pas endommagés. 2. Vérifier que les connecteurs, le câble plat et la bande de protection sont en bon état. 3. Vérifier que le volant est exempt de tout bruit, point de force et qu'il tourne librement. 4. Si l'on ne constate aucun dommage, reposer le câble spiralé. 5. En cas de dommage — REMPLACER.	
Faisceau et connecteurs	1. Vérifier si les connecteurs sont bien branchés, s'ils ne sont pas endommagés et si les bornes ne sont pas déformées. 2. Vérifier que le faisceau ne coince pas et qu'il n'est pas effiloché, coupé ou déformé. 3. Si l'on ne constate aucun dommage, reposer le faisceau et les connecteurs. 4. En cas de dommage — REMPLACER la partie du faisceau endommagée. Ne pas essayer de réparer, épisser ou modifier le faisceau du SRS.	
Tableau de bord	Se reporter au tableau de la page suivante.	

Simpo PDF Merge and Split Unregistered Version - http://www.simpopdf.com

Pièce	Le SRS est activé	Le SRS n'est PAS activé.
Tableau de bord	1. Lors du déploiement du coussin gonflable passager, vérifier que les composants suivants ne sont pas pliés, déformés ou fissurés. ● Orifice du module de coussin gonflable passager	
	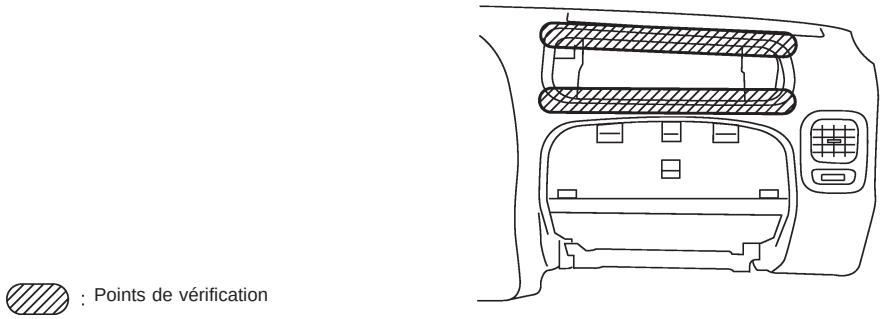 : Points de vérification SRS738	
	● Supports du module de coussin gonflable passager	
	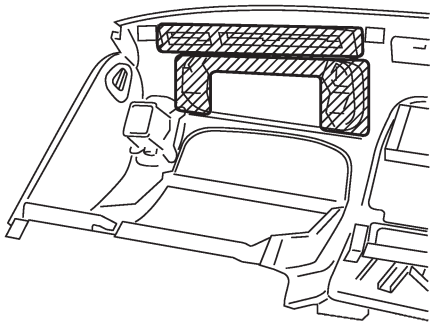 : Points de vérification SRS739	
	● Fixations du tableau de bord	
	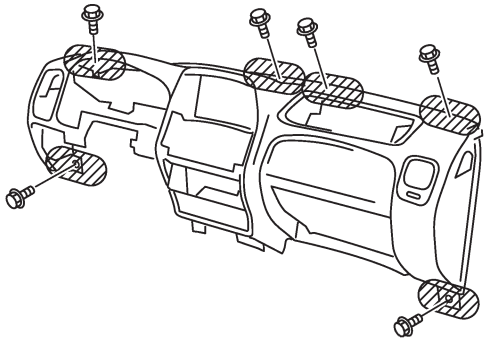 : Points de vérification SRS740	
	2. Si l'on ne constate aucun dommage, reposer le tableau de bord. 3. En cas de dommage, REMPLACER le tableau de bord et les boulons.	

Simpo PDF Merge and Split Unregistered Version - http://www.simpopdf.com

<SUPPLEMENT-II>

DIRECTION

SECTION ST

AVIS DE MODIFICATION :
La colonne de direction a été changée.

TABLE DES MATIERES

VOLANT ET COLONNE DE DIRECTION.....2002
Démontage et remontage.....2002
CARACTERISTIQUES ET VALEURS DE REGLAGE (SDS).....2004
Inspection et Réglage.....2004

Simpo PDF Merge and Split Unregistered Version - http://www.simpopdf.com

Démontage et remontage

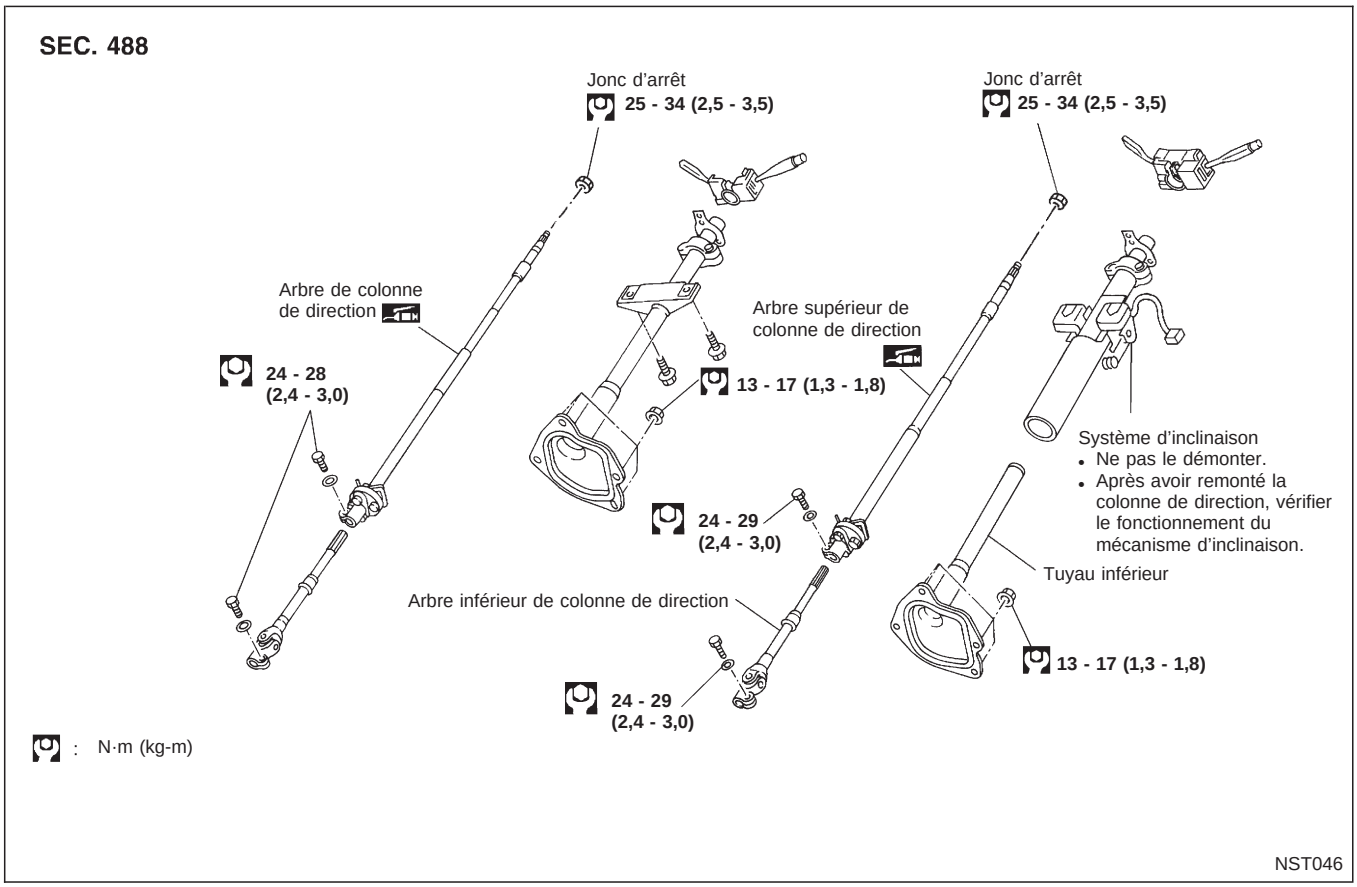

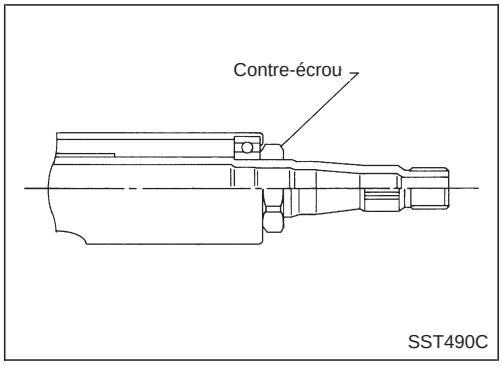

- Lors du montage et du démontage, déverrouiller le verrouillage de direction à l'aide de la clé.
- Déposer la commande combinée.
- Reposer le contre-écrou sur la colonne de direction et serrer l'écrou.

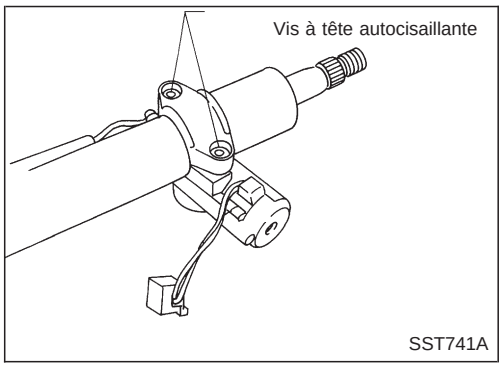

- Verrouillage de direction

a. Briser les vis à tête autocisaillante à l'aide d'une perceuse ou d'un outil approprié quelconque.

Simpo PDF Merge and Split Unregistered Version - http://www.simpopdf.com

Démontage et remontage (suite)

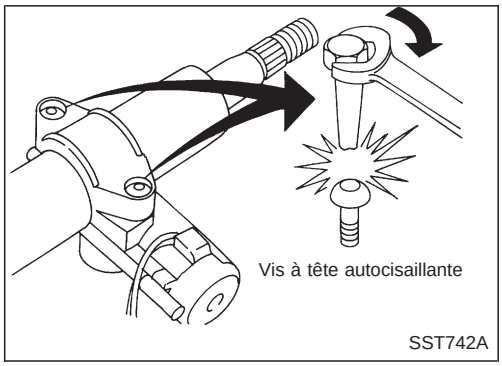

b. Reposer des vis à tête autocisaillante, puis les serrer jusqu'à rupture de la tête.

Simpo PDF Merge and Split Unregistered Version - http://www.simpopdf.com

Inspection et Réglage

COLONNE DE DIRECTION

Unité : mm

Modèle concerné	Conduite à droite avec ABS	Sauf conduite à droite avec ABS
Dimension “L”	851,0 - 852,6	822,5 - 824,1

De type non incliné

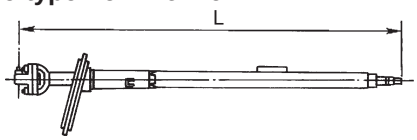

De type incliné

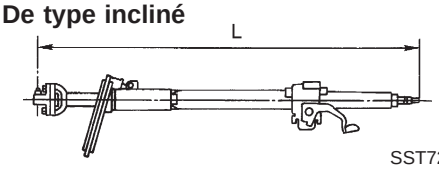

SST723C

Simpo PDF Merge and Split Unregistered Version - http://www.simpopdf.com

<SUPPLEMENT-III>

SYSTEME DE FREINAGE

SECTION BR

AVIS DE MODIFICATION :

- Les schémas de câblage ont été modifiés.

TABLE DES MATIERES

DIAGNOSTICS DES DEFAUTS.....3002
Schéma/Modèles à 3 capteurs de roue 3002
Schéma de câblage - ABS -/Modèles à 3 capteurs de roue, conduite à gauche.....3003
Schéma de câblage - ABS -/Modèles à 3 capteurs de roue, conduite à droite.....3006
Schéma/Modèles à 4 capteurs de roue 3009
Schéma de câblage - ABS -/Modèles à 4 capteurs de roue, conduite à gauche.....3010
Schéma de câblage - ABS -/Modèles à 4 capteurs de roue, conduite à droite.....3013

Simpo PDF Merge and Split Unregistered Version - http://www.simpopdf.com

Schéma/Modèles à 3 capteurs de roue

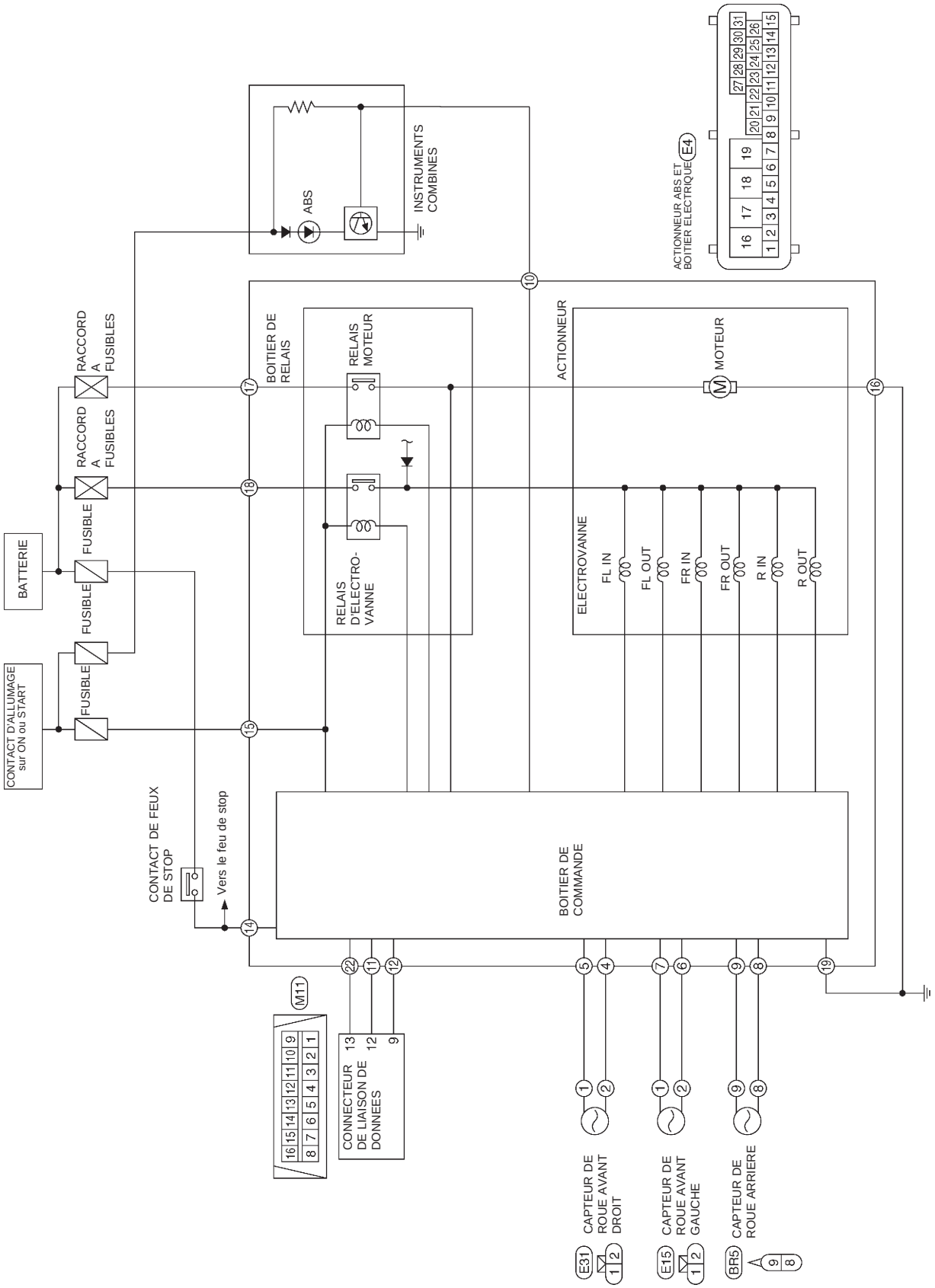

GBR006A

Simpo PDF Merge and Split Unregistered Version - http://www.simpopdf.com

Schéma de câblage — ABS —/Modèles à 3 capteurs de roue, conduite à gauche

BR-ABS-01

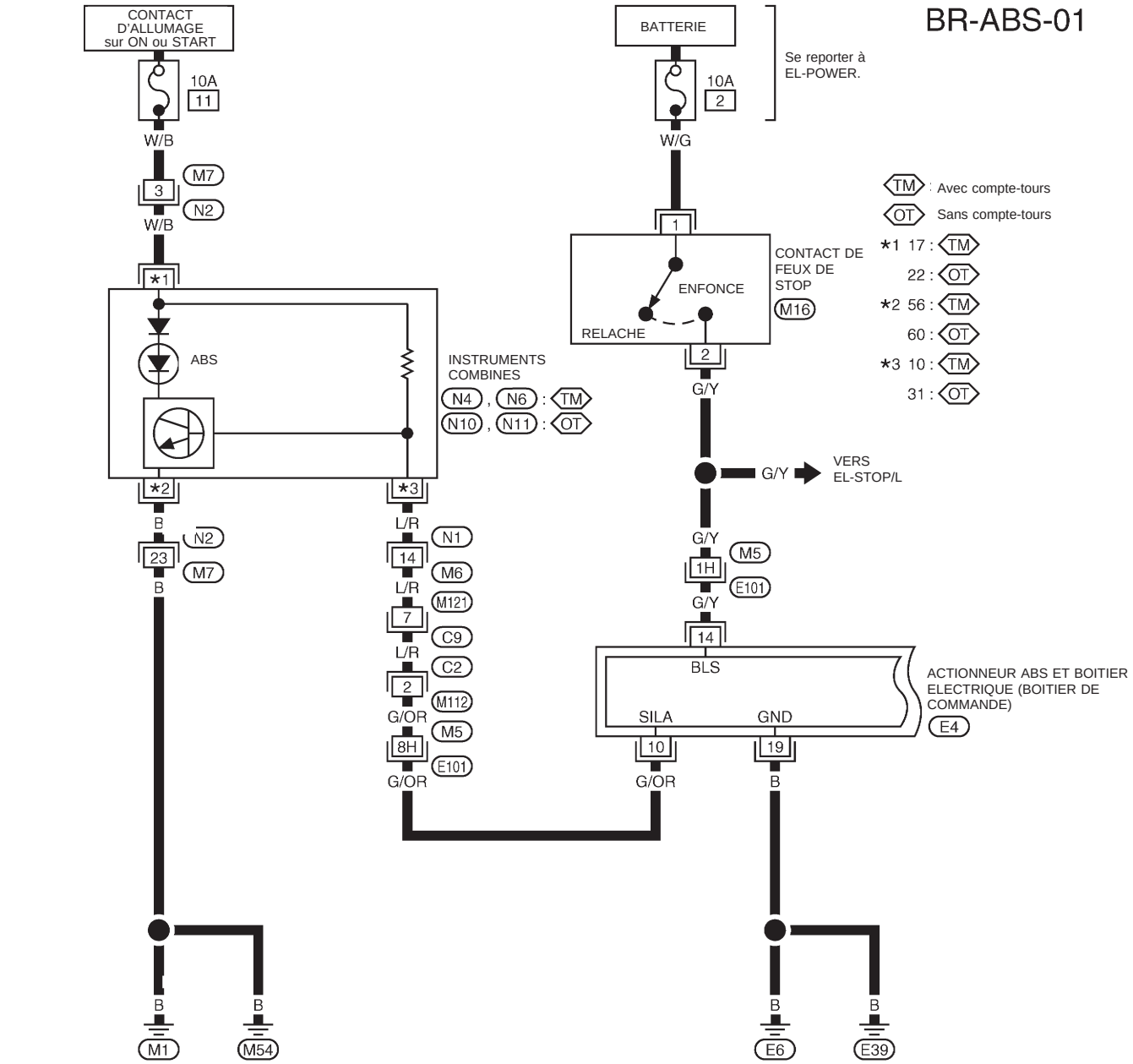

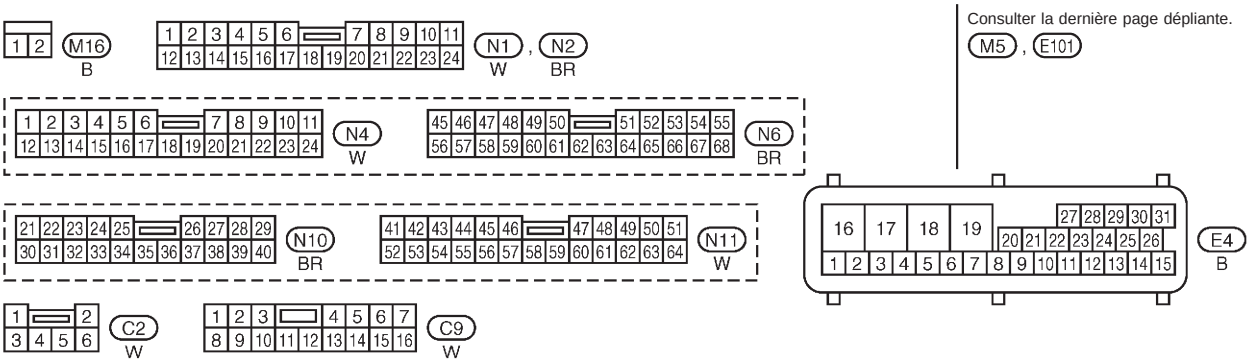

BGR007A

Simpo PDF Merge and Split Unregistered Version - http://www.simpopdf.com

Schéma de câblage — ABS —/Modèles à 3 capteurs de roue, conduite à gauche (Suite)

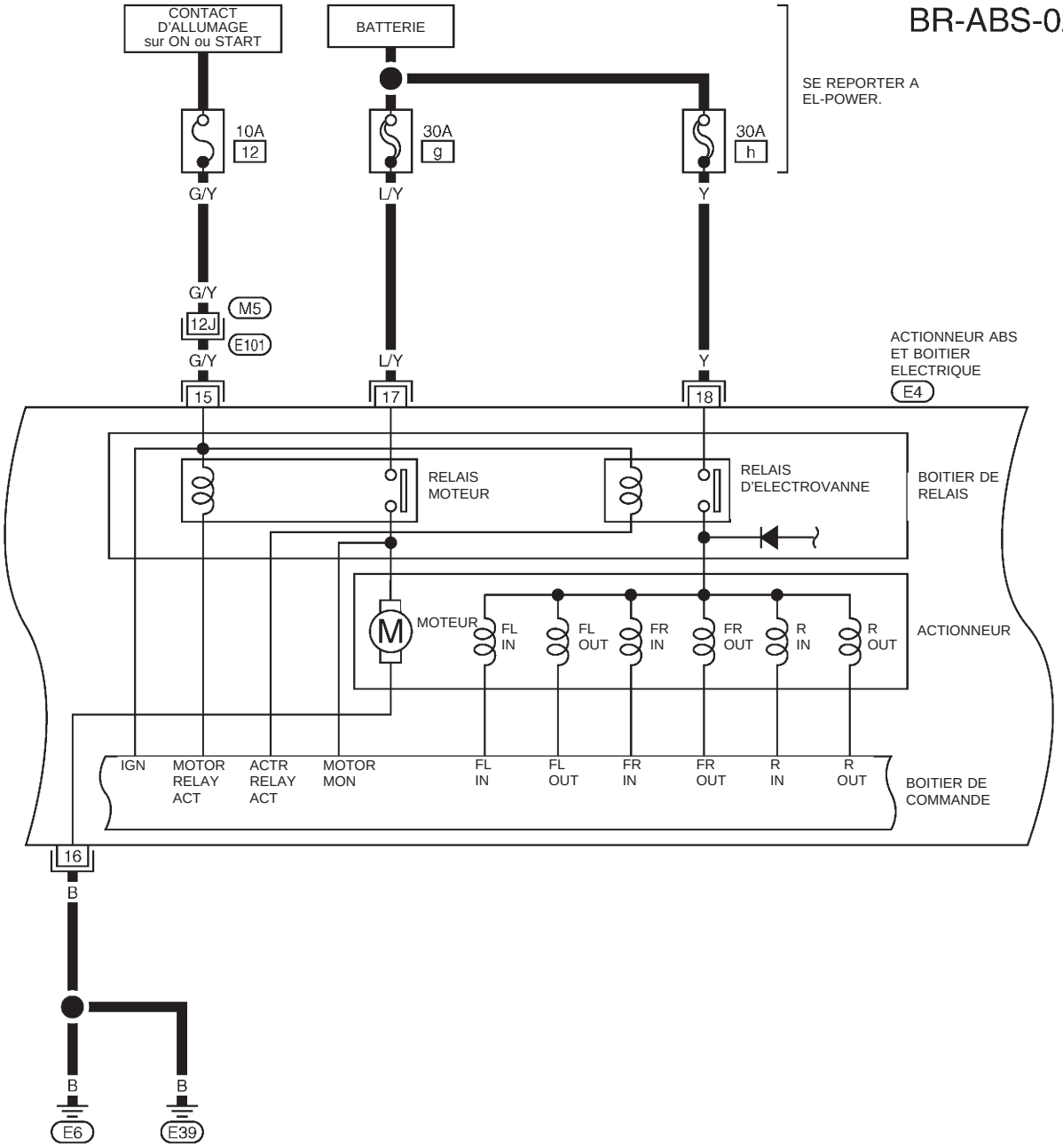

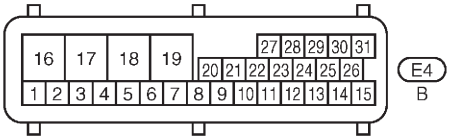

Consulter la dernière page dépliante.
M5 , E101

BGR008A

Simpo PDF Merge and Split Unregistered Version - http://www.simpopdf.com

Schéma de câblage — ABS —/Modèles à 3 capteurs de roue, conduite à gauche (Suite)

BR-ABS-03

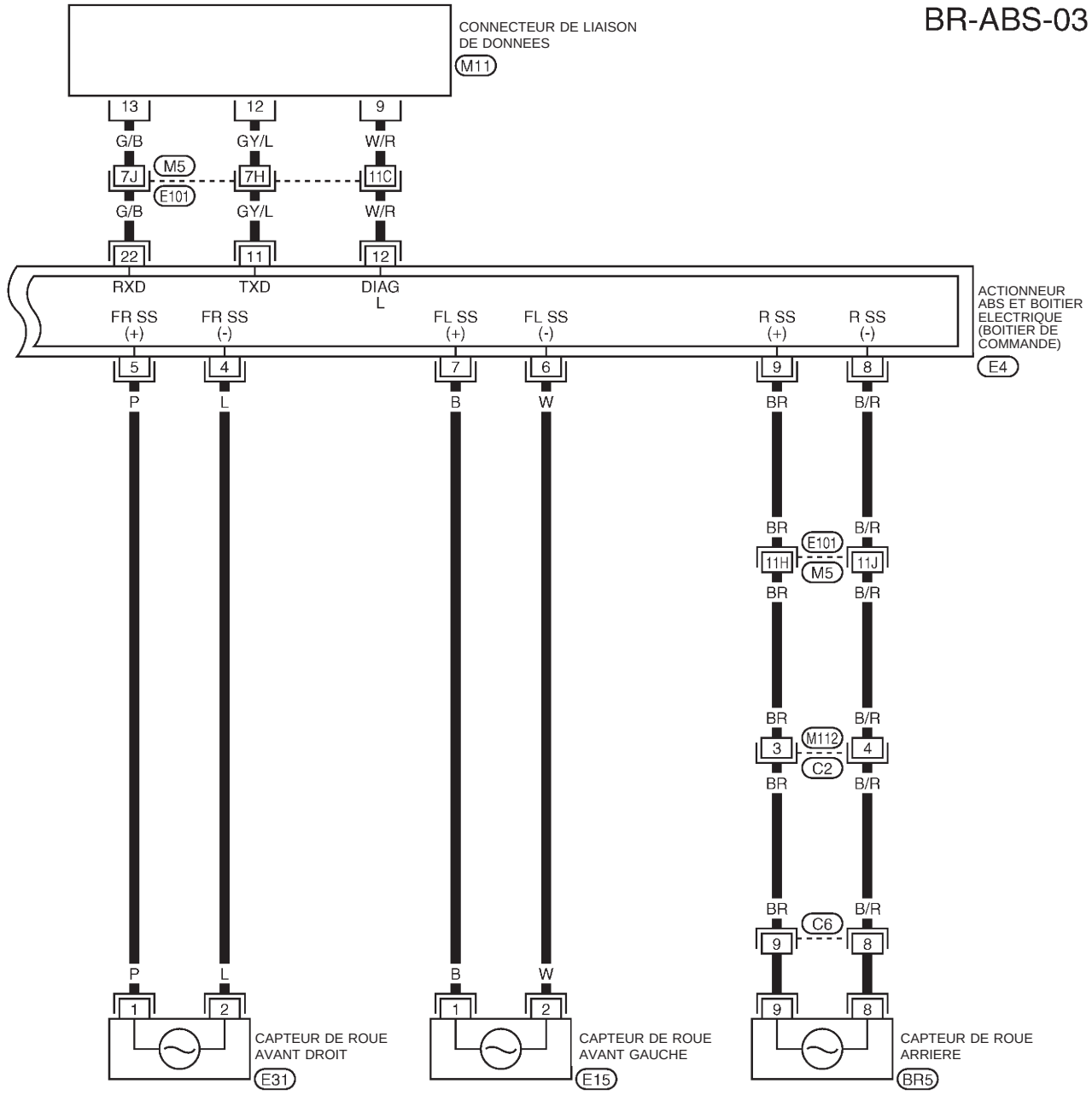

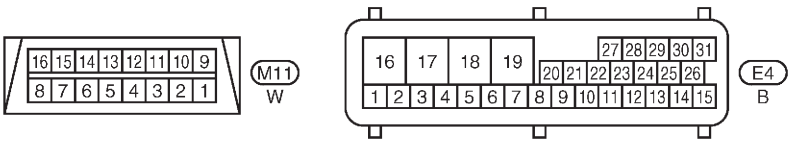

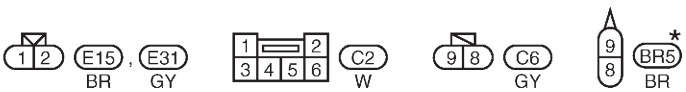

*: Ce connecteur n'apparait pas dans ''DISPOSITION DES FAISCEAUX'', section EL.

Consulter la dernière page dépliante.

M5 , E101

GBR009A

Simpo PDF Merge and Split Unregistered Version - http://www.simpopdf.com

Schéma de câblage — ABS —/Modèles à 3 capteurs de roue, conduite à droite

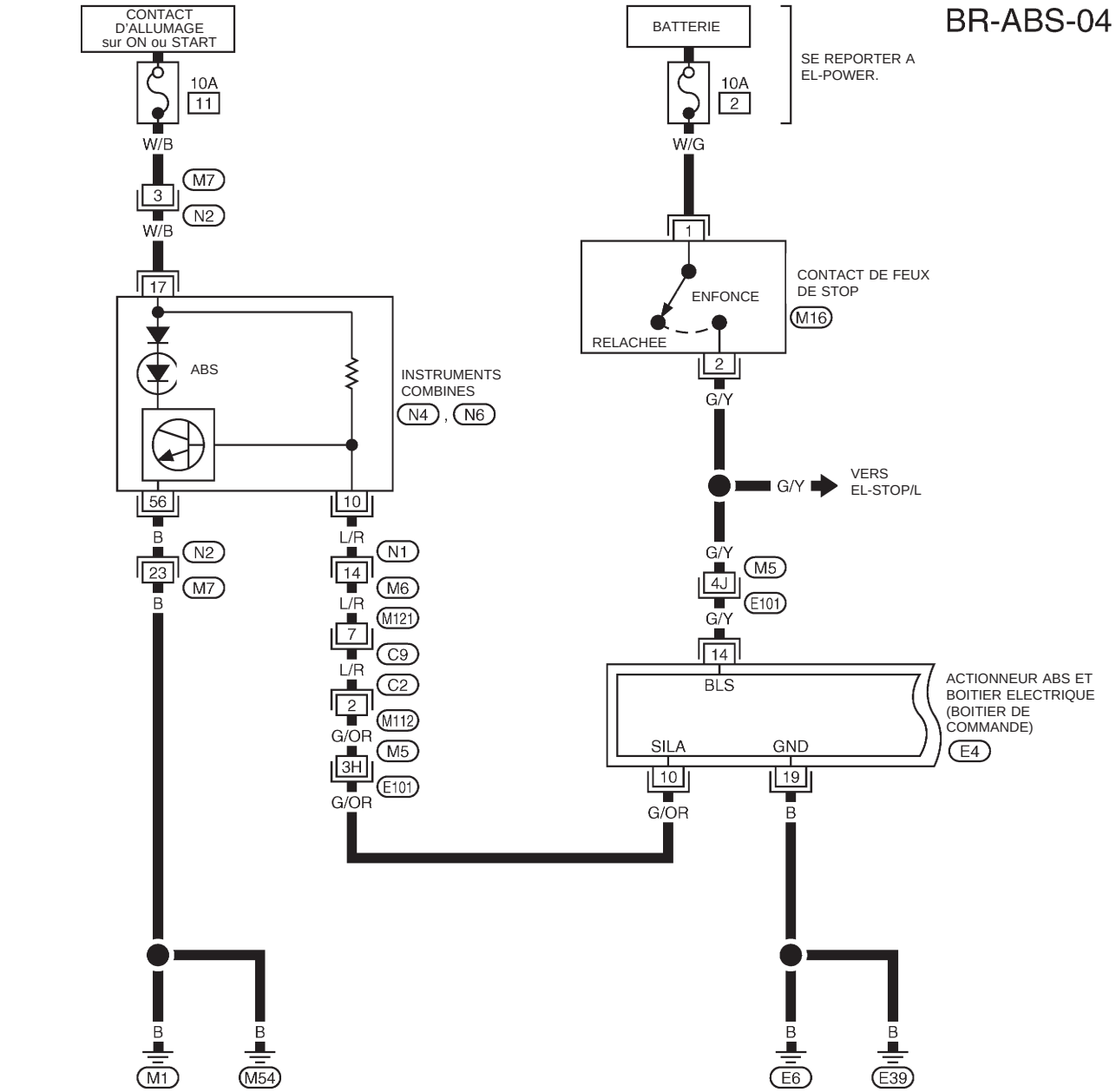

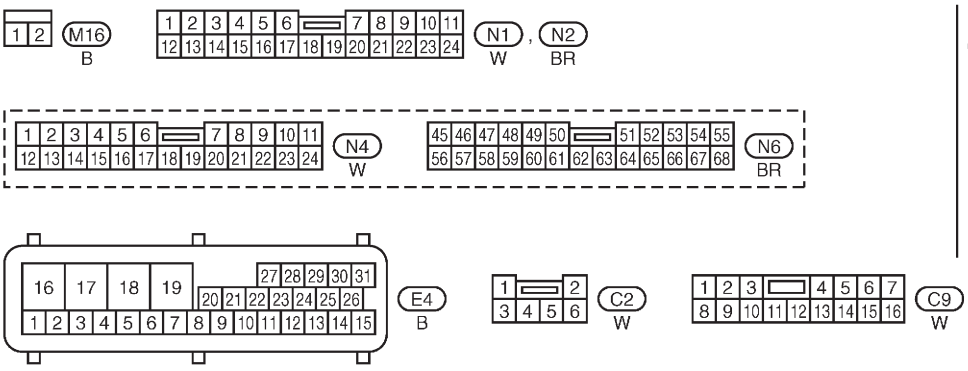

Consulter la dernière page dépliante.
M5 , E101

BGR024A

Simpo PDF Merge and Split Unregistered Version - http://www.simpopdf.com

Schéma de câblage — ABS —/Modèles à 3 capteurs de roue, conduite à droite (Suite)

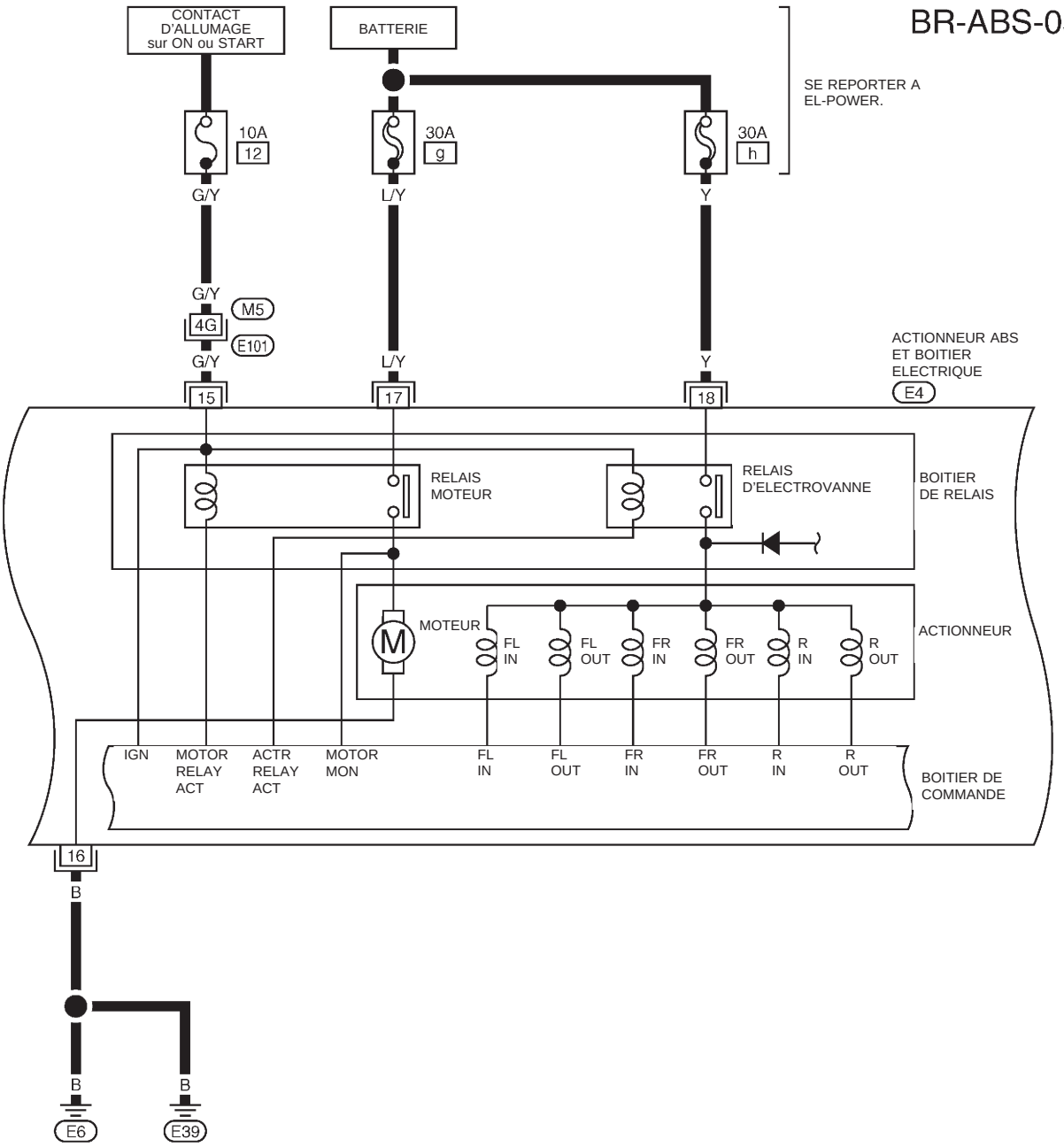

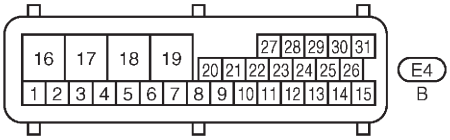

Consulter la dernière page dépliante.
M5 , E101

BGR025A

Simpo PDF Merge and Split Unregistered Version - http://www.simpopdf.com

Schéma de câblage — ABS —/Modèles à 3 capteurs de roue, conduite à droite (Suite)

BR-ABS-06

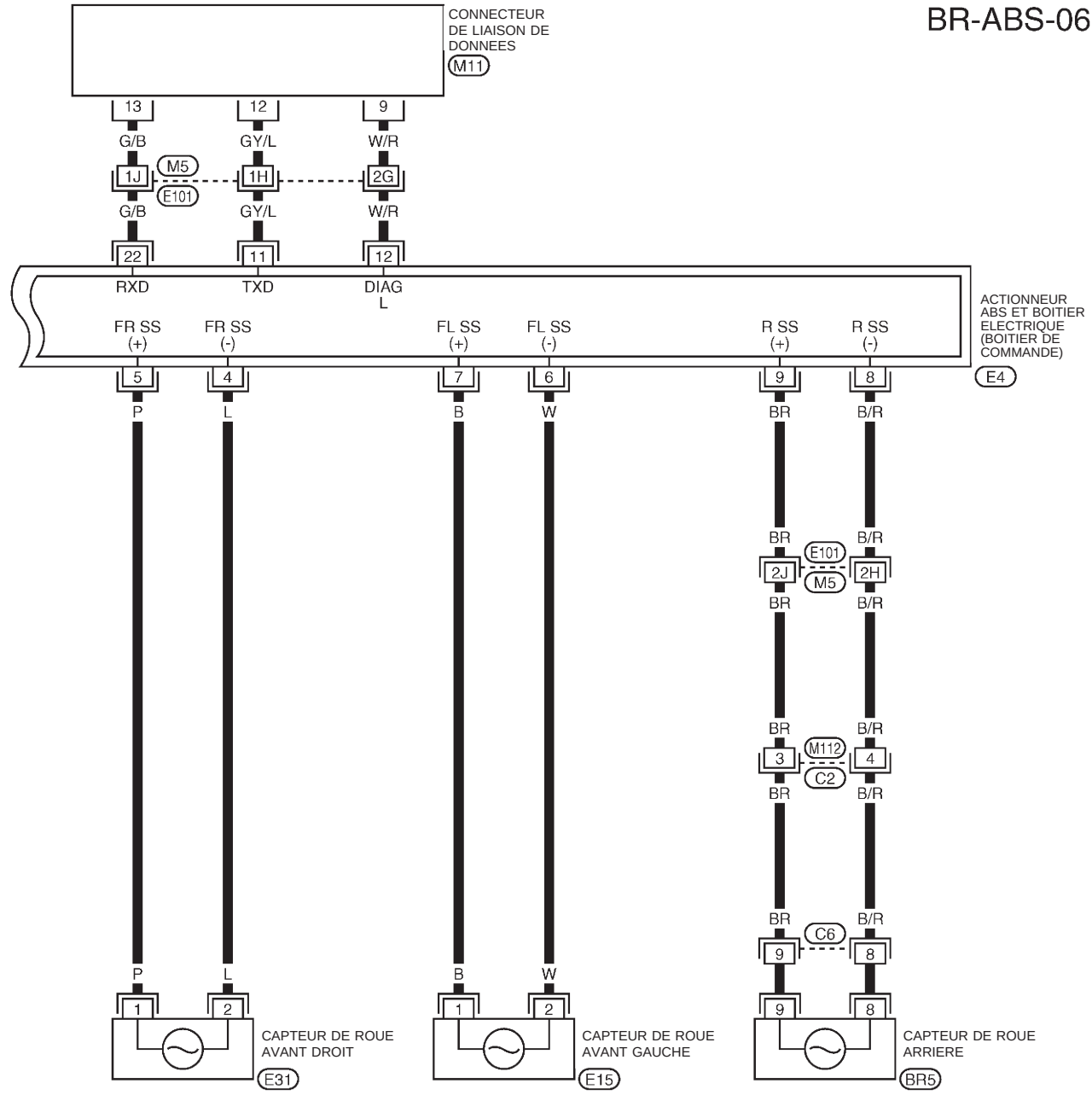

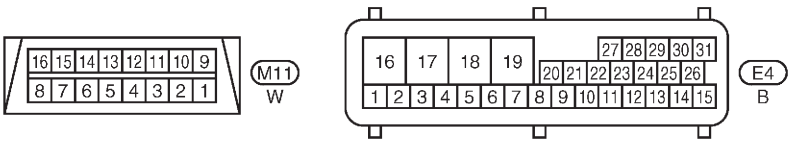

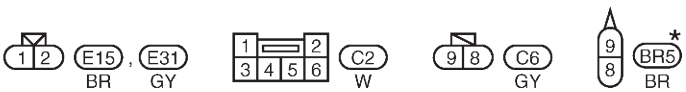

*: Ce connector n'apparait pas dans "DISPOSITION DES FAISCEAUX", section EL.

Consulter la dernière page dépliante.

M5 , E101

GBR026A

Simpo PDF Merge and Split Unregistered Version - http://www.simpopdf.com

Schéma/Modèles à 4 capteurs de roue

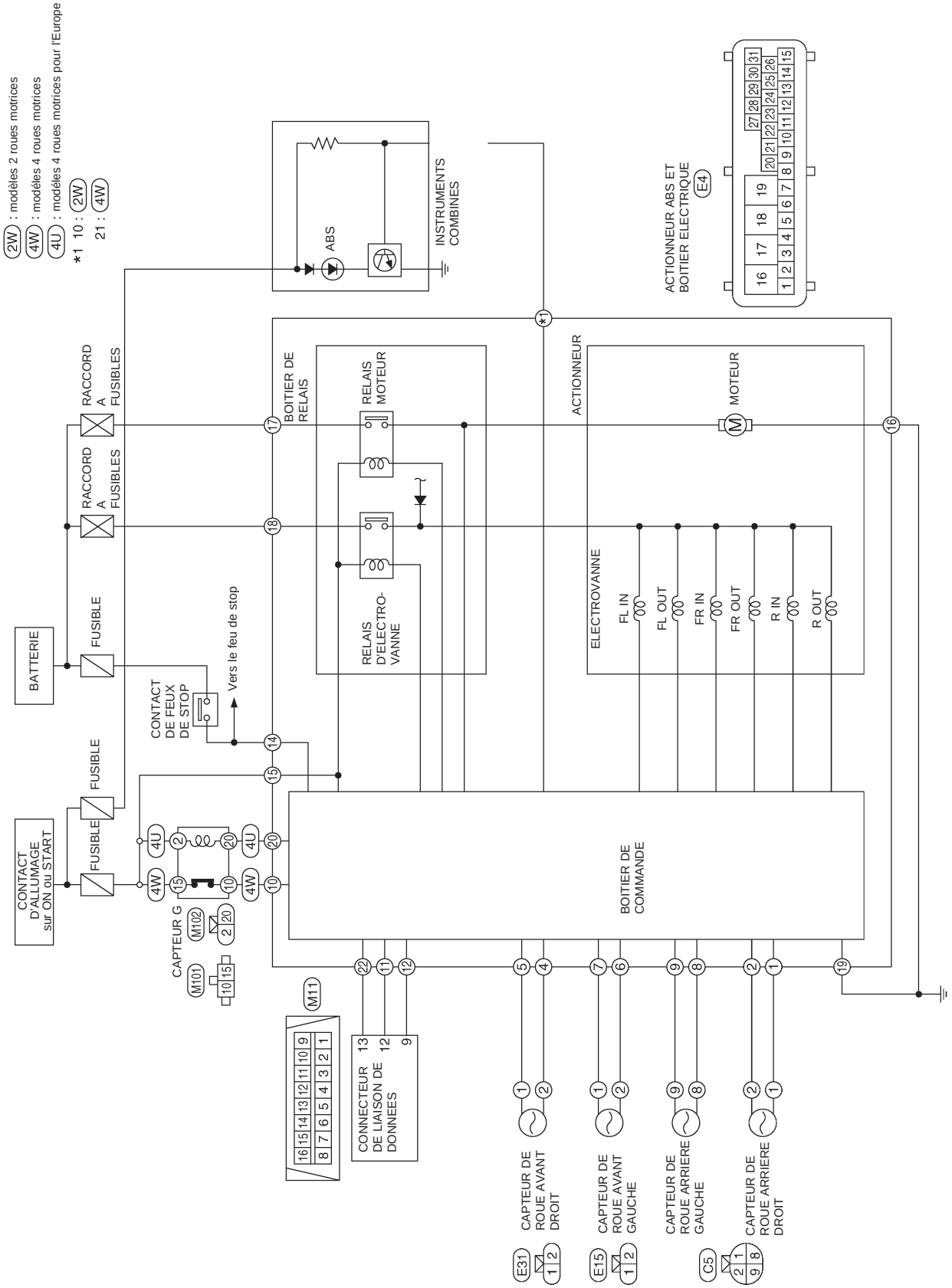

GBR027A

Simpo PDF Merge and Split Unregistered Version - http://www.simpopdf.com

Schéma de câblage — ABS —/Modèles à 4 capteurs de roue, conduite à gauche

BR-ABS-07

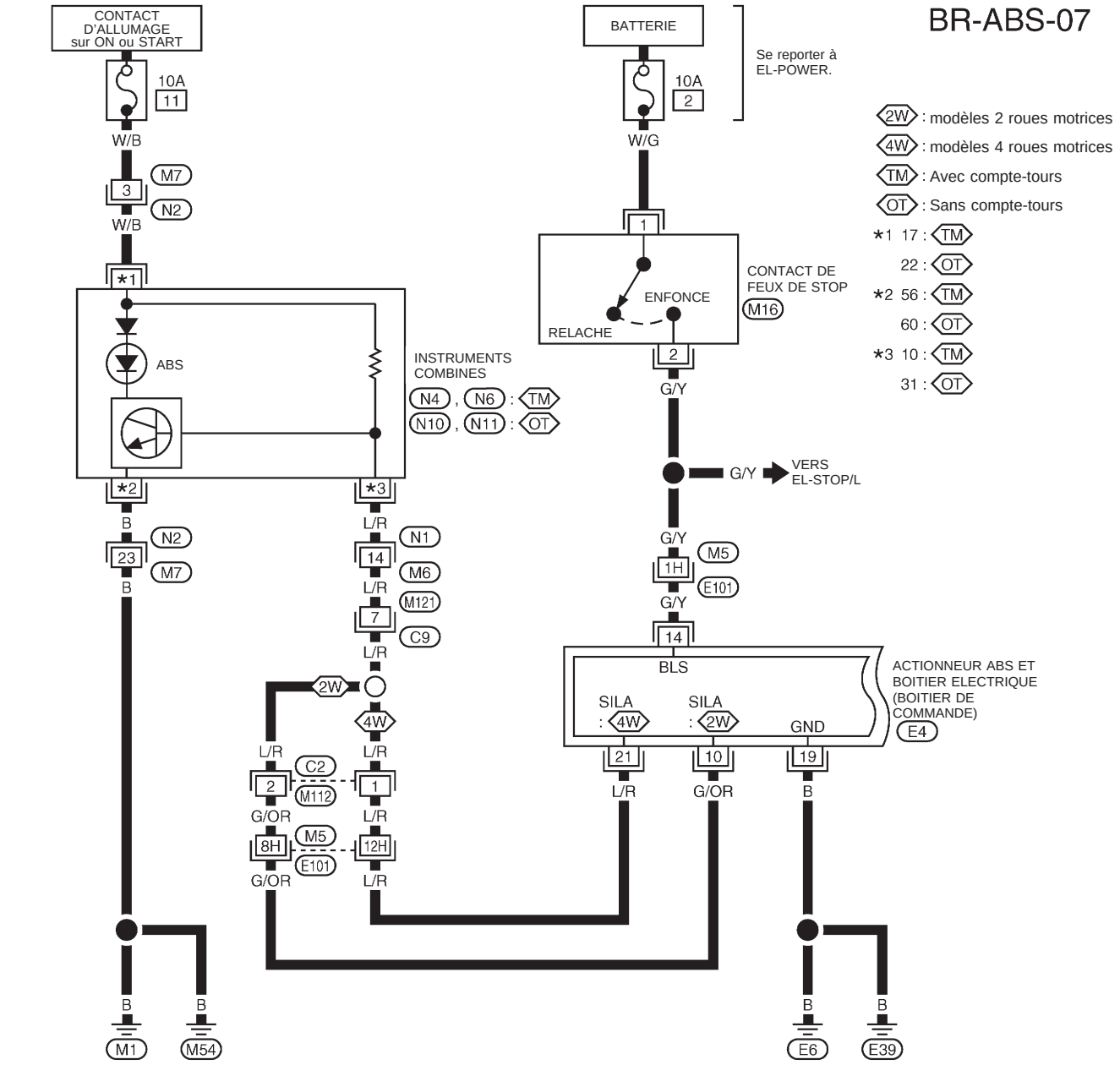

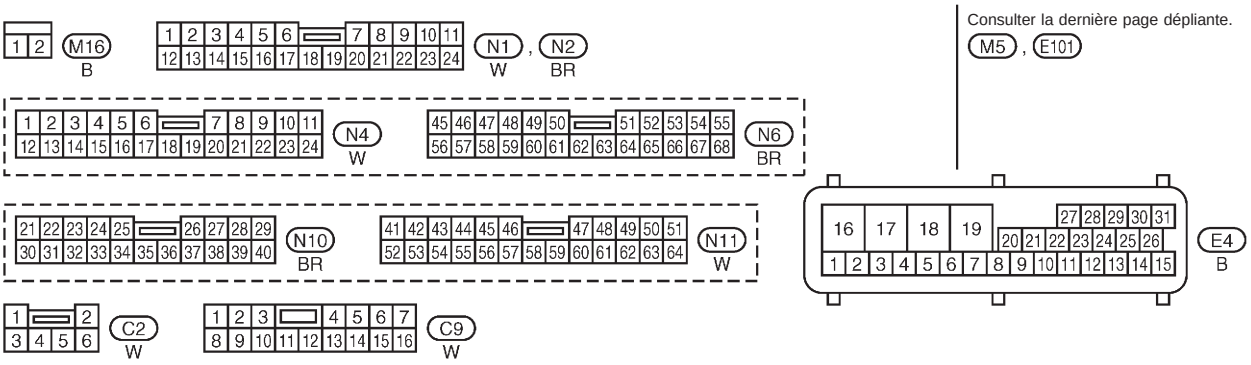

BGR028A

Simpo PDF Merge and Split Unregistered Version - http://www.simpopdf.com

Schéma de câblage — ABS —/Modèles à 4 capteurs de roue, conduite à gauche (Suite)

BR-ABS-08

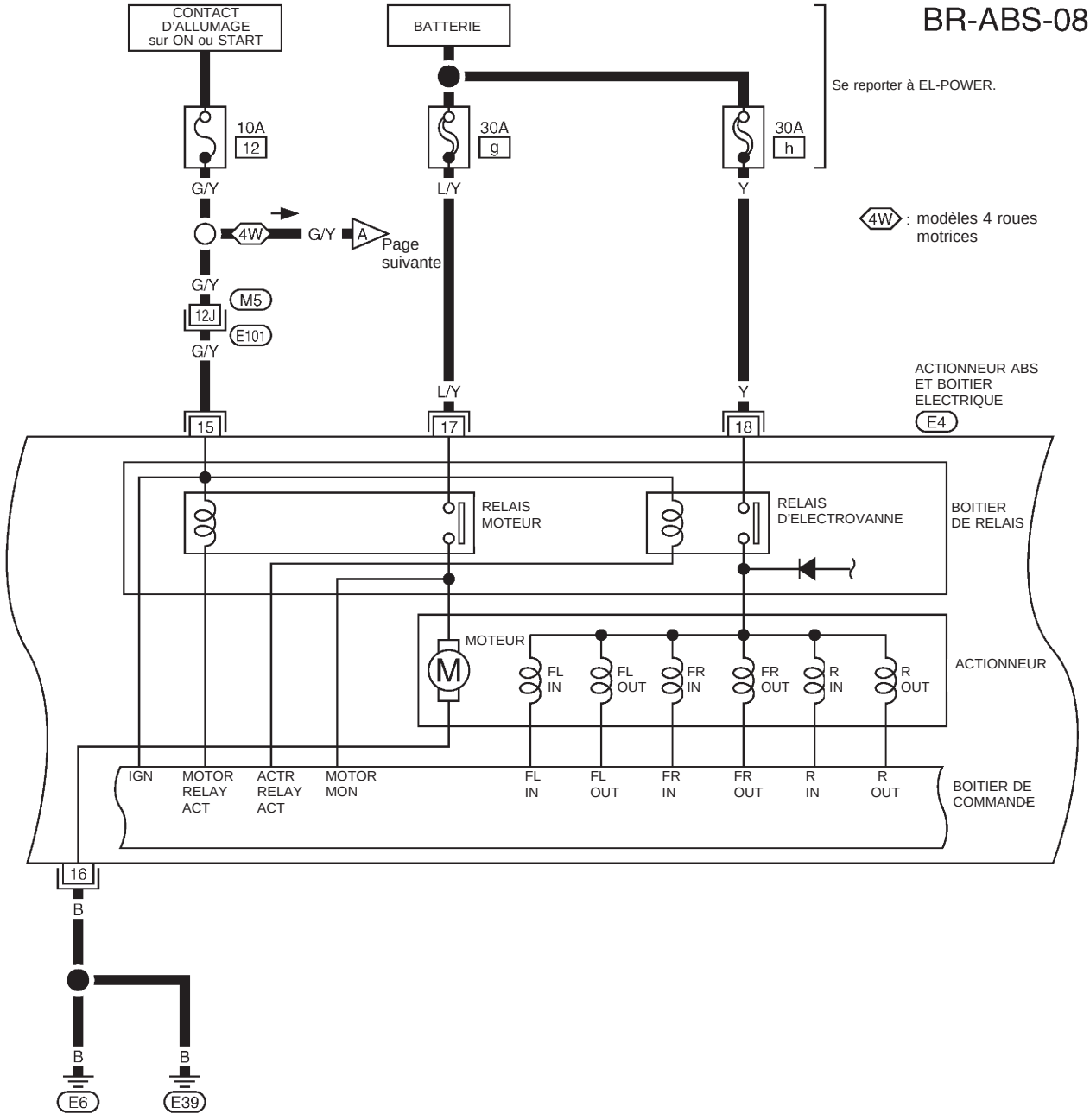

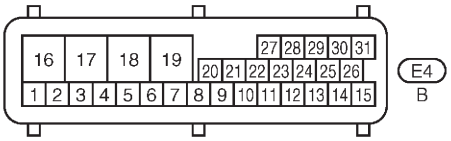

Consulter la dernière page dépliante.
M5 , E101

BGR029A

Simpo PDF Merge and Split Unregistered Version - http://www.simpopdf.com

Schéma de câblage — ABS —/Modèles à 4 capteurs de roue, conduite à gauche (Suite)

BR-ABS-09

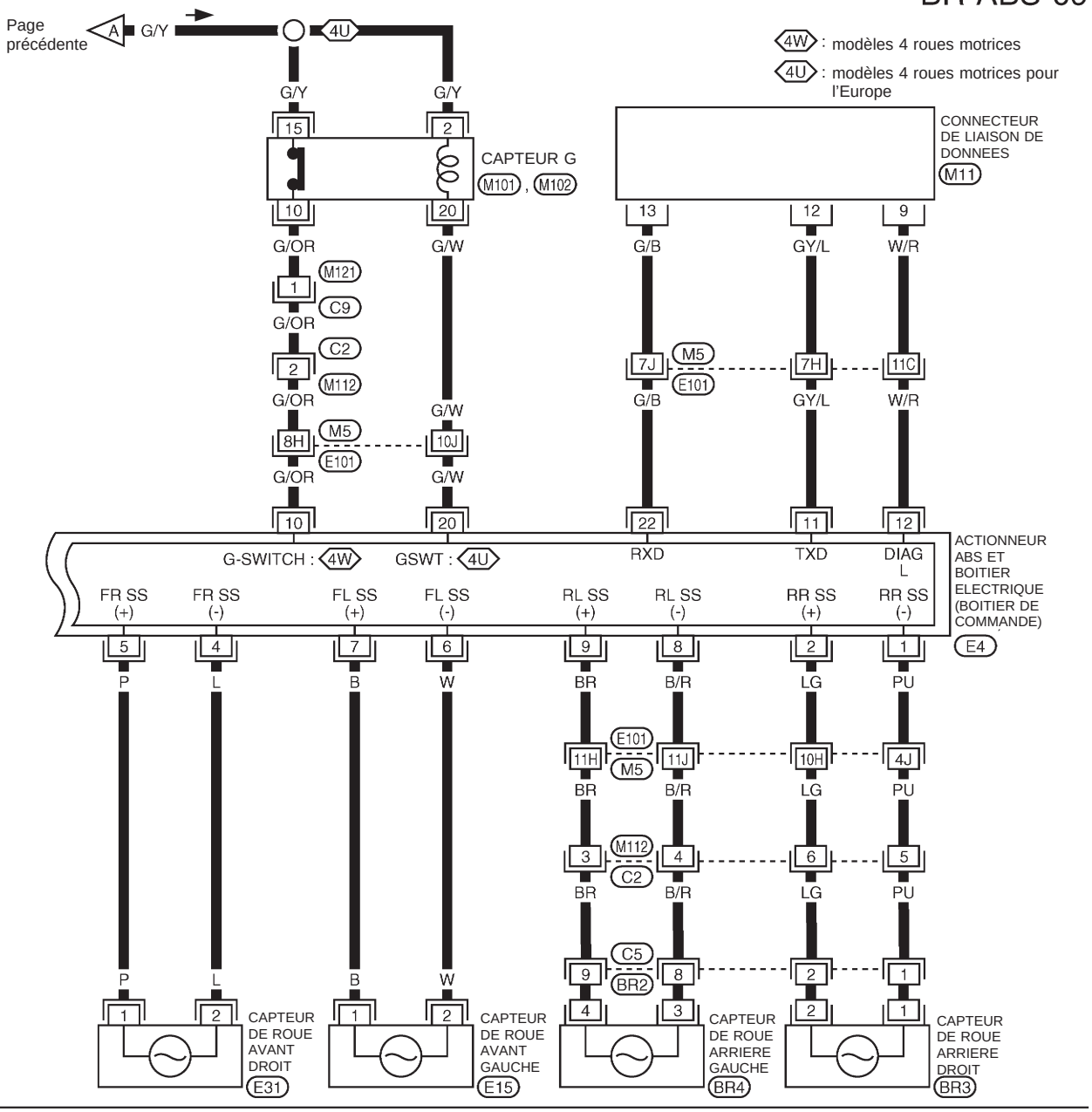

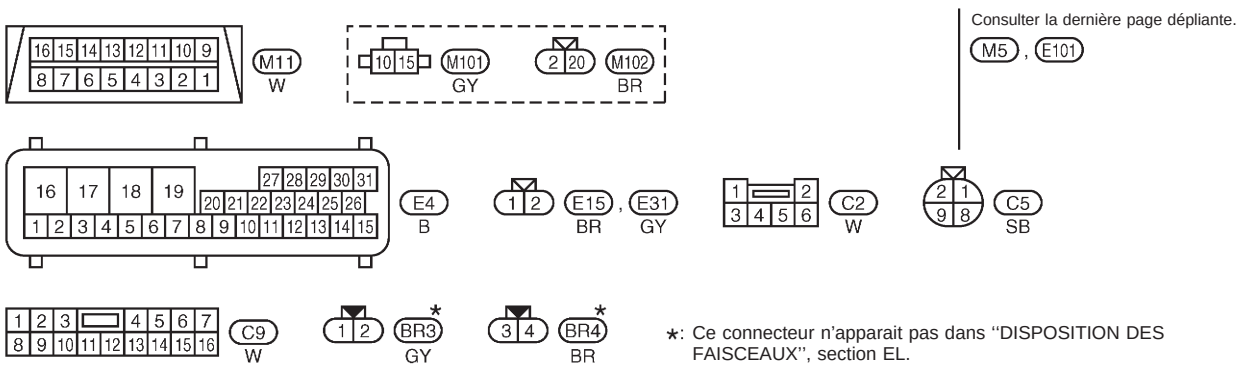

★: Ce connecteur n'apparait pas dans ''DISPOSITION DES FAISCEAUX'', section EL.

GBR030A

Simpo PDF Merge and Split Unregistered Version - http://www.simpopdf.com

Schéma de câblage — ABS —/Modèles à 4 capteurs de roue, conduite à droite

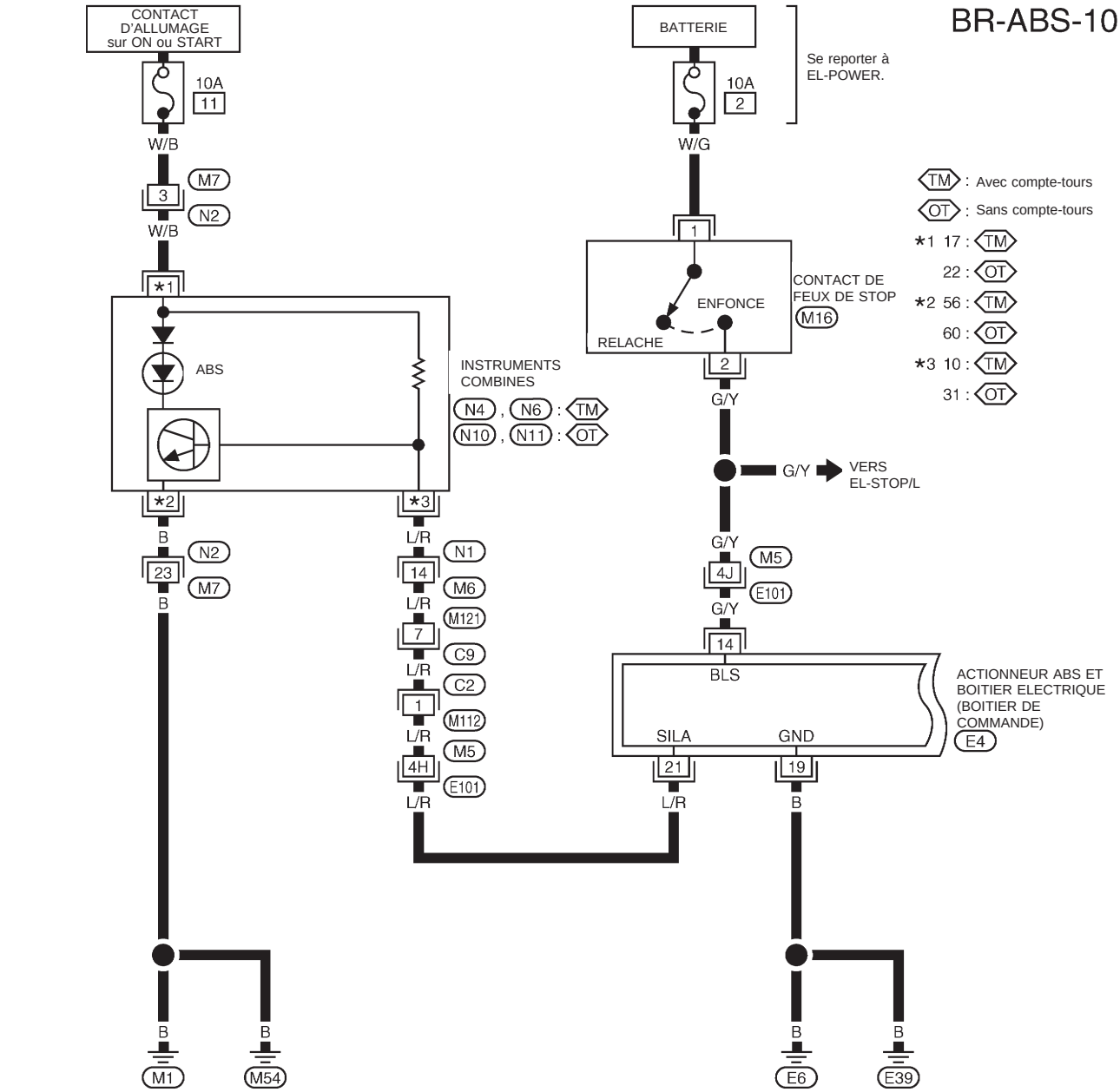

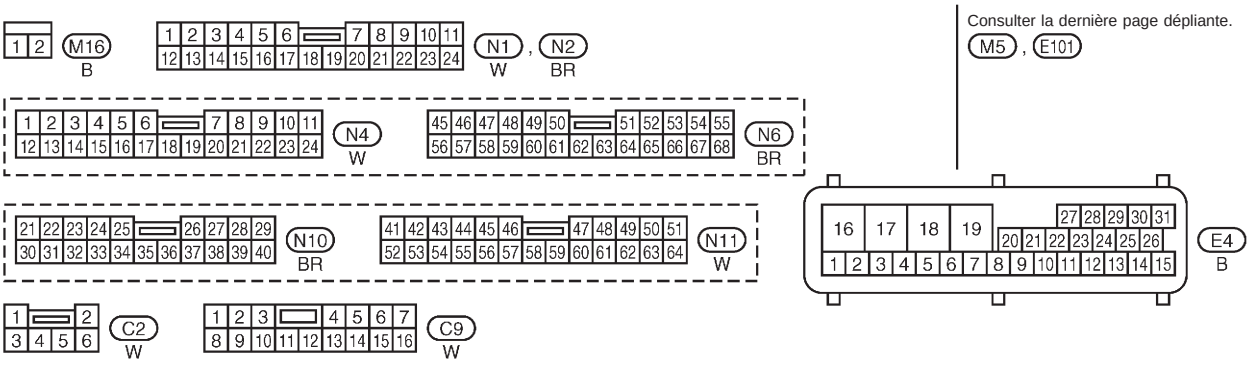

BGR031A

Simpo PDF Merge and Split Unregistered Version - http://www.simpopdf.com

Schéma de câblage — ABS —/Modèles à 4 capteurs de roue, conduite à droite (Suite)

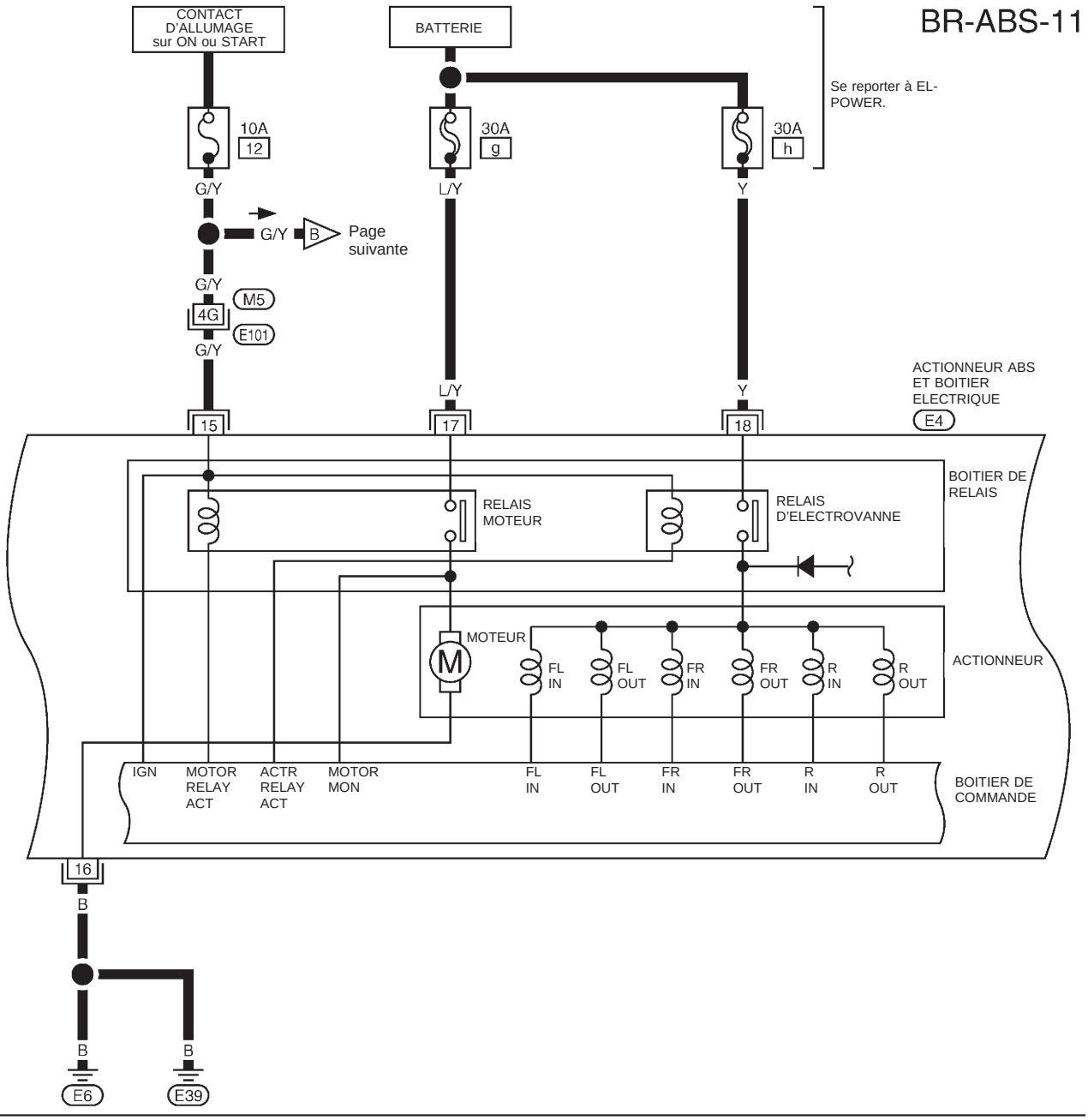

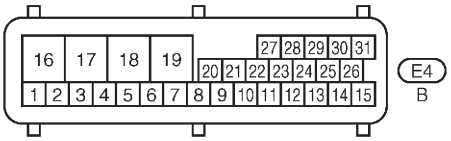

Consulter la dernière page dépliante.

M5 , E101

BGR032A

Simpo PDF Merge and Split Unregistered Version - http://www.simpopdf.com

Schéma de câblage — ABS —/Modèles à 4 capteurs de roue, conduite à droite (Suite)

BR-ABS-12

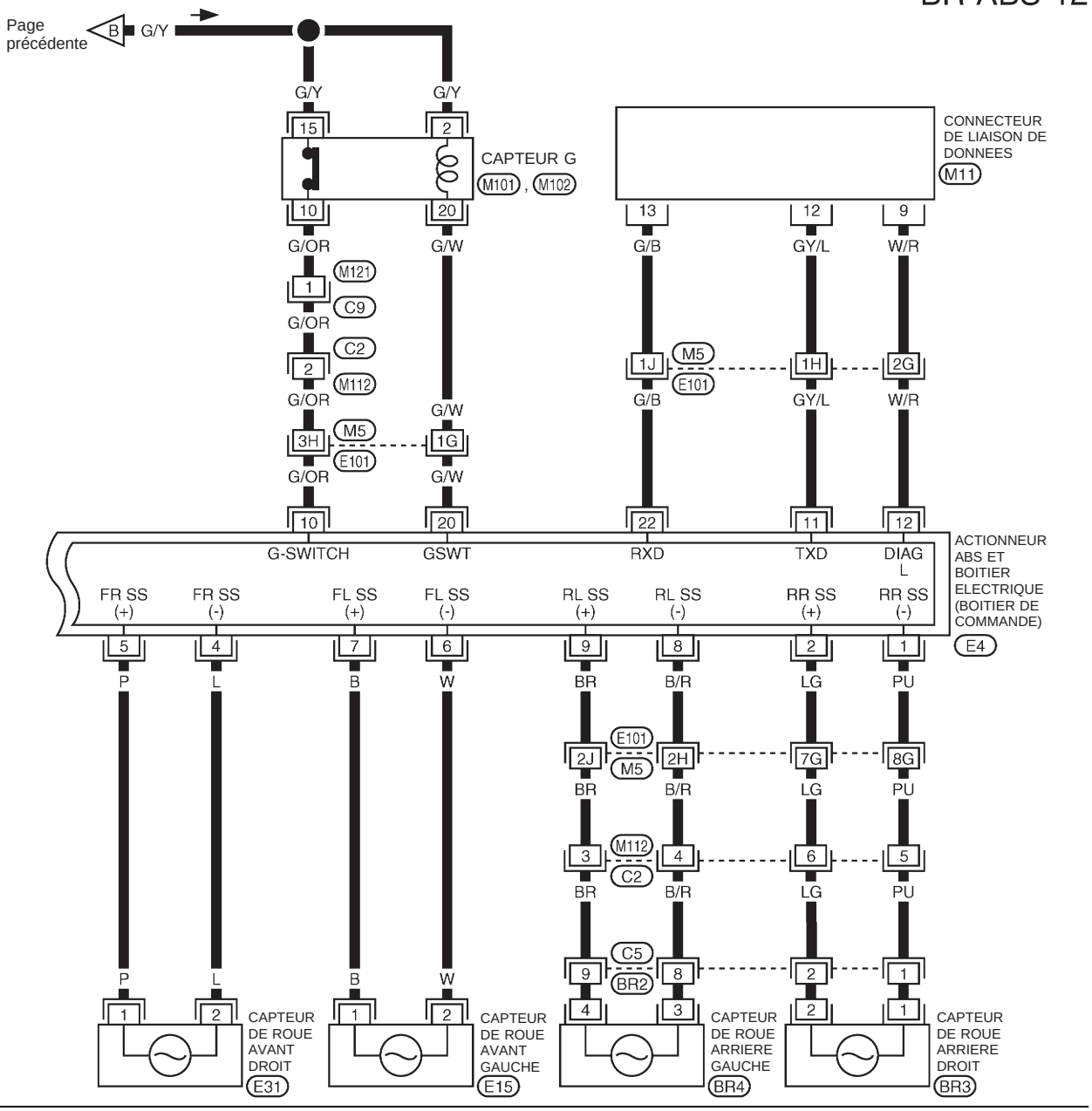

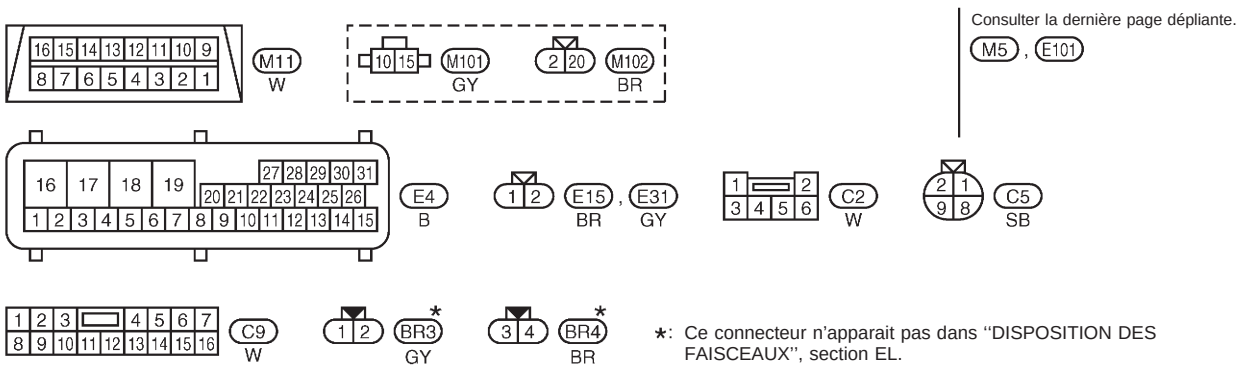

*: Ce connecteur n'apparait pas dans ''DISPOSITION DES FAISCEAUX'', section EL.

GBR033A

Simpo PDF Merge and Split Unregistered Version - http://www.simpopdf.com

<SUPPLEMENT-III>

CARROSSERIE ET GARNITURE

SECTION BT

AVIS DE MODIFICATION :

- L'extrémité avant de la carrosserie a été modifiée.
- L'extérieur a été changé.

TABLE DES MATIERES

EXTREMITES DE LA CARROSSERIE.....3002
Extrémité avant de la carrosserie.....3002

EXTERIEUR.....3006

Simpo PDF Merge and Split Unregistered Version - http://www.simpopdf.com

Extrémité avant de la carrosserie

- Couvrir le capot avec un chiffon ou tout autre matériel de protection lors de sa dépose ou de sa repose. La carrosserie sera ainsi protégée contre les rayures.
- La garniture de pare-chocs est en plastique. Ne pas forcer excessivement et veiller à éviter tout contact avec de l'huile.
- Réglage du capot : Régler à hauteur des charnières.
- Réglage du verrouillage de capot de moteur : Après le réglage, vérifier le fonctionnement de la commande de verrouillage de capot. Appliquer une couche de graisse sur le mécanisme d'enclenchement des serrures de capot.
- Ouverture du capot : Ne pas tenter de plier le câble en le forçant. Cela augmenterait l'effort nécessaire pour déverrouiller le capot.

DEPOSE — Ensemble pare-chocs avant

① Démonter les clips fixant la grille avant et la déposer. A
② Déposer les boulons qui fixent les montants à gauche et à droite du pare-chocs. B
③ Déposer les boulons qui fixent la garniture de pare-chocs (inférieure) à gauche et à droite. C
④ Déposer les boulons qui fixent les supports latéraux à gauche et à droite du pare-chocs. D
⑤ Déposer les boulons qui fixent les montants latéraux à gauche et à droite du pare-chocs. E
⑥ Déposer l'ensemble du pare-chocs.

Simpo PDF Merge and Split Unregistered Version - http://www.simpopdf.com

Extrémité avant de la carrosserie (Suite)

SEC. 261•620•623•650•656

Réglage du verrouillage de capot de moteur
- Régler le capot de façon à ce que le verrou primaire s'enclenche 1 à 1,5 mm plus bas que l'aile.
- Après avoir réglé le verrou de capot, régler le caoutchouc de butée.
- Lors du montage du verrou de capot, veiller à ce qu'il ne soit pas penché. La gâche doit être positionnée au centre du verrou primaire de capot.
- Après le réglage, s'assurer que le verrou primaire et le verrou secondaire fonctionnent correctement.

Longueur d'accrochage du crochet secondaire du verrou de capot

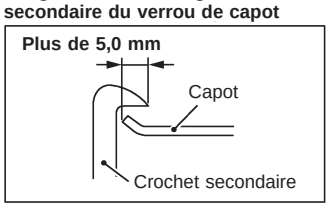

Réglage du caoutchouc de butée
- Régler de façon à ce que le capot soit aligné sur l'aile. La déflexion est alors d'environ 2 mm.

[**La hauteur libre du** caoutchouc de butée est d'env. 13 mm.]

: N·m (kg-m)

SBT270A

Simpo PDF Merge and Split Unregistered Version - http://www.simpopdf.com

Extrémité avant de la carrosserie (Suite)

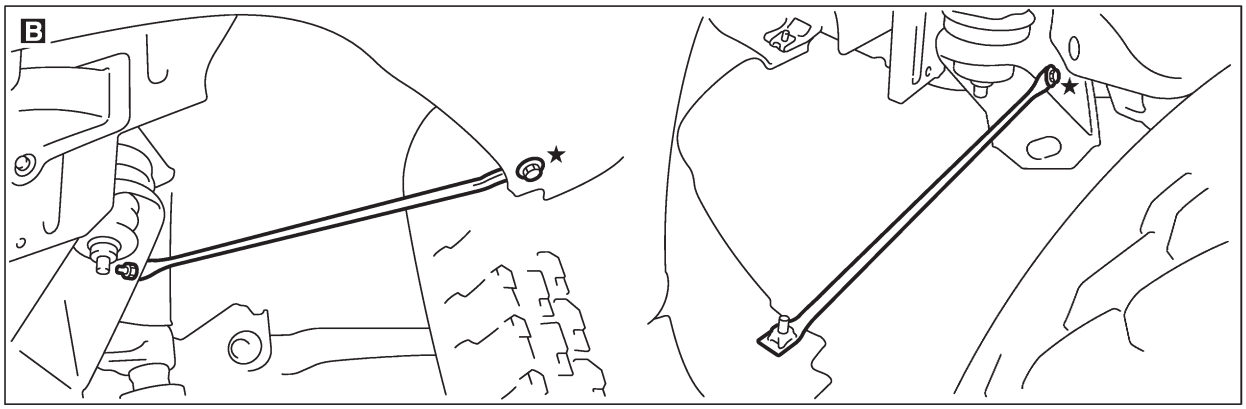

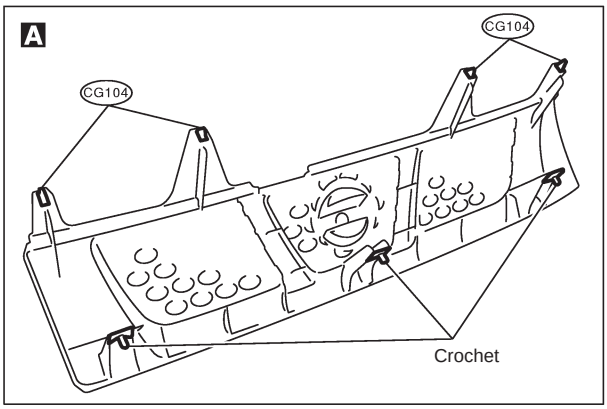

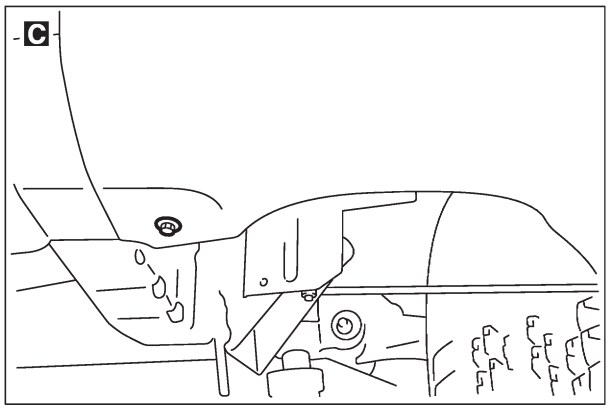

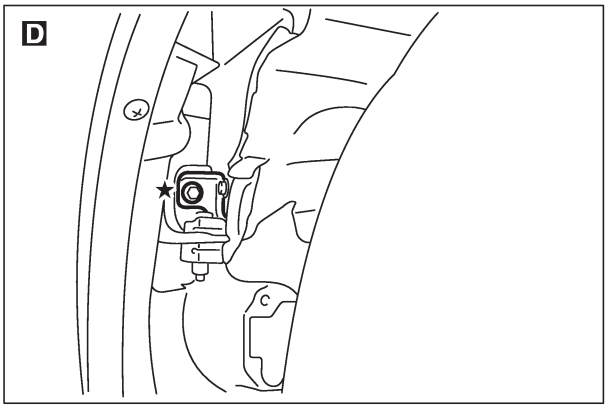

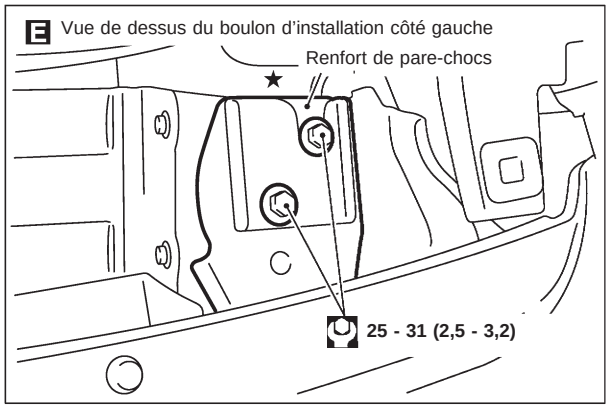

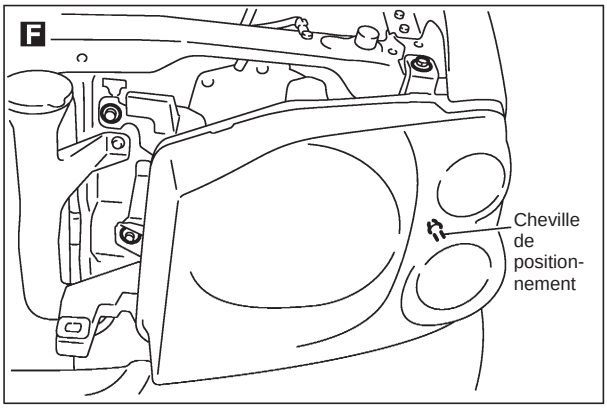

: N·m (kg-m)

★ : Boulons de montage de pare-chocs

SBT271A

Simpo PDF Merge and Split Unregistered Version - http://www.simpopdf.com

Extrémité avant de la carrosserie (Suite)

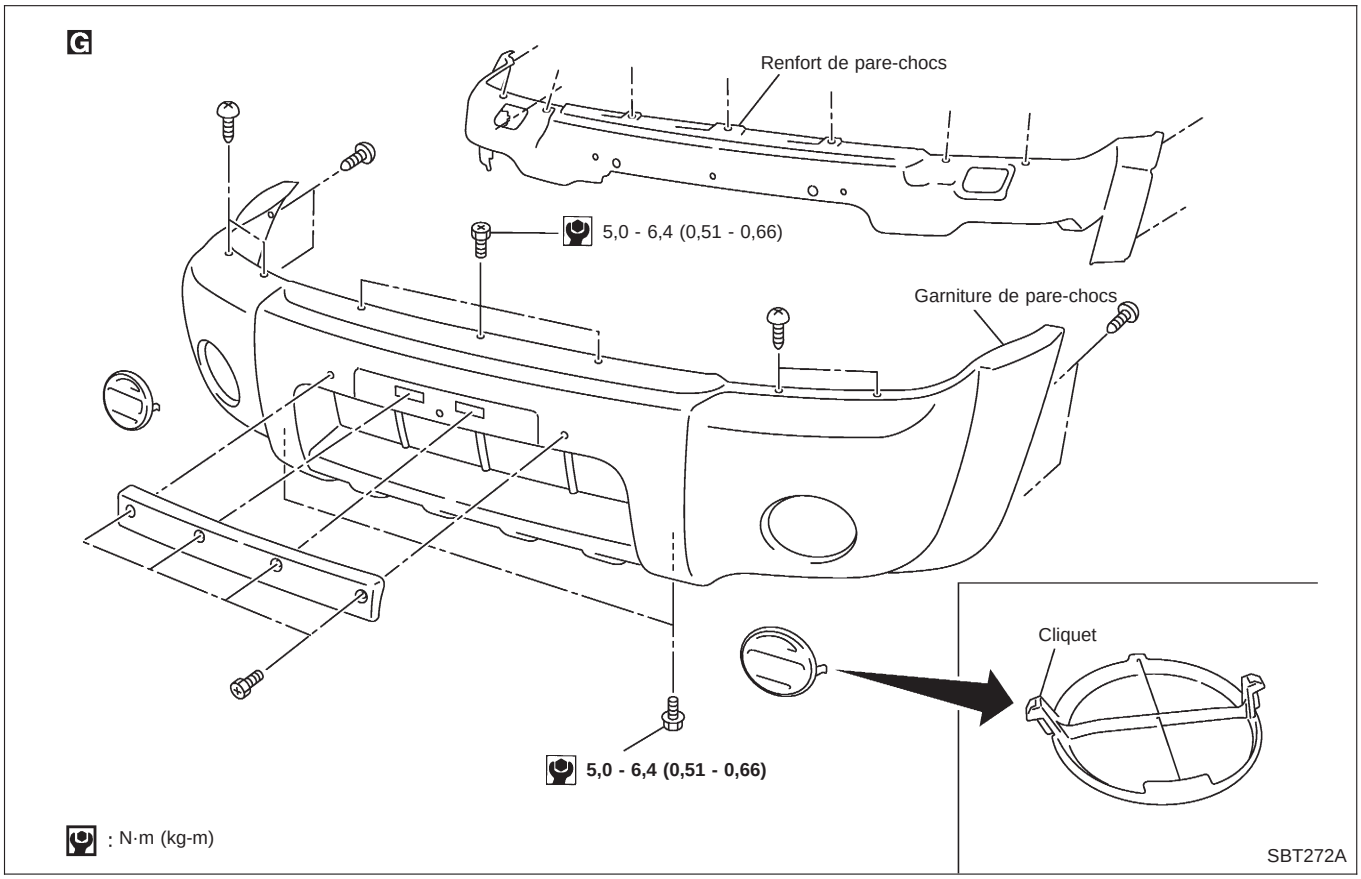

Simpo PDF Merge and Split Unregistered Version - http://www.simpopdf.com

Aile supérieure

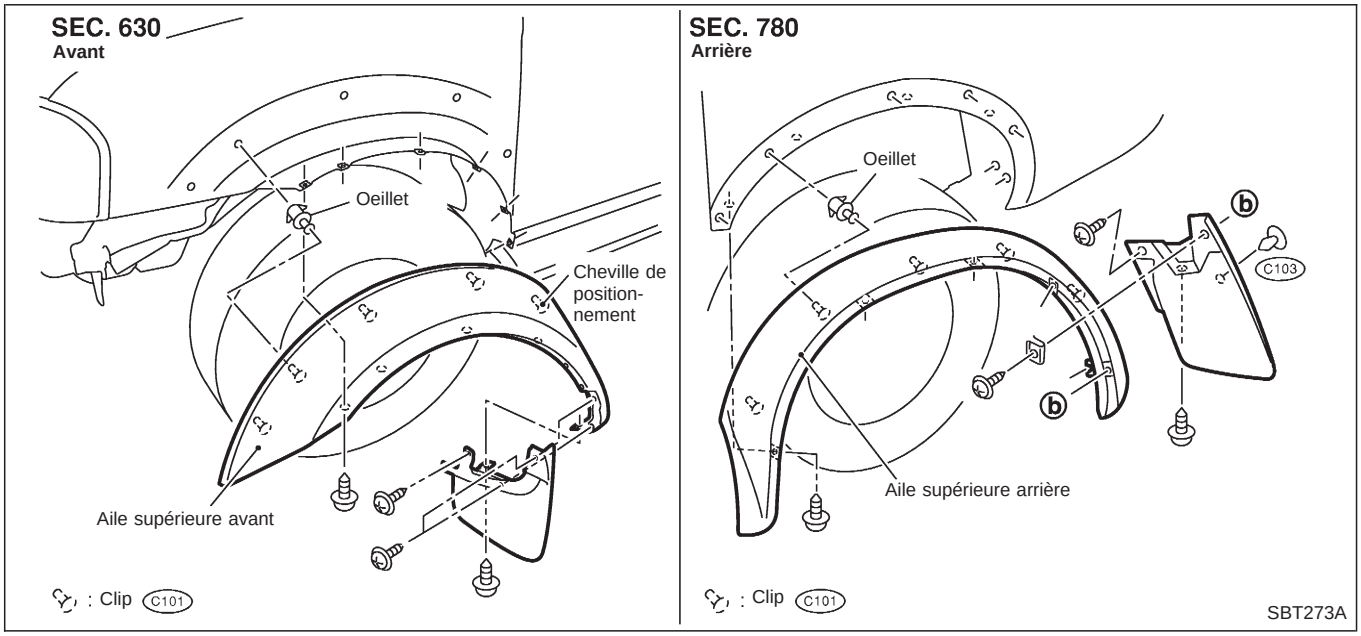

Simpo PDF Merge and Split Unregistered Version - http://www.simpopdf.com

<SUPPLEMENT-III>

EMBRAYAGE

SECTION CL

AVIS DE MODIFICATION :
Le type de moteur YD25DDTi a été ajouté.

TABLE DES MATIERES

CARACTERISTIQUES ET VALEURS DE REGLAGE (SDS) 3002
Caractéristiques générales 3002
Inspection et réglage 3002

Simpo PDF Merge and Split Unregistered Version - http://www.simpopdf.com

Caractéristiques générales

MAITRE-CYLINDRE D'EMBRAYAGE

Diamètre interne	mm	15,87 (5/8)

CYLINDRE RECEPTEUR D'EMBRAYAGE

Diamètre interne	mm	19,05 (3/4)

DISQUE D'EMBRAYAGE

Modèle	250
Moteur	YD25DDTi
Dimensions de la garniture (diam. ext. x diam. int. x épaisseur) mm	250 x 160 x 3,5 (9,84 x 6,30 x 0,138)
Epaisseur de l'ensemble de disque Avec charge mm	7,85 - 8,35 Avec 7 360 N (751 kg)

COUVERCLE D'EMBRAYAGE

Modèle		250
Moteur		YD25DDTi
Pleine charge	N (kg)	7 360 (751, 1 655)

Inspection et réglage

PEDALE D'EMBRAYAGE

Unité: mm

Hauteur de la pédale "H*"	
Conduite à droite	
Moteur YD25DDTi	203 - 213 (7,99 - 8,39)
Conduite à gauche	
Moteur YD25DDTi	237 - 247 (9,33 - 9,72)
Jeu libre de la pédale (à l'axe de chape)	1 - 1,5 (0,039 - 0,059)

*: Mesuré de la surface de la tôle d'isolation au patin de pédale.

DISQUE D'EMBRAYAGE

Unité: mm

Modèle	250
Moteur	YD25DDTi
Limite d'usure de la surface avec la tête de rivet.	0,3 (0,012)
Limite de voile de la garniture.	0,7 (0,028)
Distance du point de contrôle du voile (depuis le centre du moyeu)	120 (4,72)
Battement maximum de cannelures (à la bordure externe du disque)	1,0 (0,039)

COUVERCLE D'EMBRAYAGE

Unité: mm

Modèle	250
Moteur	YD25DDTi
Hauteur du ressort de diaphragme	39,5 - 41,5 (1,555 - 1,634)
Limite de différence de hauteur d'extrémité de ressort de diaphragme.	0,7 (0,028)

Simpo PDF Merge and Split Unregistered Version - http://www.simpopdf.com

SYSTEME DE FREINAGE

SECTION EC

TABLE DES MATIERES

PRECAUTIONS ET PREPARATION 3009
Outillage spécial (YD25DDTi) 3009
‘‘COUSSIN GONFLABLE’’ (AIR BAG) du système de retenue supplémentaire (SRS) 3009

KA24DE (EURO OBD)

DIAGNOSTIC DES DEFAUTS - INDEX 3010
Index alphabétique et numérique des codes P de défaut 3010
PRECAUTIONS 3013
‘‘COUSSIN GONFLABLE’’ (AIR BAG) et ‘‘PRETENSIONNEUR DE CEINTURE DE SECURITE’’ du (SRS)’’ 3013
Précautions pour le système de diagnostic de bord (OBD) du moteur 3013
Alimentation et système antipollution 3014
Précautions 3015
Schémas de câblage et diagnostic des défauts 3016
PREPARATION 3017
Outillage spécial 3017
Outillage en vente dans le commerce 3017
SYSTEME ENTIER DE COMMANDE DU MOTEUR ET DE CONTROLE ANTIPOLLUTION 3019
Emplacement des composants du système de gestion moteur 3019
Schéma du circuit 3021
Schéma du système 3022
Schéma des flexibles de dépression 3023
Tableau du système 3024
DESCRIPTION DU SYSTEME DE COMMANDE DE BASE DES GAZ D’ECHAPPEMENT ET DU MOTEUR 3025
Système d’injection multipoint (MFI) 3025
Système d’allumage du distributeur (DI) 3027
Commande de coupure du climatiseur 3029
Commande de coupure de l’alimentation en carburant (à vide et à régime-moteur élevé) ... 3029
Système de contrôle des évaporations de carburant 3030
Recyclage des gaz du carter 3033
PROCEDURE D’ENTRETIEN DE BASE 3035
Détente de la pression de carburant 3035
Contrôle de la pression de carburant 3035
Vérification du régulateur de pression de carburant 3036
Injecteur 3037
Came de ralenti accéléré (FIC) 3037
Réglage du régime de ralenti/calage d’allumage/richesse de mélange de ralenti 3037
DESCRIPTION DU SYSTEME DE DIAGNOSTIC DE BORD 3052
Introduction 3052
Logique de détection de deux parcours 3052
Informations de diagnostic de dépollution 3053
NVIS (système d’immobilisation de véhicule Nissan - NATS) 3066
Témoin de défaut (MI) 3067
Tableau opérationnel du diagnostic de bord (OBD) 3071
CONSULT-II 3076
Analyseur générique (GST) 3087

Simpo PDF Merge and Split Unregistered Version - http://www.simpopdf.com

DIAGNOSTIC DES DEFAUTS - INTRODUCTION 3089
Introduction 3089
Procédure de travail 3091
DIAGNOSTIC DES DEFAUTS - INSPECTION DE BASE 3093
Inspection de base 3093
DIAGNOSTIC DES DEFAUTS - DESCRIPTION GENERALE 3107
Tableau des priorités d'inspection des codes de défaut de diagnostic 3107
Tableau de sécurité 3108
Tableau des caractéristiques des symptômes 3109
Valeur de référence de CONSULT-II en mode de contrôle de données 3114
Graphique de référence du capteur principal en mode de contrôle de données 3117
Bornes de l'ECM et valeurs de référence 3119
DIAGNOSTIC DES DEFAUTS - VALEUR DE SPECIFICATION 3128
Description 3128
Conditions d'essai 3128
Procédure d'inspection 3128
Procédure de diagnostic 3129
DIAGNOSTIC DES DEFAUTS POUR UN INCIDENT INTERMITTENT 3132
Description 3132
Procédure de diagnostic 3132
DIAGNOSTIC DES DEFAUTS POUR L'ALIMENTATION 3133
Circuit d'alimentation électrique principale et de mise à la masse 3133
DTC P0031, P0032 CHAUFFAGE CH1 S/O2 3142
Description 3142
Valeur de référence de CONSULT-II en mode de contrôle de données 3142
Bornes de l'ECM et valeurs de référence 3142
Logique de diagnostic de bord 3143
Procédure de confirmation de code de défaut (DTC) 3143
Schéma de câblage 3144
Procédure de diagnostic 3145
DTC P0037, P0038 CHAUFFAGE S/O2 CH2 3147
Description 3147
Valeur de référence de CONSULT-II en mode de contrôle de données 3147
Bornes de l'ECM et valeurs de référence 3147
Logique de diagnostic de bord 3148
Procédure de confirmation de code de défaut (DTC) 3148
Schéma de câblage 3150
Procédure de diagnostic 3151
DTC P0101 DEBITMETRE D'AIR 3153
Description des composants 3153
Valeur de référence de CONSULT-II en mode de contrôle de données 3153
Bornes de l'ECM et valeurs de référence 3153
Logique de diagnostic de bord 3154
Procédure de confirmation de code de défaut (DTC) 3154
Vérification du fonctionnement général 3155
Schéma de câblage 3157
Procédure de diagnostic 3158
DTC P0102, P0103 DEBITMETRE D'AIR 3162
Description des composants 3162
Valeur de référence de CONSULT-II en mode de contrôle de données 3162
Bornes de l'ECM et valeurs de référence 3163
Logique de diagnostic de bord 3163
Procédure de confirmation de code de défaut (DTC) 3163
Schéma de câblage 3165
Procédure de diagnostic 3166
DTC P0112, P0113 CAPTEUR DE TEMPERATURE D'AIR D'ADMISSION 3171
Description des composants 3171
Bornes de l'ECM et valeurs de référence 3171
Logique de diagnostic de bord 3172
Procédure de confirmation de code de défaut (DTC) 3172
Schéma de câblage 3173
Procédure de diagnostic 3174
DTC P0117, P0118 CAPTEUR DE TEMPERATURE MOTEUR 3176
Description des composants 3176
Valeur de référence de CONSULT-II en mode de contrôle de données 3176
Bornes de l'ECM et valeurs de référence 3176
Logique de diagnostic de bord 3177
Procédure de confirmation de code de défaut (DTC) 3178
Schéma de câblage 3179
Procédure de diagnostic 3180
DTC P0121 CAPTEUR DE POSITION DE PAPILLON 3182
Description des composants 3182
Valeur de référence de CONSULT-II en mode de contrôle de données 3182
Bornes de l'ECM et valeurs de référence 3183
Logique de diagnostic de bord 3183
Procédure de confirmation de code de défaut (DTC) 3184
Schéma de câblage 3186
Procédure de diagnostic 3187
DTC P0122, P0123 CAPTEUR DE POSITION DE PAPILLON 3194
Description des composants 3194

Simpo PDF Merge and Split Unregistered Version - http://www.simpopdf.com

Valeur de référence de CONSULT-II en mode de contrôle de données 3194
Bornes de l'ECM et valeurs de référence 3195
Logique de diagnostic de bord 3195
Procédure de confirmation de code de défaut (DTC) 3196
Schéma de câblage 3197
Procédure de diagnostic 3198
DTC P0127 CAPTEUR DE POSITION DE PAPILLON 3205
Description des composants 3205
Bornes de l'ECM et valeurs de référence 3205
Logique de diagnostic de bord 3206
Procédure de confirmation de code de défaut (DTC) 3207
Procédure de diagnostic 3208
DTC P0132 SONDE A OXYGENE CHAUFFE 1 3209
Description des composants 3209
Valeur de référence de CONSULT-II en mode de contrôle de données 3209
Bornes de l'ECM et valeurs de référence 3209
Logique de diagnostic de bord 3210
Procédure de confirmation de code de défaut (DTC) 3210
Schéma de câblage 3212
Procédure de diagnostic 3213
DTC P0133 SONDE A OXYGENE CHAUFFE 1 3216
Description des composants 3216
Valeur de référence de CONSULT-II en mode de contrôle de données 3216
Bornes de l'ECM et valeurs de référence 3216
Logique de diagnostic de bord 3217
Procédure de confirmation de code de défaut (DTC) 3217
Vérification du fonctionnement général 3218
Schéma de câblage 3219
Procédure de diagnostic 3220
DTC P0134 SONDE A OXYGENE CHAUFFE 1 3227
Description des composants 3227
Valeur de référence de CONSULT-II en mode de contrôle de données 3227
Bornes de l'ECM et valeurs de référence 3227
Logique de diagnostic de bord 3228
Procédure de confirmation de code de défaut (DTC) 3228
Vérification du fonctionnement général 3229
Schéma de câblage 3230
Procédure de diagnostic 3231
DTC P0138 SONDE A OXYGENE CHAUFFE 2 3234
Description des composants 3234
Valeur de référence de CONSULT-II en mode de contrôle de données 3234
Bornes de l'ECM et valeurs de référence 3234
Logique de diagnostic de bord 3235
Procédure de confirmation de code de défaut (DTC) 3235
Vérification du fonctionnement général 3236
Schéma de câblage 3237
Procédure de diagnostic 3238
DTC P0139 SONDE A OXYGENE CHAUFFE 2 3242
Description des composants 3242
Valeur de référence de CONSULT-II en mode de contrôle de données 3242
Bornes de l'ECM et valeurs de référence 3242
Logique de diagnostic de bord 3243
Procédure de confirmation de code de défaut (DTC) 3244
Vérification du fonctionnement général 3245
Schéma de câblage 3246
Procédure de diagnostic 3247
DTC P0171 SYSTEME D'INJECTION FONCTIONNEMENT 3253
Logique de diagnostic de bord 3253
Procédure de confirmation de code de défaut (DTC) 3253
Schéma de câblage 3255
Procédure de diagnostic 3256
DTC P0172 SYSTEME D'INJECTION FONCTIONNEMENT 3260
Logique de diagnostic de bord 3260
Procédure de confirmation de code de défaut (DTC) 3260
Schéma de câblage 3262
Procédure de diagnostic 3263
DTC P0300 - P0304 RATES D'ALLUMAGE DES CYLINDRES N° 4 - 1, RATES D'ALLUMAGE DE CYLINDRES MULTIPLES 3267
Logique de diagnostic de bord 3267
Procédure de confirmation de code de défaut (DTC) 3267
Procédure de diagnostic 3268
DTC P0327, P0328 CAPTEUR DE DETONATION 3276
Description des composants 3276
Bornes de l'ECM et valeurs de référence 3276
Logique de diagnostic de bord 3276
Procédure de confirmation de code de défaut (DTC) 3276
Schéma de câblage 3278
Procédure de diagnostic 3279
DTC P0335 CAPTEUR DE POSITION DE VILEBREQUIN (OBD) 3281
Description des composants 3281

Simpo PDF Merge and Split Unregistered Version - http://www.simpopdf.com

Bornes de l'ECM et valeurs de référence 3281
Logique de diagnostic de bord 3282
Procédure de confirmation de code de défaut (DTC) 3282
Schéma de câblage 3283
Procédure de diagnostic 3284
DTC P0340 CAPTEUR D'ANGLE D'ARBRE A CAMES 3287
Description des composants 3287
Bornes de l'ECM et valeurs de référence 3287
Logique de diagnostic de bord 3289
Procédure de confirmation de code de défaut (DTC) 3290
Schéma de câblage 3291
Procédure de diagnostic 3292
DTC P0420 FONCTION DU CATALYSEUR A TROIS VOIES 3296
Logique de diagnostic de bord 3296
Procédure de confirmation de code de défaut (DTC) 3296
Vérification du fonctionnement général 3297
Procédure de diagnostic 3298
DTC P0444, P0445 ELECTROVANNE DE COMMANDE DE VOLUME DE PURGE DE CARTOUCHE EVAP 3301
Description 3301
Valeur de référence de CONSULT-II en mode de contrôle de données 3302
Bornes de l'ECM et valeurs de référence 3302
Logique de diagnostic de bord 3303
Procédure de confirmation de code de défaut (DTC) 3304
Schéma de câblage 3305
Procédure de diagnostic 3306
DTC P0500 SIGNAL DE VITESSE DU VEHICULE 3309
Description des composants 3309
Bornes de l'ECM et valeurs de référence 3309
Logique de diagnostic de bord 3309
Procédure de confirmation de code de défaut (DTC) 3309
Vérification du fonctionnement général 3310
Schéma de câblage 3312
Procédure de diagnostic 3314
DTC P0505 SYSTEME ISC 3315
Description 3315
Valeur de référence de CONSULT-II en mode de contrôle de données 3316
Bornes de l'ECM et valeurs de référence 3317
Logique de diagnostic de bord 3317
Procédure de confirmation de code de défaut (DTC) 3318
Schéma de câblage 3319
Procédure de diagnostic 3320
DTC P0510 CONTACT CTP 3322
Description des composants 3322
Bornes de l'ECM et valeurs de référence 3322
Logique de diagnostic de bord 3322
Procédure de confirmation de code de défaut (DTC) 3323
Vérification du fonctionnement général 3323
Schéma de câblage 3325
Procédure de diagnostic 3326
DTC P0605 ECM 3331
Description des composants 3331
Logique de diagnostic de bord 3331
Procédure de confirmation de code de défaut (DTC) 3331
Procédure de diagnostic 3332
DTC P1143 SONDE A OXYGENE CHAUFFE 1 3333
Description des composants 3333
Valeur de référence de CONSULT-II en mode de contrôle de données 3333
Bornes de l'ECM et valeurs de référence 3333
Logique de diagnostic de bord 3334
Procédure de confirmation de code de défaut (DTC) 3334
Vérification du fonctionnement général 3335
Procédure de diagnostic 3336
DTC P1144 SONDE A OXYGENE CHAUFFE 1 3341
Description des composants 3341
Valeur de référence de CONSULT-II en mode de contrôle de données 3341
Bornes de l'ECM et valeurs de référence 3341
Logique de diagnostic de bord 3342
Procédure de confirmation de code de défaut (DTC) 3342
Vérification du fonctionnement général 3343
Procédure de diagnostic 3344
DTC P1146 SONDE A OXYGENE CHAUFFE 2 3349
Description des composants 3349
Valeur de référence de CONSULT-II en mode de contrôle de données 3349
Bornes de l'ECM et valeurs de référence 3349
Logique de diagnostic de bord 3350
Procédure de confirmation de code de défaut (DTC) 3350
Vérification du fonctionnement général 3351
Schéma de câblage 3353
Procédure de diagnostic 3354
DTC P1147 SONDE A OXYGENE CHAUFFE 2 3360
Description des composants 3360
Valeur de référence de CONSULT-II en mode de contrôle de données 3360

Simpo PDF Merge and Split Unregistered Version - http://www.simpopdf.com

Bornes de l'ECM et valeurs de référence 3360
Logique de diagnostic de bord 3361
Procédure de confirmation de code de défaut (DTC) 3361
Vérification du fonctionnement général 3362
Schéma de câblage 3364
Procédure de diagnostic 3365
DTC P1217 SURCHAUFFE DU MOTEUR 3371
Logique de diagnostic de bord 3371
Vérification du fonctionnement général 3371
Procédure de diagnostic 3372
11 CAUSES PRINCIPALES DE SURCHAUFFE 3375
DTC P1336 CAPTEUR DE POSITION DE PAPILLON (OBD) 3376
Description des composants 3376
Bornes de l'ECM et valeurs de référence 3376
Logique de diagnostic de bord 3377
Procédure de confirmation de code de défaut (DTC) 3377
Schéma de câblage 3378
Procédure de diagnostic 3379
DTC P1706 CONTACT DE STATIONNEMENT/ POINT MORT (PNP) 3382
Description des composants 3382
Valeur de référence de CONSULT-II en mode de contrôle de données 3382
Bornes de l'ECM et valeurs de référence 3382
Logique de diagnostic de bord 3382
Procédure de confirmation de code de défaut (DTC) 3383
Vérification du fonctionnement général 3384
Schéma de câblage 3385
Procédure de diagnostic 3386
SIGNAL D'ALLUMAGE 3388
Description des composants 3388
Valeur de référence de CONSULT-II en mode de contrôle de données 3388
Bornes de l'ECM et valeurs de référence 3389
Schéma de câblage 3390
Procédure de diagnostic 3392
INJECTEUR 3396
Description des composants 3396
Bornes de l'ECM et valeurs de référence 3396
Schéma de câblage 3397
Procédure de diagnostic 3398
SIGNAL DE DEMARRAGE 3401
Valeur de référence de CONSULT-II en mode de contrôle de données 3401
Bornes de l'ECM et valeurs de référence 3401
Schéma de câblage 3402
Procédure de diagnostic 3403
POMPE A CARBURANT 3405
Description du système 3405
Description des composants 3405
Valeur de référence de CONSULT-II en mode de contrôle de données 3405
Bornes de l'ECM et valeurs de référence 3406
Schéma de câblage 3407
Procédure de diagnostic 3408
MANOCONTACT D'HUILE DE DIRECTION ASSISTEE 3412
Description des composants 3412
Valeur de référence de CONSULT-II en mode de contrôle de données 3412
Bornes de l'ECM et valeurs de référence 3412
Schéma de câblage 3413
Procédure de diagnostic 3414
ELECTROVANNE IACV-FICD 3416
Description des composants 3416
Bornes de l'ECM et valeurs de référence 3416
Schéma de câblage 3417
Procédure de diagnostic 3419
CONNECTEURS DU MI ET DE LIAISON DES DONNEES 3423
Schéma de câblage 3423
CARACTERISTIQUES ET VALEURS DE REGLAGE (SDS) 3425
Régulateur de pression de carburant 3425
Régime de ralenti et calage de l'allumage 3425
Bobine d'allumage 3425
Débitmètre d'air 3425
Capteur de température du liquide de refroidissement du moteur 3425
Pompe à carburant 3425
Soupape IACV-AAC 3425
Injecteur 3425
Capteur de position de papillon 3426
Chauffage de la sonde à oxygène chauffé 1 3426
Valeur de charge calculée 3426
Capteur de température d'air d'admission 3426
Chauffage de sonde à oxygène chauffé 2 3426
Capteur de position du vilebrequin (OBD) 3426

YD25DDTi

DIAGNOSTIC DES DEFAUTS - INDEX 3427
Index alphabétique et numérique pour DTC 3427
PRECAUTIONS 3429
Précautions 3429
ENSEMBLE DU SYSTEME DE COMMANDE DU MOTEUR ET DE CONTROLE ANTIPOLLUTION 3433
Emplacement des composants de contrôle du moteur 3433
Schéma de circuit 3436
Schéma du système 3437
Tableau du système 3438

Simpo PDF Merge and Split Unregistered Version - http://www.simpopdf.com

SYSTEME DE COMMANDE DE BASE DES GAZ D'ECHAPPEMENT ET DU MOTEUR
DESCRIPTION 3439
Système de commande d'injection de carburant 3439
Système de commande d'avance de l'injection de carburant 3441
Commande de coupure du climatiseur 3442
Commande de coupure d'alimentation (à vide et à régime élevé du moteur) 3442
Système de ventilation du carter moteur 3443
PROCEDURE D'ENTRETIEN DE BASE 3444
Tube d'injection et injecteur 3444
Pompe d'injection de carburant à commande électronique 3448
Purge d'air 3455
Vidange de l'eau 3455
Apprentissage de position de ralenti du capteur de position d'accélérateur 3456
DESCRIPTION DU SYSTEME DE DIAGNOSTIC DE BORD 3457
Logique de détection DTC/MIL 3457
Code de défaut de diagnostic (DTC) 3457
Témoin de défaut (MIL) 3458
CONSULT-II 3463
DIAGNOSTIC DES DEFAUTS - INTRODUCTION 3470
Introduction 3470
Organigramme de travail 3472
DIAGNOSTICS DES DEFAUTS - INSPECTION DE BASE 3474
Inspection de base 3474
DIAGNOSTIC DES DEFAUTS - DESCRIPTION GENERALE 3480
Tableau des caractéristiques des symptômes 3480
Valeur de référence de CONSULT-II en mode de contrôle de données 3493
Graphique de référence du capteur principal en mode de contrôle des données 3495
Bornes de l'ECM et valeurs de référence 3496
DIAGNOSTIC DES DEFAUTS POUR UN INCIDENT INTERMITTENT 3502
Description 3502
Procédure de diagnostic 3502
DIAGNOSTIC DES DEFAUTS POUR L'ALIMENTATION ELECTRIQUE 3503
Circuit d'alimentation électrique principal et de mise à la masse 3503
DTC 0103 CAP TEMP MOTEUR 3513
Description 3513
Logique de diagnostic de bord 3513
Procédure de confirmation de code de défaut (DTC) 3513
Schéma de câblage 3514
Procédure de diagnostic 3515
DTC 0104 CAP VIT VEHICULE 3517
Description 3517
Bornes de l'ECM et valeurs de référence 3517
Logique de diagnostic de bord 3517
Vérification du fonctionnement général 3518
Schéma de câblage 3519
Procédure de diagnostic 3521
DTC 0208 SURCHAUFFE 3522
Description 3522
Valeur de référence de CONSULT-II en mode de contrôle de données 3522
Bornes de l'ECM et valeurs de référence 3523
Logique de diagnostic de bord 3523
Vérification du fonctionnement général 3524
Schéma de câblage 3525
Procédure de diagnostic 3526
12 causes principales de surchauffe 3533
DTC 0301 ECM 2, DTC 901 ECM 12 3535
Description 3535
Logique de diagnostic de bord 3535
Procédure de confirmation de code de défaut (DTC) 3535
Procédure de diagnostic 3536
DTC 0401 CAPTEUR DE TEMPERATURE D'AIR D'ADMISSION 3537
Description des composants 3537
Logique de diagnostic de bord 3537
Procédure de confirmation de code de défaut (DTC) 3537
Schéma de câblage 3539
Procédure de diagnostic 3540
DTC 0402 P9·CAP TEMP CARB 3542
Description 3542
Valeur de référence de CONSULT-II en mode de contrôle de données 3543
Bornes de l'ECM et valeurs de référence 3543
Logique de diagnostic de bord 3544
Procédure de confirmation de code de défaut (DTC) 3544
Schéma de câblage 3545
Procédure de diagnostic 3547
DTC 0403 CAP POS ACCELERAT 3549
Description 3549
Valeur de référence de CONSULT-II en mode de contrôle de données 3549
Bornes de l'ECM et valeurs de référence 3550
Logique de diagnostic de bord 3550
Procédure de confirmation de code de défaut (DTC) 3551
Schéma de câblage 3552
Procédure de diagnostic 3556
DTC 0406 VOL AIR ADMI 3565

Simpo PDF Merge and Split Unregistered Version - http://www.simpopdf.com

Logique de diagnostic de bord 3565
Procédure de confirmation de code de défaut (DTC) 3565
Procédure de diagnostic 3566
DTC 0407 CAP POS VIL (PMH) 3568
Description 3568
Valeur de référence de CONSULT-II en mode de contrôle de données 3568
Bornes de l'ECM et valeurs de référence 3568
Logique de diagnostic de bord 3569
Procédure de confirmation de code de défaut (DTC) 3569
Schéma de câblage 3570
Procédure de diagnostic 3571
DTC 0502 TENSION BATTERIE 3574
Logique de diagnostic de bord 3574
Procédure de confirmation de code de défaut (DTC) 3574
Procédure de diagnostic 3575
DTC 0701 P1·CAP POS CAM 3577
Description 3577
Valeur de référence de CONSULT-II en mode de contrôle de données 3578
Bornes de l'ECM et valeurs de référence 3578
Logique de diagnostic de bord 3580
Procédure de confirmation de code de défaut (DTC) 3580
Schéma de câblage 3581
Procédure de diagnostic 3583
DTC 0702 P2·SIG IMPUL PMH 3585
Description 3585
Valeur de référence de CONSULT-II en mode de contrôle de données 3586
Bornes de l'ECM et valeurs de référence 3586
Logique de diagnostic de bord 3587
Procédure de confirmation de code de défaut (DTC) 3588
Schéma de câblage 3589
Procédure de diagnostic 3591
DTC 0703 P3·LIGNE COM POMP 3593
Description 3593
Valeur de référence de CONSULT-II en mode de contrôle de données 3594
Bornes de l'ECM et valeurs de référence 3594
Logique de diagnostic de bord 3596
Procédure de confirmation de code de défaut (DTC) 3597
Schéma de câblage 3598
Procédure de diagnostic 3600
DTC 0704 P4·CIRC V/FUITE, DTC 0706 P6·V/FUITE 3602
Description 3602
Valeur de référence de CONSULT-II en mode de contrôle de données 3603
Bornes de l'ECM et valeurs de référence 3603
Logique de diagnostic de bord 3604
Procédure de confirmation de code de défaut (DTC) 3605
Schéma de câblage 3606
Procédure de diagnostic 3608
DTC 0705 P5·MODULE COM POMP 3610
Description 3610
Valeur de référence de CONSULT-II en mode de contrôle de données 3611
Bornes de l'ECM et valeurs de référence 3611
Logique de diagnostic de bord 3612
Procédure de confirmation de code de défaut (DTC) 3613
Procédure de diagnostic 3613
DTC 0707 P7·RPNG CLG INJ/C 3614
Description 3614
Valeur de référence de CONSULT-II en mode de contrôle de données 3615
Bornes de l'ECM et valeurs de référence 3615
Logique de diagnostic de bord 3617
Procédure de confirmation de code de défaut (DTC) 3618
Schéma de câblage 3619
Procédure de diagnostic 3621
DTC 0802 ECM 10 3624
Description 3624
Logique de diagnostic de bord 3624
Procédure de confirmation de code de défaut (DTC) 3624
Procédure de diagnostic 3625
DTC 0804 ECM 11 3626
Description 3626
Logique de diagnostic de bord 3626
Procédure de confirmation de code de défaut (DTC) 3626
Procédure de diagnostic 3627
DTC 0807 ECM 14 3628
Description 3628
Bornes de l'ECM et valeurs de référence 3628
Logique de diagnostic de bord 3628
Procédure de confirmation de code de défaut (DTC) 3628
Schéma de câblage 3630
Procédure de diagnostic 3631
DTC 0902 RLS ECM 3637
Bornes de l'ECM et valeurs de référence 3637
Logique de diagnostic de bord 3637
Procédure de confirmation de code de défaut (DTC) 3637
Schéma de câblage 3638
Procédure de diagnostic 3640
DTC 0903 ECM 15 3642
Description 3642

Simpo PDF Merge and Split Unregistered Version - http://www.simpopdf.com

Logique de diagnostic de bord 3642
Procédure de confirmation de code de défaut (DTC) 3642
Procédure de diagnostic 3643
DTC 0905 PRESSION TURBO 3644
Description des composants 3644
Bornes de l'ECM et valeurs de référence 3644
Logique de diagnostic de bord 3644
Procédure de confirmation de code de défaut (DTC) 3645
Schéma de câblage 3646
Procédure de diagnostic 3647
DTC 1003 SOUP COM VOLUME EGR 3649
Description 3649
Valeur de référence de CONSULT-II en mode de contrôle de données 3650
Bornes de l'ECM et valeurs de référence 3650
Procédure de confirmation de code de défaut (DTC) 3650
Schéma de câblage 3652
Procédure de diagnostic 3654
DTC 1004 SYS COUP CAR1 3659
Description 3659
Valeur de référence de CONSULT-II en mode de contrôle de données 3660
Bornes de l'ECM et valeurs de référence 3660
Logique de diagnostic de bord 3661
Procédure de confirmation de code de défaut (DTC) 3661
Schéma de câblage 3662
Procédure de diagnostic 3664
SYSTEME DE COMMANDE DE PRECHAUFFAGE 3666
Description 3666
Bornes de l'ECM et valeurs de référence 3667
Schéma de câblage 3668
Procédure de diagnostic 3669
SIGNAL DE DEMARRAGE 3676
Schéma de câblage 3676
Procédure de diagnostic 3677
CONTACT STATIONNEMENT/POINT MORT (PNP) 3679
Description 3679
Valeur de référence de CONSULT-II en mode de contrôle de données 3679
Bornes de l'ECM et valeurs de référence 3679
Schéma de câblage 3680
Procédure de diagnostic 3681
INTERRUPTEUR DE CHAUFFAGE RAPIDE 3684
Description des composants 3684
Valeur de référence de CONSULT-II en mode de contrôle de données 3684
Bornes de l'ECM et valeurs de référence 3684
Schéma de câblage 3685
Procédure de diagnostic 3686
COMMANDE DU CLIMATISEUR 3690
Schéma de câblage 3690
CONNECTEURS DU TEMOIN (MIL) ET DE LIAISON DES DONNEES 3692
Schéma de câblage 3692
CARACTERISTIQUES ET VALEURS DE REGLAGE (SDS) 3696
Caractéristiques générales 3696
Références de la pompe d'injection 3696
Injecteur 3696
Capteur de température du liquide de refroidissement du moteur 3696
Capteur de température d'air d'admission 3696
Capteur d'angle du vilebrequin (PMH) 3696
Bougie de préchauffage 3696
Capteur de position d'accélérateur 3696
Soupape de contrôle de volume EGR 3696

Simpo PDF Merge and Split Unregistered Version - http://www.simpopdf.com

Outillage spécial (YD25DDTi)

Numéro de l'outil Nom de l'outil	Description
KV111060S0 Kit de dépose/repose de la pompe à injection de carburant	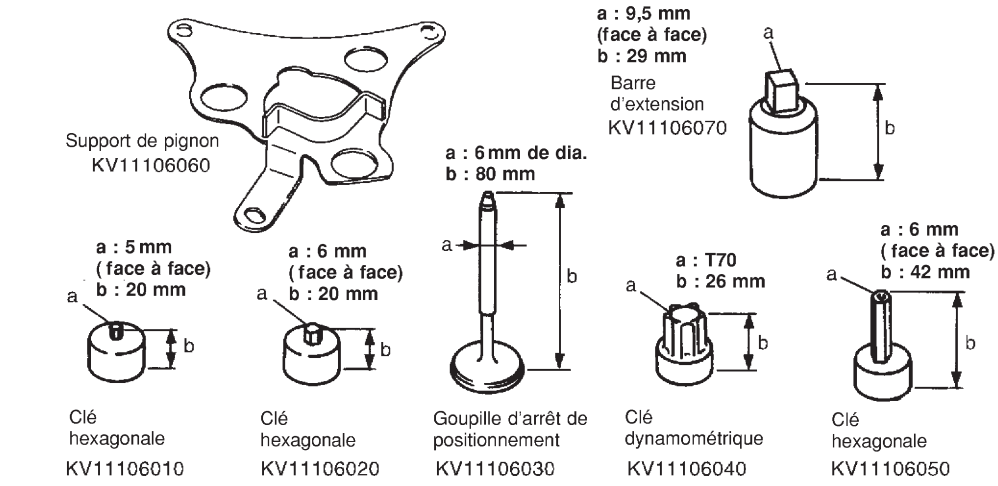 NT814

"COUSSIN GONFLABLE" (AIR BAG) du système de retenue supplémentaire (SRS)

Utilisé conjointement avec une ceinture de sécurité, les systèmes de retenue supplémentaire, tel que le "COUSSIN GONFLABLE", permettent de réduire les risques de blessures graves subies par le conducteur et le passager avant dans certains types de collision. La composition du système SRS disponible sur la NISSAN MODELE D22 se présente comme suit (la composition varie selon la destination et l'équipement optionnel):
Module de coussin gonflable côté chauffeur (situés dans le moyeu du volant), un boîtier de capteurs de diagnostic, un témoin d'avertissement, un faisceau de câblage et un câble spiralé.
Les informations nécessaires à l'entretien sans danger du système se trouvent à la **section RS** du Manuel de Réparation D22, Annexe VI.
ATTENTION :

- Pour ne pas affecter le fonctionnement du SRS, ce qui augmenterait les risques de blessures graves ou mortelles en cas de collision entraînant le déploiement de l'airbag, toutes les opérations d'entretien doivent être effectuées par un concessionnaire NISSAN agréé.
- Un entretien inadapté, y compris la dépose et la repose incorrectes du système SRS, peut être à l'origine de blessures physiques causées par le déclenchement intempestif du système. Pour la dépose du câble spiralé et du module d'airbag, se reporter à la section RS.
- Ne pas utiliser d'équipement d'essai électrique sur les circuits connexes au SRS, sauf instructions contraires données dans ce manuel de réparation. Le faisceau de câblage du SRS peut être identifié à l'aide d'un connecteur de faisceau jaune.

Simpo PDF Merge and Split Unregistered Version - http://www.simpopdf.com

Index alphabétique et numérique des codes P de défaut

NEEC0001

INDEX ALPHABÉTIQUE DES CODES DE DÉFAUT

NEEC0001S01

Eléments (terminologie des écrans CONSULT-II)	DTC*1		Page de référence
	CONSULT-II GST*2	ECM*4	
Impossible d'accéder à l'ECM	—	—	EC-3107
CIRCUIT CPV	P0335	0335	EC-3280
CAPTEUR CPV (COG)	P1336	1336	EC-3375
CIR/CON RALENTI	P0510	0510	EC-3321
CIRC/CAP CMPS	P0340	0340	EC-3286
RATE CYLINDRE 1	P0301	0301	EC-3266
RATE CYLINDRE 2	P0302	0302	EC-3266
RATE CYLINDRE 3	P0303	0303	EC-3266
RATE CYLINDRE 4	P0304	0304	EC-3266
ECM	P0605	0605	EC-3330
CIRCUIT CAP TEMP RE MOT	P0117*3	0117	EC-3175
CIRCUIT CAP TEMP RE MOT	P0118*3	0118	EC-3175
SURCHAUFFE	P1217	1217	EC-3370
SYS CARB-PVR-R1	P0171	0171	EC-3252
SYS CARB-RICH-R1	P0172	0172	EC-3259
S/O2 CH1 (R1)	P0132	0132	EC-3208
S/O2 CH1 (R1)	P0133	0133	EC-3215
S/O2 CH1 (R1)	P0134	0134	EC-3226
S/O2 CH1 (R1)	P1143	1143	EC-3332
S/O2 CH1 (R1)	P1144	1144	EC-3340
CH S/02 CH1 (R1)	P0031	0031	EC-3141
CH S/02 CH1 (R1)	P0032	0032	EC-3141
CH S/O2 CH2 (R1)	P0037	0037	EC-3146
CH S/O2 CH2 (R1)	P0038	0038	EC-3146
S/O2 CH2 (R1)	P0138	0138	EC-3233
S/O2 CH2 (R1)	P0139	0139	EC-3241
S/O2 CH2 (R1)	P1146	1146	EC-3348
S/O2 CH2 (R1)	P1147	1147	EC-3359
CIRC CAP TEMPERATURE D'AIR D'ADMISSION	P0112*3	0112	EC-3170
CIRC CAP TEMPERATURE D'AIR D'ADMISSION	P0113*3	0113	EC-3170
CAPTEUR DE TEMPERATURE D'AIR D'ADMISSION	P0127	0127	EC-3204
CIRC/ISC	P0505	0505	EC-3314
CIRC CAP DETON-R1	P0327	0327	EC-3274
CIRC CAP DETON-R1	P0328	0328	EC-3274

Simpo PDF Merge and Split Unregistered Version - http://www.simpopdf.com

Eléments (terminologie des écrans CONSULT-II)	DTC*1		Page de référence
	CONSULT-II GST*2	ECM*4	
CIRC CAP DEBIT AIR	P0101	0101	EC-3152
CIRC CAP DEBIT AIR	P0102*3	0102	EC-3161
CIRC CAP DEBIT AIR	P0103*3	0103	EC-3161
RATE MULTICYLINDRE	P0300	0300	EC-3266
NATS DEFAUT	P1610 - P1615	1610 - 1615	Section EL
AUCUN DTC INDIQUE AUTRE TEST PEUT ETRE NECESSAIRE.	**P0000**	**0000**	**—**
CIR CON NEUTRE	P1706	1706	EC-3381
SOUP COM VOL PURG	P0444	0444	EC-3300
SOUP COM VOL PURG	P0445	0445	EC-3300
CIRC CAP PAPIL	P0121	0121	EC-3193
CIRC CAP PAPIL	P0122*3	0122	EC-3193
CIRC CAP PAPIL	P0123*3	0123	EC-3181
SYST CAT 3V-R1	P0420	0420	EC-3295
CIRC/CAP VIT VEH	P0500	0500	EC-3308

*1 : Numéro de code de défaut de 1er parcours identique au numéro de code de défaut.
*2 : Ces numéros sont prescrits par ISO 15031-6.
*3 : Lorsque le mode de sécurité est activé, le MI s'allume.
*4 : En mode d'essai de diagnostic (Résultats de l'autodiagnostic), ces numéros sont contrôlés par NISSAN.

INDEX NUMÉRIQUE DES CODES P DE DÉFAUT

NEEC0001S02

DTC*1		Eléments (terminologie des écrans CONSULT-II)	Page de référence
CONSULT-II GST*2	ECM*4		
—	—	Impossible d'accéder à l'ECM	EC-3107
P0000	**0000**	**AUCUN DTC INDIQUE AUTRE TEST PEUT ETRE NECESSAIRE.**	**—**
P0031	0031	CH S/02 CH1 (R1)	EC-3141
P0032	0032	CH S/02 CH1 (R1)	EC-3141
P0037	0037	CH S/O2 CH2 (R1)	EC-3146
P0038	0038	CH S/O2 CH2 (R1)	EC-3146
P0101	0101	CIRC CAP DEBIT AIR	EC-3152
P0102*3	0102	CIRC CAP DEBIT AIR	EC-3161
P0103*3	0103	CIRC CAP DEBIT AIR	EC-3161
P0112*3	0112	CIRC CAP TEMPERATURE D'AIR D'ADMISSION	EC-3170
P0113*3	0113	CIRC CAP TEMPERATURE D'AIR D'ADMISSION	EC-3170
P0117*3	0117	CIRCUIT CAP TEMP RE MOT	EC-3175
P0118*3	0118	CIRCUIT CAP TEMP RE MOT	EC-3175
P0121	0121	CIRC CAP PAPIL	EC-3181

Simpo PDF Merge and Split Unregistered Version - http://www.simpopdf.com

Index alphabétique et numérique des codes P de défaut

DTC*1		Eléments (terminologie des écrans CONSULT-II)	Page de référence
CONSULT-II GST*2	ECM*4		
P0122*3	0122	CIRC CAP PAPIL	EC-3193
P0123*3	0123	CIRC CAP PAPIL	EC-3193
P0127	0127	CAPTEUR DE TEMPERATURE D'AIR D'ADMISSION	EC-3204
P0132	0132	S/O2 CH1 (R1)	EC-3208
P0133	0133	S/O2 CH1 (R1)	EC-3215
P0134	0134	S/O2 CH1 (R1)	EC-3226
P0138	0138	S/O2 CH2 (R1)	EC-3233
P0139	0139	S/O2 CH2 (R1)	EC-3241
P0171	0171	SYS CARB-PVR-R1	EC-3252
P0172	0172	SYS CARB-RICH-R1	EC-3259
P0300	0300	RATE MULTICYLINDRE	EC-3266
P0301	0301	RATE CYLINDRE 1	EC-3266
P0302	0302	RATE CYLINDRE 2	EC-3266
P0303	0303	RATE CYLINDRE 3	EC-3266
P0304	0304	RATE CYLINDRE 4	EC-3266
P0327	0327	CIRC CAP DETON-R1	EC-3274
P0328	0328	CIRC CAP DETON-R1	EC-3274
P0335	0335	CIRCUIT CPV	EC-3280
P0340	0340	CIRC/CAP CMPS	EC-3286
P0420	0420	SYST CAT 3V-R1	EC-3295
P0444	0444	SOUP COM VOL PURG	EC-3300
P0445	0445	SOUP COM VOL PURG	EC-3300
P0500	0500	CIRC/CAP VIT VEH	EC-3308
P0505	0505	CIRC/ISC	EC-3314
P0510	0510	CIR/CON RALENTI	EC-3321
P0605	0605	ECM	EC-3330
P1143	1143	S/O2 CH1 (R1)	EC-3332
P1144	1144	S/O2 CH1 (R1)	EC-3340
P1146	1146	S/O2 CH2 (R1)	EC-3348
P1147	1147	S/O2 CH2 (R1)	EC-3359
P1217	1217	SURCHAUFFE	EC-3370
P1336	1336	CAPTEUR CPV (COG)	EC-3375
P1610 - P1615	1610 - 1615	NATS DEFAUT	Section EL
P1706	1706	CIR CON NEUTRE	EC-3381

*1 : Numéro de code de défaut de 1er parcours identique au numéro de code de défaut.
*2 : Ces numéros sont prescrits par ISO 15031-6.
*3 : Lorsque le mode de sécurité est activé, le MI s'allume.
*4 : En mode d'essai de diagnostic (Résultats de l'autodiagnostic), ces numéros sont contrôlés par NISSAN.

Simpo PDF Merge and Split Unregistered Version - http://www.simpopdf.com

"COUSSIN GONFLABLE" (AIR BAG) et "PRETENSIONNEUR DE CEINTURE DE SECURITE" du (SRS)"

NEEC0002

Utilisé conjointement avec une ceinture de sécurité, les systèmes de retenue supplémentaire tels que le "COUSSIN GONFLABLE" et le "PRETENSIONNEUR DE CEINTURE DE SECURITE" permettent de réduire les risques de blessures graves subies par le conducteur et le passager avant dans une collision frontale. La composition du système SRS disponible sur la NISSAN MODELE D22 se présente comme suit (la composition varie selon la destination et l'équipement optionnel.) :
Module de coussin gonflable côté chauffeur (situé dans le moyeu du volant), module de coussin gonflable côté passager avant (sur le tableau de bord du côté passager), prétensionneurs de ceinture de sécurité, boîtier de capteurs de diagnostic, témoin d'avertissement, faisceau de câblage et câble spiralé.
Les informations nécessaires à l'entretien sans danger du système se trouvent à la **section RS** de ce Manuel de Réparation.

ATTENTION :

- **Pour ne pas affecter le fonctionnement du SRS, ce qui augmenterait les risques de blessures graves ou mortelles en cas de collision entraînant le déploiement du coussin gonflable, toutes les opérations d'entretien doivent être effectuées par un concessionnaire NISSAN agréé.**
- **Un entretien inadapté, y compris la dépose et la repose incorrectes du système SRS, peut être à l'origine de blessures physiques causées par le déclenchement intempestif du système. Pour la dépose du câble spiralé et du module d'airbag, se reporter à la section RS.**
- **Ne pas utiliser d'équipement d'essai électrique sur les circuits connexes au SRS, sauf instructions contraires données dans ce manuel de réparation. Le faisceau de câblage du SRS peut être identifié à l'aide d'un connecteur de faisceau jaune.**

Précautions pour le système de diagnostic de bord (OBD) du moteur

NEEC0003

Le boîtier ECM est doté d'un système de diagnostic de bord. Il déclenche l'allumage du témoin de défaut (MI) pour avertir le conducteur d'un dysfonctionnement responsable d'une détérioration de la qualité des gaz d'échappement.

ATTENTION :

- **Veiller à mettre le contact d'allumage sur OFF et à déconnecter la borne négative de la batterie avant de réaliser toute opération de réparation ou d'inspection. La mise en court-circuit ou circuit ouvert des contacts, capteurs, électrovannes, etc. entraîne l'allumage du témoin de défaut (MI).**
- **Veiller à brancher et verrouiller soigneusement les connecteurs après l'opération. Un circuit ouvert dû à un connecteur desserré (déverrouillé) active le témoin lumineux MI. (s'assurer que le connecteur soit exempt d'eau, de graisse, de saleté, de bornes tordues, etc.)**
- **Il est possible que certains systèmes et composants, notamment ceux liés au diagnostic de bord (OBD), utilisent des connecteurs électriques d'un nouveau type, à verrouillage coulissant.**
  Pour leur description et la marche à suivre pour les débrancher, se reporter à la section EL, "CONNECTEUR DE FAISCEAU".
- **Veiller à brancher et verrouiller soigneusement les connecteurs après l'opération. Le frottement d'un faisceau sur un support, par exemple, risque de causer l'allumage du témoin de défaut (MI), suite à l'apparition d'un court-circuit.**
- **Veiller à connecter soigneusement les tuyaux en caoutchouc après l'opération. Un tuyau en caoutchouc mal raccordé entraîne un défaut de fonctionnement du système d'injection de carburant, ou autre, qui active le témoin de défaut MI.**
- **Après réparation, veiller à effacer les codes de défaut de l'ECM avant de restituer le véhicule à son propriétaire.**

Simpo PDF Merge and Split Unregistered Version - http://www.simpopdf.com

Alimentation et système antipollution

NEEC0004

ECM

- Ne pas démonter l'ECM.
- Si une borne de la batterie est débranchée, la mémoire revient à la valeur de l'ECM.
  L'ECM lancera alors un autocontrôle à sa valeur initiale. Le fonctionnement du moteur peut varier légèrement lorsque la borne est déconnectée. Ceci ne signifie toutefois pas qu'il y ait un problème. Ne pas remplacer les pièces en cas de variation mineure.

EQUIPEMENT SANS CABLE

- Lors de l'installation d'une radio CB, ou d'un téléphone portable, veiller à respecter les points suivants pour éviter de perturber les systèmes de commande électroniques.

1) Eloigner l'antenne le plus possible des boîtiers de contrôle électroniques.
2) Eloigner le câble d'alimentation de l'antenne de plus de 20 cm des faisceaux électriques des boîtiers électroniques.
   Veiller à ce que cette ligne ne soit jamais parallèle au faisceau sur une grande longueur.
3) Régler l'antenne et la ligne d'alimentation de manière à pouvoir maintenir au plus petit niveau le taux d'onde stationnaire.
4) Veiller à mettre l'autoradio à la masse par rapport à la carrosserie.

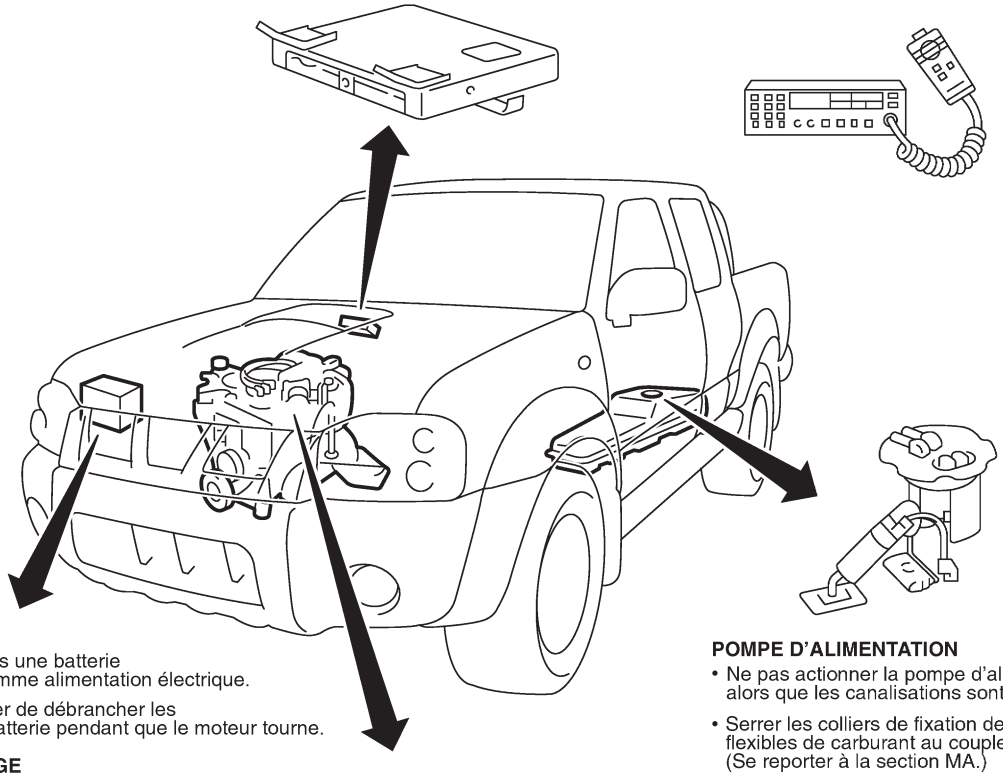

BATTERIE

- Utiliser toujours une batterie de 12 volts comme alimentation électrique.
- Ne pas essayer de débrancher les câbles de la batterie pendant que le moteur tourne.

AU DEMARRAGE

- Ne pas enfoncer la pédale d'accélérateur lors du démarrage.
- Immédiatement après le démarrage, ne pas emballer le moteur inutilement.
- Ne pas emballer le moteur avant de couper le contact.

MANIPULATION DU FAISCEAU D'ECM

- Manipuler le débitmètre d'air avec soin pour éviter de le détériorer.
- Ne pas démonter le débitmètre d'air.
- Ne pas nettoyer le débitmètre d'air avec un détergent.
- Ne pas démonter la soupape IACV-AAC.
- Une fuite, même légère, dans le système d'admission d'air peut causer de sérieux problèmes.
- Ne pas cogner ou secouer le capteur de position d'arbre à cames ou le capteur de position de vilebrequin (OBD).



POMPE D'ALIMENTATION

- Ne pas actionner la pompe d'alimentation alors que les canalisations sont vides.
- Serrer les colliers de fixation des conduites flexibles de carburant au couple spécifié. (Se reporter à la section MA.)

MANIPULATION DU FAISCEAU D'ECM

- Brancher correctement les connecteurs de faisceau d'ECM.
  Une mauvaise connexion peut engendrer de très hautes tensions (afflux) sur la bobine et sur le condensateur, susceptibles par conséquent d'endommager les CI (circuits intégrés).
- Eloigner le faisceau d'ECM de 10 cm au moins des faisceaux électriques adjacents afin d'éviter toute détérioration du système de commande du moteur suite à la réception de parasites externes, un mauvais fonctionnement des CI (circuits intégrés), etc.
- Garder les pièces du système de commande du moteur et les faisceaux secs.
- Avant la dépose de toute pièce, couper le contact et déconnecter le câble de masse de la batterie.

SEC304D

Simpo PDF Merge and Split Unregistered Version - http://www.simpopdf.com

Précautions

NEEC0005

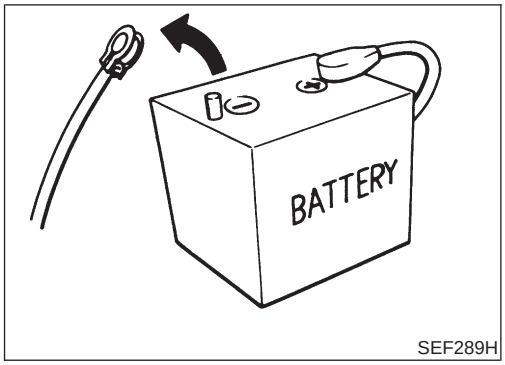

SEF289H

- **Avant de brancher ou de débrancher le connecteur du faisceau de l'ECM, couper le contact et débrancher la borne négative de la batterie. Dans le cas contraire, l'ECM peut être endommagé car la tension de la batterie est appliquée à l'ECM même si le contact d'allumage est coupé.**

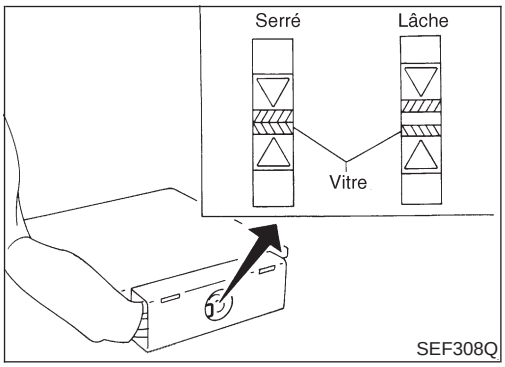

SEF308Q

- **Lors du branchement du connecteur de faisceau de l'ECM, serrer le boulon de fixation jusqu'à ce que l'espace entre les indicateurs oranges disparaisse.**
  : 3 - 5 N·m (0,3 - 0,5 kg-m)

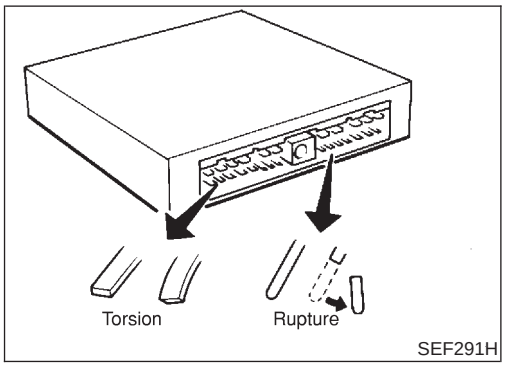

SEF291H

- **Lors du branchement ou du débranchement des connecteurs à broches de l'ECM, veiller à ne pas endommager (tordre ou casser) les bornes à broches.**
  Veiller à ce qu'aucune des bornes à broches de l'ECM ne soit pliée ou cassée au moment de rebrancher les connecteurs à broches.

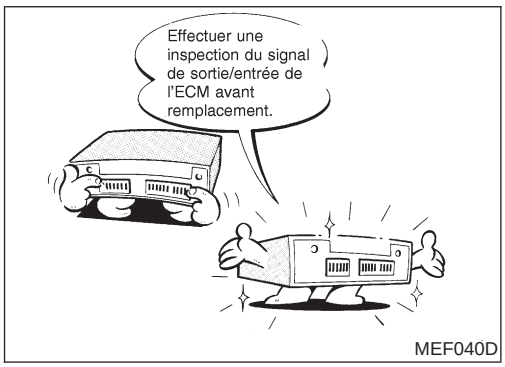

MEF040D

- **Avant de reposer l'ECM, effectuer une inspection des bornes et des valeurs de référence et s'assurer que l'ECM fonctionne correctement. Consulter la page EC-3118.**

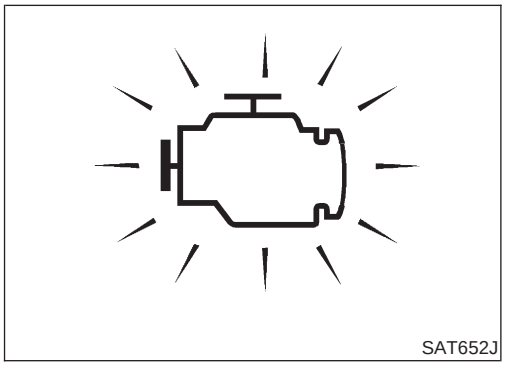
SAT652J

- **Après avoir effectué chaque DIAGNOSTIC DES DEFAUTS, effectuer une ''Procédure de confirmation de DTC (code de défaut de diagnostic)'' ou une ''Vérification du fonctionnement général''.**
  Le DTC ne devrait pas s'afficher dans la ''Procédure de confirmation de DTC'' si la réparation est terminée. La ''Vérification du fonctionnement général'' devrait produire un bon résultat si la réparation a été effectuée.

Simpo PDF Merge and Split Unregistered Version - http://www.simpopdf.com

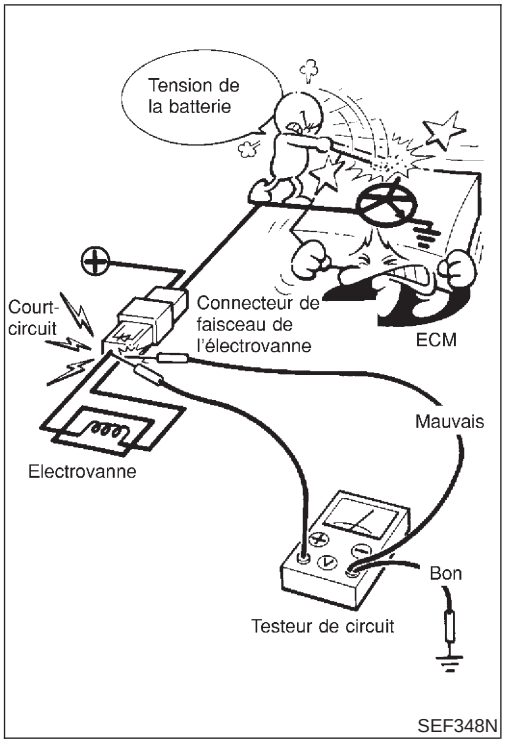

- **Lors de la mesure des signaux de l'ECM à l'aide d'un testeur de circuit, ne jamais laisser les deux sondes de testeur se toucher.**
  La mise en contact accidentelle de sondes entraîne un court-circuit et endommage le transistor d'alimentation de l'ECM.
- **Ne pas utiliser de bornes de masse de l'ECM lors de la mesure de la tension d'entrée/de sortie. En agissant de la sorte, il est possible d'endommager le transistor de l'ECM. Utiliser une masse autre que les bornes de l'ECM, comme par exemple la prise de terre.**

Schémas de câblage et diagnostic des défauts

NEEC0006

Pour l'étude des schémas de câblage, se reporter aux sections suivantes :

- section GI, ''COMMENT LIRE LES SCHEMAS DE CABLAGE''.
- section EL, ''DISPOSITION DE L'ALIMENTATION ELECTRIQUE''.

Pour le diagnostic des défauts, se reporter aux sections suivantes :

- section GI, ''Comment suivre des groupes de tests dans les diagnostics des défauts''.
- section GI, ''COMMENT EFFECTUER UN DIAGNOSTIC EFFICACE EN CAS D'INCIDENT ELECTRIQUE''

Simpo PDF Merge and Split Unregistered Version - http://www.simpopdf.com

Outillage spécial

NEEC0007

Les formes exactes des outils Kent-Moore peuvent être différents de ceux illustrés ci-contre.

Numéro de l'outil (N° Kent-Moore) Nom de l'outil	Description	
KV10117100 (J36471-A) Clé pour sonde à oxygène chauffé	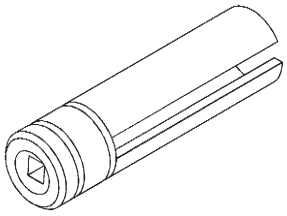 NT379	Serrer ou desserrer la sonde à oxygène chauffé 1 avec un écrou hexagonal de 22 mm.
KV10114400 (J-38365) Clé pour sonde à oxygène chauffé	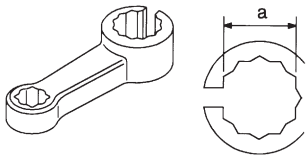 NT636	Serrer et desserrer la sonde à oxygène chauffé 2 **a : 22 mm**
(J-45178) Connecteur d'essai TPS	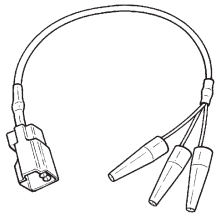 LEC120A	Utilisé pour tester le capteur de position du papillon

Outillage en vente dans le commerce

NEEC0008

Nom de l'outil	Description	
Adaptateur de bouchon de remplissage de carburant	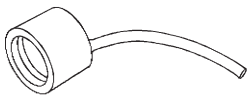 NT653	Contrôler la pression d'ouverture de la soupape de décharge de dépression du réservoir à carburant
Clé de douille	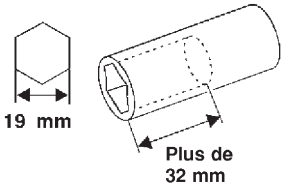 NT705	Retirer et installer le capteur de liquide de refroidissement du moteur

Simpo PDF Merge and Split Unregistered Version - http://www.simpopdf.com

Outillage en vente dans le commerce

Nom de l'outil	Description	
Outil de nettoyage pour filetage de sonde à oxygène à savoir : (J-43897-18) (J-43897-12)	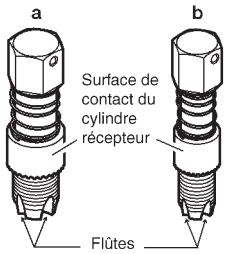 AEM488	Conditionner à nouveau le filetage du système d'échappement avant de reposer une nouvelle sonde à oxygène. Utiliser avec lubrifiant antigrippant montré dans ''Outils en vente dans le commerce''. a : J-43897-18 diamètre de 18 mm, pour sonde à oxygène en zirconium b : J-43897-12 diamètre de 12 mm, pour sonde à oxygène en dioxyde de titane
Lubrifiant antigrippant à savoir : (Permatex™ 133AR ou équivalent conforme aux spécifications MI MIL-A-907)	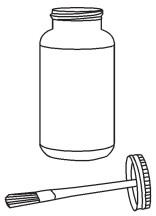 AEM489	Outil lubrifiant et nettoyant du filetage de sonde à oxygène lors de la remise en état du filetage du système d'échappement.

Simpo PDF Merge and Split Unregistered Version - http://www.simpopdf.com

Emplacement des composants du système de gestion moteur

NEEC0009

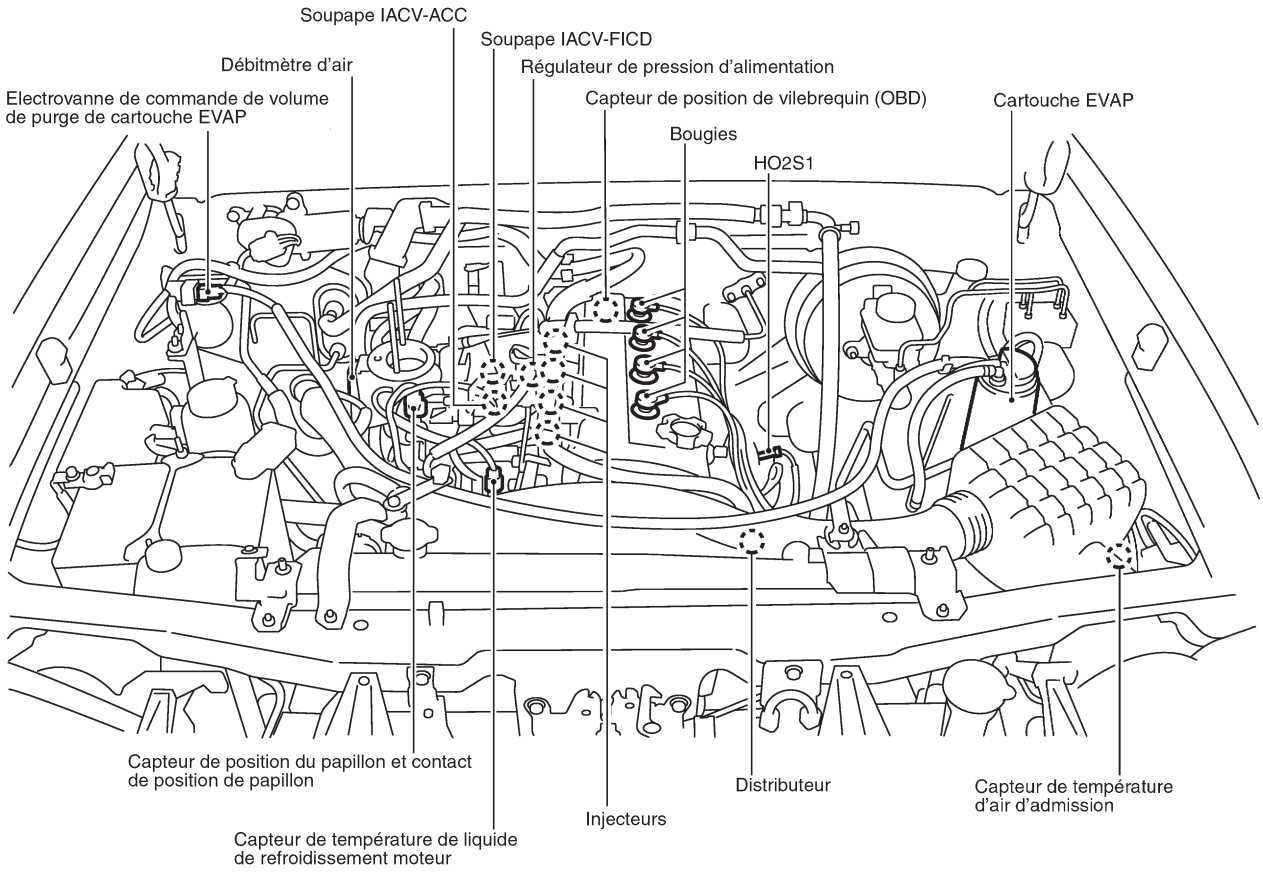

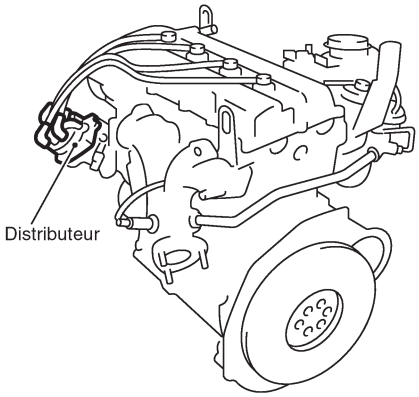

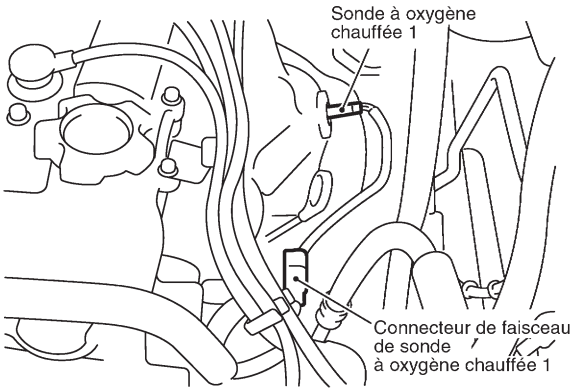

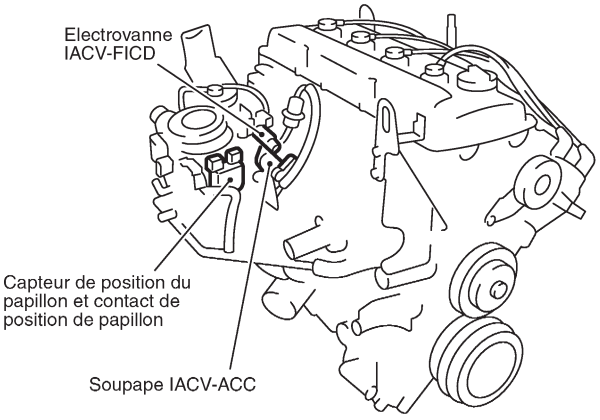

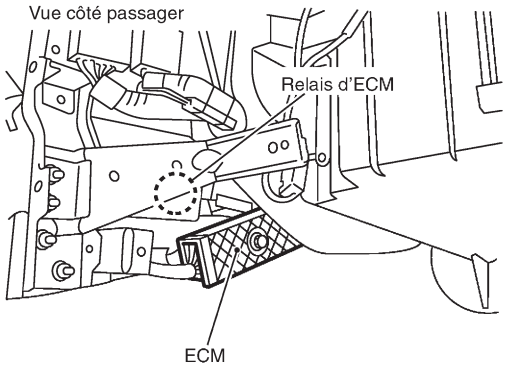

SEC196D

Simpo PDF Merge and Split Unregistered Version - http://www.simpopdf.com

Emplacement des composants du système de gestion moteur

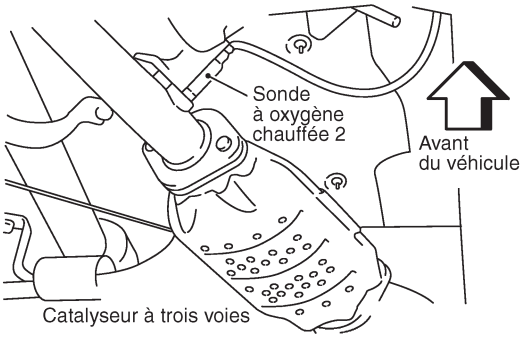

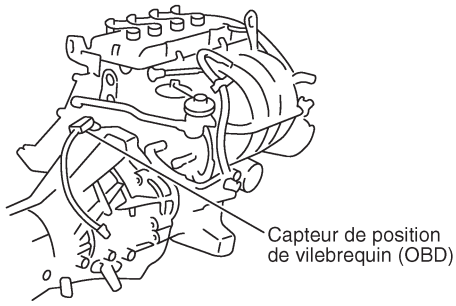

SEC302D

Simpo PDF Merge and Split Unregistered Version - http://www.simpopdf.com

Schéma du circuit

NEEC0010

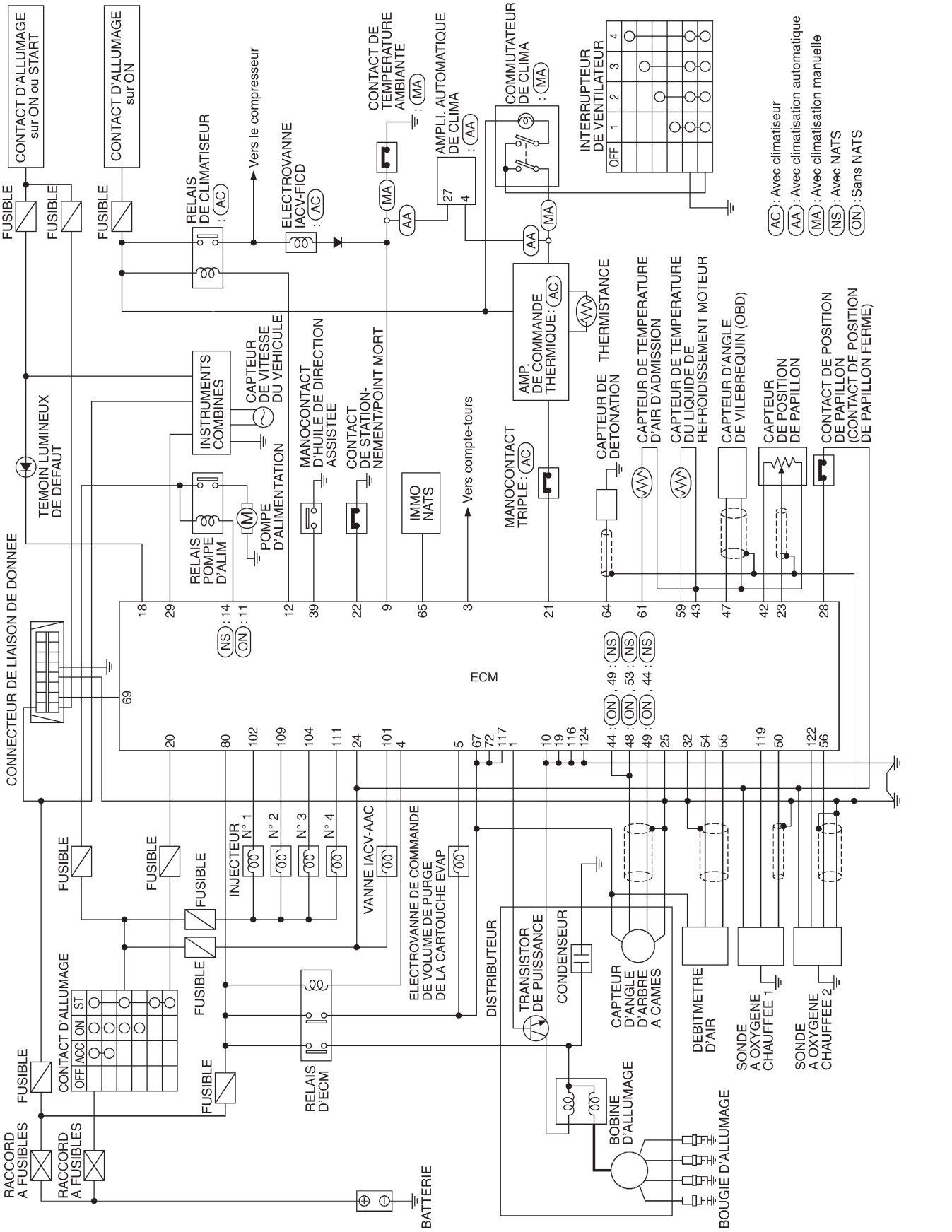

GEC232A

Simpo PDF Merge and Split Unregistered Version - http://www.simpopdf.com

Schéma du système

NEEC0011

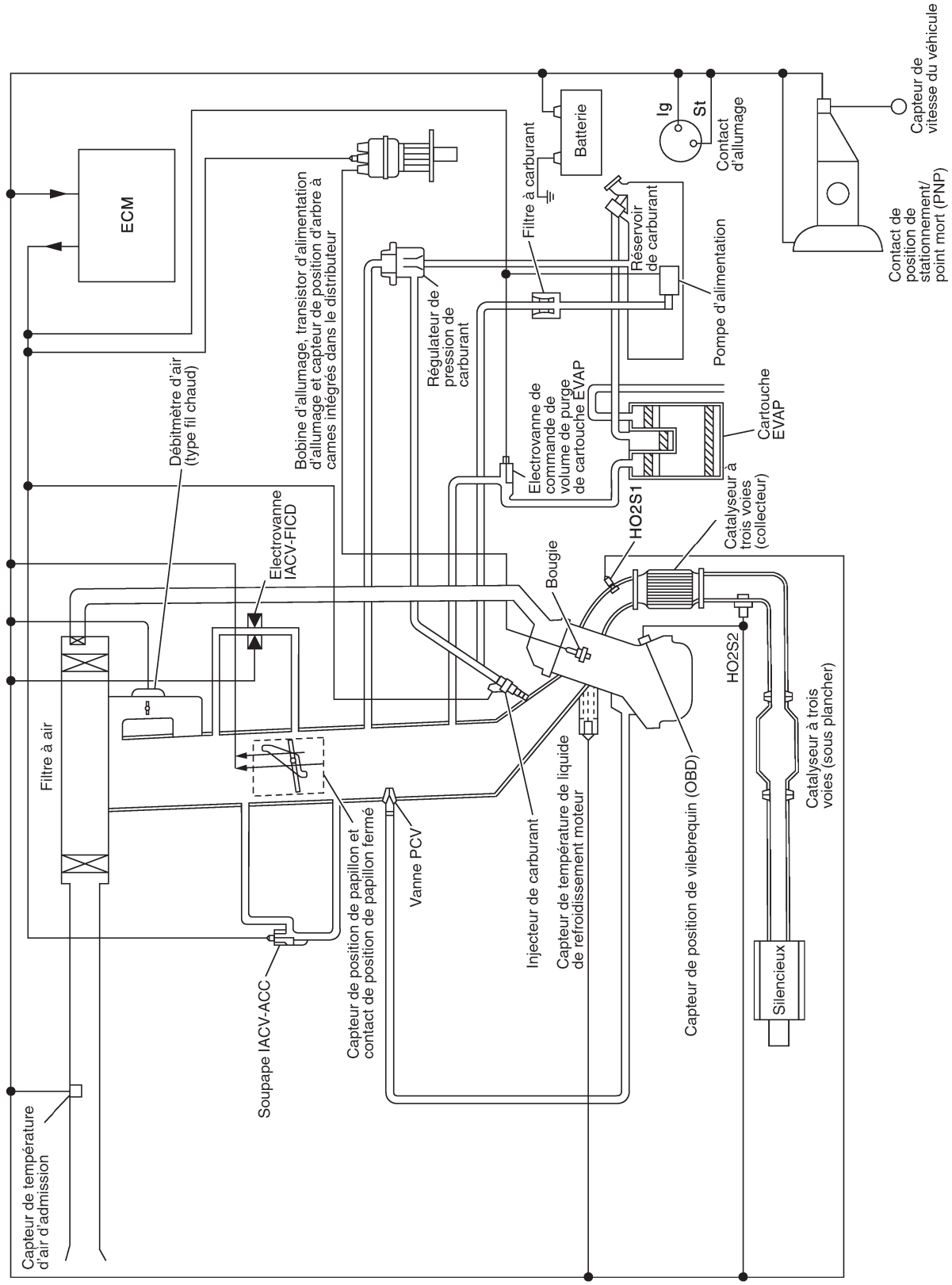

SEC270D

Simpo PDF Merge and Split Unregistered Version - http://www.simpopdf.com

Schéma des flexibles de dépression

NEEC0012

Se reporter au ‘‘Schéma du système’’ à la page EC-3022 pour le système de commande de dépression.

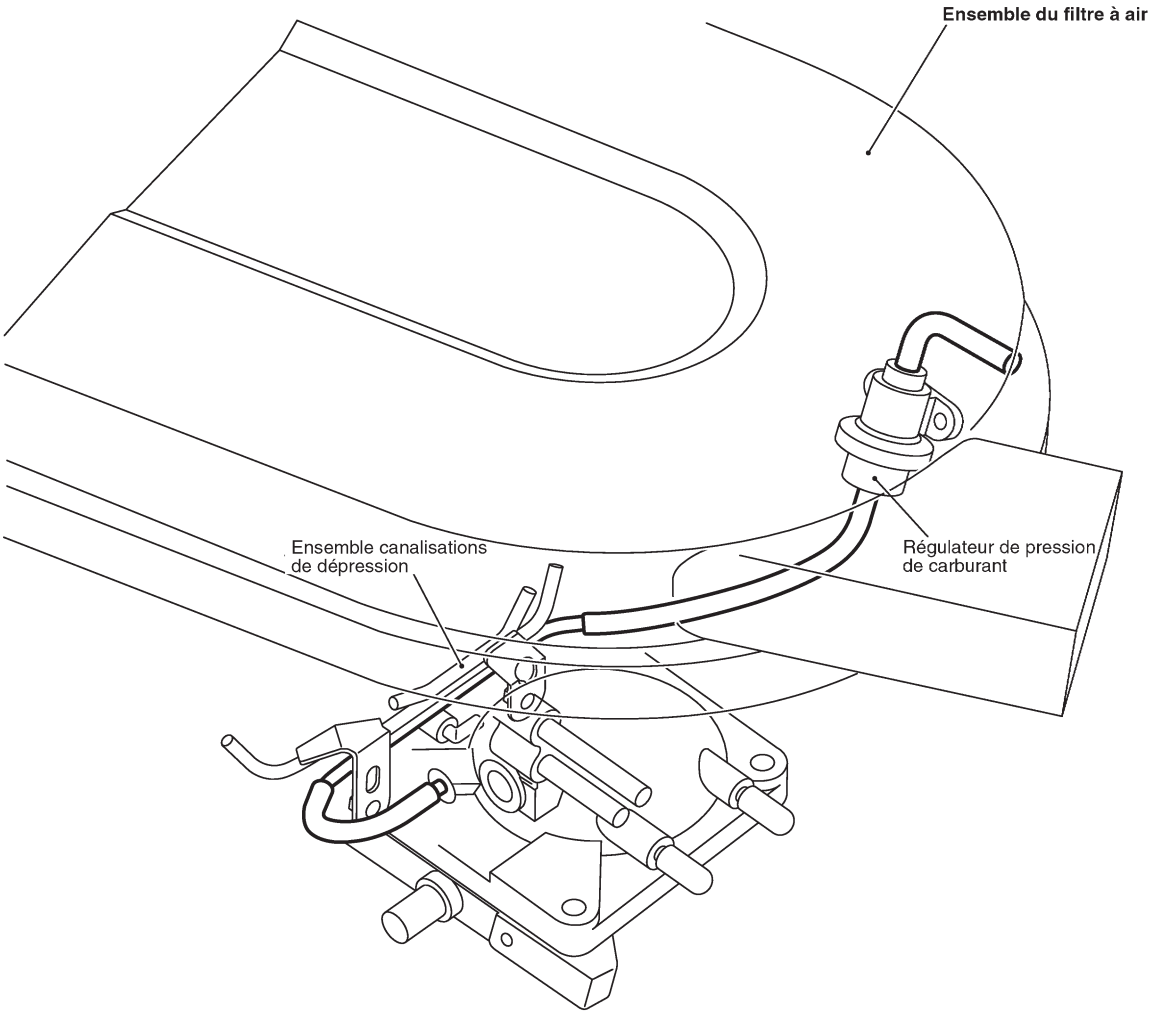

REMARQUE:

L’utilisation d’eau savonneuse ou de solvant est à proscrire pour l’installation des durites de dépression et de purge.

SEC195D

Simpo PDF Merge and Split Unregistered Version - http://www.simpopdf.com

Tableau du système

Tableau du système

NEEC0013

Entrée (capteur)	Fonction de l'ECM	Sortie (actionneur)
● Capteur d'angle d'arbre à cames ● Débitmètre d'air ● Capteur de température du liquide de refroidissement du moteur ● Sonde à oxygène chauffé 1 ● Contact d'allumage ● Capteur d'ouverture de papillon ● Contact de stationnement/point mort (PNP) ● Interrupteur de climatiseur ● Capteur de détonation ● Capteur de position du vilebrequin (OBD) ● Tension de la batterie ● Manocontact d'huile de direction assistée ● Capteur de vitesse du véhicule ● Capteur de température d'air d'admission ● Sonde à oxygène chauffé 2*1 ● Contact de position de papillon fermé *2	Commande de l'injection de carburant et de la richesse de mélange	Injecteurs
	Système d'allumage du distributeur	Transistor d'alimentation
	Commande de régime de ralenti	Soupape IACV-AAC et électro-vanne IACV-FICD
	Commande de pompe à carburant	Relais de pompe d'alimentation
	Contrôle de sonde à oxygène chauffé 1 et système de diagnostic de bord	Témoin de défaut (sur le tableau de bord)
	Commande de chauffage des sonde à oxygène chauffé 1, 2	Chauffage de la sonde à oxygène chauffé
	Commande de volume de purge de cartouche EVAP	Electrovanne de commande de volume de purge de cartouche EVAP
	Commande de coupure de climatiseur	Relais de climatiseur

*1: Dans les conditions normales, ce capteur ne sert pas au contrôle du moteur.

*2: Ce contact fonctionne en lieu et place du capteur de position du papillon pour la commande des composants EVAP dans le cas d'un dysfonctionnement du capteur.

Simpo PDF Merge and Split Unregistered Version - http://www.simpopdf.com

Système d'injection multipoint (MFI)

DESCRIPTION

NEEC0014

Tableau des signaux d'entrée/de sortie

NEEC0014S01

Capteur	Signal d'entrée à l'ECM	Fonctionnement de l'ECM	Actionneur
Capteur d'angle d'arbre à cames	Régime du moteur et position de piston	Commande de l'injection de carburant et de la richesse de mélange	Injecteur
Débitmètre d'air	Quantité d'air d'admission		
Capteur de température du liquide de refroidissement du moteur	Température du liquide de refroidissement du moteur		
Sonde à oxygène chauffé 1	Densité d'oxygène dans les gaz d'échappement		
Capteur d'ouverture de papillon	Position de papillon Soupape de papillon en position de ralenti		
Contact de stationnement/point mort (PNP)	Position de rapport		
Capteur de vitesse du véhicule	Vitesse du véhicule		
Contact d'allumage	Signal de démarrage		
Interrupteur de climatiseur	Fonctionnement du climatiseur		
Capteur de détonation	Condition de détonation du moteur		
Batterie	Tension de la batterie		
Manocontact d'huile de direction assistée	Fonctionnement de la direction assistée		
Sonde à oxygène chauffé 2*	Densité d'oxygène dans les gaz d'échappement		

* Dans des conditions normales, ce capteur ne sert pas à la gestion moteur.

Principe de base du système d'injection multipoint

NEEC0014S02

La quantité de carburant injectée depuis l'injecteur de carburant est déterminée par l'ECM. L'ECM commande la durée d'ouverture de la soupape (durée d'impulsion d'injection). La quantité de carburant injectée est une valeur programmée dans la mémoire de l'ECM. Cette valeur est prédéterminée par les conditions de marche du moteur. Ces conditions sont déterminées par les signaux d'entrée (pour le régime-moteur et l'air d'admission) en provenance du capteur d'angle d'arbre à cames et du débitmètre d'air.

Compensation des variations des valeurs d'injection de carburant

NEEC0014S03

En outre, la quantité de carburant injectée est compensée pour améliorer les performances du moteur dans les différentes conditions de fonctionnement énumérées ci-après.

<Augmentation de la quantité de carburant>

- Pendant la période d'échauffement
- Au démarrage
- Pendant l'accélération
- Lorsque le moteur est chaud
- Fonctionnement à forte charge, à grande vitesse

<Diminution de la quantité de carburant>

- Pendant la décélération
- Lorsque le moteur tourne à haut régime

Simpo PDF Merge and Split Unregistered Version - http://www.simpopdf.com

Commande de régulation automatique de la richesse de mélange (commande en boucle fermée)

NEEC0014S04

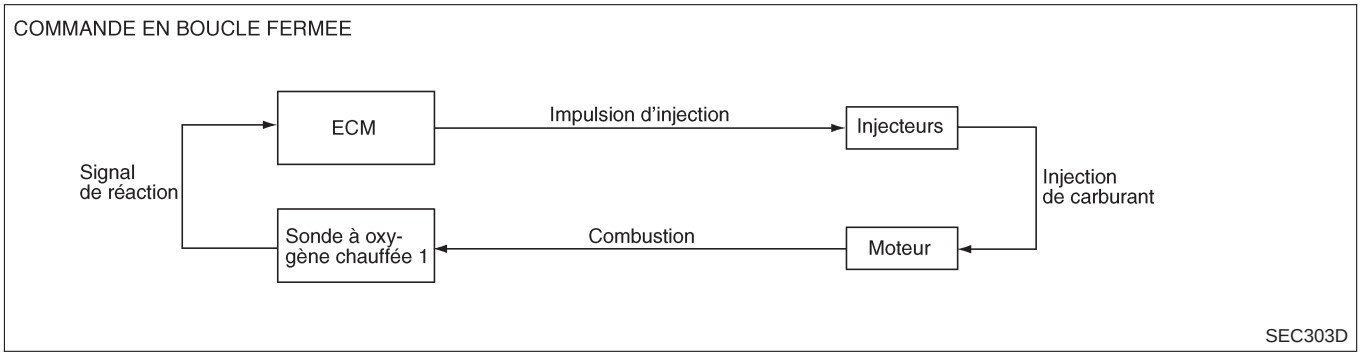

Le système de régulation automatique de la richesse de mélange fournit le mélange optimal d'air et de carburant pour améliorer la conduite et le contrôle antipollution. Le catalyseur à trois voies peut mieux réduire les émissions de CO, HC et NOx. Ce système utilise une sonde à oxygène chauffé 1 dans le collecteur d'échappement pour contrôler si le fonctionnement du moteur est riche ou pauvre. L'ECM règle la durée d'impulsion de l'injection en fonction du signal de tension de la sonde. Pour de plus amples informations sur la sonde à oxygène chauffé 1, se reporter à la page EC-3226. La richesse de mélange est ainsi maintenue dans des proportions stoechiométriques (mélange de carburant et d'air idéal).
Cette étape est désignée comme étant la condition de commande en boucle fermée.
La sonde à oxygène chauffé 2 est située en aval du catalyseur à trois voies. Même si les caractéristiques de commutation de la sonde à oxygène chauffé 1 sont modifiées, le rapport air-carburant est contrôlé de manière stœchiométrique par le signal de la sonde à oxygène chauffé 2.

Commande en boucle ouverte

NEEC0014S05

La condition de commande en boucle ouverte se rapporte à la détection de l'une des conditions suivantes par l'ECM. La commande de régulation automatique s'interrompt afin de maintenir une combustion de carburant stabilisée.

- Décélération et accélération
- Fonctionnement à forte charge, à grande vitesse
- Dysfonctionnement de la sonde à oxygène chauffé 1 ou de son circuit
- Activation insuffisante de la sonde à oxygène chauffé 1 à basse température du liquide de refroidissement du moteur
- Température élevée du liquide de refroidissement du moteur
- Pendant la période d'échauffement
- Au démarrage

Commande d'auto-instruction de richesse du mélange

NEEC0014S06

Le système de commande de régulation automatique de la richesse de mélange contrôle le signal de richesse de mélange transmis par la sonde à oxygène chauffé 1. Ce signal de régulation est ensuite transmis à l'ECM. L'ECM règle la richesse de mélange de base le plus près possible de la richesse de mélange théorique. Cependant, la richesse de mélange de base n'est pas nécessairement réglée selon les normes d'origine. Les différences de construction (c.-à-d. le film chaud du débitmètre d'air) et les modifications des caractéristiques lors du fonctionnement (c.-à-d. le colmatage d'un injecteur) affectent directement la richesse de mélange.
En conséquence, ce système contrôle la différence entre la richesse de mélange réelle et la richesse de mélange idéale. Ceci est alors calculé en termes de ''durée d'impulsion d'injection'' pour compenser automatiquement la différence entre les deux richesses.
La ''correction de carburant'' désigne la valeur de compensation du signal de réponse par rapport à la durée d'injection de base. Cette correction peut être une compensation à court terme ou à long terme.
La ''correction de carburant de courte durée'' représente une compensation utilisée pour maintenir le mélange à sa valeur théorique. Le signal émis par la sonde à oxygène chauffé 1 indique si la richesse du mélange est ELEVEE ou FAIBLE par rapport à la valeur théorique. Il déclenche alors une réduction du volume de carburant si le mélange est riche, et un enrichissement s'il est pauvre.
La ''correction de carburant de longue durée'' représente une compensation entretenue pour corriger une dérive permanente de la correction de courte durée par rapport à la valeur centrale. Un tel écart peut se produire du fait de différences entre moteurs, de l'usure due au temps et de changements dans l'environnement d'utilisation.

Simpo PDF Merge and Split Unregistered Version - http://www.simpopdf.com

Avance à l'injection de carburant

NEEC0014S07

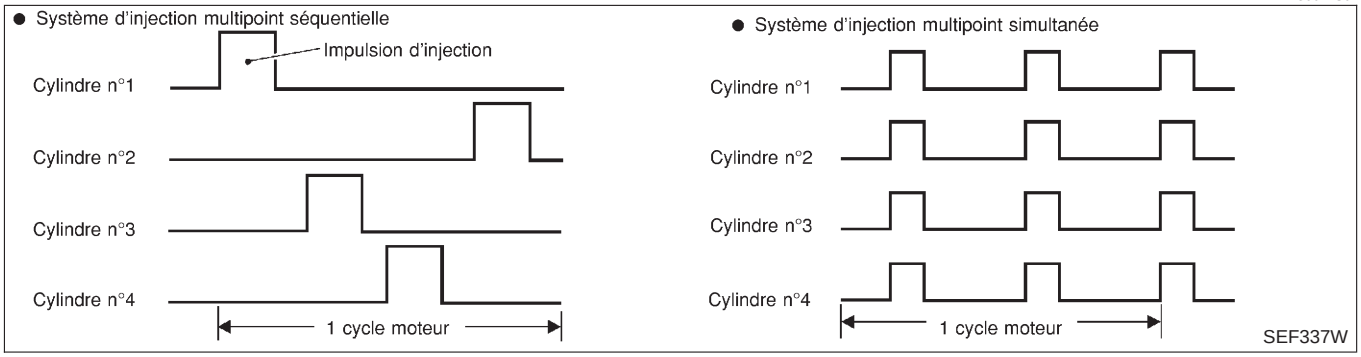

Deux types de système sont utilisés.

Système d'injection de carburant multipoint séquentielle

NEEC0014S0701

Le carburant est injecté dans chaque cylindre durant chaque cycle moteur, en fonction de l'ordre d'allumage. Ce système est utilisé lorsque le moteur tourne.

Système d'injection de carburant multipoint simultanée

NEEC0014S0702

Le carburant est injecté simultanément dans les quatre cylindres deux fois par cycle moteur. En d'autres termes, des signaux d'impulsion de même durée sont transmis simultanément par l'ECM.
Les quatre injecteurs reçoivent ainsi les signaux deux fois par cycle moteur.
Ce système est utilisé au démarrage et/ou lorsque le système de sécurité (CPU) est actif.

Coupure de l'alimentation en carburant

NEEC0014S08

L'alimentation de carburant à chaque cylindre est coupée lors de la décélération ou du surrégime.

Système d'allumage du distributeur (DI)

DESCRIPTION

NEEC0015

Tableau des signaux d'entrée/de sortie

NEEC0015S01

Capteur	Signal d'entrée à l'ECM	Fonctionnement de l'ECM	Actionneur
Capteur d'angle d'arbre à cames	Régime du moteur et position de piston	Commande du calage de l'allumage	Transistor d'alimentation
Débitmètre d'air	Quantité d'air d'admission		
Capteur de température du liquide de refroidissement du moteur	Température du liquide de refroidissement du moteur		
Capteur d'ouverture de papillon	Position de papillon Soupape de papillon en position de ralenti		
Capteur de vitesse du véhicule	Vitesse du véhicule		
Contact d'allumage	Signal de démarrage		
Capteur de détonation	Détonation du moteur		
Contact de stationnement/point mort (PNP)	Position de rapport		
Batterie	Tension de la batterie		

Simpo PDF Merge and Split Unregistered Version - http://www.simpopdf.com

Système d'allumage du distributeur (DI)

Description du système

NEEC0015S02

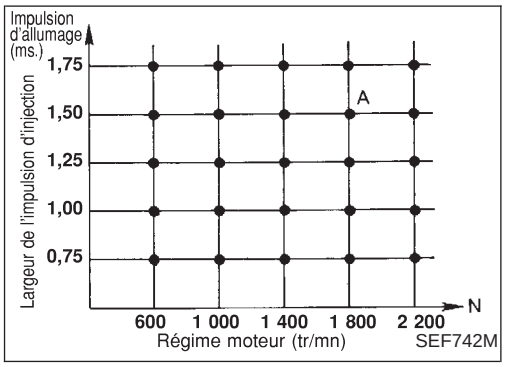

Le calage de l'allumage est contrôlé par l'ECM de manière à maintenir le meilleur mélange air-carburant dans toutes les conditions de marche du moteur. Les données de calage de l'allumage sont mémorisées dans l'ECM. Ces données sont représentées sur le schéma ci-dessus.
L'ECM reçoit un certain nombre d'informations telles la durée des impulsions d'injection ainsi que les signaux transmis par le capteur de position d'arbre à cames. A partir de ces informations, des signaux d'allumage sont transmis au transistor d'alimentation.
par exemple, N : 1,800 tr/mn, Impulsion d'allumage : 1,50 ms
A°APMH
Dans les circonstances suivantes, l'ECM révise le calage de l'allumage en fonction des autres informations qui se trouvent dans sa mémoire.

- Au démarrage
- Pendant la période d'échauffement
- Au ralenti
- A la tension de la batterie faible
- Pendant l'accélération

Le système de retardement du capteur de détonation n'est conçu que pour fonctionner en cas d'urgence. Le calage de l'allumage de base est programmé dans la zone anti-détonation, à condition que le carburant recommandé soit utilisé par temps sec. Le système de retard ne fonctionne pas dans des conditions de conduite normale.
En cas de détonation du moteur, le capteur de détonation contrôle les circonstances. Le signal est envoyé à l'ECM. L'ECM retarde le calage de l'allumage pour éliminer la circonstance ayant causé la détonation.

Simpo PDF Merge and Split Unregistered Version - http://www.simpopdf.com

Commande de coupure du climatiseur

DESCRIPTION

=NEEC0016

Tableau des signaux d'entrée/ sortie

NEEC0016S01

Capteur	Signal d'entrée à l'ECM	Fonctionnement de l'ECM	Actionneur
Interrupteur de climatiseur	Signal ''ON' du climatiseur	Commande de coupure du climatiseur	Relais de climatiseur
Capteur d'ouverture de papillon	Angle d'ouverture du papillon		
Capteur d'angle d'arbre à cames	Régime-moteur		
Capteur de température du liquide de refroidissement du moteur	Température du liquide de refroidissement du moteur		
Contact d'allumage	Signal de démarrage		
Capteur de vitesse du véhicule	Vitesse du véhicule		
Manocontact d'huile de direction assistée	Fonctionnement de la direction assistée		

Description du système

NEEC0016S02

Ce système permet d'améliorer le fonctionnement du moteur pendant le fonctionnement du climatiseur.
Le climatiseur s'éteint dans les conditions suivantes.

- Pédale d'accélérateur enfoncée au maximum.
- A l'actionnement du démarreur.
- Lorsque le liquide de refroidissement atteint une température excessive.
- Lors de l'utilisation de la direction assistée et du climatiseur à faible régime-moteur ou en relâchant complètement l'accélérateur.
- Lorsque le régime-moteur est excessivement bas.

Commande de coupure de l'alimentation en carburant (à vide et à régime-moteur élevé)

DESCRIPTION

NEEC0017

Tableau des signaux d'entrée/de sortie

NEEC0017S01

Capteur	Signal d'entrée à l'ECM	Fonctionnement de l'ECM	Actionneur
Capteur de vitesse du véhicule	Vitesse du véhicule	Commande de coupure de l'alimentation en carburant	Injecteurs
Contact de stationnement/point mort (PNP)	Position de point mort		
Capteur d'ouverture de papillon	Position de papillon		
Capteur d'angle d'arbre à cames	Régime-moteur		

Si le régime moteur dépasse 3 000 tr/mn à vide (par exemple, au point mort et régime supérieur à 3 000 tr/mn), l'alimentation en carburant est coupée au bout de quelques instants. Le moment exact de la coupure d'alimentation varie selon le régime-moteur.
La coupure d'alimentation est maintenue jusqu'à ce que le régime-moteur retombe à 1 500 tr/mn, point auquel la coupure d'alimentation est annulée.

REMARQUE :
Cette fonction diffère de la commande de décélération décrite au chapitre ''Système d'injection multipoint (MFI)'' à la page EC-3025.

Simpo PDF Merge and Split Unregistered Version - http://www.simpopdf.com

Système de contrôle des évaporations de carburant

DESCRIPTION

=NEEC0018

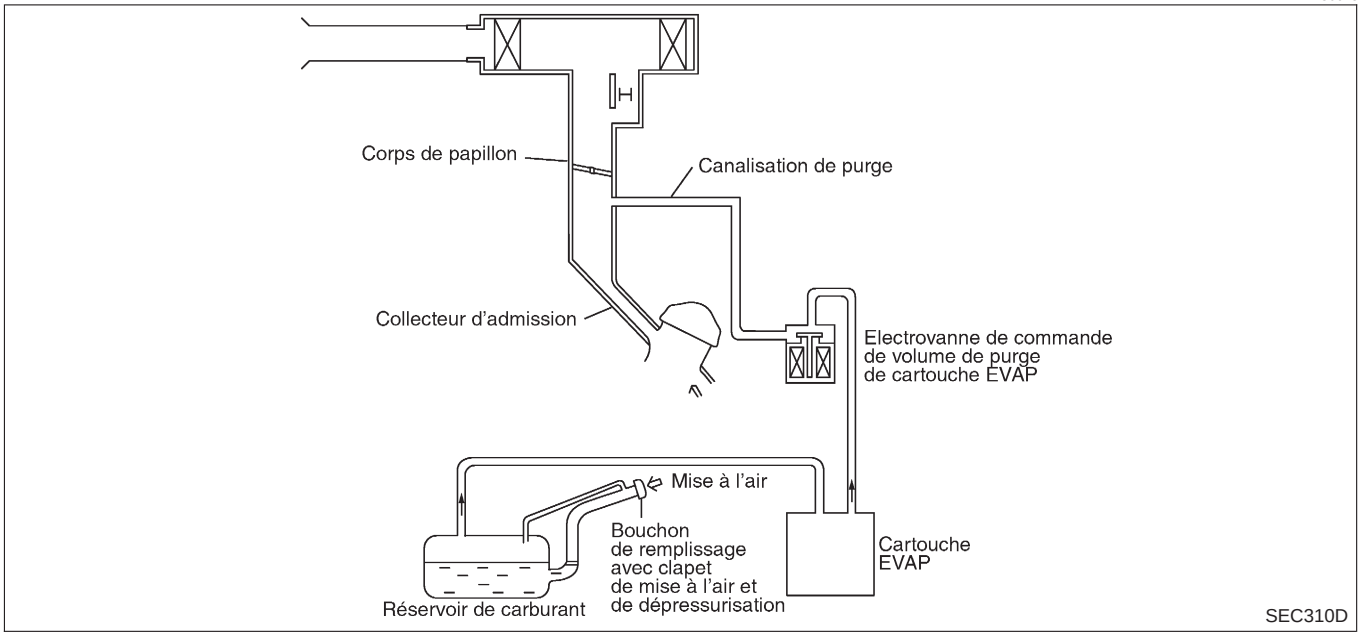

Le système de contrôle des évaporations de carburant est utilisé pour réduire les vapeurs d'hydrocarbure émises dans l'atmosphère par le système d'alimentation. Les vapeurs d'hydrocarbures sont réduites grâce à l'activation des charbons qui se trouvent dans la cartouche EVAP.
Les vapeurs de carburant issues du réservoir étanche sont transférées dans la cartouche EVAP, laquelle contient des charbons actifs, et y sont emmagasinées lorsque le moteur est arrêté ou lorsque le plein du réservoir est fait.
Lorsque le moteur tourne, les vapeurs emmagasinées dans la cartouche EVAP sont purgées par l'air et passent dans le collecteur d'admission via la canalisation sous l'effet de la dépression.
L'électrovanne de commande de volume de purge de cartouche EVAP est contrôlée par l'ECM. Quand le moteur tourne, la quantité de vapeur contrôlée par l'électrovanne de commande de volume de purge de cartouche EVAP est régulée proportionnellement à l'augmentation du débit d'air.
L'électrovanne de commande de volume de purge de cartouche EVAP ferme également la canalisation de purge à la décélération et au ralenti.

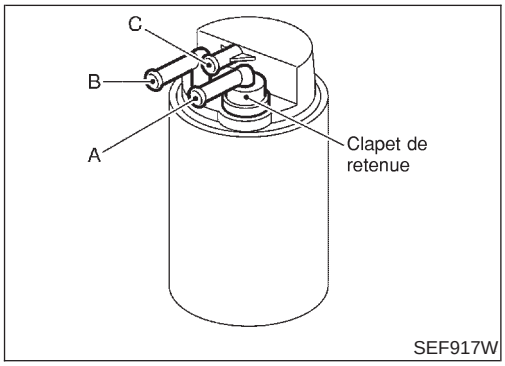

INSPECTION

NEEC0019

Cartouche EVAP

NEEC0019S01

Contrôler la cartouche EVAP comme suit :

1. Bloquer l'orifice B. Souffler par l'orifice A et vérifier que l'air passe sans encombre par l'orifice C avec la résistance du clapet de retenue.
2. Bloquer l'orifice A. Souffler par l'orifice B et vérifier que l'air passe sans encombre par l'orifice C.

Simpo PDF Merge and Split Unregistered Version - http://www.simpopdf.com

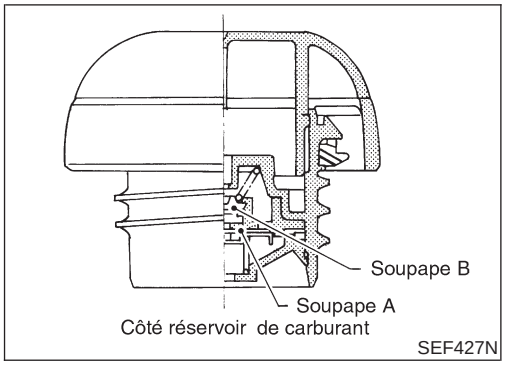

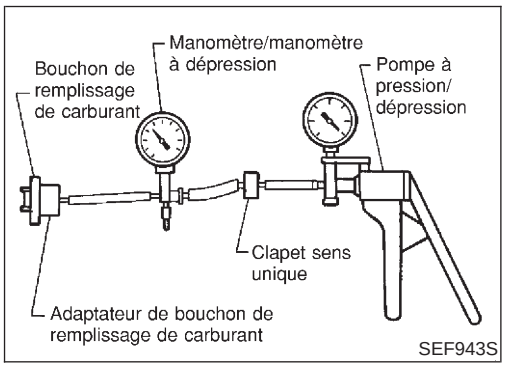

Soupape de décharge de dépression du réservoir à carburant (intégrée au bouchon de remplissage de carburant)

NEEC0019S03

1. Nettoyer soigneusement le logement de la soupape.
2. Contrôler la pression d'ouverture de la soupape et la dépression.

   Pression :

   16,0 - 20,0 kPa (0,16 - 0,20 bar, 0,163 - 0,204 kg/cm^2)

   Dépression :

   -6,0 à -3,5 kPa (-0,06 à -0,35 bar, -0,061 à -0,036 kg/cm^2)
3. Si les données sont hors spécification, remplacer le bouchon de remplissage de carburant comme un ensemble.

ATTENTION :

Utiliser uniquement un bouchon de remplissage du réservoir à carburant NISSAN d'origine comme pièce de rechange. Si un bouchon de remplissage du réservoir à carburant incorrect est utilisé, le MI peut s'allumer.

Electrovanne de commande de volume de purge de cartouche d'évaporations de carburant (EVAP)

NEEC0019S06

Consulter la page EC-3300.

Contrôler les canalisations d'évaporation EVAP

NEEC0019S13

1. Inspecter visuellement les canalisations d'évaporation pour détecter d'éventuelles fuites, fissures, dommages, raccords desserrés, traces de frottements et de détérioration.
2. Vérifier si la soupape de décharge de dépression se trouvant sur le bouchon de remplissage du réservoir à carburant n'est pas bouchée, collée, etc. Se reporter à la page EC-3031.

Simpo PDF Merge and Split Unregistered Version - http://www.simpopdf.com

SCHÉMA DU CIRCUIT D'ÉVAPORATION DE CARBURANT

=NEEC0020

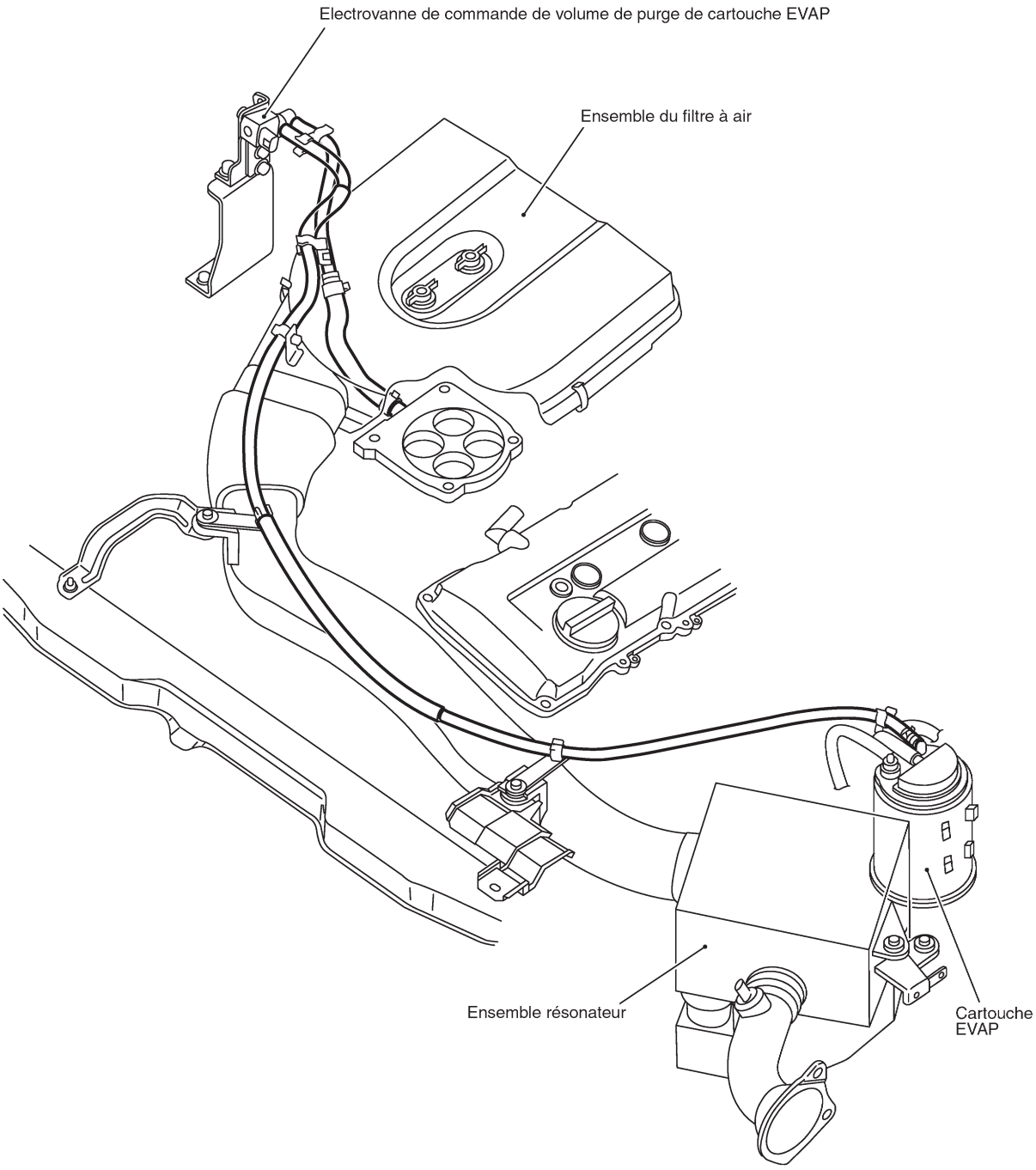

REMARQUE :
L'utilisation d'eau savonneuse ou de solvant est à proscrire pendant l'installation des flexibles de dépression ou de purge.

SEC266D

Simpo PDF Merge and Split Unregistered Version - http://www.simpopdf.com

Recyclage des gaz du carter

DESCRIPTION

NEEC0022

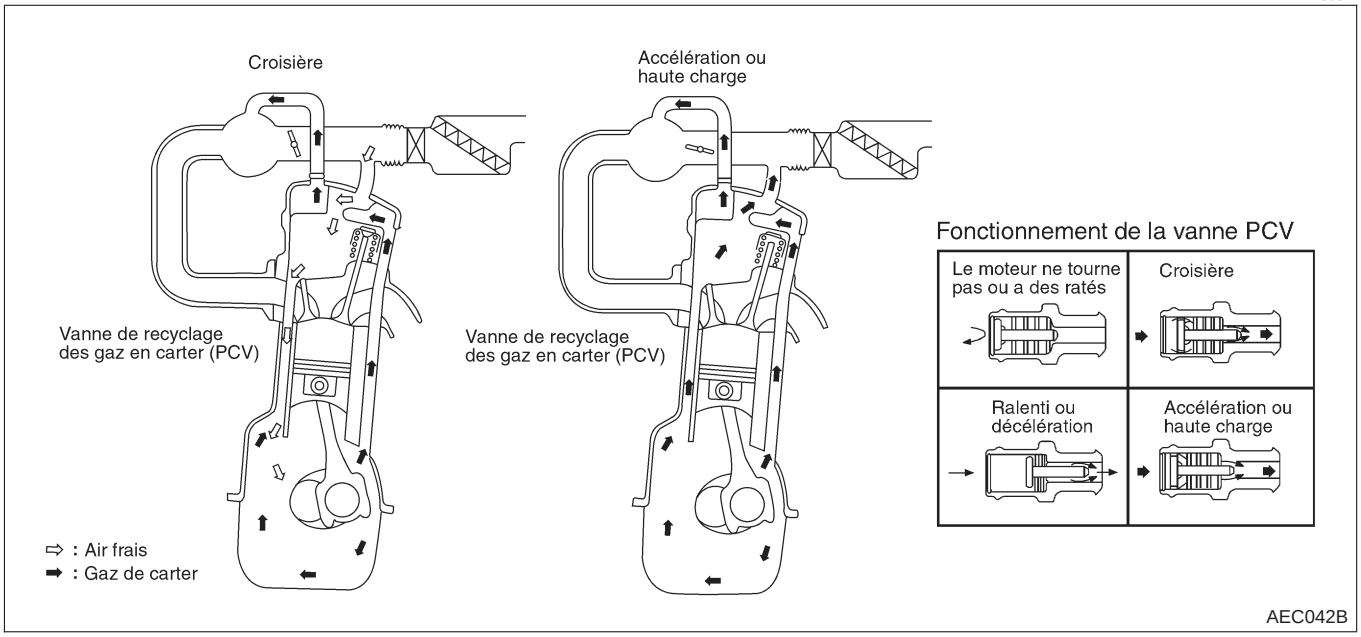

Ce système renvoie les gaz du carter vers le collecteur d'admission.
La soupape de recyclage des gaz du carter (PCV) permet d'acheminer les gaz du carter au collecteur d'admission.
Durant le fonctionnement du moteur, lorsque le papillon est partiellement ouvert, le collecteur d'admission aspire les gaz du carter par la soupape PCV.
En condition normale, la soupape a une capacité suffisante pour aspirer tous les gaz du carter ainsi qu'une petite quantité d'air de ventilation.
L'air de ventilation est alors aspiré du conduit d'air dans le carter. Durant cette opération, l'air passe à travers le flexible qui raccorde les conduites d'admission au cache-culbuteurs.
Quand le papillon est grand ouvert, le niveau de dépression à l'intérieur du collecteur est insuffisant pour aspirer les gaz du carter par la soupape. Les gaz traversent donc le raccord de flexible dans le sens opposé.
Sur les véhicules présentant une quantité excessive de gaz de carter, la soupape n'est pas suffisante pour le déroulement normal de l'opération. Ceci est dû au fait que, quelles que soient les conditions de fonctionnement, une partie des gaz traverse le raccord de flexible et va au collecteur d'admission.

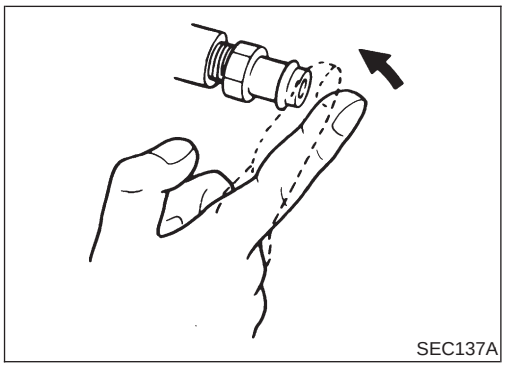

INSPECTION

NEEC0023

Soupape PCV (recyclage des gaz du carter)

NEEC0023S01

Le moteur tournant au ralenti, déposer la soupape PCV du séparateur de reniflard. Une soupape en bon état émet un sifflement lors du passage de l'air. Une forte succion doit être ressentie immédiatement lorsque l'on place un doigt sur l'orifice d'admission de la soupape.

Simpo PDF Merge and Split Unregistered Version - http://www.simpopdf.com

Recyclage des gaz du carter

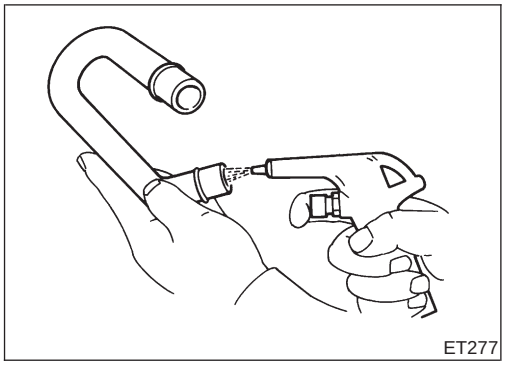
ET277

Flexible de ventilation

NEEC0023S02

1. Contrôler les flexibles et les raccords de flexible pour déceler toute présence de fuites.
2. Débrancher tous les flexibles et les nettoyer à l'air comprimé. Remplacer tous les flexibles qui ne peuvent pas être débouchés.

Simpo PDF Merge and Split Unregistered Version - http://www.simpopdf.com

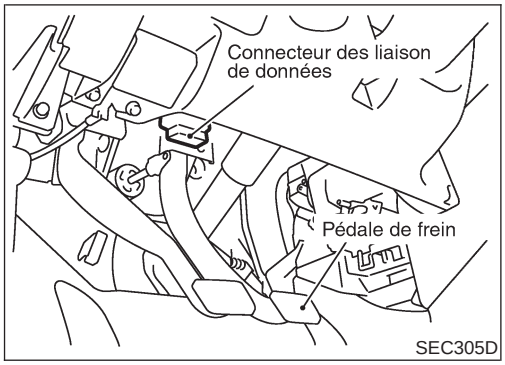

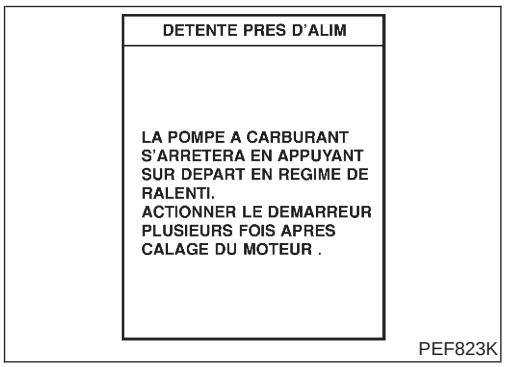

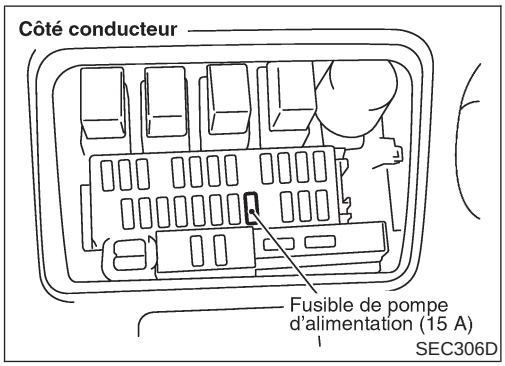

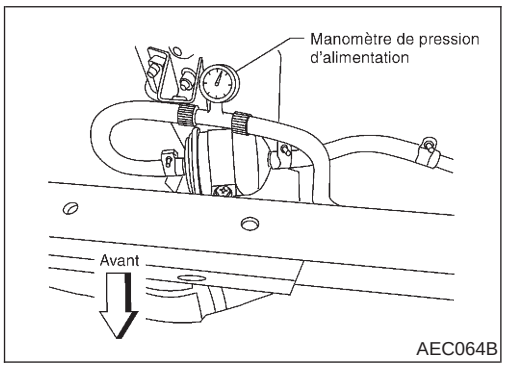

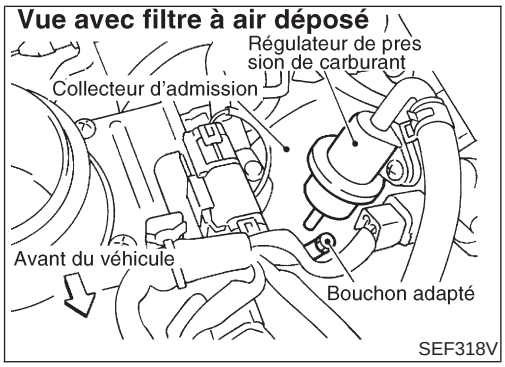

Détente de la pression de carburant

NEEC0024

Avant de déconnecter les flexibles d'alimentation, toujours relâcher la pression de carburant pour éliminer les risques d'accident.

AVEC CONSULT-II

NEEC0024S01

1. Démarrer le moteur.
2. Exécuter ''DETENTE PRES D'ALIM'' avec CONSULT-II en mode ''SUPPORT TRAVAIL''.
3. Après que le moteur a calé, le relancer deux ou trois fois afin de dépressuriser le carburant.
4. Mettre le contact d'allumage sur OFF.

SANS CONSULT-II

NEEC0024S02

1. Déposer le fusible de pompe à carburant.
2. Démarrer le moteur.
3. Après que le moteur a calé, le relancer deux ou trois fois afin de dépressuriser le carburant.
4. Couper le contact d'allumage et raccorder le fusible de pompe à carburant.

Contrôle de la pression de carburant

NEEC0025

- **Toujours utiliser des colliers neufs pour rebrancher une canalisation d'alimentation.**
- **Veiller à ce que la vis de collier n'entre pas en contact avec des pièces voisines.**
- **Utiliser un tournevis dynamométrique pour serrer les colliers.**
- **Utiliser un manomètre pour contrôler la pression du carburant.**
- **Ne pas contrôler la pression de carburant lorsque le système est en marche : l'indication donnée par le manomètre de pression de carburant pourrait être erronée.**

1. Relâcher la pression de carburant jusqu'à zéro.
2. Déconnecter le flexible d'alimentation entre le filtre et le tuyau de carburant (côté moteur).
3. Poser le manomètre entre le filtre et le tuyau de carburant.
4. Démarrer le moteur et vérifier s'il n'y a pas de fuites de carburant.
5. Lire la valeur indiquée par le manomètre.

   Au ralenti :

   Avec le flexible à dépression connecté

   Approximativement 235 kPa (2,35 bar, 2,4 kg/cm^2)

Simpo PDF Merge and Split Unregistered Version - http://www.simpopdf.com

Avec le flexible à dépression déconnecté

Approximativement 294 kPa (2,94 bar, 3,0 kg/cm^2)

Si les résultats ne sont pas satisfaisants, procéder à la "Vérification du régulateur de pression de carburant, page EC-3036.

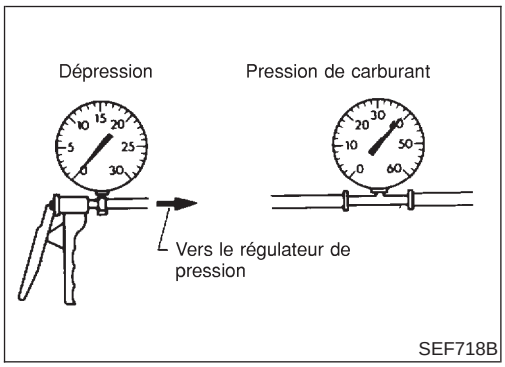

Vérification du régulateur de pression de carburant

NEEC0026

1. Arrêter le moteur et déconnecter le flexible à dépression du régulateur de pression de carburant du collecteur d'admission.
2. Boucher le collecteur d'admission avec un bouchon de caoutchouc.
3. Connecter une source de dépression variable au régulateur de pression de carburant.
4. Démarrer le moteur et lire la valeur indiquée par le manomètre au moment où la dépression change.

La pression du carburant doit diminuer parallèlement à l'augmentation de la dépression. Si les résultats ne sont pas satisfaisants, remplacer le régulateur de pression de carburant.

Simpo PDF Merge and Split Unregistered Version - http://www.simpopdf.com

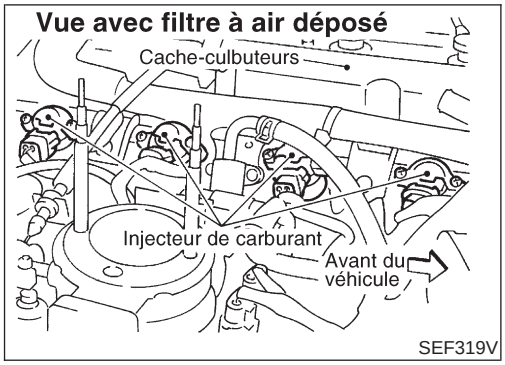

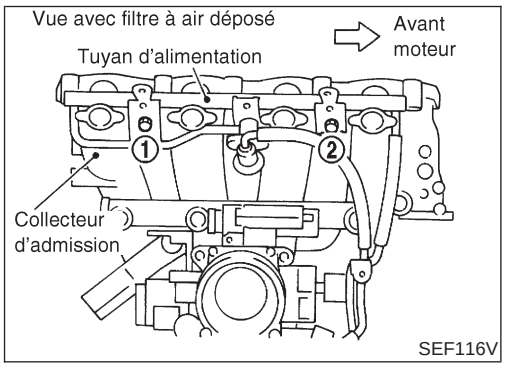

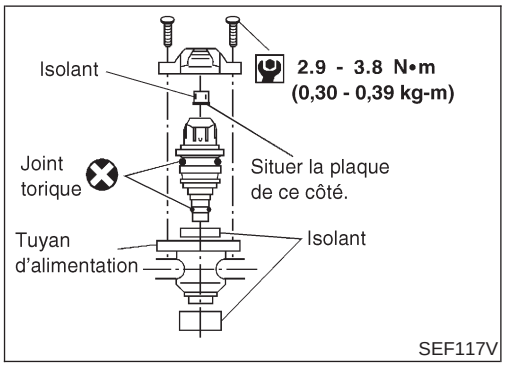

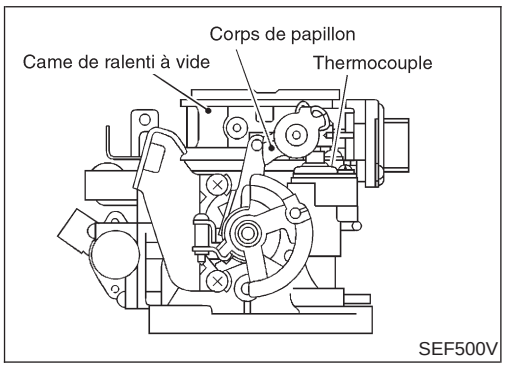

Injecteur

DÉPOSE ET REPOSE

NEEC0027

1. Relâcher la pression de carburant jusqu'à zéro.
2. Déposer l'ensemble de tuyaux d'injecteur avec les injecteurs du collecteur d'admission.
3. Déposer les injecteurs de l'ensemble de tuyaux d'injecteur.

- Pousser l'extrémité de l'injecteur.
- Ne pas tirer sur le connecteur.

4. Poser l'injecteur sur l'ensemble du tuyau de carburant.

a. Nettoyer la partie extérieure de l'extrémité de l'injecteur.
b. Utiliser des joints toriques neufs.

Toujours remplacer les joints toriques par des joints neufs.
Graisser les joints toriques avec une petite quantité d'huile moteur.

5. Reposer les injecteurs avec l'ensemble du tuyau de carburant sur le collecteur d'admission.
   Serrer dans l'ordre numérique indiqué sur la figure.

a. D'abord).
b. Ensuite).

6. Reposer les flexibles d'alimentation sur l'ensemble du tuyau de carburant.
7. Reposer tous les composants déposés dans l'ordre inverse de la repose.

ATTENTION :
Après repose des injecteurs dans l'ensemble tuyaux de carburant, vérifier l'étanchéité.

Came de ralenti accéléré (FIC)

DESCRIPTION DES COMPOSANTS

NEEC0502

Le FIC est monté sur le corps du papillon afin de maintenir un régime-moteur adéquat lorsque le moteur est froid. Il est commandé par la variation du volume de la cire située dans l'élément thermique. L'élément thermique est commandé par la température du liquide de refroidissement du moteur.
Pour inspection, se reporter à ''DIAGNOSTIC DES DEFAUTS-GENERALITES'', ''Inspection de base'', à la page EC-3092.

Réglage du régime de ralenti/calage d'allumage/richesse de mélange de ralenti

NEEC0028

NEEC0028S05

PRÉPARATION

- **S'assurer que les pièces suivantes sont en bon état.**

a) **Batterie**
b) **Système d'allumage**
c) **Niveaux d'huile moteur et de liquide de refroidissement**
d) **Fusibles**
e) **Connecteur de faisceau de l'ECM**
f) **Flexibles de dépression**

Simpo PDF Merge and Split Unregistered Version - http://www.simpopdf.com

g) **Système d'admission d'air (bouchon de remplissage d'huile, jauge de niveau d'huile, etc.)**
h) **Pression de carburant**
i) **Compression du moteur**
j) **Soupape de papillon**
k) **Système EVAP**

- **Sur les modèles équipés d'un climatiseur, effectuer les contrôles lorsque le climatiseur est sur ''OFF''.**
- **Pour mesurer le pourcentage de CO, insérer la sonde sur plus de 40 cm dans la conduite arrière d'échappement.**
- **Eteindre les phares et arrêter la soufflerie de chauffage.**
- **Aligner les roues avant en position de marche en ligne droite.**

Simpo PDF Merge and Split Unregistered Version - http://www.simpopdf.com

Séquence d'inspection globale

NEEC0028S0501

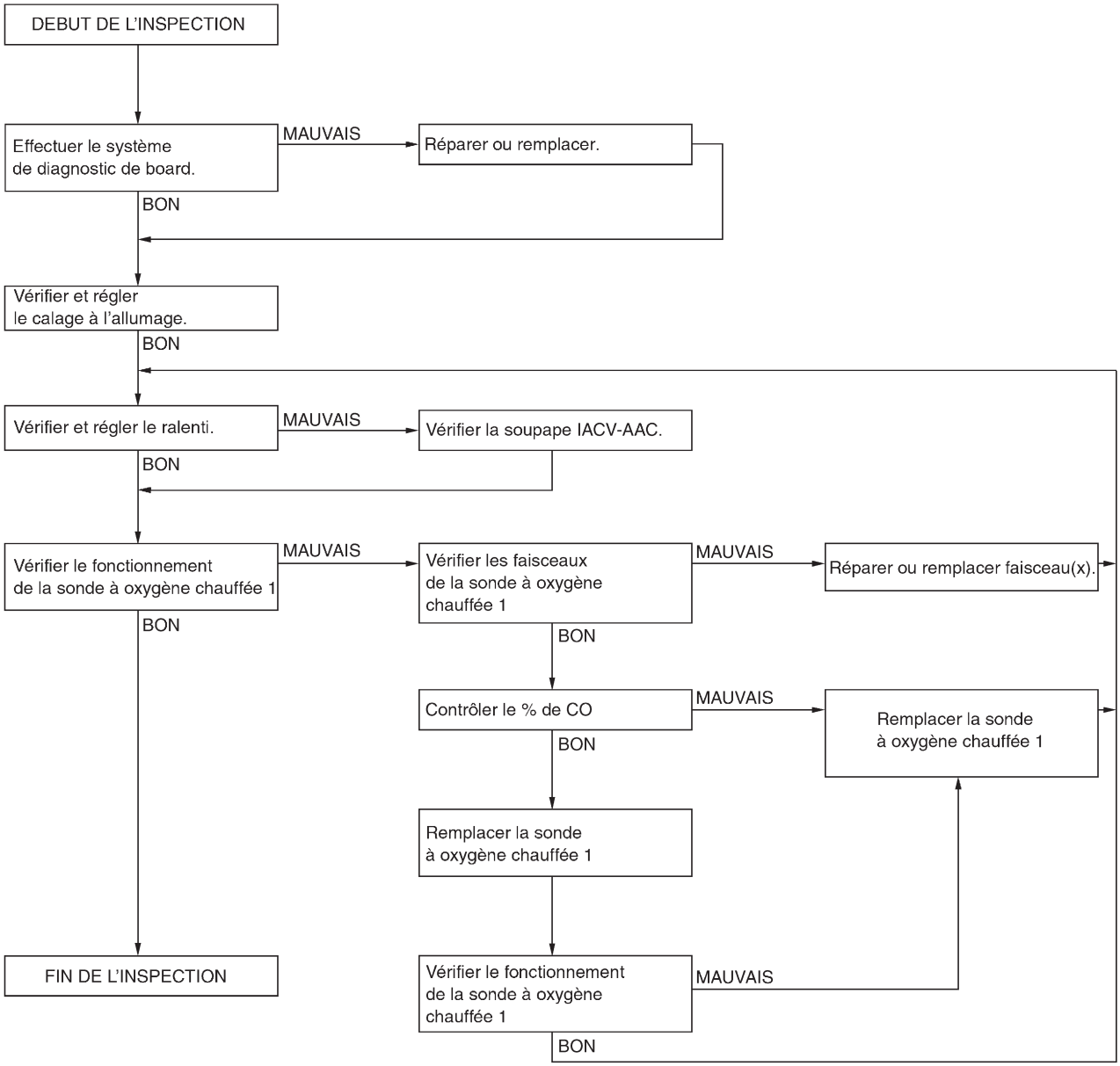

SEF554YB

REMARQUE :
Si le véhicule contient une pièce fonctionnant hors des limites de conception spécifiées et que le MI ne s'allume pas, la pièce ne doit pas être remplacée avant que le test d'émissions ne soit effectué, à moins qu'il ait été déterminé que la pièce en question a été modifiée ou manipulée de telle sorte que le diagnostic n'est plus en mesure de détecter le dysfonctionnement qui en résulte.

Simpo PDF Merge and Split Unregistered Version - http://www.simpopdf.com

Réglage du régime de ralenti/calage d'allumage/richesse de mélange de ralenti

PROCÉDURE D'INSPECTION

=NEEC0028S02

1	DEBUT DE L'INSPECTION

1. Contrôler visuellement les points suivants :
- Filtre à air bouché
- Etanchéité des flexibles et du conduit
- Connecteurs électriques
- Joint d'étanchéité (collecteur d'admission, tête de cylindre, système d'échappement)
- Fonctionnement du papillon et du capteur de position de papillon

2. Démarrer le moteur et le laisser chauffer jusqu'à ce que l'indicateur de température du liquide de refroidissement du moteur soit au milieu du cadran de la jauge.
   S'assurer que le régime-moteur reste inférieur à 1 000 tr/mn.

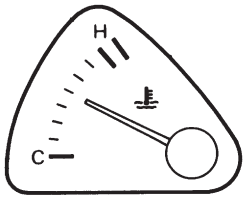

SEF810K

3. Ouvrir le capot et faire tourner le moteur à environ 2 000 tr/mn pendant environ 2 minutes à vide.
4. S'assurer qu'aucun DTC ne s'affiche à l'aide de CONSULT-II ou de l'analyseur générique DTS.

BON ou MAUVAIS

Bon ▶	● ALLER A 2. (Avec CONSULT-II) ● ALLER A 3. (Sans CONSULT-II)
Mauvais ▶	1. Réparer ou remplacer les composants si nécessaire. 2. ALLER A 2. (Avec CONSULT-II) 3. ALLER A 3. (Sans CONSULT-II)

Simpo PDF Merge and Split Unregistered Version - http://www.simpopdf.com

2	CONTROLER LE CALAGE DE L'ALLUMAGE

Avec CONSULT-II

1. Faire tourner le moteur à environ 2 000 tr/mn à vide pendant environ 2 minutes.
2. Emballer le moteur deux ou trois fois à vide, puis le faire tourner au ralenti pendant environ 1 minute.

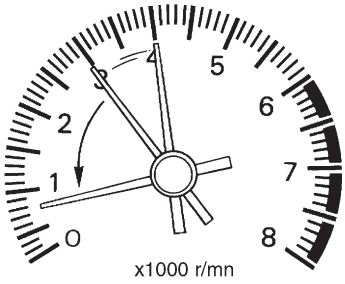

SEF978U

3. Sélectionner ''REG CALAGE ALLUMAGE'' en mode SUPPORT TRAVAIL.
4. Appuyer sur ''DEPART''.

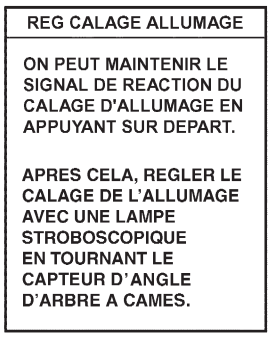

PEF546N

5. Emballer le moteur (2 000 à 3 000 tr/mn) deux ou trois fois à vide, puis le faire tourner au ralenti.
6. Contrôler le calage d'allumage à l'aide d'une lampe stroboscopique.

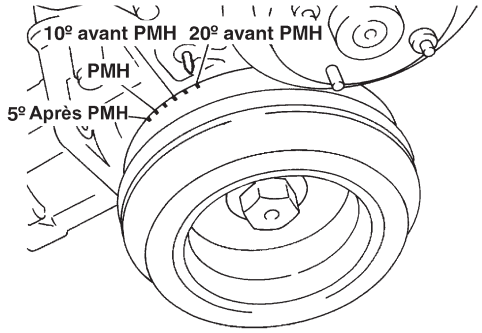

SEF320V

T/M : 15°±2° après PMH

BON ou MAUVAIS

Bon	▶	ALLER A 5.
Mauvais	▶	ALLER A 4.

Simpo PDF Merge and Split Unregistered Version - http://www.simpopdf.com

3	CONTROLER LE CALAGE DE L'ALLUMAGE

Sans CONSULT-II

1. Faire tourner le moteur à environ 2 000 tr/mn à vide pendant environ 2 minutes.
2. Emballer le moteur deux ou trois fois à vide, puis le faire tourner au ralenti pendant environ 1 minute.

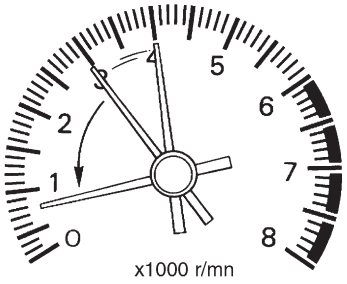

SEF978U

3. Eteindre le moteur et débrancher le connecteur de faisceau du capteur de position du papillon.

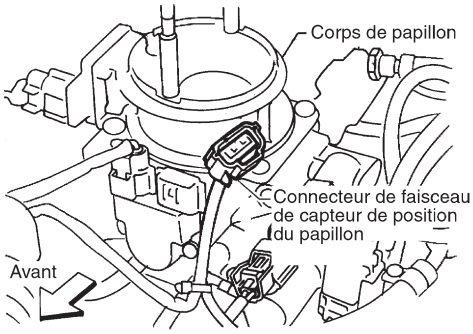

SEF265S

4. Démarrer le moteur et l'emballer (2 000 à 3 000 tr/mn) deux ou trois fois à vide, puis le faire tourner au ralenti.
5. Contrôler le calage d'allumage à l'aide d'une lampe stroboscopique.

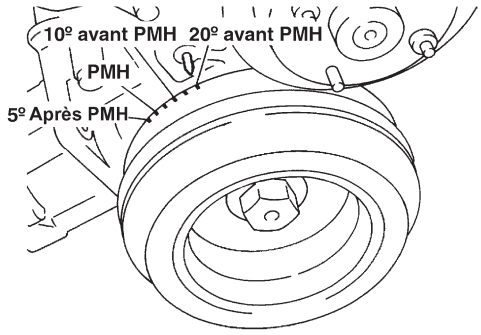

SEF320V

T/M : 15°±2° après PMH

BON ou MAUVAIS

Bon	▶	ALLER A 5.
Mauvais	▶	ALLER A 4.

Simpo PDF Merge and Split Unregistered Version - http://www.simpopdf.com

4	REGLAGE DU CALAGE D'ALLUMAGE

Avec CONSULT-II

1. Régler le calage d'allumage à la valeur spécifiée en faisant tourner le distributeur après avoir desserré les boulons de ce dernier.

Sans CONSULT-II

1. Régler le calage d'allumage à la valeur spécifiée en faisant tourner le distributeur après avoir desserré les boulons de ce dernier.
2. Eteindre le moteur et brancher le connecteur de faisceau du capteur de position du papillon au capteur de position du papillon.

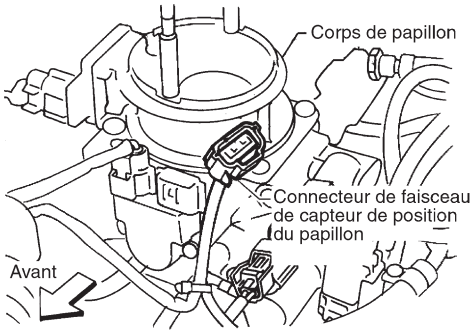

SEF265S

Modèles avec CONSULT-II	▶	ALLER A 2.
Modèles sans CONSULT-II	▶	ALLER A 3.

5	CONTROLE DU REGIME RALENTI DE BASE

Avec CONSULT-II

1. Vérifier le régime ralenti dans ''REG CALAGE ALLUMAGE'' en mode ''SUPPORT TRAVAIL''.

REG CALAGE ALLUMAGE	
REGLAGE DE LA CONDITION	
FEEDBACK CAL ALL	MAINT
CONTROLE	
TR/MN MOT	XXX tr/mn
CALAGE ALLUM	XXX avant PMH
CON RALENTI	MAR

SEF713Z

T/M : 650±50 tr/mn

Sans CONSULT-II

1. Contrôler le régime de ralenti.

T/M : 650±50 tr/mn

BON ou MAUVAIS

Bon (avec CONSULT-II)	▶	ALLER A 7.
Bon (sans CONSULT-II)	▶	ALLER A 8.
Mauvais	▶	ALLER A 6.

Simpo PDF Merge and Split Unregistered Version - http://www.simpopdf.com

6	REGLER LE REGIME DE RALENTI DE BASE

1. Emballer le moteur (2 000 à 3 000 tr/mn) deux ou trois fois à vide, puis le faire tourner au ralenti.
2. Régler le régime de ralenti en tournant la vis de réglage du régime de ralenti.

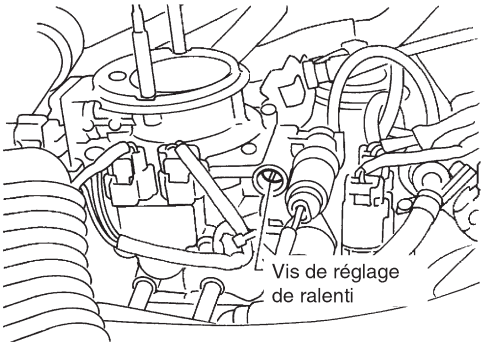

SEF240SA

T/M : 650±50 tr/mn

Modèles avec CONSULT-II ▶	ALLER A 7.
Modèles sans CONSULT-II ▶	ALLER A 8.

7	CONTROLER LE REGIME CIBLE DE RALENTI

Avec CONSULT-II

1. Appuyer sur ''RETOUR'' sur l'écran de CONSULT-II.
2. Emballer le moteur (2 000 à 3 000 tr/mn) deux ou trois fois à vide, puis le faire tourner au ralenti.

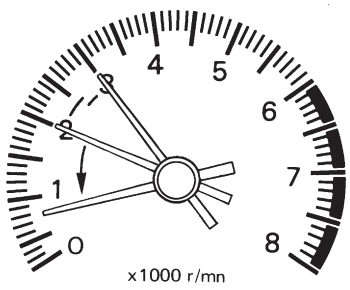

SEF602K

3. Vérifier le régime de ralenti avec CONSULT-II en mode ''CONTROLE DE DONNEES''.

CONTROLE DE DONNEES	
CONTROLE	AUCUN DTC
TR/MN MOT	XXX tr/min

SEF058Y

T/M : 700±50 tr/mn

BON ou MAUVAIS

Bon ▶	ALLER A 10.
Mauvais ▶	ALLER A 9.

Simpo PDF Merge and Split Unregistered Version - http://www.simpopdf.com

8	CONTROLER LE REGIME CIBLE DE RALENTI

⊗ **Sans CONSULT-II**

1. Eteindre le moteur et brancher le connecteur de faisceau du capteur de position du papillon.

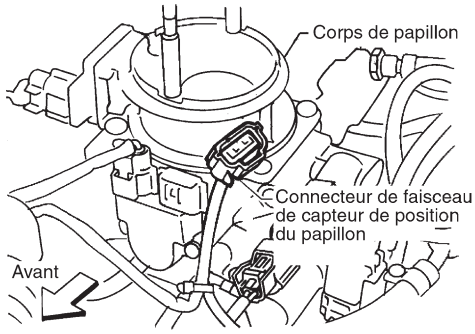

SEF265S

2. Démarrer le moteur.
3. Emballer le moteur (2 000 à 3 000 tr/mn) deux ou trois fois à vide, puis le faire tourner au ralenti.
4. Contrôler le régime cible de ralenti.

T/M : 700±50 tr/mn

BON ou MAUVAIS

Bon	▶	ALLER A 10.
Mauvais	▶	ALLER A 9.

9	DETECTER LA PIECE DEFECTUEUSE

Contrôler les points suivants.

1. Vérifier la soupape IACV-AAC et la remplacer si nécessaire. Se reporter à la page EC-3314.
2. Vérifier le faisceau de soupape IACV-AAC et réparer si nécessaire. Se reporter à la page EC-3314.
3. Contrôler le fonctionnement de l'ECM en le remplaç;ant par un autre ECM dont le bon fonctionnement ne fait pas de doute.
   (l'ECM peut être à l'origine du problème, mais c'est rarement le cas)

	▶	ALLER A 10.

Simpo PDF Merge and Split Unregistered Version - http://www.simpopdf.com

10	CONTROLER LE SIGNAL DE LA SONDE A OXYGENE CHAUFFE 1

Avec CONSULT-II

1. Se reporter à ''MTR S/O2 CH1 (R1)'' en mode ''CONTROLE DE DONNEES''.
2. Faire tourner le moteur à environ 2 000 tr/mn à vide pendant environ 2 minutes.
3. En faisant tourner le moteur à 2 000 tr/mn à vide (le moteur est chauffé jusqu'à ce qu'il ait atteint sa température normale de fonctionnement), s'assurer que le moniteur fluctue entre ''PAUVRE'' et ''RICHE'' plus de cinq fois pendant 10 secondes.

CONTROLE DE DONNEES	
CONTROLE	PAS DE DTC
TR/MN MOT	XXX TR/MN
MTR S/02CH1(R1)	RICHE

SEF820Y

1 cycle: RICHE → PAUVRE → RICHE
2 cycles: RICHE → PAUVRE → RICHE → PAUVRE → RICHE

Sans CONSULT-II

1. Faire tourner le moteur à environ 2 000 tr/mn à vide pendant environ 2 minutes.
2. Placer la sonde du voltmètre entre la borne 50 de l'ECM et la masse.
3. S'assurer que la tension fluctue entre 0 - 0,3V et 0,6 - 1,0V plus de 5 fois durant 10 secondes à 2 000 tr/mn.
   1 occurrence : 0 - 0,3 V → 0,6 - 1,0 V → 0 - 0,3 V
   2 occurrences : 0 - 0,3 V → 0,6 - 1,0 V → 0 - 0,3 V → 0,6 - 1,0 V → 0 - 0,3 V

BON ou MAUVAIS

Bon	▶	**FIN DE L'INSPECTION**
Mauvais	▶	ALLER A 11.

Simpo PDF Merge and Split Unregistered Version - http://www.simpopdf.com

11	CONTROLER LE FAISCEAU DE LA SONDE A OXYGENE CHAUFFE 1

1. Arrêter le moteur et déconnecter le câble de masse de la batterie.
2. Débrancher le connecteur de faisceau de l'ECM.
3. Débrancher le connecteur de faisceau de la sonde à oxygène chauffé 1.
4. Ensuite, brancher la borne du connecteur de faisceau de la sonde à oxygène chauffé 1 à la masse à l'aide d'un cavalier.

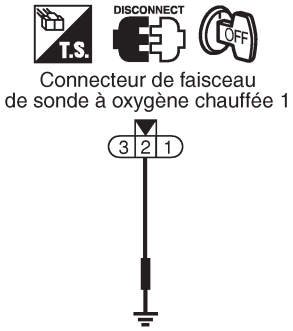

Connecteur de faisceau de sonde à oxygène chauffée 1

SEC299D

5. Vérifier la continuité entre la borne 50 du connecteur de faisceau de l'ECM et la masse de carrosserie.

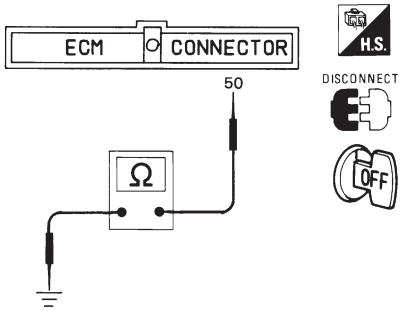

SEF250P

S'il y a continuité...BON
S'il n'y a pas continuité...MAUVAIS

BON ou MAUVAIS

Bon ▶	1. Brancher le connecteur de faisceau de l'ECM sur l'ECM. 2. Brancher le câble de masse de la batterie. 3. ALLER A 13.
Mauvais ▶	1. Réparer ou remplacer le faisceau. 2. ALLER A 12.

Simpo PDF Merge and Split Unregistered Version - http://www.simpopdf.com

12	PREPARATION POUR LE REGLAGE DU REGIME RALENTI

Avec CONSULT-II

1. Sélectionner ''REGLAGE CALAGE ALLUMAGE'' en mode ''SUPPORT TRAVAIL''.
2. Appuyer sur ''DEPART''.

REG CALAGE ALLUMAGE
ON PEUT MAINTENIR LE SIGNAL DE REACTION DU CALAGE D'ALLUMAGE EN APPUYANT SUR DEPART. APRES CELA, REGLER LE CALAGE DE L'ALLUMAGE AVEC UNE LAMPE STROBOSCOPIQUE EN TOURNANT LE CAPTEUR D'ANGLE D'ARBRE A CAMES.

PEF546N

Sans CONSULT-II

1. Arrêter le moteur et débrancher le connecteur de faisceau du capteur de position du papillon.

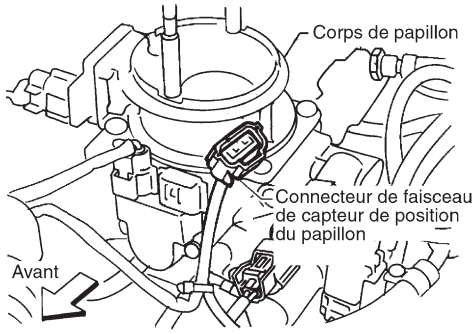

SEF265S

2. Démarrer le moteur.

▶	ALLER A 6.

Simpo PDF Merge and Split Unregistered Version - http://www.simpopdf.com

13	**PREPARATION POUR CONTROLER LE %** DE "CO"

Avec CONSULT-II

1. Sélectionner "TEMP LIQ REFR" en mode "TEST ACTIF".
2. Régler "TEMP LIQ REFR" sur 5°C en appuyant sur "Qu" et "Qd" et "UP", "DOWN".

TEST ACTIF	
TEMP LIQ REFR	XXX °C
CONTROLE	
TR/MN MOT	XXX TR/MN
IMPUL INJ-R1	XXX msec
CALAGE ALLUMAGE	XXX RPMH

SEF172Y

1. Brancher le connecteur de faisceau de l'ECM sur l'ECM.
2. Débrancher le connecteur de faisceau du capteur de température du liquide de refroidissement du moteur.
3. Brancher une résistance (4,4 kΩ) entre les bornes du connecteur de faisceau du capteur de température du liquide de refroidissement du moteur.



Connecteur de faisceau de capteur de température de liquide de refroidissement moteur

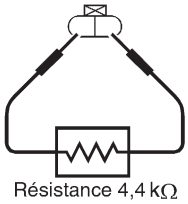

Résistance 4,4 kΩ

SEF053RA

4. Brancher le câble de masse de la batterie.

▶	ALLER A 14.

Simpo PDF Merge and Split Unregistered Version - http://www.simpopdf.com

14	CONTROLER LE % DE ''CO''

⊗ **Sans CONSULT-II**

1. Démarrer le moteur et le laisser chauffer jusqu'à ce que l'indicateur de température du liquide de refroidissement du moteur soit au milieu du cadran de la jauge.
   (s'assurer de démarrer le moteur après avoir réglé la ''TEMP LIQ REFR'' ou après avoir connecté une résistance de 4,4 kΩ.)

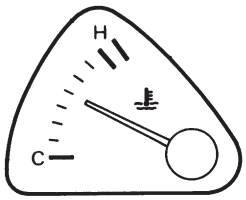

SEF810K

2. Emballer le moteur deux ou trois fois à vide, puis le faire tourner au ralenti.

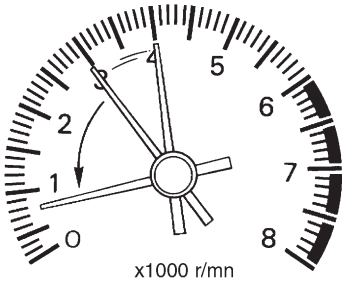

SEF978U

3. CONTROLER LE % DE ''CO''.
   CO au ralenti : 2,9 - 10,8et le moteur tourne de manière souple.
4. ⊟ **Avec CONSULT-II**
   Après avoir contrôlé le de CO, appuyer sur ''RETOUR''.
5. ⊗ **Sans CONSULT-II**
   Après avoir contrôlé le % de CO,

a. débrancher la résistance des bornes du connecteur de faisceau du capteur de température du liquide de refroidissement du moteur.
b. Brancher le connecteur de faisceau du capteur de température du liquide de refroidissement du moteur au capteur de température du liquide de refroidissement du moteur

BON ou MAUVAIS

Bon	▶	ALLER A 15.
Mauvais	▶	ALLER A 16.

Simpo PDF Merge and Split Unregistered Version - http://www.simpopdf.com

15	CONTROLER LE SIGNAL DE LA SONDE A OXYGENE CHAUFFE 1

Avec CONSULT-II

1. Remplacer la sonde à oxygène chauffé 1.
2. Se reporter à ''MTR S/O2 CH1 (R1)'' en mode ''CONTROLE DE DONNEES''.
3. Maintenir le régime-moteur à 2.000 tr/min à vide (le moteur s'échauffe jusqu'à la température normale de fonctionnement.). Vérifier que le moteur varie entre ''PAUVRE'' et ''RICHE'' plus de cinq fois pendant 10 secondes.
   1 cycle: RICHE → PAUVRE → RICHE
   2 cycles: RICHE → PAUVRE → RICHE → PAUVRE → RICHE

Sans CONSULT-II

1. Arrêter le moteur.
2. Remplacer la sonde à oxygène chauffé 1.
3. Démarrer le moteur et l'amener à température normale de fonctionnement.
4. Faire tourner le moteur à environ 2.000 tr/min pendant environ 2 minutes à vide.
5. Placer la sonde du voltmètre entre la borne 50 de l'ECM et la masse.
6. S'assurer que la tension fluctue entre 0 - 0,3V et 0,6 - 1,0V plus de 5 fois durant 10 secondes à 2 000 tr/mn.
   1 occurrence : 0 - 0,3 V → 0,6 - 1,0 V → 0 - 0,3 V
   2 occurrences : 0 - 0,3 V → 0,6 - 1,0 V → 0 - 0,3 V → 0,6 - 1,0 V → 0 - 0,3 V

BON ou MAUVAIS

Bon	▶	ALLER A 12.
Mauvais	▶	ALLER A 16.

16	DETECTER LA PIECE DEFECTUEUSE

1. Brancher le connecteur de faisceau de la sonde à oxygène chauffé 1 à la sonde à oxygène chauffé 1.
2. Vérifier le régulateur de pression de carburant. Se reporter à EC-3036.
3. Vérifier le débitmètre d'air et son circuit.
   Se reporter à EC-3152, EC-3161.
4. Vérifier l'injecteur et son circuit.
   Se reporter à EC-3395.
   Nettoyer ou remplacer si nécessaire.
5. Vérifier le capteur de température du liquide de refroidissement du moteur et son circuit. Se reporter à EC-3175.
6. Contrôler le fonctionnement de l'ECM en le remplaçant par un autre ECM dont le bon fonctionnement ne fait pas de doute.
   (l'ECM peut être à l'origine du problème, mais c'est rarement le cas)

	▶	ALLER A 12.

- **Si le véhicule contient une pièce fonctionnant hors des limites de conception spécifiées et que le MI ne s'allume pas, la pièce ne doit pas être remplacée avant que le test d'émissions ne soit effectué, à moins qu'il ait été déterminé que la pièce en question a été modifiée ou manipulée de telle sorte que le diagnostic n'est plus en mesure de détecter le dysfonctionnement qui en résulte.**

Simpo PDF Merge and Split Unregistered Version - http://www.simpopdf.com

Introduction

NEEC0029

L'ECM est équipé d'un système de diagnostic de bord qui détecte les défauts liés aux capteurs et aux actionneurs du moteur. En outre, l'ECM enregistre diverses informations de diagnostic liées au système antipollution, y compris :

Code de défaut de diagnostic (DTC)	Mode 3 de l'ISO 15031-5
Données figées	Mode 2 de l'ISO 15031-5
Code de test de lecture du système (SRT)	Mode 1 de l'ISO 15031-5
Code de défaut de diagnostic de 1er parcours (DTC de 1er parcours)	Mode 7 de l'ISO 15031-5
Données figées de 1er parcours	
Valeurs et limites de test	Mode 6 de l'ISO 15031-5
Codes d'identification d'étalonnage	Mode 9 de l'ISO 15031-6

Les informations énumérées ci-dessus peuvent être contrôlées en effectuant les procédures indiquées dans le tableau suivant.

X : Applicable —: Non applicable

	DTC	DTC de 1er parcours	Données figées	Données figées de 1er parcours	Code SRT	Valeur de test
CONSULT-II	X	X	X	X	X	—
GST	X	X*1	X	—	X	X

*1: DTC de 1er parcours pour les autodiagnostics concernant les éléments SRT ne peuvent pas être affichés sur l'écran GST.

Le témoin de défaut (MI) situé sur le tableau de bord s'allume lorsque le même défaut est détecté à l'occasion de deux parcours consécutifs (logique de détection de deux parcours), ou lorsque l'ECM se met en mode de sécurité Se reporter à EC-3107.)

Logique de détection de deux parcours

NEEC0030

Lorsqu'un défaut est détecté pour la première fois, le DTC de 1er parcours et les données figées de 1er parcours sont mémorisés par l'ECM. Le témoin MI ne s'allume pas à cette étape. <1er parcours>
Si le même défaut est à nouveau détecté lors du parcours suivant, le DTC et les données figées sont enregistrés dans la mémoire de l'ECM, et le témoin MI s'allume. Le témoin MI s'allume lorsque le DTC est enregistré. <2eme parcours> Le ''parcours'' dans la ''Logique de détection de deux parcours'' correspond à un mode de conduite dans lequel un autodiagnostic est mené pendant que le véhicule roule. Certains défauts détectés par le diagnostic de bord entraînent l'allumage ou la mise en clignotement du témoin MI par l'ECM et la mémorisation du code de défaut et des données figées et ce, dès le premier parcours, comme détaillé ci-après.

X : Applicable —: Non applicable

Eléments	MI				DTC		DTC de 1er parcours	
	1er parcours		2ème parcours		Affichage du 1er parcours	Affichage du 2ème parcours	Affichage du 1er parcours	Affichage du 2ème parcours
	Clignotement	Allumé	Clignotement	Allumé				
Raté d'allumage (dommage possible du catalyseur à 3 voies) — DTC: P0300 - P0304 est détecté	X	—	—	—	—	—	X	—
Raté d'allumage (dommage possible du catalyseur à 3 voies) — DTC: P0300 - P0304 est détecté	—	—	X	—	—	X	—	—
Eléments de sécurité (se reporter à EC-3107.)	—	X	—	—	X*1	—	X*1	—
Sauf ci-dessus	—	—	—	X	—	X	X	—

*1: Sauf ''ECM''

Simpo PDF Merge and Split Unregistered Version - http://www.simpopdf.com

Informations de diagnostic de dépollution

NEEC0031

DTC ET DTC DE 1ER PARCOURS

NEEC0031S01

Le DTC de 1er parcours (de numéro identique à celui du DTC) s'affiche en fonction du dernier résultat d'autodiagnostic obtenu. Si la mémoire de l'ECM a été effacée précédemment, et si le DTC de 1er parcours ne s'est pas représenté, le DTC de 1er parcours ne s'affiche pas. Lorsqu'un défaut est détecté pour la première fois, le DTC de 1er parcours et les données figées de 1er parcours sont mémorisés par l'ECM. Le témoin MI ne s'allume pas à cette étape (logique de détection de deux parcours). Si le même défaut n'est pas détecté lors du 2ème parcours (avec les conditions de conduite requises), le DTC de 1er parcours est effacé de la mémoire de l'ECM. Si le même défaut est détecté lors du 2ème parcours, le DTC de 1er parcours ainsi que le DTC sont enregistrés dans la mémoire de l'ECM et le témoin MI s'allume. En d'autres termes, le DTC est enregistré dans la mémoire de l'ECM et le témoin MI s'allume lorsque le même défaut se produit lors de 2 parcours consécutifs. Si le DTC de 1er parcours est mémorisé et si une opération ne relevant pas du diagnostic est effectuée entre le 1er et le 2ème parcours, seul le DTC de 1er parcours subsiste en mémoire. Pour les défauts provoquant l'allumage ou le clignotement du témoin MI dès le 1er parcours, le DTC et le DTC de 1er parcours sont mémorisés par l'ECM.

Les procédures pour effacer le DTC et le DTC de 1er parcours de la mémoire de l'ECM sont décrites dans ''Comment effacer les codes de diagnostic de dépollution''. Se reporter à EC-3064.

Pour les anomalies pour lesquelles des DTC de 1er parcours sont affichés, se reporter à la page EC-3062.

Ces éléments sont requis par des régulations légales afin de contrôler continuellement le système/composant. En outre, les paramètres testés de manière non permanente sont également affichés sur CONSULT-II.

Le DTC de 1er parcours est spécifié dans le mode 7 de ISO 15031-5. La détection du DTC du 1er parcours n'entraîne pas l'allumage du témoin de défaut MI ; le conducteur n'est donc pas averti de la présence d'un problème. Cependant, la détection du DTC de 1er parcours n'empêche pas le véhicule d'être testé, par exemple pendant les tests d'Inspection/Entretien (I/E).

Lorsqu'un DTC de 1er parcours est détecté, vérifier, imprimer ou consigner par écrit, puis effacer le DTC (de 1er parcours) et les données figées conformément aux instructions de la ''Procédure de travail'', Etape II, détaillée page EC-3090. Effectuer ensuite une ''Procédure de confirmation de DTC'' ou une ''Vérification du fonctionnement général'' pour tenter de faire resurgir le problème. Si le problème se reproduit, l'élément nécessite une réparation.

Comment lire le DTC et le DTC de 1er parcours

NEEC0031S0101

Les méthodes suivantes permettent la lecture des DTC et des DTC de 1er parcours.

Avec CONSULT-II

Avec l'analyseur générique GST

CONSULT-II ou GST (analyseur générique) Exemples : P0340 etc.

Ces codes de défaut sont prescrits par la norme ISO15031-5.

(CONSULT-II indique également le système ou la pièce défectueuse)

- **Numéro de code de défaut de 1er parcours identique au numéro de code de défaut.**
- **L'affichage d'un DTC indique un défaut. Cependant l'analyseur générique GST n'indique pas si ce défaut est toujours présent ou s'il s'est produit dans le passé et n'est plus d'actualité. CONSULT-II a la capacité d'identifier la nature du défaut comme indiqué ci-après. C'est pourquoi il est vivement conseillé de l'utiliser (si on en dispose).**

L'illustration ci-dessous montre l'affichage d'un DTC par CONSULT-II. Le DTC ou le DTC de 1er parcours d'un défaut s'affiche dans le mode RESULT AUTO-DIAG de CONSULT-II. Le paramètre d'occurrence indique combien de fois le véhicule a été conduit après la dernière détection du DTC.

Si le DTC est détecté au moment du diagnostic, le paramètre est égal à ''0''.

Si un DTC de 1er parcours a été enregistré dans la mémoire de l'ECM, le paramètre est égal à ''[1t]''.

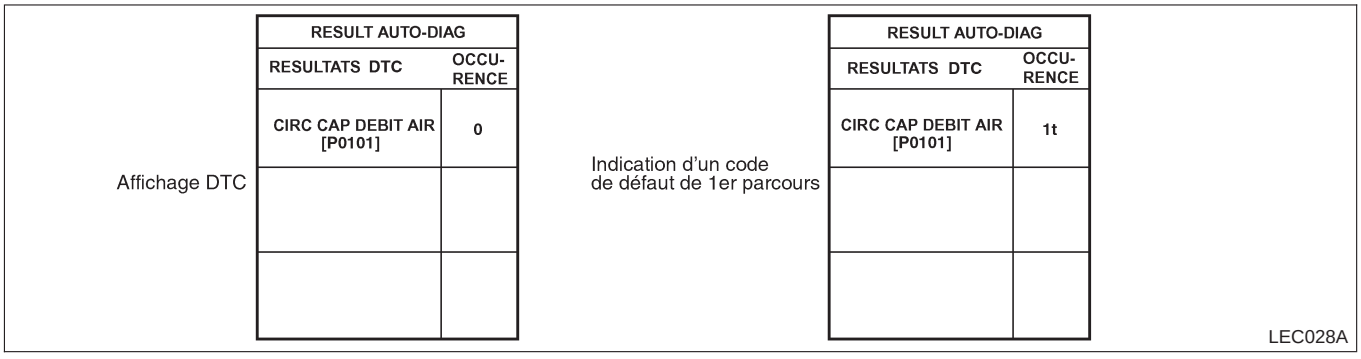

Simpo PDF Merge and Split Unregistered Version - http://www.simpopdf.com

DONNÉES FIGÉES ET DONNÉES FIGÉES DE 1ER PARCOURS

NEEC0031S02

L'ECM enregistre les conditions de conduite telles que le statut du système d'alimentation, la valeur de charge calculée, la température du liquide de refroidissement du moteur, la correction de carburant à court et long terme, le régime-moteur, la vitesse du véhicule, l'ouverture de la soupape de papillon, le programme de carburant de base et la température de l'air d'admission au moment où un défaut est détecté.
Les données mémorisées par l'ECM en même temps que le DTC de 1er parcours sont appelées données figées de 1er parcours. Les données mémorisées en même temps que le DTC sont appelées données figées et sont affichées par CONSULT-II ou par l'analyseur générique GST. Les données figées de 1er parcours ne peuvent être affichées que par CONSULT-II et non par l'analyseur générique GST. Pour plus de détails, se reporter à la page EC-3078.
Un seul ensemble de données figées (les données figées de 1er parcours ou les données figées) peut être mémorisé par l'ECM. Les données figées de 1er parcours sont mémorisées par l'ECM en même temps que le DTC de 1er parcours. Les données figées de 1er parcours ne sont pas classées par priorité et sont mises à jour chaque fois qu'un DTC de 1er parcours est détecté. En revanche, dès lors que les données figées (détection de 2ème parcours/allumage du témoin MI) sont mémorisées par l'ECM, les données figées de 1er parcours sont automatiquement effacées. Ne pas oublier que l'ECM ne peut mémoriser qu'un seul ensemble de données figées à la fois. L'ordre de priorité de mise à jour des données par l'ECM est le suivant.

Priorité	Eléments	
1	Données figées	Raté d'allumage — DTC: P0300 - P0304 Fonctionnement du système d'injection de carburant — DTC: P0171, P0172
2		Sauf éléments ci-dessus
3	Données figées de 1er parcours	

Par exemple, un défaut de fonctionnement de l'EGR (priorité : 2) a été détecté et les données figées ont été mémorisées durant le 2ème parcours. Par la suite, lorsqu'un raté d'allumage (priorité : 1) est détecté lors d'un autre parcours, les données figées seront mises à jour depuis le défaut de fonctionnement de l'EGR jusqu'au raté d'allumage. Les données figées de 1er parcours sont mises à jour chaque fois qu'un nouveau défaut de fonctionnement est détecté. Il n'existe pas de priorité pour les données figées de 1er parcours. Toutefois, dès lors que des données figées sont mémorisées par l'ECM, les données figées de 1er parcours sont effacées (car l'ECM ne peut mémoriser qu'un seul ensemble de données, qu'elles soient figées ou figées de 1er parcours). Si des données figées sont déjà mémorisées par l'ECM alors que de nouvelles données figées, présentant la même priorité, sont générées, les données initiales restent inchangées.
Les données figées de 1er parcours ainsi que les données figées (en même temps que les DTC) sont effacées lorsque la mémoire de l'ECM est réinitialisée. Les procédures pour effacer la mémoire de l'ECM sont décrites dans ''Comment effacer les codes de diagnostic de dépollution''. Se reporter à EC-3064.

CODE DE TEST DE LECTURE DU SYSTÈME (SRT)

NEEC0031S03

Le code de test de lecture du système (SRT) fait l'objet d'une spécification en mode 1 de la norme ISO 15051-5.
En tant que partie d'un test amélioré d'émissions pour l'Inspection et l'Entretien (I/E), certains états exigent le statut de SRT soit utilisé pour indiquer si l'ECM a achevé l'autodiagnostic des systèmes et composants principaux d'émission. L'achèvement de l'autodiagnostic doit être vérifié avant de continuer l'inspection des émissions.
Si, lors d'une inspection de l'état des émissions, un ou plusieurs éléments du SRT indiquent ''incomplet'', signe que le véhicule n'est pas conforme aux normes, utiliser les informations du présent manuel de réparation afin de régler le SRT sur ''complet''.
Dans la majorité de cas, l'ECM termine automatiquement son cycle d'autodiagnostic au cours d'une utilisation normale et le statut du SRT indique ''complet'' pour chaque système d'application. Ceci fait, le SRT conserve son statut de ''complet'' jusqu'à ce que la mémoire de l'autodiagnostic soit effacée.
Il arrive que certaines parties du test d'autodiagnostic ne puissent pas être accomplies en raison des habitudes de conduite du client ; le SRT indique ''incomplet'' pour ces éléments.

REMARQUE :
Le SRT indique aussi ''incomplet'' si la mémoire d'autodiagnostic est effacée pour une raison quelconque ou si l'alimentation électrique de la mémoire de l'ECM est coupée pendant plusieurs heures.

Si, durant l'inspection de l'état des émissions, le SRT indique ''complet'' pour tous les éléments du test, l'inspecteur continue ses tests d'émissions. Cependant, si le SRT indique ''incomplet'' pour un ou plusieurs éléments, le véhicule est renvoyé à son propriétaire sans avoir subi de test.

Simpo PDF Merge and Split Unregistered Version - http://www.simpopdf.com

REMARQUE :
Il en va de même si le témoin de défaut est sur ‘‘ON’’ durant l’inspection de l’état des émissions, et ce même si le SRT indique ‘‘complet’’ pour tous les éléments du test. Il est par conséquent important de vérifier le SRT (‘‘complet’’) et l’absence de DTC avant l’inspection.

Ce manuel de réparation contient des procédure de réparation et des informations utiles pour effectuer un test sur route complet permettant à l’ECM de compléter le SRT.

Simpo PDF Merge and Split Unregistered Version - http://www.simpopdf.com

Elément SRT

NEEC0031S0308

Le tableau ci-dessous indique les éléments d'autodiagnostic requis pour régler le SRT sur ''CMPLT''.

Elément SRT (indication CONSULT-II)	Priorité de performance *	Eléments d'autodiagnostic requis pour régler le SRT sur ''CMPLT''	N° de DTC correspondant
SYST CAT 3V-R1	3	Fonctionnement du catalyseur à 3 voies	P0420
CH S/02	2	Sonde à oxygène chauffé 1	P0132
		Sonde à oxygène chauffé 1	P0133
		Sonde à oxygène chauffé 1	P0134
		Sonde à oxygène chauffé 1	P1143
		Sonde à oxygène chauffé 1	P1144
		Sonde à oxygène chauffé 2	P0138
		Sonde à oxygène chauffé 2	P0139
		Sonde à oxygène chauffé 2	P1146
		Sonde à oxygène chauffé 2	P1147
CH S/02 CH	1	Chauffage de la sonde à oxygène chauffé 1	P0031, P0032
		Chauffage de la sonde à oxygène chauffé 2	P0037, P0038

*: Si l'exécution de plusieurs EGR est requise, reproduire les conditions de conduite [procédure de confirmation de code de défaut (DTC)] une par une, sur la base de la priorité pour les modèles à l'aide de CONSULT-II.

Réglage de l'allumage SRT

NEEC0031S0310

Une fois que l'autodiagnostic a été réalisé au moins une fois, le SRT est réglé sur ''complet''. Le SRT est complet lorsque le résultat est BON ou MAUVAIS. Le réglage de l'allumage diffère dans les deux cas, comme indiqué dans le tableau ci-dessous.

Résultats de l'autodiagnostic		Exemple				
		Diagnostic	Allumage ARR — MAR — ARR	Allumage ARR — MAR — ARR	Allumage ARR — MAR — ARR	Allumage ARR — MAR — ARR
Tout est BON	Cas 1	P0400	BON (1)	— (1)	BON (2)	— (2)
		P0402	BON (1)	— (1)	— (1)	BON (2)
		P1402	BON (1)	BON (2)	— (2)	— (2)
		SRT de l'EGR	''complet''	''complet''	''complet''	''complet''
	Cas 2	P0400	BON (1)	— (1)	— (1)	— (1)
		P0402	— (0)	— (0)	BON (1)	— (1)
		P1402	BON (1)	BON (2)	— (2)	— (2)
		SRT de l'EGR	''incomplet''	''incomplet''	''complet''	''complet''
MAUVAIS	Cas 3	P0400	Bon	Bon	—	—
		P0402	—	—	—	—
		P1402	Mauvais	—	Mauvais	MAUVAIS (MAUVAIS consécutifs)
		DTC (de 1er parcours)	DTC de 1er parcours	—	DTC de 1er parcours	DTC (=MI ''ON'')
		SRT de l'EGR	''incomplet''	''incomplet''	''incomplet''	''complet''

BON : l'autodiagnostic est exécuté et le résultat est satisfaisant.
MAUVAIS : l'autodiagnostic est exécuté et le résultat n'est pas satisfaisant.

Simpo PDF Merge and Split Unregistered Version - http://www.simpopdf.com

— : l'autodiagnostic n'est pas effectué.

Simpo PDF Merge and Split Unregistered Version - http://www.simpopdf.com

Lorsque les résultats de tous les autodiagnostics relatifs au SRT sont satisfaisants dans le même cycle, (allumage Arrêt-Marche-Arrêt), le SRT indique ‘‘complet’’.

→ Cas 1 ci-dessus

Lorsque les résultats de tous les autodiagnostics relatifs au SRT sont satisfaisants durant des cycles différents, le SRT indique ‘‘complet’’ quand les autodiagnostics respectifs indiquent au moins un ‘‘BON’’ résultat.

→ Cas 2 ci-dessus

Si au moins un autodiagnostic lié au SRT affiche un résultat non satisfaisant lors de 2 cycles consécutifs, le SRT indique lui aussi ‘‘complet’’.

→ Cas 3 ci-dessus

Le tableau ci-dessus montre que le nombre minimal de cycles pour régler le SRT sur ‘‘incomplet’’ est de un (1) pour chaque autodiagnostic (cas 1 et 2) ou de deux (2) pour un des autodiagnostics (cas 3). Cependant, lors de la préparation pour l’inspection de l’état des émissions, il n’est pas nécessaire d’exécuter deux fois chaque autodiagnostic (cas 3) pour les raisons suivantes :

- Le SRT indique ‘‘complet’’ lorsque l’autodiagnostic correspondant présente un (1) résultat satisfaisant.
- L’inspection des émissions ne requiert ‘‘complet’’ de SRT qu’avec de bons résultats d’autodiagnostic.
- Lorsque, durant les conditions de conduite SRT, un DTC de 1er parcours (MAUVAIS) est détecté avant que ‘‘complet’’ de SRT ne s’affiche, la mémoire d’autodiagnostic doit être effacée de l’ECM après réparation.
- Si le DTC de 1er parcours est effacé, tout le SRT indique ‘‘incomplet’’.

REMARQUE :
Le SRT peut être réglé sur ‘‘complet’’ conjointement avec le(s) DTC. Par conséquent, le contrôle DTC doit toujours précéder l’inspection de l’état des émissions, même si le code SRT indique ‘‘complet’’.

Comment afficher les codes SRT

NEEC0031S0301

1. **Avec CONSULT-II**
   Avec CONSULT-II, sélectionner ‘‘ETAT SRT’’ en mode ‘‘CONFIRMATION DE DTC’’I.
   Pour les éléments dont les codes SRT sont réglés, ‘‘complet’’ s’affiche à l’écran CONSULT-II ; pour les éléments dont les codes SRT ne sont pas réglés, ‘‘incomplet’’ s’affiche.
2. **Avec l’analyseur générique GST**
   Sélection du mode 1 avec un analyseur générique GST.

L’illustration ci-dessous montre l’affichage d’un code SRT par CONSULT-II.
‘‘INCMP’’ signifie que l’autodiagnostic est incomplet et que le SRT n’est pas réglé. ‘‘CMPLT’’ signifie que l’autodiagnostic est complet et que le SRT est réglé.

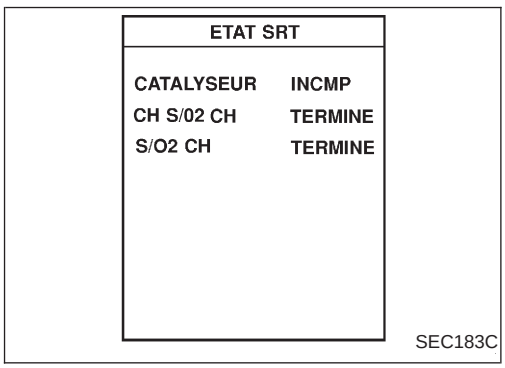

Simpo PDF Merge and Split Unregistered Version - http://www.simpopdf.com

Procédure d'entretien SRT

=NEEC0031S0311

Si, lors de l'inspection de l'état des émissions, un véhicule ne satisfait pas aux normes parce qu'un ou plusieurs éléments SRT indiquent ''incomplet'', passer en revue la séquence de diagnostic de l'organigramme de la page suivante.

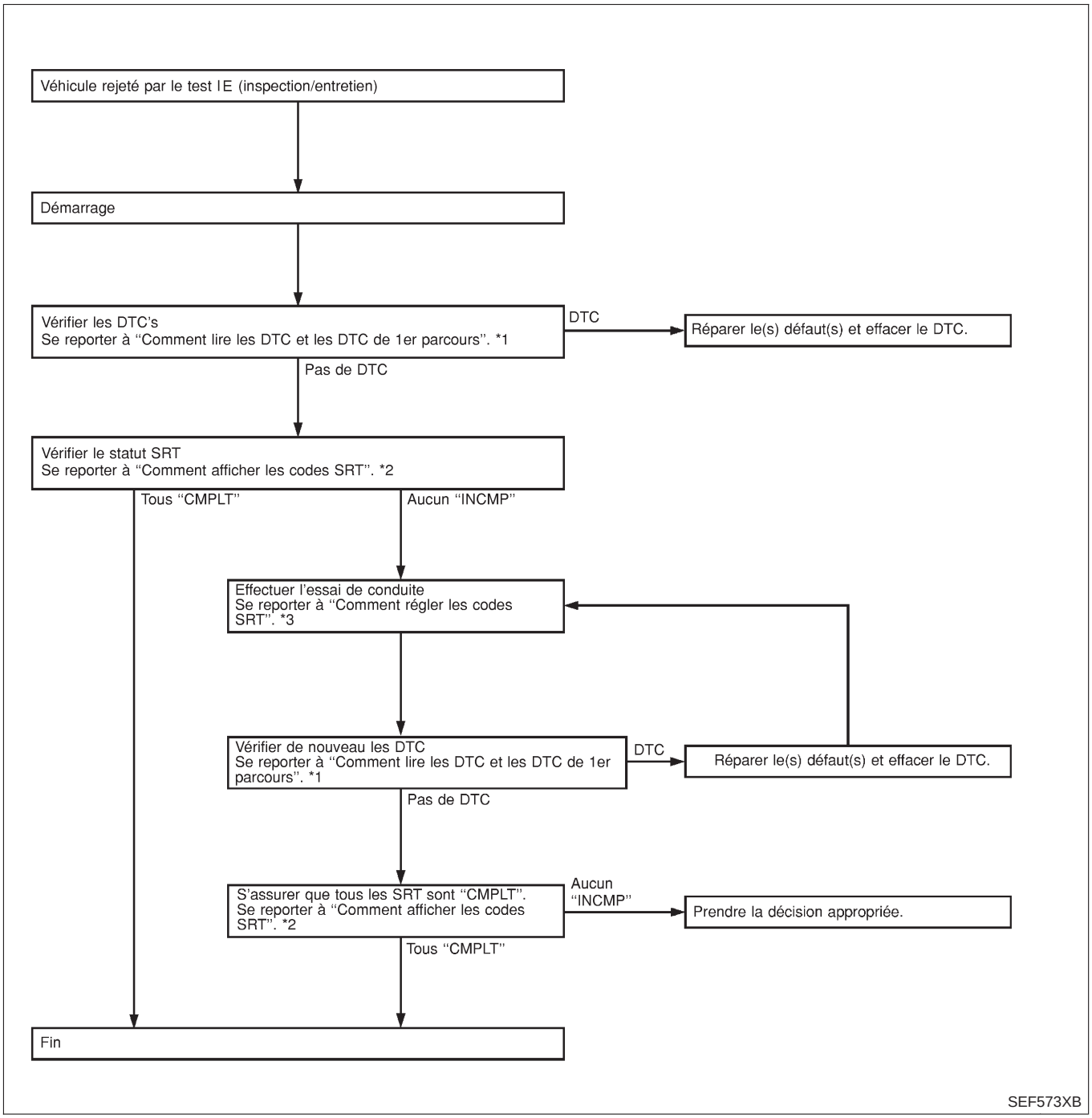

*1 EC-3053 *2 EC-3058 *3 EC-3059

Simpo PDF Merge and Split Unregistered Version - http://www.simpopdf.com

Comment régler les codes SRT

=NEEC0031S0302

Pour régler tous les codes SRT, il faut que l'autodiagnostic des éléments indiqués précédemment ait été effectué au moins une fois. Chaque diagnostic peut nécessiter une longue période d'utilisation du véhicule dans diverses conditions.

Avec CONSULT-II

Réaliser la procédure correspondante de confirmation de code de défaut (DTC) l'une après l'autre sur la base de la ''Priorité de performance'' du tableau se trouvant à EC-3056.

Sans CONSULT-II

La page suivante détaille les conditions de conduite les plus efficaces dans lesquelles les codes SRT peuvent être correctement réglés: EC-3060. Ces conditions de conduite doivent être suivies au moins une fois pour régler tous les codes SRT.

Simpo PDF Merge and Split Unregistered Version - http://www.simpopdf.com

Conditions de conduite

NEEC0031S0303

Remarque : Toujours conduire le véhicule prudemment en fonction des conditions de circulation et respecter la législation routière.

Profils de conduite — Complément d'informations et explications du tableau en page suivante.

Paramètre SRT (terminologie d'écran CONSULT-II)	Elément test d'auto-diagnostic (terminologie d'écran CONSULT-II)	Profil 1	Profil 2
CATALYSEUR	TW CATALYST SYS		
CH S/O2 HTR (SONDE A OXYGENE CHAUFFE)	HO2S1		
	HO2S2		
HO2S HTR (CHAUFFAGE DE SONDE A OXYGENE CHAUFFE)	HO2S1 HTR		
	HO2S2 HTR		

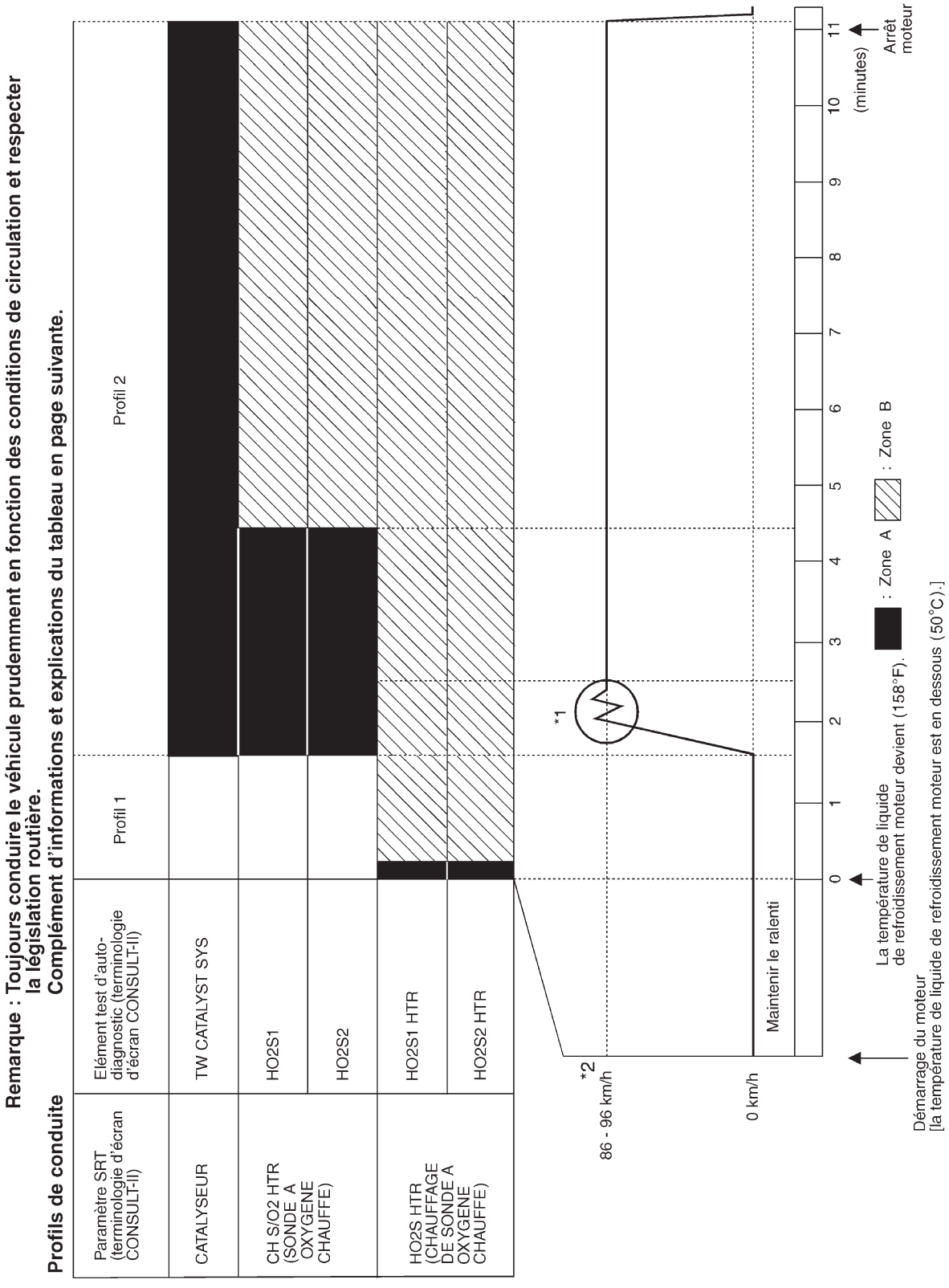

SEC300D

Simpo PDF Merge and Split Unregistered Version - http://www.simpopdf.com

- La durée requise pour chaque diagnostic varie en fonction de l'état de la chaussée, des conditions climatiques, de l'altitude, des habitudes de conduite de chacun, etc.
  La zone A correspond au laps de temps requis le plus court pour le diagnostic sous des conditions normales*.
  La zone B correspond au laps de temps dans lequel le diagnostic peut toujours être effectué s'il ne l'est pas encore à l'échéance de la zone A.

*: Les conditions normales sont caractérisées comme suit :

- Niveau de la mer
- Route sans déclivité
- Température de l'air ambiant : 20 - 30°C
- C'est dans ces conditions normales que le diagnostic est effectué le plus rapidement.
  Le diagnostic peut également être effectué dans des conditions différentes (par exemple : température ambiante autre que 20 - 30°C].

Condition 1 :

- **Le moteur est démarré et la température du liquide de refroidissement est de -10 à 35°C (la tension entre la borne 59 de l'ECM et la masse est de 3,0 - 4,3 V).**
- **Le moteur doit rester au ralenti jusqu'à ce que la température du liquide de refroidissement dépasse 70°C (tension entre la borne 59 de l'ECM et de la masse inférieure à 1,4 V).**

Condition 2 :

- La reprise d'une conduite à vitesse stabilisée, après une éventuelle interruption, permet de mener à bien chaque diagnostic. Dans ce cas, la durée nécessaire au diagnostic peut être prolongée.

*1: Accélérer jusqu'à la vitesse de 90 km/h, puis relâcher la pédale d'accélérateur et attendre pendant au moins 10 secondes. Accélérer de nouveau jusqu'à la vitesse de 90 km/h.
*2: Il est conseillé de vérifier la vitesse du véhicule au CONSULT-II ou à l'analyseur générique GST.

Vitesse suggérée de passage au rapport supérieur pour les véhicules avec T/M

Le tableau ci-après indique les vitesses conseillées de passage à chaque rapport supérieur. Ces vitesses sont optimales pour la consommation et les performances du véhicule. Les vitesses réelles de passage au rapport supérieur peuvent varier en fonction des conditions de circulation, du climat et des habitudes de conduite de chacun.

	Pour une accélération normale dans des régions à basse altitude [moins de 1,219 m]:		Pour une accélération rapide dans des régions à basse et haute altitude [plus de 1,219 m]:
Changement de vitesses	Vitesse d'accélération en km/h	Passage vitesse de CROISIERE	
1ère à 2nde	24	24	24
2nde à 3ème	40	29	40
3ème à 4ème	58	48	64
4ème à 5ème	64	63	72

Vitesse maximale conseillée pour chaque vitesse

Passer à un rapport inférieur si le moteur ne tourne pas souplement ou si vous devez accélérer.
Ne jamais dépasser la vitesse maximale conseillée (indiquée ci-dessous) dans quelque rapport. Pour conduite sur route plane, utiliser le rapport conseillé pour la vitesse concernée. Toujours respecter les limitations de vitesse indiquées sur les panneaux routiers et adapter la conduite à l'état de la chaussée afin d'assurer la sécurité. Ne pas suremballer le moteur en passant à un rapport de vitesse inférieur; ceci pourrait endommager le moteur ou entraîner la perte du contrôle sur le volant.

Rapport de vitesse	2WD (mode AUTO)
1ère	50
2ème	95

Simpo PDF Merge and Split Unregistered Version - http://www.simpopdf.com

VALEUR DU TEST ET LIMITE DU TEST (GST UNIQUEMENT - NE S'APPLIQUE PAS A CONSULT-II)

NEEC0031S04

Les informations suivantes font l'objet d'une spécification en mode 6 de la norme ISO J15031-5.
La valeur de test est un paramètre utilisé pour déterminer si le test de diagnostic d'un système/circuit est ''BON'' ou ''MAUVAIS'' pendant l'examen de l'ECM en cours d'autodiagnostic. La limite de test est une valeur de référence qui représente une valeur maximum ou minimum et qui est comparée avec la valeur de test obtenue.
Les éléments pour lesquels ces données (valeur et limite de test) sont affichées sont les mêmes que ceux des codes SRT.
Ces données (valeur et limite de test) sont spécifiées par un code d'identification de test (TID) et un code d'identification de composant (CID) et peuvent être affichées à l'écran du GST.

X : Applicable —: Non applicable

Elément SRT	Elément de test d'autodiagnostic	Valeur de test (affichage de l'analyseur générique GST)		Limite de test	Application
		TID	CID		
SYST CAT 3V-R1	Fonctionnement du catalyseur à 3 voies	01H	01H	Maxi.	X
		02H	81H	Mini.	X
CH S/O2	Sonde à oxygène chauffé 1	09H	04H	Maxi.	X
		0AH	84H	Mini.	X
		0BH	04H	Maxi.	X
		0CH	04H	Maxi.	X
		0DH	04H	Maxi.	X
	Sonde à oxygène chauffé 2	19H	86H	Mini.	X
		1AH	86H	Mini.	X
		1BH	06H	Maxi.	X
		1CH	06H	Maxi.	X
CH S/02 CH	Chauffage de la sonde à oxygène chauffé 1	29H	08H	Maxi.	X
		2AH	88H	Mini.	X
	Chauffage de la sonde à oxygène chauffé 2	2DH	0AH	Maxi.	X
		2EH	8AH	Mini.	X

ELEMENTS D'INFORMATION DE DIAGNOSTIC DE DEPOLLUTION

NEEC0031S05

X : Applicable —: Non applicable

Eléments (terminologie des écrans CONSULT-II)	DTC*1		Code SRT	Valeur de test/ Limite de test (analyseur générique GST uniquement)	DTC de 1er parcours	Page de référence
	CONSULT-II GST*3	ECM				
AUCUN DTC INDIQUE. AUTRE TEST PEUT ETRE NECESSAIRE.	**P0000**	**0000**	—	—	—	—
CH S/02 CH1 (R1)	P0031	0031	X	X	X*3	EC-3141
CH S/02 CH1 (R1)	P0032	0032	X	X	X*3	EC-3141
CH S/O2 CH2 (R1)	P0037	0037	X	X	X*3	EC-3146
CH S/O2 CH2 (R1)	P0038	0038	X	X	X*3	EC-3146
CIRC CAP DEBIT AIR	P0101	0101	—	—	X	EC-3152

Simpo PDF Merge and Split Unregistered Version - http://www.simpopdf.com

Eléments (terminologie des écrans CONSULT-II)	DTC*1		Code SRT	Valeur de test/ Limite de test (analyseur générique GST uniquement)	DTC de 1er parcours	Page de référence
	CONSULT-II GST*3	ECM				
CIRC CAP DEBIT AIR	P0102*2	0102	—	—	—	EC-3161
CIRC CAP DEBIT AIR	P0103*2	0103	—	—	—	EC-3161
CIRC CAP IAT	P0112*2	0112	—	—	—	EC-3170
CIRC CAP IAT	P0113*2	0113	—	—	—	EC-3170
CIRCUIT CAP TEMP RE MOT	P0117*2	0117	—	—	—	EC-3175
CIRCUIT CAP TEMP RE MOT	P0118*2	0118	—	—	—	EC-3175
CIRC CAP PAPIL	P0121	0121	—	—	X	EC-3181
CIRC CAP PAPIL	P0122*2	0122	—	—	—	EC-3193
CIRC CAP PAPIL	P0123*2	0123	—	—	—	EC-3193
CAPTEUR DE TEMPERATURE D'AIR D'ADMISSION	P0127	0127	—	—	X	EC-3204
S/O2 CH1 (R1)	P0132	0132	X	X	X*3	EC-3208
S/O2 CH1 (R1)	P0133	0133	X	X	X*3	EC-3215
S/O2 CH1 (R1)	P0134	0134	X	X	X*3	EC-3226
S/O2 CH2 (R1)	P0138	0138	X	X	X*3	EC-3233
S/O2 CH2 (R1)	P0139	0139	X	X	X*3	EC-3241
SYS CARB-PVR-R1	P0171	0171	—	—	X	EC-3252
SYS CARB-RICH-R1	P0172	0172	—	—	X	EC-3259
RATE MULTICYLINDRE	P0300	0300	—	—	X	EC-3266
RATE CYLINDRE 1	P0301	0301	—	—	X	EC-3266
RATE CYLINDRE 2	P0302	0302	—	—	X	EC-3266
RATE CYLINDRE 3	P0303	0303	—	—	X	EC-3266
RATE CYLINDRE 4	P0304	0304	—	—	X	EC-3266
CIRC CAP DETON-R1	P0327	0327	—	—	—	EC-3274
CIRC CAP DETON-R1	P0328	0328	—	—	—	EC-3274
CIRC CPV	P0335	0335	—	—	X	EC-3280
CIRC/CAP CMPS	P0340	0340	—	—	X	EC-3286
SYST CAT 3V-R1	P0420	0420	X	X	X*3	EC-3295
SOUP COM VOL PURG	P0444	0444	—	—	X	EC-3300
SOUP COM VOL PURG	P0445	0445	—	—	X	EC-3300
CIRC/CAP VIT VEH	P0500	0500	—	—	X	EC-3308
CIRC/ISC	P0505	0505	—	—	X	EC-3314
CIR/CON RALENTI	P0510	0510	—	—	X	EC-3321
ECM	P0605	0605	—	—	X	EC-3330

Simpo PDF Merge and Split Unregistered Version - http://www.simpopdf.com

Eléments (terminologie des écrans CONSULT-II)	DTC*1		Code SRT	Valeur de test/ Limite de test (analyseur générique GST uniquement)	DTC de 1er parcours	Page de référence
	CONSULT-II GST*3	ECM				
S/O2 CH1 (R1)	P1143	1143	X	X	X*4	EC-3332
S/O2 CH1 (R1)	P1144	1144	X	X	X*4	EC-3340
S/O2 CH2 (R1)	P1146	1146	X	X	X*4	EC-3348
S/O2 CH2 (R1)	P1147	1147	X	X	X*4	EC-3359
SURCHAUFFE	P1217	1217	—	—	X	EC-3370
CAPTEUR CPV (COG)	P1336	1336	—	—	X	EC-3375
CIR CON NEUTRE	P1706	1706	—	—	X	EC-3381

*1: le n° DTC de 1er parcours est le même que le n° DTC.
*2: Lorsque le mode de sécurité entre en fonction, le MI s'allume.
*3: Ces numéros sont prescrits par l'ISO 15031-6.
*4: Ces derniers ne sont pas affichés avec GST.

COMMENT EFFACER LES CODES DE DIAGNOSTIC DE DÉPOLLUTION

NEEC0031S06

Comment effacer les codes de défaut (avec CONSULT-II)

NEEC0031S0601

1. Si le contact d'allumage est toujours sur ON une fois la réparation terminée, veiller à le mettre sur OFF. Attendre au moins 5 secondes puis le remettre sur ON (moteur arrêté).
2. Mettre CONSULT-II sur ''ON'', puis appuyer sur la touche ''MOTEUR''.
3. Appuyer sur ''RESULT AUTO-DIAG''.
4. Appuyer sur ''EFFAC''. (Le DTC sera effacé dans l'ECM.)

Comment effacer les DTC (Avec CONSULT-II)

1. Si le contact d'allumage est sur 'ON' au terme de la réparation, veiller à le mettre une fois en position 'OFF'. Attendre au moins 5 secondes avant de le remettre en position 'ON' (moteur arrêté).

SELECTION SYSTEME
MOTEUR

2. Mettre CONSULT-II sur 'ON' et effleurer 'MOTEUR'.

SELECT MODE DIAG
SUPPORT TRAVAIL
RESULT AUTO-DIAG
CONTROLE DE DONNEES
CONTROLE DE DONNEES (SPEC)
TEST ACTIF
CONFIRMATION SRT
N° PIECE BOIT CONTR

3. Effleurer 'RESULT AUTO-DIAG'

RESULT AUTO-DIAG	
RESULTATS DTC	OCCU-RENCE
CIRC CAP DEBIT AIR [P0101]	0

4. Effleurer 'EFFAC'. (Le DTC sera effacé dans l'ECM).

SEC312D

Simpo PDF Merge and Split Unregistered Version - http://www.simpopdf.com

Les codes de diagnostic antipollution peuvent être effacés en appuyant sur ‘‘EFFAC’’ en mode de ‘‘RESULTATS D’AUTODIAGNOSTIC’’ de CONSULT-II.

Comment effacer les codes de défaut (avec GST)

NEEC0031S0602

1. Si le contact d’allumage est toujours sur ON une fois la réparation terminée, veiller à le mettre sur OFF. Attendre au moins 5 secondes puis le remettre sur ON (moteur arrêté).
2. Mettre l’analyseur générique GST en mode 4.

Les codes de diagnostic de dépollution dans l’ECM peuvent être effacés en sélectionnant le mode 4 de l’analyseur générique GST.

REMARQUE :

- **Si la batterie est déconnectée, les codes de diagnostic de dépollution seront perdus après environ 24 heures.**
- **Les données suivantes sont effacées lorsque la mémoire de l’ECM est réinitialisée.**

1) Codes de défaut de diagnostic
2) Codes de défaut de diagnostic de 1er parcours
3) Données figées
4) Données figées de 1er parcours
5) Codes de test de lecture du système (SRT)
6) Valeurs de test
7) Autres

Les procédures de travail à appliquer sont expliquées, avec des exemples de codes de défaut à l’appui. Veiller à ce que toutes les données énumérées ci-dessus, et pas seulement les codes de défaut, soient effacées de la mémoire de l’ECM lors de ces procédures de travail.

NVIS (système d’immobilisation de véhicule Nissan — NATS)

NEEC1601

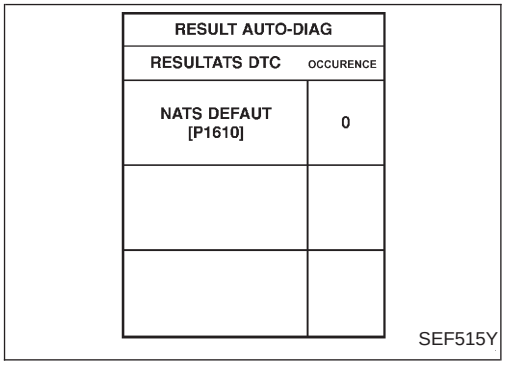

- **Si le témoin de sécurité s’allume lorsque le contact d’allumage est sur ‘‘ON’’ ou que ‘‘DEFAUT NATS’’ est affiché sur l’écran de ‘‘RESULT AUTO-DIAG’’, passer dans le mode de résultats d’autodiagnostic avec CONSULT-II en utilisant une carte de programme NATS. Se reporter à ‘‘NVIS (système d’immobilisation de véhicule Nissan — NATS)’’ dans la section EL.**
- **Confirmer qu’aucun résultat d’autodiagnostic NVIS (NATS) n’est affiché avant d’appuyer sur ‘‘EFFAC’’ dans le mode ‘‘RESULT AUTO-DIAG’’ de CONSULT-II.**
- **Lorsque l’on remplace l’ECM, il est nécessaire de procéder à l’initialisation du système NVIS (NATS) et à l’enregistrement de tous les codes d’identification des clés de contact NVIS (NATS) à l’aide du CONSULT-II et de la carte de programme NATS.**
  S’assurer par conséquent que le client a bien remis toutes ses clés. Concernant les procédures d’initialisation du NVIS (NATS) et l’enregistrement de numéros d’identification de clés de contact NVIS (NATS), se reporter au manuel d’entretien de CONSULT-II pour IVIS/NVIS.

Simpo PDF Merge and Split Unregistered Version - http://www.simpopdf.com

Témoin de défaut (MI)

DESCRIPTION

NEEC0032

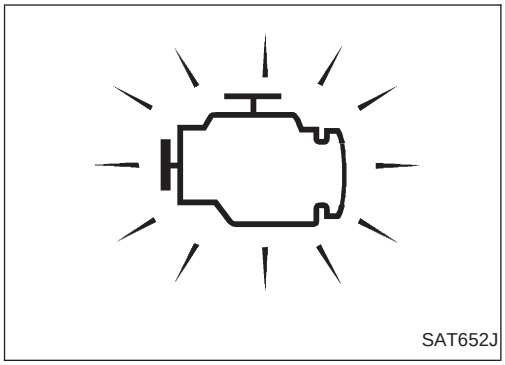
SAT652J

Le témoin MI est situé sur le tableau de bord.

1. Il s'allume lorsque le contact est mis sur la position ON, moteur arrêté. Ceci est une vérification au moyen de l'ampoule.

- Si le témoin MI ne s'allume pas, se reporter à la section EL (''TEMOINS D'AVERTISSEMENT'') ou se reporter à la page EC-3422.

2. Le témoin MI doit s'éteindre lorsque le moteur démarre.
   S'il reste allumé, le système de diagnostic de bord a probablement détecté un problème au niveau de la gestion moteur.

Fonctionnement du système de diagnostic de bord

NEEC0032S07

Le système de diagnostic de bord comprend les quatre fonctions suivantes.

Mode de test de diagnostic	Etat de CLE et de MOT.	Fonctionnement	Explication de la fonction
Mode I	Contact d'allumage sur ''ON''  Moteur arrêté 	VERIFICATION DE L'AMPOULE	Pour vérifier si l'ampoule du MI est endommagée (grillée, circuit ouvert, etc.). Si le témoin MI ne fonctionne pas, vérifier le circuit du témoin MI
	Moteur en marche 	AVERTISSEMENT DE DEFAUT	Ceci est une condition de conduite habituelle. Lorsque un défaut est détecté deux fois dans deux cycles de conduite consécutifs (logique de détection de deux parcours), le témoin MI s'allumera afin d'informer le conducteur qu'il en a détecté un. Les défauts suivants seront indiqués au moyen de l'allumage ou du clignotement du témoin MI dans le 1er parcours. ● ''Raté d'allumage (dommage possible au catalyseur 3 voies)'' ● ''Commande en boucle fermée'' ● Mode de sécurité

Simpo PDF Merge and Split Unregistered Version - http://www.simpopdf.com

Témoin de défaut (MI)

Mode de test de diagnostic	Etat de CLE et de MOT.	Fonctionnement	Explication de la fonction
Mode II	Contact d'allumage sur ''ON''  Moteur arrêté 	RESULTATS DE L'AUTODIAGNOSTIC	Cette fonction fait apparaître les DTC et des DTC de 1er parcours.
	Moteur en marche 	CONTROLE DE LA SONDE A OXYGENE CHAUFFE 1	Cette fonction fait apparaître le mélange de carburant (riche ou pauvre), contrôlé par la sonde à oxygène chauffé 1.

Le témoin MI clignote sans DTC

NEEC0032S0701

Si l'ECM se trouve en mode II de test de diagnostic, il peut arriver que le témoin MI clignote alors que le moteur tourne. Dans ce cas, vérifier le mode de test de diagnostic ECM. Comment changer de mode de diagnostic. La procédure à suivre pour changer de mode de test de diagnostic (fonction) est expliquée plus loin, avec un complément d'information sur les fonctions évoquées ci-dessus Comment changer de mode de diagnostic. Les codes de diagnostic de dépollution suivant sont effacés lorsque la mémoire de l'ECM est réinitialisée.

1. Codes de défaut de diagnostic
2. Codes de défaut de diagnostic de 1er parcours
3. Données figées
4. Données figées de 1er parcours
5. Codes de test de lecture du système (SRT)
6. Valeurs de test
7. Autres

Comment changer le mode de test de diagnostic

NEEC0032S08

REMARQUE :

- **Il est mieux de mesurer le temps avec précision avec une montre.**
- **Il n'est pas possible de passer au mode diagnostic lorsque le circuit du capteur de la position de la pédale de l'accélérateur a un défaut.**
- **L'ECM retourne toujours au mode de diagnostic I après avoir mis le contact d'allumage sur ''OFF''.**

Comment régler le mode II de test de diagnostic (résultats de l'autodiagnostic)

NEEC0032S0801

1. Vérifier que la pédale de l'accélérateur est complètement relâchée, que le contact d'allumage est sur ''ON'' et attendre 3 secondes.
2. Répéter la procédure suivante rapidement cinq fois en moins de 5 secondes.

1) Enfoncer la pédale de l'accélérateur au maximum.
2) Relâcher complètement la pédale de l'accélérateur.

3. Attendre pendant 7 secondes et ensuite enfoncer la pédale de l'accélérateur au maximum et la maintenir environ 10 secondes jusqu'au moment où le témoin MI commence à clignoter.
4. Relâcher complètement la pédale de l'accélérateur.
   ECM a commencé le mode II de test de diagnostic (Résultats de l'autodiagnostic).

Simpo PDF Merge and Split Unregistered Version - http://www.simpopdf.com

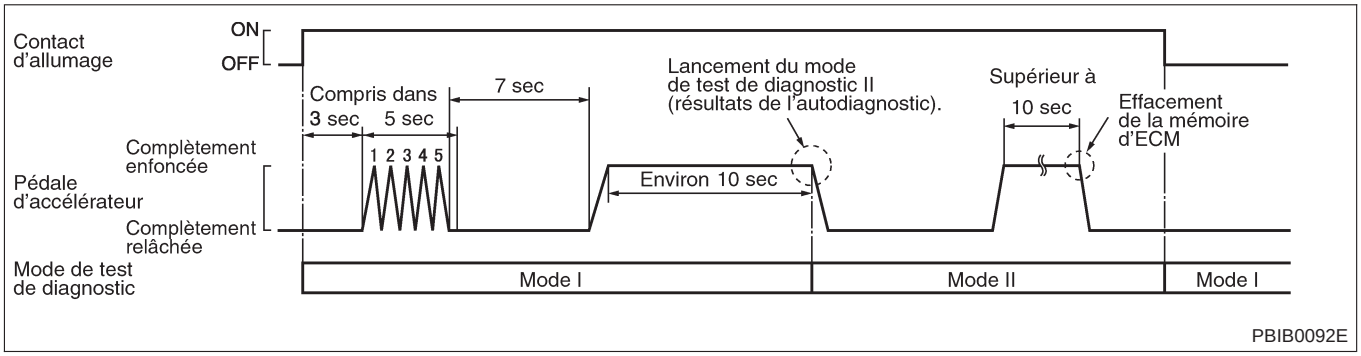

Comment régler le mode II de test de diagnostic (Contrôle de la sonde à oxygène chauffé 1)

NEEC0032S0802

1. Régler l'ECM sur Mode II de test de diagnostic (Résultats de l'autodiagnostic). Se reporter à Comment passer au mode II de test de diagnostic (résultats de l'autodiagnostic).
2. Démarrer le moteur.
   L'ECM est entré en mode II de test de diagnostic (contrôle de la sonde à oxygène chauffé 1).
   L'ECM commence le contrôle de la sonde à oxygène chauffé 1 depuis le capteur d'essai 1.

Comment effacer le mode II de test de diagnostic (résultats de l'autodiagnostic)

NEEC0032S0804

1. Régler l'ECM dans le mode II de test de diagnostic (résultats de l'autodiagnostic). Se reporter à Comment passer au mode II de test de diagnostic (résultats de l'autodiagnostic).
2. Enfoncer la pédale de l'accélérateur au maximum et la maintenir pendant plus de 10 secondes. Les codes de diagnostic de dépollution ont été effacés de la mémoire de sauvegarde de l'ECM.
3. Relâcher la pédale de l'accélérateur au maximum et confirmer que DTC 0000 est affiché.

Mode de diagnostic I — Vérification de l'ampoule

NEEC0032S09

Dans ce mode, le témoin MI du tableau de bord doit rester allumé. S'il demeure éteint, vérifier l'ampoule. Se reporter à ''TEMOINS D'AVERTISSEMENT'', à la page EC-3422.

Mode de diagnostic I — Avertissement de défaut de fonctionnement

NEEC0032S10

MI	Condition
MARCHE	Un défaut est détecté ou l'unité centrale de l'ECM est défectueuse.
ARRET	Pas de défaut.

- Ces numéros de DTC sont identifiés en mode II d'essai de diagnostic (RESULTATS DE L'AUTODIAGNOSTIC)

Mode de diagnostic II — Résultat d'autodiagnostic

NEEC0032S11

Dans ce mode, le DTC et le DTC de 1er parcours sont indiqués par le nombre de clignotements du témoin MI comme indiqué ci-dessous.
Le DTC et le DTC de 1er parcours sont indiqués simultanément. Si le témoin MI ne s'allume pas en mode I de test de diagnostic (avertissement de défaut), tous les éléments indiqués sont des DTC de 1er parcours. Lorsqu'un seul code est indiqué quand le témoin MI s'allume en mode II de test de diagnostic (RESULTATS DE L'AUTODIAGNOSTIC), c'est qu'il s'agit d'un code de défaut classique ; lorsque plusieurs codes sont indiqués, il peut s'agir soit de DTC, soit de DTC de 1er parcours. Numéro de code de défaut identique au numéro de code de défaut de 1er parcours. Ces codes peuvent être identifiés à l'aide de CONSULT-II ou de l'analyseur générique GST. Se reporter à l'exemple ci-dessous pour la procédure à suivre pour lire les codes de défaut.

Simpo PDF Merge and Split Unregistered Version - http://www.simpopdf.com

Témoin de défaut (MI)

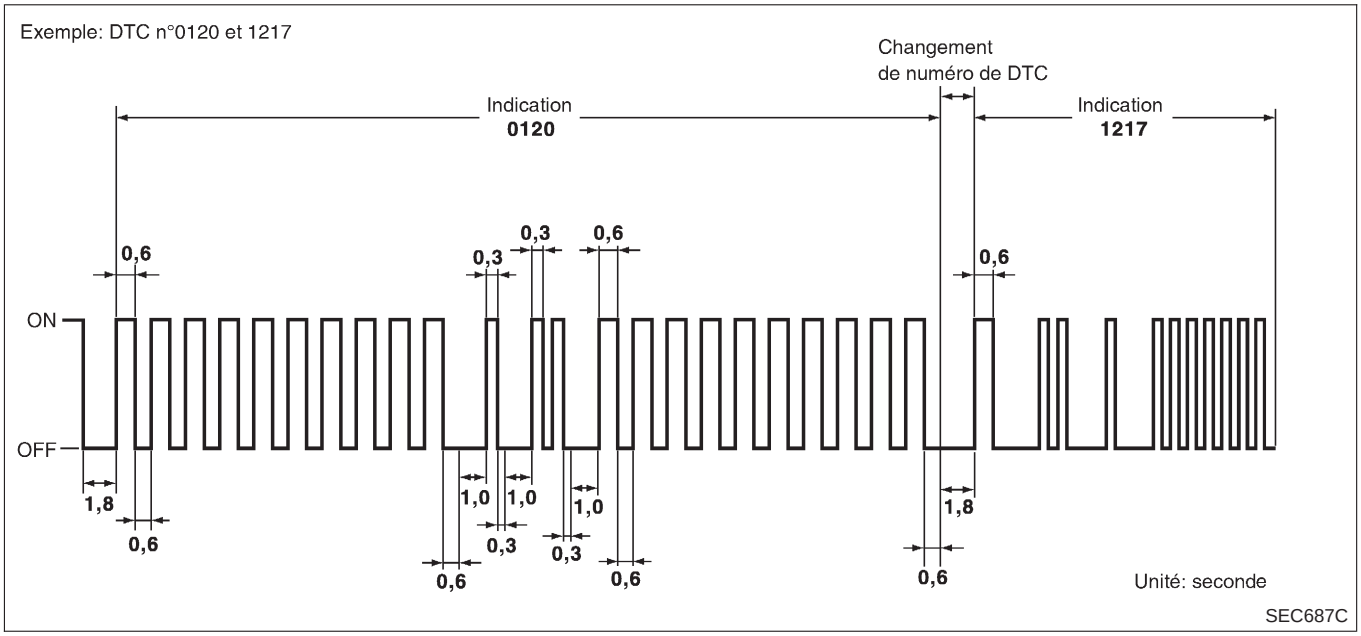

Chaque DTC est identifié par des clignotements qui composent un nombre à quatre chiffres. Le ‘‘zéro’’ est indiqué par dix clignotements. L’intervalle de temps utilisé pour indiquer le chiffre des milliers est de 1,2 seconde, décomposé en un cycle ALLUME (0,6 seconde) - ETEINT (0,6 seconde).
Les chiffres des centaines et inférieurs sont indiqués par un cycle de 0,6 seconde, décomposé en un cycle ALLUME (0,3 seconde) - ETEINT (0,3 seconde).
Le passage des milliers aux centaines, et ainsi de suite, est indiqué par une pause (ETEINT) de 1,0 seconde. Autrement dit, le chiffre suivant apparaît à l’écran 1,3 seconde après que le chiffre précédent a disparu.
Le passage d’un code défaut à un autre est indiqué par une pause (ETEINT) de 1,8 seconde.
De cette manière, tous les défauts détectés sont classés selon leur numéro de code de défaut. Le DTC ‘‘0000’’ ne se rapporte à aucun défaut. (voir ‘‘DIAGNOSTIC DE DEFAUT — INDEX’’, page EC-3010.)

Comment effacer le mode II de test de diagnostic (résultats de l’autodiagnostic)

NEEC0032S1101

Le DTC peut être effacé de la mémoire de sauvegarde dans l’ECM en enfonç;ant la pédale de l’accélérateur. Se reporter à Comment changer le mode de test de diagnostic.

- **Si la batterie est déconnectée, le DTC sera effacé de la mémoire de sauvegarde après environ 24 heures.**
- **Veiller à ne pas effacer la mémoire enregistrée avant de procéder aux diagnostics de défaut.**

Mode II de test de diagnostic — Contrôle de la sonde à oxygène chauffé 1

NEEC0032S12

Dans ce mode, le témoin MI indique l’état du mélange air-carburant (pauvre ou riche), lequel est contrôlé par la sonde à oxygène chauffé 1.

MI	Richesse de mélange de carburant dans les gaz d’échappement	Condition de contrôle de régulation automatique de la richesse de mélange air/carburant
MARCHE	Pauvre	Contrôle par boucle fermée
ARRET	Riche	
*Reste ALLUME ou ETEINT	Toute condition	Contrôle par boucle ouverte

*: Maintient les conditions juste avant de passer en boucle ouverte.

Pour vérifier le fonctionnement de la sonde à oxygène chauffé 1, démarrer le moteur en mode II de test de diagnostic et le faire chauffer jusqu’à ce que l’indicateur de température du liquide de refroidissement du moteur pointe sur le milieu du cadran de la jauge.
Faire tourner le moteur à 2 000 tr/mn pendant environ 2 minutes à vide. Puis s’assurer que le MI s’allume plus de 5 fois en 10 secondes avec un régime-moteur de 2 000 tr/mn à vide.

Simpo PDF Merge and Split Unregistered Version - http://www.simpopdf.com

Tableau opérationnel du diagnostic de bord (OBD)

NEEC0033

RELATION EXISTANT ENTRE TÉMOIN MI, DTC DE 1ER PARCOURS, DTC ET PARAMÈTRES DÉTECTABLES

NEEC0033S01

- Lorsqu'un défaut est détecté pour la première fois, le DTC de 1er parcours et les données figées de 1er parcours sont mémorisés par l'ECM.
- Lorsque le même défaut est détecté deux fois de suite au cours de deux parcours consécutifs, le DTC et les données figées sont mémorisés par l'ECM, et le témoin MI s'allume. Pour de plus amples informations, se reporter à ''Logique de détection de deux parcours'', page EC-3052.
- Le témoin MI s'éteint après que le véhicule a accompli 3 parcours sans défaut. Un parcours n'est pris en compte que lorsque les conditions de conduite enregistrées sont reproduites (telles que mémorisées dans l'ECM). Si un autre défaut est détecté lors du décompte, le compteur est remis à zéro.
- Le DTC et les données figées ne sont plus affichés après que le véhicule a accompli 40 parcours (conditions de conduite A) sans répétition du même défaut (sauf pour les ratés d'allumage et le système d'injection de carburant). Pour les ratés d'allumage et le système d'injection de carburant, le DTC et les données figées ne sont plus affichés après que le véhicule a accompli 80 parcours (conditions de conduite C) sans répétition du même défaut. Le paramètre d'occurrences ''OCCURRENCES'' indiqué en mode ''RESULTATS D'AUTODIAGNOSTIC'' de CONSULT-II comptabilise le nombre de parcours accompli par le véhicule.
- Le DTC de 1er parcours n'est pas affiché lorsque le résultat de l'autodiagnostic est ''BON'' lors du second parcours.

TABLEAU RÉCAPITULATIF

NEEC0033S02

Eléments	Système d'injection de carburant	Raté d'allumage	Autre
MI (éteint)	3 (conditions de conduite B)	3 (conditions de conduite B)	3 (conditions de conduite B)
DTC, données figées (sans affichage)	80 (conditions de conduite C)	80 (conditions de conduite C)	40 (conditions de conduite A)
DTC de 1er parcours (effacement)	1 (conditions de conduite C), *1	1 (conditions de conduite C), *1	1 (conditions de conduite B)
Données figées de 1er parcours (effacement)	*1, *2	*1, *2	1 (conditions de conduite B)

Pour en savoir plus sur les conditions de conduite B et C dans ''Système d'injection'' et ''Raté d'allumage'', se reporter à EC-3072.
Pour plus d'informations sur les conditions de conduite A et B dans ''Autres'', se reporter à EC-3074.
*1: Lorsqu'une situation normale (BON) est détectée, l'affichage s'efface.
*2: Il y a effacement au moment de la détection du même défaut lors du 2ème parcours.

Simpo PDF Merge and Split Unregistered Version - http://www.simpopdf.com

LIENS ENTRE LE MI, LE DTC, LE DTC DE 1ER PARCOURS ET LES CONDITIONS DE CONDUITE POUR "RATÉ D'ALLUMAGE" <DÉTÉRIORATION DE LA QUALITÉ D'ÉCHAPPEMENT>, "SYSTÈME D'INJECTION"

=NEEC0033S03

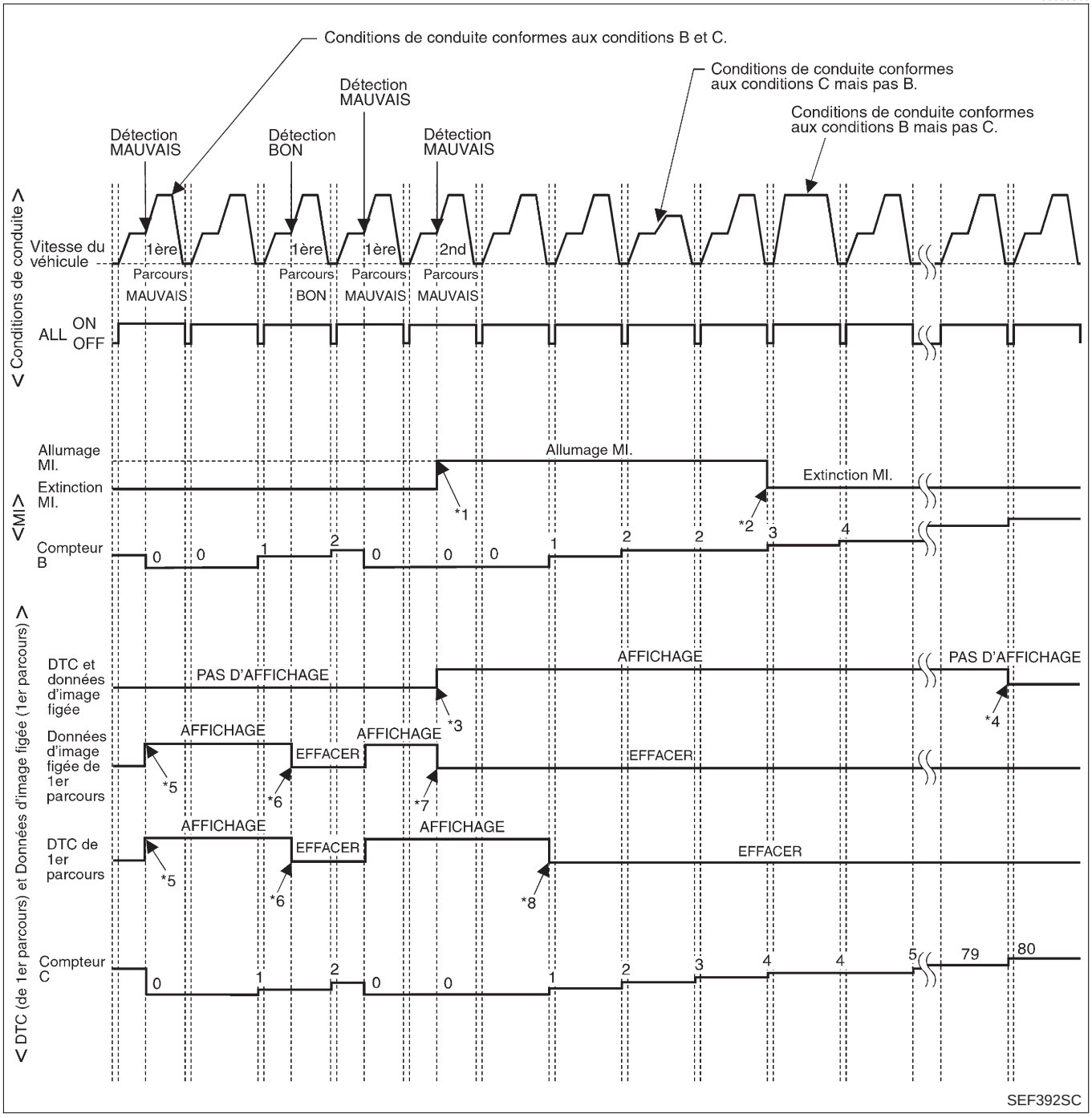

*1: Lorsque le même défaut est détecté lors de deux parcours consécutifs, le témoin MI s'allume.

*2: Le témoin MI s'éteint après que le véhicule a accompli 3 parcours (conditions de conduite B) sans défaut.

*3: Lorsque le même défaut est détecté lors de deux parcours consécutifs, le DTC et les données figées sont mémorisés par l'ECM.

*4: Le DTC et les données figées ne sont plus affichés après que le véhicule a accompli 80 parcours (conditions de conduite C) sans répétition du même défaut (le DTC et les données figées restent néanmoins dans la mémoire de l'ECM).

*5: Lorsqu'un défaut est détecté pour la première fois, le DTC de 1er parcours et les données figées de 1er parcours sont mémorisées par l'ECM.

*6: Le DTC de 1er parcours et les données figées de 1er parcours sont effacés lorsque la situation normale (BON) est détectée.

*7: Lorsque le même défaut est détecté lors d'un second parcours consécutif, les données figées du 1er parcours sont effacées.

*8: Après mémorisation du DTC par l'ECM, le DTC de 1er parcours est effacé lorsque le véhicule accomplit un parcours (conditions de conduite C) sans répétition du même défaut.

Simpo PDF Merge and Split Unregistered Version - http://www.simpopdf.com

EXPLICATION DES CONDITIONS DE CONDUITE POUR ‘‘RATÉ D’ALLUMAGE <DÉTÉRIORATION DE LA QUALITÉ DE L’ÉCHAPPEMENT>’’, ‘‘SYSTÈME D’INJECTION DE CARBURANT’’

NEEC0033S04

Conditions de conduite B

NEEC0033S0401

Les conditions de conduite B correspondent aux paramètres de fonctionnement suivants :
Tous les composants et systèmes doivent être contrôlés au moins une fois par le système OBD.

- Le compteur B est effacé dès lors qu’un défaut est détecté une fois, quelles que soient les conditions de conduite.
- Le compteur B est majoré d’une unité lorsqu’aucun défaut n’est détecté dans les conditions de conduite B.
- Le témoin MI s’éteint lorsque le compteur B atteint 3. (*2 dans ‘‘TABLEAU OPERATIONNEL DU DIAGNOSTIC DE BORD OBD’’)

Conditions de conduite C

NEEC0033S0402

Les conditions de conduite C correspondent aux paramètres de fonctionnement suivants :

1) Les conditions suivantes doivent être reproduites simultanément :
   Régime-moteur : (régime-moteur dans les données figées) ±375 tr/min
   Valeur de charge calculée : (valeur de charge calculée dans les données figées) × (1±0,1) [%]

Température (T) du liquide de refroidissement du moteur

- Lorsque les données figées indiuent une valeur inférieure á 70°C, ‘‘T’’ doit être inférieure à 70°C.
- Lorsque les données figées indiquent une valeur supérieure ou égale à 70°C, ‘‘T’’ devrait être supérieure ou égale à 70°C.

Exemples :
Si les données figées mémorisées sont les suivantes :
Régime-moteur : 850 tr/mn, Valeur de charge calculée : 30,
Température du liquide de refroidissement : 80°C
Pour répondre aux conditions de conduite C, le véhicule doit rouler en reproduisant les conditions suivantes :
Régime-moteur : 475 - 1,225 tr/mn, Valeur de charge calculée : 27-33,
Température du liquide de refroidissement : supérieure à 70°C

- Les données du compteur C sont effacées lors de la détection du défaut quelles que soient les conditions (1).
- Le compteur C est majoré d’une unité lorsque le même défaut n’est pas détecté dans (1).
- Le DTC n’est plus affiché après que le compteur C a atteint 80.
- Après mémorisation du DTC par l’ECM, le DTC de 1er parcours est effacé dès que le compteur C n’enregistre plus le même défaut.

Simpo PDF Merge and Split Unregistered Version - http://www.simpopdf.com

Tableau opérationnel du diagnostic de bord (OBD)

LIENS ENTRE LE TÉMOIN MI, LE DTC, LE DTC DE 1ER PARCOURS ET LES CONDITIONS DE CONDUITE SAUF POUR "RATÉ D'ALLUMAGE <DÉTÉRIORATION DE LA QUALITÉ DES ÉMISSIONS>", "SYSTÈME D'INJECTION DE CARBURANT"

NEEC0033S05

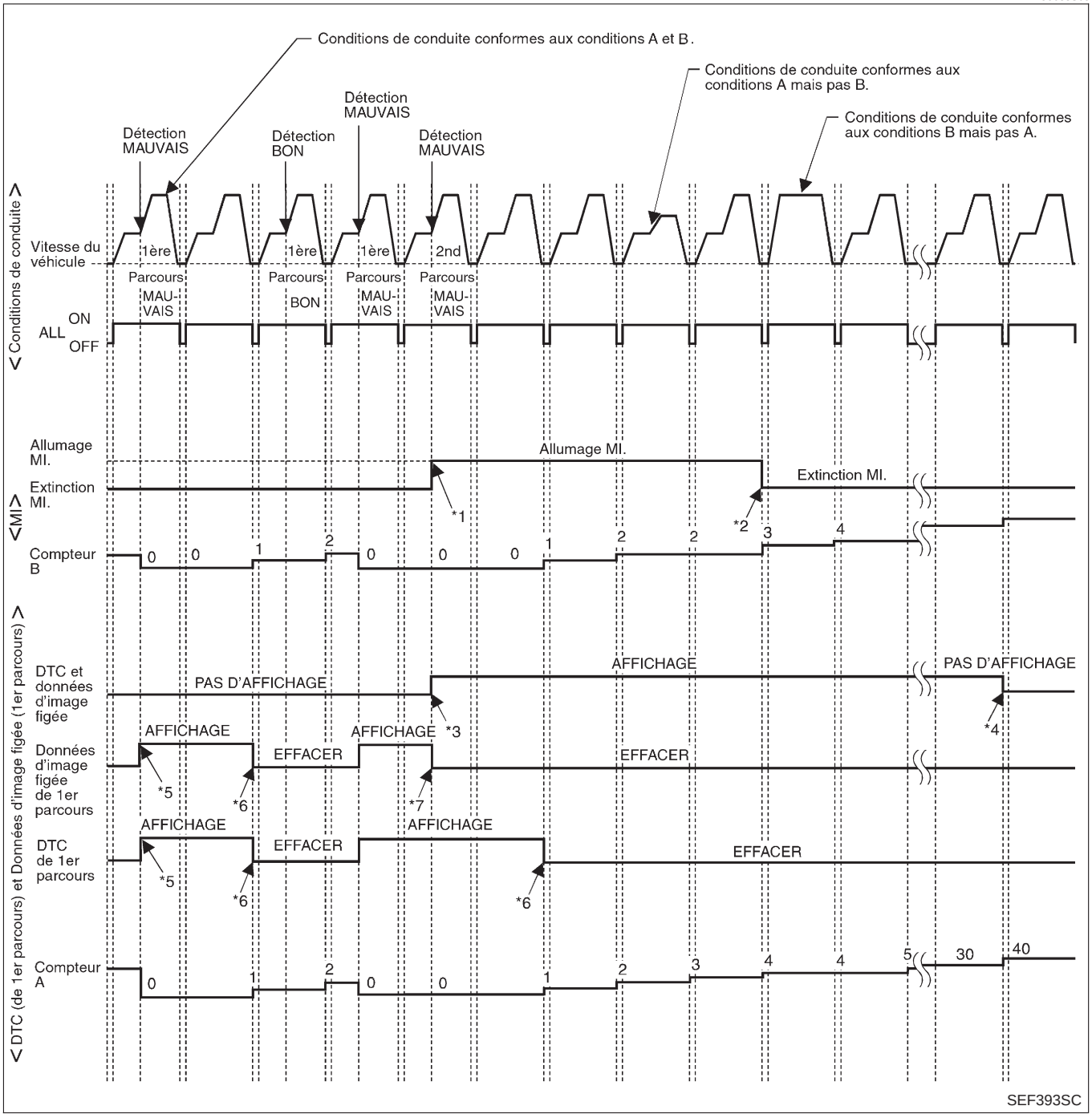

*1: Lorsque le même défaut est détecté lors de deux parcours consécutifs, le témoin MI s'allume.

*2: Le témoin MI s'éteint après que le véhicule a accompli 3 parcours (conditions de conduite B) sans défaut.

*3: Lorsque le même défaut est détecté lors de deux parcours consécutifs, le DTC et les données figées sont mémorisés par l'ECM.

*4: Le DTC et les données figées ne sont plus affichés après que le véhicule a accompli 40 parcours (conditions de conduite A) sans répétition du même défaut (le DTC et les données figées restent néanmoins dans la mémoire de l'ECM).

*5: Lorsqu'un défaut est détecté pour la première fois, le DTC de 1er parcours et les données figées de 1er parcours sont mémorisées par l'ECM.

*6: Le DTC de 1er parcours est effacé après que le véhicule a accompli un parcours (conditions de conduite B) sans répétition du même défaut.

*7: Lorsque le même défaut est détecté lors d'un second parcours consécutif, les données figées du 1er parcours sont effacées.

Simpo PDF Merge and Split Unregistered Version - http://www.simpopdf.com

EXPLICATION DES CONDITIONS DE CONDUITE SAUF POUR ''RATÉ D'ALLUMAGE <DÉTÉRIORATION DE LA QUALITÉ DES ÉMISSIONS>'', ''SYSTÈME D'INJECTION DE CARBURANT''

NEEC0033S06

Conditions de conduite A

NEEC0033S0601

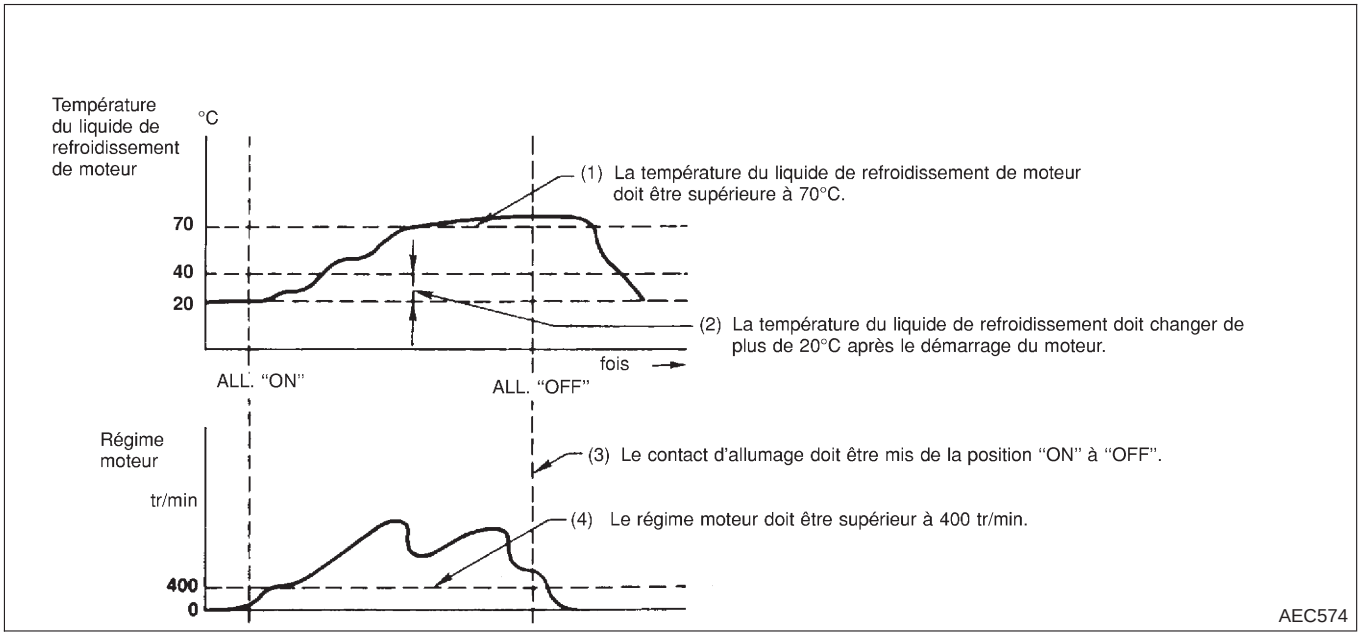

- Les données du compteur A sont effacées lors de la détection du défaut quelles que soient les conditions (1) à (4).
- Le compteur A est majoré lorsque les conditions (1) à (4) sont remplies sans répétition du même défaut.
- Le DTC n'est plus affiché après que le compteur A a atteint 40.

Conditions de conduite B

NEEC0033S0602

Les conditions de conduite B correspondent aux paramètres de fonctionnement suivants :
Tous les composants et systèmes doivent être contrôlés au moins une fois par le système OBD.

- Le compteur B est effacé dès lors qu'un défaut est détecté une fois, quelles que soient les conditions de conduite.
- Le compteur B est majoré d'une unité lorsqu'aucun défaut n'est détecté dans les conditions de conduite B.
- Le témoin MI s'éteint lorsque le compteur B atteint 3 (*2 dans ''TABLEAU OPERATIONNEL DU DIAGNOSTIC DE BORD OBD'').

Simpo PDF Merge and Split Unregistered Version - http://www.simpopdf.com

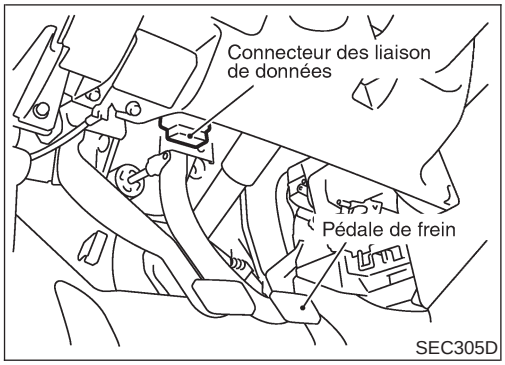

SEC305D

CONSULT-II

=NEEC0034

PROCÉDURE D’INSPECTION AVEC CONSULT-II

NEEC0034S01

1. Mettre le contact d’allumage sur OFF.
2. Brancher ‘‘CONSULT-II’’ au connecteur de diagnostic, situé derrière le couvercle de la boîte à fusibles.

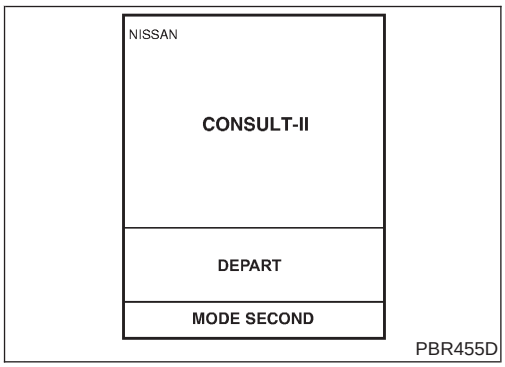

PBR455D

3. Mettre le contact d’allumage sur ‘‘ON’’.
4. Appuyer sur ‘‘DEPART’’.

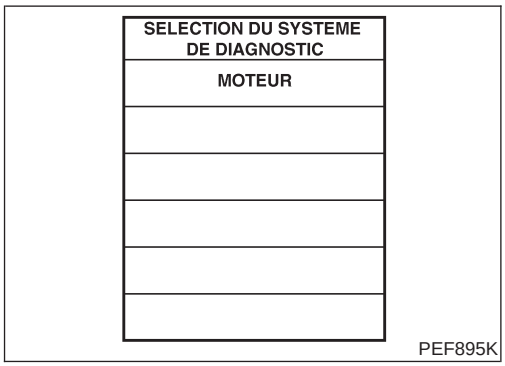

PEF895K

5. Appuyer sur ‘‘MOTEUR’’.

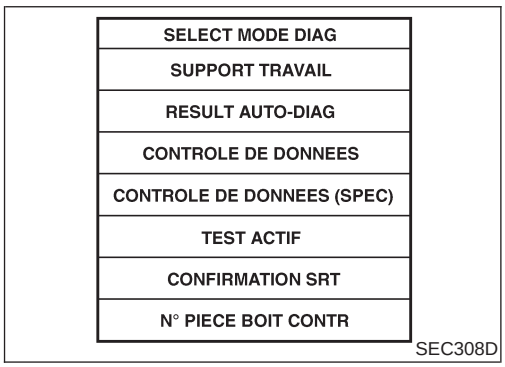

SEC308D

6. Effectuer chaque mode de test de diagnostic en fonction de chaque procédure d’entretien.

Pour de plus amples informations, se reporter au manuel d’utilisation de CONSULT-II.

Simpo PDF Merge and Split Unregistered Version - http://www.simpopdf.com

COMPATIBILITÉ AVEC LES COMPOSANTS DE L'ECCS/ LES SYSTÈMES DE COMMANDE

NEEC0034S02

Elément			MODE DE TEST DE DIAGNOSTIC							
			SUPPORT TRAVAIL	RESULTATS DE L'AUTODIAGNOSTIC		CONTROLE DE DONNEES	CONTROLE DE DONNEES (SPEC.)	TEST ACTIF	SRT CONFIRMATION	
				DTC*1	DONNEES FIGEES*2				ETAT SRT	SUPPORT TRAVAIL DTC
COMPOSANTS DE L'ECCS	ENTREE	Capteur d'angle d'arbre à cames		X	X	X	X			
		Débitmètre d'air		X		X	X			
		Capteur de température du liquide de refroidissement du moteur		X	X	X	X	X		
		Sonde à oxygène chauffé 1		X		X	X		X	X
		Sonde à oxygène chauffé 2		X		X	X		X	X
		Capteur de vitesse du véhicule		X	X	X	X			
		Capteur d'ouverture de papillon	X	X		X	X			
		Capteur de température d'air d'admission		X		X	X			
		Capteur de position du vilebrequin (OBD)		X						
		Capteur de détonation		X						
		Contact d'allumage (signal de démarrage)				X	X			
		Contact de position de papillon fermé		X		X	X			
		Contact de ralenti (signal du capteur de position de papillon)				X	X			
		Interrupteur de climatiseur				X	X			
		Contact de position de stationnement/point mort (PNP)		X		X	X			
		Manocontact d'huile de direction assistée				X	X			
		Interrupteur de pression du climatiseur				X	X			
		Tension de la batterie				X	X			
		Contact de température de l'air ambiant				X	X			

Simpo PDF Merge and Split Unregistered Version - http://www.simpopdf.com

Elément			MODE DE TEST DE DIAGNOSTIC							
			SUPPORT TRAVAIL	RESULTATS DE L'AUTODIAGNOSTIC		CONTROLE DE DONNEES	CONTROLE DE DONNEES (SPEC.)	TEST ACTIF	SRT CONFIRMATION	
				DTC*1	DONNEES FIGEES*2				ETAT SRT	SUPPORT TRAVAIL DTC
COMPOSANTS DE L'ECCS	SORTIE	Injecteurs				X	X	X		
		Transistor d'alimentation (calage de l'allumage)	X	X (Signal d'allumage)		X	X	X		
		Soupape IACV-AAC	X	X		X	X	X		
		Electrovanne de commande de volume de purge de cartouche EVAP		X		X	X	X		
		Relais de climatiseur				X	X			
		Relais de pompe d'alimentation	X			X	X	X		
		Chauffage de la sonde à oxygène chauffé 1		X		X	X		X	
		Chauffage de la sonde à oxygène chauffé 2		X		X	X		X	
		Valeur de charge calculée			X	X	X			

X : Applicable

*1: Ce paramètre comprend les DTC de 1er parcours.

*2: Ce mode comprend les données figées de 1er parcours ou les données figées. Les paramètres sont affichés par CONSULT-II en mode de données figées uniquement si un DTC de 1er parcours ou un DTC est détecté. Pour plus de détails, se reporter à EC-3054.

FONCTIONNEMENT

NEEC0034S03

Mode de test de diagnostic	Fonctionnement
Support de travail	Les indications fournies par CONSULT-II permettent au mécanicien de procéder plus rapidement et plus précisément aux réglages de certains dispositifs.
Résultats de l'autodiagnostic	Les résultats de l'autodiagnostic (par exemple DTC de 1er parcours, DTC et données de figées de 1er parcours ou données figées) peuvent être aisément lus et effacés. *1
Contrôle de données	Les informations d'entrée/de sortie de l'ECM peuvent être lues.
Contrôle de données (SPEC)	Les spécifications d'entrée/de sortie du programme de base de carburant, le mélange air-carburant, la soupape de contrôle air-carburant par régulation automatique et les autres paramètres de contrôle de données peuvent être lus.
TEST ACTIF	Mode de test de diagnostic dans lequel CONSULT-II pilote certains actionneurs indépendamment de l'ECM et modifie certains paramètres dans des limites spécifiées.
Confirmation de SRT	Mode permettant de confirmer le statut des tests de contrôle du système et les états/résultats de l'autodiagnostic.
Test de fonctionnement	Ce mode est utilisé afin d'informer aux clients lorsque la condition de leur véhicule a besoin des opérations d'entretien périodiques.
Numéro de pièce de l'ECM	Les n° de référence des composants de l'ECM peuvent être lus.

*1 Les codes de diagnostic antipollution suivants sont effacés lorsque la mémoire de l'ECM est réinitialisée.

1) Codes de défaut de diagnostic
2) Codes de défaut de diagnostic de 1er parcours

Simpo PDF Merge and Split Unregistered Version - http://www.simpopdf.com

3) Données figées
4) Données figées de 1er parcours
5) Codes de test de lecture du système (SRT)
6) Valeurs de test
7) Autres

MODE SUPPORT TRAVAIL

NEEC0034S04

INTERVENTION	CONDITION	UTILISATION
REG POS RAL CAP TP/CNT TP	● SUIVRE LES DIRECTIVES D'INSPECTION DE BASE DU MANUEL DE REPARATION	Pour régler le papillon en position de ralenti
REG CALAGE ALLUMAGE*	● LE CONTROLE AUTOMATIQUE DU CALAGE D'ALLUMAGE EST EFFECTUE EN APPUYANT SUR ''DEPART''. ENSUITE, REGLER LE CALAGE D'ALLUMAGE A L'AIDE D'UNE LAMPE STROBOSCOPIQUE EN FAISANT TOURNER LE CAPTEUR DE POSITION DU VILEBREQUIN.	Au réglage du calage d'allumage initial
DETENTE PRESS D'ALIM	● LA POMPE D'ALIMENTATION S'ARRETE LORSQUE L'ON APPUIE SUR ''DEPART'' PENDANT QUE LE MOTEUR TOURNE AU RALENTI. ACTIONNER LE STARTER PLUSIEURS FOIS APRES CALAGE DU MOTEUR.	Pour dépressuriser des flexibles d'alimentation
COM AUTO INSTRUCT	● LE COEFFICIENT DE COMMANDE D'AUTO-INSTRUCTION DE RICHESSE DU MELANGE REVIENT AU COEFFICIENT D'ORIGINE.	Pour dépressuriser des flexibles d'alimentation
REG TR/MN RALENT CIBLE*	● MOTEUR AU RALENTI	Pour régler le régime de ralenti cible

*: Cette fonction n'est pas nécessaire dans le cadre de la procédure d'entretien habituelle.

MODE D'AUTODIAGNOSTIC

NEEC0034S05

DTC et DTC de 1er parcours

NEEC0034S0501

Pour les éléments ''DTC et DTC de 1er parcours'', se reporter au ''DIAGNOSTIC DES DEFAUTS — INDEX'', page EC-3010.

Données figées et données figées de 1er parcours

NEEC0034S0502

Elément de données figées*	Description
CODE DIAG DEFAUT [PXXXX]	● L'élément/le système de gestion moteur émet un code de défaut qui s'affiche sous la forme de ''PXXXX''. [Se reporter à ''Index alphabétique et numérique pour le DTC'' (EC-3010).]
SYS CARB-R1	● ''Etat du système d'injection de carburant'' lorsqu'un défaut est détecté. ● Affichage de l'un des modes suivants : ''MODE 2'': boucle ouverte causée par la détection d'un défaut du système ''MODE 3'': boucle ouverte causée par les conditions de conduite (enrichissement à l'accélération, enrichissement à la décélération) ''MODE 4'': boucle fermée, avec utilisation du signal de la (ou des) sonde(s) à oxygène comme retour pour la commande d'alimentation ''MODE 5'': boucle ouverte - conditions non encore remplies pour rétablir le fonctionnement en boucle fermée
VALEUR CHARGE CALC [%]	● Affichage de la valeur de charge calculée au moment de la détection d'un défaut.
TEMP LIQU REFR [°C]	● Affichage de la température du liquide de refroidissement au moment de la détection d'un défaut.
C-COR AIR/CAR-R1 [%]	● Lorsqu'un défaut est détecté, ''Correction de carburant de courte durée'' s'affiche. ● La correction de carburant à courte durée représente une compensation de régulation automatique dynamique ou instantanée au programme de base de carburant.

Simpo PDF Merge and Split Unregistered Version - http://www.simpopdf.com

Elément de données figées*	Description
L-COR AIR/CAR-R1 [%]	● Lorsqu'un défaut est détecté, ''Correction de carburant de longue durée'' s'affiche. ● La correction de carburant à long terme représente une compensation beaucoup plus progressive au programme de base de carburant que la correction à court terme.
TR/MN MOT [tr/mn]	● Affichage du régime-moteur lorsqu'un défaut est détecté.
VITESSE VEHICL [km/h]	● Affichage de la vitesse du véhicule lorsqu'un défaut est détecté.
C/P PAP ABSOL [%]	● Affichage de l'angle d'ouverture de la soupape de papillon lorsqu'un défaut est détecté.
PLAN CAR BASE [ms]	● Affichage du barème de consommation au moment de la détection d'un défaut.
CAP TEMP ADMI [°C]	● Affichage de la température d'air d'admission au moment de la détection d'un défaut.

*: Eléments identiques à ceux des données figées de 1er parcours.

MODE DE CONTRÔLE DE DONNÉES

NEEC0034S06

Elément contrôlé [unité]	Signaux d'entrée de l'ECM	Signaux princi-paux	Description	Remarques
TR/MN MOT [tr/mn]	○	○	● Indication du régime-moteur calculé à partir du signal REF (signal 180°) du capteur de position de l'arbre à cames.	● La précision diminue si le régime-moteur tombe en dessous du tr/mn du régime de ralenti. ● Si le signal est interrompu alors que le moteur tourne, une valeur anor-male peut être indiquée.
DEBITMETRE-R1 [V]	○	○	● Affichage de la tension de signal du débitmètre d'air.	● Une fois le moteur arrêté, une cer-taine valeur est indiquée.
PLAN CAR BASE [ms]		○	● ''Plan de carburant de base'' indique la largeur d'impulsion d'injection du car-burant programmée dans l'ECM, avant toute correction à bord.	
ALPHA A/CARB-R1 [%]		○	● Indication de la valeur moyenne du fac-teur de correction de la régulation auto-matique de richesse de mélange air-carburant par cycle.	● Une fois le moteur arrêté, une cer-taine valeur est indiquée. ● Ces données comprennent égale-ment les données pour la commande d'instruction de la richesse de mélange air-carburant.
CAP TEMP MOT [°C]	○	○	● Affichage de la température du liquide de refroidissement du moteur (déter-minée par la tension du signal du capteur de température du liquide de refroidis-sement du moteur).	● Si le circuit du capteur de tempéra-ture du liquide de refroidissement du moteur est ouvert ou court-circuité, l'ECM passe en mode de sécurité. Affichage de la température du moteur déterminée par l'ECM.
S/O2 CH1 (R1) [V]	○	○	● Affichage de la tension du signal de la sonde à oxygène chauffé 1.	
S/O2 CH2 (R1) [V]	○		● Affichage de la tension du signal de la sonde à oxygène chauffé 2.	

Simpo PDF Merge and Split Unregistered Version - http://www.simpopdf.com

Elément contrôlé [unité]	Signaux d'entrée de l'ECM	Signaux principaux	Description	Remarques
MTR S/O2 CH1 (R1) [RICHE/PAUVRE]	○	○	● Affichage du signal de la sonde à oxygène chauffé 1 durant le contrôle de régulation automatique du rapport air-carburant : RICHE ... signifie que le mélange est devenu ''riche'', et la commande est affectée vers un mélange plus pauvre. PAUVRE ... signifie que le mélange est devenu trop pauvre et la commande est affectée vers un mélange plus riche.	● Lorsque la clé de contact est mise sur ''ON'', le message ''RICHE'' est affiché tant que le contrôle du rapport air-carburant n'a pas commencé. ● Lorsque la régulation automatique du mélange air-carburant est verrouillée, la valeur précédant immédiatement le verrouillage s'affiche de faç;on continue.
MTR S/O2 CH2 (R1) [RICHE/PAUVRE]	○		● Affichage du signal de la sonde à oxygène chauffé 2 : RICHE ... signifie que la teneur en oxygène en aval du catalyseur à 3 voies est relativement faible. PAUVRE ... signifie que la teneur en oxygène en aval du catalyseur à 3 voies est relativement importante.	● Une fois le moteur arrêté, une certaine valeur est indiquée.
CAP VIT VEHIC [km/h]	○	○	● Affichage de la vitesse du véhicule calculée à partir du signal de capteur de vitesse du véhicule.	
TENS BATTERIE [V]	○	○	● Affichage de la tension d'alimentation électrique de l'ECM.	
CAP PAPILLON [V]	○	○	● Affichage de la tension de signal du capteur de position de papillon.	
CAP TEMP ADMI [°C]	○	○	● Indication de la température d'air d'admission déterminée par la tension du signal du capteur de température d'air d'admission.	
SIGNAL DEMAR [MAR/ARR]	○	○	● Indication de l'état de [MAR/ARR] du signal de starter.	● Après avoir démarré le moteur, [ARR] s'affiche quel que soit le signal de starter.
POSIT RALENTI [MAR/ARR]	○	○	● Indication de la position de ralenti [MAR/ARR] calculée par l'ECM en fonction du signal du capteur de position de papillon.	
CON RALENTI [MAR/ARR]	○		● Indication de l'état mécanique [MAR/ARR] du contact de position de papillon fermé.	
SIGNAL CLIMAT [MAR/ARR]	○	○	● Indication de l'état [MAR/ARR] de l'interrupteur de climatiseur tel que déterminé par le signal de climatiseur.	
CON NEUTRE [MAR/ARR]	○	○	● Indication de l'état [MAR/ARR] du signal du contact de position de stationnement/point mort.	
SIG DIR ASSIS [MAR/ARR]	○	○	● Indication de l'état [MAR/ARR] du manocontact d'huile de direction assistée déterminé par le signal de pression d'huile de direction assistée.	

Simpo PDF Merge and Split Unregistered Version - http://www.simpopdf.com

Elément contrôlé [unité]	Signaux d'entrée de l'ECM	Signaux principaux	Description	Remarques
CONT TEMP AMB [MAR/ARR]	○		● Indique l'état [MAR/ARR] depuis le signal du contact de température d'air ambiant.	
CON ALLUMAGE [MAR/ARR]	○		● Indication de l'état [MAR/ARR] du contact d'allumage.	
IMPUL INJ-R1 [ms]		○	● Indication de la durée réelle des impulsions d'injection de carburant compensées par l'ECM en fonction des signaux d'entrée.	● Une fois le moteur arrêté, une certaine valeur calculée est indiquée.
CALAGE ALLUM [APMH]		○	● Indication du calage de l'allumage calculé par l'ECM en fonction des signaux d'entrée.	
VALEUR CHARGE CALC [%]			● ''Evaluation de charge'' montre la valeur du débit d'air actuel divisée par la valeur la plus haute de débit d'air.	
C/P PAP ABSOL [%]			● ''Capteur de position absolue de papillon '' montre le degré d'ouverture du papillon calculé par l'ECM, en fonction de la tension du signal émis par le capteur de position de papillon.	
DEBITMETRE AIR [g·m/s]			● Indication du débit d'air d'admission calculé par l'ECM en fonction de la tension du signal en tension délivré par le débitmètre d'air.	
IACV-AAC/V [%]		○	● Indication de la valeur de commande de la soupape IACV-AAC calculée par l'ECM en fonction des signaux d'entrée.	
S/COM VOL PURG [%]			● Indication de la valeur de commande volume de cartouche EVAP calculée par l'ECM en fonction des signaux d'entrée. ● L'ouverture s'élargit lorsque la valeur augmente.	
RELAIS CLIMAT [MAR/ARR]		○	● Indication de l'état du relais de climatiseur déterminé par l'ECM en fonction des signaux d'entrée.	
REL POMP ALI [MAR/ARR]		○	● Indication de l'état de la commande du relais de la pompe à carburant déterminé par l'ECM en fonction des signaux d'entrée.	
CH S/02 CH1 (R1) [MAR/ARR]			● Indication de l'état [MAR/ARR] du chauffage de la sonde à oxygène chauffé 1 déterminée par l'ECM en fonction des signaux d'entrée.	
CH S/O2 CH2 (R1) [MAR/ARR]			● Indication de l'état [MAR/ARR] du chauffage de la sonde à oxygène chauffé 2 déterminée par l'ECM en fonction des signaux d'entrée.	
TENSION [V]			● Tension mesurée par le capteur de tension.	

Simpo PDF Merge and Split Unregistered Version - http://www.simpopdf.com

Elément contrôlé [unité]	Signaux d'entrée de l'ECM	Signaux princi-paux	Description	Remarques
COURS APRES TEMOIN [km]			● Distance parcourue alors que le MI est activé	
Fréquence [ms] ou [Hz] ou [%]			● Amplitude, fréquence ou cycle d'impul-sions mesurés par le capteur d'impul-sions.	● Seul ''#'' est affiché si l'élément ne peut pas être mesuré. ● Les valeurs accompagnées du signe ''#'' sont temporaires. Elles sont iden-tiques à celles mesurées précédem-ment.

REMARQUE :
Tout élément contrôlé qui ne correspond pas au véhicule diagnostiqué est automatiquement effacé de l'affichage.

MODE DE CONTROLE DE DONNÉES (SPEC)

NEEC0034S12

Elément contrôlé [unité]	Signaux d'entrée de l'ECM	Signaux princi-paux	Description	Remarques
TR/MN MOT [tr/mn]	○	○	● Indication du régime-moteur calculé à partir du signal REF (signal 180°) du capteur de position de l'arbre à cames.	
DEBITMETRE-R1 [V]	○	○	● Affichage de la tension du signal de spécification du débitmètre d'air.	● Lorsque le moteur tourne, la gamme de spécification est indiquée.
PLAN CAR BASE [ms]		○	● ''Plan de carburant de base'' indique la largeur d'impulsion d'injection du car-burant programmée dans l'ECM, avant toute correction à bord.	● Lorsque le moteur tourne, la gamme de spécification est indiquée.
ALPHA A/CARB-R1 [%]		○	● La valeur moyenne du facteur de cor-rection par régulation automatique du mélange air/carburant par cycle est indiqué.	● Lorsque le moteur tourne, la gamme de spécification est indiquée. ● Ces données comprennent également les données pour la commande d'ins-truction de la richesse de mélange air-carburant.

NOTE:
Tout élément contrôlé qui ne correspond pas au véhicule diagnostiqué est automatiquement effacé de l'affichage.

MODE DE TEST ACTIF

NEEC0034S07

ELEMENT DE TEST	CONDITION	JUGEMENT	CONTROLER L'ELEMENT (REMISE EN ETAT)
INJECTION CAR-BUR	● Moteur : Retour à la condition de défaut originale ● Modifier la quantité de carburant injecté à l'aide de CONSULT-II.	Si les symptômes du défaut disparaissent, se reporter à la colonne CONTROLER L'ELE-MENT.	● Faisceau et connecteur ● Injecteurs de carburant ● Sonde à oxygène chauffé 1
CALAGE ALLUM	● Moteur : Retour à la condition de défaut originale ● Lampe stroboscopique : Réglage ● Retarder le calage de l'allumage au moyen de CONSULT-II.	Si les symptômes du défaut disparaissent, se reporter à la colonne CONTROLER L'ELE-MENT.	● Régler le calage d'allumage ini-tial

Simpo PDF Merge and Split Unregistered Version - http://www.simpopdf.com

ELEMENT DE TEST	CONDITION	JUGEMENT	CONTROLER L'ELEMENT (REMISE EN ETAT)
OUVERTURE S/ IACV-AAC	● Moteur : faire chauffer le moteur, puis le faire tourner au ralenti. ● Modifier le pourcentage d'ouverture de la soupape IACV-AAC à l'aide de CONSULT-II.	Le régime-moteur change avec le pourcentage d'ouverture.	● Faisceau et connecteur ● Soupape IACV-AAC
EQUILIBR PUISSANCE	● Moteur : faire chauffer le moteur, puis le faire tourner au ralenti. ● Interrupteur de climatiseur sur ''OFF'' ● Levier de passage sur ''N'' ● Couper les signaux des injecteurs l'un après l'autre à l'aide de CONSULT-II.	Le moteur tourne mal ou s'arrête.	● Faisceau et connecteur ● Compression ● Injecteurs ● Transistor d'alimentation ● Bougies d'allumage ● Bobines d'allumage
TEMP LIQ REFR	● Moteur : Retour à la condition de défaut originale ● Modifier l'indication de la température du liquide de refroidissement du moteur à l'aide de CONSULT-II.	Si les symptômes du défaut disparaissent, se reporter à la colonne CONTROLER L'ELEMENT.	● Faisceau et connecteur ● Capteur de température du liquide de refroidissement du moteur ● Injecteurs de carburant
RELAIS POMPE D'ALIM	● Contact d'allumage : ON (moteur à l'arrêt) ● Mettre le relais de la pompe d'alimentation sur ''MAR'', puis sur ''ARR'' avec CONSULT-II, et écouter le bruit de fonctionnement.	Le relais de pompe à carburant produit un bruit de fonctionnement.	● Faisceau et connecteur ● Relais de pompe d'alimentation
SOUP COM VOL PURG	● Moteur : chauffer le moteur et le faire tourner à 1.500 tr/min ● Modifier le pourcentage d'ouverture de l'électrovanne de commande de volume de purge de cartouche EVAP à l'aide de CONSULT-II.	Le régime-moteur change avec le pourcentage d'ouverture.	● Faisceau et connecteur ● Electrovanne de commande de volume de purge de cartouche EVAP

Simpo PDF Merge and Split Unregistered Version - http://www.simpopdf.com

DTC ET MODE DE CONFIRMATION SRT

=NEEC0034S08

Mode ETAT SRT

NEEC0034S0801

Pour plus de détails, voir ‘‘CODE DE TEST DE LECTURE DU SYSTEME (SRT)’’, EC-3054.

Mode de support travail SRT

NEEC0034S0803

Ce mode permet à un technicien de conduire un véhicule pour régler le SRT tout en contrôlant le statut SRT.

Mode de support travail DTC

NEEC0034S0802

MODE DE TEST	ELEMENT DE TEST	CONDITION	Page de référence
S/O2 CH1	P0133 S/O2 CH1 (R1)	Se reporter au diagnostic de défaut du DTC correspondant.	EC-3215
	P0134 S/O2 CH1 (R1)		EC-3226
	P1143 S/O2 CH1 (R1)		EC-3332
	P1144 S/O2 CH1 (R1)		EC-3340
S/O2 CH2	P0139 S/O2 CH2 (R1)		EC-3241
	P1146 S/O2 CH2 (R1)		EC-3348
	P1147 S/O2 CH2 (R1)		EC-3359

DIAGNOSTIC EN TEMPS RÉEL EN MODE DE CONTRÔLE DES DONNÉES (RELEVÉ DES DONNÉES VÉHICULE)

NEEC0034S10

CONSULT-II offre deux types de déclenchement qui peuvent être sélectionnés en touchant ‘‘CONFIG’’ dans le mode ‘‘CONTROLE DE DONNEES’’.

1) ‘‘ENCLEN AUTO’’ (enclenchement automatique):

- Le défaut est identifié en temps réel sur l’écran de CONSULT-II.
  Autrement dit, le DTC/DTC de 1er parcours et l’élément de défaut sont affichés si l’ECM détecte le défaut.
  Au moment où un défaut est détecté par l’ECM, ‘‘CONTROLE’’ sur l’écran ‘‘CONTROLE DE DONNEES’’ change en ‘‘Enregistrement données ... xx%’’ comme indiqué à gauche, et la donnée après la détection du défaut est enregistrée. Puis, lorsque le pourcentage a atteint 100%, l’écran ‘‘DIAG TEMPS REEL’’ apparaît. Si ‘‘STOP’’ est touché sur l’écran pendant ‘‘Enregistrement données ... xx%’’, l’écran ‘‘DIAG TEMPS REEL’’ apparaît également.
  Le temps et la vitesse d’enregistrement après la détection du défaut peuvent être modifiés à l’aide de ‘‘POINT DE DECLENCHEMENT’’ et de ‘‘VITESSE D’ENREGISTREMENT’’. Se reporter au manuel d’utilisation de CONSULT-II.

2) ‘‘ENCLEN MANU’’ (Enclenchement manuel):

- Le DTC/DTC de 1er parcours et l’élément de défaut ne s’affichent pas automatiquement à l’écran de CONSULT-II même si l’ECM détecte un défaut.
  Les données peuvent être contrôlées continuellement même si un défaut est détecté.

Utiliser ces déclencheurs comme suit :

1) ‘‘ENCLEN AUTO’’

- Lorsqu’on essaie de détecter le DTC/DTC de 1er parcours en réalisant une ‘‘PROCEDURE DE CONFIRMATION DE DTC’’, veiller à sélectionner le mode ‘‘CONTROLE DE DONNEES (ENCLEN AUTO)’’. Le défaut peut être confirmé lors de sa détection.

Simpo PDF Merge and Split Unregistered Version - http://www.simpopdf.com

- Pour procéder à l'élimination des causes possibles, CONSULT-II doit être réglé en mode ''CONTROLE DE DONNEES (ENCLEN AUTO)'', particulièrement si le défaut se produit de faç;on intermittente.
  Lorsque l'inspection du circuit est effectuée en secouant avec précaution (ou en tordant) les connecteurs, pièces ou faisceau suspects selon la ''Procédure de confirmation de code de défaut (DTC)'', le DTC/DTC de 1er parcours s'affiche dès qu'un défaut est détecté. (se reporter à ''Essais de simulation de défaut'' dans ''COMMENT REALISER UN DIAGNOSTIC EFFICACE EN CAS D'INCIDENT ELECTRIQUE'', section GI.

2) ''ENCLEN MANU''

- Si le défaut s'affiche dès que ''CONTROLE DE DONNEES'' est sélectionné, réinitialiser CONSULT-II sur ''ENCLEN MANU''. En sélectionnant ''ENCLEN MANU'', on peut surveiller et enregistrer les données. Les données peuvent être utilisées pour d'autres diagnostics, tels que la comparaison avec la valeur obtenue en suivant des conditions normales de fonctionnement.

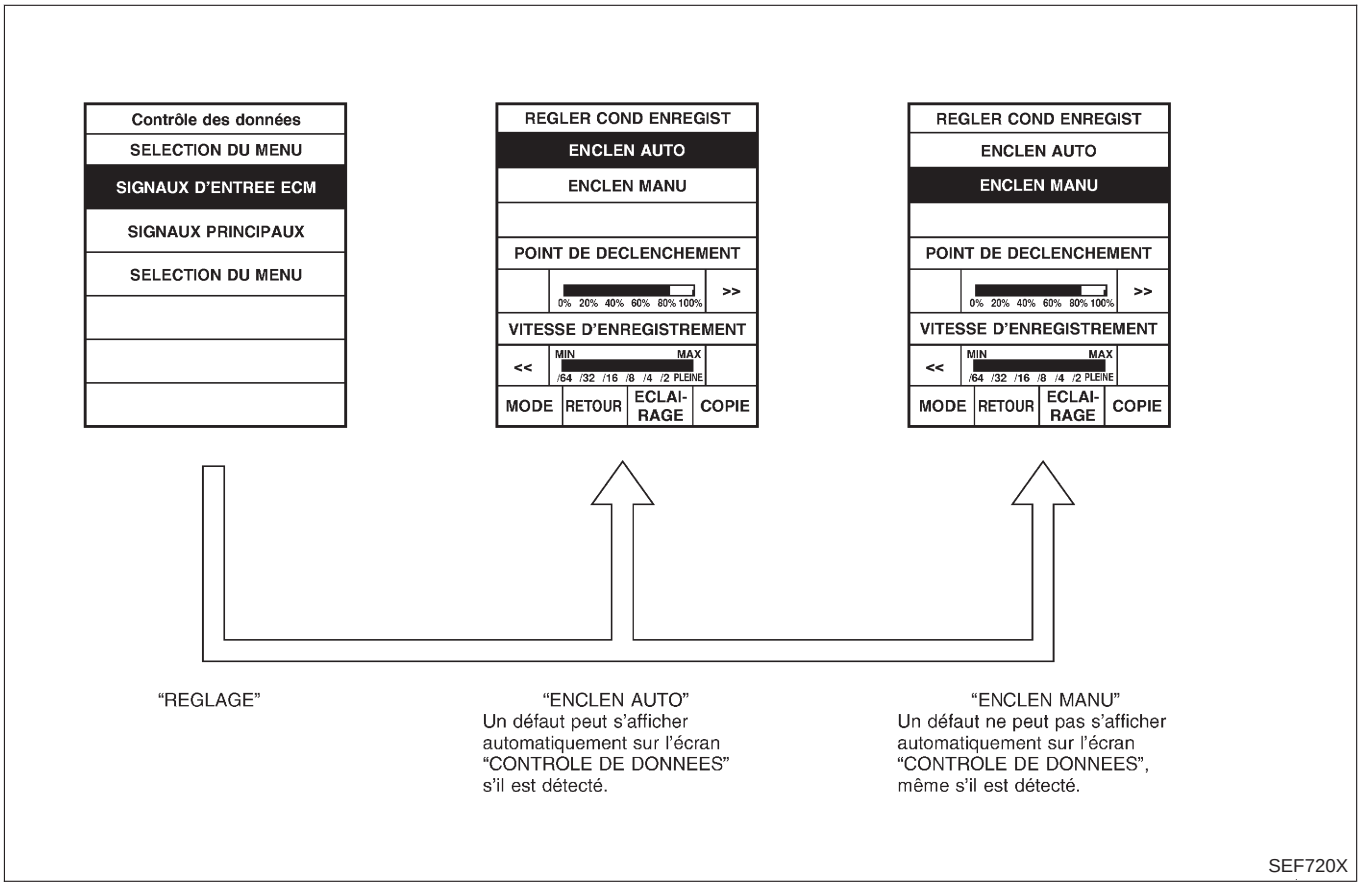

Simpo PDF Merge and Split Unregistered Version - http://www.simpopdf.com

Analyseur générique (GST) : exemple

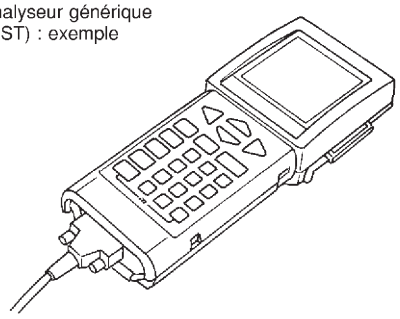

SEF139P

Analyseur générique (GST)

=NEEC0035

DESCRIPTION

NEEC0035S01

Conformément à la norme ISO 15031-4, l'analyseur générique GST, (outil d'analyse générique OBDII) offre les 8 fonctions décrites à la page suivante.
Le protocole de communication utilisé est la norme ISO9141.
Dans le présent manuel, l'appareil est indifféremment désigné ''GST'' ou ''analyseur générique'.

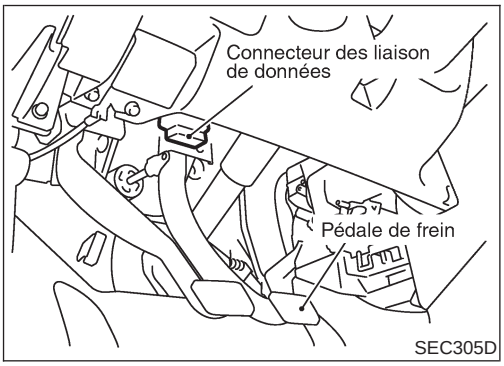

SEC305D

PROCÉDURE D'INSPECTION DE L'ANALYSEUR GÉNÉRIQUE GST

NEEC0035S02

1. Mettre le contact d'allumage sur OFF.
2. Connecter le ''GST'' au connecteur de diagnostic GST, situé sous le tableau de bord de gauche à proximité du couvercle de la boîte à fusibles.

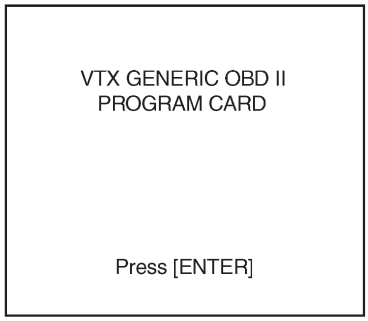

Ecran d'exemple*

SEF398S

3. Mettre le contact d'allumage sur ON.
4. Ouvrir le programme conformément aux instructions affichées à l'écran ou décrites dans le manuel d'utilisation.

(*: Les écrans du GST pertinents dans cette section sont illustrés sous forme d'exemples.)

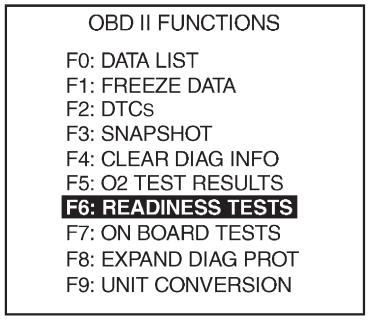

EXEMPLE D'ECRAN *

SEF416S

5. Utiliser chacun des modes de diagnostic conformément aux procédures d'entretien correspondantes.

Pour de plus amples informations, consulter le manuel d'utilisation fourni par le fabricant de l'appareil GST.

Simpo PDF Merge and Split Unregistered Version - http://www.simpopdf.com

Analyseur générique (GST)

FONCTIONNEMENT

NEEC0035S03

Mode de test de diagnostic		Fonctionnement
MODE1	TESTS DE LECTURE	Ce mode permet d'accéder aux données de diagnostic liées au système antipollution du véhicule, qui comprennent les entrées et sorties analogiques, les entrées et sorties numériques et les informations concernant l'état du système.
MODE 2	(DONNEES FIGEES)	Ce mode permet d'accéder aux données de diagnostic liées au système antipollution qui ont été mémorisées par l'ECM lors de la détection d'une donnée figée [pour plus d'informations, se reporter à ''Données figées'' (EC-3079).]
MODE 3	DTC	Ce mode permet d'accéder aux codes de défaut du groupe motopropulseur liés au système antipollution et mémorisés par l'ECM.
MODE 4	EFFAC INFO DIAG	Ce mode permet d'effacer toutes les informations de diagnostic liées au système antipollution. Cela comprend : ● Effacement du numéro des codes de défaut (MODE 1) ● Effacement des codes de diagnostic (MODE 3) ● Effacement du code de défaut des données figées (MODE 1) ● Effacement des données figées (MODE 2) ● Réinitialisation de l'état du diagnostic de contrôle du système (MODE 1) ● Effacement des résultats du test de diagnostic de bord (MODES 6 et 7)
MODE 6	(TESTS DE BORD)	Ce mode permet d'accéder aux résultats des tests de diagnostic de bord de composants/systèmes spécifiques, qui ne font pas l'objet d'une surveillance permanente.
MODE 7	(TESTS DE BORD)	Ce mode permet aux équipement de test externes d'obtenir les résultats de diagnostic des composants/systèmes du groupe motopropulseur liés au système antipollution qui ne font pas l'objet d'une surveillance permanente en conditions normales d'utilisation.
MODE 8	—	—
MODE 9	(ETALONNAGE ID)	Ce mode permet aux équipements de test externes d'obtenir des informations propres au véhicule, comme par exemple le numéro d'identification du véhicule (VIN) et les codes d'identification d'étalonnage.

Simpo PDF Merge and Split Unregistered Version - http://www.simpopdf.com

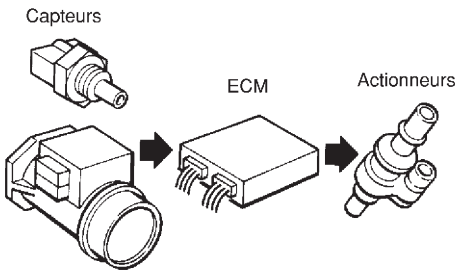

MEF036D

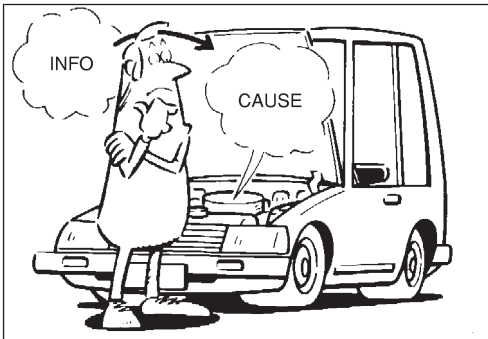

SEF233G

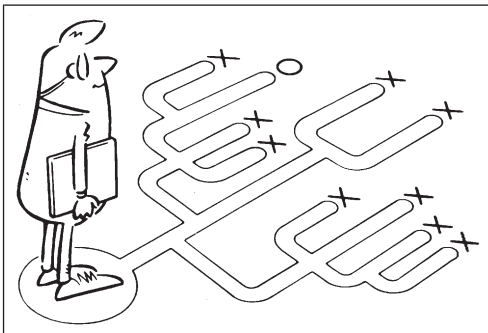
SEF234G

POINTS CLE

QUOI	.....	Modèle de moteur et de véhicule
QUAND	.....	Date, fréquence
OU	.....	Conditions de la route
COMMENT	.....	Conditions de fonctionnement, conditions climatiques, symptômes

SEF907L

Introduction

NEEC0036

Le moteur est muni d'un ECM pour la vérification des systèmes principaux tels que le contrôle du carburant, le contrôle d'allumage, les systèmes d'admission d'air au ralenti, etc. L'ECM accepte des signaux d'entrée des capteurs et commande instantanément les actionneurs. Il est essentiel que les signaux d'entrée et de sortie soient corrects et stables. Il est également important qu'il n'y ait pas de problèmes comme une fuite au niveau de la conduite de dépression, des bougies d'allumage encrassées, ou tout autre problème lié au moteur.

Il est beaucoup plus difficile de faire le diagnostic d'un problème qui se manifeste de manière intermittente que celui d'un problème constant. La plupart des défauts intermittents sont le fait d'une mauvaise connexion électrique ou d'un câblage défectueux. En pareil cas, une vérification soigneuse des circuits suspects peut éventuellement éviter le remplacement de pièces qui n'étaient pas fautives.

Le contrôle visuel seul ne permet pas toujours de déterminer la cause des défauts. Il convient d'effectuer un essai sur route à l'aide de CONSULT-II (ou du GST) ou d'un testeur de circuit branché. Suivre la ''Procédure de travail'' à la page EC-3090.

Avant d'entreprendre les vérifications, prendre quelques minutes pour parler avec le client qui se plaint d'une mauvaise conduite. Le client peut fournir des renseignements utiles quant à ces problèmes, en particulier les problèmes se produisant de faç;on intermittente. Se renseigner sur les symptômes présents et sur les conditions dans lesquelles ils se présentent. Il convient d'utiliser une ''Fiche de diagnostic'' comme celle présentée à la page suivante.

Commencer le diagnostic en recherchant d'abord les problèmes ''conventionnels''. Ceci aidera à dépister les problèmes de conduite sur un véhicule équipé d'un moteur à commande électronique.

FICHE DE DIAGNOSTIC

NEEC0036S01

Plusieurs conditions de fonctionnement entraînent un défaut des composants du moteur. Une bonne connaissance de ces cas peut accélérer la procédure et en améliorer l'exactitude.

En règle générale, la capacité à cerner le problème dépend des explications de chaque client. Il est important de bien comprendre les symptômes ou les conditions liées à la plainte du client.

Il convient donc d'utiliser une fiche de diagnostic comme celle présentée à la page suivante pour récapituler les informations nécessaires à la recherche des pannes.

Certaines conditions peuvent entraîner l'allumage continu ou le clignotement de l'indicateur de défaut et la détection du DTC. Exemples :

- Le véhicule est tombé en panne d'essence, ce qui a causé des ratés d'allumage.
- Le bouchon de remplissage de carburant a été retiré ou mal vissé, permettant au carburant de s'évaporer dans l'atmosphère.

Simpo PDF Merge and Split Unregistered Version - http://www.simpopdf.com

Exemple de fiche de diagnostic

NEEC0036S0101

Nom du client M./Mme/Mlle		Modèle et année	VIN
Moteur #		Transmission	Kilométrage
Date incident		Date de fabrication	Date d'entrée en service
Carburant et bouchon de remplissage de carburant		☐ Panne d'essence entraînant des ratés d'allumage ☐ Le bouchon de remplissage de carburant n'a pas été remis en place ou n'a pas été correctement vissé.	
Symptômes	☐ Aptitude au démarrage	☐ Démarrage impossible ☐ Pas de combustion ☐ Combustion partielle ☐ Combustion partielle à certaines positions seulement de l'accélérateur ☐ Combustion partielle NON affectée par la position du papillon ☐ Démarrage possible mais récalcitrant ☐ Autres [ ]	
	☐ Ralenti	☐ Pas de ralenti à vide ☐ Instable ☐ Ralenti accéléré ☐ Ralenti trop bas ☐ Autres [ ]	
	☐ Conduite	☐ Hésitation ☐ Afflux ☐ Détonation ☐ Manque de puissance ☐ Flammes à l'admission ☐ Flammes à l'échappement ☐ Autres [ ]	
	☐ Calage du moteur	☐ Au démarrage ☐ Au ralenti ☐ En accélération ☐ En décélération ☐ Peu après l'immobilisation ☐ Lors de l'application d'une charge	
Manifestation d'incident		☐ Peu après la livraison ☐ Récemment ☐ Le matin ☐ La nuit ☐ Dans la journée	
Fréquence		☐ Constamment ☐ Dans certaines conditions ☐ Parfois	
Conditions climatiques		☐ Sans effet	
	Conditions atmosphériques	☐ Ensoleillement ☐ Pluie ☐ Neige ☐ Autres [ ]	
	Température	☐ Chaud ☐ Tempérées ☐ Fraîches ☐ Froides ☐ Humides °C	
Conditions du moteur		☐ Froides ☐ Pendant la période d'échauffement ☐ Une fois le moteur chaud Régime du moteur 0 — 2 000 — 4 000 — 6 000 — 8 000 tr/mn	
Conditions de la route		☐ Cycle urbain ☐ Cycle banlieue ☐ Autoroute ☐ Tous terrains (montée/descente)	
Conditions de conduite		☐ Sans effet ☐ Au démarrage ☐ Au ralenti ☐ En conduite sportive ☐ En accélération ☐ A vitesse stabilisée ☐ En décélération ☐ En tournant (droite/gauche) Vitesse du véhicule 0 — 10 — 20 — 30 — 40 — 50 — 60 MPH	
Témoin d'anomalie de fonctionnement		☐ Allumé ☐ Eteint	

LEC031A

Simpo PDF Merge and Split Unregistered Version - http://www.simpopdf.com

Procédure de travail

NEEC0037

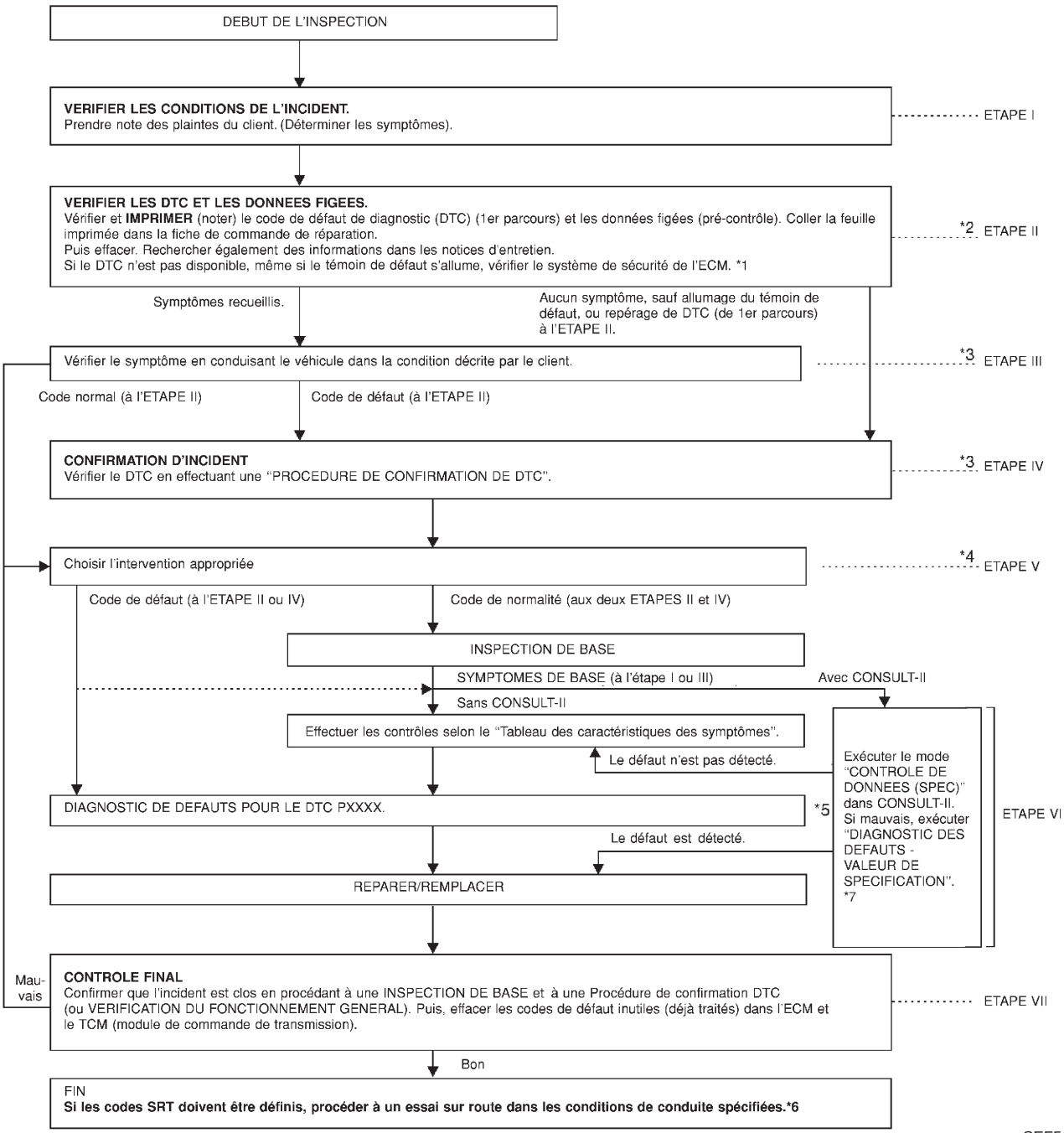

SEF510ZD

*1: EC-3107

*2: Si le paramètre d'occurrences des "RESULTATS D'AUTODIAGNOSTIC" est différent de "0" ou de "1t", se reporter à "DIAGNOSTIC DES DEFAUTS EN CAS D'INCIDENT INTERMITTENT" à la page EC-3131.

*3: Si le défaut ne peut pas être reproduit, se reporter à "DIAGNOSTIC DES DEFAUTS EN CAS D'INCIDENT INTERMITTENT" à la page EC-3131.

*4: Si le diagnostic de bord ne peut être effectué, contrôler les circuits d'alimentation principale et de masse. Se reporter à "DIAGNOSTIC DES DEFAUTS DE L'ALIMENTATION ELECTRIQUE", page EC-3132.

*5: Si l'organe défectueux ne peut pas être trouvé, se reporter à "DIAGNOSTIC DES DEFAUTS EN CAS D'INCIDENT INTERMITTENT" à la page EC-3131.

*6: EC-3061

*7: EC-3127

Simpo PDF Merge and Split Unregistered Version - http://www.simpopdf.com

Procédure de travail

DESCRIPTION DE LA PROCÉDURE

NEEC0037S01

ETAPE	DESCRIPTION
ETAPE I	Obtenir des renseignements détaillés sur les conditions et l'environnement dans lesquels le défaut/symptôme s'est produit en utilisant la ''FICHE DE CONTROLE DE DIAGNOSTIC'', illustrée à la page EC-3090.
ETAPE II	Avant de confirmer votre pronostic, vérifier et écrire (imprimer à l'aide de CONSULT-II ou de l'analyseur générique) le DTC (1er parcours) et les données figées (1er parcours), puis effacer le DTC et les données. (Se reporter à EC-3065). Le DTC (1er parcours) et les données figées (1er parcours) peuvent être utilisées en reproduisant le défaut lors des ETAPES III et IV. Etudier la relation entre la cause indiquée par le DTC (1er parcours), et le symptôme rapporté par le client (le ''Tableau des caractéristiques des symptômes'' sera utile. Voir EC-3108.) Chercher également des informations dans les notices d'entretien.
ETAPE III	Essayer de confirmer le symptôme et les conditions dans lesquelles le défaut se produit. La ''FICHE DE CONTROLE DE DIAGNOSTIC'' et les données figées sont utiles pour vérifier l'incident. Brancher CONSULT-II au véhicule, le régler en mode CONTROLE DE DONNEES (ECLEN AUTO) et vérifier les résultats du diagnostic en temps réel. Si l'incident ne peut être confirmé, procéder aux TESTS DE SIMULATION D'INCIDENT. (se reporter à la section GI). Si le code de défaut est détecté, passer directement à l'étape V.
ETAPE IV	Essayer de détecter le DTC (1er parcours) en conduisant et/ou en réalisant la ''Procédure de confirmation de code de défaut (DTC)''. Contrôler et lire le DTC (1er parcours) et les données figées (1er parcours) à l'aide de CONSULT-II ou du GST. Pendant la vérification du DTC (1er parcours), veiller à brancher CONSULT-II au véhicule en mode CONTROLE DE DONNEES (ENCLEN AUTO) et vérifier les résultats du diagnostic en temps réel. Si l'incident ne peut être confirmé, procéder aux ''Tests de simulation d'incident''. (se reporter à la section GI). Au cas où la ''PROCEDURE DE CONFIRMATION DE DTC'' serait indisponible, réaliser en remplacement une ''VERIFICATION DU FONCTIONNEMENT GENERAL''. Si le DTC (de 1er parcours) ne peut être affiché par ce dernier contrôle, il constitue néanmoins une ''vérification'' efficace. Un résultat ''MAUVAIS'' lors de la ''VERIFICATION DU FONCTIONNEMENT GENERAL'' équivaut à la détection d'un DTC (de 1er parcours).
ETAPE V	Prendre les mesures appropriées sur la base des résultats des étapes I à IV. Si le code de défaut s'affiche, passer au DIAGNOSTIC DES DEFAUTS POUR LE DTC PXXXX. Si le code normal est indiqué, passer au INSPECTION DE BASE. (Se reporter à EC-3092.) Si CONSULT-II est disponible, effectuer le mode ''CONTROLE DE DONNEES (SPEC)'' avec CONSULT-II et procéder au ''DIAGNOSTIC DES DEFAUTS — VALEUR DE SPECIFICATION'', EC-3127. (Si un défaut est détecté, procéder à ''REPARATION/REMPLACEMENT''.) Puis réaliser les inspections selon le tableau des caractéristiques des symptômes. (Se reporter à EC-3108.)
ETAPE VI	Déterminer où commencer le diagnostic en fonction de l'étude de la relation entre le symptôme et les causes possibles. Inspecter le système en cas de grippage mécanique, connecteurs desserrés, ou câblage endommagé à l'aide de ''Disposition des faisceaux''. Secouer doucement les connecteurs, composants ou faisceaux électriques correspondants, avec CONSULT-II en mode ''CONTROLE DE DONNEES (ENCLEN AUTO)''. Vérifier la tension aux bornes concernées de l'ECM ou vérifier les signaux de sortie des capteurs correspondants à l'aide de CONSULT-II. Se reporter à EC-3118. La ''Procédure de diagnostic'' de la section EC contient une description basée sur l'inspection en circuit ouvert. Une brève inspection du circuit est également nécessaire pour le contrôle du circuit dans la procédure de diagnostic. Pour de plus amples détails, se reporter à la section GI (''COMMENT ACCOMPLIR UN DIAGNOSTIC EFFICACE EN CAS D'INCIDENT ELECTRIQUE'', ''Inspection de circuit''). Réparer ou remplacer les pièces défectueuses.
ETAPE VII	Après avoir réparé le circuit ou remplacé un composant, faire tourner le moteur dans les mêmes conditions et circonstances que celles qui sont à l'origine du problème initialement décrit par le client. Effectuer la ''PROCEDURE DE CONFIRMATION DE CODE DE DIAGNOSTIC'' et vérifier que le code normal [Code de diagnostic n° P0000 ou 0505] est détecté. Si le défaut est toujours présent lors du contrôle final, effectuer l'ETAPE VI en utilisant une méthode différente de la précédente. Avant de rendre le véhicule au client, veiller à effacer les DTC (1er parcours) inutiles (déjà réparés) de l'ECM. (Se reporter à EC-3065.)

Simpo PDF Merge and Split Unregistered Version - http://www.simpopdf.com

Inspection de base

NEEC0038

Précaution :
Effectuer l'inspection de base sans appliquer de charge électrique ou mécanique.

- **La commande des phares n'est pas actionnée.**
- **L'interrupteur de climatiseur est à l'arrêt,**
- **L'interrupteur de désembuage de lunette arrière est sur ARRET.**
- **Le volant est dans la position droite, etc.**

1	DEBUT DE L'INSPECTION

1. Chercher dans les notices d'entretien toute indication de maintenance devant être effectuée, ou de réparation récente pouvant avoir un lien avec le problème.
2. Ouvrir le capot et vérifier :

- Que les connecteurs de faisceau ne sont pas mal branchés
- Que les flexibles à dépression ne sont pas fissurés, n'ont pas de défauts et sont bien raccordés
- Que les câbles ne sont pas desserrés, coincés ou coupés.

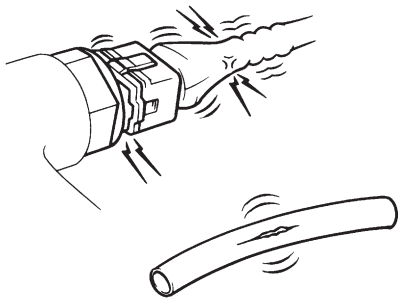

SEF142I

Avec CONSULT-II	▶	ALLER A 2.
Avec l'analyseur générique GST	▶	ALLER A 4.
Sans outils	▶	ALLER A 5.

2	CONNECTER CONSULT-II AU VEHICULE

Brancher le ''CONSULT-II'' sur connecteur de liaison des données et sélectionner ''MOTEUR'' dans le menu. Se reporter à EC-3076.

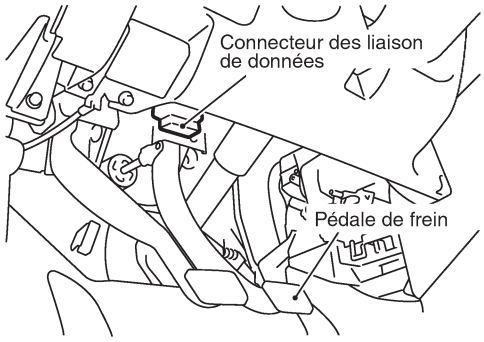

SEC305D

	▶	ALLER A 3.

Simpo PDF Merge and Split Unregistered Version - http://www.simpopdf.com

3	CONTROLER LE FONCTIONNEMENT FI CAM

Avec CONSULT-II

1. Ajuster le câble d'accélérateur. Se reporter à ''Réglage du câble d'accélérateur'' dans la section FE.
2. Chauffer le moteur à 75°C.
3. Arrêter le moteur et attendre au moins 5 secondes, ensuite mettre le contact d'allumage sur ON.
4. Sélectionner ''CAP TEMP MOT'' (température liquide refroidissement) dans le mode ''CONTROLE DE DONNEES'' de CONSULT-II.
5. Lorsque le liquide de refroidissement du moteur a atteint une température entre 75 et 85°C, entre la butée et le tambour de papillon comme indiqué sur l'illustration.

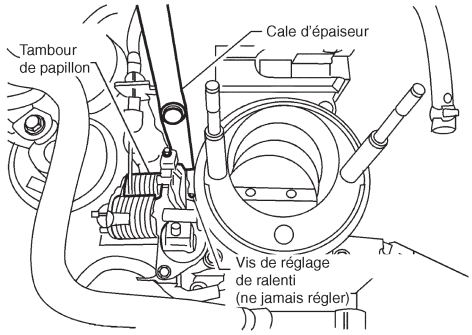

AEC871A

BON ou MAUVAIS

Bon	▶	ALLER A 6.
Mauvais	▶	1. Remplacer l'ensemble du corps de papillon. Se reporter à ''PIECES DES COMPOSANTS EXTERNES'', section EM. 2. ALLER A 6.

4	CONTROLER LE FONCTIONNEMENT FI CAM

Avec l'analyseur générique GST

1. Ajuster le câble d'accélérateur. Se reporter à ''Réglage du câble d'accélérateur'' dans la section FE.
2. Chauffer le moteur à 75°C.
3. Arrêter le moteur et attendre au moins 10 secondes, ensuite mettre le contact d'allumage sur ON.
4. Régler le GST en ''MODE 1''.
5. Lorsque le liquide de refroidissement du moteur a atteint une température entre 75 et 85°C, entre la butée et le tambour de papillon comme indiqué sur l'illustration.

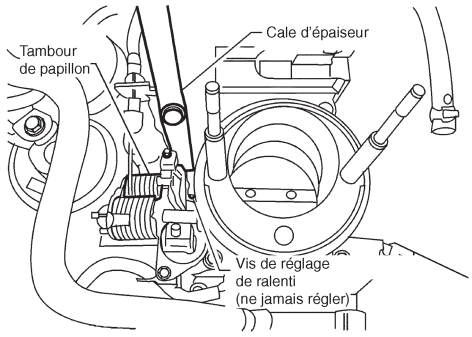

AEC871A

BON ou MAUVAIS

Bon (avec CONSULT-II)	▶	ALLER A 6.
Bon (sans CONSULT-II)	▶	ALLER A 14.
Mauvais	▶	1. Remplacer l'ensemble du corps de papillon.Se reporter à ''PIECES DES COMPOSANTS EXTERNES'', section EM. 2. Avec CONSULT-II: A 6. Sans CONSULT-II: ALLER A 14.

Simpo PDF Merge and Split Unregistered Version - http://www.simpopdf.com

5	CONTROLER LE FONCTIONNEMENT FI CAM

Sans outils

1. Ajuster le câble d'accélérateur. Se reporter à ''Réglage du câble d'accélérateur'' dans la section FE.
2. Débrancher le connecteur de faisceau du capteur de température du liquide de refroidissement moteur et vérifier la résistance comme indiqué sur l'illustration.

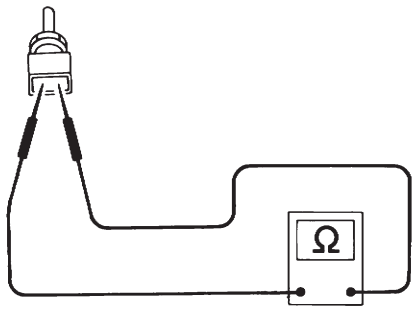

SEF536H

3. Chauffer le moteur jusqu'à ce que la résistance du capteur de température du liquide de refroidissement du moteur ait une valeur entre 0,26 et 0,39 kΩ.
4. Mettre le contact d'allumage sur OFF.
5. Lorsque la température du liquide de refroidissement du moteur est entre 75 et 85°C, et la tension entre 1,10 et 1,36V, s'assurer que le jeu entre la butée et la vis de réglage du papillon est inférieur à 0,05 mm.

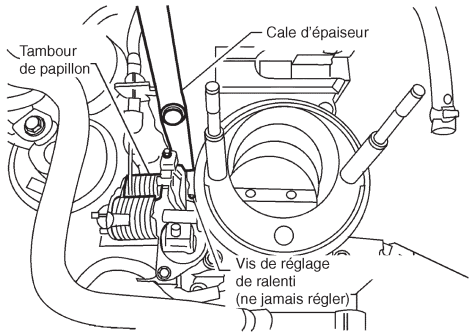

AEC871A

BON ou MAUVAIS

Bon	▶	ALLER A 14.
Mauvais	▶	1. Remplacer l'ensemble du corps de papillon. Se reporter à ''PIECES DES COMPOSANTS EXTERNES'', section EM. 2. ALLER A 14.

Simpo PDF Merge and Split Unregistered Version - http://www.simpopdf.com

6	CONTROLER LE CALAGE DE L'ALLUMAGE

Avec CONSULT-II

1. Chauffer le moteur à sa température normale de fonctionnement.
2. Sélectionner ''REG CALAGE ALLUM'' en mode ''SUPPORT TRAVAIL''.
3. Appuyer sur ''DEPART''.

REG CALAGE ALLUMAGE
ON PEUT MAINTENIR LE SIGNAL DE REACTION DU CALAGE D'ALLUMAGE EN APPUYANT SUR DEPART. APRES CELA, REGLER LE CALAGE DE L'ALLUMAGE AVEC UNE LAMPE STROBOSCOPIQUE EN TOURNANT LE CAPTEUR D'ANGLE D'ARBRE A CAMES.

PEF546N

4. Contrôler le calage de l'allumage au ralenti à l'aide d'une lampe stroboscopique.

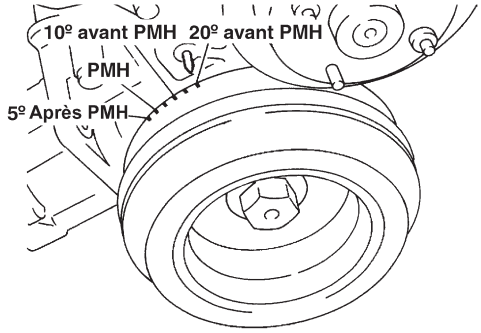

SEF320V

Calage de l'allumage :
15°±2° après PMH

BON ou MAUVAIS

Bon	▶	ALLER A 7.
Mauvais	▶	1. Régler le calage de l'allumage en faisant tourner le distributeur. Se reporter à ''Réglage régime au ralenti/calage de l'allumage/richesse de mélange de ralenti'', EC-3037. 2. ALLER A 7.

Simpo PDF Merge and Split Unregistered Version - http://www.simpopdf.com

7	CONTROLE DU REGIME AU RALENTI

Avec CONSULT-II

1. Sélectionner ‘‘REG CALAGE ALLUM’’ en mode ‘‘SUPPORT TRAVAIL’’ et appuyer sur ‘‘DEPART’’.

REGL VANNE	
CONTROLE REGLAGE	
TR/MN MOT	700 tr/mn
REGLAGE DE LA CONDITION	
VANNE IACV-ACC	IMMOBIL
CONTROLE	
CAP TEMP MOT	XXX°C
CON RALENTI	XXX N

SEF714Z

2. Contrôler le régime de ralenti.
   650±50 tr/min

BON ou MAUVAIS

Bon	▶	ALLER A 8.
Mauvais	▶	1. Régler le régime de ralenti de base en tournant la vis de réglage du régime de ralenti. Se reporter à ‘‘Réglage régime au ralenti/calage de l’allumage/richesse de mélange de ralenti’’, EC-3037. 2. ALLER A 8.

Simpo PDF Merge and Split Unregistered Version - http://www.simpopdf.com

8	CONTROLER LA POSITION FERMEE DU CONTACT DE POSITION DE PAPILLON DE RALENTI (CONTROLER LA POSITION DE RALENTI DU CAPTEUR DE POSITION DE PAPILLON)

Avec CONSULT-II

REMARQUE :

Toujours contrôler le calage de l'allumage et la vitesse de ralenti de base avant de réaliser ce qui suit.

1. Chauffer le moteur à sa température normale de fonctionnement.
2. Vérifier FIC. Se reporter à la procédure 3.
3. Arrêter le moteur.
4. Mettre le contact d'allumage sur ON.
5. Régler CONSULT-II en mode ''CONTROLE DE DONNEES''.
6. Sélectionner ''CON RALENTI'' dans le menu.
7. Lire le signal ''CON RALENTI'' en suivant la procédure suivante.

- Insérer une jauge d'épaisseur de 0,1 mm et une de 0,3 mm alternativement entre la vis de réglage du papillon (TAS) et le tambour de papillon comme indiqué sur l'illustration et vérifier le signal.

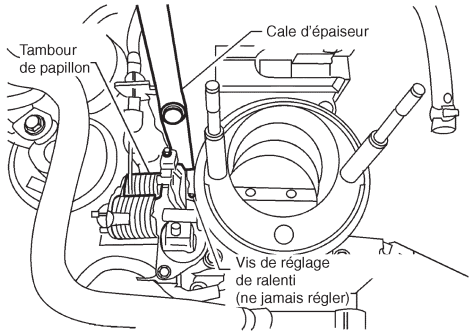

AEC871A

CONTROLE DE DONNEES	
CONTROLE	AUCUN DTC
TR/MN MOT	XXX tr/min
CAP TEMP MOT	XXX °C
CON RALENTI	MAR

SEF197Y

Lors de l'insertion d'une jauge d'épaisseur de 0,1 mm, le signal ''CON RALENTI'' devrait continuer à indiquer ''MAR''.

Lors de l'insertion d'une jauge d'épaisseur de 0,3 mm, le signal ''CON RALENTI'' devrait continuer à indiquer ''ARR''.

BON ou MAUVAIS

Bon	▶	ALLER A 12.
Mauvais	▶	ALLER A 9.

Simpo PDF Merge and Split Unregistered Version - http://www.simpopdf.com

9	REGLAGE DE LA POSITION DE RALENTI DU CAPTEUR DE POSITION DE PAPILLON-1

Avec CONSULT-II

REMARQUE :

- **Ne jamais régler la vis de réglage du papillon (TAS).**
- **Ne pas toucher le tambour du papillon en vérifiant le signal ''CON RALENTI''.**
  Ceci pourrait causer un réglage incorrect.

1. Chauffer le moteur à sa température normale de fonctionnement.
2. Vérifier FIC. Se reporter à la procédure 3.
3. Arrêter le moteur.
4. Desserrer les boulons de fixation du capteur de position de papillon.
5. Mettre le contact d'allumage sur ON.
6. Sélectionner ''CON RALENTI'' dans le mode ''CONTROLE DE DONNEES''.
7. Insérer une jauge d'épaisseur de 0,1 mm entre la vis de réglage du papillon (TAS) et le tambour de papillon comme indiqué sur l'illustration.

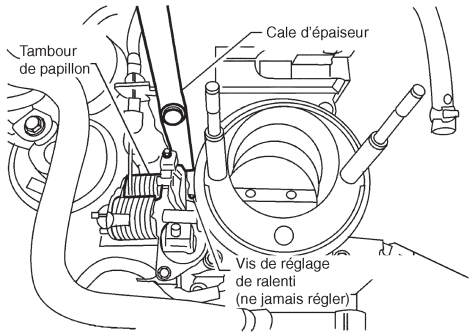

AEC871A

8. Ouvrir puis fermer la soupape de papillon.
9. Vérifier le signal ''CON RALENTI''.

CONTROLE DE DONNEES	
CONTROLE	AUCUN DTC
TR/MN MOT	XXX tr/min
CAP TEMP MOT	XXX °C
CON RALENTI	MAR

SEF197Y

Le signal ''CON RALENTI'' doit rester sur ''ARR'' lorsque la soupape de papillon est fermée.
S'il est impossible de régler le contact de position de papillon fermé, remplacer le capteur de position de papillon.

BON ou MAUVAIS

Bon	▶	ALLER A 11.
Mauvais	▶	ALLER A 10.

Simpo PDF Merge and Split Unregistered Version - http://www.simpopdf.com

10	REGLAGE DE LA POSITION DE RALENTI DU CAPTEUR DE POSITION DE PAPILLON-2

Avec CONSULT-II

Tourner le corps du capteur de position de papillon dans le sens inverse des aiguilles d'une montre jusqu'à ce que ''CON RALENTI'' indique ''ARR''.

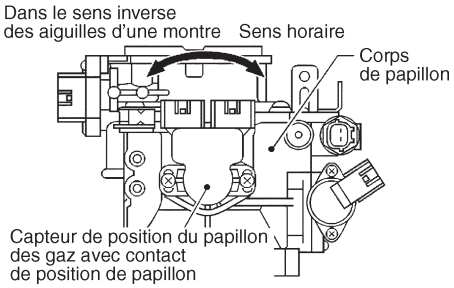

AEC872A

▶	ALLER A 11.

11	REGLAGE DE LA POSITION DE RALENTI DU CAPTEUR DE POSITION DE PAPILLON-3

Avec CONSULT-II

1. Serrer provisoirement les boulons de fixation du corps du capteur comme suit.

- **Faire bouger peu à peu le corps du capteur dans le sens des aiguilles d'une montre et l'arrêter lorsque le signal ''CON RALENTI'' commute de ''ARR'' à ''MAR'' en serrant les boulons de fixation du corps du capteur.**

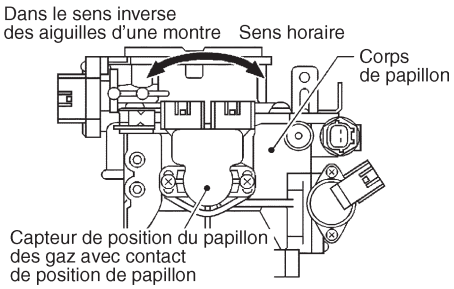

AEC872A

2. S'assurer deux ou trois fois que le signal est sur ''MAR'' lorsque la soupape de papillon est fermée et sur ''ARR'' lorsqu'elle est ouverte.
3. Retirer la jauge d'épaisseur de 0,1 mm et insérer la jauge d'épaisseur de 0,3 mm.
4. S'assurer deux à trois fois que le signal reste sur ''ARR'' lorsque la soupape de papillon est fermée.
5. Serrer le capteur de position de papillon.
6. Vérifier le signal ''CON RALENTI'' à nouveau.
   Le signal reste sur ''ARR'' lorsque l'on ferme la soupape de papillon.

BON ou MAUVAIS

Bon	▶	1. Retirer la jauge d'épaisseur de 0,3 mm. 2. ALLER A 12.
Mauvais	▶	ALLER A 9.

Simpo PDF Merge and Split Unregistered Version - http://www.simpopdf.com

12	REINITIALISER LA MEMOIRE DE POSITION DE RALENTI DU CAPTEUR DE POSITION DE PAPILLON

Avec CONSULT-II

REMARQUE :

Toujours amener le moteur à sa température normale de fonctionnement. Si le moteur est froid, la mémoire de position de ralenti du capteur de position de papillon ne peut pas être réinitialisée correctement.

1. Démarrer le moteur.
2. Chauffer le moteur à sa température normale de fonctionnement.
3. Sélectionner ‘‘POSIT RALENTI’’ dans le mode ‘‘CONTROLE DE DONNEES’’ d’enclenchement manuel.
4. Arrêter le moteur. (Mettre le contact d’allumage sur OFF.)
5. Mettre le contact d’allumage sur ON et attendre au moins 5 secondes.

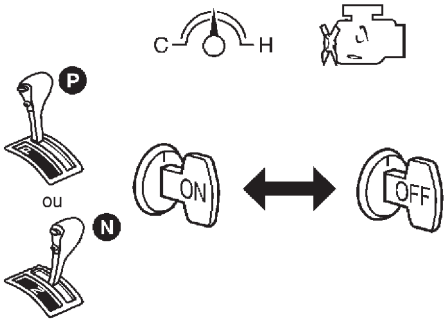

SEF864V

6. Mettre le contact d’allumage sur OFF et attendre au moins 5 secondes.
7. Recommencer les étapes 5 et 6 jusqu’à ce que le signal ‘‘POSIT RALENTI’’ passe à ‘‘MAR‘ en mode ‘‘CONTROLE DE DONNEES’’ de CONSULT-II.

CONTROLE DE DONNEES	
CONTROLE	PAS DE DTC
CON RALENTI	MAR

SEF715Z

	▶	ALLER A 13.

13	CONTROLER LE REGIME CIBLE DE RALENTI

Avec CONSULT-II

1. Démarrer le moteur et l’amener à température normale de fonctionnement.
2. Sélectionner ‘‘TR/MN MOT’’ en mode ‘‘CONTROLE DE DONNEES’’.
3. Contrôler le régime de ralenti.

700±50 tr/min

BON ou MAUVAIS

Bon	▶	**FIN DE L’INSPECTION**
Mauvais	▶	Réglage du régime de ralenti. Se reporter à ‘‘Réglage régime au ralenti/calage de l’allumage/richesse de mélange de ralenti’’, EC-3037. L’inspection est terminée après le réglage du régime de ralenti.

Simpo PDF Merge and Split Unregistered Version - http://www.simpopdf.com

14	CONTROLER LE CALAGE DE L'ALLUMAGE

⊗ **Sans CONSULT-II**

1. Chauffer le moteur à sa température normale de fonctionnement.
2. Eteindre le moteur et débrancher le connecteur de faisceau du capteur de position de papillon.

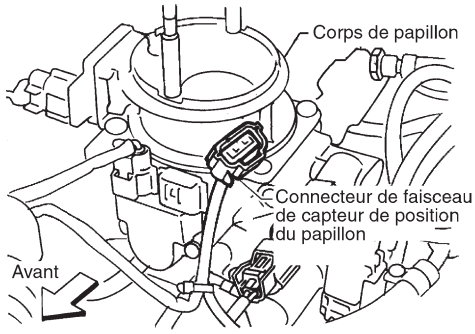

SEF265S

3. Démarrer le moteur.
4. Emballer le moteur (2 000 à 3 000 tr/mn) deux ou trois fois à vide, puis le faire tourner au ralenti.
5. Contrôler le calage de l'allumage au ralenti à l'aide d'une lampe stroboscopique.

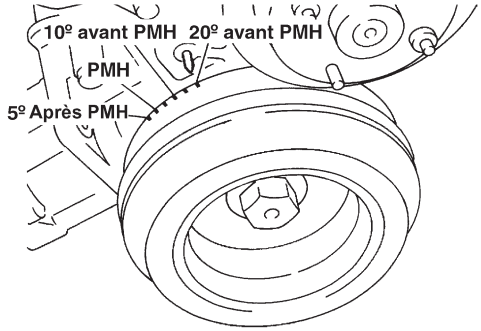

SEF320V

Calage de l'allumage :
15°±2° APMH

BON ou MAUVAIS

Bon	▶	ALLER A 15.
Mauvais	▶	1. Régler le calage de l'allumage en faisant tourner le distributeur. Se reporter à ''Réglage régime au ralenti/calage de l'allumage/richesse de mélange de ralenti'', EC-3037. 2. ALLER A 15.

15	CONTROLE DU REGIME RALENTI DE BASE

⊗ **Sans CONSULT-II**

Vérifier que le régime-moteur ralentit jusqu'au régime suivant.
650±50 tr/min

BON ou MAUVAIS

Bon	▶	ALLER A 16.
Mauvais	▶	1. Régler le régime au ralenti de base en tournant la vis de réglage du régime au ralenti. Se reporter à ''Réglage régime au ralenti/calage de l'allumage/richesse de mélange de ralenti'', EC-3037. 2. ALLER A 16.

Simpo PDF Merge and Split Unregistered Version - http://www.simpopdf.com

16	CONTROLER LA POSITION FERMEE DU CONTACT DE POSITION DE PAPILLON DE RALENTI (CONTROLER LA POSITION DE RALENTI DU CAPTEUR DE POSITION DE PAPILLON)

Sans CONSULT-II

REMARQUE :

Toujours contrôler le calage de l'allumage et le régime-moteur de base avant de réaliser ce qui suit.

1. Chauffer le moteur à sa température normale de fonctionnement.
2. Vérifier FIC. Se reporter à la procédure 5.
3. Arrêter le moteur.
4. Débrancher le connecteur de faisceau du contact de position de papillon fermé.
5. Brancher la sonde d'essai aux bornes 5 et 6 du contact de position de papillon fermé.
6. Vérifier la continuité du faisceau dans les conditions suivantes.

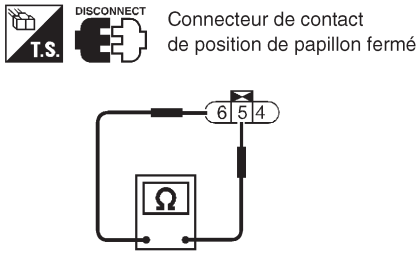

SEF862V

- Insérer la jauge d'épaisseur de 0,1 mm et de 0,3 mm alternativement entre la vis de réglage du papillon (TAS) et le tambour de papillon, comme le montre l'illustration.

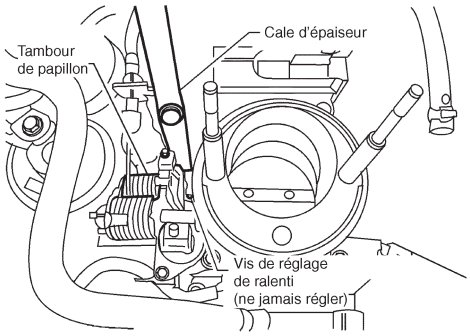

AEC871A

''Il doit y avoir continuité'' lorsque l'on insert la jauge de 0,1 mm d'épaisseur.
''Il ne doit pas y avoir continuité'' lorsque l'on insert la jauge de 0,3 mm d'épaisseur.

BON ou MAUVAIS

Bon	▶	ALLER A 20.
Mauvais	▶	ALLER A 17.

Simpo PDF Merge and Split Unregistered Version - http://www.simpopdf.com

17	REGLAGE DE LA POSITION DE RALENTI DU CAPTEUR DE POSITION DE PAPILLON-1

Sans CONSULT-II

REMARQUE :

- **Ne jamais régler la vis de réglage du papillon (TAS).**
- **Ne pas touche le tambour de papillon en vérifier la ‘‘continuité’’.**
  Ceci pourrait causer un réglage incorrect.

1. Chauffer le moteur à sa température normale de fonctionnement.
2. Vérifier FIC. Se reporter à la procédure 5.
3. Arrêter le moteur.
4. Desserrer les boulons de fixation du capteur de position de papillon.
5. Débrancher le connecteur de faisceau du capteur de position de papillon fermé.
6. Insérer une jauge d’épaisseur de 0,1 mm entre la vis de réglage du papillon et le tambour de papillon comme indiqué sur l’illustration.

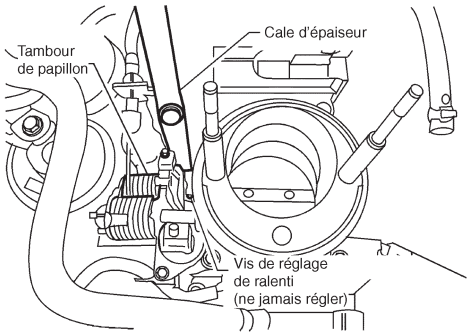

AEC871A

7. Ouvrir puis fermer la soupape de papillon.
8. Vérifier la continuité entre les bornes 5 et 6 du contact de position de papillon fermé.

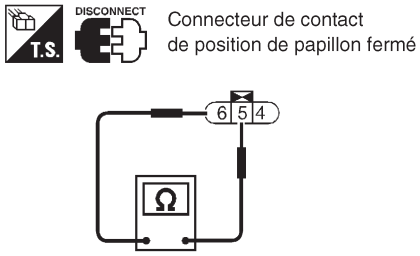

SEF862V

Il ne doit pas y avoir continuité en fermant le corps du capteur de position de papillon.
S’il est impossible de régler le contact de position de papillon fermé, remplacer le capteur de position de papillon.

BON ou MAUVAIS

Bon	▶	ALLER A 19.
Mauvais	▶	ALLER A 18.

Simpo PDF Merge and Split Unregistered Version - http://www.simpopdf.com

18	REGLAGE DE LA POSITION DE RALENTI DU CAPTEUR DE POSITION DE PAPILLON-2

⊗ **Sans CONSULT-II**

Tourner le corps du capteur de position de papillon dans le sens inverse des aiguilles d'une montre jusqu'à ce qu'il n'y ait plus continuité.

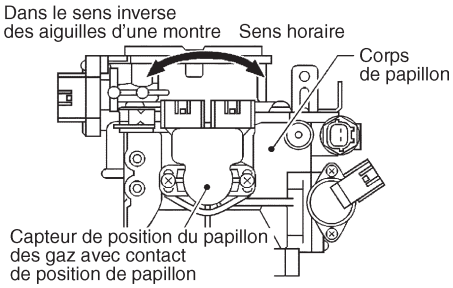

AEC872A

	▶	ALLER A 19.

19	REGLAGE DE LA POSITION DE RALENTI DU CAPTEUR DE POSITION DE PAPILLON-3

⊗ **Sans CONSULT-II**

1. Serrer provisoirement les boulons de fixation du corps du capteur comme suit.

- **Tourner progressivement le corps du capteur dans le sens des aiguilles d'une montre jusqu'à ce qu'il y ait continuité, puis serrer les boulons de fixation du corps du capteur.**

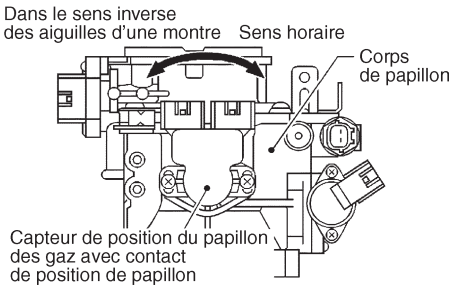

AEC872A

2. Vérifier à deux ou trois reprises qu'il y a continuité lorsque la soupape de papillon est fermée et qu'il n'y a pas continuité lorsqu'elle est ouverte.
3. Retirer la jauge de 0,1 mm d'épaisseur et insérer la jauge de 0,3 mm d'épaisseur.
4. Vérifier à deux ou trois reprises qu'il n'y a pas continuité lorsque la soupape de papillon est fermée.
5. Serrer le capteur de position de papillon.
6. Vérifier à nouveau la continuité.
   Il n'y a pas continuité lorsque la soupape de papillon est fermée.

BON ou MAUVAIS

Bon	▶	ALLER A 20.
Mauvais	▶	ALLER A 17.

20	REPOSE

⊗ **Sans CONSULT-II**

1. Retirer la jauge d'épaisseur de 0,3 mm.
2. Rebrancher le connecteur de faisceau du capteur de position de papillon et la connecteur de faisceau du contact de position de papillon fermé.
3. Emballer le moteur (2 000 à 3 000 tr/mn) deux ou trois fois à vide, puis le faire tourner au ralenti.

	▶	ALLER A 21.

Simpo PDF Merge and Split Unregistered Version - http://www.simpopdf.com

21	REINITIALISER LA MEMOIRE DE POSITION DE RALENTI DU CAPTEUR DE POSITION DE PAPILLON

⊗ **Sans CONSULT-II**

REMARQUE :

Toujours amener le moteur à sa température normale de fonctionnement. Si le moteur est froid, la mémoire de position de ralenti du capteur de position de papillon ne peut pas être réinitialisée correctement.

1. Démarrer le moteur.
2. Chauffer le moteur à sa température normale de fonctionnement.
3. Arrêter le moteur. (Mettre le contact d'allumage sur ''OFF''.)
4. Mettre le contact d'allumage sur ''ON'', puis attendre 5 secondes au moins.

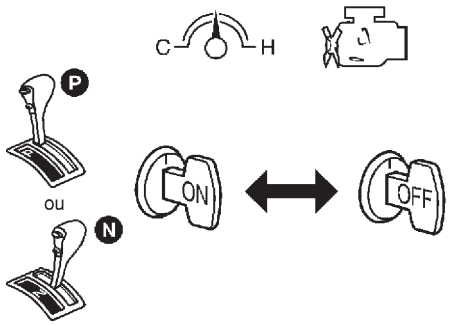

SEF864V

5. Mettre le contact d'allumage sur ''OFF'', puis attendre 5 secondes au moins.
6. Recommencer 20 fois les étapes 5 et 4.

▶	ALLER A 22.

22	CONTROLER LE REGIME CIBLE DE RALENTI

⊗ **Sans CONSULT-II**

1. Démarrer le moteur et l'amener à température normale de fonctionnement.
2. Contrôler le régime de ralenti.

700±50 tr/min

BON ou MAUVAIS

Bon	▶	ALLER A 23.
Mauvais	▶	1. Régler le régime cible de ralenti. Se reporter à ''Réglage régime au ralenti/calage de l'allumage/richesse de mélange de ralenti'', EC-3037. 2. ALLER A 23.

23	EFFACER LES CODES DE DEFAUT DTC INUTILES

Après cette inspection, un n° de DTC inutile peut être affiché.
Effacer la mémoire de l'ECM.
Se reporter à ''COMMENT EFFACER LES CODES DE DIAGNOSTIC ANTIPOLLUTION'', (EC-3065) .

▶	**FIN DE L'INSPECTION**

Simpo PDF Merge and Split Unregistered Version - http://www.simpopdf.com

Tableau des priorités d'inspection des codes de défaut de diagnostic

NEEC0039

Si plusieurs codes de défaut sont affichés en même temps, effectuer les inspections nécessaires l'une après l'autre dans l'ordre de priorité établi par le tableau suivant.

Priorité	Eléments détectés (codes de défaut)
1	● P0101, P0102, P0103 Débitmètre d'air ● P0112, P0113, P0127 Capteur de température d'admission d'air ● P0117, P0118 Capteur de température moteur ● P0121, P0122, P0123 Capteur de position de papillon ● P0327, P0328 KS ● P0340 Capteur d'angle d'arbre à cames ● P0500 VSS ● P0605 ECM ● P1706 contact PNP
2	● P0031, P0032 Chauffage CH S/O2 CH1 ● P0037, P0038 Chauffage CH S/O2 CH2 ● P0132, P0133, P0134, P1143, P1144 CH S/O2 CH1 ● P0138, P0139, P1146, P1147 CH S/O2 CH2 P0335, P1336 Capteur CPV ● P0444, P0445 Electrovanne de commande de volume de purge de cartouche EVAP ● P0510 Contact CTP
3	● P0171, P0172 Fonctionnement du système d'injection de carburant ● P0300 - P0304 Raté d'allumage ● P0505 Système ISC ● P0420 Fonctionnement du catalyseur à trois voies

Simpo PDF Merge and Split Unregistered Version - http://www.simpopdf.com

Tableau de sécurité

=NEEC0040

L'ECM passe en mode de sécurité lorsque l'un des défauts suivants est détecté suite à un circuit ouvert ou à un court-circuit. Le témoin de défaut (MI) s'allume lorsque l'ECM passe en mode de sécurité

N° de DTC CONSULT-II GST	Eléments détectés	Condition de fonctionnement du moteur en mode de sécurité	
P0102 P0103	Circuit du débitmètre d'air	Le régime-moteur ne dépasse pas 2 400 tr/mn en raison de la coupure d'alimentation.	
P0112 P0113	Capteur de température d'air d'admission	L'ECM fonctionne dans la supposition que la température d'admission d'air est de 25°C.	
P0117 P0118	Circuit du capteur de température du liquide de refroidissement du moteur	La température du liquide de refroidissement du moteur est déterminée par l'ECM sur la base du laps de temps écoulé après avoir mis le contact d'allumage sur ON ou START. CONSULT-II affiche la température du liquide de refroidissement fixée par l'ECM.	
		Condition	Température du liquide de refroidissement du moteur fixée (affichage CONSULT-II)
		Au moment de la mise du contact d'allumage sur ON ou Start	40°C
		Plus de 4 minutes environ après mise du contact sur ON ou START	80°C
		Sauf comme indiqué ci-dessus	40 - 80°C (en fonction du temps écoulé)
P0122 P0123	Circuit du capteur de position de papillon	La position de papillon sera déterminée sur la base de la quantité de carburant injectée et du régime-moteur. Par conséquent, l'accélération sera faible.	
		Condition	Condition de conduite
		Moteur au ralenti	Normal
		Lors de l'accélération	Accélération faible
Impossible d'accéder à l'ECM	ECM	**Condition de déclenchement du système de sécurité de l'ECM** La fonction de calcul de l'ECM a été jugé défectueuse. Lorsque le système de sécurité s'enclenche (c'est-à-dire si l'ECM détecte une condition de défaut dans son unité centrale de traitement), le témoin de défaut (MI) du tableau de bord s'allume pour en avertir le conducteur. Il n'est toutefois pas possible d'accéder à l'ECM et de confirmer le code de défaut. **Gestion moteur sous système de sécurité** Lorsque le système de sécurité fonctionne, l'injection de carburant, le calage de l'allumage, la pompe à carburant et la soupape IACV-AAC sont toujours contrôlés, mais avec certaines limitations.	
			Fonctionnement du système de sécurité de l'ECM
		Régime-moteur	**Le régime-moteur ne dépasse pas 3 000 tr/mn.**
		Injection de carburant	Système d'injection multipoint simultanée
		Calage de l'allumage	Le calage de l'allumage est fixé sur la valeur prédéfinie
		Pompe à carburant	Le relais de la pompe à carburant est sur MARCHE lorsque le moteur tourne et sur ARRET lorsque le moteur cale
		Soupape IACV-AAC	Grand ouvert
		Remplacer l'ECM, après confirmation que l'ECM se trouve en mode de sécurité.	

Simpo PDF Merge and Split Unregistered Version - http://www.simpopdf.com

Tableau des caractéristiques des symptômes

NEEC0041

SYSTEME — GESTION MOTEUR

NEEC0041S01

		SYMPTOME													Page de référence
		DEMARRAGE/REDEMARRAGE DIFFICILE/ABSENT (SAUF HA)	CALAGE DU MOTEUR	HESITATION/TROU D'ACCELERATION/BAISSE DE REGIME	COGNEMENT D'ALLUMAGE/DETONATION	MANQUE DE PUISSANCE/MAUVAISE ACCELERATION	RALENTI ACCELERE/RALENTI LENT	MAUVAIS RALENTI/EFFET DE SCIAGE	VIBRATION DE RALENTI	RETOUR LENT/PAS DE RETOUR AU RALENTI	SURCHAUFFE/TEMPERATURE D'EAU ELEVEE	CONSOMMATION EXCESSIVE DE CARBURANT	CONSOMMATION EXCESSIVE D'HUILE	BATTERIE A PLAT (CHARGE INSUFFISANTE)	
Code de symptôme de garantie		AA	AB	AC	AD	AE	AF	AG	AH	AJ	AK	AL	AM	HA	
Carburant	Circuit de pompe à carburant	1	1	2	3	2		2	2			3		2	EC-3404
	Système de régulation de pression de carburant	3	3	4	4	4	4	4	4	4		4			EC-3036
	Circuit d'injection	1	1	2	3	2		2	2			2			EC-3396
	Système de contrôle des évaporations de carburant	3	3	4	4	4	4	4	4	4		4			EC-3030
Air	Système de recyclage des gaz du carter	3	3	4	4	4	4	4	4	4		4	1		EC-3033
	Réglage incorrect du régime de ralenti	3	3				1	1	1	1		1			EC-3037
	Circuit de la soupape IACV-AAC	1	1	2	3	3	2	2	2	2		2		2	EC-3314
	Circuit de l'électrovanne IACV-FICD	2	2	3	3	3	3	3	3	3		3			EC-3416
Allumage	Réglage incorrect du calage de l'allumage	3	3	1	1	1		1	1			1			EC-3037
	Circuit d'allumage	1	1	2	2	2		2	2			2			EC-3387
Circuit d'alimentation principale et de mise à la masse		2	2	3	3	3		3	3		2	3		2	EC-3132
Circuit de climatiseur		2	2	3	3	3	3	3	3	3		3		2	Section HA

1 - 6 : les numéros se réfèrent à l'ordre de l'inspection.

(suite à la page suivante)

Simpo PDF Merge and Split Unregistered Version - http://www.simpopdf.com

Tableau des caractéristiques des symptômes

	SYMPTOME													
	DEMARRAGE/REDEMARRAGE DIFFICILE/ABSENT (SAUF HA)	CALAGE DU MOTEUR	HESITATION/TROU D'ACCELERATION/BAISSE DE REGIME	COGNEMENT D'ALLUMAGE/DETONATION	MANQUE DE PUISSANCE/MAUVAISE ACCELERATION	RALENTI ACCELERE/RALENTI LENT	MAUVAIS RALENTI/EFFET DE SCIAGE	VIBRATION DE RALENTI	RETOUR LENT/PAS DE RETOUR AU RALENTI	SURCHAUFFE/TEMPERATURE D'EAU ELEVEE	CONSOMMATION EXCESSIVE DE CARBURANT	CONSOMMATION EXCESSIVE D'HUILE	BATTERIE A PLAT (CHARGE INSUFFISANTE)	Page de référence
Code de symptôme de garantie	AA	AB	AC	AD	AE	AF	AG	AH	AJ	AK	AL	AM	HA	
Circuit du capteur d'angle d'arbre à cames	2	2	3	3	3		3	3			3			EC-3286
Circuit du débitmètre d'air	1	1	2	2	2		2	2			2			EC-3152, EC-3161
Circuit de la sonde à oxygène chauffé 1		1	2	3	2		2	2			2			EC-3226, 3332
Circuit du capteur de température du liquide de refroidissement du moteur	1	1	2	3	2	3	2	2	3		2			EC-3175
Circuit du capteur de position de papillon		1	2		2	2	2	2	2		2			EC-3181
Réglage incorrect du capteur de position de papillon		3	1		1	1	1	1	1		1			EC-3093
Circuit du capteur de vitesse du véhicule		2	3		3						3			EC-3308
Circuit du capteur de détonation			2								3			EC-3274
ECM	2	2	3	3	3	3	3	3	3	3	3			EC-3330, 3108
Circuit du signal de démarrage	2													EC-3401
Circuit du contact de position de stationnement/point mort (PNP)			3		3		3	3			3			EC-3381
Circuit du manocontact d'huile de direction assistée		2					3	3						EC-3412

1 - 6 : les numéros se réfèrent à l'ordre de l'inspection.

(suite à la page suivante)

Simpo PDF Merge and Split Unregistered Version - http://www.simpopdf.com

SYSTÈME — MÉCANIQUE MOTEUR ET AUTRE

NEEC0041S03

		SYMPTOME													Page de référence
		DEMARRAGE/REDEMARRAGE DIFFICILE/ABSENT (SAUF HA)	CALAGE DU MOTEUR	HESITATION/TROU D'ACCELERATION/BAISSE DE REGIME	COGNEMENT D'ALLUMAGE/DETONATION	MANQUE DE PUISSANCE/MAUVAISE ACCELERATION	RALENTI ACCELERE/RALENTI LENT	MAUVAIS RALENTI/EFFET DE SCIAGE	VIBRATION DE RALENTI	RETOUR LENT/PAS DE RETOUR AU RALENTI	SURCHAUFFE/TEMPERATURE D'EAU ELEVEE	CONSOMMATION EXCESSIVE DE CARBURANT	CONSOMMATION EXCESSIVE D'HUILE	BATTERIE A PLAT (CHARGE INSUFFISANTE)	
Code de symptôme de garantie		AA	AB	AC	AD	AE	AF	AG	AH	AJ	AK	AL	AM	HA	
Carburant	Réservoir à carburant	5	5												Section FE
	Tuyauterie d'alimentation			5	5	5		5	5			5			—
	Blocage des vapeurs d'échappement														
	Dépôt de la soupape	5		5	5	5		5	5			5			
	Mauvais carburant (lourd en essence, faible en octane)														
Air	Conduit d'air	5	5	5	5	5	5	5	5	5		5			
	Filtre à air														
	Fuite d'air par le conduit d'air (Débitmètre d'air — corps de papillon)														
	Corps de papillon, câble de papillon														Section FE
	Fuite d'air au niveau du collecteur d'admission/ collecteur/joint plat														—
Démarrage	Batterie	1	1	1		1		1	1			1		1	Section SC
	Circuit d'alternateur														
	Circuit de starter	3													
	Volant-moteur	6													Section EM
	Contact de stationnement/ point mort (PNP)	4													—

1 - 6: Les numéros se réfèrent à l'ordre d'inspection.

(suite à la page suivante)

Simpo PDF Merge and Split Unregistered Version - http://www.simpopdf.com

Tableau des caractéristiques des symptômes

		SYMPTOME													Page de référence
		DEMARRAGE/REDEMARRAGE DIFFICILE/ABSENT (SAUF HA)	CALAGE DU MOTEUR	HESITATION/TROU D'ACCELERATION/BAISSE DE REGIME	COGNEMENT D'ALLUMAGE/DETONATION	MANQUE DE PUISSANCE/MAUVAISE ACCELERATION	RALENTI ACCELERE/RALENTI LENT	MAUVAIS RALENTI/EFFET DE SCIAGE	VIBRATION DE RALENTI	RETOUR LENT/PAS DE RETOUR AU RALENTI	SURCHAUFFE/TEMPERATURE D'EAU ELEVEE	CONSOMMATION EXCESSIVE DE CARBURANT	CONSOMMATION EXCESSIVE D'HUILE	BATTERIE A PLAT (CHARGE INSUFFISANTE)	
Code de symptôme de garantie		AA	AB	AC	AD	AE	AF	AG	AH	AJ	AK	AL	AM	HA	
Moteur	Culasse	5	5	5	5	5		5	5			5			Section EM
	Joint plat de culasse										4		3		
	Bloc-cylindres	6	6	6	6	6		6	6			6	4		
	Piston														
	Segment de piston														
	Tige de raccordement														
	Roulement														
	Vilebrequin														
Mécanisme de soupape	Chaîne de distribution	5	5	5	5	5		5	5			5			Section EM
	Arbre à cames														
	Soupape d'admission												3		
	Soupape d'échappement														
Echappement	Collecteur d'échappement/ tuyau/silencieux/joint plat	5	5	5	5	5		5	5			5			Section FE
	Catalyseur trois voies														
Lubrification	Carter d'huile/crépine d'huile/ pompe à huile/filtre à huile/ galerie d'huile	5	5	5	5	5		5	5			5			Section MA, section LC
	Niveau d'huile (bas)/huile sale														

Simpo PDF Merge and Split Unregistered Version - http://www.simpopdf.com

Tableau des caractéristiques des symptômes

		SYMPTOME													Page de référence
		DEMARRAGE/REDEMARRAGE DIFFICILE/ABSENT (SAUF HA)	CALAGE DU MOTEUR	HESITATION/TROU D'ACCELERATION/BAISSE DE REGIME	COGNEMENT D'ALLUMAGE/DETONATION	MANQUE DE PUISSANCE/MAUVAISE ACCELERATION	RALENTI ACCELERE/RALENTI LENT	MAUVAIS RALENTI/EFFET DE SCIAGE	VIBRATION DE RALENTI	RETOUR LENT/PAS DE RETOUR AU RALENTI	SURCHAUFFE/TEMPERATURE D'EAU ELEVEE	CONSOMMATION EXCESSIVE DE CARBURANT	CONSOMMATION EXCESSIVE D'HUILE	BATTERIE A PLAT (CHARGE INSUFFISANTE)	
Code de symptôme de garantie		AA	AB	AC	AD	AE	AF	AG	AH	AJ	AK	AL	AM	HA	
Refroi-dissement	Radiateur/flexible/bouchon de remplissage de radiateur	5	5	5	5	5		5	5		4	5			Section LC
	Thermostat									5					
	Pompe à eau														
	Galerie d'eau														
	Niveau de liquide de refroi-dissement (bas)/liquide de refroidissement sale														Section MA

1 - 6 : les numéros se rapportent à l'ordre de l'inspection.

Simpo PDF Merge and Split Unregistered Version - http://www.simpopdf.com

Valeur de référence de CONSULT-II en mode de contrôle de données

NEEC0042

Remarques :

- Les données de spécification constituent des valeurs de référence.
- Les données de spécification sont des valeurs de sortie/entrée qui sont détectées ou fournies par l'ECM au connecteur.

* Les données de spécification peuvent ne pas avoir de rapport direct avec les signaux/valeurs/fonctionnements de leurs composants. (par ex., régler le calage de l'allumage à l'aide d'une lampe stroboscopique avant de contrôler CALAGE ALLUM. Les données spécifiées peuvent être affichées même lorsque le calage de l'allumage est hors spécifications. Le CALAGE ALLUM' contrôle les données calculées par l'ECM selon les signaux d'entrée provenant du capteur d'angle d'arbre à cames et les autres capteurs qui concernent le calage de l'allumage.)

ELEMENT DE CONTROLE	CONDITION		SPECIFICATION
TR/MN MOT	• Compte-tours : Brancher • Faire tourner le moteur et comparer l'indication du compte-tours avec la valeur affichée par CONSULT-II		Valeur voisine de celle indiquée par CONSULT-II
DEBITMETRE-R1	• Moteur : une fois le moteur chaud • Interrupteur de climatiseur : ''OFF'' • Levier de changement de vitesses : ''N'' • A vide	Ralenti	0,9 - 1,8V
		2.500 tr/mn	1,9 - 2,3V
CAP TEMP MOT	• Moteur : une fois le moteur chaud		Plus de 70°C
S/O2 CH1 (R1)	• Moteur : une fois le moteur chaud	Maintenir le régime moteur à 2 000 tr/mn	0 - 0,3V ←→ Environ 0,6 - 1,0V
MTR S/O2 CH1 (R1)			PAUVRE ←→ RICHE Change plus de 5 fois pendant 10 secondes
S/O2 CH2 (R1)	• Moteur : une fois le moteur chaud	Montée rapide du régime moteur du ralenti jusqu'à 3 000 tr/mn	0 - 0,3V ←→ Environ 0,6 - 1,0V
MTR S/O2 CH2 (R1)			PAUVRE ←→ RICHE
CAP VIT VEHIC	• Faire tourner les roues motrices et comparer l'indication du compteur de vitesse avec la valeur affichée par CONSULT-II.		Vitesse proche de la valeur donnée par CONSULT-II
TENS BATTERIE	• Contact d'allumage : ON (moteur à l'arrêt)		11 - 14V
CAP PAPILLON	• Moteur : une fois le moteur chaud • Contact d'allumage : ON (moteur à l'arrêt)	Papillon entièrement fermé	0,2 - 0,8V
		Papillon entièrement ouvert	3,5 - 4,5V
SIGNAL DEMAR	• Contact d'allumage : ON → DEPART → ON		OFF → ON → OFF
CON RALENTI	• Moteur : une fois le moteur chaud • Contact d'allumage : ON (moteur à l'arrêt)	Soupape de papillon : position de ralenti	MAR
		Soupape de papillon : légèrement ouverte	ARRET
POSIT RALENTI	• Moteur : une fois le moteur chaud • Contact d'allumage : ON (moteur à l'arrêt)	Soupape de papillon : position de ralenti	MAR
		Soupape de papillon : légèrement ouverte	ARRET
SIGNAL CLIMAT	• Moteur : faire chauffer le moteur, puis le faire tourner au ralenti.	: ARRET	ARRET
		Interrupteur de climatiseur : ON (le compresseur fonctionne)	ON

Simpo PDF Merge and Split Unregistered Version - http://www.simpopdf.com

Valeur de référence de CONSULT-II en mode de contrôle de données

ELEMENT DE CONTROLE	CONDITION		SPECIFICATION
CON NEUTRE	● Contact d'allumage : ON	Levier de changement de vitesses : "N"	MAR
		Sauf ci-dessus	ARRET
SIG DIR ASSIS	● Moteur : faire chauffer le moteur, puis le faire tourner au ralenti.	Volant de direction en position point mort (direction avant)	ARRET
		Volant tourné	MAR
CON ALLUMAGE	● Contact d'allumage : ON → OFF → ON		ON → OFF → ON
IMPUL INJ-R1	● Moteur : une fois le moteur chaud ● Interrupteur de climatiseur : ARRET ● Levier de changement de vitesses : "N" ● A vide	Ralenti	2,5 - 3,3 ms
		2 000 tr/mn	2,4 - 3,2 ms
PLAN CAR BASE	● Moteur : une fois le moteur chaud ● Interrupteur de climatiseur : ARRET ● Levier de changement de vitesses : "N" ● A vide	Ralenti	0,8 - 1,2 ms
		2 000 tr/min	0,8 - 1,2 ms
CALAGE ALLUM	● Moteur : une fois le moteur chaud ● Interrupteur de climatiseur : ARRET ● Levier de changement de vitesses : "N" ● A vide	Ralenti	env. 15° avant P.M.H.
		2 000 tr/min	Supérieur à 30° avant P.M.H.
S/IACV/AAC	● Moteur : une fois le moteur chaud ● Interrupteur de climatiseur : ARRET ● Levier de changement de vitesses : "N" ● A vide	Ralenti	env. 30
		2000 tr/mn	—
S/COM VOL PURG	● Moteur : une fois le moteur chaud ● Interrupteur de climatiseur : ARRET ● A vide	Ralenti	0%
		2 000 tr/mn (plus de 200 secondes après démarrage moteur)	—
ALPHA A/CARB-R1	● Moteur : une fois le moteur chaud	Maintenir le régime moteur à 2 000 tr/mn	50 - 159%
RELAIS CLIMAT	● Interrupteur de climatiseur : OFF → ON		ARRET → MAR
REL POMP ALI	● Le contact d'allumage est mis sur ON' (fonctionne pendant 5 secondes) ● Le moteur tourne et démarre		MAR
	● Sauf comme indiqué ci-dessus		ARRET
CH S/02 CH1 (R1)	● Régime-moteur : inférieur à 3 600 tr/mn		MAR
	● Régime-moteur : supérieur à 3 600 tr/mn		ARRET

Simpo PDF Merge and Split Unregistered Version - http://www.simpopdf.com

Valeur de référence de CONSULT-II en mode de contrôle de données

ELEMENT DE CONTROLE	CONDITION		SPECIFICATION
CH S/O2 CH2 (R1)	● Régime-moteur : Au ralenti après avoir conduit pendant 2 minutes à une vitesse de 70 km/h ou plus		ON
	● Contact d'allumage : ON (moteur à l'arrêt)		ARRET
VAL CHARGE CALC	● Moteur : une fois le moteur chaud ● Interrupteur de climatiseur : ARRET ● Levier de changement de vitesses : "N" ● A vide	Ralenti	9,5 - 34,0
		2.500 tr/mn	13,9 - 24,9
C/P PAP ABSOL	● Moteur : Une fois chauffé, le moteur arrêté ● Contact d'allumage : ON	Soupape de papillon : entièrement fermée	0,0
		Soupape de papillon : entièrement ouverte	env. 80
DEBITMETRE AIR	● Moteur : une fois le moteur chaud ● Interrupteur de climatiseur : ARRET ● Levier de changement de vitesses : "N" ● A vide	Ralenti	0,9 - 5,8 g·m/s
		2.500 tr/mn	7,5 - 13,2 g·m/s
C/PRESS ABSOL	● Moteur : plus de 5 secondes après démarrage du moteur (une fois chauffé)		env. 1,2V

Simpo PDF Merge and Split Unregistered Version - http://www.simpopdf.com

Graphique de référence du capteur principal en mode de contrôle de données

NEEC0043

Les courbes suivantes sont les courbes de référence principales des capteurs dans le mode ‘‘CONTROLE DE DONNEES’’.
(Sélectionner ‘‘ENCLEN MANU’’ dans ‘‘CONTROLE DES DONNEES’’ avec CONSULT-II. ‘‘Point de déclenchement’’ est réglé sur 100, ‘‘Vitesse d’enregistrement’’ est réglée sur MAXI.)

CAP PAPILLON, C/P PAP ABSOL, POSIT RALENTI

NEEC0043S01

On trouvera ci-dessous les données pour ‘‘CAP PAPILLON’’, ‘‘C/P PAP ABSOL’’ et ‘‘POSIT RALENTI’’ quand on appuie sur la pédale d’accélérateur avec le contact d’allumage sur ON.
Le signal de ‘‘CAP PAPILLON’’ et ‘‘C/P PAP ABSOL’’ doit monter graduellement sans chute ou élévation intermittente après que ‘‘POSIT RALENTI’’ a changé de ‘‘ON’’ à ‘‘OFF’’.

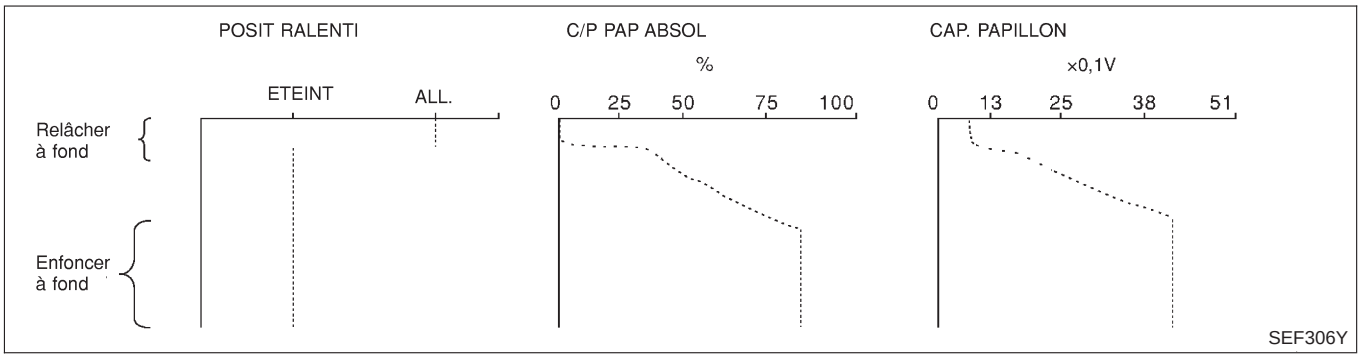

TR/MN MOT, DEBITMETRE-R1, CAP PAPILLON, S/O2 CH2 (R1), S/O2 CH1 (R1), IMPUL INJ-R1

NEEC0043S02

Ci-dessous se trouvent les données pour ‘‘TR/MN’’, ‘‘DEBITMETRE-R1’’, ‘‘CAP PAPILLON’’, ‘‘S/O2 CH2 (R1)’’, ‘‘S/O2 CH1 (R1)‘‘ et ‘‘IMPUL INJ-R1‘‘ au moment d’emballer le moteur rapidement jusqu’à 4 800 tr/mn à vide après avoir chauffé le moteur jusqu’à une température de fonctionnement normal.
Chaque valeur sert de référence, la valeur exacte peut varier.

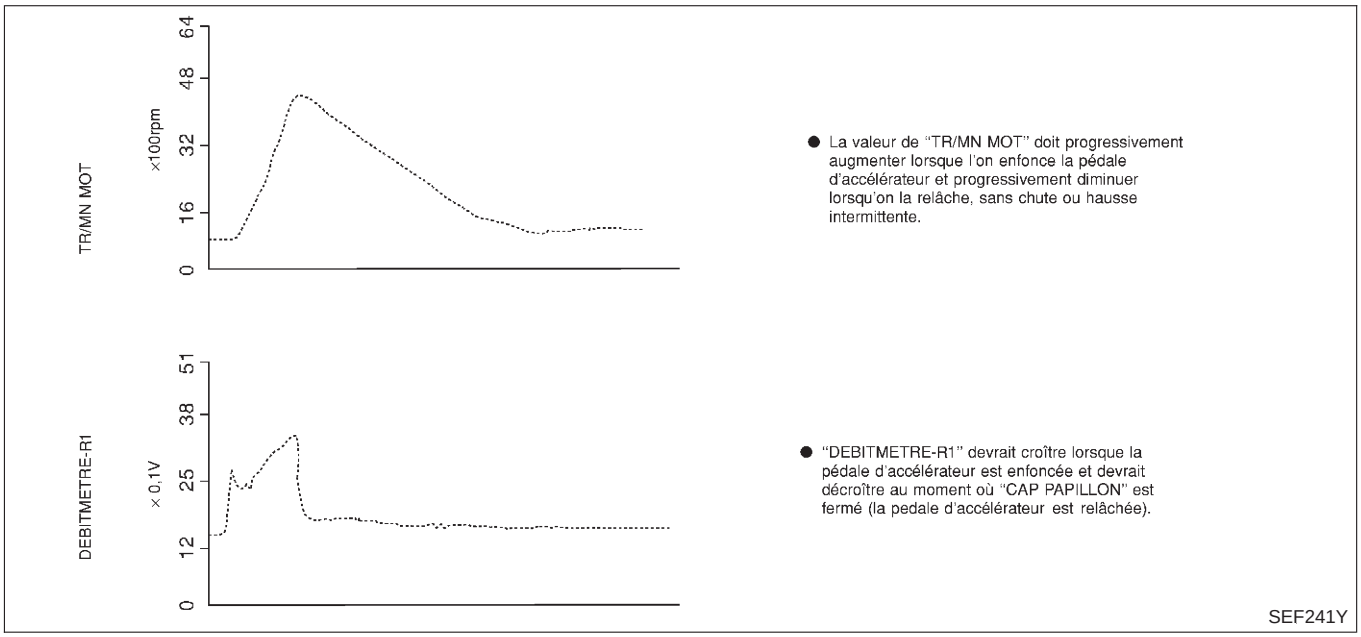

Simpo PDF Merge and Split Unregistered Version - http://www.simpopdf.com

Graphique de référence du capteur principal en mode de contrôle de données

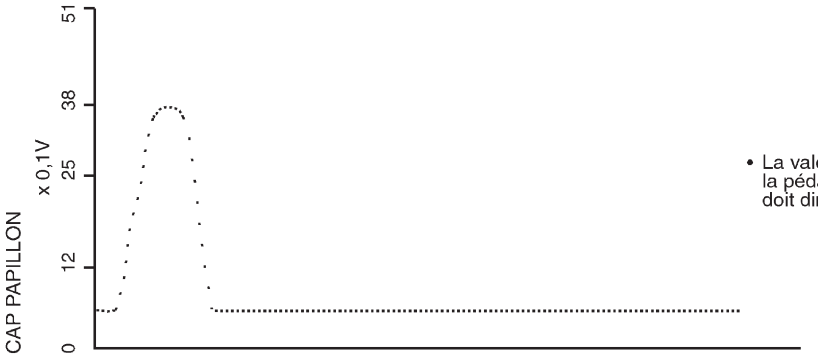

- La valeur ‘CAP PAPILLON‘ doit augmenter lorsque la pédale d’accélérateur est enfoncée et doit diminuer une fois relâchée.

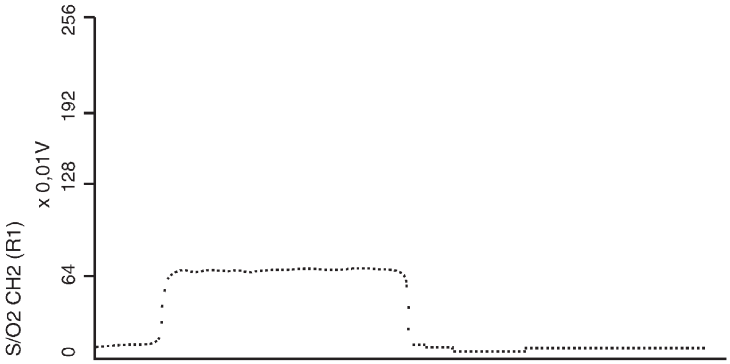

- La valeur de ‘S/O2 CH2 (R1) ‘ peut augmenter immédiatement après enfoncement de la pédale d’accélérateur et diminuer après son relâchement.

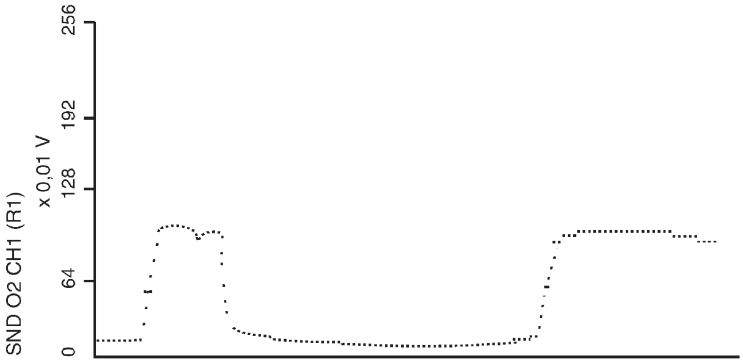

- La valeur de ‘S/O2 CH1 (R1)‘ peut augmenter immédiatement après enfoncement de la pédale d’accélérateur et diminuer après son relâchement.

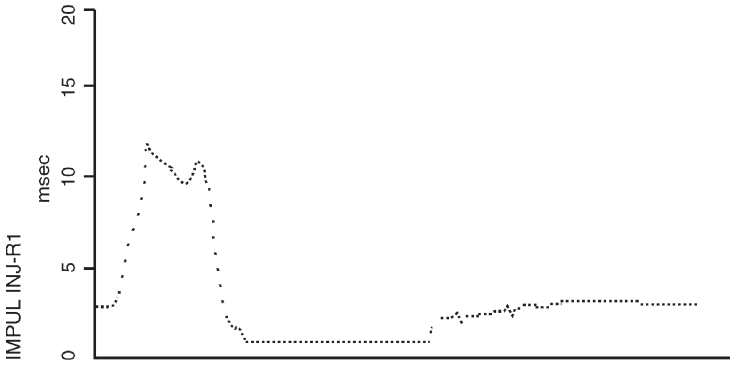

- La valeur ‘IMPUL INJ-R1‘ doit augmenter lors de l’enfoncement de la pédale d’accélérateur et doit diminuer lors de son relâchement.

SEF242YA

Simpo PDF Merge and Split Unregistered Version - http://www.simpopdf.com

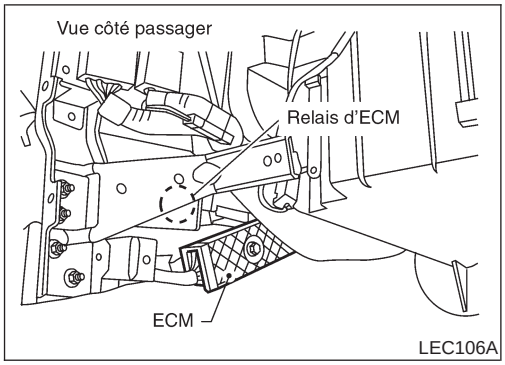

LEC106A

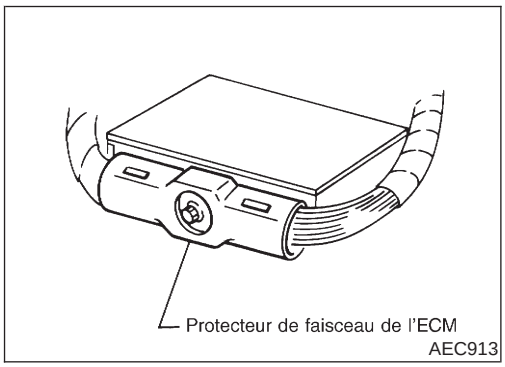

AEC913

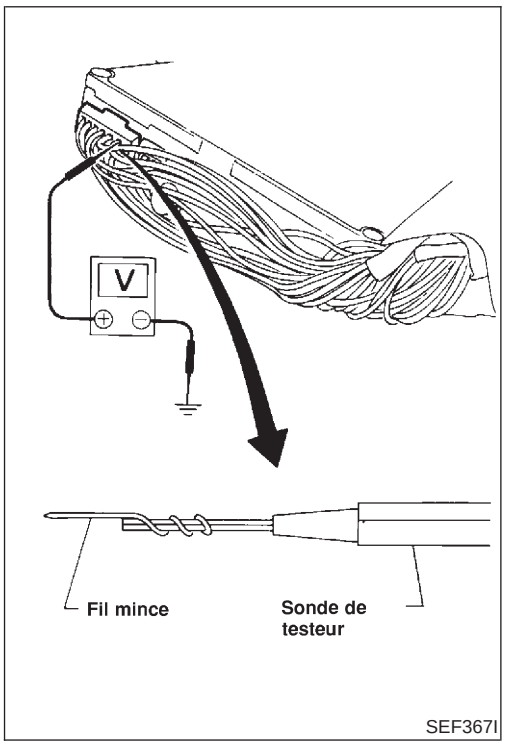

SEF367I

Bornes de l'ECM et valeurs de référence

NEEC0044

PRÉPARATION

NEEC0044S01

1. L'ECM se trouve derrière le panneau inférieur du tableau de bord. Pour cette inspection :

- Déposer le panneau inférieur du tableau de bord.

2. Déposer le protecteur de faisceau de l'ECM.

3. Effectuer toutes les mesures de tension avec le connecteur branché. Déployer la sonde du testeur comme indiqué pour faciliter les mesures.

- Ouvrir le clip de fixation du faisceau pour faciliter le test.
- Faire très attention de ne pas toucher 2 bornes à la fois.
- Les données sont des valeurs de comparaison et peuvent ne pas être exactes.

Simpo PDF Merge and Split Unregistered Version - http://www.simpopdf.com

DISPOSITION DES BORNES DU CONNECTEUR DE FAISCEAU DE L'ECM

NEEC0044S02

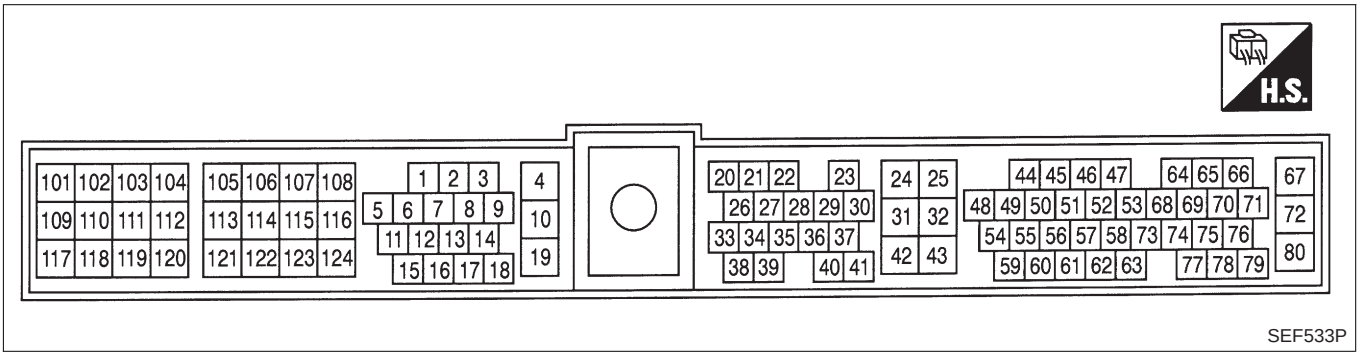

SEF533P

TABLEAU D'INSPECTION DE L'ECM

NEEC0044S03

les données de spécification sont des valeurs de référence et sont mesurées entre chaque borne et la masse.

CAUTION:
Ne pas utiliser de bornes de masse de l'ECM lors de la mesure de la tension d'entrée/de sortie. En agissant de la sorte, il est possible d'endommager le transistor de l'ECM. Utiliser une masse autre que les bornes de l'ECM, comme par exemple la prise de terre.

N° DE BORNE	COULEUR DE CABLE	ELEMENT	CONDITION	DONNEES (tension de courant continu)
1	W/PU	Signal d'allumage	**[Moteur en marche]** ● **Pendant la montée en température** ● Régime de ralenti	0 - 0,5V 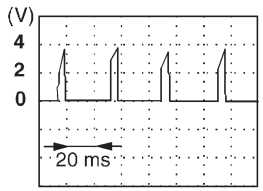 SEF186T
			[Moteur en marche] ● Le régime-moteur est de 2 000 tr/mn.	0,2 - 1,0V 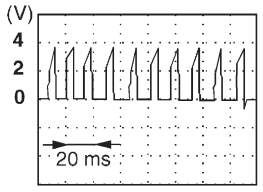 SEF187T

Simpo PDF Merge and Split Unregistered Version - http://www.simpopdf.com

N° DE BORNE	COULEUR DE CABLE	ELEMENT	CONDITION	DONNEES (tension de courant continu)
3	W	Compte-tours	**[Moteur en marche]** ● **Pendant la montée en température** ● Régime de ralenti	0 V - 1 V 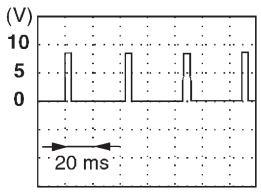 SEF190T
			[Moteur en marche] ● Le régime-moteur est de 2 000 tr/mn.	0,5 - 2V 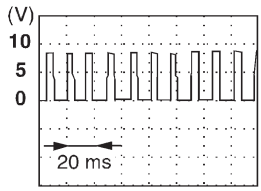 SEF191T
4	L/B	Relais de l'ECM (coupure automatique)	**[Moteur en marche]** **[Contact d'allumage sur OFF]** ● Pendant quelques secondes après avoir mis le contact d'allumage sur OFF	0 V - 1 V
			[Contact d'allumage sur OFF] ● Plus de quelques secondes après la mise du contact d'allumage sur OFF	TENSION DE LA BATTERIE (11 V - 14V)
5	W/PU	Electrovanne de commande de volume de purge de cartouche EVAP	**[Moteur en marche]** ● Régime de ralenti	TENSION DE LA BATTERIE (11 V - 14V) 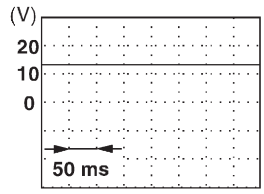 SEF109V
			[Moteur en marche] ● Le régime-moteur est de 2.000 tr/mn (plus de 200 secondes après démarrage du moteur)	12 - 13V 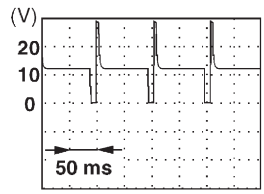 SEF110V

Simpo PDF Merge and Split Unregistered Version - http://www.simpopdf.com

Bornes de l'ECM et valeurs de référence

N° DE BORNE	COULEUR DE CABLE	ELEMENT	CONDITION	DONNEES (tension de courant continu)
9	BR/W	Contact de température de l'air ambiant	**[Moteur en marche]** ● Régime de ralenti ● Température ambiante supérieure à 23°C ● Climatiseur en marche	0 V
			[Moteur en marche] ● Régime de ralenti ● Température ambiante supérieure à 23°C ● Climatiseur en marche	TENSION DE LA BATTERIE (11 V - 14 V)
			[Moteur en marche] ● Régime de ralenti ● Température ambiante supérieure à 23°C ● Climatiseur éteint	Environ 5 V
10	B/P	Masse de l'ECM	**[Moteur en marche]** ● Régime de ralenti	Masse du moteur
11*1	Y	Relais de pompe d'alimentation	**[Contact d'allumage sur ON]** ● Pendant 5 seconde après avoir mis le contact d'allumage sur ON **[Moteur en marche]**	0 - 1 V
			[Contact d'allumage sur ON] ● Plus de 5 secondes après mise du contact d'allumage sur ON	TENSION DE LA BATTERIE (11 V - 14 V)
12	G/W	Relais de climatiseur	**[Moteur en marche]** ● L'interrupteur A/C et l'interrupteur de soufflerie sont tous deux sur MARCHE* *: Chaque mode, sauf "OFF", température ambiante supérieure à 10°C.	Environ 0 V
			[Moteur en marche] ● L'interrupteur de A/C est sur OFF	TENSION DE LA BATTERIE (11 V - 14V)
14*2	Y	Relais de pompe d'alimentation	**[Contact d'allumage sur ON]** ● Pendant 5 secondes après avoir mis le contact d'allumage sur ON	0 V - 1 V
			[Contact d'allumage sur ON] ● Plus de 5 secondes après avoir mis le contact d'allumage sur ON	TENSION DE LA BATTERIE (11 V - 14V)
18	OR/B	Témoin de défaut	**[Contact d'allumage sur ON]**	0 - 1 V
			[Moteur en marche] ● Régime de ralenti	TENSION DE LA BATTERIE (11 V - 14 V)
19	B/P	Masse de l'ECM	**[Moteur en marche]** ● Régime de ralenti	Masse du moteur
20	R	Signal de démarrage	**[Contact d'allumage sur ON]**	Environ 0 V
			[Contact d'allumage sur START]	TENSION DE LA BATTERIE (11 V - 14 V)
21	Y	Manocontact de climatiseur	**[Moteur en marche]** ● Les interrupteurs de climatiseur et de soufflerie sont sur ON (le compresseur fonctionne)	Environ 0 V
			[Moteur en marche] ● Interrupteur de climatiseur sur OFF	TENSION DE LA BATTERIE (11 V - 14 V)

Simpo PDF Merge and Split Unregistered Version - http://www.simpopdf.com

N° DE BORNE	COULEUR DE CABLE	ELEMENT	CONDITION	DONNEES (tension de courant continu)
22	Y/R	Contact de position de stationnement/point mort (PNP)	**[Contact d'allumage sur ON]** ● Position du levier de vitesses sur "N"	Environ 0 V
			[Contact d'allumage sur ON] ● Autres positions	Environ 5 V
23	G	Capteur d'ouverture de papillon	**[Contact d'allumage sur ON]** ● **Pendant la montée en température** ● Pédale d'accélérateur entièrement relâchée	0,2 - 0,8 V
			[Contact d'allumage sur ON] ● Pédale d'accélérateur enfoncée au maximum	3,5 - 4,5 V
24	W/L	Contact d'allumage	**[Contact d'allumage sur OFF]**	0V
			[Contact d'allumage sur ON]	TENSION DE LA BATTERIE (11 V - 14 V)
25	B	Masse de l'ECM	**[Moteur en marche]** ● Régime de ralenti	Masse du moteur
28	LG/B	Contact de ralenti (position de ralenti)	**[Contact d'allumage sur ON]** ● **Pendant la montée en température** ● Pédale d'accélérateur relâchée	TENSION DE LA BATTERIE (11 V - 14 V)
			[Contact d'allumage sur ON] ● Pédale d'accélérateur enfoncée	Environ 0 V
29	W/L	Capteur de vitesse du véhicule	**[Moteur en marche]** ● Lever le véhicule ● En 2nde ● 40 km/h	1 - 4V 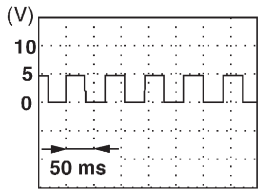 SEF111V
32	B	Masse de l'ECM	**[Moteur en marche]** ● Régime de ralenti	Masse du moteur
39	SB	Manocontact d'huile de direction assistée	**[Moteur en marche]** ● Le volant est en butée	Environ 0 V
			[Moteur en marche] ● Le volant est au point mort	Environ 5 V
42	G/B	Alimentation des capteurs	**[Contact d'allumage sur ON]**	Environ 5 V
43	B	Masse de capteurs	**[Moteur en marche]** ● Régime de ralenti	Environ 0 V

Simpo PDF Merge and Split Unregistered Version - http://www.simpopdf.com

Bornes de l'ECM et valeurs de référence

N° DE BORNE	COU-LEUR DE CABLE	ELEMENT	CONDITION	DONNEES (tension de courant continu)
44*1 48*1	OU OU	Capteur d'angle d'arbre à cames (signal de référence)	**[Moteur en marche]** ● **Pendant la montée en température** ● Régime de ralenti	0,2 - 0,5 V 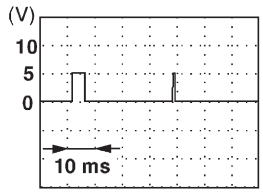 SEF114V
			[Moteur en marche] ● Le régime moteur est de 2 000 tr/mn.	0 - 0,5 V 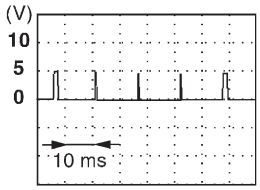 SEF200T
44*2	W	Capteur d'angle d'arbre à cames (signal de position)	**[Moteur en marche]** ● **Pendant la montée en température** ● Régime de ralenti	Environ 2,5 V 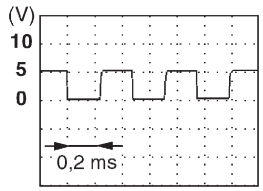 SEF195T
			[Moteur en marche] ● Le régime-moteur est de 2 000 tr/mn.	Environ 1,0 V 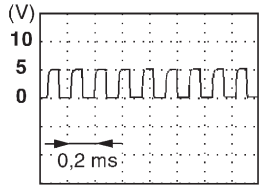 SEF196T
47	L	Capteur de position du vilebrequin (OBD)	**[Moteur en marche]** ● **Pendant la montée en température** ● Régime de ralenti	Environ 0 V 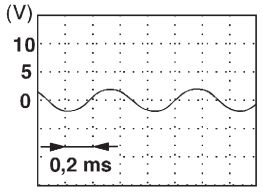 SEF112V
			[Moteur en marche] ● Le régime-moteur est de 2 000 tr/mn.	Environ 0 V 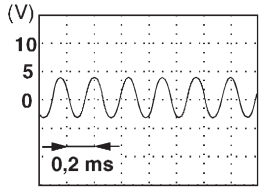 SEF113V

Simpo PDF Merge and Split Unregistered Version - http://www.simpopdf.com

N° DE BORNE	COULEUR DE CABLE	ELEMENT	CONDITION	DONNEES (tension de courant continu)
49*1	W	Capteur d'angle d'arbre à cames (signal de position)	**[Moteur en marche]** ● **Pendant la montée en température** ● Régime de ralenti	Environ 2,5 V 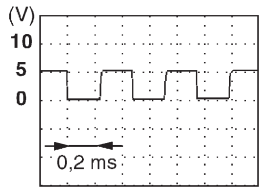 SEF195T
			[Moteur en marche] ● Le régime-moteur est de 2 000 tr/mn.	Environ 1,0 V 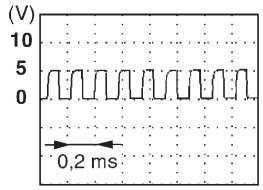 SEF196T
49*2 53*2	OU OU	Capteur d'angle d'arbre à cames (signal de référence)	**[Moteur en marche]** ● **Pendant la montée en température** ● Régime de ralenti	0,2 - 0,5 V 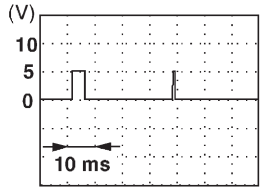 SEF114V
			[Moteur en marche] ● Le régime-moteur est de 2 000 tr/mn.	0 - 0,5 V 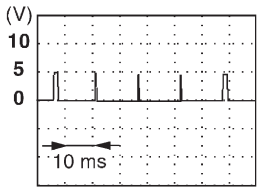 SEF200T
50	W	Sonde à oxygène chauffé 1	**[Moteur en marche]** ● Après montée en température normale de fonctionnement et au régime-moteur de 2.000 tr/mn.	0 - Environ 1,0 V 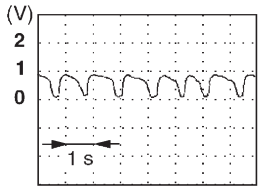 SEF201T
54	L	Débitmètre d'air	**[Moteur en marche]** ● **Pendant la montée en température** ● Régime de ralenti	0,9 - 1,8 V
			[Moteur en marche] ● **Pendant la montée en température** ● Le régime-moteur est de 2 500 tr/mn.	1,9 - 2,3 V
55	P	Masse du débitmètre d'air	**[Moteur en marche]** ● **Pendant la montée en température** ● Régime de ralenti	Environ 0 V

Simpo PDF Merge and Split Unregistered Version - http://www.simpopdf.com

Bornes de l'ECM et valeurs de référence

N° DE BORNE	COULEUR DE CABLE	ELEMENT	CONDITION	DONNEES (tension de courant continu)
56	L/W	Sonde à oxygène chauffé 2	**[Moteur en marche]** ● Après montée en température normale de fonctionnement et montée en régime rapide du ralenti jusqu'à 3.000 tr/mn.	0 - Environ 1,0 V
59	LG/R	Capteur de température du liquide de refroidissement du moteur	**[Moteur en marche]**	Environ 0 - 4,8 V La tension de sortie varie avec la température du liquide de refroidissement
61	P/B	Capteur de température d'air d'admission	**[Moteur en marche]**	Environ 0 - 4,8 V La tension de sortie varie avec la température d'air d'admission
64	W	Capteur de détonation	**[Moteur en marche]** ● Régime de ralenti	Environ 2,4 V
67	W	Alimentation électrique de l'ECM	**[Contact d'allumage sur ON]**	TENSION DE LA BATTERIE (11 V - 14 V)
72	W			
69	LG/R	Connecteur de liaison de données	**[Contact d'allumage sur ON]** ● CONSULT-II ou GST est débranché.	Environ 2 V
80	GY/L	Alimentation (sauvegarde)	**[Contact d'allumage sur OFF]**	TENSION DE LA BATTERIE (11 V - 14V)
101	G/Y	Soupape IACV-AAC	**[Moteur en marche]** ● **Pendant la montée en température** ● Régime de ralenti	10,5 - 11,5 V 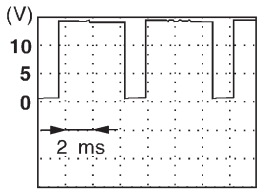 SEF645U
			[Moteur en marche] ● **Pendant la montée en température** ● Le régime-moteur est de 2 000 tr/mn.	1 - 13 V 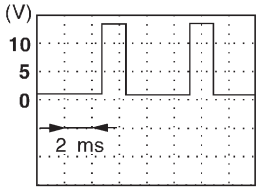 SEF646U
102	W/L	Injecteur n° 1	**[Moteur en marche]** ● **Pendant la montée en température** ● Régime de ralenti	TENSION DE LA BATTERIE (11 V - 14 V) 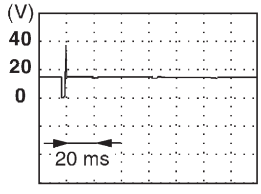 SEF204T
104	W/G	Injecteur n° 3		

Simpo PDF Merge and Split Unregistered Version - http://www.simpopdf.com

Bornes de l'ECM et valeurs de référence

N° DE BORNE	COU-LEUR DE CABLE	ELEMENT	CONDITION	DONNEES (tension de courant continu)
109	W/R	Injecteur n° 2	**[Moteur en marche]** ● **Pendant la montée en température** ● Le régime-moteur est de 2 000 tr/mn.	TENSION DE LA BATTERIE (11 V - 14 V) 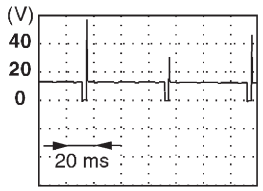 SEF205T
111	W/B	Injecteur n° 4		
116	B/P	Masse de l'ECM	**[Moteur en marche]** ● Régime de ralenti	Masse du moteur
117	W	Retour de courant	**[Moteur en marche]** ● Régime de ralenti	TENSION DE LA BATTERIE (11 V - 14 V)
119	Y/R	Chauffage de la sonde à oxygène chauffé 1	**[Moteur en marche]** ● Le régime-moteur est inférieur à 3.600 tr/mn.	Environ 0,4V
			[Moteur en marche] ● Le régime-moteur est supérieur à 3.600 tr/mn.	TENSION DE LA BATTERIE (11 V - 14 V)
122	G/B	Chauffage de la sonde à oxygène chauffé 2	**[Moteur en marche]** ● Régime de ralenti après avoir conduit pendant 2 minutes à une vitesse de 70 km/h ou plus	Environ 0,4 V
			[Contact d'allumage sur ON] ● Le moteur ne tourne pas	TENSION DE LA BATTERIE (11 V - 14 V)
124	B/P	Masse de l'ECM	**[Moteur en marche]** ● Régime de ralenti	Masse du moteur

*1: Modèle sans NATS (système antivol NISSAN)
*2: Modèle avec NATS (système antivol NISSAN)

Simpo PDF Merge and Split Unregistered Version - http://www.simpopdf.com

Description

NEEC1003

La valeur de spécification (SP) indique la tolérance de la valeur qui est affichée dans le mode ‘‘CONTROLE DE DONNEES (SPEC)’’ de CONSULT-II pendant un fonctionnent normal du système de gestion moteur. Lorsque la valeur indiquée dans le mode ‘‘CONTROLE DE DONNEES (SPEC)’’ est dans la fourchette des spécifications SP, le système de gestion moteur est confirmé comme bon. Lorsque la valeur indiquée dans le mode ‘‘CONTROLE DE DONNEES (SPEC)’’ n’est pas dans la fourchette de spécification SP, le système de gestion moteur peut avoir un défaut ou plus.
La valeur SP sert à détecter les défauts affectant le système de gestion du moteur, mais elle ne déclenche pas l’allumage du témoin MI.
La valeur SP s’affiche pour les trois éléments suivants :

- PLAN CAR BASE (largeur d’impulsion de l’injection de carburant programmée dans l’ECM, avant toute correction à bord)
- ALPHA A/CARB-R1/R2 (valeur moyenne du facteur de correction par régulation automatique du mélange air/carburant par cycle)
- DEBIMETRE-R1 (tension de signal du débitmètre d’air)

Conditions d’essai

NEEC1004

- Kilométrage effectué : plus de 5 000 km
- Pression atmosphérique : 101,3 kPa (1,013 mbar, 760,0 mmHg)±3 kPa (30 mbar, 22,5 mmHg)
- Température de l’air ambiant : 20 - 30°C
- Température du liquide de refroidissement du moteur : 75 - 95°C
- Transmission : montée en température*1
- Charge électrique : non appliquée*2
- Régime-moteur : Ralenti

*1: Pour les modèles avec T/A, une fois le moteur amené à sa température normale de fonctionnement, conduire le véhicule jusqu’à ce que ‘‘CAP TEMP LIQ’’ (signal du capteur de température du liquide de T/A) indique une valeur inférieure à 0,9V. Pour les modèles avec T/M, conduire le véhicule durant 5 minutes une fois le moteur amené à sa température normale de fonctionnement.
*2: Interrupteur de désembuage de lunette arrière, interrupteur de climatiseur, commande d’éclairage sur ‘‘ARRET’’. Ventilateurs de refroidissement arrêtés. Volant en position droit devant.

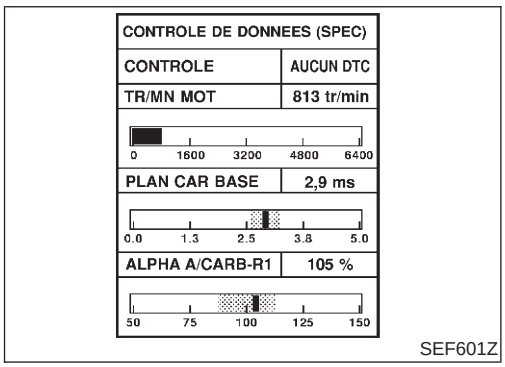

SEF601Z

Procédure d’inspection

NEEC1005

REMARQUE :
Effectuer le mode ‘‘CONTROLE DE DONNEES (SPEC)’’ en mode d’affichage maximal.

1. Effectuer ‘‘Inspection de base’’, EC-3093.
2. Vérifier que les conditions d’essai indiquées ci-dessus sont réunies.
3. Sélectionner ‘‘PLAN CAR BASE’’, ‘‘ALPHA A/CARB-R1’’ et ‘‘DEBITMETRE-R1’’ dans le mode ‘‘CONTROLE DE DONNEES (SPEC)’’ de CONSULT-II.
4. Vérifier que les éléments de contrôle sont dans les limites de la valeur SP.
5. Si les résultats ne sont pas conformes, effectuer une ‘‘Procédure de diagnostic’’, voir page EC-3128.

Simpo PDF Merge and Split Unregistered Version - http://www.simpopdf.com

Procédure de diagnostic

NEEC1006

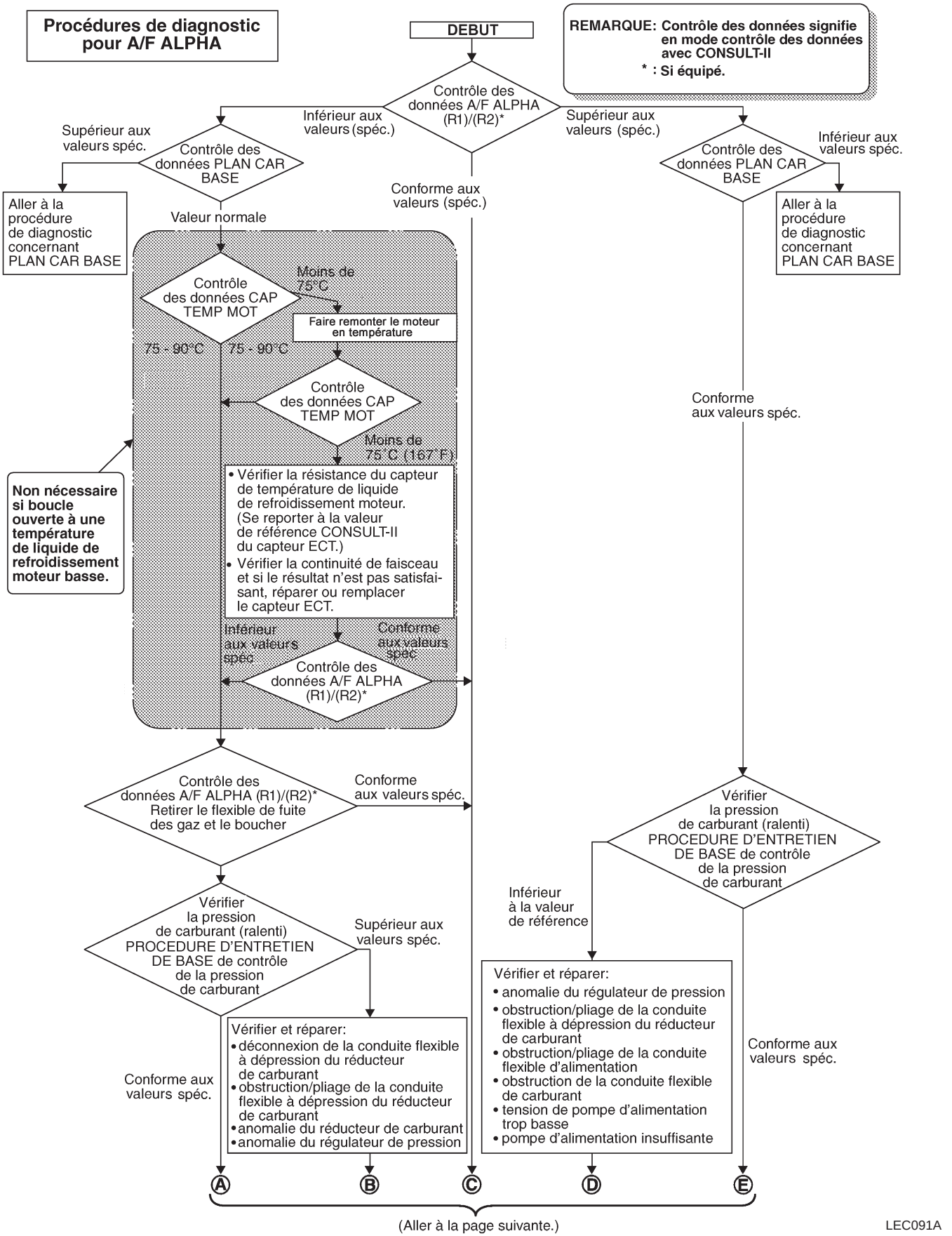

LEC091A

Simpo PDF Merge and Split Unregistered Version - http://www.simpopdf.com



SEF768Z

Simpo PDF Merge and Split Unregistered Version - http://www.simpopdf.com

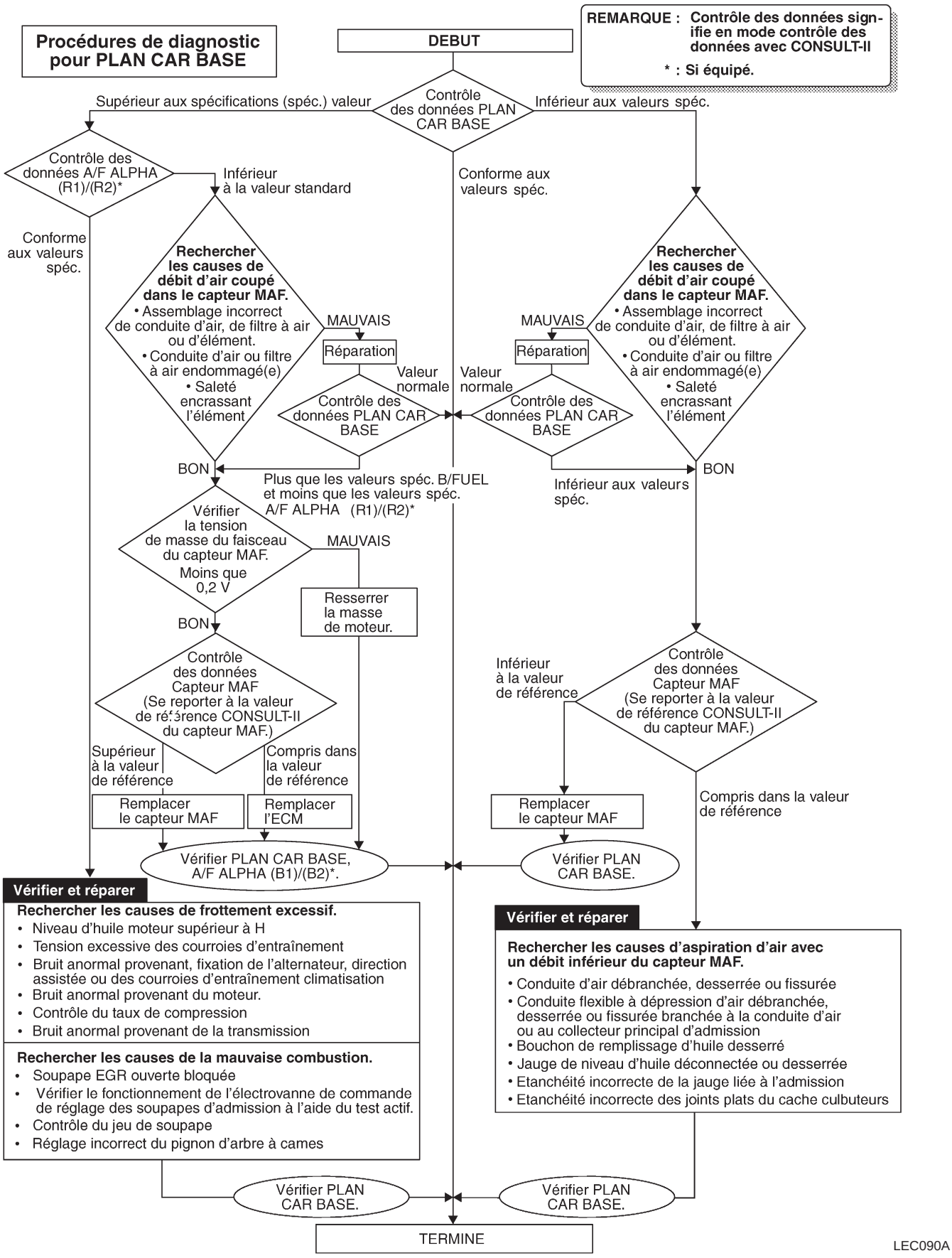

Simpo PDF Merge and Split Unregistered Version - http://www.simpopdf.com

Description

NEEC0045

Il peut arriver que les incidents se produisent de manière intermittente. Dans bien des cas, le problème se résout lui-même (le fonctionnement normal de la pièce ou du circuit en cause se rétablit sans intervention). Il est important de savoir qu'il n'est pas rare que les symptômes décrits par les client n'apparaissent pas durant l'inspection du DTC (1er parcours). Il faut également savoir que les faux contacts électriques sont la cause la plus fréquente des incidents intermittents. Il en découle que les conditions dans lesquelles l'incident s'est produit peuvent ne pas apparaître clairement. C'est pourquoi les circuits contrôlés dans le cadre d'une procédure de diagnostic standard peuvent ne pas révéler la localisation exacte du problème.

SITUATIONS COURANTES DE COMPTE-RENDU D'INCIDENT INTERMITTENT

NEEC0045S01

ETAPE de la procédure de travail	Situation
II	CONSULT-II est utilisé. Le paramètre d'occurrences indiqué sur l'écran des RESULTATS D'AUTODIAGNOSTIC est différent de '0'' ou '1t''.
III	Le symptôme rapporté par le client ne se reproduit pas.
IV	Le DTC (de 1er parcours) n'apparaît pas lors de la PROCEDURE DE CONFIRMATION DE DTC
VI	Le DIAGNOSTIC DES DEFAUTS pour le code PXXXX ne permet pas d'isoler le problème.

Procédure de diagnostic

NEEC0046

1	DEBUT DE L'INSPECTION
Effacer les DTC (1er parcours). Se reporter à ''COMMENT EFFACER LES CODES DE DIAGNOSTIC ANTIPOLLUTION'', EC-3065.	
▶	ALLER A 2.

2	CONTROLER LES BORNES DE MASSE
Vérifier que les bornes de masse ne sont pas corrodées ou en faux contact. Se reporter à la section GI ('INSPECTION DES MASSES'', ''Inspection du circuit'').	
BON ou MAUVAIS	
Bon ▶	ALLER A 3.
Mauvais ▶	Réparer ou remplacer.

3	LOCALISER L'INCIDENT ELECTRIQUE
Procéder aux ''Essais de simulation de défaut'' décrits dans la section GI.	
BON ou MAUVAIS	
Bon ▶	**FIN DE L'INSPECTION**
Mauvais ▶	Réparer ou remplacer.

DIAGNOSTIC DES DEFAUTS POUR L'ALIMENTATION
Simpo PDF Merge and Split Unregistered Version - http://www.simpopdf.com

Circuit d'alimentation électrique principale et de mise à la masse

SCHÉMA DE CABLAGE

NEEC0047

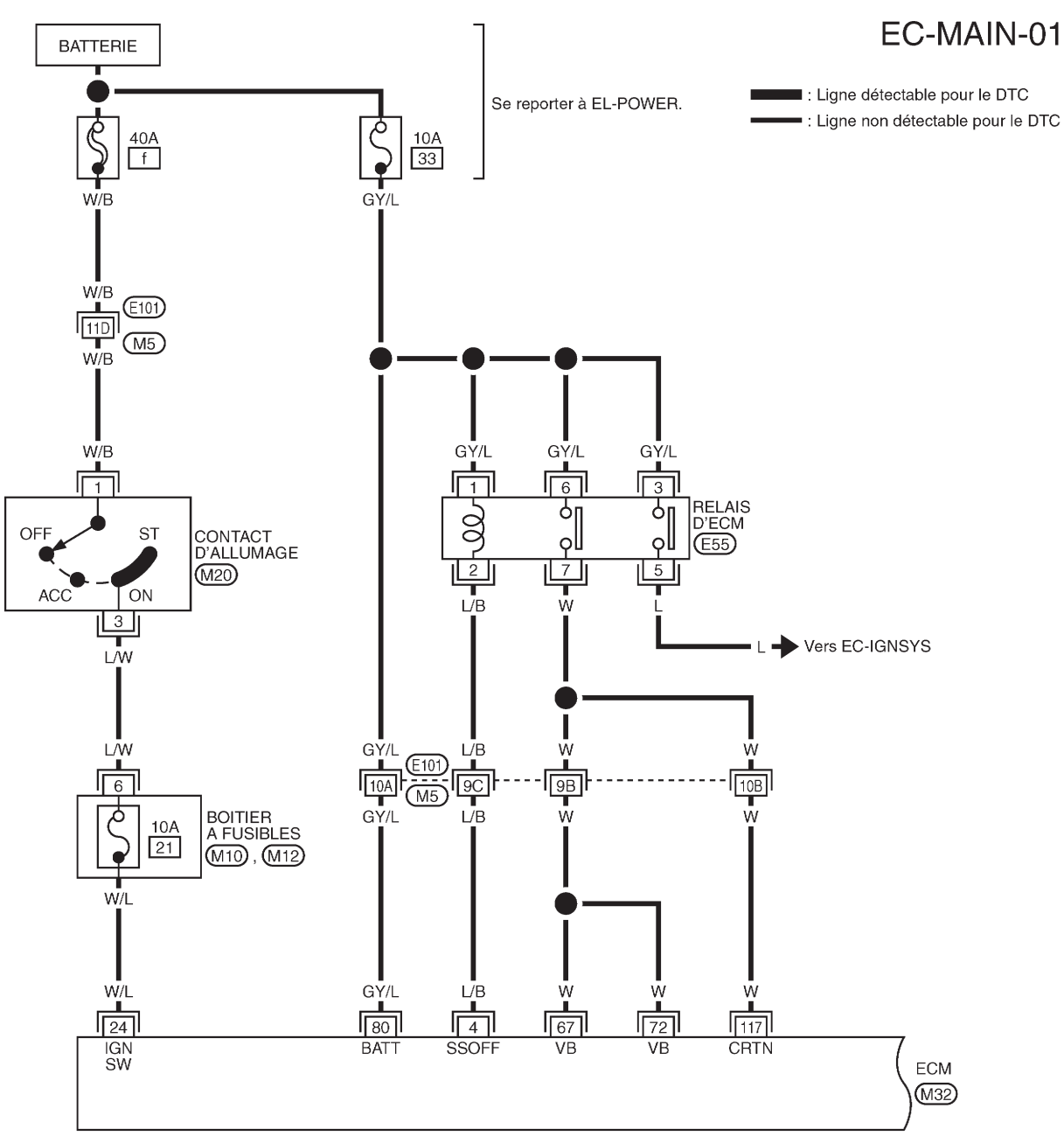

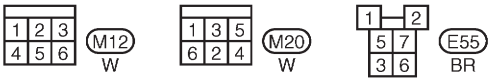

Consulter la dernière page dépliante.
M5 , E101
M10

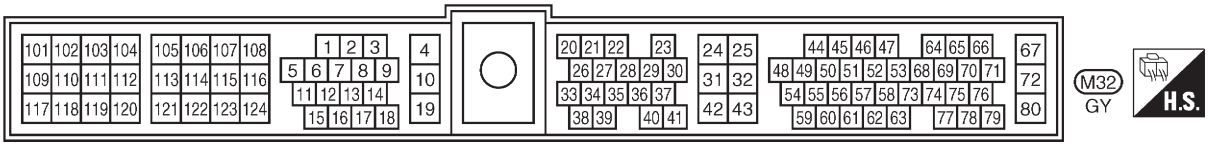

GEC233A

Simpo PDF Merge and Split Unregistered Version - http://www.simpopdf.com

EC-MAIN-02

: Ligne détectable pour le DTC
: Ligne non détectable pour le DTC

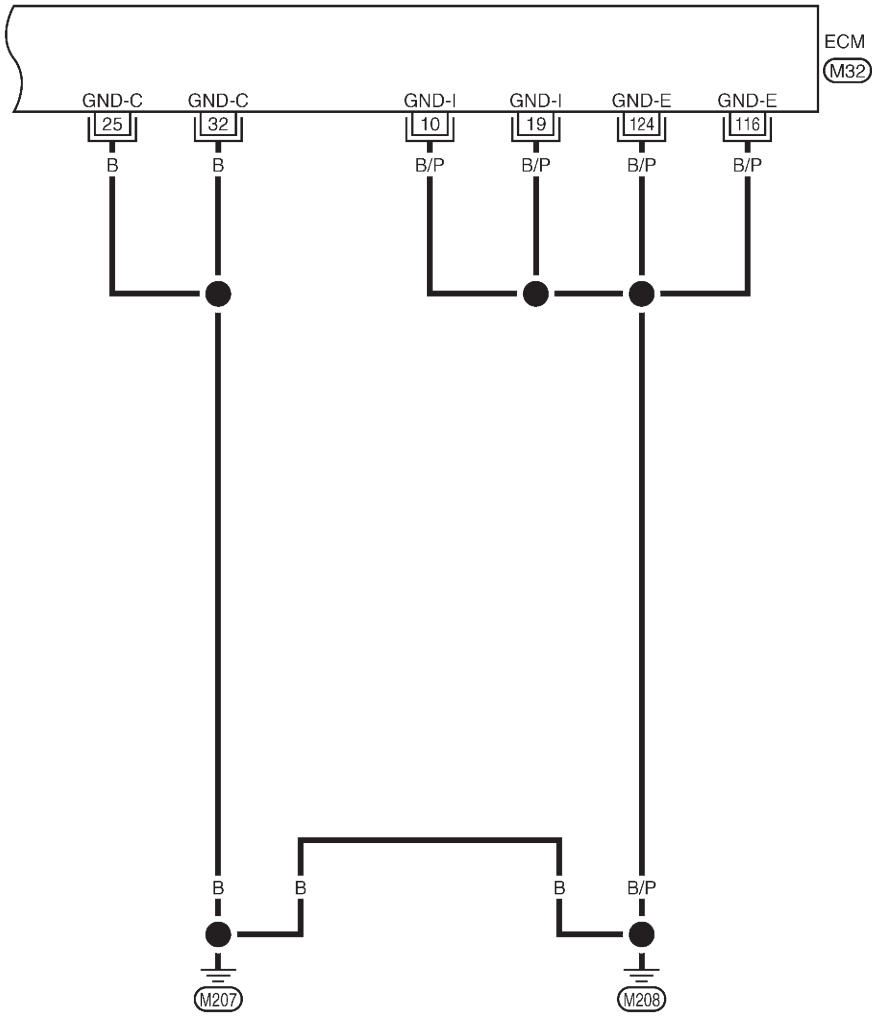

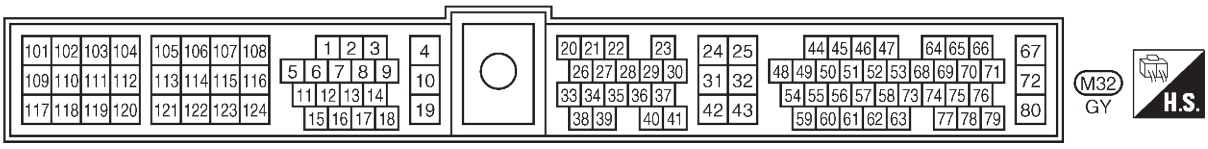

GEC234A

Simpo PDF Merge and Split Unregistered Version - http://www.simpopdf.com

BORNES DE L'ECM ET VALEURS DE RÉFÉRENCE

NEEC0048

les données de spécification sont des valeurs de référence et sont mesurées entre chaque borne et la masse.

ATTENTION :
Ne pas utiliser de bornes de masse de l'ECM lors de la mesure de la tension d'entrée/de sortie. En agissant de la sorte, il est possible d'endommager le transistor de l'ECM. Utiliser une masse autre que les bornes de l'ECM, comme par exemple la prise de terre.

N° DE BORNE	COULEUR DE CABLE	ELEMENT	CONDITION	DONNEES (tension de courant continu)
4	L/B	Relais de l'ECM (coupure automatique)	**[Moteur en marche]** **[Contact d'allumage sur OFF]** ● Pendant quelques secondes après avoir mis le contact d'allumage sur OFF	0 V - 1 V
			[Contact d'allumage sur OFF] ● Quelques secondes se sont écoulées après la mise du contact d'allumage sur OFF	TENSION DE LA BATTERIE (11 V - 14 V)
10	B/P	Masse de l'ECM	**[Moteur en marche]** ● Régime de ralenti	Masse du moteur
19	B/P	Masse de l'ECM	**[Moteur en marche]** ● Régime de ralenti	Masse du moteur
24	W/L	Contact d'allumage	**[Contact d'allumage sur OFF]**	0 V
			[Contact d'allumage sur ON]	TENSION DE LA BATTERIE (11 V - 14 V)
25	B	Masse de l'ECM	**[Moteur en marche]** ● Régime de ralenti	Masse du moteur
32	B	Masse de l'ECM	**[Moteur en marche]** ● Régime de ralenti	Masse du moteur
67	W	Alimentation électrique de l'ECM	**[Contact d'allumage sur ON]**	TENSION DE LA BATTERIE (11 V - 14 V)
72	W			
80	GY/L	Alimentation (sauvegarde)	**[Contact d'allumage sur OFF]**	TENSION DE LA BATTERIE (11 V - 14 V)
116	B/P	Masse de l'ECM	**[Moteur en marche]** ● Régime de ralenti	Masse du moteur
117	W	Retour de courant	**[Moteur en marche]** ● Régime de ralenti	TENSION DE LA BATTERIE (11 V - 14 V)
124	B/P	Masse de l'ECM	**[Moteur en marche]** ● Régime de ralenti	Masse du moteur

Simpo PDF Merge and Split Unregistered Version - http://www.simpopdf.com

Circuit d'alimentation électrique principale et de mise à la masse

PROCÉDURE DE DIAGNOSTIC

=NEEC0049

1	DEBUT DE L'INSPECTION
Démarrer le moteur. Le moteur tourne-t-il ? **Oui ou Non**	
Oui ▶	ALLER A 9.
Non ▶	ALLER A 2.

2	VERIFIER ALIMENTATION-I
1. Mettre le contact d'allumage sur 'OFF', puis sur 'ON'. 2. Contrôler la tension entre la borne 24 de l'ECM et la masse à l'aide de CONSULT-II ou du testeur.	

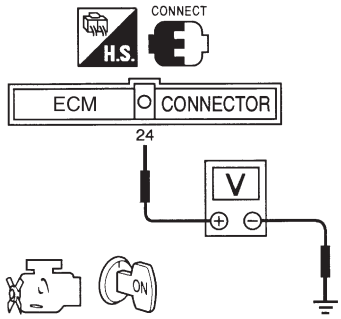

SEF600P

Tension : Tension de la batterie

BON ou MAUVAIS

Bon ▶	ALLER A 4.
Mauvais ▶	ALLER A 3.

3	DETECTER LA PIECE DEFECTUEUSE
Contrôler les points suivants. ● Raccord à fusibles de 40A ● Connecteurs de faisceau E101, M5 ● Contact d'allumage ● Boîtier à fusibles M10, M12 ● fusible de 10A. ● Faisceau ouvert ou en court-circuit entre l'ECM et la batterie	
▶	Réparer le faisceau ou les connecteurs.

4	CONTROLER QUE LE CIRCUIT DE MASSE DE L'ECM N'EST PAS OUVERT ET QU'IL N'Y A PAS DE COURT-CIRCUIT-I
1. Mettre le contact d'allumage sur ''OFF''. 2. Débrancher le connecteur de faisceau de l'ECM. 3. Vérifier la continuité du faisceau entre les bornes 10, 19, 25, 32, 116, 124 de l'ECM et la masse de moteur. Se reporter au SCHEMA DE CABLAGE. **Il doit y avoir continuité.** 4. Vérifier également que le faisceau n'est pas en court-circuit à l'alimentation. **BON ou MAUVAIS**	
Bon ▶	ALLER A 5.
Mauvais ▶	Réparer les faisceaux ou connecteurs en circuit ouvert ou en court-circuit à l'alimentation.

Simpo PDF Merge and Split Unregistered Version - http://www.simpopdf.com

5	CONTROLER L'ALIMENTATION-II

1. Déconnecter le relais de l'ECM.

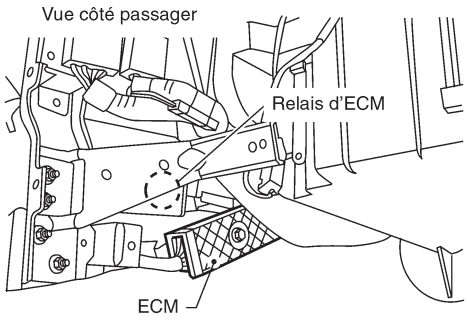

LEC106A

2. Vérifier la tension entre les bornes 1 et 3 du relais de l'ECM et la masse à l'aide de CONSULT-II ou du testeur.

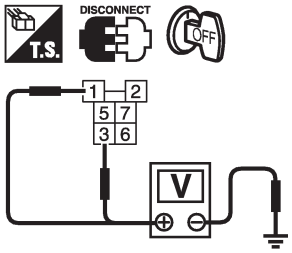

SEC313D

Tension : Tension de la batterie

BON ou MAUVAIS

Bon	▶	ALLER A 7.
Mauvais	▶	ALLER A 6.

6	DETECTER LA PIECE DEFECTUEUSE

Contrôler les points suivants.
- Fusible de 10 A
- Faisceau ouvert ou en court-circuit entre le relais de l'ECM et la batterie

	▶	Réparer les faisceaux ou les connecteurs en circuit ouvert ou en court-circuit à la masse ou à l'alimentation.

7	VERIFIER SI LE CIRCUIT DU SIGNAL DE SORTIE N'EST PAS OUVERT OU COURT-CIRCUITE

1. Vérifier la continuité du faisceau entre la borne 4 de l'ECM et la borne 2 du relais de l'ECM. Se reporter au schéma de câblage.
   Il doit y avoir continuité.
2. Vérifier également que le faisceau n'est pas en court-circuit à la masse ou à l'alimentation.

BON ou MAUVAIS

Bon	▶	Aller à ''SIGNAL D'ALLUMAGE'', EC-3387.
Mauvais	▶	ALLER A 8.

8	DETECTER LA PIECE DEFECTUEUSE

Contrôler les points suivants.
- Connecteurs de faisceau E101, M5
- Faisceau ouvert ou en court-circuit entre l'ECM et le relais de l'ECM

	▶	Réparer les faisceaux ou les connecteurs en circuit ouvert ou en court-circuit à la masse ou à l'alimentation.

Simpo PDF Merge and Split Unregistered Version - http://www.simpopdf.com

9	CONTROLER L'ALIMENTATION-II

1. Arrêter le moteur.
2. Contrôler la tension entre la borne 80 de l'ECM et la masse à l'aide de CONSULT-II ou du testeur.

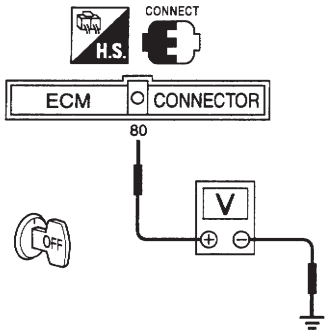

MEC698B

Tension : Tension de la batterie

BON ou MAUVAIS

Bon	▶	ALLER A 11.
Mauvais	▶	ALLER A 10.

10	DETECTER LA PIECE DEFECTUEUSE

Contrôler les points suivants.
- Connecteur de faisceaux E101, M5
- Fusible de 10 A
- Faisceau ouvert ou en court-circuit entre l'ECM et le fusible

	▶	Réparer le faisceau ou les connecteurs.

11	VERIFIER L'ALIMENTATION-III

1. Mettre le contact d'allumage sur 'OFF', puis sur 'ON'.
2. Vérifier la tension entre les bornes 67, 72, 117 de l'ECM et la masse à l'aide de CONSULT-II ou du testeur.

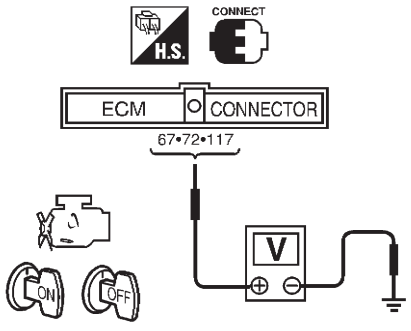

SEF121V

Tension :

Après avoir mis le contact d'allumage sur 'OFF', il y aura tension de la batterie pendant quelques secondes avant que la tension ne retombe à 0 V.

BON ou MAUVAIS

Bon	▶	ALLER A 19.
Mauvais (il n'y a pas de tension de la batterie)	▶	ALLER A 12.
Mauvais (il y a tension de la batterie pendant plus de quelques secondes)	▶	ALLER A 18.

Simpo PDF Merge and Split Unregistered Version - http://www.simpopdf.com

12	VERIFIER LA CONTINUITE DU FAISCEAU ENTRE LE RELAIS DE L'ECM ET L'ECM

1. Débrancher le connecteur de faisceau de l'ECM.
2. Déconnecter le relais de l'ECM.

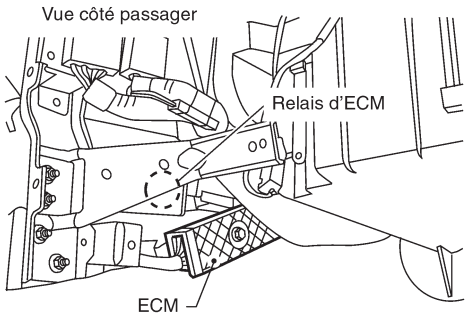

LEC106A

3. Vérifier la continuité du faisceau entre les bornes 67, 72, 117 de l'ECM et la borne 7 du relais d'ECM.

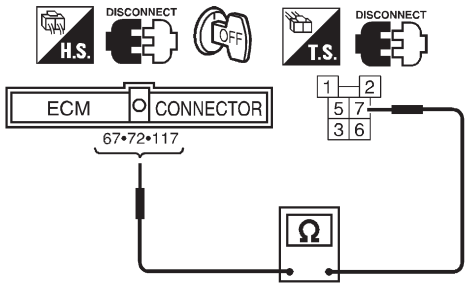

SEC267D

Il doit y avoir continuité.

4. Vérifier également que le faisceau n'est pas en court-circuit à la masse ou à l'alimentation.

BON ou MAUVAIS

Bon	▶	ALLER A 14.
Mauvais	▶	ALLER A 13.

13	DETECTER LA PIECE DEFECTUEUSE

Contrôler les points suivants.
- Connecteurs de faisceau E101, M5
- Faisceau ouvert ou en court-circuit entre l'ECM et le relais de l'ECM

	▶	Réparer le faisceau ou les connecteurs.

Simpo PDF Merge and Split Unregistered Version - http://www.simpopdf.com

14	VERIFIER LA TENSION ENTRE LE RELAIS DE L'ECM ET LA MASSE

Vérifier la tension entre les bornes 1 et 6 du relais de l'ECM et la masse à l'aide de CONSULT-II ou du testeur.

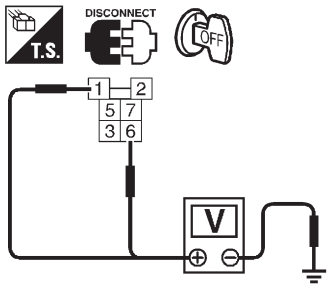

SEC268D

Tension : Tension de la batterie

BON ou MAUVAIS

Bon	▶	ALLER A 16.
Mauvais	▶	ALLER A 15.

15	DETECTER LA PIECE DEFECTUEUSE

Contrôler les points suivants.
- Fusible de 10 A
- Faisceau ouvert ou en court-circuit entre le relais de l'ECM et le fusible

	▶	Réparer le faisceau ou les connecteurs.

16	CONTROLER LE CIRCUIT DU SIGNAL DE SORTIE

1. Vérifier la continuité du faisceau entre la borne 4 de l'ECM et la borne 2 du relais de l'ECM.

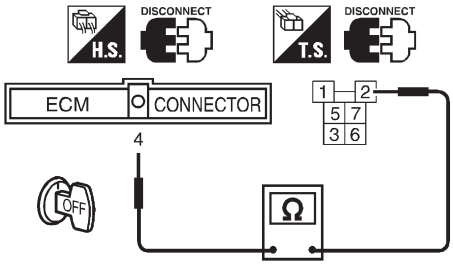

SEC269D

Il doit y avoir continuité.

2. Vérifier également que le faisceau n'est pas en court-circuit à la masse ou à l'alimentation.

BON ou MAUVAIS

Bon	▶	ALLER A 18.
Mauvais	▶	ALLER A 17.

17	DETECTER LA PIECE DEFECTUEUSE

Contrôler les points suivants.
- Connecteurs de faisceau E101, M5
- Faisceau ouvert ou en court-circuit entre l'ECM et le relais de l'ECM

	▶	Réparer le faisceau ou les connecteurs.

Simpo PDF Merge and Split Unregistered Version - http://www.simpopdf.com

18	CONTROLER LE RELAIS DE L'ECM

1. Appliquer un courant continu de 12 V entre les bornes 1 et 2 du relais de l'ECM.
2. Vérifier la continuité entre les bornes 6 et 7 du relais d'ECM.

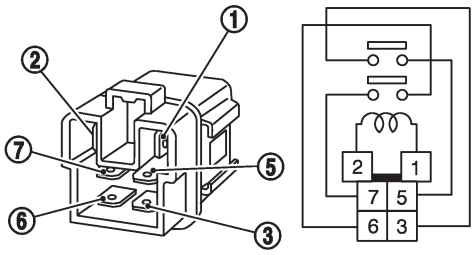

PBIB0077E

12 V (1 - 2) appliquée: il y a continuité.
Tension absente : pas de continuité

BON ou MAUVAIS

Bon	▶	ALLER A 19.
Mauvais	▶	Remplacer le relais de l'ECM.

19	CONTROLER LE CIRCUIT DE MISE A LA MASSE

1. Mettre le contact d'allumage sur ''OFF''.
2. Débrancher le connecteur de faisceau de l'ECM.
3. Vérifier la continuité du faisceau entre les bornes 10, 19, 25, 32, 116, 124 de l'ECM et la masse de moteur.

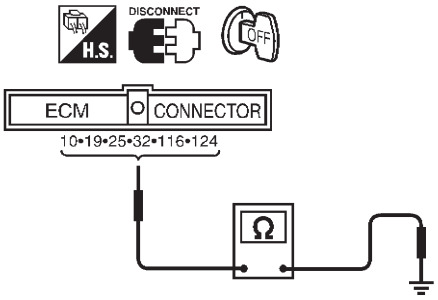

SEF119V

Il doit y avoir continuité.

4. Vérifier également que le faisceau n'est pas en court-circuit à l'alimentation.

BON ou MAUVAIS

Bon	▶	ALLER A 20.
Mauvais	▶	Réparer les faisceaux ou connecteurs en circuit ouvert ou en court-circuit à l'alimentation.

20	VERIFIER SI L'INCIDENT EST INTERMITTENT
Effectuer un ''DIAGNOSTIC DES DEFAUTS EN CAS INCIDENT INTERMITTENT'', voir page EC-3132.	
	▶ **FIN DE L'INSPECTION**

Simpo PDF Merge and Split Unregistered Version - http://www.simpopdf.com

Description

NEEC0136

DESCRIPTION DU SYSTÈME

NEEC0136S01

Capteur	Signal d'entrée à l'ECM	Fonctionnement de l'ECM	Actionneur
Capteur d'angle d'arbre à cames	Régime-moteur	Commande du chauffage de la sonde à oxygène chauffé 1	Chauffage de la sonde à oxygène chauffé 1

L'ECM effectue un contrôle MAR/ARR du chauffage de la sonde à oxygène chauffé 1 en fonction des conditions de fonctionnement du moteur.

FONCTIONNEMENT

NEEC0136S02

Régime-moteur	Chauffage de la sonde à oxygène chauffé 1
Supérieur à 3 600 tr/mn.	ARRET
Inférieur à 3 600 tr/mn.	MAR

Valeur de référence de CONSULT-II en mode de contrôle de données

NEEC0137

Les données de spécification sont des valeurs de référence.

ELEMENT DE CONTROLE	CONDITION	SPECIFICATION
CH S/02 CH1 (R1)	● Régime-moteur : Inférieur à 3 600 tr/mn.	MAR
	● Régime-moteur : Supérieur à 3 600 tr/mn	ARR

Bornes de l'ECM et valeurs de référence

NEEC0138

Les données de spécification sont des valeurs de référence et sont mesurées entre chaque borne et la masse.

ATTENTION :
Ne pas utiliser de bornes de masse de l'ECM lors de la mesure de la tension d'entrée/de sortie. En agissant de la sorte, il est possible d'endommager le transistor de l'ECM. Utiliser une masse autre que les bornes de l'ECM, comme par exemple la prise de terre.

N° DE BORNE	COULEUR DE CABLE	ELEMENT	CONDITION	DONNEES (tension de courant continu)
119	Y/R	Chauffage de la sonde à oxygène chauffé 1	**[Moteur en marche]** ● Le régime-moteur est inférieur à 3.600 tr/mn.	Environ 0,4V
			[Moteur en marche] ● Le régime-moteur est supérieur à 3.600 tr/mn.	TENSION DE LA BATTERIE (11 V - 14V)

Simpo PDF Merge and Split Unregistered Version - http://www.simpopdf.com

Logique de diagnostic de bord

NEEC0139

N° de DTC	Nom de diagnostic des défauts	Condition de détection de DTC	Cause possible
P0031 0031	Circuit de commande de chauffage de la sonde à oxygène chauffé 1 faible	● L'ampérage actuel du circuit de chauffage de la sonde à oxygène chauffé 1 ne se situe pas dans l'échelle normale. (Le signal de tension envoyé à l'ECM par le chauffage de la sonde à oxygène chauffé 1 est excessivement faible.)	● Faisceau ou connecteurs (Le circuit du chauffage de la sonde à oxygène chauffé 1 est ouvert ou en court-circuit.) ● Chauffage de la sonde à oxygène chauffé 1
P0032 0032	Circuit de commande du chauffage de la sonde à oxygène chauffé 1 haut	● L'ampérage actuel du circuit de chauffage de la sonde à oxygène chauffé 1 ne se situe pas dans l'échelle normale. (Le signal de tension envoyé à l'ECM par le chauffage de la sonde à oxygène chauffé 1 est excessivement élevé.)	● Faisceau ou connecteurs (Le circuit du chauffage de la sonde à oxygène chauffé 1 est en court-circuit.) ● Chauffage de la sonde à oxygène chauffé 1

Procédure de confirmation de code de défaut (DTC)

NEEC0140

REMARQUE :

Si une ''Procédure de confirmation de DTC'' a précédé, toujours mettre le contact d'allumage sur la position ''OFF'' et attendre au moins 5 secondes avant de procéder à l'essai suivant.

CONDITIONS D'ESSAI :

Avant d'entamer la procédure qui suit, vérifier que la tension délivrée par la batterie soit supérieure à 11V au ralenti.

2

CONTROLE DE DONNEES	
CONTROLE	AUCUN DTC
TR/MN MOT	XXX tr/min

SEF058Y

Avec CONSULT-II

1) Mettre le contact d'allumage sur ON et mettre CONSULT-II en mode ''CONTROLE DE DONNEES''.
2) Démarrer le moteur et le faire tourner pendant au moins 6 secondes en régime de ralenti.
3) Si le DTC de 1er parcours est détecté, aller à ''Procédure de diagnostic'', page EC-3144.

Avec l'analyseur générique GST

1) Démarrer le moteur et le faire tourner pendant au moins 6 secondes en régime de ralenti.
2) Mettre le contact d'allumage sur OFF et attendre au moins 5 secondes.
3) Démarrer le moteur et le faire tourner pendant au moins 6 secondes en régime de ralenti.
4) Régler le GST en ''MODE 3''.
5) Si le DTC est détecté, effectuer une ''Procédure de diagnostic'', voir page EC-3144.

● **L'utilisation d'un analyseur générique GST impose d'effectuer une 'Procédure de confirmation de DTC'' deux fois plus qu'avec CONSULT-II du fait que l'analyseur générique GST ne peut pas afficher en MODE 7 (DTC de 1er parcours), en ce qui concerne ce diagnostic. C'est pourquoi il est vivement conseillé d'utiliser CONSULT-II.**

Simpo PDF Merge and Split Unregistered Version - http://www.simpopdf.com

Schéma de câblage

NEEC0141

EC-O2H1B1-01

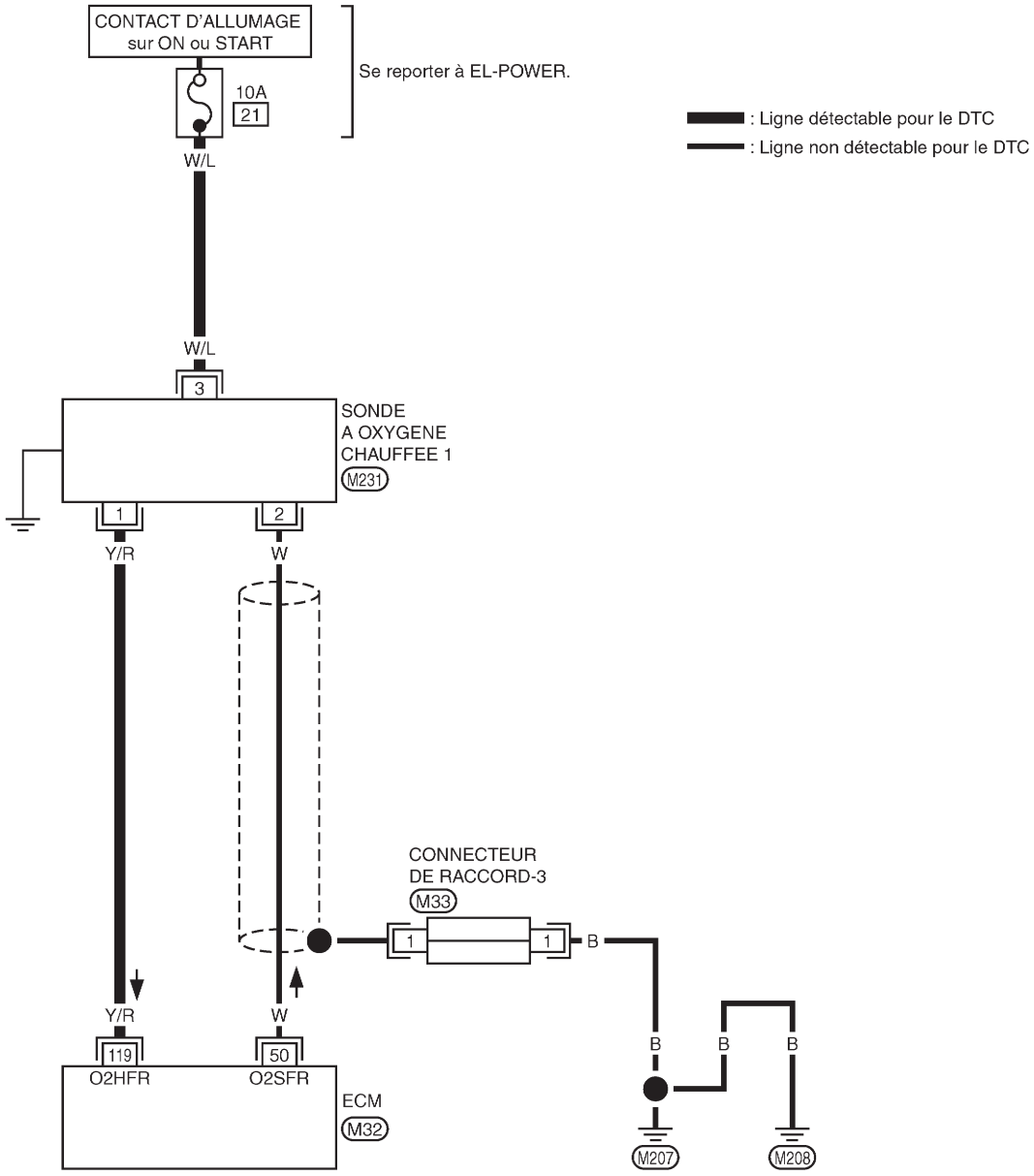

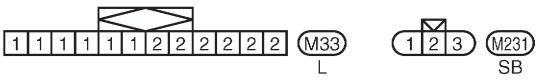

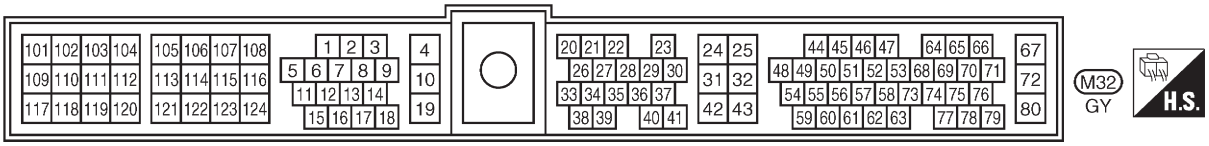

GEC247A

Simpo PDF Merge and Split Unregistered Version - http://www.simpopdf.com

Procédure de diagnostic

NEEC0142

1	CONTROLER L'ALIMENTATION ELECTRIQUE

1. Mettre le contact d'allumage sur OFF.
2. Débrancher le connecteur de faisceau de la sonde à oxygène chauffé 1.

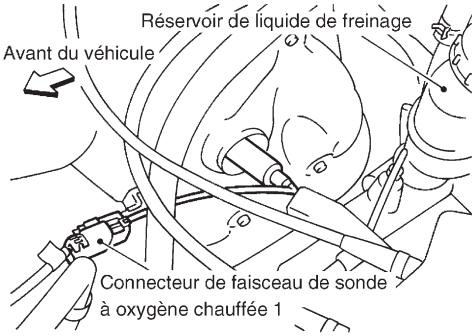

SEF331VC

3. Mettre le contact d'allumage sur ON.
4. Contrôler la tension entre la borne 3 et la masse à l'aide de CONSULT-II ou du testeur.

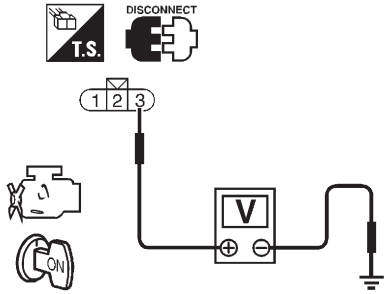

SEF732Z

Tension : Tension de la batterie

BON ou MAUVAIS

Bon	▶	ALLER A 3.
Mauvais	▶	ALLER A 2.

2	DETECTER LA PIECE DEFECTUEUSE

Contrôler les points suivants.
- Fusible de 10 A
- Faisceau ouvert ou en court-circuit entre la sonde à oxygène chauffé 1 et le fusible de 10A

	▶	Réparer le faisceau ou les connecteurs.

3	CONTROLER LE CIRCUIT DU SIGNAL DE SORTIE

1. Mettre le contact d'allumage sur OFF.
2. Débrancher le connecteur de faisceau de l'ECM.
3. Vérifier la continuité du faisceau entre la borne 1 de la sonde à oxygène chauffé 1 et la borne 119 de l'ECM. Se reporter au schéma de câblage.
   Il doit y avoir continuité.
4. Vérifier également que le faisceau n'est pas en court-circuit à la masse ou à l'alimentation.

BON ou MAUVAIS

Bon	▶	ALLER A 4.
Mauvais	▶	Réparer les faisceaux ou les connecteurs en circuit ouvert ou en court-circuit à la masse ou à l'alimentation.

Simpo PDF Merge and Split Unregistered Version - http://www.simpopdf.com

Procédure de diagnostic

4	CONTROLER LE CHAUFFAGE DE LA SONDE A OXYGENE CHAUFFE 1

Vérifier la résistance entre les bornes 3 et 1.

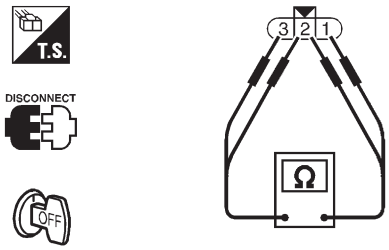

SEF731Z

Résistance : 2,3 - 4,3 Ω à 25°C

Vérifier la continuité entre les bornes 2 et 1, 3 et 2.

Il ne doit pas y avoir continuité.

ATTENTION :

- **Jeter toute sonde à oxygène chauffé tombée d'une hauteur supérieure à 0,5 m sur une surface dure telle qu'un plancher en béton, et la remplacer par une sonde neuve.**
- **Avant de reposer une nouvelle sonde à oxygène, nettoyer le filetage du système d'échappement à l'aide de l'outil de nettoyage pour filetage de sonde à oxygène J-43897-18 ou J-43897-12 et un lubrifiant antigrippant agréé.**

BON ou MAUVAIS

Bon	▶	ALLER A 5.
Mauvais	▶	Remplacer la sonde à oxygène chauffé 1.

5	VERIFIER SI L'INCIDENT EST INTERMITTENT

Effectuer un ''DIAGNOSTIC DES DEFAUTS EN CAS INCIDENT INTERMITTENT'', voir page EC-3132.

▶ **FIN DE L'INSPECTION**

Simpo PDF Merge and Split Unregistered Version - http://www.simpopdf.com

Description

NEEC0180

DESCRIPTION DU SYSTÈME

NEEC0180S01

Capteur	Signal d'entrée à l'ECM	Fonctionnement de l'ECM	Actionneur
Capteur d'angle d'arbre à cames	Régime-moteur	Commande du chauffage de la sonde à oxygène chauffé 2	Chauffage de la sonde à oxygène chauffé 2

L'ECM effectue un contrôle MARCHE/ARRET du chauffage de la sonde à oxygène chauffé 2 en fonction du régime-moteur.

FONCTIONNEMENT

NEEC0180S02

Régime-moteur tr/mn	Chauffage de la sonde à oxygène chauffé 2
Supérieur à 4 000	ARRET
Inférieur à 4 000	MAR

Valeur de référence de CONSULT-II en mode de contrôle de données

NEEC0181

Les données de spécification sont des valeurs de référence.

ELEMENT DE CONTROLE	CONDITION	SPECIFICATION
CH S/O2 CH2 (R1)	● Régime-moteur : Inférieur à 4 000 tr/mn [après avoir conduit pendant 2 minutes à la vitesse de 70 km/h ou plus]	MAR
	● Contact sur ON (moteur arrêté) ● Le régime-moteur est supérieur à 4 000 tr/mn.	ARR

Bornes de l'ECM et valeurs de référence

NEEC0182

Les données de spécification sont des valeurs de référence et sont mesurées entre chaque borne et la masse.

CAUTION:
Ne pas utiliser de bornes de masse de l'ECM lors de la mesure de la tension d'entrée/de sortie. En agissant de la sorte, il est possible d'endommager le transistor de l'ECM. Utiliser une masse autre que les bornes de l'ECM, comme par exemple la prise de terre.

N° DE BORNE	COULEUR DE CABLE	ELEMENT	CONDITION	DONNEES (tension de courant continu)
122	G/B	Chauffage de la sonde à oxygène chauffé 2	**[Moteur en marche]** ● Après avoir conduit pendant 2 minutes à une vitesse de 70 km/h ou plus	Environ 0,4V
			[Contact d'allumage sur ''ON''] ● Moteur arrêté	TENSION DE LA BATTERIE (11 V - 14V)

Logique de diagnostic de bord

NEEC0183

N° de DTC	Nom de diagnostic des défauts	Condition de détection de DTC	Cause possible
P0037 0037	Circuit de commande du chauffage de la sonde à oxygène chauffé 2 faible	● L'ampérage actuel du circuit du chauffage de la sonde à oxygène chauffé 2 ne se situe pas dans l'échelle normale. (Le signal de tension envoyé à l'ECM par le chauffage de la sonde à oxygène chauffé 2 est excessivement faible.)	● Faisceau ou connecteurs (Le circuit du chauffage de la sonde à oxygène chauffé 2 est ouvert ou en court-circuit.) ● Chauffage de la sonde à oxygène chauffé 2
P0038 0038	Circuit de commande du chauffage de la sonde à oxygène chauffé 2 élevé	● L'ampérage actuel du circuit du chauffage de la sonde à oxygène chauffé 2 ne se situe pas dans l'échelle normale. (Le signal de tension envoyé à l'ECM par le chauffage de la sonde à oxygène chauffé 2 est excessivement élevé.)	● Faisceau ou connecteurs (Le circuit du chauffage de la sonde à oxygène chauffé 2 est en court-circuit.) ● Chauffage de la sonde à oxygène chauffé 2

Procédure de confirmation de code de défaut (DTC)

NEEC0184

REMARQUE :

Si une ''Procédure de confirmation de DTC'' a précédé, toujours mettre le contact d'allumage sur la position OFF et attendre au moins 5 secondes avant de procéder à l'essai suivant.

CONDITIONS D'ESSAI :

Avant d'entamer la procédure qui suit, vérifier que la tension délivrée par la batterie est comprise entre 10,5 V au ralenti.

2

CONTROLE DE DONNEES	
CONTROLE	PAS DE DTC
TR/MN MOT	XXX TR/MN
CAP VIT VEHIC	XXX km/h
CAP PAPILLON	XXX V

SEF175Y

Avec CONSULT-II

1) Mettre le contact d'allumage sur ON et mettre CONSULT-II en mode ''CONTROLE DE DONNEES''.
2) Démarrer le moteur et conduire le véhicule à une vitesse de plus de 70 km/h pendant 2 minutes consécutives.
3) Si le DTC de 1er parcours est détecté, aller à ''Procédure de diagnostic'', page EC-3150.

Avec l'analyseur générique GST

1) Démarrer le moteur.
2) Rouler à plus de 70 km/h pendant 2 minutes.
3) Arrêter le véhicule et laisser le moteur au ralenti pendant au moins 6 secondes.
4) Mettre le contact d'allumage sur OFF et attendre au moins 10 secondes.
5) Démarrer le moteur.
6) Rouler à plus de 70 km/h pendant 2 minutes.
7) Arrêter le véhicule et laisser le moteur au ralenti pendant au moins 6 secondes.
8) Régler le GST en ''MODE 3''.
9) Si le DTC est détecté, effectuer une ''Procédure de diagnostic'', voir page EC-3150.

Simpo PDF Merge and Split Unregistered Version - http://www.simpopdf.com

L’utilisation d’un analyseur générique GST impose d’effectuer une ‘‘Procédure de confirmation de DTC’’ deux fois plus qu’avec CONSULT-II du fait que l’analyseur générique GST ne peut pas afficher en MODE 7 (DTC de 1er parcours), en ce qui concerne ce diagnostic. C’est pourquoi il est vivement conseillé d’utiliser CONSULT-II.

Schéma de câblage

NEEC0185

EC-O2H2B1-01

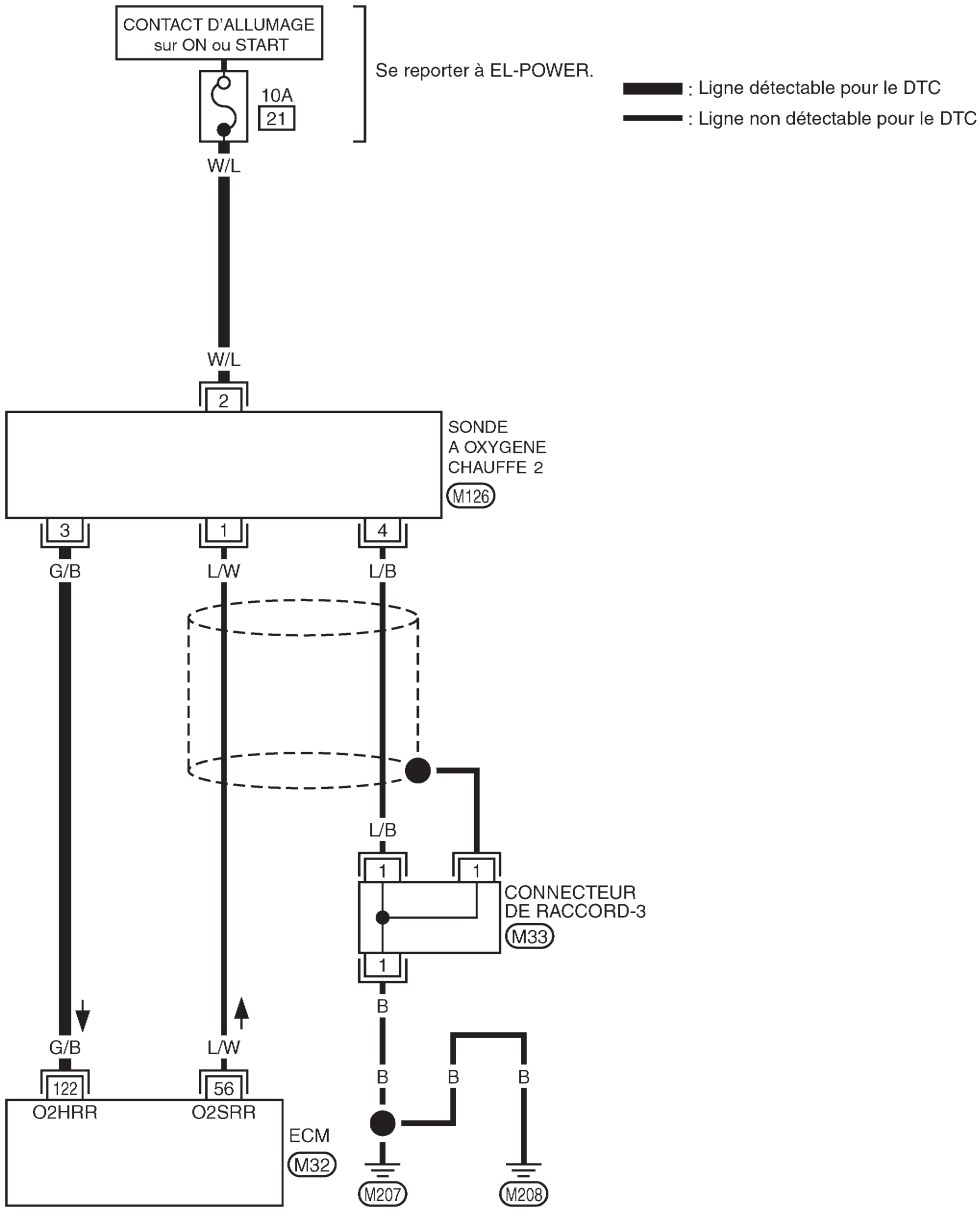

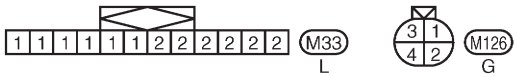

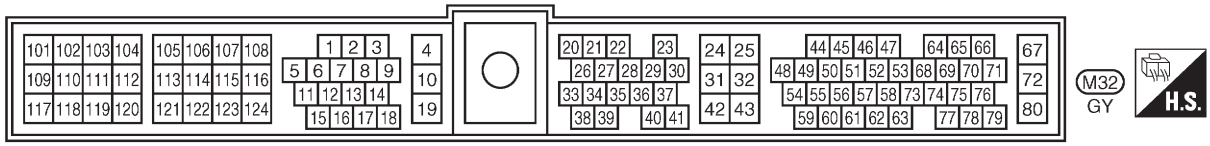

GEC248A

Procédure de diagnostic

NEEC0186

1	CONTROLER L'ALIMENTATION ELECTRIQUE

1. Mettre le contact d'allumage sur OFF.
2. Débrancher le connecteur de faisceau de la sonde à oxygène chauffé 2.
3. Mettre le contact d'allumage sur ON.
4. Contrôler la tension entre la borne 2 et la masse.

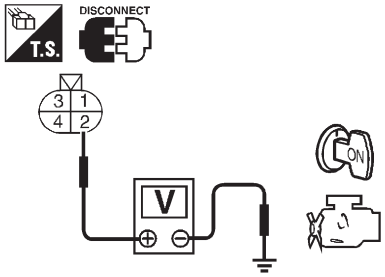

SEF218W

Tension : Tension de la batterie

BON ou MAUVAIS

Bon	▶	ALLER A 3.
Mauvais	▶	ALLER A 2.

2	DETECTER LA PIECE DEFECTUEUSE

Contrôler les points suivants.
- Fusible de 10 A
- Faisceau ouvert ou en court-circuit entre la sonde à oxygène chauffé 2 et le fusible de 10A

	▶	Réparer le faisceau ou les connecteurs.

3	CONTROLER LE CIRCUIT DU SIGNAL DE SORTIE

1. Mettre le contact d'allumage sur OFF.
2. Débrancher le connecteur de faisceau de l'ECM.
3. Vérifier la continuité du faisceau entre la borne 2 de la sonde à oxygène chauffé 2 et la borne 122 de l'ECM. Se reporter au schéma de câblage.
   Il doit y avoir continuité.
4. Vérifier également que le faisceau n'est pas en court-circuit à la masse ou à l'alimentation.

BON ou MAUVAIS

Bon	▶	ALLER A 4.
Mauvais	▶	Réparer les faisceaux ou les connecteurs en circuit ouvert ou en court-circuit à la masse ou à l'alimentation.

Simpo PDF Merge and Split Unregistered Version - http://www.simpopdf.com

4	CONTROLER LE CHAUFFAGE DE LA SONDE A OXYGENE CHAUFFE 2

Contrôler les points suivants.

1. Vérifier la résistance entre les bornes 2 et 3.

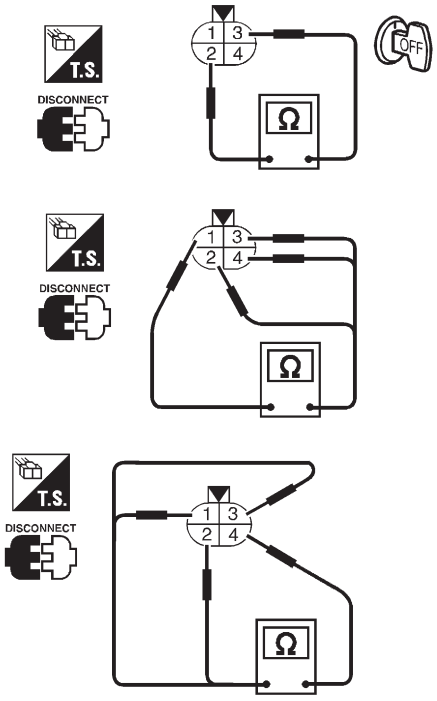

SEF221W

Résistance : 2,3 - 4,3Ω à 25°C

2. Vérifier la continuité.

N° de borne	Continuité
1 et 2, 3, 4	Non
4 et 1, 2, 3	

MTBL0330

ATTENTION :

- **Jeter toute sonde à oxygène chauffé tombée d'une hauteur supérieure à 0,5 m sur une surface dure telle qu'un plancher en béton, et la remplacer par une sonde neuve.**
- **Avant de reposer une nouvelle sonde à oxygène, nettoyer le filetage du système d'échappement à l'aide de l'outil de nettoyage pour filetage de sonde à oxygène J-43897-18 ou J-43897-12 et un lubrifiant antigrippant agréé.**

BON ou MAUVAIS

Bon	▶	ALLER A 5.
Mauvais	▶	Remplacer la sonde à oxygène chauffé 2.

5	VERIFIER SI L'INCIDENT EST INTERMITTENT
Effectuer un ''DIAGNOSTIC DES DEFAUTS EN CAS INCIDENT INTERMITTENT'', voir page EC3132.	
▶	**FIN DE L'INSPECTION**

Simpo PDF Merge and Split Unregistered Version - http://www.simpopdf.com

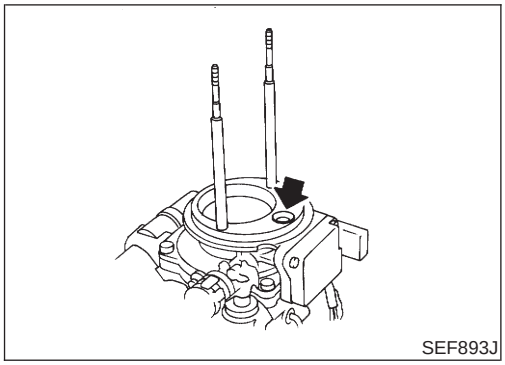
SEF893J

Description des composants

NEEC0050

Le débitmètre d'air est situé dans le passage de l'air d'admission. Il mesure le débit d'admission en se basant sur une partie du débit d'admission total. Il consiste en un câble chaud alimenté en courant électrique depuis l'ECM. La température du câble chaud est contrôlée en partie par l'ECM. La chaleur produite par le câble chaud est réduite au fur et à mesure que l'air d'admission circule autour de lui. Plus il y a d'air, plus la perte de chaleur est importante.
Par conséquent, l'ECM doit fournir une alimentation électrique plus importante pour maintenir la température du câble chaud alors que le débit de l'air augmente. L'ECM détecte le débit de l'air grâce aux variations du courant électrique.

Valeur de référence de CONSULT-II en mode de contrôle de données

NEEC0051

Les données de spécification sont des valeurs de référence.

ELEMENT DE CONTROLE	CONDITION		SPECIFICATION
DEBITMETRE-R1	● Moteur : une fois le moteur chaud ● Interrupteur de climatiseur : ARRET ● Levier de changement de vitesses : "N" ● A vide	Ralenti	0,9 - 1,8V
		2 500 tr/mn	1,9 - 2,3V
VAL CHARGE CALC	● Moteur : une fois le moteur chaud ● Interrupteur de climatiseur : ARRET ● Levier de changement de vitesses : "N" ● A vide	Ralenti	9,5 - 34,0
		2 500 tr/mn	13,9 - 24,9
DEBITMETRE AIR	● Moteur : une fois le moteur chaud ● Interrupteur de climatiseur : ARRET ● Levier de changement de vitesses : "N" ● A vide	Ralenti	0,9 - 5,8 g·m/s
		2 500 tr/mn	7,5 - 13,2 g·m/s

Bornes de l'ECM et valeurs de référence

NEEC0052

Les données de spécification sont des valeurs de référence et sont mesurées entre chaque borne et la masse.

CAUTION:
Ne pas utiliser de bornes de masse de l'ECM lors de la mesure de la tension d'entrée/de sortie. En agissant de la sorte, il est possible d'endommager le transistor de l'ECM. Utiliser une masse autre que les bornes de l'ECM, comme par exemple la prise de terre.

Simpo PDF Merge and Split Unregistered Version - http://www.simpopdf.com

Bornes de l'ECM et valeurs de référence

N° DE BORNE	COULEUR DE CABLE	ELEMENT	CONDITION	DONNEES (tension de courant continu)
54	L	Débitmètre d'air	**[Moteur en marche]** ● **Pendant la montée en température** ● Régime de ralenti	0,9 - 1,8V
			[Moteur en marche] ● **Pendant la montée en température** ● Le régime-moteur est de 2 500 tr/mn.	1,9 - 2,3V
55	P	Masse du débitmètre d'air	**[Moteur en marche]** ● **Pendant la montée en température** ● Régime de ralenti	Environ 0 V

Logique de diagnostic de bord

NEEC0053

N° de DTC	Le défaut est détecté quand ...		Eléments de contrôle (causes possibles)
P0101 0101	A)	Un signal de tension haute en provenance du capteur est envoyée à l'ECM sous une charge de conduite légère.	● Faisceau ou connecteurs (le circuit de capteur est ouvert ou court-circuité) ● Débitmètre d'air
P0101 0101	B)	Une tension basse en provenance du capteur est envoyée à l'ECM* sous une charge de conduite élevée.	● Faisceau ou connecteurs (le circuit de capteur est ouvert ou court-circuité) ● Fuites d'air d'admission ● Débitmètre d'air

*: Quand cette anomalie est détectée, l'ECM entre en mode de sécurité mode et le témoin MI s'allume.

MODE DE SÉCURITÉ

NEEC0053S01

Eléments détectés	Condition de fonctionnement du moteur en mode de sécurité
Circuit du débitmètre d'air	Le régime-moteur ne dépasse pas 2 400 tr/mn en raison de la coupure d'alimentation.

Procédure de confirmation de code de défaut (DTC)

NEEC0054

ATTENTION :
Toujours adapter sa vitesse aux exigences de sécurité.

REMARQUE :
Si une ''Procédure de confirmation de DTC'' a précédé, toujours mettre le contact d'allumage sur la position OFF et attendre au moins 5 secondes avant de procéder à l'essai suivant.

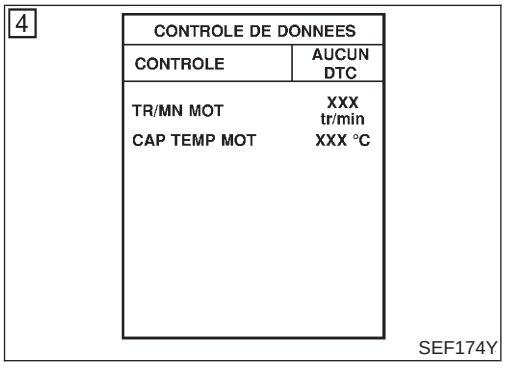

PROCÉDURE DE DÉFAUT A

NEEC0054S03

REMARQUE :
Si le moteur ne démarre pas ou s'arrête rapidement, attendre au moins 10 secondes avec le moteur arrêté (contact d'allumage sur ''ON'') plutôt que de faire tourner le moteur au ralenti.

Avec CONSULT-II

1) Mettre le contact d'allumage sur ON.
2) Régler CONSULT-II en mode ''CONTROLE DE DONNEES''.
3) Démarrer le moteur et l'amener à température normale de fonctionnement.

Simpo PDF Merge and Split Unregistered Version - http://www.simpopdf.com

4) Faire tourner le moteur au ralenti pendant au moins 10 secondes.
5) Si le DTC de 1er parcours est détecté, aller à ''Procédure de diagnostic'', page EC -3157.

Avec l'analyseur générique GST
Suivre la procédure ''Avec CONSULT-II''.

6

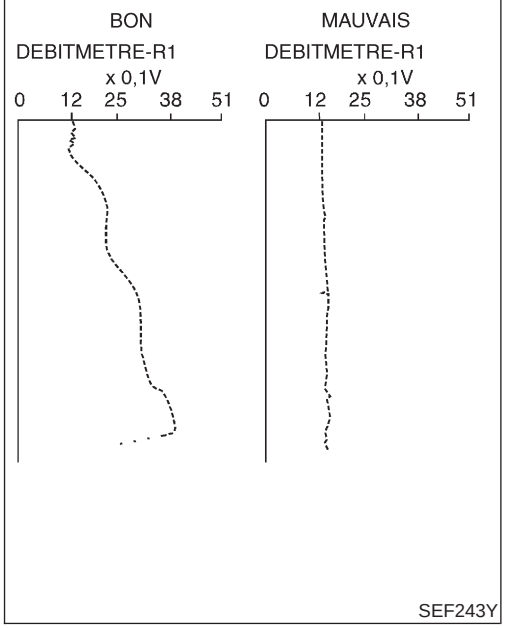

SEF243Y

PROCÉDURE DE DÉFAUT B

NEEC0054S04

Avec CONSULT-II

1) Mettre le contact d'allumage sur ON.
2) Démarrer le moteur et l'amener à température normale de fonctionnement.
   S'il est impossible de démarrer le moteur, effectuer une ''Procédure de diagnostic'', page EC-3157.
3) Régler CONSULT-II en mode ''CONTROLE DE DONNEES''.
4) Vérifier la tension de ''DEBITMETRE AIR-R1'' avec ''CONTROLE DE DONNEES''.
5) Augmenter le régime-moteur jusqu'à environ 4 000 tr/mn.
6) Vérifier la montée de la tension linéaire en fonction des hausses de régime-moteur.
   Si les résultats ne sont pas conformes, effectuer une ''Procédure de diagnostic'', voir page EC-3157.
   Si le résultat est satisfaisant, passer à l'étape suivante.
7) Maintenir les conditions suivantes pendant au moins 10 secondes de suite.

TR/MN MOT	Plus de 2 000 tr/mn.
CAP PAPILLON	Plus de 3V
Levier de vitesses	Rapport adapté
Site de conduite	Rouler en montée (ce qui augmente la charge moteur) aide à maintenir les conditions requises pour cet essai

8) Si le DTC de 1er parcours est détecté, aller à ''Procédure de diagnostic'', page EC-3157.

7

CONTROLE DE DONNEES	
CONTROLE	PAS DE DTC
TR/MN MOT	XXX TR/MN
CAP VIT VEHIC	XXX km/h
CAP PAPILLON	XXX V

SEF175Y

CALC CHARGE	20%
TEMP MOTEUR	95°C
% COR AIR/CAR #1	2%
REG INJ L-T #1	0%
% COR AIR/CAR #2	4%
REG INJ L-T #2	0%
TR/MN MOTEUR	2637TR/MN
VITESS VEHIC	0MPH
AVANCE ALLU	41,0°
AIR ADMI	41°C
DEBIT D'AIR	**14,1gm/sec**
POSI PAPIL	3%

SEF534P

Vérification du fonctionnement général

NEEC0055

Utiliser cette procédure pour vérifier le fonctionnement général du circuit du débitmètre d'air. Au cours de ce contrôle, il est possible qu'un DTC de 1er parcours ne soit pas confirmé.

PROCÉDURE DE DÉFAUT B

NEEC0055S01

Avec l'analyseur générique GST

1) Mettre le contact d'allumage sur ON.
2) Démarrer le moteur et l'amener à température normale de fonctionnement.
3) Régler le GST en ''MODE 1''.

Simpo PDF Merge and Split Unregistered Version - http://www.simpopdf.com

4) Vérifier le signal du débitmètre d'air avec le GST réglé en ''MODE 1''.
5) Vérifier la montée linéaire du débit d'air en fonction des hausses de régime-moteur jusqu'à environ 4 000 tr/mn.
6) Si les résultats ne sont pas conformes, effectuer une ''Procédure de diagnostic'', voir page EC-3157.

Simpo PDF Merge and Split Unregistered Version - http://www.simpopdf.com

Schéma de câblage

NEEC0056

EC-MAFS-01

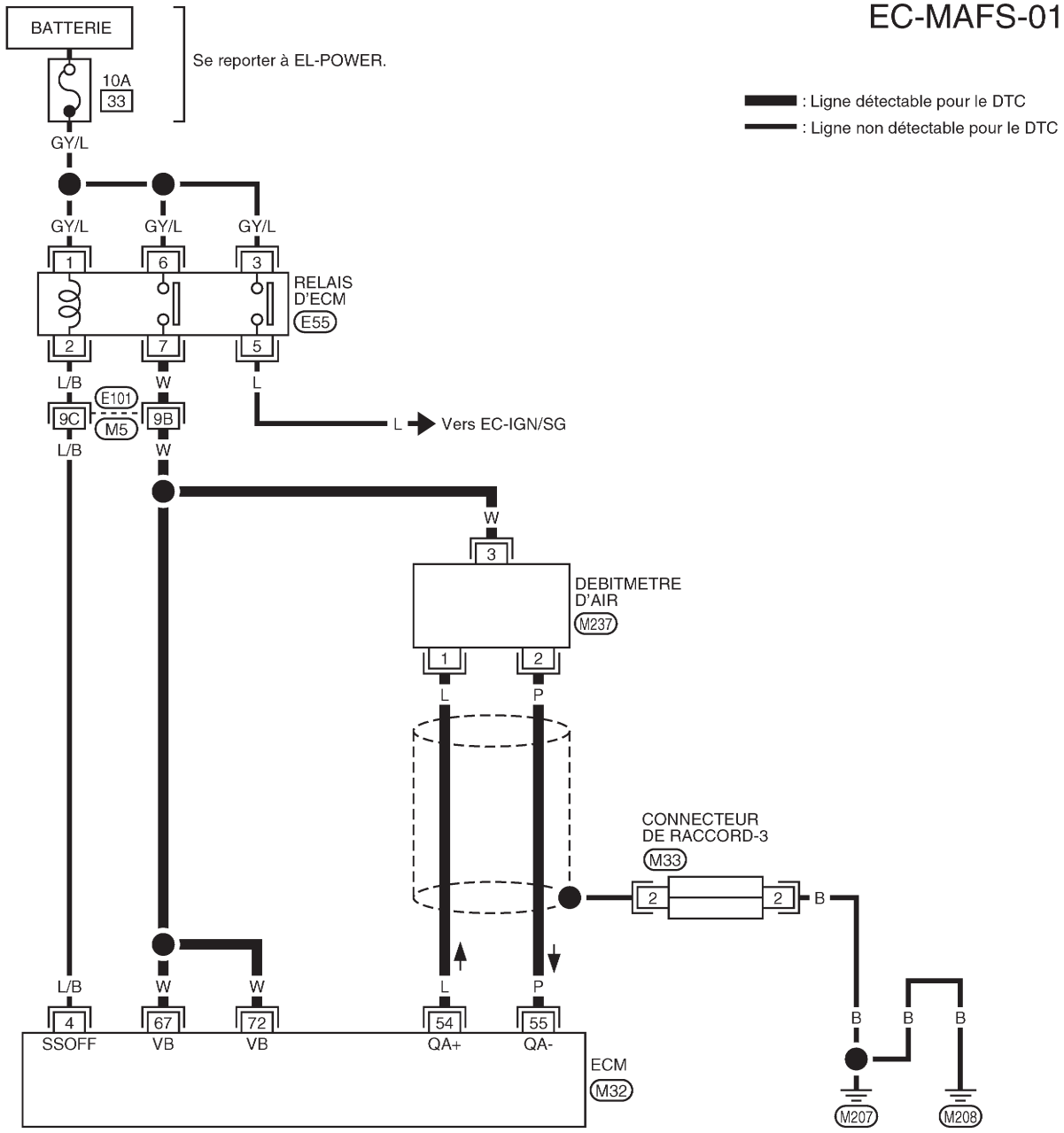

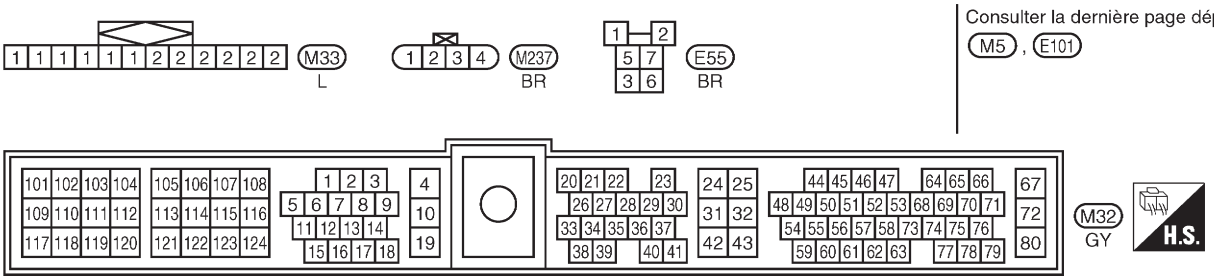

Consulter la dernière page dépliante.
M5 , E101

GEC237A

Simpo PDF Merge and Split Unregistered Version - http://www.simpopdf.com

Procédure de diagnostic

NEEC0057

1	DEBUT DE L'INSPECTION

Quel défaut (A, B, C ou D) est reproduit?

ANOMALIE	Type
A	I
B	II

MTBL1305

Type I ou Type II

Type I	▶	ALLER A 3.
Type II	▶	ALLER A 2.

2	CONTROLER LE SYSTEME D'ADMISSION

Contrôler ce qui suit en ce qui concerne le raccordement.
- Conduit d'air
- Filtre à air
- Flexibles de dépression
- Passage d'air d'aspiration du conduit d'air au collecteur

BON ou MAUVAIS

Bon	▶	ALLER A 3.
Mauvais	▶	Connecter à nouveau les pièces.

3	RESSERRER LES VIS DE MASSE

1. Mettre le contact d'allumage sur OFF.
2. Desserrer et resserrer les vis de masse du moteur.

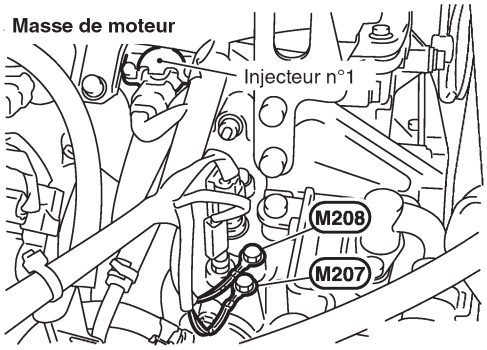

SEC309D

	▶	ALLER A 4.

Simpo PDF Merge and Split Unregistered Version - http://www.simpopdf.com

4	CONTROLER L'ALIMENTATION ELECTRIQUE

1. Débrancher le connecteur de faisceau du débitmètre d'air.

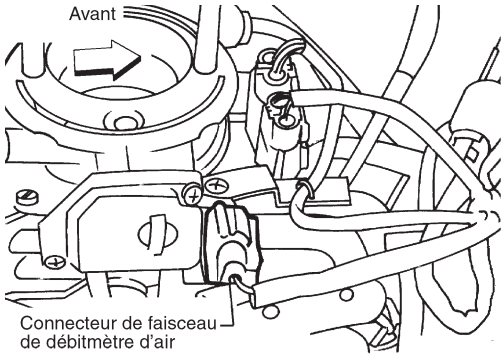

AEC131A

2. Mettre le contact d'allumage sur ON.
3. Contrôler la tension entre la borne 3 et la masse à l'aide de CONSULT-II ou du testeur.

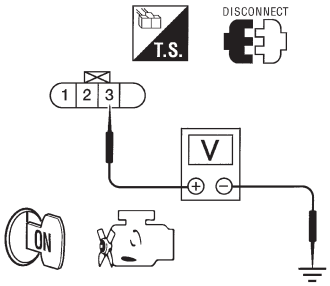

AEC691

Tension : Tension de la batterie

BON ou MAUVAIS

Bon	▶	ALLER A 6.
Mauvais	▶	ALLER A 5.

5	DETECTER LA PIECE DEFECTUEUSE

Contrôler les points suivants.
- Connecteurs de faisceau E101, M5
- Faisceau ouvert ou en court-circuit entre le relais de l'ECM et le débitmètre d'air
- Faisceau ouvert ou en court-circuit entre le débitmètre d'air et l'ECM

	▶	Réparer le faisceau ou les connecteurs.

6	CONTROLER LE CIRCUIT DE MISE A LA MASSE

1. Mettre le contact d'allumage sur OFF.
2. Débrancher le connecteur de faisceau de l'ECM.
3. Vérifier la continuité du faisceau entre la borne 2 du débitmètre d'air et la borne 55 de l'ECM. Se reporter au schéma de câblage.
   Il doit y avoir continuité.
4. Vérifier également que le faisceau n'est pas en court-circuit à la masse ou à l'alimentation.

BON ou MAUVAIS

Bon	▶	ALLER A 7.
Mauvais	▶	Réparer les faisceaux ou les connecteurs en circuit ouvert ou en court-circuit à la masse ou à l'alimentation.

Simpo PDF Merge and Split Unregistered Version - http://www.simpopdf.com

7	CONTROLER LE CIRCUIT DE SIGNAL D'ENTREE

1. Vérifier la continuité du faisceau entre la borne 1 et la borne 54 de l'ECM. Se reporter au schéma de câblage.
   Il doit y avoir continuité.
2. Vérifier également que le faisceau n'est pas en court-circuit à la masse ou à l'alimentation.

BON ou MAUVAIS

Bon	▶	ALLER A 8.
Mauvais	▶	Réparer les faisceaux ou les connecteurs en circuit ouvert ou en court-circuit à la masse ou à l'alimentation.

8	CONTROLER LE DEBITMETRE D'AIR

1. Brancher à nouveau tous les connecteurs de faisceau débranchés.
2. Mettre le contact d'allumage sur ON.
3. Démarrer le moteur et l'amener à température normale de fonctionnement.
4. Contrôler la tension entre la borne 54 de l'ECM (signal du débitmètre d'air) et la masse.

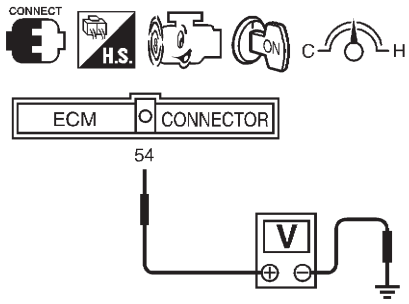

SEF326V

Conditions	Tension V
Contact d'allumage sur 'ON' (moteur arrêté.)	Moins de 1,0
Ralenti (Le moteur est monté en température jusqu'à atteindre une température de fonctionnement normale.)	0,9 - 1,8
2 500 tr/mn (Le moteur est monté en température jusqu'à atteindre une température de fonctionnement normale.)	1,9 - 2,3
Ralenti à environ 4 000 tr/mn*	1,3 - 1,7 à env. 3,0

*: Vérifier la hausse de tension linéaire en réponse à des augmentations du régime du moteur à environ 4.000 tr/mn.

MTBL0326

5. Si la tension est hors norme, débrancher et rebrancher le connecteur du faisceau de débitmètre d'air. Puis, recommencer la vérification précédente.
6. Si le résultat n'est pas conforme, déposer le débitmètre du conduit d'air. Vérifier si le fil chaud n'est pas endommagé ou encrassé.

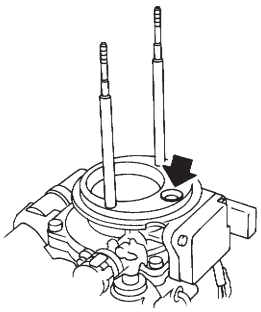

SEF893J

BON ou MAUVAIS

Bon	▶	ALLER A 9.
Mauvais	▶	Remplacer le débitmètre d'air.

Simpo PDF Merge and Split Unregistered Version - http://www.simpopdf.com

9	VERIFIER LE CIRCUIT DE BLINDAGE	
1. Mettre le contact d'allumage sur OFF. 2. Débrancher le connecteur de jonction -3. 3. Contrôler les points suivants. ● Continuité entre la borne 2 du connecteur de jonction-3 et la masse. ● Connecteur de jonction-3 (Se reporter à ''DISPOSITION DES FAISCEAUX'', dans la section EL.) **Il doit y avoir continuité.** 4. Vérifier également que le faisceau n'est pas en court-circuit à l'alimentation.		
BON ou MAUVAIS		
Bon	▶	ALLER A 10.
Mauvais	▶	Réparer les faisceaux ou connecteurs en circuit ouvert ou en court-circuit à l'alimentation.

10	VERIFIER SI L'INCIDENT EST INTERMITTENT	
Effectuer un ''DIAGNOSTIC DES DEFAUTS EN CAS INCIDENT INTERMITTENT'', voir page EC-3132.		
	▶	**FIN DE L'INSPECTION**

Simpo PDF Merge and Split Unregistered Version - http://www.simpopdf.com

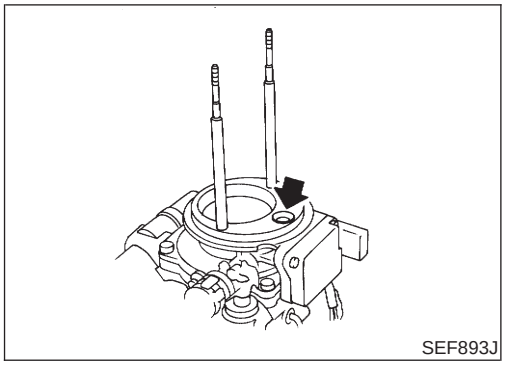
SEF893J

Description des composants

NEEC1548

Le débitmètre d'air est situé dans le passage de l'air d'admission. Il mesure le débit d'admission en se basant sur une partie du débit d'admission total. Il consiste en un câble chaud alimenté en courant électrique depuis l'ECM. La température du câble chaud est contrôlée en partie par l'ECM. La chaleur produite par le câble chaud est réduite au fur et à mesure que l'air d'admission circule autour de lui. Plus il y a d'air, plus la perte de chaleur est importante.

Par conséquent, l'ECM doit fournir une alimentation électrique plus importante pour maintenir la température du câble chaud alors que le débit de l'air augmente. L'ECM détecte le débit de l'air grâce aux variations du courant électrique.

Valeur de référence de CONSULT-II en mode de contrôle de données

NEEC1549

Les données de spécification sont des valeurs de référence.

ELEMENT DE CONTROLE	CONDITION		SPECIFICATION
DEBITMETRE-R1	● Moteur : une fois le moteur chaud ● Interrupteur de climatiseur : ARRET ● Levier de changement de vitesses : "N" ● A vide	Ralenti	0,9 - 1,8V
		2 500 tr/mn	1,9 - 2,3V
VAL CHARGE CALC	● Moteur : une fois le moteur chaud ● Interrupteur de climatiseur : ARRET ● Levier de changement de vitesses : "N" ● A vide	Ralenti	9,5 - 34,0
		2 500 tr/mn	13,9 - 24,9
DEBITMETRE AIR	● Moteur : une fois le moteur chaud ● Interrupteur de climatiseur : ARRET ● Levier de changement de vitesses : "N" ● A vide	Ralenti	0,9 - 5,8 g·m/s
		2 500 tr/mn	7,5 - 13,2 g·m/s

Simpo PDF Merge and Split Unregistered Version - http://www.simpopdf.com

Bornes de l'ECM et valeurs de référence

NEEC1550

Les données de spécification sont des valeurs de référence et sont mesurées entre chaque borne et la masse.

ATTENTION :
Ne pas utiliser de bornes de masse de l'ECM lors de la mesure de la tension d'entrée/de sortie. En agissant de la sorte, il est possible d'endommager le transistor de l'ECM. Utiliser une masse autre que les bornes de l'ECM, comme par exemple la prise de terre.

N° DE BORNE	COU-LEUR DE CABLE	ELEMENT	CONDITION	DONNEES (tension de courant continu)
54	L	Débitmètre d'air	**[Moteur en marche]** ● **Pendant la montée en température** ● Régime de ralenti	0,9 - 1,8V
			[Moteur en marche] ● **Pendant la montée en température** ● Le régime-moteur est de 2.500 tr/mn.	1,9 - 2,3V
55	P	Masse du débitmètre d'air	**[Moteur en marche]** ● **Pendant la montée en température** ● Régime de ralenti	Environ 0 V

Logique de diagnostic de bord

NEEC1551

N° de DTC	Le défaut est détecté quand ...	Eléments de contrôle (causes possibles)
P0103 0103	La tension reç;ue du capteur par l'ECM est excessive-ment élevée.	● Faisceau ou connecteurs (le circuit de capteur est ouvert ou court-circuité) ● Débitmètre d'air
P0102 0102	Une tension excessivement basse du capteur est envoyée à l'ECM* pendant que le moteur tourne.	● Faisceau ou connecteurs (le circuit de capteur est ouvert ou court-circuité) ● Fuites d'air d'admission ● Débitmètre d'air

*: Quand cette anomalie est détectée, l'ECM entre en mode de sécurité mode et le témoin MI s'allume.

MODE DE SÉCURITÉ

NEEC1551S01

Eléments détectés	Condition de fonctionnement du moteur en mode de sécurité
Circuit du débitmètre d'air	Le régime-moteur ne dépasse pas 2 400 tr/mn en raison de la coupure d'alimentation.

Procédure de confirmation de code de défaut (DTC)

NEEC1552

ATTENTION :
Toujours adapter sa vitesse aux exigences de sécurité.

REMARQUE :
Si une 'Procédure de confirmation de DTC'' a précédé, toujours mettre le contact d'allumage sur la position OFF et attendre au moins 5 secondes avant de procéder à l'essai suivant.

Simpo PDF Merge and Split Unregistered Version - http://www.simpopdf.com

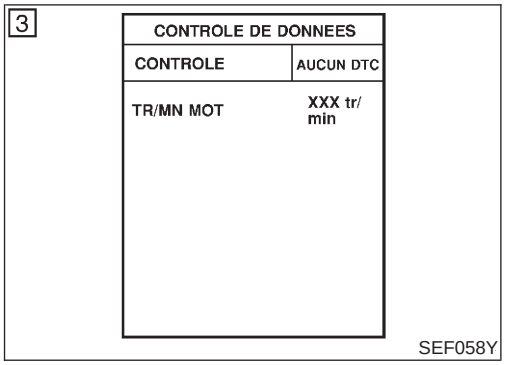

PROCÉDURE POUR DTC P0103

NEEC1552S01

Avec CONSULT-II

1) Mettre le contact d'allumage sur ON.
2) Régler CONSULT-II en mode ''CONTROLE DE DONNEES''.
3) Attendre au moins 6 secondes.
4) Si le DTC de 1er parcours est détecté, aller à ''Procédure de diagnostic'', page EC-3165.
   Si le DTC de premier parcours est détecté, passer à l'étape suivante.
5) Démarrer le moteur et le laisser tourner au ralenti pendant au moins 6 secondes.
6) Si le DTC de 1er parcours est détecté, aller à ''Procédure de diagnostic'', page EC-3165.

Avec l'analyseur générique GST

Suivre la procédure ''Avec CONSULT-II''.

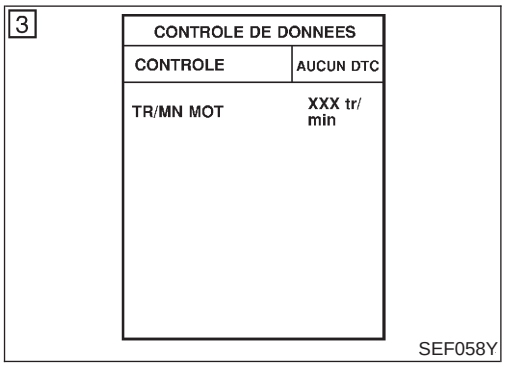

PROCÉDURE POUR DTC P0102

NEEC1552S02

Avec CONSULT-II

1) Mettre le contact d'allumage sur ON.
2) Régler CONSULT-II en mode ''CONTROLE DE DONNEES''.
3) Démarrer le moteur et attendre 5 secondes au plus.
4) Si le DTC de 1er parcours est détecté, aller à ''Procédure de diagnostic'', page EC-3165.

Avec l'analyseur générique GST

Suivre la procédure ''Avec CONSULT-II''.

REMARQUE :

Si le DTC de 1er parcours est confirmé après plus de 5 secondes, il peut y avoir un défaut C.

Simpo PDF Merge and Split Unregistered Version - http://www.simpopdf.com

Schéma de câblage

NEEC1554

EC-MAFS-01

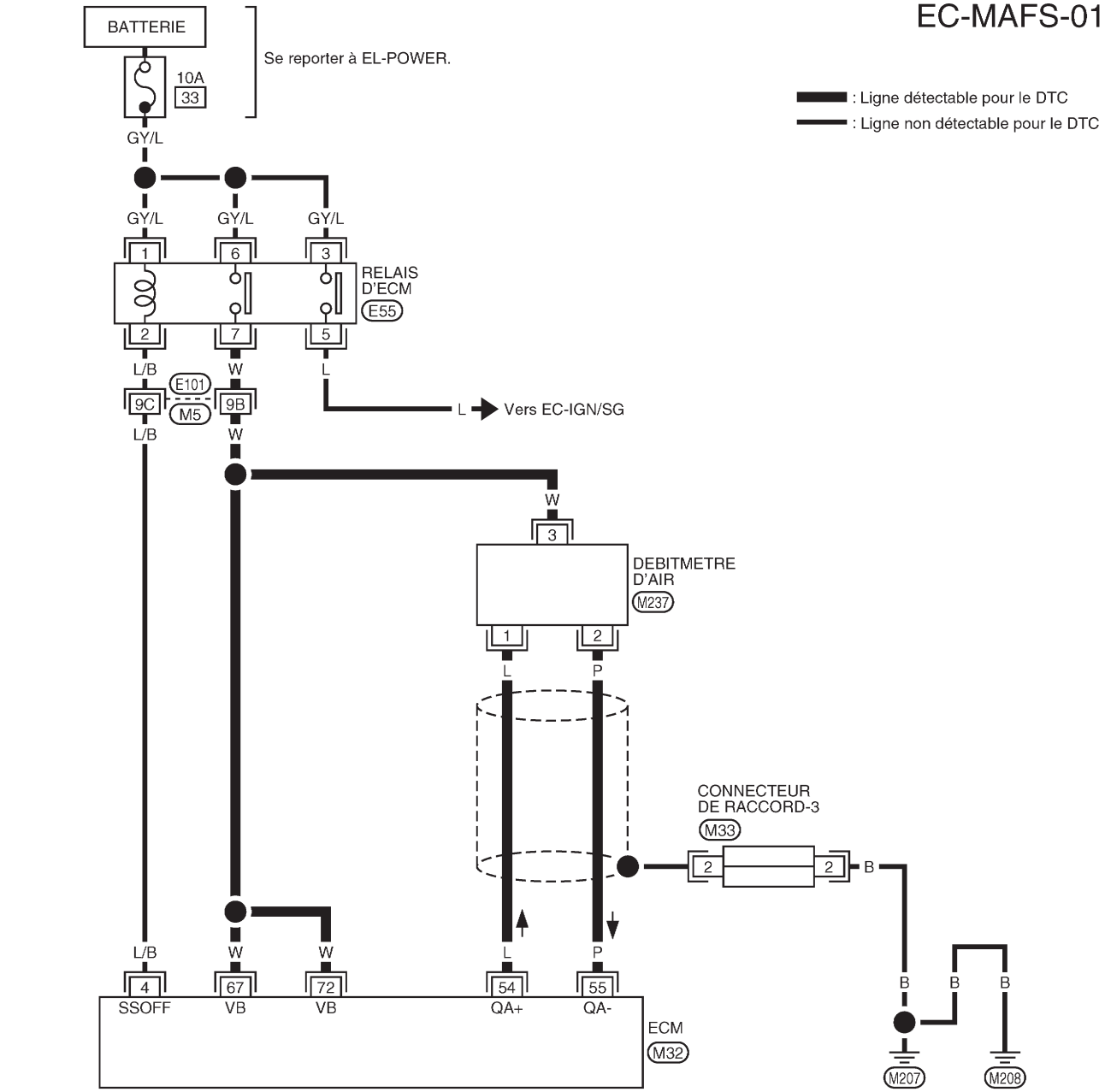

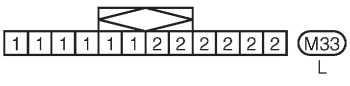

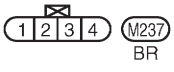

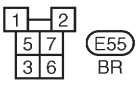

Consulter la dernière page dépliante.
M5 , E101

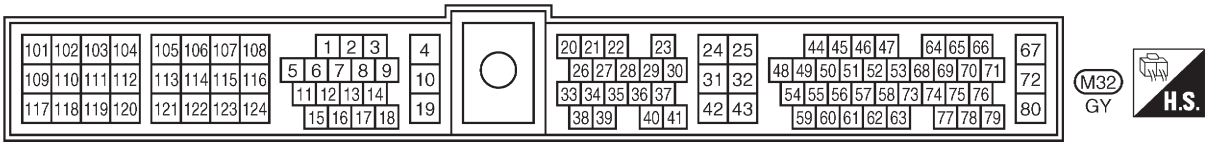

GEC237A

Simpo PDF Merge and Split Unregistered Version - http://www.simpopdf.com

Procédure de diagnostic

NEEC1555

1	DEBUT DE L'INSPECTION	
Quel défaut (P0102, P0103) est reproduit? **P0102 ou P0103**		
P0103	▶	ALLER A 3.
P0102	▶	ALLER A 2.

2	CONTROLER LE SYSTEME D'ADMISSION	
Contrôler ce qui suit en ce qui concerne le raccordement. ● Conduit d'air ● Filtre à air ● Flexibles de dépression ● Passage d'air d'aspiration du conduit d'air au collecteur **BON ou MAUVAIS**		
Bon	▶	ALLER A 3.
Mauvais	▶	Connecter à nouveau les pièces.

3	RESSERRER LES VIS DE MASSE	
1. Mettre le contact d'allumage sur OFF. 2. Desserrer et resserrer les vis de masse du moteur. 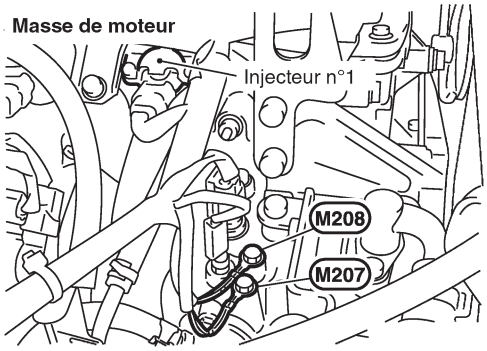 SEC309D		
	▶	ALLER A 4.

Simpo PDF Merge and Split Unregistered Version - http://www.simpopdf.com

4	CONTROLER L'ALIMENTATION ELECTRIQUE

1. Débrancher le connecteur de faisceau du débitmètre d'air.

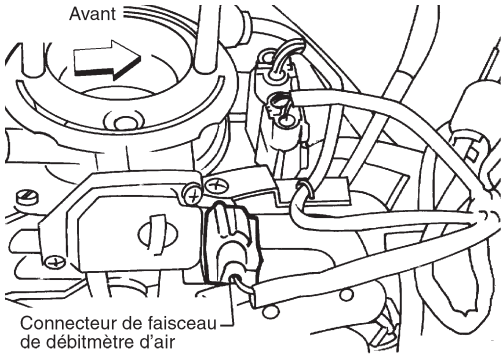

AEC131A

2. Mettre le contact d'allumage sur ON.
3. Contrôler la tension entre la borne 3 et la masse à l'aide de CONSULT-II ou du testeur.

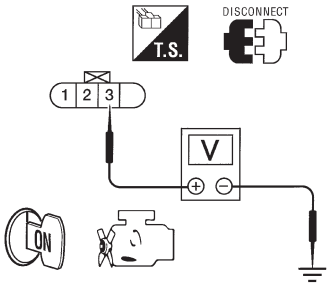

AEC691

Tension : Tension de la batterie

BON ou MAUVAIS

Bon	▶	ALLER A 6.
Mauvais	▶	ALLER A 5.

5	DETECTER LA PIECE DEFECTUEUSE

Contrôler les points suivants.
- Connecteurs de faisceau E101, M5
- Faisceau ouvert ou en court-circuit entre le relais de l'ECM et le débitmètre d'air
- Faisceau ouvert ou en court-circuit entre le débitmètre d'air et l'ECM

	▶	Réparer le faisceau ou les connecteurs.

Simpo PDF Merge and Split Unregistered Version - http://www.simpopdf.com

6	CONTROLER LE CIRCUIT DE MISE A LA MASSE

1. Mettre le contact d'allumage sur OFF.
2. Débrancher le connecteur de faisceau de l'ECM.
3. Vérifier la continuité du faisceau entre la borne 2 du débitmètre d'air et la borne 55 de l'ECM. Se reporter à EC-3165.

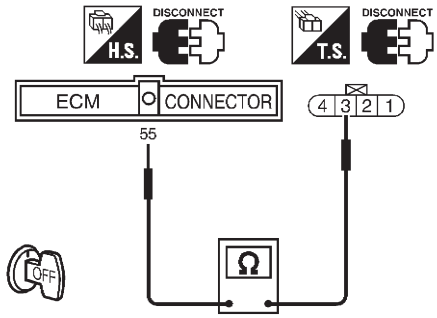

SEF124V

Il doit y avoir continuité.

4. Vérifier également que le faisceau n'est pas en court-circuit à la masse ou à l'alimentation.

BON ou MAUVAIS

Bon	▶	ALLER A 7.
Mauvais	▶	Réparer les faisceaux ou les connecteurs en circuit ouvert ou en court-circuit à la masse ou à l'alimentation.

7	CONTROLER LE CIRCUIT DE SIGNAL D'ENTREE

1. Vérifier la continuité du faisceau entre la borne 1 et la borne 54 de l'ECM. Se reporter au schéma de câblage.
   Il doit y avoir continuité.
2. Vérifier également que le faisceau n'est pas en court-circuit à la masse ou à l'alimentation.

BON ou MAUVAIS

Bon	▶	ALLER A 8.
Mauvais	▶	Réparer les faisceaux ou les connecteurs en circuit ouvert ou en court-circuit à la masse ou à l'alimentation.

Simpo PDF Merge and Split Unregistered Version - http://www.simpopdf.com

8	CONTROLER LE DEBITMETRE D'AIR

1. Brancher à nouveau tous les connecteurs de faisceau débranchés.
2. Mettre le contact d'allumage sur ON.
3. Démarrer le moteur et l'amener à température normale de fonctionnement.
4. Contrôler la tension entre la borne 54 de l'ECM (signal du débitmètre d'air) et la masse.

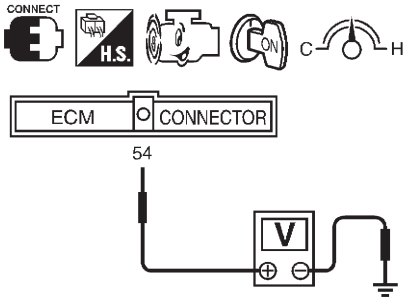

SEF326V

Conditions	Tension V
Contact d'allumage sur 'ON' (moteur arrêté.)	Moins de 1,0
Ralenti (Le moteur est monté en température jusqu'à atteindre une température de fonctionnement normale.)	0,9 - 1,8
2 500 tr/mn (Le moteur est monté en température jusqu'à atteindre une température de fonctionnement normale.)	1,9 - 2,3
Ralenti à environ 4 000 tr/mn*	1,3 - 1,7 à env. 3,0

*: Vérifier la hausse de tension linéaire en réponse à des augmentations du régime du moteur à environ 4.000 tr/mn.

MTBL0326

5. Si la tension est hors norme, débrancher et rebrancher le connecteur du faisceau de débitmètre d'air. Puis, recommencer la vérification précédente.
6. Si le résultat n'est pas conforme, déposer le débitmètre du conduit d'air. Vérifier si le fil chaud n'est pas endommagé ou encrassé.

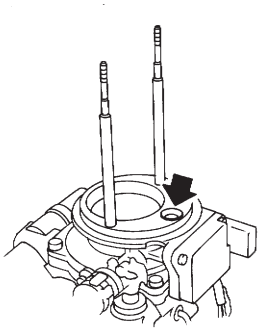

SEF893J

BON ou MAUVAIS

Bon	▶	ALLER A 9.
Mauvais	▶	Remplacer le débitmètre d'air.

Simpo PDF Merge and Split Unregistered Version - http://www.simpopdf.com

9	VERIFIER LE CIRCUIT DE BLINDAGE	
1. Mettre le contact d'allumage sur OFF. 2. Débrancher le connecteur de jonction-3. 3. Contrôler les points suivants. ● Vérifier la continuité la borne 2 du connecteur de jonction-3 et la masse. ● Connecteur de jonction-3 (Se reporter à ''DISPOSITION DES FAISCEAUX'', dans la section EL.) **Il doit y avoir continuité.** 4. Vérifier également que le faisceau n'est pas en court-circuit à l'alimentation.		
BON ou MAUVAIS		
Bon	▶	ALLER A 10.
Mauvais	▶	Réparer les faisceaux ou connecteurs en circuit ouvert ou en court-circuit à l'alimentation.

10	VERIFIER SI L'INCIDENT EST INTERMITTENT	
Effectuer un ''DIAGNOSTIC DES DEFAUTS EN CAS INCIDENT INTERMITTENT'', voir page EC-3132.		
	▶	**FIN DE L'INSPECTION**

Simpo PDF Merge and Split Unregistered Version - http://www.simpopdf.com

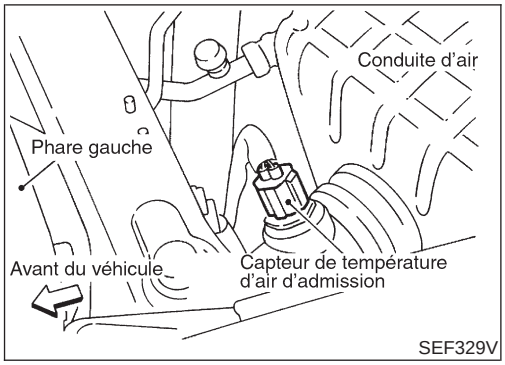

SEF329V

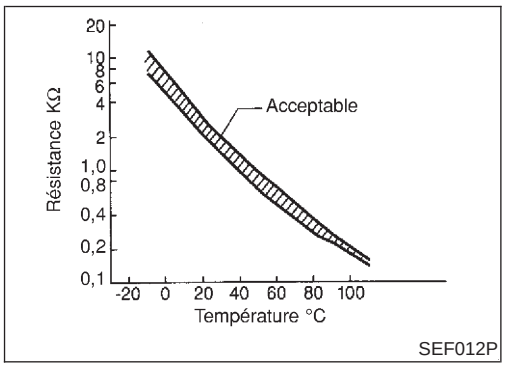

SEF012P

Description des composants

NEEC0066

Le capteur de température d'air d'admission est installé dans le logement du conduit d'air. Le capteur détecte la température d'air d'admission et transmet un signal à l'ECM.

Le boîtier de capteur de température utilise une thermistance qui est sensible aux variations de température. La résistance électrique de la thermistance diminue au fur et à mesure que la température monte.

<Données de référence>

Température de l'air d'admission °C	Tension* V	Résistance kΩ
20	3,5	2,1 - 2,9
80	1,23	0,27 - 0,38

*: Ces données sont des valeurs de référence et sont mesurées entre la borne 61 de l'ECM (capteur de température d'air d'admission) et la masse.

ATTENTION :

Ne pas utiliser de bornes de masse de l'ECM lors de la mesure de la tension d'entrée/de sortie. En agissant de la sorte, il est possible d'endommager le transistor de l'ECM. Utiliser une masse autre que les bornes de l'ECM, comme par exemple la prise de terre.

Bornes de l'ECM et valeurs de référence

NEEC1556

N° DE BORNE	COULEUR DE CABLE	ELEMENT	CONDITION	DONNEES (tension de courant continu)
43	B	Masse de capteurs	**[Moteur en marche]** ● Régime de ralenti	Environ 0 V
61	P/B	Capteur de température d'air d'admission	**[Moteur en marche]**	Environ 0 - 4,8V La tension de sortie varie avec la température d'air d'admission.

Simpo PDF Merge and Split Unregistered Version - http://www.simpopdf.com

Logique de diagnostic de bord

NEEC0067

N° de DTC	Nom de diagnostic des défauts	Condition de détection de DTC	Cause possible
P0112 0112	Faible entrée du circuit du capteur de température d'air d'admission	La tension reç;ue du capteur par l'ECM est excessivement basse.	● Faisceau ou connecteurs (le circuit de capteur est ouvert ou court-circuité) ● Capteur de température d'air d'admission
P0113 0113	Entrée élevée du circuit du capteur de température d'air d'admission	La tension reç;ue du capteur par l'ECM est excessivement élevée.	

MODE DE SÉCURITÉ

NEEC0067S01

Lorsque ce défaut est détecté, l'ECM passe en mode de sécurité et le témoin MI s'allume.

Condition de fonctionnement du moteur en mode de sécurité
L'ECM fonctionne dans la supposition que la température d'admission d'air est de 25°C.

Procédure de confirmation de code de défaut (DTC)

NEEC0068

REMARQUE :

Si une ''Procédure de confirmation de DTC'' a précédé, toujours mettre le contact d'allumage sur la position OFF et attendre au moins 5 secondes avant de procéder à l'essai suivant.

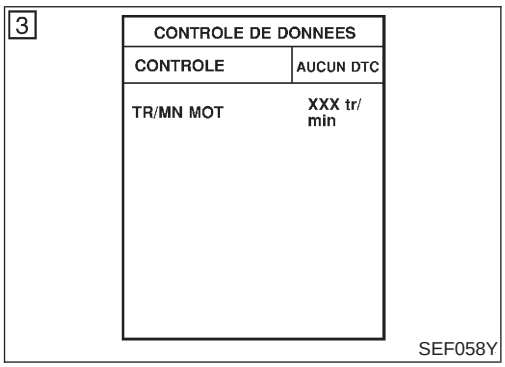

Avec CONSULT-II

1) Mettre le contact d'allumage sur ON.
2) Régler CONSULT-II en mode ''CONTROLE DE DONNEES''.
3) Attendre au moins 5 secondes.
4) Si le DTC de 1er parcours est détecté, aller à ''Procédure de diagnostic'', page EC-3173.

Avec l'analyseur générique GST

Suivre la procédure ''Avec CONSULT-II''.

Simpo PDF Merge and Split Unregistered Version - http://www.simpopdf.com

Schéma de câblage

NEEC0069

EC-IATS-01

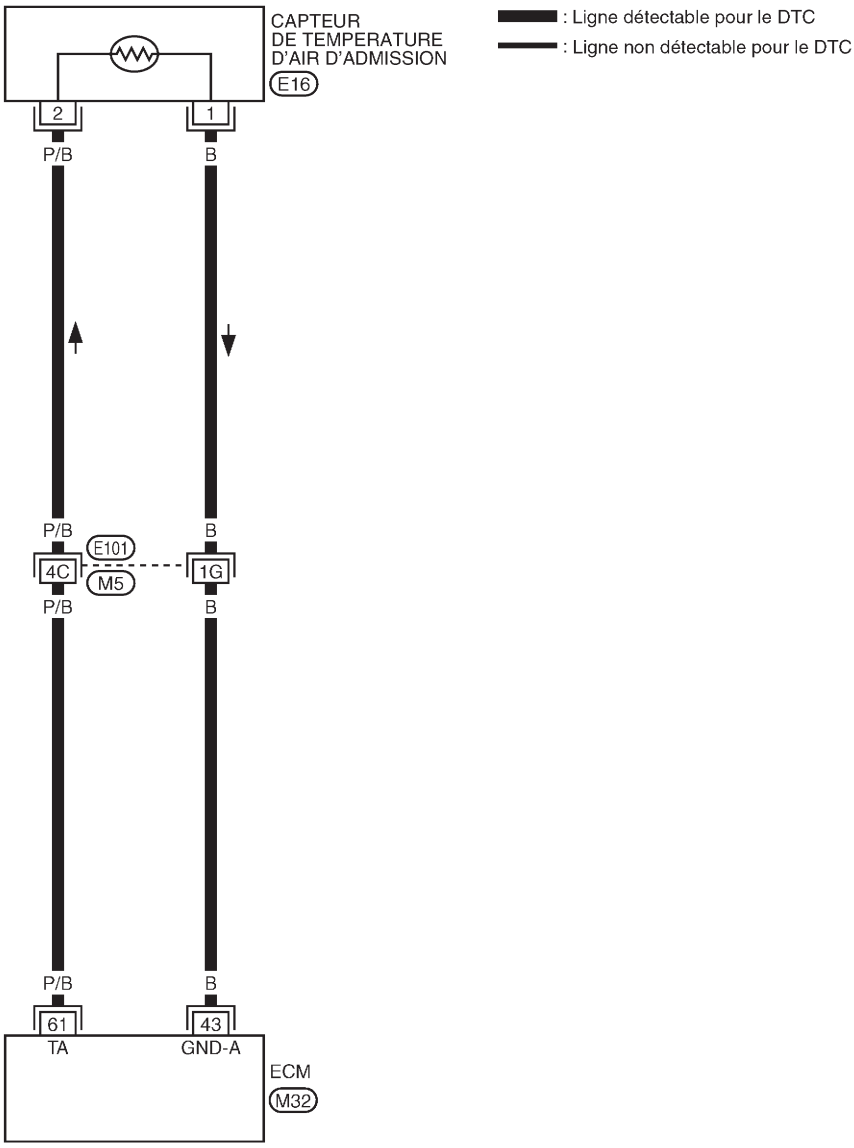

1 2 E16
GY

Consulter la dernière page dépliante.
M5 , E101

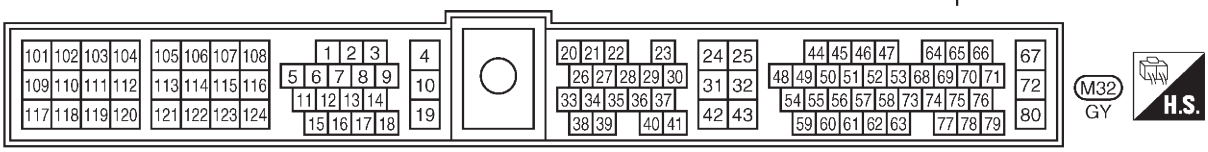

GEC238A

Simpo PDF Merge and Split Unregistered Version - http://www.simpopdf.com

Procédure de diagnostic

NEEC0070

1	CONTROLER L'ALIMENTATION ELECTRIQUE

1. Mettre le contact d'allumage sur OFF.
2. Débrancher le connecteur de faisceau du capteur de température d'air d'admission.

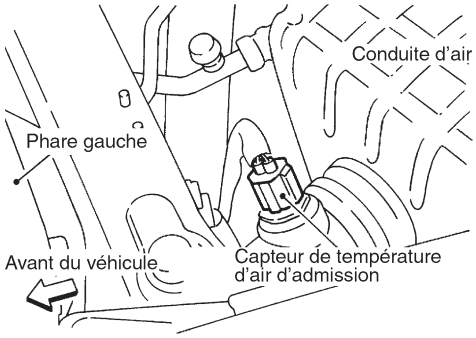

SEF329V

3. Mettre le contact d'allumage sur ON.
4. Vérifier la tension entre la borne 2 et la masse avec CONSULT-II ou le testeur.

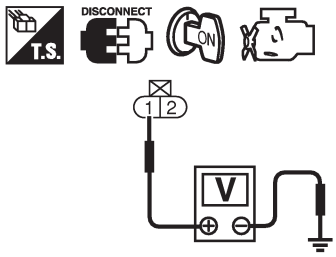

SEC271D

Tension : Environ 5 V

BON ou MAUVAIS

Bon	▶	ALLER A 3.
Mauvais	▶	ALLER A 2.

2	DETECTER LA PIECE DEFECTUEUSE

Contrôler les points suivants.
- Connecteurs de faisceau E101, M5
- Faisceau ouvert ou en court-circuit entre l'ECM et le capteur de température d'air d'admission

	▶	Réparer le faisceau ou les connecteurs.

3	CONTROLER LE CIRCUIT DE MISE A LA MASSE

1. Mettre le contact d'allumage sur OFF.
2. Vérifier la continuité du faisceau entre la borne 1 du capteur de température d'air d'admission et la masse du moteur.
   Se reporter au schéma de câblage.
   Il doit y avoir continuité.
3. Vérifier également que le faisceau n'est pas en court-circuit à l'alimentation.

BON ou MAUVAIS

Bon	▶	ALLER A 5.
Mauvais	▶	ALLER A 4.

Simpo PDF Merge and Split Unregistered Version - http://www.simpopdf.com

4	DETECTER LA PIECE DEFECTUEUSE
Contrôler les points suivants. ● Connecteurs de faisceau E101, M5 ● Faisceau ouvert ou en court-circuit entre l'ECM et le capteur de température d'air d'admission	
▶	Réparer les faisceaux ou connecteurs en circuit ouvert ou en court-circuit à l'alimentation.

5	CONTROLER LE CAPTEUR DE TEMPERATURE D'AIR D'ADMISSION

Vérifier la résistance comme indiqué sur l'illustration ci-contre.

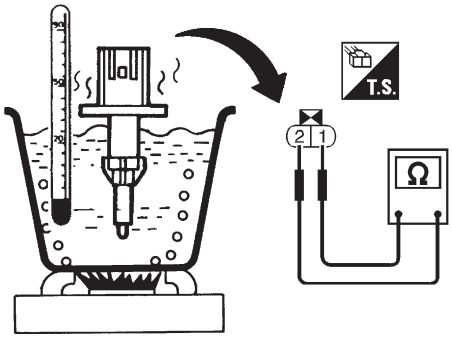

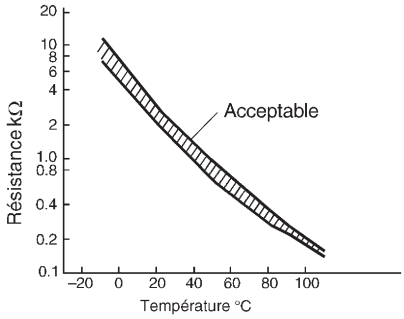

SEC272D

<Reference data>

Température °C	Résistance kΩ
20	2,1 - 2,9
80	0,27 - 0,38

MTBL1306

BON ou MAUVAIS

Bon	▶	ALLER A 6.
Mauvais	▶	Remplacer le capteur de température d'air d'admission.

6	VERIFIER SI L'INCIDENT EST INTERMITTENT
Effectuer un ''DIAGNOSTIC DES DEFAUTS EN CAS INCIDENT INTERMITTENT'', voir page EC-3132.	
▶	**FIN DE L'INSPECTION**

Simpo PDF Merge and Split Unregistered Version - http://www.simpopdf.com

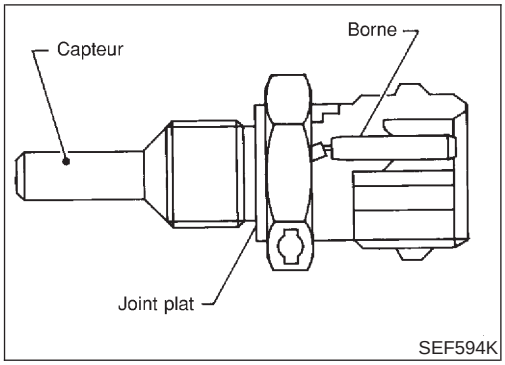

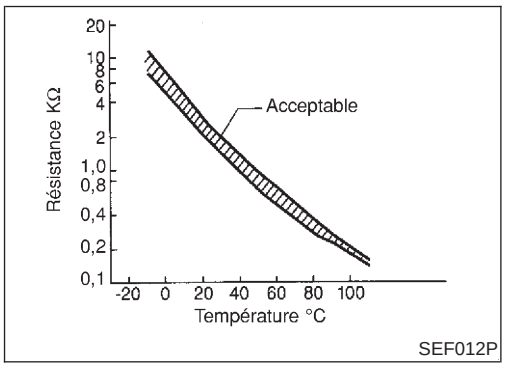

Description des composants

NEEC0072

Le capteur de température du liquide de refroidissement du moteur est utilisé pour détecter la température du liquide de refroidissement du moteur. Le capteur modifie un signal de tension de l'ECM. Le signal modifié retourne à l'ECM en tant qu'entrée de température du moteur. Le capteur utilise une thermistance qui est sensible aux variations de température. La résistance électrique de la thermistance diminue au fur et à mesure que la température monte.

<Données de référence>

Température du liquide de refroidissement du moteur °C	Tension* V	Résistance kΩ
-10 (14)	4,4	7,0 - 11,4
20	3,5	2,1 - 2,9
50	2,2	0,68 - 1,00
90	0,9	0,236 - 0,260

*: Ces données sont de valeurs de références et sont mesurées entre la borne 59 de l'ECM (capteur de température de liquide de refroidissement du moteur) et la masse.

ATTENTION :

Ne pas utiliser de bornes de masse de l'ECM lors de la mesure de la tension d'entrée/de sortie. En agissant de la sorte, il est possible d'endommager le transistor de l'ECM. Utiliser une masse autre que les bornes de l'ECM, comme par exemple la prise de terre.

Valeur de référence de CONSULT-II en mode de contrôle de données

NEEC0073

ELEMENT DE CONTROLE	CONDITION	SPECIFICATION
CAP TEMP MOT	● Moteur : une fois le moteur chaud	Plus de 70°C

Bornes de l'ECM et valeurs de référence

NEEC1557

N° DE BORNE	COULEUR DE CABLE	ELEMENT	CONDITION	DONNEES (tension de courant continu)
43	B	Masse de capteurs	**[Moteur en marche]** ● Régime de ralenti	Environ 0 V

Simpo PDF Merge and Split Unregistered Version - http://www.simpopdf.com

N° DE BORNE	COULEUR DE CABLE	ELEMENT	CONDITION	DONNEES (tension de courant continu)
59	LG/R	Capteur de température du liquide de refroidissement du moteur	**[Moteur en marche]**	Environ 0 - 4,8V La tension de sortie varie avec la température du liquide de refroidissement.

Logique de diagnostic de bord

NEEC0074

N° de DTC	Nom de diagnostic des défauts	Condition de détection de DTC	Cause possible
P0117 0117	Faible alimentation du circuit du capteur de température de liquide de refroidissement du moteur	La tension reç;ue du capteur par l'ECM est excessivement basse.	● Faisceau ou connecteurs (le circuit de capteur est ouvert ou court-circuité) ● Capteur de température du liquide de refroidissement du moteur
P0118 0118	Alimentation élevée du circuit du capteur de température du liquide de refroidissement du moteur	La tension reç;ue du capteur par l'ECM est excessivement élevée.	

MODE DE SÉCURITÉ

NEEC0074S01

Lorsque ce défaut est détecté, l'ECM passe en mode de sécurité et le témoin MI s'allume.

Eléments détectés	Condition de fonctionnement du moteur en mode de sécurité	
Circuit du capteur de température du liquide de refroidissement du moteur	La température du liquide de refroidissement du moteur est déterminée par l'ECM sur la base du laps de temps écoulé après avoir mis le contact d'allumage sur ON ou START. CONSULT-II affiche la température du liquide de refroidissement fixée par l'ECM.	
	Condition	Température du liquide de refroidissement du moteur fixée (affichage CONSULT-II)
	Au moment de la mise du contact d'allumage sur ON ou START	40°C
	Plus de 4 minutes environ après mise du contact sur ON ou START	80°C
	Sauf comme indiqué ci-dessus	40 - 80°C (en fonction du temps écoulé)

DTC P0117, P0118 CAPTEUR DE TEMPERATURE MOTEUR
Simpo PDF Merge and Split Unregistered Version - http://www.simpopdf.com

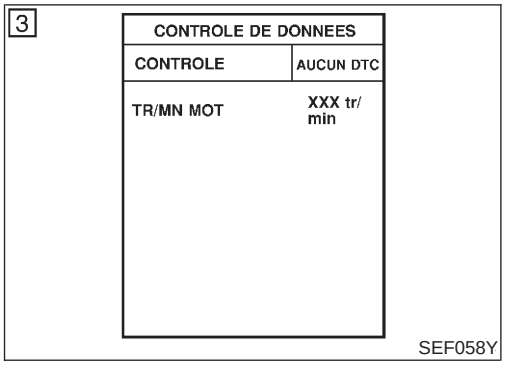

Procédure de confirmation de code de défaut (DTC)

NEEC0075

REMARQUE :

Si une ‘‘Procédure de confirmation de DTC’’ a précédé, toujours mettre le contact d’allumage sur la position OFF et attendre au moins 5 secondes avant de procéder à l’essai suivant.

Avec CONSULT-II

1) Mettre le contact d’allumage sur ON.
2) Régler CONSULT-II en mode ‘‘CONTROLE DE DONNEES’’.
3) Attendre au moins 5 secondes.
4) Si le DTC de 1er parcours est détecté, aller à ‘‘Procédure de diagnostic’’, page EC-3179.

Avec l’analyseur générique GST

Suivre la procédure ‘‘Avec CONSULT-II’’.

Simpo PDF Merge and Split Unregistered Version - http://www.simpopdf.com

Schéma de câblage

NEEC0076

EC-ECTS-01

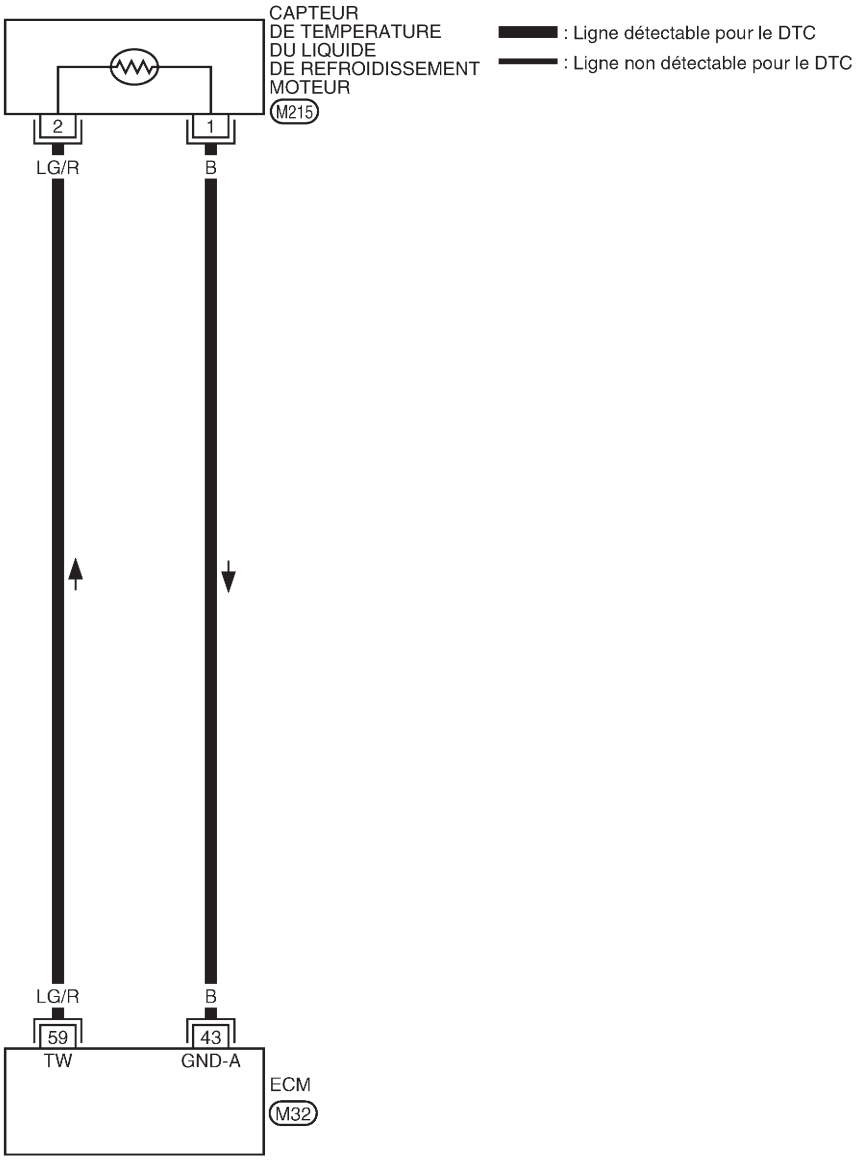

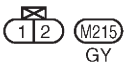

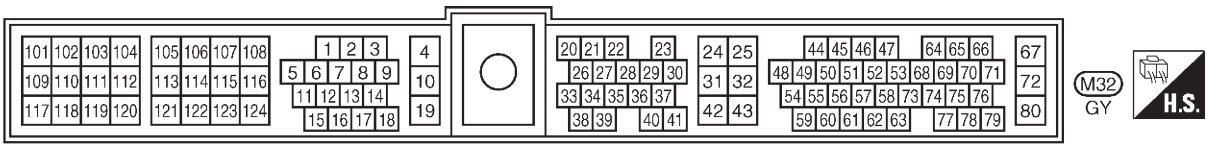

GEC239A

Simpo PDF Merge and Split Unregistered Version - http://www.simpopdf.com

Procédure de diagnostic

NEEC0077

1	CONTROLER L'ALIMENTATION ELECTRIQUE

1. Mettre le contact d'allumage sur OFF.
2. Débrancher le connecteur de faisceau du capteur de température du liquide de refroidissement du moteur.

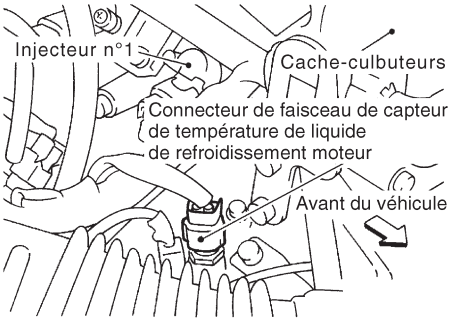

SEF330V

3. Mettre le contact d'allumage sur ON.
4. Contrôler la tension entre la borne 2 du capteur de température du liquide de refroidissement du moteur et la masse à l'aide de CONSULT-II ou du testeur.

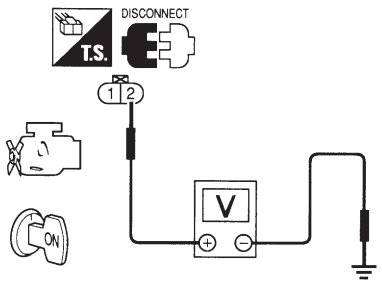

SEF541P

Tension : Environ 5 V

BON ou MAUVAIS

Bon	▶	ALLER A 3.
Mauvais	▶	ALLER A 2.

2	DETECTER LA PIECE DEFECTUEUSE

Vérifier que le faisceau n'est pas ouvert ou en court-circuit entre l'ECM et le capteur de température du liquide de refroidissement du moteur.

	▶	Réparer le faisceau ou les connecteurs.

3	CONTROLER LE CIRCUIT DE MISE A LA MASSE

1. Mettre le contact d'allumage sur OFF.
2. Vérifier la continuité du faisceau entre la borne 1 du capteur de température du liquide de refroidissement du moteur et la masse du moteur. Se reporter au schéma de câblage.
   Il doit y avoir continuité.
3. Vérifier également que le faisceau n'est pas en court-circuit à l'alimentation.

BON ou MAUVAIS

Bon	▶	ALLER A 5.
Mauvais	▶	ALLER A 4.

Simpo PDF Merge and Split Unregistered Version - http://www.simpopdf.com

4	DETECTER LA PIECE DEFECTUEUSE
Vérifier que le faisceau n'est pas ouvert ou en court-circuit entre l'ECM et le capteur de température du liquide de refroidissement du moteur.	
▶	Réparer les faisceaux ou connecteurs en circuit ouvert ou en court-circuit à l'alimentation.

5	CONTROLER LE CAPTEUR DE TEMPERATURE DU LIQUIDE DE REFROIDISSEMENT

Vérifier la résistance comme indiqué sur l'illustration ci-contre.

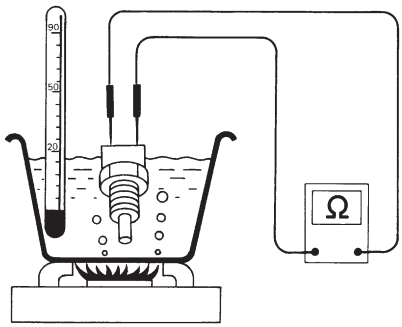

SEF152P

<Données de référence>

Température °C	Résistance kΩ
20	2,1 -2,9
50	0,68 - 1,00
90	0,236 - 0,260

MTBL0285

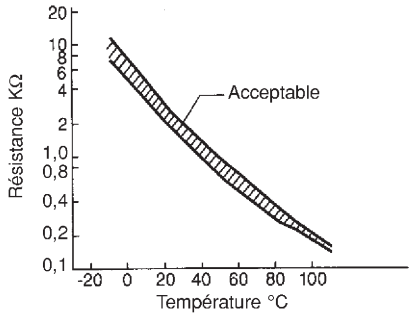

SEF012P

BON ou MAUVAIS

Bon	▶	ALLER A 6.
Mauvais	▶	Remplacer le capteur de température du liquide de refroidissement du moteur.

6	VERIFIER SI L'INCIDENT EST INTERMITTENT
Effectuer un ''DIAGNOSTIC DES DEFAUTS EN CAS INCIDENT INTERMITTENT'', voir page EC-3132.	
▶	**FIN DE L'INSPECTION**

Simpo PDF Merge and Split Unregistered Version - http://www.simpopdf.com

Description des composants

NEEC0079

REMARQUE :
Si le DTC P0121, P0122 ou P0123 s'affiche avec le DTC P0510, réaliser d'abord le diagnostic des défauts pour le DTC P0510, EC-3321.

Le capteur de position de papillon répond aux mouvements de la pédale d'accélérateur. Ce capteur est une sorte de potentiomètre qui transforme la position de papillon en tension électrique qu'il transmet à l'ECM. De plus, le capteur détecte la vitesse d'ouverture et de fermeture de la soupape de papillon et transmet le signal de tension à l'ECM.
La position ralenti de la soupape de papillon est déterminée par l'ECM lorsqu'il reç;oit le signal provenant du capteur de position de papillon. Ce capteur commande certaines fonctions du moteur comme par exemple la coupure de l'alimentation. En revanche, les contacts de ''ralenti et de position plein gaz'', lesquels sont intégrés au capteur de position du papillon, ne servent pas à la commande du moteur.

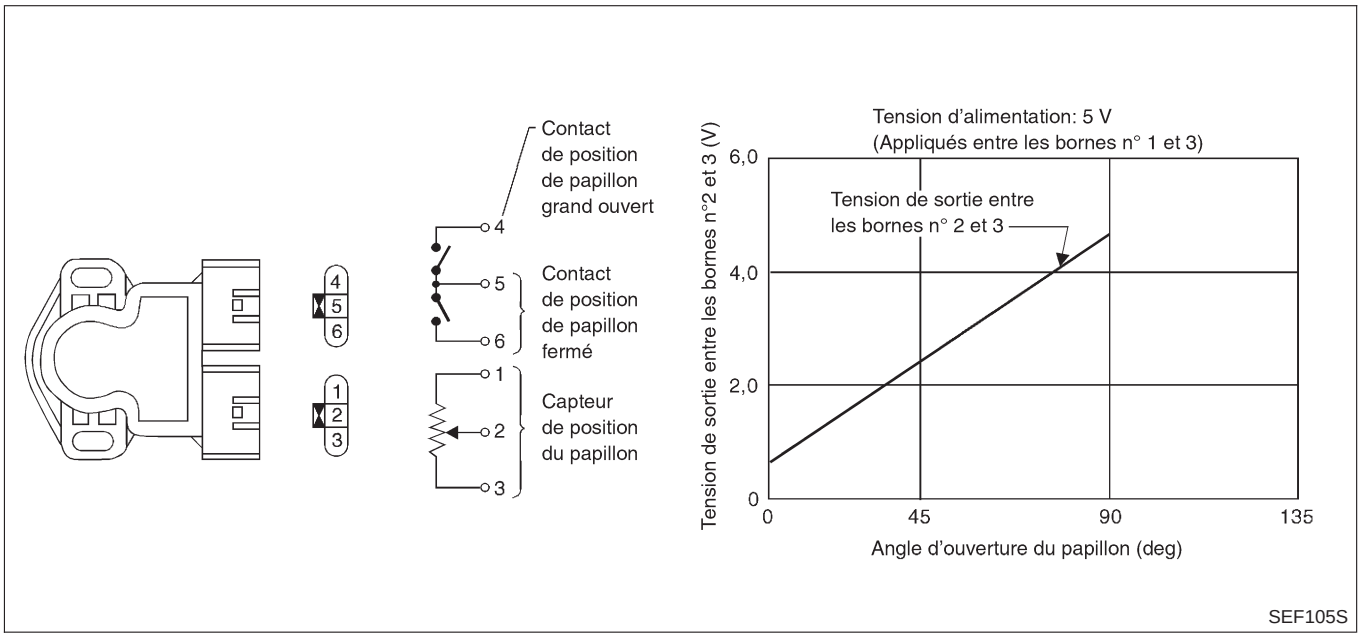

Valeur de référence de CONSULT-II en mode de contrôle de données

NEEC0080

Les données de spécification sont des valeurs de référence.

ELEMENT DE CONTROLE	CONDITION		SPECIFICATION
CAP PAPILLON	• Contact d'allumage : ON (moteur à l'arrêt) • Moteur : une fois le moteur chaud	Soupape de papillon : entièrement fermée	0,2 - 0,8V
		Soupape de papillon : entièrement ouverte	3,5 - 4,5V
C/P PAP ABSOL	• Contact d'allumage : ON (moteur à l'arrêt) • Moteur : une fois le moteur chaud	Soupape de papillon : entièrement fermée	0,0
		Soupape de papillon : entièrement ouverte	env. 80

Simpo PDF Merge and Split Unregistered Version - http://www.simpopdf.com

Bornes de l'ECM et valeurs de référence

=NEEC0081

Les données de spécification sont des valeurs de référence et sont mesurées entre chaque borne et la masse.

ATTENTION :
Ne pas utiliser de bornes de masse de l'ECM lors de la mesure de la tension d'entrée/de sortie. En agissant de la sorte, il est possible d'endommager le transistor de l'ECM. Utiliser une masse autre que les bornes de l'ECM, comme par exemple la prise de terre.

N° DE BORNE	COULEUR DE CABLE	ELEMENT	CONDITION	DONNEES (tension de courant continu)
23	G	Capteur d'ouverture de papillon	**[Contact d'allumage sur ON]** ● **Pendant la montée en température** ● Pédale d'accélérateur entièrement relâchée	0,2 - 0,8V
			[Contact d'allumage sur ON] ● Pédale d'accélérateur enfoncée au maximum	3,5 - 4,5V
42	G/B	Alimentation des capteurs	**[Contact d'allumage sur ON]**	Environ 5 V
43	B	Masse de capteurs	**[Moteur en marche]** ● Régime de ralenti	Environ 0 V

Logique de diagnostic de bord

NEEC0082

N° de DTC		Le défaut est détecté quand ...	Eléments de contrôle (causes possibles)
P0121 0121	A)	Une tension haute en provenance du capteur est envoyée à l'ECM sous charge de conduite légère.	● Faisceau ou connecteurs (circuit du capteur de position de papillon ouvert ou en court-circuit) ● Capteur d'ouverture de papillon ● Injecteur de carburant ● Capteur d'angle d'arbre à cames ● Débitmètre d'air
	B)	Une tension basse en provenance du capteur est envoyée à l'ECM sous charge de conduite importante.	● Faisceau ou connecteurs (circuit du capteur de position de papillon ouvert ou en court-circuit) ● Fuites d'air d'admission ● Capteur d'ouverture de papillon

Simpo PDF Merge and Split Unregistered Version - http://www.simpopdf.com

Procédure de confirmation de code de défaut (DTC)

=NEEC0083

REMARQUE :

Si une ‘‘Procédure de confirmation de DTC’’ a précédé, toujours mettre le contact d’allumage sur la position OFF et attendre au moins 5 secondes avant de procéder à l’essai suivant.

3

CONTROLE DE DONNEES	
CONTROLE	AUCUN DTC
TR/MN MOT	XXX tr/min

SEF058Y

PROCEDURE DE DEFAUT A

NEEC0083S02

Avec CONSULT-II

1) Mettre le contact d’allumage sur ON.
2) Régler CONSULT-II en mode ‘‘CONTROLE DE DONNEES’’.
3) Démarrer le moteur et le laisser tourner au ralenti pendant au moins 10 secondes.
   Si le régime au ralenti est supérieur à 1 100 tr/min, maintenir les conditions suivantes pendant au moins 10 secondes afin de maintenir le régime-moteur en-dessous de 1 100 tr/mn.

Levier de vitesses	Position adéquate sauf ‘‘N’’ (un rapport de vitesse plus élevé tel que 3eme ou 4eme convient mieux pour maintenir un faible régime-moteur)
Pédale d’accélérateur	Relâchée
Vitesse du véhicule	Le plus bas possible

4) Si le DTC de 1er parcours est détecté, aller à ‘‘Procédure de diagnostic’’, page EC-3186.

Avec l’analyseur générique GST

Suivre la procédure ‘‘Avec CONSULT-II’’.

6

CONTROLE DE DONNEES	
CONTROLE	PAS DE DTC
CAP PAPILLON	XXX V
C/P PAP ABSOL	XXX %

SEF177Y

PROCEDURE DE DEFAUT B

NEEC0083S03

ATTENTION :

Toujours adapter sa vitesse aux exigences de sécurité.

Avec CONSULT-II

1) Démarrer le moteur et l’amener à température normale de fonctionnement.
2) Mettre le contact d’allumage sur OFF et attendre au moins 5 secondes.
3) Mettre le contact d’allumage sur ON.
4) Sélectionner ‘‘ENCLEN MANU’’ avec CONSULT-II en mode ‘‘CONTROLE DE DONNEES’’.
5) Sélectionner ‘‘CAP PAPILLON’’ et ‘‘C/P PAP ABSOL’’ avec CONSULT-II en mode ‘‘CONTROLE DE DONNEES’’.
6) Appuyer sur ENREGISTRE sur l’écran CONSULT-II tout en enfonç;ant la pédale d’accélérateur.
7) Imprimer le graphique enregistré et vérifier les points suivants :

- La montée de la tension est linéaire en réponse à l’action d’enfoncer la pédale d’accélérateur.
- La tension à pédale d’accélérateur complètement enfoncée est d’environ 4V.

Simpo PDF Merge and Split Unregistered Version - http://www.simpopdf.com

Si les résultats ne sont pas conformes, effectuer une ‘‘Procédure de diagnostic’’, voir page EC-3186.
Si le résultat est satisfaisant, passer à l’étape suivante.

7

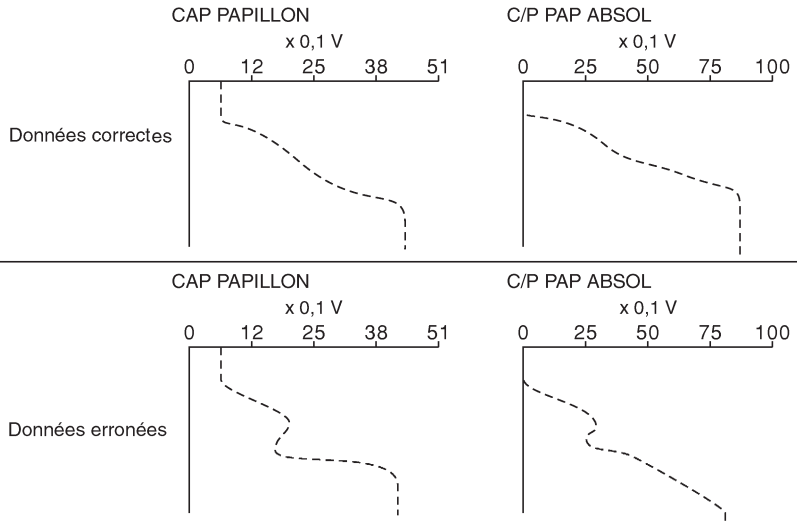

Déclencheur	CAP PAPILLON	C/P PAP ABSOL
	V	%
00"43	2,52	48,8
00"44	2,64	52,0
00"45	2,76	54,9
00"46	2,88	57,4
00"47	3,00	60,5
00"48	3,12	63,3
00"49	3,24	66,1
00"50	3,34	68,9
00"51	3,46	71,4
00"52	3,56	74,2
00"53	3,68	77,0
00"54	3,80	79,8

Déclencheur	CAP PAPILLON	C/P PAP ABSOL
	V	%
00"33	1,96	38,7
00"34	2,02	39,1
00"35	2,08	39,5
00"36	2,14	39,9
00"37	2,20	41,3
00"38	2,26	42,7
00"39	2,32	44,4
00"41	2,26	42,7
00"42	2,20	41,3
00"43	2,58	50,4
00"44	2,66	52,5
00"45	2,76	54,9

SEF245Y

9

CONTROLE DE DONNEES	
CONTROLE	PAS DE DTC
TR/MN MOT	XXX tr/mn
DEBITMETRE-R1	XXX V
CAP TEMP MOT	XXX ºC

SEF178Y

8) Sélectionner ‘‘ENCLEN AUTO’’ avec CONSULT-II en mode ‘‘CONTROLE DE DONNEES‘.
9) Maintenir les conditions suivantes pendant au moins 10 secondes de suite.

TR/MN MOT	Supérieur à 2 000 tr/mn
DEBITMETRE-R1	Plus de 3V
CAP TEMP MOT	Plus de 70°C
Levier de vitesses	Rapport adapté
Site de conduite	Rouler en montée (ce qui augmente la charge moteur) aide à maintenir les conditions requises pour cet essai

10) Si le DTC de 1er parcours est détecté, aller à ‘‘Procédure de diagnostic’’, page EC-3186.

Avec l’analyseur générique GST
Suivre la procédure ‘‘Avec CONSULT-II’’.

Simpo PDF Merge and Split Unregistered Version - http://www.simpopdf.com

Schéma de câblage

NEEC0084

EC-TPS-01

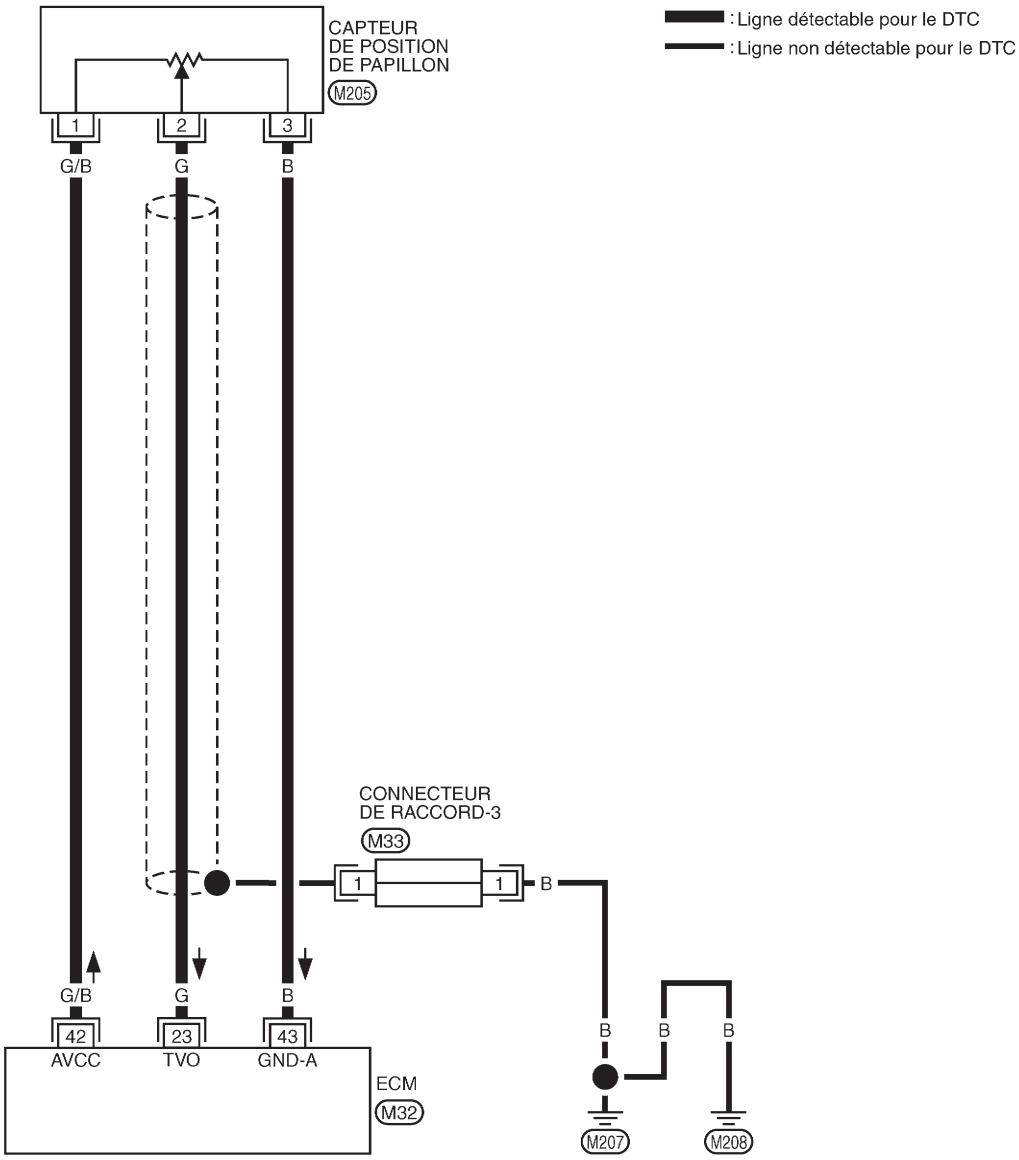

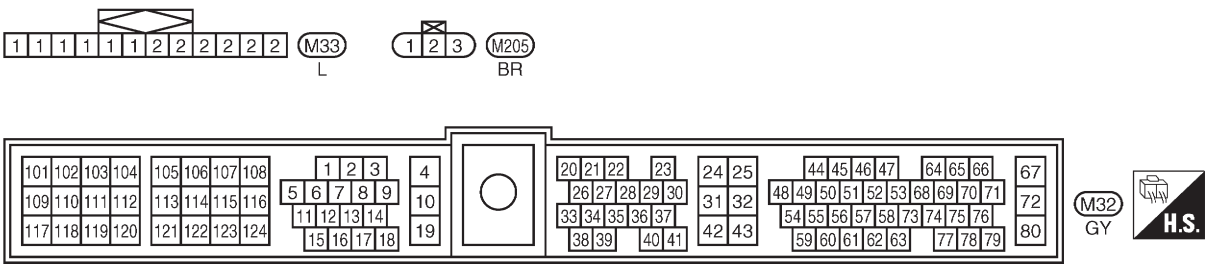

GEC243A

Procédure de diagnostic

NEEC0085

1	DEBUT DE L'INSPECTION

Quel défaut (A ou B) est reproduit ?

ANOMALIE	Type
A	A
B	B

MTBL1307

Type A ou B

Type A	▶	ALLER A 4.
Type B	▶	ALLER A 2.

2	REGLAGE DU CAPTEUR DE POSITION DE PAPILLON

1. Vérifier les points suivants : Se reporter à la "Procédure d'inspection de base", EC-3093.

Eléments	Spécifications
Calage de l'allumage	15° ± 2° AV PMH
Ralenti de base	650 ± 50 tr/mn (en position 'N')
Réglage de la position fermée du contact de ralenti	Epaisseur de la cale d'épaisseur et condition du contact 0,1 mm : MARCHE 0,3 mm : ETEINT
Régime de ralenti cible	700 ± 50 tr/mn (en position 'N')

MTBL1315

BON ou MAUVAIS

Bon	▶	ALLER A 3.

3	CONTROLER LE SYSTEME D'ADMISSION

Contrôler ce qui suit en ce qui concerne le raccordement.
- Conduit d'air
- Filtre à air
- Flexibles de dépression
- Passage d'air d'aspiration du conduit d'air au collecteur d'admission

BON ou MAUVAIS

Bon	▶	ALLER A 4.
Mauvais	▶	Connecter à nouveau les pièces.

4	RESSERRER LES VIS DE MASSE

1. Mettre le contact d'allumage sur OFF.
2. Desserrer et resserrer les vis de masse du moteur.

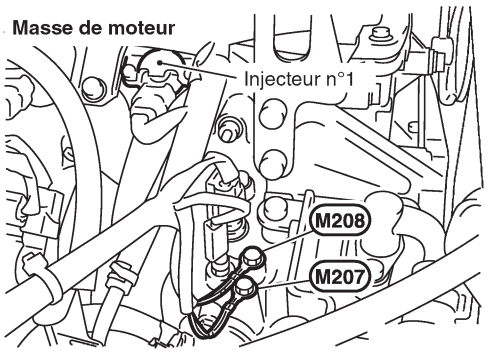

SEC309D

	▶	ALLER A 5.

Simpo PDF Merge and Split Unregistered Version - http://www.simpopdf.com

5	CONTROLER L'ALIMENTATION ELECTRIQUE

1. Débrancher le connecteur de faisceau du capteur de position de papillon.

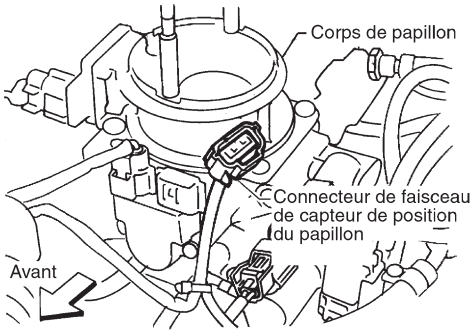

SEF265S

2. Mettre le contact d'allumage sur ON.
3. Contrôler la tension entre la borne 1 et la masse à l'aide de CONSULT-II ou du testeur.

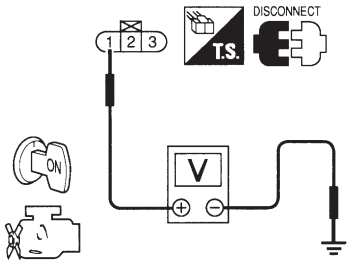

SEF564P

Tension : Environ 5 V

BON ou MAUVAIS

Bon	▶	ALLER A 6.
Mauvais	▶	Réparer le faisceau ou les connecteurs.

6	CONTROLER LE CIRCUIT DE MISE A LA MASSE

1. Mettre le contact d'allumage sur OFF.
2. Vérifier la continuité du faisceau entre la borne 3 du capteur de position de papillon et la masse du moteur. Se reporter au schéma de câblage.

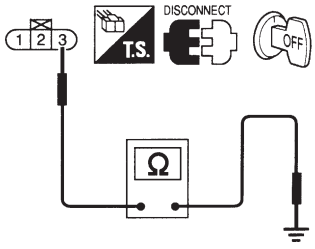

SEF565P

Il doit y avoir continuité.

3. Vérifier également que le faisceau n'est pas en court-circuit à l'alimentation.

BON ou MAUVAIS

Bon	▶	ALLER A 8.
Mauvais	▶	ALLER A 7.

Simpo PDF Merge and Split Unregistered Version - http://www.simpopdf.com

7	DETECTER LA PIECE DEFECTUEUSE
Vérifier que le faisceau entre l'ECM et le capteur de position du papillon n'est pas ouvert ou en court-circuit.	
▶	Réparer les faisceaux ou connecteurs en circuit ouvert ou en court-circuit à l'alimentation.

8	CONTROLER LE CIRCUIT DE SIGNAL D'ENTREE

1. Débrancher le connecteur de faisceau de l'ECM.
2. Vérifier la continuité du faisceau entre la borne 23 et la borne 2 de l'ECM.
   Se reporter au schéma de câblage.
   Il doit y avoir continuité.
3. Vérifier également que le faisceau n'est pas en court-circuit à la masse ou à l'alimentation.

BON ou MAUVAIS

Bon (avec CONSULT-II)	▶	ALLER A 9.
Bon (sans CONSULT-II)	▶	ALLER A 10.
Mauvais	▶	Réparer les faisceaux ou les connecteurs en circuit ouvert ou en court-circuit à la masse ou à l'alimentation.

9	CONTROLER LE CAPTEUR DE POSITION DE PAPILLON

Avec CONSULT-II

1. Brancher à nouveau tous les connecteurs de faisceau débranchés.
2. Démarrer le moteur et l'amener à température normale de fonctionnement.
3. Arrêter le moteur et mettre le contact d'allumage sur ON.
4. Régler CONSULT-II en mode ''CONTROLE DE DONNEES''.
5. Vérifier la tension du ''CAP PAPILLON'' dans les conditions suivantes.

CONTROLE DE DONNEES	
CONTROLE	PAS DE DTC
TR/MN MOT	XXX tr/mn
CAP TEMP EAU	XXX °C
CAP PAPILLON	XXX V

SEF179Y

REMARQUE :
Les relevés doivent être effectués avec le capteur de position de papillon installé dans le véhicule.

Conditions du papillon	Tension V
Complètement fermé	0,2 - 0,8 (a)
Partiellement ouvert	Entre (a) et (b)
Complètement ouvert	3,5 - 4,5 (b)

MTBL0579

Si le résultat n'est pas satisfaisant, régler le contact de position de papillon fermé. Se reporter à la ''Procédure d'inspection de base'', EC-3093.

BON ou MAUVAIS

BON (Type B à l'étape 1)	▶	ALLER A 11.
BON (Type A ou C à l'étape 1)	▶	ALLER A 14.
Mauvais	▶	Remplacer le capteur de position de papillon. Pour le régler, effectuer une ''Inspection de base'', EC-3093.

Simpo PDF Merge and Split Unregistered Version - http://www.simpopdf.com

10	CONTROLER LE CAPTEUR DE POSITION DE PAPILLON

Sans CONSULT-II

1. Brancher à nouveau tous les connecteurs de faisceau débranchés.
2. Démarrer le moteur et l'amener à température normale de fonctionnement.
3. Arrêter le moteur et mettre le contact d'allumage sur ON.
4. Contrôler la tension entre la borne 23 de l'ECM (signal du capteur de position de papillon) et la masse dans les conditions suivantes.

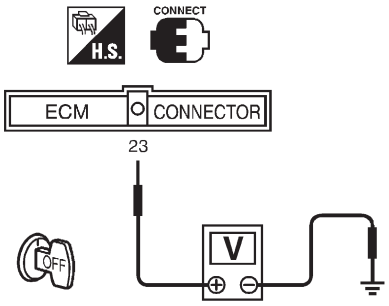

SEF767W

REMARQUE :
Les relevés doivent être effectués avec le capteur de position de papillon reposé sur le véhicule.

Conditions du papillon	Tension V
Complètement fermé	0,2 - 0,8 (a)
Partiellement ouvert	Entre (a) et (b)
Complètement ouvert	3,5 - 4,5 (b)

MTBL0579

Si le résultat n'est pas satisfaisant, régler le contact de position de papillon fermé. Se reporter à la procédure ''Inspection de base'', EC-3093.

BON ou MAUVAIS

BON (Type B à l'étape 1) ▶	ALLER A 11.
BON (Type A ou C à l'étape 1) ▶	ALLER A 14.
Mauvais ▶	Remplacer le capteur de position de papillon. Pour le régler, effectuer une ''Inspection de base'', EC-3093.

Simpo PDF Merge and Split Unregistered Version - http://www.simpopdf.com

11	CONTROLER LE DEBITMETRE D'AIR

1. Mettre le contact d'allumage sur ON.
2. Démarrer le moteur et l'amener à température normale de fonctionnement.
3. Vérifier la tension entre la borne 54 de l'ECM (signal du débitmètre d'air) et la masse.

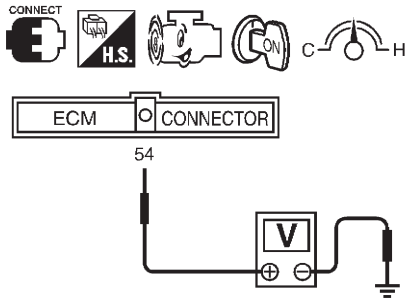

SEF326V

Conditions	Tension V
Contact d'allumage sur 'ON' (moteur arrêté.)	Moins de 1,0
Ralenti (Le moteur est monté en température jusqu'à atteindre une température de fonctionnement normale.)	0,9 - 1,8
2 500 tr/mn (Le moteur est monté en température jusqu'à atteindre une température de fonctionnement normale.)	1,9 - 2,3
Ralenti à environ 4 000 tr/mn*	1,3 - 1,7 à env. 3,0

*: Vérifier la hausse de tension linéaire en réponse à des augmentations du régime du moteur à environ 4.000 tr/mn.

MTBL0326

4. Si la tension est hors norme, débrancher et rebrancher le connecteur du faisceau de débitmètre d'air. Puis, recommencer la vérification précédente.
5. Si le résultat n'est pas conforme, déposer le débitmètre du conduit d'air. Vérifier si le fil chaud n'est pas endommagé ou encrassé.

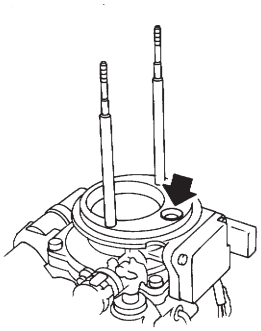

SEF893J

BON ou MAUVAIS

Bon	▶	ALLER A 12.
Mauvais	▶	Remplacer le débitmètre d'air.

Simpo PDF Merge and Split Unregistered Version - http://www.simpopdf.com

12	CONTROLER LE CAPTEUR D'ANGLE D'ARBRE A CAMES

1. Démarrer le moteur et l'amener à température normale de fonctionnement.
2. Vérifier la tension entre les bornes 49 ou (44)* de l'ECM et la masse du moteur, les bornes 44, 48 ou (49, 53)* de l'ECM et la masse du moteur.

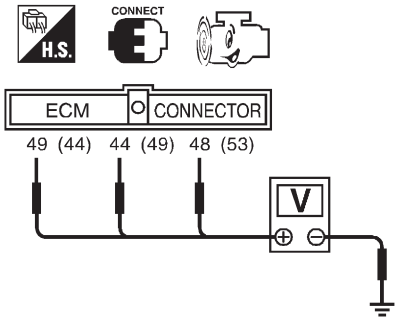

Borne 44, 48 ou (49, 53)* et masse de moteur

Condition	Ralenti	2 000 tr/mn
Tension	0,2 - 0,5V	0 - 0,5V
Signal d'impulsion	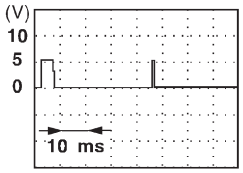	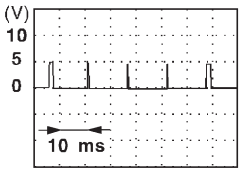

Borne 49 ou (44)* et masse de moteur

Condition	Ralenti	2 000 tr/mn
Tension	Environ 2,5V	Environ 1,0V
Signal d'impulsion	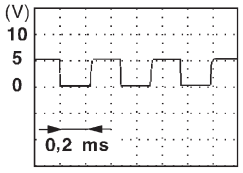	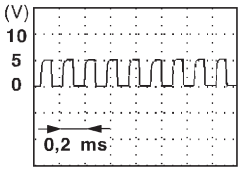

SEC273D

*: Modèle avec NATS (système antivol Nissan)

BON ou MAUVAIS

Bon	▶	ALLER A 13.
Mauvais	▶	Remplacer l'ensemble du distributeur avec le capteur d'angle d'arbre à cames.

Simpo PDF Merge and Split Unregistered Version - http://www.simpopdf.com

13	CONTROLER L'INJECTEUR DE CARBURANT

1. Débrancher le connecteur de faisceau de l'injecteur.
2. Vérifier la résistance entre les bornes comme indiqué sur l'illustration ci-contre.

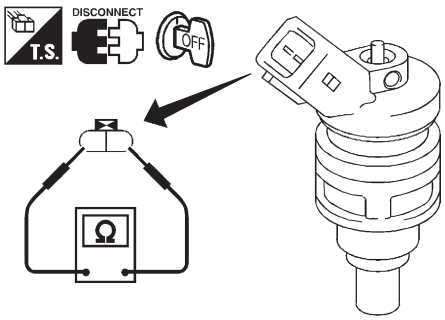

SEF836Q

Résistance : 10 - 14Ω [à 25°C]

BON ou MAUVAIS

Bon	▶	ALLER A 14.
Mauvais	▶	Remplacer l'injecteur de carburant.

14	VERIFIER LE CIRCUIT DE BLINDAGE

1. Mettre le contact d'allumage sur OFF.
2. Retirer le connecteur de jonction-3.
3. Contrôler les points suivants.

- Continuité entre la borne 2 du connecteur de jonction-3 et la masse
- Connecteur de jonction-3

(Se reporter à ''DISPOSITION DES FAISCEAUX'', section EL.)

Il doit y avoir continuité.

4. Vérifier également que le faisceau n'est pas en court-circuit à l'alimentation.
5. Ensuite rebrancher le connecteur de jonction.

BON ou MAUVAIS

Bon	▶	ALLER A 15.
Mauvais	▶	Réparer les faisceaux ou connecteurs en circuit ouvert ou en court-circuit à l'alimentation.

15	VERIFIER SI L'INCIDENT EST INTERMITTENT
Effectuer un ''DIAGNOSTIC DES DEFAUTS EN CAS INCIDENT INTERMITTENT'', voir page EC-3132.	
▶	**FIN DE L'INSPECTION**

Simpo PDF Merge and Split Unregistered Version - http://www.simpopdf.com

Description des composants

NEEC1558

REMARQUE :
Si le DTC P0121, P0122 ou P0123 s'affiche avec le DTC P0510, réaliser d'abord le diagnostic des défauts pour le DTC P0510, EC-3321.

Le capteur de position de papillon répond aux mouvements de la pédale d'accélérateur. Ce capteur est une sorte de potentiomètre qui transforme la position de papillon en tension électrique qu'il transmet à l'ECM. De plus, le capteur détecte la vitesse d'ouverture et de fermeture de la soupape de papillon et transmet le signal de tension à l'ECM.
La position ralenti de la soupape de papillon est déterminée par l'ECM lorsqu'il reç;oit le signal provenant du capteur de position de papillon. Ce capteur commande certaines fonctions du moteur comme par exemple la coupure de l'alimentation. En revanche, les contacts de 'ralenti et de position plein gaz', lesquels sont intégrés au capteur de position du papillon, ne servent pas à la commande du moteur.

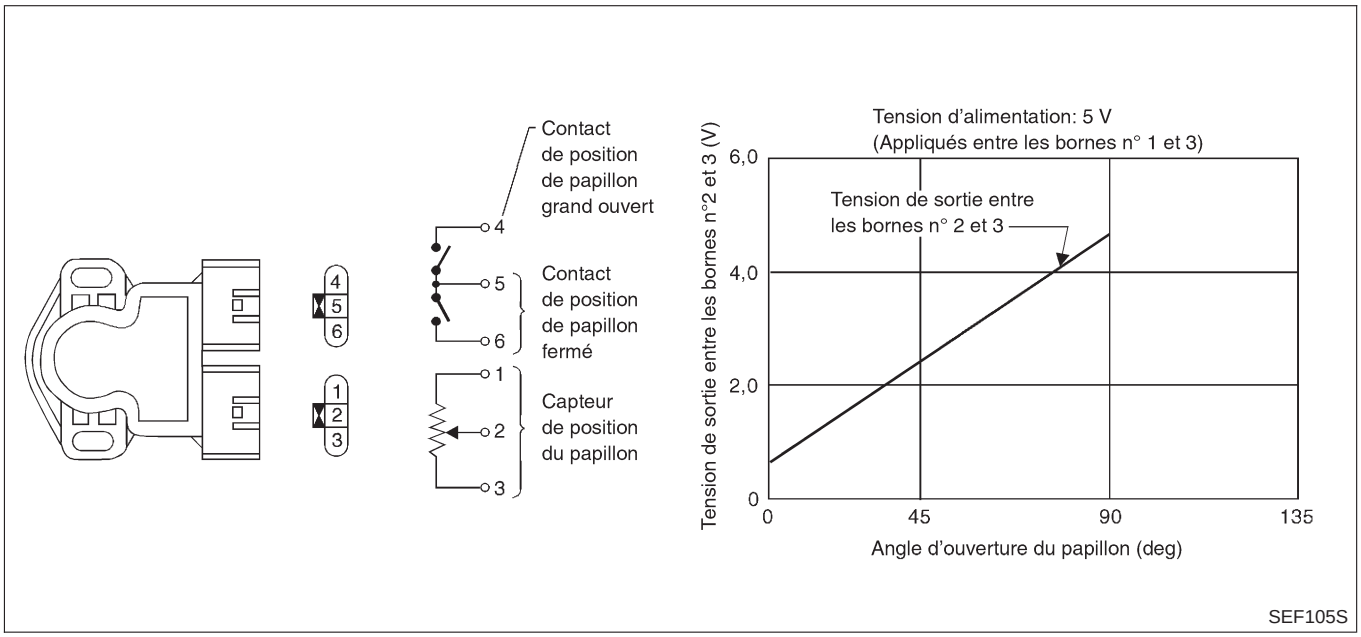

Valeur de référence de CONSULT-II en mode de contrôle de données

NEEC1559

Les données de spécification sont des valeurs de référence.

ELEMENT DE CONTROLE	CONDITION		SPECIFICATION
CAP PAPILLON	• Contact d'allumage : ON (moteur à l'arrêt) • Moteur : une fois le moteur chaud	Soupape de papillon : entièrement fermée	0,2 - 0,8V
		Soupape de papillon : entièrement ouverte	3,5 - 4,5V
C/P PAP ABSOL	• Contact d'allumage : ON (moteur à l'arrêt) • Moteur : une fois le moteur chaud	Soupape de papillon : entièrement fermée	0,0
		Soupape de papillon : entièrement ouverte	env. 80

Simpo PDF Merge and Split Unregistered Version - http://www.simpopdf.com

Bornes de l'ECM et valeurs de référence

=NEEC1560

Les données de spécification sont des valeurs de référence et sont mesurées entre chaque borne et la masse.

ATTENTION :
Ne pas utiliser de bornes de masse de l'ECM lors de la mesure de la tension d'entrée/de sortie. En agissant de la sorte, il est possible d'endommager le transistor de l'ECM. Utiliser une masse autre que les bornes de l'ECM, comme par exemple la prise de terre.

N° DE BORNE	COU-LEUR DE CABLE	ELEMENT	CONDITION	DONNEES (tension de courant continu)
23	G	Capteur d'ouverture de papillon	**[Contact d'allumage sur ON]** ● **Pendant la montée en température** ● Pédale d'accélérateur entièrement relâchée	0,2 - 0,8V
			[Contact d'allumage sur ON] ● Pédale d'accélérateur enfoncée au maximum	3,5 - 4,5V
42	G/B	Alimentation des capteurs	**[Contact d'allumage sur ON]**	Environ 5 V
43	B	Masse de capteurs	**[Moteur en marche]** ● Régime de ralenti	Environ 0 V

Logique de diagnostic de bord

NEEC1561

N° de DTC	Nom de diagnostic des défauts	Condition de détection des défauts DTC	Cause possible
P0122 0122	Faible alimentation du circuit du capteur de position de papillon	Une tension anormalement basse provenant du capteur est adressée à l'ECM.*	● Faisceau ou connecteurs (le circuit de capteur est ouvert ou court-circuité) ● Capteur d'ouverture de papillon
P0123 0123	Alimentation élevée du circuit du capteur de position de papillon	Une tension excessivement élevée est en provenance du capteur est transmise à l'ECM.*	

*: Quand cette anomalie est détectée, l'ECM entre en mode de sécurité mode et le témoin MI s'allume.

Eléments détectés	Condition de fonctionnement du moteur en mode de sécurité	
Circuit du capteur de position de papillon	La position de papillon sera déterminée sur la base de la quantité de carburant injectée et du régime-moteur. Par conséquent, l'accélération sera faible.	
	Condition	Condition de conduite
	Moteur au ralenti	Normal
	Lors de l'accélération	Accélération faible

DTC P0122, P0123 CAPTEUR DE POSITION
Simpo PDF Merge and Split Unregistered Version - http://www.simpopdf.com
DE PAPILLON

Procédure de confirmation de code de défaut (DTC)

=NEEC1562

REMARQUE :

Si une ‘‘Procédure de confirmation de DTC’’ a précédé, toujours mettre le contact d’allumage sur la position OFF et attendre au moins 5 secondes avant de procéder à l’essai suivant.

ATTENTION :

Toujours adapter sa vitesse aux exigences de sécurité.

CONDITIONS D’ESSAI :

- **Avant d’entamer la procédure qui suit, vérifier que la tension délivrée par la batterie est supérieure à 10 V au ralenti.**
- **L’essai peut être conduit sur route ou à l’atelier, roues motrices sur chandelles. Si l’essai sur route apparaît plus facile, il n’est pas nécessaire de mettre le véhicule sur chandelles.**

2

CONTROLE DE DONNEES	
CONTROLE	AUCUN DTC
TR/MN MOT	XXX tr/min
CAP VIT VEHIC	XXX km/h
CON NEUTRE	ARR

SEF065Y

Avec CONSULT-II

1) Mettre le contact d’allumage sur ON et régler CONSULT-II en mode ‘‘CONTROLE DE DONNEES’’.
2) Démarrer le moteur et maintenir les paramètres suivants pendant au moins 5 secondes.

CAP VIT VEHIC	Plus de 4 km/h
Levier de vitesses	Rapport adapté sauf la position ‘‘N’’

3) Si le DTC de 1er parcours est détecté, aller à ‘‘Procédure de diagnostic’’, page EC-3197.

Avec l’analyseur générique GST

Suivre la procédure ‘‘Avec CONSULT-II’’.

Simpo PDF Merge and Split Unregistered Version - http://www.simpopdf.com

Schéma de câblage

NEEC1563

EC-TPS-01

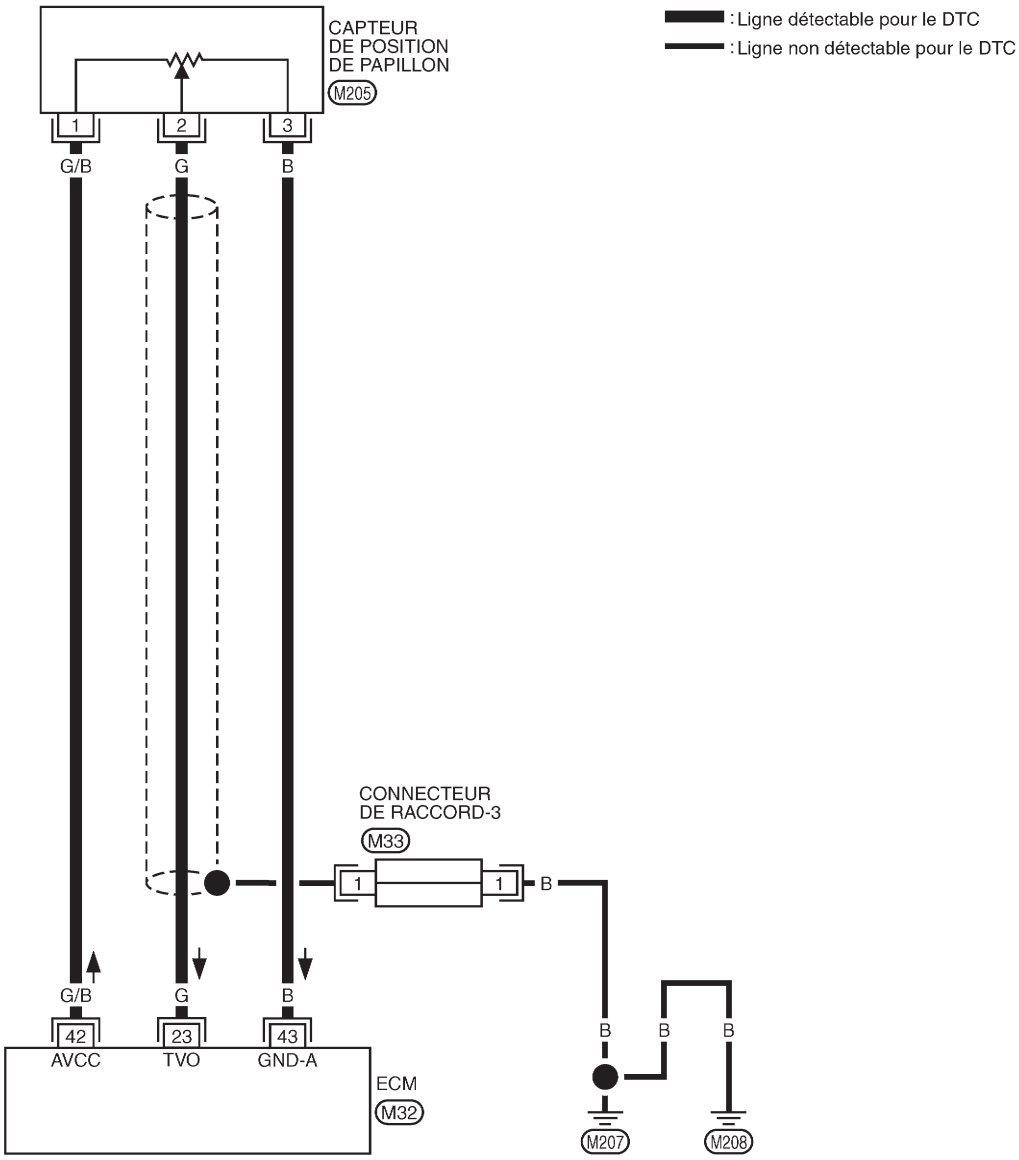

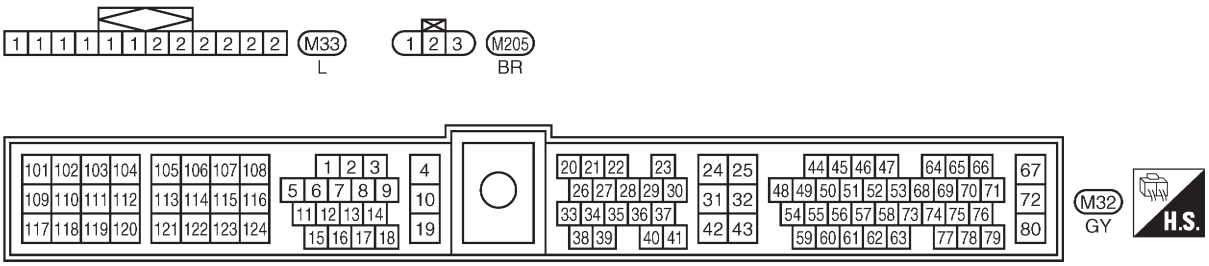

GEC243A

Simpo PDF Merge and Split Unregistered Version - http://www.simpopdf.com

Procédure de diagnostic

NEEC1564

1	RESSERRER LES VIS DE MASSE

1. Mettre le contact d'allumage sur OFF.
2. Desserrer et resserrer les vis de masse du moteur.

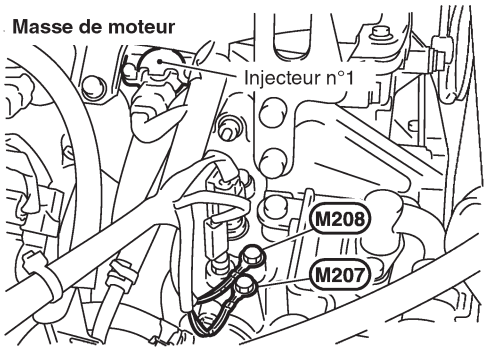

SEC309D

	▶	ALLER A 2.

2	CONTROLER L'ALIMENTATION ELECTRIQUE

1. Débrancher le connecteur de faisceau du capteur de position de papillon.

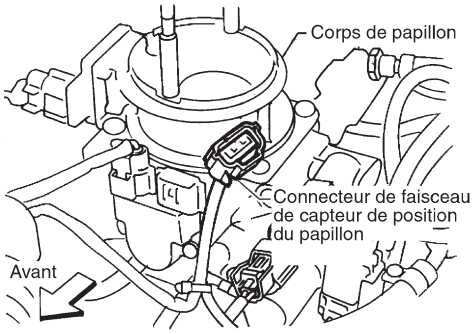

SEF265S

2. Mettre le contact d'allumage sur ON.
3. Contrôler la tension entre la borne 1 et la masse à l'aide de CONSULT-II ou du testeur.

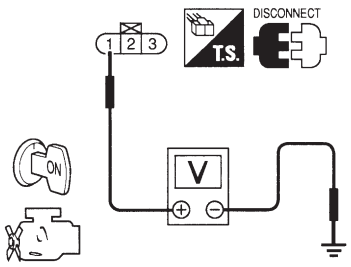

SEF564P

Tension : Environ 5 V

BON ou MAUVAIS

Bon	▶	ALLER A 3.
Mauvais	▶	Réparer le faisceau ou les connecteurs.

Simpo PDF Merge and Split Unregistered Version - http://www.simpopdf.com

3	CONTROLER LE CIRCUIT DE MISE A LA MASSE

1. Mettre le contact d'allumage sur OFF.
2. Vérifier la continuité du faisceau entre la borne 3 du capteur de position du papillon et la masse du moteur. Se reporter au schéma de câblage.

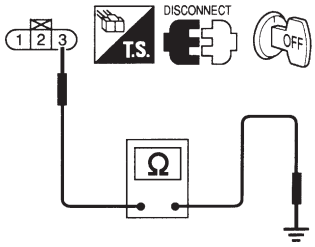

SEF565P

Il doit y avoir continuité.

3. Vérifier également que le faisceau n'est pas en court-circuit à l'alimentation.

BON ou MAUVAIS

Bon	▶	ALLER A 5.
Mauvais	▶	ALLER A 4.

4	DETECTER LA PIECE DEFECTUEUSE

Vérifier que le faisceau entre l'ECM et le capteur de position du papillon n'est pas ouvert ou en court-circuit.

	▶	Réparer les faisceaux ou connecteurs en circuit ouvert ou en court-circuit à l'alimentation.

5	CONTROLER LE CIRCUIT DE SIGNAL D'ENTREE

1. Débrancher le connecteur de faisceau de l'ECM.
2. Vérifier la continuité du faisceau entre la borne 23 et la borne 2 de l'ECM.
   Se reporter au schéma de câblage.
   Il doit y avoir continuité.
3. Vérifier également que le faisceau n'est pas en court-circuit à la masse ou à l'alimentation.

BON ou MAUVAIS

Bon (avec CONSULT-II)	▶	ALLER A 6.
Bon (sans CONSULT-II)	▶	ALLER A 7.
Mauvais	▶	Réparer les faisceaux ou les connecteurs en circuit ouvert ou en court-circuit à la masse ou à l'alimentation.

Simpo PDF Merge and Split Unregistered Version - http://www.simpopdf.com

6	CONTROLER LE CAPTEUR DE POSITION DE PAPILLON

Avec CONSULT-II

1. Brancher à nouveau tous les connecteurs de faisceau débranchés.
2. Démarrer le moteur et l'amener à température normale de fonctionnement.
3. Eteindre le moteur et mettre le contact d'allumage sur ON.
4. Régler CONSULT-II en mode ''CONTROLE DE DONNEES''.
5. Vérifier la tension du ''CAP PAPILLON'' dans les conditions suivantes.

CONTROLE DE DONNEES	
CONTROLE	PAS DE DTC
TR/MN MOT	XXX tr/mn
CAP TEMP EAU	XXX °C
CAP PAPILLON	XXX V

SEF179Y

REMARQUE :
Les relevés doivent être effectués avec le capteur de position de papillon reposé sur le véhicule.

Conditions du papillon	Tension V
Complètement fermé	0,2 - 0,8 (a)
Partiellement ouvert	Entre (a) et (b)
Complètement ouvert	3,5 - 4,5 (b)

MTBL0579

Si le résultat n'est pas satisfaisant, régler le contact de position de papillon fermé. Se reporter à la procédure ''Inspection de base'', EC-3093.

BON ou MAUVAIS

BON (Type B à l'étape 1) ▶	ALLER A 8.
BON (Type A ou C à l'étape 1) ▶	ALLER A 11.
Mauvais ▶	Remplacer le capteur de position de papillon. Pour le régler, effectuer une ''Inspection de base'', EC-3093.

Simpo PDF Merge and Split Unregistered Version - http://www.simpopdf.com

7	CONTROLER LE CAPTEUR DE POSITION DE PAPILLON

Sans CONSULT-II

1. Brancher à nouveau tous les connecteurs de faisceau débranchés.
2. Démarrer le moteur et l'amener à température normale de fonctionnement.
3. Eteindre le moteur et mettre le contact d'allumage sur ON.
4. Contrôler la tension entre la borne 23 de l'ECM (signal du capteur de position de papillon) et la masse dans les conditions suivantes.

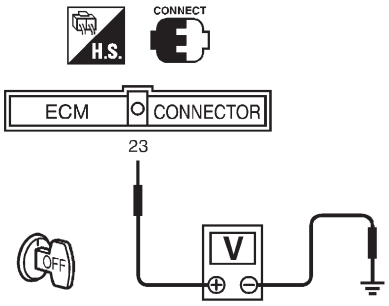

SEF767W

REMARQUE :
Les relevés doivent être effectués avec le capteur de position de papillon reposé sur le véhicule.

Conditions du papillon	Tension V
Complètement fermé	0,2 - 0,8 (a)
Partiellement ouvert	Entre (a) et (b)
Complètement ouvert	3,5 - 4,5 (b)

MTBL0579

Si le résultat n'est pas satisfaisant, régler le contact de position de papillon fermé. Se reporter à la procédure ''Inspection de base'', EC-3093.

BON ou MAUVAIS

BON (Type B à l'étape 1) ▶	ALLER A 8.
BON (Type A ou C à l'étape 1) ▶	ALLER A 11.
Mauvais ▶	Remplacer le capteur de position de papillon. Pour le régler, effectuer une ''Inspection de base'', EC-3093.

Simpo PDF Merge and Split Unregistered Version - http://www.simpopdf.com

8	CONTROLER LE DEBITMETRE D'AIR

1. Mettre le contact d'allumage sur ON.
2. Démarrer le moteur et l'amener à température normale de fonctionnement.
3. Vérifier la tension entre la borne 54 de l'ECM (signal du débitmètre d'air) et la masse.

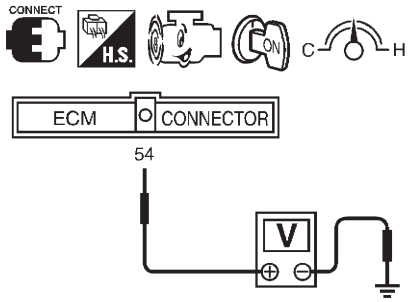

SEF326V

Conditions	Tension V
Contact d'allumage sur 'ON' (moteur arrêté.)	Moins de 1,0
Ralenti (Le moteur est monté en température jusqu'à atteindre une température de fonctionnement normale.)	0,9 - 1,8
2 500 tr/mn (Le moteur est monté en température jusqu'à atteindre une température de fonctionnement normale.)	1,9 - 2,3
Ralenti à environ 4 000 tr/mn*	1,3 - 1,7 à env. 3,0

*: Vérifier la hausse de tension linéaire en réponse à des augmentations du régime du moteur à environ 4.000 tr/mn.

MTBL0326

4. Si la tension est hors norme, débrancher et rebrancher le connecteur du faisceau de débitmètre d'air. Puis, recommencer la vérification précédente.
5. Si le résultat n'est pas conforme, déposer le débitmètre du conduit d'air. Vérifier si le fil chaud n'est pas endommagé ou encrassé.

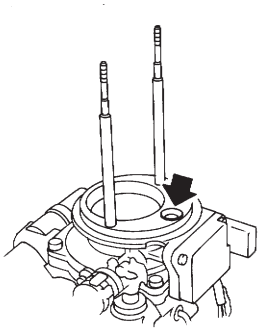

SEF893J

BON ou MAUVAIS

Bon	▶	ALLER A 9.
Mauvais	▶	Remplacer le débitmètre d'air.

Simpo PDF Merge and Split Unregistered Version - http://www.simpopdf.com

9	CONTROLER LE CAPTEUR D'ANGLE D'ARBRE A CAMES

1. Démarrer le moteur et l'amener à température normale de fonctionnement.
2. Vérifier la tension entre les bornes 49 ou (44)* de l'ECM et la masse du moteur et entre les bornes 44, 48 ou (49, 53)* de l'ECM et la masse du moteur.

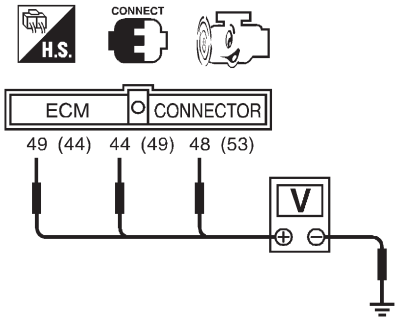

Borne 44, 48 ou (49, 53)* et masse de moteur

Condition	Ralenti	2 000 tr/mn
Tension	0,2 - 0,5V	0 - 0,5V
Signal d'impulsion	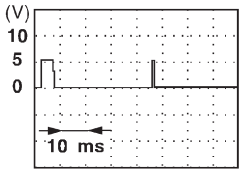	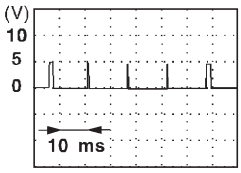

Borne 49 ou (44)* et masse de moteur

Condition	Ralenti	2 000 tr/mn
Tension	Environ 2,5V	Environ 1,0V
Signal d'impulsion	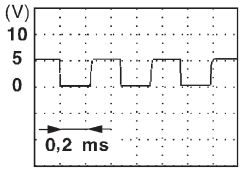	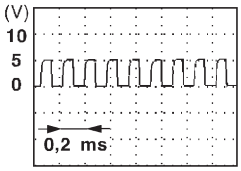

SEC273D

*: Modèle avec NATS (système antivol Nissan)

BON ou MAUVAIS

Bon	▶	ALLER A 10.
Mauvais	▶	Remplacer l'ensemble de distributeur avec le capteur d'angle d'arbre à cames.

Simpo PDF Merge and Split Unregistered Version - http://www.simpopdf.com

10	CONTROLER L'INJECTEUR DE CARBURANT

1. Débrancher le connecteur de faisceau de l'injecteur.
2. Vérifier la résistance entre les bornes comme indiqué sur l'illustration ci-contre.

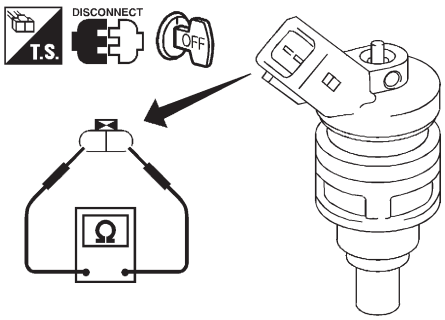

SEF836Q

Résistance : 10 - 14Ω [à 25°C]

BON ou MAUVAIS

Bon	▶	ALLER A 11.
Mauvais	▶	Remplacer l'injecteur de carburant.

11	VERIFIER LE CIRCUIT DE BLINDAGE

1. Mettre le contact d'allumage sur OFF.
2. Retirer le connecteur de jonction-3.
3. Contrôler les points suivants.

- Continuité entre la borne 2 du connecteur de jonction et la masse
- Connecteur de jonction-3

(Se reporter à ''DISPOSITION DES FAISCEAUX'', dans la section EL.)

Il doit y avoir continuité.

4. Vérifier également que le faisceau n'est pas en court-circuit à l'alimentation.
5. Ensuite, rebrancher le connecteur de jonction.

BON ou MAUVAIS

Bon	▶	ALLER A 12.
Mauvais	▶	Réparer les faisceaux ou connecteurs en circuit ouvert ou en court-circuit à l'alimentation.

12	VERIFIER SI L'INCIDENT EST INTERMITTENT
Effectuer un ''DIAGNOSTIC DES DEFAUTS EN CAS INCIDENT INTERMITTENT'', voir page EC-3132.	
▶	**FIN DE L'INSPECTION**

Simpo PDF Merge and Split Unregistered Version - http://www.simpopdf.com

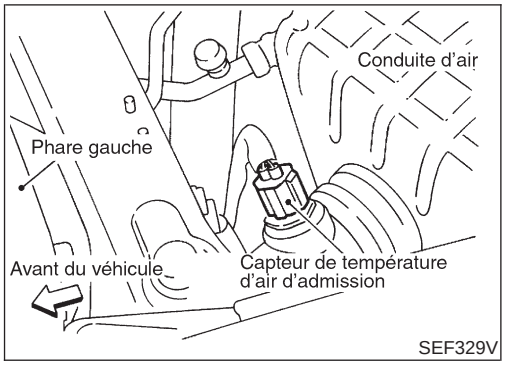

SEF329V

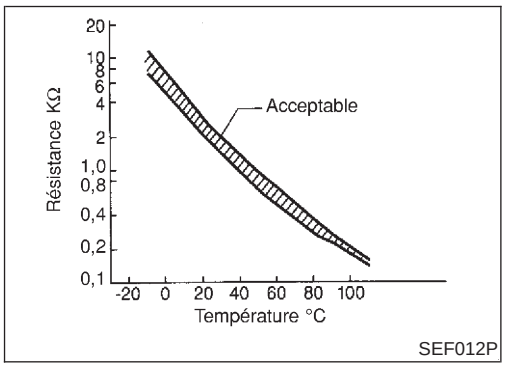

SEF012P

Description des composants

NEEC1565

Le capteur de température d'air d'admission est installé dans le logement du conduit d'air. Le capteur détecte la température d'air d'admission et transmet un signal à l'ECM.
Le boîtier de capteur de température utilise une thermistance qui est sensible aux variations de température. La résistance électrique de la thermistance diminue au fur et à mesure que la température monte.

<Données de référence>

Température de l'air d'admission °C	Tension* V	Résistance kΩ
20	3,5	2,1 - 2,9
80	1,23	0,27 - 0,38

*: Ces données sont des valeurs de référence et sont mesurées entre la borne 61 de l'ECM (capteur de température d'air d'admission) et la masse.

ATTENTION :
Ne pas utiliser de bornes de masse de l'ECM lors de la mesure de la tension d'entrée/de sortie. En agissant de la sorte, il est possible d'endommager le transistor de l'ECM. Utiliser une masse autre que les bornes de l'ECM, comme par exemple la prise de terre.

Bornes de l'ECM et valeurs de référence

NEEC1570

N° DE BORNE	COULEUR DE CABLE	ELEMENT	CONDITION	DONNEES (tension de courant continu)
43	B	Masse de capteurs	**[Moteur en marche]** ● Régime de ralenti	Environ 0 V
61	P/B	Capteur de température d'air d'admission	**[Moteur en marche]**	Environ 0 - 4,8V La tension de sortie varie avec la température d'air d'admission.

DTC P0127 CAPTEUR DE POSITION
Simpo PDF Merge and Split Unregistered Version - http://www.simpopdf.com
DE PAPILLON

Logique de diagnostic de bord

NEEC1566

N° de DTC	Le défaut est détecté quand ...	Eléments de contrôle (causes possibles)
P0127 0127	Le capteur envoie une tension clairement incorrecte à l'ECM, comparé au signal de tension en provenance du capteur de température du liquide de refroidissement du moteur.	● Faisceau ou connecteurs (le circuit de capteur est ouvert ou court-circuité) ● Capteur de température d'air d'admission

DTC P0127 CAPTEUR DE POSITION
Simpo PDF Merge and Split Unregistered Version - http://www.simpopdf.com
DE PAPILLON

Procédure de confirmation de code de défaut (DTC)

=NEEC1567

REMARQUE :

Si une ‘‘Procédure de confirmation de DTC’’ a précédé, toujours mettre le contact d’allumage sur la position OFF et attendre au moins 5 secondes avant de procéder à l’essai suivant.

ATTENTION :

Toujours adapter sa vitesse aux exigences de sécurité.

CONDITIONS D’ESSAI :

L’essai peut être conduit sur route ou à l’atelier, roues motrices sur chandelles. Si l’essai sur route apparaît plus facile, il n’est pas nécessaire de mettre le véhicule sur chandelles.

3

CONTROLE DE DONNEES	
CONTROLE	AUCUN DTC
TR/MN MOT	XXX tr/min

SEF058Y

5

CONTROLE DE DONNEES	
CONTROLE	AUCUN DTC
CAP TEMP MOT	XXX °C
CAP VIT VEHIC	XXX km/h

SEF176Y

Avec CONSULT-II

1) Attendre que la température du liquide de refroidissement du moteur soit inférieure à 90°C.

a) Mettre le contact d’allumage sur ON.

b) Régler CONSULT-II en mode ‘‘CONTROLE DE DONNEES’’.

c) Vérifier la température du liquide de refroidissement du moteur.

d) Si la température du liquide de refroidissement du moteur n’est pas inférieure à 90°C, mettre le contact d’allumage sur ‘‘OFF’’ et faire refroidir le moteur.

- La procédure suivante doit être effectuée avant que la température du liquide de refroidissement n’atteigne 90°C.

2) Mettre le contact d’allumage sur ON.

3) Régler CONSULT-II en mode ‘‘CONTROLE DE DONNEES’’.

4) Démarrer le moteur.

5) Rouler à plus de 70 km/h pendant 100 secondes.

6) Si le DTC de 1er parcours est détecté, aller à ‘‘Procédure de diagnostic’’, page EC-3207.

Avec l’analyseur générique GST

Suivre la procédure ‘‘Avec CONSULT-II’’.

Procédure de diagnostic

NEEC1569

1	CONTROLER LE CAPTEUR DE TEMPERATURE D'AIR D'ADMISSION

Vérifier la résistance comme indiqué sur l'illustration ci-contre.

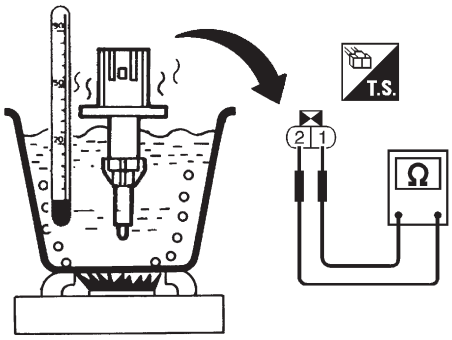

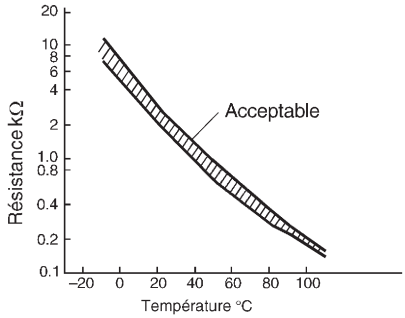

SEC272D

<Reference data>

Température °C	Résistance kΩ
20	2,1 - 2,9
80	0,27 - 0,38

MTBL1306

BON ou MAUVAIS

Bon	▶	ALLER A 2.
Mauvais	▶	Remplacer le capteur de température d'air d'admission.

2	VERIFIER SI L'INCIDENT EST INTERMITTENT
Effectuer un ''DIAGNOSTIC DES DEFAUTS EN CAS INCIDENT INTERMITTENT'', voir page EC-3132.	
▶	**FIN DE L'INSPECTION**

Simpo PDF Merge and Split Unregistered Version - http://www.simpopdf.com

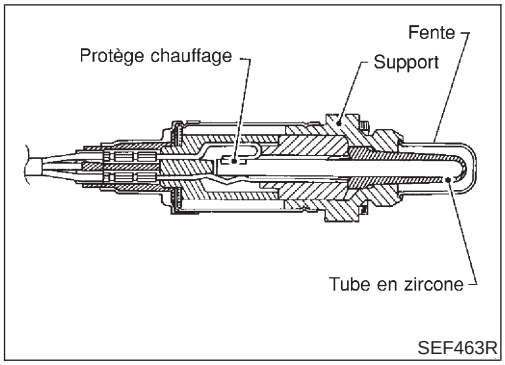

SEF463R

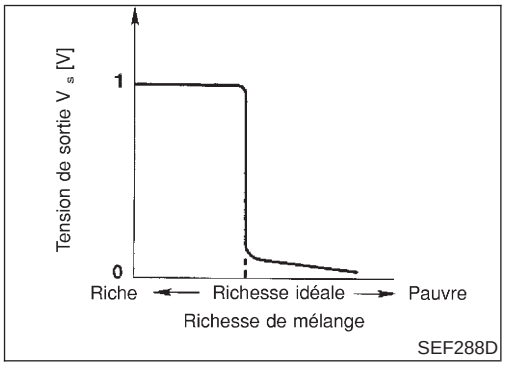

SEF288D

Description des composants

NEEC0128

La sonde à oxygène chauffé 1 est placée dans le collecteur d'échappement. Elle détecte la quantité d'oxygène contenue dans les gaz d'échappement en comparaison avec l'air extérieur. La sonde à oxygène chauffé 1 dispose d'un tube à extrémité fermée en zirconium de céramique. La zircone produit une tension qui va d'environ 1 V dans des conditions de mélange plus riche à 0 V dans des conditions de mélange plus pauvre. Le signal de la sonde à oxygène chauffé 1 est envoyé à l'ECM. L'ECM règle la durée de l'impulsion d'injection pour obtenir le mélange idéal air-carburant. Le mélange idéal air-carburant est obtenu vers le changement radical de 1 V à 0 V.

Valeur de référence de CONSULT-II en mode de contrôle de données

NEEC0129

Les données de spécification sont des valeurs de référence.

ELEMENT DE CONTROLE	CONDITION		SPECIFICATION
S/O2 CH1 (R1)	● Moteur : une fois le moteur chaud	Maintenir le régime moteur à 2 000 tr/mn	0 - 0,3V ←→ Env. 0,6 - 1,0V
MTR S/O2 CH1 (R1)			PAUVRE ←→ RICHE Change plus de 5 fois pendant 10 secondes

Bornes de l'ECM et valeurs de référence

NEEC0130

Les données de spécification sont des valeurs de référence et sont mesurées entre chaque borne et la masse.

ATTENTION :

Ne pas utiliser de bornes de masse de l'ECM lors de la mesure de la tension d'entrée/de sortie. En agissant de la sorte, il est possible d'endommager le transistor de l'ECM. Utiliser une masse autre que les bornes de l'ECM, comme par exemple la prise de terre.

N° DE BORNE	COULEUR DE CABLE	ELEMENT	CONDITION	DONNEES (tension de courant continu)
50	W	Sonde à oxygène chauffé 1	**[Moteur en marche]** ● Après montée en température normale de fonctionnement et au régime moteur de 2.000 tr/mn.	0 - Environ 1,0V 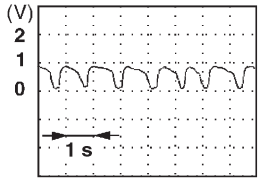 SEF008W

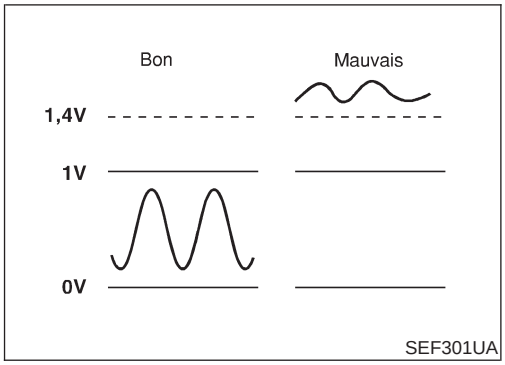

Logique de diagnostic de bord

NEEC0131

Pour déterminer le défaut de fonctionnement, le diagnostic vérifie que la sortie de la sonde à oxygène chauffé 1 n'est pas anormalement haute.

N° de DTC	Le défaut est détecté quand ...	Eléments de contrôle (causes possibles)
P0134 0134	● La tension reç;ue du capteur par l'ECM est excessivement élevée.	● Faisceau ou connecteurs (le circuit de capteur est ouvert ou court-circuité) ● Sonde à oxygène chauffé 1

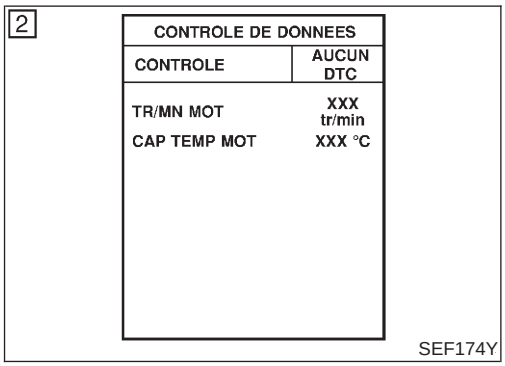

Procédure de confirmation de code de défaut (DTC)

NEEC0132

REMARQUE :

Si une ''Procédure de confirmation de DTC'' a précédé, toujours mettre le contact d'allumage sur la position OFF et attendre au moins 5 secondes avant de procéder à l'essai suivant.

Avec CONSULT-II

1) Démarrer le moteur et l'amener à température normale de fonctionnement.
2) Mettre le contact d'allumage sur OFF et attendre au moins 5 secondes.
3) Mettre le contact d'allumage sur ON.
4) Régler CONSULT-II en mode ''CONTROLE DE DONNEES''.
5) Redémarrer le moteur et le laisser tourner au ralenti pendant 35 secondes.
6) Si le DTC de 1er parcours est détecté, aller à ''Procédure de diagnostic'', page EC-3212.

Avec l'analyseur générique GST

1) Démarrer le moteur et l'amener à température normale de fonctionnement.
2) Mettre le contact d'allumage sur OFF et attendre au moins 5 secondes.
3) Redémarrer le moteur et le laisser tourner au ralenti pendant 35 secondes.
4) Mettre le contact d'allumage sur OFF et attendre au moins 5 secondes.
5) Redémarrer le moteur et le laisser tourner au ralenti pendant 35 secondes.
6) Régler le GST en ''MODE 3''.
7) Si le DTC est détecté, effectuer une ''Procédure de diagnostic'', voir page EC-3212.

- **L'utilisation d'un analyseur générique GST impose d'effectuer une 'Procédure de confirmation de DTC'' deux**

fois plus qu'avec CONSULT-II du fait que l'analyseur générique GST ne peut pas afficher en MODE 7 (DTC de 1er parcours), en ce qui concerne ce diagnostic. C'est pourquoi il est vivement conseillé d'utiliser CONSULT-II.

Simpo PDF Merge and Split Unregistered Version - http://www.simpopdf.com

Schéma de câblage

NEEC0133

EC-O2S1B1-01

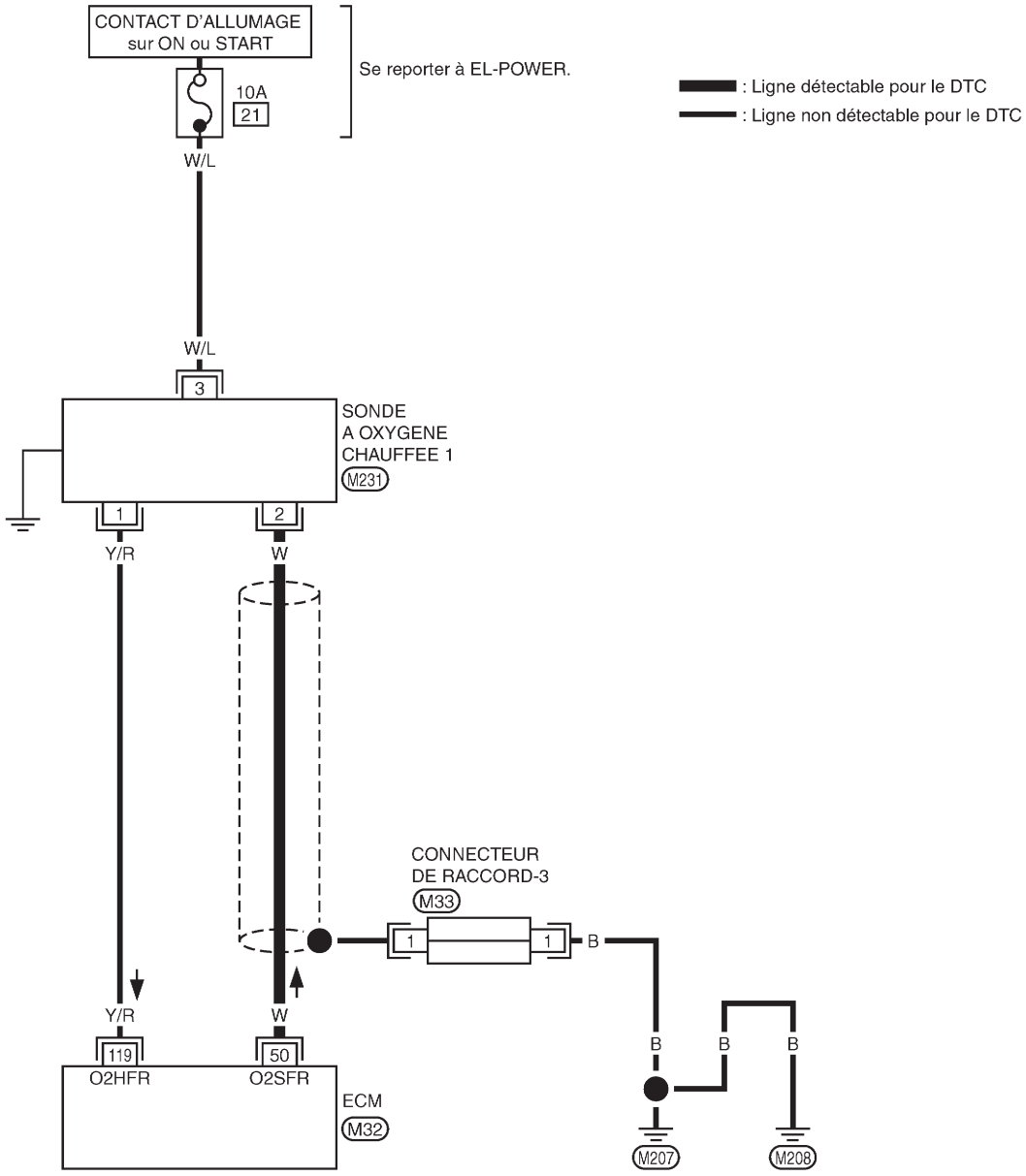

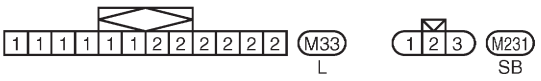

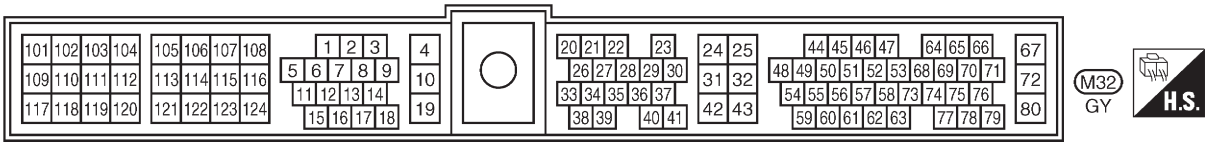

GEC245A

Simpo PDF Merge and Split Unregistered Version - http://www.simpopdf.com

Procédure de diagnostic

NEEC0134

1	RESSERRER LA SONDE A OXYGENE CHAUFFE 1

1. Mettre le contact d'allumage sur OFF.
2. Desserrer et resserrer la sonde à oxygène chauffé 1.

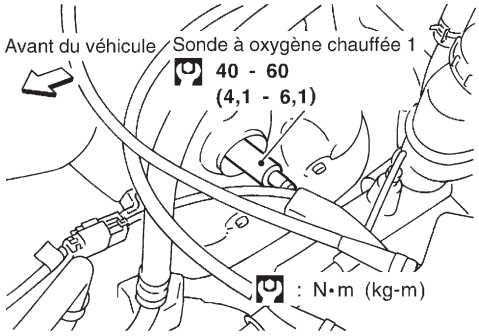

SEF332VC

Couple de serrage :
40 - 60 N·m (4,1 - 6,1 kg-m)

	▶	ALLER A 2.

2	CONTROLER LE CIRCUIT DE SIGNAL D'ENTREE

1. Débrancher le connecteur de faisceau de la sonde à oxygène chauffé 1 et le connecteur de faisceau de l'ECM.

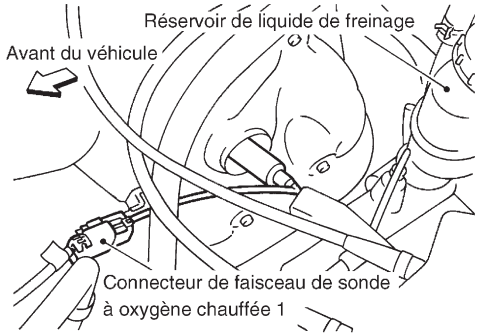

SEF331VC

2. Vérifier la continuité du faisceau entre la borne 50 de l'ECM et la borne 2. Se reporter au schéma de câblage.
   Il doit y avoir continuité.
3. Vérifier la continuité du faisceau entre la borne 50 (ou 2) de l'ECM et la masse. Se reporter au schéma de câblage.
   Il ne doit pas y avoir continuité.
4. Vérifier également que le faisceau n'est pas en court-circuit à l'alimentation.

BON ou MAUVAIS

Bon	▶	ALLER A 3.
Mauvais	▶	Réparer les faisceaux ou les connecteurs en circuit ouvert ou en court-circuit à la masse ou à l'alimentation.

3	CONTROLER LE CONNECTEUR DE FAISCEAU

Vérifier qu'il n'y a pas d'eau dans le connecteur de faisceau de la sonde à oxygène chauffé 1.
Il ne doit pas y avoir d'eau.

BON ou MAUVAIS

Bon (avec CONSULT-II)	▶	ALLER A 4.
Bon (sans CONSULT-II)	▶	ALLER A 5.
Mauvais	▶	Réparer ou remplacer le connecteur de faisceau.

4	CONTROLER LA SONDE A OXYGENE CHAUFFE 1

Avec CONSULT-II

1. Brancher à nouveau tous les connecteurs de faisceau débranchés.
2. Démarrer le moteur et l'amener à température normale de fonctionnement.
3. Sélectionner ''ENCLEN MANU'' en mode ''CONTROLE DE DONNEES'', et régler le point de déclenchement à 100%.
4. Sélectionner ''S/O2 CH1 (R1)'' et ''MTR S/O2 CH1 (R1)'' dans la sélection d'élément.
5. Maintenir le régime-moteur à 2.000 tr/mn à vide au cours des étapes suivantes.
6. Appuyer sur ''DEPART'' sur l'écran de CONSULT-II.

CONTROLE DE DONNEES	
CONTROLE	AUCUN DTC
TR/MN MOT	XXX tr/min
DEBITMETRE-R1	XXX V
CAP TEMP MOT	XXX °C
S/O2 CH1 (R1)	XXX V
MTR S/O2 CH1 (R1)	PAUVRE

SEF646Y

7. Contrôler les points suivants.

- ''MTR S/O2 CH1 (R1)'' en mode de ''CONTROLE DES DONNEES'' passe de ''RICHE'' à ''PAUVRE'' à ''RICHE'' 5 fois en 10 secondes.
  5 fois (cycles) sont comptées comme indiqué ci-dessous.

5

cycle	1	2	3	4	5
MTR S/O2 CH1 (R1)	R-L-R-L-R-L-R-L-R-L				

R associé à MTR S/O2 CH1 (R1) signifie RICHE
L associé à MTR S/O2 CH1 (R1)/(R2) signifie PAUVRE

SEF217YA

- La tension de ''S/O2 CH1 (R1)'' est supérieure à 0,6 V au moins une fois.
- La tension de ''S/O2 CH1 (R1)'' est inférieure à 0,3 V au moins une fois.
- La tension de ''S/O2 CH1(R1)'' ne dépasse jamais 1,0 V.

Déclenchement	Régime Moteur	S/02 CH1 (R1)
	tr/mn	V
XXX	XXX	XXX
XXX	XXX	XXX
XXX	XXX	XXX
XXX	XXX	XXX
XXX	XXX	XXX
XXX	XXX	XXX
XXX	XXX	XXX
XXX	XXX	XXX
XXX	XXX	XXX
XXX	XXX	XXX
XXX	XXX	XXX
XXX	XXX	XXX

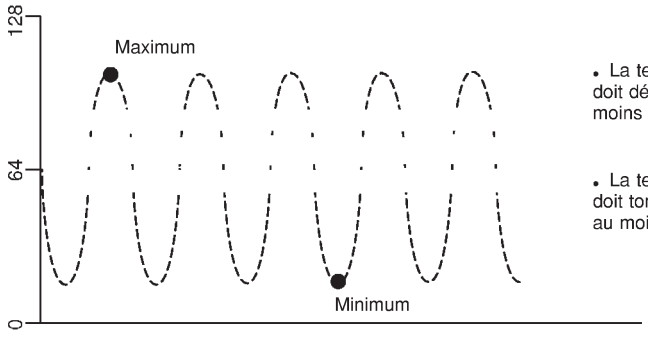

- La tension maximale doit dépasser 0,6V au moins une fois.
- La tension minimale doit tomber sous 0,30V au moins une fois.

SEF648Y

ATTENTION :

- **Jeter toute sonde à oxygène chauffé tombée d'une hauteur supérieure à 0,5 m sur une surface dure telle qu'un plancher en béton, et la remplacer par une sonde neuve.**
- **Avant de reposer une nouvelle sonde à oxygène, nettoyer le filetage du système d'échappement à l'aide de l'outil de nettoyage pour filetage de sonde à oxygène J-43897-18 ou J-43897-12 et un lubrifiant antigrippant agréé.**

BON ou MAUVAIS

Bon	▶	ALLER A 6.
Mauvais	▶	Remplacer la sonde à oxygène chauffé 1.

Simpo PDF Merge and Split Unregistered Version - http://www.simpopdf.com

5	CONTROLER LA SONDE A OXYGENE CHAUFFE 1

Sans CONSULT-II

1. Brancher à nouveau tous les connecteurs de faisceau débranchés.
2. Démarrer le moteur et l'amener à température normale de fonctionnement.
3. Placer des sondes de voltmètre entre la borne 50 de l'ECM [signal de sonde à oxygène chauffé] 1 et la masse du moteur.

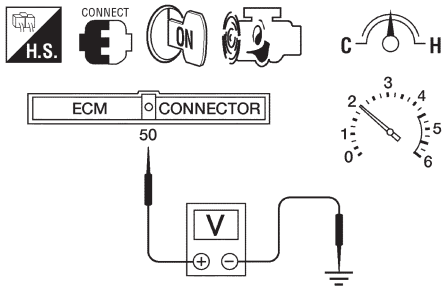

AEC873A

4. Procéder au contrôle suivant en maintenant constant le régime moteur à 2 000 tr/mn à vide.

- La tension varie entre 0 - 0,3V et 0,6 - 1,0V plus de 5 fois en 10 secondes.
  1 occurrence : 0 - 0,3 V → 0,6 - 1,0 V → 0 - 0,3 V
  2 occurrences : 0 - 0,3 V → 0,6 - 1,0 V → 0 - 0,3 V → 0,6 - 1,0 V → 0 - 0,3 V
- La tension maximale dépasse 0,6 V au moins une fois.
- La tension minimale tombe sous 0,3 V au moins une fois.
- La tension ne dépasse jamais 1,0V.

ATTENTION :

- **Jeter toute sonde à oxygène chauffé tombée d'une hauteur supérieure à 0,5 m sur une surface dure telle qu'un plancher en béton, et la remplacer par une sonde neuve.**
- **Avant de reposer une nouvelle sonde à oxygène, nettoyer le filetage du système d'échappement à l'aide de l'outil de nettoyage pour filetage de sonde à oxygène J-43897-18 ou J-43897-12 et un lubrifiant antigrippant agréé.**

BON ou MAUVAIS

Bon	▶	ALLER A 6.
Mauvais	▶	Remplacer la sonde à oxygène chauffé 1.

6	VERIFIER LE CIRCUIT DE BLINDAGE

1. Mettre le contact d'allumage sur OFF.
2. Retirer le connecteur de jonction-3.
3. Contrôler les points suivants.

- Continuité entre la borne 1 du connecteur de jonction-3 et la masse
- Connecteur de jonction-3
  (Se reporter à ''DISPOSITION DES FAISCEAUX'', dans la section EL.)
  Il doit y avoir continuité.

4. Vérifier également que le faisceau n'est pas en court-circuit à l'alimentation. Ensuite, rebrancher le connecteur de jonction.

BON ou MAUVAIS

Bon	▶	ALLER A 7.
Mauvais	▶	Réparer les faisceaux ou connecteurs en circuit ouvert ou court-circuit.

7	VERIFIER SI L'INCIDENT EST INTERMITTENT
Effectuer un ''DIAGNOSTIC DES DEFAUTS EN CAS INCIDENT INTERMITTENT'', voir page EC-3132.	
▶	**FIN DE L'INSPECTION**

Simpo PDF Merge and Split Unregistered Version - http://www.simpopdf.com

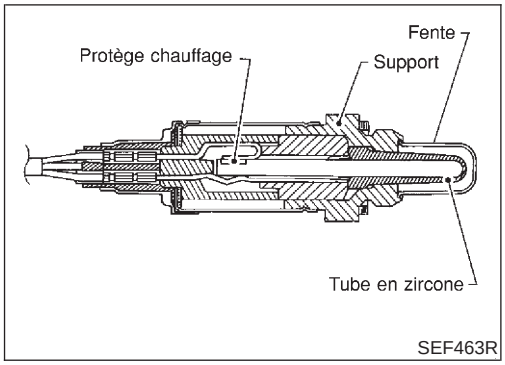

SEF463R

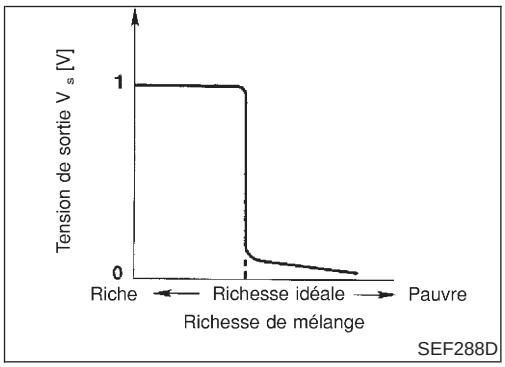

SEF288D

Description des composants

NEEC0119

La sonde à oxygène chauffé 1 est placée dans le collecteur d'échappement. Elle détecte la quantité d'oxygène contenue dans les gaz d'échappement en comparaison avec l'air extérieur. La sonde à oxygène chauffé 1 dispose d'un tube à extrémité fermée en zirconium de céramique. La zircone produit une tension qui va d'environ 1 V dans des conditions de mélange plus riche à 0 V dans des conditions de mélange plus pauvre. Le signal de la sonde à oxygène chauffé 1 est envoyé à l'ECM. L'ECM règle la durée de l'impulsion d'injection pour obtenir le mélange idéal air-carburant. Le mélange idéal air-carburant est obtenu vers le changement radical de 1 V à 0 V.

Valeur de référence de CONSULT-II en mode de contrôle de données

NEEC0120

Les données de spécification sont des valeurs de référence.

ELEMENT DE CONTROLE	CONDITION		SPECIFICATION
S/O2 CH1 (R1)	● Moteur : une fois le moteur chaud	Maintenir le régime-moteur à 2 000 tr/mn.	0 - 0,3 V ←→ Env. 0,6 - 1,0 V
MTR S/O2 CH1 (R1)			PAUVRE ←→ RICHE Change plus de 5 fois pendant 10 secondes

Bornes de l'ECM et valeurs de référence

NEEC0121

Les données de spécification sont des valeurs de référence et sont mesurées entre chaque borne et la masse.

ATTENTION :
Ne pas utiliser de bornes de masse de l'ECM lors de la mesure de la tension d'entrée/de sortie. En agissant de la sorte, il est possible d'endommager le transistor de l'ECM. Utiliser une masse autre que les bornes de l'ECM, comme par exemple la prise de terre.

N° DE BORNE	COULEUR DE CABLE	ELEMENT	CONDITION	DONNEES (tension de courant continu)
50	W	Sonde à oxygène chauffé 1	**[Moteur en marche]** ● Après montée en température normale de fonctionnement et au régime moteur de 2.000 tr/mn.	0 - Environ 1,0 V 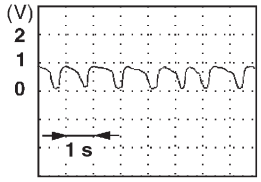 SEF008W

Simpo PDF Merge and Split Unregistered Version - http://www.simpopdf.com

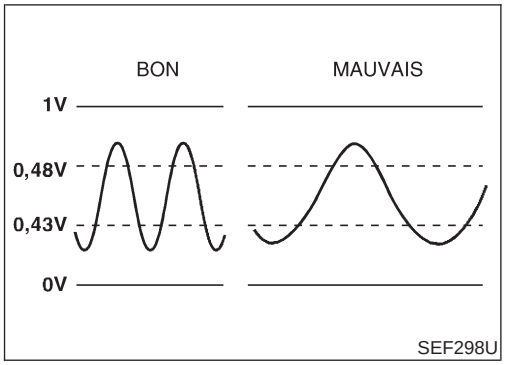

SEF298U

Logique de diagnostic de bord

NEEC0122

Pour déterminer le défaut de fonctionnement de la sonde à oxygène chauffé 1, ce diagnostic mesure le temps de réponse du signal de la sonde à oxygène chauffé 1. Le temps est compensé par l'opération du moteur (régime et charge), contrôle permanent de retour de carburant, et l'indice de température de la sonde à oxygène chauffé 1. L'évaluation consiste fondamentalement à observer si le temps compensé (indice de cycles de la sonde à oxygène chauffé 1) est anormalement long ou non.

N° de DTC	Le défaut est détecté quand ...	Eléments de contrôle (causes possibles)
P0133 0133	● Le temps de réponse au signal de tension en provenance de la sonde est plus long que prévu dans les spécifications.	● Faisceau ou connecteurs (le circuit de capteur est ouvert ou court-circuité) ● Sonde à oxygène chauffé 1 ● Chauffage de la sonde à oxygène chauffé 1 ● Pression de carburant ● Injecteurs ● Fuites d'air d'admission ● Fuites de gaz d'échappement ● PCV ● Débitmètre d'air

6

S/O2 CH1 (R1) P0133	
HORS CONDITION	
CONTROLE	
TR/MN MOT	XXX tr/mn
PLAN CAR BASE	XXX msec
CAP PAPILLON	XXX V

SEF656Y

6

S/O2 CH1 (R1) P0133	
TEST EN COURS	
CONTROLE	
TR/MN MOT	XXX tr/mn
PLAN CAR BASE	XXX msec
CAP PAPILLON	XXX V

SEF657Y

6

S/02 CH1 (R1) P0133
TERMINE

SEF658Y

Procédure de confirmation de code de défaut (DTC)

NEEC0123

ATTENTION :
Toujours adapter sa vitesse aux exigences de sécurité.

REMARQUE :
Si une ''Procédure de confirmation de DTC'' a précédé, toujours mettre le contact d'allumage sur la position OFF et attendre au moins 5 secondes avant de procéder à l'essai suivant.

CONDITIONS D'ESSAI :

- **Toujours opérer à une température supérieure à -10°C.**
- **Avant d'entamer la procédure suivante, vérifier que la tension délivrée par la batterie est supérieure à 11V au ralenti.**

Avec CONSULT-II

1) Démarrer le moteur et l'amener à température normale de fonctionnement.
2) Arrêter le moteur et attendre au moins 5 secondes.
3) Mettre le contact d'allumage sur ON et sélectionner ''P0133 S/O2 CH1 (R1)'' ou ''S/O2 CH1'' dans le mode ''SUPPORT TRAVAIL DTC'' de CONSULT-II.
4) Appuyer sur ''DEPART''.
5) Démarrer le moteur et le laisser tourner au ralenti pendant au moins 3,0 minutes.

REMARQUE :
Ne jamais dépasser le régime de 3 600 tr/mn après cette étape. Si le régime-moteur dépasse cette limite, recommencer à l'étape 5.

6) Lorsque les conditions suivantes sont remplies, l'écran de CONSULT-II indique ''TEST EN COURS''. Maintenir les conditions indiquées jusqu'à ce que le message ''TEST EN COURS'' laisse place au message ''TERMINE'' (ceci prend environ 20 secondes.)

Simpo PDF Merge and Split Unregistered Version - http://www.simpopdf.com

TR/MN MOT	1.750 - 3.750 tr/mn
Vitesse du véhicule	Plus de 80 km/h
PLAN CAR BASE	3,5 - 15,5 ms
Levier de vitesses	Rapport adapté

Si ‘‘TEST EN COURS’’ ne s’affiche pas après 5 minutes, réessayer à partir de l’étape 2.

7) S’assurer que BON s’affiche après avoir appuyé sur ‘‘RESULT AUTO-DIAG’’. Si MAUVAIS s’affiche, se reporter à la ‘‘Procédure de diagnostic’’, EC-3219.

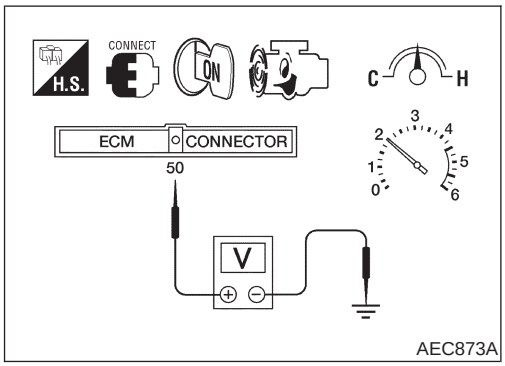

Vérification du fonctionnement général

NEEC0124

Utiliser cette procédure pour vérifier le fonctionnement général du circuit de la sonde à oxygène chauffé 1. Au cours de ce contrôle, il est possible qu’un DTC de 1er parcours ne soit pas confirmé.

Avec l’analyseur générique GST

1) Démarrer le moteur et l’amener à température normale de fonctionnement.
2) Placer des sondes de voltmètre entre la borne 50 de l’ECM [signal de sonde à oxygène chauffé] 1 et la masse du moteur.
3) Procéder au contrôle suivant en maintenant constant le régime moteur à 2 000 tr/mn à vide.

- La tension varie entre 0 - 0,3V et 0,6 - 1,0V plus de cinq fois en 10 secondes.
  1 occurrence : 0 - 0,3 V → 0,6 - 1,0 V → 0 - 0,3 V
  2 occurrences : 0 - 0,3 V → 0,6 - 1,0 V → 0 - 0,3 V → 0,6 - 1,0 V → 0 - 0,3V

4) Si ‘‘MAUVAIS’’, effectuer une ‘‘Procédure de diagnostic’’, voir page EC-3219.

Simpo PDF Merge and Split Unregistered Version - http://www.simpopdf.com

Schéma de câblage

NEEC0125

EC-O2S1B1-01

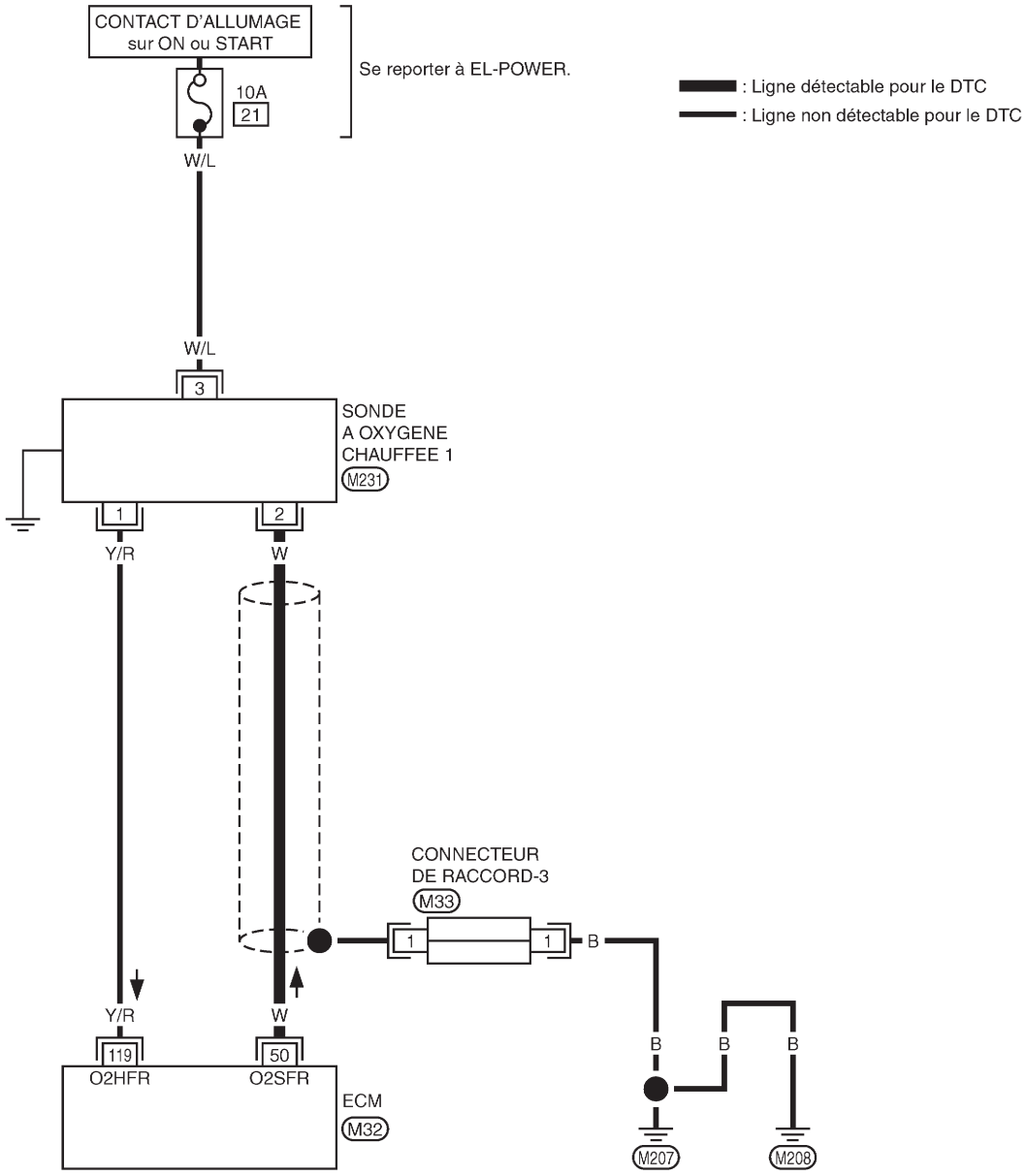

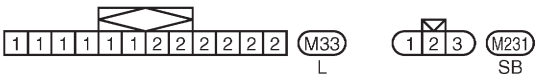

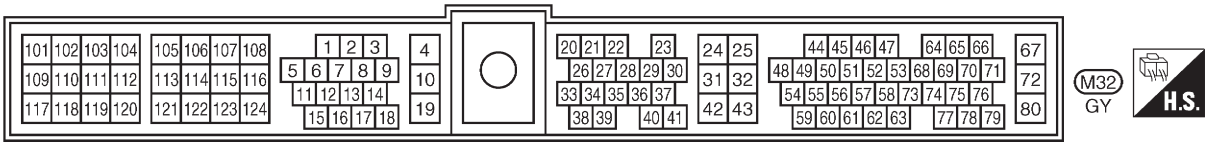

GEC245A

Simpo PDF Merge and Split Unregistered Version - http://www.simpopdf.com

Procédure de diagnostic

NEEC0126

1	RESSERRER LES VIS DE MASSE

1. Mettre le contact d'allumage sur OFF.
2. Desserrer et resserrer les vis de masse du moteur.

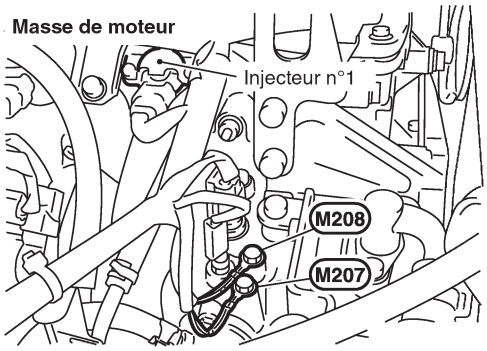

SEC309D

▶	ALLER A 2.

2	RESSERRER LA SONDE A OXYGENE CHAUFFE 1

Desserrer et resserrer la sonde à oxygène chauffé 1.

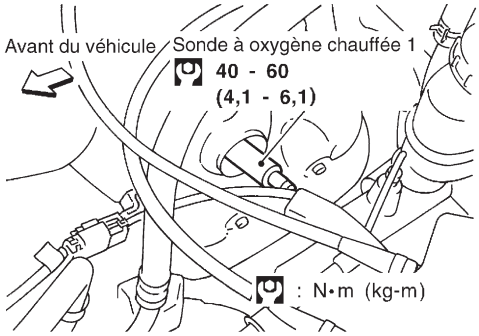

SEF332VC

Couple de serrage :
40 - 60 N·m (4,1 - 6,1 kg-m)

▶	ALLER A 3.

3	CONTROLER L'ETANCHEITE DE L'ECHAPPEMENT

1. Démarrer le moteur et le laisser tourner au ralenti.
2. Ecouter s'il n'y a pas de fuite de l'air d'échappement en amont du catalyseur à trois voies.

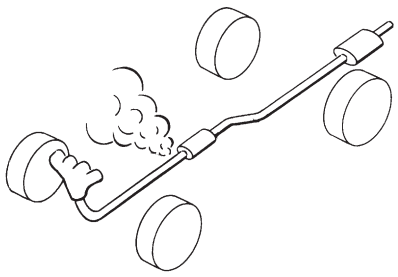

SEF099P

BON ou MAUVAIS

Bon	▶	ALLER A 4.
Mauvais	▶	Réparer ou remplacer.

Simpo PDF Merge and Split Unregistered Version - http://www.simpopdf.com

4	S'ASSURER QU'IL N'Y A PAS DE FUITE D'AIR D'ADMISSION	
Ecouter s'il n'y a pas de fuite de l'air d'admission entre le débitmètre d'air et le collecteur d'admission.		
BON ou MAUVAIS		
Bon	▶	ALLER A 5.
Mauvais	▶	Réparer ou remplacer.

5 EFFACER LES DONNEES D'AUTO-INSTRUCTION

Avec CONSULT-II

1. Démarrer le moteur et l'amener à température normale de fonctionnement.
2. Sélectionner ''COM AUTO INSTRUCT'' dans le mode ''SUPPORT TRAVAIL'' de CONSULT-II.
3. Effacer le coefficient de commande d'auto-instruction en appuyant sur ''EFFAC''.

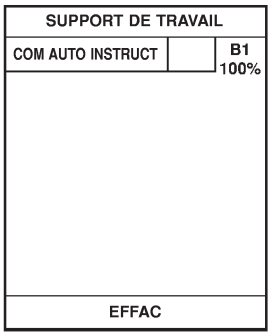

SEF215Z

4. Faire tourner le moteur pendant au moins 10 minutes au ralenti.
   Le DTC de 1er parcours P0171 ou P0172 est-il détecté ? Est-il difficile de démarrer le moteur ?

Sans CONSULT-II

1. Démarrer le moteur et l'amener à température normale de fonctionnement.
2. Mettre le contact d'allumage sur ''OFF''.
3. Débrancher le connecteur de faisceau du débitmètre d'air, redémarrer et faire tourner le moteur pendant au moins 3 secondes au ralenti.

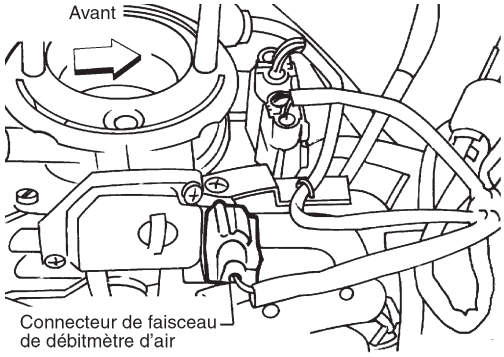

AEC131A

4. Eteindre le moteur et rebrancher le connecteur de faisceau du débitmètre d'air.
5. Vérifier que le DTC P0102 est bien affiché.
6. Effacer la mémoire de DTC. Se reporter à ''COMMENT EFFACER LES CODES DE DIAGNOSTIC ANTIPOLLUTION'', EC-3065.
7. Vérifier que le DTC P0000 est bien affiché.
8. Faire tourner le moteur pendant au moins 10 minutes au ralenti.
   Le DTC de 1er parcours P0171 ou P0172 est-il détecté ? Est-il difficile de démarrer le moteur ?

Oui ou Non

Oui	▶	Réaliser le diagnostic des défauts pour DTC P0171, P0172. Se reporter à EC-3252, 3259.
Non	▶	ALLER A 6.

Simpo PDF Merge and Split Unregistered Version - http://www.simpopdf.com

6	CONTROLER LE CIRCUIT DE SIGNAL D'ENTREE

1. Mettre le contact d'allumage sur ''OFF.''
2. Débrancher le connecteur de faisceau de la sonde à oxygène chauffé 1 et le connecteur de faisceau de l'ECM.
3. Vérifier la continuité du faisceau entre la borne 50 de l'ECM et la borne 2. Se reporter au schéma de câblage.
   Il doit y avoir continuité.
4. Vérifier la continuité du faisceau entre la borne 50 (ou 2) de l'ECM et la masse. Se reporter au schéma de câblage.
   Il ne doit pas y avoir continuité.
5. Vérifier également que le faisceau n'est pas en court-circuit à l'alimentation.

BON ou MAUVAIS

Bon	▶	ALLER A 7.
Mauvais	▶	Réparer les faisceaux ou les connecteurs en circuit ouvert ou en court-circuit à la masse ou à l'alimentation.

7	CONTROLER LE CHAUFFAGE DE LA SONDE A OXYGENE CHAUFFE 1

Vérifier la résistance entre les bornes 3 et 1.

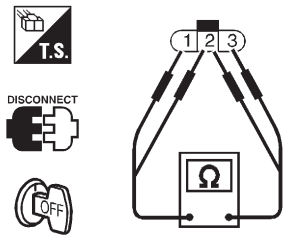

SEF220W

Résistance : 2,3 - 4,3 Ω à 25°C

Vérifier la continuité entre les bornes 2 et 1, 3 et 2.

Il ne doit pas y avoir continuité.

ATTENTION :

- **Jeter toute sonde à oxygène chauffé tombée d'une hauteur supérieure à 0,5 m sur une surface dure telle qu'un plancher en béton, et la remplacer par une sonde neuve.**
- **Avant de reposer une nouvelle sonde à oxygène, nettoyer le filetage du système d'échappement à l'aide de l'outil de nettoyage pour filetage de sonde à oxygène J-43897-18 ou J-43897-12 et un lubrifiant antigrippant agréé.**

BON ou MAUVAIS

Bon (avec CONSULT-II)	▶	ALLER A 8.
Bon (sans CONSULT-II)	▶	ALLER A 9.
Mauvais	▶	Remplacer la sonde à oxygène chauffé 1.

Simpo PDF Merge and Split Unregistered Version - http://www.simpopdf.com

8 CONTROLER LA SONDE A OXYGENE CHAUFFE 1

Avec CONSULT-II

1. Brancher à nouveau tous les connecteurs de faisceau débranchés.
2. Démarrer le moteur et l'amener à température normale de fonctionnement.
3. Sélectionner ''DECLEN MANU'' en mode ''CONTROLE DE DONNEES'', et régler le point de déclenchement à 100.
4. Sélectionner ''S/O2 CH1 (R1)'' et ''MTR S/O2 CH1 (R1)'' dans la sélection d'élément.
5. Maintenir le régime-moteur à 2.000 tr/mn à vide au cours des étapes suivantes.
6. Appuyer sur ''DEPART'' sur l'écran de CONSULT-II.

CONTROLE DE DONNEES	
CONTROLE	AUCUN DTC
TR/MN MOT	XXX tr/min
DEBITMETRE-R1	XXX V
CAP TEMP MOT	XXX °C
S/O2 CH1 (R1)	XXX V
MTR S/O2 CH1 (R1)	PAUVRE

SEF646Y

7. Contrôler les points suivants.

- ''MTR S/O2 (R1)'' en mode de ''CONTROLE DES DONNEES'' passe de ''RICH'' à ''PAUV'' à ''RICH'' 5 fois en 10 secondes.
  5 fois (cycles) sont comptées comme indiqué ci-dessous.

5

cycle	1	2	3	4	5
MTR S/O2 CH1 (R1)	R-L-	R-L-	R-L-	R-L-	R-L-R

R associé à MTR S/O2 CH1 (R1) signifie RICHE
L associé à MTR S/O2 CH1 (R1)/(R2) signifie PAUVRE

SEF217YA

- La tension de ''S/O2 CH1 (R1)'' est supérieure à 0,6V au moins une fois.
- La tension de ''S/O2 CH1 (R1)'' est inférieure à 0,3V au moins une fois.
- La tension de ''S/O2 CH1(R1)'' ne dépasse jamais 1,0V.

Déclen-chement	Régime Moteur	S/02 CH1 (R1)
	tr/mn	V
XXX	XXX	XXX
XXX	XXX	XXX
XXX	XXX	XXX
XXX	XXX	XXX
XXX	XXX	XXX
XXX	XXX	XXX
XXX	XXX	XXX
XXX	XXX	XXX
XXX	XXX	XXX
XXX	XXX	XXX
XXX	XXX	XXX
XXX	XXX	XXX

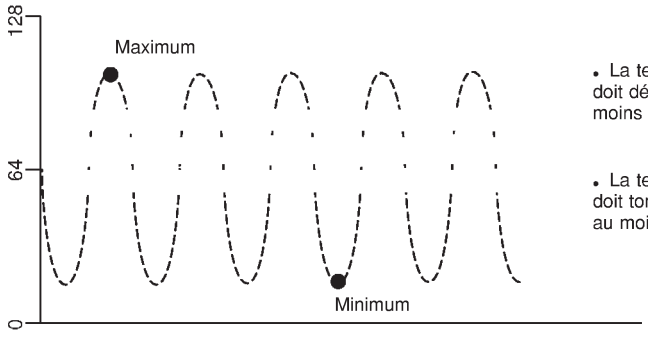

- La tension maximale doit dépasser 0,6V au moins une fois.
- La tension minimale doit tomber sous 0,30V au moins une fois.

SEF648Y

ATTENTION :

- **Jeter toute sonde à oxygène chauffé tombée d'une hauteur supérieure à 0,5 m sur une surface dure telle qu'un plancher en béton, et la remplacer par une sonde neuve.**
- **Avant de reposer une nouvelle sonde à oxygène, nettoyer le filetage du système d'échappement à l'aide de l'outil de nettoyage pour filetage de sonde à oxygène J-43897-18 ou J-43897-12 et un lubrifiant antigrippant agréé.**

BON ou MAUVAIS

Bon	▶	ALLER A 10.
Mauvais	▶	Remplacer la sonde à oxygène chauffé 1.

Simpo PDF Merge and Split Unregistered Version - http://www.simpopdf.com

9	CONTROLER LA SONDE A OXYGENE CHAUFFE 1

Sans CONSULT-II

1. Brancher à nouveau tous les connecteurs de faisceau débranchés.
2. Démarrer le moteur et l'amener à température normale de fonctionnement.
3. Placer des sondes de voltmètre entre la borne 50 de l'ECM [signal de sonde à oxygène chauffé] 1 et la masse du moteur.

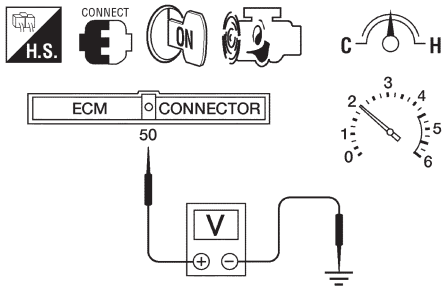

AEC873A

4. Procéder au contrôle suivant en maintenant constant le régime moteur à 2 000 tr/mn à vide.

- La tension varie entre 0 - 0,3V et 0,6 - 1,0V plus de cinq fois en 10 secondes.
  1 occurrence : 0 - 0,3V → 0,6 - 1,0V → 0 - 0,3V
  2 occurrences : 0 - 0,3V → 0,6 - 1,0V → 0 - 0,3V → 0,6 - 1,0V → 0 - 0,3V
- La tension maximale dépasse 0,6 V au moins une fois.
- La tension minimale tombe sous 0,3 V au moins une fois.
- La tension ne dépasse jamais 1,0 V.

ATTENTION :

- **Jeter toute sonde à oxygène chauffé tombée d'une hauteur supérieure à 0,5 m sur une surface dure telle qu'un plancher en béton, et la remplacer par une sonde neuve.**
- **Avant de reposer une nouvelle sonde à oxygène, nettoyer le filetage du système d'échappement à l'aide de l'outil de nettoyage pour filetage de sonde à oxygène J-43897-18 ou J-43897-12 et un lubrifiant antigrippant agréé.**

BON ou MAUVAIS

Bon	▶	ALLER A 10.
Mauvais	▶	Remplacer la sonde à oxygène chauffé 1.

Simpo PDF Merge and Split Unregistered Version - http://www.simpopdf.com

10	CONTROLER LE DEBITMETRE D'AIR

1. Mettre le contact d'allumage sur ON.
2. Démarrer le moteur et l'amener à température normale de fonctionnement.
3. Vérifier la tension entre la borne 54 de l'ECM (signal du débitmètre d'air) et la masse.

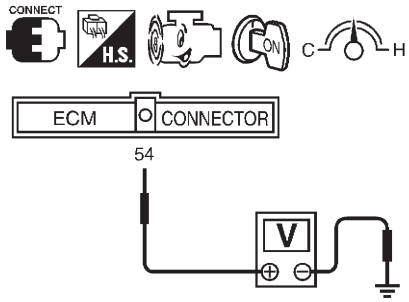

SEF326V

Conditions	Tension V
Contact d'allumage sur 'ON' (moteur arrêté.)	Moins de 1,0
Ralenti (Le moteur est monté en température jusqu'à atteindre une température de fonctionnement normale.)	0,9 - 1,8
2 500 tr/mn (Le moteur est monté en température jusqu'à atteindre une température de fonctionnement normale.)	1,9 - 2,3
Ralenti à environ 4 000 tr/mn*	1,3 - 1,7 à env. 3,0

*: Vérifier la hausse de tension linéaire en réponse à des augmentations du régime du moteur à environ 4.000 tr/mn.

MTBL0326

4. Si la tension est hors norme, débrancher et rebrancher le connecteur du faisceau de débitmètre d'air. Puis, recommencer la vérification précédente.
5. Si le résultat n'est pas conforme, déposer le débitmètre du conduit d'air. Vérifier si le fil chaud n'est pas endommagé ou encrassé.

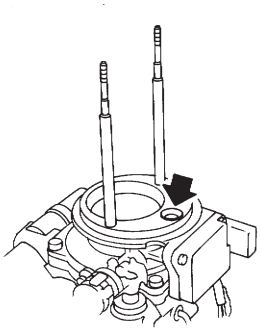

SEF893J

BON ou MAUVAIS

Bon	▶	ALLER A 11.
Mauvais	▶	Remplacer le débitmètre d'air.

11	CONTROLER LA SOUPAPE PCV

1. Le moteur tournant au ralenti, déposer la soupape PCV du séparateur de reniflard.
2. Une soupape en bon état émet un sifflement lors du passage de l'air. Une forte succion doit être ressentie immédiatement lorsque l'on place un doigt sur l'orifice d'admission de la soupape.

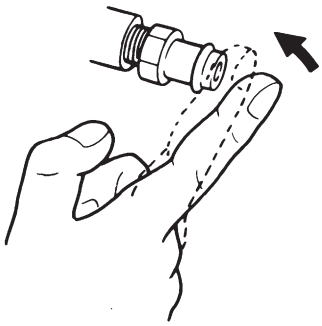

SEC137A

BON ou MAUVAIS

Bon	▶	ALLER A 12.
Mauvais	▶	Réparer ou remplacer la soupape PCV.

12	VERIFIER LE CIRCUIT DE BLINDAGE

1. Mettre le contact d'allumage sur OFF.
2. Retirer le connecteur de jonction-3.
3. Contrôler les points suivants.

- Continuité entre la borne 1 du connecteur de jonction-3 et la masse
- Connecteur de jonction-3

(Se reporter à ''DISPOSITION DES FAISCEAUX'', dans la section EL.)

Il doit y avoir continuité.

4. Vérifier également que le faisceau n'est pas en court-circuit à l'alimentation.
5. Ensuite, rebrancher le connecteur de jonction.

BON ou MAUVAIS

Bon	▶	ALLER A 13.
Mauvais	▶	Réparer les faisceaux ou connecteurs en circuit ouvert ou court-circuit.

13	VERIFIER SI L'INCIDENT EST INTERMITTENT

Effectuer un ''DIAGNOSTIC DES DEFAUTS EN CAS INCIDENT INTERMITTENT'', voir page EC-3132.

	▶	**FIN DE L'INSPECTION**

Simpo PDF Merge and Split Unregistered Version - http://www.simpopdf.com

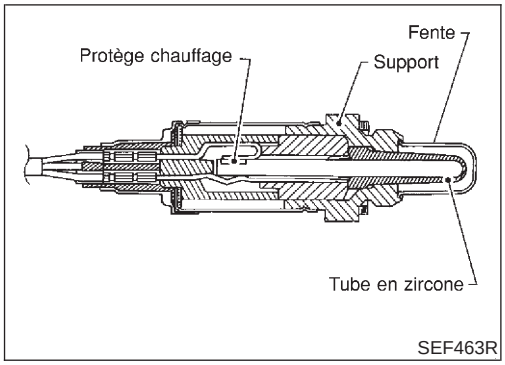

SEF463R

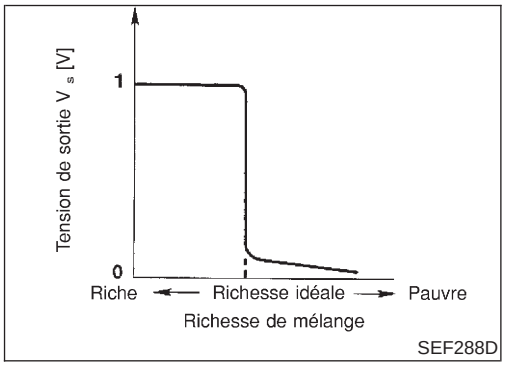

SEF288D

Description des composants

NEEC0094

La sonde à oxygène chauffé 1 est placée dans le collecteur d'échappement. Elle détecte la quantité d'oxygène contenue dans les gaz d'échappement en comparaison avec l'air extérieur. La sonde à oxygène chauffé 1 dispose d'un tube à extrémité fermée en zirconium de céramique. La zircone produit une tension qui va d'environ 1 V dans des conditions de mélange plus riche à 0 V dans des conditions de mélange plus pauvre. Le signal de la sonde à oxygène chauffé 1 est envoyé à l'ECM. L'ECM règle la durée de l'impulsion d'injection pour obtenir le mélange idéal air-carburant. Le mélange idéal air-carburant se produit vers le changement radical de 1 V à 0 V.

Valeur de référence de CONSULT-II en mode de contrôle de données

NEEC0095

Les données de spécification sont des valeurs de référence.

ELEMENT DE CONTROLE	CONDITION		SPECIFICATION
S/O2 CH1 (R1)	● Moteur : une fois le moteur chaud	Maintenir le régime-moteur à 2 000 tr/mn.	0 - 0,3 V ←→ Env. 0,6 - 1,0 V
MTR S/O2 CH1 (R1)			PAUVRE ←→ RICHE Change plus de 5 fois pendant 10 secondes

Bornes de l'ECM et valeurs de référence

NEEC0096

Les données de spécification sont des valeurs de référence et sont mesurées entre chaque borne et la masse.

ATTENTION :
Ne pas utiliser de bornes de masse de l'ECM lors de la mesure de la tension d'entrée/de sortie. En agissant de la sorte, il est possible d'endommager le transistor de l'ECM. Utiliser une masse autre que les bornes de l'ECM, comme par exemple la prise de terre.

N° DE BORNE	COULEUR DE CABLE	ELEMENT	CONDITION	DONNEES (tension de courant continu)
50	W	Sonde à oxygène chauffé 1	**[Moteur en marche]** ● Après montée en température normale de fonctionnement et au régime moteur de 2.000 tr/mn.	0 - Environ 1,0 V 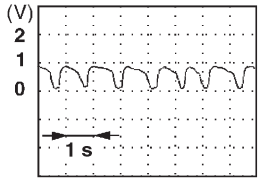 SEF008W

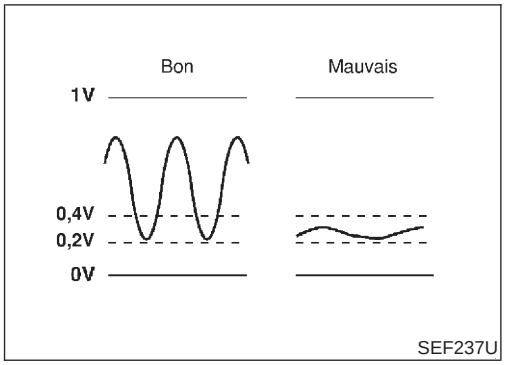

Logique de diagnostic de bord

NEEC0097

Lorsque le signal de la sonde à oxygène chauffé 1 n'est pas en entrée, les circuits de l'ECM détectent une tension continue d'environ 0,3V. En conséquence, le diagnostic a pour objet de vérifier le temps pendant lequel la tension de sortie est comprise entre 200 et 400 mV, et de vérifier que ce temps n'est pas anormalement long.

N° de DTC	Le défaut est détecté quand ...	Eléments de contrôle (causes possibles)
P0134 0134	● La tension en provenance du capteur avoisine constamment 0,3V.	● Faisceau ou connecteurs (le circuit de capteur est ouvert ou court-circuité) ● Sonde à oxygène chauffé 1

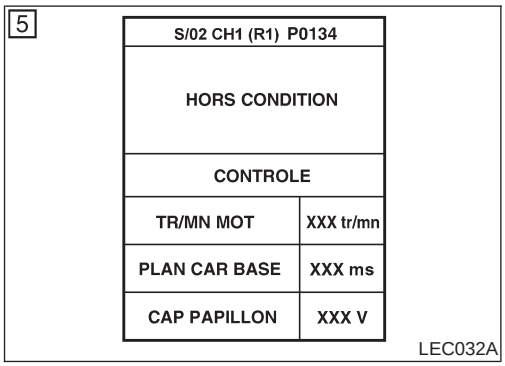

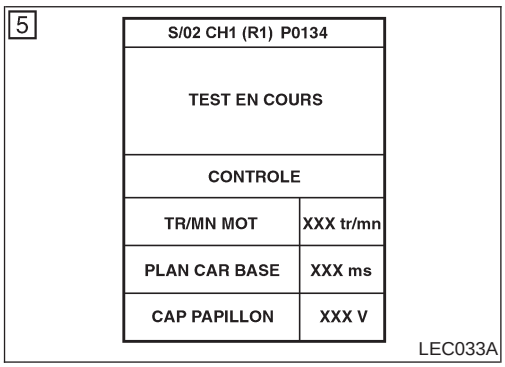

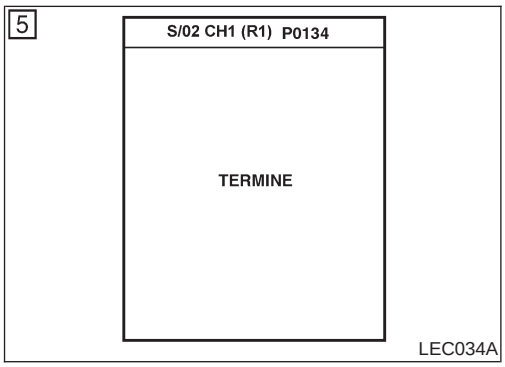

Procédure de confirmation de code de défaut (DTC)

NEEC0098

ATTENTION :
Toujours adapter sa vitesse aux exigences de sécurité.

REMARQUE :
Si une ''Procédure de confirmation de DTC'' a précédé, toujours mettre le contact d'allumage sur la position OFF et attendre au moins 5 secondes avant de procéder à l'essai suivant.

CONDITIONS D'ESSAI :
Avant d'entamer la procédure suivante, vérifier que la tension délivrée par la batterie est supérieure à 11V au ralenti.

Avec CONSULT-II

1) Démarrer le moteur et l'amener à température normale de fonctionnement.
2) Sélectionner ''P0134 S/O2 CH1 (R1)'' ou ''S/O2 CH1'' dans le mode ''SUPPORT TRAVAIL DTC'' de CONSULT-II.
3) Appuyer sur ''DEPART''.
4) Laisser le moteur tourner au ralenti pendant au moins 3 minutes.

REMARQUE :
Ne jamais dépasser le régime de 3 600 tr/mn après cette étape. Si le régime-moteur dépasse cette limite, recommencer à l'étape 4.

5) Lorsque les conditions suivantes sont remplies, l'écran de CONSULT-II indique ''TEST EN COURS''. Maintenir les conditions indiquées jusqu'à ce que le message ''TEST EN COURS'' laisse place au message ''TERMINE'' (cela prend environ 10 à 60 secondes.

Simpo PDF Merge and Split Unregistered Version - http://www.simpopdf.com

TR/MN MOT	1.400 - 4.000 tr/mn
Vitesse du véhicule	64 - 130 km/h
PLAN CAR BASE	3,5 - 17 ms
Levier de vitesses	Rapport adapté

Si ‘‘TEST EN COURS’’ ne s’affiche pas après 5 minutes, réessayer à partir de l’étape 2.

6) S’assurer que BON s’affiche après avoir appuyé sur ‘‘RESULT AUTO-DIAG’’. Si MAUVAIS s’affiche, se reporter à la ‘‘Procédure de diagnostic’’, EC-3230.

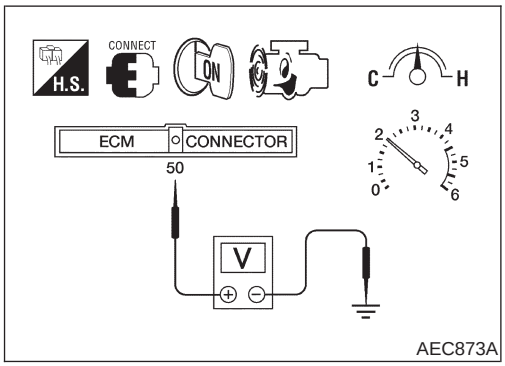

Vérification du fonctionnement général

NEEC0099

Utiliser cette procédure pour vérifier le fonctionnement général du circuit de la sonde à oxygène chauffé 1. Au cours de ce contrôle, il est possible qu’un DTC de 1er parcours ne soit pas confirmé.

Sans CONSULT-II

1) Démarrer le moteur et l’amener à température normale de fonctionnement.
2) Placer des sondes de voltmètre entre la borne 50 de l’ECM [signal de sonde à oxygène chauffé] 1 et la masse du moteur.
3) Procéder au contrôle suivant en maintenant constant le régime moteur à 2 000 tr/mn à vide.

- La tension ne reste pas dans les limites de 0,2 à 0,4 V.

4) Si les résultats ne sont pas conformes, effectuer une ‘‘Procédure de diagnostic’’, voir page EC-3230.

Simpo PDF Merge and Split Unregistered Version - http://www.simpopdf.com

Schéma de câblage

NEEC0100

EC-O2S1B1-01

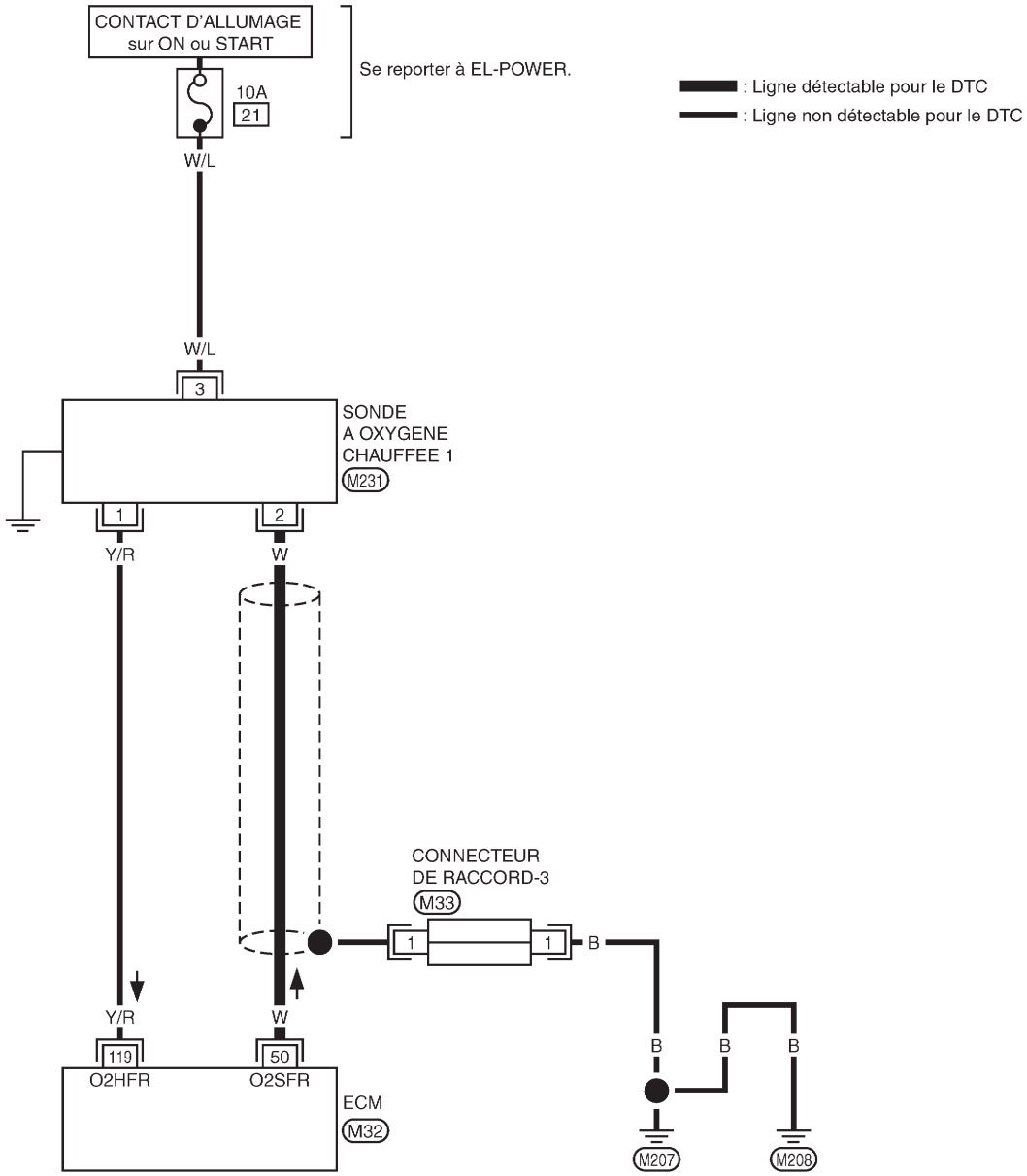

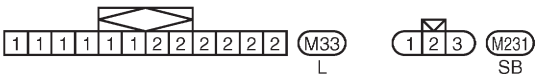

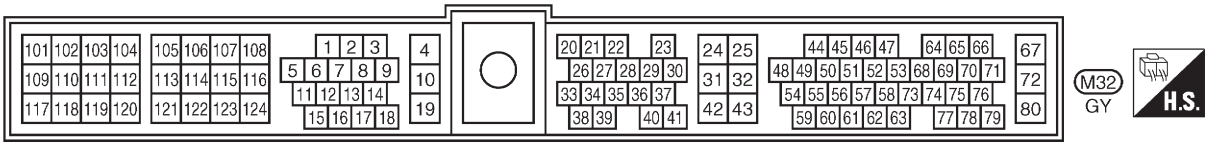

GEC245A

Simpo PDF Merge and Split Unregistered Version - http://www.simpopdf.com

Procédure de diagnostic

NEEC0101

1	DEBUT DE L'INSPECTION

1. Mettre le contact d'allumage sur OFF.
2. Desserrer et resserrer les vis de masse du moteur.

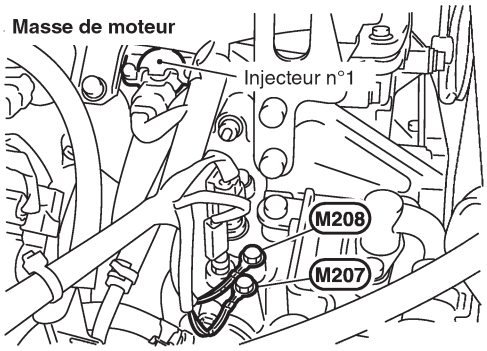

SEC309D

3. Débrancher le connecteur de faisceau de la sonde à oxygène chauffé 1.

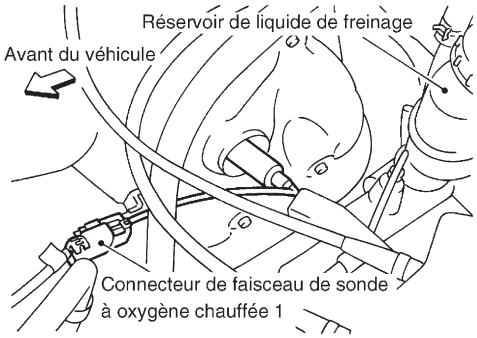

SEF331VC

▶	ALLER A 2.

2	CONTROLER LE CIRCUIT DE SIGNAL D'ENTREE

1. Débrancher le connecteur de faisceau de l'ECM.
2. Vérifier la continuité du faisceau entre la borne 50 de l'ECM et la borne 2. Se reporter au schéma de câblage.
   Il doit y avoir continuité.
3. Vérifier la continuité du faisceau entre la borne 50 (ou 2) de l'ECM et la masse. Se reporter au schéma de câblage.
   Il ne doit pas y avoir continuité.
4. Vérifier également que le faisceau n'est pas en court-circuit à l'alimentation.

BON ou MAUVAIS

Bon (avec CONSULT-II) ▶	ALLER A 3.
Bon (sans CONSULT-II) ▶	ALLER A 4.
Mauvais ▶	Réparer les faisceaux ou les connecteurs en circuit ouvert ou en court-circuit à la masse ou à l'alimentation.

3	CONTROLER LA SONDE A OXYGENE CHAUFFE 1

Avec CONSULT-II

1. Brancher à nouveau tous les connecteurs de faisceau débranchés.
2. Démarrer le moteur et l'amener à température normale de fonctionnement.
3. Sélectionner ''DECLEN MANU'' en mode ''CONTROLE DE DONNEES'', et régler le point de déclenchement à 100.
4. Sélectionner ''S/O2 CH1 (R1)'' et ''MTR S/O2 CH1 (R1)'' dans la Sélection d'élément.
5. Maintenir le régime-moteur à 2.000 tr/mn à vide au cours des étapes suivantes.
6. Appuyer sur ''DEPART'' sur l'écran de CONSULT-II.

CONTROLE DE DONNEES	
CONTROLE	AUCUN DTC
TR/MN MOT	XXX tr/min
DEBITMETRE-R1	XXX V
CAP TEMP MOT	XXX °C
S/O2 CH1 (R1)	XXX V
MTR S/O2 CH1 (R1)	PAUVRE

SEF646Y

7. Contrôler les points suivants.

- ''MTR S/O2 (R1)'' en mode de ''CONTROLE DES DONNEES'' passe de ''RICHE'' à ''PAUVRE'' à ''RICHE'' 5 fois en 10 secondes.
  5 fois (cycles) sont comptées comme indiqué ci-dessous.

5

cycle	1	2	3	4	5
MTR S/O2 CH1 (R1)	R-L-R-L-R-L-R-L-R-L				

R associé à MTR S/O2 CH1 (R1) signifie RICHE
L associé à MTR S/O2 CH1 (R1)/(R2) signifie PAUVRE

SEF217YA

- La tension de ''S/O2 CH1 (R1)'' est supérieure à 0,6V au moins une fois.
- La tension de ''S/O2 CH1 (R1)'' est inférieure à 0,3V au moins une fois.
- La tension de ''S/O2 CH1(R1)'' ne dépasse jamais 1,0V.

Déclen-chement	Régime Moteur	S/02 CH1 (R1)
	tr/mn	V
XXX	XXX	XXX
XXX	XXX	XXX
XXX	XXX	XXX
XXX	XXX	XXX
XXX	XXX	XXX
XXX	XXX	XXX
XXX	XXX	XXX
XXX	XXX	XXX
XXX	XXX	XXX
XXX	XXX	XXX
XXX	XXX	XXX
XXX	XXX	XXX

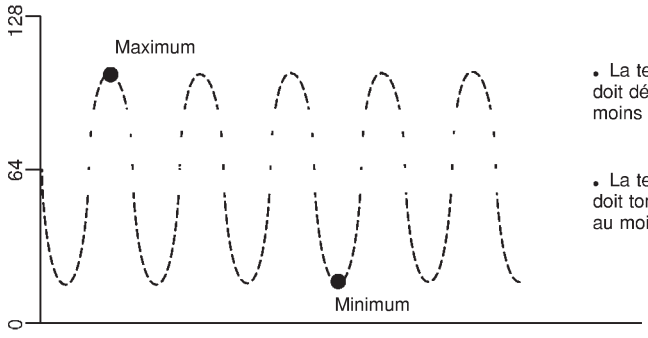

- La tension maximale doit dépasser 0,6V au moins une fois.
- La tension minimale doit tomber sous 0,30V au moins une fois.

SEF648Y

ATTENTION :

- **Jeter toute sonde à oxygène chauffé tombée d'une hauteur supérieure à 0,5 m sur une surface dure telle qu'un plancher en béton, et la remplacer par une sonde neuve.**
- **Avant de reposer une nouvelle sonde à oxygène, nettoyer le filetage du système d'échappement à l'aide de l'outil de nettoyage pour filetage de sonde à oxygène J-43897-18 ou J-43897-12 et un lubrifiant antigrippant agréé.**

BON ou MAUVAIS

Bon	▶	ALLER A 5.
Mauvais	▶	Remplacer la sonde à oxygène chauffé 1.

Simpo PDF Merge and Split Unregistered Version - http://www.simpopdf.com

4	CONTROLER LA SONDE A OXYGENE CHAUFFE 1

Sans CONSULT-II

1. Brancher à nouveau tous les connecteurs de faisceau débranchés.
2. Démarrer le moteur et l'amener à température normale de fonctionnement.
3. Placer des sondes de voltmètre entre la borne 50 de l'ECM (signal de sonde à oxygène chauffé) 1 et la masse du moteur.

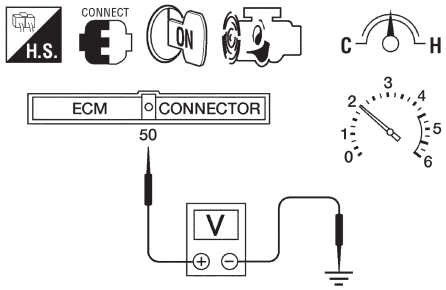

AEC873A

4. Procéder au contrôle suivant en maintenant constant le régime moteur à 2 000 tr/mn à vide.

- La tension varie entre 0 - 0,3 V et 0,6 - 1,0 V plus de cinq fois en 10 secondes.
  1 occurrence : 0 - 0,3 V → 0,6 - 1,0 V → 0 - 0,3 V
  2 occurrences : 0 - 0,3 V → 0,6 - 1,0 V → 0 - 0,3 V → 0,6 - 1,0 V → 0 - 0,3 V
- La tension maximale dépasse 0,6 V au moins une fois.
- La tension minimale tombe sous 0,3 V au moins une fois.
- La tension ne dépasse jamais 1,0 V.

ATTENTION :

- **Jeter toute sonde à oxygène chauffé tombée d'une hauteur supérieure à 0,5 m sur une surface dure telle qu'un plancher en béton, et la remplacer par une sonde neuve.**
- **Avant de reposer une nouvelle sonde à oxygène, nettoyer le filetage du système d'échappement à l'aide de l'outil de nettoyage pour filetage de sonde à oxygène J-43897-18 ou J-43897-12 et un lubrifiant antigrippant agréé.**

BON ou MAUVAIS

Bon	▶	ALLER A 5.
Mauvais	▶	Remplacer la sonde à oxygène chauffé 1.

5	VERIFIER LE CIRCUIT DE BLINDAGE

1. Mettre le contact d'allumage sur OFF.
2. Retirer le connecteur de jonction-3.
3. Contrôler les points suivants.

- Continuité entre la borne 1 du connecteur de jonction-3 et la masse
- Connecteur de jonction-3
  (Se reporter à ''DISPOSITION DES FAISCEAUX'', dans la section EL.)
  Il doit y avoir continuité.

4. Vérifier également que le faisceau n'est pas en court-circuit à l'alimentation.
5. Ensuite, rebrancher le connecteur de jonction.

BON ou MAUVAIS

Bon	▶	ALLER A 6.
Mauvais	▶	Réparer les faisceaux ou connecteurs en circuit ouvert ou court-circuit.

6	VERIFIER SI L'INCIDENT EST INTERMITTENT
Effectuer un ''DIAGNOSTIC DES DEFAUTS EN CAS INCIDENT INTERMITTENT'', voir page EC-3132.	
▶	**FIN DE L'INSPECTION**

Simpo PDF Merge and Split Unregistered Version - http://www.simpopdf.com

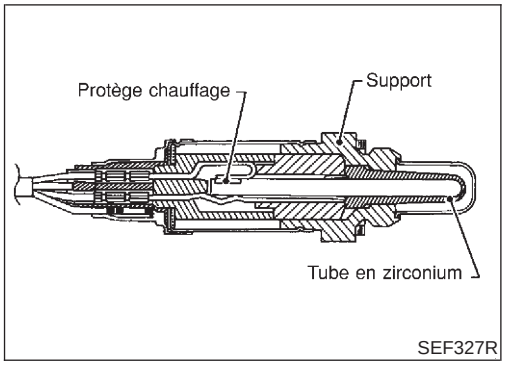

Description des composants

NEEC0171

La sonde à oxygène chauffé 2, située en aval du catalyseur à trois voies, contrôle le niveau d'oxygène dans les gaz d'échappement. Même si les caractéristiques de commutation de la sonde à oxygène chauffé 1 sont modifiées, le rapport air-carburant est commandé à la stœchiométrie par le signal délivré par la sonde à oxygène chauffé 2

Cette sonde est en zircone céramique La zircone produit une tension qui va d'environ 1 V dans des conditions de mélange plus riche à 0 V dans des conditions de mélange plus pauvre.

En conditions normales, la sonde à oxygène chauffé 2 n'est pas utilisée pour la gestion moteur.

Valeur de référence de CONSULT-II en mode de contrôle de données

NEEC0172

Les données de spécification sont des valeurs de référence.

ELEMENT DE CONTROLE	CONDITION		SPECIFICATION
S/O2 CH2 (R1)	● Moteur : une fois le moteur chaud	Montée rapide du régime moteur du ralenti jusqu'à 3 000 tr/mn.	0 - 0,3 V ←→ Env. 0,6 - 1,0 V
MTR S/O2 CH2 (R1)			PAUVRE ←→ RICHE

Bornes de l'ECM et valeurs de référence

NEEC0173

Les données de spécification sont des valeurs de référence et sont mesurées entre chaque borne et la masse.

ATTENTION :
Ne pas utiliser de bornes de masse de l'ECM lors de la mesure de la tension d'entrée/de sortie. En agissant de la sorte, il est possible d'endommager le transistor de l'ECM. Utiliser une masse autre que les bornes de l'ECM, comme par exemple la prise de terre.

N° DE BORNE	COULEUR DE CABLE	ELEMENT	CONDITION	DONNEES (tension de courant continu)
56	L/W	Sonde à oxygène chauffé 2	**[Moteur en marche]** ● Après montée en température normale de fonctionnement et montée en régime du ralenti jusqu'à 3000 tr/mn.	0 - Environ 1,0 V

Simpo PDF Merge and Split Unregistered Version - http://www.simpopdf.com

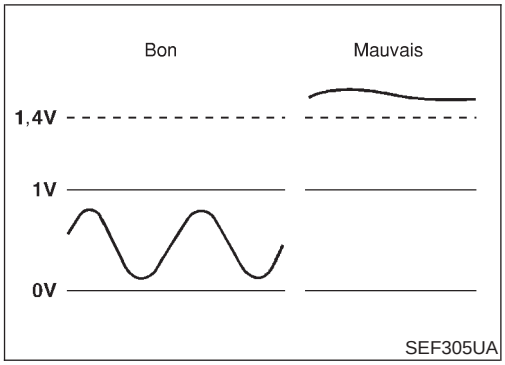

Logique de diagnostic de bord

NEEC0174

La sonde à oxygène chauffé 2 possède une longueur d'interruption entre riche et pauvre beaucoup plus grande que la sonde à oxygène chauffé 1. La capacité de stockage d'oxygène avant le catalyseur à trois voies est la cause du temps d'interruption plus long. Pour estimer les défauts de fonctionnement de la sonde à oxygène chauffé 2, l'ECM contrôle si la tension du capteur est suffisamment élevée durant différentes conditions de conduite comme la coupure d'alimentation.

N° de DTC	Le défaut est détecté quand ...	Eléments de contrôle (causes possibles)
P0138 0138	● La tension reçue du capteur par l'ECM est excessivement élevée.	● Faisceau ou connecteurs (le circuit de capteur est ouvert ou court-circuité) ● Sonde à oxygène chauffé 2

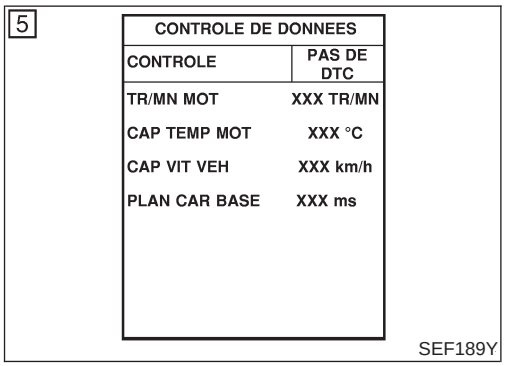

Procédure de confirmation de code de défaut (DTC)

NEEC0175

REMARQUE :

Si une ''Procédure de confirmation de DTC'' a précédé, toujours mettre le contact d'allumage sur la position OFF et attendre au moins 5 secondes avant de procéder à l'essai suivant.

Avec CONSULT-II

1) Mettre le contact d'allumage sur ON et régler CONSULT-II en mode ''CONTROLE DE DONNEES''.
2) Démarrer le moteur et conduire le véhicule à une vitesse de plus de 70 km/h pendant 2 minutes consécutives.
3) Maintenir les conditions suivantes pendant au moins 5 secondes de suite.

TR/MN MOT	1100 - 3600 tr/mn
CAP VIT VEHIC	32 - 120 km/h
PLAN CAR BASE	3,5 - 15,5 ms
CAP TEMP MOT	Plus de 70°C
Levier de vitesses	Rapport adapté

4) Si le DTC de 1er parcours est détecté, aller à ''Procédure de diagnostic'', page EC-3237.

DTC P0138 SONDE A OXYGENE CHAUFFE 2
Simpo PDF Merge and Split Unregistered Version - http://www.simpopdf.com

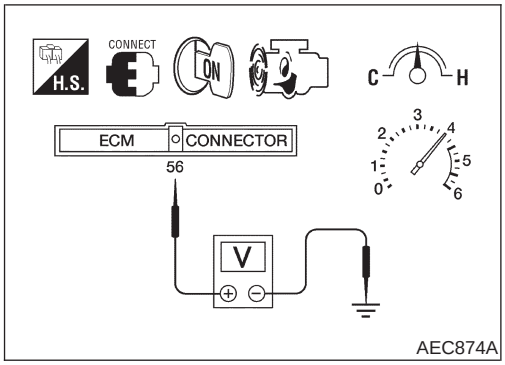

Vérification du fonctionnement général

NEEC0176

Utiliser cette procédure pour contrôler le fonctionnement général du circuit de la sonde à oxygène chauffé 2. Au cours de ce contrôle, il est possible qu'un DTC de 1er parcours ne soit pas confirmé.

Sans CONSULT-II

1) Démarrer le moteur et conduire le véhicule à une vitesse de plus de 70 km/h pendant 2 minutes consécutives.
2) Arrêter le véhicule et laisser tourner le moteur.
3) Placer des sondes de voltmètre entre la borne 56 de l'ECM (signal de sonde à oxygène chauffé 2) et la masse du moteur.
4) Vérifier la tension après avoir emballé le moteur jusqu'à 4 000 tr/mn à vide et ce, au moins 10 fois.
   (appuyer sur la pédale d'accélérateur et la relâcher aussi vite que possible)
   La tension doit être inférieure à 1,4 V pendant la procédure.
5) Si les résultats ne sont pas conformes, effectuer une ''Procédure de diagnostic'', voir page EC-3237.

Simpo PDF Merge and Split Unregistered Version - http://www.simpopdf.com

Schéma de câblage

NEEC0177

EC-O2S2B1-01

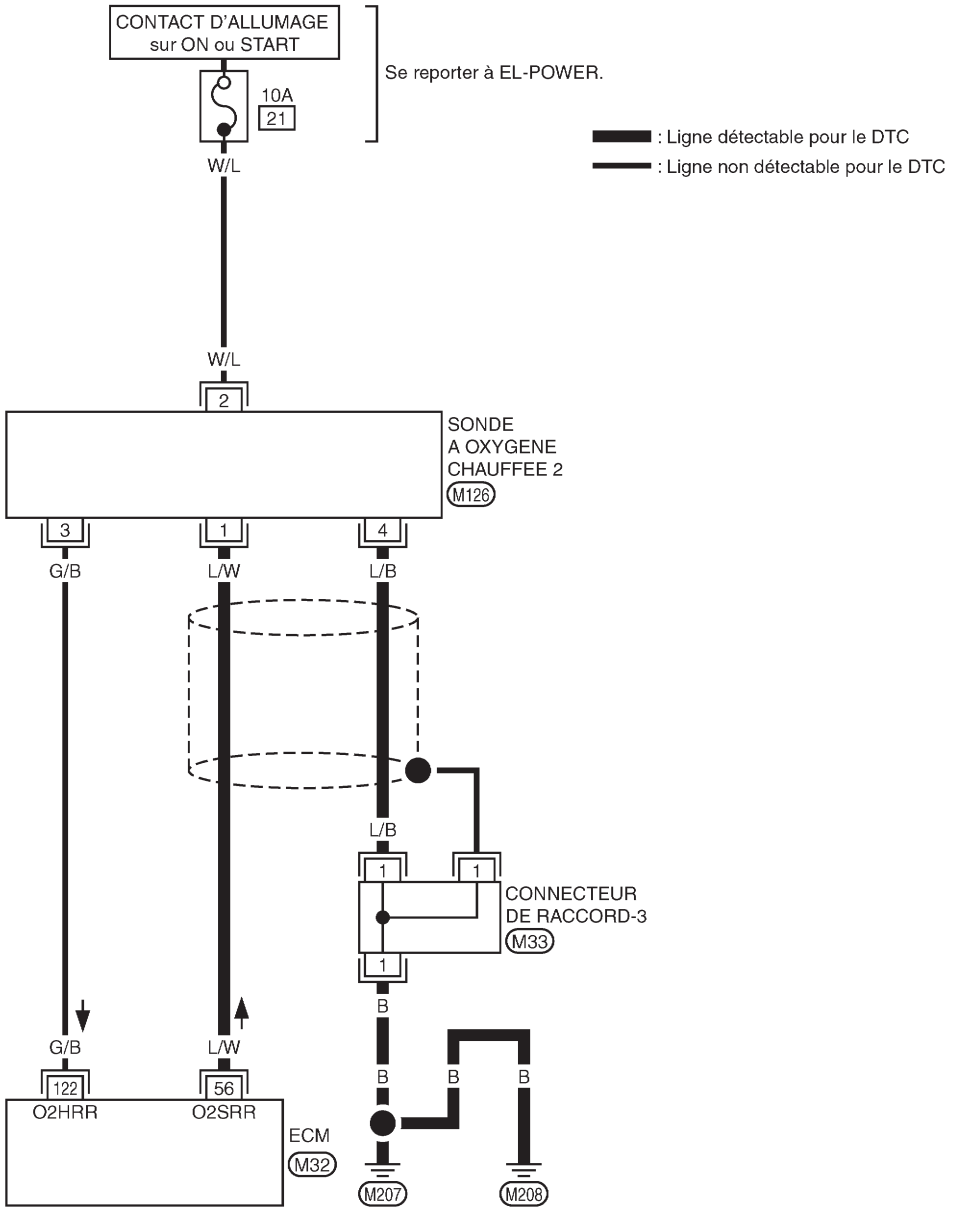

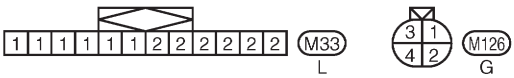

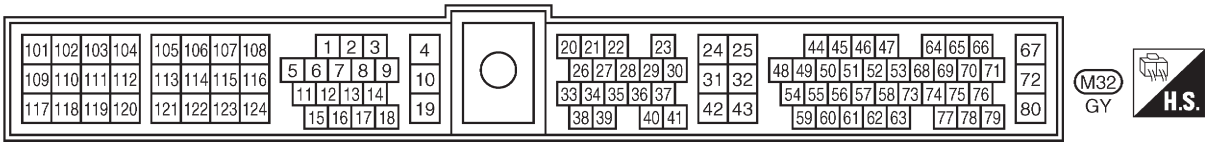

GEC246A

Procédure de diagnostic

NEEC0178

1	RESSERRER LES VIS DE MASSE

1. Mettre le contact d'allumage sur OFF.
2. Desserrer et resserrer les vis de masse du moteur.

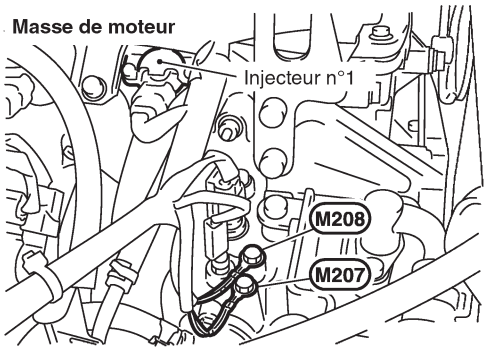

SEC309D

	▶	ALLER A 2.

2	CONTROLER LE CIRCUIT DE SIGNAL D'ENTREE

1. Débrancher le connecteur de faisceau de la sonde à oxygène chauffé 2 et le connecteur de faisceau de l'ECM.
2. Vérifier la continuité du faisceau entre la borne 56 de l'ECM et la borne 1. Se reporter au schéma de câblage.
   Il doit y avoir continuité.
3. Vérifier la continuité du faisceau entre la borne 56 (ou 1) de l'ECM et la masse. Se reporter au schéma de câblage.
   Il ne doit pas y avoir continuité.
4. Vérifier également que le faisceau n'est pas en court-circuit à la masse ou à l'alimentation.

BON ou MAUVAIS

Bon	▶	ALLER A 4.
Mauvais	▶	ALLER A 3.

3	DETECTER LA PIECE DEFECTUEUSE

Contrôler les points suivants.
- Vérifier que le faisceau entre la sonde à oxygène chauffé 2 et l'ECM n'est pas ouvert ou en court-circuit.

	▶	Réparer les faisceaux ou les connecteurs en circuit ouvert ou en court-circuit à la masse ou à l'alimentation.

4	CONTROLER LE CIRCUIT DE MISE A LA MASSE

1. Vérifier la continuité du faisceau entre la borne 4 de la sonde à oxygène chauffé 2 et la masse du moteur. Se reporter au schéma de câblage.
   Il doit y avoir continuité.
2. Vérifier également que le faisceau n'est pas en court-circuit à l'alimentation.

BON ou MAUVAIS

Bon	▶	ALLER A 6.
Mauvais	▶	ALLER A 5.

5	DETECTER LA PIECE DEFECTUEUSE

Contrôler les points suivants.
- Connecteur de jonction-3
- Vérifier que le faisceau entre la sonde à oxygène chauffé 2 et la masse du moteur n'est pas ouvert ou en court-circuit.

	▶	Réparer les faisceaux ou connecteurs en circuit ouvert ou en court-circuit à l'alimentation.

Simpo PDF Merge and Split Unregistered Version - http://www.simpopdf.com

6	CONTROLER LE CONNECTEUR DE FAISCEAU

Vérifier qu'il n'y a pas d'eau sur le connecteur de faisceau de la sonde à oxygène chauffé 2.
Il ne doit pas y avoir d'eau.

BON ou MAUVAIS

Bon (avec CONSULT-II)	▶	ALLER A 7.
Bon (sans CONSULT-II)	▶	ALLER A 8.
Mauvais	▶	Réparer ou remplacer le connecteur de faisceau.

7	CONTROLER LA SONDE A OXYGENE CHAUFFE 2

Avec CONSULT-II
1. Brancher à nouveau tous les connecteurs de faisceau débranchés.
2. Démarrer le moteur et conduire le véhicule à une vitesse de plus de 70 km/h pendant 2 minutes consécutives.
3. Arrêter le véhicule et laisser tourner le moteur.
4. Sélectionner ''INJECTION CARB'' en mode ''TEST ACTIF'' et sélectionner ''S/O2 CH2 (R1)'' comme élément à contrôler avec CONSULT-II.
5. Vérifier ''S/O2 CH2 (R1)'' au ralenti lorsque ''INJECTION CARB'' est réglé sur ±25.

TEST ACTIF	
INJECTION CARBUR	25 %
CONTROLE	
TR/MN MOT	XXX TR/MN
S/02 CH1 (R1)	XXX V
S/02 CH2 (R1)	XXX V
MTR S/02CH1 (R1)	RICHE
MTR S/02CH2 (R1)	RICHE

SEF662Y

La tension de ''S/O2 CH2 (R1)'' doit être supérieure à 0,56V au moins une fois lorsque le paramètre ''INJECTION CARB'' est à +25.
La tension de ''S/O2 CH2 (R1)'' doit être inférieure à 0,54V au moins une fois lorsque le paramètre ''INJECTION CARB'' est à -25
ATTENTION :
- **Jeter toute sonde à oxygène chauffé tombée d'une hauteur supérieure à 0,5 m sur une surface dure telle qu'un plancher en béton, et la remplacer par une sonde neuve.**
- **Avant de reposer une nouvelle sonde à oxygène, nettoyer le filetage du système d'échappement à l'aide de l'outil de nettoyage pour filetage de sonde à oxygène J-43897-18 ou J-43897-12 et un lubrifiant antigrippant agréé.**

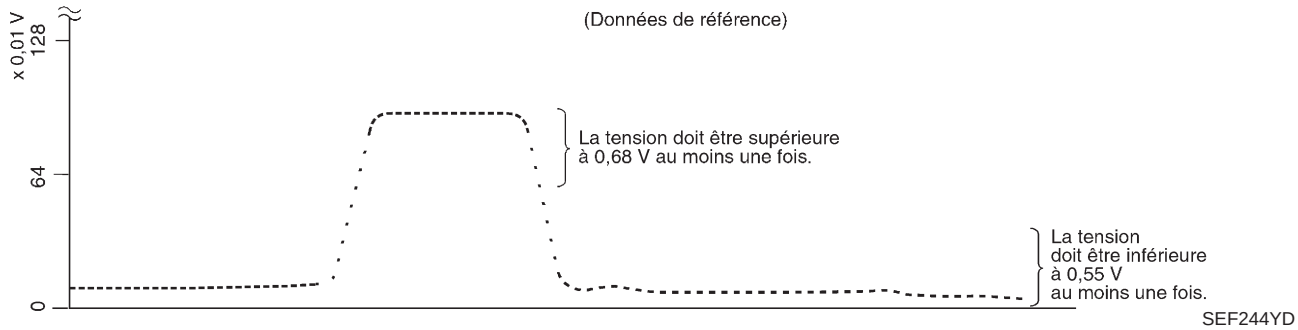

SEF244YD

BON ou MAUVAIS

Bon	▶	ALLER A 9.
Mauvais	▶	Remplacer la sonde à oxygène chauffé 2.

Simpo PDF Merge and Split Unregistered Version - http://www.simpopdf.com

8	CONTROLER LA SONDE A OXYGENE CHAUFFE 2

Sans CONSULT-II

1. Brancher à nouveau tous les connecteurs de faisceau débranchés.
2. Démarrer le moteur et conduire le véhicule à une vitesse de plus de 70 km/h pendant 2 minutes consécutives.
3. Arrêter le véhicule et laisser tourner le moteur.
4. Placer des sondes de voltmètre entre la borne 56 de l'ECM (signal de sonde à oxygène chauffé 2) et la masse du moteur.

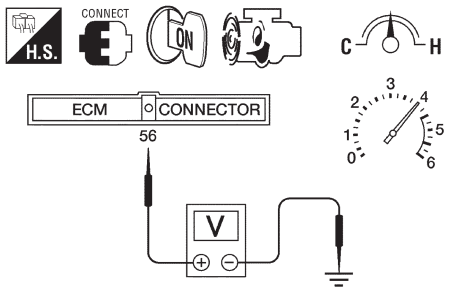

AEC874A

5. Vérifier la tension en emballant le moteur jusqu'à 4 000 tr/mn à vide et ce, au moins 10 fois.
   (appuyer sur la pédale d'accélérateur et la relâcher aussi vite que possible)
   La tension doit être supérieure à 0,56 V au moins une fois pendant la procédure.
   Si la tension est supérieure à 0,56 V à l'étape 4, il est inutile de procéder aux opérations décrites à l'étape 5.
6. Vérifier la tension en emballant le moteur jusqu'à 5 000 tr/mn à vide. Ou laisser le moteur tourner au ralenti pendant 10 minutes, puis vérifier la tension. Ou vérifier la tension lors du passage à 80 km/h en 3ème (T/M), ou en position D avec surmultipliée sur ARRET (T/A).
   La tension doit être inférieure à 0,54V au moins une fois.
   ATTENTION :
   - **Jeter toute sonde à oxygène chauffé tombée d'une hauteur supérieure à 0,5 m sur une surface dure telle qu'un plancher en béton, et la remplacer par une sonde neuve.**
   - **Avant de reposer une nouvelle sonde à oxygène, nettoyer le filetage du système d'échappement à l'aide de l'outil de nettoyage pour filetage de sonde à oxygène J-43897-18 ou J-43897-12 et un lubrifiant antigrippant agréé.**

BON ou MAUVAIS

Bon	▶	ALLER A 9.
Mauvais	▶	Remplacer la sonde à oxygène chauffé 2.

9	VERIFIER LE CIRCUIT DE BLINDAGE

1. Mettre le contact d'allumage sur OFF.
2. Débrancher le connecteur de fonction-3.
3. Vérifier la continuité du faisceau entre la borne 1 du connecteur de jonction-3 et la masse. Se reporter au schéma de câblage.
   Il doit y avoir continuité.
4. Vérifier également que le faisceau n'est pas en court-circuit à l'alimentation.
5. Ensuite, rebrancher le connecteur de jonction-3.

BON ou MAUVAIS

Bon	▶	ALLER A 11.
Mauvais	▶	ALLER A 10.

10	DETECTER LA PIECE DEFECTUEUSE

Contrôler les points suivants.
- Connecteur de jonction-3 (Se reporter à ''DISPOSITION DES FAISCEAUX'', dans la section EL.)
- Faisceau ouvert ou en court-circuit entre le connecteur de jonction-3 et la masse du moteur

	▶	Réparer les faisceaux ou connecteurs en circuit ouvert ou court-circuit.

11	**VERIFIER SI L'INCIDENT EST INTERMITTENT**
Effectuer un ''DIAGNOSTIC DES DEFAUTS EN CAS D'INCIDENT INTERMITTENT'', voir page EC-3132.	
▶	**FIN DE L'INSPECTION**

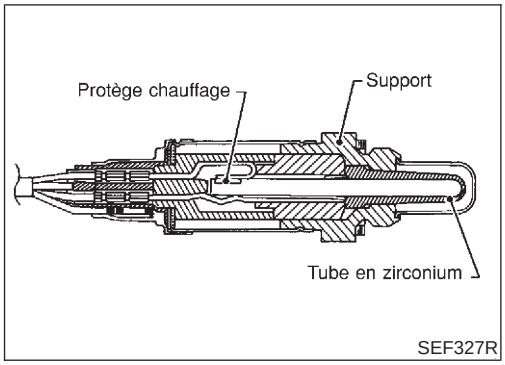

Description des composants

NEEC0162

La sonde à oxygène chauffé 2, située en aval du catalyseur à trois voies, contrôle le niveau d'oxygène dans les gaz d'échappement. Même si les caractéristiques de commutation de la sonde à oxygène chauffé 1 sont modifiées, le rapport air-carburant est commandé à la st[009c]chiométrie par le signal délivré par la sonde à oxygène chauffé 2

Cette sonde est en zircone céramique La zircone produit une tension qui va d'environ 1 V dans des conditions de mélange plus riche à 0 V dans des conditions de mélange plus pauvre.

En conditions normales, la sonde à oxygène chauffé 2 n'est pas utilisée pour la gestion moteur.

Valeur de référence de CONSULT-II en mode de contrôle de données

NEEC0163

Les données de spécification sont des valeurs de référence.

ELEMENT DE CONTROLE	CONDITION		SPECIFICATION
S/O2 CH2 (R1)	● Moteur : une fois le moteur chaud	Montée rapide du régime moteur du ralenti jusqu'à 3 000 tr/mn.	0 - 0,3 V ←→ Env. 0,6 - 1,0 V
MTR S/O2 CH2 (R1)			PAUVRE ←→ RICHE

Bornes de l'ECM et valeurs de référence

NEEC0164

Les données de spécification sont des valeurs de référence et sont mesurées entre chaque borne et la masse.

ATTENTION :
Ne pas utiliser de bornes de masse de l'ECM lors de la mesure de la tension d'entrée/de sortie. En agissant de la sorte, il est possible d'endommager le transistor de l'ECM. Utiliser une masse autre que les bornes de l'ECM, comme par exemple la prise de terre.

N° DE BORNE	COULEUR DE CABLE	ELEMENT	CONDITION	DONNEES (tension de courant continu)
56	L/W	Sonde à oxygène chauffé 2	**[Moteur en marche]** ● Après montée en température normale de fonctionnement et montée en régime du ralenti jusqu'à 3.000 tr/mn.	0 - Environ 1,0 V

Simpo PDF Merge and Split Unregistered Version - http://www.simpopdf.com

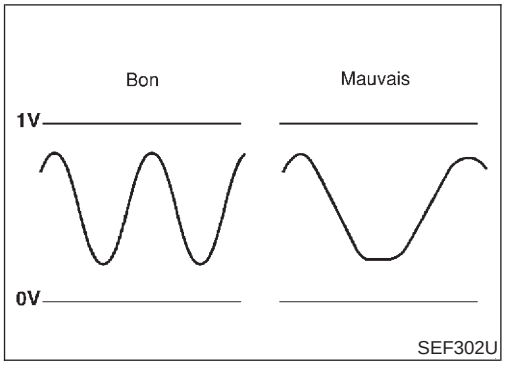

Logique de diagnostic de bord

NEEC0165

La sonde à oxygène chauffé 2 possède une longueur d'interruption entre riche et pauvre beaucoup plus grande que la sonde à oxygène chauffé 1. La capacité de stockage d'oxygène avant le catalyseur à trois voies est la cause du temps d'interruption plus long. Pour estimer les défauts de la sonde à oxygène chauffé 2, l'ECM contrôle si la réponse du capteur est plus rapide que ce qui est spécifié durant différentes conditions de conduite comme la coupure de carburant.

N° de DTC	Le défaut est détecté quand ...	Eléments de contrôle (causes possibles)
P0139 0139	● La sonde prend plus longtemps que la durée spécifiée pour réagir aux variations entre riche et pauvre.	● Faisceau ou connecteurs (le circuit de capteur est ouvert ou court-circuité) ● Sonde à oxygène chauffé 2 ● Pression de carburant ● Injecteurs ● Fuites d'air d'admission

DTC P0139 SONDE A OXYGENE CHAUFFE 2
Simpo PDF Merge and Split Unregistered Version - http://www.simpopdf.com

8

S/02 CH2 (R1) P0139	
COND1: HORS CONDITION COND2: INCMP COND3: INCMP	
CONTROLE	
TR/MN MOT	XXX TR/MN
PLAN CAR BASE	XXX ms
CAP TEMP MOT	XXX °C
CAP VIT VEH	XXX km/h

SEF841Y

8

S/02 CH2 (R1) P0139	
COND1: TEST EN COURS COND2: INCMP COND3: INCMP	
CONTROLE	
TR/MN MOT	XXX TR/MN
PLAN CAR BASE	XXX ms
CAP TEMP MOT	XXX °C
CAP VIT VEH	XXX km/h

SEF842Y

8

S/02 CH2 (R1) P0139	
COND1: TERMINE COND2: INCMP COND3: INCMP	
CONTROLE	
TR/MN MOT	XXX TR/MN
PLAN CAR BASE	XXX ms
CAP TEMP MOT	XXX °C
CAP VIT VEH	XXX km/h

SEF843Y

Procédure de confirmation de code de défaut (DTC)

NEEC0166

ATTENTION :
Toujours adapter sa vitesse aux exigences de sécurité.

REMARQUE :
- **‘‘TERMINE‘ apparaît sur l’écran de CONSULT-II lorsque tous les tests ‘‘COND1’’, ‘‘COND2’’ et ‘‘COND3’’ sont terminés.**
- Si une ‘‘Procédure de confirmation de DTC’’ a précédé, toujours mettre le contact d’allumage sur la position ‘‘OFF’’ et attendre au moins 5 secondes avant de procéder à l’essai suivant.

CONDITIONS D’ESSAI :
Ne jamais arrêter le moteur au cours de cette procédure. Si le moteur est arrêté, recommencer cette procédure depuis l’étape 2 de ‘‘Procédure pour COND1’’.

AVEC CONSULT-II

NEEC0166S01

Procédure pour COND1

NEEC0166S0101

1. Démarrer le moteur et l’amener à température normale de fonctionnement.
2. Mettre le contact d’allumage sur ‘‘OFF’’ et attendre au moins 5 secondes.
3. Mettre le contact d’allumage sur ‘‘ON’’ et sélectionner ‘‘P0139 S/O2 CH2 (R1)’’ ou ‘‘S/O2 CH2’’ dans le mode ‘‘SUPPORT TRAVAIL DTC’’ de CONSULT-II.
4. Appuyer sur ‘‘DEPART’’.
5. Démarrer le moteur et le laisser tourner au ralenti pendant au moins 30 secondes.
6. Emballer le moteur à 2 000 tr/mn à 2 ou 3 reprises, à vide.
   Si ‘‘TERMINE’’ apparaît sur l’écran de CONSULT-II, passer à l’étape 2 de ‘‘Procédure pour COND3’’.
   Si ‘‘TERMINE’’ n’apparaît pas sur l’écran CONSULT-II, passer à l’étape suivante.
7. Rouler à plus de 70 km/h pendant 2 minutes.
8. Lorsque les conditions suivantes sont réunies, ‘‘TEST EN COURS’’ sera affiché dans ‘‘COND1’’ sur l’écran de CONSULT-II. Maintenir les conditions indiquées jusqu’à ce que le message ‘‘TEST EN COURS’’ laisse place au message ‘‘TERMINE’’ (cela prend environ 60 secondes.)

TR/MN MOT	Plus de 1000 tr/mn
PLAN CAR BASE	Plus de 1,0 ms
CAP TEMP LIQ REFR	70 - 105°C
Levier sélecteur	Rapport adapté

REMARQUE :
- **Si ‘‘TEST EN COURS’’ ne s’affiche pas après 5 minutes, recommencer à partir de l’étape 2 dans ‘‘Procédure pour COND1’’.**
- **Si TERMINE apparaît dès que l’écran de CONSULT-II affiche ‘‘COND2’’, avant même de réaliser la ‘‘Procédure pour COND2’’, il n’est pas nécessaire de réaliser l’étape 1 de la ‘‘Procédure pour COND2’’.**

Simpo PDF Merge and Split Unregistered Version - http://www.simpopdf.com

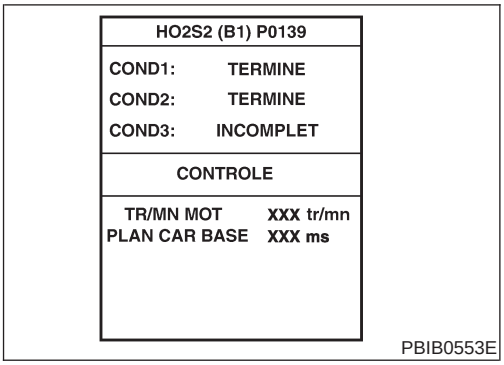

PBIB0553E

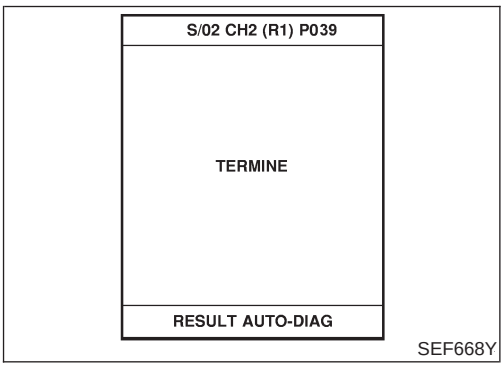

SEF668Y

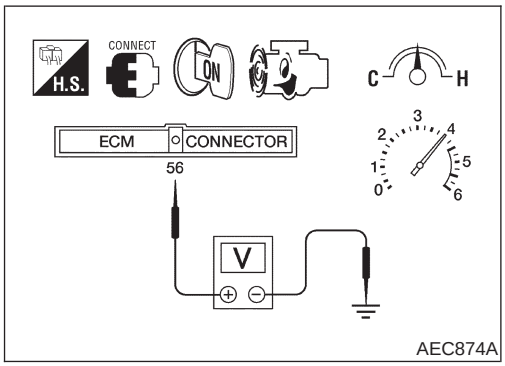

AEC874A

Procédure pour COND2

NEEC0166S0102

1. En conduisant, relâcher la pédale d'accélération complètement comme indiqué à l'étape 8 des conditions ci-dessus jusqu'à ce que ''COND2'' sur l'écran CONSULT-II passe de ''INCOMPLET'' à ''TERMINE'' (ceci prend environ 4 secondes.)

REMARQUE :
Si ''TERMINE'' apparaît dès que l'écran de CONSULT-II affiche ''COND3'', avant même de réaliser la ''Procédure pour COND3'', il n'est pas nécessaire de réaliser l'étape 1 de la ''Procédure pour COND3''.

Procédure pour COND3

NEEC0166S0103

1. Arrêter le véhicule et le laisser au ralenti jusqu'à ce que ''COND3'' passe de INCOMPLET à TERMINE sur l'écran de CONSULT-II (ceci prend environ 6 minutes au plus.)
2. Veiller à ce que ''BON'' soit affiché après avoir appuyé sur ''RESULT AUTODIAG''.
   Si ''MAUVAIS'' est affiché, se reporter à EC-3246, ''Procédure de diagnostic''.

Vérification du fonctionnement général

NEEC0167

Utiliser cette procédure pour contrôler le fonctionnement général du circuit de la sonde à oxygène chauffé 2. Au cours de ce contrôle, il est possible qu'un DTC de 1er parcours ne soit pas confirmé.

ATTENTION :
Toujours adapter sa vitesse aux exigences de sécurité.

Sans CONSULT-II

1) Démarrer le moteur et conduire le véhicule à une vitesse de plus de 70 km/h pendant 2 minutes consécutives.
2) Arrêter le véhicule et laisser tourner le moteur.
3) Placer des sondes de voltmètre entre la borne 56 de l'ECM (signal de sonde à oxygène chauffé 2) et la masse du moteur
4) Vérifier la tension en emballant le moteur jusqu'à 4 000 tr/mn à vide et ce, au moins 10 fois.
   (appuyer sur la pédale d'accélérateur et la relâcher aussi vite que possible)
   La tension doit varier de plus de 0,06 V par seconde pendant la procédure.
   Si la tension est conforme à ce stade, il est inutile de procéder aux opérations décrites à l'étape 5.
5) Laisser le moteur tourner au ralenti pendant 10 minutes, puis vérifier la tension. Ou vérifier la tension lors du passage à 80 km/h en 3ème.
   La tension doit varier de plus de 0,06 V par seconde pendant la procédure.
6) Si les résultats ne sont pas conformes, effectuer une ''Procédure de diagnostic'', voir page EC-3246.

DTC P0139 SONDE A OXYGENE CHAUFFE 2
Simpo PDF Merge and Split Unregistered Version - http://www.simpopdf.com

Schéma de câblage

NEEC0168

EC-O2S2B1-01

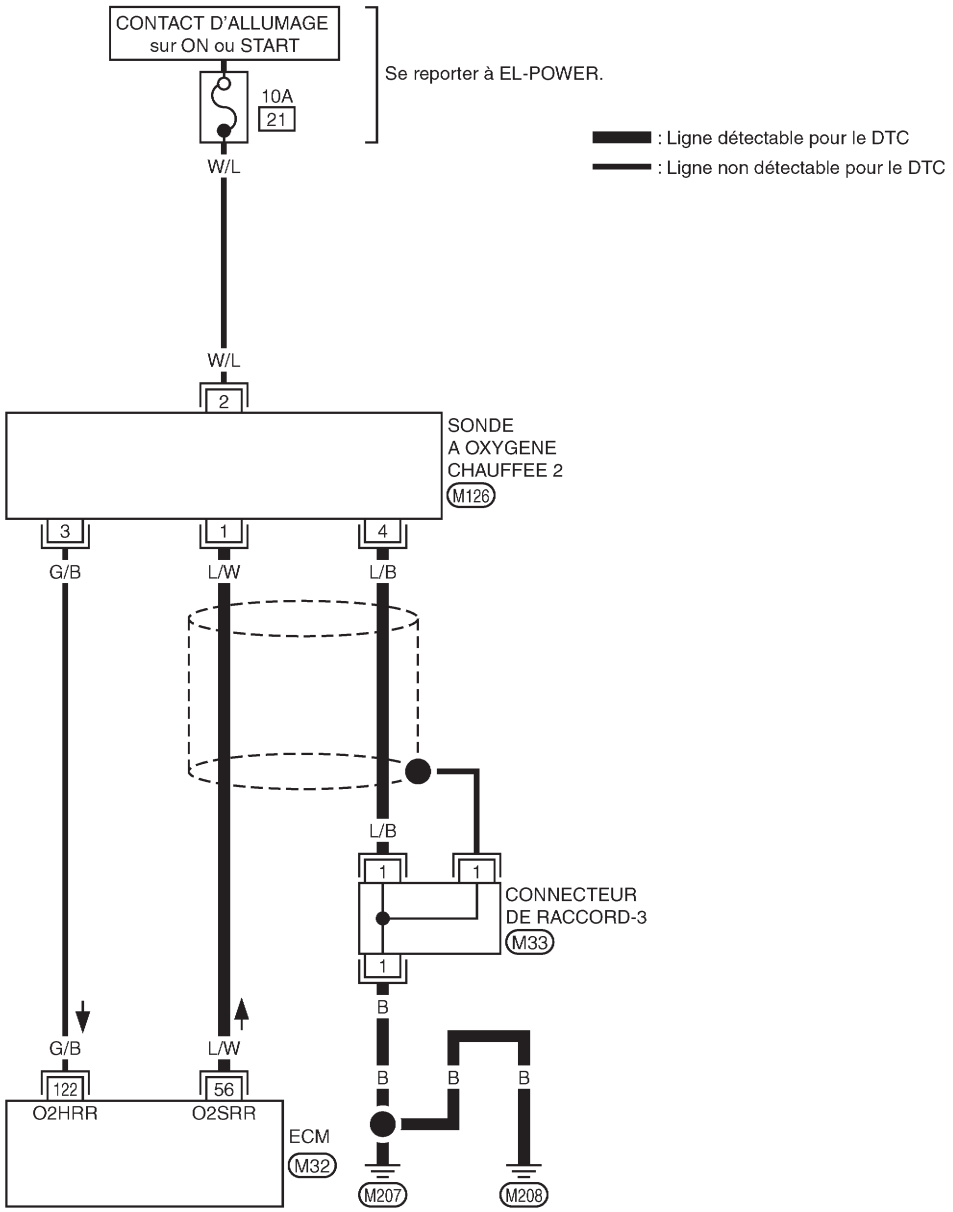

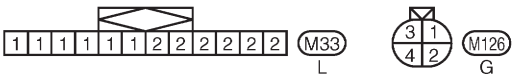

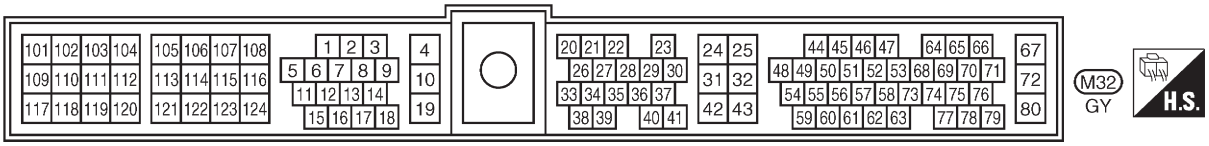

GEC246A

Procédure de diagnostic

NEEC0169

1	RESSERRER LES VIS DE MASSE

1. Mettre le contact d'allumage sur OFF.
2. Desserrer et resserrer les vis de masse du moteur.

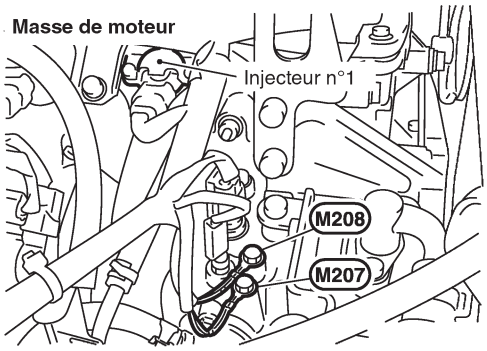

SEC309D

▶	ALLER A 2.

2	EFFACER LES DONNEES D'AUTO-INSTRUCTION

Avec CONSULT-II

1. Démarrer le moteur et l'amener à température normale de fonctionnement.
2. Sélectionner ''COM AUTO INSTRUCT'' dans le mode ''SUPPORT TRAVAIL'' de CONSULT-II.
3. Effacer le coefficient de commande d'auto-instruction en appuyant sur ''EFFAC''.

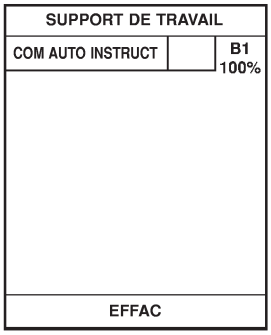

SEF215Z

4. Faire tourner le moteur pendant au moins 10 minutes au ralenti.
   Le DTC de 1er parcours P0171 ou P0172 est-il détecté ? Est-il difficile de démarrer le moteur ?

Sans CONSULT-II

1. Démarrer le moteur et l'amener à température normale de fonctionnement.
2. Mettre le contact d'allumage sur ''OFF''.
3. Débrancher le connecteur de faisceau du débitmètre d'air, redémarrer et faire tourner le moteur pendant au moins 3 secondes au ralenti.

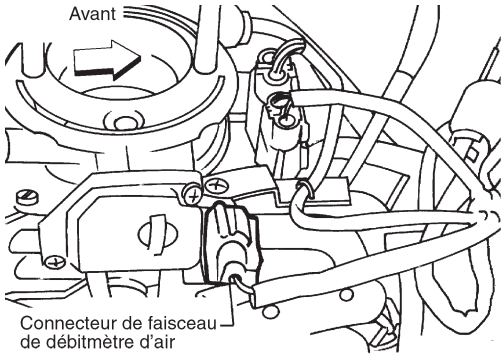

AEC131A

4. Eteindre le moteur et rebrancher le connecteur de faisceau du débitmètre d'air.
5. Vérifier que le DTC de 1er parcours P0102 est bien affiché.
6. Effacer le DTC de 1er parcours. Se reporter à ''COMMENT EFFACER LES CODES DE DIAGNOSTIC ANTIPOLLUTION'', EC-3065.
7. Vérifier que le DTC P0000 est bien affiché.
8. Faire tourner le moteur pendant au moins 10 minutes au ralenti.
   Le DTC de 1er parcours P0171 ou P0172 est-il détecté ? Est-il difficile de démarrer le moteur ?

Oui ou Non

Oui	▶	Réaliser le diagnostic des défauts pour DTC P0171 ou P0172. Se reporter à EC-3252 ou EC-3259.
Non	▶	ALLER A 3.

Simpo PDF Merge and Split Unregistered Version - http://www.simpopdf.com

3	CONTROLER LE CIRCUIT DE SIGNAL D'ENTREE

1. Débrancher le connecteur de faisceau de la sonde à oxygène chauffé 2 et le connecteur de faisceau de l'ECM.
2. Vérifier la continuité du faisceau entre la borne 56 de l'ECM et la borne 1. Se reporter au schéma de câblage.
   Il doit y avoir continuité.
3. Vérifier la continuité du faisceau entre la borne 56 (ou 1) de l'ECM et la masse. Se reporter au schéma de câblage.
   Il ne doit pas y avoir continuité.
4. Vérifier également que le faisceau n'est pas en court-circuit à la masse ou à l'alimentation.

BON ou MAUVAIS

Bon	▶	ALLER A 5.
Mauvais	▶	ALLER A 4.

4	DETECTER LA PIECE DEFECTUEUSE

Contrôler les points suivants.
- Vérifier que le faisceau entre la sonde à oxygène chauffé 2 et l'ECM n'est pas ouvert ou en court-circuit.

	▶	Réparer les faisceaux ou les connecteurs en circuit ouvert ou en court-circuit à la masse ou à l'alimentation.

5	CONTROLER LE CIRCUIT DE MISE A LA MASSE

1. Vérifier la continuité du faisceau entre la borne 4 de la sonde à oxygène chauffé 2 et la masse du moteur. Se reporter au schéma de câblage.
   Il doit y avoir continuité.
2. Vérifier également que le faisceau n'est pas en court-circuit à l'alimentation.

BON ou MAUVAIS

Bon (avec CONSULT-II)	▶	ALLER A 7.
Bon (sans CONSULT-II)	▶	ALLER A 8.
Mauvais	▶	ALLER A 6.

6	DETECTER LA PIECE DEFECTUEUSE

Contrôler les points suivants.
- Connecteur de jonction-3
- Vérifier que le faisceau entre la sonde à oxygène chauffé 2 et la masse du moteur.

	▶	Réparer les faisceaux ou connecteurs en circuit ouvert ou en court-circuit à l'alimentation.

Simpo PDF Merge and Split Unregistered Version - http://www.simpopdf.com

7	CONTROLER LA SONDE A OXYGENE CHAUFFE 2

Avec CONSULT-II

1. Brancher à nouveau tous les connecteurs de faisceau débranchés.
2. Démarrer le moteur et conduire le véhicule à une vitesse de plus de 70 km/h pendant 2 minutes consécutives.
3. Arrêter le véhicule et laisser tourner le moteur.
4. Sélectionner ‘‘INJECTION CARB’’ en mode ‘‘TEST ACTIF’’ et sélectionner ‘‘S/O2 CH2 (R1)’’ comme élément à contrôler avec CONSULT-II.
5. Vérifier ‘‘S/O2 CH2 (R1)‘‘ au ralenti lorsque ‘‘INJECTION CARB‘‘ est réglé sur ±25

TEST ACTIF	
INJECTION CARBUR	25 %
CONTROLE	
TR/MN MOT	XXX TR/MN
S/02 CH1 (R1)	XXX V
S/02 CH2 (R1)	XXX V
MTR S/02CH1 (R1)	RICHE
MTR S/02CH2 (R1)	RICHE

SEF662Y

La tension de ‘‘S/O2 CH2 (R1)’’ doit être supérieure à 0,56V au moins une fois lorsque le paramètre ‘‘INJECTION CARB’’ est à +25.
La tension de ‘‘S/O2 CH2 (R1)’’ doit être inférieure à 0,54V au moins une fois lorsque le paramètre ‘‘INJECTION CARB’’ est à -25.
ATTENTION :

- **Jeter toute sonde à oxygène chauffé tombée d’une hauteur supérieure à 0,5 m sur une surface dure telle qu’un plancher en béton, et la remplacer par une sonde neuve.**
- **Avant de reposer une nouvelle sonde à oxygène, nettoyer le filetage du système d’échappement à l’aide de l’outil de nettoyage pour filetage de sonde à oxygène J-43897-18 ou J-43897-12 et un lubrifiant antigrippant agréé.**

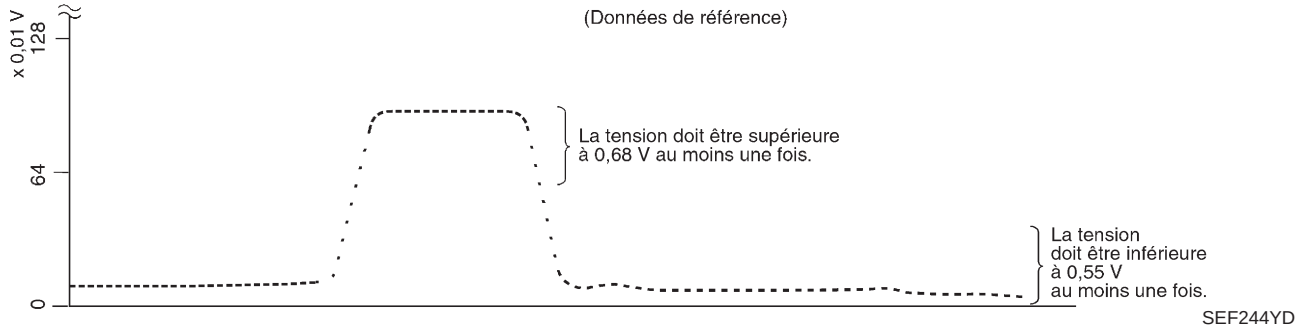

SEF244YD

BON ou MAUVAIS

Bon	▶	ALLER A 9.
Mauvais	▶	Remplacer la sonde à oxygène chauffé 2.

Simpo PDF Merge and Split Unregistered Version - http://www.simpopdf.com

8	CONTROLER LA SONDE A OXYGENE CHAUFFE 2

Sans CONSULT-II

1. Brancher à nouveau tous les connecteurs de faisceau débranchés.
2. Démarrer le moteur et conduire le véhicule à une vitesse de plus de 70 km/h pendant 2 minutes consécutives.
3. Arrêter le véhicule et laisser tourner le moteur.
4. Placer des sondes de voltmètre entre la borne 56 de l'ECM (signal de sonde à oxygène chauffé 2) et la masse du moteur.

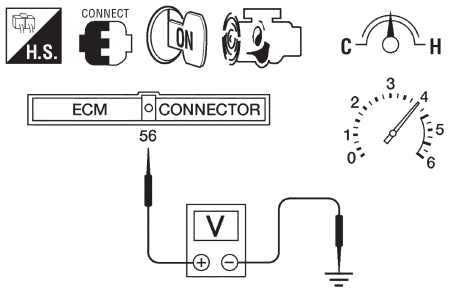

AEC874A

5. Vérifier la tension en emballant le moteur jusqu'à 4 000 tr/mn à vide et ce, au moins 10 fois.
   (appuyer sur la pédale d'accélérateur et la relâcher aussi vite que possible)
   La tension doit être supérieure à 0,56V au moins une fois pendant la procédure.
   Si la tension est supérieure à 0,56V à l'étape 4, il est inutile de procéder aux opérations décrites à l'étape 5.
6. Vérifier la tension en emballant le moteur jusqu'à 5 000 tr/mn à vide. Ou laisser le moteur tourner au ralenti pendant 10 minutes, puis vérifier la tension. Ou vérifier la tension lors du passage à 80 km/h en 3ème (T/M), ou en position ''D'' avec ''surmultipliée'' sur ARRET (T/A).
   La tension doit être inférieure à 0,54V au moins une fois.
   ATTENTION :
   - **Jeter toute sonde à oxygène chauffé tombée d'une hauteur supérieure à 0,5 m sur une surface dure telle qu'un plancher en béton, et la remplacer par une sonde neuve.**
   - **Avant de reposer une nouvelle sonde à oxygène, nettoyer le filetage du système d'échappement à l'aide de l'outil de nettoyage pour filetage de sonde à oxygène J-43897-18 ou J-43897-12 et un lubrifiant antigrippant agréé.**

BON ou MAUVAIS

Bon	▶	ALLER A 9.
Mauvais	▶	Remplacer la sonde à oxygène chauffé 2.

9	VERIFIER LE CIRCUIT DE BLINDAGE

1. Mettre le contact d'allumage sur OFF.
2. Débrancher le connecteur de jonction-3.
3. Vérifier la continuité du faisceau entre la borne 1 du connecteur de jonction-3 et la masse. Se reporter au schéma de câblage.
   Il doit y avoir continuité.
4. Vérifier également que le faisceau n'est pas en court-circuit à l'alimentation.
5. Ensuite, brancher à nouveau les connecteurs de faisceau.

BON ou MAUVAIS

Bon	▶	ALLER A 11.
Mauvais	▶	ALLER A 10.

10	DETECTER LA PIECE DEFECTUEUSE

Contrôler les points suivants.
- Connecteur de jonction-3 (Se reporter à ''DISPOSITION DES FAISCEAUX'', dans la section EL.)
- Faisceau ouvert ou en court-circuit entre le connecteur de jonction-3 et la masse du moteur.

	▶	Réparer les faisceaux ou connecteurs en circuit ouvert ou court-circuit.

11	**VERIFIER SI L'INCIDENT EST INTERMITTENT**
Effectuer un ''DIAGNOSTIC DES DEFAUTS EN CAS INCIDENT INTERMITTENT'', voir page EC-3132.	
▶	**FIN DE L'INSPECTION**

Simpo PDF Merge and Split Unregistered Version - http://www.simpopdf.com

Logique de diagnostic de bord

NEEC0188

Grâce au contrôle d'auto-instruction du rapport de richesse de mélange air/combustible, le rapport de richesse de mélange actuel peut se rapprocher du rapport de richesse de mélange théorique fondée sur le signal de réponse du taux de richesse de mélange de la sonde à oxygène chauffé 1. L'ECM calcule la compensation nécessaire pour corriger l'écart entre le rapport actuel et le rapport théorique.
Dans le cas où la valeur de compensation est extrêmement importante (le dosage réel est trop pauvre), l'ECM juge que le système d'injection de carburant ne fonctionne pas correctement et déclenche l'allumage du témoin de défaut (MI) au tableau de bord (logique de détection de deux parcours).

Capteur	Signal d'entrée à l'ECM	Fonctionnement de l'ECM	Actionneur
Sonde à oxygène chauffé 1	Densité d'oxygène dans les gaz d'échappement (signal de régulation automatique de la richesse de mélange)	Commande de l'injection de carburant et de la richesse de mélange	Injecteurs

N° de DTC	Le défaut est détecté quand ...	Eléments de contrôle (causes possibles)
P0171 0171	● Le système d'injection ne fonctionne pas correctement. ● La compensation du rapport de mélange est trop importante (le rapport de mélange est trop pauvre)	● Fuites d'air d'admission ● Sonde à oxygène chauffé 1 ● Injecteurs ● Fuites de gaz d'échappement ● Pression de carburant incorrecte ● Manque de carburant ● Débitmètre d'air ● Verrouillage du PCV flexible incorrect

4

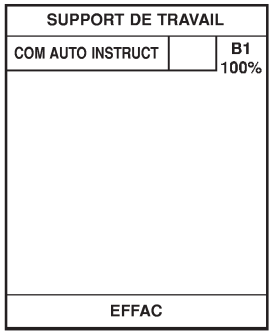

SEF215Z

6

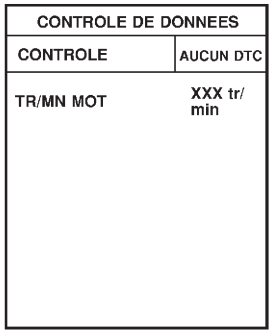

SEF058Y

Procédure de confirmation de code de défaut (DTC)

NEEC0189

REMARQUE :
Si une ''Procédure de confirmation de DTC'' a précédé, toujours mettre le contact d'allumage sur la position OFF et attendre au moins 5 secondes avant de procéder à l'essai suivant.

Avec CONSULT-II

1) Démarrer le moteur et l'amener à température normale de fonctionnement.
2) Mettre le contact d'allumage sur OFF et attendre au moins 5 secondes.
3) Mettre le contact sur la position ''ON'' et sélectionner ''CON AUTO INSTRUCT'' en mode ''SUPPORT TRAVAIL'' de CONSULT-II.
4) Effacer le coefficient de commande d'auto-instruction en appuyant sur ''EFFAC''.
5) Régler CONSULT-II en mode ''CONTROLE DE DONNEES''.
6) Démarrer le moteur et le laisser tourner au ralenti pendant au moins 10 minutes.
   Si un défaut existe, le DTC de 1er parcours P0171 doit être détecté à ce stade. Si tel est le cas, aller à ''Procédure de diagnostic'', EC-3255.

Simpo PDF Merge and Split Unregistered Version - http://www.simpopdf.com

7) Si le moteur a du mal à démarrer à l'étape 6, le système d'injection est défectueux.
8) Actionner le starter avec la pédale d'accélérateur enfoncée. Si le moteur démarre, effectuer une ''Procédure de diagnostic'', page EC-3255. Si le moteur ne démarre pas, rechercher par une inspection visuelle une prise d'air à l'admission ou une fuite à l'échappement.

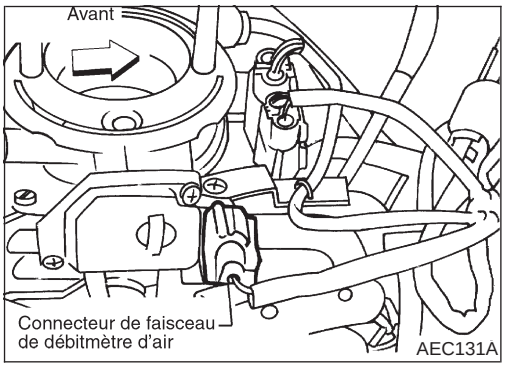

Avec l'analyseur générique GST

1) Démarrer le moteur et l'amener à température normale de fonctionnement.
2) Mettre le contact d'allumage sur OFF et attendre au moins 5 secondes.
3) Débrancher le connecteur de faisceau du débitmètre d'air. Puis redémarrer le moteur et le faire tourner pendant au moins 3 secondes au ralenti.
4) Eteindre le moteur et rebrancher le connecteur de faisceau du débitmètre d'air.
5) Régler le GST en ''MODE 7''. Vérifier que le DTC P0102 est bien détecté.
6) Régler le GST en ''MODE 4'' et effacer le DTC P0102.
7) Démarrer à nouveau le moteur et le faire tourner pendant au moins 10 minutes au ralenti.
8) Régler le GST en ''MODE 7''. Si un défaut existe, le DTC de 1er parcours P0171 doit être détecté à ce stade. Si tel est le cas, aller à ''Procédure de diagnostic'', EC-3255.
9) Si le moteur a du mal à démarrer à l'étape 8, le système d'injection est défectueux.
10) Actionner le starter avec la pédale d'accélérateur enfoncée. Si le moteur démarre, effectuer une ''Procédure de diagnostic'', page EC-3255. Si le moteur ne démarre pas, rechercher par une inspection visuelle une prise d'air à l'admission ou une fuite à l'échappement.

Simpo PDF Merge and Split Unregistered Version - http://www.simpopdf.com

Schéma de câblage

NEEC0190

EC-FUEL-01

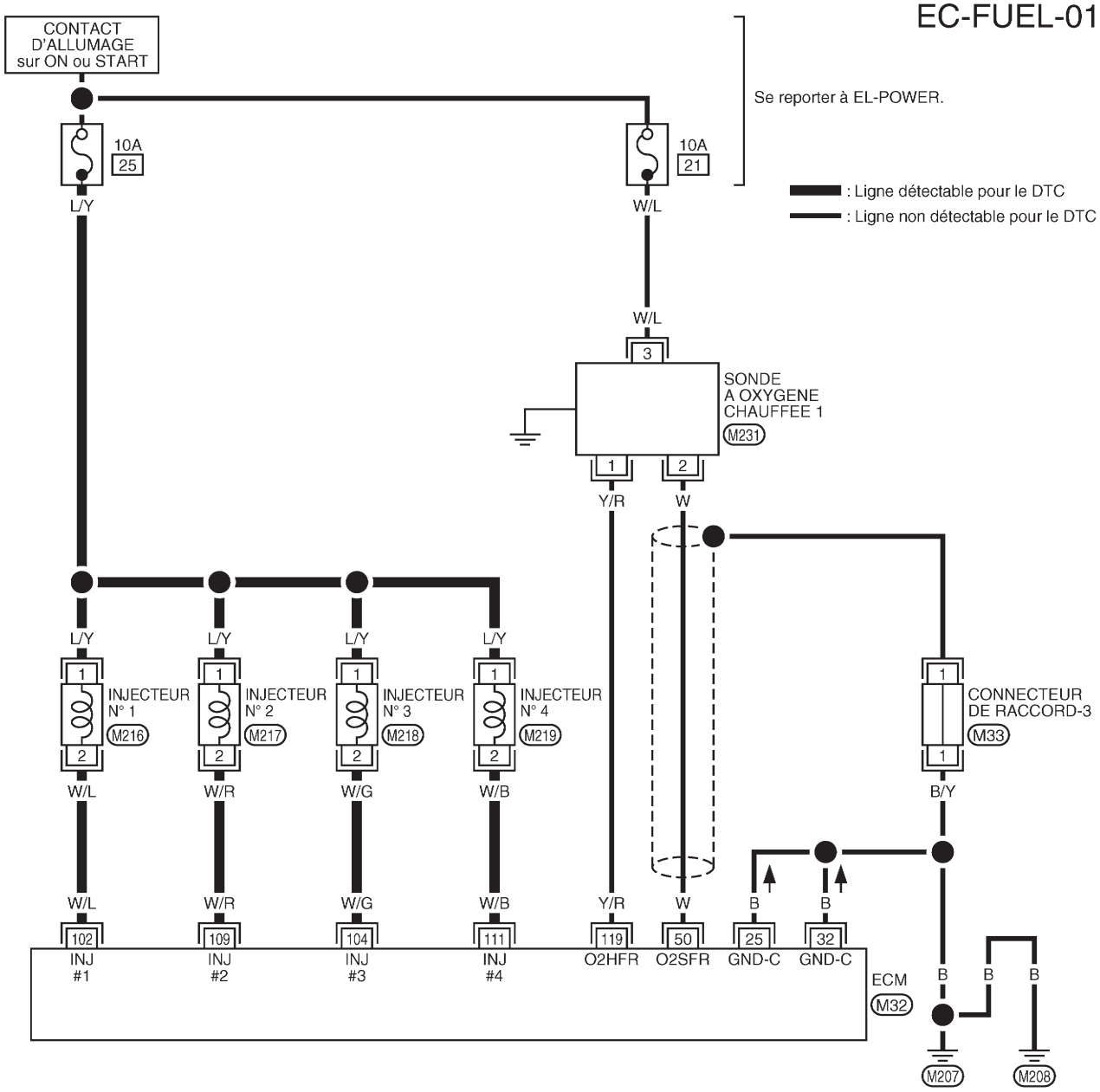

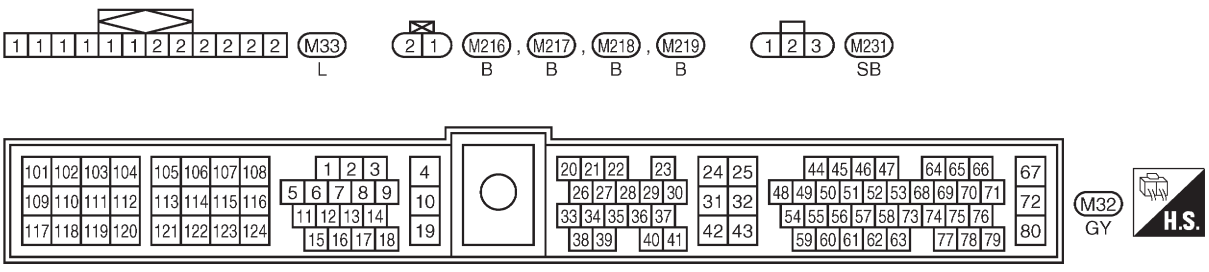

GEC296A

Simpo PDF Merge and Split Unregistered Version - http://www.simpopdf.com

Procédure de diagnostic

NEEC0191

1	CONTROLER L'ETANCHEITE DE L'ECHAPPEMENT

1. Démarrer le moteur et le laisser tourner au ralenti.
2. Ecouter s'il n'y a pas de fuite de l'air d'échappement en amont du catalyseur à trois voies.

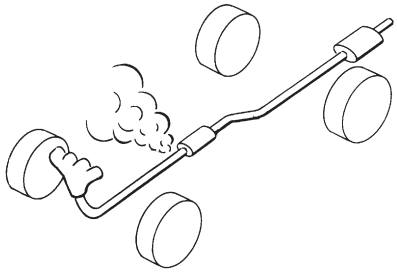

SEF099P

BON ou MAUVAIS

Bon	▶	ALLER A 2.
Mauvais	▶	Réparer ou remplacer.

2	VERIFIER LA SORTIE DE L'AIR D'ADMISSION ET LE FLEXIBLE PCV

1. Ecouter s'il n'y a pas de fuite entre le débitmètre d'air et le collecteur d'air d'admission.
2. Vérifier le verrouillage du PCV flexible.

BON ou MAUVAIS

Bon	▶	ALLER A 3.
Mauvais	▶	Réparer ou remplacer.

3	CONTROLER LE CIRCUIT DE LA SONDE A OXYGENE CHAUFFE 1

1. Mettre le contact d'allumage sur OFF.
2. Débrancher le connecteur de faisceau de la sonde à oxygène chauffé 1 et le connecteur de faisceau de l'ECM.

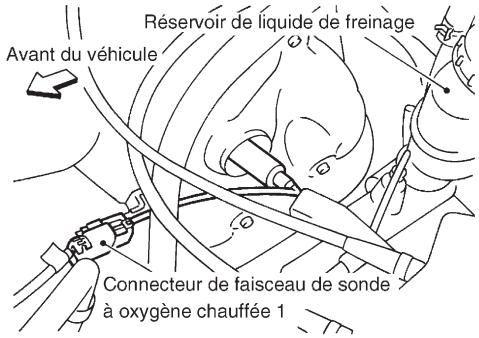

SEF331VC

3. Vérifier la continuité du faisceau entre la borne 50 de l'ECM et la borne 2. Se reporter au schéma de câblage.
   Il doit y avoir continuité.
4. Vérifier la continuité du faisceau entre la borne 50 (ou 2) de l'ECM et la masse. Se reporter au schéma de câblage.
   Il ne doit pas y avoir continuité.
5. Vérifier également que le faisceau n'est pas en court-circuit à la masse ou à l'alimentation.

BON ou MAUVAIS

Bon	▶	ALLER A 4.
Mauvais	▶	Réparer les faisceaux ou les connecteurs en circuit ouvert ou en court-circuit à la masse ou à l'alimentation.

Simpo PDF Merge and Split Unregistered Version - http://www.simpopdf.com

4	CONTROLER LA PRESSION DE CARBURANT

1. Relâcher la pression de carburant jusqu'à zéro.
   Se reporter à EC-3035.
2. Reposer le manomètre de carburant et vérifier la pression de carburant.
   Au ralenti :
   lorsque le flexible à dépression de la soupape du régulateur de pression de carburant est connecté
   235 kPa (2,35 bar, 2,4 kg/cm^2)
   Lorsque le flexible à dépression de la soupape de régulation de pression de carburant est déconnecté.
   294 kPa (2,94 bar, 3,0 kg/cm^2)

BON ou MAUVAIS

Bon	▶	ALLER A 6.
Mauvais	▶	ALLER A 5.

5	DETECTER LA PIECE DEFECTUEUSE

Contrôler les points suivants.
- Pompe à carburant et circuit (se reporter à EC-3404.)
- Régulateur de pression de carburant (se reporter à EC-3036.)
- Canalisations de carburant (se reporter à ''Contrôler les canalisations de carburant'', dans la section MA.)
- Obstructions éventuelles sur le filtre à carburant

	▶	Réparer ou remplacer.

6	CONTROLER LE DEBITMETRE D'AIR

Avec CONSULT-II
1. Démarrer le moteur et l'amener à température normale de fonctionnement.
2. Vérifier ''DEBITMETRE D'AIR'' en mode ''CONTROLE DE DONNEES'', avec CONSULT-II.
   Au ralenti : 0,9 - 5,8 g·m/sec
   à 2500 tr/mn: 7,5 - 13,2 g·m/sec

Avec l'analyseur générique GST
1. Démarrer le moteur et l'amener à température normale de fonctionnement.
2. Contrôler le signal du débitmètre d'air en MODE 1 avec le GST.
   Au ralenti : 0,9 - 5,8 g·m/sec
   à 2500 tr/mn: 7,5 - 13,2 g·m/sec

BON ou MAUVAIS

Bon	▶	ALLER A 7.
Mauvais	▶	Vérifier si les connecteurs du circuit du débitmètre d'air de masse ou des masses du moteur ne présentent pas de bornes rouillées ou des connexions desserrées. Se reporter à EC-3153.

Simpo PDF Merge and Split Unregistered Version - http://www.simpopdf.com

7	CONTROLER LE FONCTIONNEMENT DES INJECTEURS

Avec CONSULT-II

1. Reposer toutes les pièces déposées.
2. Démarrer le moteur.
3. Effectuer ''EQUILIBR PUISSANCE'' en mode ''TEST ACTIF'' avec CONSULT-II.

TEST ACTIF	
EQUILIBRE PUISSANCE	
CONTROLE	
TR/MN MOT	XXX tr/mn
DEBITMETRE-R1	XXX V
VANNE IACV-AAC	XXX %

SEF981Z

4. Vérifier que chaque circuit produit une baisse momentanée du régime-moteur.

Sans CONSULT-II

1. Reposer toutes les pièces déposées.
2. Démarrer le moteur.
3. Contrôler le bruit de fonctionnement de chaque injecteur.

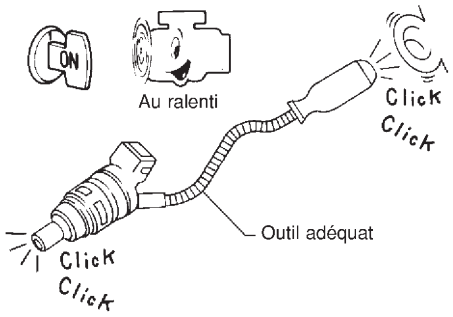

MEC703B

On doit entendre un cliquetis.

BON ou MAUVAIS

Bon	▶	ALLER A 8.
Mauvais	▶	Réaliser le diagnostic des défauts pour les ''INJECTEURS'', EC-3396.

8	DEPOSER L'INJECTEUR

1. S'assurer que le moteur est refroidi et qu'il n'y a pas de risque d'incendie près du véhicule.
2. Mettre le contact d'allumage sur OFF.
3. Déposer l'injecteur avec l'ensemble du tuyau de carburant. Se reporter à EC-3037.
   Garder le flexible d'alimentation et tous les injecteurs raccordés à la galerie de l'injecteur. Les connecteurs de faisceau de l'injecteur doivent rester branchés.

	▶	ALLER A 9.

Simpo PDF Merge and Split Unregistered Version - http://www.simpopdf.com

9	CONTROLER L'INJECTEUR

1. Débrancher tous les connecteurs des bobines d'allumage.
2. Placer des cuvettes ou récipients sous chaque injecteur.
3. Actionner le starter pendant environ 3 secondes. S'assurer que le carburant est vaporisé par les injecteurs.

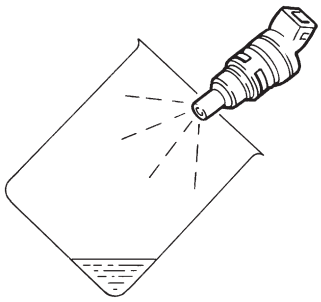

SEF595Q

Le carburant doit être vaporisé de façon uniforme pour chaque cylindre.

BON ou MAUVAIS

Bon	▶	ALLER A 10.
Mauvais	▶	Remplacer les injecteurs qui ne vaporisent pas de carburant. Remplacer toujours les joints toriques par des joints neufs.

10	VERIFIER SI L'INCIDENT EST INTERMITTENT

Effectuer un ''DIAGNOSTIC DES DEFAUTS EN CAS INCIDENT INTERMITTENT'', voir page EC-3132.

	▶	**FIN DE L'INSPECTION**

Simpo PDF Merge and Split Unregistered Version - http://www.simpopdf.com

Logique de diagnostic de bord

NEEC0192

Grâce au contrôle d'auto-instruction du rapport de richesse de mélange air/combustible, le rapport de richesse de mélange actuel peut se rapprocher du rapport de richesse de mélange théorique fondée sur le signal de réponse du taux de richesse de mélange de la sonde à oxygène chauffé 1. L'ECM calcule la compensation nécessaire pour corriger l'écart entre le rapport actuel et le rapport théorique.
Dans le cas où la valeur de compensation est extrêmement importante (le dosage réel est trop riche), l'ECM juge que le système d'injection ne fonctionne pas correctement et allume le témoin MI (logique de détection à deux parcours).

Capteur	Signal d'entrée à l'ECM	Fonctionnement de l'ECM	Actionneur
Sonde à oxygène chauffé 1	Densité d'oxygène dans les gaz d'échappement (signal de régulation automatique de la richesse de mélange)	Commande de l'injection de carburant et de la richesse de mélange	Injecteurs

N° de DTC	Le défaut est détecté quand ...	Eléments de contrôle (causes possibles)
P0172 0172	● Le système d'injection ne fonctionne pas correctement. ● La compensation du rapport de mélange est trop importante (le rapport de mélange est trop riche).	● Sonde à oxygène chauffé 1 ● Injecteurs ● Fuites de gaz d'échappement ● Pression de carburant incorrecte ● Débitmètre d'air

4

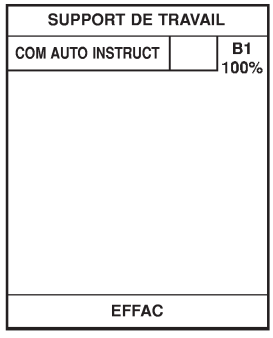

SEF215Z

6

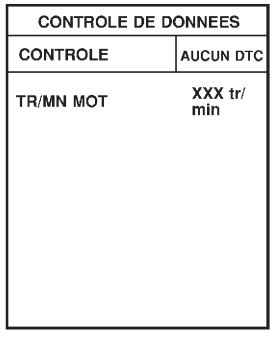

SEF058Y

Procédure de confirmation de code de défaut (DTC)

NEEC0193

REMARQUE :
Si une ''Procédure de confirmation de DTC'' a précédé, toujours mettre le contact d'allumage sur la position OFF et attendre au moins 5 secondes avant de procéder à l'essai suivant.

Avec CONSULT-II

1) Démarrer le moteur et l'amener à température normale de fonctionnement.
2) Mettre le contact d'allumage sur OFF et attendre au moins 5 secondes.
3) Mettre le contact sur la position ''ON'' et sélectionner ''CON AUTO INSTRUCT'' en mode ''SUPPORT TRAVAIL'' de CONSULT-II.
4) Effacer le coefficient de commande d'auto-instruction en appuyant sur ''EFFAC''.
5) Régler CONSULT-II en mode ''CONTROLE DE DONNEES''.
6) Démarrer le moteur et le laisser tourner au ralenti pendant au moins 10 minutes.
   Si un défaut existe, le DTC de 1er parcours P0172 doit être détecté à ce stade. Si tel est le cas, aller à ''Procédure de diagnostic'', EC-3262.

Simpo PDF Merge and Split Unregistered Version - http://www.simpopdf.com

7) Si le moteur a du mal à démarrer à l'étape 6, le système d'injection est défectueux.
8) Actionner le starter avec la pédale d'accélérateur enfoncée. Si le moteur démarre, effectuer une ''Procédure de diagnostic'', EC-3262. Si le moteur ne démarre pas, enlever les prises d'allumage et vérifier l'encrassement, etc.

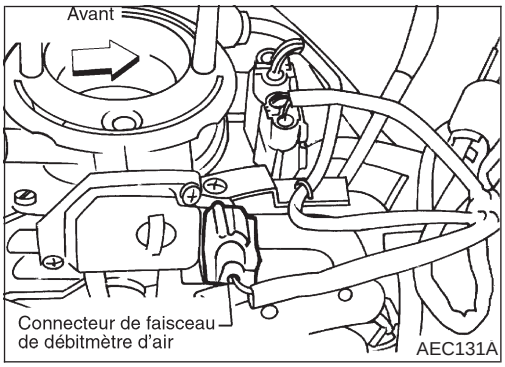

Avec l'analyseur générique GST

1) Démarrer le moteur et l'amener à température normale de fonctionnement.
2) Mettre le contact d'allumage sur OFF et attendre au moins 5 secondes.
3) Débrancher le connecteur de faisceau du débitmètre d'air. Puis redémarrer le moteur et le faire tourner pendant au moins 3 secondes au ralenti.
4) Eteindre le moteur et rebrancher le connecteur de faisceau du débitmètre d'air.
5) Régler le GST en ''MODE 7''. Veiller à ce que le DTC du 1er parcours P0102 soit détecté.
6) Régler le GST en ''MODE 4'' et effacer le DTC de 1er parcours P0102.
7) Démarrer à nouveau le moteur et le faire tourner pendant au moins 10 minutes au ralenti.
8) Régler le GST en ''MODE 7''. Si un défaut existe, le DTC de 1er parcours P0172 doit être détecté à ce stade. Si tel est le cas, aller à ''Procédure de diagnostic'', EC-3262.
9) Si le moteur a du mal à démarrer à l'étape 8, le système d'injection est défectueux.
10) Démarrer le moteur avec la pédale d'accélérateur enfoncée. Si le moteur démarre, effectuer une ''Procédure de diagnostic'', EC-3262. Si le moteur ne démarre pas, enlever les prises d'allumage et vérifier l'encrassement, etc.

Simpo PDF Merge and Split Unregistered Version - http://www.simpopdf.com

Schéma de câblage

NEEC0194

EC-FUEL-01

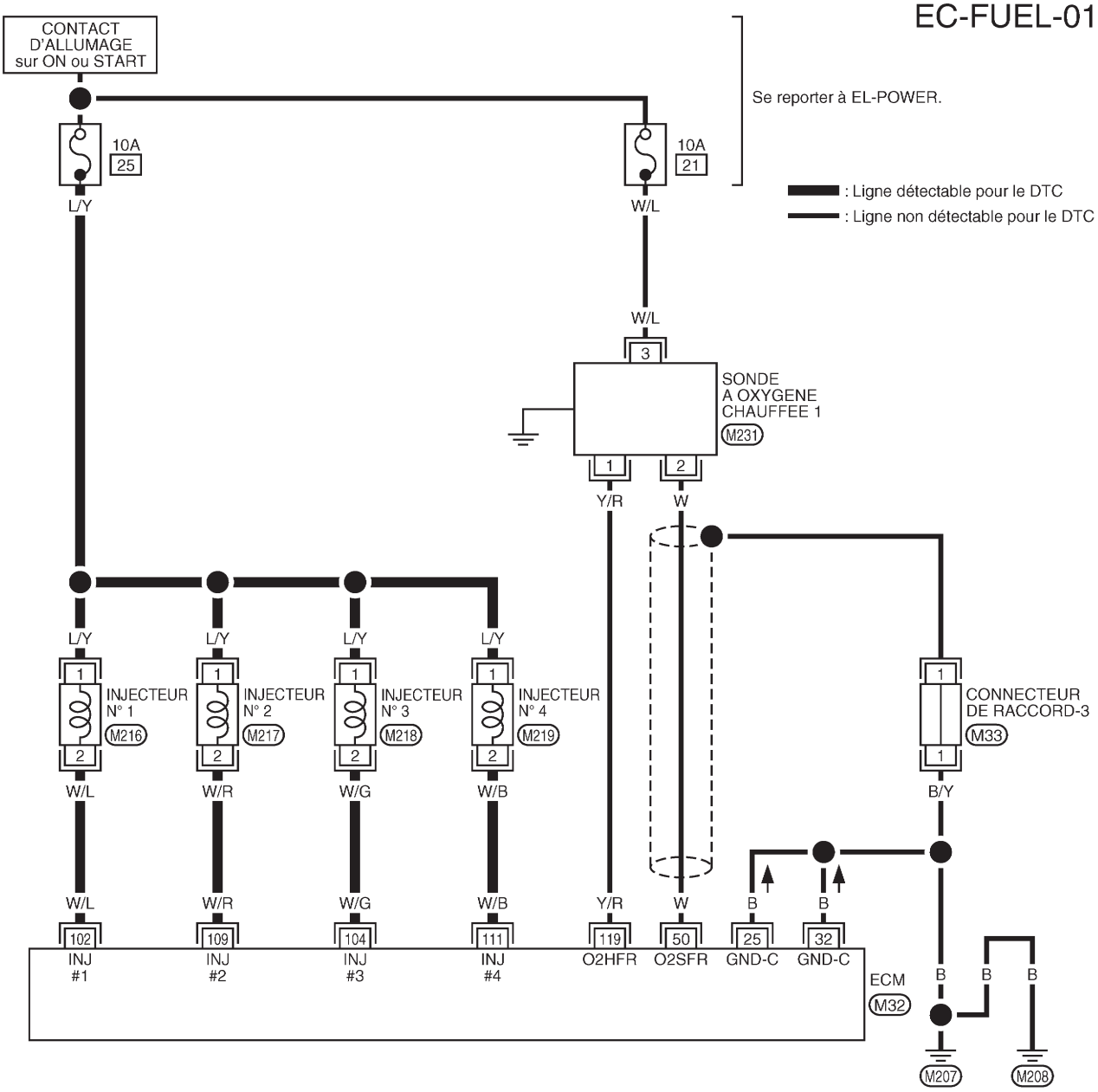

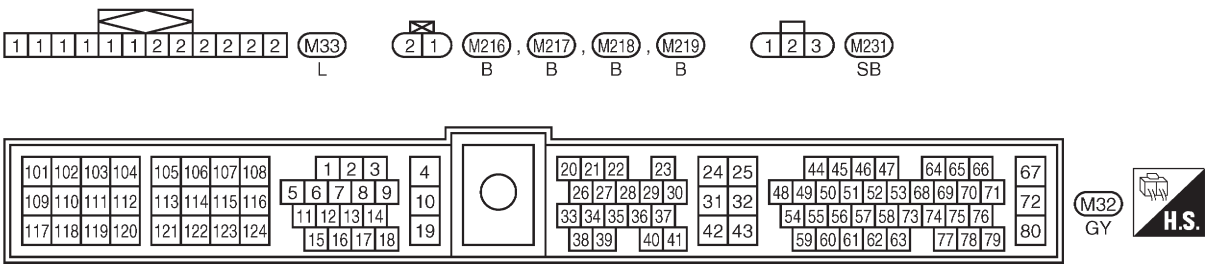

GEC296A

Simpo PDF Merge and Split Unregistered Version - http://www.simpopdf.com

Procédure de diagnostic

NEEC0195

1	CONTROLER L'ETANCHEITE DE L'ECHAPPEMENT

1. Démarrer le moteur et le laisser tourner au ralenti.
2. Ecouter s'il n'y a pas de fuite de l'air d'échappement en amont du catalyseur à trois voies.

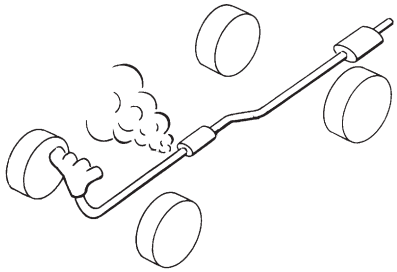

SEF099P

BON ou MAUVAIS

Bon	▶	ALLER A 2.
Mauvais	▶	Réparer ou remplacer.

2	CONTROLER LE CIRCUIT DE LA SONDE A OXYGENE CHAUFFE 1

1. Mettre le contact d'allumage sur OFF.
2. Débrancher le connecteur de faisceau de la sonde à oxygène chauffé 1 et le connecteur de faisceau de l'ECM.

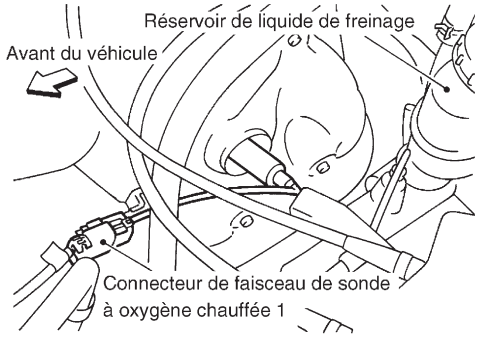

SEF331VC

3. Vérifier la continuité du faisceau entre la borne 50 de l'ECM et la borne 2. Se reporter au schéma de câblage.
   Il doit y avoir continuité.
4. Vérifier la continuité du faisceau entre la borne 50 (ou 2) de l'ECM et la masse. Se reporter au schéma de câblage.
   Il ne doit pas y avoir continuité.
5. Vérifier également que le faisceau n'est pas en court-circuit à la masse ou à l'alimentation.

BON ou MAUVAIS

Bon	▶	ALLER A 3.
Mauvais	▶	Réparer les faisceaux ou les connecteurs en circuit ouvert ou en court-circuit à la masse ou à l'alimentation.

Simpo PDF Merge and Split Unregistered Version - http://www.simpopdf.com

Procédure de diagnostic

3	CONTROLER LA PRESSION DE CARBURANT	
1. Relâcher la pression de carburant jusqu'à zéro. Se reporter à EC-3035. 2. Reposer le manomètre de carburant et vérifier la pression de carburant. **Au ralenti :** **lorsque le flexible à dépression de la soupape du régulateur de pression de carburant est connecté** **Environ 235 kPa (2,35 bar, 2,4 kg/cm^2)** **Lorsque le flexible à dépression de la soupape de régulation de pression de carburant est déconnecté.** **Environ 294 kPa (2,94 bar, 3,0 kg/cm^2)** **BON ou MAUVAIS**		
Bon	▶	ALLER A 5.
Mauvais	▶	ALLER A 4.

4	DETECTER LA PIECE DEFECTUEUSE	
Contrôler les points suivants. ● Pompe à carburant et circuit (se reporter à EC-3404.) ● Régulateur de pression de carburant (se reporter à EC-3036.)		
	▶	Réparer ou remplacer.

5	CONTROLER LE DEBITMETRE D'AIR	
Avec CONSULT-II 1. Démarrer le moteur et l'amener à température normale de fonctionnement. 2. Vérifier ''DEBITMETRE D'AIR'' en mode ''CONTROLE DE DONNEES'', avec CONSULT-II. **Au ralenti : 0,9 - 5,8 g·m/sec** **à 2.500 tr/mn : 7,5 - 13,2 g·m/sec**		
Avec l'analyseur générique GST 1. Démarrer le moteur et l'amener à température normale de fonctionnement. 2. Contrôler le signal du capteur du débitmètre d'air en MODE 1 avec le GST. **Au ralenti : 0,9 - 5,8 g·m/sec** **à 2.500 tr/mn : 7,5 - 13,2 g·m/sec** **BON ou MAUVAIS**		
Bon	▶	ALLER A 6.
Mauvais	▶	Vérifier si les connecteurs du circuit du débitmètre d'air de masse ou des masses du moteur ne présentent pas de bornes rouillées ou des connexions desserrées. Se reporter à EC-3153, EC-3162.

Simpo PDF Merge and Split Unregistered Version - http://www.simpopdf.com

6	CONTROLER LE FONCTIONNEMENT DES INJECTEURS

Avec CONSULT-II

1. Reposer toutes les pièces déposées.
2. Démarrer le moteur.
3. Effectuer ''EQUILIBR PUISSANCE'' en mode ''TEST ACTIF'' avec CONSULT-II.

TEST ACTIF	
EQUILIBRE PUISSANCE	
CONTROLE	
TR/MN MOT	XXX tr/mn
DEBITMETRE-R1	XXX V
VANNE IACV-AAC	XXX %

SEF981Z

4. Vérifier que chaque circuit produit une baisse momentanée du régime-moteur.

Sans CONSULT-II

1. Reposer toutes les pièces déposées.
2. Démarrer le moteur.
3. Contrôler le bruit de fonctionnement de chaque injecteur.

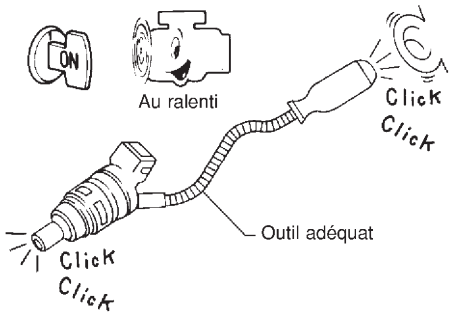

MEC703B

On doit entendre un cliquetis.

BON ou MAUVAIS

Bon	▶	ALLER A 7.
Mauvais	▶	Réaliser le diagnostic des défauts pour les ''INJECTEURS'', EC-3396.

7	DEPOSER L'INJECTEUR

1. S'assurer que le moteur est refroidi et qu'il n'y a pas de risque d'incendie près du véhicule.
2. Mettre le contact d'allumage sur OFF.
3. Déposer l'ensemble d'injecteur. Se reporter à EC-3037.
   Garder le flexible d'alimentation et tous les injecteurs raccordés à la galerie de l'injecteur.

	▶	ALLER A 8.

Simpo PDF Merge and Split Unregistered Version - http://www.simpopdf.com

Procédure de diagnostic

8	CONTROLER L'INJECTEUR
1. Débrancher tous les connecteurs de faisceau de l'injecteur. 2. Débrancher tous les connecteurs des bobines d'allumage. 3. Placer des cuvettes ou récipients sous chaque injecteur. 4. Actionner le starter pendant environ 3 secondes. Veiller à ce que le carburant ne coule pas de l'injecteur.	
BON ou MAUVAIS	
Bon (il n'y a pas d'écoulement) ▶	ALLER A 9.
Mauvais (écoulements) ▶	Remplacer les injecteurs dont s'écoulent le carburant. Remplacer toujours les joints toriques par des joints neufs.

9	VERIFIER SI L'INCIDENT EST INTERMITTENT
Effectuer un ''DIAGNOSTIC DES DEFAUTS EN CAS INCIDENT INTERMITTENT'', voir page EC-3132.	
▶	**FIN DE L'INSPECTION**

Simpo PDF Merge and Split Unregistered Version - http://www.simpopdf.com

Logique de diagnostic de bord

NEEC0202

Lorsqu'il y a raté, le régime moteur subira des variations. Le régime-moteur varie suffisamment pour causer la variation du signal du capteur CPV, l'ECM est en mesure de déterminer si un raté d'allumage a lieu.

Capteur	Signal d'entrée à l'ECM	Fonctionnement de l'ECM
Capteur de position du vilebrequin (OBD)	Régime-moteur	Diagnostic de bord de raté d'allumage

La logique de détection des ratés d'allumage considère les deux points suivants.

1. Logique de détection de premier parcours (endommagement du catalyseur à 3 voies)
   Au premier parcours où une condition de raté, qui peut endommager le catalyseur à trois voies (TWC) à cause de la surchauffe, se produit, le témoin MI clignotera.
   Lorsqu'une condition de raté se produit, l'ECM contrôle les variations du signal du capteur CPV tous les 200 tours moteur.
   Lorsque la condition de raté diminue à un niveau où le catalyseur à trois voies ne sera pas endommagé, le témoin MI s'éteint.
   S'il se produit une autre condition de raté qui pourrait endommager le catalyseur à trois voies sur un second parcours, le témoin MI clignotera.
   Lorsque la condition de raté diminue à un niveau où le catalyseur à trois voies ne sera pas endommagé, le témoin MI restera allumé.
   S'il se produit une autre condition de raté qui pourrait endommager le catalyseur à trois voies, le témoin MI recommencera à clignoter.
2. Logique de détection de deux parcours (détérioration de la qualité de l'échappement)
   Pour les conditions de raté qui n'endommagent pas le catalyseur à trois voies (mais affectent les émissions du véhicule), le témoin MI ne s'allumera que lorsque le raté est détecté sur un second parcours. Dans cette situation, l'ECM contrôle le signal du capteur CPV tous les 1 000 tours moteur.
   Un défaut de raté peut être détecté sur tout cylindre isolé ou sur des cylindres multiples.

N° de DTC	Le défaut est détecté quand ...	Eléments de contrôle (causes possibles)
P0300 0300	• Ratés d'allumage sur plusieurs cylindres	• Bougie d'allumage inadaptée • Compression insuffisante • Pression de carburant incorrecte • Circuit d'injection ouvert ou en court-circuit • Injecteurs • Fuite d'air d'admission • Le circuit d'allumage secondaire est ouvert ou en court-circuit • Manque de carburant • Plateau d'entraînement/Volant-moteur • Sonde à oxygène chauffé 1 • Rotor de distribution inadapté
P0301 0301	• Ratés d'allumage au cylindre n° 1.	
P0302 0302	• Ratés d'allumage au cylindre n° 2.	
P0303 0303	• Ratés d'allumage au cylindre n° 3.	
P0304 0304	• Ratés d'allumage au cylindre n° 4.	

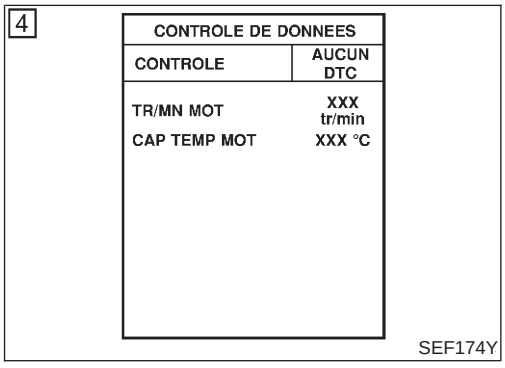

Procédure de confirmation de code de défaut (DTC)

NEEC0203

ATTENTION :
Toujours adapter sa vitesse aux exigences de sécurité.

REMARQUE :
Si une ''Procédure de confirmation de DTC'' a précédé, toujours mettre le contact d'allumage sur la position OFF et attendre au moins 5 secondes avant de procéder à l'essai suivant.

Avec CONSULT-II

1) Mettre le contact d'allumage sur ON et mettre CONSULT-II en mode ''CONTROLE DE DONNEES''.

Simpo PDF Merge and Split Unregistered Version - http://www.simpopdf.com

2) Démarrer le moteur et l'amener à température normale de fonctionnement.
3) Mettre le contact d'allumage sur OFF et attendre au moins 5 secondes.
4) Démarrer le moteur et rouler pendant au moins 3 minutes en restant entre 1 500 - 3 000 tr/mn.
   Limiter au maximum les variations de position de la pédale d'accélérateur.

REMARQUE :
Se reporter aux données figées pour les conditions de l'essai sur route.

5) Si le DTC de 1er parcours est détecté, aller à ''Procédure de diagnostic'', page EC-3267.

Avec l'analyseur générique GST
Suivre la procédure ''Avec CONSULT-II''.

Procédure de diagnostic

NEEC0204

1	CONTROLER QU'IL N'Y A PAS DE FUITE DE L'AIR D'ADMISSION	
1. Démarrer le moteur et le faire tourner au ralenti. 2. Contrôler qu'il n'y a pas de bruit de fuite de l'air d'admission.		
BON ou MAUVAIS		
Bon	▶	ALLER A 2.
Mauvais	▶	Localiser et réparer la fuite d'air.

2	CONTROLER S'IL N'Y A PAS OBSTRUCTION DU SYSTEME D'ECHAPPEMENT	
Eteindre le moteur et vérifier visuellement si le tuyau d'échappement, le catalyseur à 3 voies et le pot d'échappement ne présentent pas d'entailles.		
BON ou MAUVAIS		
Bon	▶	ALLER A 3.
Mauvais	▶	Réparer ou remplacer.

Simpo PDF Merge and Split Unregistered Version - http://www.simpopdf.com

3	REALISER LE TEST D'EQUILIBRE DE PUISSANCE

Avec CONSULT-II

1. Effectuer "EQUILIBR PUISSANCE" en mode "TEST ACTIF".

TEST ACTIF	
EQUILIBRE PUISSANCE	
CONTROLE	
TR/MN MOT	XXX tr/mn
DEBITMETRE-R1	XXX V
VANNE IACV-AAC	XXX %

SEF981Z

2. Y a-t-il un cylindre qui ne produit pas de baisse momentanée du régime-moteur ?

Sans CONSULT-II

Lorsque l'on débranche un par un les connecteurs de faisceau de chaque injecteur, y a-t-il un cylindre qui n'entraîne pas une baisse momentanée du régime-moteur ?

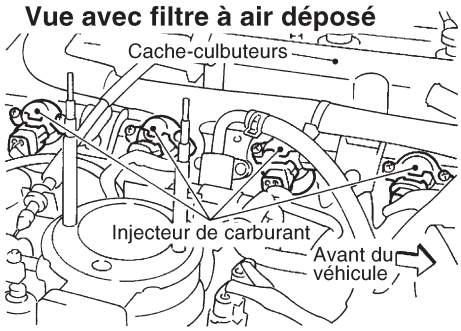

SEF319V

Oui ou Non

Oui	▶	ALLER A 4.
Non	▶	ALLER A 7.

4	CONTROLER L'INJECTEUR

Chaque injecteur émet-il un bruit de fonctionnement au ralenti ?

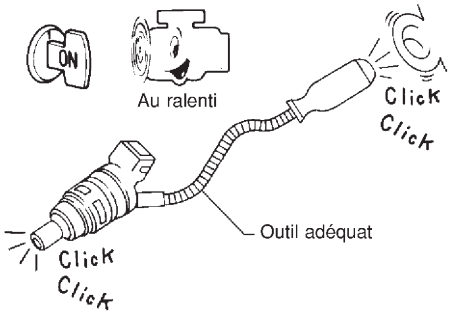

MEC703B

Oui ou Non

Oui	▶	ALLER A 5.
Non	▶	Vérifier les injecteurs et circuits. Se reporter à EC-3396.

Simpo PDF Merge and Split Unregistered Version - http://www.simpopdf.com

Procédure de diagnostic

5	CONTROLER L'ETINCELLE D'ALLUMAGE

1. Mettre le contact d'allumage sur OFF.
2. Déconnecter le fil d'allumage de la bougie.
3. Raccorder une bougie en bon état de fonctionnement au fil d'allumage.
4. Poser l'extrémité de la bougie sur une masse appropriée et actionner le starter.
5. Vérifier qu'une étincelle se produit.

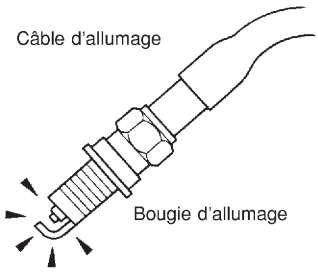

SEF282G

BON ou MAUVAIS

Bon	▶	ALLER A 7.
Mauvais	▶	ALLER A 6.

6	CONTROLER LES FILS D'ALLUMAGE

1. Vérifier que les fils ne sont pas cassés ou endommagés, que les bornes ne sont pas brûlées et qu'ils s'adaptent bien.
2. Mesurer la résistance des fils vers leur borne du couvercle de distributeur. Faire bouger chaque fil en le testant afin de vérifier s'il n'y a pas de coupures intermittentes.

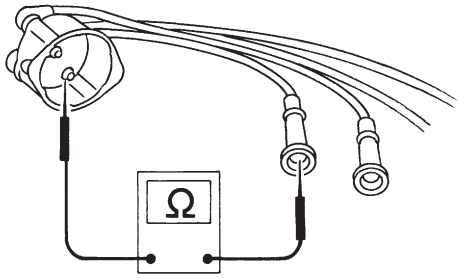

SEF174P

Résistance :
13,6 - 18,4 kΩ/m à 25°C

Si la résistance est supérieure à la spécification données ci-dessus, inspecter la connexion entre le fil d'allumage et le couvercle du distributeur. Nettoyer la connexion ou remplacer le fil d'allumage par un exemplaire neuf.

BON ou MAUVAIS

Bon	▶	Vérifier que la tête de rotor du distributeur ne comprend aucune pièce abîmée. Vérifier la bobine d'allumage, le transistor d'alimentation et leurs circuits. Se reporter à EC-3387.
Mauvais	▶	Remplacer.

Simpo PDF Merge and Split Unregistered Version - http://www.simpopdf.com

7	CONTROLER LES BOUGIES D'ALLUMAGE

Déposer les bougies d'allumage et vérifier qu'elles ne sont pas encrassées etc.

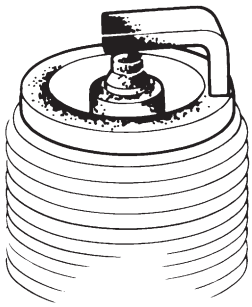

SEF156I

BON ou MAUVAIS

Bon	▶	ALLER A 8.
Mauvais	▶	Réparer les bougies ou les remplacer par d'autres bougies de type standard. Pour le type de bougies d'allumage à utiliser, se reporter à "ENTRETIEN DU MOTEUR", à la section MA.

8	CONTROLER LA PRESSION DE LA COMPRESSION

Consulter la section EM.

- Contrôler la pression de la compression.

Pression normale :
1.226 kPa (12,3 bar, 12,5 kg/cm^2)/300 tr/mn
Minimum :
1.030 kPa (10,3 bar, 10,5 kg/cm^2)/300 tr/mn
Différence entre chaque cylindre :
98 kPa (0,98 bar, 1,0 kg/cm^2)/300 tr/mn

BON ou MAUVAIS

Bon	▶	ALLER A 9.
Mauvais	▶	Vérifier les pistons, les segments de pistons, les soupapes, les sièges de soupape et les joints plats de culasse.

9	CONTROLER LA PRESSION DE CARBURANT

1. Reposer les pièces déposées.
2. Relâcher la pression de carburant jusqu'à zéro. Se reporter à EC-3035.
3. Reposer le manomètre de carburant et vérifier la pression de carburant.

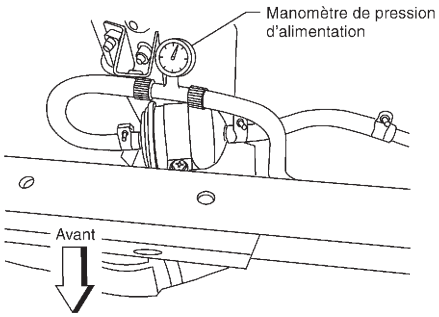

AEC064B

Au ralenti env. 235 kPa (2,35 bar, 2,4 kg/cm^2)

BON ou MAUVAIS

Bon	▶	ALLER A 11.
Mauvais	▶	ALLER A 10.

Simpo PDF Merge and Split Unregistered Version - http://www.simpopdf.com

Procédure de diagnostic

10	DETECTER LA PIECE DEFECTUEUSE
Contrôler les points suivants. ● Pompe à carburant et circuit (Se reporter à EC-3404.) ● Régulateur de pression de carburant (Se reporter à EC-3036.) ● Canalisations de carburant (Se reporter à ''Contrôler les canalisations de carburant'', à la section MA). ● Obstructions éventuelles sur le filtre à carburant	
▶	Réparer ou remplacer.

11	CONTROLER LE CALAGE DE L'ALLUMAGE

1. Vérifier les points suivants : Se reporter à la procédure ''Inspection de base'', EC-3093.

Eléments	Spécifications
Calage de l'allumage	15° ± 2° AV PMH
Ralenti de base	650 ± 50 tr/mn (en position 'N')
Réglage de la position fermée du contact de ralenti	Epaisseur de la cale d'épaisseur et condition du contact 0,1 mm : MARCHE 0,3 mm : ETEINT
Régime de ralenti cible	700 ± 50 tr/mn (en position 'N')

MTBL1315

BON ou MAUVAIS

Bon (avec CONSULT-II)	▶	ALLER A 12.
Bon (sans CONSULT-II)	▶	ALLER A 13.
Mauvais	▶	Régler le calage d'allumage.

Simpo PDF Merge and Split Unregistered Version - http://www.simpopdf.com

12	CONTROLER LA SONDE A OXYGENE CHAUFFE 1

Avec CONSULT-II

1. Démarrer le moteur et l'amener à température normale de fonctionnement.
2. Sélectionner "DECLEN MANU" en mode "CONTROLE DE DONNEES", et régler le point de déclenchement à 100 .
3. Sélectionner "S/O2 CH1 (R1)" et "MTR S/O2 CH1 (R1)" dans la Sélection d'élément.
4. Maintenir le régime-moteur à 2.000 tr/mn à vide au cours des étapes suivantes.
5. Appuyer sur "DEPART" sur l'écran de CONSULT-II.

CONTROLE DE DONNEES	
CONTROLE	AUCUN DTC
TR/MN MOT	XXX tr/min
DEBITMETRE-R1	XXX V
CAP TEMP MOT	XXX °C
S/O2 CH1 (R1)	XXX V
MTR S/O2 CH1 (R1)	PAUVRE

SEF646Y

6. Contrôler les points suivants.

- "MTR S/O2 (R1)" en mode de "CONTROLE DES DONNEES" passe de "RICHE" à "PAUVRE" à "RICHE" 5 fois en 10 secondes.
  5 fois (cycles) sont comptées comme indiqué ci-dessous.

5

cycle	1	2	3	4	5
MTR S/O2 CH1 (R1)	R-L-R-L-R-L-R-L-R-L				

R associé à MTR S/O2 CH1 (R1) signifie RICHE
L associé à MTR S/O2 CH1 (R1)/(R2) signifie PAUVRE

SEF217YA

- La tension de "S/O2 CH1 (R1)" est supérieure à 0,6V au moins une fois.
- La tension de "S/O2 CH1 (R1)" est inférieure à 0,3V au moins une fois.
- La tension de "S/O2 CH1(R1)" ne dépasse jamais 1,0V.

Déclen-chement	Régime Moteur	S/02 CH1 (R1)
	tr/mn	V
XXX	XXX	XXX
XXX	XXX	XXX
XXX	XXX	XXX
XXX	XXX	XXX
XXX	XXX	XXX
XXX	XXX	XXX
XXX	XXX	XXX
XXX	XXX	XXX
XXX	XXX	XXX
XXX	XXX	XXX
XXX	XXX	XXX
XXX	XXX	XXX

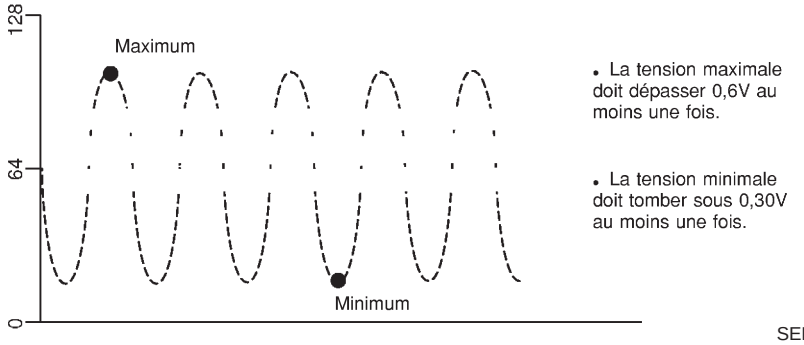

SEF648Y

ATTENTION :

- **Jeter toute sonde à oxygène chauffé tombée d'une hauteur supérieure à 0,5 m sur une surface dure telle qu'un plancher en béton, et la remplacer par une sonde neuve.**
- **Avant de reposer une nouvelle sonde à oxygène, nettoyer le filetage du système d'échappement à l'aide de l'outil de nettoyage pour filetage de sonde à oxygène J-43897-18 ou J-43897-12 et un lubrifiant antigrippant agréé.**

BON ou MAUVAIS

Bon	▶	ALLER A 14.
Mauvais	▶	Remplacer la sonde à oxygène chauffé 1.

Simpo PDF Merge and Split Unregistered Version - http://www.simpopdf.com

13	CONTROLER LA SONDE A OXYGENE CHAUFFE 1

Sans CONSULT-II

1. Démarrer le moteur et l'amener à température normale de fonctionnement.
2. Placer des sondes de voltmètre entre la borne 50 de l'ECM (signal de sonde à oxygène chauffé 1) et la masse du moteur.

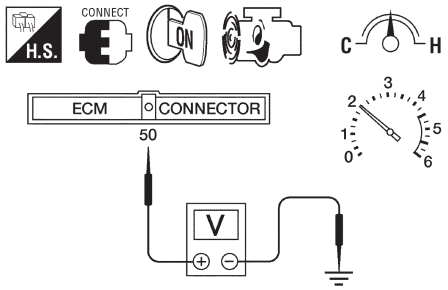

AEC873A

3. Procéder au contrôle suivant en maintenant constant le régime moteur à 2 000 tr/mn à vide.

- La tension varie entre 0 - 0,3V et 0,6 - 1,0V plus de cinq fois en 10 secondes.

1 occurrence : 0 — 0,3V → 0,6 — 1,0V → 0 — 0,3V
2 occurrences : 0 — 0,3V → 0,6 — 1,0V → 0 — 0,3V → 0,6 — 1,0V → 0 — 0,3V

- La tension maximale dépasse 0,6 V au moins une fois.
- La tension minimale tombe sous 0,3 V au moins une fois.
- La tension ne dépasse jamais 1,0V.

ATTENTION :

- **Jeter toute sonde à oxygène chauffé tombée d'une hauteur supérieure à 0,5 m sur une surface dure telle qu'un plancher en béton, et la remplacer par une sonde neuve.**
- **Avant de reposer une nouvelle sonde à oxygène, nettoyer le filetage du système d'échappement à l'aide de l'outil de nettoyage pour filetage de sonde à oxygène J-43897-18 ou J-43897-12 et un lubrifiant antigrippant agréé.**

BON ou MAUVAIS

Bon	▶	ALLER A 14.
Mauvais	▶	Remplacer la sonde à oxygène chauffé 1.

14	CONTROLER LE DEBITMETRE D'AIR

Avec CONSULT-II

Vérifier "DEBITMETRE D'AIR" en mode "CONTROLE DE DONNEES", avec CONSULT-II.

Au ralenti : 0,9 - 5,8 g·m/sec
à 2.500 tr/mn : 7,5 - 13,2 g·m/sec

Avec l'analyseur générique GST

Contrôler le signal du capteur du débitmètre d'air en MODE 1 avec le GST.

Au ralenti : 0,9 - 5,8 g·m/sec
à 2.500 tr/mn : 7,5 - 13,2 g·m/sec

BON ou MAUVAIS

Bon	▶	ALLER A 16.
Mauvais	▶	ALLER A 15.

15	CONTROLER LES CONNECTEURS

Vérifier si les connecteurs du circuit du débitmètre d'air de masse ou des masses du moteur ne présentent pas de bornes rouillées ou des connexions desserrées.
Se reporter à EC-3153, EC-3162.

BON ou MAUVAIS

Mauvais	▶	Réparer ou remplacer.

Simpo PDF Merge and Split Unregistered Version - http://www.simpopdf.com

16	CONTROLER A L'AIDE DU TABLEAU DES CARACTERISTIQUES DES SYMPTOMES	
Vérifier les paramètres de symptôme de ralenti irrégulier dans le ''Tableau des caractéristiques des symptômes'', EC-3109.		
BON ou MAUVAIS		
Bon	▶	ALLER A 17.
Mauvais	▶	Réparer ou remplacer.

17	EFFACER LE DTC DE 1ER PARCOURS	
Certains tests peuvent entraîner l'établissement d'un DTC de 1er parcours. Après exécution des tests, effacer le DTC du 1er parcours de la mémoire de l'ECM. Se reporter à EC-3065.		
	▶	ALLER A 18.

18	VERIFIER SI L'INCIDENT EST INTERMITTENT	
Effectuer un ''DIAGNOSTIC DES DEFAUTS EN CAS INCIDENT INTERMITTENT'', voir page EC-3132.		
	▶	**FIN DE L'INSPECTION**

Simpo PDF Merge and Split Unregistered Version - http://www.simpopdf.com

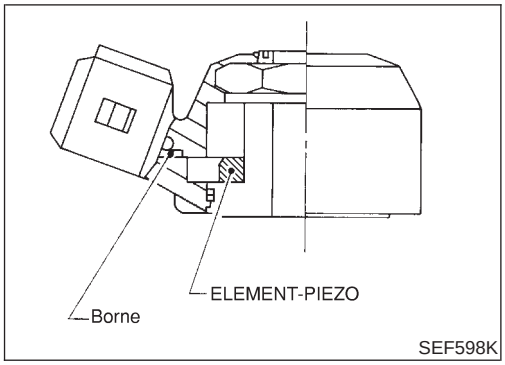

Description des composants

NEEC0206

Le capteur de détonation est monté sur le bloc-cylindres. Il capte la détonation du moteur à l'aide d'un élément piézo-électrique. Une vibration de détonation du bloc-cylindres est captée comme une pression vibrante. Cette pression est convertie en signal de tension et envoyée à l'ECM.

L'ECM ne mémorise pas les données figées concernant le capteur de détonation. Le MI ne s'allume pas s'il y a défaut du capteur de détonation.

Bornes de l'ECM et valeurs de référence

NEEC0207

Les données de spécification sont des valeurs de référence et sont mesurées entre chaque borne et la masse.

ATTENTION :

Ne pas utiliser de bornes de masse de l'ECM lors de la mesure de la tension d'entrée/de sortie. En agissant de la sorte, il est possible d'endommager le transistor de l'ECM. Utiliser une masse autre que les bornes de l'ECM, comme par exemple la prise de terre.

N° DE BORNE	COU-LEUR DE CA-BLE	ELEMENT	CONDITION	DONNEES (tension de courant continu)
64	W	Capteur de détonation	**[Moteur en marche]** ● Régime de ralenti	Environ 2,4V

Logique de diagnostic de bord

NEEC0208

N° de DTC	Nom de diagnostic des défauts	Condition de détection des défauts DTC	Cause possible
P0327 0327	Faible circuit d'entrée du capteur de déto-nation	La tension reç;ue du capteur par l'ECM est exces-sivement basse.	● Faisceau ou connecteurs (le circuit de capteur est ouvert ou court-circuité) ● Capteur de détonation
P0328 0328	Fort circuit d'entrée du capteur de déto-nation	La tension reç;ue du capteur par l'ECM est exces-sivement élevée.	

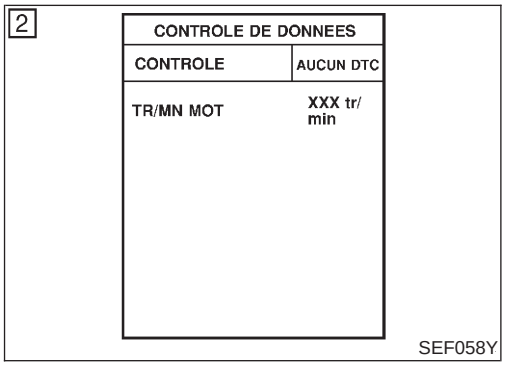

Procédure de confirmation de code de défaut (DTC)

NEEC0209

REMARQUE :

Si une 'Procédure de confirmation de DTC'' a précédé, toujours mettre le contact d'allumage sur la position OFF et attendre au moins 5 secondes avant de procéder à l'essai suivant.

CONDITIONS D'ESSAI :

Avant d'entamer la procédure qui suit, vérifier que la tension délivrée par la batterie est supérieure à 10 V au ralenti.

Avec CONSULT-II

1) Mettre le contact d'allumage sur ON et régler CONSULT-II en

Simpo PDF Merge and Split Unregistered Version - http://www.simpopdf.com

mode ‘‘CONTROLE DE DONNEES’’.

2) Démarrer le moteur et le faire tourner pendant au moins 5 secondes au régime de ralenti.
3) Si le DTC est détecté, effectuer une ‘‘Procédure de diagnostic’’, voir page EC-3275.

Avec l’analyseur générique GST

Suivre la procédure ‘‘Avec CONSULT-II’’.

Simpo PDF Merge and Split Unregistered Version - http://www.simpopdf.com

Schéma de câblage

NEEC0210

EC-KS-01

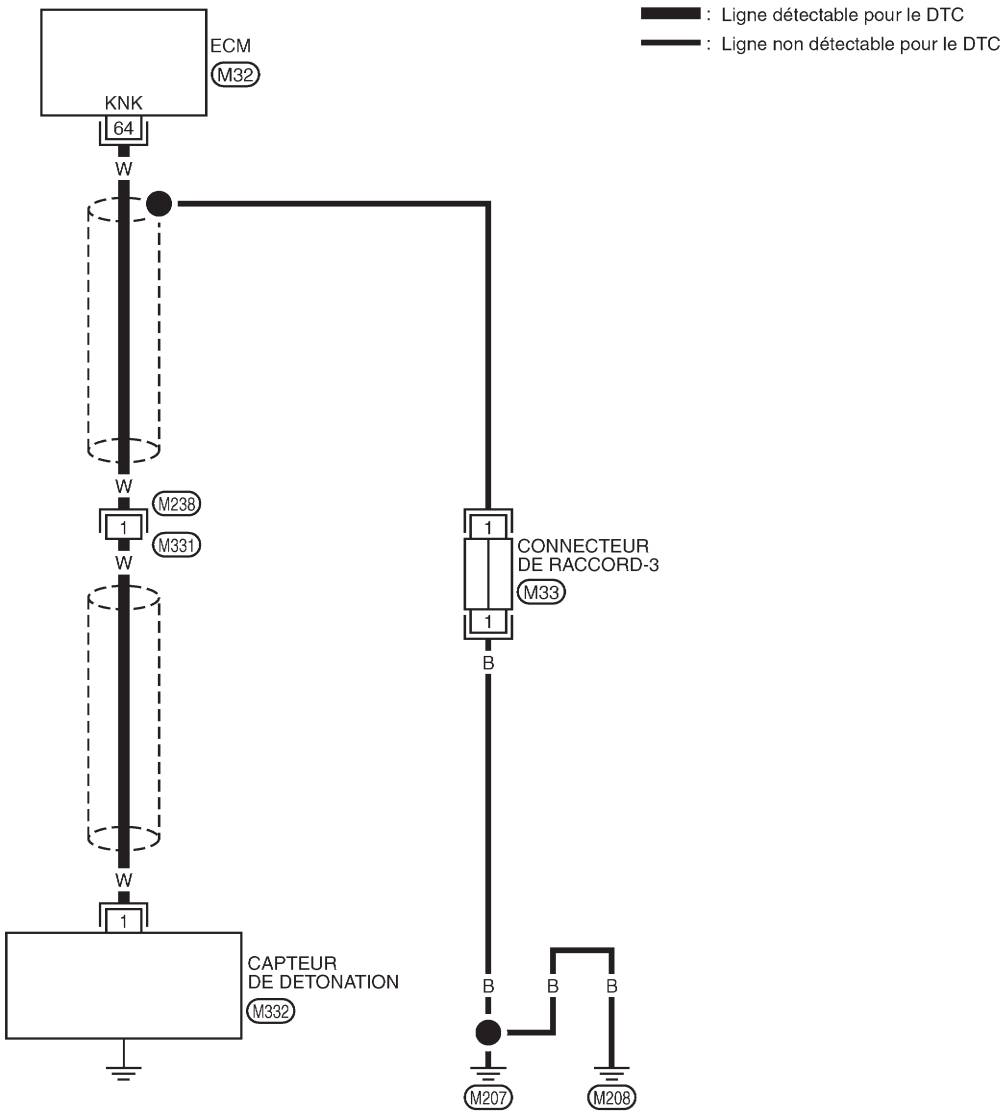

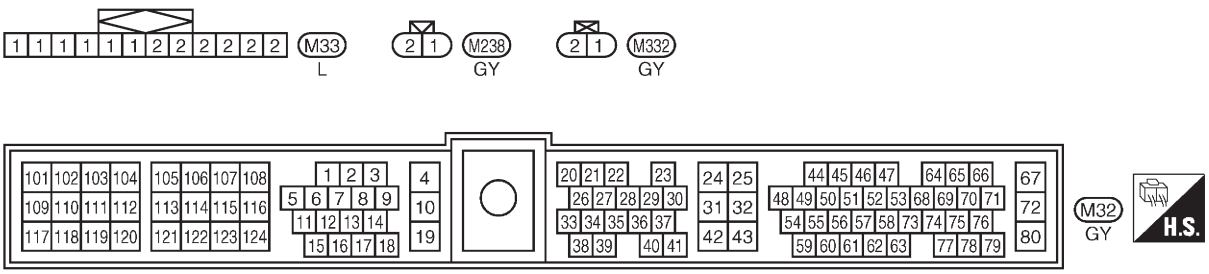

GEC242A

Simpo PDF Merge and Split Unregistered Version - http://www.simpopdf.com

Procédure de diagnostic

NEEC0211

1	RESSERRER LES VIS DE MASSE

Desserrer et resserrer les vis de masse du moteur.

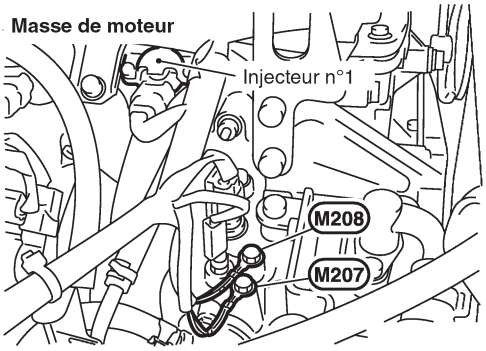

SEC309D

	▶	ALLER A 2.

2	CONTROLER LE CIRCUIT DE SIGNAL D'ENTREE 1

1. Mettre le contact d'allumage sur OFF.
2. Débrancher le connecteur de faisceau de l'ECM.
3. Vérifier la continuité du faisceau entre la borne 64 de l'ECM et la masse.

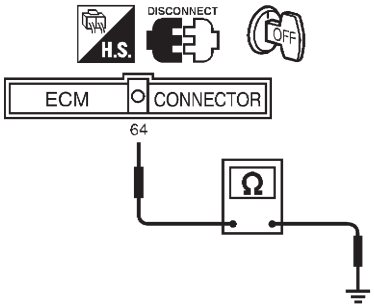

SEF173V

Résistance : Environ 500 - 620 kΩ [à 25°C]

Utiliser un ohmmètre pouvant mesurer plus de 10 MΩ.

4. Vérifier également que le faisceau n'est pas en court-circuit à la masse ou à l'alimentation.

BON ou MAUVAIS

Bon	▶	ALLER A 4.
Mauvais	▶	ALLER A 3.

3	CONTROLER SI LE CIRCUIT DU SIGNAL D'ENTREE DU CAPTEUR DE DETONATION N'EST PAS OUVERT OU COURT-CIRCUITE-II

1. Débrancher le connecteur du faisceau du capteur de détonation.
2. Vérifier la continuité du faisceau entre la borne 64 de l'ECM et la borne 1 du capteur de détonation. Se reporter au schéma de câblage.

   Il doit y avoir continuité.
3. Vérifier également que le faisceau n'est pas en court-circuit à la masse ou à l'alimentation.

BON ou MAUVAIS

Bon	▶	ALLER A 4.
Mauvais	▶	Réparer les faisceaux ou les connecteurs en circuit ouvert ou en court-circuit à la masse ou à l'alimentation.

Simpo PDF Merge and Split Unregistered Version - http://www.simpopdf.com

4	CONTROLER LE CAPTEUR DE DETONATION

Utiliser un ohmmètre pouvant mesurer plus de 10 MΩ.
1. Débrancher le connecteur du faisceau du capteur de détonation.
2. Vérifier la résistance entre la borne 1 et la masse

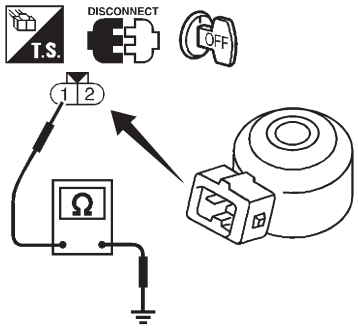

SEF174V

Résistance : 500 - 620 kΩ [à 25°C]

ATTENTION :

Ne pas utiliser de capteurs de détonation qui sont tombés ou qui sont endommagés. Utiliser uniquement des capteurs neufs.

BON ou MAUVAIS

Bon	▶	ALLER A 5.
Mauvais	▶	Remplacer le capteur de détonation.

5	VERIFIER LE CIRCUIT DE BLINDAGE

1. Mettre le contact d'allumage sur OFF.
2. Retirer le connecteur de jonction-3.
3. Contrôler les points suivants. Se reporter au schéma de câblage.
- Continuité entre la borne 1 du connecteur de jonction-3 et la masse
- Connecteur de jonction-3 (Se reporter à ''DISPOSITION DES FAISCEAUX'', dans la section EL.)

Il doit y avoir continuité.

4. Vérifier également que le faisceau n'est pas en court-circuit à l'alimentation.
5. Brancher à nouveau les connecteurs de faisceau.

BON ou MAUVAIS

Bon	▶	ALLER A 7.
Mauvais	▶	ALLER A 6.

6	DETECTER LA PIECE DEFECTUEUSE

Vérifier le connecteur de jonction-3. (Se reporter à ''DISPOSITION DES FAISCEAUX'', dans la section EL.)

	▶	Réparer les faisceaux ou les connecteurs en circuit ouvert ou en court-circuit à la masse ou à l'alimentation.

7	VERIFIER SI L'INCIDENT EST INTERMITTENT

Effectuer un ''DIAGNOSTIC DES DEFAUTS EN CAS INCIDENT INTERMITTENT'', voir page EC-3132.

	▶	**FIN DE L'INSPECTION**

Simpo PDF Merge and Split Unregistered Version - http://www.simpopdf.com

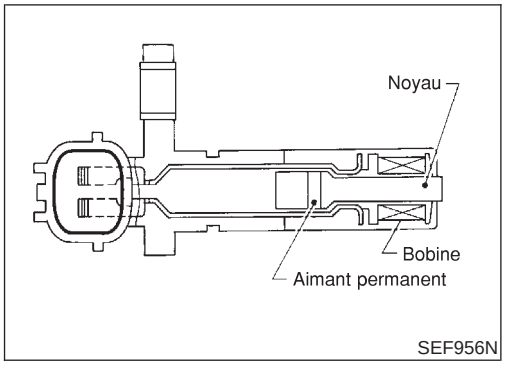

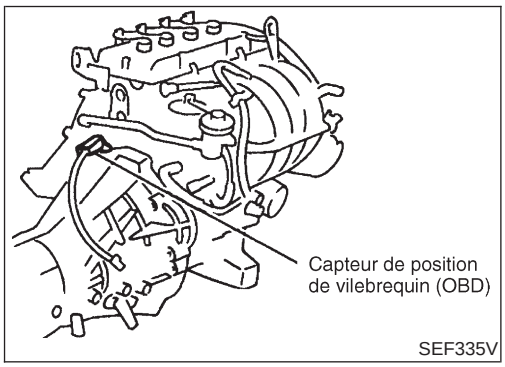

Description des composants

NEEC0213

Le capteur de position du vilebrequin (OBD) est situé sur carter de boîte-pont face aux dents de pignon (dentures) du volant-moteur ou du plateau d'entraînement. Cela permet de détecter la fluctuation de la révolution du moteur.

La capteur comprend un aimant permanent, un noyau, et une bobine.

Lorsque le moteur tourne, la succession de dents et de vides de la roue dentée entraîne une variation de l'espacement avec le capteur.

Cette variation d'espacement entraîne une variation du champ magnétique près du capteur.

Cette variation du champ magnétique entraîne une variation de la tension fournie par le capteur.

L'ECM reçoit le signal de tension et détecte les variations du régime-moteur.

Ce capteur ne joue aucun rôle direct dans le système de gestion du moteur. Il est utilisé exclusivement à des fins de diagnostic de bord.

Bornes de l'ECM et valeurs de référence

NEEC0214

Les données de spécification sont des valeurs de référence et sont mesurées entre chaque borne et la masse.

ATTENTION :

Ne pas utiliser de bornes de masse de l'ECM lors de la mesure de la tension d'entrée/de sortie. En agissant de la sorte, il est possible d'endommager le transistor de l'ECM. Utiliser une masse autre que les bornes de l'ECM, comme par exemple la prise de terre.

N° DE BORNE	COULEUR DE CABLE	ELEMENT	CONDITION	DONNEES (tension du courant alternatif)
47	L	Capteur de position du vilebrequin (OBD)	**[Moteur en marche]** ● **Pendant la montée en température** ● Régime de ralenti	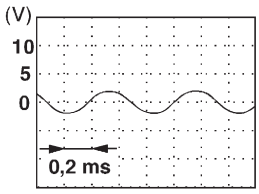
			[Moteur en marche] ● Le régime-moteur est de 2 000 tr/mn.	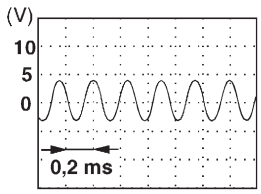

DTC P0335 CAPTEUR DE POSITION DE VILEBREQUIN (OBD)
Simpo PDF Merge and Split Unregistered Version - http://www.simpopdf.com

Logique de diagnostic de bord

NEEC0215

N° de DTC	Le défaut est détecté quand ...	Eléments de contrôle (causes possibles)
P0335 0335	● Lorsque le moteur tourne au régime spécifié, l'ECM ne reç;oit pas le signal correct d'impulsion provenant du capteur de position du vilebrequin (OBD).	● Faisceau ou connecteurs (Le circuit du capteur de position du vilebrequin (OBD) est ouvert.) ● Capteur de position du vilebrequin (OBD) ● Batterie à plat

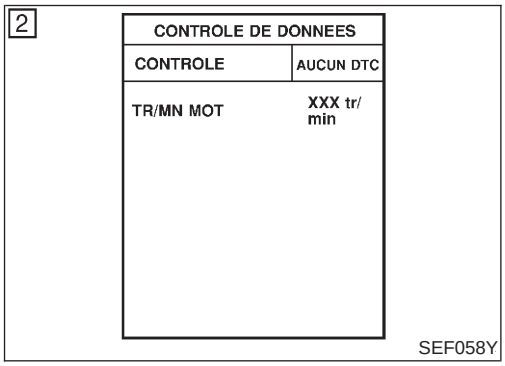

Procédure de confirmation de code de défaut (DTC)

NEEC0216

REMARQUE :
Si une ''Procédure de confirmation de DTC'' a précédé, toujours mettre le contact d'allumage sur la position OFF et attendre au moins 5 secondes avant de procéder à l'essai suivant.

Avec CONSULT-II

1) Mettre le contact d'allumage sur ON et régler CONSULT-II en mode ''CONTROLE DE DONNEES''.
2) Démarrer le moteur et le faire tourner pendant au moins 15 secondes au régime de ralenti.
3) Si le DTC de 1er parcours est détecté, aller à ''Procédure de diagnostic'', page EC-3283.

Avec l'analyseur générique GST

Suivre la procédure ''Avec CONSULT-II''.

Simpo PDF Merge and Split Unregistered Version - http://www.simpopdf.com

Schéma de câblage

NEEC0217

EC-CKPS-01

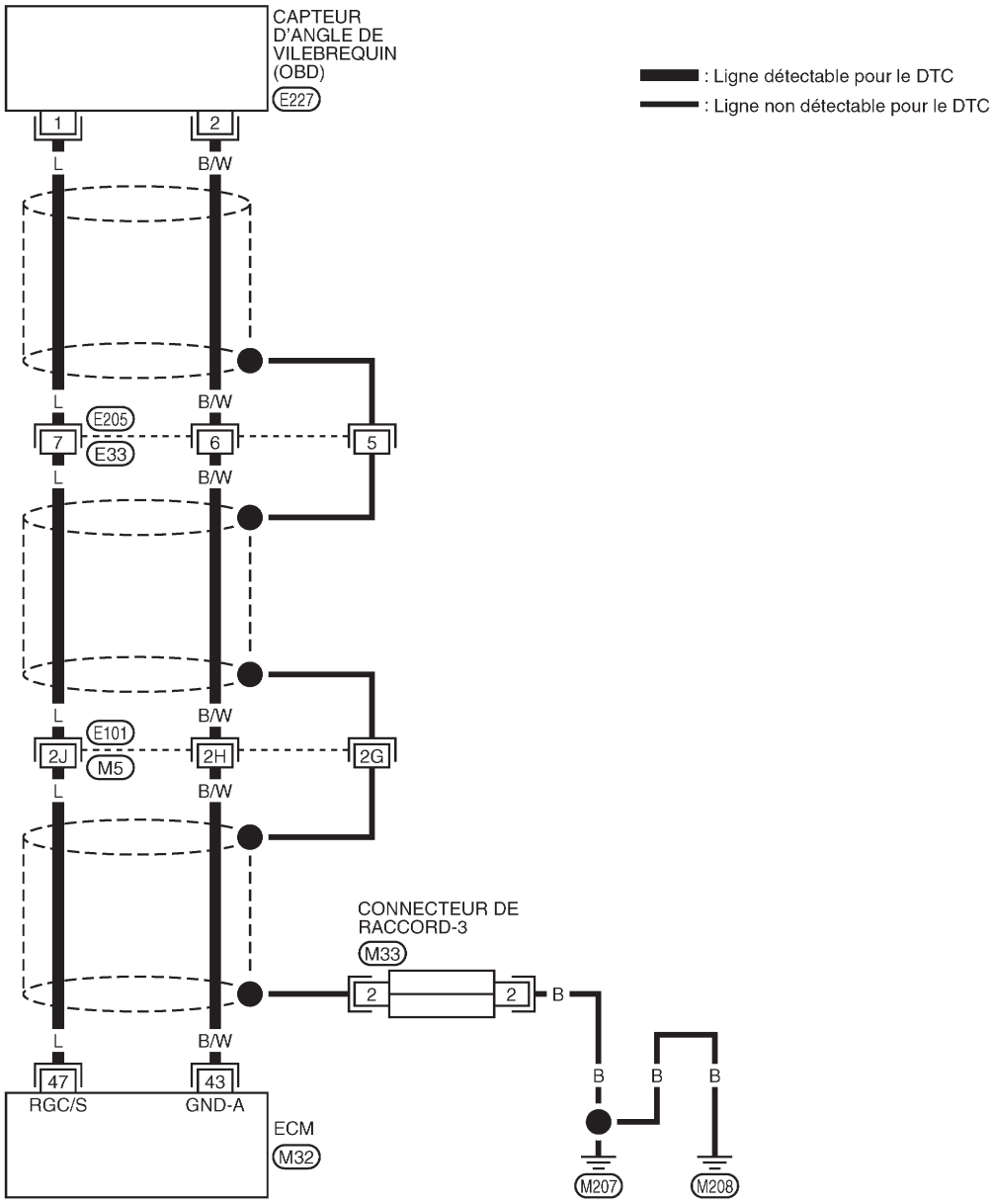



Consulter la dernière page dépliante.
M5 , E101

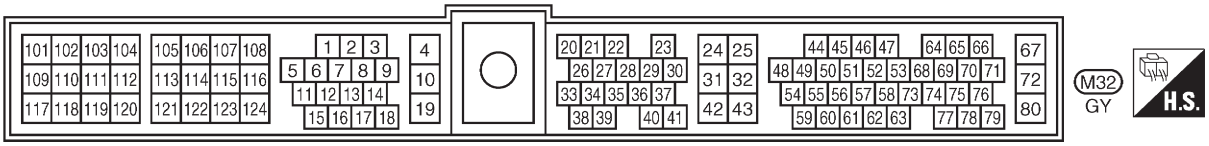

GEC236A

Simpo PDF Merge and Split Unregistered Version - http://www.simpopdf.com

Procédure de diagnostic

NEEC0218

1	RESSERRER LES VIS DE MASSE

1. Mettre le contact d'allumage sur OFF.
2. Desserrer et resserrer les vis de masse du moteur.

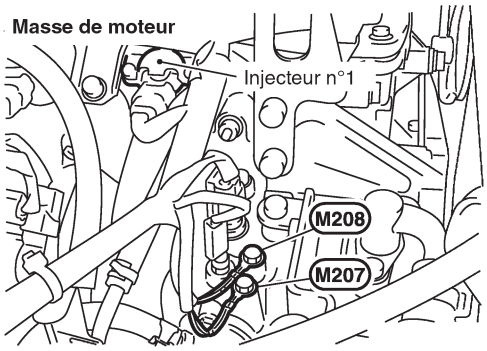

SEC309D

	▶	ALLER A 2.

2	CONTROLER LE CIRCUIT DE SIGNAL D'ENTREE

1. Débrancher les connecteurs de faisceau du capteur de position de vilebrequin (OBD) et de l'ECM.

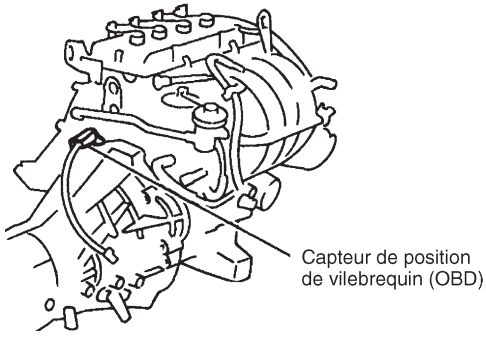

SEF335V

2. Vérifier la continuité du faisceau entre la borne 47 de l'ECM et la borne 1. Se reporter au schéma de câblage.
   Il doit y avoir continuité.
3. Vérifier également que le faisceau n'est pas en court-circuit à la masse ou à l'alimentation.

BON ou MAUVAIS

Bon	▶	ALLER A 4.
Mauvais	▶	ALLER A 3.

3	DETECTER LA PIECE DEFECTUEUSE

Contrôler les points suivants.
- Connecteurs de faisceau E205, E33
- Connecteurs de faisceau E101, M5
- Faisceau ouvert ou en court-circuit entre le capteur de position de vilebrequin (ODB) et d'ECM.

	▶	Réparer les faisceaux ou les connecteurs en circuit ouvert ou en court-circuit à la masse ou à l'alimentation.

Simpo PDF Merge and Split Unregistered Version - http://www.simpopdf.com

4	CONTROLER LE CIRCUIT DE MISE A LA MASSE	
1. Rebrancher le connecteur de faisceau de l'ECM 2. Vérifier la continuité du faisceau entre la borne 2 du capteur de position du vilebrequin (OBD) et la masse du moteur. Se reporter au schéma de câblage. **Il doit y avoir continuité.** 3. Vérifier également que le faisceau n'est pas en court-circuit à l'alimentation. **BON ou MAUVAIS**		
Bon	▶	ALLER A 6.
Mauvais	▶	ALLER A 5.

5	DETECTER LA PIECE DEFECTUEUSE	
Contrôler les points suivants. ● Connecteurs de faisceau E205, E33 ● Connecteurs de faisceau E101, M5 ● Faisceau ouvert ou en court-circuit entre le capteur de position du vilebrequin (OBD) et l'ECM		
	▶	Réparer les faisceaux ou les connecteurs en circuit ouvert ou en court-circuit à la masse ou à l'alimentation.

6	VERIFIER LE CIRCUIT DE BLINDAGE	
1. Mettre le contact d'allumage sur OFF. 2. Débrancher tous les connecteurs de faisceau E205, E33. 3. Vérifier la continuité de faisceau entre la borne 5 du connecteur de faisceau E33 et la masse. Se reporter au schéma de câblage. **Il doit y avoir continuité.** 4. Vérifier également que le faisceau n'est pas en court-circuit à l'alimentation. 5. Brancher à nouveau les connecteurs de faisceau. **BON ou MAUVAIS**		
Bon	▶	ALLER A 8.
Mauvais	▶	ALLER A 7.

7	DETECTER LA PIECE DEFECTUEUSE	
Contrôler les points suivants. ● Connecteurs de faisceau E101, M5 ● Connecteur de jonction-3 (Se reporter à ''DISPOSITION DES FAISCEAUX'', dans la section EL.) ● Vérifier que le faisceau n'est pas en circuit ouvert ou en court-circuit entre le connecteur de faisceau E33 et la masse du moteur.		
	▶	Réparer les faisceaux ou connecteurs en circuit ouvert ou en court-circuit à l'alimentation.

Simpo PDF Merge and Split Unregistered Version - http://www.simpopdf.com

Procédure de diagnostic

8	CONTROLER LE CAPTEUR DE POSITION DU VILEBREQUIN (OBD)

1. Débrancher le connecteur de faisceau du capteur de position de vilebrequin (OBD).
2. Desserrer le boulon de fixation du capteur.
3. Déposer le capteur.
4. Vérifier visuellement si le capteur n'est pas buriné.

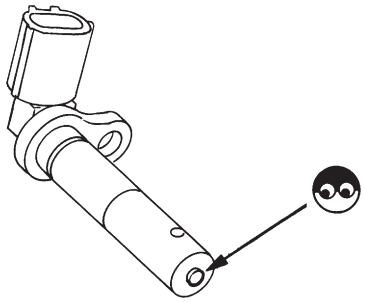

SEF960N

5. Vérifier la résistance comme indiqué sur l'illustration ci-contre.

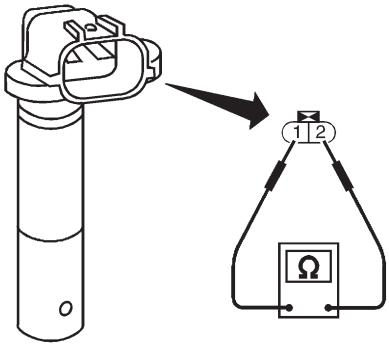

SEF231W

Résistance : Environ 512 - 632Ω [à 20°C]

BON ou MAUVAIS

Bon	▶	ALLER A 9.
Mauvais	▶	Remplacer le capteur de position de vilebrequin (OBD).

9	VERIFIER SI L'INCIDENT EST INTERMITTENT
Effectuer un ''DIAGNOSTIC DES DEFAUTS EN CAS INCIDENT INTERMITTENT'', voir page EC-3132.	
▶	**FIN DE L'INSPECTION**

Simpo PDF Merge and Split Unregistered Version - http://www.simpopdf.com

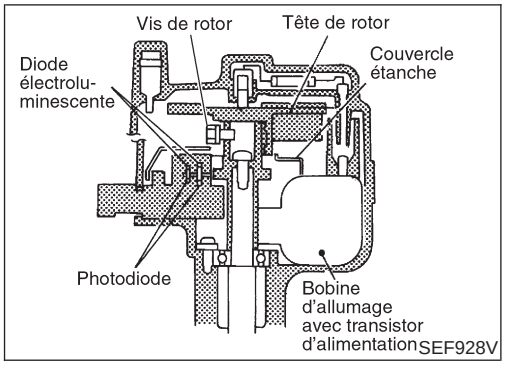

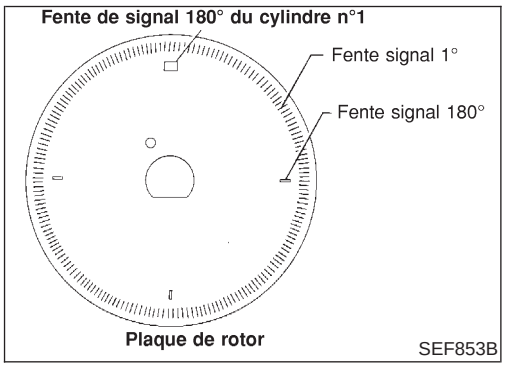

Description des composants

NEEC0220

Le capteur d'angle d'arbre à cames est un élément central du système de commande du moteur. Il contrôle le régime moteur ainsi que la position des pistons. Les signaux d'entrée qu'il transmet au système de gestion moteur servent à commander l'injection, l'avance à l'allumage et d'autres fonctions.

Le capteur d'angle d'arbre à cames est muni d'un plaque de rotor et un circuit de génération d'ondes. La plaque de rotor comporte 360 fentes pour un signal 1° (POS) et 4 fentes pour un signal 180° (REF). Le circuit de génération d'ondes se compose de diodes lumineuses (LED) et de photodiodes.

La plaque de rotor se situe entre le LED et la photodiode. Le LED émet un signal lumineux à la photodiode. Lorsque la plaque de rotor tourne, les fentes bloquent la lumière et génèrent des impulsions de forme brute. Ces impulsions sont converties en signaux allumé-éteint par le circuit de génération d'ondes et sont envoyées à l'ECM.

Le distributeur ne peut être réparé et doit être remplacé comme un tout, à l'exception du couvercle du distributeur et de la tête de rotor.

Bornes de l'ECM et valeurs de référence

NEEC0221

Les données de spécification sont des valeurs de référence et sont mesurées entre chaque borne et la masse.

ATTENTION :

Ne pas utiliser de bornes de masse de l'ECM lors de la mesure de la tension d'entrée/de sortie. En agissant de la sorte, il est possible d'endommager le transistor de l'ECM. Utiliser une masse autre que les bornes de l'ECM, comme par exemple la prise de terre.

N° DE BORNE	COULEUR DE CABLE	ELEMENT	CONDITION	DONNEES (tension de courant continu)
4	L/B	Relais d'ECM (arrêt automatique)	**[Moteur en marche]** **[Contact d'allumage sur OFF]** ● Pendant quelques secondes après avoir mis le contact d'allumage sur OFF	0 V - 1 V
			[Contact d'allumage sur OFF] ● Pendant plus de quelques secondes après avoir mis le contact d'allumage sur OFF	TENSION DE LA BATTERIE (11 V - 14V)

Simpo PDF Merge and Split Unregistered Version - http://www.simpopdf.com

Bornes de l'ECM et valeurs de référence

N° DE BORNE	COULEUR DE CABLE	ELEMENT	CONDITION	DONNEES (tension de courant continu)
44*1 48*1 (49)*2 (53)*2	OU OU OU OU	Capteur d'angle d'arbre à cames (signal de référence)	**[Moteur en marche]** (moteur chauffé) ● Régime de ralenti	0,2 - 0,5V 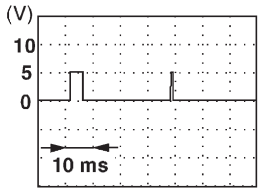
			[Moteur en marche] ● Le régime-moteur est de 2 000 tr/mn.	0 - 0,5V 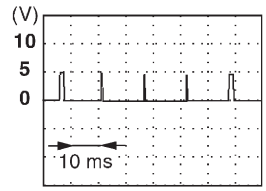
(44)*2 49*1	W	Capteur d'angle d'arbre à cames (signal de position)	**[Moteur en marche]** ● **Pendant la montée en température** ● Régime de ralenti	Environ 2,5V 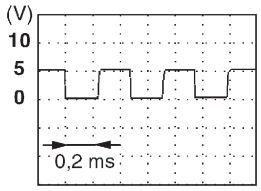
			[Moteur en marche] ● Le régime-moteur est de 2 000 tr/mn.	Environ 1,0V 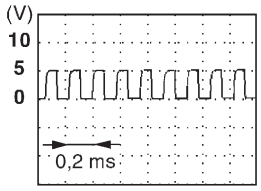
67	W	Alimentation électrique de l'ECM	**[Contact d'allumage sur ON]**	TENSION DE LA BATTERIE (11 V - 14V)
72	W			
117	W	Retour de courant	**[Moteur en marche]** ● Régime de ralenti	TENSION DE LA BATTERIE (11 V - 14V)

*1: Modèle sans NATS (système antivol Nissan)
*2: Modèle avec NATS (système antivol Nissan)

Simpo PDF Merge and Split Unregistered Version - http://www.simpopdf.com

Logique de diagnostic de bord

NEEC0222

N° de DTC		Le défaut est détecté quand ...	Eléments de contrôle (causes possibles)
P0340 0340	A)	Le signal 1° ou 180° n'est pas introduit dans l'ECM pendant les premières secondes où le démarreur est actionné.	● Faisceau ou connecteurs (circuit du capteur d'angle d'arbre à cames ouvert ou court-circuité) ● Capteur d'angle d'arbre à cames ● Starter (se reporter à la section SC.) ● Circuit du système de démarrage (se reporter à la section SC.) ● Batterie à plat (faible)
	B)	Le signal 1° ou 180° n'est pas introduit assez souvent dans l'ECM alors que le régime-moteur est supérieur au régime spécifié.	
	C)	La relation entre le signal 1° et 180° ne se trouve pas dans la plage d'action normale lorsque le moteur tourne au régime spécifié.	

Procédure de confirmation de code de défaut (DTC)

=NEEC0223

Dans un premier temps, effectuer la ''Procédure de défauts A''. Si le DTC ne peut pas être confirmé, réaliser la ''Procédure de défauts B et C''.

REMARQUE :

Si une ''Procédure de confirmation de DTC'' a précédé, toujours mettre le contact d'allumage sur la position OFF et attendre au moins 5 secondes avant de procéder à l'essai suivant.

CONDITIONS D'ESSAI :

Avant d'effectuer la procédure suivante, veiller à ce que la tension de la batterie soit supérieure à 10,5V.

2

CONTROLE DE DONNEES	
CONTROLE	AUCUN DTC
TR/MN MOT	XXX tr/ min

SEF058Y

PROCEDURE DE DEFAUT A

NEEC0223S01

Avec CONSULT-II

1) Mettre le contact d'allumage sur ON.
2) Régler CONSULT-II en mode ''CONTROLE DE DONNEES''.
3) Actionner le starter pendant au moins 2 secondes.
4) Si le DTC de 1er parcours est détecté, aller à ''Procédure de diagnostic'', page EC-3291.

Avec l'analyseur générique GST

Suivre la procédure ''Avec CONSULT-II''.

3

CONTROLE DE DONNEES	
CONTROLE	AUCUN DTC
TR/MN MOT	XXX tr/ min

SEF058Y

PROCEDURE DE DEFAUT B ET C

NEEC0223S02

Avec CONSULT-II

1) Mettre le contact d'allumage sur ON.
2) Régler CONSULT-II en mode ''CONTROLE DE DONNEES''.
3) Démarrer le moteur et le faire tourner pendant au moins 2 secondes au régime de ralenti.
4) Si le DTC de 1er parcours est détecté, aller à ''Procédure de diagnostic'', page EC-3291.

Avec l'analyseur générique GST

Suivre la procédure ''Avec CONSULT-II''.

Simpo PDF Merge and Split Unregistered Version - http://www.simpopdf.com

Schéma de câblage

NEEC0224

EC-CMPS-01

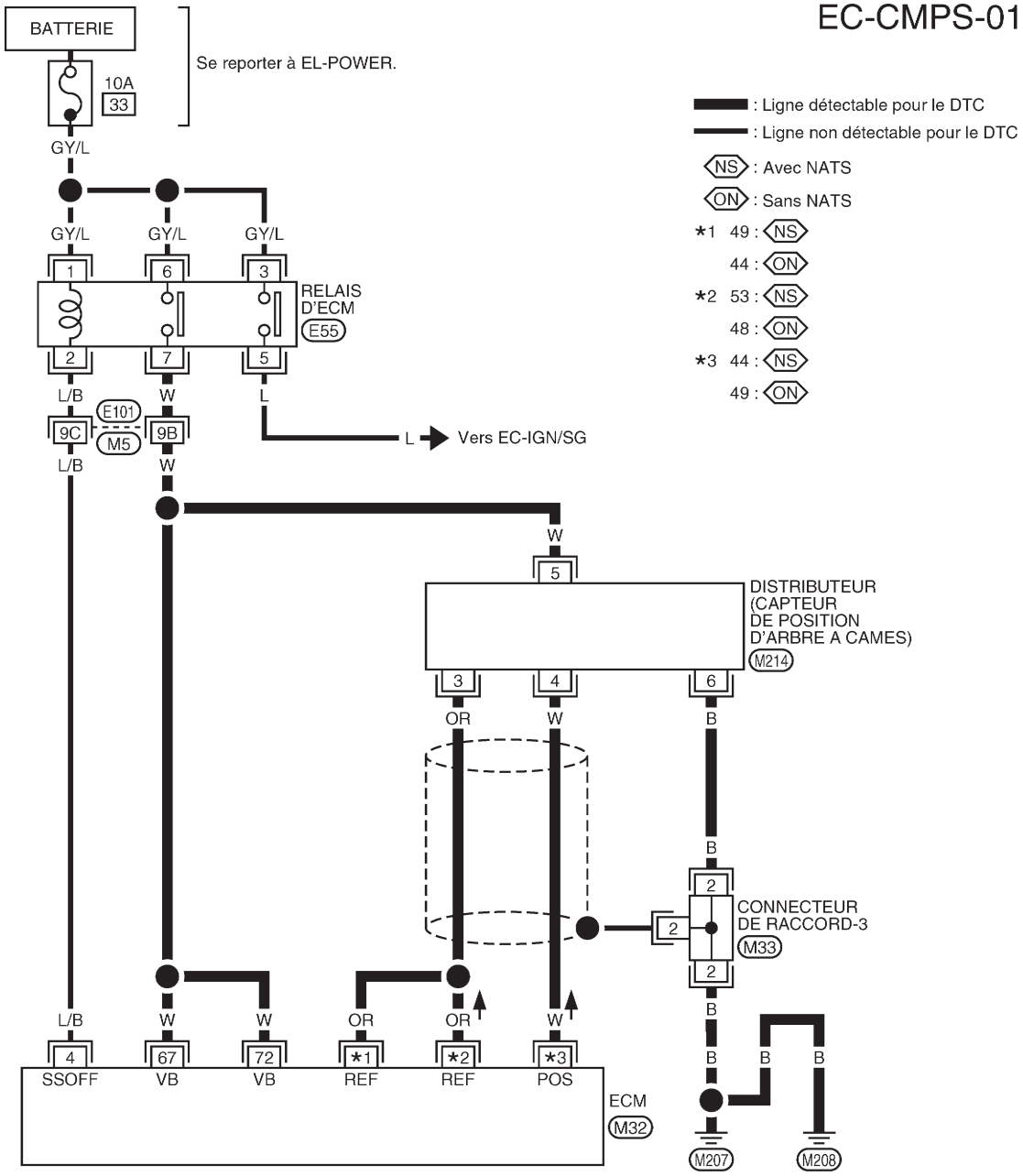

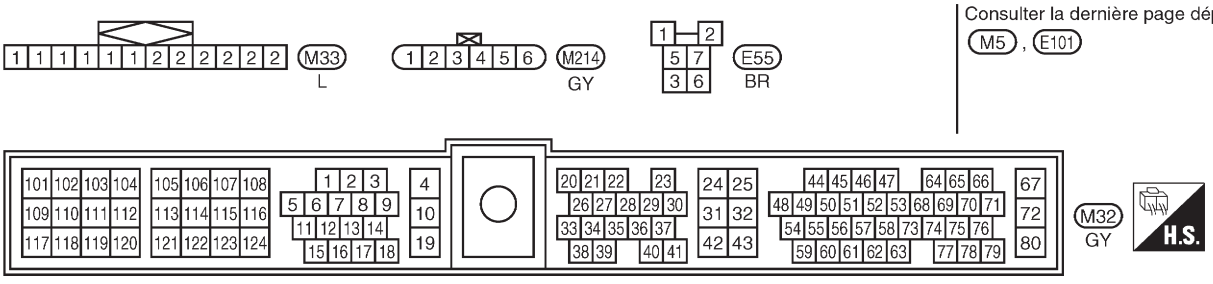

GEC235A

Simpo PDF Merge and Split Unregistered Version - http://www.simpopdf.com

Procédure de diagnostic

NEEC0225

1	CONTROLER LE SYSTEME DE DEMARRAGE	
Le moteur tourne-t-il au ralenti ? (Le starter fonctionne-t-il ?) **Oui ou Non**		
Oui	▶	ALLER A 2.
Non	▶	Contrôler le système de démarrage (se reporter à la section SC.)

2	RESSERRER LES VIS DE MASSE	
1. Mettre le contact d'allumage sur OFF. 2. Desserrer et resserrer les vis de masse du moteur. 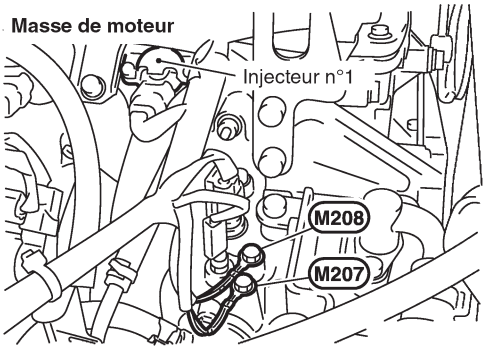 SEC309D		
	▶	ALLER A 3.

Simpo PDF Merge and Split Unregistered Version - http://www.simpopdf.com

3	CONTROLER L'ALIMENTATION ELECTRIQUE

1. Débrancher le connecteur de faisceau du capteur d'angle d'arbre à cames.

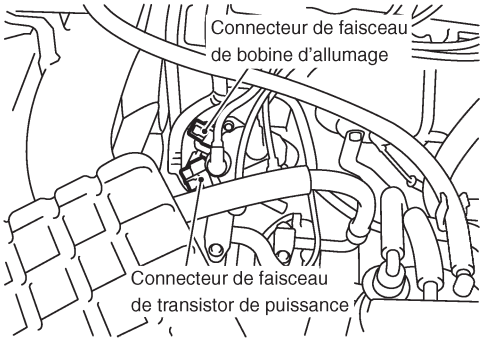

SEC276D

2. Mettre le contact d'allumage sur ON.
3. Contrôler la tension entre la borne 5 et la masse à l'aide de CONSULT-II ou du testeur.

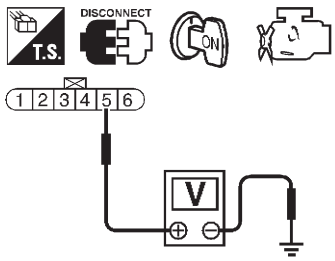

SEF040S

Tension : Tension de la batterie

BON ou MAUVAIS

Bon	▶	ALLER A 5.
Mauvais	▶	ALLER A 4.

4	DETECTER LA PIECE DEFECTUEUSE

Contrôler les points suivants.
- Connecteurs de faisceau E101, M5
- Faisceau ouvert ou en court-circuit entre le capteur d'angle d'arbre à cames et le relais d'ECM
- Faisceau ouvert ou en court-circuit entre le capteur d'angle d'arbre à cames et l'ECM

	▶	Réparer les faisceaux ou les connecteurs en circuit ouvert ou en court-circuit à la masse ou à l'alimentation.

5	CONTROLER LE CIRCUIT DE SIGNAL D'ENTREE

1. Mettre le contact d'allumage sur OFF.
2. Débrancher le connecteur de faisceau de l'ECM.
3. Vérifier la continuité du faisceau entre la borne 4 du capteur et la borne 49 ou (44)* de l'ECM, entre la borne 3 du capteur et les bornes 44, 48 ou (49, 53)* de l'ECM. Se reporter au schéma de câblage.
   Il doit y avoir continuité.
   *: Modèle avec NATS (système antivol Nissan)
4. Vérifier également que le faisceau n'est pas en court-circuit à la masse ou à l'alimentation.

BON ou MAUVAIS

Bon	▶	ALLER A 6.
Mauvais	▶	Réparer les faisceaux ou les connecteurs en circuit ouvert ou en court-circuit à la masse ou à l'alimentation.

Simpo PDF Merge and Split Unregistered Version - http://www.simpopdf.com

6	CONTROLER LE CIRCUIT DE MISE A LA MASSE

1. Mettre le contact d'allumage sur OFF.
2. Vérifier la continuité du faisceau entre la borne 6 du distributeur (capteur d'angle d'arbre à cames) et la masse du moteur. Se reporter au schéma de câblage.
   Il doit y avoir continuité.
3. Vérifier également que le faisceau n'est pas en court-circuit à l'alimentation.

BON ou MAUVAIS

Bon	▶	ALLER A 8.
Mauvais	▶	ALLER A 7.

7	DETECTER LA PIECE DEFECTUEUSE

Contrôler les points suivants.
- Connecteur de jonction-3
- Faisceau ouvert ou en court-circuit entre le capteur d'angle d'arbre à cames et la masse du moteur

	▶	Réparer les faisceaux ou les connecteurs en circuit ouvert ou en court-circuit à la masse ou à l'alimentation.

8	CONTROLER LE CAPTEUR D'ANGLE D'ARBRE A CAMES

1. Brancher à nouveau tous les connecteurs de faisceau débranchés.
2. Démarrer le moteur et l'amener à température normale de fonctionnement.
3. Vérifier la tension entre la borne 49 ou (44)* de l'ECM et la masse du moteur, entre les bornes 44, 48 ou (49, 53)* de l'ECM et la masse du moteur.

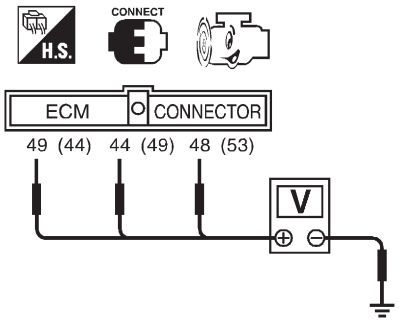

Borne 44, 48 ou (49, 53)* et masse de moteur

Condition	Ralenti	2 000 tr/mn
Tension	0,2 - 0,5V	0 - 0,5V
Signal d'impulsion	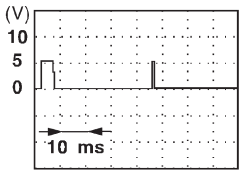	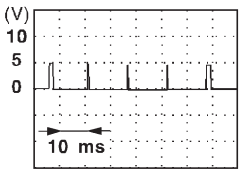

Borne 49 ou (44)* et masse de moteur

Condition	Ralenti	2 000 tr/mn
Tension	Environ 2,5V	Environ 1,0V
Signal d'impulsion	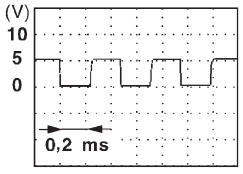	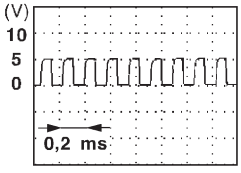

SEC273D

*: Modèle avec NATS (système antivol Nissan)

BON ou MAUVAIS

Bon	▶	ALLER A 9.
Mauvais	▶	Remplacer le capteur d'angle d'arbre à cames.

Simpo PDF Merge and Split Unregistered Version - http://www.simpopdf.com

9	VERIFIER LE CIRCUIT DE BLINDAGE	
1. Mettre le contact d'allumage sur OFF. 2. Débrancher le connecteur de jonction-3. 3. Contrôler les points suivants. ● Continuité entre la borne 2 du connecteur de jonction-3 et la masse ● Connecteur de jonction-3 (Se reporter à ''DISPOSITION DES FAISCEAUX'', dans la section EL.) **Il doit y avoir continuité.** 4. Vérifier également que le faisceau n'est pas en court-circuit à l'alimentation. 5. Ensuite, brancher à nouveau le connecteur de jonction-3.		
BON ou MAUVAIS		
Bon	▶	ALLER A 10.
Mauvais	▶	Réparer les faisceaux ou connecteurs en circuit ouvert ou court-circuit.

10	VERIFIER SI L'INCIDENT EST INTERMITTENT	
Effectuer un ''DIAGNOSTIC DES DEFAUTS EN CAS INCIDENT INTERMITTENT'', voir page EC-3132.		
	▶	**FIN DE L'INSPECTION**

Simpo PDF Merge and Split Unregistered Version - http://www.simpopdf.com

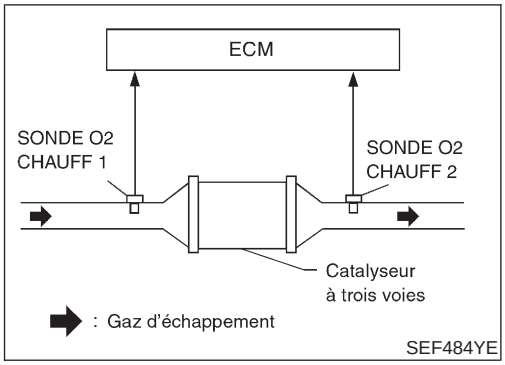

Logique de diagnostic de bord

NEEC1050

L'ECM contrôle la fréquence de commutation des sondes à oxygène chauffé 1 et 2.
Un catalyseur à trois voies présentant une importante capacité d'accumulation de l'oxygène indique que la fréquence de commutation de la sonde à oxygène chauffé 2 (arrière) est faible. A mesure que la capacité d'accumulation de l'oxygène augmente, la fréquence de commutation de la sonde à oxygène chauffé 2 augmentera également.
Lorsque le taux de fréquence des sondes à oxygène chauffé 1 et 2 approche d'une valeur limite déterminée, le défaut du catalyseur à trois voies est diagnostiqué.

N° de DTC	Le défaut est détecté quand ...	Eléments de contrôle (causes possibles)
P0420 0420	• Le catalyseur à 3 voies ne fonctionne pas correctement. • La capacité d'accumulation de l'oxygène du catalyseur à 3 voies est insuffisante.	• Catalyseur trois voies • Tuyau d'échappement • Fuites d'air d'admission • Injecteurs • Fuites des injecteurs • Bougie d'allumage • Mauvais calage de l'allumage

3

SUPPORT TRAVAIL SRT	
CATALYSEUR	INCMP
CH S/02 HTR	CMPLT
CH S/02	INCMP
CONTROLE	
TR/MN MOT	tr/mn
PLAN CAR BASE	ms

PBIB0566E

7

SUPPORT TRAVAIL SRT	
CATALYSEUR	CMPLT
CH S/02 HTR	CMPLT
CH S/02	INCMP
CONTROLE	
TR/MN MOT	tr/mn
PLAN CAR BASE	ms

PBIB0567E

Procédure de confirmation de code de défaut (DTC)

NEEC1051

REMARQUE :
Si une ''Procédure de confirmation de DTC'' a précédé, toujours mettre le contact d'allumage sur la position ''OFF'' et attendre au moins 5 secondes avant de procéder à l'essai suivant.

CONDITIONS D'ESSAI :

- **Ouvrir le capot du moteur avant de commencer la procédure suivante.**
- **Ne pas maintenir le régime-moteur plus longtemps que le minutage spécifié ci-dessous.**

Avec CONSULT-II

1) Mettre le contact d'allumage sur ''ON''.
2) Sélectionner ''CONFIRMATION DTC & SRT'' puis mettre CONSULT-II en mode ''SUPPORT TRAVAIL SRT''.
3) Démarrer le moteur.
4) Emballer le moteur jusqu'à 2 500 à 3 000 tr/mn et maintenir ce régime pendant 3 minutes consécutives, puis relâcher complètement la pédale d'accélération.
   Si ''INCMP'' de ''CATALYSEUR'' change en ''CMPLT'', passer à l'étape 7.

Simpo PDF Merge and Split Unregistered Version - http://www.simpopdf.com

5) Attendre 5 secondes au ralenti.
6) Emballer le moteur jusqu'à 2 500 à 3 500 tr/mn et le maintenir jusqu'à ce que CATALYSEUR passe de INCOMPLET à TERMINE (ceci prend environ 5 minutes.)

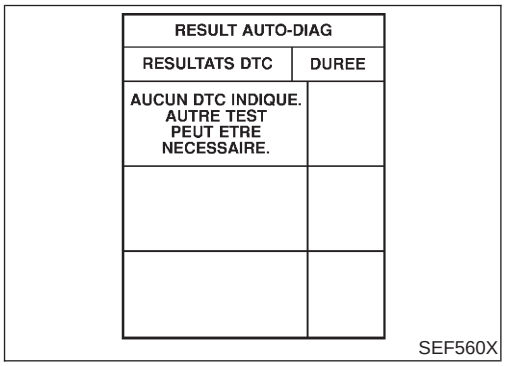

7) Sélectionner le mode ''RESULT AUTO-DIAG'' sur CONSULT-II.
Si le DTC de 1er parcours est détecté, effectuer une ''PROCEDURE DE DIAGNOSTIC'', page EC-3297. Si TERMINE n'apparaît pas, arrêter le moteur et laisser refroidir le ''CAP TEMP REFR'' jusqu'à moins de 70°C et puis effectuer à nouveau les tests à partir de l'étape 1.

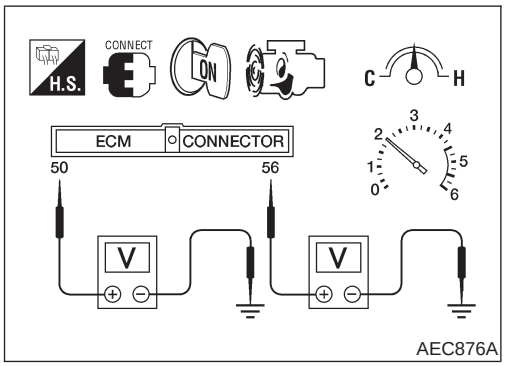

Vérification du fonctionnement général

NEEC0242

Utiliser cette procédure pour vérifier le fonctionnement général du catalyseur à trois voies. Au cours de ce contrôle, il est possible qu'un DTC de 1er parcours ne soit pas confirmé.

Sans CONSULT-II

1) Démarrer le moteur et conduire le véhicule à une vitesse de plus de 70 km/h pendant 2 minutes consécutives.
2) Arrêter le véhicule et laisser tourner le moteur.
3) Placer les sondes du voltmètre entre les bornes 50 (signal de la sonde à oxygène chauffé 1), 56 (signal de la sonde à oxygène chauffé 2) et la masse du moteur.
4) Maintenir le régime-moteur constant à 2 000 tr/mn à vide.
5) Vérifier que la fréquence de commutation de la tension (entre maxi. et mini.) entre la borne 56 de l'ECM et la masse du moteur est très inférieure à celle de la tension entre la borne 50 de l'ECM et la masse du moteur.
Rapport entre fréquences de commutation = A/B
A : Fréquence de commutation de la tension de la sonde à oxygène chauffé 2
A : Fréquence de commutation de la tension de la sonde à oxygène chauffé 1
Ce rapport doit être inférieur à 0,75.
Si le rapport est supérieur à la valeur indiquée ci-dessus, cela indique que le catalyseur à 3 voies ne fonctionne pas correctement.

REMARQUE :
Si la tension à la borne 50 ne varie pas périodiquement plus de 5 fois en l'espace de 10 secondes à l'étape 4, effectuer avant toute chose un diagnostic pour le code de défaut DTC P0133 (voir EC-3216.)

Simpo PDF Merge and Split Unregistered Version - http://www.simpopdf.com

Procédure de diagnostic

=NEEC0243

1	CONTROLER LE SYSTEME D'ECHAPPEMENT	
Vérifier visuellement que les tuyaux d'échappement et le silencieux ne sont pas bosselés. **BON ou MAUVAIS**		
Bon	▶	ALLER A 2.
Mauvais	▶	Réparer ou remplacer.

2	CONTROLER L'ETANCHEITE DE L'ECHAPPEMENT	
1. Démarrer le moteur et le laisser tourner au ralenti. 2. Ecouter s'il n'y a pas de fuite de l'air d'échappement en amont du catalyseur à trois voies.		
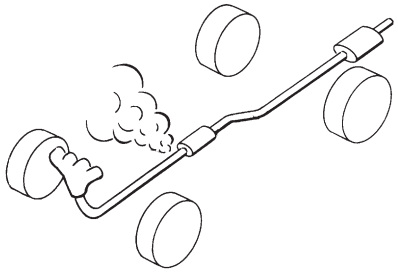 SEF099P **BON ou MAUVAIS**		
Bon	▶	ALLER A 3.
Mauvais	▶	Réparer ou remplacer.

3	VERIFIER S'IL N'Y A PAS DE FUITE DE L'AIR D'ADMISSION	
Ecouter s'il n'y a pas de fuite de l'air d'admission en aval du débitmètre d'air. **BON ou MAUVAIS**		
Bon	▶	ALLER A 4.
Mauvais	▶	Réparer ou remplacer.

4	CONTROLER LE CALAGE DE L'ALLUMAGE	
1. Vérifier les points suivants : Se reporter à la procédure ''Inspection de base'', EC-3093.		

Eléments	Spécifications
Calage de l'allumage	15° ± 2° AV PMH
Ralenti de base	650 ± 50 tr/mn (en position 'N')
Réglage de la position fermée du contact de ralenti	Epaisseur de la cale d'épaisseur et condition du contact 0,1 mm : MARCHE 0,3 mm : ETEINT
Régime de ralenti cible	700 ± 50 tr/mn (en position 'N')

MTBL1315

BON ou MAUVAIS

Bon	▶	ALLER A 5.
Mauvais	▶	Régler le calage d'allumage.

Simpo PDF Merge and Split Unregistered Version - http://www.simpopdf.com

5	CONTROLER LES INJECTEURS

1. Se reporter au schéma de câblage pour injecteurs, EC-3396.
2. Eteindre le moteur, puis mettre le contact d'allumage sur ON.
3. Vérifier la tension entre les bornes 102, 104, 109 et 111 de l'ECM et la masse à l'aide de CONSULT-II ou du testeur.

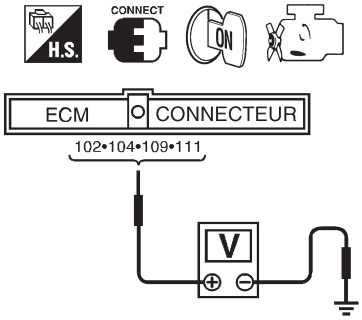

LEC041A

La batterie doit émettre une tension.

BON ou MAUVAIS

Bon	▶	ALLER A 6.
Mauvais	▶	Réaliser la ''Procédure de diagnostic'' pour l'INJECTEUR, EC-3397.

6	CONTROLER L'ETINCELLE D'ALLUMAGE

1. Déconnecter le fil d'allumage de la bougie.
2. Raccorder une bougie en bon état de fonctionnement au fil d'allumage.
3. Poser l'extrémité de la bougie sur une masse appropriée et actionner le starter.
4. Vérifier qu'une étincelle se produit.

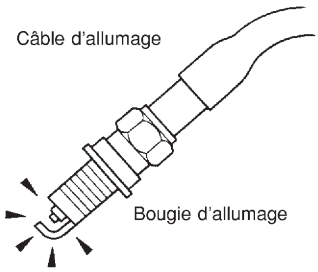

SEF282G

BON ou MAUVAIS

Bon	▶	ALLER A 8.
Mauvais	▶	ALLER A 7.

Simpo PDF Merge and Split Unregistered Version - http://www.simpopdf.com

7	CONTROLER LES FILS D'ALLUMAGE

1. Vérifier que les fils ne sont pas cassés ou endommagés, que les bornes ne sont pas brûlées et qu'ils s'adaptent bien.
2. Mesurer la résistance des fils vers leur borne de couvercle de distributeur. Faire bouger chaque fil lors du test afin de vérifier s'il n'y a pas de coupures intermittentes.

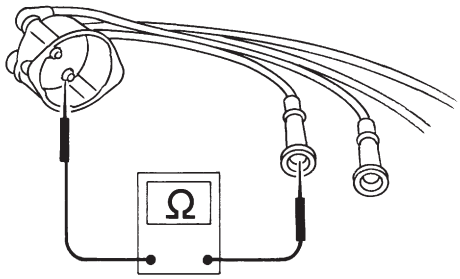

SEF174P

Résistance :
13,6 - 18,4 kΩ/m

Si la résistance est supérieure à la spécification données ci-dessus, inspecter la connexion entre le fil d'allumage et le couvercle du distributeur. Nettoyer la connexion ou remplacer le fil d'allumage par un exemplaire neuf.

BON ou MAUVAIS

Bon	▶	Vérifier la bobine d'allumage, le transistor d'alimentation et leurs circuits. Se reporter à EC-3387.
Mauvais	▶	Remplacer.

8	CONTROLER L'INJECTEUR

1. Mettre le contact d'allumage sur OFF.
2. Déposer l'ensemble d'injecteur. Se reporter à EC-3037.
   Garder le flexible d'alimentation et tous les injecteurs raccordés à la galerie de l'injecteur.
3. Débrancher le connecteur de faisceau du capteur d'angle d'arbre à cames.
4. Mettre le contact d'allumage sur ON.
   Veiller à ce que le carburant ne coule pas de l'injecteur.

BON ou MAUVAIS

Bon (pas d'écoulement)	▶	ALLER A 9.
Mauvais (écoulements)	▶	Remplacer le(s) injecteur(s) dont s'écoule le carburant.

9	VERIFIER SI L'INCIDENT EST INTERMITTENT

Effectuer un ''DIAGNOSTIC DES DEFAUTS EN CAS INCIDENT INTERMITTENT'', voir page EC-3132.

Panne réparée.	▶	**FIN DE L'INSPECTION**
Panne non réparée.	▶	Remplacer le catalyseur à trois voies.

Simpo PDF Merge and Split Unregistered Version - http://www.simpopdf.com

Description

DESCRIPTION DU SYSTÈME

NEEC0248

NEEC0248S01

Capteur	Signal d'entrée à l'ECM	Fonction de l'ECM	Actionneur
Capteur d'angle d'arbre à cames	Régime-moteur	Commande de volume de purge de cartouche EVAP	Electrovanne de commande de volume de purge de cartouche EVAP
Débitmètre d'air	Quantité d'air d'admission		
Capteur de température du liquide de refroidissement du moteur	Température du liquide de refroidissement du moteur		
Contact d'allumage	Signal de démarrage		
Capteur d'ouverture de papillon	Position de papillon		
Contact de position de papillon	Position de papillon fermé		
Sonde à oxygène chauffé 1	Densité d'oxygène dans les gaz d'échappement (signal de régulation automatique de la richesse de mélange)		
Capteur de vitesse du véhicule	Vitesse du véhicule		

Ce système commande le débit des vapeurs de carburant venant de la cartouche EVAP. La commande du débit se fait par régulation de l'ouverture du by-pass de l'électrovanne de commande de volume de purge de cartouche EVAP. L'électrovanne de commande de volume de purge de cartouche EVAP opère par cycles MARCHE/ARRET en réponse au signal envoyé pas l'ECM. L'ouverture de la soupape varie pour optimiser la gestion moteur. La valeur optimale programmée dans l'ECM est déterminée en tenant compte de diverses conditions du moteur. Lorsque le moteur fonctionne, le débit de vapeur de carburant de la cartouche EVAP est régulé en fonction de la variation du débit d'air.

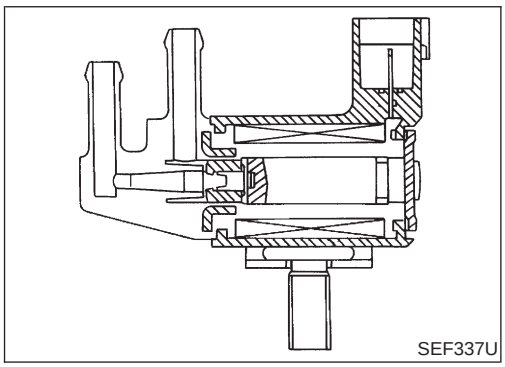
SEF337U

DESCRIPTION DES COMPOSANTS

NEEC0248S02

L'électrovanne de commande de volume de purge de cartouche EVAP fonctionne par cycles MARCHE/ARRET pour commander le débit de vapeur de carburant de la cartouche EVAP. L'électrovanne de commande de volume de purge de cartouche EVAP bouge en fonction des impulsions MARCHE/ARRET qui lui sont transmises par l'ECM. Plus l'impulsion ON est longue, plus la quantité de vapeur de carburant passant à travers la soupape est importante.

Simpo PDF Merge and Split Unregistered Version - http://www.simpopdf.com

Valeur de référence de CONSULT-II en mode de contrôle de données

NEEC0249

Les données de spécification sont des valeurs de référence.

ELEMENT DE CONTROLE	CONDITION		SPECIFICATION
S/COM VOL PURG	● Moteur : une fois le moteur chaud ● Interrupteur de climatiseur “OFF” ● Levier de changement de vitesses : “N” ● A vide	Ralenti (véhicule à l’arrêt)	0
		2.000 tr/mn	—

Bornes de l’ECM et valeurs de référence

NEEC0250

Les données de spécification sont des valeurs de référence et sont mesurées entre chaque borne et la masse.

ATTENTION :
Ne pas utiliser de bornes de masse de l’ECM lors de la mesure de la tension d’entrée/de sortie. En agissant de la sorte, il est possible d’endommager le transistor de l’ECM. Utiliser une masse autre que les bornes de l’ECM, comme par exemple la prise de terre.

N° DE BORNE	COULEUR DE CABLE	ELEMENT	CONDITION	DONNEES (tension de courant continu)
4	L/B	Relais de l’ECM (coupure automatique)	**[Moteur en marche]** **[Contact d’allumage sur OFF]** ● Pendant quelques secondes après avoir mis le contact d’allumage sur OFF	0 V - 1 V
			[Contact d’allumage sur OFF] ● Quelques secondes se sont écoulées après la mise du contact d’allumage sur OFF	TENSION DE LA BATTERIE (11 V - 14V)
5	W/PU	Electrovanne de commande de volume de purge de cartouche EVAP	**[Moteur en marche]** ● Régime de ralenti	TENSION DE LA BATTERIE (11 V - 14V) 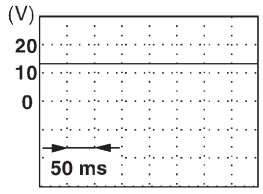
			[Moteur en marche] ● Le régime-moteur est de 2 000 tr/mn. (plus de 200 secondes après le démarrage du moteur)	TENSION DE LA BATTERIE (11 V - 14V) 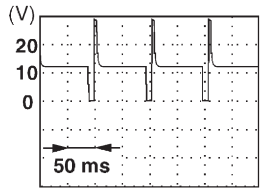
67	W	Alimentation électrique de l’ECM	**[Contact d’allumage sur ON]**	TENSION DE LA BATTERIE (11 V - 14V)
72	W			
117	W	Retour de courant	**[Moteur en marche]** ● Régime de ralenti	TENSION DE LA BATTERIE (11 V - 14V)

Simpo PDF Merge and Split Unregistered Version - http://www.simpopdf.com

Logique de diagnostic de bord

NEEC0251

N° de DTC	Nom de diagnostic des défauts	Condition de détection des défauts DTC	Cause possible
P0444 0444	DTC P0443 Electro-vanne de commande de volume de purge de cartouche EVAP (circuit ouvert)	Une tension anormalement élevée provenant de la vanne est adressée à l'ECM.	● Faisceau ou connecteurs (le circuit de capteur est ouvert ou court-circuité) ● Electrovanne de commande de volume de purge de cartouche EVAP
P0445 0445	DTC P0443 Electro-vanne de commande du volume de purge de la cartouche EVAP (court-circuit)	Une tension anormalement élevée provenant de la vanne est adressée à l'ECM.	● Faisceau ou connecteurs (le circuit de capteur est en court-circuit) ● Electrovanne de commande de volume de purge de cartouche EVAP

Simpo PDF Merge and Split Unregistered Version - http://www.simpopdf.com

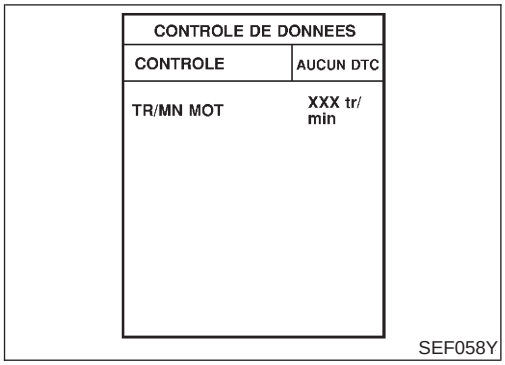

Procédure de confirmation de code de défaut (DTC)

=NEEC0252

REMARQUE :

Si une ‘‘Procédure de confirmation de DTC’’ a précédé, toujours mettre le contact d’allumage sur la position ‘‘OFF’’ et attendre au moins 5 secondes avant de procéder à l’essai suivant.

CONDITIONS D’ESSAI :

Avant d’entamer la procédure qui suit, vérifier que la tension délivrée par la batterie soit supérieure à 11V au ralenti.

Avec CONSULT-II

1) Mettre le contact d’allumage sur ON.
2) Régler CONSULT-II en mode ‘‘CONTROLE DE DONNEES’’.
3) Démarrer le moteur et le laisser tourner au ralenti pendant au moins 30 secondes.
4) Si le DTC de 1er parcours est détecté, aller à ‘‘Procédure de diagnostic’’, page EC-3305

Avec l’analyseur générique GST

Suivre la procédure ‘‘Avec CONSULT-II’’.

Simpo PDF Merge and Split Unregistered Version - http://www.simpopdf.com

Schéma de câblage

NEEC0253

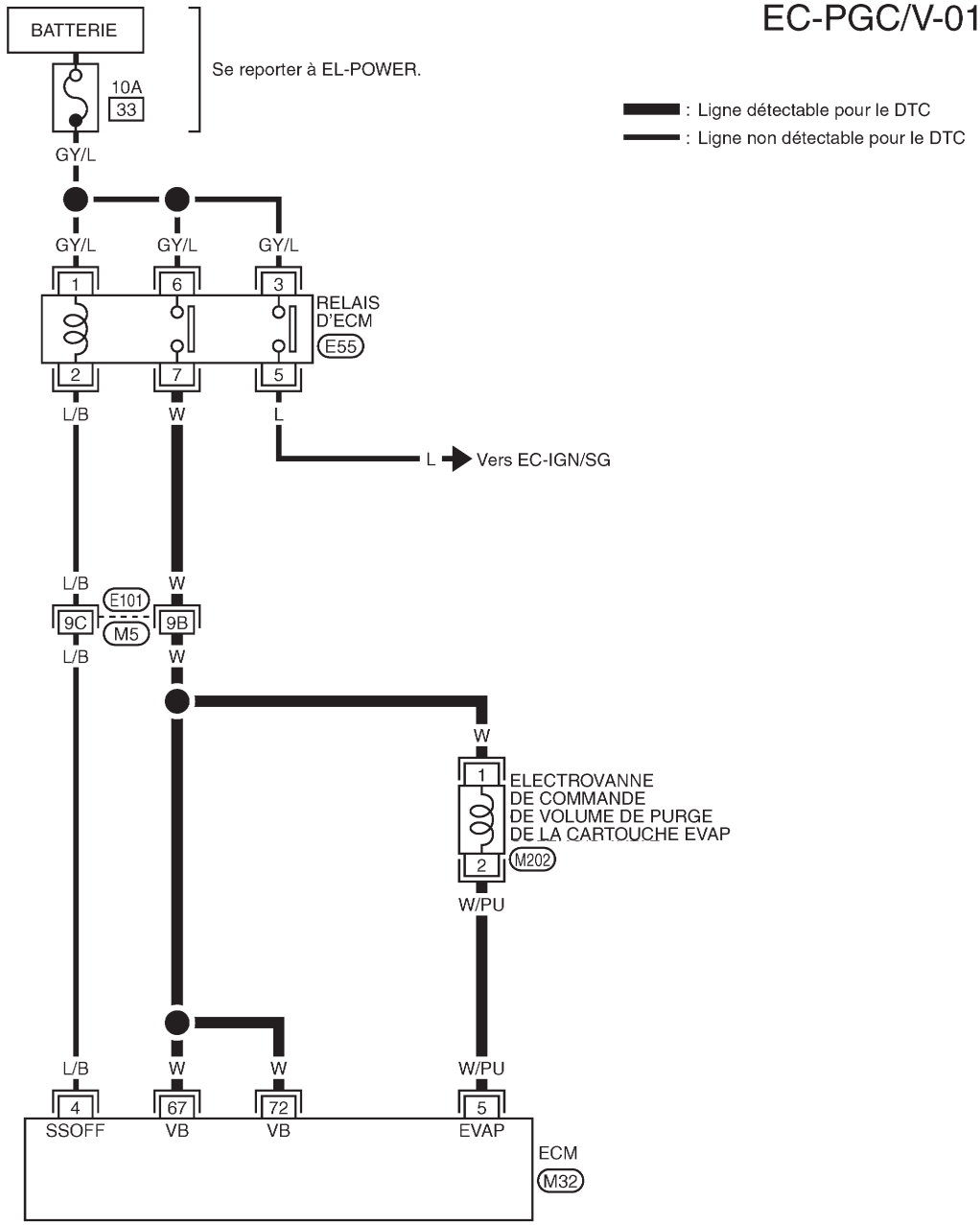

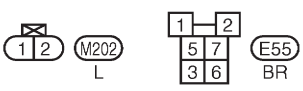

Consulter la dernière page dépliante.
M5 , E101

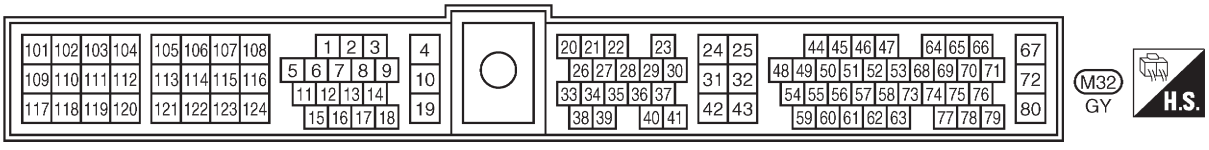

GEC249A

Simpo PDF Merge and Split Unregistered Version - http://www.simpopdf.com

Procédure de diagnostic

NEEC0254

1	CONTROLER L'ALIMENTATION ELECTRIQUE

1. Mettre le contact d'allumage sur OFF.
2. Débrancher le connecteur de faisceau de l'électrovanne de commande de volume de purge de cartouche EVAP.

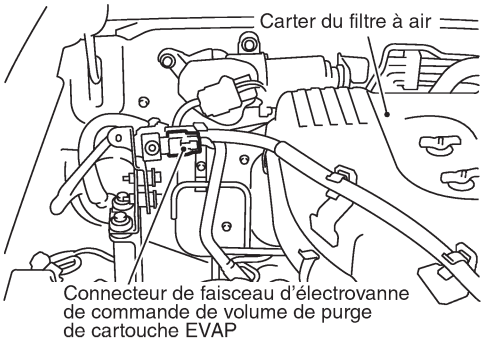

SEC307D

3. Mettre le contact d'allumage sur ON.
4. Contrôler la tension entre la borne 1 et la masse à l'aide de CONSULT-II ou du testeur.

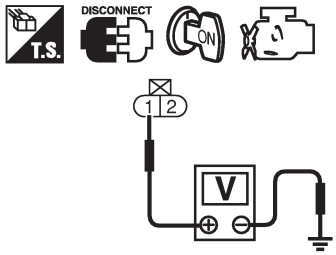

SEC275D

Tension : Tension de la batterie

BON ou MAUVAIS

Bon	▶	ALLER A 3.
Mauvais	▶	ALLER A 2.

2	DETECTER LA PIECE DEFECTUEUSE

Contrôler les points suivants.
- Connecteurs de faisceau E101, M5
- Faisceau ouvert ou en court-circuit entre l'électrovanne de commande de volume de purge de cartouche EVAP et le relais de l'ECM.
- Faisceau ouvert ou en court-circuit entre l'électrovanne de commande de volume de purge de cartouche EVAP et l'ECM.

	▶	Réparer le faisceau ou les connecteurs.

3	CONTROLER LE CIRCUIT DU SIGNAL DE SORTIE

1. Mettre le contact d'allumage sur OFF.
2. Débrancher le connecteur de faisceau de l'ECM.
3. Vérifier la continuité du faisceau entre la borne 5 de l'ECM et la borne 2. Se reporter au schéma de câblage.
   Il doit y avoir continuité.
4. Vérifier également que le faisceau n'est pas en court-circuit à la masse ou à l'alimentation.

BON ou MAUVAIS

Bon (avec CONSULT-II)	▶	ALLER A 5.
Bon (sans CONSULT-II)	▶	ALLER A 6.
Mauvais	▶	ALLER A 4.

Simpo PDF Merge and Split Unregistered Version - http://www.simpopdf.com

4	DETECTER LA PIECE DEFECTUEUSE
Faisceau ouvert ou en court-circuit entre l'électrovanne de commande de volume de purge de cartouche EVAP et l'ECM.	
▶	Réparer les faisceaux ou les connecteurs en circuit ouvert ou en court-circuit à la masse ou à l'alimentation.

5	CONTROLER L'ELECTROVANNE DE COMMANDE DE VOLUME DE PURGE DE CARTOUCHE EVAP

Avec CONSULT-II

1. Démarrer le moteur.
2. Effectuer ''SOUP COM VOL PURG'' en mode ''TEST ACTIF'' à l'aide de CONSULT-II. Vérifier que le régime-moteur varie selon l'ouverture de la soupape.

TEST ACTIF	
SP COM VOL PURG	XXX %
CONTROLE	
TR/MN MOT	XXX tr/mn
ALPHA A/CARB-R1	XXX %
MTR S/O2 CH1 (R1)	PAUVRE
CAP PAPILLON	XXX V

SEF801Y

BON ou MAUVAIS

Bon	▶	ALLER A 7.
Mauvais	▶	ALLER A 6.

Simpo PDF Merge and Split Unregistered Version - http://www.simpopdf.com

6	CONTROLER L'ELECTROVANNE DE COMMANDE DE VOLUME DE PURGE DE CARTOUCHE EVAP

Avec CONSULT-II

Vérifier la continuité du passage d'air de l'électrovanne de commande de volume de purge de cartouche EVAP dans les conditions suivantes.

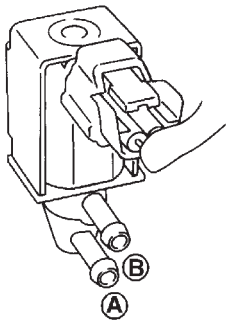

Condition de la valeur de SP COM VOL PURG	Continuité de passage d'air entre A et B
100,0%	Oui
0,0%	Non

SEF334X

Sans CONSULT-II

Vérifier la continuité du passage d'air de l'électrovanne de commande de volume de purge de cartouche EVAP dans les conditions suivantes.

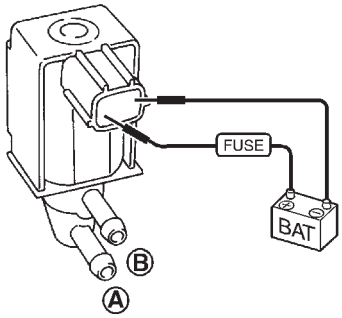

Condition	Continuité de passage d'air entre A et B
Courant continu de 12V entre les bornes 1 et 2 du relais	Oui
Aucune alimentation électrique	Non

SEF335X

BON ou MAUVAIS

Bon	▶	ALLER A 7.
Mauvais	▶	Remplacer l'électrovanne de commande de volume de purge de cartouche EVAP.

7	VERIFIER SI L'INCIDENT EST INTERMITTENT
Se reporter à ''DIAGNOSTIC DES DEFAUTS EN CAS D'INCIDENT INTERMITTENT'', page EC-3132.	
▶	**FIN DE L'INSPECTION**

Simpo PDF Merge and Split Unregistered Version - http://www.simpopdf.com

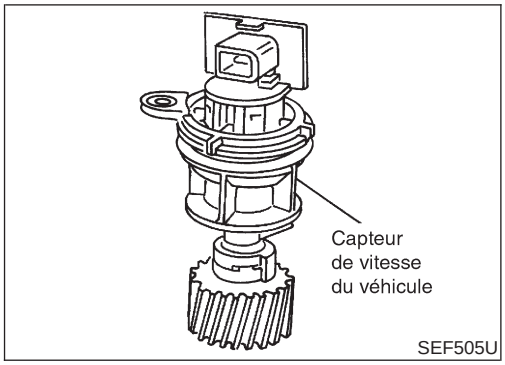

Description des composants

NEEC0272

Le capteur de vitesse du véhicule est monté dans la boîte-pont. Il contient un générateur d'impulsions qui délivre le signal de vitesse du véhicule au compte-tours. Le compte-tours envoie alors un signal à l'ECM.

Bornes de l'ECM et valeurs de référence

NEEC0273

Les données de spécification sont des valeurs de référence et sont mesurées entre chaque borne et la masse.

ATTENTION :
Ne pas utiliser de bornes de masse de l'ECM lors de la mesure de la tension d'entrée/de sortie. En agissant de la sorte, il est possible d'endommager le transistor de l'ECM. Utiliser une masse autre que les bornes de l'ECM, comme par exemple la prise de terre.

N° DE BORNE	COULEUR DE CABLE	ELEMENT	CONDITION	DONNEES (tension de courant continu)
29	W/L	Capteur de vitesse du véhicule	**[Moteur en marche]** ● Lever le véhicule ● En 2nde ● La vitesse du véhicule est de 40 km/h	1 - 4V 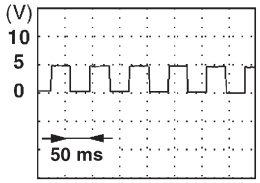 SEF003W

Logique de diagnostic de bord

NEEC0274

N° de DTC	Le défaut est détecté quand ...	Eléments de contrôle (causes possibles)
P0500 0500	● Le signal d'environ 0 km/h du capteur de vitesse du véhicule est envoyé à l'ECM même lorsque le véhicule est conduit.	● Faisceau ou connecteur (le circuit du capteur de vitesse du véhicule est ouvert ou en court-circuit) ● Capteur de vitesse du véhicule

Procédure de confirmation de code de défaut (DTC)

NEEC0275

ATTENTION :
Toujours adapter sa vitesse aux exigences de sécurité.

REMARQUE :
Si une ''Procédure de confirmation de DTC'' a précédé, toujours mettre le contact d'allumage sur la position OFF et attendre au moins 5 secondes avant de procéder à l'essai suivant.

Simpo PDF Merge and Split Unregistered Version - http://www.simpopdf.com

CONDITIONS D'ESSAI :
L'essai peut être conduit sur route ou à l'atelier, roues motrices sur chandelles. Si l'essai sur route apparaît plus facile, il n'est pas nécessaire de mettre le véhicule sur chandelles.

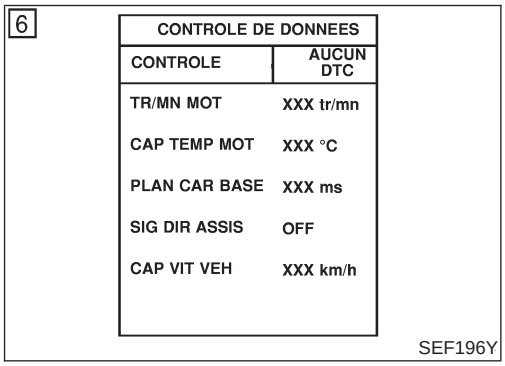

Avec CONSULT-II

1) Faire tourner le moteur.
2) Lire le signal du capteur de vitesse de véhicule sur le CONSULT-II en mode ''CONTROLE DE DONNEES''. La vitesse indiquée sur l'écran CONSULT-II doit être supérieure à 10 km/h lorsque les roues tournent avec un rapport adapté enclenché.
3) Si les résultats ne sont pas conformes, effectuer une ''Procédure de diagnostic'', voir page EC-3313.
   Si le résultat est satisfaisant, passer à l'étape suivante.
4) Régler CONSULT-II en mode ''CONTROLE DE DONNEES''.
5) Chauffer le moteur à sa température normale de fonctionnement.
6) Maintenir les conditions suivantes pendant au moins 1 minute.

TR/MN MOT	1.800 - 6.000 tr/mn
CAP TEMP MOT	Plus de 70°C
PLAN CAR BASE	7 - 15 ms
Levier de vitesses	Rapport adapté
SIG DIR ASSIS	ARR

7) Si le DTC de 1er parcours est détecté, aller à ''Procédure de diagnostic'', page EC-3313.

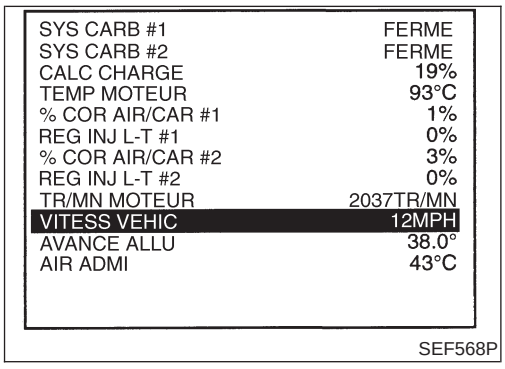

Vérification du fonctionnement général

NEEC0276

Utiliser cette procédure pour vérifier le fonctionnement général du circuit de la soupape de commande de mise à l'air libre de la cartouche EVAP. Au cours de ce contrôle, il est possible qu'un DTC de 1er parcours ne soit pas confirmé.

Avec l'analyseur générique GST

1) Soulever les roues motrices.
2) Démarrer le moteur.
3) Lire le signal du capteur de vitesse du véhicule en 'MODE 1'', avec le GST.
   La vitesse du capteur de vitesse indiquée par GST devrait

Simpo PDF Merge and Split Unregistered Version - http://www.simpopdf.com

pouvoir dépasser 10 km/h lorsque les roues tournent avec la position de transmission adéquate.

4) Si les résultats ne sont pas conformes, effectuer une ‘‘Procédure de diagnostic’’, voir page EC-3313.

Simpo PDF Merge and Split Unregistered Version - http://www.simpopdf.com

Schéma de câblage

NEEC0277

AVEC COMPTE-TOURS

NEEC0277S01

EC-VSS-01

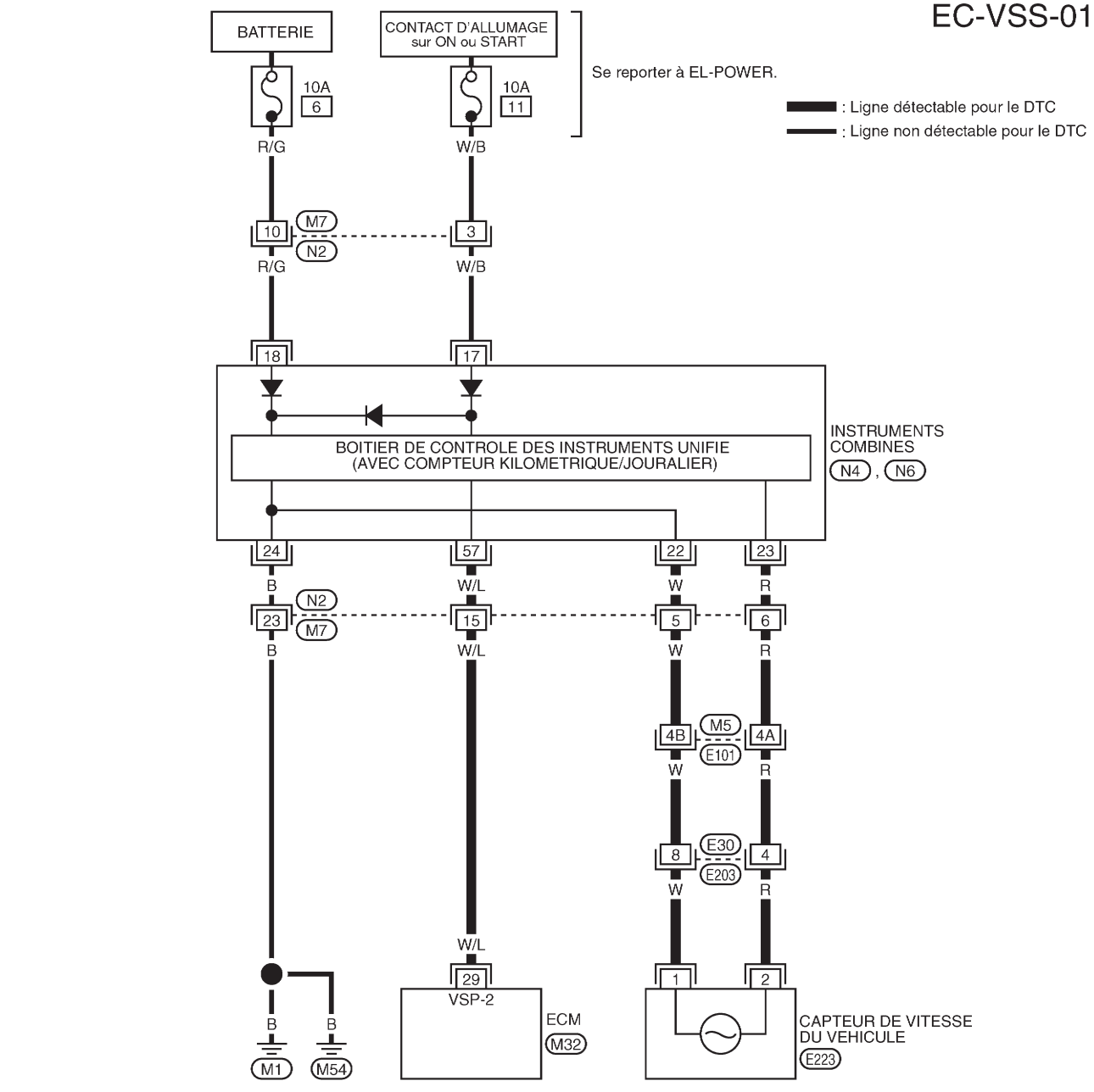

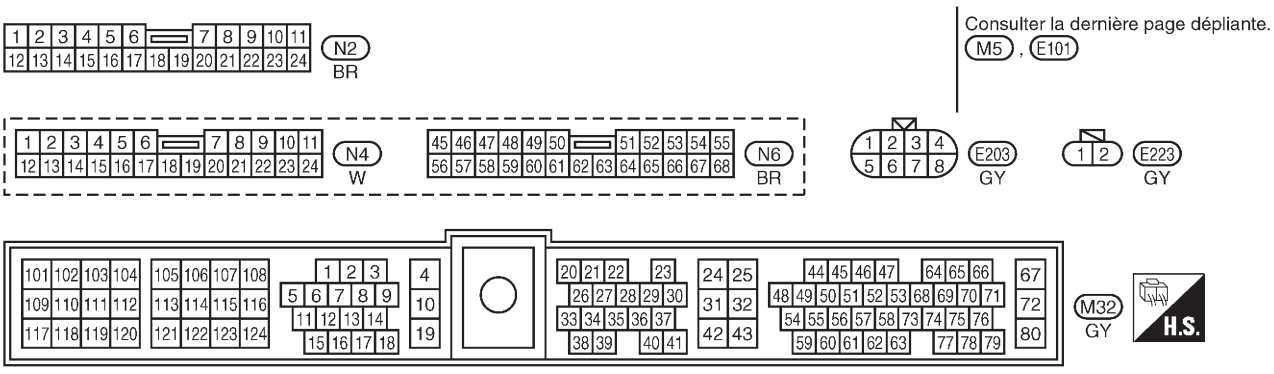

GEC250A

Simpo PDF Merge and Split Unregistered Version - http://www.simpopdf.com

SANS COMPTE-TOURS

NEEC0277S02

EC-VSS-02

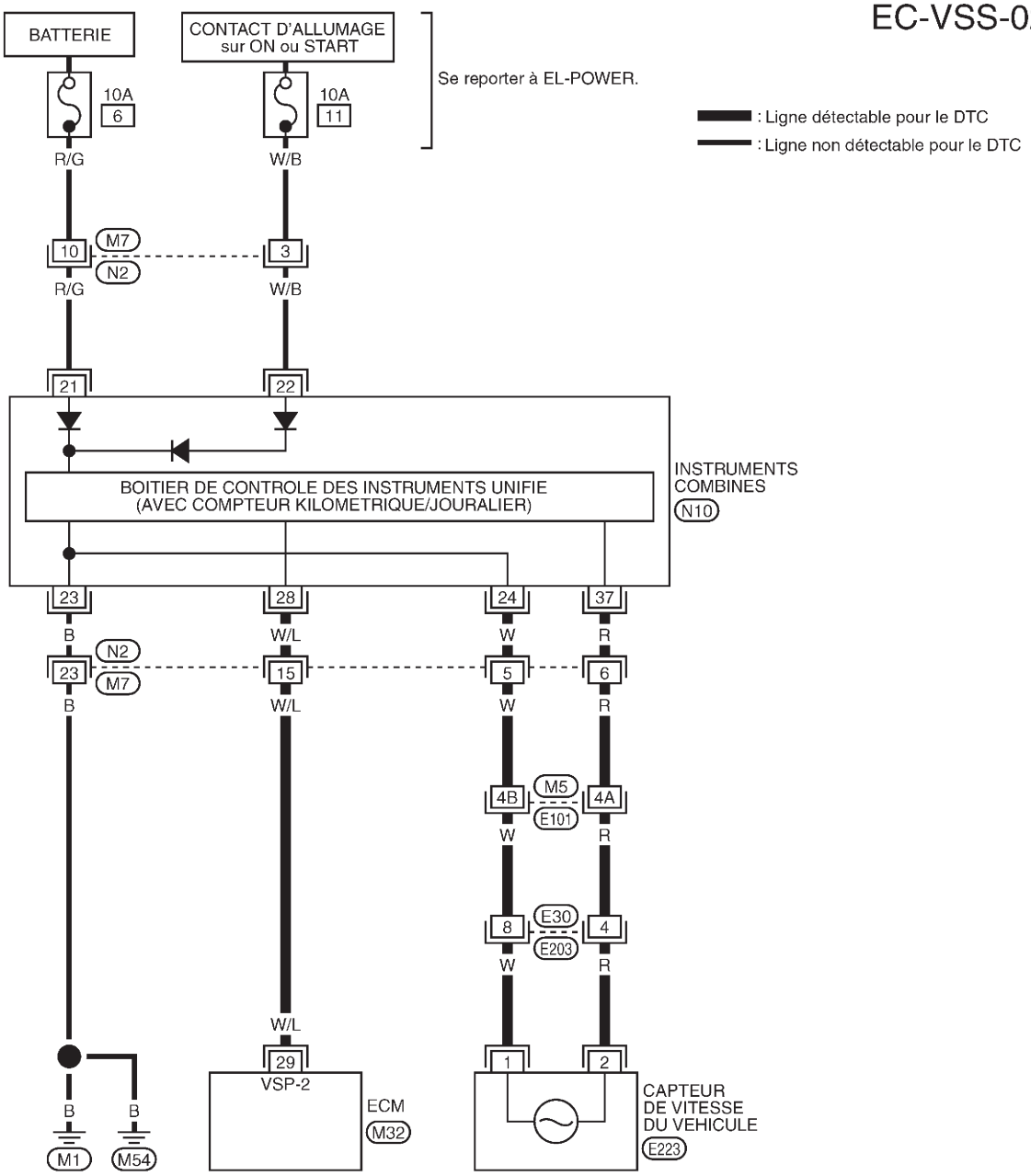

: Ligne détectable pour le DTC

: Ligne non détectable pour le DTC

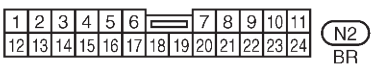



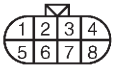

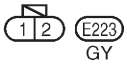

Consulter la dernière page dépliante.
M5 , E101

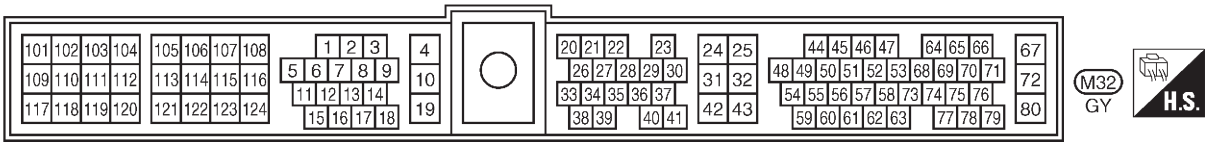

GEC251A

Simpo PDF Merge and Split Unregistered Version - http://www.simpopdf.com

Procédure de diagnostic

AVEC COMPTE-TOURS

NEEC1054

NEEC1054S01

1	CONTROLER LE CIRCUIT DE SIGNAL D'ENTREE

1. Mettre le contact d'allumage sur OFF.
2. Débrancher le connecteur de faisceau de l'ECM et le connecteur de faisceau des instruments combinés.

		Connecteur de faisceau	Borne
Connecteur de faisceau des instruments combinés	Avec compte-tours	N16	57
	Sans compte-tours	N10	28

MTBL1308

3. Vérifier la continuité du faisceau entre la borne 29 de l'ECM et la borne 57 de l'instrument (avec compte-tours), 28 (sans compte-tours). Se reporter au schéma de câblage.
   Il doit y avoir continuité.
4. Vérifier également que le faisceau n'est pas en court-circuit à la masse ou à l'alimentation.

BON ou MAUVAIS

Bon	▶	ALLER A 3.
Mauvais	▶	ALLER A 2.

2	DETECTER LA PIECE DEFECTUEUSE

Contrôler les points suivants.
- Connecteurs de faisceau N2, M7
- Faisceau ouvert ou en court-circuit entre l'ECM et les instruments combinés

	▶	Réparer les faisceaux ou les connecteurs en circuit ouvert ou en court-circuit à la masse ou à l'alimentation.

3	CONTROLER LE FONCTIONNEMENT DU COMPTEUR DE VITESSE

S'assurer que le compteur de vitesse fonctionne correctement.

BON ou MAUVAIS

Bon	▶	ALLER A 5.
Mauvais	▶	ALLER A 4.

4	DETECTER LA PIECE DEFECTUEUSE

Contrôler les points suivants.
- Connecteurs de faisceau N2, M7
- Connecteurs de faisceau M5, E101
- Connecteurs de faisceau E30, E203
- Faisceau ouvert ou en court-circuit entre les instruments combinés et le capteur de vitesse du véhicule

	▶	Réparer le faisceau ou les connecteurs. Contrôler le capteur de vitesse du véhicule et son circuit. Consulter la section EL.

5	VERIFIER SI L'INCIDENT EST INTERMITTENT

Effectuer un ''DIAGNOSTIC DES DEFAUTS EN CAS INCIDENT INTERMITTENT'', voir page EC-3132.

	▶	**FIN DE L'INSPECTION**

Simpo PDF Merge and Split Unregistered Version - http://www.simpopdf.com

Description

DESCRIPTION DU SYSTÈME

NEEC1594

NEEC1594S01

Capteur	Signal d'entrée à l'ECM	Fonctionnement de l'ECM	Actionneur
Capteur d'angle d'arbre à cames	Régime-moteur	Contrôle de l'air au ralenti	Soupape IACV-AAC
Débitmètre d'air	Quantité d'air d'admission		
Capteur de température du liquide de refroidissement du moteur	Température du liquide de refroidissement du moteur		
Contact d'allumage	Signal de démarrage		
Capteur d'ouverture de papillon	Position de papillon		
Contact de stationnement/point mort (PNP)	Position de point mort		
Interrupteur de climatiseur	Fonctionnement du climatiseur		
Manocontact d'huile de direction assistée	Signal de charge de direction assistée		
Batterie	Tension de la batterie		
Capteur de vitesse du véhicule	Vitesse du véhicule		
Capteur de température d'air d'admission	Température de l'air d'admission		

Ce système commande automatiquement le régime de ralenti du moteur à un niveau spécifié. Le régime de ralenti est contrôlé par un réglage précis de la quantité d'air qui est admise directement par la soupape AAC, sans passer par le papillon. La soupape AAC opère par cycles MARCHE/ARRET en réponse au signal envoyé pas l'ECM. Le capteur d'angle d'arbre à cames détecte la vitesse réelle du moteur et envoie un signal à l'ECM. L'ECM commande alors le temps ON/OFF de la soupape IACV-AAC afin que le régime-moteur coïncide avec la valeur cible mémorisée dans l' ECM. Le régime-moteur cible est la vitesse la plus basse à laquelle le moteur peut fonctionner de façon stable. La valeur optimale mémorisée dans l'ECM est déterminée en tenant compte des diverses conditions du moteur à savoir : la durée de réchauffement, la décélération, et la charge du moteur (fonctionnement du climatiseur, de la direction assistée et du ventilateur de refroidissement).

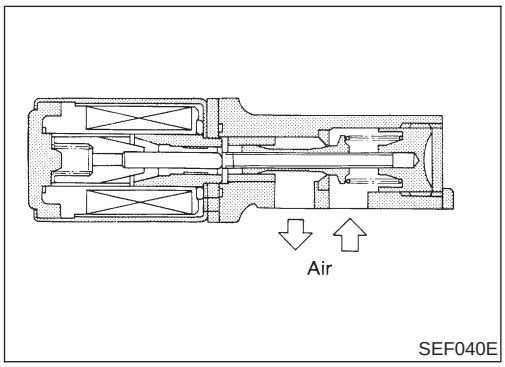

SEF040E

DESCRIPTION DES COMPOSANTS

NEEC1594S02

La soupape AAC est actionnée par les impulsions ON/OFF transmises par l'ECM. Plus l'impulsion ON est longue, plus la quantité de vapeur de carburant passant à travers la soupape est importante. Plus la quantité d'air qui passe à travers la soupape est grande et plus le régime du moteur est élevé.

Simpo PDF Merge and Split Unregistered Version - http://www.simpopdf.com

Valeur de référence de CONSULT-II en mode de contrôle de données

NEEC1595

ELEMENT DE CONTROLE	CONDITION		SPECIFICATION
S/IACV/AAC	● Moteur : une fois le moteur chaud ● Interrupteur de climatiseur : ARRET ● Levier de changement de vitesses : “N” ● A vide	Ralenti	env. 30
		2.000 tr/mn	—

Simpo PDF Merge and Split Unregistered Version - http://www.simpopdf.com

Bornes de l'ECM et valeurs de référence

=NEEC1596

Les données de spécification sont des valeurs de référence et sont mesurées entre chaque borne et la masse.

ATTENTION :
Ne pas utiliser de bornes de masse de l'ECM lors de la mesure de la tension d'entrée/de sortie. En agissant de la sorte, il est possible d'endommager le transistor de l'ECM. Utiliser une masse autre que les bornes de l'ECM, comme par exemple la prise de terre.

N° DE BORNE	COULEUR DE CABLE	ELEMENT	CONDITION	DONNEES (tension de courant continu)
101	G/Y	Soupape IACV-AAC	**[Moteur en marche]** ● **Pendant la montée en température** ● Régime de ralenti	10,5 - 11,5V 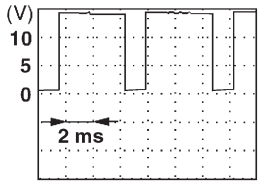 SEF015W
			[Moteur en marche] ● **Pendant la montée en température** ● Le régime-moteur est de 2 000 tr/mn.	1 - 13V 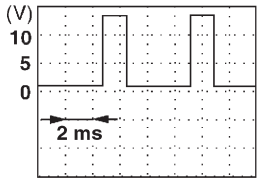 SEF016W

Logique de diagnostic de bord

NEEC1597

N° de DTC	Le défaut est détecté quand ...		Eléments de contrôle (causes possibles)
P0505 0505	A)	La soupape IACV-AAC ne fonctionne pas correctement.	● Faisceau ou connecteurs (le circuit de la soupape IACV-AAC est ouvert) ● Soupape IACV-AAC
	B)	La soupape IACV-AAC ne fonctionne pas correctement.	● Faisceau ou connecteurs (le circuit de la soupape IACV-AAC est en court-circuit.) ● Soupape IACV-AAC

Simpo PDF Merge and Split Unregistered Version - http://www.simpopdf.com

Procédure de confirmation de code de défaut (DTC)

=NEEC1598

REMARQUE :

- Si une ‘‘Procédure de confirmation de DTC’’ a précédé, toujours mettre le contact d’allumage sur la position OFF et attendre au moins 5 secondes avant de procéder à l’essai suivant.
- **Dans un premier temps, effectuer la ‘‘PROCEDURE DE DEFAUT A’’. Si le DTC parcours ne peut pas être confirmé, réaliser la ‘‘Procédure de défaut B’’.**

3

CONTROLE DE DONNEES	
CONTROLE	AUCUN DTC
TR/MN MOT	XXX tr/min

SEF058Y

PROCEDURE DE DEFAUT A

NEEC1598S01

CONDITIONS D’ESSAI :

Avant d’entamer la procédure qui suit, vérifier que la tension délivrée par la batterie est supérieure à 10,5V avec le contact d’allumage sur ON.

Avec CONSULT-II

1) Mettre le contact d’allumage sur ON.
2) Régler CONSULT-II en mode ‘‘CONTROLE DE DONNEES’’.
3) Démarrer le moteur et le faire tourner pendant au moins 2 secondes au régime de ralenti.
4) Si le DTC de 1er parcours est détecté, aller à ‘‘Procédure de diagnostic’’, page EC-3319.

Avec l’analyseur générique GST

Suivre la procédure ‘‘Avec CONSULT-II’’.

4

CONTROLE DE DONNEES	
CONTROLE	AUCUN DTC
TR/MN MOT	XXX tr/min
CAP TEMP MOT	XXX °C

SEF174Y

PROCEDURE DE DEFAUT B

NEEC1598S02

CONDITIONS D’ESSAI :

- **Avant d’entamer la procédure qui suit, s’assurer que la tension délivrée par la batterie est supérieure à 11V au ralenti.**
- **Toujours opérer à une température supérieure à —10°C.**

Avec CONSULT-II

1) Démarrer le moteur et l’amener à température normale de fonctionnement.
2) Mettre le contact d’allumage sur OFF et attendre au moins 5 secondes.
3) Mettre à nouveau le contact d’allumage sur ON et régler CONSULT-II en mode ‘‘CONTROLE DE DONNEES’’.
4) Démarrer le moteur et le laisser tourner au ralenti pendant au moins 6 minutes.
5) Si le DTC de 1er parcours est détecté, aller à ‘‘Procédure de diagnostic’’, page EC-3319.

Avec l’analyseur générique GST

Suivre la procédure ‘‘Avec CONSULT-II’’.

Simpo PDF Merge and Split Unregistered Version - http://www.simpopdf.com

Schéma de câblage

NEEC1599

EC-AAC/V-01

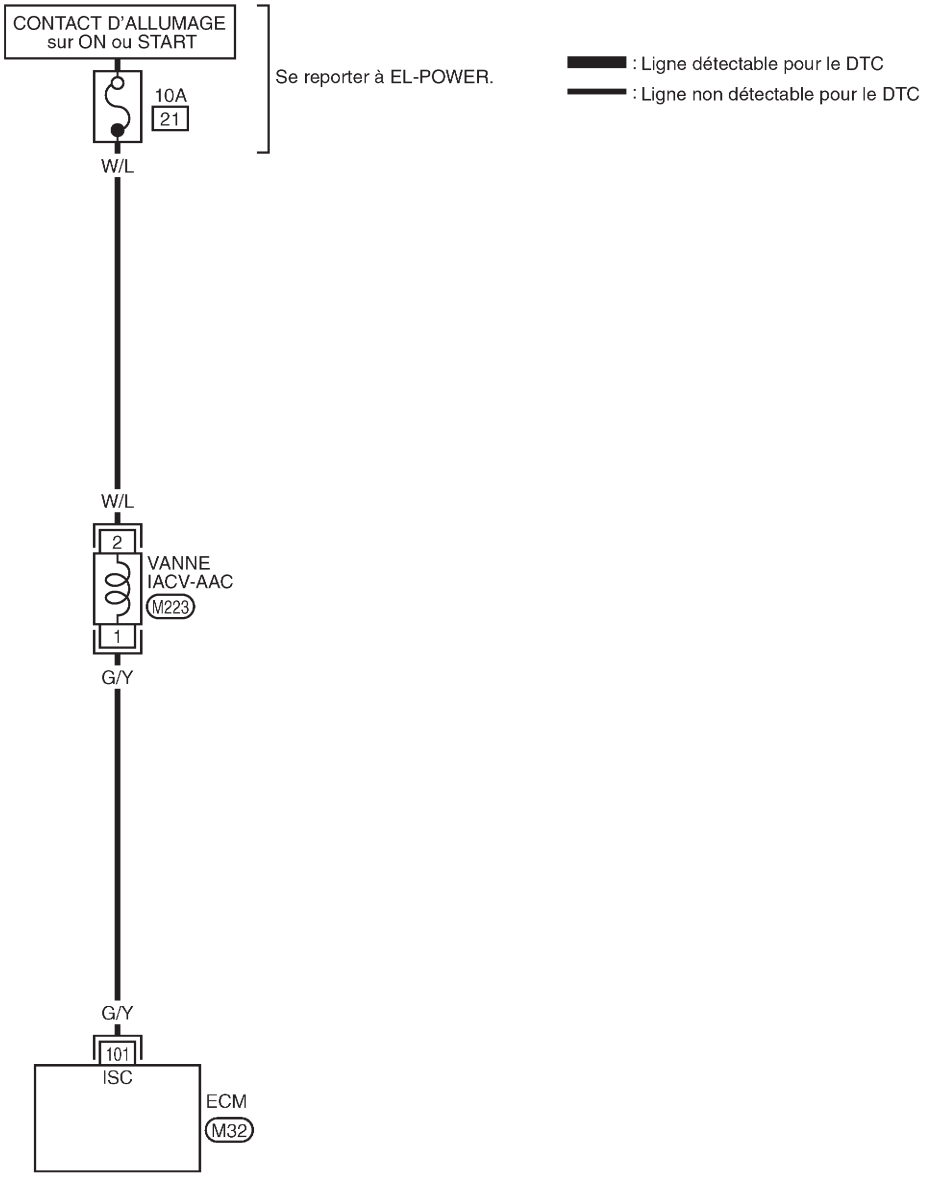

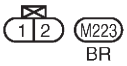

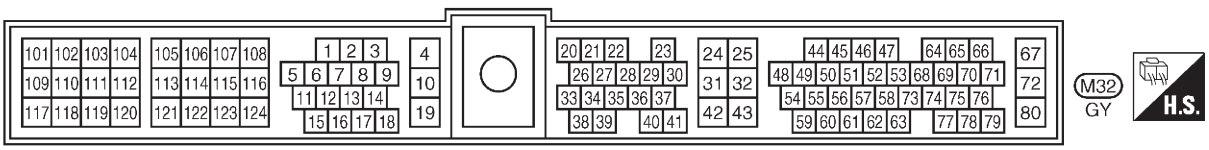

GEC252A

Simpo PDF Merge and Split Unregistered Version - http://www.simpopdf.com

Procédure de diagnostic

NEEC1600

1	CONTROLER L'ALIMENTATION ELECTRIQUE

1. Arrêter le moteur.
2. Débrancher le connecteur de faisceau de la soupape IACV-AAC.

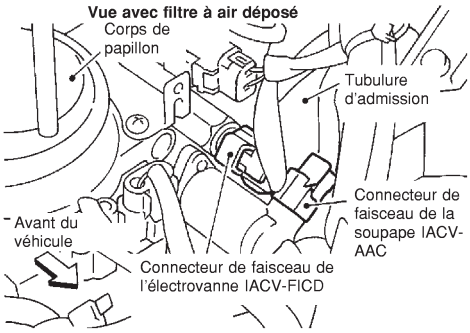

SEF342V

3. Mettre le contact d'allumage sur ON.
4. Vérifier la tension entre la borne 2 et la masse au CONSULT-II ou au testeur.

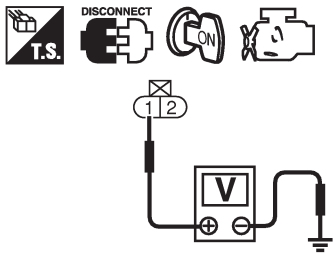

SEC271D

Tension : Tension de la batterie

BON ou MAUVAIS

Bon	▶	ALLER A 3.
Mauvais	▶	ALLER A 2.

2	DETECTER LA PIECE DEFECTUEUSE

Contrôler les points suivants.
- Fusible de 10 A
- Faisceau ouvert ou en court-circuit entre la soupape AAC et le fusible de 10 A

	▶	Réparer le faisceau ou les connecteurs.

3	CONTROLER LE CIRCUIT DU SIGNAL DE SORTIE

1. Mettre le contact d'allumage sur OFF.
2. Débrancher le connecteur de faisceau de l'ECM.
3. Vérifier la continuité du faisceau entre la borne 101 de l'ECM et la borne 1. Se reporter au schéma de câblage.
   Il doit y avoir continuité.
4. Vérifier également que le faisceau n'est pas en court-circuit à la masse ou à l'alimentation.

BON ou MAUVAIS

Bon	▶	ALLER A 4.
Mauvais	▶	Réparer les faisceaux ou les connecteurs en circuit ouvert ou en court-circuit à la masse ou à l'alimentation.

Simpo PDF Merge and Split Unregistered Version - http://www.simpopdf.com

4	CONTROLER LA SOUPAPE IACV-AAC

Débrancher le connecteur de faisceau de la soupape IACV-AAC.
- Vérifier la résistance de la soupape IACV-AAC

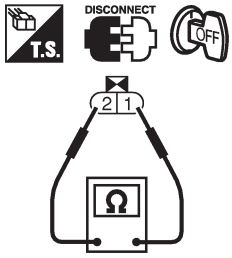

SEC284D

Résistance : Environ 10 Ω [à 25°C]
- Vérifier que le plongeur ne s'agrippe pas ou ne colle pas.
- Vérifier qu'il n'y a pas de ressort cassé.

BON ou MAUVAIS

Bon	▶	ALLER A 5.
Mauvais	▶	Remplacer la soupape IACV-AAC.

5	VERIFIER SI L'INCIDENT EST INTERMITTENT

Effectuer un ''DIAGNOSTIC DES DEFAUTS EN CAS D'INCIDENT INTERMITTENT'', voir page EC-3132.

	▶	**FIN DE L'INSPECTION**

Simpo PDF Merge and Split Unregistered Version - http://www.simpopdf.com

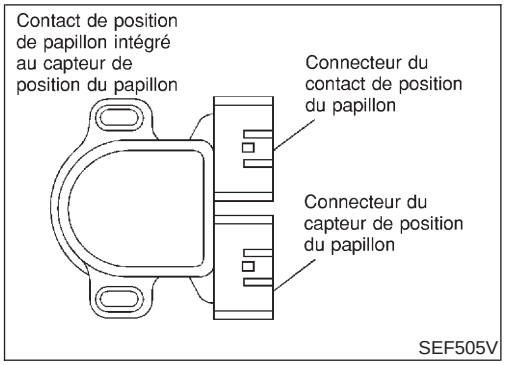

Description des composants

NEEC0287

Le boîtier de capteur de position de papillon comprend un contact de position de papillon fermé et un contact de position de papillon grand ouvert.
Lorsque la soupape de papillon est en position fermée, le contact de position de papillon fermé envoie un signal de tension à l'ECM. L'ECM n'exploite ce signal que pour ouvrir ou fermer la soupape de commande de purge de cartouche EVAP lorsque le capteur de position de papillon est défectueux.

Bornes de l'ECM et valeurs de référence

NEEC0288

Les données de spécification sont des valeurs de référence et sont mesurées entre chaque borne et la masse.

ATTENTION :
Ne pas utiliser de bornes de masse de l'ECM lors de la mesure de la tension d'entrée/de sortie. En agissant de la sorte, il est possible d'endommager le transistor de l'ECM. Utiliser une masse autre que les bornes de l'ECM, comme par exemple la prise de terre.

N° DE BORNE	COU-LEUR DE CABLE	ELEMENT	CONDITION	DONNEES (tension de courant continu)
28	LG/B	Contact de ralenti (position de ralenti)	**[Contact d'allumage sur ON]** ● **Pendant la montée en température** ● Pédale d'accélérateur relâchée	TENSION DE LA BATTE-RIE (11 V - 14 V)
			[Contact d'allumage sur ON] ● Pédale d'accélérateur enfoncée	Environ 0 V

Logique de diagnostic de bord

NEEC0289

N° de DTC	Le défaut est détecté quand ...	Eléments de contrôle (causes possibles)
P0510 0510	● Le contact de position de papillon fermé transmet un signal de tension de batterie à l'ECM avec la soupape de papillon ouverte.	● Faisceau ou connecteurs (le circuit du contact de ralenti est ouvert ou en court-circuit) ● Contact de position de papillon fermé ● Capteur d'ouverture de papillon

Simpo PDF Merge and Split Unregistered Version - http://www.simpopdf.com

4

CONTROLE DE DONNEES	
CONTROLE	AUCUN DTC
TR/MN MOT	XXX tr/min
CAP TEMP MOT	XXX °C
CON RALENTI	MAR

SEF197Y

CONTROLE DE DONNEES	
CONTROLE	AUCUN DTC
CAP TEMP MOT	XXX °C
CAP VIT VEHIC	XXX km/h
CAP PAPILLON	XXX V

SEF198Y

Procédure de confirmation de code de défaut (DTC)

=NEEC0290

ATTENTION :
Toujours adapter sa vitesse aux exigences de sécurité.

REMARQUE :
Si une ‘‘Procédure de confirmation de DTC’’ a précédé, toujours mettre le contact d’allumage sur la position OFF et attendre au moins 5 secondes avant de procéder à l’essai suivant.

Avec CONSULT-II

1) Démarrer le moteur et l’amener à température normale de fonctionnement.
2) Sélectionner ‘‘CON RALENTI’’ dans le mode ‘‘CONTROLE DE DONNEES’’ de CONSULT-II et vérifier la valeur dans les conditions suivantes.

Condition	Indication du signal
Soupape de papillon : position de ralenti	MAR
Soupape de papillon : légèrement ouverte	ARR

Si le résultat n’est pas satisfaisant, aller à ‘‘Procédure de diagnostic’’, EC-3325.
Si le résultat est satisfaisant, passer à l’étape suivante.

3) Régler CONSULT-II en mode ‘‘CONTROLE DE DONNEES’’.
4) Rouler pendant au moins 5 secondes de suite dans les conditions suivantes.

CAP PAPILLON	Plus de 2,5 V
CAP VIT VEHIC	Plus de 4 km/h
Levier de vitesses	Rapport adapté
Conditions de conduite	Rouler en montée (ce qui augmente la charge moteur) aide à maintenir les conditions requises pour cet essai

5) Si le DTC de 1er parcours est détecté, aller à ‘‘Procédure de diagnostic’’, page EC-3325.

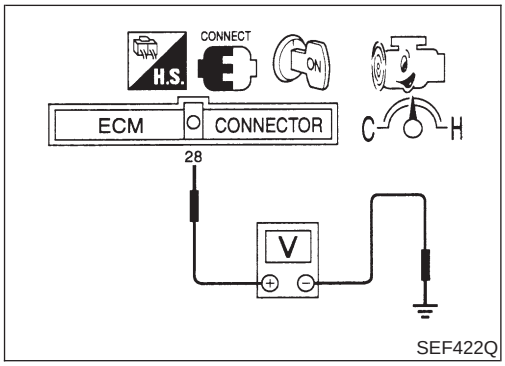

SEF422Q

Vérification du fonctionnement général

NEEC0291

Utiliser cette procédure pour vérifier le fonctionnement général du circuit de contact de position de papillon fermé. Au cours de ce contrôle, il est possible qu’un DTC de 1er parcours ne soit pas confirmé.

Sans CONSULT-II

1) Démarrer le moteur et l’amener à température normale de fonctionnement.
2) Contrôler la tension entre la borne 28 de l’ECM (signal du contact de position de papillon fermé) et la masse dans les conditions suivantes.

Simpo PDF Merge and Split Unregistered Version - http://www.simpopdf.com

Condition	Tension
Au ralenti	Tension de la batterie
A 2000 tr/mn	Environ 0 - 1 V

3) Si les résultats ne sont pas conformes, effectuer une ‘‘Procédure de diagnostic’’, voir page EC-3325.

Simpo PDF Merge and Split Unregistered Version - http://www.simpopdf.com

Schéma de câblage

NEEC0292

EC-TP/SW-01

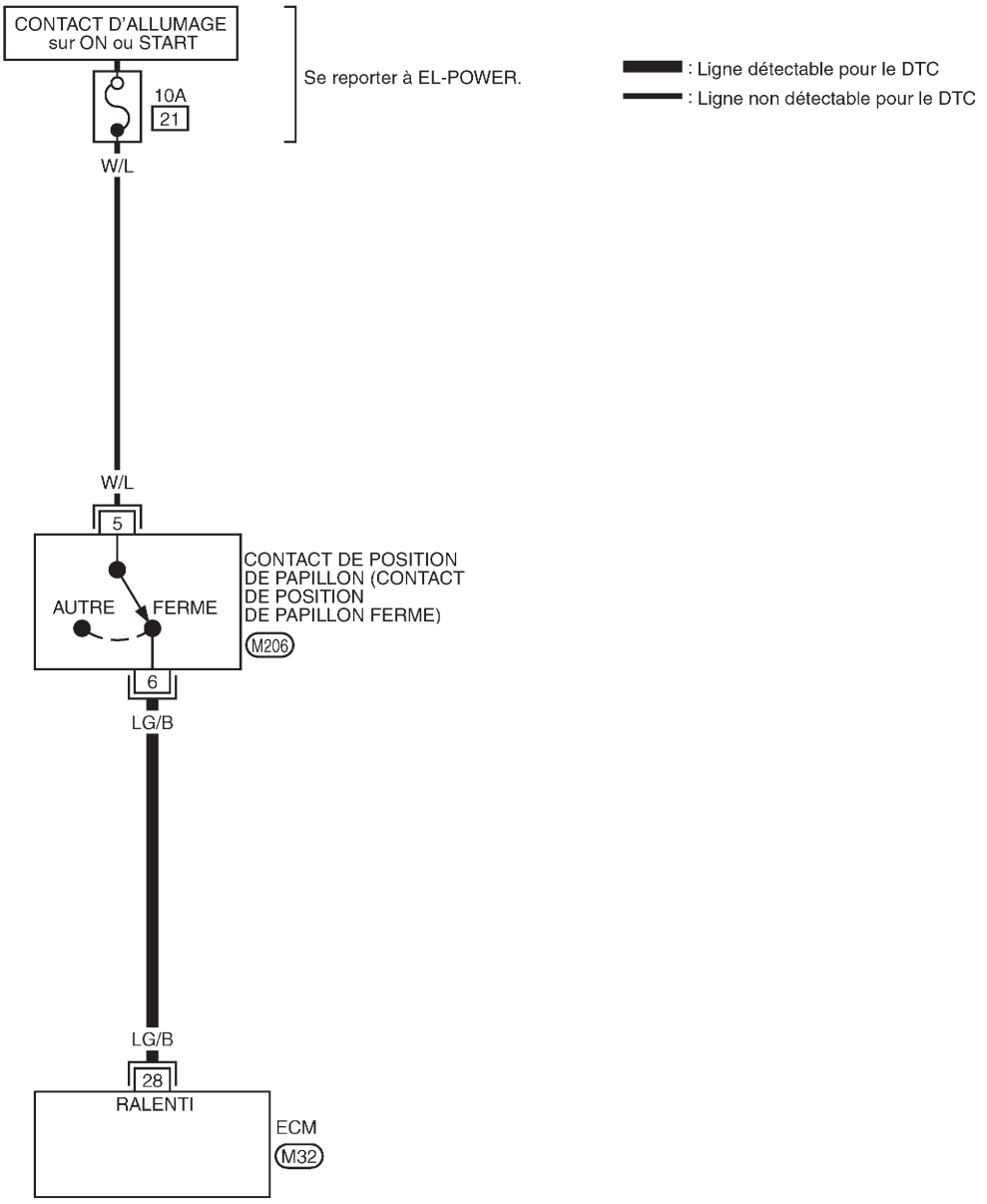



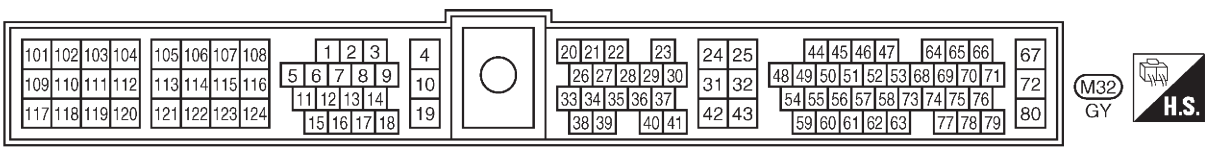

GEC244A

Simpo PDF Merge and Split Unregistered Version - http://www.simpopdf.com

Procédure de diagnostic

NEEC0293

1	CONTROLER L'ALIMENTATION ELECTRIQUE

1. Mettre le contact d'allumage sur OFF.
2. Débrancher le connecteur de faisceau du contact de position de papillon.

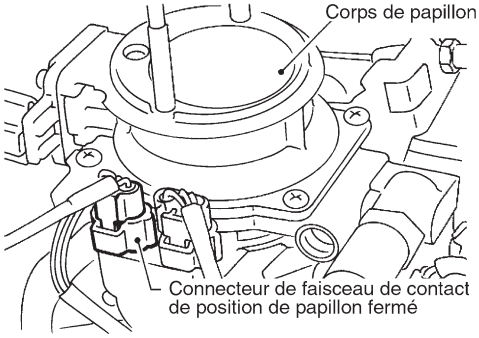

SEF158S

3. Mettre le contact d'allumage sur ON.
4. Contrôler la tension entre la borne 5 et la masse du moteur à l'aide de CONSULT-II ou du testeur.

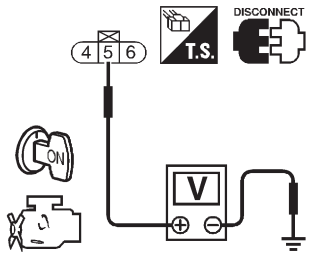

SEF715U

Tension : Tension de la batterie

BON ou MAUVAIS

Bon	▶	ALLER A 3.
Mauvais	▶	ALLER A 2.

2	DETECTER LA PIECE DEFECTUEUSE

Contrôler les points suivants.
- Fusible de 10 A
- Faisceau ouvert ou en court-circuit entre le contact de position de papillon et le fusible de 10 A

	▶	Réparer le faisceau ou les connecteurs.

Simpo PDF Merge and Split Unregistered Version - http://www.simpopdf.com

3	CONTROLER LE CIRCUIT DE SIGNAL D'ENTREE

1. Mettre le contact d'allumage sur OFF.
2. Débrancher le connecteur de faisceau de l'ECM.
3. Vérifier la continuité du faisceau entre la borne 28 de l'ECM et la borne 6.

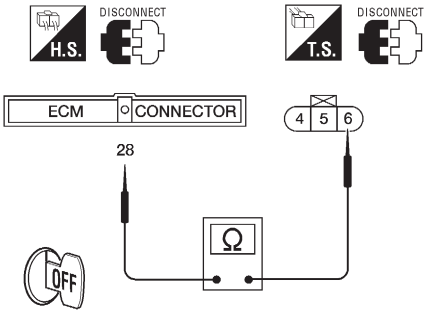

AEC571A

Il doit y avoir continuité.

4. Vérifier également que le faisceau n'est pas en court-circuit à la masse ou à l'alimentation.

BON ou MAUVAIS

Bon	▶	ALLER A 5.
Mauvais	▶	ALLER A 4.

4	DETECTER LA PIECE DEFECTUEUSE

Vérifier que le faisceau entre l'ECM et le contact de position du papillon n'est pas ouvert ou en court-circuit.

▶	Réparer les faisceaux ou les connecteurs en circuit ouvert ou en court-circuit à la masse ou à l'alimentation.

5	REGLER LE CONTACT DE POSITION DE PAPILLON EN POSITION DE RALENTI

1. Vérifier les points suivants : Se reporter à la procédure ''Inspection de base'', EC-3093.

Eléments	Spécifications
Calage de l'allumage	15° ± 2° AV PMH
Ralenti de base	650 ± 50 tr/mn (en position 'N')
Réglage de la position fermée du contact de ralenti	Epaisseur de la cale d'épaisseur et condition du contact 0,1 mm : MARCHE 0,3 mm : ETEINT
Régime de ralenti cible	700 ± 50 tr/mn (en position 'N')

MTBL1315

▶	ALLER A 6.

Simpo PDF Merge and Split Unregistered Version - http://www.simpopdf.com

6	CONTROLER LE CONTACT DE POSITION DE PAPILLON FERME

Avec CONSULT-II

1. Démarrer le moteur et l'amener à température normale de fonctionnement.
2. Eteindre le moteur et mettre le contact d'allumage sur ON.
3. Régler CONSULT-II en mode ''CONTROLE DE DONNEES''.
4. Vérifier l'état du paramètre ''CON RALENTI'' dans les conditions suivantes.

CONTROLE DE DONNEES	
CONTROLE	PAS DE DTC
TR/MN MO T	XXX tr/mn
CAP TEMP MOT	XXX °C
CON RALENTI	MAR

Conditions du papillon	POS PAP FRM
Complètement fermé	MAR
Partiellement ouvert ou complètement ouvert	ARR

SEF721Z

REMARQUE :
Le relevé doit être effectué avec le contact de position de papillon fermé posé sur le véhicule.
Si le résultat n'est pas satisfaisant, régler le contact de position de papillon fermé. Se reporter à la procédure ''Inspection de base', EC-3093.

5. S'il est impossible de régler le contact de position de papillon fermé dans ''Inspection de base'', remplacer le contact de position de papillon fermé.

Sans CONSULT-II

1. Démarrer le moteur et l'amener à température normale de fonctionnement.
2. Mettre le contact d'allumage sur OFF.
3. Débrancher le connecteur de faisceau du contact de position de papillon.
4. Vérifier la continuité entre les bornes 6 et 5 dans les conditions suivantes.

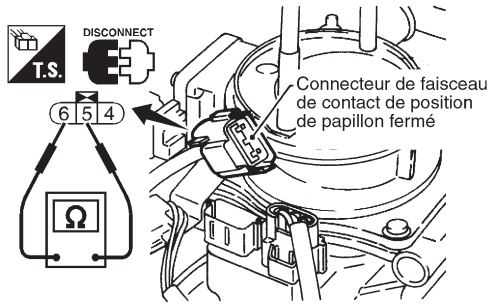

SEF159S

Conditions de papillon	Continuité
Complètement fermé	Oui
Partiellement ouvert ou complètement ouvert	Non

MTBL0299

REMARQUE :
Le contrôle de continuité doit être effectué avec le contact de position de papillon fermé posé sur le véhicule.
Si le résultat n'est pas satisfaisant, régler le contact de position de papillon fermé. Se reporter à la procédure ''Inspection de base'', EC-3093.

5. S'il est impossible de régler le contact de position de papillon fermé dans ''Inspection de base'', remplacer le contact de position de papillon fermé.

BON ou MAUVAIS

Bon	▶	ALLER A 7.
Mauvais	▶	Remplacer le contact de position de papillon.

Simpo PDF Merge and Split Unregistered Version - http://www.simpopdf.com

7	CONTROLER LE CAPTEUR DE POSITION DE PAPILLON

Avec CONSULT-II

1. Démarrer le moteur et l'amener à température normale de fonctionnement.
2. Eteindre le moteur et mettre le contact d'allumage sur ON.
3. Régler CONSULT-II en mode ''CONTROLE DE DONNEES''.
4. Vérifier la tension du 'CAP PAPILLON'dans les conditions suivantes.

CONTROLE DE DONNEES	
CONTROLE	AUCUN DTC
CAP TEMP MOT	XXX °C
CAP VIT VEHIC	XXX km/h
CAP PAPILLON	XXX V

SEF198Y

REMARQUE :
Les relevés doivent être effectués avec le capteur de position de papillon reposé sur le véhicule.
Si le résultat n'est pas satisfaisant, régler le contact de position de papillon fermé. Se reporter à la procédure ''Inspection de base'', EC-3093.

5. S'il est impossible de régler le contact de position de papillon fermé en suivant la procédure d'inspection de base, remplacer le capteur de position de papillon.

Sans CONSULT-II

1. Démarrer le moteur et l'amener à température normale de fonctionnement.
2. Eteindre le moteur et mettre le contact d'allumage sur ON.
3. Contrôler la tension entre la borne 23 de l'ECM (signal du capteur de position de papillon) et la masse dans les conditions suivantes.

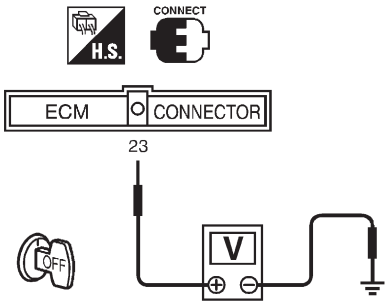

SEF767W

Conditions du papillon	Tension V
Complètement fermé	0,15 - 0,85 (a)
Partiellement ouvert	Entre (a) et (b)
Complètement ouvert	3,5 - 4,7 (b)

MTBL0329

REMARQUE :
Les relevés doivent être effectués avec le capteur de position de papillon reposé sur le véhicule.
Si le résultat n'est pas satisfaisant, régler le contact de position de papillon fermé. Se reporter à la procédure ''Inspection de base'', EC-3093.

4. S'il est impossible de régler le contact de position de papillon fermé en suivant la procédure d'inspection de base, remplacer le capteur de position de papillon.

BON ou MAUVAIS

Bon	▶	ALLER A 8.
Mauvais	▶	Remplacer le capteur de position de papillon.

Simpo PDF Merge and Split Unregistered Version - http://www.simpopdf.com

8	**VERIFIER SI L'INCIDENT EST INTERMITTENT**
Effectuer un ''DIAGNOSTIC DES DEFAUTS EN CAS INCIDENT INTERMITTENT'', voir page EC-3132.	
▶	**FIN DE L'INSPECTION**

Simpo PDF Merge and Split Unregistered Version - http://www.simpopdf.com

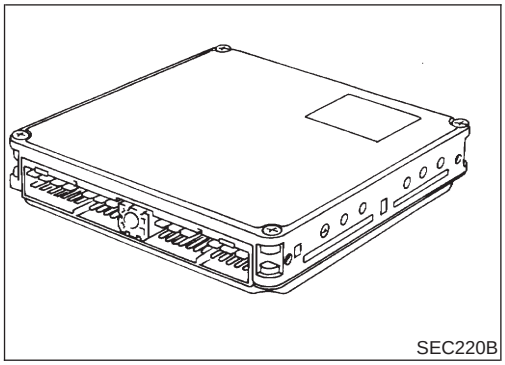
SEC220B

Description des composants

NEEC0295

L'ECM est constitué d'un micro-ordinateur et de connecteurs pour l'entrée et la sortie des signaux et le raccordement de l'alimentation. Il contrôle le fonctionnement du moteur.

Logique de diagnostic de bord

NEEC0296

N° de DTC	Le défaut est détecté quand ...	Eléments de contrôle (causes possibles)
P0605 0605	● La fonction de calcul de l'ECM est défectueuse.	● ECM

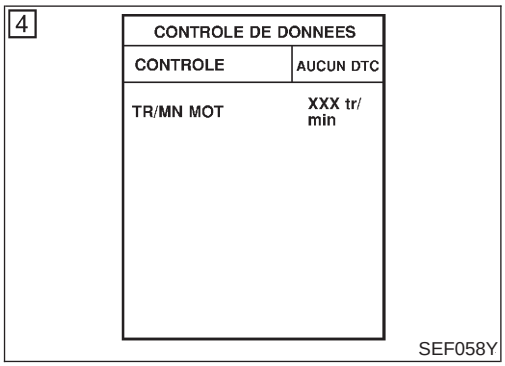

SEF058Y

Procédure de confirmation de code de défaut (DTC)

NEEC0297

REMARQUE :

Si une ''Procédure de confirmation de DTC'' a précédé, toujours mettre le contact d'allumage sur la position OFF et attendre au moins 5 secondes avant de procéder à l'essai suivant.

Avec CONSULT-II

1) Mettre le contact d'allumage sur ON.
2) Régler CONSULT-II en mode ''CONTROLE DE DONNEES''.
3) Démarrer le moteur.
4) Laisser tourner le moteur au ralenti pendant au moins 30 secondes.
5) Si le DTC de 1er parcours est détecté, aller à ''Procédure de diagnostic'', page EC-3331.

Avec l'analyseur générique GST

Suivre la procédure ''Avec CONSULT-II''.

Simpo PDF Merge and Split Unregistered Version - http://www.simpopdf.com

Procédure de diagnostic

NEEC0298

1	DEBUT DE L'INSPECTION
Avec CONSULT-II 1. Mettre le contact d'allumage sur ON. 2. Sélectionner le mode 'RESULT AUTO-DIAG'' sur CONSULT-II. 3. Appuyer sur ''EFFAC''. 4. Effectuer une ''Procédure de confirmation de DTC''. Voir page précédente. 5. Le DTC de 1er parcours P0605 est-il encore affiché ?	
Avec l'analyseur générique GST 1. Mettre le contact d'allumage sur ON. 2. Régler l'analyseur générique GST en MODE 4. 3. Appuyer sur ''EFFAC''. 4. Effectuer une ''Procédure de confirmation de DTC''. Voir page précédente. 5. Le DTC de 1er parcours P0605 est-il encore affiché ?	
Oui ou Non	
Oui ▶	ALLER A 2.
Non ▶	**FIN DE L'INSPECTION**

2	REMPLACER L'ECM
1. Remplacer l'ECM. 2. Initialiser le système NATS et enregistrer tous les codes de clés de contact NATS. Se reporter à EC-3247, ''NVIS (système d'immobilisation de véhicule Nissan — NATS''.	
▶	**FIN DE L'INSPECTION**

Simpo PDF Merge and Split Unregistered Version - http://www.simpopdf.com

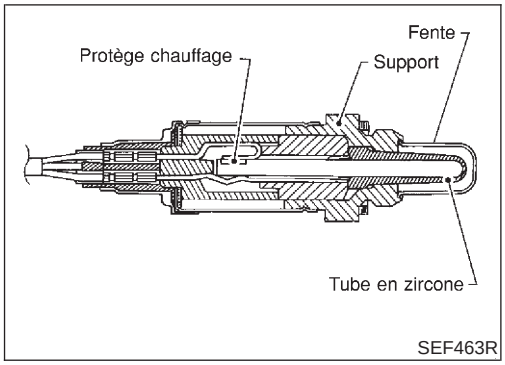

SEF463R

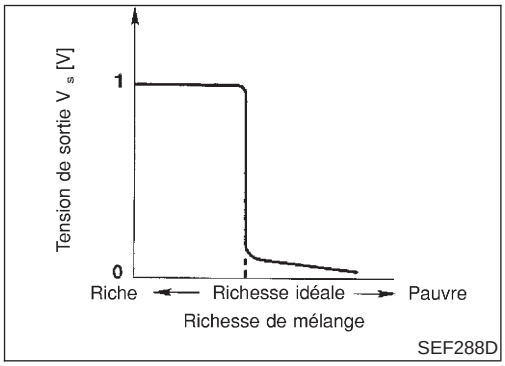

SEF288D

Description des composants

NEEC0103

La sonde à oxygène chauffé 1 est placée dans le collecteur d'échappement. Elle détecte la quantité d'oxygène contenue dans les gaz d'échappement en comparaison avec l'air extérieur. La sonde à oxygène chauffé 1 dispose d'un tube à extrémité fermée en zirconium de céramique. La zircone produit une tension qui va d'environ 1 V dans des conditions de mélange plus riche à 0 V dans des conditions de mélange plus pauvre. Le signal de la sonde à oxygène chauffé 1 est envoyé à l'ECM. L'ECM règle la durée de l'impulsion d'injection pour obtenir le mélange idéal air-carburant. Le mélange idéal air-carburant se produit vers le changement radical de 1 V à 0 V.

Valeur de référence de CONSULT-II en mode de contrôle de données

NEEC0104

Les données de spécification sont des valeurs de référence.

ELEMENT DE CONTROLE	CONDITION		SPECIFICATION
S/O2 CH1 (R1)	● Moteur : une fois le moteur chaud	Maintenir le régime-moteur à 2 000 tr/mn.	0 - 0,3 V ←→ Env. 0,6 - 1,0 V
MTR S/O2 CH1 (R1)			PAUVRE ←→ RICHE Change plus de 5 fois pendant 10 secondes

Bornes de l'ECM et valeurs de référence

NEEC0105

Les données de spécification sont des valeurs de référence et sont mesurées entre chaque borne et la masse.

ATTENTION :
Ne pas utiliser de bornes de masse de l'ECM lors de la mesure de la tension d'entrée/de sortie. En agissant de la sorte, il est possible d'endommager le transistor de l'ECM. Utiliser une masse autre que les bornes de l'ECM, comme par exemple la prise de terre.

N° DE BORNE	COULEUR DE CABLE	ELEMENT	CONDITION	DONNEES (tension de courant continu)
50	W	Sonde à oxygène chauffé 1	**[Moteur en marche]** ● Après montée en température normale de fonctionnement et au régime moteur de 2.000 tr/mn.	0 - Environ 1,0V 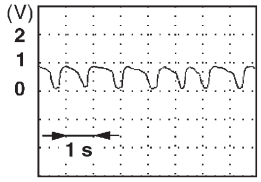 SEF008W

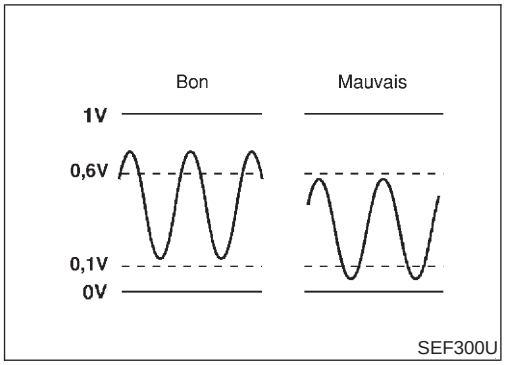

Logique de diagnostic de bord

NEEC0106

Pour estimer le défaut, le signal de sortie de la sonde à oxygène chauffé 1 est contrôlé pour déterminer si la sortie ‘‘riche’’ est suffisamment élevée et si la sortie ‘‘pauvre’’ est suffisamment basse. Le défaut est détecté lorsque ces deux sorties dérivent vers l’appauvrissement.

N° de DTC	Le défaut est détecté quand ...	Eléments de contrôle (causes possibles)
P1143 1143	● Les tensions maxi. et mini. reç;ues de la sonde ne sont pas conformes aux valeurs spécifiées.	● Sonde à oxygène chauffé 1 ● Commande de la sonde à oxygène chauffé 1 chauffage ● Pression de carburant ● Injecteurs ● Fuites d’air d’admission

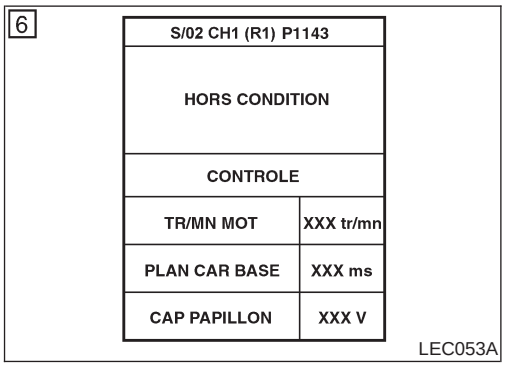

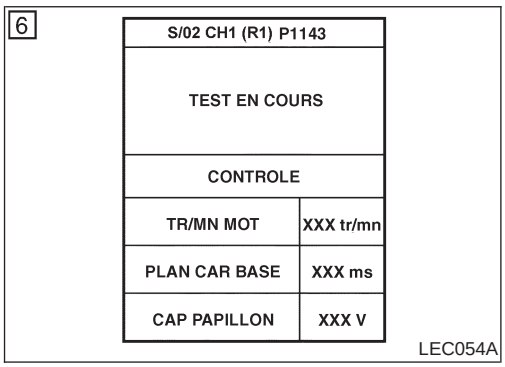

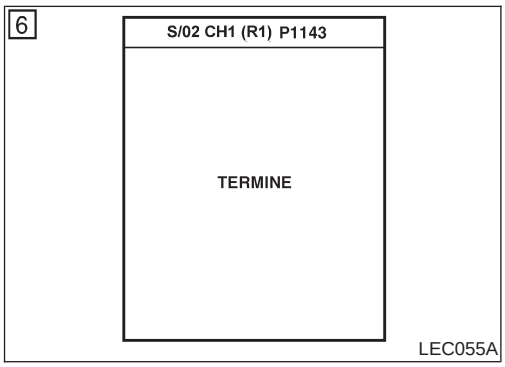

Procédure de confirmation de code de défaut (DTC)

NEEC0107

ATTENTION :

Toujours adapter sa vitesse aux exigences de sécurité.

REMARQUE :

Si une ‘‘Procédure de confirmation de DTC’’ a précédé, toujours mettre le contact d’allumage sur la position OFF et attendre au moins 5 secondes avant de procéder à l’essai suivant.

CONDITIONS D’ESSAI :

- **Toujours opérer à une température supérieure à -10°C.**
- **Avant d’entamer la procédure suivante, vérifier que la tension délivrée par la batterie est supérieure à 11V au ralenti.**

Avec CONSULT-II

1) Démarrer le moteur et l’amener à température normale de fonctionnement.
2) Arrêter le moteur et attendre au moins 5 secondes.
3) Mettre le contact d’allumage sur ON et sélectionner ‘‘P1143 S/O2 CH1 (R1)’’ de ‘‘S/O2 CH1’’ dans le mode ‘‘SUPPORT TRAVAIL DTC’’ de CONSULT-II.
4) Appuyer sur ‘‘DEPART’’.
5) Démarrer le moteur et le laisser tourner au ralenti pendant au moins 3,0 minutes.

REMARQUE :

Ne jamais dépasser le régime de 3 600 tr/mn après cette étape. Si le régime-moteur dépasse cette limite, recommencer à l’étape 5.

6) Lorsque les conditions suivantes sont remplies, l’écran de CONSULT-II indique ‘‘TEST EN COURS’’. Maintenir les conditions indiquées jusqu’à ce que le message ‘‘TEST EN COURS’’ laisse place au message ‘‘TERMINE’’ (ceci prend environ 50 secondes.)

Simpo PDF Merge and Split Unregistered Version - http://www.simpopdf.com

TR/MN MOT	1200 - 3150 tr/mn
Vitesse du véhicule	Moins de 100 km/h
PLAN CAR BASE	3,5 - 15 ms
Levier de vitesses	Rapport adapté

Si ‘‘TEST EN COURS’’ ne s’affiche pas après 5 minutes, réessayer à partir de l’étape 2.

7) S’assurer que BON s’affiche après avoir appuyé sur ‘‘RESULT AUTO-DIAG’’. Si MAUVAIS s’affiche, se reporter à la ‘‘Procédure de diagnostic’’, EC-3335.

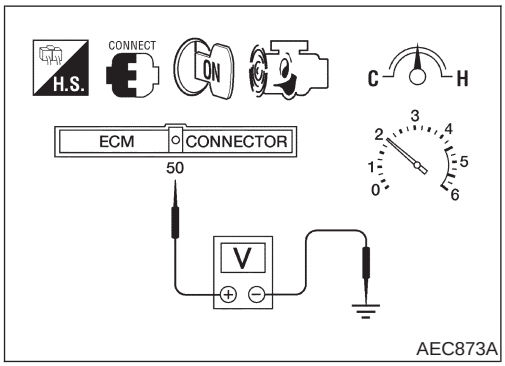

Vérification du fonctionnement général

NEEC0108

Utiliser cette procédure pour vérifier le fonctionnement général du circuit de la sonde à oxygène chauffé 1. Au cours de ce contrôle, il est possible qu’un DTC de 1er parcours ne soit pas confirmé.

Sans CONSULT-II

1) Démarrer le moteur et l’amener à température normale de fonctionnement.
2) Placer des sondes de voltmètre entre la borne 50 de l’ECM (signal de sonde à oxygène chauffé 1) et la masse du moteur.
3) Procéder au contrôle suivant en maintenant constant le régime moteur à 2 000 tr/mn à vide.

- La tension maximale dépasse 0,6 V au moins une fois.
- La tension minimale dépasse 0,1 V au moins une fois.

4) Si les résultats ne sont pas conformes, effectuer une ‘‘Procédure de diagnostic’’, voir page EC-3335.

Simpo PDF Merge and Split Unregistered Version - http://www.simpopdf.com

Procédure de diagnostic

NEEC0109

1	RESSERRER LA SONDE A OXYGENE CHAUFFE 1

1. Mettre le contact d'allumage sur OFF.
2. Desserrer et resserrer la sonde à oxygène chauffé 1.

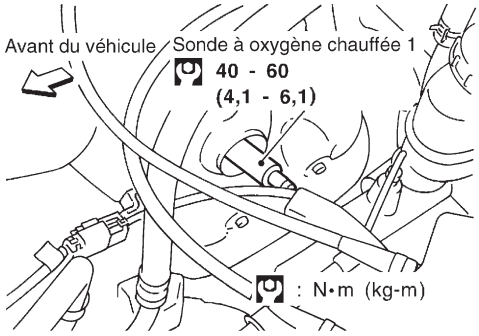

SEF332VC

Couple de serrage :
40 - 60 N·m (4,1 - 6,1 kg-m)

▶	ALLER A 2.

2	EFFACER LES DONNEES D'AUTO-INSTRUCTION.

Avec CONSULT-II

1. Démarrer le moteur et l'amener à température normale de fonctionnement.
2. Sélectionner ''COM AUTO INSTRUCT'' dans le mode ''SUPPORT TRAVAIL'' de CONSULT-II.
3. Effacer le coefficient de commande d'auto-instruction en appuyant sur 'EFFAC''.

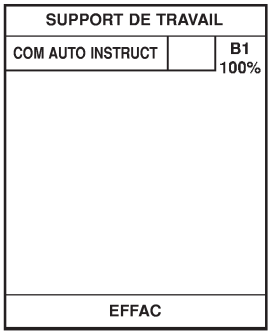

SEF215Z

4. Faire tourner le moteur pendant au moins 10 minutes au ralenti.
   Le DTC de 1er parcours P0171 est-il détecté ? Est-il difficile de démarrer le moteur ?

Sans CONSULT-II

1. Démarrer le moteur et l'amener à température normale de fonctionnement.
2. Mettre le contact d'allumage sur OFF.
3. Débrancher le connecteur de faisceau du débitmètre de masse d'air, redémarrer et faire tourner le moteur pendant au moins 3 secondes au ralenti.

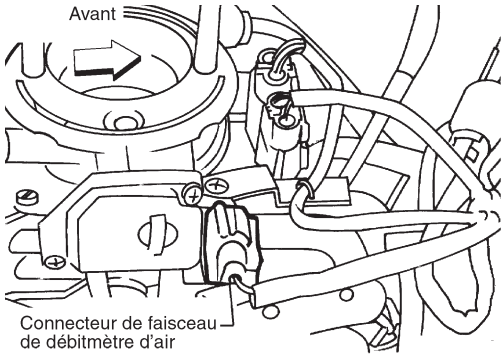

AEC131A

4. Eteindre le moteur et rebrancher le connecteur de faisceau du débitmètre de masse d'air.
5. Vérifier que le DTC de 1er parcours P0102 est bien affiché.
6. Effacer le DTC de 1er parcours. Se reporter à 'COMMENT EFFACER LES CODES DE DIAGNOSTIC ANTIPOLLUTION'', EC-3065.
7. Vérifier que le DTC P0000 est bien affiché.
8. Faire tourner le moteur pendant au moins 10 minutes au ralenti.
   Le DTC de 1er parcours P0171 est-il détecté ? Est-il difficile de démarrer le moteur ?

Oui ou Non

Oui	▶	Réaliser le diagnostic des défauts pour DTC P0171. Se reporter à EC-3253.
Non	▶	ALLER A 3.

Simpo PDF Merge and Split Unregistered Version - http://www.simpopdf.com

3	CONTROLER LE CHAUFFAGE DE LA SONDE A OXYGENE CHAUFFE 1	
Vérifier la résistance entre les bornes 3 et 1. Se reporter au schéma de câblage. **Résistance : 2,3 - 4,3 Ω à 25°C** Vérifier la continuité entre les bornes 2 et 1, 3 et 2. Se reporter au schéma de câblage. **Il ne doit pas y avoir continuité.** **ATTENTION :** **Jeter toute sonde à oxygène chauffé tombée d'une hauteur supérieure à 0,5 m sur une surface dure telle qu'un plancher en béton, et la remplacer par une sonde neuve.**		
BON ou MAUVAIS		
Bon (avec CONSULT-II)	▶	ALLER A 4.
Bon (sans CONSULT-II)	▶	ALLER A 5.
Mauvais	▶	Remplacer la sonde à oxygène chauffé 1.

Simpo PDF Merge and Split Unregistered Version - http://www.simpopdf.com

4 CONTROLER LA SONDE A OXYGENE CHAUFFE 1

Avec CONSULT-II

1. Brancher à nouveau tous les connecteurs de faisceau débranchés.
2. Démarrer le moteur et l'amener à température normale de fonctionnement.
3. Sélectionner ''DECLEN MANU'' en mode ''CONTROLE DE DONNEES'', et régler le point de déclenchement à 100.
4. Sélectionner ''S/O2 CH1 (R1)'' et ''MTR S/O2 CH1 (R1)'' dans la Sélection d'élément.
5. Maintenir le régime-moteur à 2000 tr/mn à vide au cours des étapes suivantes.
6. Appuyer sur ''DEPART'' sur l'écran de CONSULT-II.

CONTROLE DE DONNEES	
CONTROLE	AUCUN DTC
TR/MN MOT	XXX tr/min
DEBITMETRE-R1	XXX V
CAP TEMP MOT	XXX °C
S/O2 CH1 (R1)	XXX V
MTR S/O2 CH1 (R1)	PAUVRE

SEF646Y

7. Contrôler les points suivants.

- ''MTR S/O2 (R1)'' en mode de ''CONTROLE DES DONNEES'' passe de ''RICHE'' à ''PAUVRE'' à ''RICHE'' 5 fois en 10 secondes.
  5 fois (cycles) sont comptées comme indiqué ci-dessous.

5

cycle	1	2	3	4	5
MTR S/O2 CH1 (R1)	R-L-R-L-R-L-R-L-R-L				

R associé à MTR S/O2 CH1 (R1) signifie RICHE
L associé à MTR S/O2 CH1 (R1)/(R2) signifie PAUVRE

SEF217YA

- La tension de ''S/O2 CH1 (R1)'' est supérieure à 0,6V au moins une fois.
- La tension de ''S/O2 CH1 (R1)'' est inférieure à 0,3V au moins une fois.
- La tension de ''S/O2 CH1(R1)'' ne dépasse jamais 1,0V.

Déclen-chement	Régime Moteur	S/02 CH1 (R1)
	tr/mn	V
XXX	XXX	XXX
XXX	XXX	XXX
XXX	XXX	XXX
XXX	XXX	XXX
XXX	XXX	XXX
XXX	XXX	XXX
XXX	XXX	XXX
XXX	XXX	XXX
XXX	XXX	XXX
XXX	XXX	XXX
XXX	XXX	XXX
XXX	XXX	XXX

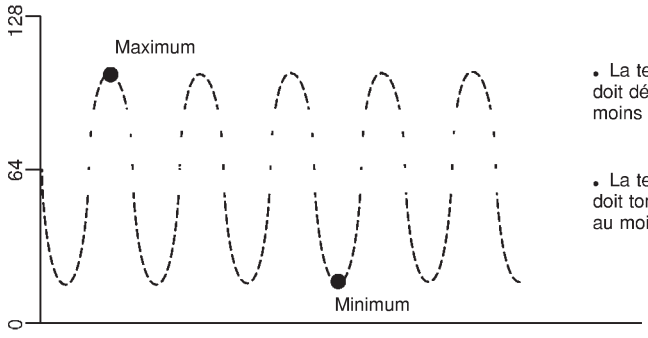

- La tension maximale doit dépasser 0,6V au moins une fois.
- La tension minimale doit tomber sous 0,30V au moins une fois.

SEF648Y

ATTENTION :

- **Jeter toute sonde à oxygène chauffé tombée d'une hauteur supérieure à 0,5 m sur une surface dure telle qu'un plancher en béton, et la remplacer par une sonde neuve.**
- **Avant de reposer une nouvelle sonde à oxygène, nettoyer le filetage du système d'échappement à l'aide de l'outil de nettoyage pour filetage de sonde à oxygène J-43897-18 ou J-43897-12 et un lubrifiant antigrippant agréé.**

BON ou MAUVAIS

Bon	▶	ALLER A 6.
Mauvais	▶	Remplacer la sonde à oxygène chauffé 1.

Simpo PDF Merge and Split Unregistered Version - http://www.simpopdf.com

5	CONTROLER LA SONDE A OXYGENE CHAUFFE 1

Sans CONSULT-II

1. Brancher à nouveau tous les connecteurs de faisceau débranchés.
2. Démarrer le moteur et l'amener à température normale de fonctionnement.
3. Placer des sondes de voltmètre entre la borne 50 de l'ECM (signal de sonde à oxygène chauffé 1) et la masse du moteur.

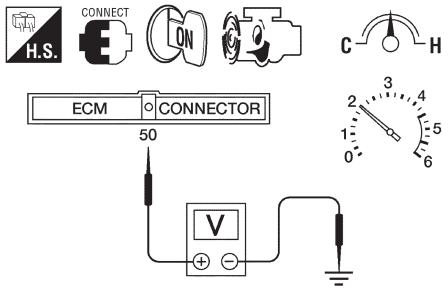

AEC873A

4. Procéder au contrôle suivant en maintenant constant le régime moteur à 2 000 tr/mn à vide.

- La tension varie entre 0 - 0,3 V et 0,6 - 1,0 V plus de cinq fois en 10 secondes.
  1 occurrence : 0 - 0,3 V → 0,6 - 1,0 V → 0 - 0,3 V
  2 occurrences : 0 - 0,3 V → 0,6 - 1,0 V → 0 - 0,3 V → 0,6 - 1,0 V → 0 - 0,3 V
- La tension maximale dépasse 0,6 V au moins une fois.
- La tension minimale tombe sous 0,3 V au moins une fois.
- La tension ne dépasse jamais 1,0 V.

ATTENTION :

- **Jeter toute sonde à oxygène chauffé tombée d'une hauteur supérieure à 0,5 m sur une surface dure telle qu'un plancher en béton, et la remplacer par une sonde neuve.**
- **Avant de reposer une nouvelle sonde à oxygène, nettoyer le filetage du système d'échappement à l'aide de l'outil de nettoyage pour filetage de sonde à oxygène J-43897-18 ou J-43897-12 et un lubrifiant antigrippant agréé.**

BON ou MAUVAIS

Bon	▶	ALLER A 6.
Mauvais	▶	Remplacer la sonde à oxygène chauffé 1.

6	VERIFIER SI L'INCIDENT EST INTERMITTENT
Effectuer un ''DIAGNOSTIC DES DEFAUTS EN CAS INCIDENT INTERMITTENT'', voir page EC-3132. Se reporter au ''Schéma de câblage'', EC-3230, pour circuit.	
▶	**FIN DE L'INSPECTION**

Simpo PDF Merge and Split Unregistered Version - http://www.simpopdf.com

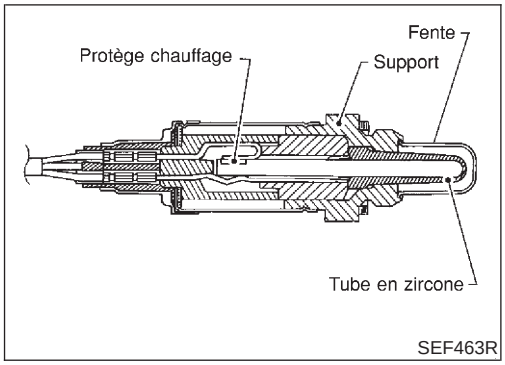

SEF463R

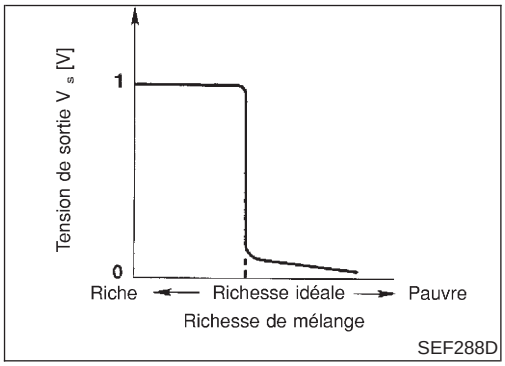

SEF288D

Description des composants

NEEC0111

La sonde à oxygène chauffé 1 est placée dans le collecteur d'échappement. Elle détecte la quantité d'oxygène contenue dans les gaz d'échappement en comparaison avec l'air extérieur. La sonde à oxygène chauffé 1 dispose d'un tube à extrémité fermée en zirconium de céramique. La zircone produit une tension qui va d'environ 1 V dans des conditions de mélange plus riche à 0 V dans des conditions de mélange plus pauvre. Le signal de la sonde à oxygène chauffé 1 est envoyé à l'ECM. L'ECM règle la durée de l'impulsion d'injection pour obtenir le mélange idéal air-carburant. Le mélange idéal air-carburant se produit vers le changement radical de 1 V à 0 V.

Valeur de référence de CONSULT-II en mode de contrôle de données

NEEC0112

Les données de spécification sont des valeurs de référence.

ELEMENT DE CONTROLE	CONDITION		SPECIFICATION
S/O2 CH1 (R1)	● Moteur : une fois le moteur chaud	Maintenir le régime-moteur à 2 000 tr/mn.	0 - 0,3 V ←→ Env. 0,6 - 1,0 V
MTR S/O2 CH1 (R1)			PAUVRE ←→ RICHE Change plus de 5 fois pendant 10 secondes

Bornes de l'ECM et valeurs de référence

NEEC0113

Les données de spécification sont des valeurs de référence et sont mesurées entre chaque borne et la masse.

ATTENTION :
Ne pas utiliser de bornes de masse de l'ECM lors de la mesure de la tension d'entrée/de sortie. En agissant de la sorte, il est possible d'endommager le transistor de l'ECM. Utiliser une masse autre que les bornes de l'ECM, comme par exemple la prise de terre.

N° DE BORNE	COULEUR DE CABLE	ELEMENT	CONDITION	DONNEES (tension de courant continu)
50	W	Sonde à oxygène chauffé 1	**[Moteur en marche]** ● Après montée en température normale de fonctionnement et au régime moteur de 2.000 tr/mn.	0 - Environ 1,0V 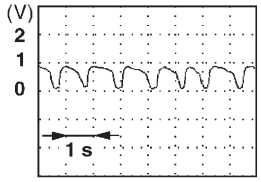 SEF008W

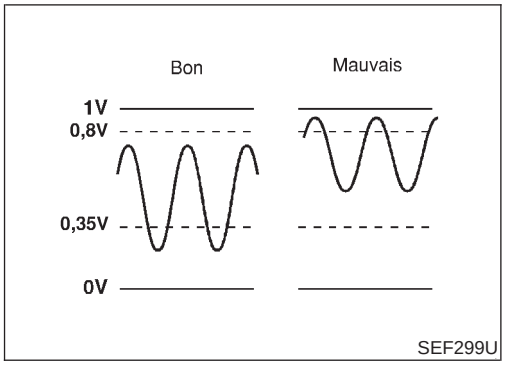

Logique de diagnostic de bord

NEEC0114

Pour estimer le défaut, la sortie de la sonde à oxygène chauffé 1 est contrôlée pour déterminer si la sortie ‘‘riche’’ est suffisamment élevée et si la sortie ‘‘pauvre’’ est suffisamment basse. Le défaut est détecté lorsque ces deux sorties dérivent vers l’enrichissement.

N° de DTC	Le défaut est détecté quand ...	Eléments de contrôle (causes possibles)
P1144 1144	● Les tensions maxi. et mini. reçues de la sonde dépassent les valeurs spécifiées.	● Sonde à oxygène chauffé 1 ● Chauffage de la sonde à oxygène chauffé 1 ● Pression de carburant ● Injecteurs

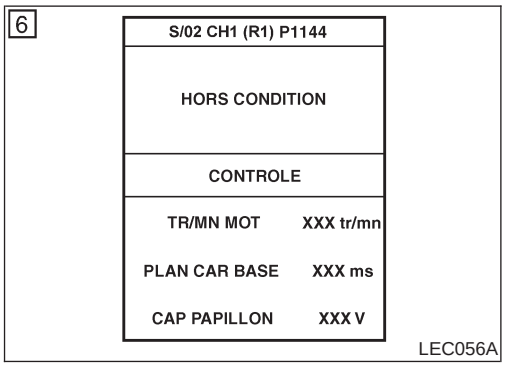

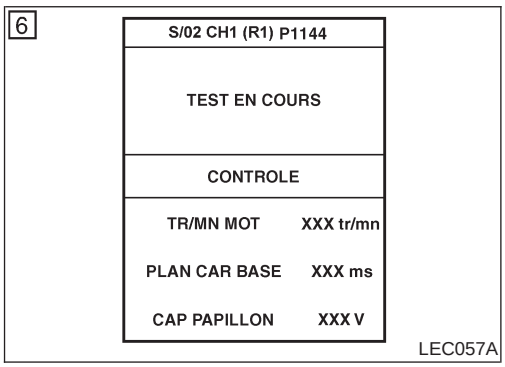

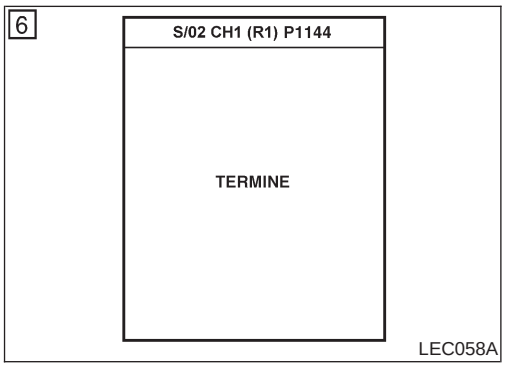

Procédure de confirmation de code de défaut (DTC)

NEEC0115

ATTENTION :
Toujours adapter sa vitesse aux exigences de sécurité.

REMARQUE :
Si une ‘‘Procédure de confirmation de DTC’’ a précédé, toujours mettre le contact d’allumage sur la position OFF et attendre au moins 5 secondes avant de procéder à l’essai suivant.

CONDITIONS D’ESSAI:

- **Toujours opérer à une température supérieure à -10°C.**
- **Avant d’entamer la procédure suivante, vérifier que la tension délivrée par la batterie est supérieure à 11 V au ralenti.**

Avec CONSULT-II

1) Démarrer le moteur et l’amener à température normale de fonctionnement.
2) Arrêter le moteur et attendre au moins 5 secondes.
3) Mettre le contact d’allumage sur ON et sélectionner ‘‘P1144’ S/O2 CH1 (R1)‘ de ‘‘S/O2 CH1’’ dans le mode ‘‘SUPPORT TRAVAIL DTC’’ de CONSULT-II.
4) Appuyer sur ‘‘DEPART’’.
5) Démarrer le moteur et le laisser tourner au ralenti pendant au moins 3,0 minutes.

REMARQUE :
Ne jamais dépasser le régime de 3 600 tr/mn après cette étape. Si le régime-moteur dépasse cette limite, recommencer à l’étape 5.

6) Lorsque les conditions suivantes sont remplies, l’écran de CONSULT-II indique ‘‘TEST EN COURS’’. Maintenir les conditions indiquées jusqu’à ce que le message ‘‘TEST EN COURS’’ laisse place au message ‘‘TERMINE’’ (ceci prend environ 50 secondes.)

Simpo PDF Merge and Split Unregistered Version - http://www.simpopdf.com

TR/MN MOT	1200 - 3150 tr/mn
Vitesse du véhicule	Moins de 100 km/h
PLAN CAR BASE	3,5 - 15 ms
Levier de vitesses	Rapport adapté

Si ‘‘TEST EN COURS’’ ne s’affiche pas après 5 minutes, réessayer à partir de l’étape 2.

7) S’assurer que BON s’affiche après avoir appuyé sur ‘‘RESULT AUTO-DIAG’’. Si MAUVAIS s’affiche, se reporter à la ‘‘Procédure de diagnostic’’, EC-3343.

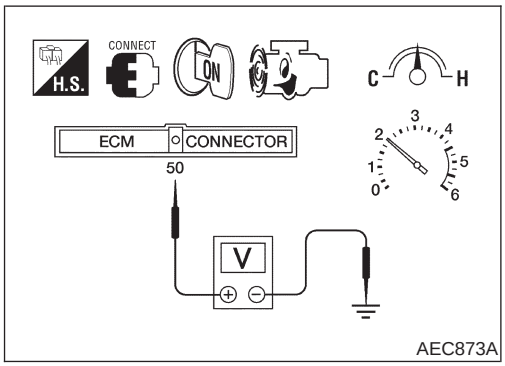

Vérification du fonctionnement général

NEEC0116

Utiliser cette procédure pour vérifier le fonctionnement général du circuit de la sonde à oxygène chauffé 1 (avant). Au cours de ce contrôle, il est possible qu’un DTC de 1er parcours ne soit pas confirmé.

Sans CONSULT-II

1) Démarrer le moteur et l’amener à température normale de fonctionnement.
2) Placer des sondes de voltmètre entre la borne 50 de l’ECM (signal de sonde à oxygène chauffé 1) et la masse du moteur.
3) Procéder au contrôle suivant en maintenant constant le régime moteur à 2 000 tr/mn à vide.

- La tension maximale tombe sous 0,8 V au moins une fois.
- La tension minimale tombe sous 0,35 V au moins une fois.

4) Si les résultats ne sont pas conformes, effectuer une ‘‘Procédure de diagnostic’’, voir page EC-3343.

Simpo PDF Merge and Split Unregistered Version - http://www.simpopdf.com

Procédure de diagnostic

NEEC0117

1	RESSERRER LA SONDE A OXYGENE CHAUFFE 1

1. Mettre le contact d'allumage sur OFF.
2. Desserrer et resserrer la sonde à oxygène chauffé 1.

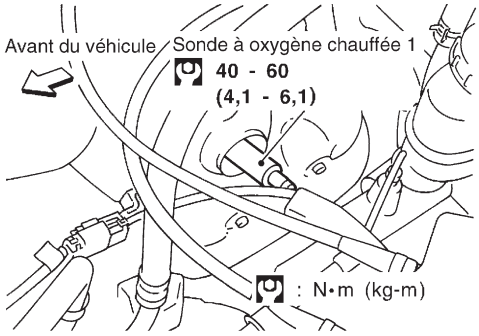

SEF332VC

Couple de serrage :
40 - 60 N·m (4,1 - 6,1 kg-m)

▶	ALLER A 2.

2	EFFACER LES DONNEES D'AUTO-INSTRUCTION

Avec CONSULT-II

1. Démarrer le moteur et l'amener à température normale de fonctionnement.
2. Sélectionner ''COM AUTO INSTRUCT'' en mode ''TEST ACTIF'' de CONSULT-II.
3. Effacer le coefficient de commande d'auto-instruction en appuyant sur ''EFFAC''.

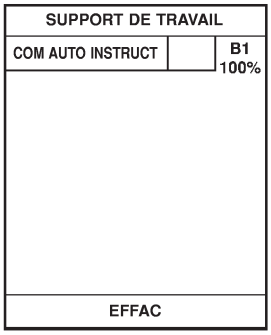

SEF215Z

4. Faire tourner le moteur pendant au moins 10 minutes au ralenti.
   Le DTC de 1er parcours P0172 est-il détecté ? Est-il difficile de démarrer le moteur ?

Sans CONSULT-II

1. Démarrer le moteur et l'amener à température normale de fonctionnement.
2. Mettre le contact d'allumage sur OFF.
3. Débrancher le connecteur de faisceau du débitmètre d'air, redémarrer et faire tourner le moteur pendant au moins 3 secondes au ralenti.

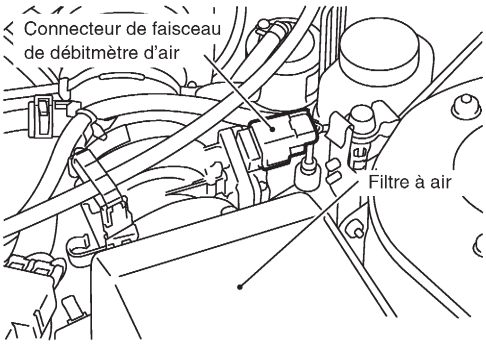

SEF293W

4. Eteindre le moteur et rebrancher le connecteur de faisceau du débitmètre d'air.
5. Vérifier que le DTC de 1er parcours P0102 est bien affiché.
6. Effacer le DTC de 1er parcours. Se reporter à ''COMMENT EFFACER LES CODES DE DIAGNOSTIC ANTIPOLLUTION'', EC-3065.
7. Vérifier que le DTC P0000 est bien affiché.
8. Faire tourner le moteur pendant au moins 10 minutes au ralenti.
   Le DTC de 1er parcours P0171 est-il détecté ? Est-il difficile de démarrer le moteur ?

Oui ou Non

Oui	▶	Réaliser le diagnostic des défauts pour DTC P0172. Se reporter à EC-3260.
Non	▶	ALLER A 3.

3	CONTROLER LE CONNECTEUR DE FAISCEAU

1. Mettre le contact d'allumage sur OFF.
2. Débrancher le connecteur de faisceau de la sonde à oxygène chauffé 1.
3. Vérifier si de l'eau n'a pas pénétré dans le connecteur de faisceau.
   Il ne doit pas y avoir d'eau.

BON ou MAUVAIS

Bon	▶	ALLER A 4.
Mauvais	▶	Réparer ou remplacer le connecteur de faisceau.

Simpo PDF Merge and Split Unregistered Version - http://www.simpopdf.com

4	CONTROLER LE CHAUFFAGE DE LA SONDE A OXYGENE CHAUFFE 1	
Vérifier la résistance entre les bornes 3 et 1. Se reporter au schéma de câblage. **Résistance : 2,3 - 4,3 Ω à 25°C** Vérifier la continuité entre les bornes 2 et 1, 3 et 2. Se reporter au schéma de câblage. **Il ne doit pas y avoir continuité.** **ATTENTION :** ● **Jeter toute sonde à oxygène chauffé tombée d'une hauteur supérieure à 0,5 m sur une surface dure telle qu'un plancher en béton, et la remplacer par une sonde neuve.** ● **Avant de reposer une nouvelle sonde à oxygène, nettoyer le filetage du système d'échappement à l'aide de l'outil de nettoyage pour filetage de sonde à oxygène J-43897-18 ou J-43897-12 et un lubrifiant antigrippant agréé.**		
BON ou MAUVAIS		
Bon (avec CONSULT-II)	▶	ALLER A 5.
Bon (sans CONSULT-II)	▶	ALLER A 6.
Mauvais	▶	Remplacer la sonde à oxygène chauffé 1.

Simpo PDF Merge and Split Unregistered Version - http://www.simpopdf.com

5 CONTROLER LA SONDE A OXYGENE CHAUFFE 1

Avec CONSULT-II

1. Brancher à nouveau tous les connecteurs de faisceau débranchés.
2. Démarrer le moteur et l'amener à température normale de fonctionnement.
3. Sélectionner ''DECLEN MANU'' en mode ''CONTROLE DE DONNEES'', et régler le point de déclenchement à 100.
4. Sélectionner ''S/O2 CH1 (R1)'' et ''MTR S/O2 CH1 (R1)'' dans la Sélection d'élément.
5. Maintenir le régime-moteur à 2.000 tr/mn à vide au cours des étapes suivantes.
6. Appuyer sur ''ENREG'' de l'écran CONSULT-II.

CONTROLE DE DONNEES	
CONTROLE	AUCUN DTC
TR/MN MOT	XXX tr/min
DEBITMETRE-R1	XXX V
CAP TEMP MOT	XXX °C
S/O2 CH1 (R1)	XXX V
MTR S/O2 CH1 (R1)	PAUVRE

SEF646Y

7. Contrôler les points suivants.

- ''MTR S/O2 (R1)'' en mode de ''CONTROLE DES DONNEES'' passe de ''RICHE'' à ''PAUVRE'' à ''RICHE''5 fois en 10 secondes.
  5 fois (cycles) sont comptées comme indiqué ci-dessous.

5

cycle	1	2	3	4	5
MTR S/O2 CH1 (R1)	R-L-R-L-R-L-R-L-R-L				

R associé à MTR S/O2 CH1 (R1) signifie RICHE
L associé à MTR S/O2 CH1 (R1)/(R2) signifie PAUVRE

SEF217YA

- La tension de ''S/O2 CH1 (R1)'' est supérieure à 0,6V au moins une fois.
- La tension de ''S/O2 CH1 (R1)'' est inférieure à 0,3V au moins une fois.
- La tension de ''S/O2 CH1(R1)'' ne dépasse jamais 1,0V.

Déclen-chement	Régime Moteur	S/02 CH1 (R1)
	tr/mn	V
XXX	XXX	XXX
XXX	XXX	XXX
XXX	XXX	XXX
XXX	XXX	XXX
XXX	XXX	XXX
XXX	XXX	XXX
XXX	XXX	XXX
XXX	XXX	XXX
XXX	XXX	XXX
XXX	XXX	XXX
XXX	XXX	XXX
XXX	XXX	XXX

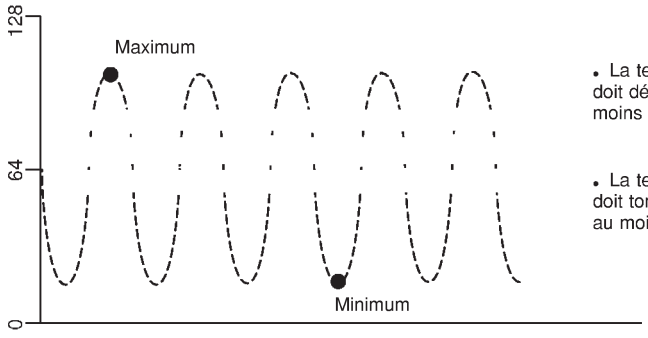

- La tension maximale doit dépasser 0,6V au moins une fois.
- La tension minimale doit tomber sous 0,30V au moins une fois.

SEF648Y

ATTENTION :

- **Jeter toute sonde à oxygène chauffé tombée d'une hauteur supérieure à 0,5 m sur une surface dure telle qu'un plancher en béton, et la remplacer par une sonde neuve.**
- **Avant de reposer une nouvelle sonde à oxygène, nettoyer le filetage du système d'échappement à l'aide de l'outil de nettoyage pour filetage de sonde à oxygène J-43897-18 ou J-43897-12 et un lubrifiant antigrippant agréé.**

BON ou MAUVAIS

Bon	▶	ALLER A 7.
Mauvais	▶	Remplacer la sonde à oxygène chauffé 1.

Simpo PDF Merge and Split Unregistered Version - http://www.simpopdf.com

6	CONTROLER LA SONDE A OXYGENE CHAUFFE 1

Sans CONSULT-II

1. Brancher à nouveau tous les connecteurs de faisceau débranchés.
2. Démarrer le moteur et l'amener à température normale de fonctionnement.
3. Placer des sondes de voltmètre entre la borne 50 de l'ECM (signal de sonde à oxygène chauffé 1) et la masse du moteur.

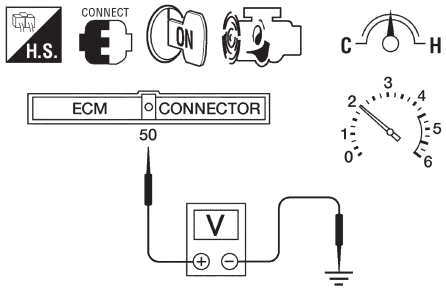

AEC873A

4. Procéder au contrôle suivant en maintenant constant le régime moteur à 2 000 tr/mn à vide.

- La tension varie entre 0 - 0,3 V et 0,6 - 1,0 V plus de cinq fois en 10 secondes.
  1 occurrence : 0 - 0,3 V → 0,6 - 1,0 V → 0 - 0,3 V
  2 occurrences : 0 - 0,3 V → 0,6 - 1,0 V → 0 - 0,3 V → 0,6 - 1,0 V → 0 - 0,3 V
- La tension maximale dépasse 0,6 V au moins une fois.
- La tension minimale tombe sous 0,3 V au moins une fois.
- La tension ne dépasse jamais 1,0 V.

ATTENTION :

- **Jeter toute sonde à oxygène chauffé tombée d'une hauteur supérieure à 0,5 m sur une surface dure telle qu'un plancher en béton, et la remplacer par une sonde neuve.**
- **Avant de reposer une nouvelle sonde à oxygène, nettoyer le filetage du système d'échappement à l'aide de l'outil de nettoyage pour filetage de sonde à oxygène J-43897-18 ou J-43897-12 et un lubrifiant antigrippant agréé.**

BON ou MAUVAIS

Bon	▶	ALLER A 7.
Mauvais	▶	Remplacer la sonde à oxygène chauffé 1.

7	VERIFIER SI L'INCIDENT EST INTERMITTENT
Effectuer un ''DIAGNOSTIC DES DEFAUTS EN CAS INCIDENT INTERMITTENT'', voir page EC-3132. Se reporter au ''Schéma de câblage'', EC-3230, pour circuit.	
▶	**FIN DE L'INSPECTION**

Simpo PDF Merge and Split Unregistered Version - http://www.simpopdf.com

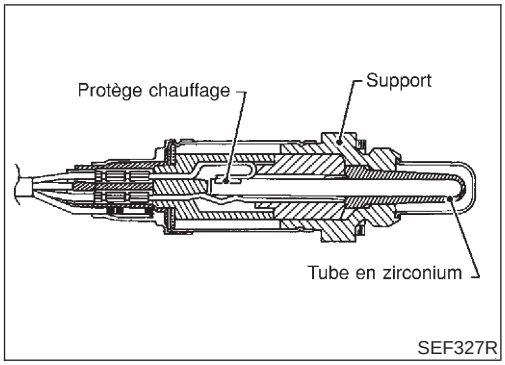

Description des composants

NEEC0144

La sonde à oxygène chauffé 2, située en aval du catalyseur à trois voies, contrôle le niveau d'oxygène dans les gaz d'échappement. Même si les caractéristiques de commutation de la sonde à oxygène chauffé 1 sont modifiées, le rapport air-carburant est commandé à la stœchiométrie par le signal délivré par la sonde à oxygène chauffé 2

Cette sonde est en zircone céramique La zircone produit une tension qui va d'environ 1 V dans des conditions de mélange plus riche à 0 V dans des conditions de mélange plus pauvre.

En conditions normales, la sonde à oxygène chauffé 2 n'est pas utilisée pour la gestion moteur.

Valeur de référence de CONSULT-II en mode de contrôle de données

NEEC0145

Les données de spécification sont des valeurs de référence.

ELEMENT DE CONTROLE	CONDITION		SPECIFICATION
S/O2 CH2 (R1)	● Moteur : une fois le moteur chaud	Montée rapide du régime moteur du ralenti jusqu'à 3 000 tr/mn	0 - 0,3V ←→ Env. 0,6 - 1,0V
MTR S/O2 CH2 (R1)			PAUVRE ←→ RICHE

Bornes de l'ECM et valeurs de référence

NEEC0146

Les données de spécification sont des valeurs de référence et sont mesurées entre chaque borne et la masse.

ATTENTION :
Ne pas utiliser de bornes de masse de l'ECM lors de la mesure de la tension d'entrée/de sortie. En agissant de la sorte, il est possible d'endommager le transistor de l'ECM. Utiliser une masse autre que les bornes de l'ECM, comme par exemple la prise de terre.

N° DE BORNE	COULEUR DE CABLE	ELEMENT	CONDITION	DONNEES (tension de courant continu)
56	L/W	Sonde à oxygène chauffé 2	**[Moteur en marche]** ● Après montée en température normale de fonctionnement et montée en régime rapide du ralenti jusqu'à 3.000 tr/mn.	0 - Environ 1,0V

Simpo PDF Merge and Split Unregistered Version - http://www.simpopdf.com

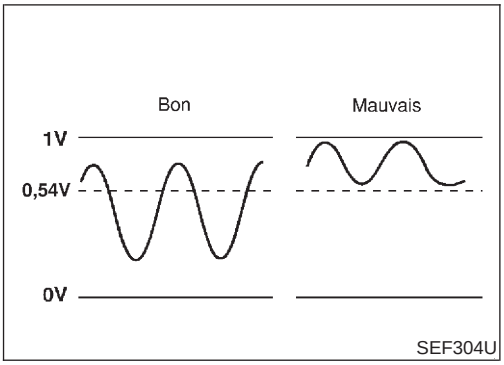

SEF304U

Logique de diagnostic de bord

NEEC0147

La sonde à oxygène chauffé 2 possède une longueur d'interruption entre riche et pauvre beaucoup plus grande que la sonde à oxygène chauffé 1. La capacité de stockage d'oxygène avant le catalyseur à trois voies est la cause du temps d'interruption plus long. Pour estimer les défauts de fonctionnement de la sonde à oxygène chauffé 2, l'ECM contrôle si la tension minimale du capteur est suffisamment basse durant les différentes conditions de conduite comme par exemple la coupure de carburant.

N° de DTC	Le défaut est détecté quand ...	Eléments de contrôle (causes possibles)
P1146 1146	● La tension minimale en provenance de la sonde n'atteint pas les valeurs spécifiées.	● Faisceau ou connecteurs (le circuit de capteur est ouvert ou court-circuité) ● Sonde à oxygène chauffé 2 ● Pression de carburant ● Injecteurs

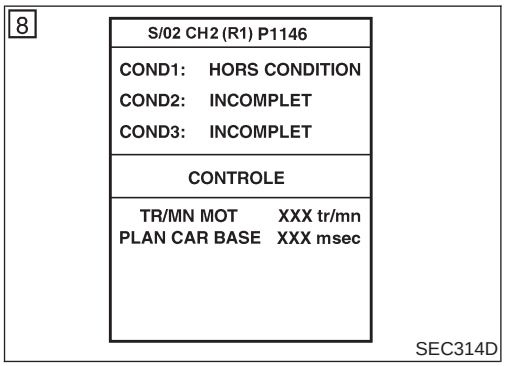

SEC314D

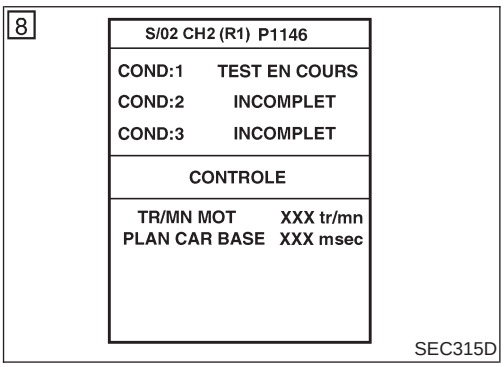

SEC315D

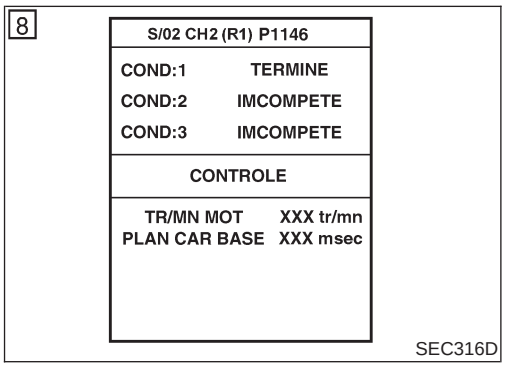

SEC316D

Procédure de confirmation de code de défaut (DTC)

NEEC0148

ATTENTION :
Toujours adapter sa vitesse aux exigences de sécurité.

REMARQUE :

- **''TERMINE'' apparaît sur l'écran de CONSULT-II lorsque tous les tests ''COND1'', ''COND2'' et ''COND3'' sont terminés.**
- Si une ''Procédure de confirmation de DTC'' a précédé, toujours mettre le contact d'allumage sur la position ''OFF'' et attendre au moins 5 secondes avant de procéder à l'essai suivant.

CONDITIONS D'ESSAI :
Ne jamais arrêter le moteur au cours de cette procédure. Si le moteur est arrêté, recommencer cette procédure depuis l'étape 2 de ''Procédure pour COND1''.

AVEC CONSULT-II

NEEC0148S01

Procédure pour COND1

NEEC0148S0101

1. Démarrer le moteur et l'amener à température normale de fonctionnement.
2. Mettre le contact d'allumage sur ''OFF'' et attendre au moins 5 secondes.
3. Mettre le contact d'allumage sur ''ON' et sélectionner ''P1146 S/O2 CH2 (R1)'' de ''S/O2 CH2'' dans le mode ''SUPPORT TRAVAIL DTC'' de CONSULT-II.
4. Appuyer sur ''DEPART''.
5. Démarrer le moteur et le laisser tourner au ralenti pendant au moins 30 secondes.
6. Emballer le moteur à 2 000 tr/mn à 2 ou 3 reprises, à vide.
   Si ''TERMINE'' apparaît sur l'écran de CONSULT-II, passer à l'étape 2 de ''Procédure pour COND3''.
   Si ''TERMINE'' n'apparaît pas sur l'écran CONSULT-II, passer à l'étape suivante.

Simpo PDF Merge and Split Unregistered Version - http://www.simpopdf.com

7. Rouler à plus de 70 km/h pendant 2 minutes.
8. Lorsque les conditions suivantes sont réunies, ‘‘TEST EN COURS’’ sera affiché dans ‘‘COND1’’ sur l’écran de CONSULT-II. Maintenir les conditions indiquées jusqu’à ce que le message ‘‘TEST EN COURS’’ laisse place au message ‘‘TERMINE’’ (cela prend environ 60 secondes.)

TR/MN MOT	Plus de 1.000 tr/mn
PLAN CAR BASE	Plus de 1,0 ms
CAP TEMP LIQ REFR	70 - 105°C
Levier sélecteur	Rapport adapté

REMARQUE :

- **Si ‘‘TEST EN COURS’’ ne s’affiche pas après 5 minutes, recommencer à partir de l’étape 2 dans ‘‘Procédure pour COND1’’.**
- **Si ‘‘TERMINE‘ apparaît dès que l’écran de CONSULT-II affiche ‘‘COND2’’, avant même de réaliser la ‘‘Procédure pour COND2’’, il n’est pas nécessaire de réaliser l’étape 1 de la ‘‘Procédure pour COND2’’.**

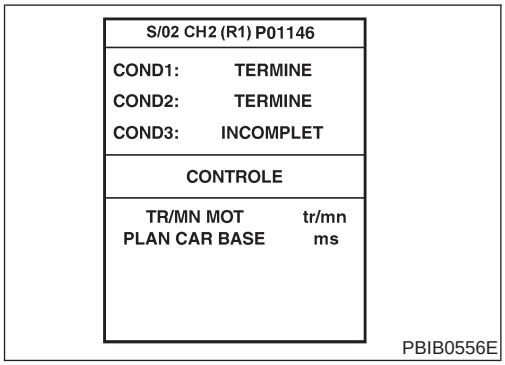

PBIB0556E

Procédure pour COND2

NEEC0148S0102

1. En conduisant, relâcher la pédale d’accélération complètement comme indiqué à l’étape 8 des conditions ci-dessus jusqu’à ce que ‘‘COND2’’ sur l’écran CONSULT-II passe de INCOMPLET à TERMINE (ceci prend environ 4 secondes).

REMARQUE :
Si ‘‘TERMINE‘ apparaît dès que l’écran de CONSULT-II affiche ‘‘COND3’’, avant même de réaliser la ‘‘Procédure pour COND3’’, il n’est pas nécessaire de réaliser l’étape 1 de la ‘‘Procédure pour COND3’’.

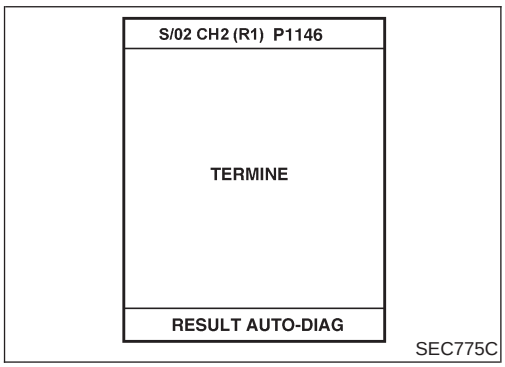

SEC775C

Procédure pour COND3

NEEC0148S0103

1. Arrêter le véhicule et le laisser au ralenti jusqu’à ce que ‘‘COND3’’ passe de INCOMPLET à TERMINE sur l’écran de CONSULT-II (ceci prend environ 6 minutes au plus).
2. Veiller à ce que ‘‘BON’’ soit affiché après avoir appuyé sur ‘‘RESULT AUTODIAG’’.
   Si c’est ‘‘MAUVAIS’’ qui est affiché, se reporter à EC-3353, ‘‘Procédure de diagnostic’’.

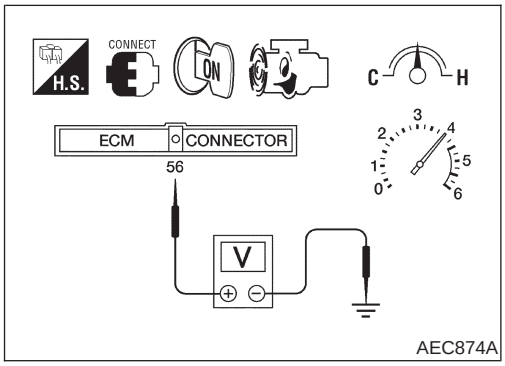

AEC874A

Vérification du fonctionnement général

NEEC0149

Utiliser cette procédure pour contrôler le fonctionnement général du circuit de la sonde à oxygène chauffé 2. Au cours de ce contrôle, il est possible qu’un DTC de 1er parcours ne soit pas confirmé.

ATTENTION :
Toujours adapter sa vitesse aux exigences de sécurité.

Ⓧ Sans CONSULT-II

1) Démarrer le moteur et conduire le véhicule à une vitesse de plus de 70 km/h pendant 2 minutes consécutives.
2) Arrêter le véhicule et laisser tourner le moteur.

Simpo PDF Merge and Split Unregistered Version - http://www.simpopdf.com

3) Placer des sondes de voltmètre entre la borne 56 de l'ECM (signal de sonde à oxygène chauffé 2) et la masse du moteur.
4) Vérifier la tension en emballant le moteur jusqu'à 4 000 tr/mn à vide et ce, au moins 10 fois.
(appuyer sur la pédale d'accélérateur et la relâcher aussi vite que possible)
La tension doit être inférieure à 0,54 V au moins une fois pendant la procédure.
Si la tension est conforme à ce stade, il est inutile de procéder aux opérations décrites à l'étape 5.
5) Laisser le moteur tourner au ralenti pendant 10 minutes, puis vérifier la tension. Ou vérifier la tension lors du passage à 80 km/h en 3ème.
La tension doit être inférieure à 0,54 V au moins une fois pendant la procédure.
6) Si les résultats ne sont pas conformes, effectuer une ''Procédure de diagnostic'', voir page EC-3353.

Simpo PDF Merge and Split Unregistered Version - http://www.simpopdf.com

Schéma de câblage

NEEC0150

EC-O2S2B1-01

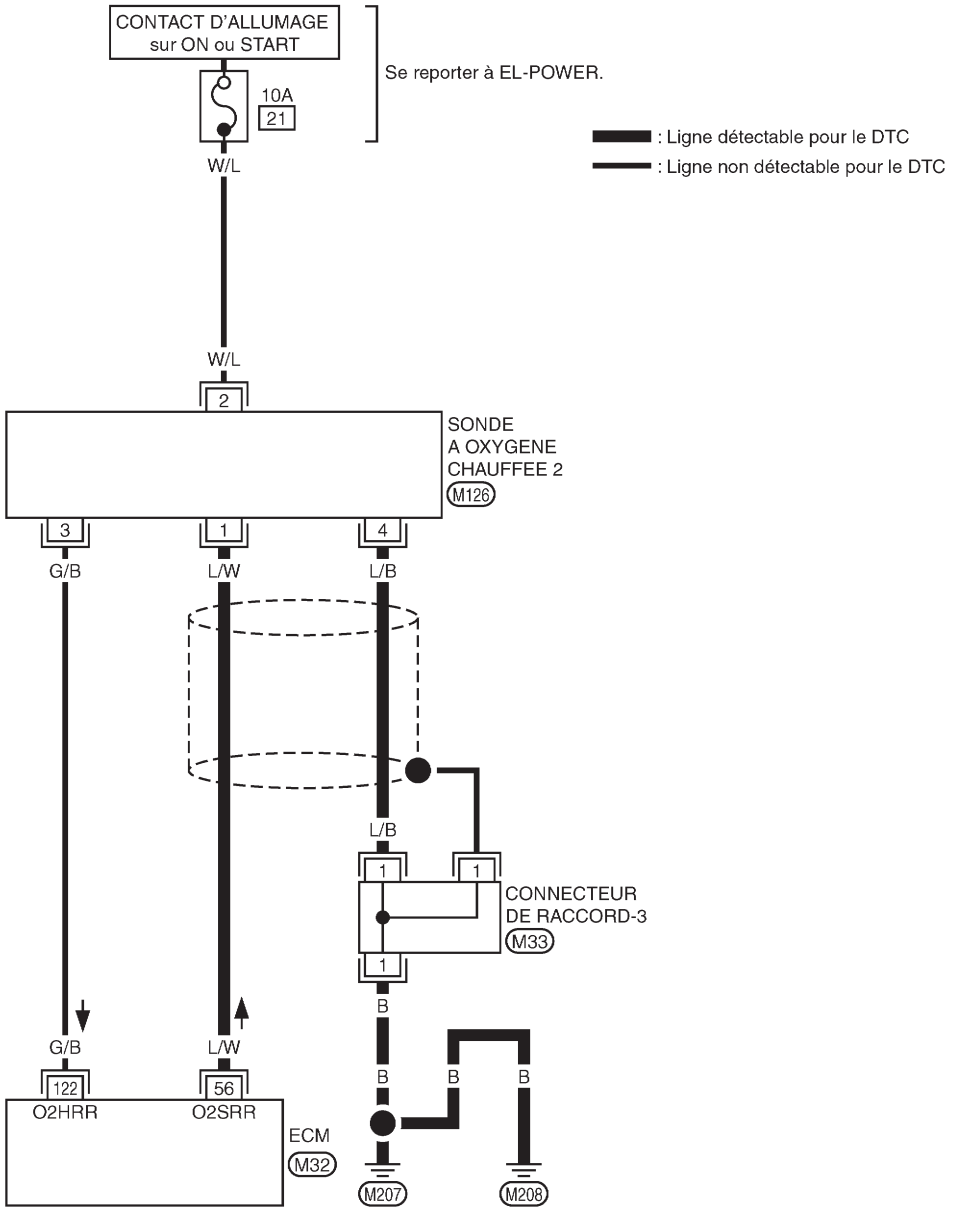

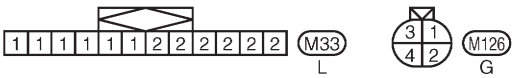

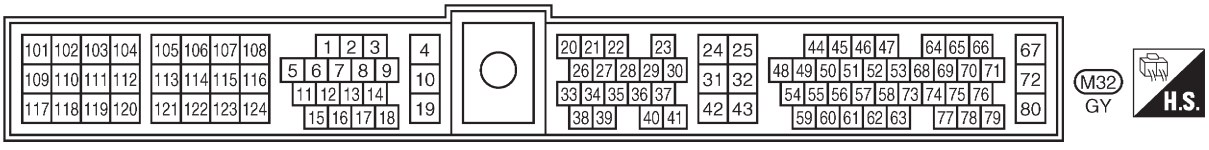

GEC246A

Procédure de diagnostic

NEEC0151

1	RESSERRER LES VIS DE MASSE
1. Mettre le contact d'allumage sur OFF. 2. Desserrer et resserrer les vis de masse du moteur. 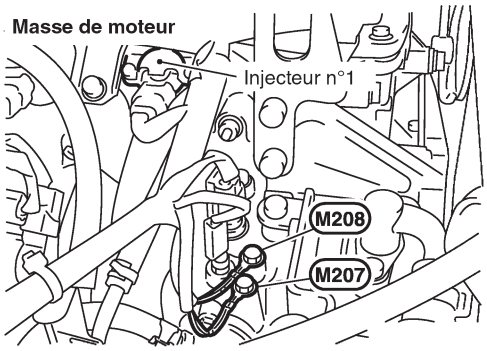 SEC309D	
▶	ALLER A 2.

2	EFFACER LES DONNEES D'AUTO-INSTRUCTION

Avec CONSULT-II

1. Démarrer le moteur et l'amener à température normale de fonctionnement.
2. Sélectionner ''COM AUTO INSTRUCT'' dans le mode ''SUPPORT TRAVAIL'' de CONSULT-II.
3. Effacer le coefficient de commande d'auto-instruction en appuyant sur ''EFFAC''.

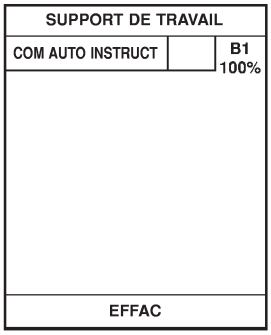

SEF215Z

4. Faire tourner le moteur pendant au moins 10 minutes au ralenti.
   Le DTC de 1er parcours P0172 est-il détecté ? Est-il difficile de démarrer le moteur ?

Sans CONSULT-II

1. Démarrer le moteur et l'amener à température normale de fonctionnement.
2. Mettre le contact d'allumage sur ''OFF''.
3. Débrancher le connecteur de faisceau du débitmètre d'air, redémarrer et faire tourner le moteur pendant au moins 3 secondes au ralenti.

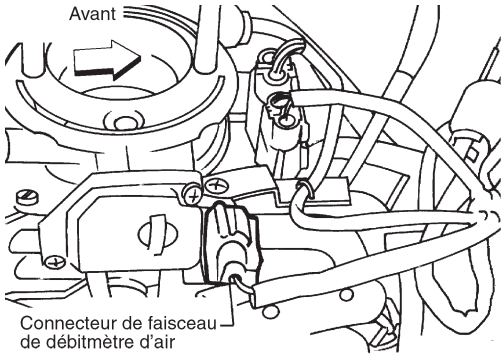

AEC131A

4. Eteindre le moteur et rebrancher le connecteur de faisceau du débitmètre d'air.
5. Vérifier que le DTC de 1er parcours P0102 est bien affiché.
6. Effacer le DTC de 1er parcours. Se reporter à ''COMMENT EFFACER LES CODES DE DIAGNOSTIC ANTIPOLLUTION'', EC-3065.
7. Vérifier que le DTC P0000 est bien affiché.
8. Faire tourner le moteur pendant au moins 10 minutes au ralenti.
   Le DTC de 1er parcours P0172 est-il détecté ? Est-il difficile de démarrer le moteur ?

Oui ou Non

Oui	▶	Réaliser le diagnostic des défauts pour DTC P0172. Se reporter à EC-3260.
Non	▶	ALLER A 3.

Simpo PDF Merge and Split Unregistered Version - http://www.simpopdf.com

3	CONTROLER LE CIRCUIT DE SIGNAL D'ENTREE

1. Mettre le contact d'allumage sur OFF.
2. Débrancher le connecteur de faisceau de la sonde à oxygène chauffé 2 et le connecteur de faisceau de l'ECM.
3. Vérifier la continuité du faisceau entre la borne 56 de l'ECM et la borne 1. Se reporter au schéma de câblage.
   Il doit y avoir continuité.
4. Vérifier la continuité du faisceau entre la borne 56 (ou 1) de l'ECM et la masse. Se reporter au schéma de câblage.
   Il ne doit pas y avoir continuité.
5. Vérifier également que le faisceau n'est pas en court-circuit à la masse ou à l'alimentation.

BON ou MAUVAIS

Bon	▶	ALLER A 5.
Mauvais	▶	ALLER A 4.

4	DETECTER LA PIECE DEFECTUEUSE

Contrôler les points suivants.
- Vérifier que le faisceau entre la sonde à oxygène chauffé 2 et l'ECM n'est pas ouvert ou en court-circuit

	▶	Réparer les faisceaux ou les connecteurs en circuit ouvert ou en court-circuit à la masse ou à l'alimentation.

5	CONTROLER LE CIRCUIT DE MISE A LA MASSE

1. Vérifier la continuité du faisceau entre la borne 4 de la sonde à oxygène chauffé 2 et la masse du moteur. Se reporter au schéma de câblage.
   Il doit y avoir continuité.
2. Vérifier également que le faisceau n'est pas en court-circuit à l'alimentation.

BON ou MAUVAIS

Bon (avec CONSULT-II)	▶	ALLER A 7.
Bon (sans CONSULT-II)	▶	ALLER A 8.
Mauvais	▶	ALLER A 6.

6	DETECTER LA PIECE DEFECTUEUSE

Contrôler les points suivants.
- Connecteur de jonction-3
- Vérifier que le faisceau entre la sonde à oxygène chauffé 2 et la masse du moteur n'est pas ouvert ou en court-circuit

	▶	Réparer les faisceaux ou connecteurs en circuit ouvert ou en court-circuit à l'alimentation.

Simpo PDF Merge and Split Unregistered Version - http://www.simpopdf.com

7	CONTROLER LA SONDE A OXYGENE CHAUFFE 2

Avec CONSULT-II

1. Brancher à nouveau tous les connecteurs de faisceau débranchés.
2. Démarrer le moteur et conduire le véhicule à une vitesse de plus de 70 km/h pendant 2 minutes consécutives.
3. Arrêter le véhicule et laisser tourner le moteur.
4. Sélectionner ‘‘INJECTION CARB’’ en mode ‘‘TEST ACTIF’’ et sélectionner ‘‘S/O2 CH2 (R1)’’ comme élément à contrôler avec CONSULT-II.
5. Vérifier ‘‘S/O2 CH2 (R1)‘‘ au ralenti lorsque ‘‘INJECTION CARB‘‘ est réglé sur ±25.

TEST ACTIF	
INJECTION CARBUR	25 %
CONTROLE	
TR/MN MOT	XXX TR/MN
S/02 CH1 (R1)	XXX V
S/02 CH2 (R1)	XXX V
MTR S/02CH1 (R1)	RICHE
MTR S/02CH2 (R1)	RICHE

SEF662Y

La tension de ‘‘S/O2 CH2 (R1)’’ doit être supérieure à 0,56V au moins une fois lorsque le paramètre ‘‘INJECTION CARB’’ est à +25.
La tension de ‘‘S/O2 CH2 (R1)’’ doit être inférieure à 0,54 V au moins une fois lorsque le paramètre ‘‘INJECTION CARB’’ est à -25.
ATTENTION :

- **Jeter toute sonde à oxygène chauffé tombée d’une hauteur supérieure à 0,5 m sur une surface dure telle qu’un plancher en béton, et la remplacer par une sonde neuve.**
- **Avant de reposer une nouvelle sonde à oxygène, nettoyer le filetage du système d’échappement à l’aide de l’outil de nettoyage pour filetage de sonde à oxygène J-43897-18 ou J-43897-12 et un lubrifiant antigrippant agréé.**

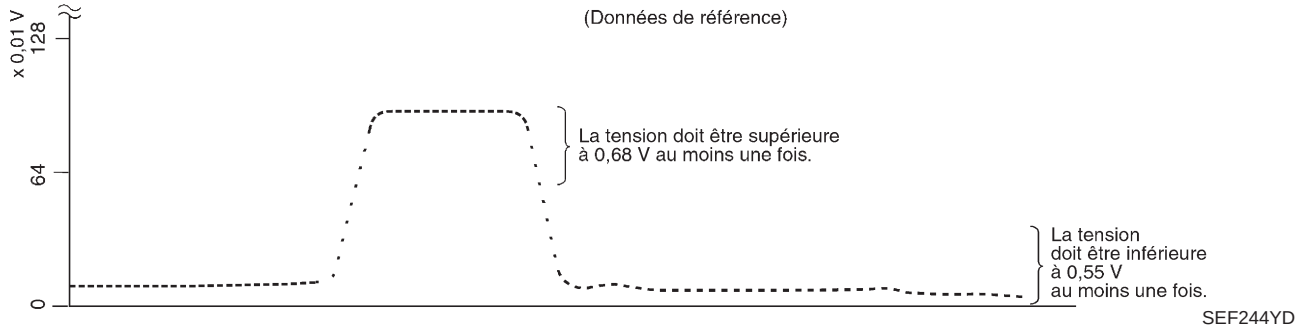

SEF244YD

BON ou MAUVAIS

Bon	▶	ALLER A 9.
Mauvais	▶	Remplacer la sonde à oxygène chauffé 2.

Simpo PDF Merge and Split Unregistered Version - http://www.simpopdf.com

8	CONTROLER LA SONDE A OXYGENE CHAUFFE 2

Sans CONSULT-II

1. Brancher à nouveau tous les connecteurs de faisceau débranchés.
2. Démarrer le moteur et conduire le véhicule à une vitesse de plus de 70 km/h pendant 2 minutes consécutives.
3. Arrêter le véhicule et laisser tourner le moteur.
4. Placer des sondes de voltmètre entre la borne 56 de l'ECM (signal de sonde à oxygène chauffé 2) et la masse du moteur.

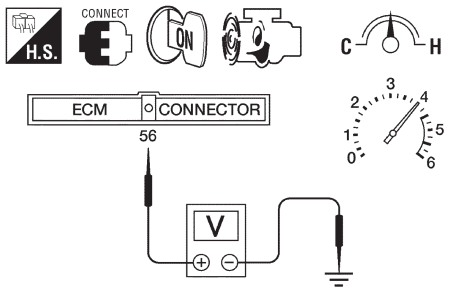

AEC874A

5. Vérifier la tension en emballant le moteur jusqu'à 4 000 tr/mn à vide et ce, au moins 10 fois.
   (appuyer sur la pédale d'accélérateur et la relâcher aussi vite que possible)
   La tension doit être supérieure à 0,56 V au moins une fois pendant la procédure.
   Si la tension est supérieure à 0,56V à l'étape 4, il est inutile de procéder aux opérations décrites à l'étape 5.
6. Vérifier la tension en emballant le moteur jusqu'à 5 000 tr/mn à vide. Ou laisser le moteur tourner au ralenti pendant 10 minutes, puis vérifier la tension. Ou vérifier la tension lors du passage à 80 km/h en 3ème (T/M), ou en position D avec surmultipliée sur ARRET (T/A).
   La tension doit être inférieure à 0,54V au moins une fois.
   ATTENTION :
   - **Jeter toute sonde à oxygène chauffé tombée d'une hauteur supérieure à 0,5 m sur une surface dure telle qu'un plancher en béton, et la remplacer par une sonde neuve.**
   - **Avant de reposer une nouvelle sonde à oxygène, nettoyer le filetage du système d'échappement à l'aide de l'outil de nettoyage pour filetage de sonde à oxygène J-43897-18 ou J-43897-12 et un lubrifiant antigrippant agréé.**

BON ou MAUVAIS

Bon	▶	ALLER A 9.
Mauvais	▶	Remplacer la sonde à oxygène chauffé 2.

9	VERIFIER LE CIRCUIT DE BLINDAGE

1. Mettre le contact d'allumage sur OFF.
2. Débrancher le connecteur de jonction-3.
3. Vérifier la continuité du faisceau entre la borne 1 du connecteur de jonction-3 et la masse. Se reporter au schéma de câblage.
   Il doit y avoir continuité.
4. Vérifier également que le faisceau n'est pas en court-circuit à l'alimentation.
5. Brancher à nouveau les connecteurs de faisceau.

BON ou MAUVAIS

Bon	▶	ALLER A 11.
Mauvais	▶	ALLER A 10.

10	DETECTER LA PIECE DEFECTUEUSE

Contrôler les points suivants.
- Connecteur de jonction-3 (Se reporter à ''DISPOSITION DES FAISCEAUX'', dans la section EL.)
- Faisceau ouvert ou en court-circuit entre le connecteur de jonction-3 et la masse du moteur

	▶	Réparer les faisceaux ou connecteurs en circuit ouvert ou court-circuit.

11	**VERIFIER SI L'INCIDENT EST INTERMITTENT**
Effectuer un ''DIAGNOSTIC DES DEFAUTS EN CAS INCIDENT INTERMITTENT'', voir page EC-3132.	
▶	**FIN DE L'INSPECTION**

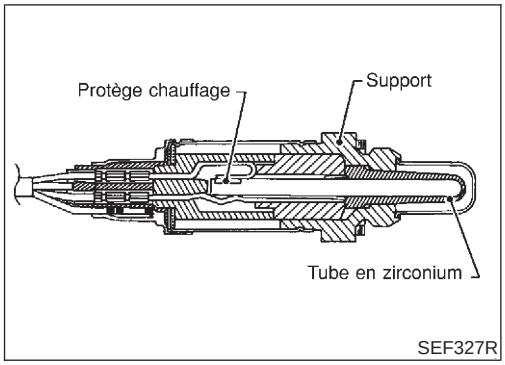

Description des composants

NEEC0153

La sonde à oxygène chauffé 2, située en aval du catalyseur à trois voies, contrôle le niveau d'oxygène dans les gaz d'échappement. Même si les caractéristiques de commutation de la sonde à oxygène chauffé 1 sont modifiées, le rapport air-carburant est commandé à la stœchiométrie par le signal délivré par la sonde à oxygène chauffé 2

Cette sonde est en zircone céramique La zircone produit une tension qui va d'environ 1 V dans des conditions de mélange plus riche à 0 V dans des conditions de mélange plus pauvre.

En conditions normales, la sonde à oxygène chauffé 2 n'est pas utilisée pour la gestion moteur.

Valeur de référence de CONSULT-II en mode de contrôle de données

NEEC0154

Les données de spécification sont des valeurs de référence.

ELEMENT DE CONTROLE	CONDITION		SPECIFICATION
S/O2 CH2 (R1)	● Moteur : une fois le moteur chaud	Montée rapide du régime moteur du ralenti jusqu'à 3 000 tr/mn.	0 - 0,3 V ←→ Env. 0,6 - 1,0 V
MTR S/O2 CH2 (R1)			PAUVRE ←→ RICHE

Bornes de l'ECM et valeurs de référence

NEEC0155

Les données de spécification sont des valeurs de référence et sont mesurées entre chaque borne et la masse.

ATTENTION :
Ne pas utiliser de bornes de masse de l'ECM lors de la mesure de la tension d'entrée/de sortie. En agissant de la sorte, il est possible d'endommager le transistor de l'ECM. Utiliser une masse autre que les bornes de l'ECM, comme par exemple la prise de terre.

N° DE BORNE	COULEUR DE CABLE	ELEMENT	CONDITION	DONNEES (tension de courant continu)
56	L/W	Sonde à oxygène chauffé 2	**[Moteur en marche]** ● Après montée en température normale de fonctionnement et montée rapide en régime du ralenti jusqu'à 3.000 tr/mn	0 - Environ 1,0V

Simpo PDF Merge and Split Unregistered Version - http://www.simpopdf.com

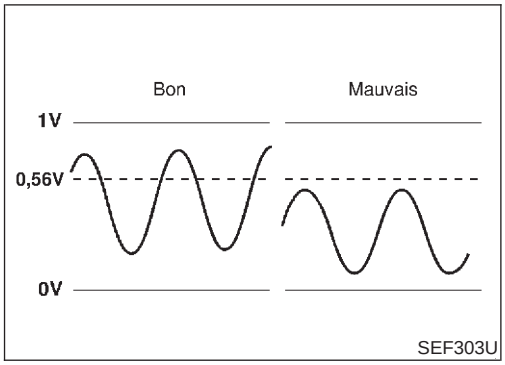

SEF303U

Logique de diagnostic de bord

NEEC0156

La sonde à oxygène chauffé 2 possède une longueur d'interruption entre riche et pauvre beaucoup plus grande que la sonde à oxygène chauffé 1. La capacité de stockage d'oxygène avant le catalyseur à trois voies est la cause du temps d'interruption plus long. Pour estimer les défauts de fonctionnement de la sonde à oxygène chauffé 2, l'ECM contrôle si la tension maximale du capteur est suffisamment élevée durant les différentes conditions de conduite comme par exemple la coupure de carburant.

N° de DTC	Le défaut est détecté quand ...	Eléments de contrôle (causes possibles)
P1147 1147	● La tension maximale en provenance de la sonde n'atteint pas les valeurs spécifiées.	● Faisceau ou connecteurs (le circuit de capteur est ouvert ou court-circuité) ● Sonde à oxygène chauffé 2 ● Pression de carburant ● Injecteurs ● Fuites d'air d'admission

8

S/02 CH2 (R1) P1147	
COND:1	HORS CONDITION
COND:2	IMCOMPETE
COND:3	IMCOMPETE
CONTROLE	
TR/MN MOT	XXX tr/mn
PLAN CAR BASE	XXX msec

SEC340D

8

S/02 CH2 (R1) P1147	
COND:1	TEST EN COURS
COND:2	INCOMPETE
COND:3	INCOMPETE
CONTROLE	
TR/MN MOT	XXX tr/mn
PLAN CAR BASE	XXX msec

SEC341D

8

S/02 CH2 (R1) P1147	
COND:1	TERMINE
COND:2	INCOMPETE
COND:3	INCOMPETE
CONTROLE	
TR/MN MOT	XXX tr/mn
PLAN CAR BASE	XXX msec

SEC342D

Procédure de confirmation de code de défaut (DTC)

NEEC0157

ATTENTION :
Toujours adapter sa vitesse aux exigences de sécurité.

REMARQUE :

- **''TERMINE'' apparaît sur l'écran de CONSULT-II lorsque tous les tests ''COND1'', ''COND2'' et ''COND3'' sont terminés.**
- Si une ''Procédure de confirmation de DTC'' a précédé, toujours mettre le contact d'allumage sur la position ''OFF'' et attendre au moins 5 secondes avant de procéder à l'essai suivant.

CONDITIONS D'ESSAI :
Ne jamais arrêter le moteur au cours de cette procédure. Si le moteur est arrêté, recommencer cette procédure depuis l'étape 2 de ''Procédure pour COND1''.

AVEC CONSULT-II

NEEC0157S01

Procédure pour COND1

NEEC0157S0101

1. Démarrer le moteur et l'amener à température normale de fonctionnement.
2. Mettre le contact d'allumage sur ''OFF'' et attendre au moins 5 secondes.
3. Mettre le contact d'allumage sur ON et sélectionner ''P1147 S/O2 CH2 (R1)'' de ''S/O2 CH2'' dans le mode ''SUPPORT TRAVAIL DTC'' de CONSULT-II.
4. Appuyer sur ''DEPART''.
5. Démarrer le moteur et le laisser tourner au ralenti pendant au moins 30 secondes.
6. Emballer le moteur à 2 000 tr/mn à 2 ou 3 reprises, à vide.
   Si TERMINE apparaît sur l'écran de CONSULT-II, passer à l'étape 2 de ''Procédure pour COND3''.
   Si TERMINE n'apparaît pas sur l'écran CONSULT-II, passer à l'étape suivante.

Simpo PDF Merge and Split Unregistered Version - http://www.simpopdf.com

7. Rouler à plus de 70 km/h pendant 2 minutes.
8. Lorsque les conditions suivantes sont réunies, ‘‘TEST EN COURS’’ sera affiché dans ‘‘COND1’’ sur l’écran de CONSULT-II. Maintenir les conditions indiquées jusqu’à ce que le message ‘‘TEST EN COURS’’ laisse place au message ‘‘TERMINE’’ (cela prend environ 60 secondes.)

TR/MN MOT	Plus de 1000 tr/mn
PLAN CAR BASE	Plus de 1,0 ms
CAP TEMP LIQ REFR	70 - 105°C
Levier sélecteur	Rapport adapté

REMARQUE :
- **Si ‘‘TEST EN COURS’’ ne s’affiche pas après 5 minutes, recommencer à partir de l’étape 2 dans ‘‘Procédure pour COND1’’.**
- **Si TERMINE apparaît dès que l’écran de CONSULT-II affiche ‘‘COND2’’, avant même de réaliser la ‘‘Procédure pour COND2’’, il n’est pas nécessaire de réaliser l’étape 1 de la ‘‘Procédure pour COND2’’.**

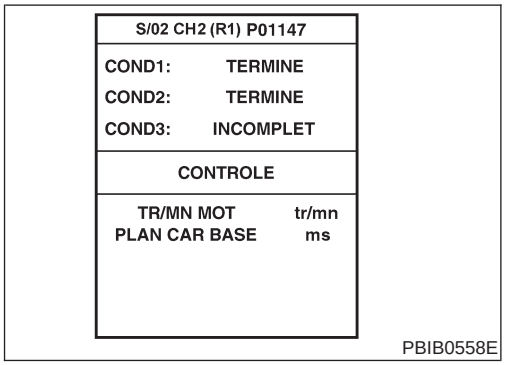

PBIB0558E

Procédure pour COND2

NEEC0157S0102

1. En conduisant, relâcher la pédale d’accélération complètement comme indiqué à l’étape 8 des conditions ci-dessus jusqu’à ce que ‘‘COND2’’ sur l’écran CONSULT-II passe de INCOMPLET à TERMINE (ceci prend environ 4 secondes.)

REMARQUE :
Si TERMINE apparaît dès que l’écran de CONSULT-II affiche ‘‘COND3’’, avant même de réaliser la ‘‘Procédure pour COND3’’, il n’est pas nécessaire de réaliser l’étape 1 de la ‘‘Procédure pour COND3’’.

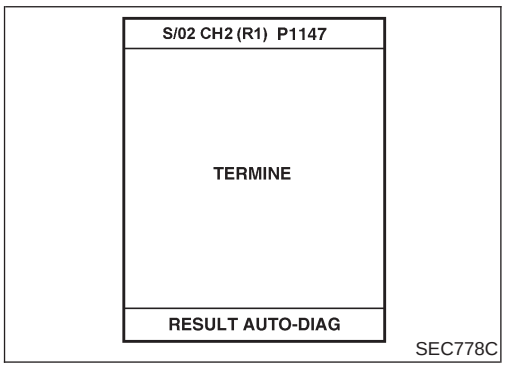

SEC778C

Procédure pour COND3

NEEC0157S0103

1. Arrêter le véhicule et le laisser au ralenti jusqu’à ce que ‘‘COND3’’ passe de INCOMPLET à TERMINE sur l’écran de CONSULT-II (ceci prend environ 6 minutes au plus.)
2. Veiller à ce que ‘‘BON’’ soit affiché après avoir appuyé sur ‘‘RESULT AUTODIAG’’.
   Si ‘‘MAUVAIS’’ est affiché, se reporter à EC-3364, ‘‘Procédure de diagnostic’’.

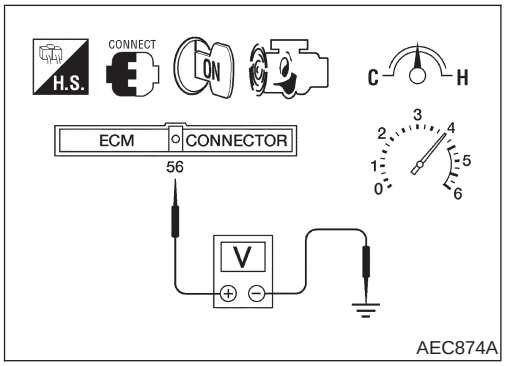

AEC874A

Vérification du fonctionnement général

NEEC0158

Utiliser cette procédure pour vérifier le fonctionnement général du circuit de la sonde à oxygène chauffé arrière. Au cours de ce contrôle, il est possible qu’un DTC de 1er parcours ne soit pas confirmé.

ATTENTION :
Toujours adapter sa vitesse aux exigences de sécurité.

Ⓧ Sans CONSULT-II

1) Démarrer le moteur et conduire le véhicule à la vitesse de 70 km/h pendant 2 minutes consécutives.
2) Arrêter le véhicule et laisser tourner le moteur.

3) Placer des sondes de voltmètre entre la borne 56 de l'ECM (signal de sonde à oxygène chauffé 2) et la masse du moteur.
4) Vérifier la tension en emballant le moteur jusqu'à 4 000 tr/mn à vide et ce, au moins 10 fois.
(appuyer sur la pédale d'accélérateur et la relâcher aussi vite que possible)
La tension doit être supérieure à 0,56 V au moins une fois pendant la procédure.
Si la tension est conforme à ce stade, il est inutile de procéder aux opérations décrites à l'étape 5.
5) Laisser le moteur tourner au ralenti pendant 10 minutes, puis vérifier la tension. Ou vérifier la tension lors du passage à 80 km/h en 3ème.
La tension doit être supérieure à 0,56 V au moins une fois pendant la procédure.
6) Si les résultats ne sont pas conformes, effectuer une ''Procédure de diagnostic'', voir page EC-3364.

Simpo PDF Merge and Split Unregistered Version - http://www.simpopdf.com

Schéma de câblage

NEEC0159

EC-O2S2B1-01

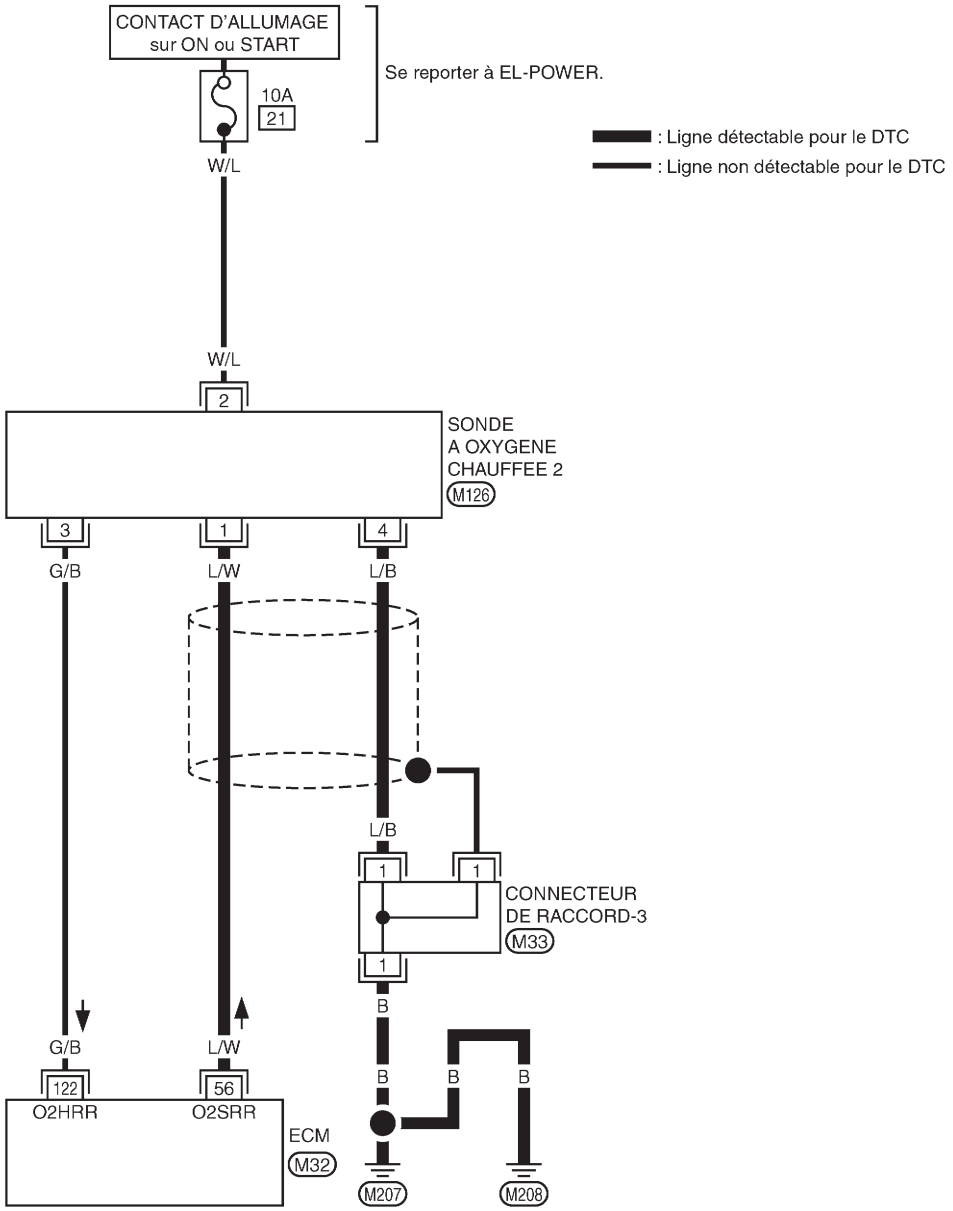

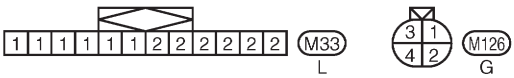

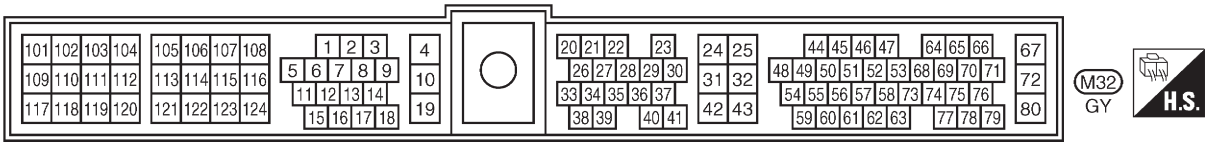

GEC246A

Procédure de diagnostic

NEEC0160

1	RESSERRER LES VIS DE MASSE

1. Mettre le contact d'allumage sur OFF.
2. Desserrer et resserrer les vis de masse du moteur.

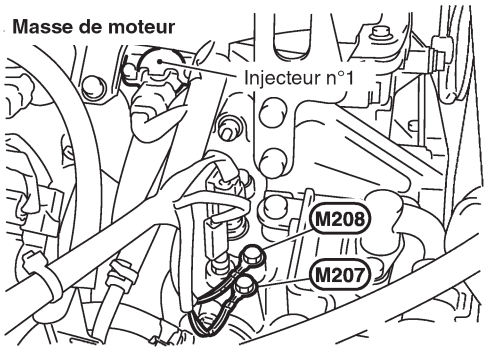

SEC309D

▶	ALLER A 2.

2	EFFACER LES DONNEES D'AUTO-INSTRUCTION

Avec CONSULT-II

1. Démarrer le moteur et l'amener à température normale de fonctionnement.
2. Sélectionner ''COM AUTO INSTRUCT'' dans le mode ''SUPPORT TRAVAIL'' de CONSULT-II.
3. Effacer le coefficient de commande d'auto-instruction en appuyant sur ''EFFAC''.

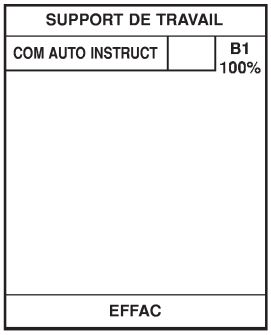

SEF215Z

4. Faire tourner le moteur pendant au moins 10 minutes au ralenti.
   Le DTC de 1er parcours P0171 est-il détecté ? Est-il difficile de démarrer le moteur ?

Sans CONSULT-II

1. Démarrer le moteur et l'amener à température normale de fonctionnement.
2. Mettre le contact d'allumage sur ''OFF''.
3. Débrancher le connecteur de faisceau du débitmètre d'air, redémarrer et faire tourner le moteur pendant au moins 3 secondes au ralenti.

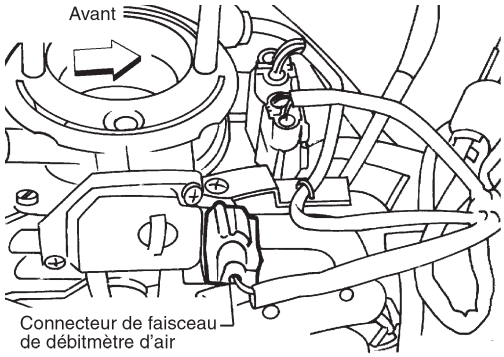

AEC131A

4. Eteindre le moteur et rebrancher le connecteur de faisceau du débitmètre d'air.
5. Vérifier que le DTC de 1er parcours P0102 est bien affiché.
6. Effacer le DTC de 1er parcours. Se reporter à ''COMMENT EFFACER LES CODES DE DIAGNOSTIC ANTIPOLLUTION'', EC-3065.
7. Vérifier que le DTC P0000 est bien affiché.
8. Faire tourner le moteur pendant au moins 10 minutes au ralenti.
   Le DTC de 1er parcours P0171 est-il détecté ? Est-il difficile de démarrer le moteur ?

Oui ou Non

Oui	▶	Réaliser le diagnostic des défauts pour DTC P0171. Se reporter à EC-3253.
Non	▶	ALLER A 3.

3	CONTROLER LE CIRCUIT DE SIGNAL D'ENTREE

1. Débrancher le connecteur de faisceau de la sonde à oxygène chauffé 2 et le connecteur de faisceau de l'ECM.
2. Vérifier la continuité du faisceau entre la borne 56 de l'ECM et la borne 1. Se reporter au schéma de câblage.
   Il doit y avoir continuité.
3. Vérifier la continuité du faisceau entre la borne 56 (ou 1) de l'ECM et la masse. Se reporter au schéma de câblage.
   Il ne doit pas y avoir continuité.
4. Vérifier également que le faisceau n'est pas en court-circuit à la masse ou à l'alimentation.

BON ou MAUVAIS

Bon	▶	ALLER A 5.
Mauvais	▶	ALLER A 4.

Simpo PDF Merge and Split Unregistered Version - http://www.simpopdf.com

4	DETECTER LA PIECE DEFECTUEUSE
Contrôler les points suivants. ● Vérifier que le faisceau entre l'ECM et la sonde à oxygène chauffé 2 n'est pas ouvert ou en court-circuit	
▶	Réparer les faisceaux ou les connecteurs en circuit ouvert ou en court-circuit à la masse ou à l'alimentation.

5	CONTROLER LE CIRCUIT DE MISE A LA MASSE
1. Vérifier la continuité du faisceau entre la borne 4 de la sonde à oxygène chauffé 2 et la masse du moteur. Se reporter au schéma de câblage. **Il doit y avoir continuité.** 2. Vérifier également que le faisceau n'est pas en court-circuit à l'alimentation.	
BON ou MAUVAIS	
Bon (avec CONSULT-II) ▶	ALLER A 7.
Bon (sans CONSULT-II) ▶	ALLER A 8.
Mauvais ▶	ALLER A 6.

6	DETECTER LA PIECE DEFECTUEUSE
Contrôler les points suivants. ● Connecteur de jonction-3 ● Vérifier que le faisceau entre la sonde à oxygène chauffé 2 et la masse du moteur n'est pas ouvert ou en court-circuit.	
▶	Réparer les faisceaux ou connecteurs en circuit ouvert ou en court-circuit à l'alimentation.

Simpo PDF Merge and Split Unregistered Version - http://www.simpopdf.com

7	CONTROLER LA SONDE A OXYGENE CHAUFFE 2

Avec CONSULT-II

1. Brancher à nouveau tous les connecteurs de faisceau débranchés.
2. Démarrer le moteur et conduire le véhicule à une vitesse de plus de 70 km/h pendant 2 minutes consécutives.
3. Arrêter le véhicule et laisser tourner le moteur.
4. Sélectionner ‘‘INJECTION CARB’’ en mode ‘‘TEST ACTIF’’ et sélectionner ‘‘S/O2 CH2 (R1)’’ comme élément à contrôler avec CONSULT-II.
5. Vérifier ‘‘S/O2 CH2 (R1)‘‘ au ralenti lorsque ‘‘INJECTION CARB‘‘ est réglé sur ±25.

TEST ACTIF	
INJECTION CARBUR	25 %
CONTROLE	
TR/MN MOT	XXX TR/MN
S/02 CH1 (R1)	XXX V
S/02 CH2 (R1)	XXX V
MTR S/02CH1 (R1)	RICHE
MTR S/02CH2 (R1)	RICHE

SEF662Y

La tension de ‘‘S/O2 CH2 (R1)’’ doit être supérieure à 0,56V au moins une fois lorsque le paramètre ‘‘INJECTION CARB’’ est à +25.La tension de ‘‘S/O2 CH2 (R1)’’ doit être inférieure à 0,54V au moins une fois lorsque le paramètre ‘‘INJECTION CARB’’ est à -25.

ATTENTION :

- **Jeter toute sonde à oxygène chauffé tombée d’une hauteur supérieure à 0,5 m sur une surface dure telle qu’un plancher en béton, et la remplacer par une sonde neuve.**
- **Avant de reposer une nouvelle sonde à oxygène, nettoyer le filetage du système d’échappement à l’aide de l’outil de nettoyage pour filetage de sonde à oxygène J-43897-18 ou J-43897-12 et un lubrifiant antigrippant agréé.**

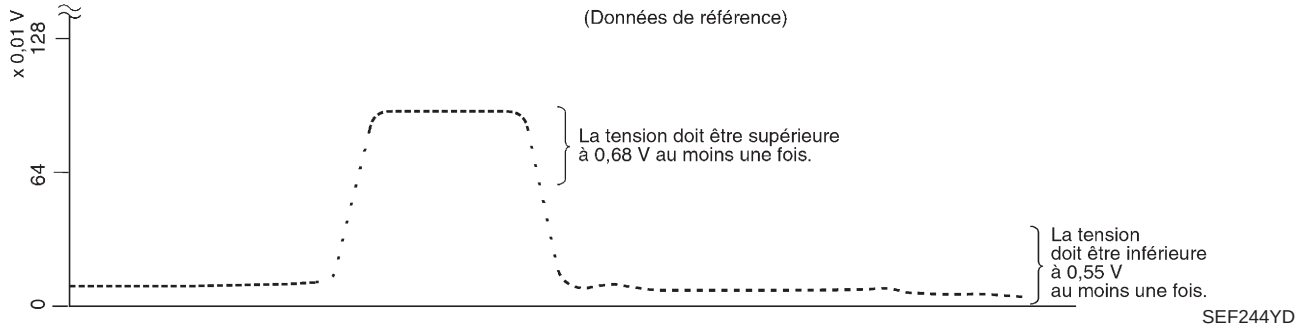

SEF244YD

BON ou MAUVAIS

Bon	▶	ALLER A 9.
Mauvais	▶	Remplacer la sonde à oxygène chauffé 2.

Simpo PDF Merge and Split Unregistered Version - http://www.simpopdf.com

8	CONTROLER LA SONDE A OXYGENE CHAUFFE 2

Sans CONSULT-II

1. Brancher à nouveau tous les connecteurs de faisceau débranchés.
2. Démarrer le moteur et conduire le véhicule à une vitesse de plus de 70 km/h pendant 2 minutes consécutives.
3. Arrêter le véhicule et laisser tourner le moteur.
4. Placer des sondes de voltmètre entre la borne 56 de l'ECM (signal de sonde à oxygène chauffé 2) et la masse du moteur.

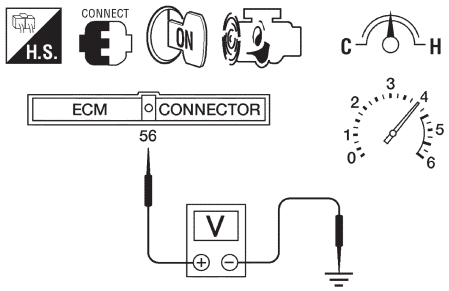

AEC874A

5. Vérifier la tension en emballant le moteur jusqu'à 4 000 tr/mn à vide et ce, au moins 10 fois.
   (appuyer sur la pédale d'accélérateur et la relâcher aussi vite que possible)
   La tension doit être supérieure à 0,56 V au moins une fois pendant la procédure.
   Si la tension est supérieure à 0,56V à l'étape 4, il est inutile de procéder aux opérations décrites à l'étape 5.
6. Vérifier la tension en emballant le moteur jusqu'à 5 000 tr/mn à vide. Ou laisser le moteur tourner au ralenti pendant 10 minutes, puis vérifier la tension. Ou vérifier la tension lors du passage à 80 km/h en 3ème (T/M), ou en position D avec surmultipliée sur ARRET (T/A).
   La tension doit être inférieure à 0,54V au moins une fois.
   ATTENTION :
   - **Jeter toute sonde à oxygène chauffé tombée d'une hauteur supérieure à 0,5 m sur une surface dure telle qu'un plancher en béton, et la remplacer par une sonde neuve.**
   - **Avant de reposer une nouvelle sonde à oxygène, nettoyer le filetage du système d'échappement à l'aide de l'outil de nettoyage pour filetage de sonde à oxygène J-43897-18 ou J-43897-12 et un lubrifiant antigrippant agréé.**

BON ou MAUVAIS

Bon	▶	ALLER A 9.
Mauvais	▶	Remplacer la sonde à oxygène chauffé 2.

9	VERIFIER LE CIRCUIT DE BLINDAGE

1. Mettre le contact d'allumage sur OFF.
2. Débrancher le connecteur de jonction-3.
3. Vérifier la continuité du faisceau entre la borne 1 du connecteur de jonction-3 et la masse. Se reporter au schéma de câblage.
   Il doit y avoir continuité.
4. Vérifier également que le faisceau n'est pas en court-circuit à l'alimentation.
5. Brancher à nouveau les connecteurs de faisceau.

BON ou MAUVAIS

Bon	▶	ALLER A 11.
Mauvais	▶	ALLER A 10.

10	DETECTER LA PIECE DEFECTUEUSE

Contrôler les points suivants.
- Connecteur de jonction-3 (Se reporter à ''DISPOSITION DES FAISCEAUX'', dans la section EL.)
- Faisceau ouvert ou en court-circuit entre le connecteur de jonction-3 et la masse du moteur.

	▶	Réparer les faisceaux ou connecteurs en circuit ouvert ou court-circuit.

Simpo PDF Merge and Split Unregistered Version - http://www.simpopdf.com

11	**VERIFIER SI L'INCIDENT EST INTERMITTENT**
Effectuer un ''DIAGNOSTIC DES DEFAUTS EN CAS INCIDENT INTERMITTENT'', voir page EC-3132.	
▶	**FIN DE L'INSPECTION**

Simpo PDF Merge and Split Unregistered Version - http://www.simpopdf.com

Logique de diagnostic de bord

NEEC1534

Si le ventilateur de refroidissement ou tout autre composant du système de refroidissement est défectueux, la température du moteur augmente.
Lorsque la température du liquide de refroidissement du moteur atteint un degré de température anormalement élevé, un défaut est indiqué.

N° de DTC	Le défaut est détecté quand ...	Contrôler les points suivants (causes possibles)
P1217 1217	● Le liquide de refroidissement atteint une température excessive.	● Ventilateur de refroidissement (entraîné par le vilebrequin) Flexible de radiateur ● Radiateur ● Bouchon de radiateur ● Pompe à eau ● Thermostat ● Capteur de température du liquide de refroidissement du moteur Pour plus d'informations, se reporter à ''11 CAUSES PRINCIPALES DE SURCHAUFFE'', page EC-3374.

ATTENTION :
Lorsqu'un défaut est indiqué, veiller à remplacer le liquide de refroidissement. Se reporter à la section MA, ''Remplacer le liquide de refroidissement du moteur''. Remplacer également l'huile moteur.

1) **Faire le plein du radiateur jusqu'au niveau spécifié en versant 2 litres de liquide de refroidissement par minute. Veiller à utiliser un liquide de refroidissement contenant une richesse de mélange appropriée. Se reporter à la section MA ''Richesse de mélange de liquide de refroidissement antigel''.**
2) **Après avoir fait le plein de liquide de refroidissement, faire tourner le moteur pour s'assurer que l'on n'entend aucun bruit d'écoulement d'eau.**

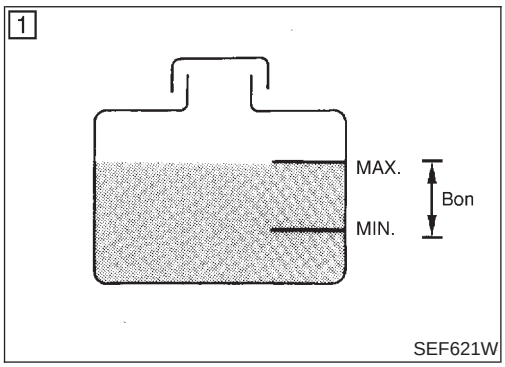

Vérification du fonctionnement général

NEEC1535

AVERTISSEMENT :
Ne jamais déposer le bouchon de radiateur lorsque le moteur est chaud. Le liquide haute pression s'échappant du radiateur peut occasionner de sérieuses brûlures.
Entourer le bouchon d'un chiffon épais. Retirer le bouchon avec précaution en le tournant d'un quart de tour pour permettre à la pression de s'échapper. Puis tourner le bouchon à fond.

1) Contrôler le niveau de liquide de refroidissement dans le réservoir et dans le radiateur.
   Laisser le moteur refroidir avant de vérifier le niveau de liquide de refroidissement.
   Si le niveau du liquide de réfrigérant dans le réservoir et/ou dans le radiateur est au-dessous de la limite correcte, sauter les étapes suivantes et passer directement à la ''Procédure de diagnostic'', page EC-3371.
2) Vérifier si le client a fait le plein de liquide de refroidissement ou non. Si le client a fait le plein de liquide de refroidissement, sauter les étapes suivantes et passer à la ''Procédure de diagnostic'', page EC-3371.

Simpo PDF Merge and Split Unregistered Version - http://www.simpopdf.com

Procédure de diagnostic

NEEC1536

1	CONTROLER L'ETANCHEITE DU SYSTEME DE REFROIDISSEMENT

Augmenter la pression du système de refroidissement à l'aide d'un testeur, et vérifier si la pression chute.

Pression d'essai : 157 kPa (1,57 bar, 1,6 kg/cm^2)

ATTENTION :

Une pression supérieure à celle spécifiée pourrait endommager le radiateur.

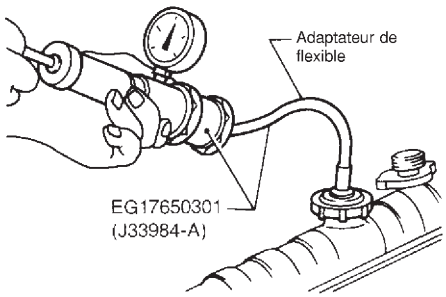

SLC754A

La pression ne doit pas chuter.

BON ou MAUVAIS

Bon	▶	ALLER A 2.
Mauvais	▶	**Vérifier l'étanchéité des éléments suivants.** ● Flexible ● Radiateur ● Pompe à eau Se reporter à la section LC, "Pompe à eau".

2	CONTROLER LE BOUCHON DE RADIATEUR

Mettre le bouchon sous pression à l'aide d'un testeur.

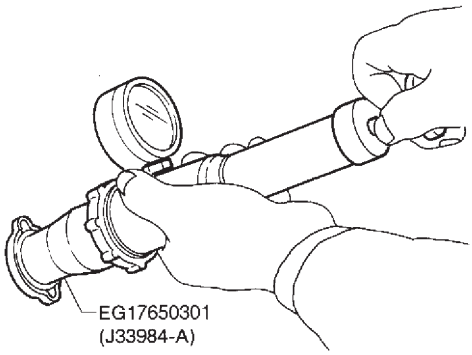

SLC755A

Pression de décharge du bouchon de radiateur :
78 - 98 kPa (0,78 - 0,98 bar, 0,8 - 1,0 kg/cm^2)

BON ou MAUVAIS

Bon	▶	ALLER A 3.
Mauvais	▶	Remplacer le bouchon de radiateur.

Simpo PDF Merge and Split Unregistered Version - http://www.simpopdf.com

3	CONTROLER LE THERMOSTAT

1. Vérifier l'assise de la soupape à température ambiante normale.
   Elle doit être assise en contact étroit avec le siège.
2. Vérifier la température d'ouverture de soupape et la levée de soupape.

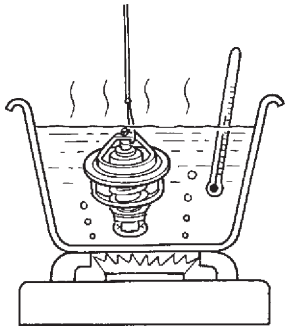

SLC343

Température d'ouverture de soupape :
76,5°C [standard]
Levée de soupape :
Plus de 8 mm/90°C

3. Vérifier si la soupape est fermée à 5°C au-dessous de la température d'ouverture de la vanne.

Pour plus de détails, consulter la section LC, ''Thermostat''.

BON ou MAUVAIS

Bon	▶	ALLER A 4.
Mauvais	▶	Remplacer le thermostat.

Simpo PDF Merge and Split Unregistered Version - http://www.simpopdf.com

4	CONTROLER LE CAPTEUR DE TEMPERATURE DU LIQUIDE DE REFROIDISSEMENT

Vérifier la résistance comme indiqué sur l'illustration ci-contre.

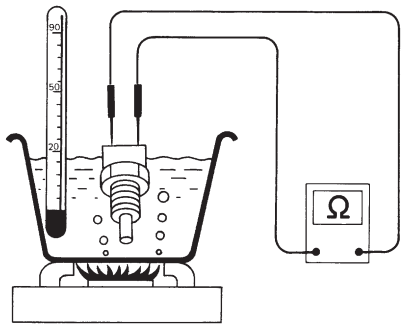

SEF152P

<Données de référence>

Température °C	Résistance kΩ
20	2,1 -2,9
50	0,68 - 1,00
90	0,236 - 0,260

MTBL0285

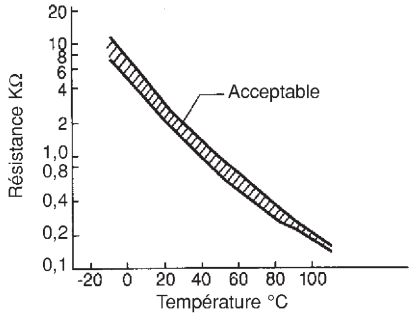

SEF012P

BON ou MAUVAIS

Bon	▶	ALLER A 5.
Mauvais	▶	Remplacer le capteur de température du liquide de refroidissement du moteur.

5	CONTROLER LES 11 CAUSES PRINCIPALES
Si la cause ne peut pas être identifiée, aller à ''11 CAUSES PRINCIPALES DE SURCHAUFFE'', page EC-3374.	
▶	**FIN DE L'INSPECTION**

Effectuer le CONTROLE FINAL en effectuant la procédure suivante après la réparation.

1. Faire chauffer le moteur. Faire tourner le moteur pendant au moins 20 minutes. Observer la jauge de la température du liquide de refroidissement moteur sur le panneau de bord. Si la jauge indique une température anormalement élevée, il se peut qu'une autre pièce soit défectueuse.
2. Arrêter le véhicule et et laisser tourner le moteur au ralenti. Vérifier que les systèmes d'admission et d'échappement ne présentent pas de fuites en écoutant si un bruit s'échappe ou en effectuant un contrôle visuel des composants.
3. Laisser refroidir le moteur et effectuer un contrôle visuel pour détecter les fuites d'huile et de liquide de refroidissement éventuelles. Ensuite, réaliser la ''VERIFICATION DU FONCTIONNEMENT GENERAL''.

DTC P1217 SURCHAUFFE DU MOTEUR
Simpo PDF Merge and Split Unregistered Version - http://www.simpopdf.com

11 causes principales de surchauffe

NEEC1537

Moteur	ETAPE	Elément d'inspection	Equipement	Standard	Page de référence
ARRET	1	● Radiateur encrassé ● Condenseur bouché ● Grille de radiateur encrassée ● Pare-chocs bloqué	● Visuel	Pas de blocage	—
	2	● Mélange de liquide de refroidissement	● Testeur de liquide de refroidissement	Mélange eau/antigel 50 - 50	Voir la section MA, ''LIQUIDES ET LUBRIFIANTS RECOMMANDES''.
	3	● Niveau de liquide de refroidissement	● Visuel	Liquide de refroidissement au niveau ''MAXI'' dans le réservoir et le goulot de remplissage du radiateur	Voir la section MA, ''Remplacement du liquide de refroidissement moteur''.
	4	● Bouchon de radiateur	● Testeur de pression	78 kPa - 98 kPa (0,78 - 0,98 bar, 0,8 - 1,0 kg/cm^2, 11 - 14 psi) 59 kPa - 98 kPa (0,59 - 0,98 bar, 0,6 - 1,0 kg/cm^2, 9 - 14 psi) (limite)	Voir la section LC, ''Contrôle du système''.
MAR*2	5	● Fuites de liquide de refroidissement	● Visuel	Absence de fuites	Voir la section LC, ''Contrôle du système''.
MAR*2	6	● Thermostat	● Toucher les flexibles supérieur et inférieur du radiateur	Les deux flexibles doivent être chauds	Voir la section LC, ''Thermostat'' et la section LC, ''Radiateur''.
ARRET	7	● Fuite du gaz de combustion	● Analyseur générique de gaz 4 du testeur chimique de contrôleur de couleur	Négatif	—
MAR*3	8	● Jauge de température de liquide de refroidissement	● Visuel	La jauge n'est pas aux 3/4 lors de la conduite	—
		● Trop-plein de liquide de refroidissement au réservoir	● Visuel	Pas de trop-plein lors de la conduite et du ralenti	Voir la section MA, ''Remplacement du liquide de refroidissement moteur''.
ARRET*4	9	● Le liquide de refroidissement repart du réservoir vers le radiateur	● Visuel	Le niveau du réservoir doit être le même qu'au départ	Voir la section MA, ''ENTRETIEN DU MOTEUR''.
ARRET	10	● Culasse	● Jauge d'épaisseur droite	0,1 mm de défaut de planéité max. (gauchissement)	Voir la section EM, ''Inspection''.
	11	● Bloc-cylindres et pistons	● Visuel	Pas de frottement sur les parois du cylindre ou sur le piston	Voir la section EM, ''Inspection''.

*1 : Mettre le contact d'allumage sur ON.
*2 : Le moteur tourne à 3 000 tr/mn pendant 10 minutes.
*3 : Conduire à 90 km/h pendant 30 minutes puis laisser tourner au ralenti pendant 10 minutes.
*4 : Après 60 minutes de refroidissement.
Pour plus d'information, se référer à ''ANALYSE DES CAUSES DE SURCHAUFFE'' à la section LC''.

Simpo PDF Merge and Split Unregistered Version - http://www.simpopdf.com

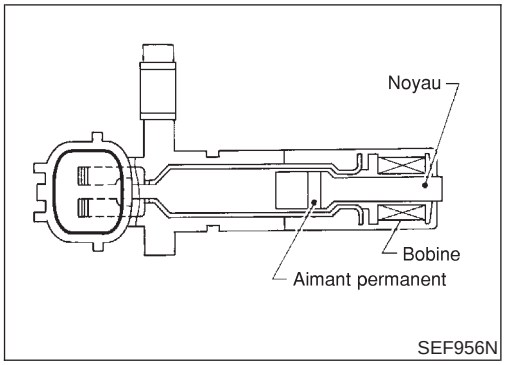

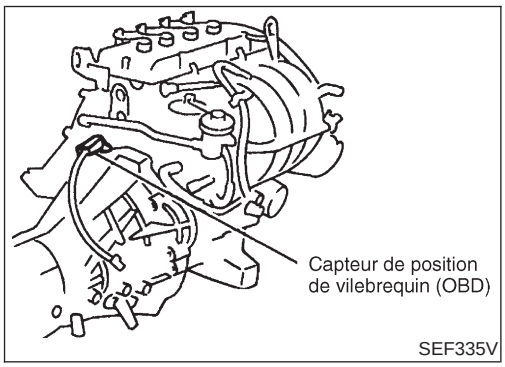

Description des composants

NEEC0327

Le capteur de position du vilebrequin (OBD) est situé sur carter de boîte-pont face aux dents de pignon (dentures) du volant-moteur ou du plateau d'entraînement. Cela permet de détecter la fluctuation de la révolution du moteur.

La capteur comprend un aimant permanent, un noyau, et une bobine.

Lorsque le moteur tourne, la succession de dents et de vides de la roue dentée entraîne une variation de l'espacement avec le capteur.

Cette variation d'espacement entraîne une variation du champ magnétique près du capteur.

Cette variation du champ magnétique entraîne une variation de la tension fournie par le capteur.

L'ECM reç;oit le signal de tension et détecte les variations du régime-moteur.

Ce capteur ne joue aucun rôle dans le système de gestion du moteur.

Il est utilisé exclusivement à des fins de diagnostic de bord.

Bornes de l'ECM et valeurs de référence

NEEC0328

Les données de spécification sont des valeurs de référence et sont mesurées entre chaque borne et la masse.

ATTENTION :

Ne pas utiliser de bornes de masse de l'ECM lors de la mesure de la tension d'entrée/de sortie. En agissant de la sorte, il est possible d'endommager le transistor de l'ECM. Utiliser une masse autre que les bornes de l'ECM, comme par exemple la prise de terre.

N° DE BORNE	COULEUR DE CABLE	ELEMENT	CONDITION	DONNEES (tension du courant alternatif)
43	B	Masse de capteurs	**[Moteur en marche]** ● **Pendant la montée en température** ● Régime de ralenti	Environ 0 V
47	L	Capteur de position du vilebrequin (OBD)	**[Moteur en marche]** ● **Pendant la montée en température** ● Régime de ralenti	env. 0 V 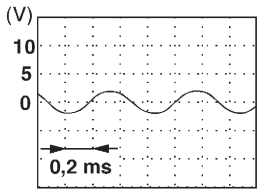
			[Moteur en marche] ● Le régime-moteur est de 2 000 tr/mn.	env. 0 V 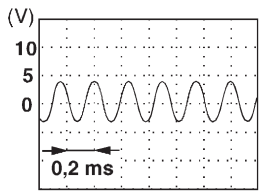

Simpo PDF Merge and Split Unregistered Version - http://www.simpopdf.com

Logique de diagnostic de bord

NEEC0329

N° de DTC	Le défaut est détecté quand ...	Eléments de contrôle (causes possibles)
P1336 1336	● L'effritement des dents de pignon (denture) du volant-moteur ou du plateau d'entraînement est détecté par l'ECM.	● Faisceau ou connecteurs ● Capteur de position du vilebrequin (OBD) ● Volant-moteur

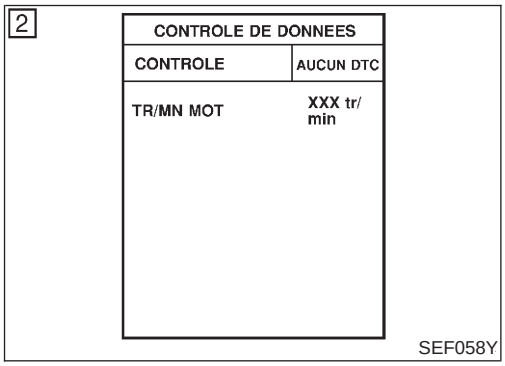

Procédure de confirmation de code de défaut (DTC)

NEEC0330

REMARQUE :
Si une ''Procédure de confirmation de DTC'' a précédé, toujours mettre le contact d'allumage sur la position OFF et attendre au moins 5 secondes avant de procéder à l'essai suivant.

Avec CONSULT-II

1) Mettre le contact d'allumage sur ON et régler CONSULT-II en mode ''CONTROLE DE DONNEES''.
2) Démarrer le moteur et le laisser tourner au ralenti pendant au moins 2 minutes.
3) Si le DTC de 1er parcours est détecté, aller à ''Procédure de diagnostic'', page EC-3378.

Avec l'analyseur générique GST

Suivre la procédure ''Avec CONSULT-II''.

Simpo PDF Merge and Split Unregistered Version - http://www.simpopdf.com

Schéma de câblage

NEEC0331

EC-CKPS-01

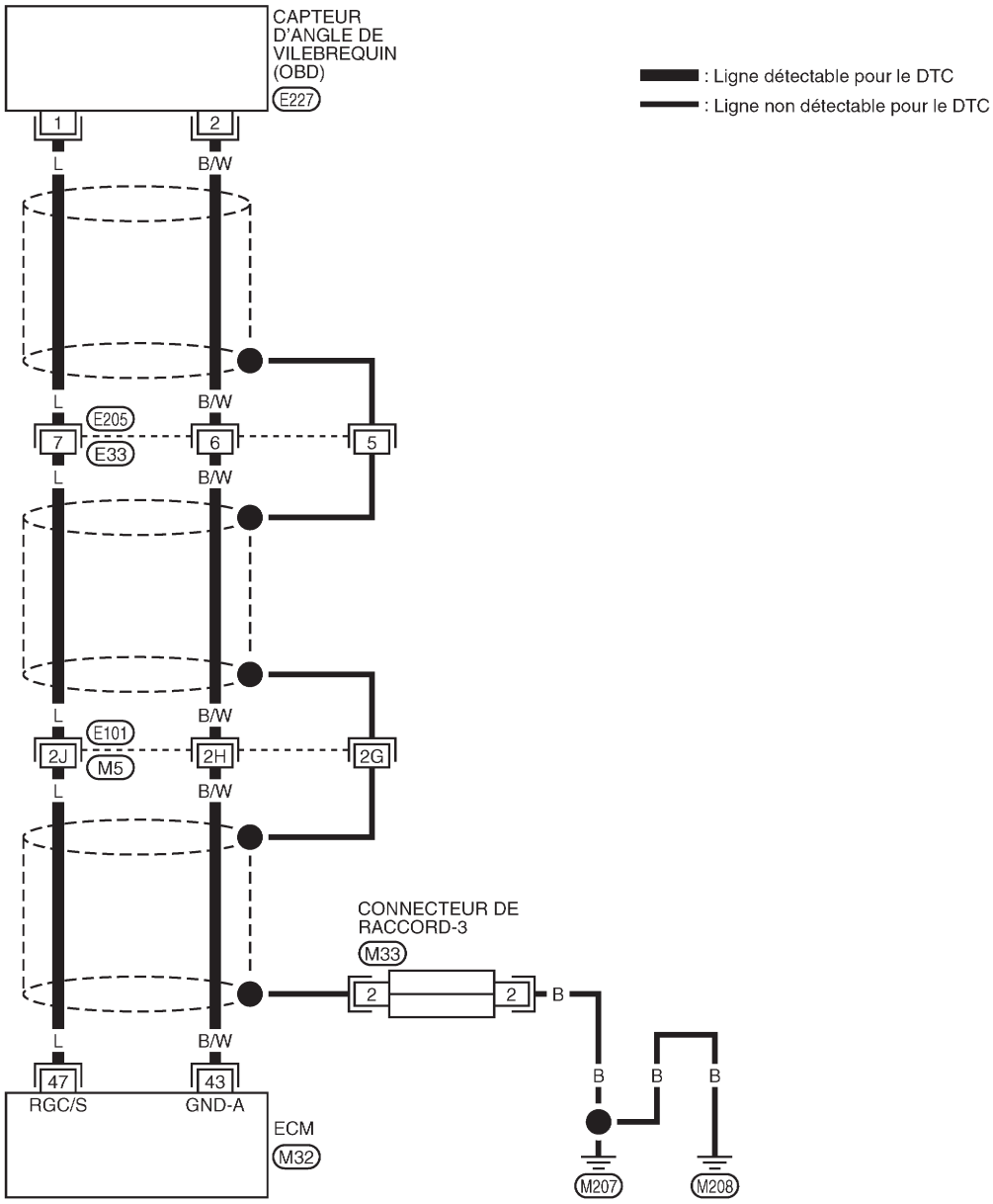

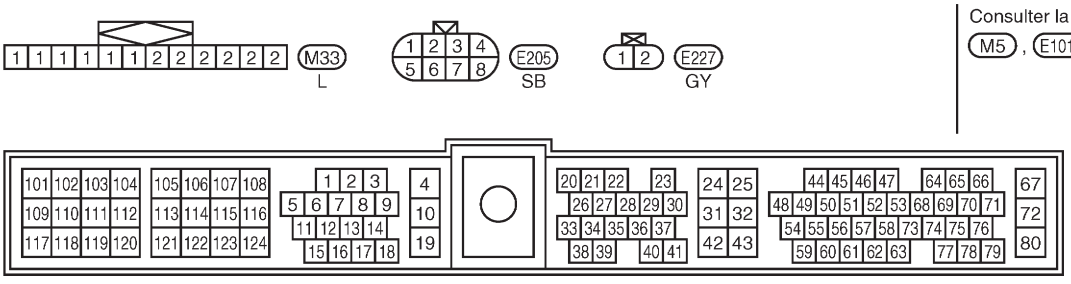

Consulter la dernière page dépliante.
M5 , E101

GEC236A

Simpo PDF Merge and Split Unregistered Version - http://www.simpopdf.com

Procédure de diagnostic

NEEC0332

1	RESSERRER LES VIS DE MASSE
1. Mettre le contact d'allumage sur OFF. 2. Desserrer et resserrer les vis de masse du moteur.	
▶	ALLER A 2.

2	CONTROLER LE CIRCUIT DE SIGNAL D'ENTREE

1. Débrancher les connecteurs de faisceau du capteur de position de vilebrequin (OBD) et de l'ECM.

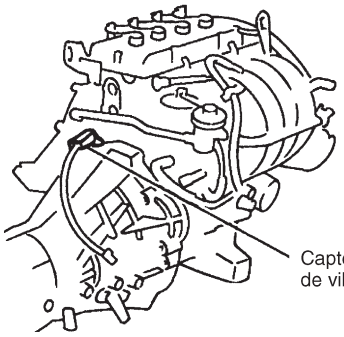

SEF335V

2. Vérifier la continuité du faisceau entre la borne 47 de l'ECM et la borne 1. Se reporter au schéma de câblage.
   Il doit y avoir continuité.
3. Vérifier également que le faisceau n'est pas en court-circuit à la masse ou à l'alimentation.

BON ou MAUVAIS

Bon	▶	ALLER A 4.
Mauvais	▶	ALLER A 3.

3	DETECTER LA PIECE DEFECTUEUSE

Contrôler les points suivants.
- Connecteurs de faisceau E205, E33
- Connecteurs de faisceau E101, M5
- Faisceau ouvert ou en court-circuit entre le capteur de position de vilebrequin (OBD) et l'ECM.

▶	Réparer les faisceaux ou les connecteurs en circuit ouvert ou en court-circuit à la masse ou à l'alimentation.

4	CONTROLER LE CIRCUIT DE MISE A LA MASSE

1. Rebrancher les connecteurs de faisceau de l'ECM.
2. Vérifier la continuité du faisceau entre la borne 2 du capteur de position du vilebrequin 2 et la masse du moteur. Se reporter au schéma de câblage.
   Il doit y avoir continuité.
3. Vérifier également que le faisceau n'est pas en court-circuit à l'alimentation.

BON ou MAUVAIS

Bon	▶	ALLER A 6.
Mauvais	▶	ALLER A 5.

5	DETECTER LA PIECE DEFECTUEUSE

Contrôler les points suivants.
- Connecteurs de faisceau E205, E33
- Connecteurs de faisceau E101, M5
- Faisceau ouvert ou en court-circuit entre le capteur de position du vilebrequin (OBD) et l'ECM

▶	Réparer les faisceaux ou les connecteurs en circuit ouvert ou en court-circuit à la masse ou à l'alimentation.

Simpo PDF Merge and Split Unregistered Version - http://www.simpopdf.com

6	VERIFIER LE CIRCUIT DE BLINDAGE

1. Mettre le contact d'allumage sur OFF.
2. Débrancher les connecteurs de faisceau E205, E33.
3. Vérifier la continuité du faisceau entre la borne 5 du connecteur de faisceau E33 et la masse. Se reporter au schéma de câblage.
   Il doit y avoir continuité.
4. Vérifier également que le faisceau n'est pas en court-circuit à l'alimentation.
5. Brancher à nouveau les connecteurs de faisceau.

BON ou MAUVAIS

Bon	▶	ALLER A 8.
Mauvais	▶	ALLER A 7.

7	DETECTER LA PIECE DEFECTUEUSE

Contrôler les points suivants.
- Connecteurs de faisceau E101, M5
- Connecteur de jonction-3 (Se reporter à ''DISPOSITION DES FAISCEAUX'', dans la section EL.)
- Faisceau ouvert ou en court-circuit entre le connecteur de faisceau E33 et la masse du moteur

	▶	Réparer les faisceaux ou connecteurs en circuit ouvert ou en court-circuit à l'alimentation.

8	VERIFIER REPOSE INCORRECTE

Desserrer et resserrer le boulon de fixation du capteur de position de vilebrequin (OBD). Ensuite, procéder à un nouvel essai.

Panne non réparée.	▶	ALLER A 9.

Simpo PDF Merge and Split Unregistered Version - http://www.simpopdf.com

9	CONTROLER LE CAPTEUR DE POSITION DU VILEBREQUIN (OBD)

1. Débrancher le connecteur de faisceau du capteur de position de vilebrequin (OBD).
2. Desserrer le boulon de fixation du capteur.
3. Déposer le capteur.
4. Vérifier visuellement si le capteur n'est pas buriné.

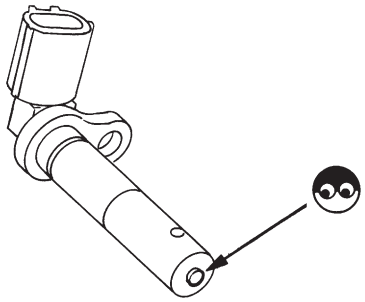

SEF960N

5. Vérifier la résistance comme indiqué sur l'illustration ci-contre.

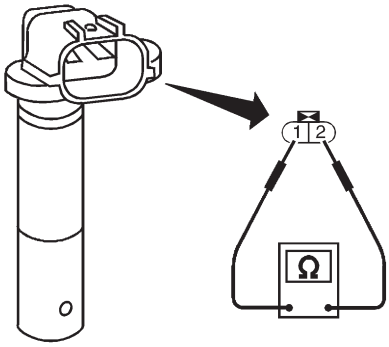

SEF231W

Résistance : Environ 512 - 632Ω [à 20°C]

BON ou MAUVAIS

Bon	▶	ALLER A 10.
Mauvais	▶	Remplacer le capteur de position de vilebrequin (OBD).

10	VERIFIER LES DENTS DU PIGNON

Effectuer un contrôle visuel pour détecter l'effritement des dents de pignon (denture) du volant-moteur ou de du plateau d'entraînement.

BON ou MAUVAIS

Bon	▶	ALLER A 11.
Mauvais	▶	Remplacer le volant-moteur.

11	VERIFIER SI L'INCIDENT EST INTERMITTENT

Effectuer un ''DIAGNOSTIC DES DEFAUTS EN CAS INCIDENT INTERMITTENT'', voir page EC-3132.

	▶	**FIN DE L'INSPECTION**

Simpo PDF Merge and Split Unregistered Version - http://www.simpopdf.com

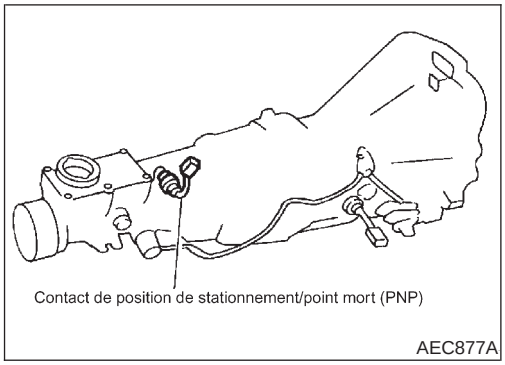

Description des composants

NEEC0424

Lorsque l'embrayage est sur la position ''P'' ou ''N'', le contact de position de stationnement/mort (PNP) est en ''MARCHE''.
L'ECM détecte cet état lorsqu'il y a continuité avec la masse.

Valeur de référence de CONSULT-II en mode de contrôle de données

NEEC0425

Les données de spécification sont des valeurs de référence.

ELEMENT DE CONTROLE	CONDITION		SPECIFICATION
CON NEUTRE	● Contact d'allumage : ON	Levier de changement de vitesses : ''N''	MAR
		Sauf ci-dessus	ARR

Bornes de l'ECM et valeurs de référence

NEEC0426

Les données de spécification sont des valeurs de référence et sont mesurées entre chaque borne et la masse.

ATTENTION :
Ne pas utiliser de bornes de masse de l'ECM lors de la mesure de la tension d'entrée/de sortie. En agissant de la sorte, il est possible d'endommager le transistor de l'ECM. Utiliser une masse autre que les bornes de l'ECM, comme par exemple la prise de terre.

N° DE BORNE	COULEUR DE CABLE	ELEMENT	CONDITION	DONNEES (tension de courant continu)
22	Y/R	Contact de stationnement/ point mort (PNP)	**[Contact d'allumage sur ''ON'']** ● Position du levier de vitesses sur ''N''	Environ 0 V
			[Contact d'allumage sur ''ON''] ● Autres positions	Environ 5 V

Logique de diagnostic de bord

NEEC0427

N° de DTC	Le défaut est détecté quand ...	Eléments de contrôle (causes possibles)
P1706 1706	● Le signal du contact PNP ne varie pas alors que le moteur est en marche et que le véhicule roule.	● Faisceau ou connecteurs (le circuit du contact PNP est ouvert ou en court-circuit) ● Contact de stationnement/point mort (PNP)

Simpo PDF Merge and Split Unregistered Version - http://www.simpopdf.com

CONTROLE DE DONNEES	
CONTROLE	AUCUN DTC
CON NEUTRE	MAR

SEF212Y

5

CONTROLE DE DONNEES	
CONTROLE	AUCUN DTC
TR/MN MOT	XXX tr/min
CAP TEMP MOT	XXX °C
CAP VIT VEHIC	XXX km/h
CON NEUTRE	ARR
PLAN CAR BASE	XXX ms

SEF213Y

Procédure de confirmation de code de défaut (DTC)

=NEEC0428

ATTENTION :

Toujours adapter sa vitesse aux exigences de sécurité.

REMARQUE :

Si une ‘‘Procédure de confirmation de DTC’’ a précédé, toujours mettre le contact d’allumage sur la position ‘‘OFF’’ et attendre au moins 5 secondes avant de procéder à l’essai suivant.

Avec CONSULT-II

1) Mettre le contact d’allumage sur ON.
2) Sélectionner ‘‘CON NEUTRE’’ (contact PNP) dans le mode ‘‘CONTROLE DE DONNEES’’ de CONSULT-II. Ensuite, vérifier le signal ‘‘CON NEUTRE’’ dans les conditions suivantes.

Position (levier sélecteur)	Signal de bonne connaissance
‘‘N’’	MAR
Sauf position ci-dessus	ARR

Si les résultats ne sont pas conformes, effectuer une ‘‘Procédure de diagnostic’’, voir page EC-3385.
Si le résultat est satisfaisant, passer à l’étape suivante.

3) Régler CONSULT-II en mode ‘‘CONTROLE DE DONNEES’’.
4) Démarrer le moteur et l’amener à température normale de fonctionnement.
5) Maintenir les conditions suivantes pendant au moins 60 secondes consécutives.

TR/MN MOT	1400 - 4000 tr/mn
CAP TEMP MOT	Plus de 70°C
PLAN CAR BASE	3,5 - 17 ms
CAP VIT VEHIC	Plus de 64 km/h
Levier de vitesses	Rapport adapté

6) Si le DTC de 1er parcours est détecté, aller à ‘‘Procédure de diagnostic’’, page EC-3385.

Simpo PDF Merge and Split Unregistered Version - http://www.simpopdf.com

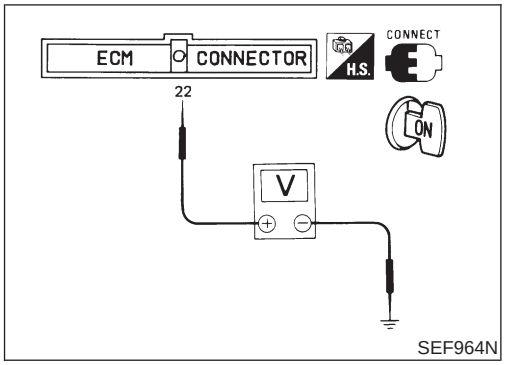

Vérification du fonctionnement général

=NEEC0429

Utiliser cette procédure pour vérifier le fonctionnement général du circuit du contact de position de stationnement/point mort (PNP). Au cours de ce contrôle, il est possible qu'un DTC de 1er parcours ne soit pas confirmé.

Sans CONSULT-II

1) Mettre le contact d'allumage sur ON.
2) Contrôler la tension entre la borne 22 de l'ECM (signal du contact PNP) et la masse carrosserie dans les conditions suivantes.

Condition (position de rapport)	Tension (V) (valeurs spécifiées)
position ''N''	env. 0
Sauf position ci-dessus	env. 5

3) Si les résultats ne sont pas conformes, effectuer une ''Procédure de diagnostic'', voir page EC-3385.

Simpo PDF Merge and Split Unregistered Version - http://www.simpopdf.com

Schéma de câblage

NEEC0430

EC-PNP/SW-01

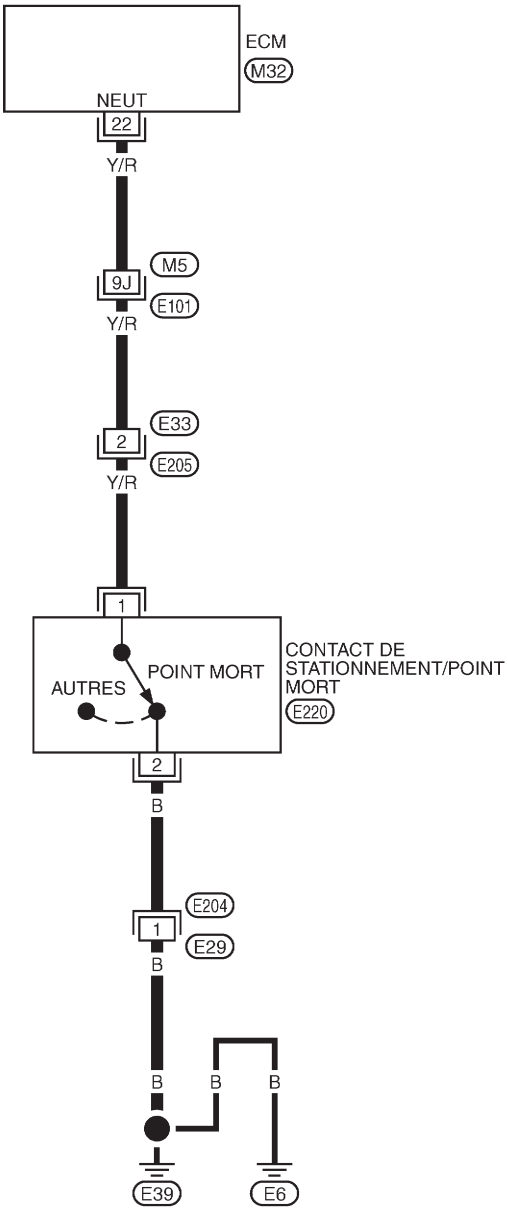

: Ligne détectable pour le DTC
: Ligne non détectable pour le DTC

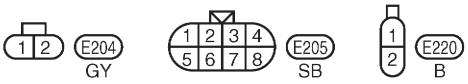

Consulter la dernière page dépliante.
M5 , E101

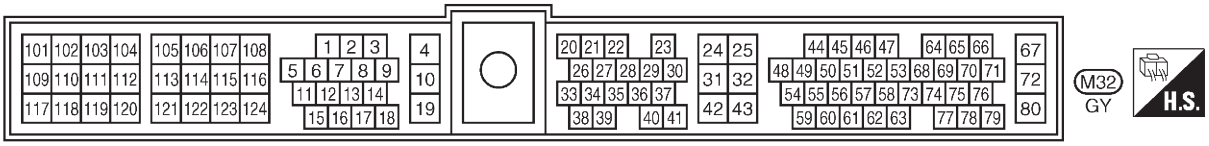

GEC253A

Simpo PDF Merge and Split Unregistered Version - http://www.simpopdf.com

Procédure de diagnostic

NEEC1059

1	CONTROLER LE CIRCUIT DE MISE A LA MASSE

1. Mettre le contact d'allumage sur OFF.
2. Débrancher le connecteur de faisceau du contact de stationnement/point mort (PNP).

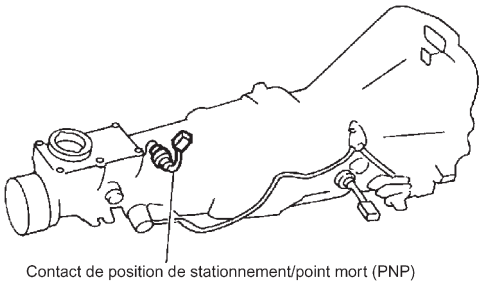

AEC877A

3. Vérifier la continuité du faisceau entre la borne 2 et la masse de la carrosserie.

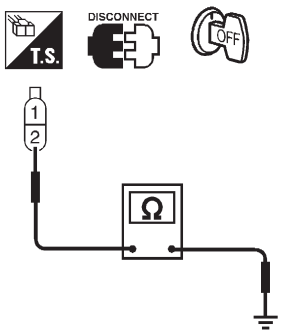

SEF218V

Il doit y avoir continuité.

4. Vérifier également que le faisceau n'est pas en court-circuit à l'alimentation.

BON ou MAUVAIS

Bon	▶	ALLER A 3.
Mauvais	▶	ALLER A 2.

2	DETECTER LA PIECE DEFECTUEUSE

Contrôler les points suivants.
- Connecteurs de faisceau E204, E29
- Faisceau ouvert ou en court-circuit entre le contact PNP et l'ECM

	▶	Réparer les faisceaux ou connecteurs en circuit ouvert ou en court-circuit à l'alimentation.

Simpo PDF Merge and Split Unregistered Version - http://www.simpopdf.com

3	CONTROLER LE CIRCUIT DE SIGNAL D'ENTREE

1. Débrancher le connecteur de faisceau de l'ECM.
2. Vérifier la continuité du faisceau entre la borne 22 de l'ECM et la borne 1.

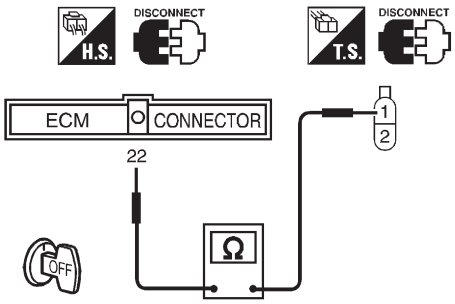

SEF219V

Il doit y avoir continuité.

3. Vérifier également que le faisceau n'est pas en court-circuit à la masse ou à l'alimentation.

BON ou MAUVAIS

Bon	▶	ALLER A 5.
Mauvais	▶	ALLER A 4.

4	DETECTER LA PIECE DEFECTUEUSE

Contrôler les points suivants.
- Connecteurs de faisceau M5, E101
- Connecteurs de faisceau E33, E205
- Faisceau ouvert ou court-circuit entre le contact PNP et l'ECM

	▶	Réparer les faisceaux ou les connecteurs en circuit ouvert ou en court-circuit à la masse ou à l'alimentation.

5	CONTROLER LE CONTACT DE STATIONNEMENT/POINT MORT

Se reporter à la section MT.

BON ou MAUVAIS

Bon	▶	ALLER A 6.
Mauvais	▶	Remplacer le contact PNP.

6	VERIFIER SI L'INCIDENT EST INTERMITTENT

Effectuer un ''DIAGNOSTIC DES DEFAUTS EN CAS INCIDENT INTERMITTENT'', voir page EC-3132.

	▶	**FIN DE L'INSPECTION**

Simpo PDF Merge and Split Unregistered Version - http://www.simpopdf.com

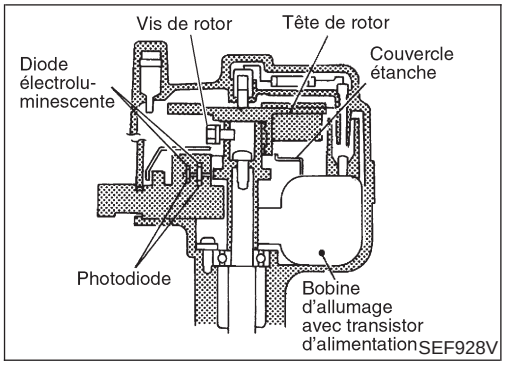

Description des composants

NEEC0319

BOBINE D'ALLUMAGE ET TRANSISTOR D'ALIMENTATION

NEEC0319S01

Le signal d'allumage envoyé par l'ECM est délivré au transistor d'alimentation qui l'amplifie. Le transistor d'alimentation ouvre et coupe le circuit primaire de la bobine d'allumage. Ce fonctionnement intermittent induit la tension élevée correcte dans le circuit secondaire de la bobine.
Le distributeur ne peut être réparé et doit être remplacé comme un ensemble, à l'exception du couvercle du distributeur et de la tête du rotor.

REMARQUE :
La vis du rotor qui fixe la tête du rotor de distribution à l'arbre du distributeur doit être convenablement serrée.

: 3,3 - 3,9 N·m (0,34 - 0,40 kg-m)

Valeur de référence de CONSULT-II en mode de contrôle de données

NEEC0320

ELEMENT DE CONTROLE	CONDITION		SPECIFICATION
CALAGE ALLUM	• Moteur : une fois le moteur chaud • Interrupteur de climatiseur : ARRET • Levier de changement de vitesses : "N" • A vide	Ralenti	env. 15° avant PMH
		2000 tr/mn	Plus de 30° avant PMH

Simpo PDF Merge and Split Unregistered Version - http://www.simpopdf.com

Bornes de l'ECM et valeurs de référence

=NEEC0321

Les données de spécification sont des valeurs de référence et sont mesurées entre chaque borne et la masse.

ATTENTION :
Ne pas utiliser de bornes de masse de l'ECM lors de la mesure de la tension d'entrée/de sortie. En agissant de la sorte, il est possible d'endommager le transistor de l'ECM. Utiliser une masse autre que les bornes de l'ECM, comme par exemple la prise de terre.

N° DE BORNE	COULEUR DE CABLE	ELEMENT	CONDITION	DONNEES (tension de courant continu)
1	W/PU	Signal d'allumage	**[Moteur en marche]** ● **Pendant la montée en température** ● Régime de ralenti	0 - 0,5V 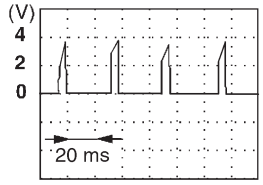 SEF996V
			[Moteur en marche] ● Le régime-moteur est de 2 000 tr/mn.	0,2 - 1,0V 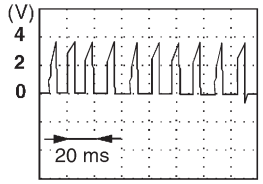 SEF997V

Simpo PDF Merge and Split Unregistered Version - http://www.simpopdf.com

Schéma de câblage

NEEC0324

EC-IGNSYS-01

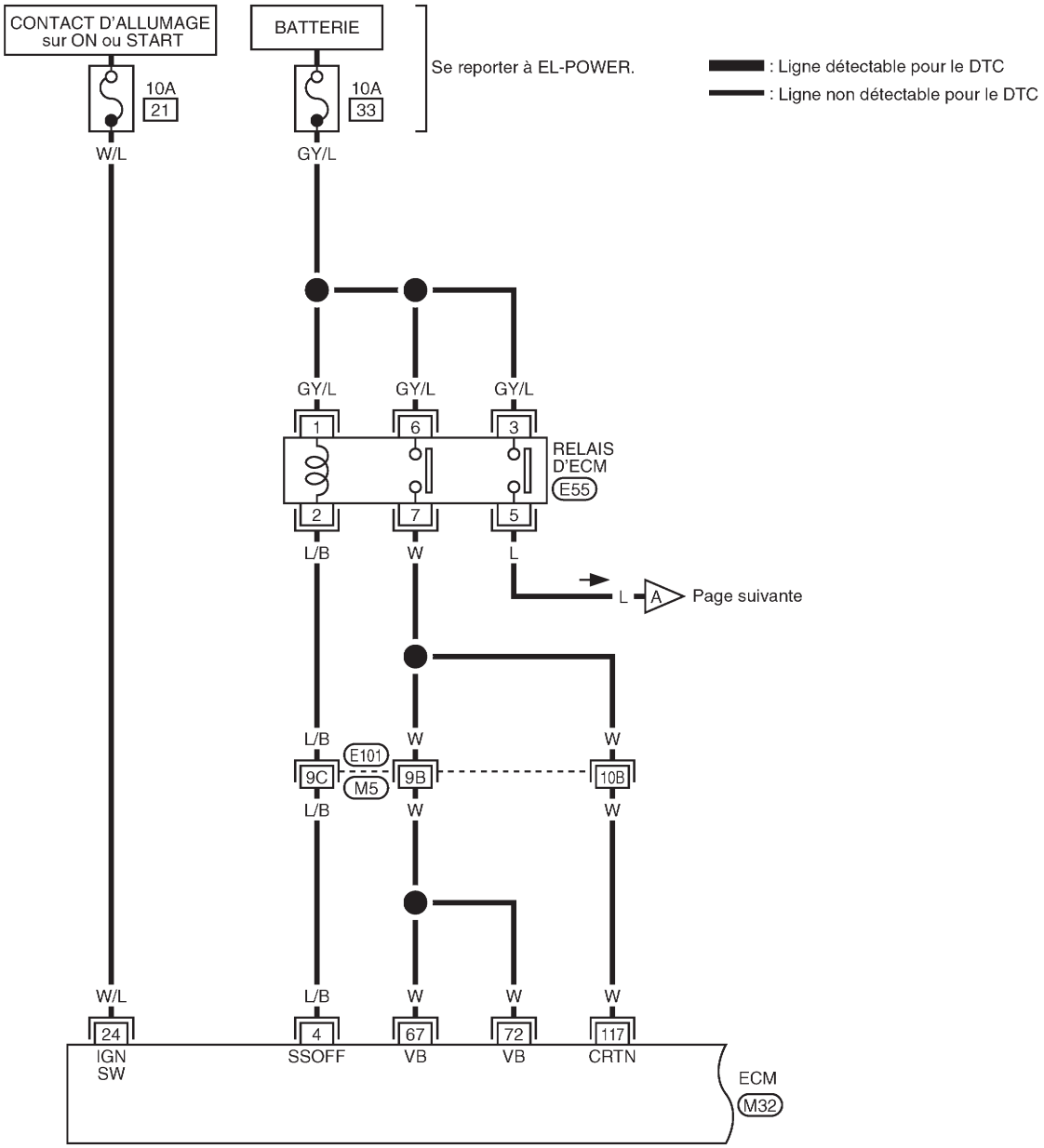

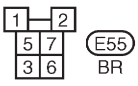

Consulter la dernière page dépliante.
(M5), (E101)

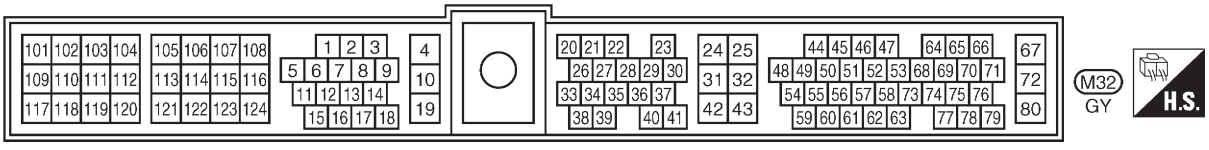

GEC240A

Simpo PDF Merge and Split Unregistered Version - http://www.simpopdf.com

EC-IGNSYS-02

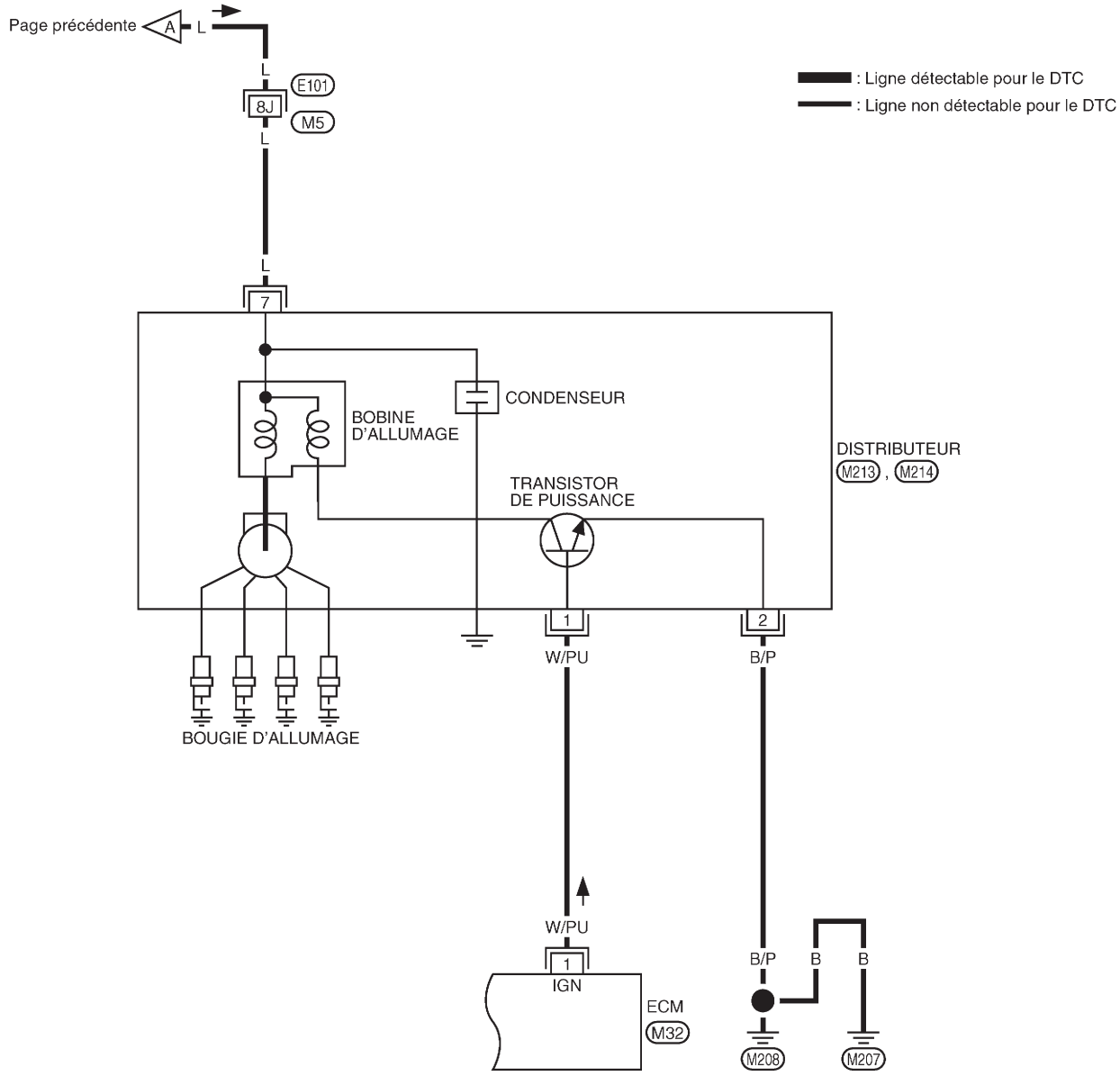

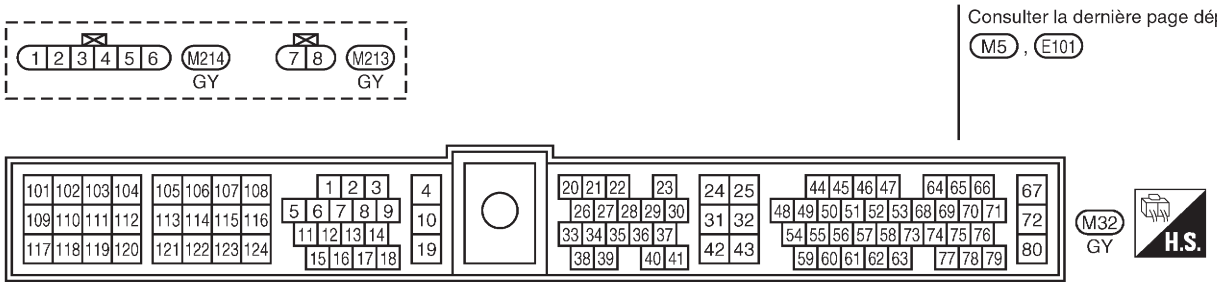

GEC241A

Simpo PDF Merge and Split Unregistered Version - http://www.simpopdf.com

Procédure de diagnostic

NEEC0325

1	DEBUT DE L'INSPECTION
Mettre le contact d'allumage sur ''OFF'', et redémarrer le moteur. **Le moteur tourne-t-il ?**	
Oui ou Non	
Oui (avec CONSULT-II) ▶	ALLER A 2.
Oui (sans CONSULT-II) ▶	ALLER A 3.
Non ▶	ALLER A 4.

2	CONTROLER LE FONCTIONNEMENT GENERAL

Avec CONSULT-II

1. Effectuer ''EQUILIBR PUISSANCE'' en mode ''TEST ACTIF'' avec CONSULT-II.
2. Vérifier que tous les circuits ne produisent pas une baisse momentanée du régime-moteur.

TEST ACTIF	
EQUILIBRE PUISSANCE	
CONTROLE	
TR/MN MOT	XXX tr/mn
DEBITMETRE-R1	XXX V
VANNE IACV-AAC	XXX %

SEF981Z

BON ou MAUVAIS

Bon ▶	**FIN DE L'INSPECTION**
Mauvais ▶	ALLER A 7.

3	CONTROLER LE FONCTIONNEMENT GENERAL

Sans CONSULT-II

1. Laisser le moteur au ralenti.
2. Avec un oscilloscope, relever le signal de tension entre la borne 1 de l'ECM et la masse.
3. Vérifier que l'écran de l'oscilloscope affiche une courbe de signal telle qu'illustrée ci-dessous.

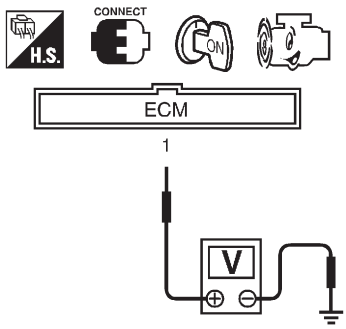

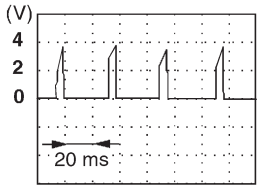

SEF984Z

BON ou MAUVAIS

Bon ▶	**FIN DE L'INSPECTION**
Mauvais ▶	ALLER A 7.

Simpo PDF Merge and Split Unregistered Version - http://www.simpopdf.com

4	CONTROLER L'ALIMENTATION ELECTRIQUE

1. Mettre le contact d'allumage sur OFF.
2. Débrancher le connecteur de faisceau de la bobine d'allumage.

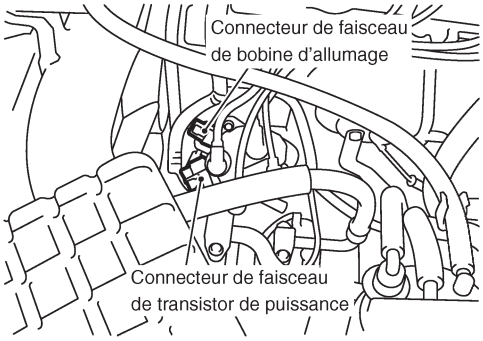

SEC276D

3. Mettre le contact d'allumage sur ON.
4. Vérifier la tension entre la borne 7 et la masse à l'aide de CONSULT-II ou du testeur.

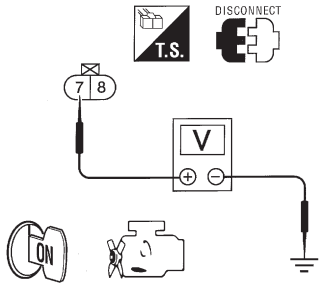

AEC698

Tension : Tension de la batterie

BON ou MAUVAIS

Bon	▶	ALLER A 6.
Mauvais	▶	ALLER A 5.

5	DETECTER LA PIECE DEFECTUEUSE

Contrôler les points suivants.
- Connecteurs de faisceau E101, M5
- Faisceau ouvert ou en court-circuit entre la bobine d'allumage et le relais de l'ECM
- Faisceau ouvert ou en court-circuit entre le relais de l'ECM et le fusible

	▶	Réparer le faisceau ou les connecteurs.

6	CONTROLER LE CIRCUIT DE MISE A LA MASSE

1. Mettre le contact d'allumage sur OFF.
2. Débrancher le connecteur du faisceau du transistor d'alimentation.
3. Vérifier la continuité du faisceau entre la borne 2 du transistor d'alimentation et la masse du moteur. Se reporter au schéma de câblage.
   Il doit y avoir continuité.
4. Vérifier également que le faisceau n'est pas en court-circuit à l'alimentation.

BON ou MAUVAIS

Bon	▶	ALLER A 7.
Mauvais	▶	Réparer les faisceaux ou connecteurs en circuit ouvert ou en court-circuit à l'alimentation.

Simpo PDF Merge and Split Unregistered Version - http://www.simpopdf.com

7	CONTROLER LE CIRCUIT DE SIGNAL D'ENTREE

1. Débrancher le connecteur de faisceau de l'ECM.
2. Vérifier la continuité du faisceau entre la borne 1 de l'ECM et la borne 1 du transistor d'alimentation.

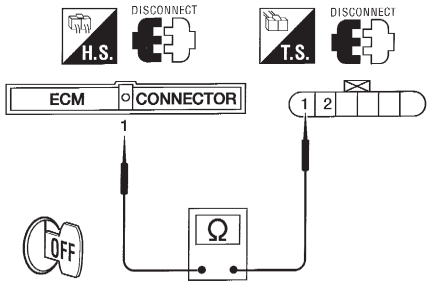

AEC700

Il doit y avoir continuité.

3. Vérifier également que le faisceau n'est pas en court-circuit à la masse ou à l'alimentation.

BON ou MAUVAIS

Bon	▶	ALLER A 8.
Mauvais	▶	Réparer les faisceaux ou les connecteurs en circuit ouvert ou en court-circuit à la masse ou à l'alimentation.

8	VERIFIER LA BOBINE D'ALLUMAGE

1. Débrancher le connecteur de faisceau de la bobine d'allumage.
2. Retirer le couvercle du distributeur.
3. Vérifier la résistance comme indiqué sur l'illustration ci-contre.

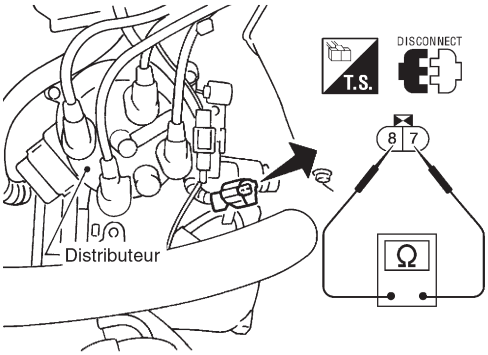

AEC150A

Borne	Résistance [à 25°C (77°F)]
7 - 8	Inférieur à 1Ω
7 - 9	7 - 13Ω

MTBL0300

BON ou MAUVAIS

Bon	▶	ALLER A 9.
Mauvais	▶	Remplacer l'ensemble du distributeur comme un tout.

Simpo PDF Merge and Split Unregistered Version - http://www.simpopdf.com

9	CONTROLER TRANSISTOR D'ALIMENTATION

1. Débrancher le connecteur de faisceau du capteur d'angle d'arbre à cames et du transistor d'alimentation et le connecteur de faisceau de la bobine d'allumage.

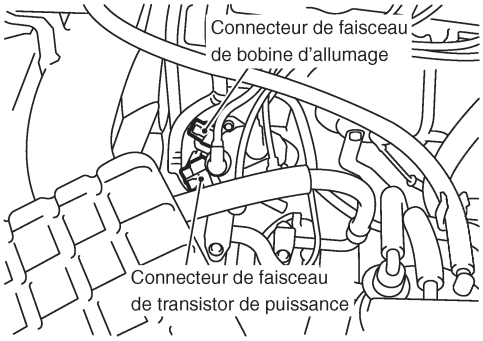

SEC276D

2. Vérifier comme suit la résistance entre les bornes du capteur d'angle d'arbre à cames, du transistor d'alimentation et de la bobine d'allumage. Se reporter au schéma de câblage.

N° de borne (Polarité)	Résistance Ω [à 25°C (77°F)]
7 (+) - 2 (–)	Sauf 0 ou ∞
1 (+) - 7 (–)	Sauf 0
1 (+) - 2 (–)	

MTBL1309

BON ou MAUVAIS

Bon	▶	ALLER A 10.
Mauvais	▶	Remplacer l'ensemble du distributeur.

10	VERIFIER SI L'INCIDENT EST INTERMITTENT
Effectuer un ''DIAGNOSTIC DES DEFAUTS EN CAS INCIDENT INTERMITTENT'', voir page EC-3132.	
▶	**FIN DE L'INSPECTION**

Simpo PDF Merge and Split Unregistered Version - http://www.simpopdf.com

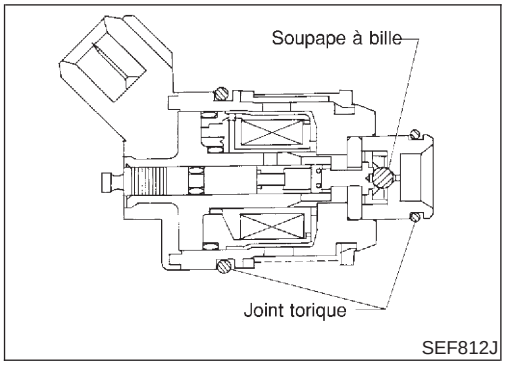

Description des composants

NEEC0435

L'injecteur de carburant est une électrovanne précise de petite dimension. Quand l'ECM fournit une masse au circuit de l'injecteur, la bobine située dans l'injecteur est alimentée en courant. La bobine alimentée tire la soupape à bille et permet au carburant de couler par l'injecteur dans le collecteur d'admission. La quantité de carburant injectée est déterminée par la durée de l'impulsion d'injection. La durée d'impulsion correspond au temps durant lequel l'injecteur reste ouvert. L'ECM commande la durée d'impulsion d'injection basée sur les besoins en carburant du moteur.

Bornes de l'ECM et valeurs de référence

NEEC0437

Les données de spécification sont des valeurs de référence et sont mesurées entre chaque borne et la masse.

ATTENTION :
Ne pas utiliser de bornes de masse de l'ECM lors de la mesure de la tension d'entrée/de sortie. En agissant de la sorte, il est possible d'endommager le transistor de l'ECM. Utiliser une masse autre que les bornes de l'ECM, comme par exemple la prise de terre.

N° DE BORNE	COULEUR DE CABLE	ELEMENT	CONDITION	DONNEES (tension de courant continu)
102 104 109 111	W/L W/G W/R W/B	Injecteur N° 1 Injecteur N° 3 Injecteur N° 2 Injecteur N° 4	**[Moteur en marche]** ● **Pendant la montée en température** ● Régime de ralenti	TENSION DE LA BATTERIE (11 V - 14 V) 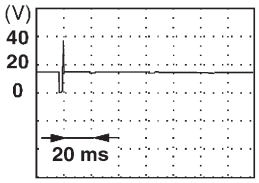 SEF011W
			[Moteur en marche] ● **Pendant la montée en température** ● Le régime-moteur est de 2 000 tr/mn.	TENSION DE LA BATTERIE (11 V - 14 V) 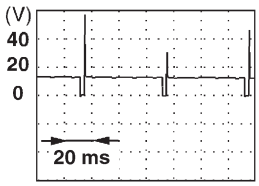 SEF012W

Simpo PDF Merge and Split Unregistered Version - http://www.simpopdf.com

Schéma de câblage

NEEC0434

EC-INJECT-01

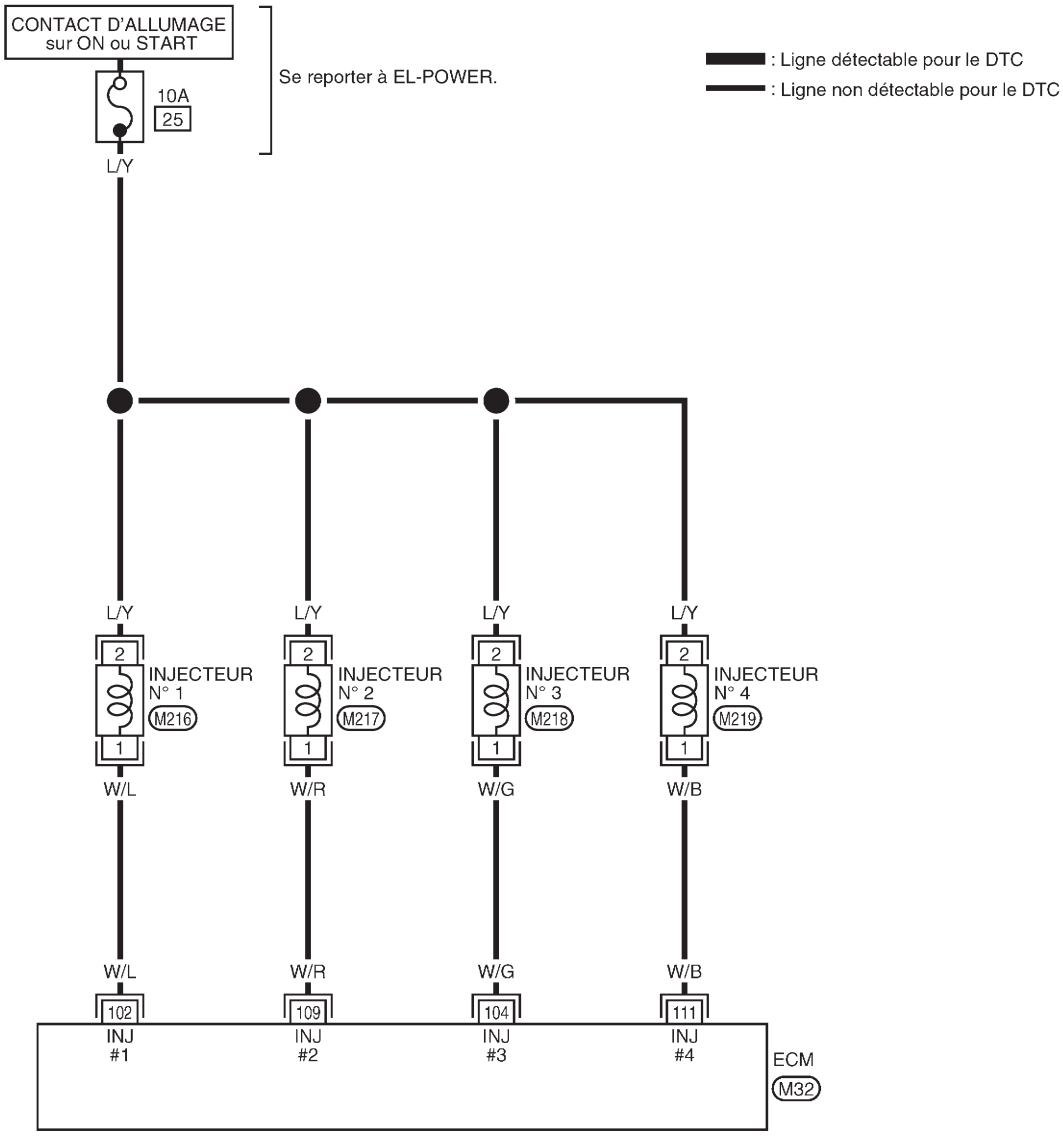

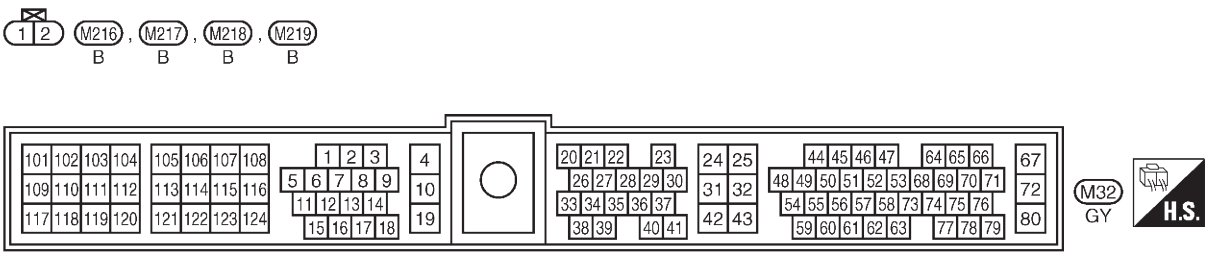

GEC254A

Simpo PDF Merge and Split Unregistered Version - http://www.simpopdf.com

Procédure de diagnostic

NEEC0438

1	CONTROLER LE FONCTIONNEMENT GENERAL

Avec CONSULT-II

1. Démarrer le moteur.
2. Effectuer ‘‘EQUILIBR PUISSANCE’’ en mode ‘‘TEST ACTIF’’ avec CONSULT-II.

TEST ACTIF	
EQUILIBRE PUISSANCE	
CONTROLE	
TR/MN MOT	XXX tr/mn
DEBITMETRE-R1	XXX V
VANNE IACV-AAC	XXX %

SEF981Z

3. Vérifier que chaque circuit produit une baisse momentanée du régime-moteur.

Sans CONSULT-II

1. Démarrer le moteur.
2. Contrôler le bruit de fonctionnement de chaque injecteur.

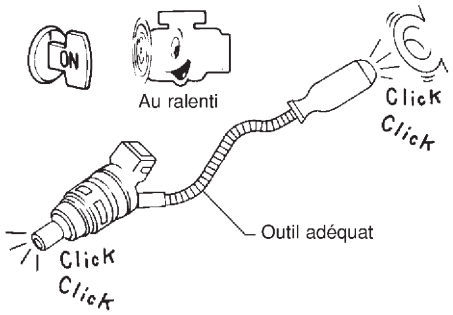

MEC703B

On doit entendre un cliquetis.

BON ou MAUVAIS

Bon	▶	**FIN DE L’INSPECTION**
Mauvais	▶	ALLER A 2.

Simpo PDF Merge and Split Unregistered Version - http://www.simpopdf.com

2	CONTROLER L'ALIMENTATION ELECTRIQUE

1. Arrêter le moteur.
2. Débrancher le connecteur de faisceau de l'injecteur.
3. Mettre le contact d'allumage sur ON.
4. Contrôler la tension entre la borne 2 de l'injecteur et la masse à l'aide de CONSULT-II ou du testeur.

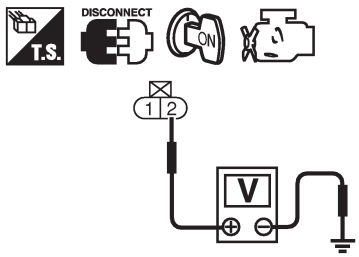

SEC277D

Tension : Tension de la batterie

BON ou MAUVAIS

Bon	▶	ALLER A 4.
Mauvais	▶	ALLER A 3.

3	DETECTER LA PIECE DEFECTUEUSE

Contrôler les points suivants.
- Fusible de 10 A
- Faisceau ouvert ou en court-circuit entre l'injecteur et le fusible

	▶	Réparer le faisceau ou les connecteurs.

4	CONTROLER LE CIRCUIT DU SIGNAL DE SORTIE

1. Mettre le contact d'allumage sur OFF.
2. Débrancher le connecteur de faisceau de l'ECM.
3. Vérifier la continuité du faisceau entre la borne 1 de l'injecteur et les bornes 102, 104, 109, 111 de l'ECM. Se reporter au Schéma de câblage.
   Il doit y avoir continuité.
4. Vérifier également que le faisceau n'est pas en court-circuit à la masse ou à l'alimentation.

BON ou MAUVAIS

Bon	▶	ALLER A 6.
Mauvais	▶	ALLER A 5.

5	DETECTER LA PIECE DEFECTUEUSE

Vérifier que le faisceau n'est pas ouvert ou en court-circuit entre l'ECM et l'injecteur.

	▶	Réparer les faisceaux ou les connecteurs en circuit ouvert ou en court-circuit à la masse ou à l'alimentation.

Simpo PDF Merge and Split Unregistered Version - http://www.simpopdf.com

6	CONTROLER L'INJECTEUR

1. Débrancher le connecteur de faisceau de l'injecteur.
2. Vérifier la résistance entre les bornes comme indiqué sur l'illustration ci-contre.

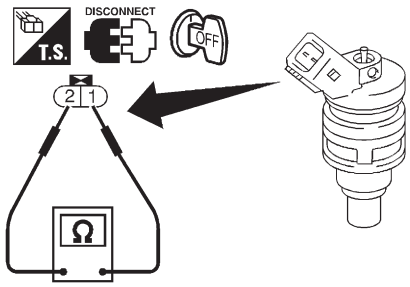

SEC278D

Résistance : 7,3 - 9,9Ω [à 25°C]

BON ou MAUVAIS

Bon	▶	ALLER A 7.
Mauvais	▶	Remplacer l'injecteur.

7	VERIFIER SI L'INCIDENT EST INTERMITTENT
Effectuer un ''DIAGNOSTIC DES DEFAUTS EN CAS D'INCIDENT INTERMITTENT'', voir page EC-3132.	
	▶ **FIN DE L'INSPECTION**

Simpo PDF Merge and Split Unregistered Version - http://www.simpopdf.com

Valeur de référence de CONSULT-II en mode de contrôle de données

NEEC0441

Les données de spécification sont des valeurs de référence.

ELEMENT DE CONTROLE	CONDITION	SPECIFICATION
SIGNAL DE MAR	● Contact d'allumage : ON → START → ON	ARR → MAR → ARR

Bornes de l'ECM et valeurs de référence

NEEC0442

Les données de spécification sont des valeurs de référence et sont mesurées entre chaque borne et la masse.

ATTENTION :
Ne pas utiliser de bornes de masse de l'ECM lors de la mesure de la tension d'entrée/de sortie. En agissant de la sorte, il est possible d'endommager le transistor de l'ECM. Utiliser une masse autre que les bornes de l'ECM, comme par exemple la prise de terre.

N° DE BORNE	COU-LEUR DE CABLE	ELEMENT	CONDITION	DONNEES (tension de courant continu)
20	R	Signal de démarrage	**[Contact d'allumage sur "ON"]**	Environ 0 V
			[Contact d'allumage sur "START"]	TENSION DE LA BATTE-RIE (11 V - 14 V)

Simpo PDF Merge and Split Unregistered Version - http://www.simpopdf.com

Schéma de câblage

NEEC0440

EC-S/SIG-01

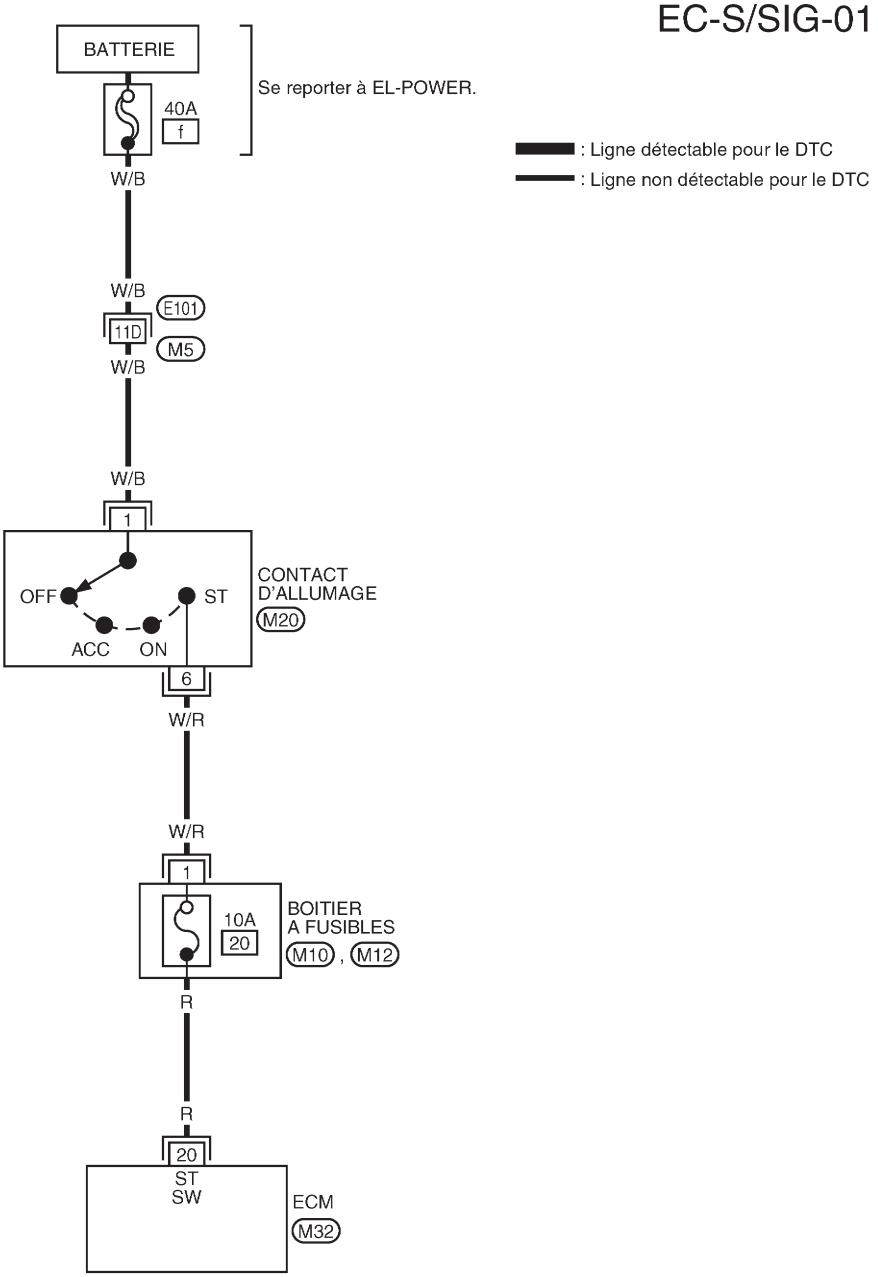

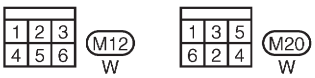

Consulter la dernière page dépliante.
M5 , E101
M10

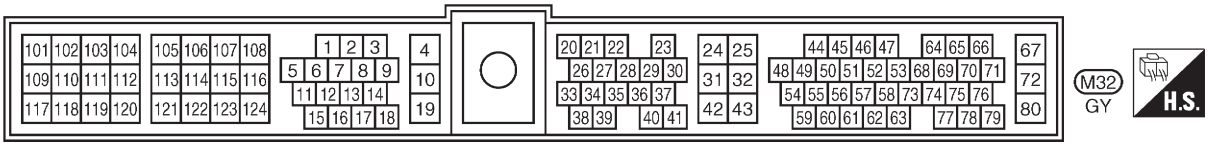

GEC255A

Simpo PDF Merge and Split Unregistered Version - http://www.simpopdf.com

Procédure de diagnostic

=NEEC0443

1	DEBUT DE L'INSPECTION
CONSULT-II est-il disponible ?	
Oui ou Non	
Oui ▶	ALLER A 2.
Non ▶	ALLER A 3.

2	CONTROLER LE FONCTIONNEMENT GENERAL

Avec CONSULT-II

1. Mettre le contact d'allumage sur ON.
2. Faire le test ''SIGNAL DEMAR'' (signal de démarrage) dans le mode ''CONTROLE DE DONNEES'' de CONSULT-II dans les conditions suivantes.

CONTROLE DE DONNEES	
CONTROLE	PAS DE DTC
SIGNAL DEMAR	ARR

Condition	''SIGNAL DEMAR''
Contact d'allumage ''ON''	OFF
Contact d'allumage ''START''	ON

SEF227Y

BON ou MAUVAIS

Bon ▶	**FIN DE L'INSPECTION**
Mauvais ▶	ALLER A 4.

3	CONTROLER LE FONCTIONNEMENT GENERAL

Sans CONSULT-II

1. Mettre le contact d'allumage sur START.
2. Contrôler la tension entre la borne 20 de l'ECM et la masse dans les conditions suivantes.

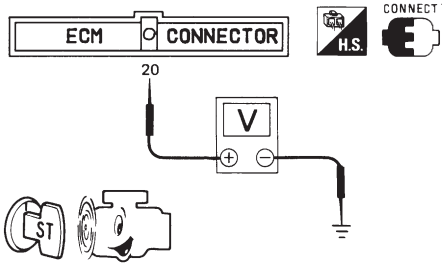

SEF109P

Condition	Tension
Contact d'allumage sur 'START'	Tension de batterie
Sauf ci-dessus	Environ 0 V

MTBL0143

BON ou MAUVAIS

Bon ▶	**FIN DE L'INSPECTION**
Mauvais ▶	ALLER A 4.

Simpo PDF Merge and Split Unregistered Version - http://www.simpopdf.com

4	DETECTER LA PIECE DEFECTUEUSE	
Contrôler les points suivants. ● Fusible de 40 A ● Connecteurs de faisceau E101, M5 ● Faisceau en circuit ouvert ou en court-circuit entre le contact d'allumage et le fusible de 40 A		
BON ou MAUVAIS		
Bon	▶	ALLER A 5.
Mauvais	▶	Réparer les faisceaux ou les connecteurs en circuit ouvert ou en court-circuit à la masse ou à l'alimentation.

5	CONTROLER LE CIRCUIT DE SIGNAL D'ENTREE	
1. Mettre le contact d'allumage sur OFF. 2. Débrancher le connecteur de faisceau de l'ECM et le contact d'allumage. 3. Vérifier la continuité du faisceau entre la borne 20 de l'ECM et la borne 6 du contact d'allumage. Se reporter au schéma de câblage. **Il doit y avoir continuité.** 4. Vérifier également que le faisceau n'est pas en court-circuit à la masse ou à l'alimentation.		
BON ou MAUVAIS		
Bon	▶	ALLER A 7.
Mauvais	▶	ALLER A 6.

6	DETECTER LA PIECE DEFECTUEUSE	
Contrôler les points suivants. ● Connecteurs de boîtier à fusibles M10, M12 ● Faisceau ouvert ou en court-circuit entre l'ECM et le contact d'allumage		
BON ou MAUVAIS		
Bon	▶	ALLER A 7.
Mauvais	▶	Réparer les faisceaux ou les connecteurs en circuit ouvert ou en court-circuit à la masse ou à l'alimentation.

7	VERIFIER SI L'INCIDENT EST INTERMITTENT	
Effectuer un ''DIAGNOSTIC DES DEFAUTS EN CAS INCIDENT INTERMITTENT'', voir page EC-3132.		
	▶	**FIN DE L'INSPECTION**

Simpo PDF Merge and Split Unregistered Version - http://www.simpopdf.com

Description du système

NEEC0444

Capteur	Signal d'entrée à l'ECM	Fonctionnement de l'ECM	Actionneur
Capteur d'angle d'arbre à cames	Régime-moteur	Commande de pompe à carburant	Relais de pompe d'alimentation
Contact d'allumage	Signal de démarrage		

L'ECM actionne la pompe à carburant pendant plusieurs secondes après que le contact d'allumage a été établi afin d'améliorer l'aptitude du moteur au démarrage. Si l'ECM reç;oit un signal à 180° venant du capteur d'angle d'arbre à cames, il sait que le moteur tourne, et il actionne alors la pompe. Si le signal à 180° n'est pas reç;u quand le contact est établi, le moteur cale. L'ECM arrête la pompe et empêche la batterie de se décharger, renforç;ant ainsi la sécurité. L'ECM n'entraîne pas directement la pompe à carburant. Il commande l'état de MARCHE/ARRET du relais de la pompe à carburant, qui à son tour commande la pompe à carburant.

Condition	Fonctionnement de la pompe à carburant
Le contact d'allumage est mis sur ON	Fonctionne pendant 5 secondes.
Le moteur tourne et démarre	Fonctionne.
Sauf comme indiqué ci-dessus	S'arrête.

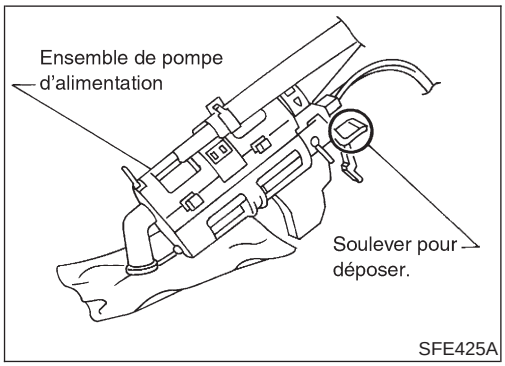

Description des composants

NEEC0501

La pompe à carburant avec régulateur de carburant est du type intégré dans le réservoir (la pompe et le régulateur se trouvent dans le réservoir à carburant).

Valeur de référence de CONSULT-II en mode de contrôle de données

NEEC0445

ELEMENT DE CONTROLE	CONDITION	SPECIFICATION
REL POMP ALI	● Le contact d'allumage est mis sur ''ON'' (fonctionne pendant 5 secondes) ● Le moteur tourne et démarre	MAR
	● Sauf comme indiqué ci-dessus	ARR

Simpo PDF Merge and Split Unregistered Version - http://www.simpopdf.com

Bornes de l'ECM et valeurs de référence

=NEEC0446

Les données de spécification sont des valeurs de référence et sont mesurées entre chaque borne et la masse.

ATTENTION :
Ne pas utiliser de bornes de masse de l'ECM lors de la mesure de la tension d'entrée/de sortie. En agissant de la sorte, il est possible d'endommager le transistor de l'ECM. Utiliser une masse autre que les bornes de l'ECM, comme par exemple la prise de terre.

N° DE BORNE	COULEUR DE CABLE	ELEMENT	CONDITION	DONNEES (tension de courant continu)
11*1	Y	Relais de pompe d'alimentation	**[Contact d'allumage sur ''ON'']** ● Durant 5 secondes après mise du contact d'allumage sur ''ON'' **[Moteur en marche]**	0 - 1 V
			[Contact d'allumage sur ''ON''] ● Plus de 5 secondes après mise du contact d'allumage sur ''ON''	TENSION DE LA BATTERIE (11 V - 14 V)
14*2	Y	Relais de pompe d'alimentation	**[Contact d'allumage sur ON]** ● Pendant 5 secondes après avoir tourné le contact d'allumage	0 V - 1 V
			[Contact d'allumage sur ON] ● Plus de 5 secondes après mise du contact d'allumage sur ON	TENSION DE LA BATTERIE (11 V - 14 V)

*1: Modèle sans NATS (système antivol Nissan)
*2: Modèle avec NATS (système antivol Nissan)

Simpo PDF Merge and Split Unregistered Version - http://www.simpopdf.com

Schéma de câblage

NEEC0447

EC-F/PUMP-C

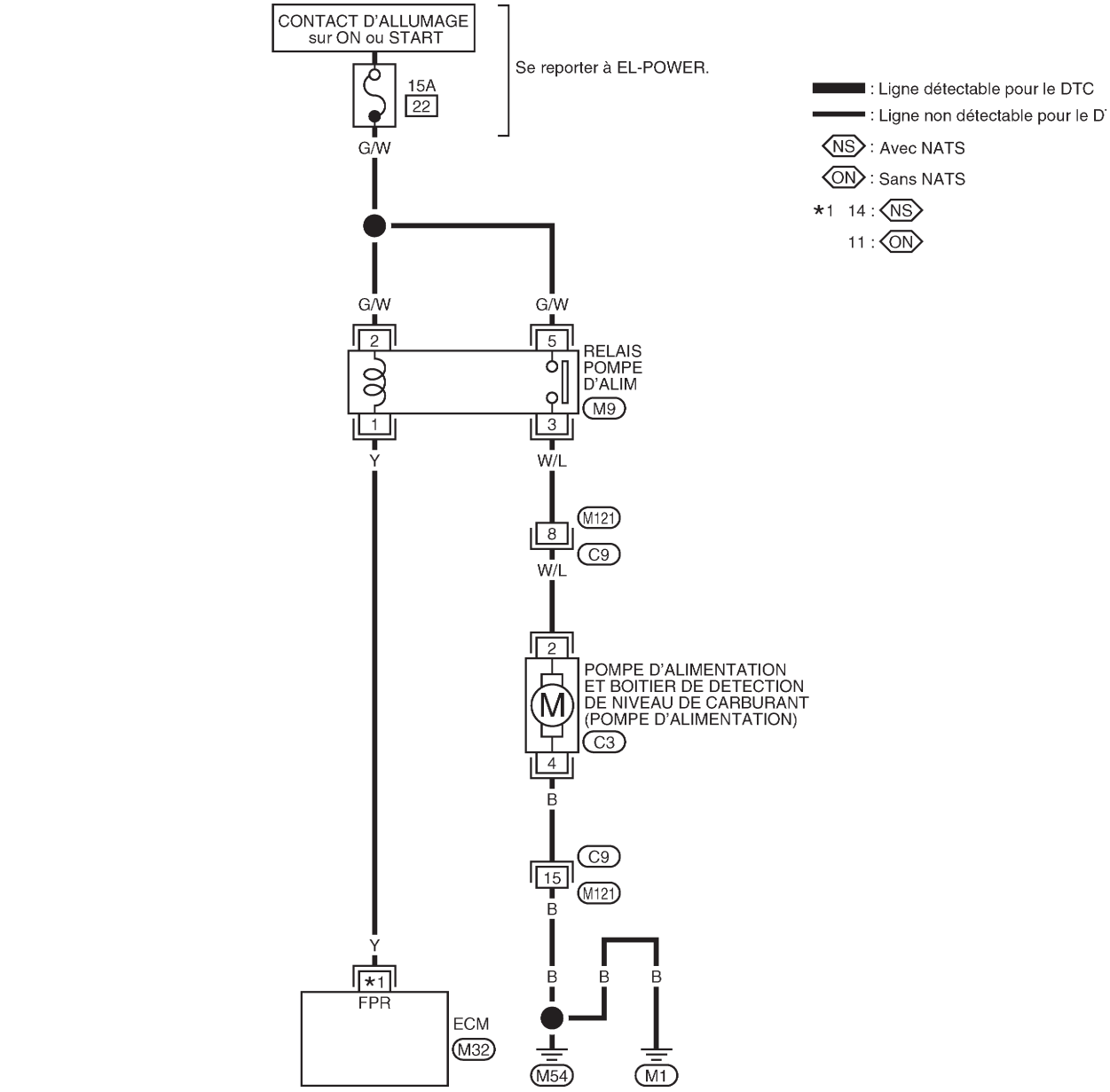

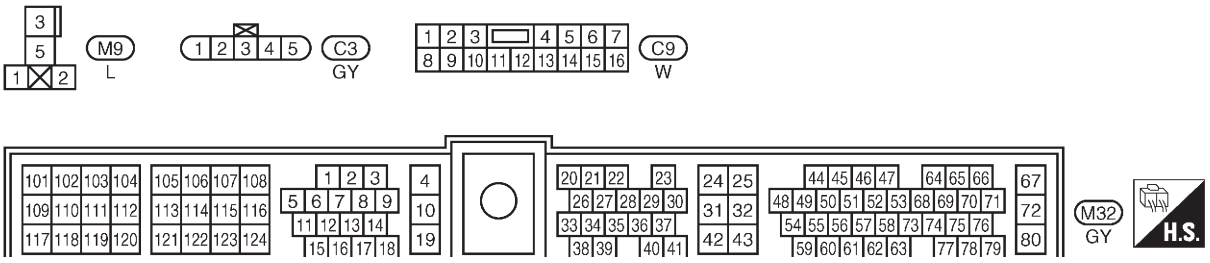

GEC256A

Simpo PDF Merge and Split Unregistered Version - http://www.simpopdf.com

Procédure de diagnostic

NEEC1074

1	CONTROLER LE FONCTIONNEMENT GENERAL

1. Mettre le contact d'allumage sur ON.
2. Pincer le flexible d'alimentation avec deux doigts.

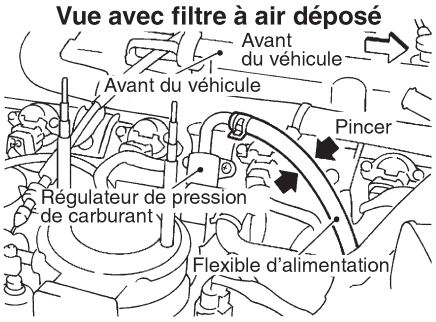

SEF348V

L'impulsion de pression du carburant devrait être ressentie sur le tuyau d'alimentation du carburant pendant 5 secondes après avoir mis le contact d'allumage sur ''ON''.

BON ou MAUVAIS

Bon	▶	**FIN DE L'INSPECTION**
Mauvais	▶	ALLER A 2.

2	CONTROLER L'ALIMENTATION ELECTRIQUE

1. Mettre le contact d'allumage sur OFF.
2. Débrancher le relais de pompe à carburant.

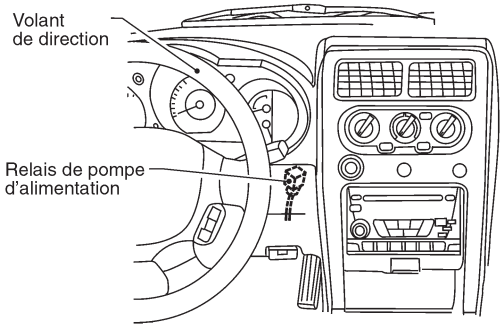

LEC103A

3. Mettre le contact d'allumage sur ON.
4. Vérifier la tension entre les bornes 2 et 5 et la masse à l'aide de CONSULT-II ou du testeur.

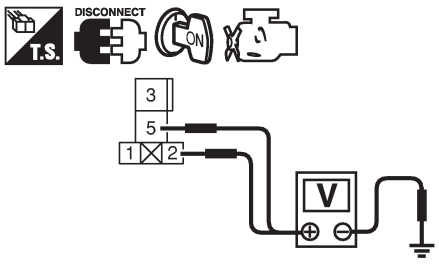

SEC279D

Tension : Tension de la batterie

BON ou MAUVAIS

Bon	▶	ALLER A 4.
Mauvais	▶	ALLER A 3.

Simpo PDF Merge and Split Unregistered Version - http://www.simpopdf.com

3	DETECTER LA PIECE DEFECTUEUSE
Contrôler les points suivants. ● Fusible de 15 A ● Faisceau ouvert ou en court-circuit entre le fusible et le relais de pompe à carburant	
▶	Réparer le faisceau ou les connecteurs.

4	CONTROLER CIRCUIT DE POMPE A CARBURANT

1. Mettre le contact d'allumage sur OFF.
2. Débrancher le boîtier de capteurs de niveau de carburant et le connecteur de faisceau de la pompe à carburant.

Vue avec réservoir de carburant déposé

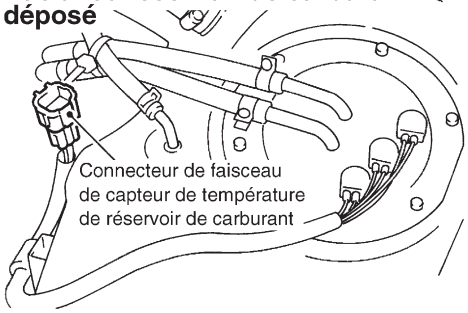

SEF334VA

3. Vérifier la continuité du faisceau entre la borne 4 de la pompe à carburant et la masse de la carrosserie, la borne 2 de la pompe à carburant et la borne 3 du relais de la pompe à carburant. Se reporter au schéma de câblage.
   Il doit y avoir continuité.
4. Vérifier également que le faisceau n'est pas en court-circuit à la masse ou à l'alimentation.

BON ou MAUVAIS

Bon	▶	ALLER A 6.
Mauvais	▶	ALLER A 5.

5	DETECTER LA PIECE DEFECTUEUSE
Contrôler les points suivants. ● Connecteurs de faisceau M121, C9 ● Faisceau ouvert ou en court-circuit entre la pompe à carburant et la masse de carrosserie ● Faisceau ouvert ou en court-circuit entre la pompe à carburant et le relais de pompe à carburant	
▶	Réparer les faisceaux ou les connecteurs en circuit ouvert ou en court-circuit à la masse ou à l'alimentation.

6	CONTROLER LE CIRCUIT DU SIGNAL DE SORTIE

1. Débrancher le connecteur de faisceau de l'ECM.
2. Vérifier la continuité du faisceau entre la borne 11 ou (14)* de l'ECM et la borne 1 du relais de la pompe à carburant. Se reporter au schéma de câblage.
   *: Modèle avec NATS (système antivol Nissan)
   Il doit y avoir continuité.
3. Vérifier également que le faisceau n'est pas en court-circuit à la masse ou à l'alimentation.

BON ou MAUVAIS

Bon	▶	ALLER A 8.
Mauvais	▶	Réparer les faisceaux ou les connecteurs en circuit ouvert ou en court-circuit à la masse ou à l'alimentation.

Simpo PDF Merge and Split Unregistered Version - http://www.simpopdf.com

7	CONTROLER LE RELAIS DE POMPE A CARBURANT

Avec CONSULT-II

1. Rebrancher le connecteur de faisceau du relais de pompe à carburant, du boîtier de capteurs de niveau de carburant et de la pompe à carburant et le connecteur de faisceau de l'ECM.
2. Mettre le contact d'allumage sur ON.
3. Mettre le relais de pompe à carburant sur MARCHE et ARRET dans le mode ''TEST ACTIF'' aide de CONSULT-II et écouter le bruit de fonctionnement.

TEST ACTIF	
RELAIS POMP D'ALIM	MAR
CONTROLE	
TR/MN MOT	XXX tr/mn

SEF724Z

Sans CONSULT-II

Vérifier la continuité entre les bornes 3 et 5.

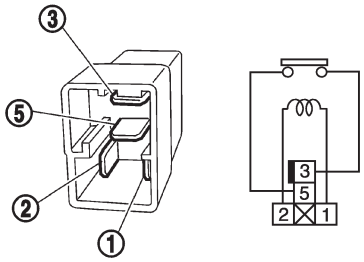

PBIB0098E

Conditions	Continuité
Alimentation en courant continu de 12 V entre les bornes 1 et 2	Oui
Pas d'alimentation en courant	Non

MTBL0306

BON ou MAUVAIS

Bon	▶	ALLER A 8.
Mauvais	▶	Remplacer le relais de pompe à carburant.

Simpo PDF Merge and Split Unregistered Version - http://www.simpopdf.com

8	CONTROLER LA POMPE A CARBURANT

1. Débrancher le capteur de niveau de carburant et le connecteur de faisceau de la pompe à carburant. Se reporter au schéma de câblage.

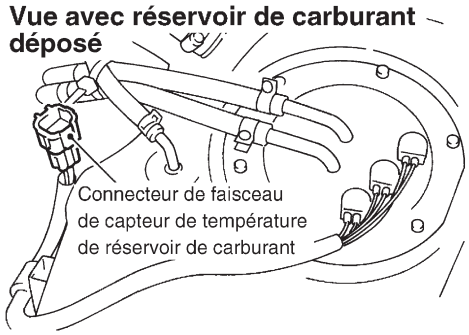

SEC280D

2. Vérifier la résistance entre les bornes 2 et 4.
   Résistance : 0,2 - 5,0Ω [à 25°C]

BON ou MAUVAIS

Bon	▶	ALLER A 9.
Mauvais	▶	Remplacer la pompe à carburant.

9	VERIFIER SI L'INCIDENT EST INTERMITTENT
Effectuer un ''DIAGNOSTIC DES DEFAUTS EN CAS INCIDENT INTERMITTENT'', voir page EC-3132.	
	▶ FIN DE L'INSPECTION

Simpo PDF Merge and Split Unregistered Version - http://www.simpopdf.com

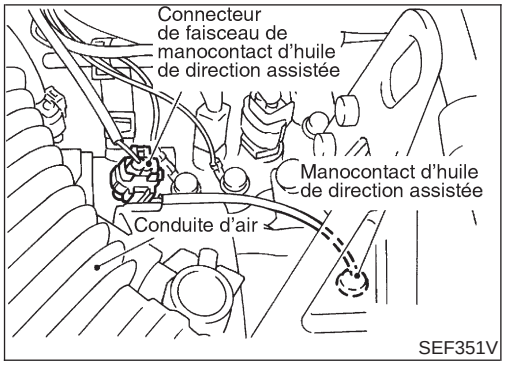

Description des composants

NEEC0451

Le manocontact d'huile de direction assistée est relié au tuyau haute-pression de la direction assistée et détecte la charge de la direction assistée. Lorsqu'une charge de direction assistée est détectée, le manocontact la signale à l'ECM. L'ECM règle la soupape IACV-AAC pour augmenter le régime de ralenti et pour tenir compte de la charge augmentée.

Valeur de référence de CONSULT-II en mode de contrôle de données

NEEC0452

Les données de spécification sont des valeurs de référence.

ELEMENT DE CONTROLE	CONDITION		SPECIFICATION
SIG DIR ASSIS	● Moteur : faire chauffer le moteur, puis le faire tourner au ralenti.	Volant de direction en position point mort (direction avant)	ARRET
		Le volant est en butée	MAR

Bornes de l'ECM et valeurs de référence

NEEC0453

Les données de spécification sont des valeurs de référence et sont mesurées entre chaque borne et la masse.

ATTENTION :
Ne pas utiliser de bornes de masse de l'ECM lors de la mesure de la tension d'entrée/de sortie. En agissant de la sorte, il est possible d'endommager le transistor de l'ECM. Utiliser une masse autre que les bornes de l'ECM, comme par exemple la prise de terre.

N° DE BORNE	COULEUR DE CABLE	ELEMENT	CONDITION	DONNEES (tension de courant continu)
39	SB	Manocontact d'huile de direction assistée	**[Moteur en marche]** ● Le volant est en butée	Environ 0 V
			[Moteur en marche] ● Le volant est au point mort	Environ 5 V

MANOCONTACT D'HUILE DE DIRECTION ASSISTEE
Simpo PDF Merge and Split Unregistered Version - http://www.simpopdf.com

Schéma de câblage

NEEC0450

EC-PST/SW-01

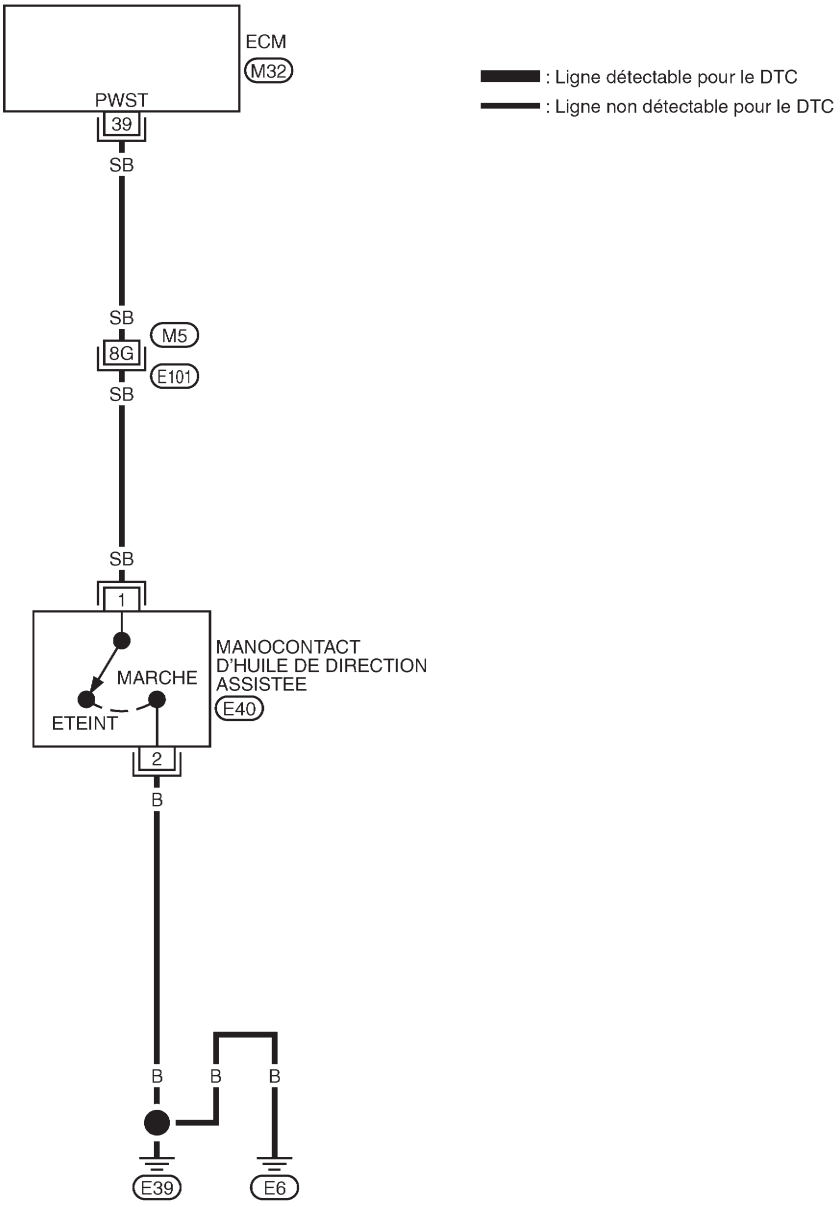

2 1 E40
B

Consulter la dernière page dépliante.
M5 , E101

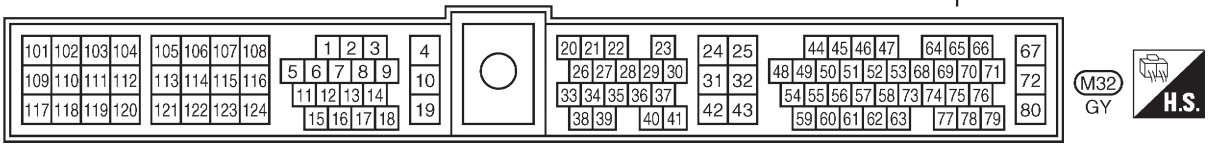

GEC257A

Procédure de diagnostic

=NEEC0454

1	DEBUT DE L'INSPECTION
CONSULT-II est-il disponible ?	
Oui ou Non	
Oui ▶	ALLER A 2.
Non ▶	ALLER A 3.

2	CONTROLER LE FONCTIONNEMENT GENERAL

Avec CONSULT-II

1. Démarrer le moteur.
2. Vérifier ''SIG DIR ASSIS'' dans le mode ''CONTROLE DE DONNEES'' de CONSULT-II dans les conditions suivantes.

CONTROLE DES DONNEES	
CONTROLE	PAS DE DTC
PW/ST SIGNAL	OFF

Conditions	Indication PW/ST SIGNAL
Indication PW/ST SIGNAL	OFF
Volant de direction braqué	ON

LEC065A

BON ou MAUVAIS

Bon ▶	**FIN DE L'INSPECTION**
Mauvais ▶	ALLER A 4.

3	CONTROLER LE FONCTIONNEMENT GENERAL

Sans CONSULT-II

1. Démarrer le moteur.
2. Contrôler la tension entre la borne 39 de l'ECM et la masse dans les conditions suivantes.

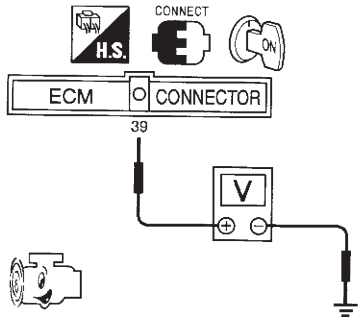

SEF662P

Condition	Tension
Lorsque le volant de direction est braqué rapidement	Environ 0 V
Sauf ci-dessus	Environ 5 V

MTBL0142

BON ou MAUVAIS

Bon ▶	**FIN DE L'INSPECTION**
Mauvais ▶	ALLER A 4.

Simpo PDF Merge and Split Unregistered Version - http://www.simpopdf.com

4	CONTROLER LE CIRCUIT DE SIGNAL D'ENTREE

1. Mettre le contact d'allumage sur ''OFF''.
2. Débrancher le connecteur de faisceau de l'ECM.
3. Vérifier la continuité du faisceau entre la borne 39 de l'ECM et la borne 1. Se reporter au schéma de câblage.
   Il doit y avoir continuité.
4. Vérifier également que le faisceau n'est pas en court-circuit à la masse ou à l'alimentation.

BON ou MAUVAIS

Bon	▶	ALLER A 6.
Mauvais	▶	ALLER A 5.

5	DETECTER LA PIECE DEFECTUEUSE

Contrôler les points suivants.
- Connecteurs de faisceau M5, E101

Vérifier que le faisceau n'est pas ouvert ou en court-circuit entre l'ECM et le manocontact d'huile de direction assistée.

	▶	Réparer les faisceaux ou les connecteurs en circuit ouvert ou en court-circuit à la masse ou à l'alimentation.

6	CONTROLER LE CIRCUIT DE MISE A LA MASSE

1. Débrancher le connecteur de faisceau du manocontact d'huile de direction assistée.
2. Vérifier la continuité entre la borne 2 du connecteur de faisceau de manocontact d'huile de direction assistée et la masse.
   Il doit y avoir continuité.

BON ou MAUVAIS

Bon	▶	
Mauvais	▶	Réparer les faisceaux ou connecteurs en circuit ouvert ou en court-circuit à l'alimentation.

7	CONTROLER LE MANOCONTACT D'HUILE DE DIRECTION ASSISTEE

1. Débrancher le connecteur de faisceau du manocontact d'huile de direction assistée, puis démarrer le moteur.
2. Vérifier la continuité du faisceau entre la borne 1 et la masse. Se reporter au schéma de câblage.

Conditions	Continuité
Volant de direction braqué	Oui
Le volant de direction n'est pas braqué	Non

MTBL0307

BON ou MAUVAIS

Bon	▶	ALLER A 8.
Mauvais	▶	Remplacer le manocontact d'huile de direction assistée.

8	VERIFIER SI L'INCIDENT EST INTERMITTENT

Effectuer un ''DIAGNOSTIC DES DEFAUTS EN CAS INCIDENT INTERMITTENT'', voir page EC-3132.

	▶	**FIN DE L'INSPECTION**

Simpo PDF Merge and Split Unregistered Version - http://www.simpopdf.com

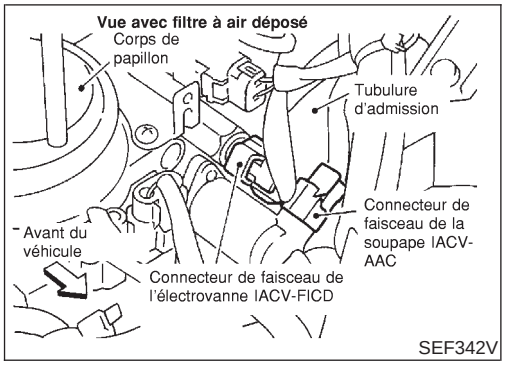

Description des composants

NEEC0462

Lorsque le climatiseur est en marche, l'électrovanne IACV-FICD fournit de l'air supplémentaire afin de compenser l'augmentation de la charge.

Bornes de l'ECM et valeurs de référence

NEEC0463

Les données de spécification sont des valeurs de référence et sont mesurées entre chaque borne et la masse.

ATTENTION :

Ne pas utiliser de bornes de masse de l'ECM lors de la mesure de la tension d'entrée/de sortie. En agissant de la sorte, il est possible d'endommager le transistor de l'ECM. Utiliser une masse autre que les bornes de l'ECM, comme par exemple la prise de terre.

N° DE BORNE	COU-LEUR DE CABLE	ELEMENT	CONDITION	DONNEES (tension de courant continu)
12	G/W	Relais de climatiseur	**[Moteur en marche]** ● L'interrupteur du climatiseur et l'interrupteur de la soufflerie sont tous mis sur ON★	Environ 0 V
			[Moteur en marche] ● L'interrupteur de A/C est sur OFF	TENSION DE LA BATTE-RIE (11 V - 14 V)

★ Température ambiante supérieure à 10°C dans chaque mode, sauf ARR.

Simpo PDF Merge and Split Unregistered Version - http://www.simpopdf.com

Schéma de câblage

NEEC0461

MODÈLE AVEC CLIMATISEUR MANUEL

NEEC0461S01

EC-FICD-01

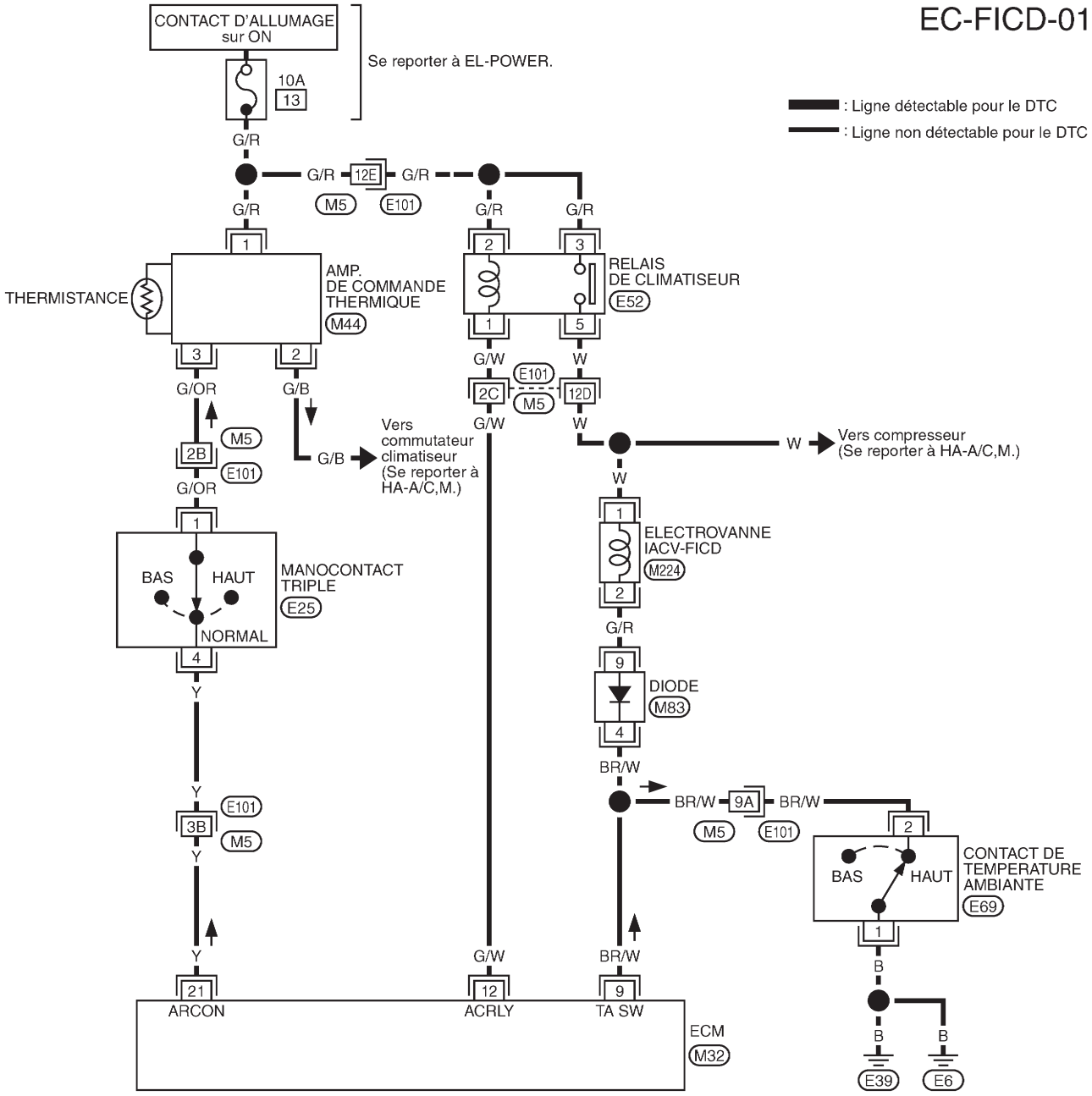

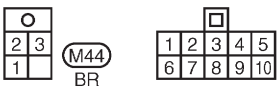





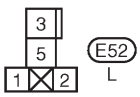



Consulter la dernière page dépliante.
M5 , E101

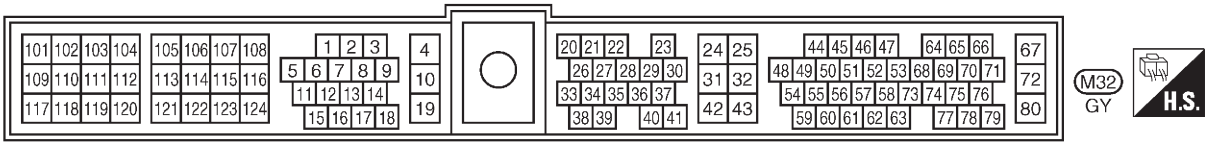

GEC258A

Simpo PDF Merge and Split Unregistered Version - http://www.simpopdf.com

Schéma de câblage

MODÈLE AVEC CLIMATISEUR AUTOMATIQUE

NEEC0461S02

EC-FICD-02

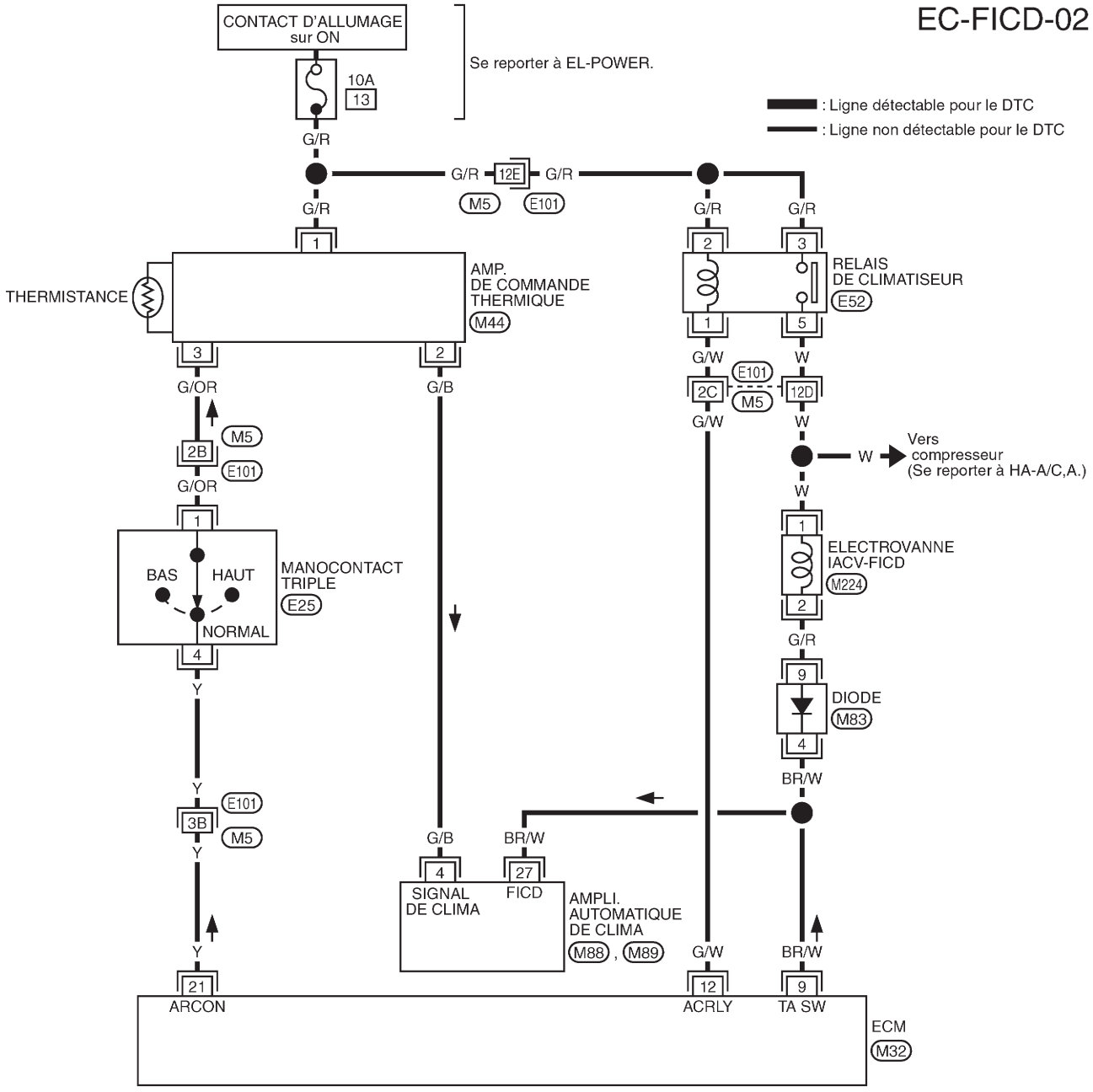

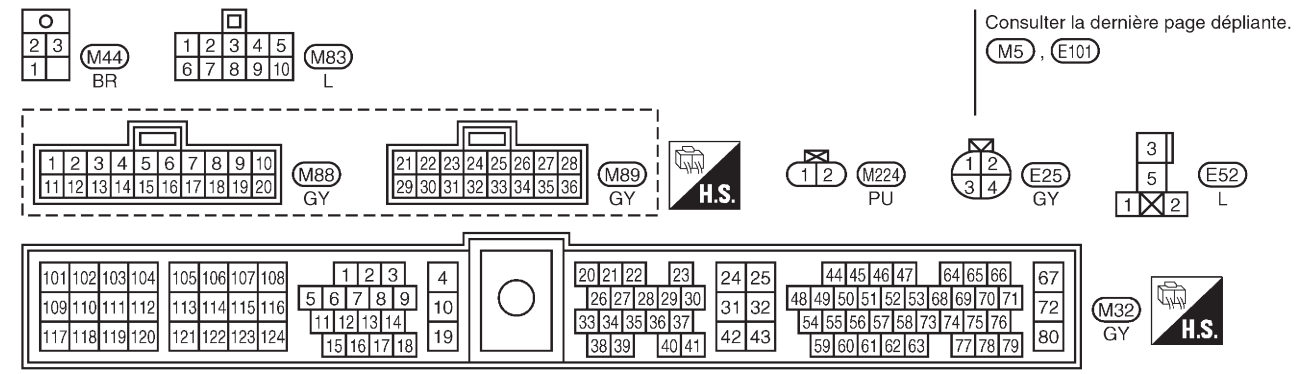

GEC259A

Simpo PDF Merge and Split Unregistered Version - http://www.simpopdf.com

Procédure de diagnostic

=NEEC0464

1	CONTROLER LE FONCTIONNEMENT GENERAL

1. Démarrer le moteur et l'amener à température normale de fonctionnement.
2. Contrôler le régime de ralenti.
   700±50 tr/mn
   Si MAUVAIS, régler régime de ralenti.
3. Mettre l'interrupteur de climatiseur sur ON et mettre l'interrupteur du ventilateur sur la vitesse 4.
4. Revérifier le régime de ralenti.

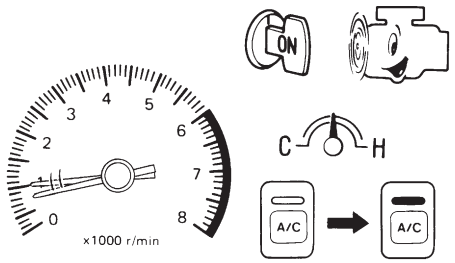

MEF634E

850 tr/mn ou plus

BON ou MAUVAIS

Bon	▶	**FIN DE L'INSPECTION**
Mauvais	▶	ALLER A 2.

2	VERIFIER LE FONCTIONNEMENT DU CLIMATISEUR

Vérifier que le compresseur du climatiseur fonctionne normalement.

BON ou MAUVAIS

Bon	▶	ALLER A 3.
Mauvais	▶	Se reporter à la ''Table des symptômes'' dans ''DIAGNOSTIC DES DEFAUTS'' de la section HA.

Simpo PDF Merge and Split Unregistered Version - http://www.simpopdf.com

3	CONTROLER L'ALIMENTATION ELECTRIQUE

1. Arrêter le moteur.
2. Débrancher le connecteur de faisceau de l'électrovanne IACV-FICD.

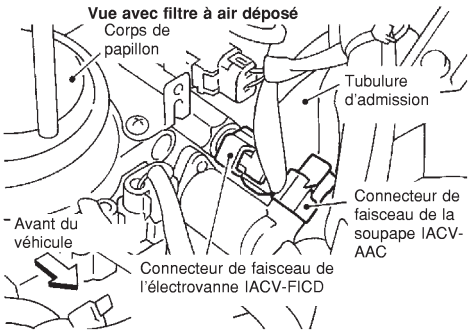

SEF342V

3. Démarrer le moteur, ensuite mettre l'interrupteur de climatiseur sur ON et la commande de réglage de la ventilation sur la vitesse 4.
4. Contrôler la tension entre la borne 1 et la masse à l'aide de CONSULT-II ou du testeur.

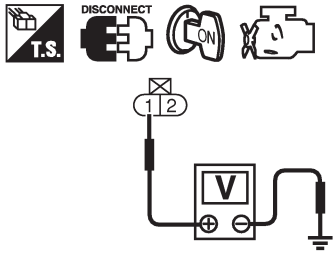

SEC281D

Tension : Tension de la batterie

BON ou MAUVAIS

Bon	▶	ALLER A 5.
Mauvais	▶	ALLER A 4.

4	DETECTER LA PIECE DEFECTUEUSE

Contrôler les points suivants.
- Connecteurs de faisceau E101, M5
- Faisceau ouvert ou en court-circuit entre la l'électrovanne IACV-FICD et le relais du climatiseur

	▶	Réparer les faisceaux ou connecteurs en circuit ouvert ou en court-circuit à la masse ou à l'alimentation.

Simpo PDF Merge and Split Unregistered Version - http://www.simpopdf.com

5 CONTROLER LE CIRCUIT DE MISE A LA MASSE

1. Mettre le contact d'allumage sur OFF.
2. Vérifier la continuité du faisceau comme suit.

Type	Nom de borne	Condition				
Modèle avec climatisation manuelle	Borne 5 du relais de climatiseur	+	La continuité ne doit pas exister.	–	La continuité doit exister.	
	Borne 2 de contact de température ambiante	–		+		
	Borne 4 de diode et borne 9 d'ECM	La continuité doit exister.				
	Borne 2 de contact de température ambiante et borne 9 d'ECM	La continuité doit exister.				
	Borne 1 de contact de température ambiante et masse	La continuité doit exister.				
Modèle avec climatisation automatique	Borne 5 de relais de climatiseur	+	La continuité ne doit pas exister.	–	La continuité doit exister.	
	Borne 9 d'ECM	–		+		
	Borne 4 de la diode et borne 27 d'amp. automatique de climatisation	La continuité doit exister.				
	Borne 27 d'ampli. automatique de climatisation Borne 27 et borne 9 d'ECM	La continuité doit exister.				

MTBL1310

Il doit y avoir continuité.

3. Vérifier également que le faisceau n'est pas en court-circuit à la masse ou à l'alimentation.

BON ou MAUVAIS

Bon	▶	ALLER A 7.
Mauvais	▶	ALLER A 6.

6 DETECTER LA PIECE DEFECTUEUSE

CLIMATISEUR MANUEL

Contrôler les points suivants.

- Connecteurs de faisceau E101, M5
- Electrovanne IACV-FICD
- Interrupteur de température ambiante
- Diode M83
- Connecteurs de faisceau M5, E101
- Vérifier que le faisceau n'est pas ouvert ou en court-circuit entre le relais du climatiseur et l'interrupteur de température ambiante
- Vérifier que le faisceau n'est pas ouvert ou en court-circuit entre la diode M83 et l'ECM
- Vérifier que le faisceau n'est pas ouvert ou en court-circuit entre l'interrupteur de température ambiante et l'ECM
- Vérifier que le faisceau n'est pas ouvert ou en court-circuit entre l'interrupteur de température ambiante et la masse

CLIMATISEUR AUTOMATIQUE

Contrôler les points suivants.

- Connecteurs de faisceau E101, M5
- Electrovanne IACV-FICD
- Diode M83
- Vérifier si le faisceau n'est pas ouvert ou court-circuité entre le relais du climatiseur et l'ECM
- Vérifier si le faisceau n'est pas ouvert ou court-circuité entre la diode et l'ampli. auto du climatiseur
- Vérifier si le faisceau n'est pas ouvert ou court-circuité entre l'ampli. auto du climatiseur et l'ECM

	▶	Réparer les faisceaux ou connecteurs en circuit ouvert ou en court-circuit à l'alimentation.

Simpo PDF Merge and Split Unregistered Version - http://www.simpopdf.com

7	VERIFIER L'ELECTROVANNE IACV-FICD

Débrancher le connecteur de faisceau de l'électrovanne IACV-FICD.

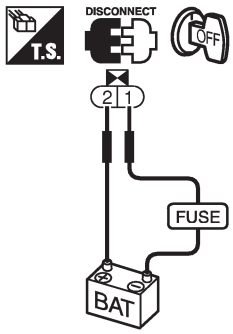

SEC282D

- Vérifier qu'il n'y a pas de bruit de cliquetis en appliquant un courant continu de 12V aux bornes.
- Vérifier que le plongeur ne s'agrippe pas ou ne colle pas.
- Vérifier que les ressorts ne sont pas cassés.

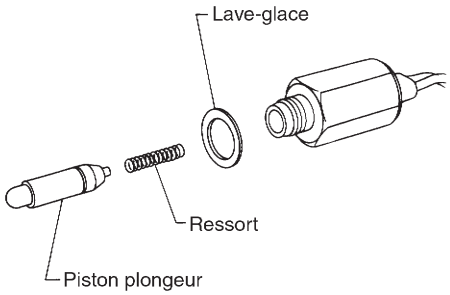

SEF097K

BON ou MAUVAIS

Bon	▶	ALLER A 8.
Mauvais	▶	Remplacer l'électrovanne IACV-FICD.

8	VERIFIER L'INTERRUPTEUR DE TEMPERATURE AMBIANTE

Se reporter à la section AC, ''DIAGNOSTIC DES DEFAUTS''.

BON ou MAUVAIS

Bon	▶	ALLER A 9.
Mauvais	▶	Remplacer l'interrupteur de température d'air ambiante.

9	VERIFIER SI L'INCIDENT EST INTERMITTENT

Effectuer un ''DIAGNOSTIC DES DEFAUTS EN CAS INCIDENT INTERMITTENT'', voir page EC-3132.

	▶	**FIN DE L'INSPECTION**

CONNECTEURS DU MI ET DE LIAISON DES DONNEES
Simpo PDF Merge and Split Unregistered Version - http://www.simpopdf.com

Schéma de câblage

NEEC0466

EC-MIL/DL-01

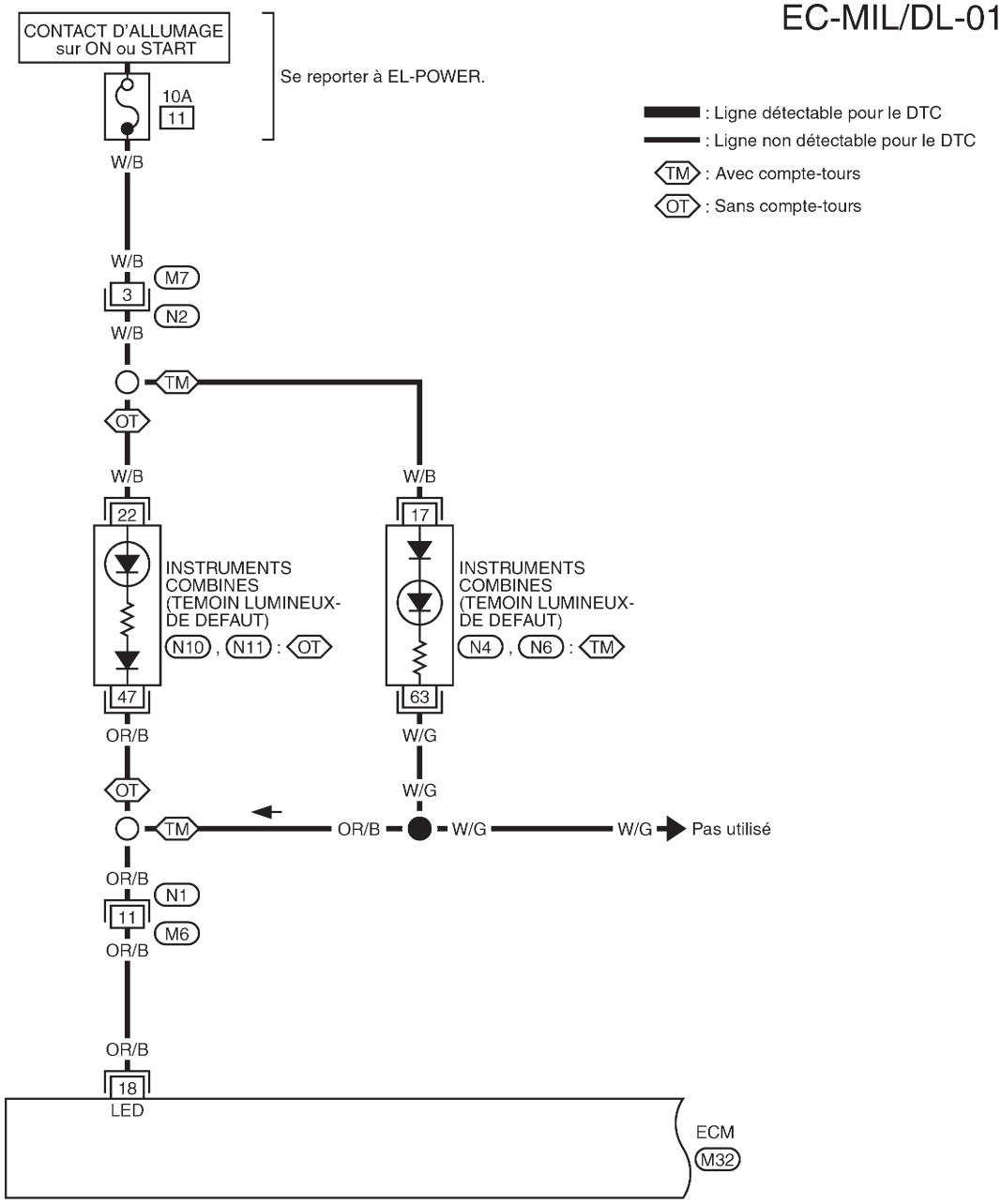

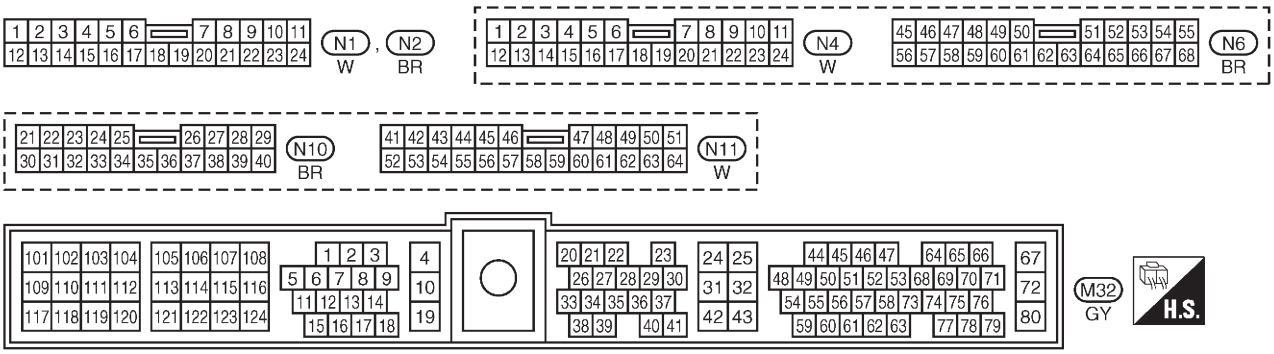

GEC260A

Simpo PDF Merge and Split Unregistered Version - http://www.simpopdf.com

Schéma de câblage

EC-MIL/DL-02

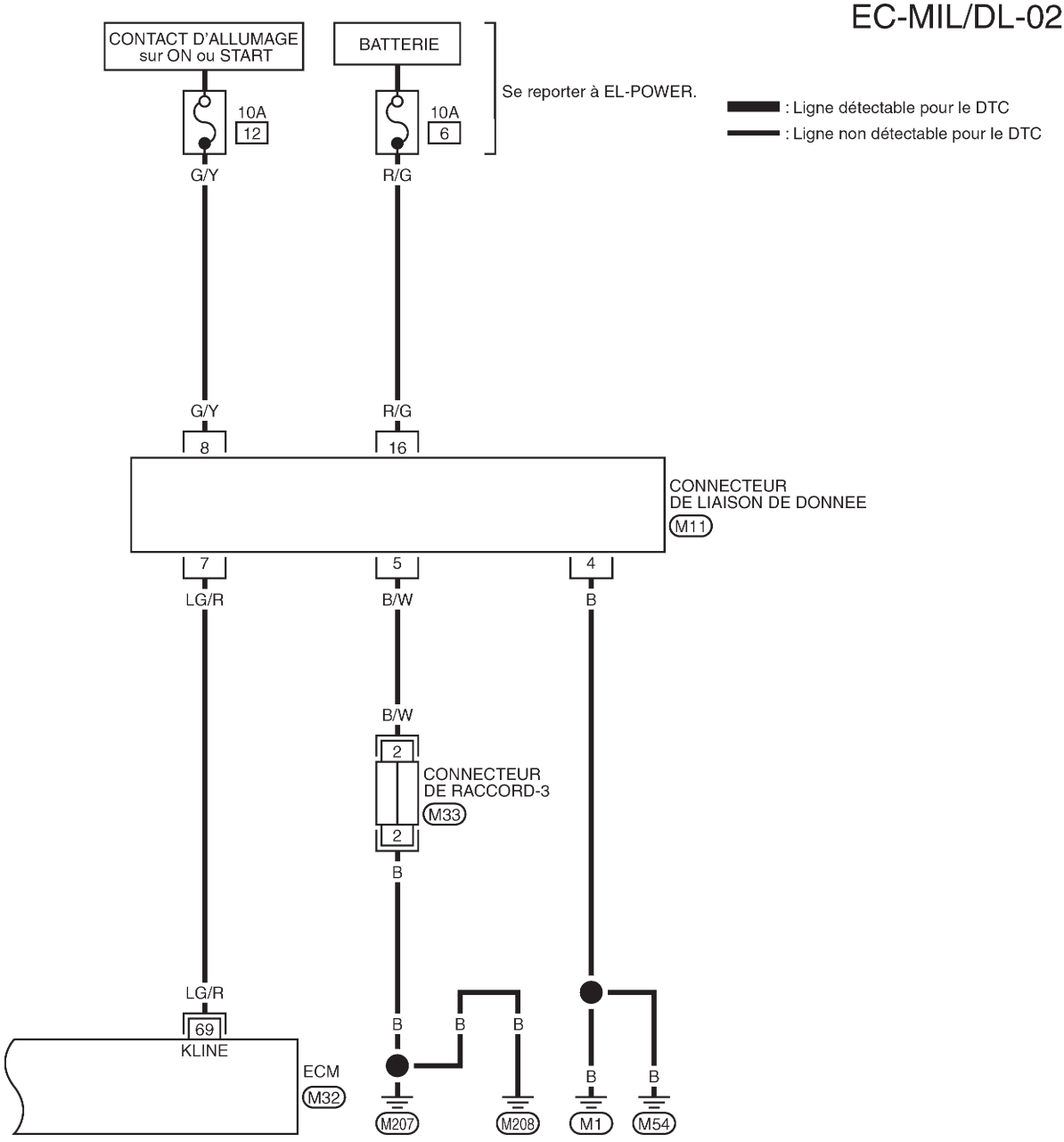

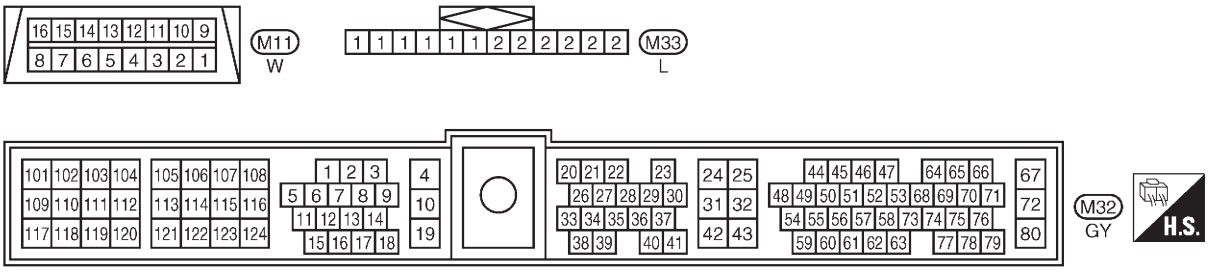

GEC261A

Simpo PDF Merge and Split Unregistered Version - http://www.simpopdf.com

Régulateur de pression de carburant

NEEC0467

Pression de carburant au ralenti kPa (bar, kg/cm^2)	Flexible à dépression branché	Environ 235 (2,35, 2,4, 34)
	Flexible à dépression débranché	Environ 294 (2,94, 3,0, 43)

Régime de ralenti et calage de l'allumage

NEEC0468

Régime de ralenti de base*1 tr/mn	A vide*3 (dans la position ''N'')	650±50
Régime cible de ralenti*2 tr/mn	A vide*3 (dans la position ''N'')	700±50
Climatiseur : ON tr/mn	Dans la position ''N''	850 ou plus
Calage d'allumage*1	Dans la position ''N''	15°±2° avant PMH

*1: Connecteur de faisceau du capteur de position du papillon débranché ou utilisation de CONSULT-II en mode ''SUPPORT DE TRAVAIL''

*2: Connecteur de faisceau du capteur de position du papillon branché

*3: Dans les conditions suivantes :

- Interrupteur de climatiseur : ARRET
- Charge électrique : ARRET (phares, ventilateur de chauffage et désembuage de la lunette arrière)
- Volant : Position droite vers l'avant

Bobine d'allumage

NEEC0469

Tension primaire V	Tension de la batterie 12
Résistance primaire [à 20°C] Ω	Environ 1,0
Résistance secondaire [à 20°C] kΩ	Environ 10

Débitmètre d'air

NEEC0470

Tension d'alimentation V	Tension de la batterie (11 - 14)
Tension de sortie V	0,9 - 1,8*
Débitmètre d'air (Avec CONSULT-II ou analyseur générique GST) g·m/s	0,9 - 5,8 au ralenti* 7,5 - 13,2 à 2.500 tr/mn*

*: Le moteur est amené à sa température normale de fonctionnement et tourne au ralenti, à vide.

Capteur de température du liquide de refroidissement du moteur

NEEC0471

Température °C	Résistance kΩ
20	2,1 - 2,9
50	0,68 - 1,00
90	0,236 - 0,260

Pompe à carburant

NEEC0473

Résistance [à 25°C] Ω	0,2 - 5,0

Soupape IACV-AAC

NEEC0474

Résistance [à 25°C] Ω	Environ 10,0

Injecteur

NEEC0475

Résistance [à 25°C] Ω	7,3 - 9,9

Simpo PDF Merge and Split Unregistered Version - http://www.simpopdf.com

Capteur de position de papillon

Capteur de position de papillon

=NEEC0477

Etat de la soupape de papillon	Tension (température de fonctionnement normale, moteur coupé, contact d'allumage sur ON)
Complètement fermée (a)	0,2 - 0,8V
Partiellement ouverte	Entre (a) et (b)
Complètement ouverte (b)	3,5 - 4,5V

Chauffage de la sonde à oxygène chauffé 1

NEEC0478

Résistance [à 25°C] Ω	2,3 - 4,3

Valeur de charge calculée

NEEC0479

	Valeur de charge calculée (Avec CONSULT-II ou analyseur générique GST)
Au ralenti	9,5 - 34,0
A 2.500 tr/mn	13,9 - 24,9

Capteur de température d'air d'admission

NEEC0480

Température °C	Résistance kΩ
20	2,1 - 2,9
80	0,27 - 0,38

Chauffage de sonde à oxygène chauffé 2

NEEC0483

Résistance [à 25°C] Ω	2,3 - 4,3

Capteur de position du vilebrequin (OBD)

NEEC0484

Résistance [à 20°C] Ω	512 - 632

YD25DDTi

Simpo PDF Merge and Split Unregistered Version - http://www.simpopdf.com

Index alphabétique et numérique pour DTC

INDEX ALPHABETIQUE POUR DTC

X : Applicable — : Non applicable

Eléments (terminologie des écrans CONSULT-II)	DTC	Allumage du témoin de défaut (MIL)	Page de référence
AUCUN DTC INDIQUE. IL PEUT S'AVERER NECESSAIRE DE POURSUIVRE LES VERIFICATIONS.	0505	—	—
CAP POS ACCELERAT	0403	X	EC-3548
CAP POS VIL (PMH)	0407	X	EC-3567
CAP TEMP AIR ADM	0401	X	EC-3536
CAP TEMP MOTEUR	0103	X	EC-3512
CAP VIT VEHICULE	0104	X	EC-3516
ECM 2	0301	X	EC-3534
ECM 10	0802	X	EC-3623
ECM 11	0804	—	EC-3625
ECM 12	0901	X	EC-3534
ECM 14	0807	X	EC-3627
ECM 15	0903	—	EC-3641
NATS DEFAUT	0601 - 0608	—	Section EL
P1·CAP POS CAM	0701	X	EC-3576
P2·SIG IMPUL PMH	0702	X	EC-3584
P3·LIGNE COM POMP	0703	X	EC-3592
P4·CIRC V/FUITE	0704	X	EC-3601
P5·MODULE COM POMP	0705	X	EC-3609
P6·V/FUITE	0706	X	EC-3601
P7·RPNG CLG INJ/C	0707	X	EC-3613
P9·CAP TEMP CARB	0402	X	EC-3541
PRESSION TURBO	0905	X	EC-3643
RLS ECM	0902	X	EC-3636
SOUP COM VOLUME EGR	1003	X	EC-3648
SURCHAUFFE	0208	X	EC-3521
SYSTEME DE COUPURE DE CARBURANT 1	1004	X	EC-3658
TENSION BATTERIE	0502	—	EC-3573
VOLUME AIR ADM	0406	—	EC-3564

Simpo PDF Merge and Split Unregistered Version - http://www.simpopdf.com

Index alphabétique et numérique pour DTC (Suite)

INDEX NUMERIQUE POUR DTC

X : Applicable — : Non applicable

DTC	Eléments (terminologie des écrans CONSULT-II)	Allumage du témoin de défaut (MIL)	Page de référence
0103	CAP TEMP MOTEUR	X	EC-3512
0104	CAP VIT VEHICULE	X	EC-3516
0208	SURCHAUFFE	X	EC-3521
0301	ECM 2	X	EC-3534
0401	CAP TEMP AIR ADM	X	EC-3536
0402	P9·CAP TEMP CARB	X	EC-3541
0403	CAP POS ACCELERAT	X	EC-3548
0406	VOLUME AIR ADM	—	EC-3564
0407	CAP POS VIL (PMH)	X	EC-3567
0502	TENSION BATTERIE	—	EC-3573
0505	**AUCUN DTC INDIQUE. IL PEUT S'AVERER NECES-SAIRE DE POURSUIVRE LES VERIFICATIONS.**	—	—
0601 - 0608	NATS DEFAUT	—	Section EL
0701	P1·CAP POS CAM	X	EC-3576
0702	P2·SIG IMPUL PMH	X	EC-3584
0703	P3·LIGNE COM POMP	X	EC-3592
0704	P4·CIRC V/FUITE	X	EC-3601
0705	P5·MODULE COM POMP	X	EC-3609
0706	P6·V/FUITE	X	EC-3601
0707	P7·RPNG CLG INJ/C	X	EC-3613
0802	ECM 10	X	EC-3623
0804	ECM 11	—	EC-3625
0807	ECM 14	X	EC-3627
0901	ECM 12	X	EC-3534
0902	RLS ECM	X	EC-3636
0903	ECM 15	—	EC-3641
0905	PRESSION TURBO	X	EC-3643
1003	SOUP COM VOLUME EGR	X	EC-3648
1004	SYSTEME DE COUPURE DE CARBURANT 1	X	EC-3658

Simpo PDF Merge and Split Unregistered Version - http://www.simpopdf.com

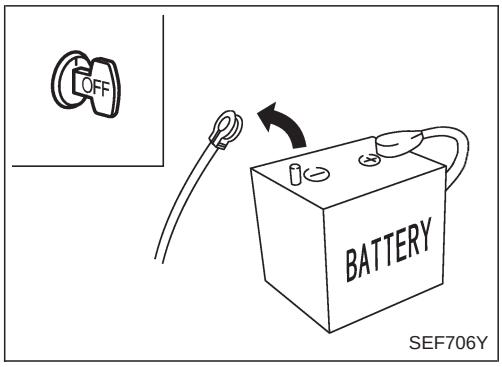

SEF706Y

Précautions

- **Toujours utiliser une batterie de 12 volts comme source d'alimentation.**
- **Ne pas débrancher la batterie lorsque le moteur tourne.**
- **Avant de brancher ou débrancher le connecteur du faisceau d'ECM, couper le contact et débrancher la borne négative de la batterie. On évitera ainsi d'endommager l'ECM dans la mesure où la tension de batterie est appliquée à l'ECM, même si le contact d'allumage est coupé.**
- **Avant la dépose de toute pièce, couper le contact et déconnecter le câble de masse de la batterie.**

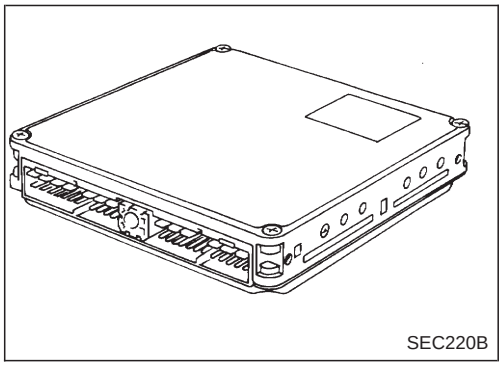
SEC220B

- **Ne pas démonter l'ECM.**
- **Lorsqu'une borne de batterie est débranchée, la mémoire retourne à la valeur de l'ECM.**
  L'ECM commence alors l'autodiagnostic à la valeur initiale. Le fonctionnement du moteur peut varier légèrement lorsque la borne est déconnectée. Ceci ne signifie toutefois pas qu'il y ait un problème. Ne pas remplacer les pièces en cas de variation mineure.

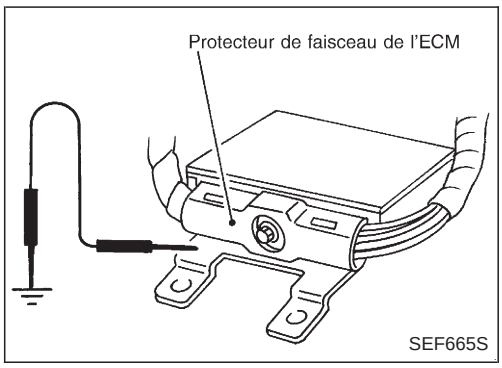

SEF665S

- **Lorsque l'ECM est détaché pour contrôle, veiller à ce que son châssis reste connecté à la masse.**

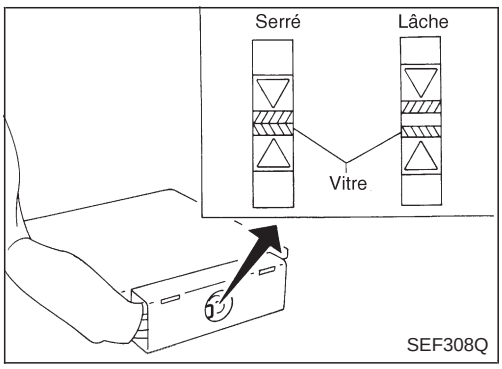

SEF308Q

- **Lors du branchement du connecteur de faisceau du système de gestion moteur, serrer le boulon de fixation jusqu'à ce que l'espace entre les indicateurs oranges disparaisse.**
  :3,0 - 5,0 N·m (0,3 kgm - 0,5 kgm)

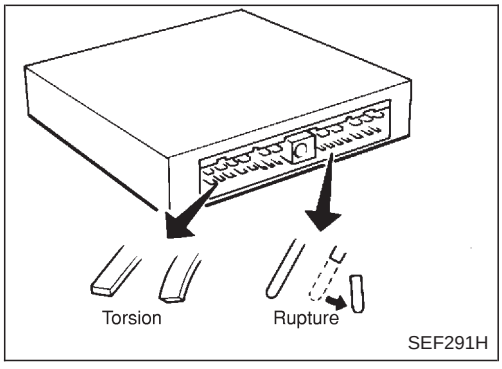

SEF291H

- **Lors du branchement ou du débranchement des connecteurs à broches de l'ECM, veiller à ne pas endommager (tordre ou casser) les bornes à broches.**
  Veiller à ce qu'aucune des bornes à broches de l'ECM ne soit pliée ou cassée au moment où l'on rebranche les connecteurs à broches.
- **Veiller à la qualité du branchement des connecteurs du faisceau de l'ECM.**
  Une connexion de mauvaise qualité peut entraîner le développement d'une tension extrêmement élevée dans le circuit, capable d'endommager les circuits intégrés.
- **Veiller à ce que le faisceau de l'ECM se trouve à plus de**

Simpo PDF Merge and Split Unregistered Version - http://www.simpopdf.com

Précautions (Suite)

10 cm du faisceau voisin afin d'éviter tout dysfonctionnement du système ECM dû aux signaux parasites induits, une dégradation du fonctionnement des circuits intégrés, etc.

- **Maintenir au sec les pièces du système de gestion moteur et les harnais.**

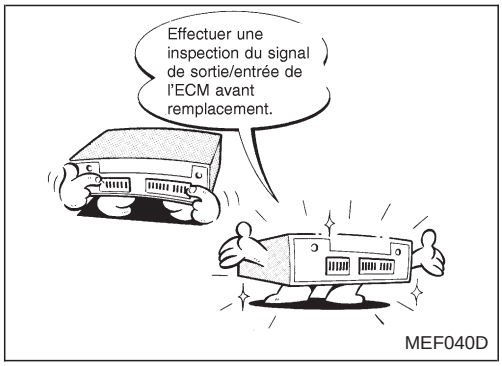

MEF040D

- **Avant de reposer l'ECM, effectuer une inspection des bornes et des valeurs de référence et s'assurer que l'ECM fonctionne correctement. Consulter la page EC-3495.**

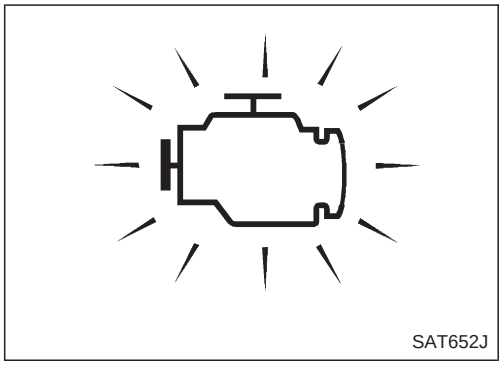
SAT652J

- **Le contact de filtre à carburant est fournis sauf pour l'Europe.**
  Si le témoin de défaut (MIL) s'allume ou clignote de manière irrégulière alors que le moteur tourne, le filtre à carburant contient éventuellement de l'eau. Vidanger l'eau du filtre à carburant. Consulter la page EC-3454. Si cela ne résout pas le problème, effectuer les procédures de diagnostic de défaut spécifiées.
- **Après avoir effectué chaque DIAGNOSTIC DES DEFAUTS, effectuer une ''Procédure de confirmation de DTC (code de défaut de diagnostic)'' ou une ''Vérification du fonctionnement général''.**
  Le DTC ne devrait pas s'afficher dans la ''Procédure de confirmation de DTC'' si la réparation est terminée. La '' Vérification du fonctionnement général'' devrait produire un bon résultat si la réparation a été effectuée.

Simpo PDF Merge and Split Unregistered Version - http://www.simpopdf.com

Précautions (Suite)

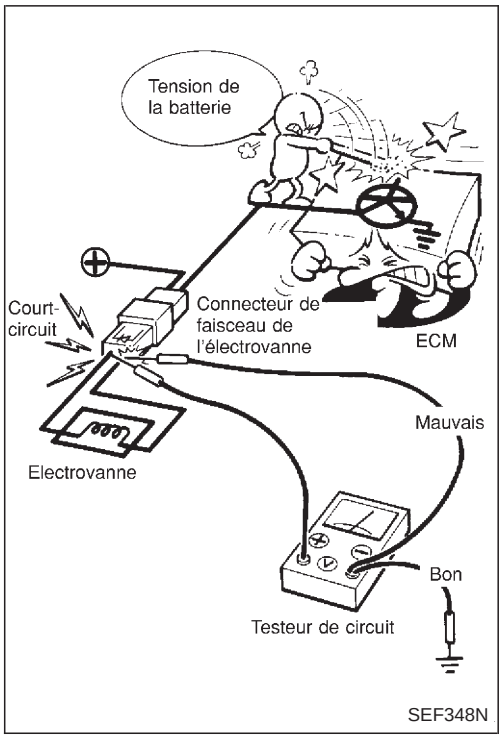

SEF348N

- **Lors de la mesure des signaux de l'ECM à l'aide d'un testeur de circuit, ne jamais approcher une sonde de testeur d'une autre sonde.**
  La mise en contact accidentelle des deux sondes entraîne un court-circuit et endommage le transistor de puissance de l'ECM.
- **Lors de la mesure de la tension d'entrée/sortie, ne pas utiliser les bornes de masse de l'ECM sous peine d'endommager le transistor de l'ECM. Utiliser une autre masse que celle des bornes de l'ECM.**

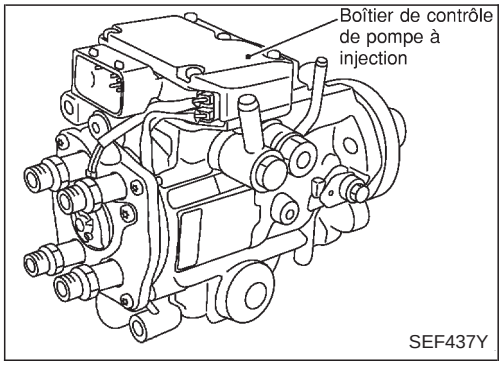

SEF437Y

- **Ne pas débrancher le connecteur du faisceau de la pompe lorsque le moteur tourne.**
- **Ne pas démonter la pompe d'injection de carburant à commande électronique.**
  Si "MAUVAIS", prendre les mesures nécessaires.
- **Ne pas démonter l'injecteur.**
  En cas de résultat "MAUVAIS", remplacer l'injecteur.
- **Ne pas heurter ni dérégler le capteur d'angle du vilebrequin (PMH).**


SEF709Y

- **Ne pas appuyer sur la pédale d'accélérateur lors du démarrage.**
- **Immédiatement après le démarrage, ne pas emballer le moteur inutilement.**
- **Ne pas emballer le moteur avant de couper le contact.**

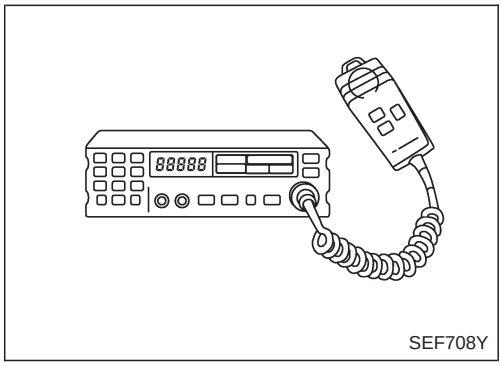

SEF708Y

- **La repose d'une C.B. ou d'un téléphone mobile peut, selon son emplacement, affecter défavorablement les systèmes de contrôle électronique. Veiller par conséquent à respecter ce qui suit.**

1) **Eloigner le plus possible l'antenne de l'ECM.**
2) **Veiller à ce que le câble d'antenne se trouve à plus de 20 cm du faisceau de câbles des systèmes de commande électroniques.**
   Veiller à ce que ce câble ne soit jamais parallèle au faisceau sur une grande longueur.
3) **Régler l'antenne et la ligne d'alimentation de manière à**

Simpo PDF Merge and Split Unregistered Version - http://www.simpopdf.com

Précautions (Suite)

pouvoir maintenir au plus petit niveau le taux d'onde stationnaire.

4) Veiller à connecter la radio à la masse de carrosserie du véhicule.

Simpo PDF Merge and Split Unregistered Version - http://www.simpopdf.com

Emplacement des composants de contrôle du moteur

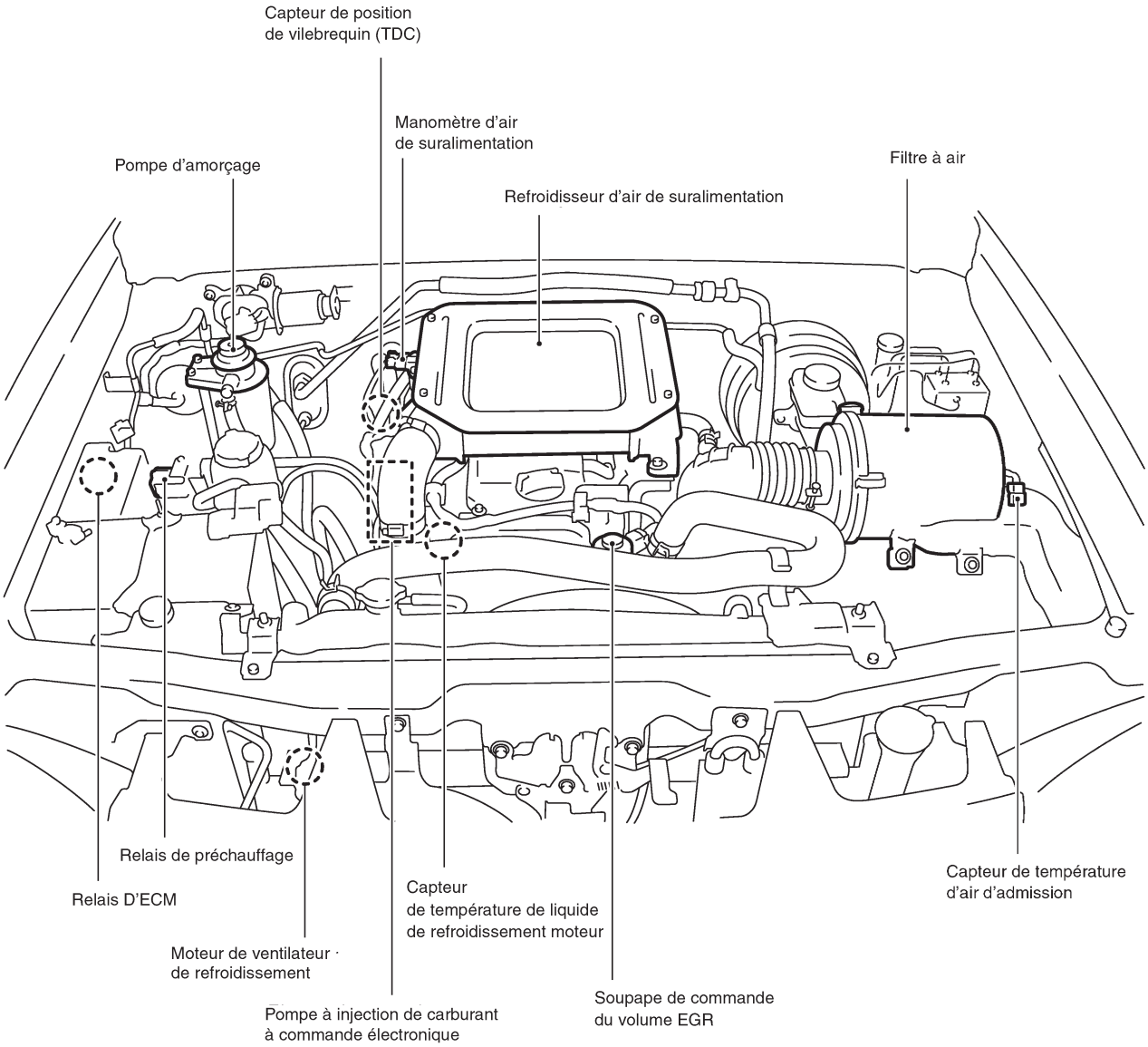

SEC225D

Simpo PDF Merge and Split Unregistered Version - http://www.simpopdf.com

Emplacement des composants de contrôle du moteur (Suite)

Pompe à injection de carburant à commande électronique

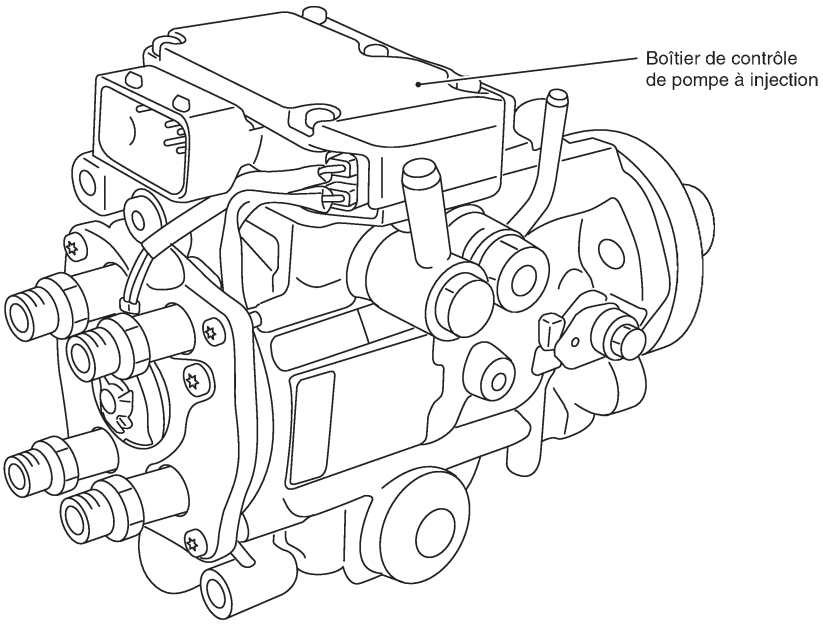

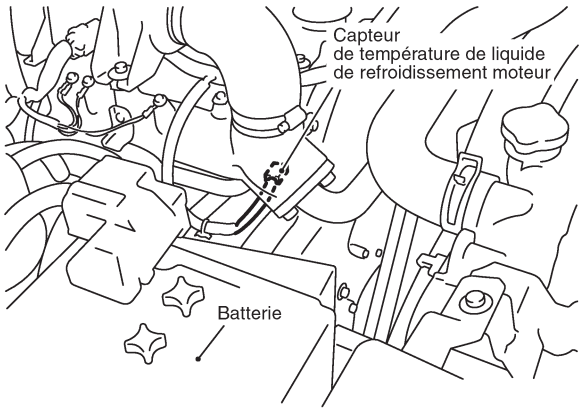

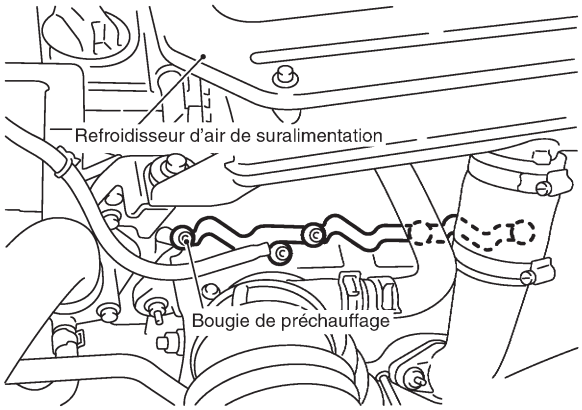

Vue du logement de roue avant droite

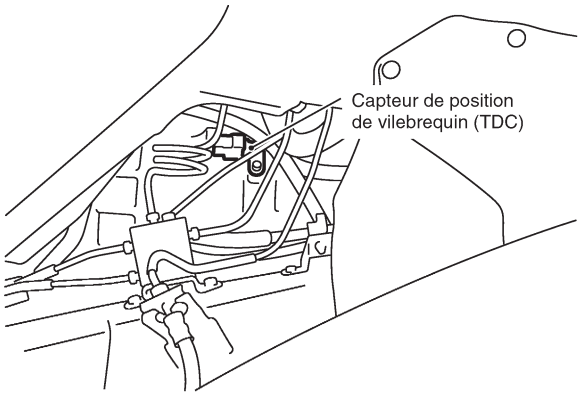

Vue du dessous du véhicule

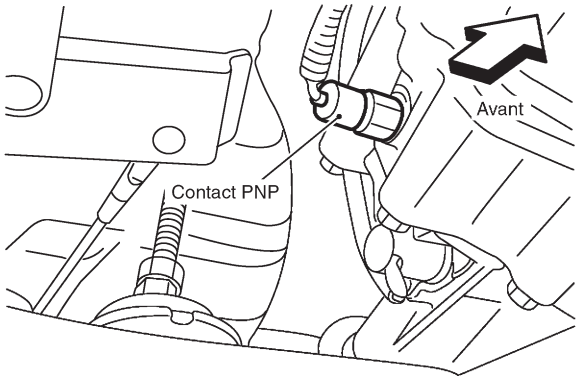

SEC226D

Simpo PDF Merge and Split Unregistered Version - http://www.simpopdf.com

Emplacement des composants de contrôle du moteur (Suite)

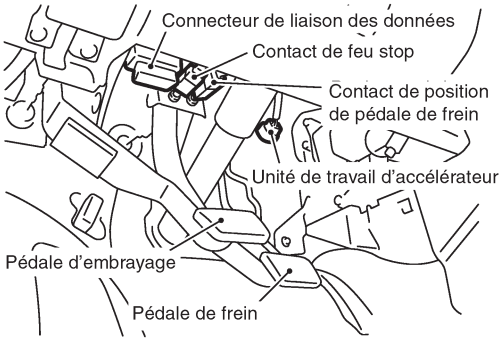

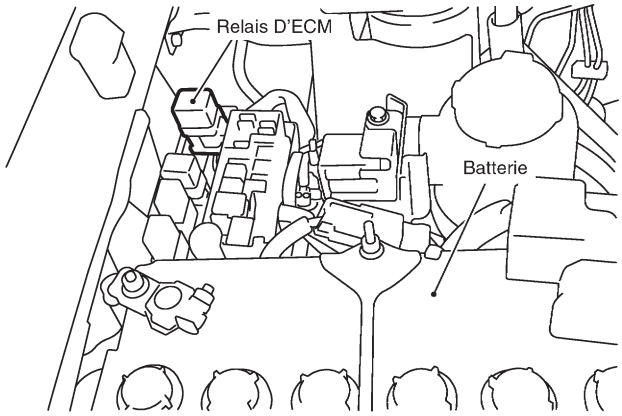

Vue côté siège conducteur

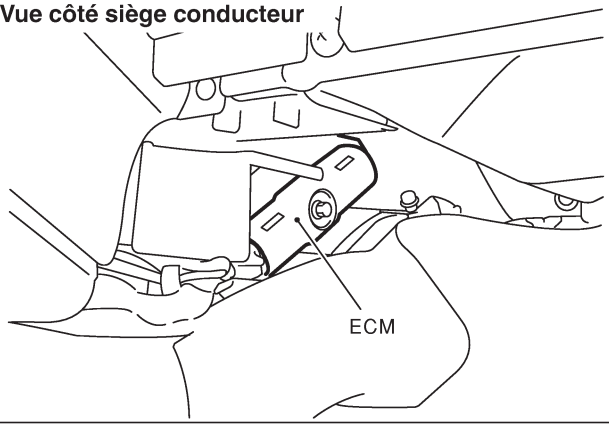

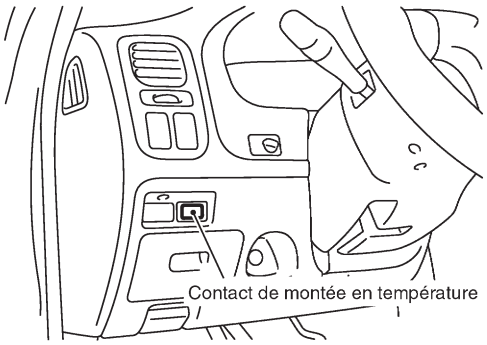

SEC227D

Simpo PDF Merge and Split Unregistered Version - http://www.simpopdf.com

Schéma de circuit

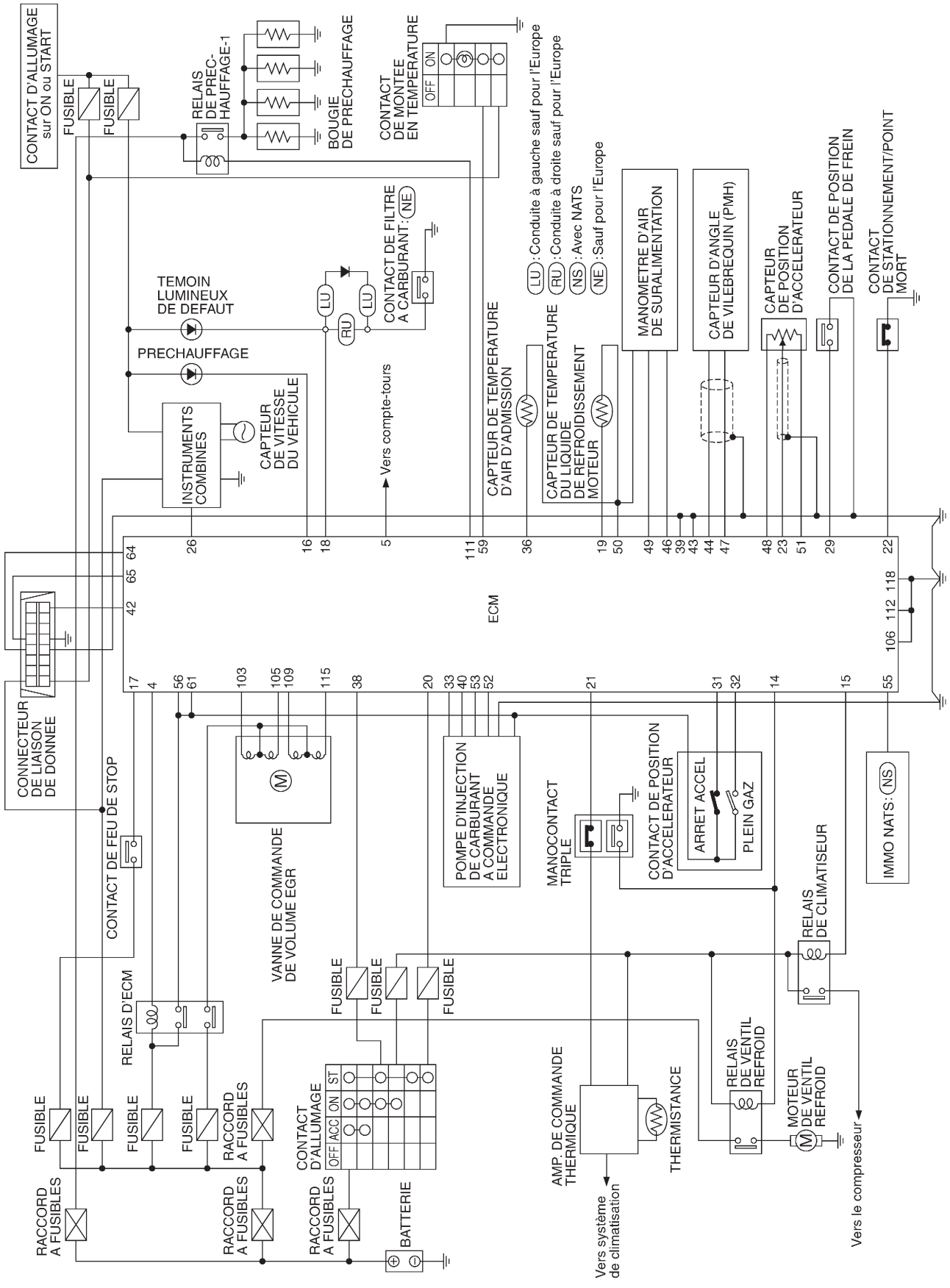

GEC273A

Simpo PDF Merge and Split Unregistered Version - http://www.simpopdf.com

Schéma du système

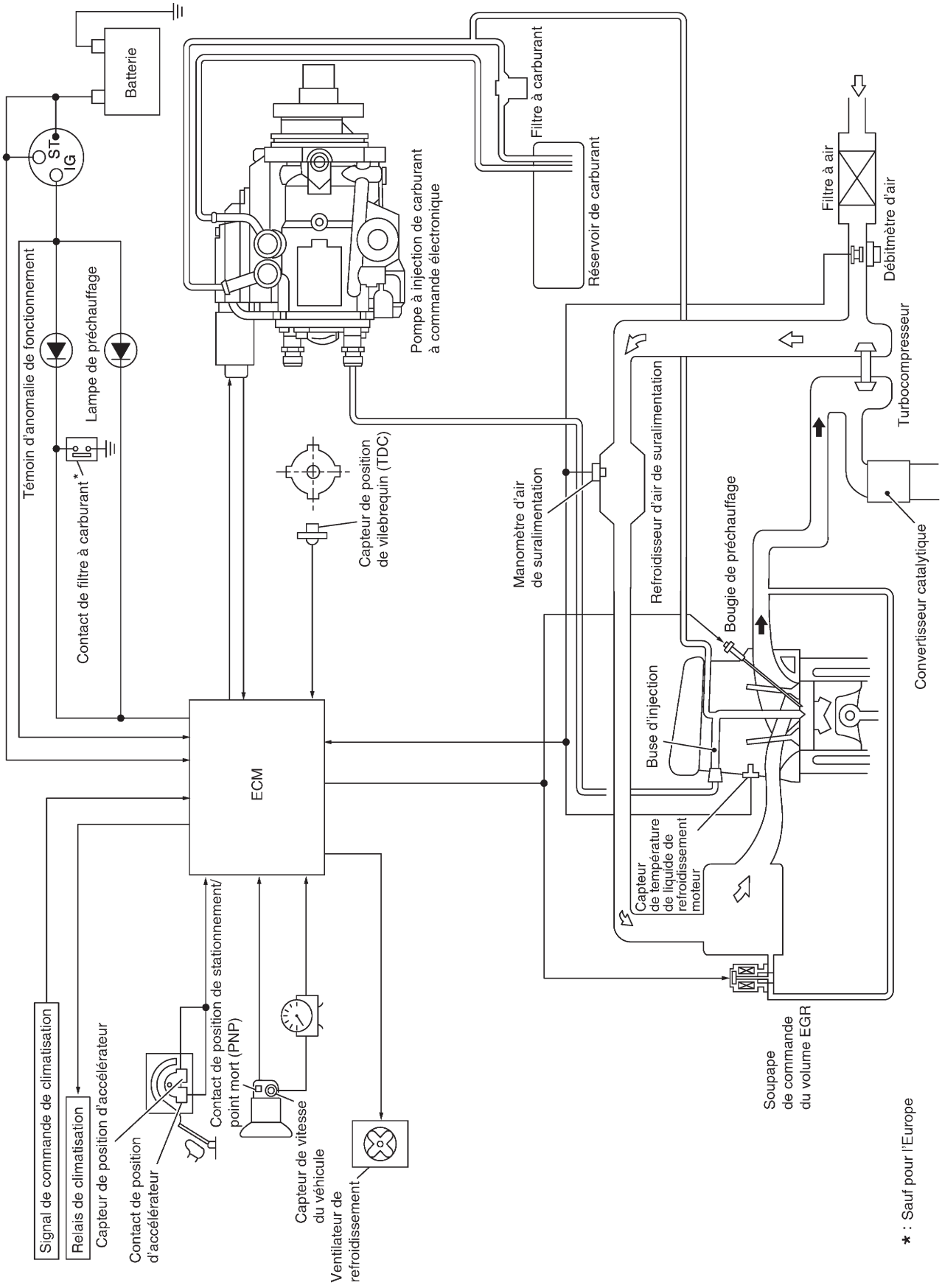

SEC239D

Simpo PDF Merge and Split Unregistered Version - http://www.simpopdf.com

Tableau du système

Entrée (capteur)	Fonction de l'ECM	Sortie (actionneur)
● Pompe d'injection de carburant à commande électronique ● Capteur d'angle de vilebrequin (PMH) ● Capteur de température du liquide de refroidissement moteur ● Capteur de position d'accélérateur ● Contact de position d'accélérateur ● Contact de stationnement/point mort (PNP) ● Contact d'allumage ● Tension de la batterie ● Capteur de vitesse du véhicule ● Interrupteur de climatiseur ● Contact de feu stop ● Capteur de pression d'air de suralimentation ● Capteur de température d'air d'admission	Commande d'injection de carburant	Pompe d'injection de carburant à commande électronique
	Commande de l'avance à l'injection de carburant	Pompe d'injection de carburant à commande électronique
	Commande de coupure de carburant	Pompe d'injection de carburant à commande électronique
	Système de commande de préchauffage	Relais et témoin de préchauffage
	Système d'autodiagnostic	Témoin de défaut (MIL) (sur le tableau de bord)
	Commande de volume EGR	Soupape de contrôle de volume EGR
	Commande du ventilateur de radiateur	Relais du ventilateur de radiateur
	Commande de coupure de climatiseur	Relais de climatiseur

Simpo PDF Merge and Split Unregistered Version - http://www.simpopdf.com

Système de commande d'injection de carburant

DESCRIPTION

Description du système

Trois types de commande de l'injection de carburant sont fournis pour adapter l'état de marche du moteur: commande normale, de ralenti et de démarrage. L'ECM détermine la commande d'injection de carburant appropriée. Pour chaque contrôle, la quantité de carburant injectée est compensée pour améliorer le rendement du moteur.
Un échange de signaux sous forme d'impulsions s'effectue entre l'ECM et la pompe d'injection à commande électronique (unité de commande intégrée). Le boîtier de commande de la pompe d'injection de carburant réalise un contrôle de fonction sur la soupape de décharge (intégrée à la pompe d'injection de carburant) en fonction des signaux d'entrée pour compenser la quantité de carburant injectée à la valeur prédéfinie.

Commande de démarrage

Tableau des signaux d'entrée/sortie

Capteur	Signal d'entrée à l'ECM	Fonction de l'ECM	Actionneur
Capteur de température du liquide de refroidissement moteur	Température du liquide de refroidissement moteur	Commande de l'injection de carburant (commande de démarrage)	Pompe d'injection de carburant à commande électronique
Capteur d'angle de vilebrequin (PMH)	Régime du moteur		
Contact d'allumage	Signal de démarrage		

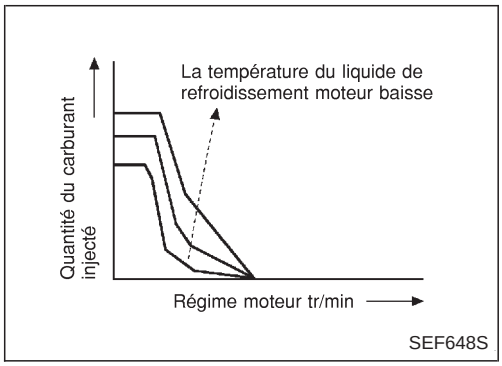

Quand l'ECM reçoit un signal de départ du contact d'allumage, l'ECM adapte le système d'injection de carburant à la commande de démarrage. La quantité de carburant injectée au moment du démarrage correspond à une valeur de programme préétablie dans l'ECM. Le programme est déterminé par le régime du moteur et la température du liquide de refroidissement moteur.
Pour faciliter le démarrage dans des conditions de moteur froid, la quantité de carburant injectée augmente au fur et à mesure où la température du liquide de refroidissement diminue. L'ECM termine la commande de démarrage lorsque la vitesse du moteur atteint la valeur spécifique, et transmet le contrôle à la commande normale ou de ralenti.

Simpo PDF Merge and Split Unregistered Version - http://www.simpopdf.com

Système de commande d'injection de carburant (Suite)

Commande de régime ralenti

Tableau des signaux d'entrée/sortie

Capteur	Signal d'entrée à l'ECM	Fonction de l'ECM	Actionneur
Capteur de température du liquide de refroidissement moteur	Température du liquide de refroidissement moteur	Commande de l'injection de carburant (commande de régime ralenti)	Pompe d'injection de carburant à commande électronique
Capteur d'angle de vilebrequin (PMH)	Régime du moteur		
Contact de stationnement/point mort (PNP)	Position du rapport		
Batterie	Tension de la batterie		
Contact de position d'accélérateur	Position de ralenti		
Capteur de vitesse du véhicule	Vitesse du véhicule		
Interrupteur de climatiseur	Signal du climatiseur		
Capteur de température d'air d'admission	Température de l'air d'admission		

Quand l'ECM détermine que le régime moteur est au ralenti, le système d'injection de carburant est adapté à la commande de ralenti. L'ECM régle la quantité de carburant injectée correspondant aux changements de charge appliqués au moteur pour maintenir un régime moteur constant. L'ECM fournit aussi rapidement au système une commande du régime ralenti en fonction de la température du liquide de refroidissement du moteur et du signal de l'interrupteur de chauffage rapide.

Commande normale

Tableau des signaux d'entrée/sortie

Capteur	Signal d'entrée à l'ECM	Fonction de l'ECM	Actionneur
Capteur d'angle de vilebrequin (PMH)	Régime du moteur	Commande de l'injection de carburant (commande normale)	Pompe d'injection de carburant à commande électronique
Capteur de position d'accélérateur	Position de l'accélérateur		
Capteur de vitesse du véhicule	Vitesse du véhicule		

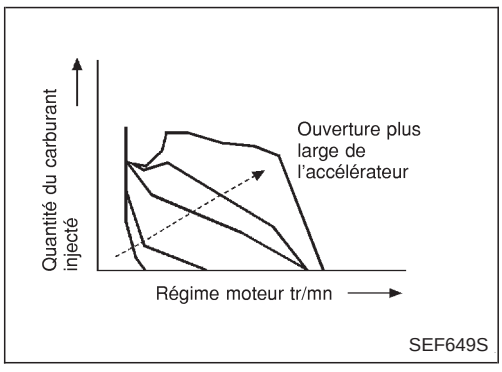

La quantité de carburant injectée dans des conditions de conduite normales est déterminée par les signaux du capteur. Le capteur d'angle de vilebrequin (PMH) détecte le régime du moteur et le capteur de position d'accélérateur détecte la position de l'accélérateur. Ces capteurs envoient des signaux à l'ECM.

Les données d'injection de carburant, prédéterminée en corrélation avec différentes vitesses du moteur et positions d'accélérateur, sont enregistrées dans la mémoire de l'ECM, selon un certain schéma. L'ECM détermine la quantité optimale de carburant à injecter en utilisant les signaux du capteur par comparaison avec le schéma.

Simpo PDF Merge and Split Unregistered Version - http://www.simpopdf.com

Système de commande d'injection de carburant (Suite)

Contrôle de la quantité maximale

Tableau des signaux d'entrée/sortie

Capteur	Signal d'entrée à l'ECM	Fonction de l'ECM	Actionneur
Capteur de température du liquide de refroidissement moteur	Température du liquide de refroidissement moteur	Commande de l'injection de carburant (contrôle de la quantité maximale)	Pompe d'injection de carburant à commande électronique
Capteur d'angle de vilebrequin (PMH)	Régime du moteur		
Capteur de position d'accélérateur	Position de l'accélérateur		

Le débit d'injection maximal dépend du régime moteur, de la quantité d'air admise, de la température du liquide de refroidissement du moteur et de la position de la pédale d'accélérateur, le tout en fonction des conditions de marche.
Ceci évite l'injection d'une quantité trop importante de carburant lorsque la densité de l'air décroît avec l'altitude ou lorsque le système est en panne.

Commande de décélération

Tableau des signaux d'entrée/sortie

Capteur	Signal d'entrée à l'ECM	Fonction de l'ECM	Actionneur
Contact de position d'accélérateur	Position de l'accélérateur	Commande de l'injection de carburant (commande de décélération)	Pompe d'injection de carburant à commande électronique
Capteur d'angle de vilebrequin (PMH)	Régime du moteur		

Pour un meilleur rendement énergétique, l'ECM envoie un signal de coupure à la pompe d'injection à commande électronique pendant la décélération. L'ECM détermine le temps de décélération selon les signaux de la commande de position de l'accélérateur et le capteur de position de vilebrequin (PMH).

Système de commande d'avance de l'injection de carburant

DESCRIPTION

Le calage théorique de l'injection en fonction du régime moteur et du débit d'injection est mémorisé à l'avance dans la cartographie de l'ECM. L'ECM et le boîtier de commande de la pompe d'injection échangent des signaux et effectuent une régulation automatique pour une programmation optimale de l'injection conformément au plan.

Simpo PDF Merge and Split Unregistered Version - http://www.simpopdf.com

Commande de coupure du climatiseur

DESCRIPTION

Tableau des signaux d'entrée/sortie

Capteur	Signal d'entrée à l'ECM	Fonction de l'ECM	Actionneur
Interrupteur de climatiseur	Signal 'ON' du climatiseur	Commande de coupure du climatiseur	Relais de climatiseur
Capteur de position d'accélérateur	Position de l'accélérateur		
Capteur de vitesse du véhicule	Vitesse du véhicule		
Capteur de température du liquide de refroidissement moteur	Température du liquide de refroidissement moteur		

Description du système

Ce système permet d'améliorer les accélérations en cas de fonctionnement de la climatisation.
Lorsque la pédale de l'accélérateur est enfoncée à fond, le climatiseur s'arrête pendant quelques secondes.
Lorsque la température du liquide de refroidissement moteur monte excessivement, le climatiseur est coupé jusqu'à ce que la température du liquide de refroidissement du moteur revienne à la normale.

Commande de coupure d'alimentation (à vide et à régime élevé du moteur)

DESCRIPTION

Tableau des signaux d'entrée/sortie

Capteur	Signal d'entrée à l'ECM	Fonction de l'ECM	Actionneur
Capteur de vitesse du véhicule	Vitesse du véhicule	Commande de coupure de carburant	Pompe d'injection de carburant à commande électronique
Contact de stationnement/point mort (PNP)	Position de point mort		
Contact de position d'accélérateur	Position de l'accélérateur		
Capteur de température du liquide de refroidissement moteur	Température du liquide de refroidissement moteur		
Capteur d'angle de vilebrequin (PMH)	Régime du moteur		

Si le régime moteur dépasse 2 700 tr/mn à vide (par exemple, au point mort et régime supérieur à 2 700 tr/mn), l'alimentation en carburant est coupée au bout de quelques instants. Le moment exact de la coupure d'alimentation varie selon le régime du moteur. La coupure de l'alimentation de carburant est maintenue jusqu'à ce que le régime du moteur atteigne 1 500 tr/mn, puis l'alimentation de carburant est rétablie.

REMARQUE :
Cette fonction diffère de la commande de décélération décrite au chapitre ''Système de commande d'injection de carburant'', page EC-3439.

Simpo PDF Merge and Split Unregistered Version - http://www.simpopdf.com

Système de ventilation du carter moteur

DESCRIPTION

Ce système réinjecte les gaz perdus dans la conduite d'admission d'air après séparation de l'huile par le séparateur monté dans le cache-culbuteurs.

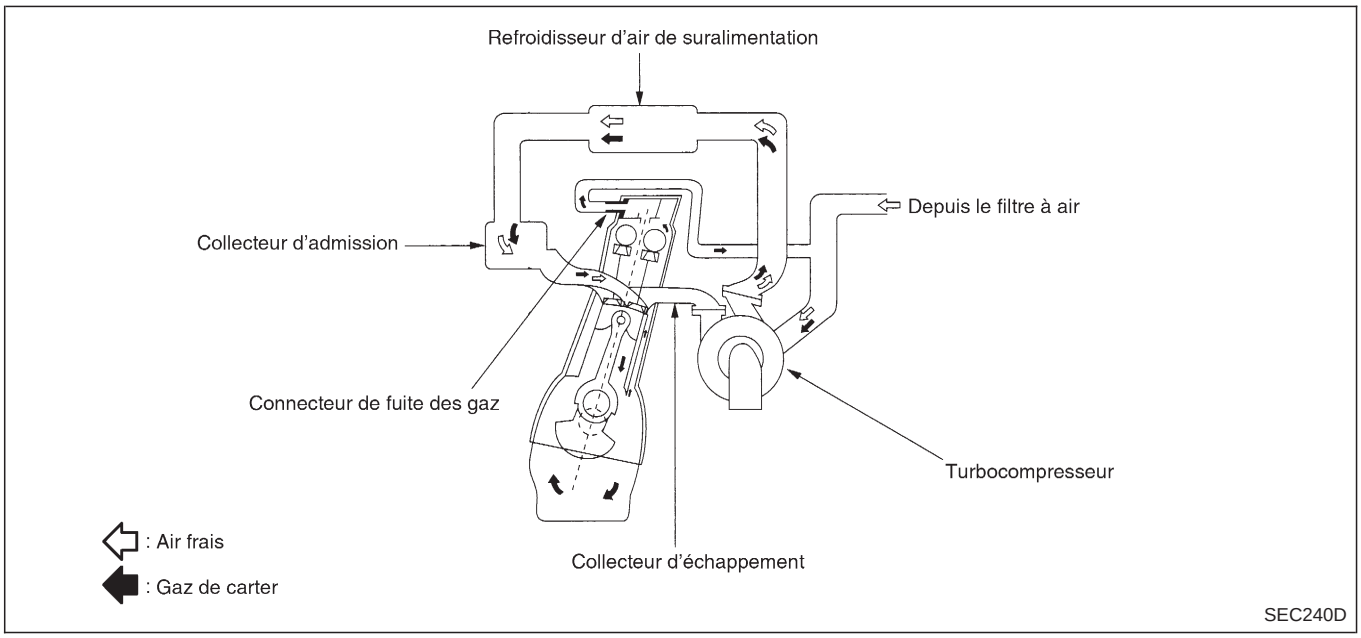

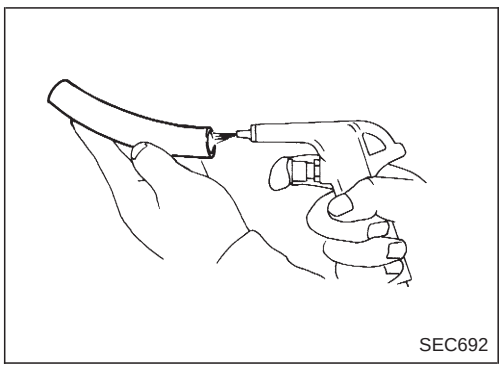

INSPECTION

Flexible de ventilation

1. Vérifier les flexibles et les raccords de flexible pour déceler toute présence de fuites.
2. Débrancher tous les flexibles et les nettoyer à l'air comprimé. Remplacer tous les flexibles qui ne peuvent pas être débouchés.

Simpo PDF Merge and Split Unregistered Version - http://www.simpopdf.com

Tube d'injection et injecteur

DEPOSE ET REPOSE

PRECAUTION :

- **Ne pas démonter l'ensemble injecteurs. Si le résultat n'est pas satisfaisant, remplacer l'ensemble injecteur.**
- **Obturer l'écrou évasé avec un capuchon ou un chiffon de façon que la poussière ne puisse pas pénétrer à l'intérieur de l'injecteur. Couvrir la tête de l'injecteur pour protéger l'aiguille.**

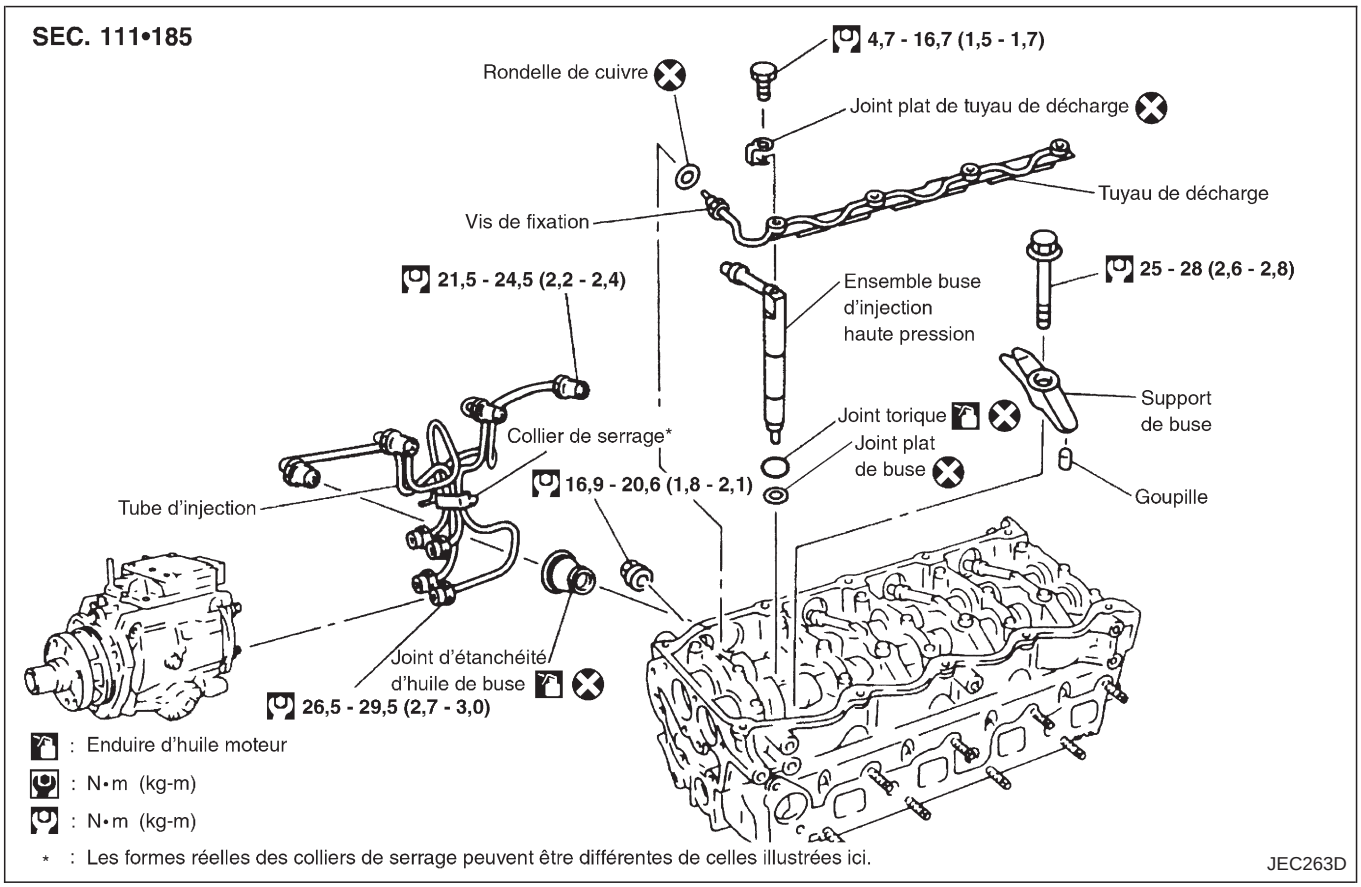

Simpo PDF Merge and Split Unregistered Version - http://www.simpopdf.com

Tube d'injection et injecteur (Suite)

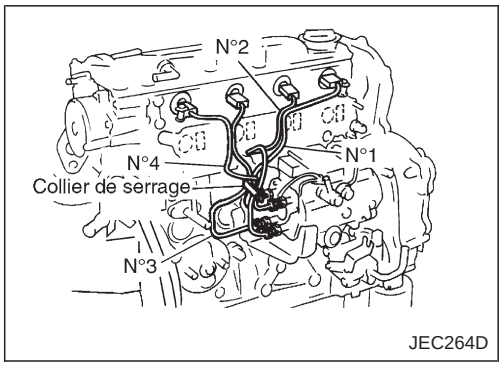

Tube d'injection

Dépose

1. Marquer les n° des cylindres vers les tuyaux à injection, puis les déconnecter.

● **Effectuer le marquage à un endroit approprié et de manière à ce qu'il ne puisse pas être effacé par le carburant, etc.**

2. Déposer les brides puis débrancher les tubes l'un après l'autre.

● Le collecteur d'admission est ôté pour explication dans la figure.

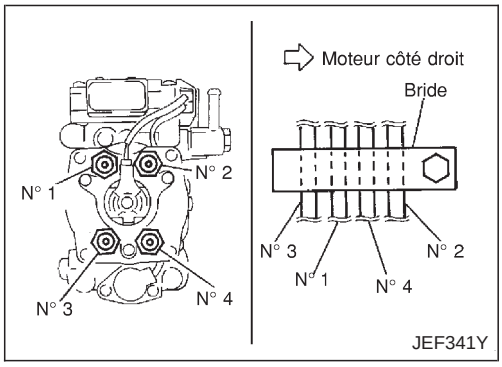

Repose

1. En se référant à la figure et aux marquages qui ont été faits pour la repose, connecter les tubes à injection à tous les cylindres.
2. Raccorder provisoirement les tubes à la tête du cylindre uniquement en vissant 2 à 3 tours. S'assurer que tous les tubes peuvent être raccordés également au côté de la pompe.
3. Serrer ensuite les écrous évasés du côté de la culasse et du côté de la pompe, en commençant par le côté opposé à vous.

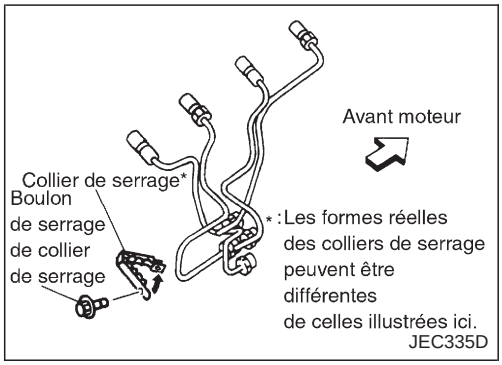

4. Attacher le collier du tube à injection dans la direction indiquée sur la figure.
5. Insérer le boulon de serrage du collier (type à 4 tuyaux) de l'arrière à l'avant du moteur.

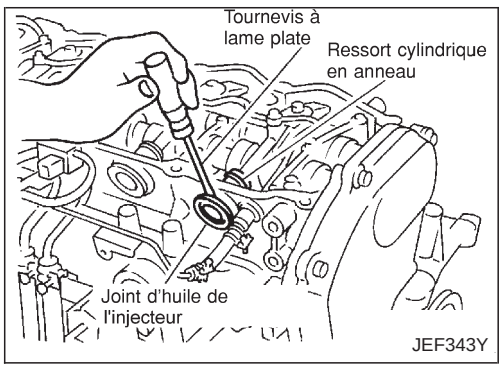

Joint d'huile d'injecteur

Dépose

Soulever la bride du joint avec la lame d'un tournevis, par exemple, puis la déposer.

Repose

1. Une fois l'ensemble d'injecteur à haute pression reposé, pousser le joint du côté de la culasse jusqu'à ce qu'il entre en contact avec la bride.
2. S'assurer que le ressort cylindrique en anneau du joint sur l'ensemble d'injecteur à haute pression ne tombe pas.

● **Remplacer le joint à huile par une pièce neuve lorsque l'ensemble d'injecteur à haute pression est déposé (il n'est pas nécessaire de remplacer le joint à huile lorsque seuls les tubes à injection sont déposés).**

Simpo PDF Merge and Split Unregistered Version - http://www.simpopdf.com

Tube d'injection et injecteur (Suite)

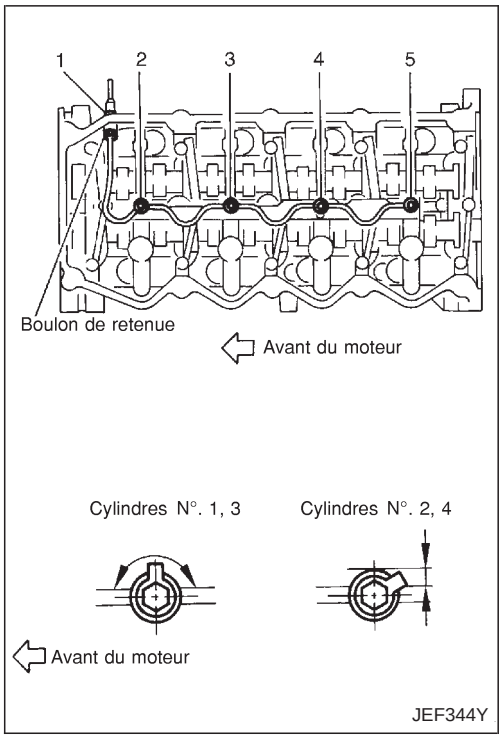

Tube de décharge

Dépose

Desserrer et déposer les boulons de montage et les écrous évasés dans l'ordre inverse des numéros de la figure.

- Lorsque les écrous évasés sont desserrés, maintenir la tête des boulons de retenue hexagonaux (tête à l'intérieur) à l'aide d'une clé.

Repose

1. Serrer les écrous évasés et les boulons de montage dans l'ordre numérique indiqué sur la figure.

- Lorsque les écrous évasés sont serrés, maintenir la tête des boulons de retenue hexagonaux (tête à l'intérieur) à l'aide d'une clé.

2. Pour éviter des interférences avec le cache-culbuteurs, placer le joint d'étanchéité dans la zone indiquée par la flèche, puis serrer les boulons de montage (être particulièrement attentif aux cylindres n° 2 et 4).

- **Après repose du tube de décharge, vérifier son étanchéité à l'air.**
- Le serrage des boulons peut entraîner la rupture du joint du tube de décharge. Cependant, cela n'affecte pas le bon fonctionnement.

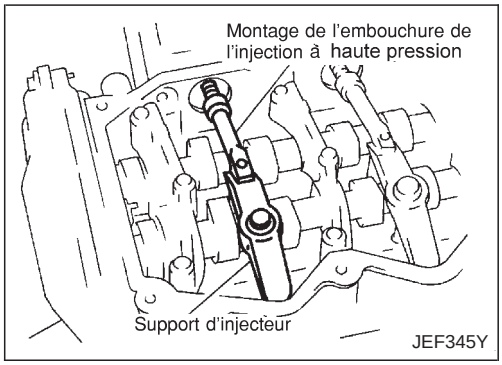

Ensemble d'injecteur à haute pression

Dépose

1. Déposer le support d'embouchure, puis tirer l'ensemble d'injecteur à haute pression en le tournant dans le sens des aiguilles d'une montre/le sens inverse.
2. Sortir la rondelle en cuivre de la culasse en utilisant par exemple la lame d'un tournevis.

PRECAUTION :

Ne pas démonter l'embouchure de l'injecteur à haute pression.

Repose

1. Introduire le joint de l'injecteur dans l'alésage de la culasse.
2. Placer le joint torique dans la rainure de l'injecteur, puis insérer l'ensemble injecteur dans la culasse.

ESSAI ET REGLAGE

ATTENTION :

Lorsqu'on utilise un appareil d'essai pour injecteur, il faut veiller à ne pas laisser le carburant diesel vaporisé par l'injecteur être en contact avec les mains ou avec le corps, et il faut s'assurer que les yeux sont correctement protégés par des lunettes de travail.

Simpo PDF Merge and Split Unregistered Version - http://www.simpopdf.com

Tube d'injection et injecteur (Suite)

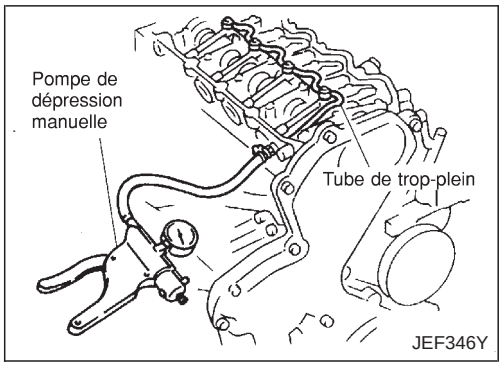

Contrôle de l'étanchéité à l'air du tube de décharge

Avant de remonter le cache-culbuteurs, effectuer le contrôle de la manière suivante.

1. Brancher la pompe à vide manuelle au flexible de décharge.
2. Vérifier que l'étanchéité à l'air subsiste lorsque la dépression indiquée ci-après est appliquée.

Pression normale :

−53,3 kPa à −66,7 kPa (−533 mbar à −667 mbar, −400 mmHg à −500 mmHg)

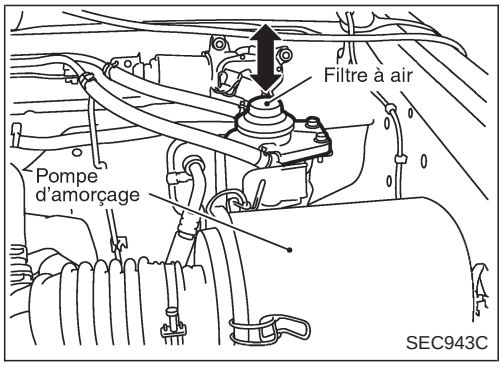

Purge d'air de la conduite d'alimentation en carburant

Lorsque la réparation est effectuée, purger l'air de la conduite en actionnant la pompe d'amorçage vers le haut et vers le bas jusqu'à sentir une résistance. Consulter la page EC-3454.

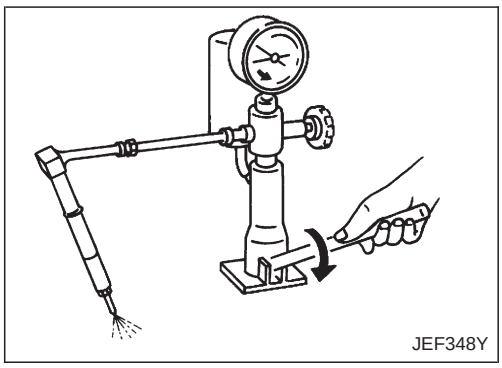

Essai de pression d'injection

1. Raccorder l'ensemble injecteur à l'appareil de test et purger l'air par le raccord conique.
2. Pomper lentement la poignée de l'appareil (une fois par seconde) et surveiller le manomètre.
3. Prendre note de la valeur indiquée par le manomètre, lorsque la pression d'injection commence juste à chuter.

Pression d'injection initiale :

Neuf

18 500 - 20 500 kPa (185 - 205 bar, 189 - 209 kg/cm^2)

Limite

16 200 kPa (162 bar, 165 kg/cm^2)

- L'ensemble injecteur fournit 2 niveaux de pression d'injection. Cependant, le jugement devrait être fait à la première étape de la pression de l'ouverture de soupape.

Vérifier systématiquement la pression d'injection initiale à l'aide d'un injecteur neuf.

Simpo PDF Merge and Split Unregistered Version - http://www.simpopdf.com

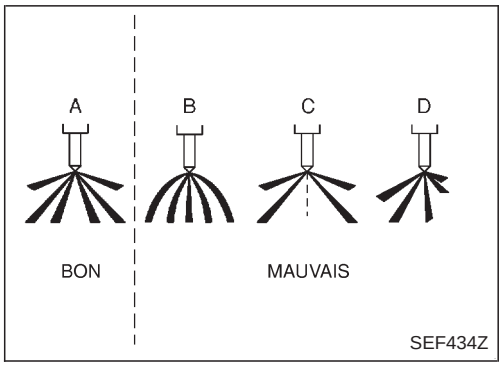

Tube d'injection et injecteur (Suite)

Essai du jet d'injection

1. Contrôler le cône d'injection en pompant une fois par seconde la poignée du contrôleur d'injecteurs.
   Formes de jet d'injection incorrectes :
   Le jet n'est pas droit et manque de puissance (cas B de l'illustration).
   Le carburant goutte (cas C de l'illustration).
   Le jet n'est pas uniforme (cas D de l'illustration).
2. Si la forme du jet n'est pas correcte, remplacer l'ensemble injecteur.

Pompe d'injection de carburant à commande électronique

DEPOSE ET REPOSE

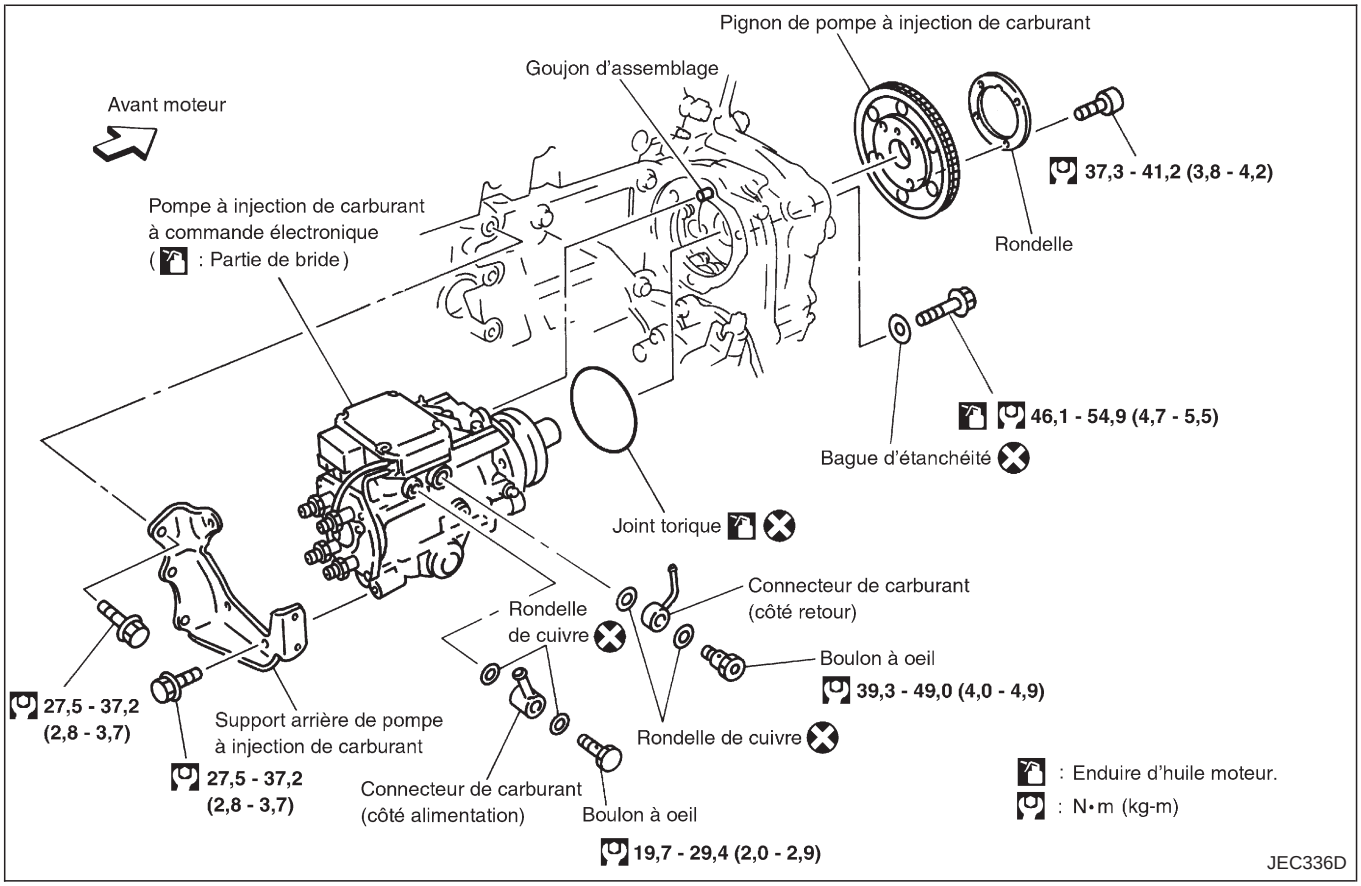

Dépose

1. Déposer les pièces indiquées ci-dessous.

- Capot du moteur
- Liquide de refroidissement du moteur (vidange)
- Protection du moteur
- Tuyau de chauffage sous le collecteur d'admission
- Tubes à injection
- Garde-boue droit (avec sous-protection)
- Roue avant droite

Simpo PDF Merge and Split Unregistered Version - http://www.simpopdf.com

Pompe d'injection de carburant à commande électronique (Suite)

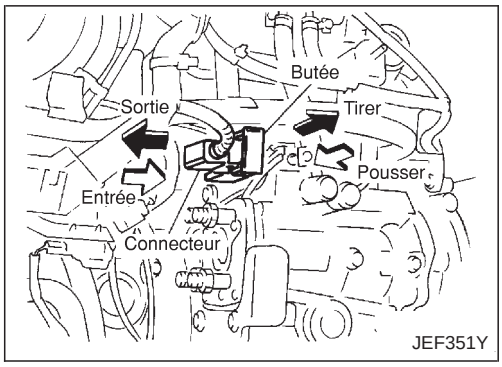

2. Déconnecter les flexibles d'alimentation de la pompe d'injection de carburant.
3. Débrancher le connecteur de faisceau de la pompe d'injection de carburant.
- Débrancher le connecteur en tirant complètement sa butée.
- Lorsque la butée est entièrement tirée, le connecteur est également débranché. Pour la repose, appuyer d'abord sur le milieu du connecteur, puis appuyer sur la butée jusqu'à ce qu'elle se verrouille, signe que le connecteur est raccordé.

4. Déposer le support arrière de la pompe d'injection.

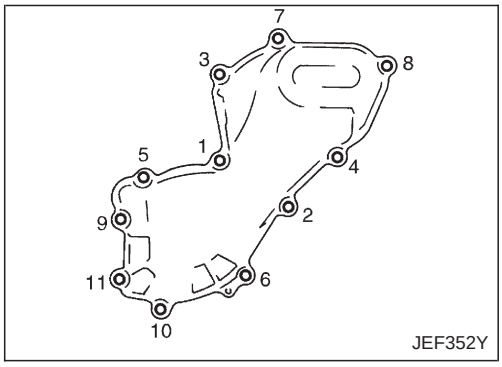

5. Déposer le boîtier de la chaîne avant.
- Déplacer le réservoir de liquide de direction assistée du support.
- Desserrer et déposer les boulons de montage dans l'ordre inverse des numéros indiqués sur la figure.
- Comme pour les boulons 6, 10, et 11, déposer avec la rondelle de caoutchouc car il n'y a pas suffisamment d'espace pour déposer uniquement les boulons.

PRECAUTION :
Pour éviter que des corps étrangers ne pénètrent dans le moteur, couvrir l'ouverture durant la dépose du boîtier de la chaîne avant.

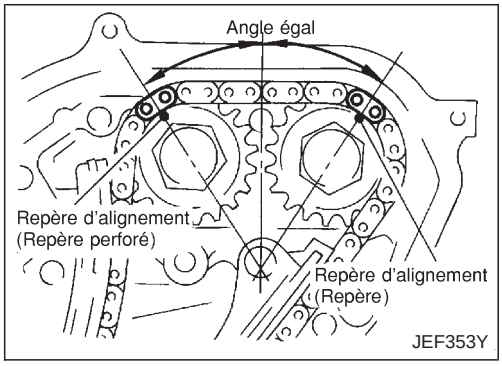

6. Régler le cylindre n°1 à la position point mort haut.
- Tourner la poulie de vilebrequin dans le sens des aiguilles d'une montre, puis aligner la marque d'alignement (marque perforée) de la roue dentée d'arbre à cames sur la position indiquée sur la figure.
- Il n'y a aucun indicateur sur la poulie de vilebrequin.
- Il n'est pas nécessaire de marquer la chaîne secondaire de distribution pour la dépose car cela peut être fait à l'aide de la couleur de lien pour la repose. Cependant, la marque de réglage sur la roue de la pompe d'injection de carburant est difficile à voir ; la marquer si nécessaire.

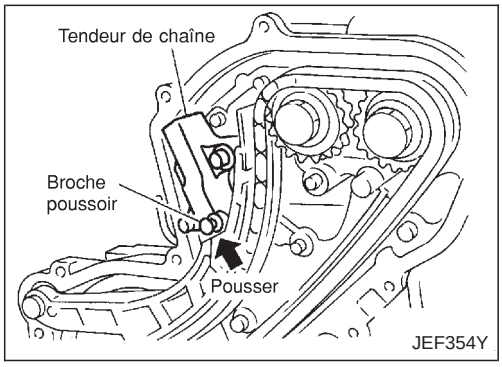

7. Déposer le tendeur de chaîne.
a. Appuyer sur le piston du tendeur de chaîne, puis le fixer avec un outil tel qu'une broche-poussoir.

Simpo PDF Merge and Split Unregistered Version - http://www.simpopdf.com

Pompe d'injection de carburant à commande électronique (Suite)

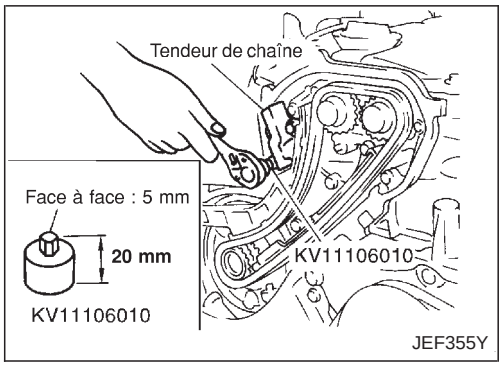

b. En utilisant la clé hexagonale (face à face : 5 mm) (outil spécial), déposer les boulons de montage, puis déposer le tendeur de chaîne.
- Un outil polyvalent peut également être utilisé.

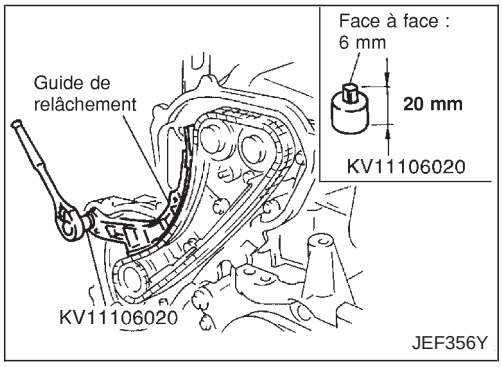

8. Déposer le guide de relâchement de la chaîne de distribution.
- En utilisant la clé hexagonale (face à face : 6 mm, type court) (outil spécial), déposer les boulons de montage, puis déposer le guide de relâchement de la chaîne de distribution.

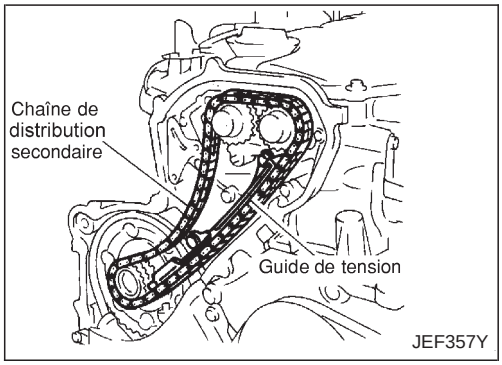

9. Déposer le guide de tension de chaîne de distribution.
10. Déposer la chaîne de distribution secondaire.
- Seule la chaîne de distribution peut être déposée sans déposer les pignons.

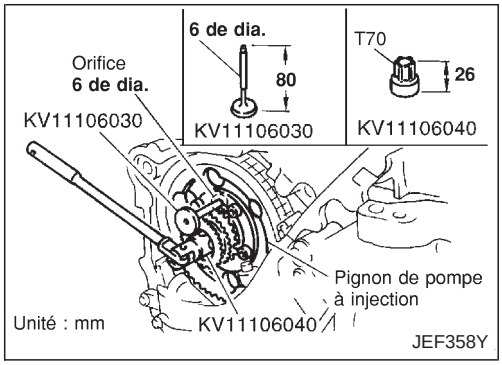

11. Fixer le pignon de la pompe d'injection de carburant.
a. Insérer la goupille d'arrêt de positionnement dans l'orifice de cm de diamètre du pignon de la pompe d'injection de carburant.
b. En utilisant la clé Torx (outil spécial), tourner progressivement le manche de la pompe pour régler la position de l'orifice du pignon de la pompe d'injection de carburant.
c. Insérer la goupille d'arrêt de positionnement dans le corps de la pompe d'injection de carburant pour fixer le pignon.

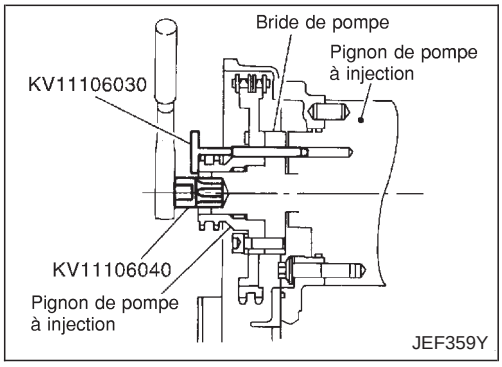

- Insérer la goupille d'arrêt de positionnement jusqu'à ce que sa bride entre en contact avec le pignon de la pompe d'injection de carburant.
d. Retirer la clé Torx (outil spécial).

Simpo PDF Merge and Split Unregistered Version - http://www.simpopdf.com

Pompe d'injection de carburant à commande électronique (Suite)

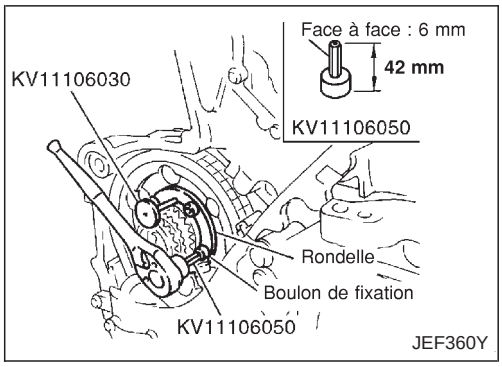

12. En utilisant la clé hexagonale (face à face : 6 mm, type long) (outil spécial), déposer les boulons de montage du pignon de la pompe d'injection de carburant.
- Il n'est pas nécessaire d'enlever la rondelle du pignon de la pompe d'injection de carburant.

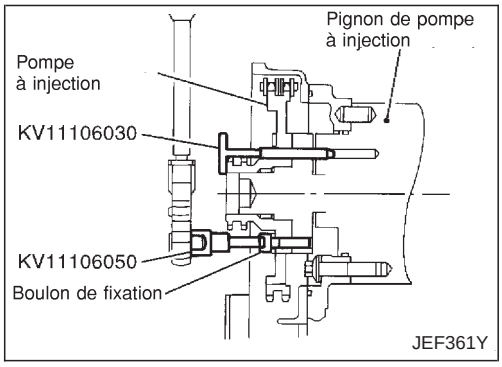

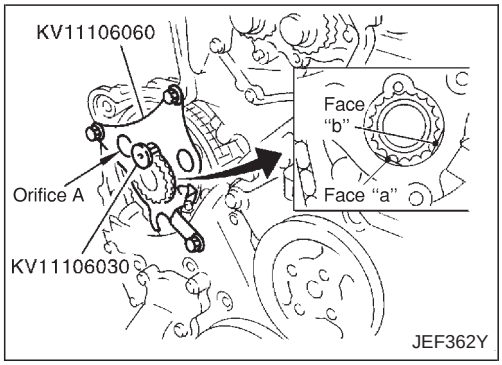

13. En utilisant le support de pignon (outil spécial), maintenir le pignon de la pompe d'injection de carburant pour éviter qu'il ne tombe.
- Une fois le support de pignon posé, si la goupille d'arrêt de positionnement interfère, la tirer d'environ 10 mm, puis l'installer.
- Une fois le support de pignon reposé temporairement, insérer la barre d'extension (outil spécial) et la douille Torx dans les trois orifices A. Après avoir positionné les orifices, serrer les boulons de montage du support. (se reporter à l'étape 14 concernant l'outil)
- La longueur des boulons de montage du support de pignon doit être d'environ 15 mm (longueur de filetage M6).
- S'assurer que les faces a et b du support de pignon sont en contact avec le côté du bas du pignon sur 15 mm (côté du petit diamètre).

PRECAUTION :
Ne pas déposer le support de pignon tant que la pompe d'injection de carburant n'est pas installée.
- Une fois le support de pignon reposé, ôter la goupille d'arrêt de positionnement (outil spécial) du pignon de la pompe d'injection de carburant.

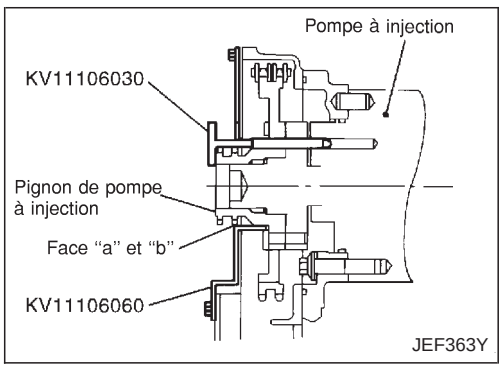

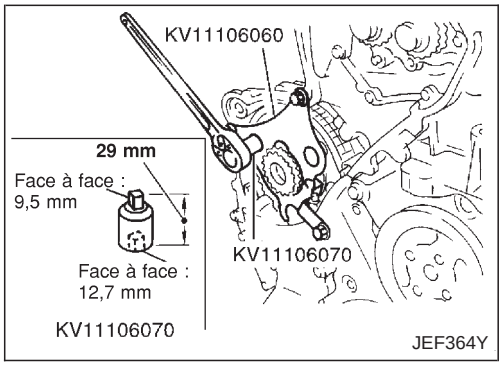

14. En utilisant la barre d'extension (outil spécial : longueur totale 43 mm) et la douille Torx (Q6-E12 : disponible dans le commerce), déposer les boulons de montage, puis déposer la pompe d'injection de carburant vers l'arrière du moteur.
- Même après avoir déposé tous les boulons de montage, la pompe d'injection de carburant est toujours maintenue par une cheville de positionnement.

PRECAUTION :
Ne pas démonter ou régler la pompe d'injection de carburant.

Simpo PDF Merge and Split Unregistered Version - http://www.simpopdf.com

Pompe d'injection de carburant à commande électronique (Suite)

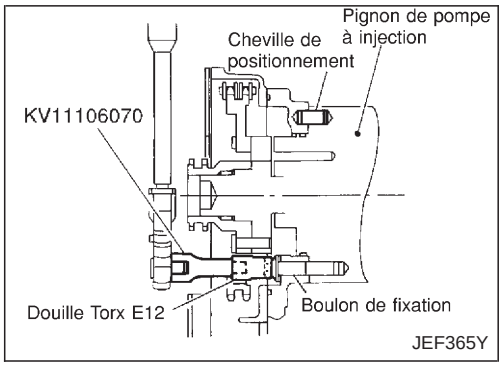

15. Déposer les boulons de montage de la pompe d'injection de carburant.

- Le joint des boulons de montage ne peut être réutilisé.

PRECAUTION :

Pendant la dépose, veiller à ne pas laisser tomber le joint dans le moteur.

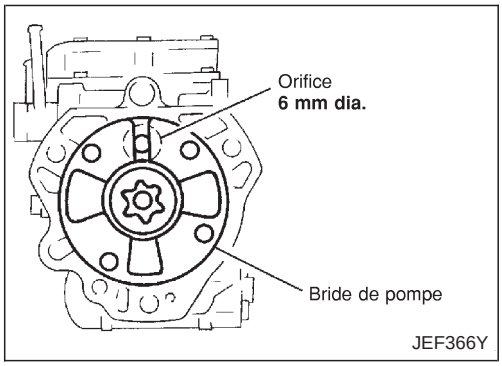

Repose

- Il n'est pas nécessaire de régler la distribution d'injection en modifiant l'angle de repose qui était réalisé avec la pompe d'injection de carburants traditionnelle. La position de repose peut être facilement fixée par la cheville de positionnement et les boulons de montage.

1. Avant de reposer la pompe d'injection de carburant, vérifier que l'entaille de sa bride et l'orifice de 6 mm de diamètre situé sur la carrosserie sont alignés.

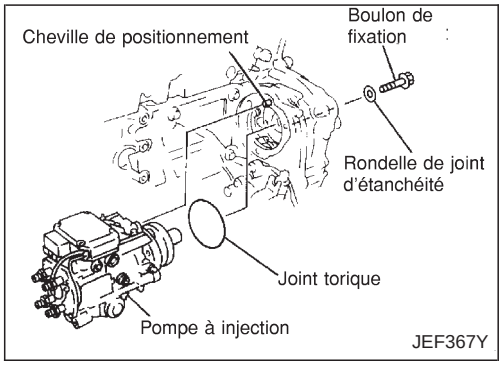

2. Insérer la pompe d'injection de carburant sur la position de montage de la partie arrière du moteur.

- Régler la position du support de la pompe d'injection de carburant sur la cheville de positionnement, puis l'installer.

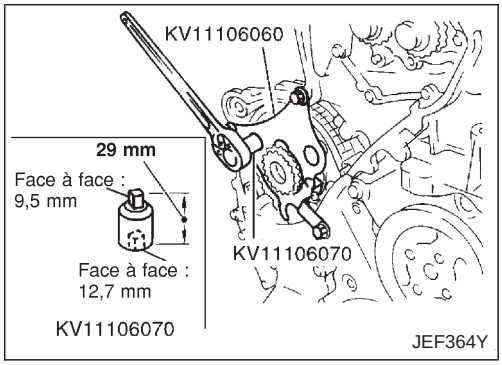

3. En utilisant la barre d'extension (outil spécial) et la douille Torx, serrer les boulons de montage de la pompe d'injection de carburant.
4. Déposer le support du pignon (outil spécial).

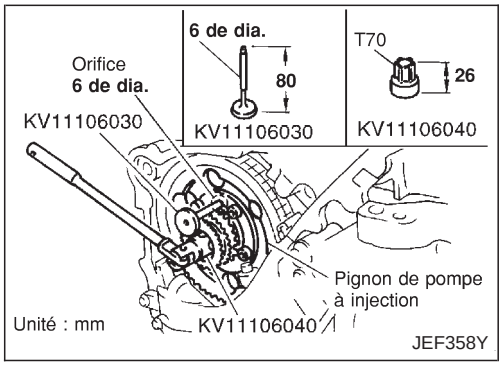

5. En utilisant la clé Torx (outil spécial), tourner progressivement le manche de la pompe pour régler la position de la bride. Puis, insérer la goupille d'arrêt de positionnement dans l'orifice de cm de diamètre du pignon de la pompe d'injection de carburant via la bride de la pompe et le corps de la pompe.
6. Retirer la clé Torx (outil spécial).

Simpo PDF Merge and Split Unregistered Version - http://www.simpopdf.com

Pompe d'injection de carburant à commande électronique (Suite)

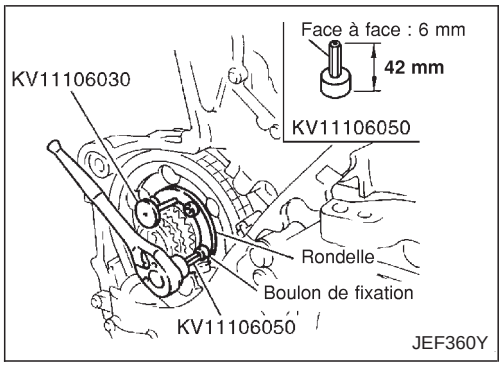

7. En utilisant la clé hexagonale (face à face : 6 mm, type long) (outil spécial), serrer le boulon de montage du pignon.
- Lorsque le joint du pignon de la pompe d'injection de carburant est déposé, l'installer avec la marque F (avant) face à l'avant du moteur.

8. Tirer la goupille d'arrêt de positionnement (outil spécial).

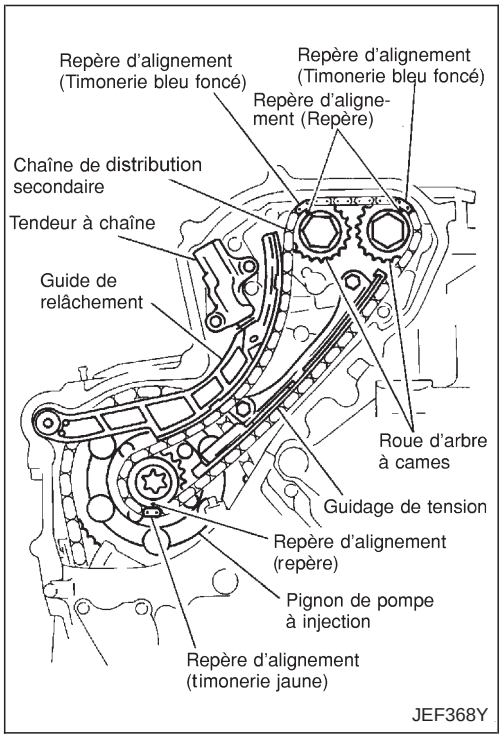

9. Reposer la chaîne de distribution secondaire.
- Aligner les repères d'alignement des pignons et ceux de la chaîne, puis l'installer.
- L'illustration indique l'état de la repose et les noms de la chaîne de distribution secondaire et d'autres éléments relatifs.

10. Reposer le guide de tension de la chaîne de distribution.
- Le boulon supérieur de repose est plus long que le boulon inférieur.

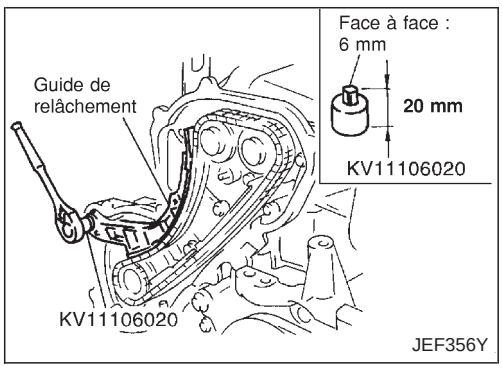

11. En utilisant une clé hexagonale (face à face : 6 mm, type court) (outil spécial), installer le guide de relâchement de la chaîne de distribution.

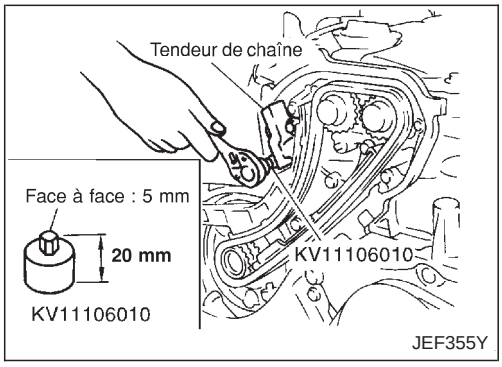

12. Reposer le tendeur de chaîne.
a. Appuyer sur le piston du tendeur de chaîne, puis le maintenir avec un outil tel qu'une broche-poussoir, et l'installer.
b. En utilisant une clé hexagonale (face à face : 5 mm) (outil spécial), serrer les boulons de montage.
- La repose est possible également via un outil polyvalent.

c. Tirer l'outil tel qu'une broche-poussoir qui maintient le piston.
- **S'assurer que la marque de réglage des roues et la chaîne de distribution soient alignées.**

Simpo PDF Merge and Split Unregistered Version - http://www.simpopdf.com

Pompe d'injection de carburant à commande électronique (Suite)

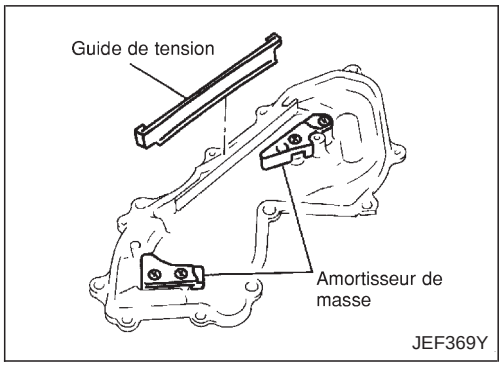

13. Reposer le boîtier de la chaîne avant.

a. Reposer le guide de tension à l'arrière du boîtier de la chaîne avant.

- Si le boîtier de la chaîne avant est secoué, le guide de tension peut tomber. Par conséquent, lors de la repose du boîtier de la chaîne avant, le maintenir verticalement.

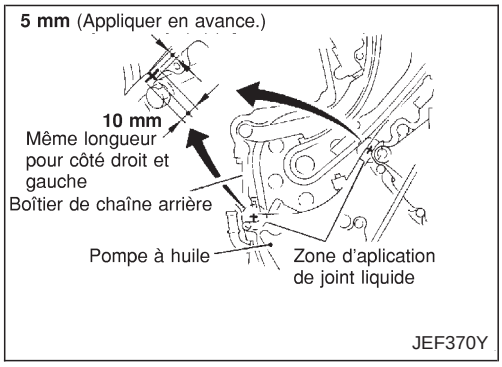

b. Appliquer du produit Three Bond 1207C (KP510 00150) aux deux extrémités de la zone de voûte de la pompe à huile (surface de contact du boîtier de la chaîne arrière) comme indiqué sur la figure.

c. Reposer le boîtier de la chaîne avant.

- Aligner la cheville de positionnement du boîtier de la pompe à huile sur l'orifice de la goupille, puis l'installer.
- Reposer les boulons 6, 10 et 11 (indiqués sur la figure) avec une rondelle de caoutchouc sur le boîtier de la chaîne avant.

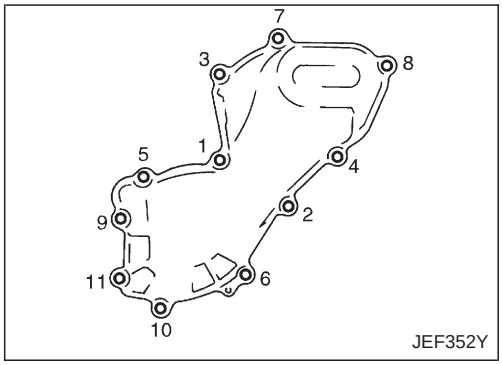

d. Serrer les boulons de fixation dans l'ordre numérique indiqué sur la figure.

e. Après avoir serré tous les boulons, serrer à nouveau les boulons de montage suivant l'ordre numérique indiqué sur la figure.

14. Monter le support arrière de la pompe d'injection.

- Serrer tous les boulons temporairement, puis les serrer fortement avec la face de montage bien en contact avec la pompe d'injection de carburant et le support de la pompe.

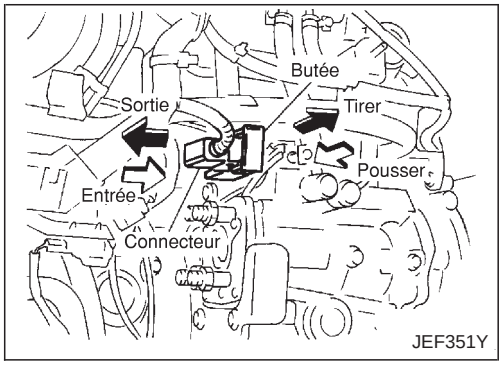

15. Raccorder le connecteur de faisceau de la pompe d'injection de carburant.

- Insérer fermement le connecteur de faisceau jusqu'à ce que la butée se verrouille.
- Pousser le connecteur d'abord à moitié, puis appuyer sur la butée jusqu'à ce qu'elle se verrouille, de sorte que le connecteur soit raccordé.

16. Raccorder les flexibles d'alimentation.

- Lorsque les flexibles sont déconnectées du côté de la galerie de carburant, insérer jusqu'à ce qu'ils soient en contact avec la soupape, puis installer solidement le collier.

17. Reposer les autres composants dans l'ordre inverse de la repose.

Simpo PDF Merge and Split Unregistered Version - http://www.simpopdf.com

Purge d'air

Pour purger l'air, actionner la pompe d'amorçage.

- **Lorsque l'air est complètement sorti, la pompe d'amorçage devient brusquement difficile à actionner. Arrêter de pomper.**
- **Si la purge de l'air ne peut pas être effectuée en actionnant la pompe d'amorçage (la pompe d'amorçage ne présente de résistance à aucun moment), débrancher le flexible d'alimentation en carburant qui se trouve entre le filtre à carburant et la pompe d'injection. Réaliser ensuite l'opération décrite ci-dessus, et s'assurer que le carburant sort bien (utiliser un récipient, etc. de manière à ne pas déverser de carburant; ne pas laisser le carburant entrer en contact avec le moteur et d'autres pièces). Rebrancher le flexible puis purger à nouveau.**
- **Démarrer le moteur et le laisser tourner au ralenti pendant au moins une minute après avoir purgé l'air.**

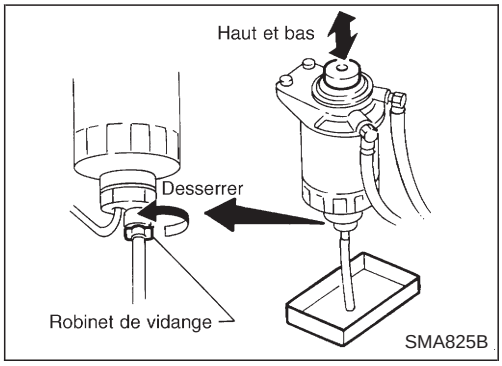

Vidange de l'eau

SAUF POUR L'EUROPE

- Si l'indicateur de défaut (MIL) s'allume ou clignote pendant la marche du moteur, vidanger l'eau comme suit.

1. Desserrer le bouchon de vidange et vidanger l'eau.
   En desserrant le bouchon de vidange de quatre ou cinq tours, on permet à l'eau de commencer à s'évacuer.
   Ne pas enlever le bouchon de vidange en le desserrant trop.
   Si l'eau ne s'écoule pas correctement, actionnez la pompe d'amorçage d'un mouvement vertical.
   Quantité d'eau lorsque l'indicateur MIL clignote :
   90 mℓ - 150 mℓ

PRECAUTION :

Lorsque l'eau est évacuée, le carburant est également évacué. Utiliser un bac, etc. pour éviter une adhérence du carburant aux parties en caoutchouc comme par exemple l'isolant de montage du moteur.

Ne pas serrer trop fort le robinet de drainage d'eau. Ceci endommagerait le filetage du robinet, entraînant une fuite d'eau ou de carburant.

2. Purger l'air du filtre à carburant. Consulter la page EC-3455.
3. Démarrer le moteur, puis vérifier que l'indicateur MIL s'éteint.

POUR L'EUROPE.

1. Desserrer le bouchon de vidange et vidanger l'eau.
   En desserrant le bouchon de vidange de quatre ou cinq tours, on permet à l'eau de commencer à s'évacuer.
   Ne pas enlever le bouchon de vidange en le desserrant trop.
   Si l'eau ne s'écoule pas correctement, actionnez la manette de pompe d'amorçage d'un mouvement vertical.

PRECAUTION :

Lorsque l'eau est évacuée, le carburant est également éva-

Simpo PDF Merge and Split Unregistered Version - http://www.simpopdf.com

Vidange de l'eau (Suite)

cué. Utiliser un bac, etc. pour éviter une adhérence du carburant aux parties en caoutchouc comme, par exemple, l'isolant de montage du moteur.
Ne pas serrer trop fort le robinet de drainage d'eau. Ceci endommagerait le filetage du robinet, entraînant une fuite d'eau ou de carburant.

2. Purger l'air du filtre à carburant. Consulter la page EC-3455.

Apprentissage de position de ralenti du capteur de position d'accélérateur

DESCRIPTION

'L'apprentissage de position de ralenti du capteur de position d'accélérateur'' est une opération servant à effacer la la position d'auto-instruction 'complètement fermé' de l'accélérateur.
Il doit être exécuté à chaque fois que le connecteur de faisceaux du capteur de position d'accélérateur ou l'ECM est débranché.

Procédure de mise en œuvre

Avec CONSULT-II

1. Mettre le contact d'allumage sur ''ON''.
2. Sélectionner "SIG POS ACC COUP" (signal position accélérateur OFF) en mode ''TEST ACTIF'' de CONSULT-II.
3. Appuyer sur ''EFFAC''.

Sans CONSULT-II

1. Démarrer le moteur et l'amener à température normale de fonctionnement.
2. Laisser le moteur tourner au ralenti pendant 10 minutes.

Simpo PDF Merge and Split Unregistered Version - http://www.simpopdf.com

Logique de détection DTC/MIL

Lorsqu'un défaut est détecté, le code de défaut (DTC) est enregistré dans la mémoire de l'ECM.
Le témoin MIL s'allume à chaque fois que l'ECM détecte un défaut. Pour les éléments du diagnostic qui provoque l'allumage du témoin MIL, se référer à ''DIAGNOSTIC DES DEFAUTS — INDEX'', page EC-3427.

Code de défaut de diagnostic (DTC)

COMMENT LIRE LE DTC

Les méthodes suivantes permettent la lecture des DTC.

Sans CONSULT-II

L'ECM affiche le DTC par un ensemble de nombres à 4 chiffres avec un éclairage du témoin MIL dans le mode II de test de diagnostic (résultats de l'autodiagnostic). Exemple : 0407, 1004, etc.

Avec CONSULT-II

CONSULT-II affiche le DTC dans le mode "RESULTATS AUTO-DIAG" (résultats de l'autodiagnostic). Exemples : ''CAP POS VIL (PMH)'', etc.

COMMENT EFFACER LE DTC

Comment effacer les DTC (Avec CONSULT-II)

1. Si le contact d'allumage est sur ''ON'' après la réparation, veiller à le tourner une fois sur ''OFF''. Attendre 5 secondes au moins et le remettre en position ''ON'' (moteur arrêté).
2. Appuyer sur ''MOTEUR''.
3. Appuyer ''RESULTATS AUTO-DIAG''.
4. Appuyer sur ''EFFAC'' (Le DTC sera effacé dans l'ECM.)

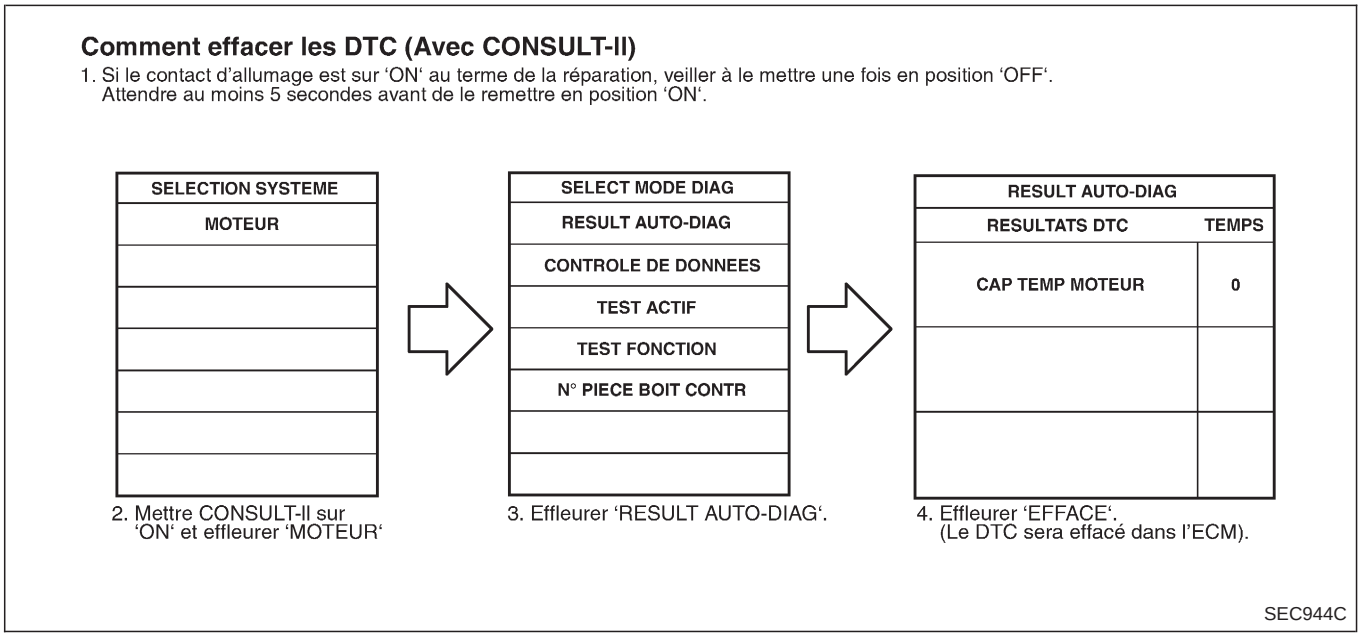

Les codes de diagnostic de dépollution dans l'ECM peuvent être effacés en touchant ''EFFAC'' en mode ''RESULT AUTO-DIAG'' du CONSULT-II.

Comment effacer les DTC (sans CONSULT-II)

1. Si le contact d'allumage est sur ''ON'' après la réparation, veiller à le tourner une fois sur ''OFF''. Attendre 5 secondes au moins et le remettre en position ''ON'' (moteur arrêté).
2. Passer le test de diagnostic du Mode II en Mode I par l'intermédiaire du connecteur de diagnostic (Se reporter à la page EC-3459.)

Les codes de diagnostic de dépollution dans l'ECM peuvent être effacés en changeant le mode de test de diagnostic.

Simpo PDF Merge and Split Unregistered Version - http://www.simpopdf.com

Code de défaut de diagnostic (DTC) (Suite)

- **Si la batterie est déconnectée, les codes de diagnostic de dépollution seront perdus après environ 24 heures.**
- **Il est plus facile et plus rapide d'effacer les codes de diagnostic avec CONSULT-II plutôt que de passer dans le mode de test de diagnostic par le connecteur de liaison des données.**

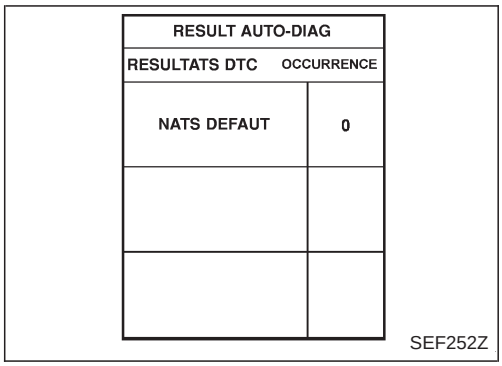

NATS (Système Antivol NISSAN)

- **Si le témoin de sécurité s'allume lorsque le contact d'allumage est sur ''ON'' ou que ''NATS DEFAUT'' (défaut NATS) est affiché sur l'écran de ''RESULTATS AUTO-DIAG'', passer dans le mode de résultats d'autodiagnostic avec CONSULT-II en utilisant une carte de programme NATS. Se référer à ''NATS (système antivol Nissan)'' dans la section EL.**
- **Confirmer qu'aucun résultat d'autodiagnostic NATS n'est affiché avant d'appuyer sur ''EFFAC'' dans le mode ''RESULTATS AUTO-DIAG'' du CONSULT-II.**
- **Lorsque l'on remplace l'ECM, il est nécessaire de procéder à l'initialisation du système NATS et à l'enregistrement de tous les codes d'identification des clés de contact NATS à l'aide du CONSULT-II et de la carte de programme NATS .**
  S'assurer par conséquent que le client a bien remis toutes ses clés. Concernant les procédures d'initialisation du NATS et l'enregistrement des numéros d'identification des clés de contact NATS, se reporter au manuel d'entretien du NATS CONSULT-II pour NATS.

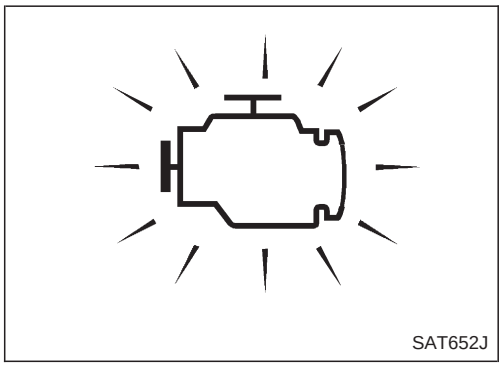

Témoin de défaut (MIL)

DESCRIPTION

Le témoin MIL est situé sur le tableau de bord.

1. Il s'allume lorsque le contact est mis sur la position ON, moteur arrêté. Ceci est un contrôle d'ampoule.
- Si le témoin MIL ne s'allume pas, se reporter à la section EL ('TEMOINS D'AVERTISSEMENT') ou à la page EC-3691

2. Le témoin MIL doit s'éteindre lorsque le moteur démarre.
   S'il reste allumé, le système de diagnostic de bord a probablement détecté un problème au niveau de la gestion moteur.

Le contact de filtre à carburant est fourni, sauf pour l'Europe.
Si le témoin de défaut (MIL) s'allume ou clignote de manière irrégulière après démarrage du moteur, le filtre à carburant contient éventuellement de l'eau. Vidanger l'eau du filtre à carburant. Consulter la page EC-3455.

Fonctions du système de diagnostic de bord

Le système de diagnostic de bord comprend les trois fonctions suivantes.

Simpo PDF Merge and Split Unregistered Version - http://www.simpopdf.com

Témoin de défaut (MIL) (Suite)

Mode de diagnostic	Etats CLE et MOTEUR	Fonction	Explication de la fonction
Mode I	Contact d'allumage sur ON  Moteur arrêté 	VERIFICATION DE L'AMPOULE	Pour vérifier si l'ampoule du MIL est endommagée (grillée, circuit ouvert, etc.). Si le témoin MIL ne fonctionne pas, vérifier le circuit du témoin MIL (Se reporter à la page EC-3691.)
	Moteur en marche 	DEFAUT ATTENTION :	Ceci est une condition de conduite habituelle. Lorsque l'ECM détecte un défaut, le témoin MIL s'allume pour informer le conducteur qu'un défaut a été détecté.
Mode II	Contact d'allumage sur ON  Moteur arrêté 	RESULTATS DE L'AUTODIAGNOSTIC	Cette fonction permet de lire les DTC.

Simpo PDF Merge and Split Unregistered Version - http://www.simpopdf.com

Témoin de défaut (MIL) (Suite)

COMMENT CHANGER DE MODE DE DIAGNOSTIC

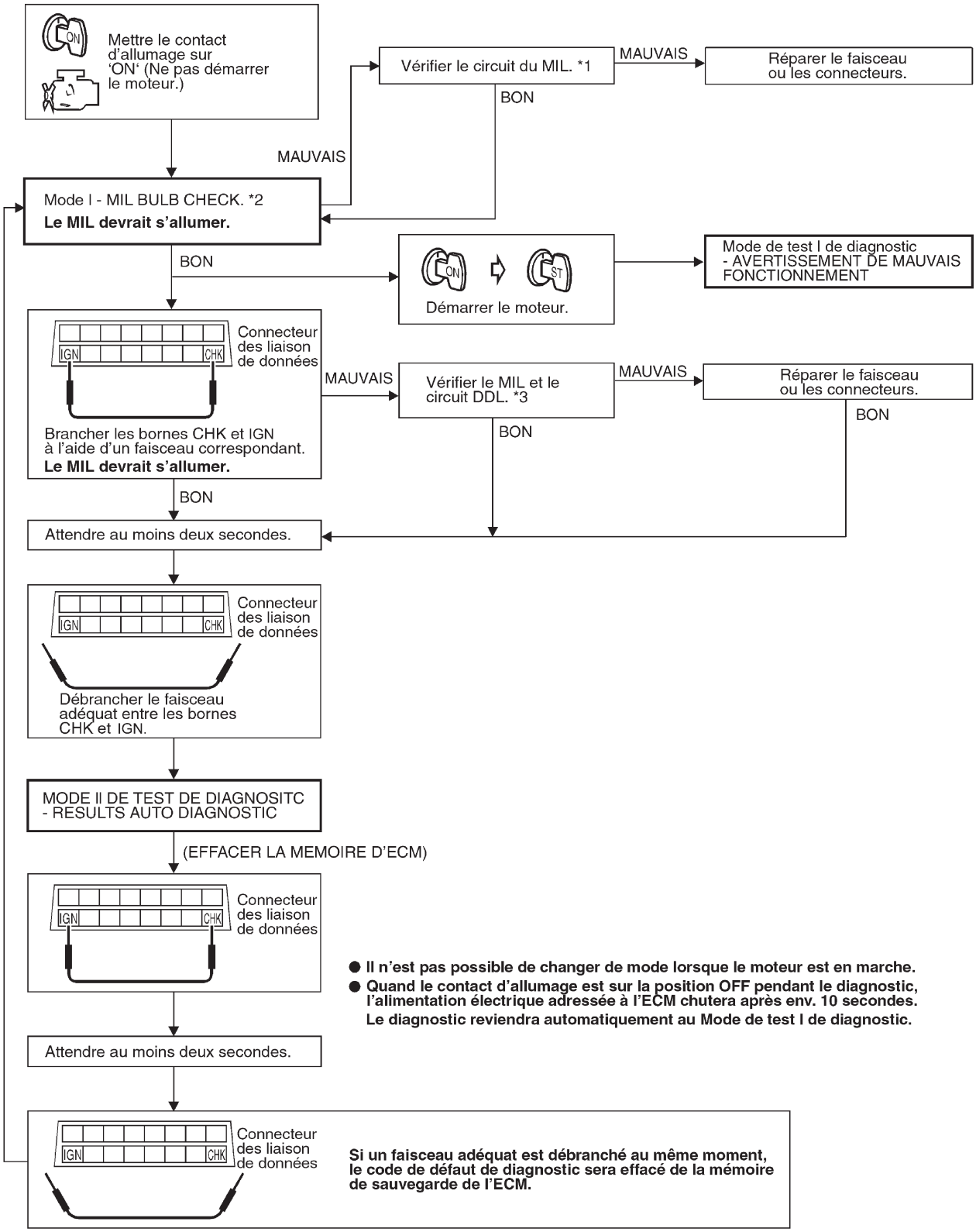

SEC945C

*1 : EC-3691 *2 : EC-3458 *3 : EC-3691

Simpo PDF Merge and Split Unregistered Version - http://www.simpopdf.com

Témoin de défaut (MIL) (Suite)

Mode de diagnostic I — Vérification de l'ampoule

Dans ce mode, le témoin MIL du tableau de bord doit rester allumé. S'il demeure éteint, vérifier l'ampoule. Se référer à la section EL, ''TEMOINS D'AVERTISSEMENT'' ou à la page EC-3691.

Mode de diagnostic I — Avertissement de défaut de fonctionnement

MIL	Condition
ALLUME	Lorsqu'un défaut est détecté ou que l'unité centrale de l'ECM est défectueuse.
ETEINT	Pas de défaut.

Mode de diagnostic II — Résultat d'autodiagnostic

Dans ce mode, le DTC est indiqué par le nombre de clignotements du témoin MIL comme indiqué ci-dessous.

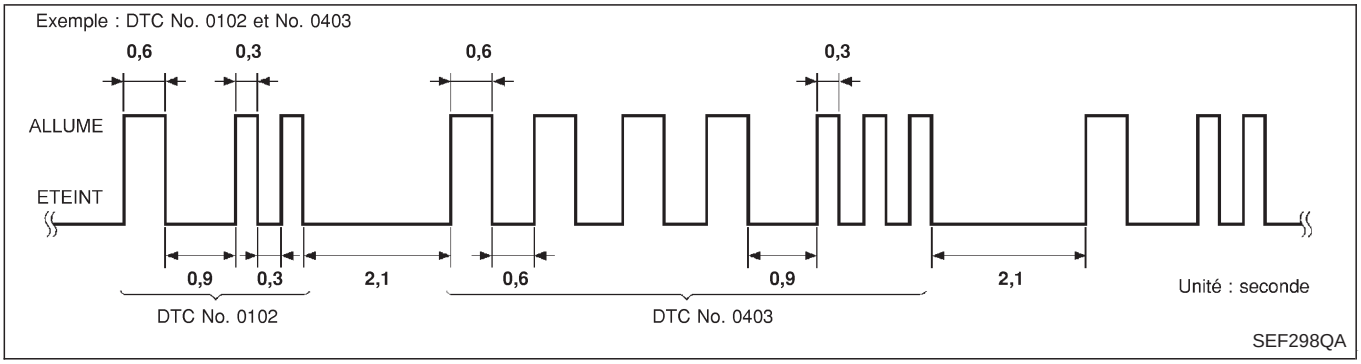

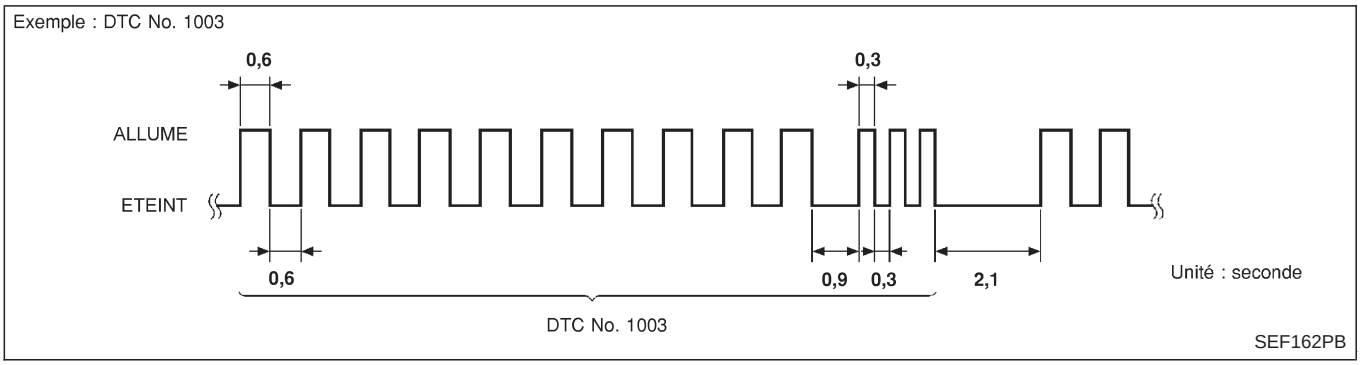

Les deux premiers chiffres du code sont indiqués par des impulsions d'allumage longues (0,6 seconde) et les deux derniers chiffres par des impulsions d'allumage courtes (0,3 seconde). Par exemple, le témoin MIL clignote 10 fois pendant 6 secondes (0,6 s x 10 fois) et puis il clignote 3 fois pendant environ 1 seconde (0,3 s x 3 fois). Le code de défaut (DTC) est ''1003''.
De cette manière, toutes les anomalies détectées sont classées par leurs numéros de code de défaut. Le code ''0505'' ne signale pas un défaut répertorié (voir DIAGNOSTIC DE DEFAUT — INDEX, page EC-3427).

Comment effacer le mode II de test de diagnostic (résultats de l'autodiagnostic)

Les codes de défaut peuvent être effacés de la mémoire de sauvegarde de l'ECM par simple passage d'un mode de diagnostic à l'autre, c'est-à-dire du Mode II au Mode I (se référer à ''Comment changer de mode de diagnostic'', page EC-3460).

- **Si la batterie est débranchée, les codes de défaut disparaissent de la mémoire de sauvegarde après 24 heures environ.**
- **Veiller à ne pas effacer la mémoire enregistrée avant de commencer les diagnostics de défaut.**

Simpo PDF Merge and Split Unregistered Version - http://www.simpopdf.com

Témoin de défaut (MIL) (Suite)

Relation existant entre témoin MIL, DTC, CONSULT-II et les conditions de conduite

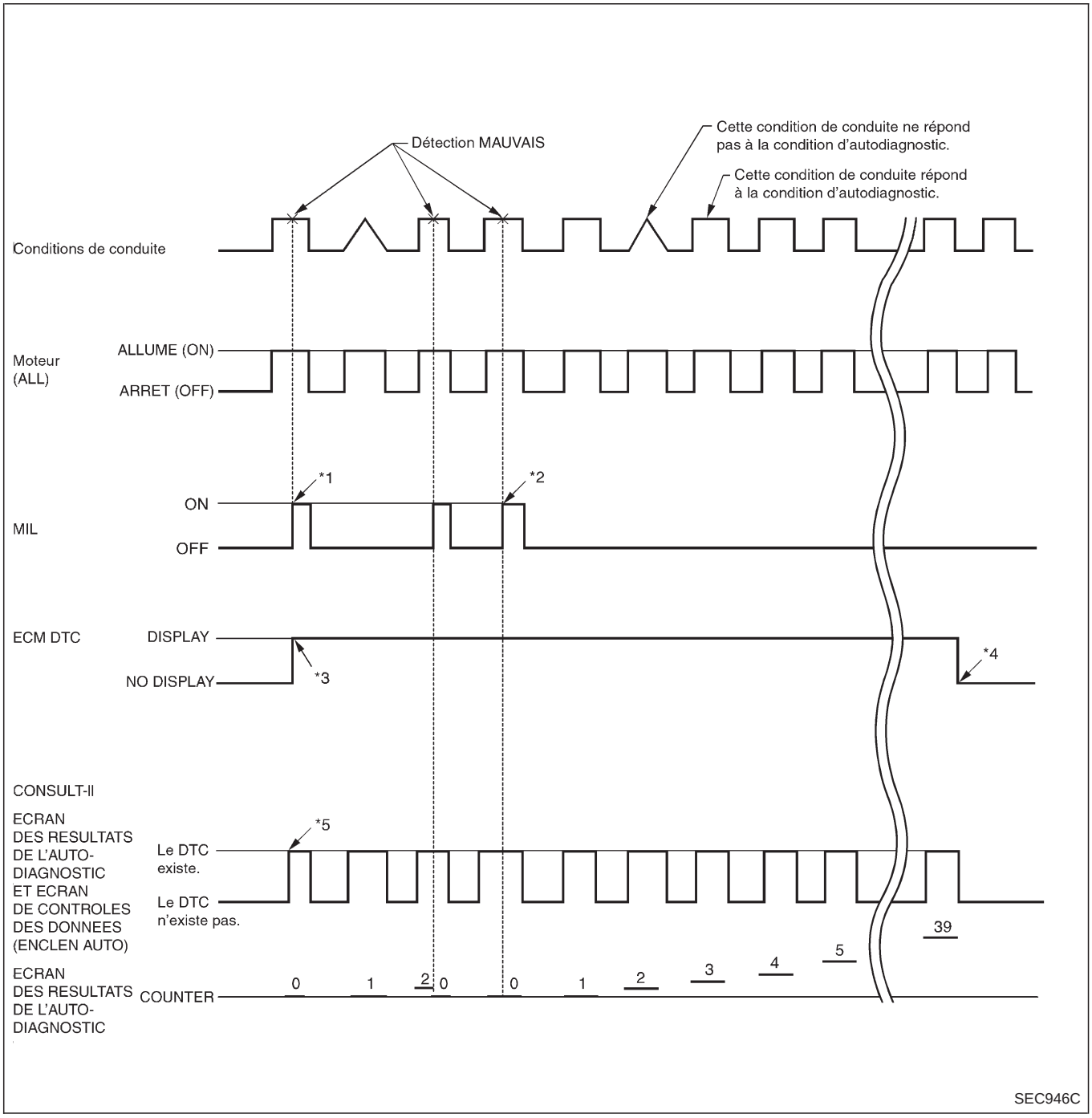

*1 : Lorsqu'un défaut est détecté, le témoin MIL s'allume.

*2 : Lorsque le même défaut est détecté dans deux conditions de conduite consécutives, le témoin MI reste allumé.

*3 : Lorsqu'un défaut est détecté pour la première fois, le DTC est enregistré dans l'ECM.

*4 : Le DTC ne s'affichera plus si le véhicule est conduit 40 fois sans que le défaut se reproduise. (le DTC reste encore dans l'ECM).

*5 : Tous les écrans peuvent afficher les pannes, à l'exception des "RESULTATS D'AUTODIAGNOSTIC ET CONTROLE DE DONNEES (DECLEN AUTO). Le mode "CONTROLE DE DONNEES" (DECLEN AUTO) permet l'affichage du défaut au moment où il est détecté.

Simpo PDF Merge and Split Unregistered Version - http://www.simpopdf.com

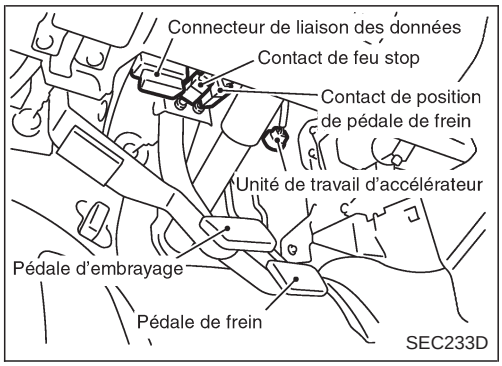

CONSULT-II

PROCEDURE D'INSPECTION CONSULT-II

1. Mettre le contact d'allumage sur 'OFF'.
2. Connecter CONSULT-II au connecteur de diagnostic, situé sous le tableau de bord, côté conducteur.

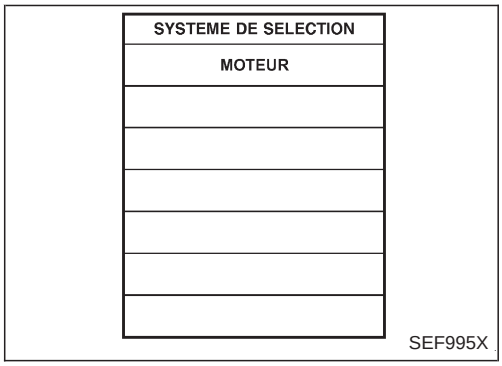

3. Mettre le contact d'allumage sur 'ON'.
4. Appuyer ''DEPART''.
5. Appuyer sur ''MOTEUR''.
6. Effectuer chaque mode de diagnostic en fonction de chaque procédure d'entretien.

Pour de plus amples informations, voir le Manuel d'utilisation de CONSULT-II.

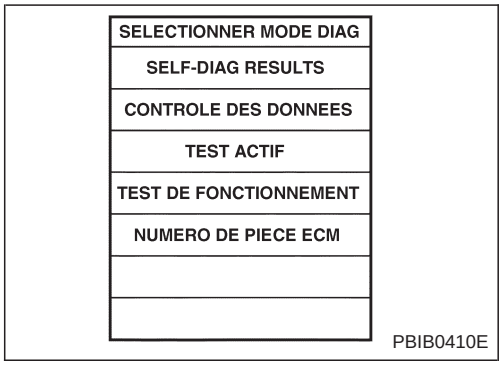

Simpo PDF Merge and Split Unregistered Version - http://www.simpopdf.com

CONSULT-II (Suite)

COMPATIBILITE AVEC LES COMPOSANTS DE L'ECCS/SYSTEMES DE COMMANDE

Elément			MODE DE DIAGNOSTIC		
			RESULT AUTO-DIAG	CONTROLE DE DON-NEES	TEST ACTIF
COMPOSANTS DU SYSTEME DE COMMANDE DU MOTEUR	ENTREE	Capteur de température du liquide de refroidissement moteur	X	X	
		Capteur de température d'air d'admission	X	X	
		Capteur de vitesse du véhicule	X	X	
		Capteur de position d'accélérateur	X	X	X
		Contact de position d'accélérateur	X	X	
		Capteur d'angle de vilebrequin (PMH)	X	X	
		Contact d'allumage (signal de démarrage)		X	
		Contact de stationnement/point mort (PNP)		X	
		Tension de la batterie		X	
		Interrupteur de climatiseur		X	
		Contact de position de la pédale de frein	X	X	
		Capteur de pression d'air de suralimentation	X	X	
		Interrupteur de chauffage rapide		X	
		Contact de feu stop	X	X	
	SORTIE	Relais de préchauffage		X	X
		Soupape de contrôle de volume EGR	X	X	X
		Relais du ventilateur de radiateur	X	X	X
		Relais de climatiseur		X	

X : Applicable

MODE D'AUTODIAGNOSTIC

Pour ce qui concerne les défauts détectés dans le mode ''RESULT AUTO-DIAG'', se référer à ''DIAGNOSTIC DES DEFAUTS — INDEX'', page EC-3427.

MODE CONTROLE DE DONNEES

Elément contrôlé [Unité]	Signaux d'entrée de l'ECM	Signaux princi-paux	Description	Remarques
CPV·TR/MN (PMH) [tr/mn]	○	○	● Le régime du moteur calculé par le signal du capteur d'angle de vilebre-quin (PMH) est affiché.	
CPA·TR/MN·POMPE [tr/mn]	○	○	● Le régime moteur calculé d'après le signal d'impulsion envoyé par la pompe d'injection de carburant est affiché.	

Simpo PDF Merge and Split Unregistered Version - http://www.simpopdf.com

CONSULT-II (Suite)

Elément contrôlé [Unité]	Signaux d'entrée de l'ECM	Signaux principaux	Description	Remarques
CAP TEMP MOT [°C]	○	○	● La température du moteur (déterminée par la tension de signal du capteur de température du moteur) est affichée.	● Si le circuit du capteur de température du liquide de refroidissement du moteur est ouvert ou en court-circuit, l'ECM passe en mode de sécurité. La température du moteur déterminée par l'ECM est affichée.
CAP VIT VEHI [km/h]	○	○	● La vitesse du véhicule calculée à partir du signal de capteur de vitesses du véhicule est affichée.	
CAP TEMP CARB [°C]	○	○	● La température du carburant (envoyée par la pompe d'injection de carburant) est affichée.	
CAP POS ACCEL [V]	○	○	● La tension du signal du capteur de position d'accélérateur est affichée.	
CNT ACCEL FOND [MAR/ARR]	○	○	● Indique l'état [MARCHE/ARRET] du signal de contact de position de l'accélérateur.	
CNT ACCEL COUP [MAR/ARR]	○	○	● Indique l'état [MARCHE/ARRET] du signal de contact de position de l'accélérateur.	
SOUPAPE/FUITE [°CA]		○	● La position de commande de la soupape de décharge (envoyée par la pompe d'injection de carburant) est affichée.	
TENS BATTERIE [V]	○	○	● La tension d'alimentation électrique de l'ECM est affichée.	
I/C INT/A T/S [V]	○	○	● Affichage de la tension du signal du capteur de température d'air d'admission.	
CON NEUTRE [MAR/ARR]	○	○	● Indique l'état [MAR/ARR] depuis le signal du contact de stationnement/point mort.	
SIGNAL DEMAR [MAR/ARR]	○	○	● Indique l'état de [MAR/ARR] du signal de démarreur.	● Après avoir démarré le moteur, l'état [OFF] est affiché quel que soit le signal de démarreur.
SIGNAL CLIMAT [MAR/ARR]	○	○	● Indique l'état [MARCHE/ARRET] de l'interrupteur de climatiseur de la manière déterminée par le signal du climatiseur.	
CNT FREIN [MAR/ARR]	○	○	● Indique l'état [MAR/ARR] du signal du contact de feu stop.	
CONT FREIN2 [MAR/ARR]	○	○	● Indique la condition [MAR/ARR] à partir du contact de position de la pédale de frein.	
CNT ALL [MAR/ARR]	○	○	● Indique l'état [MAR/ARR] du signal du contact d'allumage.	
INT CHAUF [MAR/ARR]	○		● Indique l'état [MAR/ARR] du signal de l'interrupteur de chauffage rapide.	

Simpo PDF Merge and Split Unregistered Version - http://www.simpopdf.com

CONSULT-II (Suite)

Elément contrôlé [Unité]	Signaux d'entrée de l'ECM	Signaux principaux	Description	Remarques
TURBO BST SEN [kPa]	○		● La pression d'air de suralimentation (détermnée par le signal de tension envoyé à l'ECM) s'affiche.	
COUP/C DECELER [MAR/ARR]		○	● L'état [MAR/ARR] du signal de coupure de carburant en cas de décélération (envoyé par l'ECM) est affiché.	
INJ TIMG C/V [%]		○	● Le facteur de marche de la soupape de commande d'avance de l'injection (envoyé par la pompe d'injection de carburant) est affiché.	
RELAIS CLIMAT [MAR/ARR]		○	● Indique l'état du relais de climatiseur déterminé par l'ECM en fonction des signaux d'entrée.	
RELS PRECHAUFF [MAR/ARR]		○	● La condition de contrôle du relais de préchauffage (déterminée par l'ECM en fonction des signaux d'entrée) est affichée.	
VENTIL RADIATEUR [MAR/ARR]		○	● Indique la condition de la commande des ventilateurs de refroidissement (déterminée par l'ECM à partir du signal d'entrée). ● ON ... En marche. OFF ... A l'arrêt	
SOUP COMM VOL EGR [niveau]		○	● Indique l'état de la valeur de commande du volume EGR calculé par l'ECM en fonction des signaux d'entrée. ● L'ouverture s'élargit lorsque la valeur augmente.	
CAP BARO [kPa]	○		● La pression atmosphérique (déterminée sur la base du signal en tension du capteur de pression intégré à l'ECM) est affichée.	

REMARQUE :
Tout élément contrôlé qui ne correspond pas au véhicule diagnostiqué est automatiquement effacé de l'affichage.

MODE TEST ACTIF

ELEMENT DE TEST	CONDITION	JUGEMENT	VERIFIER L'ELEMENT (REMISE EN ETAT)
VENTIL RADIATEUR	● Contact d'allumage : ON ● Mettre le ventilateur de radiateur sur ''ON'', puis sur ''OFF'', avec CONSULT-II.	Le ventilateur de radiateur tourne puis s'arrête.	● Faisceau et connecteur ● Moteur du ventilateur de radiateur ● Relais du ventilateur de radiateur
SIG POS ACC COUP	● Effacer de l'ECM la position d'auto-instruction 'complètement fermé' de l'accélérateur, détectée par le capteur de position d'accélérateur.		

Simpo PDF Merge and Split Unregistered Version - http://www.simpopdf.com

CONSULT-II (Suite)

ELEMENT DE TEST	CONDITION	JUGEMENT	VERIFIER L'ELEMENT (REMISE EN ETAT)
REL PRECHAUFF	● Contact d'allumage : ON (moteur à l'arrêt) ● Mettre le relais du préchauffage en marche 'ON' puis à l'arrêt 'OFF' avec CONSULT-II et écouter le bruit de fonctionnement.	Le relais de préchauffage émet un bruit de fonctionnement.	● Faisceau et connecteur ● Relais de préchauffage
INJ TIMING*1	● moteur : retour à la condition de défaut originale ● Retarder le calage de l'injection au moyen de CONSULT-II.	Si les symptômes du défaut disparaissent, voir la colonne VERIFIER L'ELEMENT.	● Pompe d'injection de carburant à commande électronique
SOUP COMM VOL EGR	● Contact d'allumage : ON ● Modifier le pourcentage d'ouverture de la soupape de commande du volume EGR avec CONSULT-II.	La soupape de commande de volume EGR émet un bruit de fonctionnement.	● Faisceau et connecteur ● Soupape de contrôle de volume EGR

*1 : Avec cet élément, le code de défaut DTC 0707 ''P7·RPNG CLG INJ/C'' peut être détecté. L'effacer dans ce cas, car il ne s'agit pas d'un défaut.

Simpo PDF Merge and Split Unregistered Version - http://www.simpopdf.com

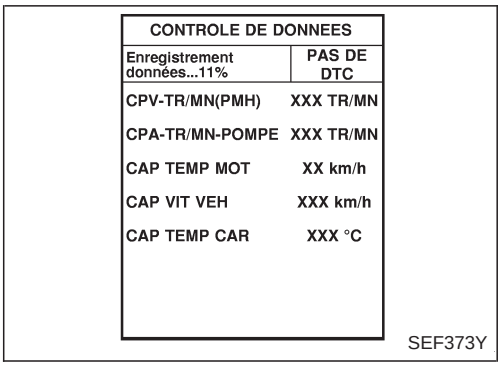

SEF373Y

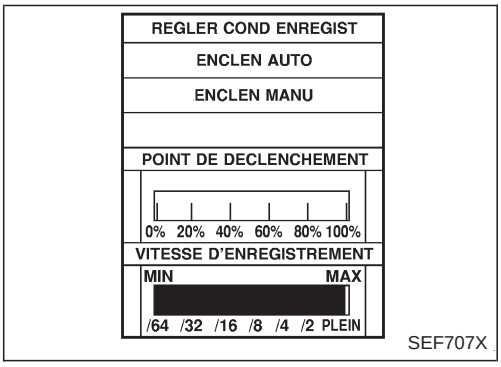

SEF707X

CONSULT-II (Suite)

DIAGNOSTIC EN TEMPS REEL EN MODE DE CONTROLE DE DONNEES

CONSULT-II offre deux types de déclenchement qui peuvent être sélectionnés en touchant ''CONFIG'' dans le mode ''CONTROLE DE DONNEES''.

1) ''ENCLEN AUTO'' :

- Le défaut est identifié en temps réel à l'écran d'affichage de CONSULT-II.
  Autrement dit, le DTC est affiché si le défaut a été détecté par l'ECM.
  Au moment où un défaut est détecté par l'ECM, ''CONTROLE'' sur l'écran ''CONTROLE DE DONNEES'' change en ''Enregistrement données ... xx%'' comme indiqué à gauche, et la donnée après la détection du défaut est enregistrée. Lorsque 100% est atteint, l'écran ''DIAG TEMPS REEL'' apparaît. Si ''STOP'' est touché sur l'écran pendant '' Enregistrement données ... xx%'', l'écran ''DIAG TEMPS REEL'' apparaît également.
  Le temps d'enregistrement après la détection du défaut et la vitesse d'enregistrement peuvent être changés avec ''Point de déclenchement'' et ''Vitesse d'enregistrement''. Se reporter au MANUEL D'UTILISATION DE CONSULT-II

2) ''ENCLEN MANU'' (enclenchement manuel) :

- Le DTC ne s'affiche pas automatiquement à l'écran de CONSULT-II même si l'ECM détecte un défaut.
  Le CONTROLE DE DONNEES peut être effectué en permanence même si un défaut est détecté.

Utiliser ces possibilités de déclenchement comme suit :

1) ''ENCLEN AUTO''

- Lorsqu'on essaie de détecter le DTC en réalisant une ''Procédure de confirmation de DTC'', veiller à sélectionner le mode ''CONTROLE DE DONNEES (ENCLEN AUTO)''. Le défaut peut être confirmé au moment où il est détecté.
- Pour procéder à l'élimination des causes possibles, CONSULT-II doit être réglé en mode ''CONTROLE DE DONNEES (ENCLEN AUTO)'', particulièrement si le défaut se produit de façon intermittente.
  Lors du contrôle du circuit en secouant (ou en tordant) avec précaution les connecteurs, pièces ou faisceau suspects dans la ''Procédure de confirmation de DTC'', le DTC sera affiché dès que le défaut se produira (se référer à la section GI, ''Essais de simulation de défaut'' dans ''COMMENT REALISER UN DIAGNOSTIC EFFICACE EN CAS D'INCIDENT ELECTRIQUE'').

2) ''ENCLEN MANU''

- Si le défaut s'affiche dès que le ''CONTROLE DE DONNEES'' est sélectionné, régler le CONSULT-II sur ''ENCLEN MANU''. Il est possible de vérifier et d'enregistrer les données en sélectionnant ''ENCLEN MANU''. Les données peuvent être utilisées pour d'autres diagnostics, telle que la comparaison de la valeur avec des conditions normales de fonctionnement.

Simpo PDF Merge and Split Unregistered Version - http://www.simpopdf.com

CONSULT-II (Suite)

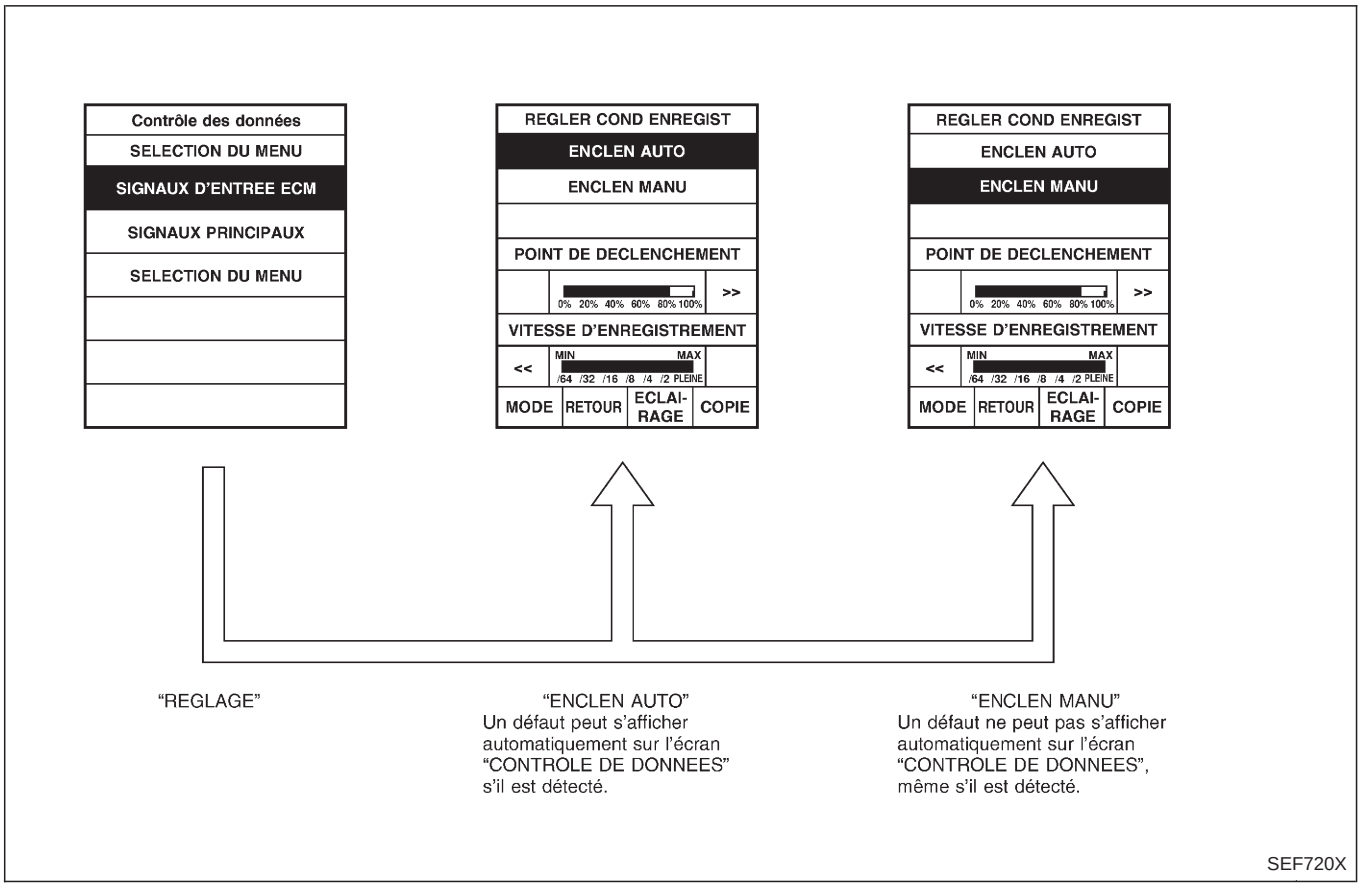

TEST DE FONCTION

Ce mode est utilisé pour informer les clients sur l'état de leur véhicule en rapport avec l'entretien périodique.

Simpo PDF Merge and Split Unregistered Version - http://www.simpopdf.com

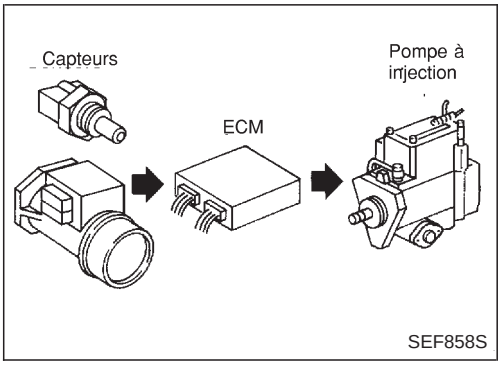

SEF858S

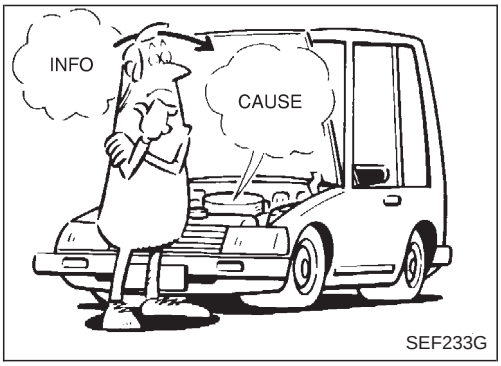

SEF233G

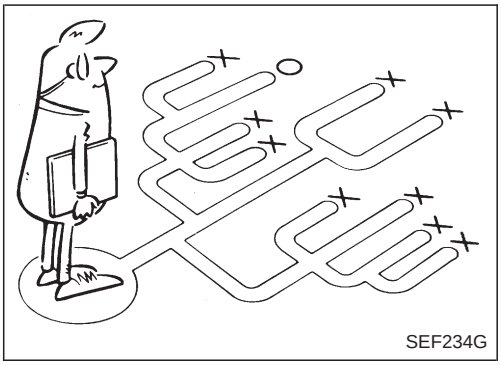
SEF234G

POINTS CLE

QUOI	..... Modèle de moteur et de véhicule
QUAND	..... Date, fréquence
OU	..... Conditions de la route
COMMENT	..... Conditions de fonctionnement, conditions climatiques, symptômes

SEF907L

Introduction

Le moteur dispose d'un ECM pour contrôler les principaux systèmes tel que la commande d'injection, la commande de l'avance à l'injection de carburant, le système de commande de préchauffage, etc. L'ECM accepte les signaux d'entrée des capteurs et contrôle instantanément la pompe d'injection de carburant à commande électronique. Il est essentiel que les signaux d'entrée et de sortie soient corrects et stables. En même temps, il est important qu'il n'y ait aucun problème tel que fuites de dépression ou autres problèmes affectant le moteur.

Il est beaucoup plus difficile de faire le diagnostic d'un problème qui se manifeste de manière intermittente que celui d'un problème constant. La plupart des défauts intermittents sont le fait d'une mauvaise connexion électrique ou d'un câblage défectueux. En pareil cas, une vérification soigneuse des circuits suspects peut éventuellement éviter le remplacement de pièces qui n'étaient pas fautives.

Le contrôle visuel seul ne permet pas toujours de déterminer la cause des défauts. Il convient d'effectuer un essai sur route à l'aide de CONSULT-II ou d'un testeur de circuit branché. Suivre ''Procédure de travail'', page EC-3471.

Avant d'entreprendre les vérifications, prendre quelques minutes pour parler à un client qui se plaint d'une mauvaise conduite. Le client peut fournir des renseignements utiles quant à ces problèmes, en particulier les problèmes se produisant de façon intermittente. Se renseigner sur les symptômes présents et sur les conditions dans lesquelles ils se présentent. Il convient d'utiliser une ''Fiche de diagnostic'' comme celle présentée à la page suivante.

Commencer le diagnostic en recherchant d'abord les problèmes ''conventionnels''. Ceci aidera à dépister les problèmes de conduite sur un véhicule à moteur à commande électronique.

FICHE DE DIAGNOSTIC

Il existe plusieurs conditions de fonctionnement qui conduisent vers le défaut des composants du moteur. Une bonne connaissance de ces cas peut accélérer la procédure et en améliorer l'exactitude.

En règle générale, la capacité à cerner le problème dépend de chaque client. Il est important de bien comprendre les symptômes ou les conditions liées à la plainte du client.

L'utilisation d'une fiche de contrôle de diagnostic (voir ci-dessous) permet de classer toutes les informations nécessaires au dépistage des pannes.

Simpo PDF Merge and Split Unregistered Version - http://www.simpopdf.com

Introduction (Suite)

Exemple de fiche de contrôle de diagnostic

Nom du client M./Mme/Mlle		Modèle et année	Immatriculation
Moteur		Trans.	Kilométrage
Date incident		Date de construction	Date d'entrée en service
Symptômes	☐ Démarrage	☐ Impossible de démarrer ☐ Pas de combustion ☐ Combustion partielle ☐ Combustion partielle provoquée par la position du papillon ☐ Combustion partielle quand le moteur est froid ☐ Démarrage possible mais difficile ☐ autres [ ]	
	☐ Ralenti	☐ Pas de ralenti accéléré ☐ Instable ☐ Ralenti accéléré ☐ Ralenti bas ☐ Autres [ ]	
	☐ Conduite	☐ Bronchement ☐ Irrégularités ☐ Détonation ☐ Manque de puissance ☐ Autres [ ]	
	☐ Calage du moteur	☐ Au démarrage ☐ Au ralenti ☐ En accélération ☐ En décélération ☐ Peu après l'immobilisation ☐ Lors de l'application d'une charge	
Manifestation de l'incident		☐ Juste après la livraison ☐ Récemment ☐ Le matin ☐ Le soir ☐ Dans la journée	
Fréquence		☐ Tout le temps ☐ Dans certaines circonstances ☐ Parfois	
Conditions climatiques		☐ Pas affecté	
	Temps	☐ Agréable ☐ Pluie ☐ Neige ☐ Autres [ ]	
	Température	☐ Très chaude ☐ Chaude ☐ Fraîche ☐ Froide ☐ Humide °F	
Conditions du moteur		☐ A froid ☐ Pendant le réchauffement ☐ Après le réchauffement Régime du moteur 0 2,000 4,000 6,000 8,000	
Conditions de la route		☐ En ville ☐ Dans les faubourgs ☐ Sur les grandes routes ☐ Tout terrain (haut/bas)	
Conditions de conduite		☐ Pas affecté ☐ Au démarrage ☐ Au ralenti ☐ Avec le moteur emballé ☐ En accélération ☐ En vitesse de croisière ☐ En décélération ☐ En tournant (DR/GA) Vitesse du véhicule 0 10 20 30 40 50 60	
TEMOIN LUMINEUX DE DEFAUT		☐ Mis en marche ☐ Pas mis en marche	

MTBL0397

Simpo PDF Merge and Split Unregistered Version - http://www.simpopdf.com

Organigramme de travail

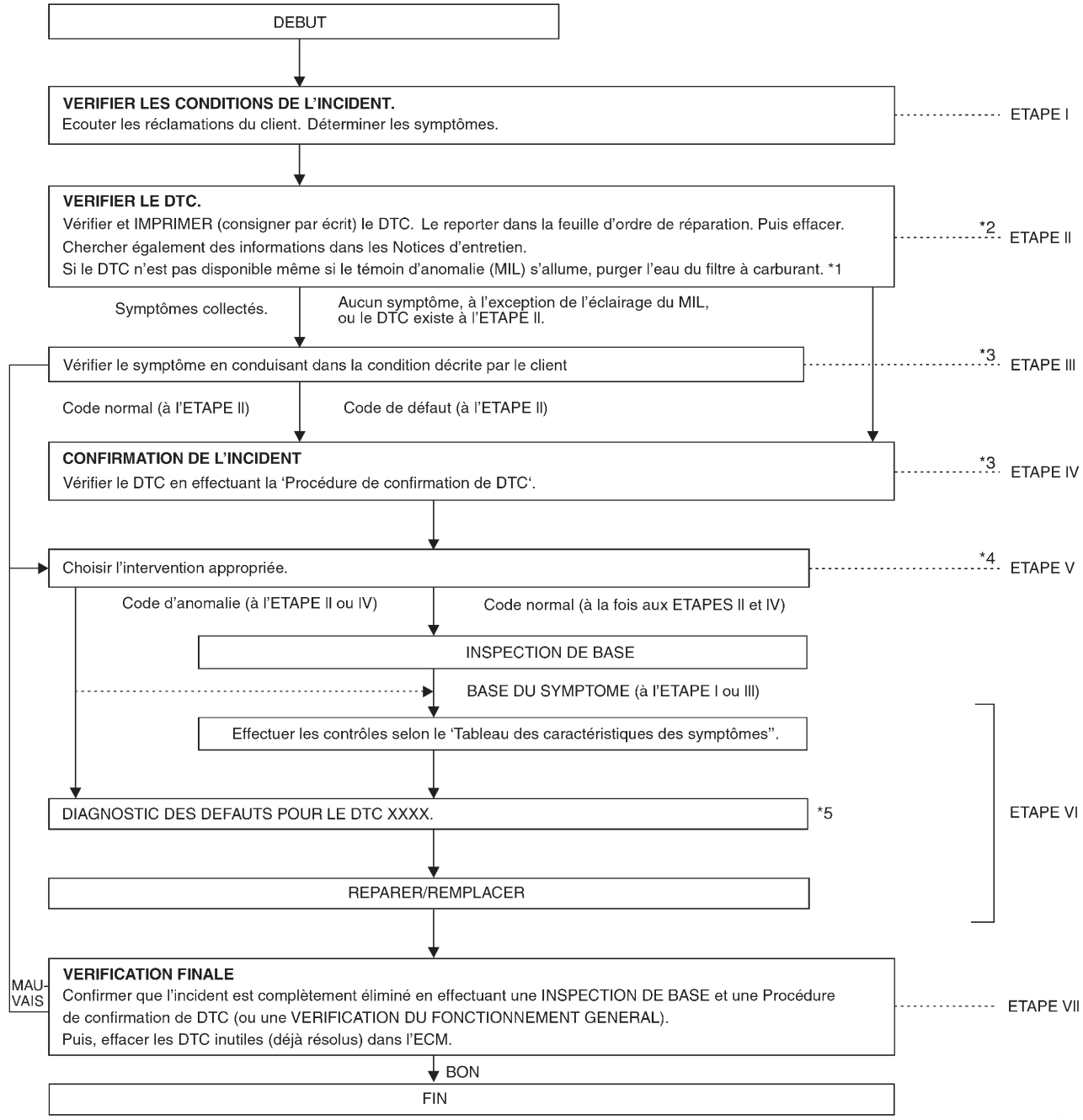

SEF374YC

*1 Se référer à la section MA ('Contrôle et remplacement du filtre à carburant et purge de l'eau ', 'ENTRETIEN DU MOTEUR').

*2 Si le paramètre d'occurrence des 'RESULT AUTO-DIAG' (résultats d'autodiagnostic) est différent de '0', effectuer un 'DIAGNOSTIC DES DEFAUTS EN CAS D'INCIDENT INTERMITTENT', voir page EC-3501.

*3 Si le défaut ne peut pas être vérifié, effectuer un 'DIAGNOSTIC DES DEFAUTS EN CAS D'INCIDENT INTERMITTENT', voir page EC-3501.

*4 S'il n'est pas possible de réaliser l'autodiagnostic, vérifier le circuit d'alimentation électrique principal et de mise à la masse. Se référer à 'DIAGNOSTIC DES DEFAUTS DE L'ALIMENTATION ELECTRIQUE', page EC-3502.

*5 Si l'organe défectueux ne peut être trouvé, effectuer un 'DIAGNOSTIC DES DEFAUTS EN CAS D'INCIDENT INTERMITTENT', voir page EC-3501.

Simpo PDF Merge and Split Unregistered Version - http://www.simpopdf.com

Organigramme de travail (Suite)

DESCRIPTION DE LA PROCEDURE

ETAPE	DESCRIPTION
ETAPE I	Obtenir des renseignements détaillés sur les conditions et l'environnement dans lesquels le défaut/ symptôme s'est produit en utilisant la ''FICHE DE DIAGNOSTIC'', voir page EC-3470.
ETAPE II	Avant de confirmer la cause, vérifier le DTC et le noter (l'imprimer avec CONSULT-II), puis effacer le DTC. Consulter la page EC-3457. Si le défaut ne peut pas être vérifié, effectuer un ''DIAGNOSTIC DES DEFAUTS EN CAS D'INCIDENT INTERMITTENT'', voir page EC-3501. Etudier la relation entre la cause, spécifiée par le DTC, et le symptôme décrit par le client. (le ''Tableau des caractéristiques des symptômes'' sera utile, se reporter à la page EC-3479). Vérifier également toutes les notices d'entretien liées à la vérification pour information.
ETAPE III	Essayer de confirmer le symptôme et les conditions dans lesquelles le défaut se produit. La ''FICHE DE DIAGNOSTIC'' est utile pour vérifier le défaut. Brancher CONSULT-II au véhicule, le régler en mode ''CONTROLE DE DONNEES (ENCLEN AUTO)'' et contrôler les résultats de diagnostic de bord en temps réel. Si le défaut ne peut pas être vérifié, effectuer un ''DIAGNOSTIC DES DEFAUTS EN CAS D'INCIDENT INTERMITTENT'', voir page EC-3501. Si le code de défaut est détecté, sauter l'étape IV et effectuer l'étape V.
ETAPE IV	Essayer de connaître le DTC en effectuant la ''Procédure de confirmation de DTC''. Vérifier et lire le code de défaut à l'aide de CONSULT-II. Pendant la vérification DTC, s'assurer que CONSULT-II est adapté sur le véhicule en mode ''CONTROLE DE DONNEES'' (DECLEN AUTO) et vérifier les résultats de diagnostic en temps réel. Si le défaut ne peut pas être vérifié, effectuer un ''DIAGNOSTIC DES DEFAUTS EN CAS D'INCIDENT INTERMITTENT'', voir page EC-3501. Au cas où la ''Procédure de confirmation de DTC'' serait indisponible, réaliser une ''Vérification du fonctionnement général'' à la place. Le DTC ne peut être affiché par ce contrôle. Cependant, ce ''contrôle'' simplifié constitue un autre moyen efficace. Un résultat négatif de la ''Vérification du fonctionnement général'' équivaut à une détection du DTC.
ETAPE V	Prendre les mesures appropriées sur la base des résultats des étapes I à IV. Si le code de défaut est indiqué, passer au DIAGNOSTIC DES DEFAUTS POUR LE DTC XXXX. Si le code normal est indiqué, procéder à l'inspection de base, voir page EC-3473. Puis effectuer les inspections conformément au tableau des caractéristiques des symptômes. Consulter la page EC-3479.
ETAPE VI	Déterminer où commencer le diagnostic en fonction de l'étude de la relation entre le symptôme et les causes possibles. Inspecter le système en cas de grippage mécanique, connecteurs desserrés, ou câblage endommagé à l'aide de ''Disposition des faisceaux''. Secouer doucement les connecteurs, composants ou faisceaux électriques correspondants, avec CONSULT-II en mode ''CONTROLE DE DONNEES (ENCLEN AUTO)''. Vérifier la tension aux bornes concernées de l'ECM ou vérifier les signaux de sortie des capteurs associés avec CONSULT-II. Se référer à la page EC-3495 ou EC-3492. La ''Procédure de diagnostic'' de la section EC contient une description basée sur l'inspection en circuit ouvert. Une brève inspection du circuit est également nécessaire pour le contrôle du circuit dans la procédure de diagnostic. Pour les détails, se reporter à la section GI (''Inspection du circuit'', ''COMMENT ACCOMPLIR UN DIAGNOSTIC EFFICACE EN CAS D'INCIDENT ELECTRIQUE''). Réparer ou remplacer les pièces défectueuses. Si l'organe défectueux ne peut être trouvé, effectuer un ''DIAGNOSTIC DES DEFAUTS EN CAS D'INCIDENT INTERMITTENT'', voir page EC-3501.
ETAPE VII	Après avoir réparé le circuit ou remplacé un composant, vous devez faire tourner le moteur dans les mêmes conditions et circonstances qui sont à l'origine du problème initialement décrit par le client. Effectuer une ''Procédure de confirmation de code de défaut (DTC)'' et vérifier si le code normal (DTC N° 0505) est détecté. Si le défaut est toujours présent lors du contrôle final, effectuer l'ETAPE VI en utilisant une méthode différente de la précédente. Avant de rendre le véhicule au client, veiller à effacer le DTC inutile (déjà enregistré) dans l'ECM. (Consulter la page EC-3457.)

Simpo PDF Merge and Split Unregistered Version - http://www.simpopdf.com

Inspection de base

Précaution :
Effectuer une inspection de base sans appliquer de charge électrique ou mécanique :

- **Boîte de vitesses au point mort,**
- **Interrupteur de chauffage rapide sur ‘‘OFF’’ (arrêt),**
- **Commande des phares pas actionnée,**
- **Interrupteur de climatiseur sur ‘‘OFF’’ (arrêt),**
- **Interrupteur de désembuage arrière sur ‘‘OFF’’ (arrêt).**
- **Volant en position droite, etc.**

1	DEBUT DE L’INSPECTION

1. Vérifier dans les rapports d’atelier si des travaux de réparation récents pourraient avoir un rapport avec le problème.
2. Vérifier si des travaux d’entretien programmés arrivent à échéance, en particulier pour le filtre à carburant ou pour le filtre à air. Consulter la section MA.
3. Ouvrir le capot et vérifier :

● Que les connecteurs de faisceau ne sont pas mal branchés
● Que les flexibles à dépression ne sont pas fissurés, n’ont pas de défauts et sont bien raccordés
● Que les câbles ne sont pas desserrés, coincés ou coupés.

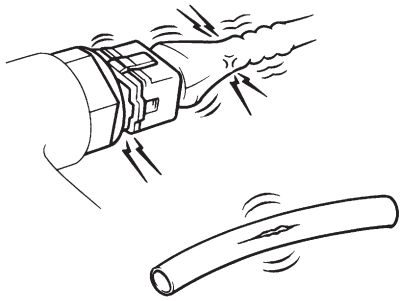

SEF142I

4. Démarrer le moteur et le faire chauffer jusqu’à ce qu’il atteigne sa température de fonctionnement normale.

▶	PASSER A L’ETAPE 2.

	PREPARATION POUR LE CONTROLE DU REGIME RALENTI
	Avec CONSULT-II Brancher ‘‘CONSULT-II’’ au connecteur de liaison des données.
	Sans CONSULT-II Brancher le compte-tours sur le véhicule.
▶	PASSER A L’ETAPE 3.

Simpo PDF Merge and Split Unregistered Version - http://www.simpopdf.com

Inspection de base (Suite)

3	CONTROLE DU REGIME RALENTI

Avec CONSULT-II

1.Sélectionner ‘‘CPV·TR/MN (PMH)’’ (capteur angle vilebrequin) dans le mode ‘‘CONTROLE DE DONNEES’’ de CONSULT-II.

2. Relever le régime ralenti.

CONTROLE DE DONNEES	
CONTROLE	PAS DE DTC
CPV-TR/MN (PMH)	XXX TR/MN

SEF817Y

Sans CONSULT-II

Contrôler le régime ralenti.

750±25 tr/mn

Bon ou mauvais

Bon	►	**FIN DE L’INSPECTION**
Mauvais	►	PASSER A L’ETAPE 4.

4	PURGE DE L’AIR DU SYSTEME D’ALIMENTATION EN CARBURANT

1. Arrêter le moteur.
2. A l’aide d’une pompe d’amorçage, purger l’air du système d’alimentation. Se référer à ‘‘Purge de l’air’’, page EC-3455.

	►	PASSER A L’ETAPE 5.

Simpo PDF Merge and Split Unregistered Version - http://www.simpopdf.com

Inspection de base (Suite)

5	NOUVEAU CONTROLE DU REGIME RALENTI

Avec CONSULT-II

1.Démarrer le moteur et le laisser tourner au ralenti.
2. Sélectionner ‘‘CPV·TR/MN (PMH)’’ (capteur angle vilebrequin) dans le mode ‘‘CONTROLE DE DONNEES’’ de CONSULT-II.
3. Relever le régime ralenti.

CONTROLE DE DONNEES	
CONTROLE	PAS DE DTC
CPV-TR/MN (PMH)	XXX TR/MN

SEF817Y

Sans CONSULT-II

1.Démarrer le moteur et le laisser tourner au ralenti.
2. Contrôler le régime ralenti.

750±25 tr/mn

Bon ou mauvais

Bon	▶	**FIN DE L’INSPECTION**
Mauvais	▶	PASSER A L’ETAPE 6.

6	PURGE DE L’EAU DU FILTRE A CARBURANT

Vidanger l’eau du filtre à carburant. Se référer à la section MA (‘‘Contrôle et remplacement du filtre à carburant et purge de l’eau’’, ‘‘ENTRETIEN DU MOTEUR’’).

	▶	PASSER A L’ETAPE 7.

Simpo PDF Merge and Split Unregistered Version - http://www.simpopdf.com

Inspection de base (Suite)

7	NOUVEAU CONTROLE DU REGIME RALENTI

Avec CONSULT-II

1.Démarrer le moteur et le laisser tourner au ralenti.
2. Sélectionner ‘‘CPV·TR/MN (PMH)’’ (capteur angle vilebrequin) dans le mode ‘‘CONTROLE DE DONNEES’’ de CONSULT-II.
3. Relever le régime ralenti.

CONTROLE DE DONNEES	
CONTROLE	PAS DE DTC
CPV-TR/MN (PMH)	XXX TR/MN

SEF817Y

Sans CONSULT-II

1.Démarrer le moteur et le laisser tourner au ralenti.
2. Contrôler le régime ralenti.

750±25 tr/mn

Bon ou mauvais

Bon	▶	**FIN DE L’INSPECTION**
Mauvais	▶	PASSER A L’ETAPE 8.

8	CONTROLE DU FILTRE A AIR

Contrôler que le filtre à air n’est ni colmaté ni déchiré.

Bon ou mauvais

Bon	▶	PASSER A L’ETAPE 9.
Mauvais	▶	Remplacer le filtre à air.

9	CONTROLE DES INJECTEURS DE CARBURANT

Contrôler la pression d’ouverture des injecteurs. Se référer à ‘‘Essai de pression d’injection’’, page EC-3447.

Bon ou mauvais

Bon	▶	PASSER A L’ETAPE 10.
Mauvais	▶	Remplacer l’ensemble injecteur.

Simpo PDF Merge and Split Unregistered Version - http://www.simpopdf.com

Inspection de base (Suite)

10	NOUVEAU CONTROLE DU REGIME RALENTI

Avec CONSULT-II

1.Démarrer le moteur et le laisser tourner au ralenti.
2. Sélectionner ‘‘CPV·TR/MN (PMH)’’ (capteur angle vilebrequin) dans le mode ‘‘CONTROLE DE DONNEES’’ de CONSULT-II.
3. Relever le régime ralenti.

CONTROLE DE DONNEES	
CONTROLE	PAS DE DTC
CPV-TR/MN (PMH)	XXX TR/MN

SEF817Y

Sans CONSULT-II

1.Démarrer le moteur et le laisser tourner au ralenti.
2. Contrôler le régime ralenti.
750±25 tr/mn

Bon ou mauvais

Bon	▶	**FIN DE L’INSPECTION**
Mauvais	▶	PASSER A L’ETAPE 11.

11	CONTROLE DE LA PRESSION DE COMPRESSION

Vérifier la pression de compression. Se référer à la section EM, ‘‘MESURE DE LA PRESSION DE COMPRESSION’’.

Bon ou mauvais

Bon	▶	PASSER A L’ETAPE 12.
Mauvais	▶	Suivre les instructions de ‘‘MESURE DE LA PRESSION DE COMPRESSION’’.

Simpo PDF Merge and Split Unregistered Version - http://www.simpopdf.com

Inspection de base (Suite)

12	NOUVEAU CONTROLE DU REGIME RALENTI

Avec CONSULT-II

1. Démarrer le moteur et le laisser tourner au ralenti.
2. Sélectionner ‘‘CPV·TR/MN (PMH)’’ (capteur angle vilebrequin) dans le mode ‘‘CONTROLE DE DONNEES’’ de CONSULT-II.
3. Relever le régime ralenti.

CONTROLE DE DONNEES	
CONTROLE	PAS DE DTC
CPV-TR/MN (PMH)	XXX TR/MN

SEF817Y

Sans CONSULT-II

1. Démarrer le moteur et le laisser tourner au ralenti.
2. Contrôler le régime ralenti.
   750±25 tr/mn

Bon ou mauvais

Bon	▶	**FIN DE L’INSPECTION**
Mauvais	▶	Remplacer la pompe d’injection de carburant.

Simpo PDF Merge and Split Unregistered Version - http://www.simpopdf.com

Tableau des caractéristiques des symptômes

SYSTEME — Système de base de gestion moteur	SYMPTOME													Page de référence	Caractéristique du symptôme, poste de contrôle
	DEMARRAGE DIFFICILE/ PAS DE DEMARRAGE/ PAS DE REDEMARRAGE (SAUFHA)				LE MOTEUR CALE			HESITATION/TROU D'ACCELERATION/BAISSE DE REGIME	COGNEMENT/DETONATION	MANQUE DE PUISSANCE	MAUVAISE ACCELERATION	RALENTI RAPIDE	RALENTI BAS		
	PAS DE DEMARRAGE (lors du premier allumage)	PAS DE DEMARRAGE (sans premier allumage)	DIFFICULTE A DEMARRER LORSQUE LE MOTEUR EST FROID	DIFFICULTE A DEMARRER LORSQUE LE MOTEUR EST CHAUD	AU RALENTI	PENDANT LA CONDUITE	EN DECELERATION								
Code de symptôme de garantie	AA				AB			AC	AD	AE		AF			
Corps de pompe d'injection de carburant à commande électronique	4	4	4	4	4	4	4	4	4	5	5	4	4	—	*1
Injecteur	3	3	3	3	3	3	3	3	3	4	4	3	3	EC-3444	*2
Système de préchauffage	1	1	1	1					1					EC-3665	
Corps du moteur	3	3	3	3	3	3	3		3	4	4		3	Section EM	*3
Système EGR										3	3			EC-3648	
Filtre à air et conduits										3	3			Section MA	*4

1 - 5 : Les numéros se réfèrent à l'ordre de l'inspection
(suite à la page suivante)
*1 : Défaut possible du système d'injection ou du système de commande d'avance de l'injection.
*2 : Dépend de la pression d'ouverture de la soupape et de la forme du jet.
*3 : La plupart du temps due à une pression de compression insuffisante.
*4 : Le symptôme change en fonction du décalage de la conduite d'air, etc.

Simpo PDF Merge and Split Unregistered Version - http://www.simpopdf.com

Tableau des caractéristiques des symptômes (Suite)

SYSTEME — Système de base de gestion moteur	SYMPTOME												Page de référence	Caractéristique du symptôme, poste de contrôle
	MAUVAIS RALENTI/EFFET DE POMPAGE	VIBRATION DE RALENTI	RETOUR LENT/PAS DE RETOUR AU RALENTI	SURCHAUFFE/TEMPERATURE DU LIQUIDE DE REFROIDISSEMENT MOTEUR ELEVEE	CONSOMMATION EXCESSIVE DE CARBURANT	CONSOMMATION EXCESSIVE DE L'HUILE	COULEUR DE FUMEE ANORMALE		BATTERIE DECHARGE	Le témoin de défaut s'allume.	Peut être détecté par CONSULT-II ?	Coupure de carburant		
							FUMEE NOIRE	FUMEE BLANCHE						
Code de symptôme de garantie	AG	AH	AJ	AK	AL	AM	AP		HA					
Corps de pompe d'injection de carburant à commande électronique	4	4	3		4		5	4		3	3	3	—	*1
Injecteur	3	3			3		4	3		1			EC-3444	*2
Système de préchauffage								1					EC-3665	
Corps du moteur	3	3		3	3	3		3					Section EM	*3
Système EGR							3						EC-3648	
Filtre à air et conduits							3				3		Section MA	*4

1 - 5 : Les numéros se réfèrent à l'ordre de l'inspection
(suite à la page suivante)
*1 : Défaut possible du système d'injection ou du système de commande d'avance de l'injection.
*2 : Dépend de la pression d'ouverture de la soupape et de la forme du jet.
*3 : La plupart du temps due à une pression de compression insuffisante.
*4 : Le symptôme change en fonction du décalage de la conduite d'air, etc.

Simpo PDF Merge and Split Unregistered Version - http://www.simpopdf.com

Tableau des caractéristiques des symptômes (Suite)

SYSTEME — Gestion moteur		Défaut	SYMPTOME: DEMARRAGE DIFFICILE/ PAS DE DEMARRAGE/ PAS DE REDEMARRAGE (SAUFHA)				SYMPTOME: LE MOTEUR CALE			SYMPTOME	SYMPTOME	SYMPTOME	SYMPTOME	SYMPTOME	SYMPTOME	Page de référence	Caractéristique du symptôme, poste de contrôle
			PAS DE DEMARRAGE (lors du premier allumage)	PAS DE DEMARRAGE (sans premier allumage)	DIFFICULTE A DEMARRER LORSQUE LE MOTEUR EST FROID	DIFFICULTE A DEMARRER LORSQUE LE MOTEUR EST CHAUD	AU RALENTI	PENDANT LA CONDUITE	EN DECELERATION	HESITATION/TROU D'ACCELERATION/BAISSE DE REGIME	COGNEMENT/DETONATION	MANQUE DE PUISSANCE	MAUVAISE ACCELERATION	RALENTI ELEVE	RALENTI BAS		
Code de symptôme de garantie			AA				AB			AC	AD	AE		AF			
GESTION MOTEUR	Circuit de la pompe d'injection de carburant à commande électronique.	*a, *b		1		1	1	1	1	1	1	1	1	1	1	—	
		*c, *d															
	Circuit du capteur de température du moteur	*a, *b			1		1		1						1	EC-3512	*1
	Circuit du capteur de vitesse du véhicule	*a, *b											1			EC-3516	

1 - 5 : Les numéros se réfèrent à l'ordre d'inspection.
(suite à la page suivante)
*a : Circuit ouvert
*b : Court-circuit
*c : Court-circuit à la masse
*d : Bruit
*1 : La compensation en fonction de la température du liquide de refroidissement ne fonctionne pas.

Simpo PDF Merge and Split Unregistered Version - http://www.simpopdf.com

Tableau des caractéristiques des symptômes (Suite)

SYSTEME — Gestion moteur		Défaut	SYMPTOME: MAUVAIS RALENTI/EFFET DE POMPAGE	VIBRATION DE RALENTI	RETOUR LENT/PAS DE RETOUR AU RALENTI	SURCHAUFFE/TEMPERATURE DU LIQUIDE DE REFROIDISSEMENT MOTEUR ELEVEE	CONSOMMATION EXCESSIVE DE CARBURANT	CONSOMMATION EXCESSIVE DE L'HUILE	COULEUR DE FUMEE ANORMALE: FUMEE NOIRE	COULEUR DE FUMEE ANORMALE: FUMEE BLANCHE	BATTERIE MORTE (SANS CHARGE)	Le témoin de défaut s'allume.	Peut être détecté par CONSULT-II ?	Coupure de carburant	Page de référence	Caractéristique du symptôme, poste de contrôle
Code de symptôme de garantie			AG	AH	AJ	AK	AL	AM	AP		HA					
GESTION MOTEUR	Circuit de la pompe d'injection de carburant à commande électronique.	*a, *b	1				1			1		1	1	1	—	
		*c, *d							1							
	Circuit du capteur de température du moteur	*a, *b	1	1		1						1	1		EC-3512	*1
	Circuit du capteur de vitesse du véhicule	*a, *b											1		EC-3516	

1 - 5 : Les numéros se réfèrent à l'ordre d'inspection.
(suite à la page suivante)
*a : Circuit ouvert
*b : Court-circuit
*c : Court-circuit à la masse
*d : Bruit
*1 : La compensation en fonction de la température du liquide de refroidissement ne fonctionne pas.

Simpo PDF Merge and Split Unregistered Version - http://www.simpopdf.com

Tableau des caractéristiques des symptômes (Suite)

SYSTEME — Gestion moteur		Défaut	SYMPTOME: DEMARRAGE DIFFICILE/ PAS DE DEMARRAGE/ PAS DE REDEMARRAGE (SAUFHA)				SYMPTOME: LE MOTEUR CALE			SYMPTOME						Page de référence	Caractéristique du symptôme, poste de contrôle
			PAS DE DEMARRAGE (lors du premier allumage)	PAS DE DEMARRAGE (sans premier allumage)	DIFFICULTE A DEMARRER LORSQUE LE MOTEUR EST FROID	DIFFICULTE A DEMARRER LORSQUE LE MOTEUR EST CHAUD	AU RALENTI	PENDANT LA CONDUITE	EN DECELERATION	HESITATION/TROU D'ACCELERATION/BAISSE DE REGIME	COGNEMENT/DETONATION	MANQUE DE PUISSANCE	MAUVAISE ACCELERATION	RALENTI RAPIDE	RALENTI BAS		
Code de symptôme de garantie			AA				AB			AC	AD	AE		AF			
GESTION MOTEUR	Câble du système de coupure du carburant	*a, *c														EC-3658	
		*b	1				1	1	1								*2
	Circuit du capteur de position d'accélérateur	*a, *b								1		1	1			EC-3548	
	Circuit du capteur d'angle de vilebrequin (PMH)	*a, *b, *d			1	1	1	1	1	1	1	1	1			EC-3567	
	Circuit du capteur de la pression d'air de suralimentation	*a, *c								1		1	1			EC-3643	
		*b															

1 - 5 : Les numéros se réfèrent à l'ordre de l'inspection.
(suite à la page suivante)
*a : Circuit ouvert
*b : Court-circuit
*c : Court-circuit à la masse
*d : Bruit
*2 : Le moteur tourne lorsque le contact d'allumage est sur 'OFF'.

Simpo PDF Merge and Split Unregistered Version - http://www.simpopdf.com

Tableau des caractéristiques des symptômes (Suite)

SYSTEME — Gestion moteur		Défaut	SYMPTOME: MAUVAIS RALENTI/EFFET DE POMPAGE	VIBRATION DE RALENTI	RETOUR LENT/PAS DE RETOUR AU RALENTI	SURCHAUFFE/TEMPERATURE DU LIQUIDE DE REFROIDISSEMENT MOTEUR ELEVEE	CONSOMMATION EXCESSIVE DE CARBURANT	CONSOMMATION EXCESSIVE DE L'HUILE	COULEUR DE FUMEE ANORMALE: FUMEE NOIRE	COULEUR DE FUMEE ANORMALE: FUMEE BLANCHE	BATTERIE MORTE (SANS CHARGE)	Le témoin de défaut s'allume.	Peut être détecté par CONSULT-II ?	Coupure de carburant	Page de référence	Caractéristique du symptôme, poste de contrôle
Code de symptôme de garantie			AG	AH	AJ	AK	AL	AM	AP		HA					
GESTION MOTEUR	Câble du système de coupure du carburant	*a, *c										1	1		EC-3658	
		*b												1		*2
	Circuit du capteur de position d'accélérateur	*a, *b										1	1		EC-3548	
	Circuit du capteur d'angle de vile-brequin (PMH)	*a, *b, *d	1	1								1	1		EC-3567	
	Circuit du capteur de la pression d'air de suralimentation	*a, *c											1		EC-3643	
		*b							1							

1 - 5 : Les numéros se réfèrent à l'ordre de l'inspection.
(suite à la page suivante)
*a : Circuit ouvert
*b : Court-circuit
*c : Court-circuit à la masse
*d : Bruit
*2 : Le moteur tourne lorsque le contact d'allumage est sur 'OFF'.

Simpo PDF Merge and Split Unregistered Version - http://www.simpopdf.com

Tableau des caractéristiques des symptômes (Suite)

SYSTEME — Gestion moteur		Défaut	SYMPTOME													Page de référence	Caractéristique du symptôme, poste de contrôle
			DEMARRAGE DIFFICILE/ PAS DE DEMARRAGE/ PAS DE REDEMARRAGE (SAUF. HA)				LE MOTEUR CALE			HESITATION/TROU D'ACCELERATION/BAISSE DE REGIME	COGNEMENT/DETONATION	MANQUE DE PUISSANCE	MAUVAISE ACCELERATION	RALENTI RAPIDE	RALENTI BAS		
			PAS DE DEMARRAGE (lors du premier allumage)	PAS DE DEMARRAGE (sans premier allumage)	DIFFICULTE A DEMARRER LORSQUE LE MOTEUR EST FROID	DIFFICULTE A DEMARRER LORSQUE LE MOTEUR EST CHAUD	AU RALENTI	PENDANT LA CONDUITE	EN DECELERATION								
Code de symptôme de garantie			AA				AB			AC	AD	AE		AF			
GESTION MOTEUR	Circuit de signal de démarrage	*a, *b	1	1	1	1										EC-3675	*3
	Circuit du contact de stationnement/point mort (PNP)	*a, *b							1							EC-3678	
		*c															
	Circuit du contact de position d'accélérateur (au ralenti)	*a, *c			1	1	1		1						1	EC-3548	
		*b								1		1	1				*4
	Circuit du contact de position d'accélérateur (à fond)	*a, *b								1		1	1			EC-3548	
	Circuit de commande d'allumage	*a		1			1	1	1							EC-3502	
		*b															*5
	Alimentation électrique du circuit ECM	*a		1			1	1	1							EC-3502	
		*b															

1 - 5 : Les numéros se réfèrent à l'ordre de l'inspection.
(suite à la page suivante)
*a : Circuit ouvert
*b : Court-circuit
*c : Court-circuit à la masse
*d : Bruit
*3 : La command de démarrage ne fonctionne pas.
*4 : Le signal négatif du capteur de position de l'accélérateur est en sortie.
*5 : Le moteur ne s'arrête pas.

Simpo PDF Merge and Split Unregistered Version - http://www.simpopdf.com

Tableau des caractéristiques des symptômes (Suite)

NOTE

Simpo PDF Merge and Split Unregistered Version - http://www.simpopdf.com

Tableau des caractéristiques des symptômes (Suite)

SYSTEME — Gestion moteur		Défaut	SYMPTOME: MAUVAIS RALENTI/EFFET DE POMPAGE	VIBRATION DE RALENTI	RETOUR LENT/PAS DE RETOUR AU RALENTI	SURCHAUFFE/TEMPERATURE DU LIQUIDE DE REFROIDISSEMENT MOTEUR ELEVEE	CONSOMMATION EXCESSIVE DE CARBURANT	CONSOMMATION EXCESSIVE DE L'HUILE	COULEUR DE FUMEE ANORMALE: FUMEE NOIRE	COULEUR DE FUMEE ANORMALE: FUMEE BLANCHE	BATTERIE MORTE (SANS CHARGE)	Le témoin de défaut s'allume.	Peut être détecté par CONSULT-II ?	Coupure de carburant	Page de référence	Caractéristique du symptôme, poste de contrôle
Code de symptôme de garantie			AG	AH	AJ	AK	AL	AM	AP		HA					
GESTION MOTEUR	Circuit de signal de démarrage	*a, *b													EC-3675	*3
	Circuit du contact de stationnement/ point mort (PNP)	*a, *b	1	1											EC-3678	
		*c														
	Circuit du contact de position d'accélérateur (au ralenti)	*a, *c													EC-3548	
		*b										1	1			*4
	Circuit du contact de position d'accélérateur (à fond)	*a, *b										1	1		EC-3548	
	Circuit de commande d'allumage	*a													EC-3502	
		*b														*5
	Alimentation électrique du circuit ECM	*a										1	1	1	EC-3502	
		*b														

1 - 5 : Les numéros se réfèrent à l'ordre de l'inspection.
(suite à la page suivante)
*a : Circuit ouvert
*b : Court-circuit
*c : Court-circuit à la masse
*d : Bruit
*3 : La command de démarrage ne fonctionne pas.
*4 : Le signal négatif du capteur de position de l'accélérateur est en sortie.
*5 : Le moteur ne s'arrête pas.

Simpo PDF Merge and Split Unregistered Version - http://www.simpopdf.com

Tableau des caractéristiques des symptômes (Suite)

SYSTEME — Gestion moteur		Défaut	SYMPTOME: DEMARRAGE DIFFICILE/ PAS DEDEMARRAGE/ PAS DE REDEMARRAGE (SAUF. HA) — PAS DE DEMARRAGE (lors du premier allumage)	PAS DE DEMARRAGE (sans premier allumage)	DIFFICULTE A DEMARRER LORSQUE LE MOTEUR EST FROID	DIFFICULTE A DEMARRER LORSQUE LE MOTEUR EST CHAUD	SYMPTOME: LE MOTEUR CALE — AU RALENTI	PENDANT LA CONDUITE	EN DECELERATION	HESITATION/TROU D'ACCELERATION/BAISSE DE REGIME	COGNEMENT/DETONATION	MANQUE DE PUISSANCE	MAUVAISE ACCELERATION	RALENTI RAPIDE	RALENTI BAS	Page de référence	Caractéristique du symptôme, poste de contrôle
Code de symptôme de garantie			AA				AB			AC	AD	AE		AF			
GESTION MOTEUR	Circuit de l'électrovanne de commande de volume EGR	*a, *b														EC-3648	
		*c															*8
	Circuit du relais de préchauffage	*a	1	1	1	1										EC-3665	*9
		*b															*10
	Circuit du relais d'ECM (arrêt automatique)	*a		1			1	1	1							EC-3502	
		*b															*11
	ECM, circuit du connecteur	*a, *b	2	2	2	2	2	2	2	2	2	2	2	2	2	EC-3534, 3623, 3641	
	Circuit du relais de climatiseur	*a														EC-3689	*12
		*b											1				*13
	Circuit de l'interrupteur de climatiseur	*a, *c														EC-3689	*13
		*b															*14

1 - 5 : Les numéros se réfèrent à l'ordre de l'inspection.
(suite à la page suivante)
*a : Circuit ouvert
*b : Court-circuit
*c : Court-circuit à la masse
*d : Bruit
*8 : Ne cesse pas de fonctionner.
*9 : Le témoin de préchauffage ne s'allume pas.
*10 : Le témoin de préchauffage ne s'éteint pas.
*11 : Un court-circuit à la masse empêche le moteur de s'arrêter.
*12 : Le climatiseur ne fonctionne pas.
*13 : Le climatiseur ne s'arrête pas.
*14 : Le climatiseur ne fonctionne pas.

Simpo PDF Merge and Split Unregistered Version - http://www.simpopdf.com

Tableau des caractéristiques des symptômes (Suite)

NOTE

Simpo PDF Merge and Split Unregistered Version - http://www.simpopdf.com

Tableau des caractéristiques des symptômes (Suite)

SYSTEME — SYSTEME DE GESTION MOTEUR		Défaut	SYMPTOME												Page de référence	Caractéristique du symptôme, poste de contrôle
			MAUVAIS RALENTI/EFFET DE POMPAGE	VIBRATION DE RALENTI	RETOUR LENT/PAS DE RETOUR AU RALENTI	SURCHAUFFE/TEMPERATURE DU LIQUIDE DE REFROIDISSEMENT MOTEUR ELEVEE	CONSOMMATION EXCESSIVE DE CARBURANT	CONSOMMATION EXCESSIVE DE L'HUILE	COULEUR DE FUMEE ANORMALE: FUMEE NOIRE	COULEUR DE FUMEE ANORMALE: FUMEE BLANCHE	BATTERIE MORTE (SANS CHARGE)	Le témoin de défaut s'allume.	Peut être détecté par CONSULT-II ?	Coupure de carburant		
Code de symptôme de garantie			AG	AH	AJ	AK	AL	AM	AP		HA					
GESTION MOTEUR	Circuit de l'électrovanne de commande de volume EGR	*a, *b													EC-3648	
		*c							1							*8
	Circuit du relais de préchauffage	*a								1					EC-3665	*9
		*b														*10
	Circuit du relais d'ECM (arrêt automatique)	*a										1	1	1	EC-3502	
		*b														*11
	ECM, circuit du connecteur	*a, *b	2	2	2	2	2	2	2	2	2	2	2	2	EC-3534, 3623, 3641	
	Circuit du relais de climatiseur	*a													EC-3689	*12
		*b														*13
	Circuit de l'interrupteur de climatiseur	*a, *c													EC-3689	*13
		*b														*14

1 - 5 : Les numéros se réfèrent à l'ordre de l'inspection.
*a : Circuit ouvert
*b : Court-circuit
*c : Court-circuit à la masse
*d : Bruit
*8 : Ne cesse pas de fonctionner.
*9 : Le témoin de préchauffage ne s'allume pas.
*10 : Le témoin de préchauffage ne s'éteint pas.
*11 : Un court-circuit à la masse empêche le moteur de s'arrêter.
*12 : Le climatiseur ne fonctionne pas.
*13 : Le climatiseur ne s'arrête pas.
*14 : Le climatiseur ne fonctionne pas.

Simpo PDF Merge and Split Unregistered Version - http://www.simpopdf.com

Tableau des caractéristiques des symptômes (Suite)

NOTE

Simpo PDF Merge and Split Unregistered Version - http://www.simpopdf.com

Valeur de référence de CONSULT-II en mode de contrôle de données

Remarques :
- Les données de spécification sont des valeurs de référence.
- Les données de spécification sont des valeurs de sortie/entrée détectées ou transmises au connecteur par l'ECM

* Les données de spécification peuvent ne pas avoir de rapport direct avec les signaux/valeurs/fonctionnements de leurs composants.

ELEMENT DE CONTROLE	CONDITION		SPECIFICATION
CPV·TR/MN (PMH)	● Compte-tours : Brancher ● Faire tourner le moteur et comparer l'indication du compte-tours avec la valeur affichée par CONSULT-II.		Valeur voisine de cette indiquée par CONSULT-II.
CPA·TR/MN-POMPE			
CAP TEMP MOT	● moteur : Une fois le moteur chaud		Supérieur à 80°C
CAP VIT VEH	● Faire tourner les roues motrices et comparer l'indication du compteur de vitesse avec la valeur affichée par CONSULT-II.		Valeur voisine de cette indiquée par CONSULT-II.
CAP TEMP CARB	● moteur : Une fois le moteur chaud		Plus de 40°C
CAP POS ACCEL	● Contact d'allumage : ON (moteur à l'arrêt)	Pédale d'accélérateur Complètement relâchée	0,29 V - 0,79 V
		Pédale d'accélérateur enfoncée au maximum	Environ 3,48 V - 4,64 V
CNT ACCEL FOND	● Contact d'allumage : ON (moteur à l'arrêt)	Pédale d'accélérateur enfoncée au maximum	ON
		Sauf ci-dessus	OFF
CNT ACCEL COUP	● Contact d'allumage : ON (moteur à l'arrêt)	Pédale d'accélérateur Complètement relâchée	ON
		Pédale d'accélérateur légèrement ouverte	OFF
SOUPAPE/FUITE (soupape de décharge)	● moteur : Une fois le moteur chaud	Régime de ralenti	Environ 13°CA
TENS BATTERIE	● Contact d'allumage : ON (moteur à l'arrêt)		11 V - 14 V
I/C INT/A T/S	● Contact d'allumage : ON		Température de l'air d'admission Environ 0°C : Environ 4,2 V Environ 20°C : Environ 3,5 V
CON NEUTRE	● Contact d'allumage : ON	Levier de changement de vitesses : Position de stationnement/point mort	ON
		Sauf ci-dessus	OFF
SIGNAL DE DEMARRAGE	● Contact d'allumage : Contact d'allumage : ''ON'' → ''START'' → ''ON''		ARR → MAR → ARR
SIGNAL CLIMAT	● moteur : faire chauffer le moteur, puis le faire tourner au ralenti.	Interrupteur de climatiseur : OFF	OFF
		Interrupteur de climatiseur : ON (Le compresseur fonctionne).	ON
CONT FREIN	● Contact d'allumage : ON	Pédale de frein enfoncée	ON
		Pédale de frein libre	OFF
CONT FREIN2	● Contact d'allumage : ON	Pédale de frein enfoncée	ON
		Pédale de frein libre	OFF
CNT ALL	● Contact d'allumage : ON → OFF		MAR → ARR
INT CHAUF	● Contact d'allumage : ON	Interrupteur de chauffage rapide ON	ON
		Interrupteur de chauffage rapide : OFF	OFF
TURBO BST SEN	● moteur : Une fois le moteur chaud ● Levier de changement de vitesses : Position de point mort	Régime de ralenti	Environ Pression atmosphérique
		Le régime moteur est de 2 000 tr/mn.	Environ 106,0 kPa

Simpo PDF Merge and Split Unregistered Version - http://www.simpopdf.com

Valeur de référence de CONSULT-II en mode de contrôle de données (Suite)

ELEMENT DE CONTROLE	CONDITION		SPECIFICATION
COUP/C DECELER	● moteur : Une fois le moteur chaud	Régime de ralenti	OFF
INJ TIMG C/V (commande avance injection)	● moteur : faire chauffer le moteur, puis le faire tourner au ralenti.		Environ 50 % - 70 %
RELAIS CLIMAT	● moteur : faire chauffer le moteur, puis le faire tourner au ralenti.	Interrupteur de climatiseur : OFF	OFF
		Interrupteur de climatiseur : ON (Le compresseur fonctionne).	ON
REL PRECHAUFF	● Consulter la page EC-3665.		
VENTIL RADIATEUR	● Lorsque le ventilateur de refroidissement est arrêté.		OFF
	● Lorsque le ventilateur fonctionne.		ON (marche)
SOUP COMM VOL EGR	● moteur : Une fois le moteur chaud ● Interrupteur de climatiseur : ‘‘OFF’’ ● Levier de changement de vitesses : Position de point mort ● A vide	Après 1 minute au ralenti	Plus de 10 paliers
		Montée rapide du régime moteur du ralenti jusqu’à 3.200 tr/mn	0 degré
CAP BARO	● Contact d’allumage : ON		Altitude Environ 0 m : Environ 100,62 kPa (1,0062 bar, 1,026 kg/cm^2) Environ 1 000 m : Environ 88,95 kPa (0,8895 bar, 0,907 kg/cm^2) Environ 1 500 m : Environ 83,16 kPa (0,8316 bar, 0,848 kg/cm^2) Environ 2 000 m : Environ 78,36 kPa (0,7836 bar, 0,799 kg/cm^2)

Simpo PDF Merge and Split Unregistered Version - http://www.simpopdf.com

Graphique de référence du capteur principal en mode de contrôle des données

Les courbes suivantes sont les courbes de référence principales des capteurs dans le mode ‘‘CONTROLE DE DONNEES’’ (contrôle des données).

CAP POS ACCEL, ‘‘CPV·TR/MN (PMH)’’

Les courbes suivantes de ‘‘CAP POS ACCEL’’ et ‘‘CPV·TR/MN (PMH)’’ sont valables lorsque le moteur est accéléré rapidement jusqu’à 3 000 tr/min à vide, après que la température de fonctionnement normale a été atteinte.

Chaque valeur sert de référence, la valeur exacte peut varier.

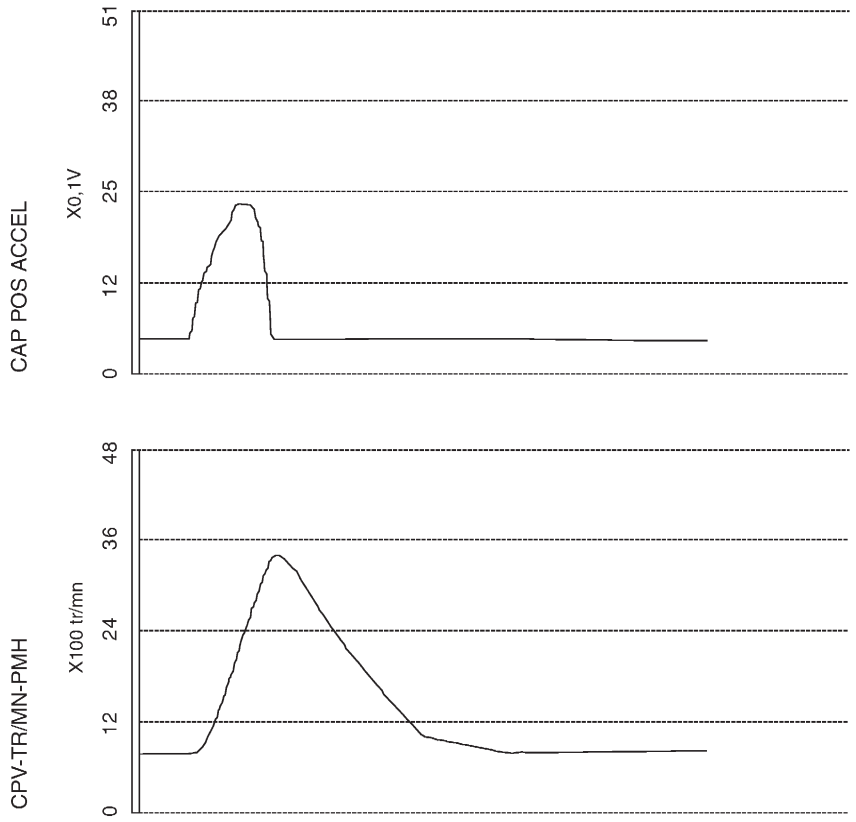

- La valeur de ‘CAP POS ACCEL‘ doit augmenter lorsque la pédale d’accélérateur est enfoncée et doit diminuer une fois relâchée.

- La valeur ‘CPV-TR/MN-PMH‘ doit augmenter progressivement lorsque la pédale d’accélérateur est enfoncée et doit diminuer progressivement une fois la pédale relâchée sans provoquer de baisse ou de hausse intermittente.

SEC947C

Simpo PDF Merge and Split Unregistered Version - http://www.simpopdf.com

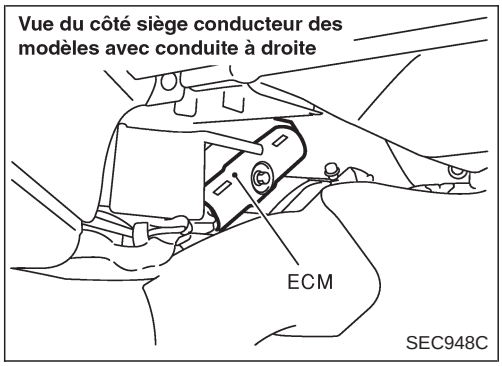

Bornes de l'ECM et valeurs de référence

PREPARATION

1. L'ECM se trouve derrière le tableau de bord inférieur. Déposer pour cela la protection sous le tableau de bord côté conducteur.

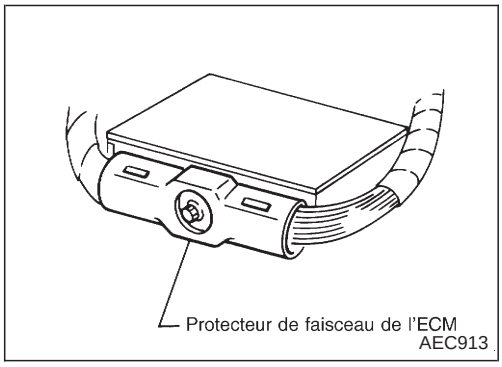

2. Déposer la protection du faisceau de l'ECM.

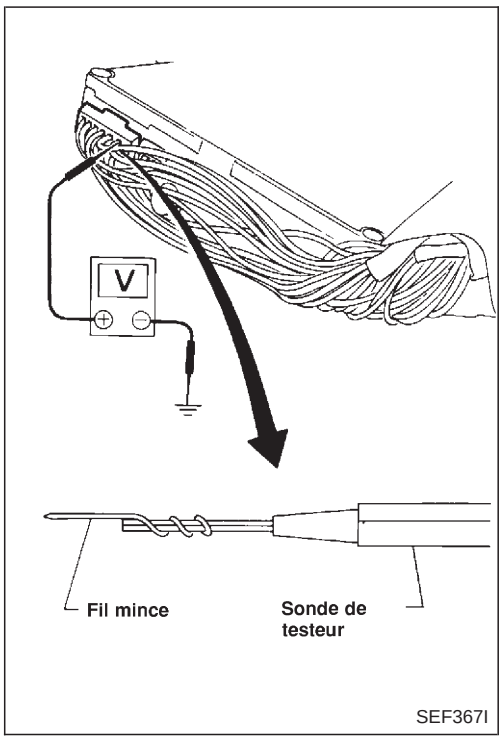

3. Effectuer toutes les mesures de la tension, le connecteur étant branché. Les sondes prolongées de la façon illustrée ci-contre permettent d'effectuer les tests plus facilement.
   - Ouvrir la bride de fixation du faisceau pour faciliter le test.
   - Faire très attention de ne pas toucher 2 bornes à la fois.
   - Les données sont des valeurs de comparaison et peuvent ne pas être exactes.

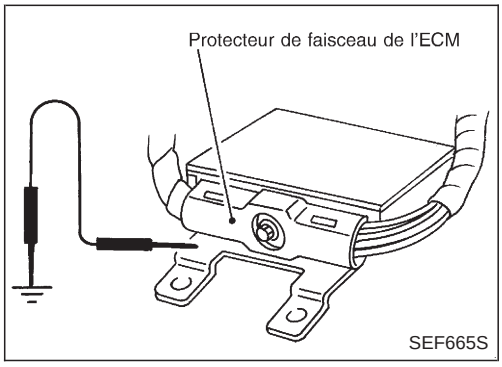

S'assurer que l'ECM est correctement mis à la masse avant le contrôle.

Simpo PDF Merge and Split Unregistered Version - http://www.simpopdf.com

Bornes de l'ECM et valeurs de référence (Suite)

DISPOSITION DES BORNES DU CONNECTEUR DE FAISCEAU DE L'ECM

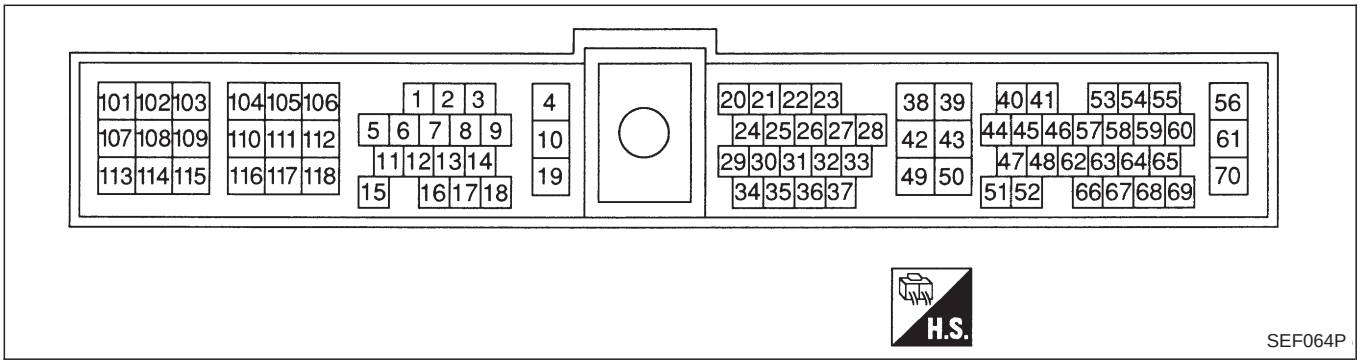

SEF064P

TABLEAU D'INSPECTION DE L'ECM

Remarques : Données de référence relevées entre chaque borne et la masse.

PRECAUTION :

Lors de la mesure de la tension d'entrée/sortie, ne pas utiliser les bornes de masse de l'ECM sous peine d'endommager le transistor de l'ECM. Utiliser une autre masse que celle des bornes de l'ECM.

BORNE N°	COULEUR DE CABLE	ELEMENT	CONDITION	DONNEE (tension continue ou impulsion)
4	G	Relais d'ECM (arrêt automatique)	Contact d'allumage sur "ON" Contact d'allumage "OFF" └ Pendant quelques secondes après avoir mis le contact d'allumage sur "OFF"	Environ 0,9 V
			Contact d'allumage "OFF" └ Quelques secondes après avoir mis le contact d'allumage sur "OFF"	TENSION BATTERIE (11 V - 14 V)
5	W	Compte-tours	Moteur en marche. └ **Pendant la montée en température** Régime de ralenti	Environ 4,8 V 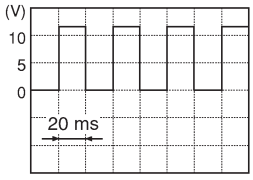 SEF255Z
			Moteur en marche. └ **Pendant la montée en température** Le régime moteur est de 2 000 tr/mn.	Environ 4,5 V 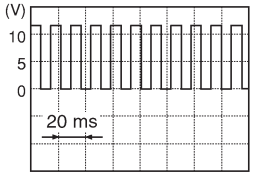 SEF256Z

Simpo PDF Merge and Split Unregistered Version - http://www.simpopdf.com

Bornes de l'ECM et valeurs de référence (Suite)

BORNE N°	COULEUR DE CABLE	ELEMENT	CONDITION	DONNEE (tension continue ou impulsion)
14	G/B	Relais du ventilateur de radiateur	Moteur en marche. └ Le ventilateur de radiateur est à l'arrêt	TENSION BATTERIE (11 V - 14 V)
			Moteur en marche. └ Le ventilateur de radiateur est en marche	Environ 0,1 V
15	G/W	Relais de climatiseur	Moteur en marche. └ Interrupteur de climatiseur sur ''OFF''	TENSION BATTERIE (11 V - 14 V)
			Moteur en marche. └ L'interrupteur de climatiseur et le commutateur de ventilateur sont tous deux sur 'ON' (MARCHE) (le compresseur fonctionne)	Environ 0,1 V
16	L/W	Témoin de préchauffage	Contact d'allumage sur ''ON'' └ Le témoin de préchauffage est ''ON''	Environ 1 V
			Contact d'allumage sur ''ON'' └ Le témoin de préchauffage est ''OFF''	TENSION BATTERIE (11 V - 14 V)
17	G/Y	Contact de feu stop	Contact d'allumage sur ''ON'' └ Pédale de frein entièrement relâchée	Environ 0 V
			Contact d'allumage sur ''ON'' └ Pédale de frein enfoncée	TENSION BATTERIE (11 V - 14 V)
18	W/G	Témoin de défaut	Contact d'allumage sur ''ON''	Environ 1 V
			Moteur en marche. └ Régime de ralenti	TENSION BATTERIE (11 V - 14 V)
19	L/OR	Capteur de température du liquide de refroidissement moteur	Moteur en marche.	Environ 0 - 4,8 V La tension de sortie varie avec la température du liquide de refroidissement
20	R	Signal de démarrage	Contact d'allumage sur ''ON''	Environ 0 V
			Contact d'allumage ''START''	TENSION BATTERIE (11 V - 14 V)
21	Y	Interrupteur de climatiseur	Moteur en marche. └ Interrupteur de climatiseur sur ''OFF''	TENSION BATTERIE (11 V - 14 V)
			Moteur en marche. └ L'interrupteur de climatiseur et le commutateur de ventilateur sont tous deux sur ''ON'' (MARCHE) (le compresseur fonctionne)	Environ 0 V

Simpo PDF Merge and Split Unregistered Version - http://www.simpopdf.com

Bornes de l'ECM et valeurs de référence (Suite)

BORNE N°	COULEUR DE CABLE	ELEMENT	CONDITION	DONNEE (tension continue ou impulsion)
22	G/OR	Contact de position stationnement/point mort	Contact d'allumage sur "ON" └ La position du levier est la position "point mort"	Environ 0 V
			Contact d'allumage sur "ON" └ Autres positions	TENSION BATTERIE (11 V - 14 V)
23	W	Capteur de position d'accélérateur	Contact d'allumage sur "ON" └ Pédale d'accélérateur entièrement relâchée	0,29 - 0,79V
			Contact d'allumage sur "ON" └ Pédale d'accélérateur complètement enfoncée	3,48 V - 4,64 V
26	W/L	Capteur de vitesse du véhicule	Moteur en marche. └ Lever le véhicule Levier de sélection sur 1er rapport La vitesse du véhicule est de 10 km/h	0 V - 4,6 V environ 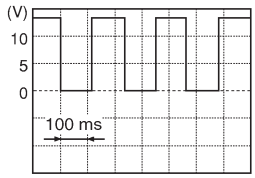 SEF257Z
			Moteur en marche. └ Lever le véhicule En seconde La vitesse du véhicule est de 30 km/h	Environ 2,2 V 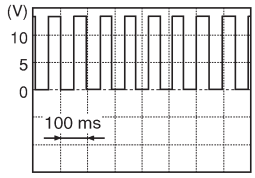 SEF258Z
30	BR/R	Contact de position de la pédale de frein	Contact d'allumage sur 'ON" └ Pédale de frein entièrement relâchée	TENSION BATTERIE (11 V - 14 V)
			Contact d'allumage sur 'ON" └ Pédale de frein enfoncée	Environ 0 V
31	Y	Contact de position d'accélérateur (au ralenti)	Contact d'allumage sur 'ON" └ Pédale d'accélérateur entièrement relâchée	TENSION BATTERIE (11 V - 14 V)
			Contact d'allumage sur 'ON" └ Pédale d'accélérateur enfoncée	Environ 0 V

Simpo PDF Merge and Split Unregistered Version - http://www.simpopdf.com

Bornes de l'ECM et valeurs de référence (Suite)

BORNE N°	COULEUR DE CABLE	ELEMENT	CONDITION	DONNEE (tension continue ou impulsion)
32	G	Contact de position d'accélérateur (accélération maximale)	Contact d'allumage sur "ON" └ Pédale d'accélérateur relâchée	Environ 0 V
			Contact d'allumage sur "ON" └ Pédale d'accélérateur complètement enfoncée	TENSION BATTERIE (11 V - 14 V)
33	G/Y	Pompe d'injection de carburant à commande électronique	Moteur en marche. └ **Pendant la montée en température** Régime de ralenti	Environ 2,4 V
37	P/B	Capteur de température d'air d'admission	Moteur en marche. └ Régime de ralenti	Environ 0 V - 8 V La tension de sortie varie avec la température d'air d'admission
38	W/R	Contact d'allumage	Contact d'allumage "OFF"	0 V
			Contact d'allumage sur "ON"	TENSION BATTERIE (11 V - 14 V)
39 43	B/W B/W	Masse de l'ECM	Moteur en marche. └ Régime de ralenti	Environ 0 V
40	PU	Pompe d'injection de carburant à commande électronique	Moteur en marche. └ **Pendant la montée en température** Régime de ralenti	Environ 2,4 V
42	G/R	Connecteur de diagnostic	Moteur en marche. └ Régime de ralenti (CONSULT-II est branché et allumé)	Environ 0 V
64	G/B			Environ 0,2 V
65	GY/L			Inférieure à 9 V
44	Y	Capteur d'angle de vilebrequin (PMH)	Moteur en marche. └ **Pendant la montée en température** Régime de ralenti	Environ 0,04 V 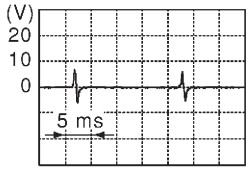 SEF333Y
			Moteur en marche. └ **Pendant la montée en température** Le régime moteur est de 2 000 tr/mn.	Environ 0,04 V 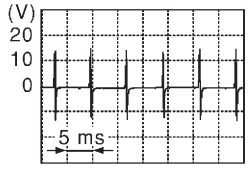 SEF334Y
46	P/L	Capteur de pression d'air de suralimentation	Moteur en marche. └ **Pendant la montée en température** Régime de ralenti	Environ 2,7 V

Simpo PDF Merge and Split Unregistered Version - http://www.simpopdf.com

Bornes de l'ECM et valeurs de référence (Suite)

BORNE N°	COULEUR DE CABLE	ELEMENT	CONDITION	DONNEE (tension continue ou impulsion)
47	BR	Masse du capteur d'angle du vilebrequin (PMH)	Moteur en marche. └ **Pendant la montée en température** Régime de ralenti	Environ 0 V
48	OR/L	Alimentation électrique du capteur de position d'accélérateur	Contact d'allumage sur "ON"	Environ 5 V
49	W	Tension d'alimentation du capteur	Contact d'allumage sur "ON"	Environ 5 V
50	B	Masse de capteurs	Moteur en marche. └ **Pendant la montée en température** Régime de ralenti	Environ 0 V
51	B/W	Masse du capteur de position d'accélérateur	Moteur en marche. └ **Pendant la montée en température** Régime de ralenti	Environ 0 V
52	L/W	Pompe d'injection de carburant à commande électronique	Moteur en marche. └ Régime de ralenti	Environ 0,1 V
53	L/R	Pompe d'injection de carburant à commande électronique	Moteur en marche. └ Régime de ralenti	Environ 0,45 V
			Moteur en marche. └ Le régime moteur est de 2 000 tr/mn.	Environ 0,7 V
56 61	R R	Alimentation électrique de l'ECM	Contact d'allumage sur "ON"	TENSION BATTERIE (11 V - 14 V)
59	BR/R	Interrupteur de chauffage rapide	Contact d'allumage sur "ON" └ Interrupteur de chauffage rapide sur "ON"	TENSION BATTERIE (11 V - 14 V)
			Contact d'allumage sur "ON" └ Interrupteur de chauffage rapide sur "OFF"	Environ 0 V
103 105 109 115	GY OR/B W/L SB	Soupape de contrôle de volume EGR	Moteur en marche. └ **Pendant la montée en température** Régime de ralenti	0,2 V - 14 V
106 112 118	B B B	Masse de l'ECM	Moteur en marche. └ Régime de ralenti	Environ 0 V
111	W/R	Relais de préchauffage	Se référer à "SYSTEME DE COMMANDE DE PRECHAUFFAGE", page EC-3665.	

Simpo PDF Merge and Split Unregistered Version - http://www.simpopdf.com

Description

Il peut arriver que les incidents se produisent de manière intermittente. Dans bien des cas, le problème se résout lui-même (le fonctionnement normal de l'organe ou du circuit en cause se rétablit sans intervention). Il est important de réaliser que, souvent, les symptômes décrits par les clients ne se produisent pas lors des contrôles du DTC. Il faut également savoir que les faux contacts électriques sont la cause la plus fréquente des incidents intermittents. Il en découle que les conditions dans lesquelles l'incident s'est produit peuvent ne pas apparaître clairement. C'est pourquoi les circuits contrôlés dans le cadre d'une procédure de diagnostic standard peuvent ne pas révéler la localisation exacte du problème.

SITUATIONS COURANTES DE COMPTE RENDU D'INCIDENT INTERMITTENT

ETAPE de la Procédure de travail	Situation
II	CONSULT-II est utilisé. Le paramètre d'occurrence indiqué dans l'écran ''RESULT AUTO-DIAG'' (résultats d'autodiagnostic) est différent de ''0''.
III	Le symptôme rapporté par le client ne se répète pas.
IV	Le DTC n'apparaît pas lors de la procédure de confirmation de DTC.
VI	La Procédure de diagnostic pour le code XXXX ne permet pas d'isoler le problème.

Procédure de diagnostic

1	**DEBUT DE L'INSPECTION**
Effacer les DTC. Se référer à ''COMMENT EFFACER LES DTC'', page EC-3457	
►	PASSER A L'ETAPE 2.

2	**VERIFIER LES BORNES DE MASSE**
Vérifier que les bornes de masse ne sont pas corrodées ou en faux contact. Se référer à la section GI (''INSPECTION DES MASSES'', ''Inspection du circuit'').	
Bon ou mauvais	
Bon ►	PASSER A L'ETAPE 3.
Mauvais ►	Réparer ou remplacer.

3	**LOCALISER L'INCIDENT ELECTRIQUE**
Procéder aux 'Essais de simulation de défaut' décrits dans la section GI.	
Bon ou mauvais	
Bon ►	**FIN DE L'INSPECTION**
Mauvais ►	Réparer ou remplacer.

Simpo PDF Merge and Split Unregistered Version - http://www.simpopdf.com

Circuit d'alimentation électrique principal et de mise à la masse

BORNES DE L'ECM ET VALEURS DE REFERENCE

Remarques : Données de référence relevées entre chaque borne et la masse.

PRECAUTION :

Lors de la mesure de la tension d'entrée/sortie, ne pas utiliser les bornes de masse de l'ECM sous peine d'endommager le transistor de l'ECM. Utiliser une autre masse que celle des bornes de l'ECM.

BORNE N°	COU-LEUR DE CABLE	ELEMENT	CONDITION	DONNEES (tension continue)
4	G	Relais d'ECM (arrêt automatique)	Contact d'allumage sur ''ON''	Environ 0,25 V
			Contact d'allumage ''OFF'' └ Pendant quelques secondes après avoir mis le contact d'allumage sur ''OFF''	
			Contact d'allumage ''OFF'' └ Quelques secondes après avoir mis le contact d'allumage sur ''OFF''	TENSION BATTERIE (11 V - 14 V)
38	W/R	Contact d'allumage	Contact d'allumage ''OFF''	0V
			Contact d'allumage sur ''ON''	TENSION BATTERIE (11 V - 14 V)
39 43	B/W B/W	Masse de l'ECM	Moteur en marche. └ Régime de ralenti	Environ 0 V
56 61	R R	Alimentation électrique de l'ECM	Contact d'allumage sur ''ON''	TENSION BATTERIE (11 V - 14 V)
106 112 118	B B B	Masse de l'ECM	Moteur en marche. └ Régime de ralenti	Environ 0 V

Simpo PDF Merge and Split Unregistered Version - http://www.simpopdf.com

Circuit d'alimentation électrique principal et de mise à la masse (Suite)

SCHEMA DE CABLAGE / MODELES A DIRECTION A GAUCHE

EC-MAIN-01

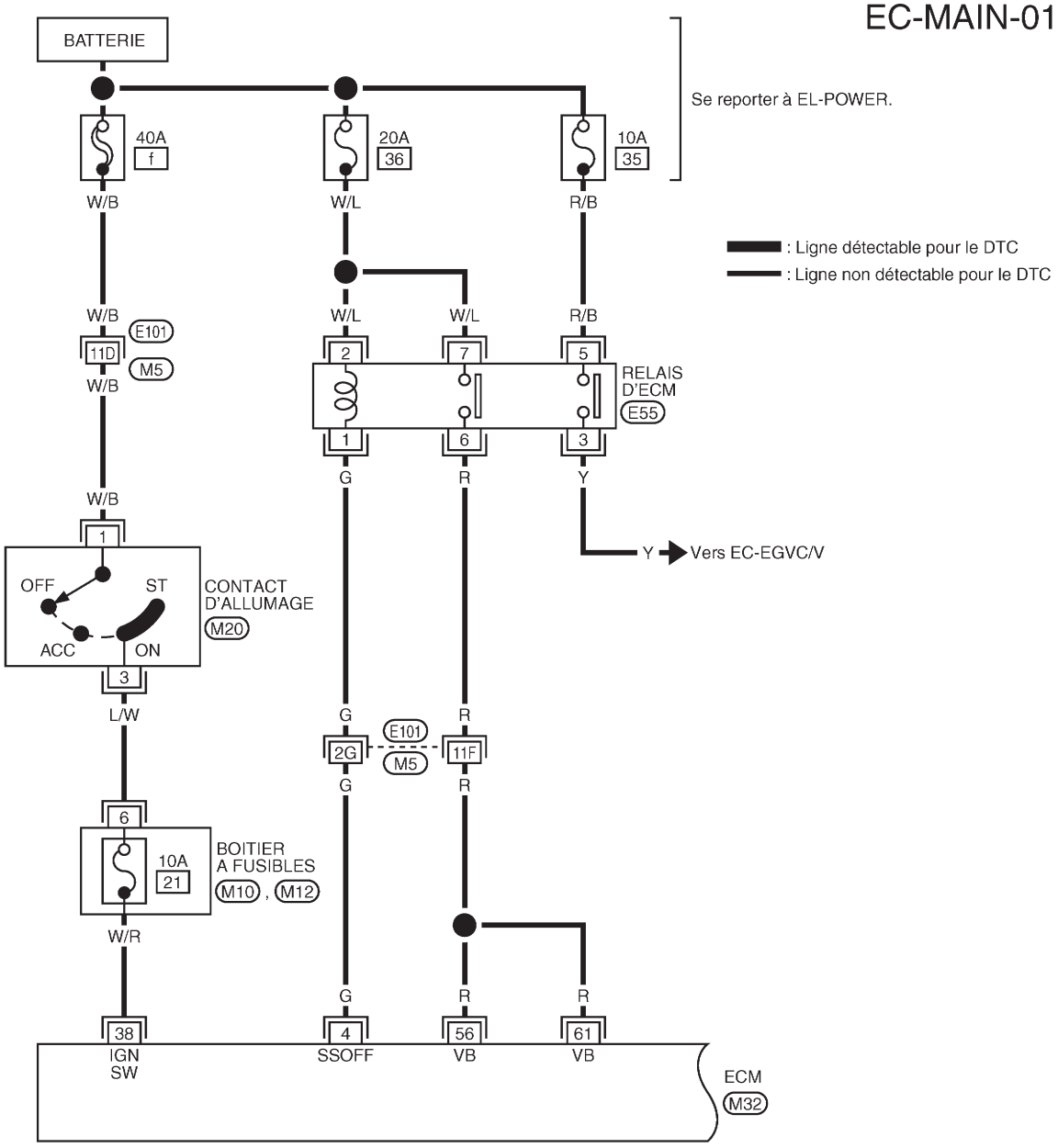

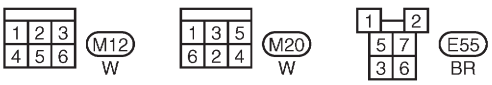

Consulter la dernière page dépliante.
M5 , E101
M10

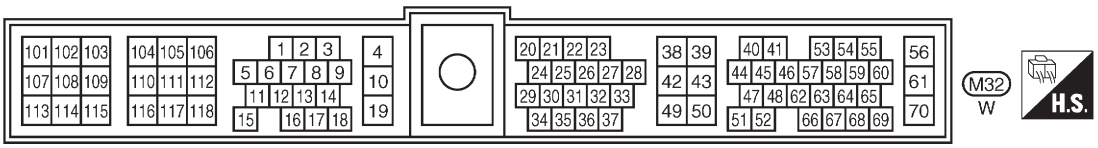

GEC124A

Simpo PDF Merge and Split Unregistered Version - http://www.simpopdf.com

Circuit d'alimentation électrique principal et de mise à la masse (Suite)

EC-MAIN-02

: Ligne détectable pour le DTC
: Ligne non détectable pour le DTC

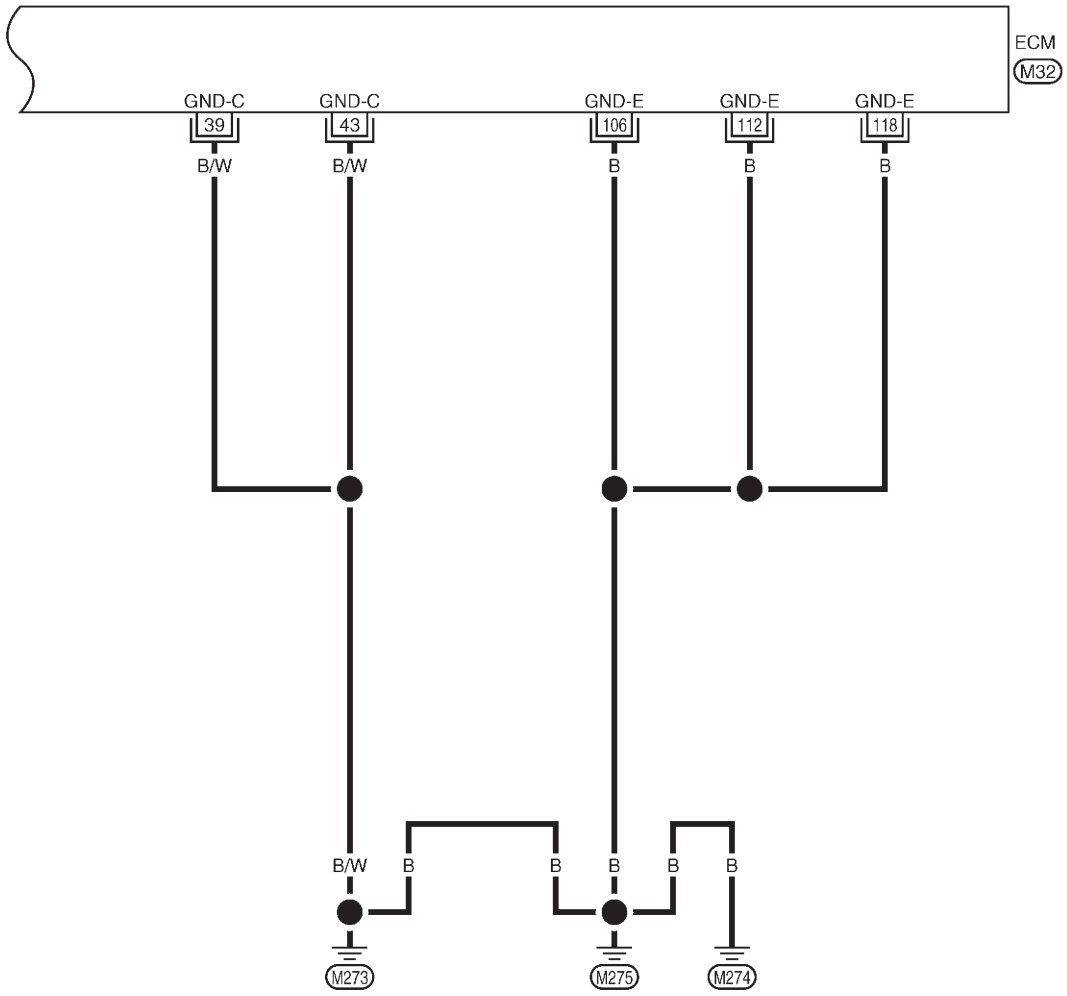

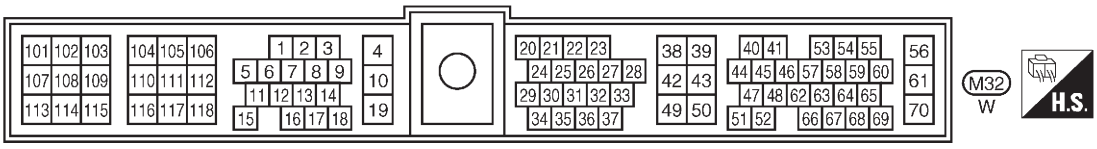

GEC125A

Simpo PDF Merge and Split Unregistered Version - http://www.simpopdf.com

Circuit d'alimentation électrique principal et de mise à la masse (Suite)

SCHEMA DE CABLAGE / MODELES A DIRECTION A DROITE

EC-MAIN-03

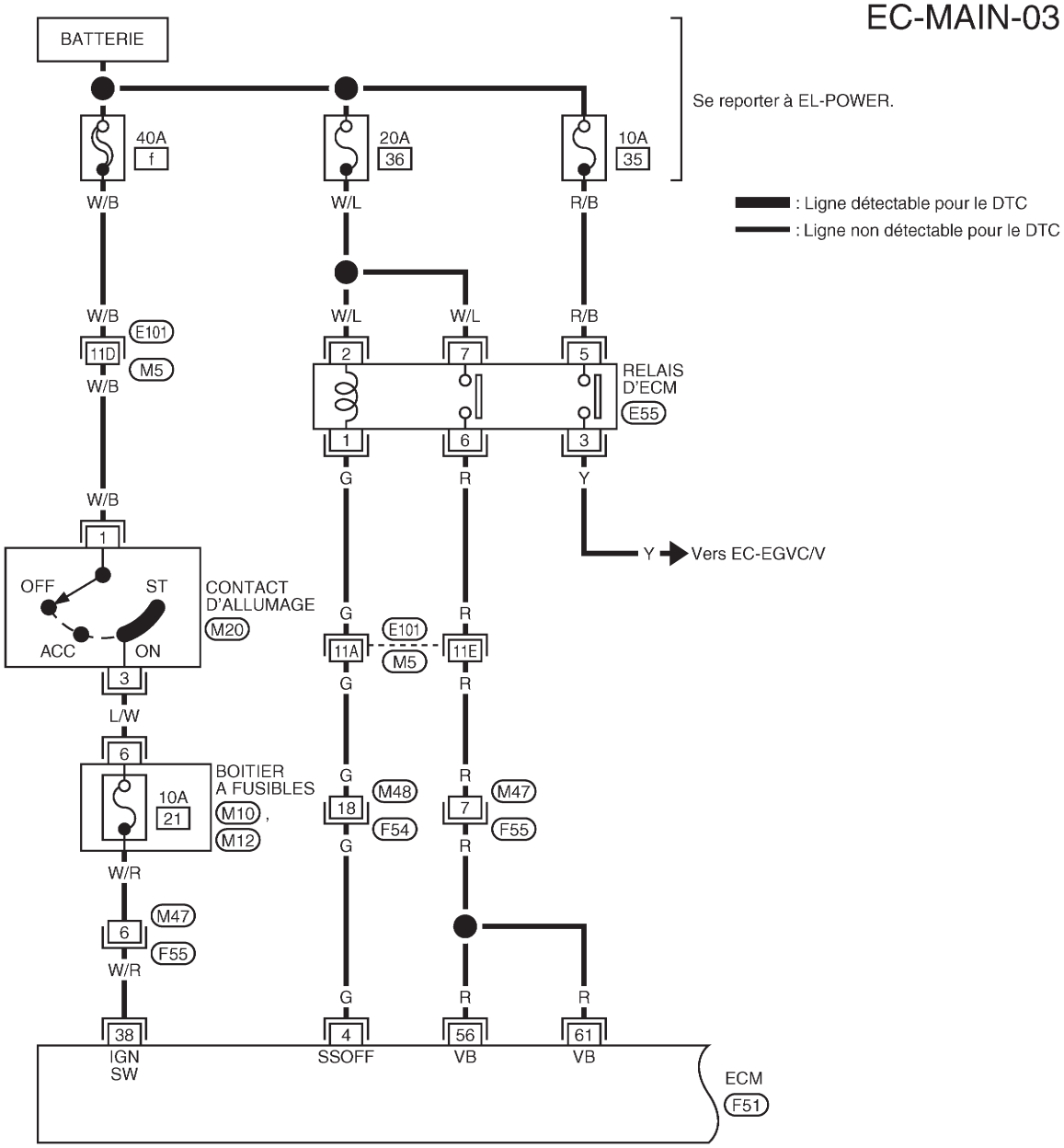

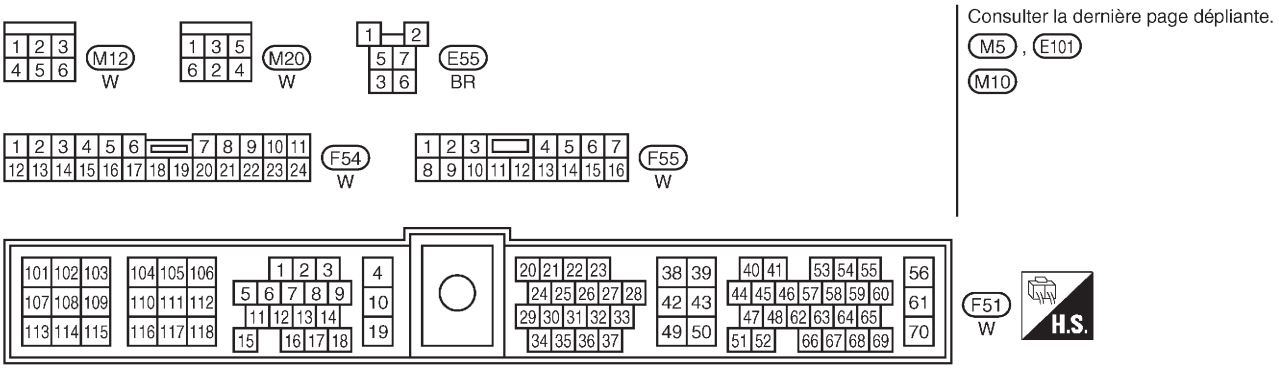

Consulter la dernière page dépliante.
M5 , E101
M10

GEC126A

Simpo PDF Merge and Split Unregistered Version - http://www.simpopdf.com

Circuit d'alimentation électrique principal et de mise à la masse (Suite)

EC-MAIN-04

: Ligne détectable pour le DTC
: Ligne non détectable pour le DTC

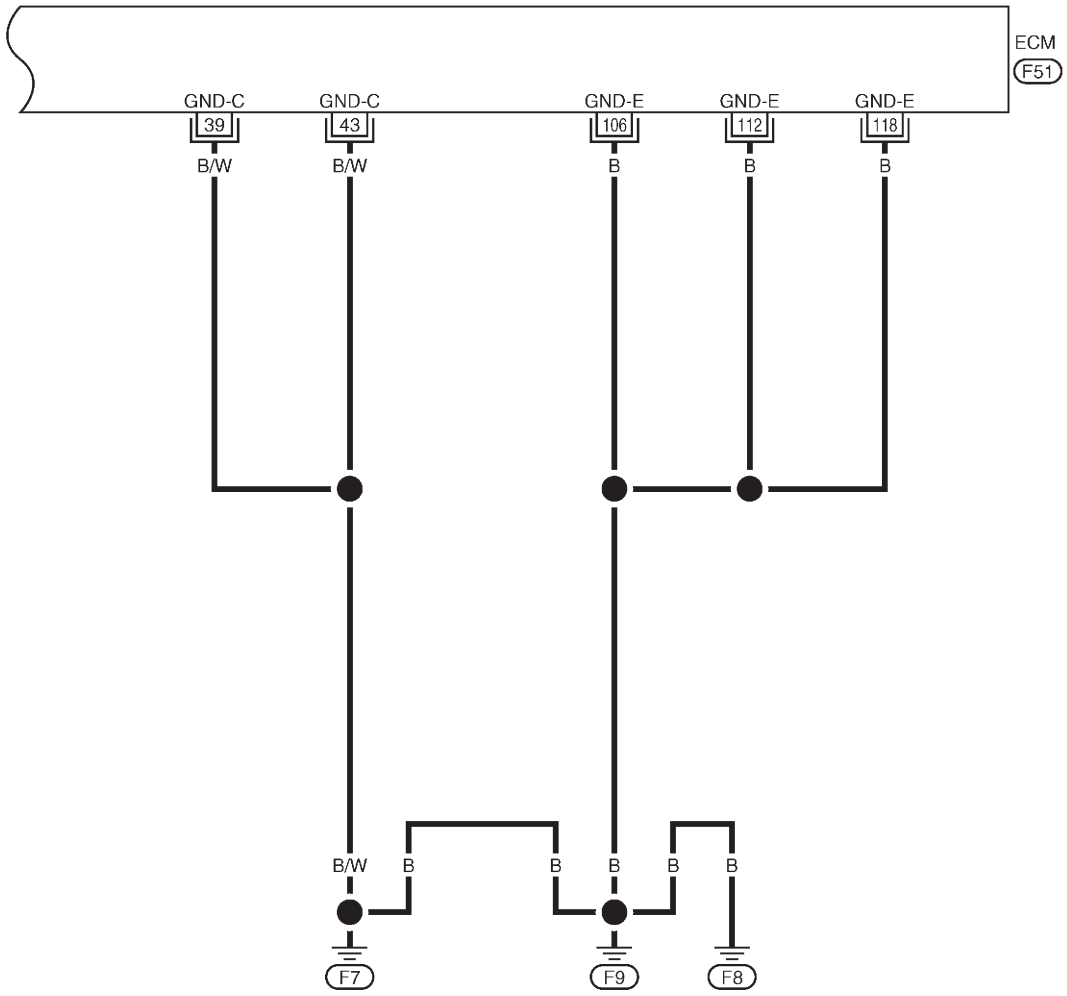

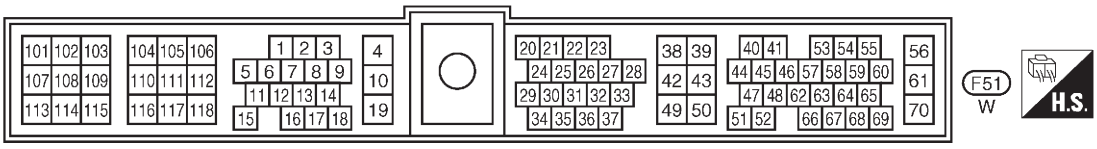

GEC127A

Simpo PDF Merge and Split Unregistered Version - http://www.simpopdf.com

Circuit d'alimentation électrique principal et de mise à la masse (Suite)

PROCEDURE DE DIAGNOSTIC

1	DEBUT DE L'INSPECTION
Démarrer le moteur. Le moteur tourne-t-il ? **Oui ou Non**	
Oui ▶	PASSER A L'ETAPE 14.
Non ▶	PASSER A L'ETAPE 2.

2	VERIFIER LE CIRCUIT D'ALIMENTATION DE L'ECM I

1. Mettre le contact d'allumage sur ''ON''.
2. Vérifier la tension entre la borne 38 de l'ECM et la masse au CONSULT-II ou au contrôleur.

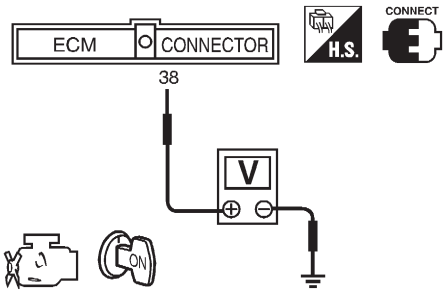

Tension : Tension de la batterie

SEF397Y

Bon ou mauvais

Bon ▶	PASSER A L'ETAPE 4.
Mauvais ▶	PASSER A L'ETAPE 3.

3	DETECTER LA PIECE DEFECTUEUSE
Vérifier les points suivants. ● Connecteurs de faisceau M47, F55 (modèles avec conduite à droite) ● Connecteur de boîte à fusibles (J/B) M10, M12 ● Fusible de 10A ● Faisceau ouvert ou court-circuit entre l'ECM et le fusible	
▶	Réparer les faisceaux ou connecteurs en circuit ouvert ou en court-circuit à la masse ou à l'alimentation.

4	VERIFIER SI LE CIRCUIT DE MASSE DE L'ECM EST OUVERT OU EN COURT-CIRCUIT

1. Mettre le contact d'allumage sur ''OFF''.
2. Débrancher le connecteur de faisceau de l'ECM.
3. Vérifier la continuité du faisceau entre les bornes 39, 43, 106, 112 et 118 de l'ECM et la masse de moteur. Se référer au schéma de câblage.
   Il doit y avoir continuité.
4. Vérifier également que le faisceau n'est pas ouvert ou en court-circuit à l'alimentation.

Bon ou mauvais

Bon ▶	PASSER A L'ETAPE 6.
Mauvais ▶	PASSER A L'ETAPE 5.

Simpo PDF Merge and Split Unregistered Version - http://www.simpopdf.com

Circuit d'alimentation électrique principal et de mise à la masse (Suite)

5	DETECTER LA PIECE DEFECTUEUSE
Vérifier si le faisceau n'est pas ouvert ou en court-circuit entre le relais de l'ECM et la masse du moteur.	
▶	Réparer les faisceaux ou connecteurs en circuit ouvert ou en court-circuit à la masse ou à l'alimentation.

6	VERIFIER LE CIRCUIT D'ALIMENTATION DE L'ECM II

1. Rebrancher le connecteur de faisceau de l'ECM
2. Mettre le contact d'allumage sur ''OFF'' puis sur ''ON''.
3. Vérifier la tension entre les bornes 56, 61 de l'ECM et la masse avec le CONSULT-II ou un contrôleur.

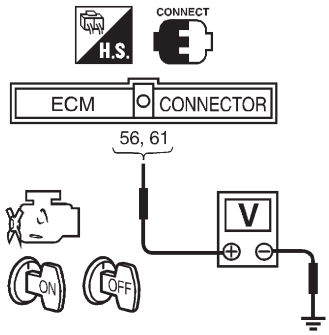

Tension:
Une fois le contact d'allumage sur 'Off', la tension de la batterie subsiste pendant quelques secondes. then drop to approximately 0V.

SEC949C

Bon ou mauvais

Bon ▶	Vérifier le circuit d'alimentation de la pompe d'injection de carburant. Se référer à la ''Procédure de diagnostic'', page EC-3599.
Mauvais (pas de tension batterie) ▶	PASSER A L'ETAPE 7.
Mauvais (la tension batterie est présente pendant plus de quelques secondes) ▶	PASSER A L'ETAPE 13.

Simpo PDF Merge and Split Unregistered Version - http://www.simpopdf.com

Circuit d'alimentation électrique principal et de mise à la masse (Suite)

7	VERIFIER LE CIRCUIT D'ALIMENTATION DE L'ECM III

1. Débrancher le relais d'ECM.

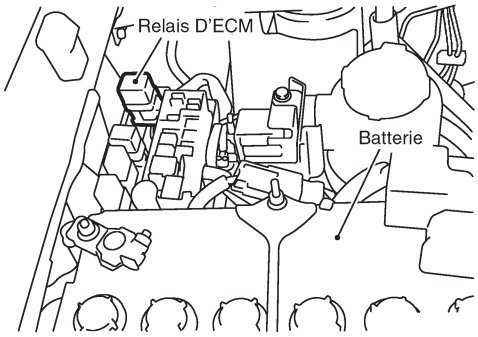

SEC950C

2. Vérifier la tension entre les bornes 2, 7 du relais et la masse avec le CONSULT-II ou avec un contrôleur.

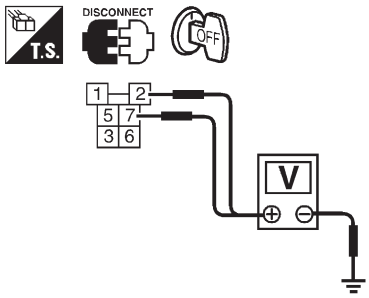

Tension: Tension de la batterie

SEC241D

Bon ou mauvais

Bon	▶	PASSER A L'ETAPE 9.
Mauvais	▶	PASSER A L'ETAPE 8.

8	DETECTER LA PIECE DEFECTUEUSE

Vérifier les points suivants.
- Fusible de 20 A
- Faisceau ouvert ou en court-circuit entre le relais de l'ECM et le fusible

	▶	Réparer les faisceaux ou connecteurs en circuit ouvert ou en court-circuit à la masse ou à l'alimentation.

9	VERIFIER SI LE CIRCUIT DE SIGNAL DE SORTIE EST OUVERT OU EN COURT-CIRCUIT

1. Débrancher le connecteur de faisceau de l'ECM.
2. Vérifier la continuité du faisceau entre la borne 4 de l'ECM et la borne 1 du relais d'ECM. Se référer au schéma de câblage.
   Il doit y avoir continuité.
3. Vérifier également que le faisceau n'est pas ouvert ou en court-circuit à l'alimentation.

Bon ou mauvais

Bon	▶	PASSER A L'ETAPE 11.
Mauvais	▶	PASSER A L'ETAPE 10.

Simpo PDF Merge and Split Unregistered Version - http://www.simpopdf.com

Circuit d'alimentation électrique principal et de mise à la masse (Suite)

10	DETECTER LA PIECE DEFECTUEUSE
Vérifier les points suivants. ● Connecteurs de faisceaux E101, M5 ● Connecteurs de faisceaux M48, F54 (Modèles à conduite à droite) ● Faisceau ouvert ou en court-circuit entre l'ECM et le relais l'ECM	
▶	Réparer les faisceaux ou connecteurs en circuit ouvert ou en court-circuit à la masse ou à l'alimentation.

11	VERIFIER LE CIRCUIT IV D'ALIMENTATION DE L'ECM
1. Vérifier la continuité du faisceau entre les bornes 56, 61 de l'ECM et la borne 6 du relais d'ECM. Se référer au schéma de câblage. **Il doit y avoir continuité.** 2. Vérifier également que le faisceau n'est pas ouvert ou en court-circuit à l'alimentation.	
Bon ou mauvais	
Bon ▶	PASSER A L'ETAPE 13.
Mauvais ▶	PASSER A L'ETAPE 12.

12	DETECTER LA PIECE DEFECTUEUSE
Vérifier les points suivants. ● Connecteurs de faisceaux E101, M5 ● Connecteurs de faisceaux M47, F55 (modèles à conduite à droite) ● Faisceau ouvert ou en court-circuit entre l'ECM et le relais l'ECM	
▶	Réparer les faisceaux ou connecteurs en circuit ouvert ou en court-circuit à la masse ou à l'alimentation.

13	VERIFIER LE RELAIS D'ECM.
1. Appliquer une tension continue de 12 V entre les bornes 1 et 2 du relais d'ECM. 2. Vérifier la continuité entre les bornes 3 et 5, 7 et 6 du relais d'ECM	

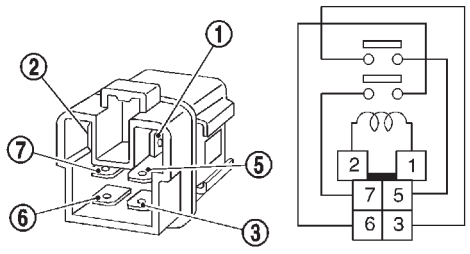

Condition	Continuité
Courant continu de 12V entre les bornes 1 et 2 du relais	Oui
ETEINT	Non

SEF296X

Bon ou mauvais	
Bon ▶	PASSER A L'ETAPE 18.
Mauvais ▶	Remplacer le relais d'ECM.

Simpo PDF Merge and Split Unregistered Version - http://www.simpopdf.com

Circuit d'alimentation électrique principal et de mise à la masse (Suite)

14	VERIFIER LE CIRCUIT V D'ALIMENTATION DE L'ECM

1. Mettre le contact d'allumage sur ''OFF''.
2. Débrancher le relais d'ECM.

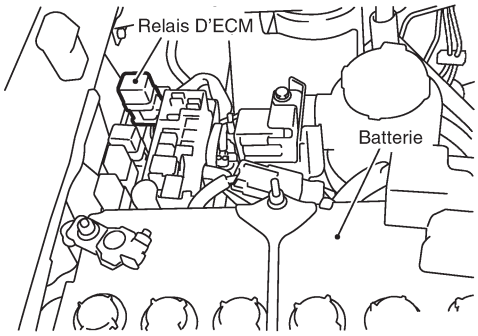

SEC950C

3. Débrancher le connecteur de faisceau de l'ECM.
4. Vérifier la continuité du faisceau entre les bornes 56, 61 de l'ECM et la borne 6 du relais d'ECM. Se référer au schéma de câblage.
   Il doit y avoir continuité.
5. Vérifier également que le faisceau n'est pas ouvert ou en court-circuit à l'alimentation.

Bon ou mauvais

Bon	▶	PASSER A L'ETAPE 16.
Mauvais	▶	PASSER A L'ETAPE 15.

15	DETECTER LA PIECE DEFECTUEUSE

Vérifier les points suivants.
- Connecteurs de faisceaux M101, M5
- Connecteurs de faisceaux M47, F55 (modèles à conduite à droite)
- Faisceau ouvert ou en court-circuit entre l'ECM et le relais l'ECM

	▶	Réparer les faisceaux ou connecteurs en circuit ouvert ou en court-circuit à la masse ou à l'alimentation.

16	VERIFIER SI LE CIRCUIT DE MASSE DE L'ECM EST OUVERT OU EN COURT-CIRCUIT

1. Vérifier la continuité du faisceau entre les bornes 39, 43, 106, 112 et 118 de l'ECM et la masse de moteur. Se référer au schéma de câblage.
   Il doit y avoir continuité.
2. Vérifier également que le faisceau n'est pas ouvert ou en court-circuit à l'alimentation.

Bon ou mauvais

Bon	▶	PASSER A L'ETAPE 18.
Mauvais	▶	PASSER A L'ETAPE 17.

17	DETECTER LA PIECE DEFECTUEUSE

Vérifier si le faisceau n'est pas ouvert ou en court-circuit entre le relais de l'ECM et la masse du moteur.

	▶	Réparer les faisceaux ou connecteurs en circuit ouvert ou en court-circuit à la masse ou à l'alimentation.

18	VERIFIER SI L'INCIDENT EST INTERMITTENT
Se référer à ''DIAGNOSTIC DES DEFAUTS EN CAS D'INCIDENT INTERMITTENT'', page EC-3502.	
	▶ **FIN DE L'INSPECTION**

Simpo PDF Merge and Split Unregistered Version - http://www.simpopdf.com

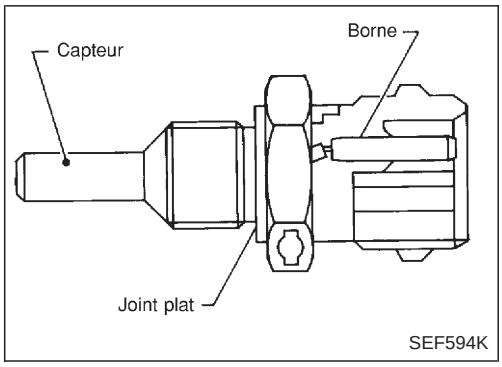

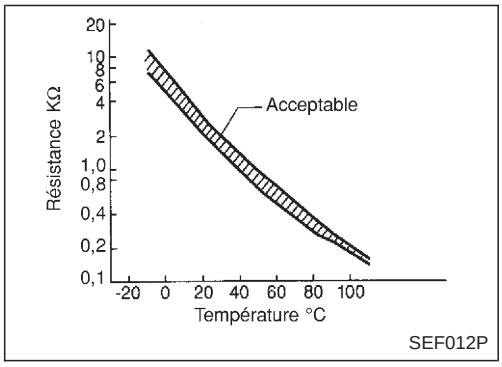

Description

Le capteur de température du liquide de refroidissement du moteur (ECTS) est utilisé pour détecter la température du liquide de refroidissement du moteur. Le capteur modifie un signal de tension depuis l'ECM. Le signal modifié retourne à l'ECM en tant qu'entrée de température du moteur. Le capteur utilise une thermistance qui est sensible au changement de température. La résistance électrique de la thermistance diminue au fur et à mesure que la température monte.

<Données de référence>

Température de liquide de refroidissement du moteur °C	Tension* (V)	Résistance (kΩ)
−10	4,4	7,0 - 11,4
20	3,5	2,1 - 2,9
50	2,3	0,68 - 1,0
90	1,0	0,236 - 0,260

* : Valeurs de référence relevées entre la borne 19 de l'ECM (capteur de température de liquide de refroidissement) et la masse.

PRECAUTION :
Lors de la mesure de la tension d'entrée/sortie, ne pas utiliser les bornes de masse de l'ECM sous peine d'endommager le transistor de l'ECM. Utiliser une autre masse que celle des bornes de l'ECM.

Logique de diagnostic de bord

Le défaut est détecté quand ...	Eléments de contrôles (causes possibles)
● Une tension excessivement haute ou basse du capteur est appliquée à l'ECM.	● Faisceau ou connecteurs (le circuit du capteur est ouvert ou en court-circuit) ● Capteur de température du liquide de refroidissement moteur

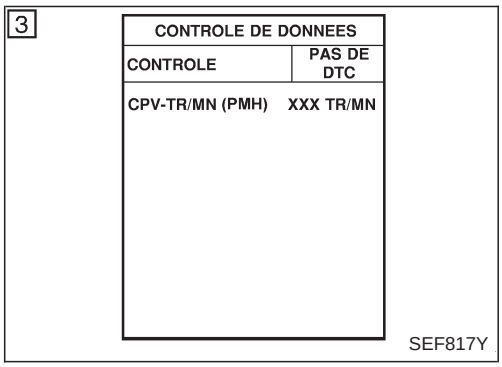

Procédure de confirmation de code de défaut (DTC)

AVEC CONSULT-II

1) Mettre le contact d'allumage sur ''ON''.
2) Régler CONSULT-II en mode ''CONTROLE DE DONNEES''.
3) Attendre au moins 5 secondes.
4) Si le DTC est détecté, effectuer une ''Procédure de diagnostic'', voir page EC-3514.

SANS CONSULT-II

1) Mettre le contact d'allumage sur ''ON'', puis attendre 5 secondes au moins.
2) Mettre le contact d'allumage sur ''OFF'', attendre au moins 5 secondes, puis remettre le contact sur ''ON''.
3) Effectuer le ''Test de diagnostic mode II (résultats d'autodiagnostic)'' avec l'ECM.
4) Si le DTC est détecté, effectuer une ''Procédure de diagnostic'', voir page EC-3514.

Simpo PDF Merge and Split Unregistered Version - http://www.simpopdf.com

Schéma de câblage

EC-ECTS-01

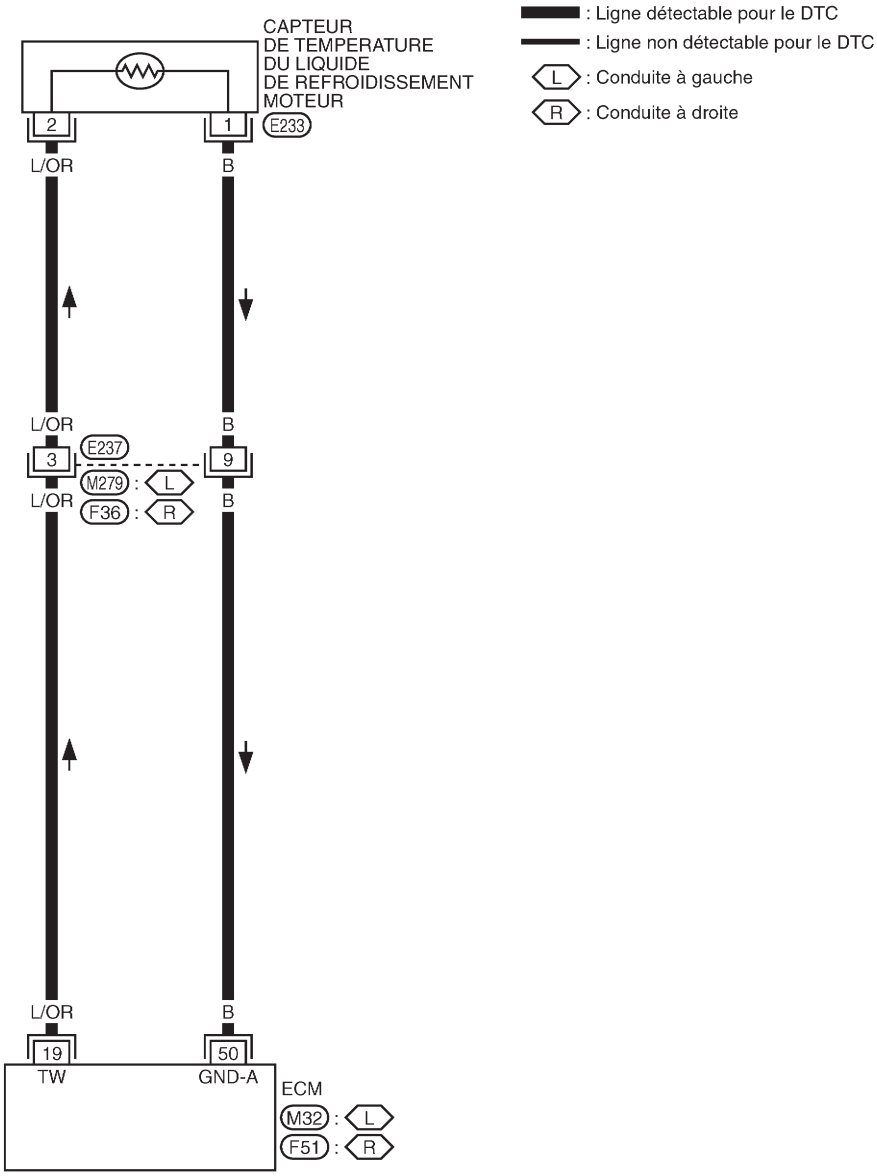

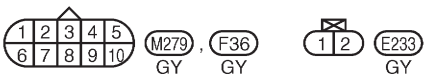

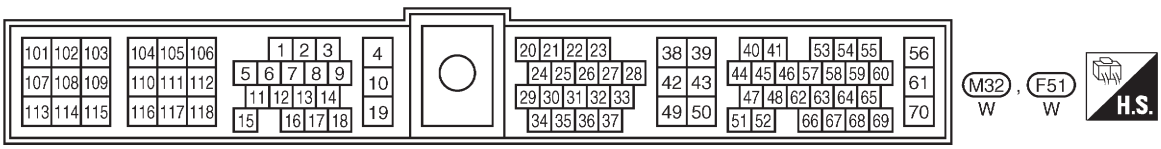

GEC274A

Simpo PDF Merge and Split Unregistered Version - http://www.simpopdf.com

Procédure de diagnostic

1	VERIFIER LE CIRCUIT D'ALIMENTATION DU CAPTEUR

1. Mettre le contact d'allumage sur ''OFF''.
2. Débrancher le connecteur de faisceau du capteur de température du liquide de refroidissement moteur.

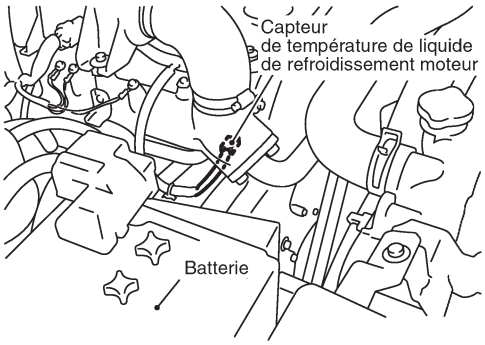

SEC230D

3. Mettre le contact d'allumage sur ''ON''.
4. Vérifier la tension entre la borne e du capteur de température et la masse avec le CONSULT-II ou avec un contrôleur.

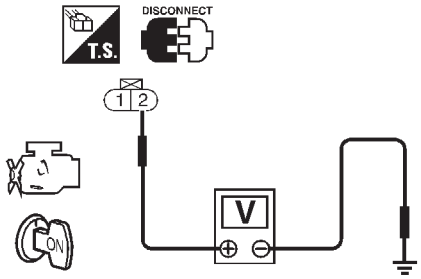

Tension : environ 5V

SEF401Y

Bon ou mauvais

Bon	▶	PASSER A L'ETAPE 3.
Mauvais	▶	PASSER A L'ETAPE 2.

2	DETECTER LA PIECE DEFECTUEUSE

Vérifier les points suivants.
- Connecteurs de faisceaux E237, M279 (conduite à gauche)
- Connecteurs de faisceaux E237, F36 (conduite à droite)
- Faisceau ouvert ou en court-circuit entre le capteur de température du liquide de refroidissement du moteur et l'ECM.

	▶	Réparer les faisceaux ou connecteurs en circuit ouvert ou en court-circuit à la masse ou à l'alimentation.

3	VERIFIER SI LE CIRCUIT DE MASSE DU CAPTEUR DE TEMPERATURE EST OUVERT OU EN COURT-CIRCUIT

1. Mettre le contact d'allumage sur ''OFF''.
2. Vérifier la continuité du faisceau entre la borne 1 du capteur et la masse du moteur. Se référer au schéma de câblage.
   Il doit y avoir continuité.
3. Vérifier également que le faisceau n'est pas ouvert ou en court-circuit à l'alimentation.

Bon ou mauvais

Bon	▶	PASSER A L'ETAPE 5.
Mauvais	▶	PASSER A L'ETAPE 4.

Simpo PDF Merge and Split Unregistered Version - http://www.simpopdf.com

Procédure de diagnostic (Suite)

4	DETECTER LA PIECE DEFECTUEUSE
Vérifier les points suivants. ● Connecteurs de faisceaux E237, M279 (conduite à gauche) ● Connecteurs de faisceaux E237, F36 (conduite à droite) ● Faisceau ouvert ou en court-circuit entre le capteur de température du liquide de refroidissement du moteur et l'ECM.	
▶	Réparer les faisceaux ou connecteurs en circuit ouvert ou en court-circuit à la masse ou à l'alimentation.

5	VERIFIER LE CAPTEUR DE TEMPERATURE DE LIQUIDE DE REFROIDISSEMENT

1. Déposer le capteur de température de liquide de refroidissement du moteur
2. Vérifier la résistance entre les bornes 1 et 2 du capteur de température comme indiqué sur l'illustration.

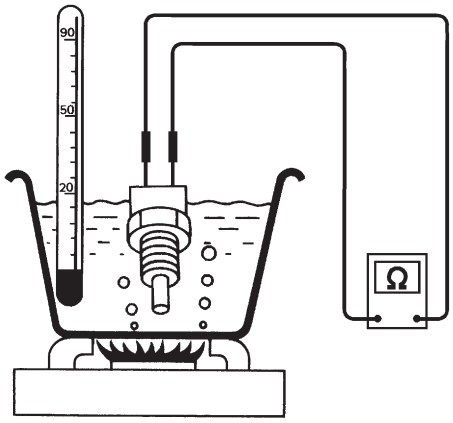

Données de référence

Température °C	Résistance kΩ
20	2,1 - 2,9
50	0,68 - 1,00
90	0,236 - 0,260

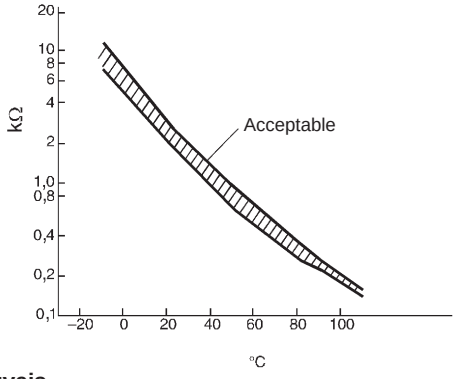

SEF304X-R

Bon ou mauvais

Bon	▶	PASSER A L'ETAPE 6.
Mauvais	▶	Remplacer le capteur de température du liquide de refroidissement moteur.

6	VERIFIER SI L'INCIDENT EST INTERMITTENT
Se référer à ''DIAGNOSTIC DES DEFAUTS EN CAS D'INCIDENT INTERMITTENT'', page EC-3502.	
▶	**FIN DE L'INSPECTION**

Simpo PDF Merge and Split Unregistered Version - http://www.simpopdf.com

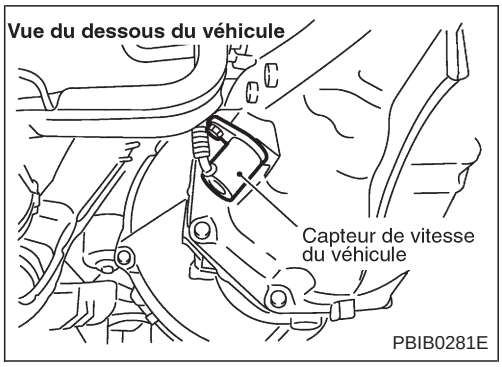

Description

Le capteur de vitesses du véhicule est monté dans la boîte/pont. Il contient un générateur d'impulsions qui délivre le signal de vitesse du véhicule au compte-tours. Le compte-tours envoie alors un signal à l'ECM.

Bornes de l'ECM et valeurs de référence

Données de référence relevées entre chaque borne et la masse.

PRECAUTION :

Lors de la mesure de la tension d'entrée/sortie, ne pas utiliser les bornes de masse de l'ECM sous peine d'endommager le transistor de l'ECM. Utiliser une autre masse que celle des bornes de l'ECM.

BORNE N°	COULEUR DE CABLE	ELEMENT	CONDITION	DONNEE (tension continue ou impulsion)
26	W/L	Capteur de vitesse du véhicule	Moteur en marche. └ Lever le véhicule Levier de sélection sur 1er rapport La vitesse du véhicule est de 10 km/h	Environ 4,6 V 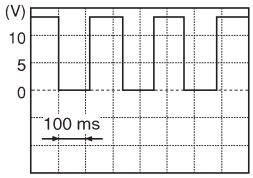 SEF257Z
			Moteur en marche. └ Lever le véhicule En seconde La vitesse du véhicule est de 30 km/h.	Environ 2,2 V 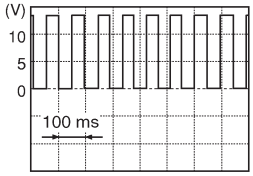 SEF258Z

Logique de diagnostic de bord

Le défaut est détecté quand ...	Eléments de contrôles (causes possibles)
● Le signal d'environ 0 km/h du capteur de vitesse du véhicule est envoyé à l'ECM même lorsque le véhicule est conduit.	● Faisceau ou connecteur (le circuit du capteur de vitesse du véhicule est ouvert ou en court-circuit). ● Capteur de vitesse du véhicule

Simpo PDF Merge and Split Unregistered Version - http://www.simpopdf.com

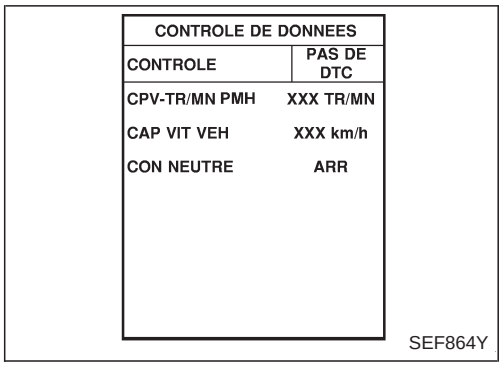

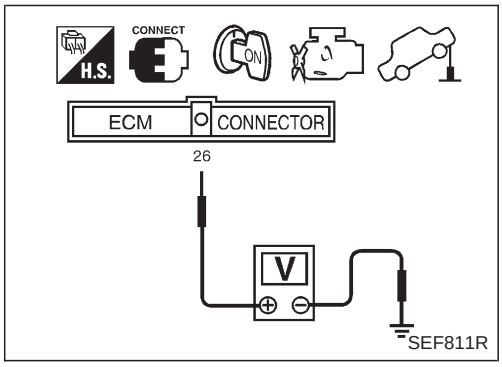

Vérification du fonctionnement général

Utiliser cette procédure pour vérifier le fonctionnement général du circuit du capteur de vitesse du véhicule. Pendant ce contrôle, il se peut que le DTC ne soit pas confirmé.

AVEC CONSULT-II

1) Soulever le véhicule.
2) Démarrer le moteur.
3) Lire le signal du capteur de vitesse de véhicule sur le CONSULT-II en mode ‘‘CONTROLE DE DONNEES’’.
   La vitesse du véhicule indiquée par CONSULT-II devrait pouvoir dépasser 10 km/h lorsque les roues tournent avec la position de transmission adéquate.
4) Si les résultats ne sont pas conformes, effectuer une ‘‘Procédure de diagnostic’’, voir page EC-3520.

SANS CONSULT-II

1) Soulever le véhicule.
2) Démarrer le moteur.
3) Faire tourner la roue motrice à la main.
4) Vérifier la tension entre la borne 26 de l’ECM et la masse avec un contrôleur.
   La tension devrait varier entre 0 V et 4,8 V.
5) Si ‘‘MAUVAIS’’, effectuer une ‘‘Procédure de diagnostic’’, voir page EC-3520.

Simpo PDF Merge and Split Unregistered Version - http://www.simpopdf.com

Schéma de câblage

MODELES AVEC COMPTE-TOURS

EC-VSS-01

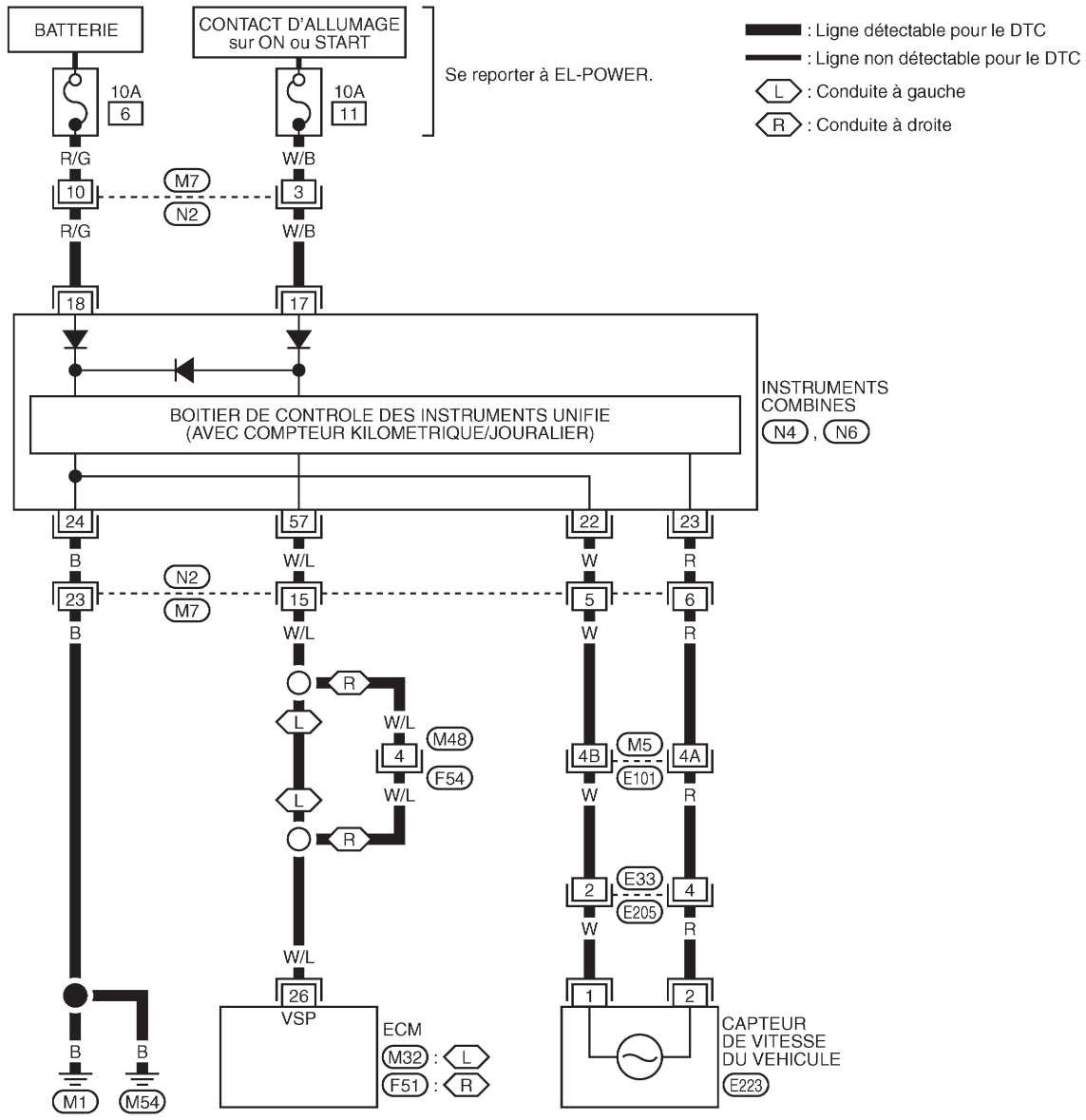

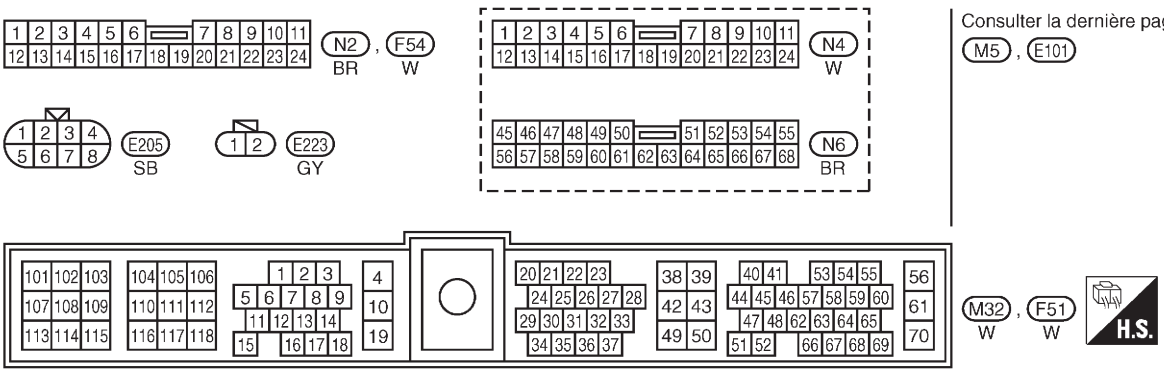

GEC130A

Simpo PDF Merge and Split Unregistered Version - http://www.simpopdf.com

Schéma de câblage (Suite)

MODELES SANS COMPTE-TOURS

EC-VSS-02

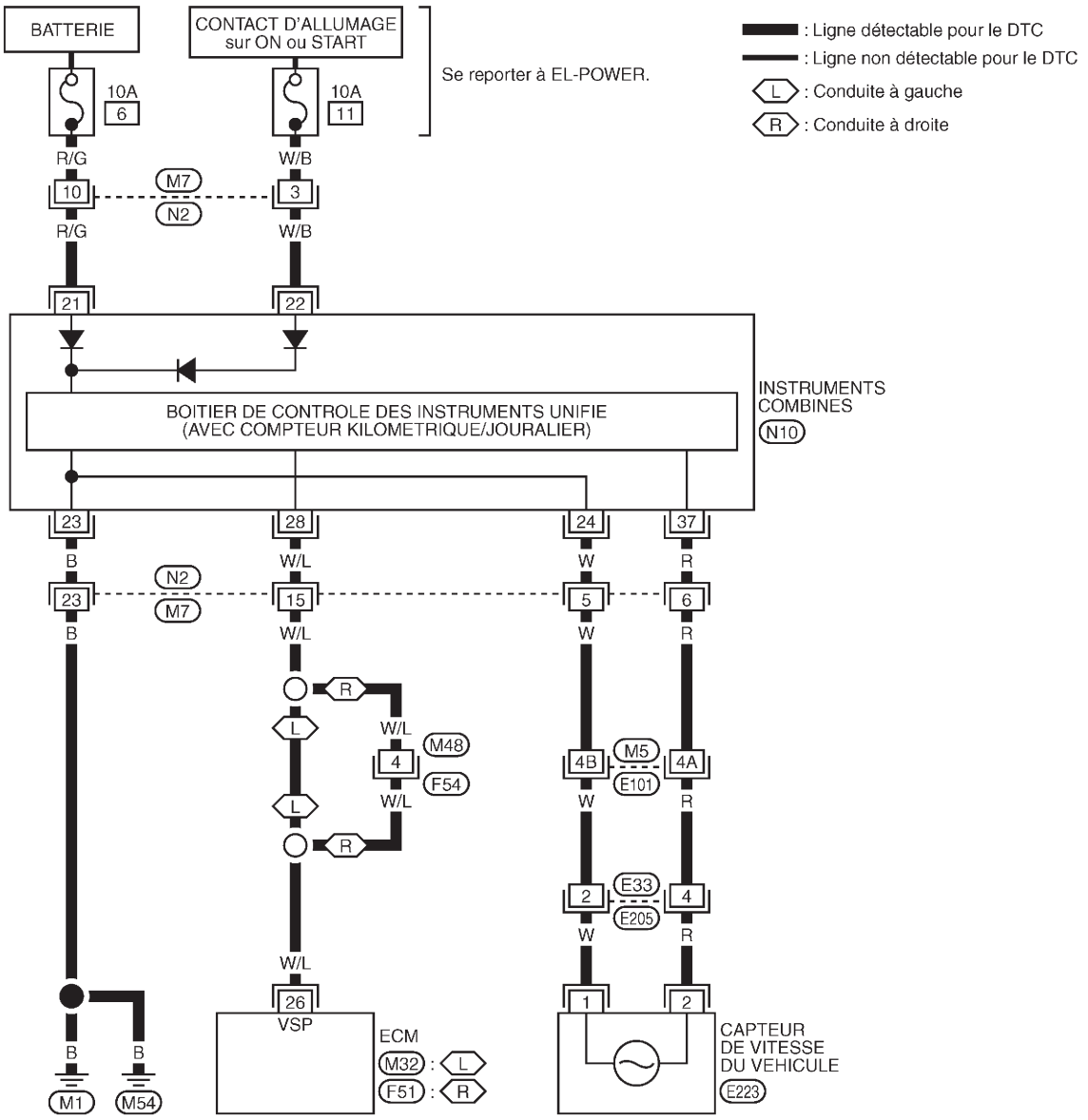

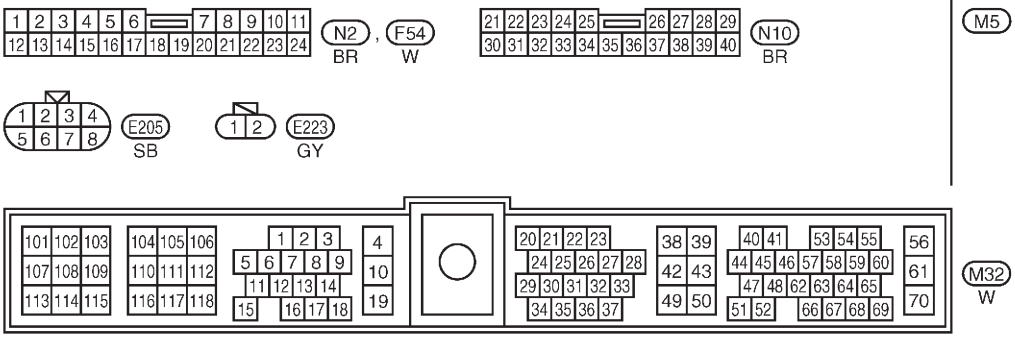

Consulter la dernière page dépliante.
M5 , E101

GEC131A

Simpo PDF Merge and Split Unregistered Version - http://www.simpopdf.com

Procédure de diagnostic

1	VERIFIER SI LE CIRCUIT DU SIGNAL D'ENTREE DU CAPTEUR DE VITESSE DU VEHICULE EST OUVERT OU EN COURT-CIRCUIT
1. Mettre le contact d'allumage sur ''OFF''. 2. Débrancher le connecteur de faisceau de l'ECM et le connecteur de faisceau du combiné d'instruments. 3. Vérifier la continuité du faisceau entre la borne 26 de l'ECM 26 et la borne du combiné d'instruments 57 (modèles avec compte-tours) ou 28 (modèles sans compte-tours). Se référer au schéma de câblage. **Il doit y avoir continuité.** 4. Vérifier également que le faisceau n'est pas ouvert ou en court-circuit à l'alimentation.	
Bon ou mauvais	
Bon ▶	PASSER A L'ETAPE 3.
Mauvais ▶	PASSER A L'ETAPE 2.

2	DETECTER LA PIECE DEFECTUEUSE
Vérifier les points suivants. ● Connecteurs de faisceaux N2, M7 ● Connecteurs de faisceaux M48, F54 (conduite à droite) ● Faisceau ouvert ou en court-circuit entre l'ECM et le combiné d'instruments	
▶	Réparer les faisceaux ou connecteurs en circuit ouvert ou en court-circuit à la masse ou à l'alimentation.

3	VERIFIER LE FONCTIONNEMENT DU COMPTEUR DE VITESSE
S'assurer que le compteur de vitesse fonctionne correctement.	
Bon ou mauvais	
Bon ▶	PASSER A L'ETAPE 5.
Mauvais ▶	PASSER A L'ETAPE 4.

4	VERIFIER SI LE CIRCUIT DU COMPTEUR DE VITESSE EST OUVERT OU EN COURT-CIRCUIT
Vérifier les points suivants. ● Connecteurs de faisceaux N2, M7 ● Connecteurs de faisceaux M5, E101 ● Connecteurs de faisceaux E33, E205 ● Faisceau ouvert ou en court-circuit entre le combiné d'instruments et le capteur de vitesse du véhicule	
Bon ou mauvais	
Bon ▶	Vérifier le capteur de vitesse du véhicule et le combiné d'instruments. Se référer à la section EL.
Mauvais ▶	Réparer les faisceaux ou connecteurs en circuit ouvert ou en court-circuit à la masse ou à l'alimentation.

5	VERIFIER SI L'INCIDENT EST INTERMITTENT
Se référer à ''DIAGNOSTIC DES DEFAUTS EN CAS D'INCIDENT INTERMITTENT'', page EC-3502.	
▶	**FIN DE L'INSPECTION**

Simpo PDF Merge and Split Unregistered Version - http://www.simpopdf.com

Description

DESCRIPTION DU SYSTEME

Capteur	Signal d'entrée à l'ECM	Fonction d'ECM	Actionneur
Capteur de vitesse du véhicule	Vitesse du véhicule	Commande du ventilateur de radiateur	Relais du ventilateur de radiateur
Capteur de température du liquide de refroidissement moteur	Température du liquide de refroidissement moteur		
Interrupteur de climatiseur	Signal ''ON'' du climatiseur		

L'ECM contrôle le ventilateur de refroidissement en fonction de la vitesse du véhicule, de la température du liquide de refroidissement du moteur. Le système de commande est à deux positions [MAR/ARR].

FONCTIONNEMENT

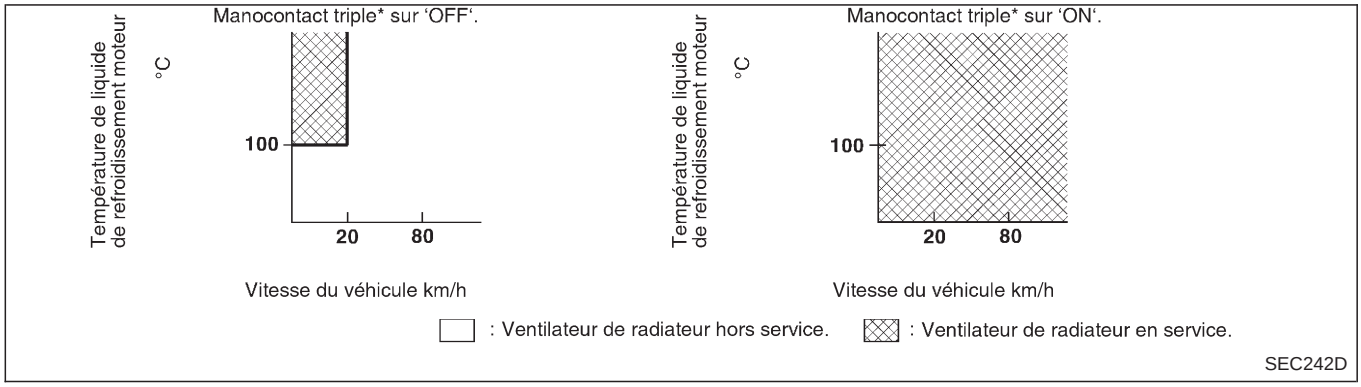

* : Se reporter à la section HA.

Valeur de référence de CONSULT-II en mode de contrôle de données

Les données de spécification sont des valeurs de référence.

ELEMENT DE CONTROLE	CONDITION		SPECIFICATION
RELAIS CLIMAT	● moteur : faire chauffer le moteur, puis le faire tourner au ralenti.	Interrupteur de climatiseur : OFF	OFF
		Interrupteur de climatiseur : ON (Le compresseur fonctionne).	ON
VENTIL RADIATEUR	● Lorsque le ventilateur de refroidissement est arrêté.		ARR
	● Lorsque le ventilateur fonctionne.		MAR

Simpo PDF Merge and Split Unregistered Version - http://www.simpopdf.com

Bornes de l'ECM et valeurs de référence

Données de référence relevées entre chaque borne et la masse.

PRECAUTION :

Lors de la mesure de la tension d'entrée/sortie, ne pas utiliser les bornes de masse de l'ECM sous peine d'endommager le transistor de l'ECM. Utiliser une autre masse que celle des bornes de l'ECM.

BORNE N°	COULEUR DE CABLE	ELEMENT	CONDITION	DONNEES (tension continue)
14	G/B	Relais du ventilateur de radiateur	Moteur en marche. └ Le ventilateur de radiateur est à l'arrêt	TENSION BATTERIE (11 V - 14 V)
			Moteur en marche. └ Le ventilateur de radiateur est en marche	Environ 0,1 V

Logique de diagnostic de bord

Ce diagnostic contrôle de façon continue la température du liquide de refroidissement moteur.
Si le ventilateur de refroidissement ou tout autre composant du système de refroidissement est défectueux, la température moteur augmentera.
Lorsque la température du liquide de refroidissement moteur atteint un degré de température anormalement élevé, un défaut est indiqué.

Le défaut est détecté quand ...	Eléments de contrôles (causes possibles)
● Le ventilateur de radiateur ne fonctionne pas correctement (surchauffe). ● Le système de ventilateur de radiateur ne fonctionne pas correctement (surchauffe). ● Le liquide de refroidissement moteur a été ajouté dans le système sans que la procédure de remplissage soit respectée.	● Faisceau ou connecteurs (Le circuit du ventilateur de refroidissement est ouvert ou en court-circuit). ● Ventilateur de radiateur ● Flexible de radiateur ● Radiateur ● Bouchon du radiateur ● Pompe à eau ● Thermostat ● Courroie de ventilateur ● Capteur de température du liquide de refroidissement moteur Pour plus d'informations, se reporter à ''12 CAUSES PRINCIPALES DE SURCHAUFFE'', page EC-3532.

PRECAUTION :

Lorsqu'un défaut est indiqué, veiller à remplacer le liquide de refroidissement en suivant la procédure indiquée à la section MA (''Remplacement du liquide de refroidissement moteur'', ''ENTRETIEN DU MOTEUR''). Remplacer également l'huile moteur.

1) **Faire le plein du radiateur jusqu'au niveau spécifié en versant 2 litres de liquide de refroidissement par minute. Veiller à utiliser un liquide de refroidissement contenant une richesse de mélange appropriée. Se référer à la section MA (''Richesse de mélange de liquide de refroidissement antigel'', ''LIQUIDES ET LUBRIFIANTS RECOMMANDES'').**
2) **Après avoir fait le plein de liquide de refroidissement, faire tourner le moteur pour s'assurer que l'on entend aucun bruit d'écoulement d'eau.**

Simpo PDF Merge and Split Unregistered Version - http://www.simpopdf.com

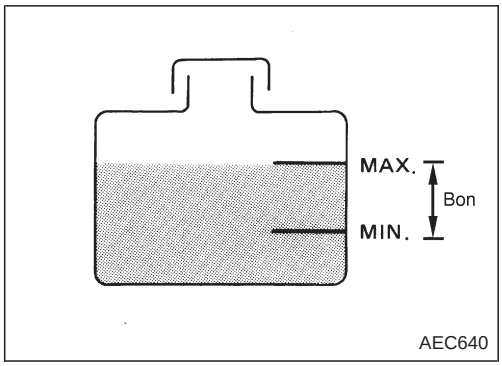

AEC640

TEST ACTIF	
VENTIL RADIATEUR	ARR
CONTROLE	
CAP TEMP MOT	XXX °C

SEF111X

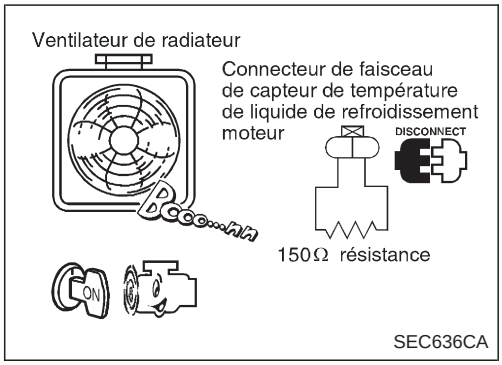

SEC636CA

Vérification du fonctionnement général

Utiliser cette procédure pour vérifier le fonctionnement général du ventilateur de radiateur. Pendant ce contrôle, il se peut que le DTC ne soit pas confirmé.

ATTENTION :

Ne jamais déposer le bouchon de radiateur lorsque le moteur est chaud. Le liquide haute pression s'échappant du radiateur peut occasionner de sérieuses brûlures.

Entourer le bouchon d'un chiffon épais. Retirer le bouchon avec précaution en le tournant d'un quart de tour pour permettre à la pression de s'échapper. Puis tourner le bouchon à fond.

AVEC CONSULT-II

1) Contrôler le niveau de liquide de refroidissement dans le réservoir et dans le radiateur.
   Laisser le moteur refroidir avant de vérifier le niveau de liquide de refroidissement.
   Si le niveau du liquide de réfrigérant dans le réservoir et/ou dans le radiateur est au-dessous de la limite correcte, sauter les étapes suivantes et passer directement à la ''Procédure de diagnostic'', page EC-3525.
2) Confirmer si le client a fait le plein de liquide de refroidissement ou non. Si le client a fait le plein de liquide de refroidissement, sauter les étapes suivantes et passer à la ''Procédure de diagnostic'', page EC-3525.
3) Mettre le contact d'allumage sur ''ON''.
4) Effectuer le test ''VENTIL RADIATEUR'' (ventilateur radiateur) dans le mode ''TEST ACTIF'' de CONSULT-II et s'assurer que les ventilateurs fonctionnent en touchant ''ON'' (MARCHE) ou ''OFF'' (ARRET).
   Si les résultats ne sont pas conformes, effectuer une ''Procédure de diagnostic'', voir page EC-3525.

SANS CONSULT-II

1) Contrôler le niveau de liquide de refroidissement dans le réservoir et dans le radiateur.
   Laisser le moteur refroidir avant de vérifier le niveau de liquide de refroidissement.
   Si le niveau du liquide de réfrigérant dans le réservoir et/ou dans le radiateur est au-dessous de la limite correcte, sauter les étapes suivantes et passer directement à la ''Procédure de diagnostic'', page EC-3525.
2) Confirmer si le client a fait le plein de liquide de refroidissement ou non. Si le client a fait le plein de liquide de refroidissement, sauter les étapes suivantes et passer à la ''Procédure de diagnostic'', page EC-3525.
3) Débrancher le connecteur de faisceau du capteur de température du liquide de refroidissement moteur.
4) Brancher la résistance de 150Ω sur le connecteur de faisceau du capteur de température du liquide de refroidissement moteur.
5) Démarrer le moteur et s'assurer que le ventilateur de radiateur fonctionne.
   Faire attention de ne pas laisser le moteur surchauffer.
6) Si les résultats ne sont pas conformes, effectuer une ''Procédure de diagnostic'', voir page EC-3525.

Simpo PDF Merge and Split Unregistered Version - http://www.simpopdf.com

Schéma de câblage

EC-COOL/F-01

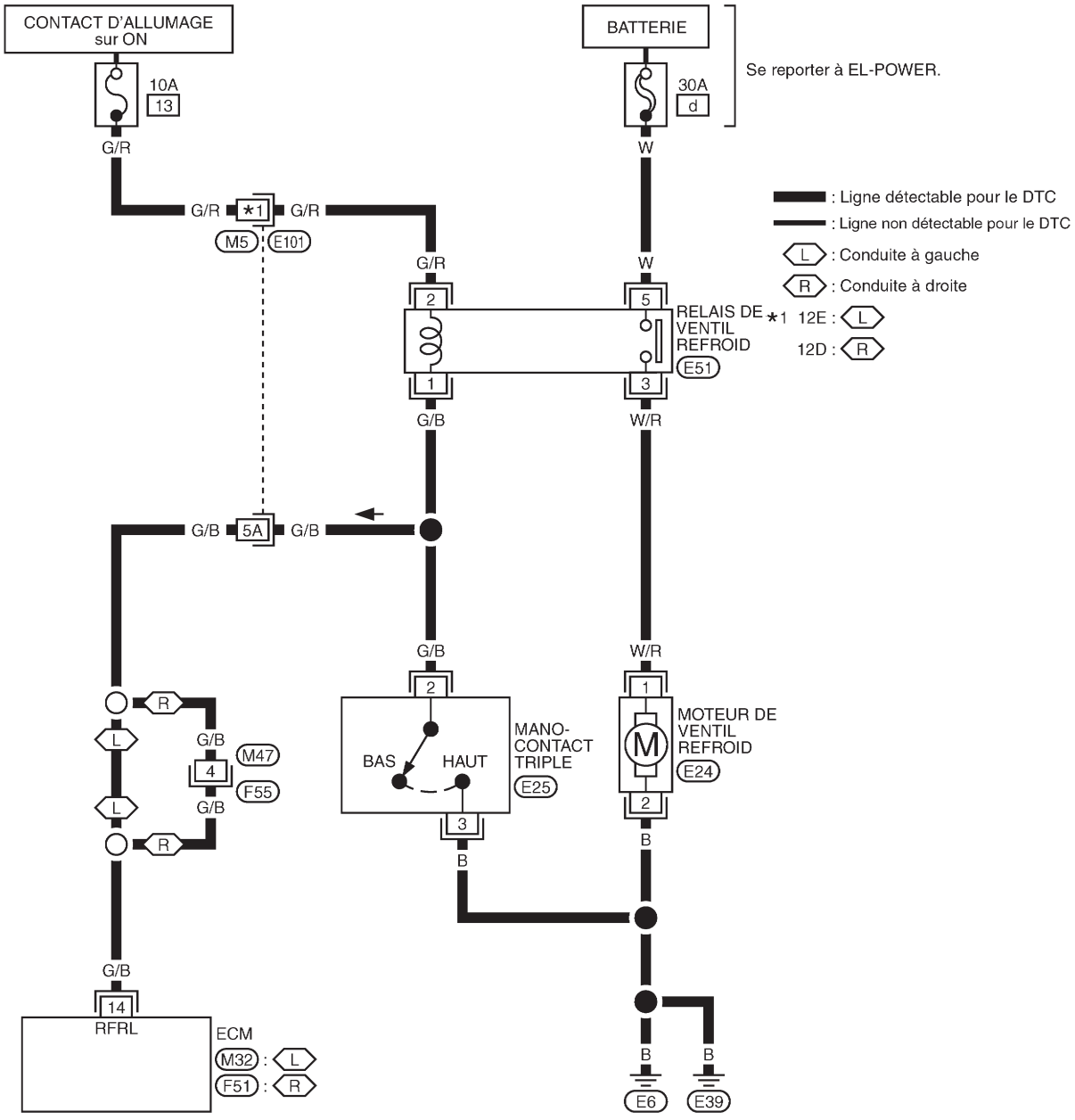

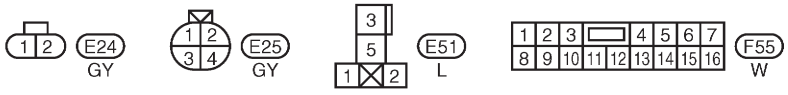

Consulter la dernière page dépliante.
M5 , E101

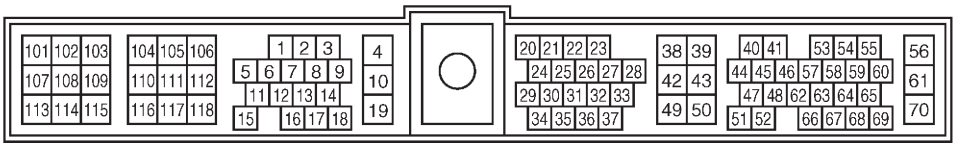

M32 , F51
W W

H.S.

GEC133A

Simpo PDF Merge and Split Unregistered Version - http://www.simpopdf.com

Procédure de diagnostic

1	DEBUT DE L'INSPECTION	
CONSULT-II est-il disponible ? **Oui ou Non**		
Oui	▶	PASSER A L'ETAPE 2.
Non	▶	PASSER A L'ETAPE 3.

2	VERIFIER LE FONCTIONNEMENT DU VENTILATEUR DE REFROIDISSEMENT	

Avec CONSULT-II

1. Mettre le contact d'allumage sur ''ON''.
2. Effectuer le test ''VENTIL RADIATEUR'' (ventilateur radiateur) dans le mode ''TEST ACTIF'' de CONSULT-II.

TEST ACTIF	
VENTIL RADIATEUR	ARR
CONTROLE	
CAP TEMP MOT	XXX °C

SEF646X

3. S'assurer que le ventilateur de radiateur fonctionne.

Bon ou mauvais

Bon	▶	PASSER A L'ETAPE 13.
Mauvais	▶	PASSER A L'ETAPE 4.

Simpo PDF Merge and Split Unregistered Version - http://www.simpopdf.com

Procédure de diagnostic (Suite)

3	VERIFIER LE FONCTIONNEMENT DU VENTILATEUR DE REFROIDISSEMENT

Sans CONSULT-II

1. Mettre le contact d'allumage sur "OFF".
2. Débrancher le connecteur de faisceau du capteur de température du liquide de refroidissement moteur.
3. Brancher la résistance de 150Ω sur le connecteur de faisceau du capteur de température du liquide de refroidissement moteur.
4. Redémarrer le moteur et s'assurer que le ventilateur de radiateur fonctionne.

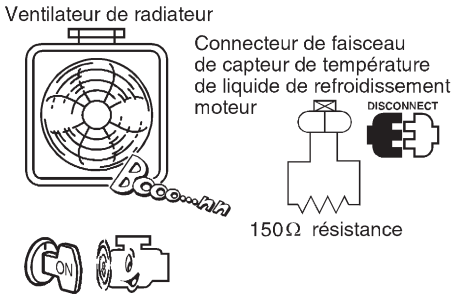

SEC636CA

Bon ou mauvais

Bon	►	PASSER A L'ETAPE 13.
Mauvais	►	PASSER A L'ETAPE 4.

Simpo PDF Merge and Split Unregistered Version - http://www.simpopdf.com

Procédure de diagnostic (Suite)

4	VERIFIER LE CIRCUIT D'ALIMENTATION DU VENTILATEUR DE REFROIDISSEMENT

1. Mettre le contact d'allumage sur ''OFF''.
2. Débrancher le relais de ventilateur de radiateur 1.

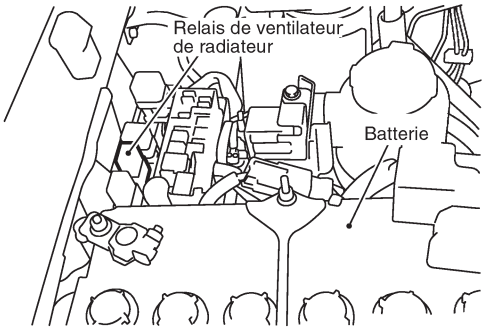

SEC954C

3. Mettre le contact d'allumage sur ''ON''.
4. Vérifier la tension entre les bornes 2 et 5 du relais de ventilateur de radiateur et la masse avec CONSULT-II ou avec un contrôleur.

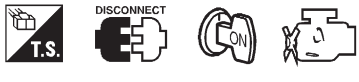

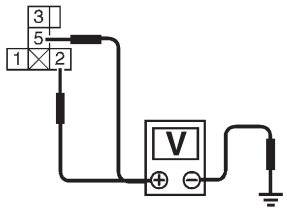

Tension: Tension de la batterie

SEC161D

Bon ou mauvais

Bon	▶	PASSER A L'ETAPE 6.
Mauvais	▶	PASSER A L'ETAPE 5.

5	DETECTER LA PIECE DEFECTUEUSE

Vérifier les points suivants.
- Connecteurs de faisceaux M5, E101
- Fusible de 10 A
- Raccord à fusible de 30 A
- Faisceau ouvert ou en court-circuit entre le relais de ventilateur de refroidissement et le fusible
- Faisceau ouvert ou en court-circuit entre le relais de ventilateur de radiateur et la batterie

	▶	Réparer les faisceaux ou connecteurs en circuit ouvert ou en court-circuit à la masse ou à l'alimentation.

Simpo PDF Merge and Split Unregistered Version - http://www.simpopdf.com

Procédure de diagnostic (Suite)

6	VERIFIER SI LE CIRCUIT DE MASSE DU VENTILATEUR DE REFROIDISSEMENT EST OUVERT OU EN COURT-CIRCUIT

1. Mettre le contact d'allumage sur ''OFF''.
2. Débrancher le connecteur du faisceau du moteur de ventilateur de refroidissement.

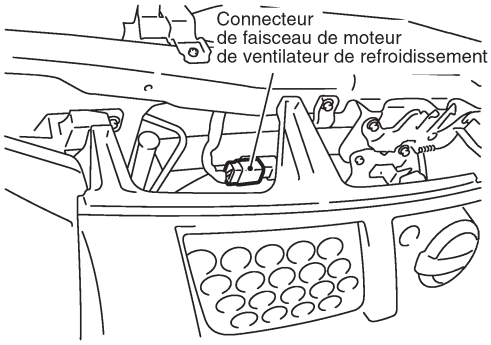

SEC232D

3. Vérifier la continuité de faisceau entre la borne 3 du relais de ventilateur et les bornes 1 du moteur de ventilateur, les bornes 2 du moteur de ventilateur et la masse de la carrosserie. Se référer au schéma de câblage.
   Il doit y avoir continuité.
4. Vérifier également que le faisceau n'est pas ouvert ou en court-circuit à l'alimentation.

Bon ou mauvais

Bon	►	PASSER A L'ETAPE 7.
Mauvais	►	Réparer les faisceaux ou connecteurs en circuit ouvert ou en court-circuit à la masse ou à l'alimentation.

7	VERIFIER SI LE CIRCUIT DU SIGNAL DE SORTIE DU VENTILATEUR DE REFROIDISSEMENT EST OUVERT OU EN COURT-CIRCUIT

1. Débrancher le connecteur de faisceau de l'ECM.
2. Débrancher le connecteur de faisceau du manocontact triple.
3. Vérifier la continuité du faisceau entre la borne 14 de l'ECM et la borne 1 du relais de ventilateur de refroidissement, la borne 1 du relais de ventilateur de refroidissement et la borne 2 du manocontact triple, la borne 3 du manocontact triple et la masse. Se référer au schéma de câblage.
   Il doit y avoir continuité.
4. Vérifier également que le faisceau n'est pas ouvert ou en court-circuit à l'alimentation.

Bon ou mauvais

Bon	►	PASSER A L'ETAPE 9.
Mauvais	►	PASSER A L'ETAPE 8.

8	DETECTER LA PIECE DEFECTUEUSE

Vérifier les points suivants.
- Connecteurs de faisceaux M5, E101
- Connecteurs de faisceaux M47, F55 (conduite à droite)
- Faisceau ouvert ou en court-circuit entre le relais du ventilateur de refroidissement et l'ECM
- Faisceau ouvert ou en court-circuit entre le relais de ventilateur de refroidissement et le manocontact triple
- Faisceau ouvert ou en court-circuit entre le manocontact triple et la masse.

	►	Réparer les faisceaux ou connecteurs en circuit ouvert ou en court-circuit à la masse ou à l'alimentation.

Simpo PDF Merge and Split Unregistered Version - http://www.simpopdf.com

Procédure de diagnostic (Suite)

9	VERIFIER LE RELAIS DE VENTILATEUR DE REFROIDISSEMENT

Vérifier la continuité entre les bornes 3 et 5 du relais de ventilateur de refroidissement, dans les conditions suivantes.

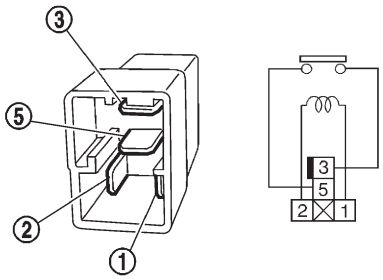

Conditions	Continuité
Alimentation en courant continu de 12 V entre les bornes 1 et 2	Oui
Pas d'alimentation en courant	Non

SEC340C

Bon ou mauvais

Bon	▶	PASSER A L'ETAPE 10.
Mauvais	▶	Remplacer le relais de ventilateur de radiateur.

10	CONTROLER LE MOTEUR DE VENTILATEUR DE REFROIDISSEMENT

Appliquer une tension de batterie entre les bornes suivantes et vérifier le fonctionnement.

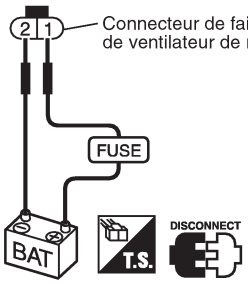

Fournir la tension de batterie: ventilateur de refroidissement en service

SEC162D

Bon ou mauvais

Bon	▶	PASSER A L'ETAPE 11.
Mauvais	▶	Remplacer le moteur du ventilateur de radiateur.

11	VERIFICATION DU MANOCONTACT TRIPLE

Se reporter à la section HA.

Bon ou mauvais

Bon	▶	PASSER A L'ETAPE 12.
Mauvais	▶	Remplacer le manocontact triple.

12	VERIFIER SI L'INCIDENT EST INTERMITTENT
Effectuer un ''DIAGNOSTIC DES DEFAUTS POUR INCIDENT INTERMITTENT'', voir page EC-3502.	
	▶ **FIN DE L'INSPECTION**

Simpo PDF Merge and Split Unregistered Version - http://www.simpopdf.com

Procédure de diagnostic (Suite)

13	VERIFIER SI LE SYSTEME DE REFROIDISSEMENT A DES FUITES

Augmenter la pression du système de refroidissement à l'aide d'un testeur, et vérifier si la pression chute.
Pression d'essai : 157 kPa (1,57 bar, 1,6 kg/cm^2)
PRECAUTION :
Une pression supérieure à celle spécifiée pourrait endommager le radiateur.

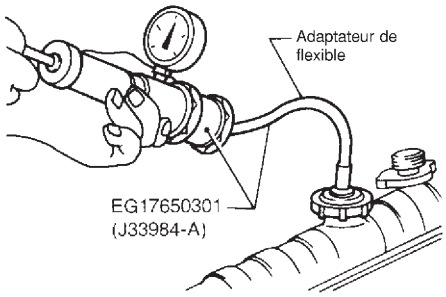

SLC754A

La pression ne doit pas chuter.

Bon ou mauvais

Bon	▶	PASSER A L'ETAPE 15.
Mauvais	▶	PASSER A L'ETAPE 14.

14	DETECTER LA PIECE DEFECTUEUSE

Vérifier si les éléments suivants ne fuient pas.
- Flexible
- Radiateur
- Pompe à eau (se référer à la section LC, ''Pompe à eau''.)

	▶	Réparer ou remplacer.

15	VERIFIER LE BOUCHON DE RADIATEUR

Appliquer une pression sur le bouchon de radiateur avec un contrôleur et en vérifier la pression de décharge.

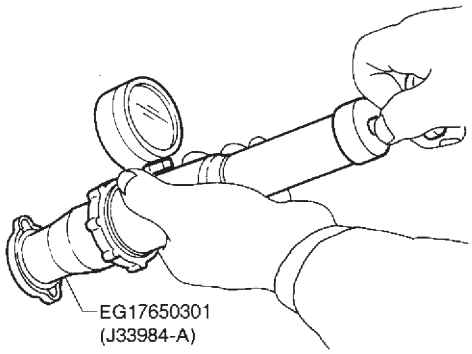

SLC755A

Pression d'ouverture du bouchon de radiateur :
79 - 98 kPa (0,78 - 0,98 bar, 0,8 - 1,0 kg/cm^2)

Bon ou mauvais

Bon	▶	PASSER A L'ETAPE 16.
Mauvais	▶	Remplacer le bouchon de radiateur.

Simpo PDF Merge and Split Unregistered Version - http://www.simpopdf.com

Procédure de diagnostic (Suite)

16	VERIFIER LE THERMOSTAT

1. Déposer le thermostat.
2. Vérifier l'assise de la soupape à température ambiante normale.
   Il doit avoir une bonne assise.
3. Vérifier la température d'ouverture de soupape et la levée de soupape.

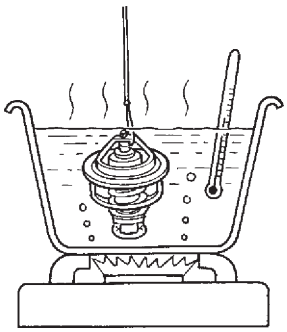

SLC343

Température d'ouverture de vanne
82°C [standard]
Levée de soupape :
Plus de 10 mm/ 95°C

4. Vérifier si la soupape est fermée à 5°C au-dessous de la température d'ouverture de la vanne. Pour plus de détails, consulter la section LC, ''Thermostat''.

Bon ou mauvais

Bon	▶	PASSER A L'ETAPE 17.
Mauvais	▶	Remplacer le thermostat

17	VERIFIER LE CAPTEUR DE TEMPERATURE DE LIQUIDE DE REFROIDISSEMENT

1. Déposer le capteur de température du liquide de refroidissement moteur.
2. Vérifier la résistance entre les bornes 1 et 2 du capteur de température du liquide de refroidissement moteur, comme le montre l'illustration.

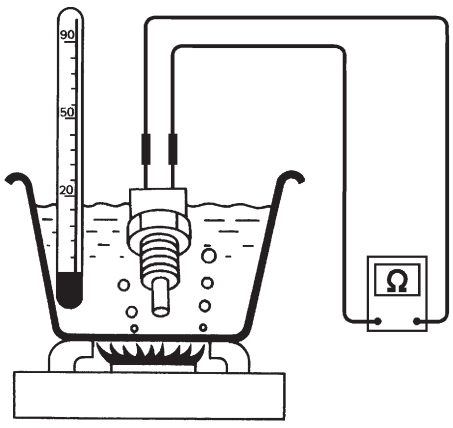

Données de référence

Température °C	Résistance kΩ
20	2,1 - 2,9
50	0,68 - 1,00
90	0,236 - 0,260

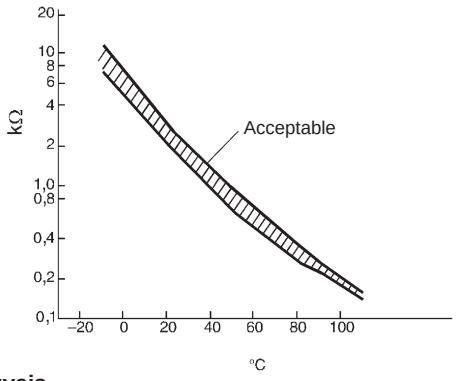

SEF304X-R

Bon ou mauvais

Bon	▶	PASSER A L'ETAPE 18.
Mauvais	▶	Remplacer le capteur de température du liquide de refroidissement moteur.

Simpo PDF Merge and Split Unregistered Version - http://www.simpopdf.com

Procédure de diagnostic (Suite)

18	**VERIFIER LES 12 CAUSES PRINCIPALES**
Si la cause ne peut pas être identifiée, aller à ''12 CAUSES PRINCIPALES DE SURCHAUFFE'', page EC-3532.	
►	**FIN DE L'INSPECTION**

12 causes principales de surchauffe

Moteur	ETAPE	Elément d'inspection	Equipement	Standard	Page de référence
ARR	1	● Radiateur encrassé ● Condenseur bouché ● Grille de radiateur encrassée ● Pare-chocs bloqué	● Visuel	Pas de blocage	—
	2	● Mélange de liquide de refroidissement	● Testeur de liquide de refroidissement	Mélange eau/antigel 30 % - 50%	Voir ''LIQUIDES ET LUBRIFIANTS RECOMMANDES'' à la section MA.
	3	● Niveau de liquide de refroidissement	● Visuel	Réfrigérant au niveau ''MAX'' dans le réservoir et le goulot de remplissage du radiateur	Voir ''Remplacement du liquide de refroidissement moteur'' dans ''ENTRETIEN DU MOTEUR'' de la section MA.
	4	● Bouchon de radiateur	● Testeur de pression	78 - 98 kPa (0,78 - 0,98 bar, 0,8 - 1,0 kg/cm^2) 59 - 98 kPa (0,59 - 0,98 bar, 0,6 - 1,0 kg/cm^2, Limite)	Voir ''Contrôle du système'' dans ''SYSTEME DE REFROIDISSEMENT DU MOTEUR'' à la section LC.
MAR*2	5	● Fuites de liquide de refroidissement	● Visuel	Absence de fuites	Voir ''Contrôle du système'' dans ''SYSTEME DE REFROIDISSEMENT DU MOTEUR'' à la section LC.
MAR*2	6	Thermostat●	● Toucher les flexibles supérieur et inférieur du radiateur.	Les deux flexibles doivent être brûlants	Voir ''Thermostat'' et ''Radiateur'' dans ''SYSTEME DE REFROIDISSEMENT DU MOTEUR'' de la section LC.
MAR*1	7	● Ventilateur de radiateur	● Visuel	Fonctionnement	Voir ''DTC 0208 SURCHAUFFE'', page EC-3522.
ARR	8	● Fuite du gaz de combustion	● Contrôleur de couleur testeur chimique analyseur de gaz 4	Négative	—

Simpo PDF Merge and Split Unregistered Version - http://www.simpopdf.com

12 causes principales de surchauffe (Suite)

MAR*3	9	● Jauge de température de liquide de refroidissement	● Visuel	La jauge n'est pas aux 3/4 lors de la conduite	—
		● Trop-plein de liquide de refroidissement au réservoir	● Visuel	Pas de trop-plein lors de la conduite et du ralenti	Voir ''Remplacement du liquide de refroidissement moteur'' dans ''ENTRETIEN DU MOTEUR'' de la section MA.
ARR*4	10	● Le liquide de refroidissement repart du réservoir vers le radiateur	● Visuel	Le niveau du réservoir doit être le même qu'au départ	Voir ''ENTRETIEN DU MOTEUR'' à la section MA.
ARR	11	● Culasse	● Règle, jauge d'épaisseur	0,1 mm de défaut de planéité max. (gauchissement)	Voir ''Inspection'', ''CULASSE'' à la section EM.
	12	● Bloc-cylindres et pistons	● Visuel	Pas de frottement sur les parois du cylindre ou sur le piston	Voir ''Inspection'', ''BLOC-CYLINDRES'' à la section EM.

*1 : Le moteur tourne au ralenti.
*2 : Le moteur tourne à 3 000 tr/mn pendant 10 minutes.
*3 : Conduire à 90 km/h pendant 30 minutes puis laisser tourner au ralenti pendant 10 minutes.
*4 : Après 60 minutes de refroidissement.
Pour plus d'information, se référer à ''Analyse des causes de surchauffe'' à la section LC.

Simpo PDF Merge and Split Unregistered Version - http://www.simpopdf.com

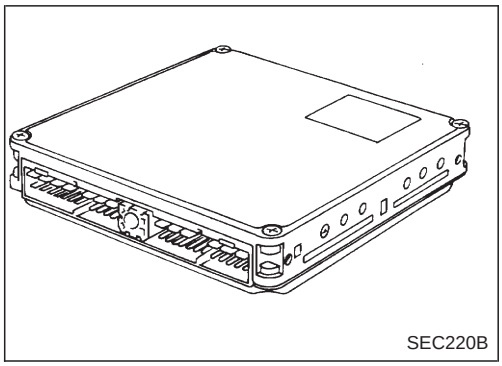
SEC220B

Description

Le module de commande du moteur est constitué d'un micro-ordinateur et de connecteurs pour l'entrée et la sortie des signaux et le raccordement de l'alimentation. Le boîtier contrôle le fonctionnement du moteur.

Logique de diagnostic de bord

Le défaut est détecté quand ...	Eléments de contrôles (causes possibles)
● La fonction de calcul de l'ECM est défectueuse.	● ECM (Boîtier de contrôle de l'ECCS-D)

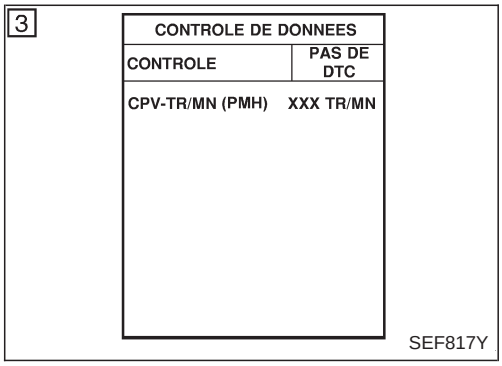
3

CONTROLE DE DONNEES	
CONTROLE	PAS DE DTC
CPV-TR/MN (PMH)	XXX TR/MN

SEF817Y

Procédure de confirmation de code de défaut (DTC)

AVEC CONSULT-II

1) Mettre le contact d'allumage sur ''ON''.
2) Régler CONSULT-II en mode ''CONTROLE DE DONNEES''.
3) Démarrer le moteur et attendre au moins 2 secondes.
4) Si le DTC est détecté, effectuer une ''Procédure de diagnostic'', voir page EC-3535.

SANS CONSULT-II

1) Mettre le contact d'allumage sur ''ON'', puis attendre au moins 2 secondes.
2) Démarrer le moteur et attendre au moins 2 secondes.
3) Mettre le contact d'allumage sur ''OFF'', attendre au moins 5 secondes, puis remettre le contact sur ''ON''.
4) Effectuer le ''Test de diagnostic mode II (résultats d'autodiagnostic)'' avec l'ECM.
5) Si le DTC est détecté, effectuer une ''Procédure de diagnostic'', voir page EC-3535.

Simpo PDF Merge and Split Unregistered Version - http://www.simpopdf.com

Procédure de diagnostic

1	DEBUT DE L'INSPECTION
Avec CONSULT-II 1. Mettre le contact d'allumage sur ''ON''. 2. Sélectionner le mode ''RESULT AUTO-DIAG'' sur CONSULT-II. 3. Appuyer ''EFFAC''. 4. Effectuer de nouveau une ''Procédure de confirmation de DTC'', voir page EC-3535. 5. Le défaut est-il toujours affiché ?	
Sans CONSULT-II 1. Mettre le contact d'allumage sur ''ON''. 2. Effacer les données de la mémoire du mode II de diagnostic (résultats de l'autodiagnostic). 3. Effectuer de nouveau une ''Procédure de confirmation de DTC'', voir page EC-3535. 4. Effectuer le ''Test de diagnostic mode II (résultats d'autodiagnostic)''. 5. Le DTC 0301 ou 0901 est-il toujours affiché ?	
Oui ou Non	
Oui ►	PASSER A L'ETAPE 2.
Non ►	**FIN DE L'INSPECTION**

2	REMPLACER l'ECM.
1. Remplacer l'ECM. 2. Initialiser le système NATS et enregistrer tous les codes de clés de contact NATS. Se reporter à la page EC-3458. (Modèles avec NATS) 3. Effectuer ''l'Apprentissage de position de ralenti du capteur de position d'accélérateur'' de la ''PROCEDURE D'ENTRETIEN DE BASE''. Consulter la page EC-3456.	
►	**FIN DE L'INSPECTION**

Simpo PDF Merge and Split Unregistered Version - http://www.simpopdf.com

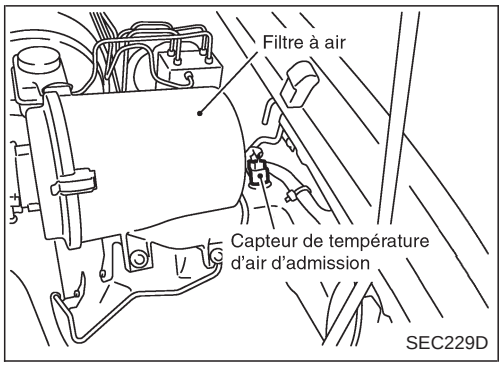

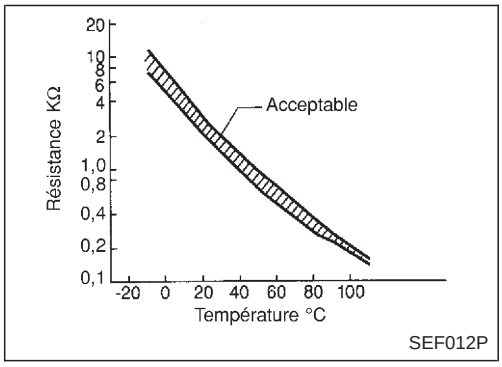

Description des composants

Le capteur de température d'air d'admission est fixé au logement de canalisation d'air. Le capteur détecte la température d'air d'admission et transmet un signal à l'ECM.
L'élément utilisé pour la détection de la température est une thermistance, laquelle est sensible aux variations de température. La résistance électrique de cette thermistance chute en réponse à l'élévation de la température.

<Données de référence>

Température de l'air d'admission °C	Voltage* V	Résistance kΩ
20	3,5	2,1 - 2,9
80	1,24	0,27 - 0,38

* : Ces données sont des valeurs de référence et sont mesurées entre la borne 36 de l'ECM (capteur de température de l'air d'admission) et la masse.

PRECAUTION :
Lors de la mesure de la tension d'entrée/sortie, ne pas utiliser les bornes de masse de l'ECM sous peine d'endommager le transistor de l'ECM. Utiliser une autre masse que celle des bornes de l'ECM, comme la prise de terre.

Logique de diagnostic de bord

Le défaut est détecté quand ...	Eléments de contrôles (causes possibles)
Une tension anormalement basse ou élevée provenant du capteur est adressée à l'ECM.	● Faisceau ou connecteurs (le circuit de capteur est ouvert ou en court-circuit). ● Capteur de température d'air d'admission

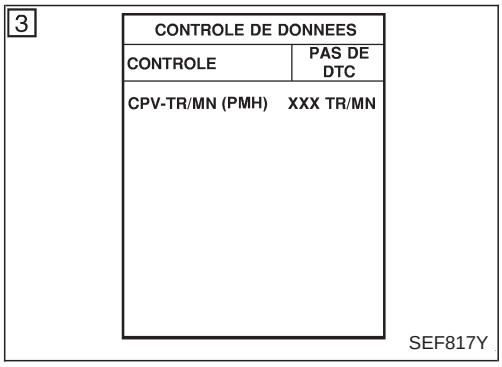

Procédure de confirmation de code de défaut (DTC)

AVEC CONSULT-II

1) Mettre le contact d'allumage sur ''ON''.
2) Régler CONSULT-II en mode ''CONTROLE DE DONNEES''.
3) Attendre au moins 5 secondes.
4) Si le DTC est détecté, effectuer une ''Procédure de diagnostic'', voir page EC-3539.

Simpo PDF Merge and Split Unregistered Version - http://www.simpopdf.com

Procédure de confirmation de code de défaut (DTC) (Suite)

⊗ **SANS CONSULT-II**

1. Mettre le contact d'allumage sur 'ON', puis attendre 5 secondes au moins.
2. Mettre le contact d'allumage sur 'OFF', attendre au moins 5 secondes, puis remettre le contact sur 'ON'.
3. Effectuer le ''Test de diagnostic mode II (résultats d'autodiagnostic)'' avec l'ECM.
4. Si le DTC est détecté, voir page EC-3539.

Simpo PDF Merge and Split Unregistered Version - http://www.simpopdf.com

Schéma de câblage

EC-IATS-01

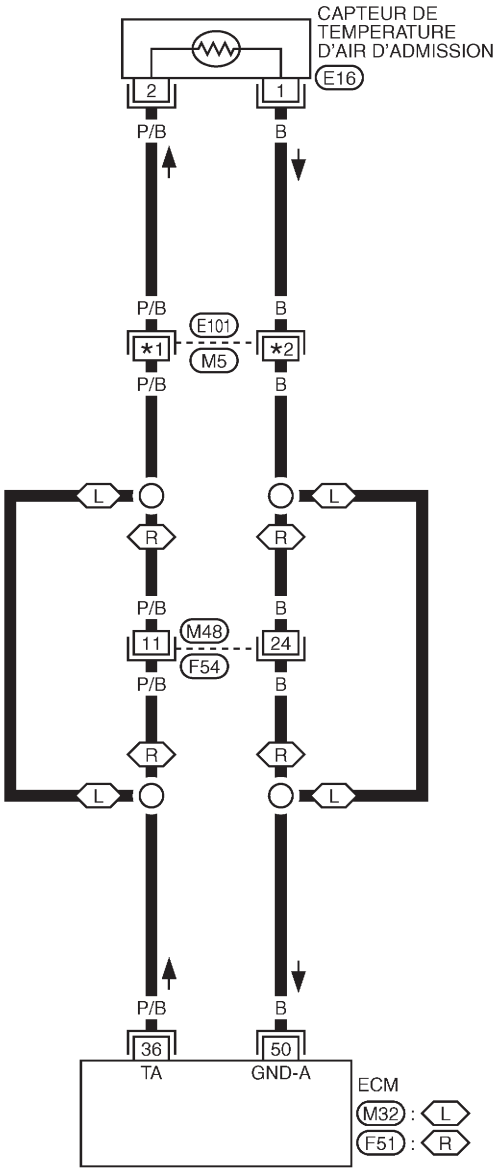

: Ligne détectable pour le DTC
: Ligne non détectable pour le DTC
L : Conduite à gauche
R : Conduite à droite
*1 7A : L
9J : R
*2 7B : L
10J : R

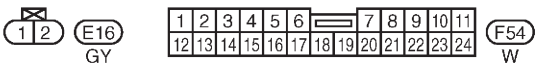

Consulter la dernière page dépliante.
M5 , E101

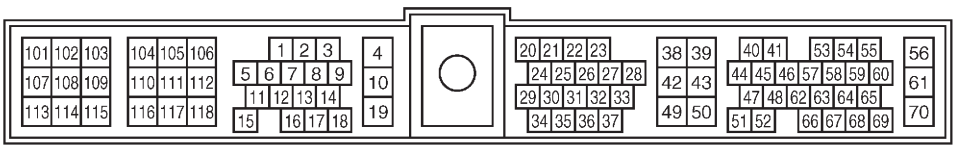

M32 , F51
W W
H.S.

GEC128A

Simpo PDF Merge and Split Unregistered Version - http://www.simpopdf.com

Procédure de diagnostic

1	VERIFIER L'ALIMENTATION ELECTRIQUE

1. Mettre le contact d'allumage sur ''OFF''.
2. Débrancher le connecteur de faisceau du capteur de température d'air d'admission.

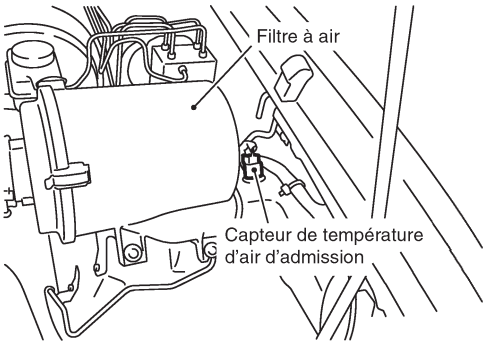

SEC229D

3.Mettre le contact d'allumage sur ''ON''.

4. Vérifier la tension entre la borne 2 du capteur de température d'air d'admission et la masse à l'aide deCONSULT-II ou du testeur.

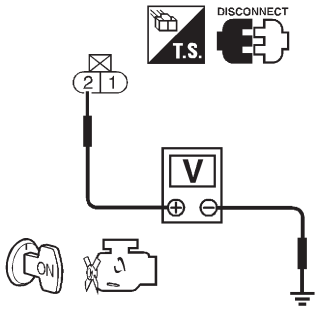

Tension: Environ 5V

SEC163D

Bon ou mauvais

Bon	▶	PASSER A L'ETAPE 3.
Mauvais	▶	PASSER A L'ETAPE 2.

2	DETECTER LA PIECE DEFECTUEUSE

Vérifier les points suivants.
- Connecteurs de faisceaux E101, M5
- Connecteurs de faisceaux M48, F54 (conduite à droite)
- Faisceau ouvert ou en court-circuit entre l'ECM et le capteur de température d'air d'admission

	▶	Réparer le faisceau ou les connecteurs.

Simpo PDF Merge and Split Unregistered Version - http://www.simpopdf.com

Procédure de diagnostic (Suite)

3	VERIFIER LE CIRCUIT DE MISE A LA MASSE

1. Mettre le contact d'allumage sur ''OFF''.
2. Vérifier la continuité du faisceau entre la borne 1 et la masse du moteur.
   Il doit y avoir continuité.

3. Vérifier également que le faisceau n'est pas en court-circuit à l'alimentation.

Bon ou mauvais

Bon	▶	PASSER A L'ETAPE 5.
Mauvais	▶	PASSER A L'ETAPE 4.

4	DETECTER LA PIECE DEFECTUEUSE

Vérifier les points suivants.
- Connecteurs de faisceaux E101, M5
- Connecteurs de faisceaux M48, F54 (conduite à droite)
- Faisceau ouvert ou en court-circuit entre l'ECM et le capteur de température d'air d'admission

	▶	Réparer les faisceaux ou connecteurs en circuit ouvert ou court-circuit.

5	VERIFIER LE CAPTEUR DE TEMPERATURE D'AIR D'ADMISSION

Vérifier la résistance entre les bornes 1 et 2 du capteur de température d'air d'admission, comme le montre l'illustration.

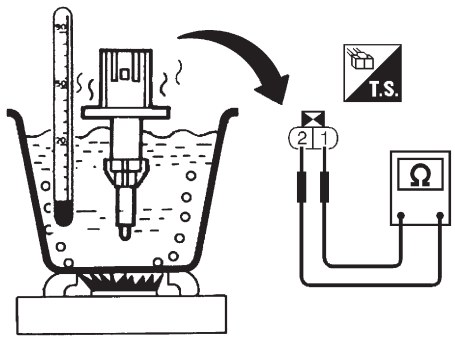

Données de référence

Température°C	Résistance kΩ
20	2,1 -2,9
80	0,27 - 0,38

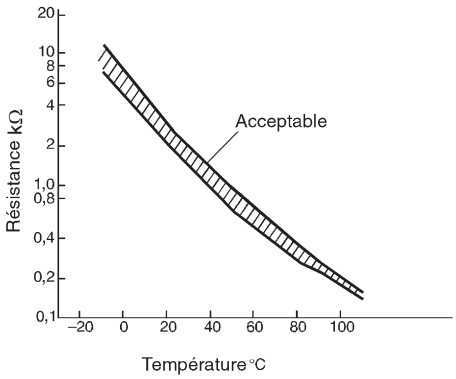

SEC165D

Bon ou mauvais

Bon	▶	PASSER A L'ETAPE 6.
Mauvais	▶	Remplacer le capteur de température d'air d'admission.

6	VERIFIER SI L'INCIDENT EST INTERMITTENT

Effectuer un ''DIAGNOSTIC DES DEFAUTS EN CAS INCIDENT INTERMITTENT'', voir page EC-3502.

	▶	**FIN DE L'INSPECTION**

Simpo PDF Merge and Split Unregistered Version - http://www.simpopdf.com

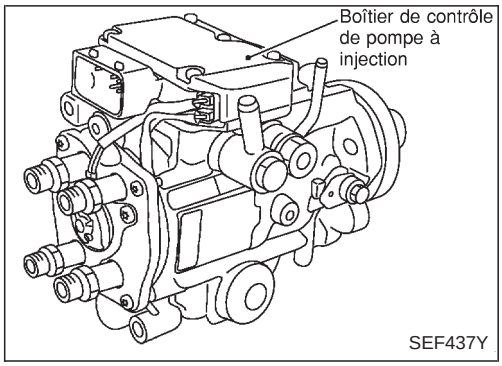

Description

DESCRIPTION DU SYSTEME

L'ECM et l'ensemble de la pompe d'injection de carburant à commande électronique (abrégé ensuite en pompe d'injection) communiquent en temps réel (échange de signaux).
L'ECM transmet les signaux de la quantité d'injection de carburant cible, d'avance à l'injection de carburant cible, de vitesse du moteur, etc., et reçoit les signaux de vitesse de la pompe et de la température du carburant, etc. du boîtier de commande de la pompe d'injection.
Avec ces signaux, la pompe d'injection commande de manière optimale le débit d'injection et l'avance de l'injection au niveau de la soupape de décharge et de la soupape de commande.
La pompe d'injection possède un système de diagnostic intégré qui détecte les défauts des capteurs ou des actionneurs qui se trouvent dans la pompe. Ces informations concernant le défaut sont transférées via la ligne (circuit) du boîtier de commande de la pompe d'injection vers l'ECM.

COMMANDE DU DEBIT D'INJECTION

En fonction de la valeur théorique envoyée par l'ECM, le débit d'injection dépend de la commande de la soupape de décharge de la pompe d'injection et de la modification du temps d'ouverture de l'aiguille.

COMMANDE D'AVANCE A L'INJECTION DE CARBURANT

Sur la base de la valeur théorique envoyée par l'ECM, l'avance de l'injection dépend, en fonction du tarage ressort du système d'avance, du cycle de fonctionnement de la soupape de commande d'avance qui se trouve dans la pompe d'injection et du réglage de la pression dans la chambre haute pression du piston du système d'avance.

CAPTEUR DE TEMPERATURE DU CARBURANT

Le capteur relève la température du carburant dans la pompe d'injection et calibre le débit d'injection en fonction de la température du carburant.

CAPTEUR DE LA POSITION DE L'ANNEAU A CAME

Le capteur détecte le passage du bossage qui se trouve sur l'anneau à came de la pompe d'injection à l'aide d'un élément semi-conducteur à réluctance variable. Le capteur de position de l'anneau à cames assure la synchronisation de l'anneau à cames, et détecte l'avance réelle. Le boîtier de commande de la pompe d'injection mesure la révolution de la pompe d'injection grâce au signal du capteur de position de l'anneau à cames.

Simpo PDF Merge and Split Unregistered Version - http://www.simpopdf.com

Valeur de référence de CONSULT-II en mode de contrôle de données

Remarques : Les données de spécification sont des valeurs de référence.

ELEMENT DE CONTROLE	CONDITION		SPECIFICATION
CAP TEMP CARB	● moteur : Une fois le moteur chaud		Plus de 40°C
SOUPAPE/FUITE (soupape de décharge)	● moteur : Une fois le moteur chaud	Ralenti	Environ 13°CA
INJ TIMG C/V (commande avance injection)	● moteur : faire chauffer le moteur, puis le faire tourner au ralenti.		Environ 50 - 70%
COUP/C DECELER	● moteur : Une fois le moteur chaud	Ralenti	OFF
CAP BARO	● Contact d'allumage : ON		Altitude Environ 0 m : Environ 100,62 kPa (1,0062 bar, 1,026 kg/cm^2) Environ 1000 m : Environ 88,95 kPa (0,8895 bar, 0,907 kg/cm^2) Environ 1 500 m : Environ 83,16 kPa (0,8316 bar, 0,848 kg/cm^2) Environ 2 000 m : Environ 78,36 kPa (0,7836 bar, 0,799 kg/cm^2)

Bornes de l'ECM et valeurs de référence

Données de référence relevées entre chaque borne et la masse.

PRECAUTION :

Lors de la mesure de la tension d'entrée/sortie, ne pas utiliser les bornes de masse de l'ECM sous peine d'endommager le transistor de l'ECM. Utiliser une autre masse que celle des bornes de l'ECM.

BORNE N°	COULEUR DE CABLE	ELEMENT	CONDITION	DONNEES (tension continue)
33	G/Y	Pompe d'injection de carburant à commande électronique	Moteur en marche. └ **Pendant la montée en température** Régime de ralenti	Environ 2,4 V
40	PU	Pompe d'injection de carburant à commande électronique	Moteur en marche. └ **Pendant la montée en température** Régime de ralenti	Environ 2,4 V
52	L/W	Pompe d'injection de carburant à commande électronique	Moteur en marche. └ Régime de ralenti	Environ 0,1 V
53	L/R	Pompe d'injection de carburant à commande électronique	Moteur en marche. └ Régime de ralenti	Environ 0,45 V
			Moteur en marche. └ Le régime moteur est de 2 000 tr/mn.	Environ 0,7 V

Simpo PDF Merge and Split Unregistered Version - http://www.simpopdf.com

Logique de diagnostic de bord

Le défaut est détecté quand ...	Eléments de contrôles (causes possibles)
● Le capteur de température de carburant (intégré à la pompe d'injection) envoie un signal tension incorrect au circuit électronique de la pompe.	● Faisceau ou connecteurs (le circuit électronique de la pompe d'injection est ouvert ou en court-circuit) ● Pompe d'injection de carburant à commande électronique

2

CONTROLE DE DONNEES	
CONTROLE	PAS DE DTC
CPV-TR/MN (PMH)	XXX TR/MN

SEF817Y

Procédure de confirmation de code de défaut (DTC)

AVEC CONSULT-II

1) Mettre le contact d'allumage sur 'ON', puis attendre au moins 2 secondes.
2) Régler CONSULT-II en mode ''CONTROLE DE DONNEES''.
3) Démarrer le moteur et le faire tourner pendant au moins 2 secondes au régime ralenti.
   (si le moteur ne tourne pas, mettre le contact d'allumage sur "START" pendant 2 secondes au moins)
4) Si le DTC est détecté, effectuer une ''Procédure de diagnostic'', voir page EC-3546.

SANS CONSULT-II

1) Mettre le contact d'allumage sur ''ON'', puis attendre au moins 2 secondes.
2) Démarrer le moteur et le faire tourner pendant au moins 2 secondes au régime ralenti.
   (si le moteur ne tourne pas, mettre le contact d'allumage sur ''DEPART'' pendant 2 secondes au moins)
3) Mettre le contact d'allumage sur ''OFF'', attendre au moins 5 secondes, puis remettre le contact sur ''ON''.
4) Effectuer le ''Test de diagnostic mode II (résultats d'autodiagnostic)'' avec l'ECM.
5) Si le DTC est détecté, effectuer une ''Procédure de diagnostic'', voir page EC-3546.

Simpo PDF Merge and Split Unregistered Version - http://www.simpopdf.com

Schéma de câblage

CONDUITE A GAUCHE

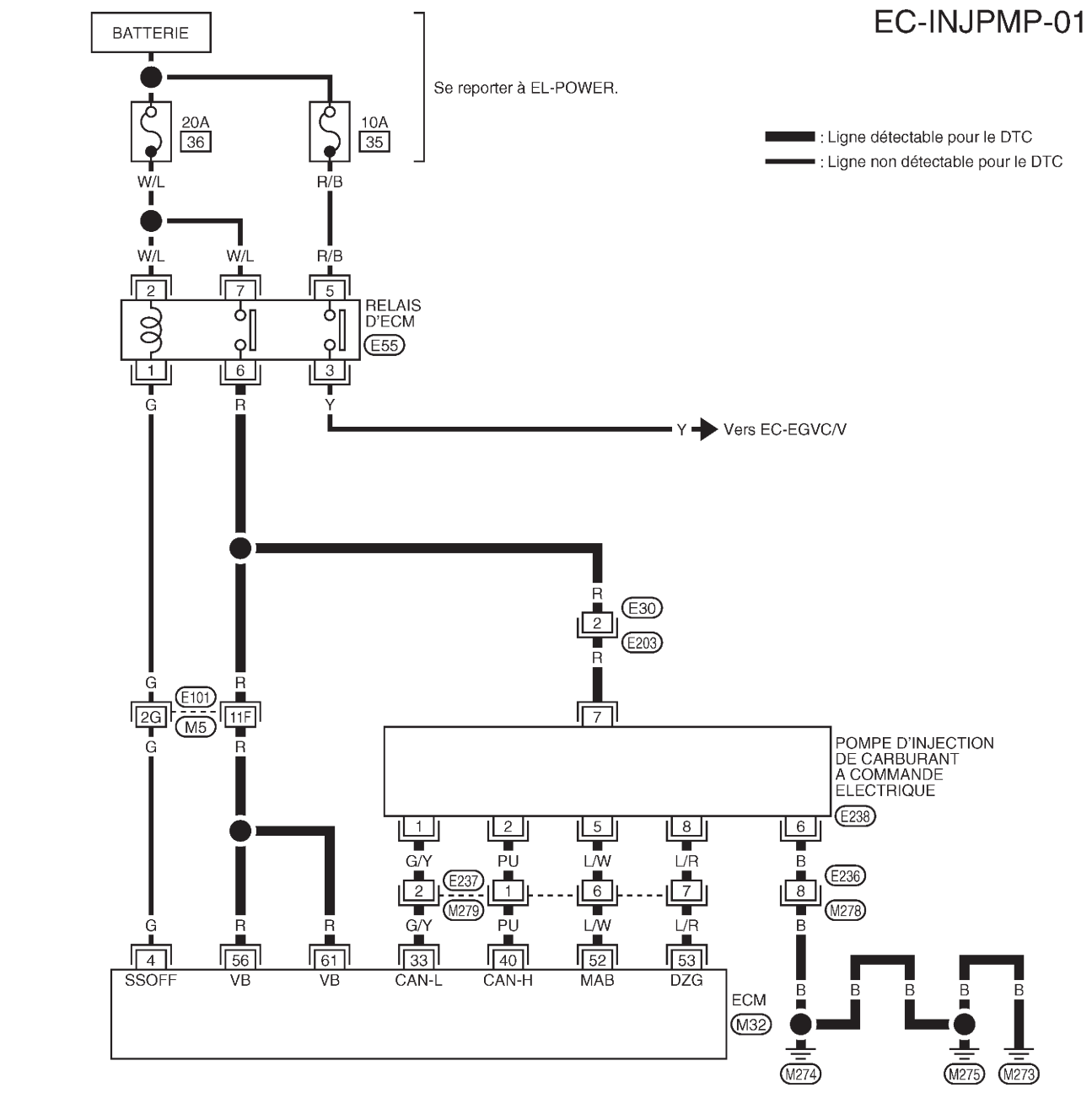

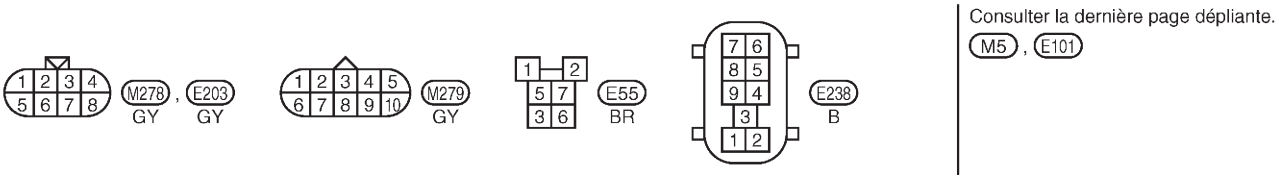

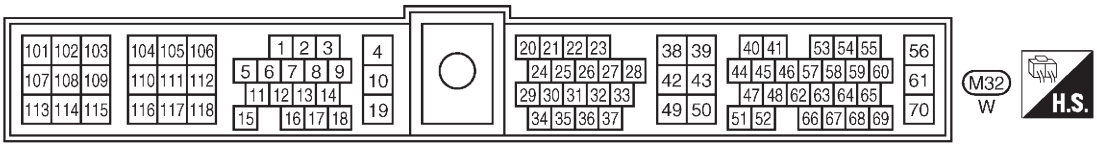

GEC275A

Simpo PDF Merge and Split Unregistered Version - http://www.simpopdf.com

Schéma de câblage (Suite)

CONDUITE A DROITE

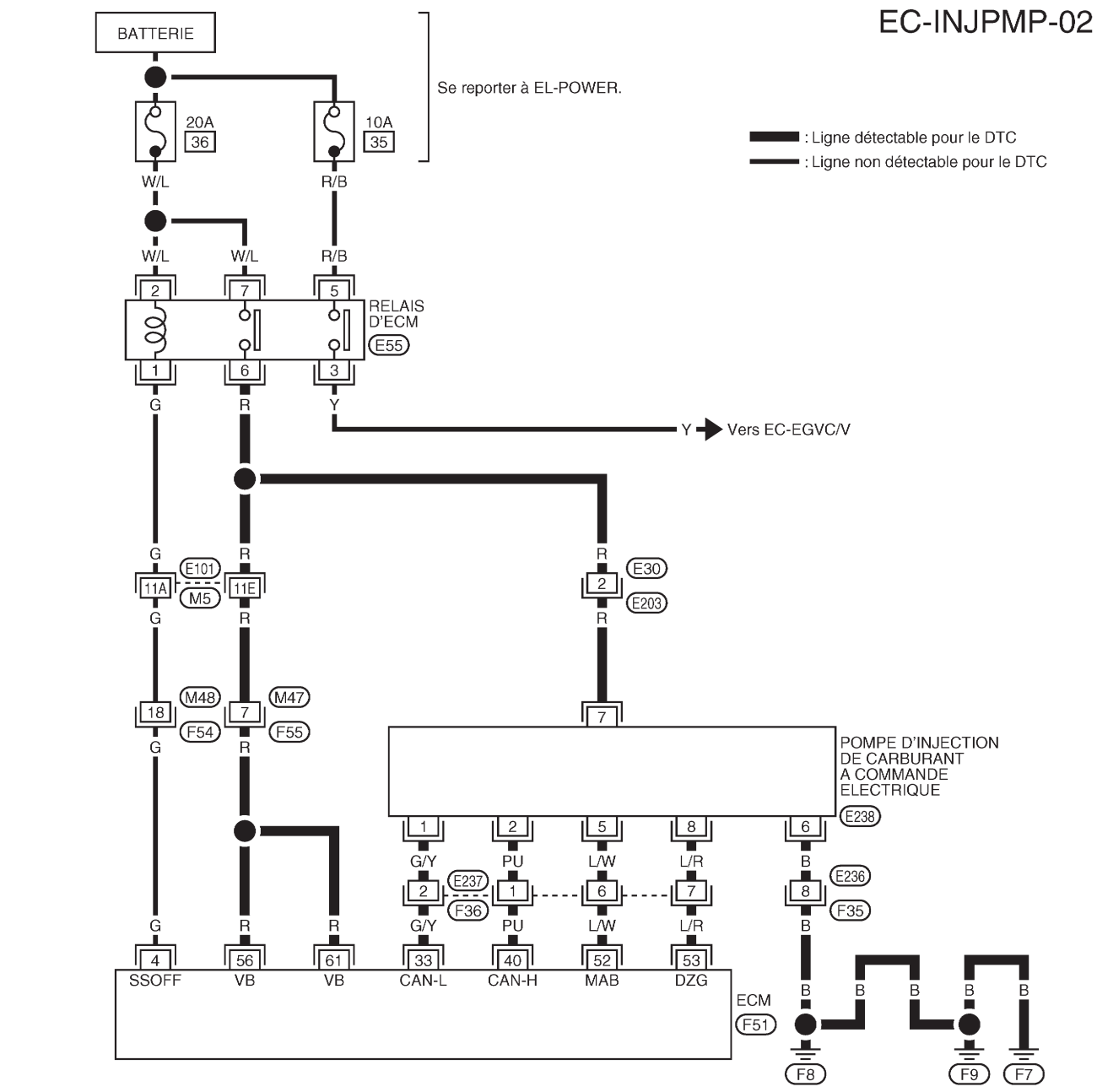

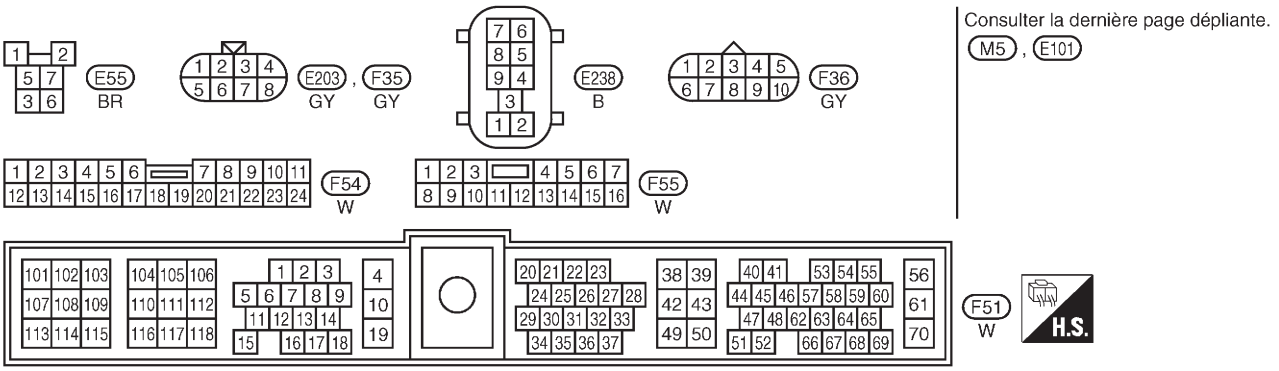

Consulter la dernière page dépliante.
M5 , E101

GEC276A

Simpo PDF Merge and Split Unregistered Version - http://www.simpopdf.com

Procédure de diagnostic

1	VERIFIER LE CIRCUIT D'ALIMENTATION DE LA POMPE D'INJECTION

1. Mettre le contact d'allumage sur ''OFF''.
2. Débrancher le connecteur de la pompe d'injection.

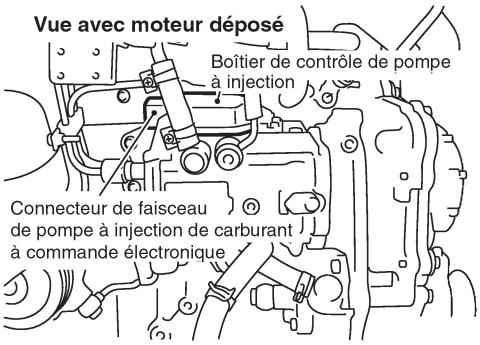

SEC228D

3. Mettre le contact d'allumage sur ''ON''.
4. Vérifier la tension entre la borne 7 de la pompe et la masse.

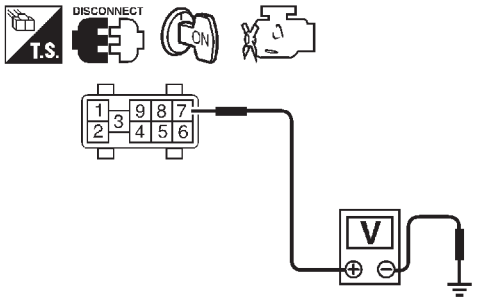

Tension : tension de la batterie

SEF438Y

Bon ou mauvais

Bon	▶	PASSER A L'ETAPE 3.
Mauvais	▶	PASSER A L'ETAPE 2.

	DETECTER LA PIECE DEFECTUEUSE

Vérifier les points suivants.
- Connecteurs de faisceaux E30, E203
- Connecteurs de faisceaux E101, M5
- Connecteurs de faisceaux M47, F55 (conduite à droite)
- Faisceau ouvert ou en court-circuit entre la pompe d'injection et l'ECM
- Faisceau ouvert ou en court-circuit entre la pompe d'injection et le relais d'ECM

	▶	Réparer les faisceaux ou connecteurs en circuit ouvert ou en court-circuit à la masse ou à l'alimentation.

3	VERIFIER SI LE CIRCUIT DE MASSE DE LA POMPE D'INJECTION EST OUVERT OU EN COURT-CIRCUIT

1. Mettre le contact d'allumage sur ''OFF''.
2. Vérifier la continuité du faisceau entre la borne 6 de la pompe d'injection et la masse. Se référer au schéma de câblage.
   Il doit y avoir continuité.
3. Vérifier également que le faisceau n'est pas ouvert ou en court-circuit à l'alimentation.

Bon ou mauvais

Bon	▶	PASSER A L'ETAPE 5.
Mauvais	▶	PASSER A L'ETAPE 4.

Simpo PDF Merge and Split Unregistered Version - http://www.simpopdf.com

Procédure de diagnostic (Suite)

4	DETECTER LA PIECE DEFECTUEUSE
Vérifier les points suivants. ● Connecteurs de faisceaux E236, M278 (conduite à gauche) ● Connecteurs de faisceaux E236, F35 (conduite à droite) ● Faisceau ouvert ou en court-circuit entre la pompe d'injection et la masse du moteur	
►	Réparer les faisceaux ou connecteurs en circuit ouvert ou en court-circuit à la masse ou à l'alimentation.

5	VERIFIER SI LA LIGNE DE COMMUNICATION EST OUVERTE OU EN COURT-CIRCUIT

1. Vérifier la continuité entre les bornes suivantes. Se référer au schéma de câblage.

Pompe à injection de carburant à commande électronique	ECM
1	33
2	40
5	52
8	53

MTBL0444

Il doit y avoir continuité.

2. Vérifier également que le faisceau n'est pas ouvert ou en court-circuit à l'alimentation.

Bon ou mauvais

Bon	►	PASSER A L'ETAPE 7.
Mauvais	►	PASSER A L'ETAPE 6.

6	DETECTER LA PIECE DEFECTUEUSE
Vérifier les points suivants. ● Connecteurs de faisceaux E237, M279 (conduite à gauche) ● Connecteurs de faisceaux E237, F36 (conduite à droite) ● Faisceau ouvert ou en court-circuit entre la pompe d'injection et l'ECM	
►	Réparer les faisceaux ou connecteurs en circuit ouvert ou en court-circuit à la masse ou à l'alimentation.

7	VERIFIER SI L'INCIDENT EST INTERMITTENT
Se référer à ''DIAGNOSTIC DES DEFAUTS EN CAS D'INCIDENT INTERMITTENT'', page EC-3502.	
Bon ou mauvais	
Bon ►	Remplacer la pompe d'injection de carburant.
Mauvais ►	Réparer les faisceaux ou connecteurs en circuit ouvert ou en court-circuit à la masse ou à l'alimentation.

Simpo PDF Merge and Split Unregistered Version - http://www.simpopdf.com

Description

L'unité de fonctionnement de l'accélérateur est installée sur l'extrémité supérieure de la pédale d'accélération. Le capteur détecte la position de l'accélérateur et envoie un signal à l'ECM. L'ECM utilise le signal pour déterminer la quantité de carburant à injecter.
Le contact d'accélérateur détecte si la pédale d'accélérateur est entièrement relâchée ou complètement enfoncée et envoie le signal correspondant à l'ECM. L'ECM détermine les conditions de ralenti du moteur. Ces signaux sont aussi utilisés pour le diagnostic du capteur de position d'accélérateur.

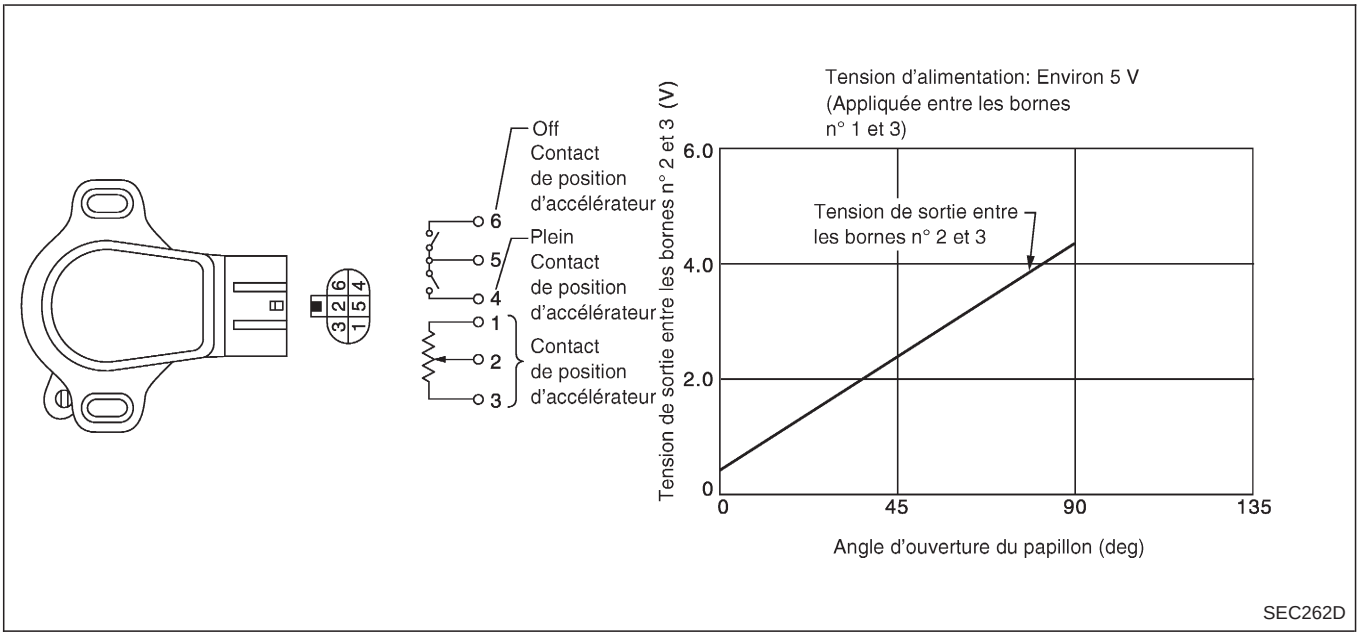

Valeur de référence de CONSULT-II en mode de contrôle de données

Les données de spécification sont des valeurs de référence.

ELEMENT DE CONTROLE	CONDITION		SPECIFICATION
CAP POS ACCEL	● Contact d'allumage : ON (moteur à l'arrêt)	Pédale d'accélérateur libre	0,29 - 0,79V
		Pédale d'accélérateur enfoncée	3,48 V - 4,64 V
CNT ACCEL FOND	● Contact d'allumage : ON (moteur à l'arrêt)	Pédale d'accélérateur enfoncée au maximum	MAR
		Sauf ci-dessus	ARR
CNT ACCEL COUP	● Contact d'allumage : ON (moteur à l'arrêt)	Pédale d'accélérateur Complètement relâchée	MAR
		Pédale d'accélérateur légèrement ouverte	ARR

Simpo PDF Merge and Split Unregistered Version - http://www.simpopdf.com

Bornes de l'ECM et valeurs de référence

Données de référence relevées entre chaque borne et la masse.

PRECAUTION :
Lors de la mesure de la tension d'entrée/sortie, ne pas utiliser les bornes de masse de l'ECM sous peine d'endommager le transistor de l'ECM. Utiliser une autre masse que celle des bornes de l'ECM comme la prise de terse.

BORNE N°	COULEUR DE CABLE	ELEMENT	CONDITION	DONNEES (tension continue)
23	W	Capteur de position d'accélérateur	Contact d'allumage sur "ON" └ Pédale d'accélérateur entièrement relâchée	0,29 - 0,79 V
			Contact d'allumage sur "ON" └ Pédale d'accélérateur complètement enfoncée	3,48 V - 4,64 V
31	Y	Contact de position d'accélérateur (au ralenti)	Contact d'allumage sur "ON" └ Pédale d'accélérateur entièrement relâchée	TENSION BATTERIE (11 V - 14 V)
			Contact d'allumage sur "ON" └ Pédale d'accélérateur enfoncée	Environ 0 V
32	G	Contact de position d'accélérateur (accélération maximale)	Contact d'allumage sur "ON" └ Pédale d'accélérateur relâchée	Environ 0 V
			Contact d'allumage sur "ON" └ Pédale d'accélérateur complètement enfoncée	TENSION BATTERIE (11 V - 14 V)
48	OR/L	Alimentation électrique du capteur de position d'accélérateur	Contact d'allumage sur "ON"	Environ 5 V
51	B/W	Masse du capteur de position d'accélérateur	Moteur en marche. └ **Pendant la montée en température** Régime de ralenti	Environ 0 V

Logique de diagnostic de bord

Le défaut est détecté quand ...	Eléments de contrôles (causes possibles)
● La relation entre le signal du capteur de position et le contact d'accélérateur dans la plage d'action normale de la pédale n'est pas correcte.	● Faisceau ou connecteurs (le circuit de capteur est ouvert ou en court-circuit). ● Capteur de position d'accélérateur ● Contact de position d'accélérateur

Simpo PDF Merge and Split Unregistered Version - http://www.simpopdf.com

3

CONTROLE DE DONNEES	
CONTROLE	PAS DE DTC
CPV-TR/MN (PMH)	XXX TR/MN

SEF817Y

Procédure de confirmation de code de défaut (DTC)

AVEC CONSULT-II

1) Mettre le contact d'allumage sur ''ON''.
2) Régler CONSULT-II en mode ''CONTROLE DE DONNEES''.
3) Enfoncer et relâcher lentement la pédale d'accélérateur (toute la course).
4) Si le DTC est détecté, effectuer une ''Procédure de diagnostic'', voir page EC-3555.

SANS CONSULT-II

1) Mettre le contact d'allumage sur ''ON''.
2) Enfoncer et relâcher lentement la pédale d'accélérateur (toute la course).
3) Mettre le contact d'allumage sur ''OFF'', attendre au moins 5 secondes, puis remettre le contact sur ''ON''.
4) Effectuer le ''Test de diagnostic mode II (résultats d'autodiagnostic)'' avec l'ECM.
5) Si le DTC est détecté, effectuer une ''Procédure de diagnostic'', voir page EC-3555.

Simpo PDF Merge and Split Unregistered Version - http://www.simpopdf.com

Schéma de câblage

CONDUITE A GAUCHE

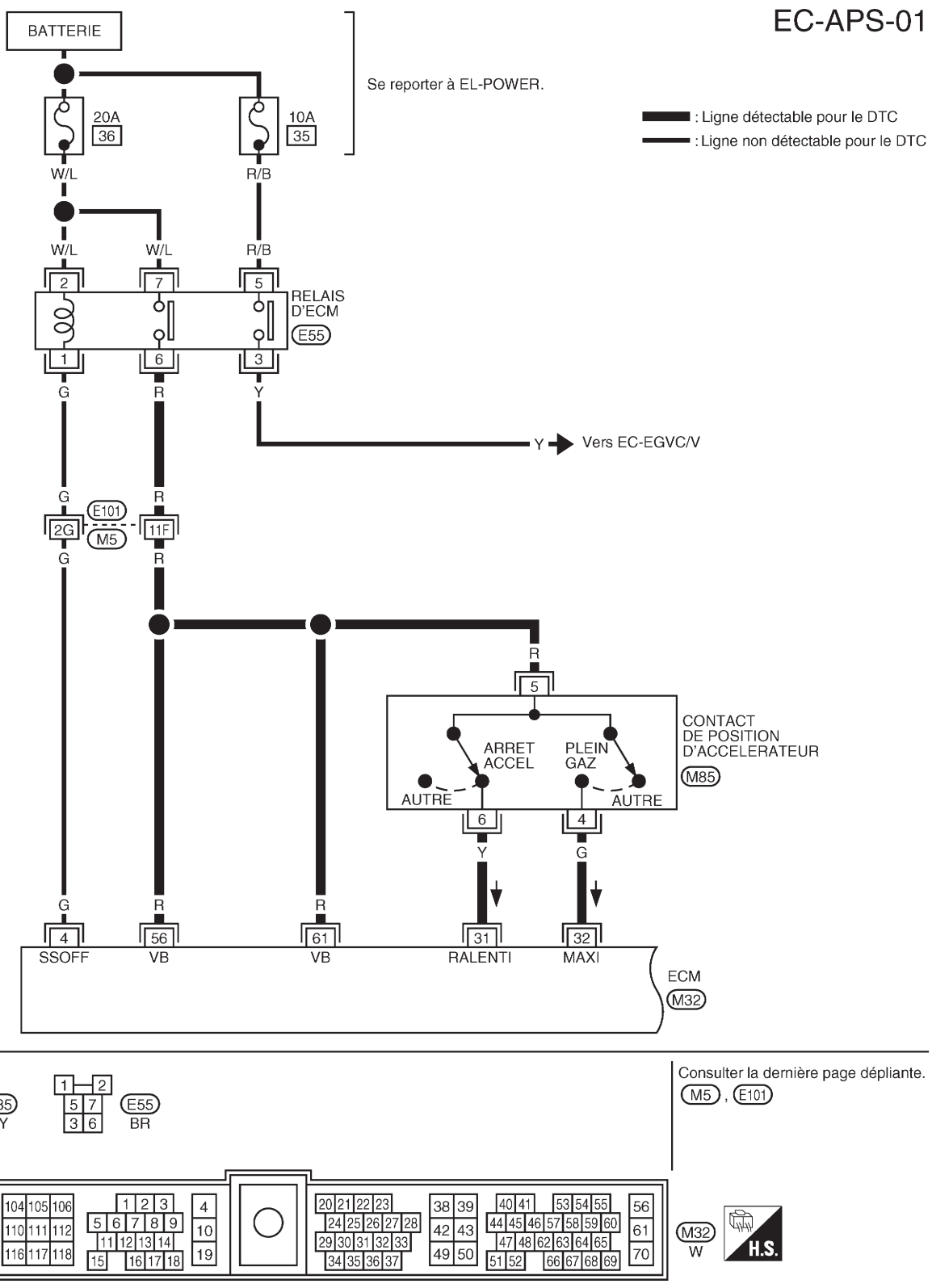

GEC277A

Simpo PDF Merge and Split Unregistered Version - http://www.simpopdf.com

Schéma de câblage (Suite)

EC-APS-02

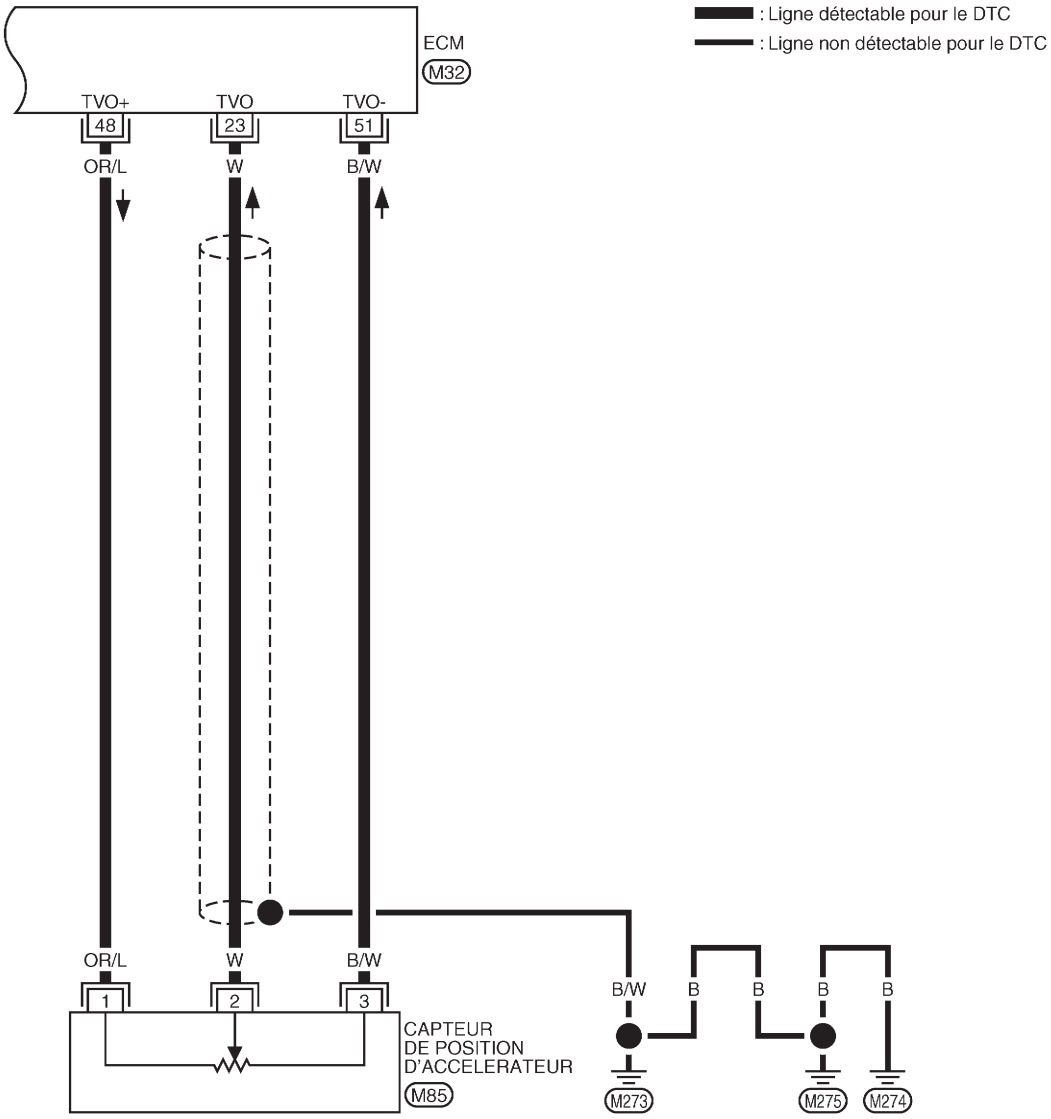

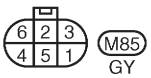

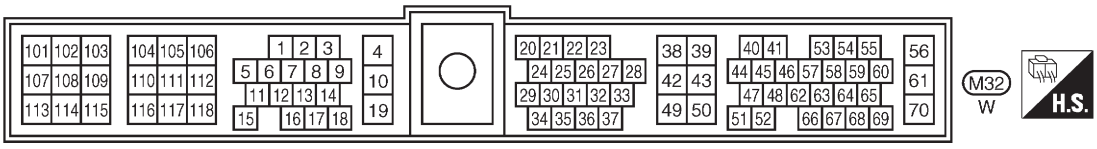

GEC278A

Simpo PDF Merge and Split Unregistered Version - http://www.simpopdf.com

Schéma de câblage (Suite)

MODELES A DIRECTION A DROITE

EC-APS-03

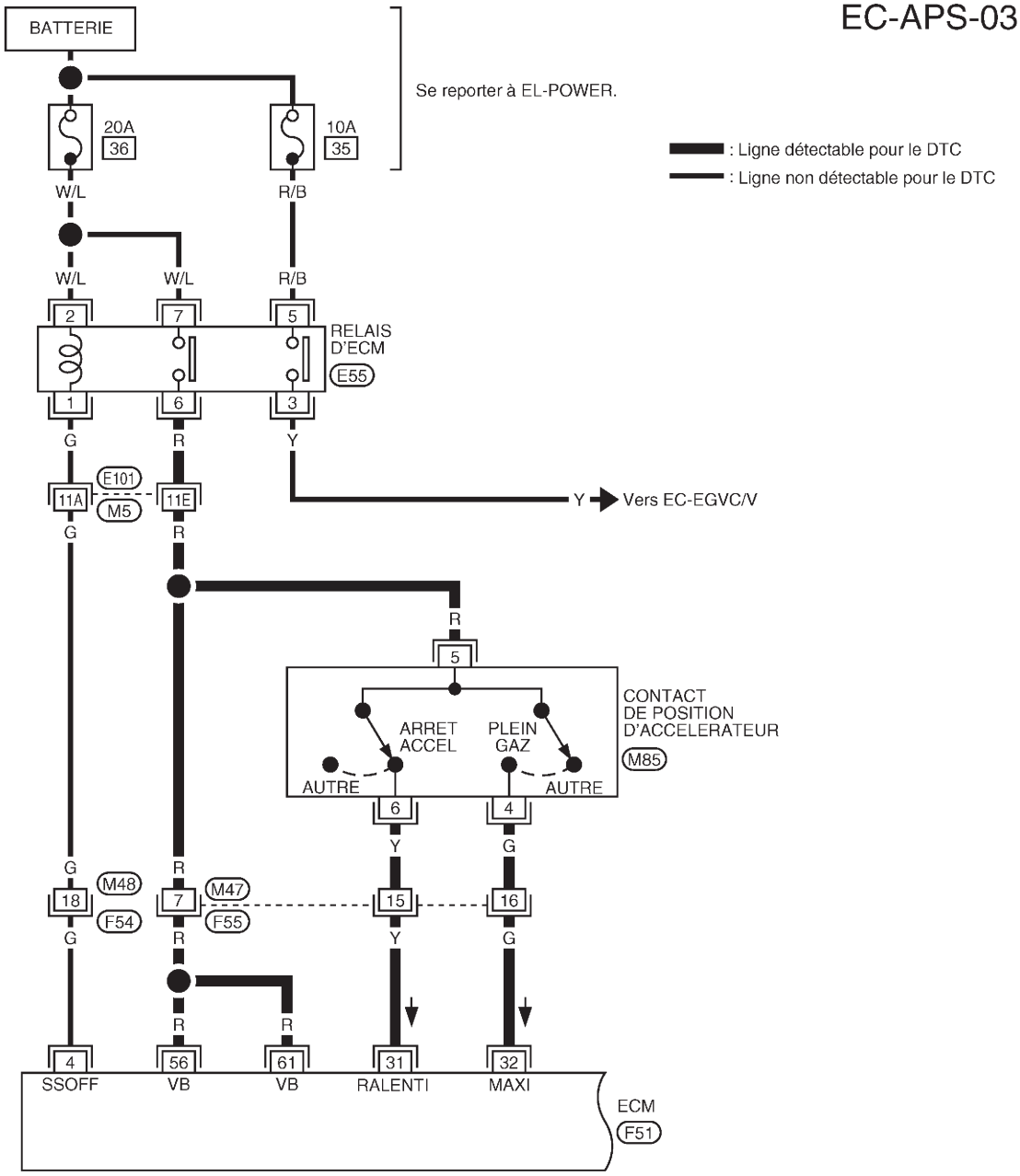

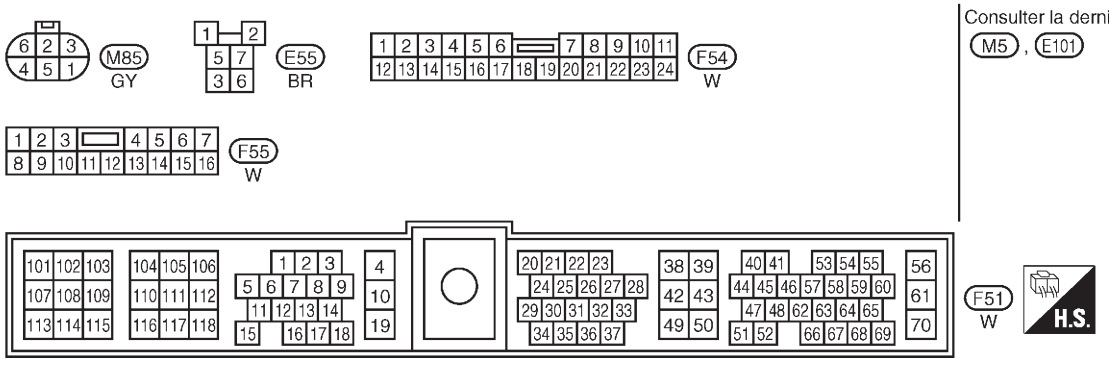

Consulter la dernière page dépliante.
M5, E101

GEC279A

Simpo PDF Merge and Split Unregistered Version - http://www.simpopdf.com

Schéma de câblage (Suite)

EC-APS-04

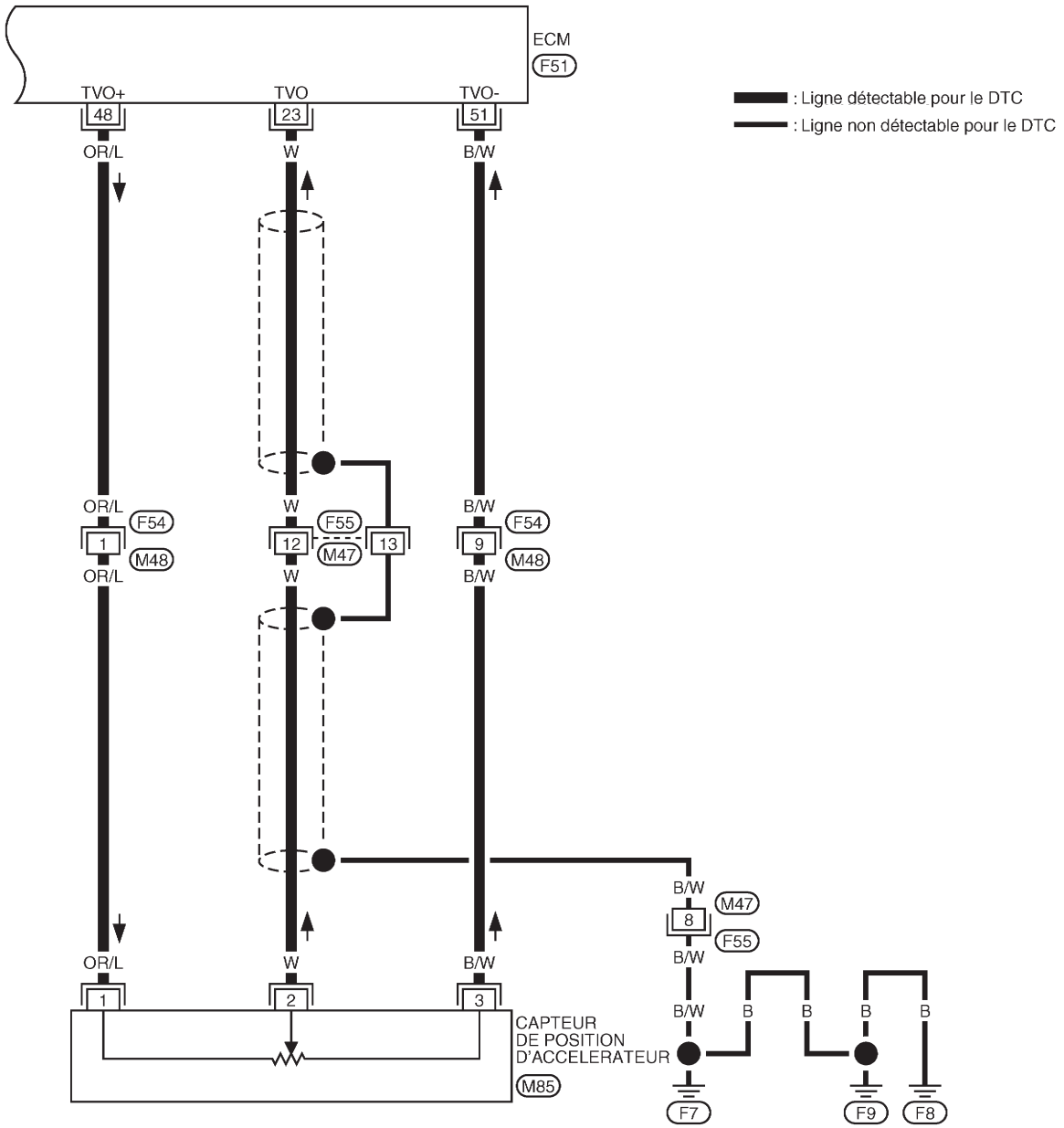

GEC280A

Simpo PDF Merge and Split Unregistered Version - http://www.simpopdf.com

Procédure de diagnostic

1	VERIFICATION DU FONCTIONNEMENT GENERAL I

Avec CONSULT-II

1.Mettre le contact d'allumage sur ''ON''.
2. Sélectionner ''CAP POS ACCEL'' (capteur position accélérateur) dans le mode ''CONTROLE DE DONNEES'' (contrôle de données) de CONSULT-II.
3. Vérifier le signal ''CAP POS ACCEL'' dans les conditions suivantes.

CONTROLE DE DONNEES	
CONTROLE	PAS DE DTC
CAP POS ACCEL	XXX V

Conditions	CAP POS ACCEL
Pédale d'accélérateur complètement enfoncée	3,48 - 4,64 V
Pédale d'accélérateur complètement relâchée	0,29 - 0,79 V

SEF278ZB

Sans CONSULT-II

1.Mettre le contact d'allumage sur ''ON''.
2. Vérifier la tension entre la borne 23 de l'ECM et la masse dans les conditions suivantes.

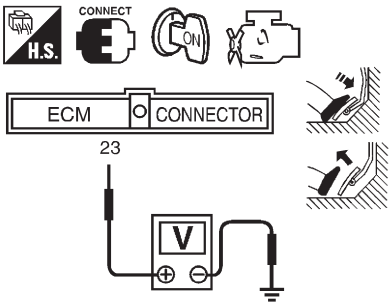

Conditions	Tension
Pédale d'accélérateur complètement enfoncée	3,48 - 4,64 V
Pédale d'accélérateur complètement relâchée	0,29 - 0,79V

SEF279ZB

Bon ou mauvais

Bon	▶	PASSER A L'ETAPE 2.
Mauvais	▶	PASSER A L'ETAPE 3.

Simpo PDF Merge and Split Unregistered Version - http://www.simpopdf.com

Procédure de diagnostic (Suite)

2	VERIFIER LE FONCTIONNEMENT GENERAL

Avec CONSULT-II

1. Mettre le contact d'allumage sur ''ON''.
2. Sélectionner ''CNT ACCEL FOND'' (contact plein accélération) et ''CNT ACCEL COUP'' (contact accélération nulle) dans le mode ''CONTROLE DE DONNEES'' (contrôle de données) de CONSULT-II.
3. Vérifier les signaux ''CNT ACCEL FOND'' et ''CNT ACCEL COUP'' dans les conditions suivantes.

Contrôle des données	
CONTROLE	Aucun DTC
CON ACCEL PLEIN	OFF
CNT ACC COUP	ON

Conditions	CON ACCEL PLEIN
Pédale d'accélérateur enfoncée complètement	ON
Sauf ci-dessus	OFF

Conditions	CON ACCEL COUP
Pédale d'accélérateur relâchée complètement	ON
Pédale d'accélérateur enfoncée	OFF

SEF416Y

Sans CONSULT-II

1. Mettre le contact d'allumage sur ''ON''.
2. Vérifier la tension entre la borne 31 et 32 de l'ECM et la masse dans les conditions suivantes.

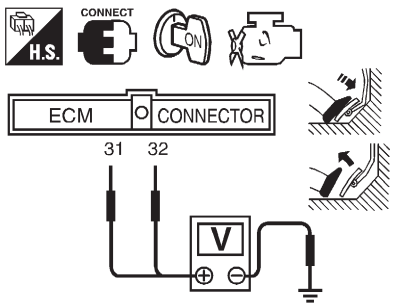

Conditions	Tension (Borne d'ECM 32)
Pédale d'accélérateur Enfoncée à fond	Tension de la batterie
Sauf ci-dessus	Environ 0 V

Conditions	Tension (Borne d'ECM 31)
Pédale d'accélérateur complètement relâchée	Tension de la batterie
Pédale d'accélérateur enfoncée	Environ 0 V

SEF417Y

Bon ou mauvais

Bon	▶	PASSER A L'ETAPE 24.
Mauvais	▶	PASSER A L'ETAPE 15.

Simpo PDF Merge and Split Unregistered Version - http://www.simpopdf.com

Procédure de diagnostic (Suite)

3	VERIFIER LE CIRCUIT D'ALIMENTATION DU CAPTEUR DE POSITION D'ACCELERATEUR

1. Mettre le contact d'allumage sur ''OFF''.
2. Débrancher le connecteur de faisceau du boîtier de l'accélérateur.

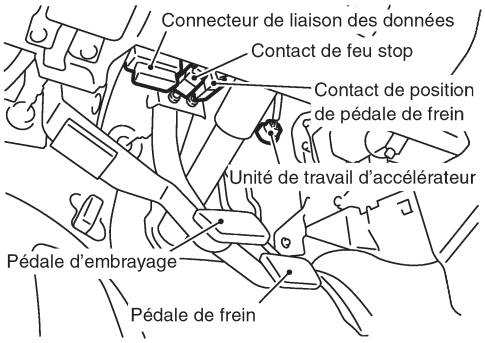

SEC233D

3. Mettre le contact d'allumage sur ''ON''.
4. Contrôler la tension entre la borne 1 de l'unité de fonctionnement de l'accélérateur et la masse à l'aide de CONSULT-II ou du testeur.

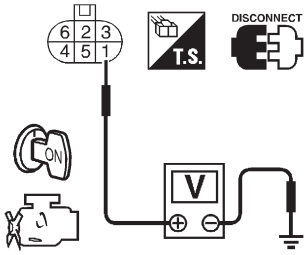

Environ 5 V

SEC244D

Bon ou mauvais

Bon	▶	PASSER A L'ETAPE 5.
Mauvais	▶	PASSER A L'ETAPE 4.

4	DETECTER LA PIECE DEFECTUEUSE

Vérifier les points suivants.
- Connecteurs de faisceaux F54, M48 (conduite à droite)
- Faisceau ouvert ou en court-circuit entre l'ECM et l'unité de fonctionnement de l'accélérateur

	▶	Réparer le faisceau ou les connecteurs.

Simpo PDF Merge and Split Unregistered Version - http://www.simpopdf.com

Procédure de diagnostic (Suite)

5	VERIFIER SI LE CIRCUIT DE MASSE DU CAPTEUR DE POSITION D'ACCELERATEUR EST OUVERT OU EN COURT-CIRCUIT

1. Mettre le contact d'allumage sur ''OFF''.
2. Desserrer et resserrer la vis de masse du moteur.

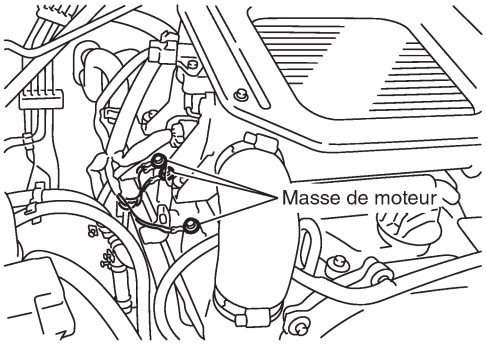

SEC245D

3. Vérifier la continuité du faisceau entre la borne 3 de l'unité de fonctionnement de l'accélérateur et la masse du moteur. Se référer au schéma de câblage.
   Il doit y avoir continuité.
4. Vérifier également que le faisceau n'est pas ouvert ou en court-circuit à l'alimentation.

Bon ou mauvais

Bon	►	PASSER A L'ETAPE 7.
Mauvais	►	PASSER A L'ETAPE 6.

6	DETECTER LA PIECE DEFECTUEUSE

Vérifier les points suivants.
- Connecteurs de faisceaux F54, M48 (conduite à droite)
- Faisceau ouvert ou en court-circuit entre l'ECM et l'unité de fonctionnement de l'accélérateur

	►	Réparer les faisceaux ou connecteurs en circuit ouvert ou en court-circuit à la masse ou à l'alimentation.

7	VERIFIER SI LE CIRCUIT DU SIGNAL D'ENTREE DU CAPTEUR DE POSITION D'ACCELERATEUR EST OUVERT OU EN COURT-CIRCUIT

1. Débrancher le connecteur de faisceau de l'ECM.
2. Vérifier la continuité du faisceau entre la borne 23 de l'ECM et la borne 2 de l'unité de fonctionnement de l'accélérateur. Se référer au schéma de câblage.
   Il doit y avoir continuité.
3. Vérifier également que le faisceau n'est pas ouvert ou en court-circuit à l'alimentation.

Bon ou mauvais

Bon (avec CONSULT-II)	►	PASSER A L'ETAPE 9.
Bon (sans CONSULT-II)	►	PASSER A L'ETAPE 10.
Mauvais	►	PASSER A L'ETAPE 8.

8	DETECTER LA PIECE DEFECTUEUSE

Vérifier les points suivants.
- Connecteurs de faisceaux F55, M47 (conduite à droite)
- Faisceau ouvert ou en court-circuit entre l'ECM et l'unité de fonctionnement de l'accélérateur

	►	Réparer les faisceaux ou connecteurs en circuit ouvert ou en court-circuit à la masse ou à l'alimentation.

Simpo PDF Merge and Split Unregistered Version - http://www.simpopdf.com

Procédure de diagnostic (Suite)

9	VERIFIER LE CAPTEUR DE POSITION D'ACCELERATEUR

Avec CONSULT-II

1. Rebrancher tous les connecteurs de faisceau débranchés.
2. Mettre le contact d'allumage sur ''ON''.
3. Régler CONSULT-II en mode ''CONTROLE DE DONNEES''.
4. Vérifier l'indication de ''CAP POS ACCEL'' (capteur position accélérateur) dans les conditions suivantes.

CONTROLE DE DONNEES	
CONTROLE	PAS DE DTC
CPV-TR/MN-PMH	XXX tr/mn
CAP POS ACCEL	XXX V

Conditions du papillon	CAP POS ACCEL
Complètement fermé (a)	0,29 - 0,79V
Partiellement ouvert	Entre (a) et (b)
Complètement ouvert (b)	3,48 - 4,64V

SEF818YB

Bon ou mauvais

Bon (conduite à gauche)	▶	PASSER A L'ETAPE 13.
Bon (conduite à droite)	▶	PASSER A L'ETAPE 11.
Mauvais	▶	Remplacer l'ensemble de la pédale d'accélérateur.

10	VERIFIER LE CAPTEUR DE POSITION D'ACCELERATEUR

Sans CONSULT-II

1. Rebrancher tous les connecteurs de faisceau débranchés.
2. Mettre le contact d'allumage sur ''ON''.
3. Vérifier la tension entre la borne 23 de l'ECM et la masse dans les conditions suivantes.

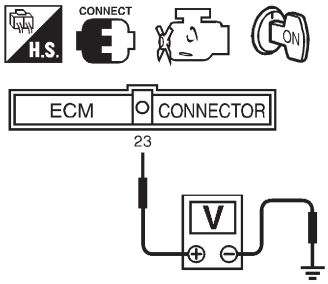

Condition du papillon	Tension
Complètement fermé (a)	0,29 - 0,79V
Ouvert partiellement	Entre (a) et (b)
Complètement ouvert (b)	3,48 - 4,64V

SEF407YB

Bon ou mauvais

Bon (conduite à gauche)	▶	PASSER A L'ETAPE 14.
Bon (conduite à droite)	▶	PASSER A L'ETAPE 11.
Mauvais	▶	Remplacer l'ensemble de la pédale d'accélérateur.

Simpo PDF Merge and Split Unregistered Version - http://www.simpopdf.com

Procédure de diagnostic (Suite)

11	VERIFIER SI LE CIRCUIT DE BLINDAGE DU CAPTEUR DE POSITION D'ACCELERATEUR EST OUVERT OU EN COURT-CIRCUIT
1. Mettre le contact d'allumage sur ''OFF''. 2. Vérifier la continuité du faisceau entre la borne 13 du connecteur de faisceau F55 et la masse du moteur. Se référer au schéma de câblage. **Il doit y avoir continuité.** 3. Vérifier également que le faisceau n'est pas en court-circuit à l'alimentation.	
Bon ou mauvais	
Bon (avec CONSULT-II) ▶	PASSER A L'ETAPE 13.
Bon (sans CONSULT-II) ▶	PASSER A L'ETAPE 14.
Mauvais ▶	PASSER A L'ETAPE 12.

12	DETECTER LA PIECE DEFECTUEUSE
Vérifier les points suivants. ● Connecteurs de faisceaux M47, F55 ● Faisceau ouvert ou en court-circuit entre le connecteur de faisceau F55 et la masse du moteur	
▶	Réparer le faisceau ou les connecteurs.

13	REMISE A ZERO DE LA MEMOIRE DE POSITION DE RALENTI DU CAPTEUR DE POSITION D'ACCELERATEUR
Avec CONSULT-II 1. Mettre le contact d'allumage sur ''ON''. 2. Sélectionner ''SIG POS ACC COUP'' (signal position accélérateur OFF) en mode ''TEST ACTIF'' de CONSULT-II. 3. Appuyer sur ''EFFAC''.	
▶	PASSER A L'ETAPE 24.

14	REMISE A ZERO DE LA MEMOIRE DE POSITION DE RALENTI DU CAPTEUR DE POSITION D'ACCELERATEUR
Sans CONSULT-II 1. Démarrer le moteur et l'amener à température normale de fonctionnement. 2. Laisser le moteur tourner au ralenti pendant 10 minutes.	
▶	PASSER A L'ETAPE 24.

Simpo PDF Merge and Split Unregistered Version - http://www.simpopdf.com

Procédure de diagnostic (Suite)

15	VERIFIER LE CIRCUIT D'ALIMENTATION DU CONTACT D'ACCELERATEUR

1. Mettre le contact d'allumage sur ''OFF''.
2. Débrancher le connecteur de faisceau de l'unité de fonctionnement de l'accélérateur.

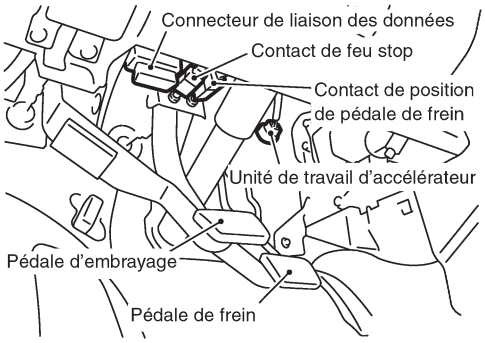

SEC233D

3. Mettre le contact d'allumage sur ''ON''.
4. Vérifier la tension entre la borne 5 du contact d'accélérateur et la masse avec CONSULT-II ou un contrôleur.

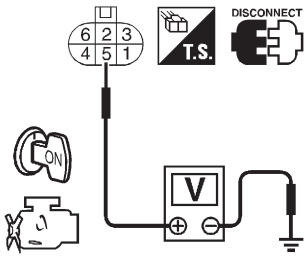

Tension: Tension de la batterie

SEC243D

Bon ou mauvais

Bon	▶	PASSER A L'ETAPE 17.
Mauvais	▶	PASSER A L'ETAPE 16.

16	DETECTER LA PIECE DEFECTUEUSE

Vérifier les points suivants.
- Connecteurs de faisceaux E101, M5
- Connecteurs de faisceaux M47, F55 (conduite à droite)
- Faisceau ouvert ou en court-circuit entre l'unité de fonctionnement de l'accélérateur et le relais de l'ECM
- Faisceau ouvert ou en court-circuit entre l'unité de fonctionnement de l'accélérateur et l'ECM

	▶	Réparer le faisceau ou les connecteurs.

Simpo PDF Merge and Split Unregistered Version - http://www.simpopdf.com

Procédure de diagnostic (Suite)

17	VERIFIER SI LE CIRCUIT DU SIGNAL D'ENTREE DU CONTACT D'ACCELERATEUR EST OUVERT OU EN COURT-CIRCUIT I

1. Mettre le contact d'allumage sur ''OFF''.
2. Débrancher le connecteur de faisceau de l'ECM.
3. Vérifier la continuité du faisceau entre la borne 6 de l'unité de fonctionnement de l'accélérateur et la borne 31 de l'ECM. Se référer au schéma de câblage.
   Il doit y avoir continuité.
4. Vérifier également que le faisceau n'est pas ouvert ou en court-circuit à l'alimentation.

Bon ou mauvais

Bon	▶	PASSER A L'ETAPE 19.
Mauvais	▶	PASSER A L'ETAPE 18.

18	DETECTER LA PIECE DEFECTUEUSE

Vérifier les points suivants.
- Connecteurs de faisceaux M47, F55 (conduite à droite)
- Faisceau ouvert ou en court-circuit entre l'ECM et l'unité de fonctionnement de l'accélérateur

	▶	Réparer les faisceaux ou connecteurs en circuit ouvert ou en court-circuit à la masse ou à l'alimentation.

19	VERIFIER SI LE CIRCUIT DU SIGNAL D'ENTREE DU CONTACT D'ACCELERATEUR EST OUVERT OU EN COURT-CIRCUIT II

1. Vérifier la continuité du faisceau entre la borne 4 de l'unité de fonctionnement de l'accélérateur et la borne 32 de l'ECM. Se référer au schéma de câblage.
   Il doit y avoir continuité.
2. Vérifier également que le faisceau n'est pas ouvert ou en court-circuit à l'alimentation.

Bon ou mauvais

Bon	▶	PASSER A L'ETAPE 21.
Mauvais	▶	PASSER A L'ETAPE 20.

20	DETECTER LA PIECE DEFECTUEUSE

Vérifier les points suivants.
- Connecteurs de faisceaux M47, F55 (conduite à droite)
- Faisceau ouvert ou en court-circuit entre l'ECM et l'unité de fonctionnement de l'accélérateur

	▶	Réparer les faisceaux ou connecteurs en circuit ouvert ou en court-circuit à la masse ou à l'alimentation.

Simpo PDF Merge and Split Unregistered Version - http://www.simpopdf.com

Procédure de diagnostic (Suite)

21	VERIFIER LE CONTACT D'ACCELERATEUR

Vérifier la continuité entre les bornes 4 et 5 puis 5 et 6 de l'unité de fonctionnement de l'accélérateur dans les conditions suivantes.

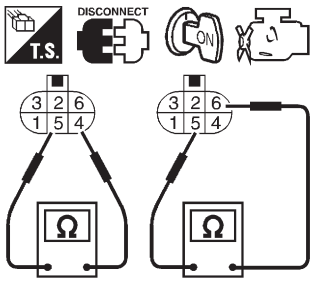

Entre bornes 4 et 5

Conditions	Continuité
Pédale d'accélérateur complètement enfoncée	Doit exister.
Sauf ci-dessus	Ne doit pas exister.

Entre les bornes 5 et 6

Conditions	Continuité
Pédale d'accélérateur complètement relâchée	Doit exister.
Pédale d'accélérateur enfoncée	Ne doit pas exister.

SEC246D

Bon ou mauvais

Bon (avec CONSULT-II)	▶	PASSER A L'ETAPE 22.
Bon (sans CONSULT-II)	▶	PASSER A L'ETAPE 23.
Mauvais	▶	Remplacer l'ensemble de la pédale d'accélérateur.

22	REMISE A ZERO DE LA MEMOIRE DE POSITION DE RALENTI DU CAPTEUR DE POSITION D'ACCELERATEUR

Avec CONSULT-II
1. Brancher à nouveau tous les connecteurs de faisceau débranchés.
2. Mettre le contact d'allumage sur ''ON''.
3. Sélectionner ''SIG POS ACC COUP'' (signal position accélérateur OFF) en mode ''TEST ACTIF'' de CONSULT-II.
4. Appuyer sur ''EFFAC''.

	▶	PASSER A L'ETAPE 24.

23	REMISE A ZERO DE LA MEMOIRE DE POSITION DE RALENTI DU CAPTEUR DE POSITION D'ACCELERATEUR

Sans CONSULT-II
1. Brancher à nouveau tous les connecteurs de faisceau débranchés.
2. Démarrer le moteur et l'amener à température normale de fonctionnement.
3. Laisser le moteur tourner au ralenti pendant 10 minutes.

	▶	PASSER A L'ETAPE 24.

24	VERIFIER SI L'INCIDENT EST INTERMITTENT

Se référer à ''DIAGNOSTIC DES DEFAUTS EN CAS D'INCIDENT INTERMITTENT'', page EC-3502.

	▶	**FIN DE L'INSPECTION**

Simpo PDF Merge and Split Unregistered Version - http://www.simpopdf.com

Logique de diagnostic de bord

Le défaut est détecté quand ...	Eléments de contrôles (causes possibles)
● Une tension extrêmement élevée est envoyée à l'ECM par le capteur de pression d'air de suralimentation lorsque le moteur tourne.	● Système d'air d'admission ● Système de turbocompresseur ● Capteur de pression d'air de suralimentation ● Faisceau ou connecteurs (Le circuit du capteur de pression d'air de suralimentation est en court-circuit.)

Procédure de confirmation de code de défaut (DTC)

REMARQUE :
Si le code DTC 0406 ''VOL AIR ADMI'' s'affiche avec le code DTC 0905 ''PRESSION TURBO'', effectuer un diagnostic des défauts pour le code DTC 0905 ''PRESSION TURBO'' en premier lieu. (Se reporter à la page EC-3643.)

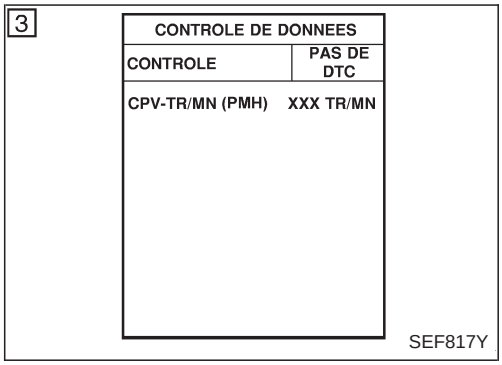

Avec CONSULT-II

1) Mettre le contact d'allumage sur ''ON''.
2) Régler CONSULT-II en mode ''CONTROLE DE DONNEES''.
3) Démarrer le moteur et l'amener à température normale de fonctionnement.
4) Conduire le véhicule.
5) Maintenir le régime moteur à plus de 4 000 tr/min pendant 10 secondes au minimum.
6) Si le DTC est détecté, effectuer une ''Procédure de diagnostic'', voir page EC-3565.

SANS CONSULT-II

1) Démarrer le moteur et l'amener à température normale de fonctionnement.
2) Conduire le véhicule.
3) Maintenir le régime moteur à plus de 4 000 tr/min pendant 10 secondes au minimum.
4) Arrêter le véhicule.
5) Mettre le contact d'allumage sur ''OFF'', attendre au moins 5 secondes, puis remettre le contact sur ''ON''.
6) Effectuer le ''Test de diagnostic mode II (résultats d'autodiagnostic)'' avec l'ECM.
7) Si le DTC est détecté, effectuer une ''Procédure de diagnostic'', voir page EC-3565.

Simpo PDF Merge and Split Unregistered Version - http://www.simpopdf.com

Procédure de diagnostic

1	VERIFIER LE SYSTEME D'AIR D'ADMISSION

Ecouter pour déceler une fuite d'air d'admission ou de colmatage après le capteur de température d'air d'admission.

Bon ou mauvais

Bon	▶	PASSER A L'ETAPE 2.
Mauvais	▶	Réparer ou remplacer.

2	VERIFIER LE CAPTEUR DE PRESSION D'AIR DE SURALIMENTATION

1. Déposer le capteur de pression d'air de suralimentation avec son connecteur de faisceau branché.
2. Mettre le contact d'allumage sur ''ON''.
3. Appliquer une pression au capteur de pression d'air de suralimentation avec une pompe génératrice de pression comme indiqué sur l'illustration.

PRECAUTION :

- **Toujours étalonner la jauge de la pompe au moment de l'utiliser.**
- **Effectuer la vérification à température ambiante [10°C - 30°C].**

4. Vérifier la tension de sortie entre la borne 2 du capteur d'air de suralimentation et la masse du moteur.

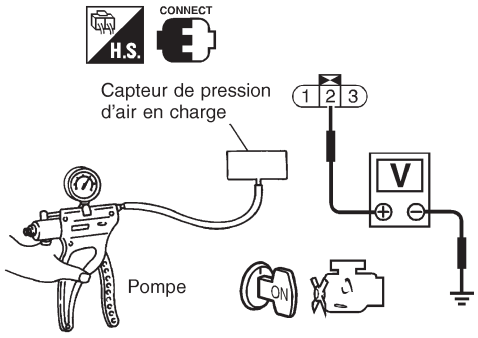

Pression (Relative à la pression atmosphérique)	Tension V
0 kPa (0 mbar, 0 mmHg)	1,9 - 3,0
+40 kPa (400 mbar, 300 mmHg)	La tension devrait être entre 0,6 et 1,0V supérieure à la valeur mesurée ci-dessus.

SEF449Z

Bon ou mauvais

Bon	▶	PASSER A L'ETAPE 3.
Mauvais	▶	Remplacer le capteur de pression d'air de suralimentation

3	VERIFIER LE FONCTIONNEMENT GENERAL DU TURBOCOMPRESSEUR

1. Démarrer le moteur et le laisser tourner au ralenti.
2. S'assurer que la tige de l'actionneur de commande de la soupape de décharge du turbocompresseur se déplace lorsque le moteur tourne jusqu'à 3 000 tr/min puis revient au régime ralenti

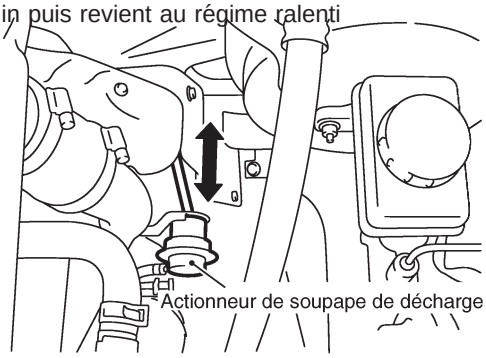

SEC255D

Bon ou mauvais

Bon	▶	PASSER A L'ETAPE 4.
Mauvais	▶	Se reporter à la section EM ''Inspection du Turbocompresseur''.

Simpo PDF Merge and Split Unregistered Version - http://www.simpopdf.com

Procédure de diagnostic (Suite)

4	VERIFIER SI L'INCIDENT EST INTERMITTENT
Se référer à ''DIAGNOSTIC DES DEFAUTS EN CAS D'INCIDENT INTERMITTENT'', page EC-3502.	
►	FIN DE L'INSPECTION

Simpo PDF Merge and Split Unregistered Version - http://www.simpopdf.com

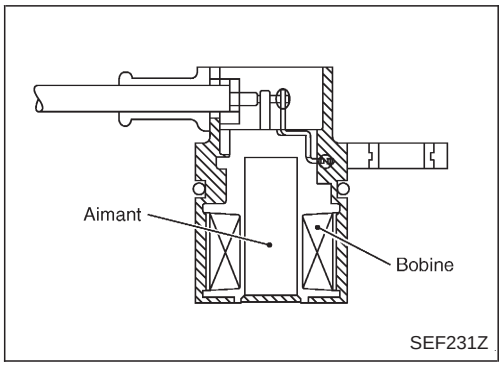

Description

Le capteur d'angle du vilebrequin (PMH) contrôle le régime moteur grâce au signal généré par la rotation d'une plaque avec 3 bossages fixée sur la poulie du vilebrequin. Le signal de sortie est détecté à 70° avant le PMH et envoyé à l'ECM. Le signal du capteur est utilisé pour les contrôles d'injection de carburant et d'avance d'injection de carburant.

Valeur de référence de CONSULT-II en mode de contrôle de données

Les données de spécification sont des valeurs de référence.

ELEMENT DE CONTROLE	CONDITION	SPECIFICATION
CPV·TR/MN (PMH)	● Compte-tours : Brancher ● Faire tourner le moteur et comparer l'indication du compte-tours avec la valeur affichée par CONSULT-II.	Valeur voisine de cette indiquée par CONSULT-II.

Bornes de l'ECM et valeurs de référence

Données de référence relevées entre chaque borne et la masse.

PRECAUTION :

Lors de la mesure de la tension d'entrée/sortie, ne pas utiliser les bornes de masse de l'ECM sous peine d'endommager le transistor de l'ECM. Utiliser une autre masse que celle des bornes de l'ECM.

BORNE N°	COULEUR DE CABLE	ELEMENT	CONDITION	DONNEE (tension continue ou impulsion)
44	Y	Capteur d'angle de vilebrequin (PMH)	Moteur en marche. └ **Pendant la montée en température** Régime de ralenti	Environ 0,04 V  SEF333Y
			Moteur en marche. └ **Pendant la montée en température** Le régime moteur est de 2 000 tr/mn.	Environ 0,04 V 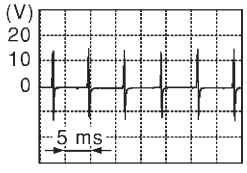 SEF334Y
47	BR	Masse du capteur d'angle du vilebrequin (PMH)	Moteur en marche. └ **Pendant la montée en température** Régime de ralenti	Environ 0 V

Simpo PDF Merge and Split Unregistered Version - http://www.simpopdf.com

Logique de diagnostic de bord

Le défaut est détecté quand ...	Eléments de contrôles (causes possibles)
● Le capteur envoie un signal incorrect à l'ECM au lancement du moteur et lorsqu'il tourne.	● Faisceau ou connecteurs (Le circuit du capteur est ouvert). ● Capteur d'angle de vilebrequin (PMH)

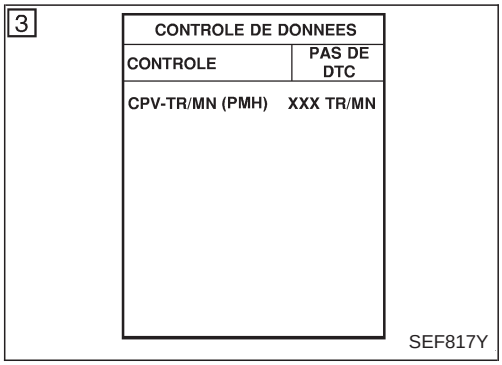

Procédure de confirmation de code de défaut (DTC)

Avant d'effectuer la procédure suivante, vérifier que la tension de la batterie est supérieure à 10 V.

AVEC CONSULT-II

1) Mettre le contact sur ''ON'' et régler CONSULT-II en mode ''CONTROLE DE DONNEES''.
2) Lancer le moteur pendant au moins 1 seconde.
3) Démarrer le moteur et le faire tourner pendant au moins 2 secondes au régime ralenti.
4) Si le DTC est détecté, effectuer une ''Procédure de diagnostic'', voir page EC-3570.

SANS CONSULT-II

1) Lancer le moteur pendant au moins 1 seconde.
2) Démarrer le moteur et le faire tourner pendant au moins 2 secondes au régime ralenti.
3) Mettre le contact d'allumage sur ''OFF'', attendre au moins 5 secondes, puis remettre le contact sur ''ON''.
4) Effectuer le ''Test de diagnostic mode II (résultats d'autodiagnostic)'' avec l'ECM.
5) Si le DTC est détecté, effectuer une ''Procédure de diagnostic'', voir page EC-3570.

Simpo PDF Merge and Split Unregistered Version - http://www.simpopdf.com

Schéma de câblage

EC-CKPS-01

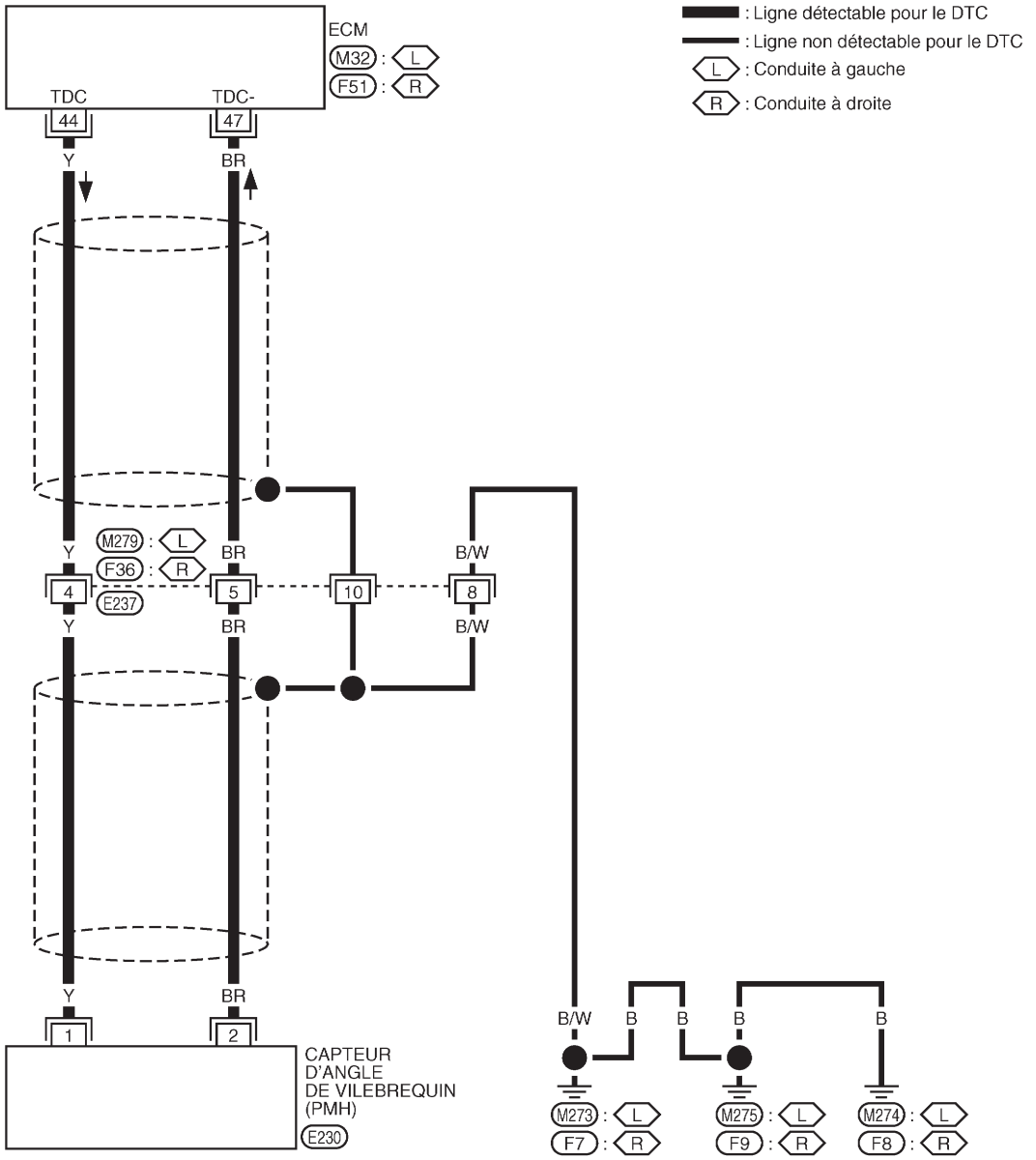

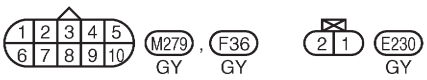

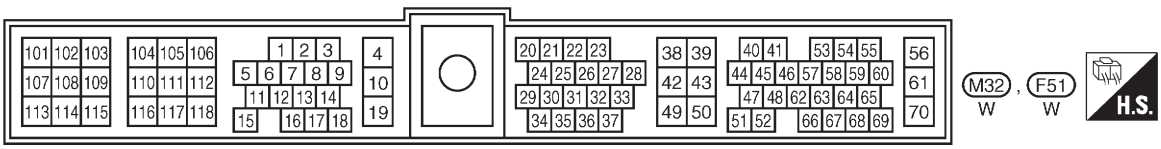

GEC281A

Simpo PDF Merge and Split Unregistered Version - http://www.simpopdf.com

Procédure de diagnostic

1	VERIFIER SI LE CIRCUIT DE MASSE DU CAPTEUR D'ANGLE DU VILEBREQUIN (PMH) EST OUVERT OU EN COURT-CIRCUIT

1. Mettre le contact d'allumage sur ''OFF''.
2. Desserrer et resserrer les vis de masse du moteur.

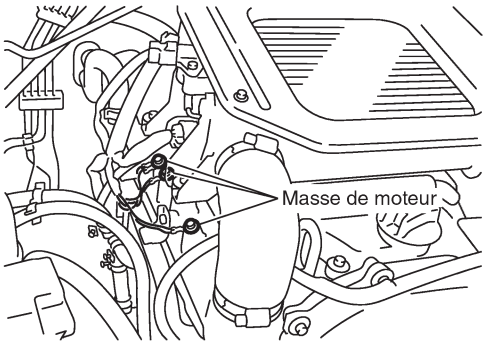

SEC245D

3. Débrancher les connecteurs de faisceau du capteur d'angle du vilebrequin (PMH) et de l'ECM.

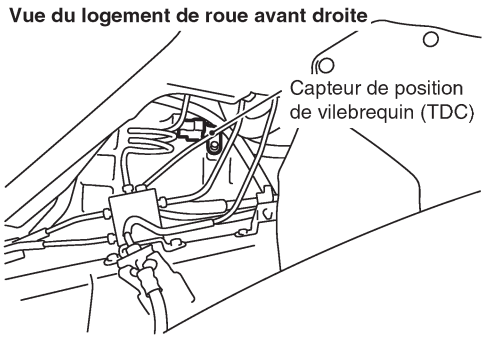

SEC238D

4. Vérifier la continuité de faisceau entre la borne 47 de l'ECM et la borne 2 du capteur de position de vilebrequin (PMH). Se reporter au schéma de câblage.
   Il doit y avoir continuité.
5. Vérifier également que le faisceau n'est pas ouvert ou en court-circuit à l'alimentation.

Bon ou mauvais

Bon	▶	PASSER A L'ETAPE 2.
Mauvais	▶	PASSER A L'ETAPE 3.

2	DETECTER LA PIECE DEFECTUEUSE

Vérifier les points suivants.
- Connecteurs de faisceaux M279, E237 (conduite à gauche)
- Connecteurs de faisceaux F36, E237 (conduite à droite)
- Faisceau ouvert ou en court-circuit entre le capteur d'angle du vilebrequin (PMH) et l'ECM

	▶	Réparer le faisceau ou les connecteurs.

Simpo PDF Merge and Split Unregistered Version - http://www.simpopdf.com

Procédure de diagnostic (Suite)

3	VERIFIER SI LE CIRCUIT DU SIGNAL D'ENTREE DU CAPTEUR D'ANGLE DU VILEBREQUIN (PMH) EST OUVERT OU EN COURT-CIRCUIT

1. Vérifier la continuité du faisceau entre la borne 1 et la borne 44 de l'ECM. Se référer au schéma de câblage.
   Il doit y avoir continuité.
2. Vérifier également que le faisceau n'est pas ouvert ou en court-circuit à l'alimentation.

Bon ou mauvais

Bon	▶	PASSER A L'ETAPE 5.
Mauvais	▶	PASSER A L'ETAPE 4.

4	DETECTER LA PIECE DEFECTUEUSE

Vérifier les points suivants.
- Connecteurs de faisceaux M279, E237 (conduite à gauche)
- Connecteurs de faisceaux F36, E237 (conduite à droite)
- Faisceau ouvert ou en court-circuit entre le capteur d'angle du vilebrequin (PMH) et l'ECM

	▶	Réparer le faisceau ou les connecteurs.

5	VERIFIER LE CAPTEUR D'ANGLE DU VILEBREQUIN (PMH) I

1. Desserrer la vis de fixation et déposer le capteur d'angle du vilebrequin (PMH).
2. Effectuer un contrôle visuel du capteur pour déceler un éventuel burinage.

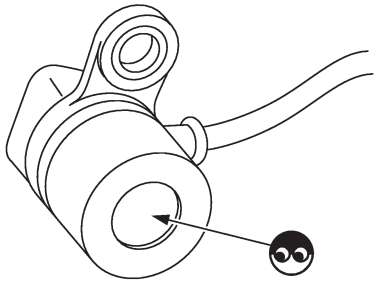

SEF232Z

Bon ou mauvais

Bon	▶	PASSER A L'ETAPE 6.
Mauvais	▶	Remplacer le capteur d'angle de vilebrequin (PMH).

6	VERIFIER LE CAPTEUR D'ANGLE DU VILEBREQUIN (PMH) II

1. Débrancher le connecteur de faisceau du capteur d'angle de vilebrequin (PMH).
2. Vérifier la résistance entre les bornes 1 et 2 du capteur d'angle du vilebrequin (PMH).



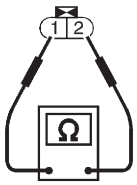

Résistance: 495 - 605Ω (à 20°C)

SEC248D

Bon ou mauvais

Bon	▶	PASSER A L'ETAPE 7.
Mauvais	▶	Remplacer le capteur d'angle de vilebrequin (PMH).

Simpo PDF Merge and Split Unregistered Version - http://www.simpopdf.com

Procédure de diagnostic (Suite)

7	POSER LE CAPTEUR DE POSITION DE VILEBREQUIN

1. Poser le capteur de position de vilebrequin (PMH) et serrer provisoirement le boulon de fixation.
2. Tourner le capteur de position de vilebrequin (PMH) dans le sens des aiguilles d'une montre jusqu'à ce qu'il s'arrête.
3. Serrer le boulon de fixation.

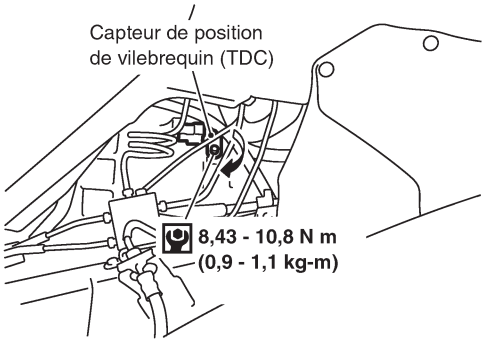

SEC247D

►	PASSER A L'ETAPE 8.

8	VERIFIER SI L'INCIDENT EST INTERMITTENT
Se référer à ''DIAGNOSTIC DES DEFAUTS EN CAS D'INCIDENT INTERMITTENT'', page EC-3502.	
►	**FIN DE L'INSPECTION**

Simpo PDF Merge and Split Unregistered Version - http://www.simpopdf.com

Logique de diagnostic de bord

L'ECM vérifie si la tension de la batterie est dans la tolérance exigée par le système de gestion moteur.

Le défaut est détecté quand ...	Eléments de contrôles (causes possibles)
● La tension reçue par l'ECM est anormalement élevée.	● Démarrage avec des câbles de dépannage incorrect ● Batterie ● Alternateur ● ECM

Procédure de confirmation de code de défaut (DTC)

Avec CONSULT-II

1) Vérifier les points suivants.
● Les câbles de connexion sont branchés pour le démarrage à l'aide d'une batterie auxiliaire.
● La batterie ou l'alternateur a été remplacé(e).
Si ''oui'' pour un des éléments ou les deux, sauter les étapes suivantes et effectuer la ''Procédure de diagnostic'', voir page EC-3574.
2) Vérifier si la cosse de la borne positive de la batterie est branchée correctement. Si le résultat n'est pas satisfaisant, la reconnecter correctement.
3) Vérifier que l'alternateur fonctionne correctement. Se référer à la section EL (''SYSTEME DE CHARGE'').
4) Mettre le contact sur ''ON'' et régler CONSULT-II en mode ''CONTROLE DE DONNEES''.
5) Attendre 1 minute.
6) Si le DTC est détecté, effectuer une ''Procédure de diagnostic'', voir page EC-3574.
Si le DTC n'est pas détecté, passer à l'étape suivante.
7) Démarrer le moteur et le laisser tourner au ralenti pendant 1 minute.
8) Si le DTC est détecté, effectuer une ''Procédure de diagnostic'', voir page EC-3574.

Sans CONSULT-II

1) Vérifier les points suivants.
● Les câbles volants sont branchés pour le démarrage par batterie auxiliaire
● La batterie ou l'alternateur a été remplacé(e).
Si ''oui'' pour un des éléments ou les deux, sauter les étapes suivantes et effectuer la ''Procédure de diagnostic'', voir page EC-3574.
2) Vérifier si la cosse de la borne positive de la batterie est branchée correctement. Si le résultat n'est pas satisfaisant, la reconnecter correctement.
3) Vérifier que l'alternateur fonctionne correctement. Se référer à la section EL (''SYSTEME DE CHARGE'').
4) Mettre le contact d'allumage sur ''ON'' et attendre 1 minute.
5) Mettre le contact sur ''OFF'', attendre 5 secondes, puis remettre le contact sur ''ON''.
6) Effectuer le ''Test de diagnostic mode II (résultats d'autodiagnostic)'' avec l'ECM.
7) Si le DTC est détecté, effectuer une ''Procédure de diagnostic'', voir page EC-3574.
Si le DTC n'est pas détecté, passer à l'étape suivante.
8) Démarrer le moteur et le laisser tourner au ralenti pendant 1 minute.
9) Mettre le contact sur ''OFF'', attendre 5 secondes, puis remettre le contact sur ''ON''.
10) Effectuer le ''Test de diagnostic mode II (résultats d'autodiagnostic)'' avec l'ECM.
11) Si le DTC est détecté, effectuer une ''Procédure de diagnostic'', voir page EC-3574.

Simpo PDF Merge and Split Unregistered Version - http://www.simpopdf.com

Procédure de diagnostic

1	DEBUT DE L'INSPECTION	
Les câbles de connexion sont-ils raccordés pour le démarrage à l'aide d'une batterie de jecours?		
Oui ou Non		
Oui	▶	PASSER A L'ETAPE 3.
Non	▶	PASSER A L'ETAPE 2.

2	VERIFIER LA BATTERIE ET L'ALTERNATEUR	
Vérifier que le modèle de batterie et d'alternateur installés est correct. Se référer à la section EL (''BATTERIE'' et ''SYSTEME DE CHARGE'').		
Bon ou mauvais		
Bon	▶	PASSER A L'ETAPE 5.
Mauvais	▶	Remplacer par le modèle correct.

3	VERIFIER LE BRANCHEMENT DES CABLES DE CONNEXION	
Vérifier que les câbles de connexion sont branchés dans l'ordre correct.		

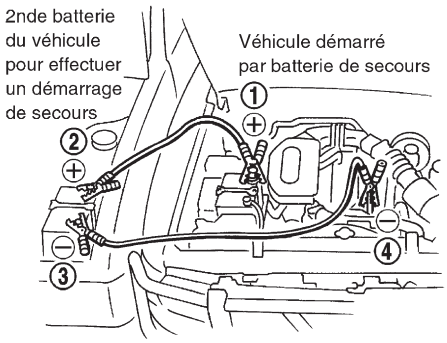

SEF488Z

Bon ou mauvais		
Bon	▶	PASSER A L'ETAPE 4.
Mauvais	▶	Rebrancher correctement les câbles volants.

4	VERIFIER LA BATTERIE DE SECOURS	
Vérifier que la batterie de secours est un modèle 12 V.		
Bon ou mauvais		
Bon	▶	PASSER A L'ETAPE 5.
Mauvais	▶	Changer de batterie d'appoint.

5	EFFECTUER DE NOUVEAU UNE PROCEDURE DE CONFIRMATION DTC	
Effectuer de nouveau une ''Procédure de confirmation de DTC'', voir page EC-3574.		
Bon ou mauvais		
Bon	▶	PASSER A L'ETAPE 6.
Mauvais	▶	Remplacer l'ECM.

Simpo PDF Merge and Split Unregistered Version - http://www.simpopdf.com

Procédure de diagnostic (Suite)

6	VERIFIER L'ETAT DES COMPOSANTS ELECTRIQUES	
Vérifier l'état des composants suivants. ● Faisceau de câbles et connecteurs brûlés ● Fusibles en court-circuit		
Bon ou mauvais		
Bon	▶	**FIN DE L'INSPECTION**
Mauvais	▶	Réparer ou remplacer les pièces défectueuses.

Simpo PDF Merge and Split Unregistered Version - http://www.simpopdf.com

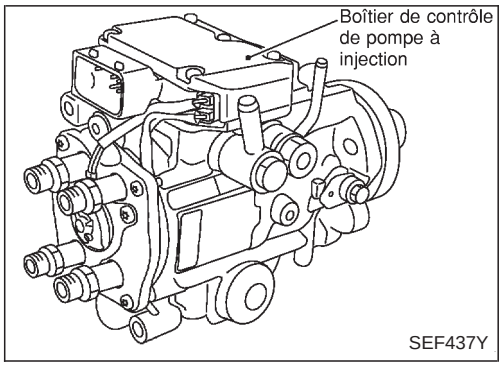

Description

DESCRIPTION DU SYSTEME

L'ECM et l'ensemble de la pompe d'injection de carburant à commande électronique (abrégé ensuite en pompe d'injection) communiquent en temps réel (échange de signaux).
L'ECM transmet les signaux de la quantité d'injection de carburant cible, d'avance à l'injection de carburant cible, de vitesse du moteur, etc., et reçoit les signaux de vitesse de la pompe et de la température du carburant, etc. du boîtier de commande de la pompe d'injection.
Avec ces signaux, la pompe d'injection commande de manière optimale le débit d'injection et l'avance de l'injection au niveau de la soupape de décharge et de la soupape de commande.
La pompe d'injection possède un système de diagnostic intégré qui détecte les défauts des capteurs ou des actionneurs qui se trouvent dans la pompe. Ces informations concernant le défaut sont transférées via la ligne (circuit) du boîtier de commande de la pompe d'injection vers l'ECM.

COMMANDE DU DEBIT D'INJECTION

En fonction de la valeur théorique envoyée par l'ECM, le débit d'injection dépend de la commande de la soupape de décharge de la pompe d'injection et de la modification du temps d'ouverture de l'aiguille.

COMMANDE DE L'AVANCE A L'INJECTION DE CARBURANT

Sur la base de la valeur théorique envoyée par l'ECM, l'avance de l'injection dépend, en fonction du tarage ressort du système d'avance, du cycle de fonctionnement de la soupape de commande d'avance qui se trouve dans la pompe d'injection et du réglage de la pression dans la chambre haute pression du piston du système d'avance.

CAPTEUR DE TEMPERATURE DU CARBURANT

Le capteur relève la température du carburant dans la pompe d'injection et calibre le débit d'injection en fonction de la température du carburant.

CAPTEUR DE LA POSITION DE L'ANNEAU A CAME

Le capteur détecte le passage du bossage qui se trouve sur l'anneau à came de la pompe d'injection à l'aide d'un élément semi-conducteur à réluctance variable. Le capteur de position de l'anneau à cames assure la synchronisation de l'anneau à cames, et détecte l'avance réelle. Le boîtier de commande de la pompe d'injection mesure la révolution de la pompe d'injection grâce au signal du capteur de position de l'anneau à cames.

Simpo PDF Merge and Split Unregistered Version - http://www.simpopdf.com

Valeur de référence de CONSULT-II en mode de contrôle de données

Remarques : Les données de spécification sont des valeurs de référence.

ELEMENT DE CONTROLE	CONDITION		SPECIFICATION
CAP TEMP CARB	● moteur : Une fois le moteur amené à la température normale de fonctionnement		Plus de 40°C
SOUPAPE/FUITE (soupape de décharge)	● moteur : Une fois le moteur amené à la température normale de fonctionnement	Ralenti	Environ 13°CA
INJ TIMG C/V	● moteur : faire monter le moteur en température, puis le faire tourner au ralenti.		Environ 50 % - 70 %
COUP/C DECELER	● moteur : Une fois le moteur amené à la température mornale de fonctionnement	Ralenti	OFF
CAP BARO	● Contact d'allumage : ON		Altitude Environ 0 m : Environ 100,62 kPa (1,0062 bar, 1,026 kg/cm^2) Environ 1 000 m : Environ 88,95 kPa (0,8895 bar, 0,907 kg/cm^2) Environ 1 500 m : Environ 83,16 kPa (0,8316 bar, 0,848 kg/cm^2) Environ 2 000 m : Environ 78,36 kPa (0,7836 bar, 0,799 kg/cm^2)

Bornes de l'ECM et valeurs de référence

Données de référence relevées entre chaque borne et la masse.

PRECAUTION :

Lors de la mesure de la tension d'entrée/sortie, ne pas utiliser les bornes de masse de l'ECM sous peine d'endommager le transistor de l'ECM. Utiliser une autre masse que celle des bornes de l'ECM.

BORNE N°	COULEUR DE CABLE	ELEMENT	CONDITION	DONNEES (tension continue)
33	G/Y	Pompe d'injection de carburant à commande électronique	Moteur en marche. └ **Pendant la montée en température** Régime de ralenti	Environ 2,4 V
40	PU	Pompe d'injection de carburant à commande électronique	Moteur en marche. └ **Pendant la montée en température** Régime de ralenti	Environ 2,4 V
52	L/W	Pompe d'injection de carburant à commande électronique	Moteur en marche. └ Régime de ralenti	Environ 0,1 V

Simpo PDF Merge and Split Unregistered Version - http://www.simpopdf.com

Bornes de l'ECM et valeurs de référence (Suite)

BORNE N°	COU-LEUR DE CABLE	ELEMENT	CONDITION	DONNEES (tension continue)
53	L/R	Pompe d'injection de carburant à commande électronique	Moteur en marche. └ Régime de ralenti	Environ 0,45 V
			Moteur en marche. └ Le régime moteur est de 2 000 tr/mn.	Environ 0,7 V

Simpo PDF Merge and Split Unregistered Version - http://www.simpopdf.com

Logique de diagnostic de bord

Le défaut est détecté quand ...	Eléments de contrôles (causes possibles)
● Le capteur de position de l'anneau à came (intégré à la pompe d'injection) envoie un signal de tension incorrect au boîtier de commande de la pompe.	● Faisceau ou connecteurs (le circuit électronique de la pompe d'injection est ouvert ou en court-circuit) ● Pompe d'injection de carburant à commande électronique

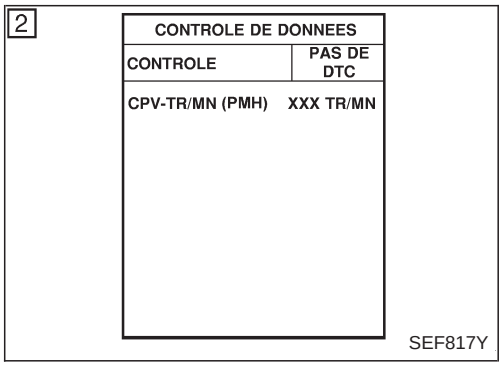

Procédure de confirmation de code de défaut (DTC)

AVEC CONSULT-II

1) Mettre le contact d'allumage sur ''ON'', puis attendre au moins 2 secondes.
2) Régler CONSULT-II en mode ''CONTROLE DE DONNEES''.
3) Démarrer le moteur et le faire tourner pendant au moins 2 secondes au régime ralenti.
   (si le moteur ne tourne pas, mettre le contact d'allumage sur ''DEPART'' pendant 2 secondes au moins)
4) Si le DTC est détecté, effectuer une ''Procédure de diagnostic'', voir page EC-3582.

SANS CONSULT-II

1) Mettre le contact d'allumage sur ''ON'', puis attendre au moins 2 secondes.
2) Démarrer le moteur et le faire tourner pendant au moins 2 secondes au régime ralenti.
   (si le moteur ne tourne pas, mettre le contact d'allumage sur ''START'' pendant 2 secondes au moins)
3) Mettre le contact d'allumage sur ''OFF'', attendre au moins 5 secondes, puis remettre le contact sur ''ON''.
4) Effectuer le ''Test de diagnostic mode II (résultats d'autodiagnostic)'' avec l'ECM.
5) Si le DTC est détecté, effectuer une ''Procédure de diagnostic'', voir page EC-3582.

Simpo PDF Merge and Split Unregistered Version - http://www.simpopdf.com

Schéma de câblage

MODELES A DIRECTION A GAUCHE

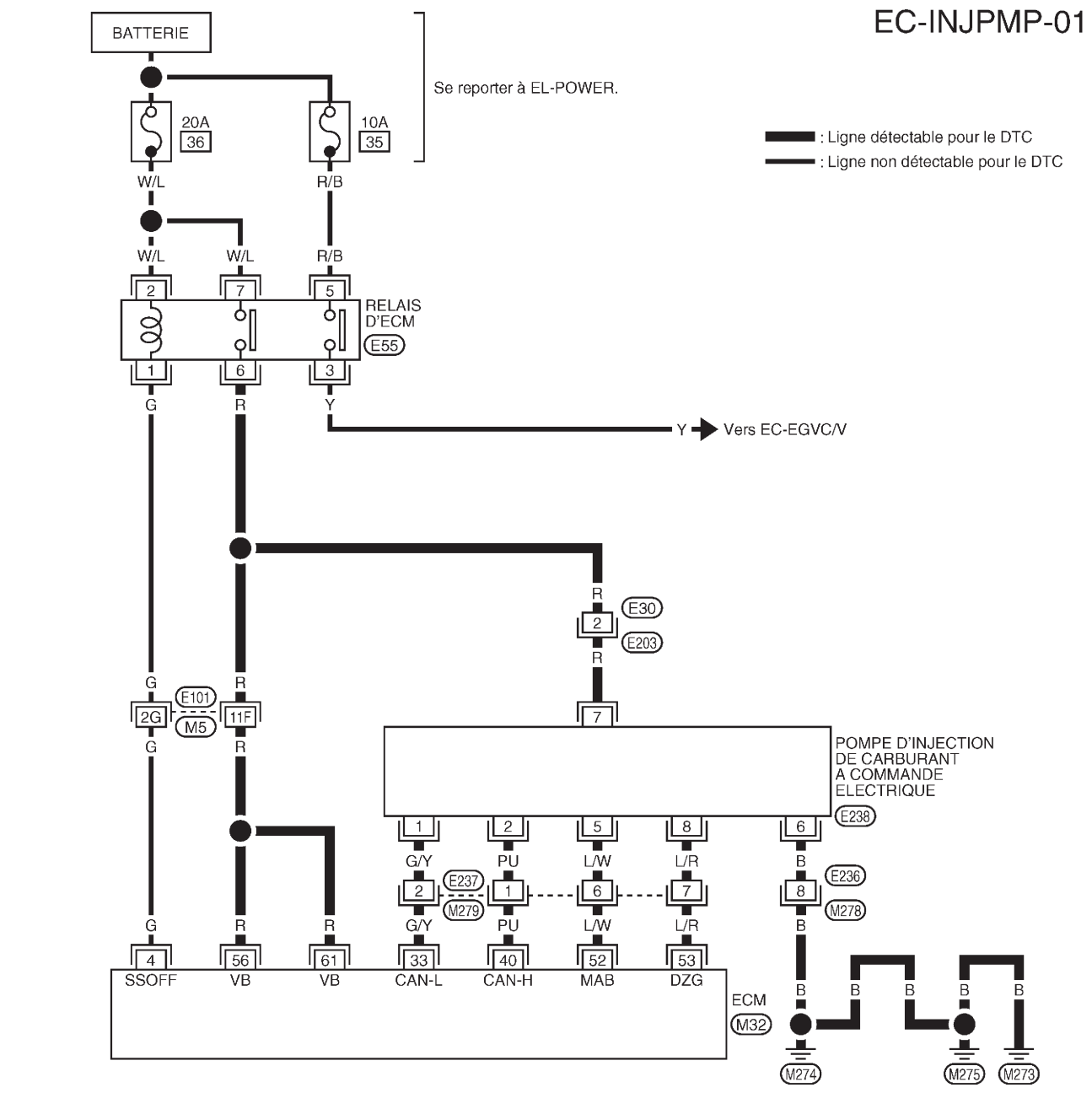

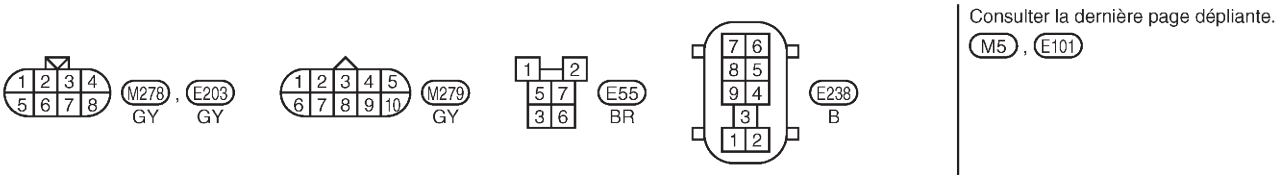

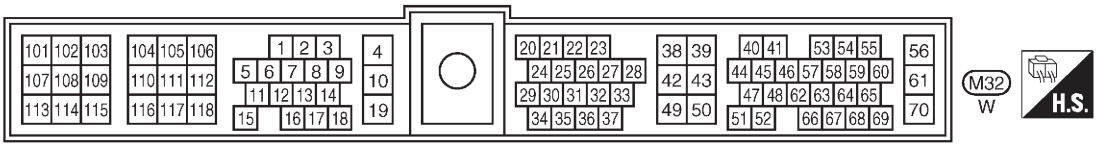

GEC275A

Simpo PDF Merge and Split Unregistered Version - http://www.simpopdf.com

Schéma de câblage (Suite)

MODELES A DIRECTION A DROITE

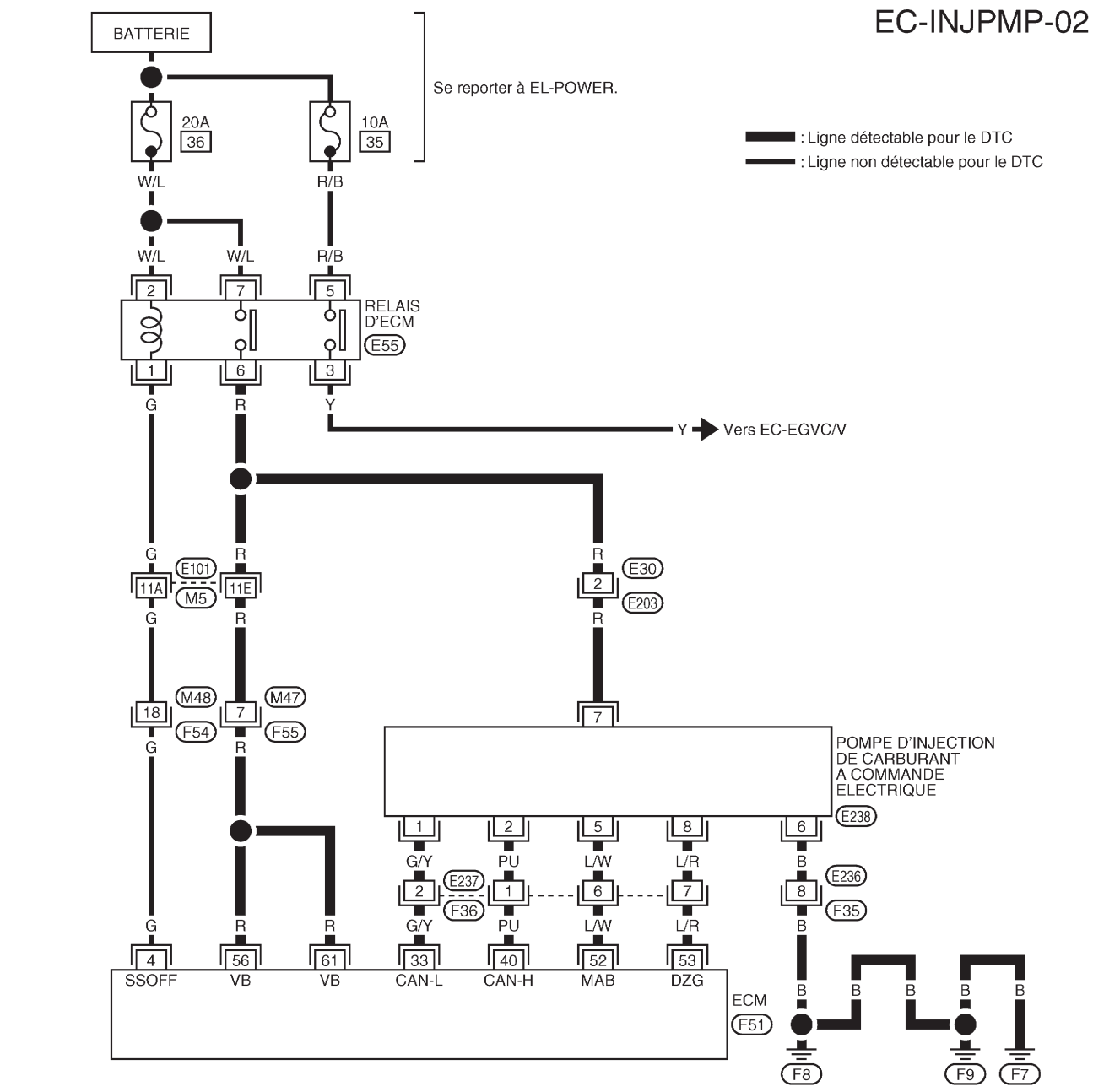

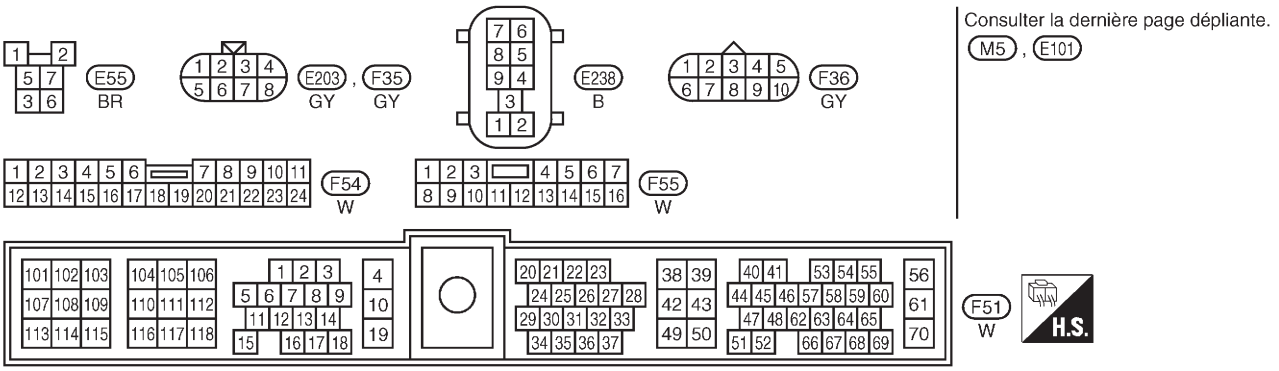

GEC276A

Simpo PDF Merge and Split Unregistered Version - http://www.simpopdf.com

Procédure de diagnostic

1	VERIFIER LE CIRCUIT D'ALIMENTATION DE LA POMPE D'INJECTION

1. Mettre le contact d'allumage sur ''OFF''.
2. Débrancher le connecteur de la pompe d'injection.

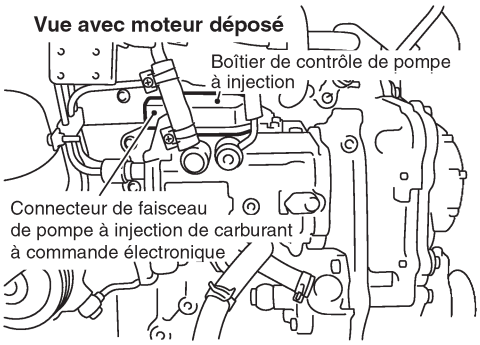

SEC228D

3. Mettre le contact d'allumage sur ''ON''.
4. Vérifier la tension entre la borne 7 de la pompe et la masse.

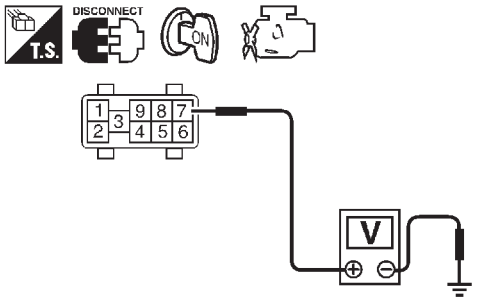

Tension : tension de la batterie

SEF438Y

Bon ou mauvais

Bon	▶	PASSER A L'ETAPE 3.
Mauvais	▶	PASSER A L'ETAPE 2.

2	DETECTER LA PIECE DEFECTUEUSE

Vérifier les points suivants.
- Connecteurs de faisceaux E30, E203
- Connecteurs de faisceaux E101, M5
- Connecteurs de faisceaux M47, F55 (conduite à droite)
- Faisceau ouvert ou en court-circuit entre la pompe d'injection et l'ECM
- Faisceau ouvert ou en court-circuit entre la pompe d'injection et le relais d'ECM

	▶	Réparer les faisceaux ou connecteurs en circuit ouvert ou en court-circuit à la masse ou à l'alimentation.

3	VERIFIER SI LE CIRCUIT DE MASSE DE LA POMPE D'INJECTION EST OUVERT OU EN COURT-CIRCUIT

1. Mettre le contact d'allumage sur ''OFF''.
2. Vérifier la continuité du faisceau entre la borne 6 de la pompe d'injection et la masse. Se référer au schéma de câblage.
   Il doit y avoir continuité.
3. Vérifier également que le faisceau n'est pas ouvert ou en court-circuit à l'alimentation.

Bon ou mauvais

Bon	▶	PASSER A L'ETAPE 5.
Mauvais	▶	PASSER A L'ETAPE 4.

Simpo PDF Merge and Split Unregistered Version - http://www.simpopdf.com

Procédure de diagnostic (Suite)

4	DETECTER LA PIECE DEFECTUEUSE
Vérifier les points suivants. ● Connecteurs de faisceaux E236, M278 (conduite à gauche) ● Connecteurs de faisceaux E236, F35 (conduite à droite) ● Faisceau en circuit ouvert ou en court-circuit entre la pompe d'injection et la masse du moteur	
►	Réparer les faisceaux ou connecteurs en circuit ouvert ou en court-circuit à la masse ou à l'alimentation.

5	VERIFIER SI LA LIGNE DE COMMUNICATION EST OUVERTE OU EN COURT-CIRCUIT

1. Vérifier la continuité entre les bornes suivantes. Se référer au schéma de câblage.

Pompe à injection de carburant à commande électronique	ECM
1	33
2	40
5	52
8	53

MTBL0444

Il doit y avoir continuité.

2. Vérifier également que le faisceau n'est pas ouvert ou en court-circuit à l'alimentation.

Bon ou mauvais

Bon	►	PASSER A L'ETAPE 7.
Mauvais	►	PASSER A L'ETAPE 6.

6	DETECTER LA PIECE DEFECTUEUSE
Vérifier les points suivants. ● Connecteurs de faisceaux E237, M279 (conduite à gauche) ● Connecteurs de faisceaux E237, F36 (conduite à droite) ● Faisceau ouvert ou en court-circuit entre la pompe d'injection et l'ECM	
►	Réparer les faisceaux ou connecteurs en circuit ouvert ou en court-circuit à la masse ou à l'alimentation.

7	VERIFIER SI L'INCIDENT EST INTERMITTENT
Se référer à 'DIAGNOSTIC DES DEFAUTS EN CAS D'INCIDENT INTERMITTENT', page EC-3502.	

Bon ou mauvais

Bon	►	Remplacer la pompe d'injection de carburant.
Mauvais	►	Réparer les faisceaux ou connecteurs en circuit ouvert ou en court-circuit à la masse ou à l'alimentation.

Simpo PDF Merge and Split Unregistered Version - http://www.simpopdf.com

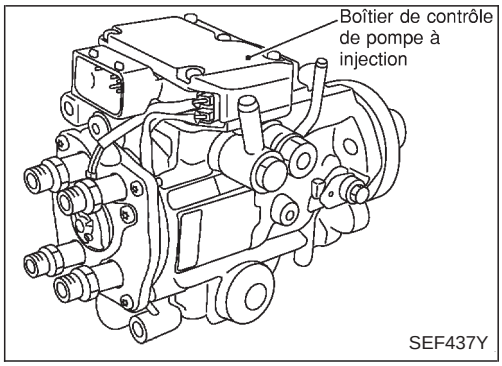

Description

DESCRIPTION DU SYSTEME

L'ECM et l'ensemble de la pompe d'injection de carburant à commande électronique (abrégé ensuite en pompe d'injection) communiquent en temps réel (échange de signaux).
L'ECM transmet les signaux de la quantité d'injection de carburant cible, d'avance à l'injection de carburant cible, de vitesse du moteur, etc., et reçoit les signaux de vitesse de la pompe et de la température du carburant, etc. du boîtier de commande de la pompe d'injection.
Avec ces signaux, la pompe d'injection commande de manière optimale le débit d'injection et l'avance de l'injection au niveau de la soupape de décharge et de la soupape de commande.
La pompe d'injection possède un système de diagnostic intégré qui détecte les défauts des capteurs ou des actionneurs qui se trouvent dans la pompe. Ces informations concernant le défaut sont transférées via la ligne (circuit) du boîtier de commande de la pompe d'injection vers l'ECM.

COMMANDE DU DEBIT D'INJECTION

En fonction de la valeur théorique envoyée par l'ECM, le débit d'injection dépend de la commande de la soupape de décharge de la pompe d'injection et de la modification du temps d'ouverture de l'aiguille.

COMMANDE DE L'AVANCE A L'INJECTION DE CARBURANT

Sur la base de la valeur théorique envoyée par l'ECM, l'avance de l'injection dépend, en fonction du tarage ressort du système d'avance, du cycle de fonctionnement de la soupape de commande d'avance qui se trouve dans la pompe d'injection et du réglage de la pression dans la chambre haute pression du piston du système d'avance.

CAPTEUR DE TEMPERATURE DU CARBURANT

Le capteur relève la température du carburant dans la pompe d'injection et calibre le débit d'injection en fonction de la température du carburant.

CAPTEUR DE LA POSITION DE L'ANNEAU A CAME

Le capteur détecte le passage du bossage qui se trouve sur l'anneau à came de la pompe d'injection à l'aide d'un élément semi-conducteur à réluctance variable. Le capteur de position de l'anneau à cames assure la synchronisation de l'anneau à cames, et détecte l'avance réelle. Le boîtier de commande de la pompe d'injection mesure la révolution de la pompe d'injection grâce au signal du capteur de position de l'anneau à cames.

Simpo PDF Merge and Split Unregistered Version - http://www.simpopdf.com

Valeur de référence de CONSULT-II en mode de contrôle de données

Remarques : Les données de spécification sont des valeurs de référence.

ELEMENT DE CONTROLE	CONDITION		SPECIFICATION
CAP TEMP CARB	● moteur : Une fois le moteur chaud		Plus de 40°C
SOUPAPE/FUITE (soupape de décharge)	● moteur : Une fois le moteur chaud	Ralenti	Environ 13°CA
INJ TIMG C/V	● moteur : faire chauffer le moteur, puis le faire tourner au ralenti.		Environ 50 % - 70 %
COUP/C DECELER	● moteur : Une fois le moteur chaud	Ralenti	ARR
CAP BARO	● Contact d'allumage : ON		Altitude Environ 0 m : Environ 100,62 kPa (1,0062 bar, 1,026 kg/cm^2) Environ 1 000 m : Environ 88,95 kPa (0,8895 bar, 0,907 kg/cm^2) Environ 1 500 m : Environ 83,16 kPa (0,8316 bar, 0,848 kg/cm^2) Environ 2 000 m : Environ 78,36 kPa (0,7836 bar, 0,799 kg/cm^2)

Bornes de l'ECM et valeurs de référence

Données de référence relevées entre chaque borne et la masse.

PRECAUTION :

Lors de la mesure de la tension d'entrée/sortie, ne pas utiliser les bornes de masse de l'ECM sous peine d'endommager le transistor de l'ECM. Utiliser une autre masse que celle des bornes de l'ECM.

BORNE N°	COULEUR DE CABLE	ELEMENT	CONDITION	DONNEES (tension continue)
33	G/Y	Pompe d'injection de carburant à commande électronique	Moteur en marche. └ **Pendant la montée en température** Régime de ralenti	Environ 2,4 V
40	PU	Pompe d'injection de carburant à commande électronique	Moteur en marche. └ **Pendant la montée en température** Régime de ralenti	Environ 2,4 V
52	L/W	Pompe d'injection de carburant à commande électronique	Moteur en marche. └ Régime de ralenti	Environ 0,1 V
53	L/R	Pompe d'injection de carburant à commande électronique	Moteur en marche. └ Régime de ralenti	Environ 0,45 V
			Moteur en marche. └ Le régime moteur est de 2 000 tr/mn.	Environ 0,7 V

Simpo PDF Merge and Split Unregistered Version - http://www.simpopdf.com

Logique de diagnostic de bord

Le défaut est détecté quand ...	Eléments de contrôles (causes possibles)
● Le traitement du signal d'entrée de la pompe d'injection [signal du capteur de position de l'arbres à cames (PMH)] est incorrect.	● Faisceau ou connecteurs (le circuit électronique de la pompe d'injection est ouvert ou en court-circuit) ● Pompe d'injection de carburant à commande électronique

Simpo PDF Merge and Split Unregistered Version - http://www.simpopdf.com

2

CONTROLE DE DONNEES	
CONTROLE	PAS DE DTC
CPV-TR/MN (PMH)	XXX TR/MN

SEF817Y

Procédure de confirmation de code de défaut (DTC)

AVEC CONSULT-II

1) Mettre le contact d'allumage sur ''ON'', puis attendre au moins 2 secondes.
2) Régler CONSULT-II en mode ''CONTROLE DE DONNEES''.
3) Démarrer le moteur et le faire tourner pendant au moins 2 secondes au régime ralenti.
   (si le moteur ne tourne pas, mettre le contact d'allumage sur ''START'' pendant 2 secondes au moins)
4) Si le DTC 0407 est détecté, effectuer une ''Procédure de diagnostic'', voir page EC-3571.
   Si le DTC 0702 est détecté, effectuer une ''Procédure de diagnostic'', voir page EC-3590.

SANS CONSULT-II

1) Mettre le contact d'allumage sur ''ON'', puis attendre au moins 2 secondes.
2) Démarrer le moteur et le faire tourner pendant au moins 2 secondes au régime ralenti.
   (si le moteur ne tourne pas, mettre le contact d'allumage sur ''START'' pendant 2 secondes au moins)
3) Mettre le contact d'allumage sur ''OFF'', attendre au moins 5 secondes, puis remettre le contact sur ''ON''.
4) Effectuer le ''Test de diagnostic mode II (résultats d'autodiagnostic)'' avec l'ECM.
5) Si le DTC 0407 est détecté, effectuer une ''Procédure de diagnostic'', voir page EC-3571.
   Si le DTC 0702 est détecté, effectuer une ''Procédure de diagnostic'', voir page EC-3590.

Simpo PDF Merge and Split Unregistered Version - http://www.simpopdf.com

Schéma de câblage

MODELES A DIRECTION A GAUCHE

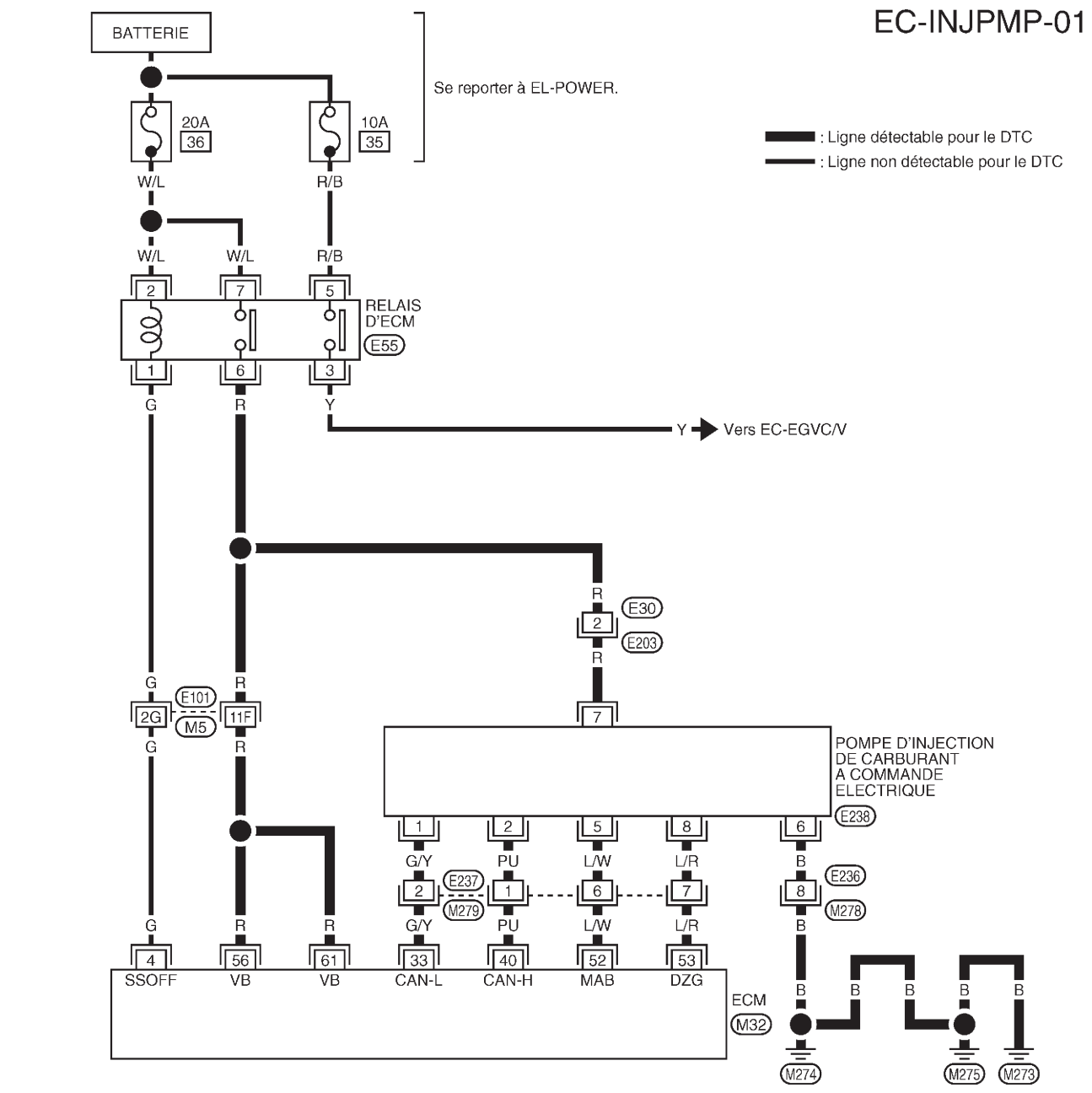

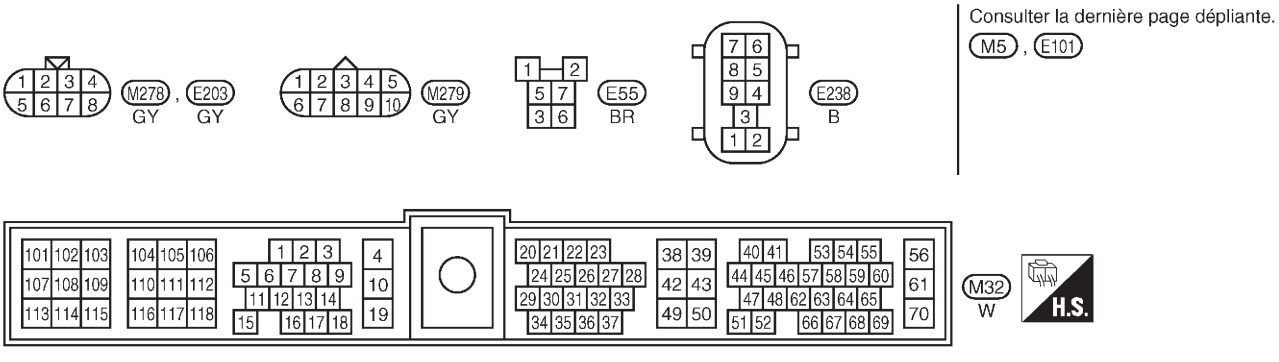

GEC275A

Simpo PDF Merge and Split Unregistered Version - http://www.simpopdf.com

Schéma de câblage (Suite)

MODELES A DIRECTION A DROITE

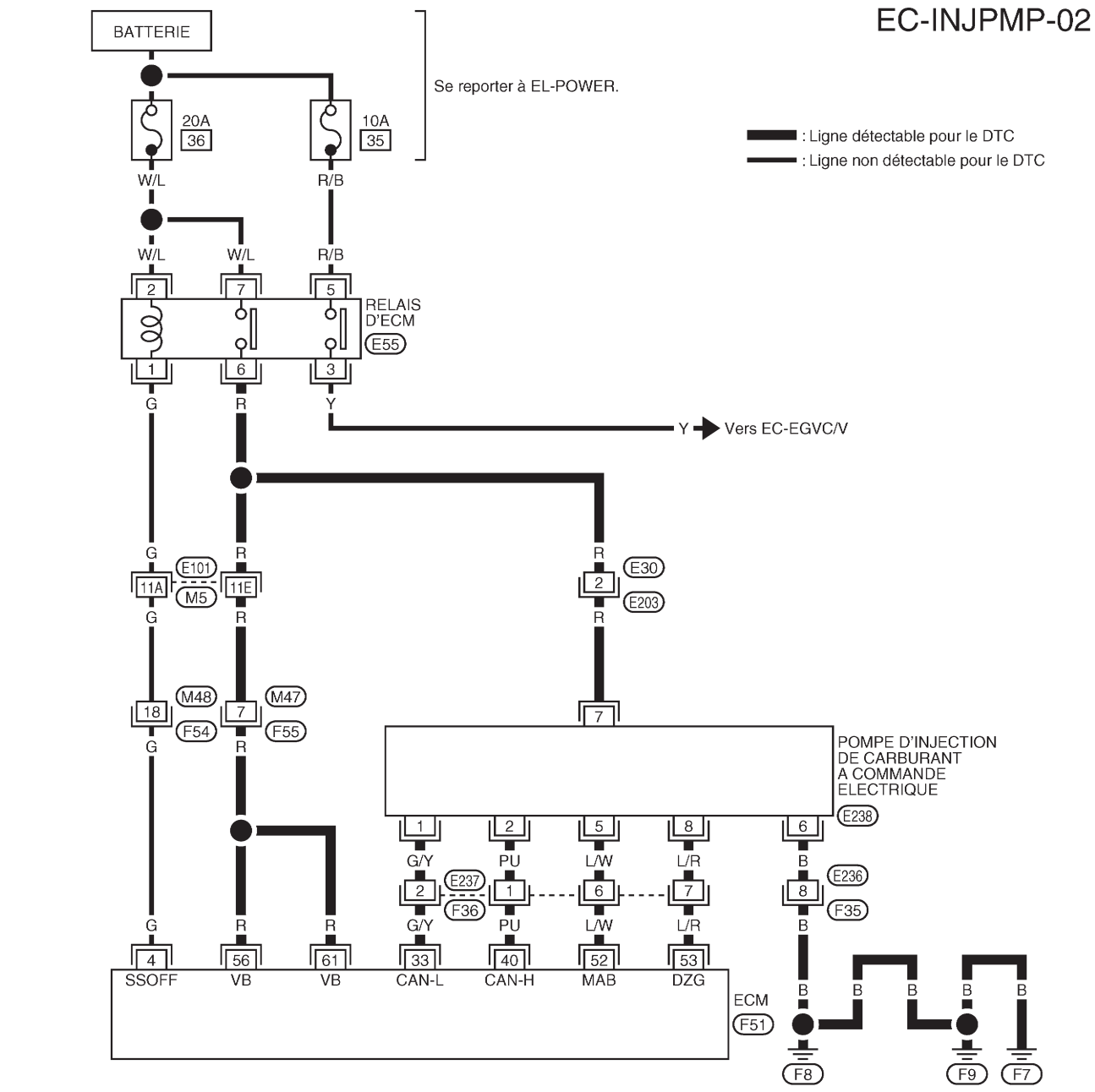

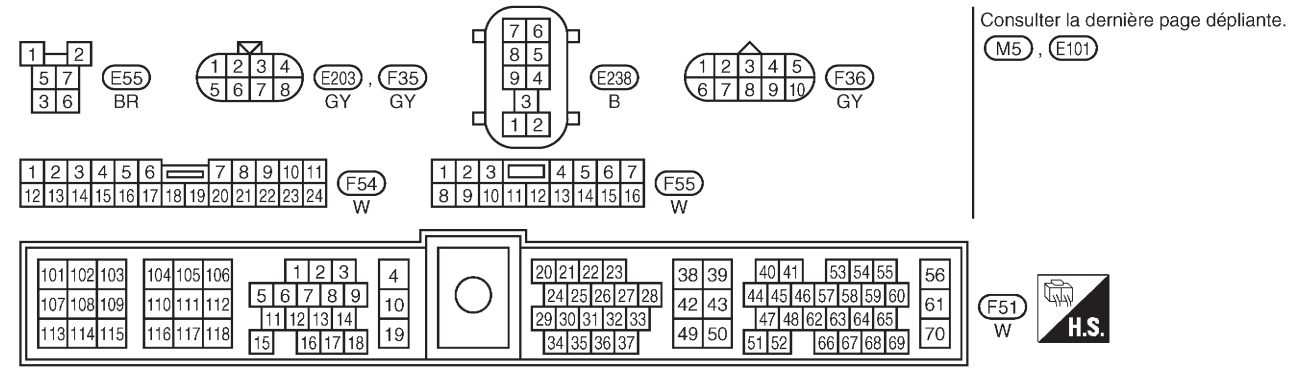

Consulter la dernière page dépliante.
M5 , E101

GEC276A

Simpo PDF Merge and Split Unregistered Version - http://www.simpopdf.com

Procédure de diagnostic

1	VERIFIER LE CIRCUIT D'ALIMENTATION DE LA POMPE D'INJECTION À COMMANDE ÉLECTRONIQUE

1. Mettre le contact d'allumage sur ''OFF''.
2. Débrancher le connecteur de la pompe d'injection.

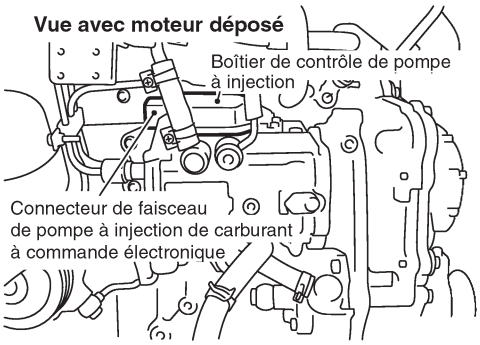

SEC228D

3. Mettre le contact d'allumage sur ''ON''.
4. Vérifier la tension entre la borne 7 de la pompe d'injection de carburant à commande électronique et la masse.

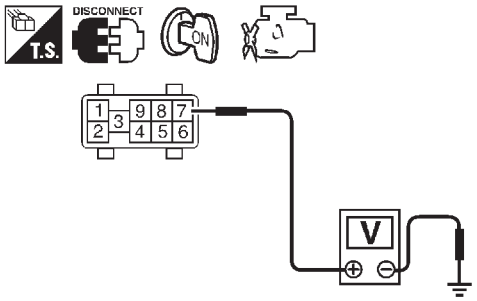

Tension : tension de la batterie

SEF438Y

Bon ou mauvais

Bon	▶	PASSER A L'ETAPE 3.
Mauvais	▶	PASSER A L'ETAPE 2.

2	DETECTER LA PIECE DEFECTUEUSE

Vérifier les points suivants.
- Connecteurs de faisceaux E30, E203
- Connecteurs de faisceaux E101, M5
- Connecteurs de faisceaux M47, F55 (conduite à droite)
- Faisceau ouvert ou en court-circuit entre la pompe d'injection et l'ECM
- Faisceau ouvert ou en court-circuit entre la pompe d'injection et le relais d'ECM

	▶	Réparer les faisceaux ou connecteurs en circuit ouvert ou en court-circuit à la masse ou à l'alimentation.

3	VERIFIER SI LE CIRCUIT DE MASSE DE LA POMPE D'INJECTION EST OUVERT OU EN COURT-CIRCUIT

1. Mettre le contact d'allumage sur ''OFF''.
2. Vérifier la continuité du faisceau entre la borne 6 de la pompe d'injection et la masse. Se référer au schéma de câblage.
   Il doit y avoir continuité.
3. Vérifier également que le faisceau n'est pas ouvert ou en court-circuit à l'alimentation.

Bon ou mauvais

Bon	▶	PASSER A L'ETAPE 5.
Mauvais	▶	PASSER A L'ETAPE 4.

Simpo PDF Merge and Split Unregistered Version - http://www.simpopdf.com

Procédure de diagnostic (Suite)

4	DETECTER LA PIECE DEFECTUEUSE
Vérifier les points suivants. ● Connecteurs de faisceaux E236, M278 (conduite à gauche) ● Connecteurs de faisceaux E236, F35 (conduite à droite) ● Faisceau ouvert ou en court-circuit entre la pompe d'injection et la masse du moteur	
►	Réparer les faisceaux ou connecteurs en circuit ouvert ou en court-circuit à la masse ou à l'alimentation.

5	VERIFIER SI LA LIGNE DE COMMUNICATION EST OUVERTE OU EN COURT-CIRCUIT

1. Vérifier la continuité entre les bornes suivantes. Se référer au schéma de câblage.

Pompe à injection de carburant à commande électronique	ECM
1	33
2	40
5	52
8	53

MTBL0444

Il doit y avoir continuité.

2. Vérifier également que le faisceau n'est pas ouvert ou en court-circuit à l'alimentation.

Bon ou mauvais

Bon	►	PASSER A L'ETAPE 7.
Mauvais	►	PASSER A L'ETAPE 6.

6	DETECTER LA PIECE DEFECTUEUSE
Vérifier les points suivants. ● Connecteurs de faisceaux E237, M279 (conduite à gauche) ● Connecteurs de faisceaux E237, F36 (conduite à droite) ● Faisceau ouvert ou en court-circuit entre la pompe d'injection et l'ECM	
►	Réparer les faisceaux ou connecteurs en circuit ouvert ou en court-circuit à la masse ou à l'alimentation.

7	VERIFIER SI L'INCIDENT EST INTERMITTENT
Se référer à ''DIAGNOSTIC DES DEFAUTS EN CAS D'INCIDENT INTERMITTENT'', page EC-3502.	

Bon ou mauvais

Bon	►	Remplacer la pompe d'injection de carburant.
Mauvais	►	Réparer les faisceaux ou connecteurs en circuit ouvert ou en court-circuit à la masse ou à l'alimentation.

Simpo PDF Merge and Split Unregistered Version - http://www.simpopdf.com

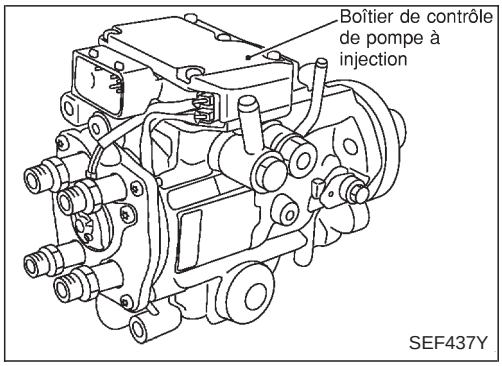

Description

DESCRIPTION DU SYSTEME

L'ECM et l'ensemble de la pompe d'injection de carburant à commande électronique (abrégé ensuite en pompe d'injection) communiquent en temps réel (échange de signaux).
L'ECM transmet les signaux de la quantité d'injection de carburant cible, d'avance à l'injection de carburant cible, de vitesse du moteur, etc., et reçoit les signaux de vitesse de la pompe et de la température du carburant, etc. du boîtier de commande de la pompe d'injection.
Avec ces signaux, la pompe d'injection commande de manière optimale le débit d'injection et l'avance de l'injection au niveau de la soupape de décharge et de la soupape de commande.
La pompe d'injection possède un système de diagnostic intégré qui détecte les défauts des capteurs ou des actionneurs qui se trouvent dans la pompe. Ces informations concernant le défaut sont transférées via la ligne (circuit) du boîtier de commande de la pompe d'injection vers l'ECM.

COMMANDE DU DEBIT D'INJECTION

En fonction de la valeur théorique envoyée par l'ECM, le débit d'injection dépend de la commande de la soupape de décharge de la pompe d'injection et de la modification du temps d'ouverture de l'aiguille.

COMMANDE DE L'AVANCE A L'INJECTION DE CARBURANT

Sur la base de la valeur théorique envoyée par l'ECM, l'avance de l'injection dépend, en fonction du tarage ressort du système d'avance, du cycle de fonctionnement de la soupape de commande d'avance qui se trouve dans la pompe d'injection et du réglage de la pression dans la chambre haute pression du piston du système d'avance.

CAPTEUR DE TEMPERATURE DU CARBURANT

Le capteur relève la température du carburant dans la pompe d'injection et calibre le débit d'injection en fonction de la température du carburant.

CAPTEUR DE LA POSITION DE L'ANNEAU A CAME

Le capteur détecte le passage du bossage qui se trouve sur l'anneau à came de la pompe d'injection à l'aide d'un élément semi-conducteur à réluctance variable. Le capteur de position de l'anneau à cames assure la synchronisation de l'anneau à cames, et détecte l'avance réelle. Le boîtier de commande de la pompe d'injection mesure la révolution de la pompe d'injection grâce au signal du capteur de position de l'anneau à cames.

Simpo PDF Merge and Split Unregistered Version - http://www.simpopdf.com

Valeur de référence de CONSULT-II en mode de contrôle de données

Remarques : Les données de spécification sont des valeurs de référence.

ELEMENT DE CONTROLE	CONDITION		SPECIFICATION
CAP TEMP CARB	● moteur : Une fois le moteur amené à la température normale de fonctionnement		Plus de 40°C
SOUPAPE/FUITE (soupape de décharge)	● moteur : Une fois le moteur amené à la température normale de fonctionnement	Ralenti	Environ 13°CA
INJ TIMG C/V	● moteur : faire monter le moteur en température, puis le faire tourner au ralenti.		Environ 50 % - 70 %
COUP/C DECELER	● moteur : Une fois le moteur amené à la température normale de fonctionnement	Ralenti	ARR
CAP BARO	● Contact d'allumage : ON		Altitude Environ 0 m : Environ 100,62 kPa (1,0062 bar, 1,026 kg/cm^2) Environ 1 000 m : Environ 88,95 kPa (0,8895 bar, 0,907 kg/cm^2) Environ 1 500 m : Environ 83,16 kPa (0,8316 bar, 0,848 kg/cm^2) Environ 2 000 m : Environ 78,36 kPa (0,7836 bar, 0,799 kg/cm^2)

Bornes de l'ECM et valeurs de référence

Données de référence relevées entre chaque borne et la masse.

PRECAUTION :

Lors de la mesure de la tension d'entrée/sortie, ne pas utiliser les bornes de masse de l'ECM sous peine d'endommager le transistor de l'ECM. Utiliser une autre masse que celle des bornes de l'ECM.

BORNE N°	COULEUR DE CABLE	ELEMENT	CONDITION	DONNEES (tension continue)
33	G/Y	Pompe d'injection de carburant à commande électronique	Moteur en marche. └ **Pendant la montée en température** Régime de ralenti	Environ 2,4 V
40	PU	Pompe d'injection de carburant à commande électronique	Moteur en marche. └ **Pendant la montée en température** Régime de ralenti	Environ 2,4 V
52	L/W	Pompe d'injection de carburant à commande électronique	Moteur en marche. └ Régime de ralenti	Environ 0,1 V

Simpo PDF Merge and Split Unregistered Version - http://www.simpopdf.com

Bornes de l'ECM et valeurs de référence (Suite)

BORNE N°	COU-LEUR DE CABLE	ELEMENT	CONDITION	DONNEES (tension continue)
53	L/R	Pompe d'injection de carburant à commande électronique	Moteur en marche. └ Régime de ralenti	Environ 0,45 V
			Moteur en marche. └ Le régime moteur est de 2 000 tr/mn.	Environ 0,7 V

Simpo PDF Merge and Split Unregistered Version - http://www.simpopdf.com

Logique de diagnostic de bord

Le défaut est détecté quand ...	Eléments de contrôles (causes possibles)
● La pompe d'injection reçoit en permanence un signal de tension incorrect de l'ECM.	● Faisceau ou connecteurs (le circuit électronique de la pompe d'injection est ouvert ou en court-circuit) ● Pompe d'injection de carburant à commande électronique

Simpo PDF Merge and Split Unregistered Version - http://www.simpopdf.com

2

CONTROLE DE DONNEES	
CONTROLE	PAS DE DTC
CPV-TR/MN (PMH)	XXX TR/MN

SEF817Y

Procédure de confirmation de code de défaut (DTC)

AVEC CONSULT-II

1) Mettre le contact d'allumage sur ''ON'', puis attendre au moins 2 secondes.
2) Régler CONSULT-II en mode ''CONTROLE DE DONNEES''.
3) Démarrer le moteur et le faire tourner pendant au moins 2 secondes au régime ralenti.
   (si le moteur ne tourne pas, mettre le contact d'allumage sur "START" pendant 2 secondes au moins)
4) Si le DTC est détecté, effectuer une ''Procédure de diagnostic'', voir page EC-3599.

SANS CONSULT-II

1) Mettre le contact d'allumage sur ''ON'', puis attendre au moins 2 secondes.
2) Démarrer le moteur et le faire tourner pendant au moins 2 secondes au régime ralenti.
   (si le moteur ne tourne pas, mettre le contact d'allumage sur "START" pendant 2 secondes au moins)
3) Mettre le contact d'allumage sur ''OFF'', attendre au moins 5 secondes, puis remettre le contact sur ''ON''.
4) Effectuer le ''Test de diagnostic mode II (résultats d'autodiagnostic)'' avec l'ECM.
5) Si le DTC est détecté, effectuer une ''Procédure de diagnostic'', voir page EC-3599.

Simpo PDF Merge and Split Unregistered Version - http://www.simpopdf.com

Schéma de câblage

MODELES A DIRECTION A GAUCHE

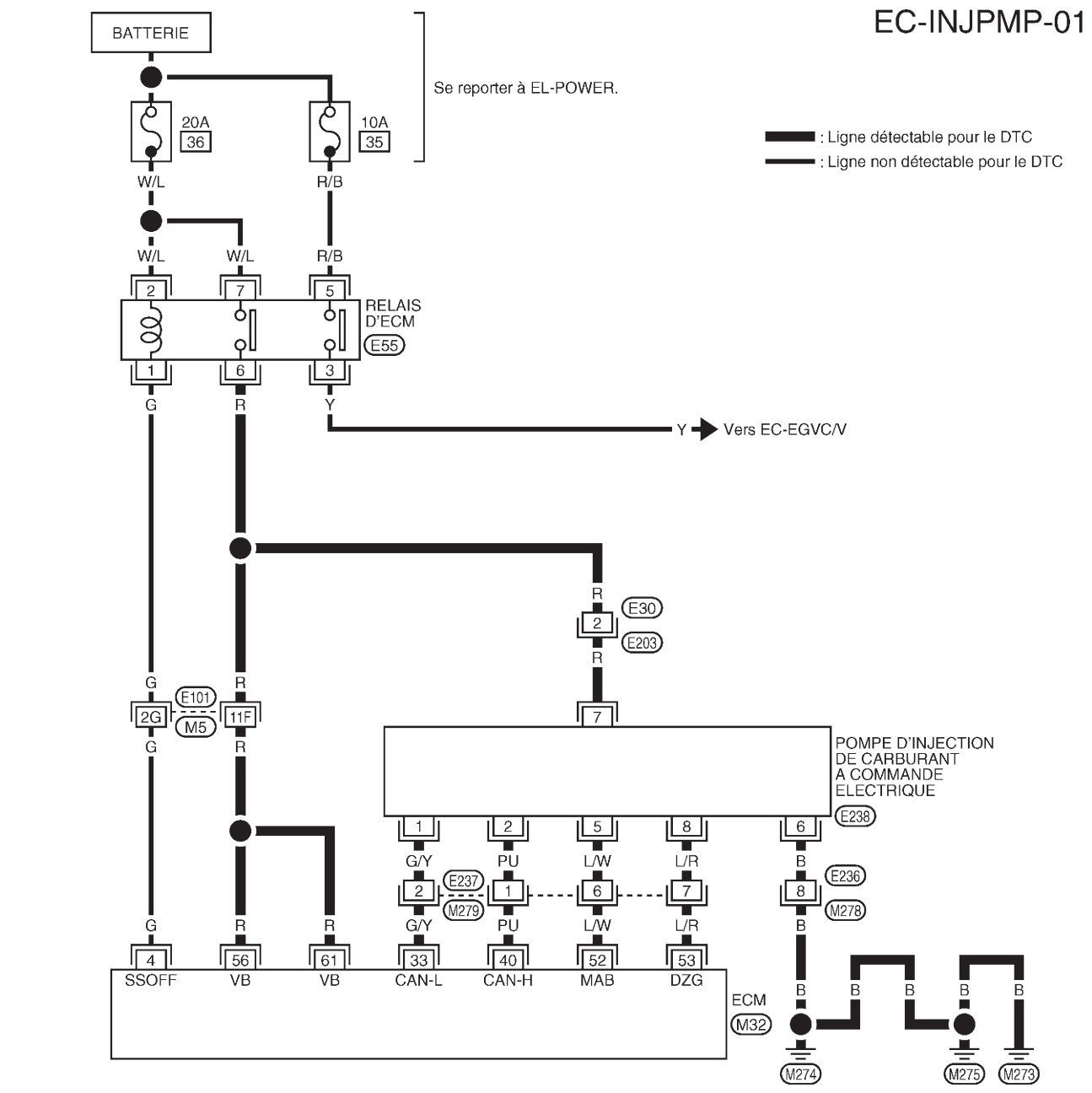

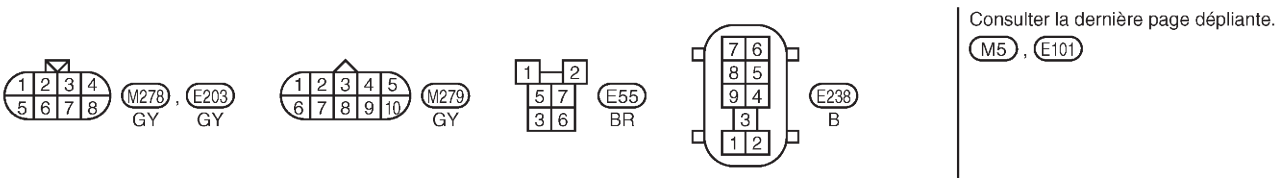

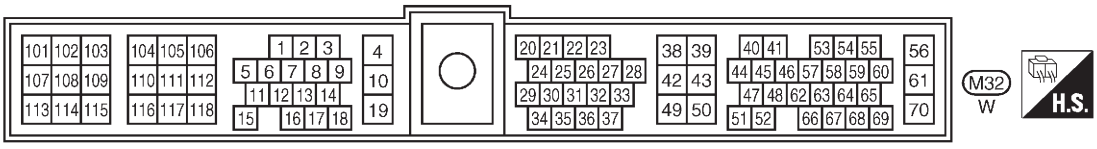

GEC275A

Simpo PDF Merge and Split Unregistered Version - http://www.simpopdf.com

Schéma de câblage (Suite)

MODELES A DIRECTION A DROITE

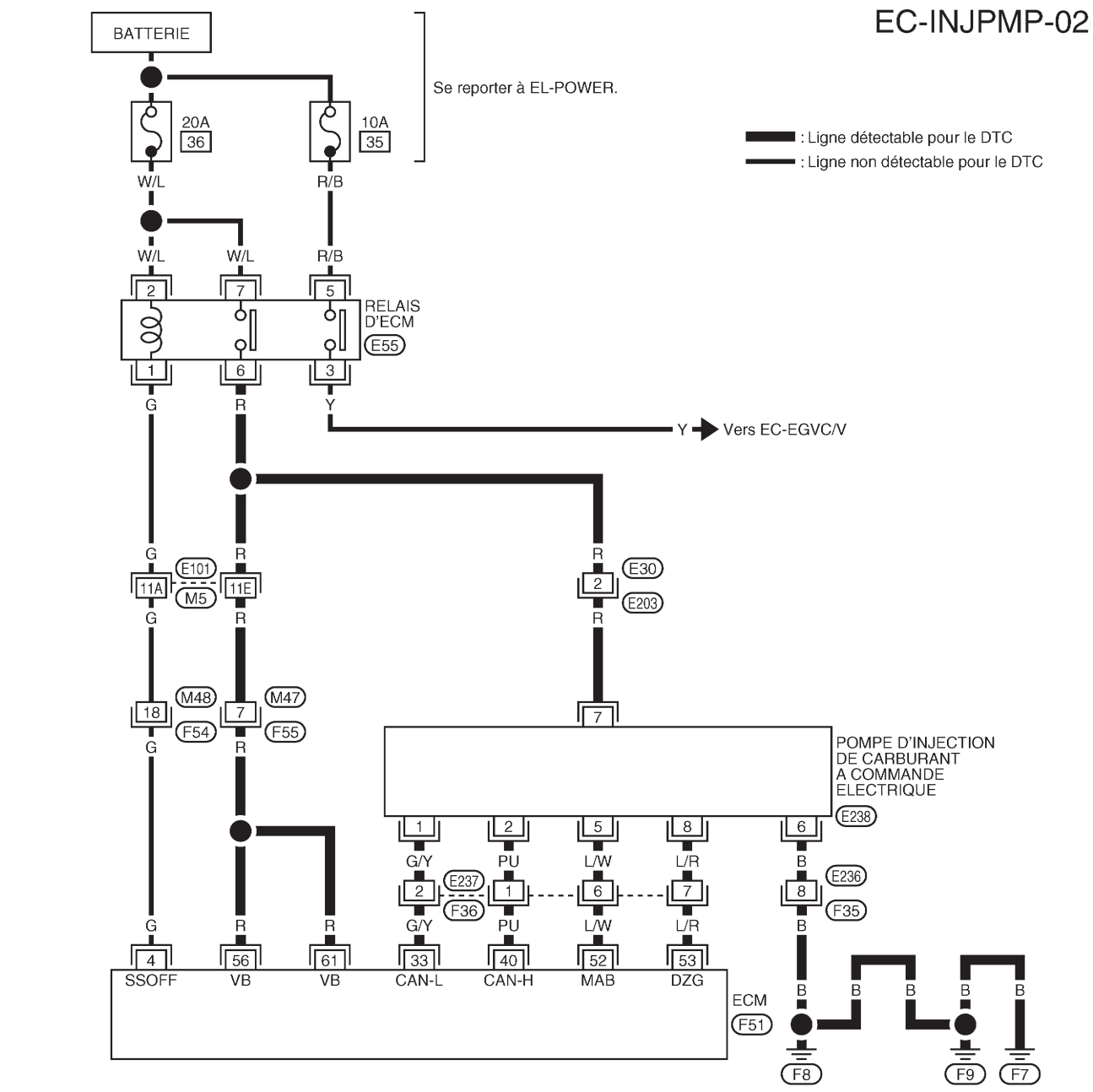

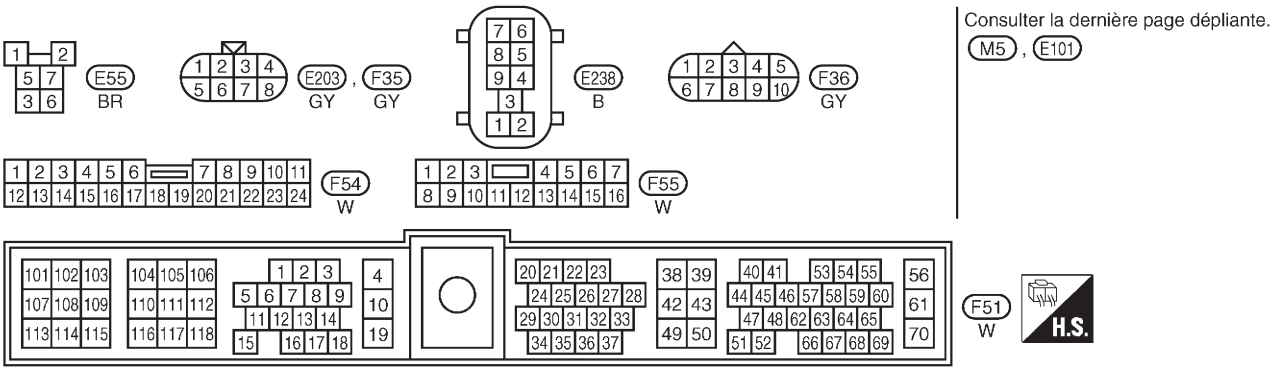

Consulter la dernière page dépliante.
M5 , E101

GEC276A

Simpo PDF Merge and Split Unregistered Version - http://www.simpopdf.com

Procédure de diagnostic

1	VERIFIER LE CIRCUIT D'ALIMENTATION DE LA POMPE D'INJECTION

1. Mettre le contact d'allumage sur ''OFF''.
2. Débrancher le connecteur de la pompe d'injection.

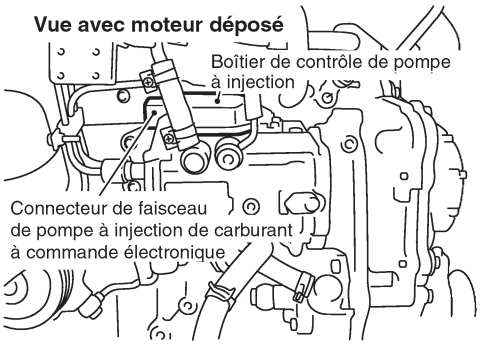

SEC228D

3. Mettre le contact d'allumage sur ''ON''.
4. Vérifier la tension entre la borne 7 de la pompe et la masse.

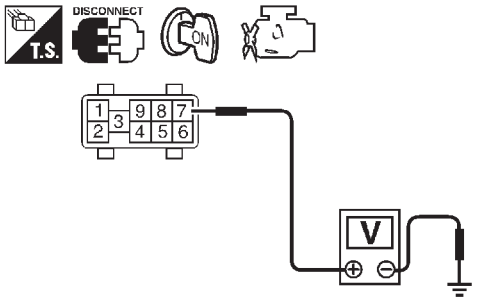

Tension : tension de la batterie

SEF438Y

Bon ou mauvais

Bon	▶	PASSER A L'ETAPE 3.
Mauvais	▶	PASSER A L'ETAPE 2.

2	DETECTER LA PIECE DEFECTUEUSE

Vérifier les points suivants.
- Connecteurs de faisceaux E30, E203
- Connecteurs de faisceaux E101, M5
- Connecteurs de faisceaux M47, F55 (conduite à droite)
- Faisceau ouvert ou en court-circuit entre la pompe d'injection et l'ECM
- Faisceau ouvert ou en court-circuit entre la pompe d'injection et le relais d'ECM

	▶	Réparer les faisceaux ou connecteurs en circuit ouvert ou en court-circuit à la masse ou à l'alimentation.

3	VERIFIER SI LE CIRCUIT DE MASSE DE LA POMPE D'INJECTION EST OUVERT OU EN COURT-CIRCUIT

1. Mettre le contact d'allumage sur ''OFF''.
2. Vérifier la continuité du faisceau entre la borne 6 de la pompe d'injection et la masse. Se référer au schéma de câblage.
   Il doit y avoir continuité.
3. Vérifier également que le faisceau n'est pas ouvert ou en court-circuit à l'alimentation.

Bon ou mauvais

Bon	▶	PASSER A L'ETAPE 5.
Mauvais	▶	PASSER A L'ETAPE 4.

Simpo PDF Merge and Split Unregistered Version - http://www.simpopdf.com

Procédure de diagnostic (Suite)

4	DETECTER LA PIECE DEFECTUEUSE
Vérifier les points suivants. ● Connecteurs de faisceaux E236, M278 (conduite à gauche) ● Connecteurs de faisceaux E236, F35 (conduite à droite) ● Faisceau ouvert ou en court-circuit entre la pompe d'injection et la masse du moteur	
►	Réparer les faisceaux ou connecteurs en circuit ouvert ou en court-circuit à la masse ou à l'alimentation.

5	VERIFIER SI LA LIGNE DE COMMUNICATION EST OUVERTE OU EN COURT-CIRCUIT

1. Vérifier la continuité entre les bornes suivantes. Se référer au schéma de câblage.

Pompe à injection de carburant à commande électronique	ECM
1	33
2	40
5	52
8	53

MTBL0444

Il doit y avoir continuité.

2. Vérifier également que le faisceau n'est pas ouvert ou en court-circuit à l'alimentation.

Bon ou mauvais

Bon	►	PASSER A L'ETAPE 7.
Mauvais	►	PASSER A L'ETAPE 6.

6	DETECTER LA PIECE DEFECTUEUSE
Vérifier les points suivants. ● Connecteurs de faisceaux E237, M279 (conduite à gauche) ● Connecteurs de faisceaux E237, F36 (conduite à droite) ● Faisceau ouvert ou en court-circuit entre la pompe d'injection et l'ECM	
►	Réparer les faisceaux ou connecteurs en circuit ouvert ou en court-circuit à la masse ou à l'alimentation.

7	VERIFIER SI L'INCIDENT EST INTERMITTENT
Se référer à ''DIAGNOSTIC DES DEFAUTS EN CAS D'INCIDENT INTERMITTENT'', page EC-3502.	

Bon ou mauvais

Bon	►	Remplacer la pompe d'injection de carburant.
Mauvais	►	Réparer les faisceaux ou connecteurs en circuit ouvert ou en court-circuit à la masse ou à l'alimentation.

Simpo PDF Merge and Split Unregistered Version - http://www.simpopdf.com

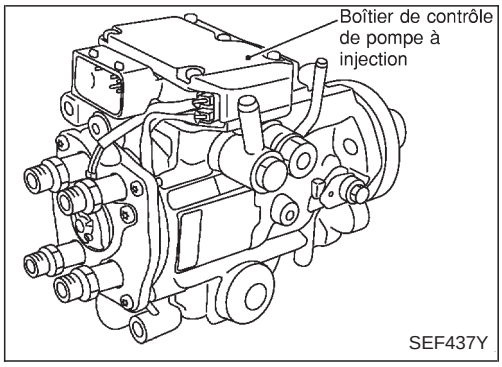

Description

DESCRIPTION DU SYSTEME

L'ECM et l'ensemble de la pompe d'injection de carburant à commande électronique (abrégé ensuite en pompe d'injection) communiquent en temps réel (échange de signaux).
L'ECM transmet les signaux de la quantité d'injection de carburant cible, d'avance à l'injection de carburant cible, de vitesse du moteur, etc., et reçoit les signaux de vitesse de la pompe et de la température du carburant, etc. du boîtier de commande de la pompe d'injection.
Avec ces signaux, la pompe d'injection commande de manière optimale le débit d'injection et l'avance de l'injection au niveau de la soupape de décharge et de la soupape de commande.
La pompe d'injection possède un système de diagnostic intégré qui détecte les défauts des capteurs ou des actionneurs qui se trouvent dans la pompe. Ces informations concernant le défaut sont transférées via la ligne (circuit) du boîtier de commande de la pompe d'injection vers l'ECM.

COMMANDE DU DEBIT D'INJECTION

En fonction de la valeur théorique envoyée par l'ECM, le débit d'injection dépend de la commande de la soupape de décharge de la pompe d'injection et de la modification du temps d'ouverture de l'aiguille.

COMMANDE DE L'AVANCE A L'INJECTION DE CARBURANT

Sur la base de la valeur théorique envoyée par l'ECM, l'avance de l'injection dépend, en fonction du tarage ressort du système d'avance, du cycle de fonctionnement de la soupape de commande d'avance qui se trouve dans la pompe d'injection et du réglage de la pression dans la chambre haute pression du piston du système d'avance.

CAPTEUR DE TEMPERATURE DU CARBURANT

Le capteur relève la température du carburant dans la pompe d'injection et calibre le débit d'injection en fonction de la température du carburant.

CAPTEUR DE LA POSITION DE L'ANNEAU A CAME

Le capteur détecte le passage du bossage qui se trouve sur l'anneau à came de la pompe d'injection à l'aide d'un élément semi-conducteur à réluctance variable. Le capteur de position de l'anneau à cames assure la synchronisation de l'anneau à cames, et détecte l'avance réelle. Le boîtier de commande de la pompe d'injection mesure la révolution de la pompe d'injection grâce au signal du capteur de position de l'anneau à cames.

Simpo PDF Merge and Split Unregistered Version - http://www.simpopdf.com

Valeur de référence de CONSULT-II en mode de contrôle de données

Remarques : Les données de spécification sont des valeurs de référence.

ELEMENT DE CONTROLE	CONDITION		SPECIFICATION
CAP TEMP CARB	● moteur : Une fois le moteur chaud		Plus de 40°C
SOUPAPE/FUITE (soupape de décharge)	● moteur : Une fois le moteur chaud	Ralenti	Environ 13°CA
INJ TIMG C/V	● moteur : faire chauffer le moteur, puis le faire tourner au ralenti.		Environ 50 % - 70 %
COUP/C DECELER	● moteur : Une fois le moteur chaud	Ralenti	OFF
CAP BARO	● Contact d'allumage : ON		Altitude Environ 0 m : Environ 100,62 kPa (1,0062 bar, 1,026 kg/cm^2) Environ 1 000 m : Environ 88,95 kPa (0,8895 bar, 0,907 kg/cm^2) Environ 1 500 m : Environ 83,16 kPa (0,8316 bar, 0,848 kg/cm^2) Environ 2 000 m : Environ 78,36 kPa (0,7836 bar, 0,799 kg/cm^2)

Bornes de l'ECM et valeurs de référence

Données de référence relevées entre chaque borne et la masse.

PRECAUTION :

Lors de la mesure de la tension d'entrée/sortie, ne pas utiliser les bornes de masse de l'ECM sous peine d'en endommager le transistor. Utiliser une autre masse que celle des bornes de l'ECM.

BORNE N°	COULEUR DE CABLE	ELEMENT	CONDITION	DONNEES (tension continue)
33	G/Y	Pompe d'injection de carburant à commande électronique	Moteur en marche. └ **Pendant la montée en température** Régime de ralenti	Environ 2,4 V
40	PU	Pompe d'injection de carburant à commande électronique	Moteur en marche. └ **Pendant la montée en température** Régime de ralenti	Environ 2,4 V
52	L/W	Pompe d'injection de carburant à commande électronique	Moteur en marche. └ Régime de ralenti	Environ 0,1 V
53	L/R	Pompe d'injection de carburant à commande électronique	Moteur en marche. └ Régime de ralenti	Environ 0,45 V
			Moteur en marche. └ Le régime moteur est de 2 000 tr/mn.	Environ 0,7 V

Simpo PDF Merge and Split Unregistered Version - http://www.simpopdf.com

Logique de diagnostic de bord

Le défaut est détecté quand ...	Eléments de contrôles (causes possibles)
● La soupape de décharge (intégrée à la pompe d'injection) ne fonctionne pas correctement.	● Faisceau ou connecteurs (le circuit électronique de la pompe d'injection est ouvert ou en court-circuit) ● Pompe d'injection de carburant à commande électronique

Simpo PDF Merge and Split Unregistered Version - http://www.simpopdf.com

2

CONTROLE DE DONNEES	
CONTROLE	PAS DE DTC
CPV-TR/MN (PMH)	XXX TR/MN

SEF817Y

Procédure de confirmation de code de défaut (DTC)

AVEC CONSULT-II

1) Mettre le contact d'allumage sur 'ON', puis attendre au moins 2 secondes.
2) Régler CONSULT-II en mode ''CONTROLE DE DONNEES''.
3) Démarrer le moteur et le faire tourner pendant au moins 2 secondes au régime ralenti.
   (si le moteur ne tourne pas, mettre le contact d'allumage sur ''START'' pendant 2 secondes au moins)
4) Si le DTC est détecté, effectuer une ''Procédure de diagnostic'', voir page EC-3607.

SANS CONSULT-II

1) Mettre le contact d'allumage sur ''ON'', puis attendre au moins 2 secondes.
2) Démarrer le moteur et le faire tourner pendant au moins 2 secondes au régime ralenti.
   (si le moteur ne tourne pas, mettre le contact d'allumage sur ''START'' pendant 2 secondes au moins)
3) Mettre le contact d'allumage sur ''OFF'', attendre au moins 5 secondes, puis remettre le contact sur ''ON''.
4) Effectuer le ''Test de diagnostic mode II (résultats d'autodiagnostic)'' avec l'ECM.
5) Si le DTC est détecté, effectuer une ''Procédure de diagnostic'', voir page EC-3607.

Simpo PDF Merge and Split Unregistered Version - http://www.simpopdf.com

Schéma de câblage

MODELES A DIRECTION A GAUCHE

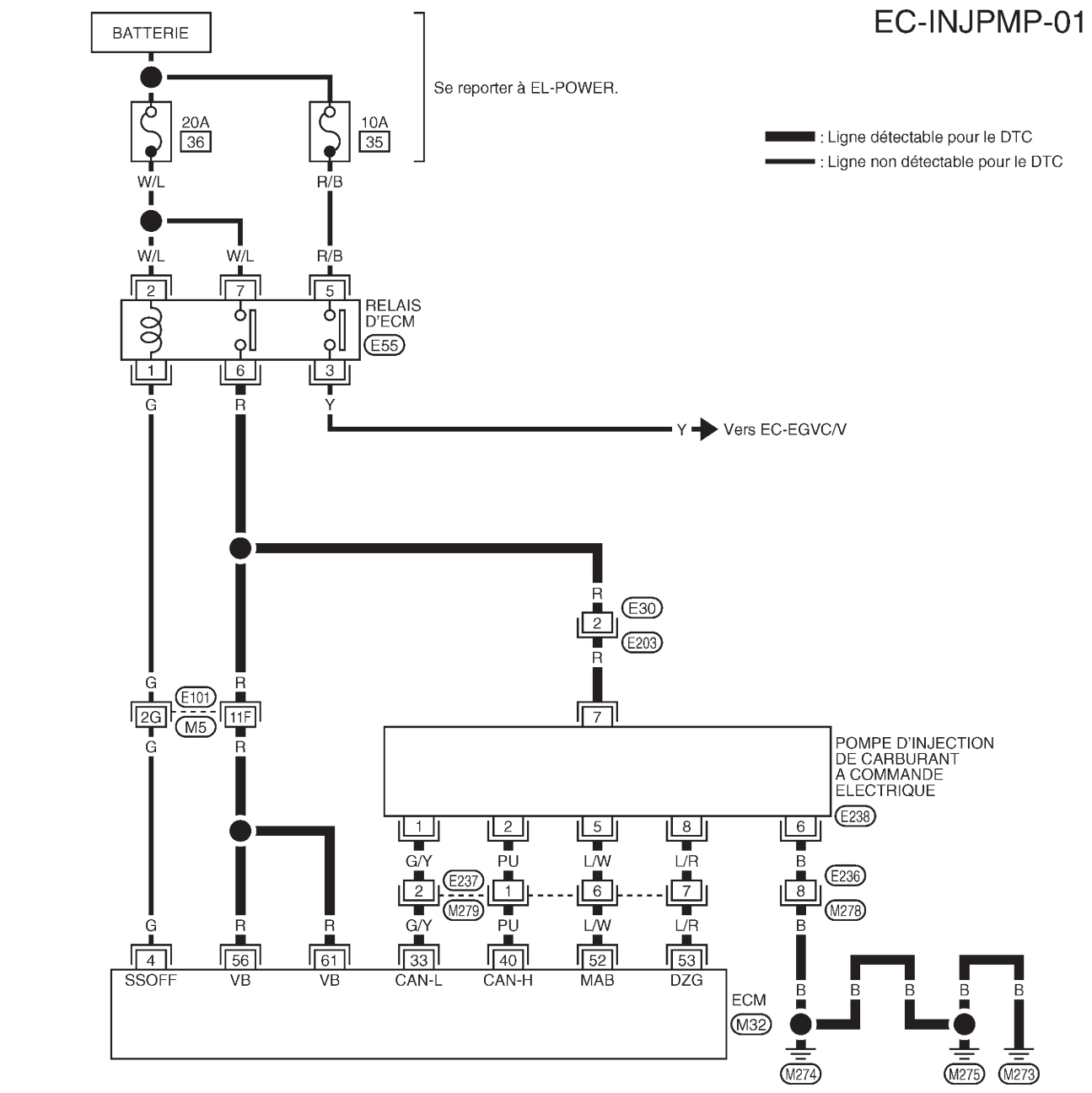

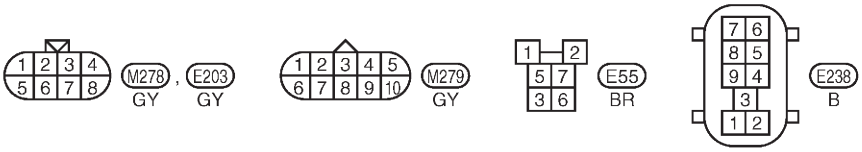

Consulter la dernière page dépliante.
M5 , E101

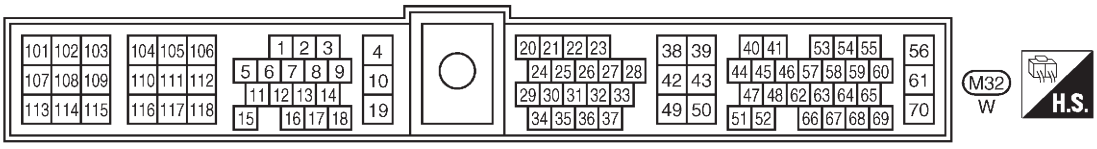

GEC275A

Simpo PDF Merge and Split Unregistered Version - http://www.simpopdf.com

Schéma de câblage (Suite)

MODELES A DIRECTION A DROITE

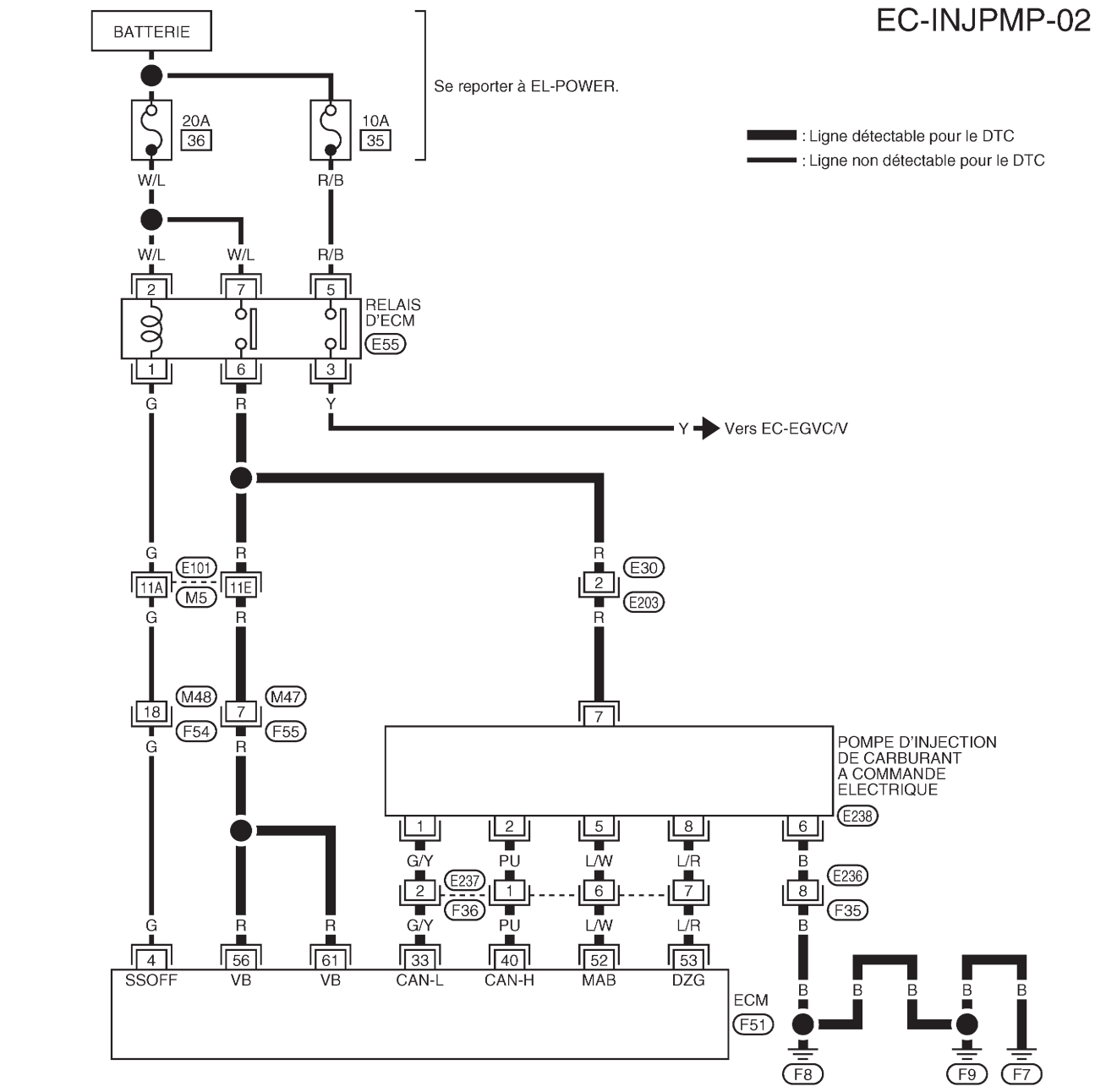

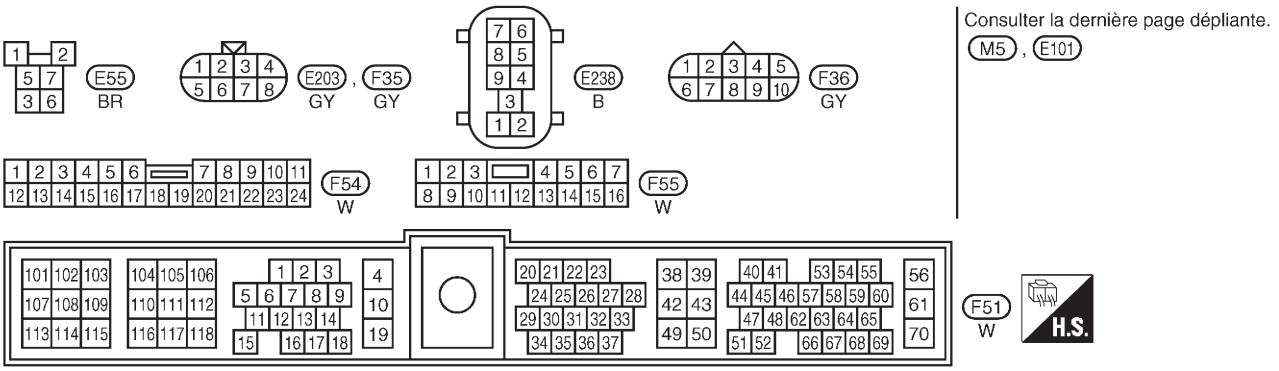

GEC276A

Simpo PDF Merge and Split Unregistered Version - http://www.simpopdf.com

Procédure de diagnostic

1	VERIFIER LE CIRCUIT D'ALIMENTATION DE LA POMPE D'INJECTION

1. Mettre le contact d'allumage sur ''OFF''.
2. Débrancher le connecteur de la pompe d'injection.

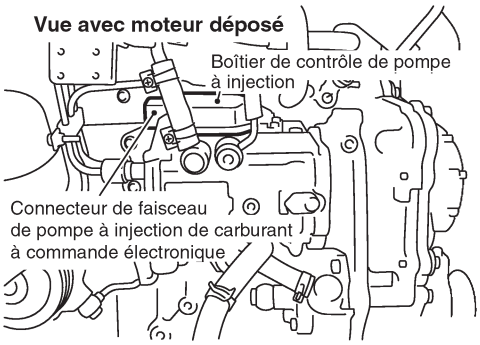

SEC228D

3. Mettre le contact d'allumage sur ''ON''.
4. Vérifier la tension entre la borne 7 de la pompe et la masse.

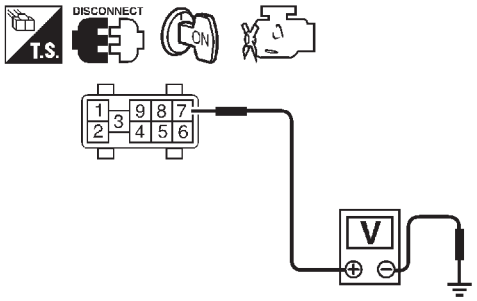

Tension : tension de la batterie

SEF438Y

Bon ou mauvais

Bon	▶	PASSER A L'ETAPE 3.
Mauvais	▶	PASSER A L'ETAPE 2.

2	DETECTER LA PIECE DEFECTUEUSE

Vérifier les points suivants.
- Connecteurs de faisceaux E30, E203
- Connecteurs de faisceaux E101, M5
- Connecteurs de faisceaux M47, F55 (conduite à droite)
- Faisceau ouvert ou en court-circuit entre la pompe d'injection et l'ECM
- Faisceau ouvert ou en court-circuit entre la pompe d'injection et le relais d'ECM

	▶	Réparer les faisceaux ou connecteurs en circuit ouvert ou en court-circuit à la masse ou à l'alimentation.

3	VERIFIER SI LE CIRCUIT DE MASSE DE LA POMPE D'INJECTION EST OUVERT OU EN COURT-CIRCUIT

1. Mettre le contact d'allumage sur ''OFF''.
2. Vérifier la continuité du faisceau entre la borne 6 de la pompe d'injection et la masse. Se référer au schéma de câblage.
   Il doit y avoir continuité.
3. Vérifier également que le faisceau n'est pas ouvert ou en court-circuit à l'alimentation.

Bon ou mauvais

Bon	▶	PASSER A L'ETAPE 5.
Mauvais	▶	PASSER A L'ETAPE 4.

Simpo PDF Merge and Split Unregistered Version - http://www.simpopdf.com

Procédure de diagnostic (Suite)

4	DETECTER LA PIECE DEFECTUEUSE
Vérifier les points suivants. ● Connecteurs de faisceaux E236, M278 (conduite à gauche) ● Connecteurs de faisceaux E236, F35 (conduite à droite) ● Faisceau ouvert ou en court-circuit entre la pompe d'injection et la masse du moteur	
►	Réparer les faisceaux ou connecteurs en circuit ouvert ou en court-circuit à la masse ou à l'alimentation.

5	VERIFIER SI LA LIGNE DE COMMUNICATION EST OUVERTE OU EN COURT-CIRCUIT

1. Vérifier la continuité entre les bornes suivantes. Se référer au schéma de câblage.

Pompe à injection de carburant à commande électronique	ECM
1	33
2	40
5	52
8	53

MTBL0444

Il doit y avoir continuité.

2. Vérifier également que le faisceau n'est pas ouvert ou en court-circuit à l'alimentation.

Bon ou mauvais

Bon	►	PASSER A L'ETAPE 7.
Mauvais	►	PASSER A L'ETAPE 6.

6	DETECTER LA PIECE DEFECTUEUSE
Vérifier les points suivants. ● Connecteurs de faisceaux E237, M279 (conduite à gauche) ● Connecteurs de faisceaux E237, F36 (conduite à droite) ● Faisceau ouvert ou en court-circuit entre la pompe d'injection et l'ECM	
►	Réparer les faisceaux ou connecteurs en circuit ouvert ou en court-circuit à la masse ou à l'alimentation.

7	VERIFIER SI L'INCIDENT EST INTERMITTENT
Se référer à ''DIAGNOSTIC DES DEFAUTS EN CAS D'INCIDENT INTERMITTENT'', page EC-3502	

Bon ou mauvais

Bon	►	Remplacer la pompe d'injection de carburant.
Mauvais	►	Réparer les faisceaux ou connecteurs en circuit ouvert ou en court-circuit à la masse ou à l'alimentation.

Simpo PDF Merge and Split Unregistered Version - http://www.simpopdf.com

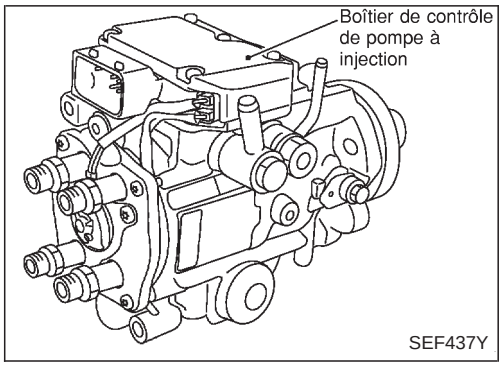

Description

DESCRIPTION DU SYSTEME

L'ECM et l'ensemble de la pompe d'injection de carburant à commande électronique (abrégé ensuite en pompe d'injection) communiquent en temps réel (échange de signaux).
L'ECM transmet les signaux de la quantité d'injection de carburant cible, d'avance à l'injection de carburant cible, de vitesse du moteur, etc., et reçoit les signaux de vitesse de la pompe et de la température du carburant, etc. du boîtier de commande de la pompe d'injection.
Avec ces signaux, la pompe d'injection commande de manière optimale le débit d'injection et l'avance de l'injection au niveau de la soupape de décharge et de la soupape de commande.
La pompe d'injection possède un système de diagnostic intégré qui détecte les défauts des capteurs ou des actionneurs qui se trouvent dans la pompe. Ces informations concernant le défaut sont transférées via la ligne (circuit) du boîtier de commande de la pompe d'injection vers l'ECM.

COMMANDE DU DEBIT D'INJECTION

En fonction de la valeur théorique envoyée par l'ECM, le débit d'injection dépend de la commande de la soupape de décharge de la pompe d'injection et de la modification du temps d'ouverture de l'aiguille.

COMMANDE DE L'AVANCE A L'INJECTION DE CARBURANT

Sur la base de la valeur théorique envoyée par l'ECM, l'avance de l'injection dépend, en fonction du tarage ressort du système d'avance, du cycle de fonctionnement de la soupape de commande d'avance qui se trouve dans la pompe d'injection et du réglage de la pression dans la chambre haute pression du piston du système d'avance.

CAPTEUR DE TEMPERATURE DU CARBURANT

Le capteur relève la température du carburant dans la pompe d'injection et calibre le débit d'injection en fonction de la température du carburant.

CAPTEUR DE LA POSITION DE L'ANNEAU A CAME

Le capteur détecte le passage du bossage qui se trouve sur l'anneau à came de la pompe d'injection à l'aide d'un élément semi-conducteur à réluctance variable. Le capteur de position de l'anneau à cames assure la synchronisation de l'anneau à cames, et détecte l'avance réelle. Le boîtier de commande de la pompe d'injection mesure la révolution de la pompe d'injection grâce au signal du capteur de position de l'anneau à cames.

Simpo PDF Merge and Split Unregistered Version - http://www.simpopdf.com

Valeur de référence de CONSULT-II en mode de contrôle de données

Remarques : Les données de spécification sont des valeurs de référence.

ELEMENT DE CONTROLE	CONDITION		SPECIFICATION
CAP TEMP CARB	● moteur : Une fois le moteur chaud		Plus de 40°C
SOUPAPE/FUITE (soupape de décharge)	● moteur : Une fois le moteur chaud	Ralenti	Environ 13°CA
INJ TIMG C/V	● moteur : faire chauffer le moteur, puis le faire tourner au ralenti.		Environ 50 % - 70 %
COUP/C DECELER	● moteur : Une fois le moteur chaud	Ralenti	OFF
CAP BARO	● Contact d'allumage : ON		Altitude Environ 0 m : Environ 100,62 kPa (1,0062 bar, 1,026 kg/cm^2) Environ 1 000 m : Environ 88,95 kPa (0,8895 bar, 0,907 kg/cm^2) Environ 1 500 m : Environ 83,16 kPa (0,8316 bar, 0,848 kg/cm^2) Environ 2 000 m : Environ 78,36 kPa (0,7836 bar, 0,799 kg/cm^2)

Bornes de l'ECM et valeurs de référence

Données de référence relevées entre chaque borne et la masse.

PRECAUTION :
Lors de la mesure de la tension d'entrée/sortie, ne pas utiliser les bornes de masse de l'ECM sous peine d'endommager le transistor. Utiliser une autre masse que celle des bornes de l'ECM.

BORNE N°	COULEUR DE CABLE	ELEMENT	CONDITION	DONNEES (tension continue)
33	G/Y	Pompe d'injection de carburant à commande électronique	Moteur en marche. └ **Pendant la montée en température** Régime de ralenti	Environ 2,4 V
40	PU	Pompe d'injection de carburant à commande électronique	Moteur en marche. └ **Pendant la montée en température** Régime de ralenti	Environ 2,4 V
52	L/W	Pompe d'injection de carburant à commande électronique	Moteur en marche. └ Régime de ralenti	Environ 0,1 V
53	L/R	Pompe d'injection de carburant à commande électronique	Moteur en marche. └ Régime de ralenti	Environ 0,45 V
			Moteur en marche. └ Le régime moteur est de 2 000 tr/mn.	Environ 0,7 V

Simpo PDF Merge and Split Unregistered Version - http://www.simpopdf.com

Logique de diagnostic de bord

Le défaut est détecté quand ...	Eléments de contrôles (cause possible)
● La pompe d'injection ne fonctionne pas correctement.	● Pompe d'injection de carburant à commande électronique

Simpo PDF Merge and Split Unregistered Version - http://www.simpopdf.com

2

CONTROLE DE DONNEES	
CONTROLE	PAS DE DTC
CPV-TR/MN (PMH)	XXX TR/MN

SEF817Y

Procédure de confirmation de code de défaut (DTC)

AVEC CONSULT-II

1) Mettre le contact d'allumage sur ''ON'', puis attendre au moins 2 secondes.
2) Régler CONSULT-II en mode ''CONTROLE DE DONNEES''.
3) Démarrer le moteur et le faire tourner pendant au moins 2 secondes au régime ralenti.
   (si le moteur ne tourne pas, mettre le contact d'allumage sur ''START'' pendant 2 secondes au moins)
4) Si le DTC est détecté, effectuer une ''Procédure de diagnostic'', voir page EC-3612.

SANS CONSULT-II

1) Mettre le contact d'allumage sur ''ON'', puis attendre au moins 2 secondes.
2) Démarrer le moteur et le faire tourner pendant au moins 2 secondes au régime ralenti.
   (si le moteur ne tourne pas, mettre le contact d'allumage sur ''START'' pendant 2 secondes au moins)
3) Mettre le contact d'allumage sur ''OFF'', attendre au moins 5 secondes, puis remettre le contact sur ''ON''.
4) Effectuer le ''Test de diagnostic mode II (résultats d'autodiagnostic)'' avec l'ECM.
5) Si le DTC est détecté, effectuer une ''Procédure de diagnostic'', voir page EC-3612.

Procédure de diagnostic

1	DEBUT DE L'INSPECTION	
Avec CONSULT-II 1. Mettre le contact d'allumage sur ''ON''. 2. Sélectionner le mode ''RESULT AUTO-DIAG'' sur CONSULT-II. 3. Appuyer ''EFFAC''. 4. Effectuer de nouveau une ''Procédure de confirmation de DTC'', voir page EC-3613. 5. Le défaut est-il toujours affiché ?		
Sans CONSULT-II 1. Mettre le contact d'allumage sur ''ON''. 2. Effacer les données de la mémoire du mode II de diagnostic (résultats de l'autodiagnostic). 3. Effectuer de nouveau une ''Procédure de confirmation de code de défaut (DTC)'', voir page EC-3613. 4. Effectuer le ''Test de diagnostic mode II (résultats d'autodiagnostic)''. 5. Le DTC 0705 est-il de nouveau affiché ?		
	Oui ou Non	
Oui	▶	Remplacer la pompe d'injection de carburant.
Non	▶	**FIN DE L'INSPECTION**

Simpo PDF Merge and Split Unregistered Version - http://www.simpopdf.com

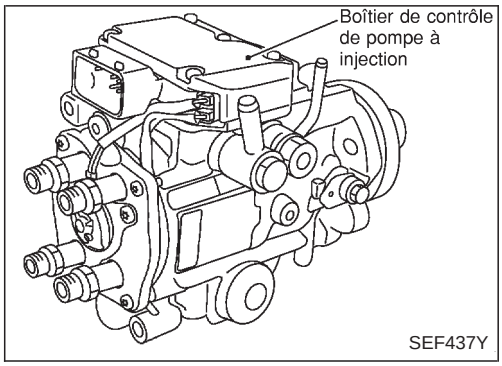

Description

DESCRIPTION DU SYSTEME

L'ECM et l'ensemble de la pompe d'injection de carburant à commande électronique (abrégé ensuite en pompe d'injection) communiquent en temps réel (échange de signaux).
L'ECM transmet les signaux de la quantité d'injection de carburant cible, d'avance à l'injection de carburant cible, de vitesse du moteur, etc., et reçoit les signaux de vitesse de la pompe et de la température du carburant, etc. du boîtier de commande de la pompe d'injection.
Avec ces signaux, la pompe d'injection commande de manière optimale le débit d'injection et l'avance de l'injection au niveau de la soupape de décharge et de la soupape de commande.
La pompe d'injection possède un système de diagnostic intégré qui détecte les défauts des capteurs ou des actionneurs qui se trouvent dans la pompe. Ces informations concernant le défaut sont transférées via la ligne (circuit) du boîtier de commande de la pompe d'injection vers l'ECM.

COMMANDE DU DEBIT D'INJECTION

En fonction de la valeur théorique envoyée par l'ECM, le débit d'injection dépend de la commande de la soupape de décharge de la pompe d'injection et de la modification du temps d'ouverture de l'aiguille.

Commande de l'avance à l'injection de carburant

Sur la base de la valeur théorique envoyée par l'ECM, l'avance de l'injection dépend, en fonction du tarage ressort du système d'avance, du cycle de fonctionnement de la soupape de commande d'avance qui se trouve dans la pompe d'injection et du réglage de la pression dans la chambre haute pression du piston du système d'avance.

CAPTEUR DE TEMPERATURE DU CARBURANT

Le capteur relève la température du carburant dans la pompe d'injection et calibre le débit d'injection en fonction de la température du carburant.

CAPTEUR DE LA POSITION DE L'ANNEAU A CAME

Le capteur détecte le passage du bossage qui se trouve sur l'anneau à came de la pompe d'injection à l'aide d'un élément semi-conducteur à réluctance variable. Le capteur de position de l'anneau à cames assure la synchronisation de l'anneau à cames, et détecte l'avance réelle. Le boîtier de commande de la pompe d'injection mesure la révolution de la pompe d'injection grâce au signal du capteur de position de l'anneau à cames.

Simpo PDF Merge and Split Unregistered Version http://www.simpopdf.com

Valeur de référence de CONSULT-II en mode de contrôle de données

Remarques : Les données de spécification sont des valeurs de référence.

ELEMENT DE CONTROLE	CONDITION		SPECIFICATION
CAP TEMP CARB	● moteur : Une fois le moteur amené à la température normale de fontionnement		Plus de 40°C
SOUPAPE/FUITE (soupape de décharge)	● moteur : Une fois le moteur amené à la température normale de fonctionnement	Ralenti	Environ 13°CA
INJ TIMG C/V	● moteur : faire mouter le moteur en température, puis le faire tourner au ralenti.		Environ 50 % - 70 %
COUP/C DECELER	● moteur : Une fois le moteur amené à la température normal de fontionnement	Ralenti	OFF
CAP BARO	● Contact d'allumage : ON		Altitude Environ 0 m : Environ 100,62 kPa (1,0062 bar, 1,026 kg/cm^2) Environ 1 000 m : Environ 88,95 kPa (0,8895 bar, 0,907 kg/cm^2) Environ 1 500 m : Environ 83,16 kPa (0,8316 bar, 0,848 kg/cm^2) Environ 2 000 m : Environ 78,36 kPa (0,7836 bar, 0,799 kg/cm^2)

Bornes de l'ECM et valeurs de référence

Données de référence relevées entre chaque borne et la masse.

PRECAUTION :

Lors de la mesure de la tension d'entrée/sortie, ne pas utiliser les bornes de masse de l'ECM sous peine d'endommager le transistor de l'ECM. Utiliser une autre masse que celle des bornes de l'ECM.

BORNE N°	COULEUR DE CABLE	ELEMENT	CONDITION	DONNEES (tension continue)
33	G/Y	Pompe d'injection de carburant à commande électronique	Moteur en marche. └ **Pendant la montée en température** Régime de ralenti	Environ 2,4 V
40	PU	Pompe d'injection de carburant à commande électronique	Moteur en marche. └ **Pendant la montée en température** Régime de ralenti	Environ 2,4 V
52	L/W	Pompe d'injection de carburant à commande électronique	Moteur en marche. └ Régime de ralenti	Environ 0,1 V
53	L/R	Pompe d'injection de carburant à commande électronique	Moteur en marche. └ Régime de ralenti	Environ 0,45 V
			Moteur en marche. └ Le régime moteur est de 2 000 tr/mn.	Environ 0,7 V

Simpo PDF Merge and Split Unregistered Version - http://www.simpopdf.com

Bornes de l'ECM et valeurs de référence (Suite)

NOTE

Simpo PDF Merge and Split Unregistered Version - http://www.simpopdf.com

Logique de diagnostic de bord

Le défaut est détecté quand ...	Eléments de contrôles (causes possibles)
● Le système de commande de la pompe d'injection ne fonctionne pas correctement.	● Faisceau ou connecteurs (le circuit électronique de la pompe d'injection est ouvert ou en court-circuit) ● Pompe d'injection de carburant à commande électronique ● Mauvaise qualité de carburant ● ''INJ TIMING'' dans le mode ''TEST ACTIF'' de CONSULT-II.*

* : Un DTC peut être détecté avec ce test. L'effacer dans ce cas, car il ne s'agit pas d'un défaut.

Simpo PDF Merge and Split Unregistered Version - http://www.simpopdf.com

2

CONTROLE DE DONNEES	
CONTROLE	PAS DE DTC
CPV-TR/MN (PMH)	XXX TR/MN

SEF817Y

Procédure de confirmation de code de défaut (DTC)

AVEC CONSULT-II

1) Mettre le contact d'allumage sur ''ON'', puis attendre au moins 2 secondes.
2) Régler CONSULT-II en mode ''CONTROLE DE DONNEES''.
3) Démarrer le moteur et le faire tourner pendant au moins 2 secondes au régime ralenti.
   (si le moteur ne tourne pas, mettre le contact d'allumage sur ''START'' pendant 2 secondes au moins)
4) Maintenir le régime moteur à plus de 2 000 tr/min. pendant 10 secondes au minimum.
5) Si le DTC est détecté, effectuer une ''Procédure de diagnostic'', voir page EC-3620.

SANS CONSULT-II

1) Mettre le contact d'allumage sur ''ON'', puis attendre au moins 2 secondes.
2) Démarrer le moteur et le faire tourner pendant au moins 2 secondes au régime ralenti.
   (si le moteur ne tourne pas, mettre le contact d'allumage sur ''START'' pendant 2 secondes au moins)
3) Maintenir le régime moteur à plus de 2 000 tr/min. pendant 10 secondes au minimum.
4) Mettre le contact d'allumage sur ''OFF'', attendre au moins 5 secondes, puis remettre le contact sur ''ON''.
5) Effectuer le ''Test de diagnostic mode II (résultats d'autodiagnostic)'' avec l'ECM.
6) Si le DTC est détecté, effectuer une ''Procédure de diagnostic'', voir page EC-3620.

Simpo PDF Merge and Split Unregistered Version - http://www.simpopdf.com

Schéma de câblage

MODELES A DIRECTION A GAUCHE

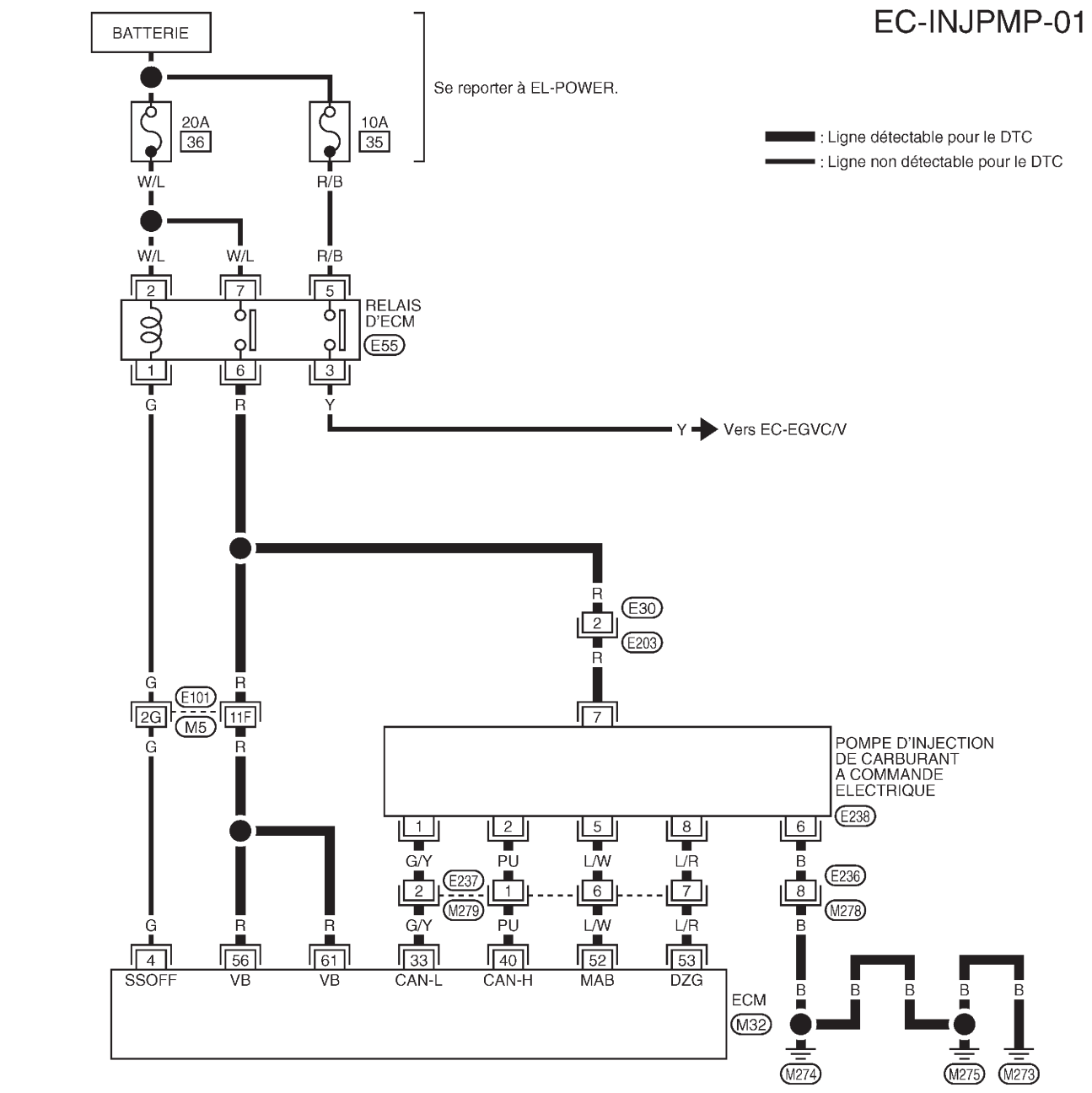



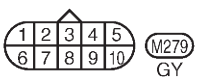

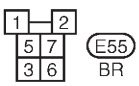

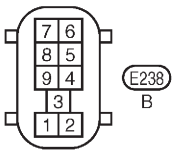

Consulter la dernière page dépliante.
M5 , E101

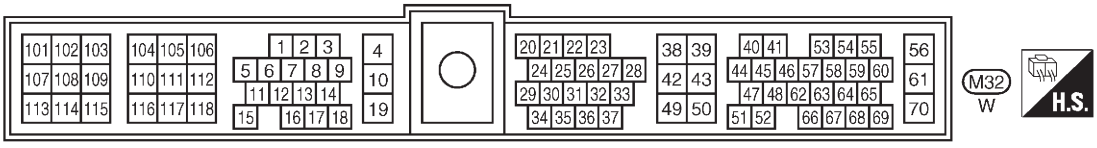

GEC275A

Simpo PDF Merge and Split Unregistered Version - http://www.simpopdf.com

Schéma de câblage (Suite)

MODELES A DIRECTION A DROITE

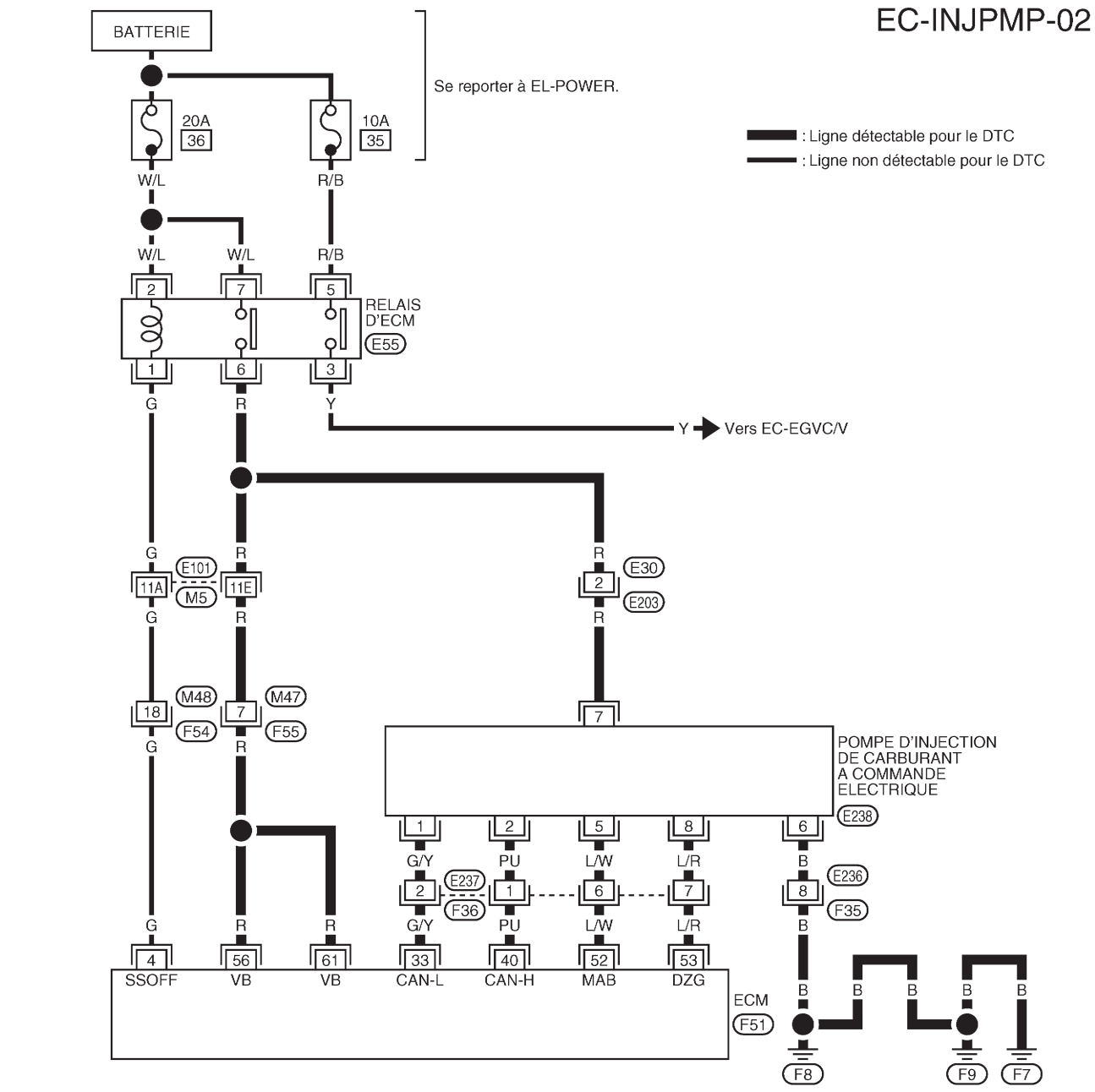

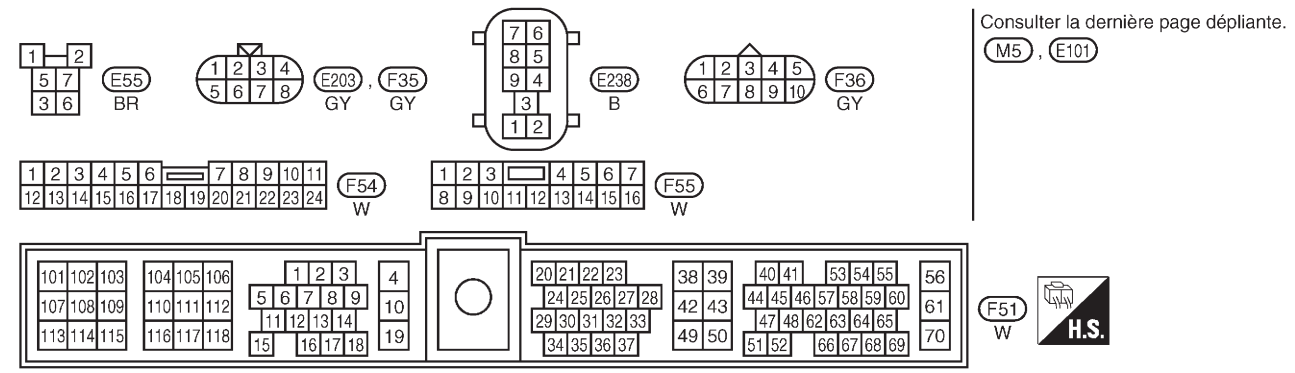

Consulter la dernière page dépliante.
M5 , E101

GEC276A

Simpo PDF Merge and Split Unregistered Version - http://www.simpopdf.com

Procédure de diagnostic

1	DEBUT DE L'INSPECTION
1. Mettre le contact d'allumage sur ''OFF''. 2. Effectuer la ''Purge d'air'', voir page EC-3455, et la ''PURGE DE L'EAU'', voir page EC-3455	
►	PASSER A L'ETAPE 2.

2	EFFECTUER DE NOUVEAU UNE PROCEDURE DE CONFIRMATION DTC
Effectuer de nouveau une ''Procédure de confirmation de DTC'', voir page EC-3618.	
Bon ou mauvais	
Bon ►	**FIN DE L'INSPECTION**
Mauvais ►	PASSER A L'ETAPE 3.

3	VERIFIER LE CIRCUIT D'ALIMENTATION DE LA POMPE D'INJECTION A COMMANDE ELECTRONIQUE

1. Mettre le contact d'allumage sur ''OFF''.
2. Débrancher le connecteur de la pompe d'injection.

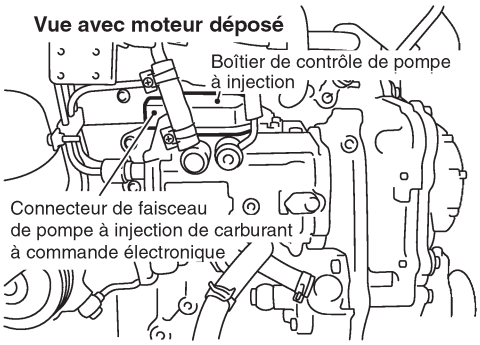

SEC228D

3. Mettre le contact d'allumage sur ''ON''.
4. Vérifier la tension entre la borne 7 de la pompe et la masse.

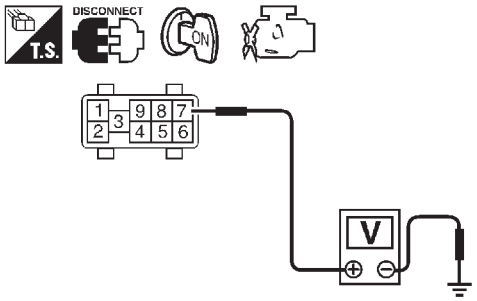

Tension : tension de la batterie

SEF438Y

Bon ou mauvais

Bon ►	PASSER A L'ETAPE 5.
Mauvais ►	PASSER A L'ETAPE 4.

Simpo PDF Merge and Split Unregistered Version - http://www.simpopdf.com

Procédure de diagnostic (Suite)

4	DETECTER LA PIECE DEFECTUEUSE
Vérifier les points suivants. ● Connecteurs de faisceaux E30, E203 ● Connecteurs de faisceaux E101, M5 ● Connecteurs de faisceaux M47, F55 (conduite à droite) ● Faisceau en circuit ouvert ou en court-circuit entre la pompe d'injection et l'ECM ● Faisceau en circuit ouvert ou en court-circuit entre la pompe d'injection et le relais d'ECM	
▶	Réparer les faisceaux ou connecteurs en circuit ouvert ou en court-circuit à la masse ou à l'alimentation.

5	VERIFIER SI LE CIRCUIT DE MASSE DE LA POMPE D'INJECTION EST OUVERT OU EN COURT-CIRCUIT
1. Mettre le contact d'allumage sur ''OFF''. 2. Vérifier la continuité du faisceau entre la borne 6 de la pompe d'injection et la masse. Se référer au schéma de câblage. **Il doit y avoir continuité.** 3. Vérifier également que le faisceau n'est pas ouvert ou en court-circuit à l'alimentation.	
Bon ou mauvais	
Bon ▶	PASSER A L'ETAPE 7.
Mauvais ▶	PASSER A L'ETAPE 6.

6	DETECTER LA PIECE DEFECTUEUSE
Vérifier les points suivants. ● Connecteurs de faisceaux E236, M278 (conduite à gauche) ● Connecteurs de faisceaux E236, F35 (conduite à droite) ● Faisceau en circuit ouvert ou en court-circuit entre la pompe d'injection et la masse du moteur	
▶	Réparer les faisceaux ou connecteurs en circuit ouvert ou en court-circuit à la masse ou à l'alimentation.

7	VERIFIER SI LA LIGNE DE COMMUNICATION EST OUVERTE OU EN COURT-CIRCUIT

1. Vérifier la continuité entre les bornes suivantes. Se référer au schéma de câblage.

Pompe à injection de carburant à commande électronique	ECM
1	33
2	40
5	52
8	53

MTBL0444

Il doit y avoir continuité.

2. Vérifier également que le faisceau n'est pas en circuit ouvert ou en court-circuit à l'alimentation.

Bon ou mauvais	
Bon ▶	PASSER A L'ETAPE 9.
Mauvais ▶	PASSER A L'ETAPE 8.

8	DETECTER LA PIECE DEFECTUEUSE
Vérifier les points suivants. ● Connecteurs de faisceaux E237, M279 (conduite à gauche) ● Connecteurs de faisceaux E237, F36 (conduite à droite) ● Faisceau en circuit ouvert ou en court-circuit entre la pompe d'injection et l'ECM	
▶	Réparer les faisceaux ou connecteurs en circuit ouvert ou en court-circuit à la masse ou à l'alimentation.

Simpo PDF Merge and Split Unregistered Version - http://www.simpopdf.com

Procédure de diagnostic (Suite)

9	**VERIFIER SI L'INCIDENT EST INTERMITTENT**
Se référer à ''DIAGNOSTIC DES DEFAUTS EN CAS D'INCIDENT INTERMITTENT'', page EC-3502.	
Bon ou mauvais	
Bon ►	Remplacer la pompe d'injection de carburant.
Mauvais ►	Réparer les faisceaux ou connecteurs en circuit ouvert ou en court-circuit à la masse ou à l'alimentation.

Simpo PDF Merge and Split Unregistered Version - http://www.simpopdf.com

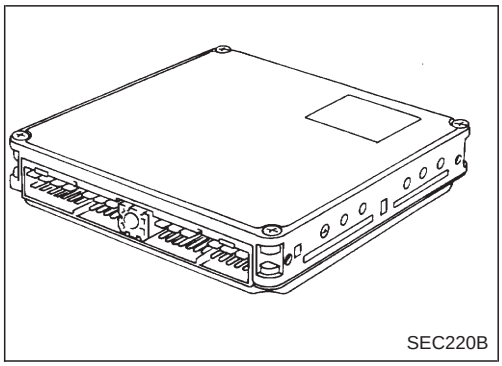
SEC220B

Description

Le module de commande du moteur est constitué d'un micro-ordinateur et de connecteurs pour l'entrée et la sortie des signaux et le raccordement de l'alimentation. Le boîtier contrôle le fonctionnement du moteur.

Logique de diagnostic de bord

Le défaut est détecté quand ...	Eléments de contrôle (causes possibles)
● Le capteur de pression absolue (intégré à l'ECM) envoie une tension trop élevée ou trop basse à l'ECM.	● ECM (module de commande de l'ECCS-D)

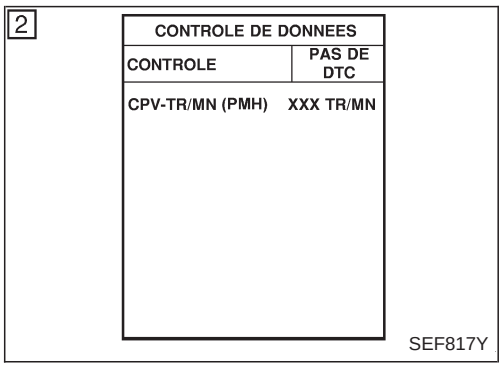

SEF817Y

Procédure de confirmation de code de défaut (DTC)

AVEC CONSULT-II

1) Mettre le contact d'allumage sur ''ON''.
2) Régler CONSULT-II en mode ''CONTROLE DE DONNEES''.
3) Démarrer le moteur et attendre au moins 2 secondes.
4) Si le DTC est détecté, effectuer une ''Procédure de diagnostic'', voir page EC-3624.

SANS CONSULT-II

1) Mettre le contact d'allumage sur ''ON'', puis attendre au moins 2 secondes.
2) Démarrer le moteur et attendre au moins 2 secondes.
3) Mettre le contact d'allumage sur ''OFF'', attendre au moins 5 secondes, puis remettre le contact sur ''ON''.
4) Effectuer le ''Test de diagnostic mode II (résultats d'autodiagnostic)'' avec l'ECM.
5) Si le DTC est détecté, effectuer une ''Procédure de diagnostic'', voir page EC-3624.

Simpo PDF Merge and Split Unregistered Version - http://www.simpopdf.com

Procédure de diagnostic

1	DEBUT DE L'INSPECTION
Avec CONSULT-II 1. Mettre le contact d'allumage sur ''ON''. 2. Sélectionner le mode ''RESULTATS AUTO-DIAG'' sur CONSULT-II. 3. Appuyer ''EFFAC''. 4. Effectuer de nouveau une ''Procédure de confirmation de DTC'', voir page EC-3624. 5. Le défaut est-il toujours affiché ?	
Sans CONSULT-II 1. Mettre le contact d'allumage sur ''ON''. 2. Effacer les données de la mémoire du mode II de diagnostic (résultats de l'autodiagnostic). 3. Effectuer de nouveau une ''Procédure de confirmation de DTC'', voir page EC-3624. 4. Effectuer le ''Test de diagnostic mode II (résultats d'autodiagnostic)''. 5. Le DTC 0802 est-il de nouveau affiché ?	
Oui ou Non	
Oui ►	PASSER A L'ETAPE 2.
Non ►	**FIN DE L'INSPECTION**

2	REMPLACER l'ECM.
1. Remplacer l'ECM. 2. Initialiser le système NATS et enregistrer tous les codes de clés de contact NATS. Se reporter à la page EC-3458. (Modèles avec NATS) 3. Effectuer ''l'Apprentissage de position de ralenti du capteur de position d'accélérateur'' de la ''PROCEDURE D'ENTRETIEN DE BASE''. Consulter la page EC-3456.	
►	**FIN DE L'INSPECTION**

Simpo PDF Merge and Split Unregistered Version - http://www.simpopdf.com

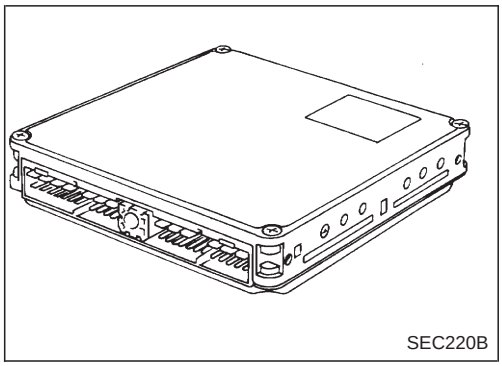
SEC220B

Description

Le module de commande du moteur est constitué d'un micro-ordinateur et de connecteurs pour l'entrée et la sortie des signaux et le raccordement de l'alimentation. Le boîtier commande le fonctionnement du moteur.

Logique de diagnostic de bord

Le défaut est détecté quand ...	Elément de contrôle (causes possibles)
● Le traitement des signaux d'entrée de l'ECM n'est pas correct.	● ECM (Boîtier de contrôle de l'ECCS-D)

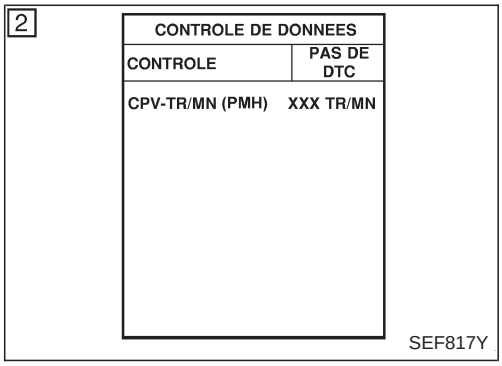

SEF817Y

Procédure de confirmation de code de défaut (DTC)

AVEC CONSULT-II

1) Mettre le contact d'allumage sur ''ON''.
2) Régler CONSULT-II en mode ''CONTROLE DE DONNEES''.
3) Attendre au moins 1 seconde.
4) Si le DTC est détecté, effectuer une ''Procédure de diagnostic'', voir page EC-3626.

SANS CONSULT-II

1) Mettre le contact d'allumage sur ''ON'', puis attendre au moins 1 seconde.
2) Mettre le contact d'allumage sur ''OFF'', attendre au moins 5 secondes, puis remettre le contact sur ''ON''.
3) Effectuer le ''Test de diagnostic mode II (résultats d'autodiagnostic)'' avec l'ECM.
4) Si le DTC est détecté, effectuer une ''Procédure de diagnostic'', voir page EC-3626.

Simpo PDF Merge and Split Unregistered Version - http://www.simpopdf.com

Procédure de diagnostic

1	DEBUT DE L'INSPECTION
Avec CONSULT-II 1. Mettre le contact d'allumage sur ''ON''. 2. Sélectionner le mode 'RESULT AUTO-DIAG'' sur CONSULT-II. 3. Appuyer ''EFFAC''. 4. Effectuer de nouveau une ''Procédure de confirmation de code de défout (DTC)'', voir page EC-3626. 5. Le défaut est-il toujours affiché ?	
Sans CONSULT-II 1. Mettre le contact d'allumage sur ''ON''. 2. Effacer les données de la mémoire du mode II de diagnostic (résultats de l'autodiagnostic). 3. Effectuer de nouveau une ''Procédure de confirmation de code de défout (DTC)'', voir page EC-3626. 4. Effectuer le ''Test de diagnostic mode II (résultats d'autodiagnostic)''. 5. Le DTC 0802 est-il de nouveau affiché ?	
Oui ou Non	
Oui ►	PASSER A L'ETAPE 2.
Non ►	**FIN DE L'INSPECTION**

2	REMPLACER l'ECM.
1. Remplacer l'ECM. 2. Initialiser le système NATS et enregistrer tous les codes de clés de contact NATS. Se reporter à la page EC-3458. (Modèles avec NATS) 3. Effectuer ''l'Apprentissage de position de ralenti du capteur de position d'accélérateur'' de la ''PROCEDURE D'ENTRETIEN DE BASE''. Consulter la page EC-3456.	
►	**FIN DE L'INSPECTION**

Simpo PDF Merge and Split Unregistered Version - http://www.simpopdf.com

Description

Le contact du feu stop se trouve sur le support de la pédale de frein. Le contact détecte la position de la pédale de frein et envoie un signal MARCHE-ARRET à l'ECM. L'ECM utilise le signal pour contrôler le système de commande de l'injection de carburant.

Bornes de l'ECM et valeurs de référence

Données de référence relevées entre chaque borne et la masse.

PRECAUTION :

Lors de la mesure de la tension d'entrée/sortie, ne pas utiliser les bornes de masse de l'ECM sous peine d'endommager le transistor de l'ECM. Utiliser une autre masse que celle des bornes de l'ECM.

BORNE N°	COULEUR DE CABLE	ELEMENT	CONDITION	DONNEES (tension continue)
17	G/Y	Contact de feu stop	Contact d'allumage sur ''ON'' └ Pédale de frein entièrement relâchée	Environ 0 V
			Contact d'allumage sur ''ON'' └ Pédale de frein enfoncée	TENSION BATTERIE (11 V - 14 V)
29	BR/R	Contact de position de la pédale de frein	Contact d'allumage sur ''ON'' └ Pédale de frein entièrement relâchée	TENSION BATTERIE (11 V - 14 V)
			Contact d'allumage sur ''ON'' └ Pédale de frein enfoncée	Environ 0 V

Logique de diagnostic de bord

Le défaut est détecté quand ...	Eléments de contrôles (causes possibles)
● La relation entre le signal du contact de feux de stop et le signal du contact de position de la pédale de frein ne se trouve pas dans la plage normale pendant la position spécifiée de la pédale de frein.	● Faisceau ou connecteurs (Le circuit du contact de feux de stop ou le circuit du contact de position de pédale de frein est ouvert ou en court-circuit.) ● Contact de feu stop ● Contact de position de la pédale de frein

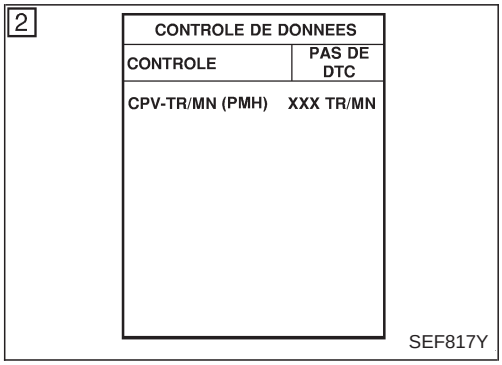

Procédure de confirmation de code de défaut (DTC)

AVEC CONSULT-II

1) Mettre le contact d'allumage sur ''ON''.
2) Régler CONSULT-II en mode ''CONTROLE DE DONNEES''.
3) Appuyer sur la pédale de frein puis la relâcher plus de 10 fois.
4) Si le DTC est détecté, effectuer une ''Procédure de diagnostic'', voir page EC-3630.

Simpo PDF Merge and Split Unregistered Version - http://www.simpopdf.com

Procédure de confirmation de code de défaut (DTC) (Suite)

SANS CONSULT-II

1) Mettre le contact d'allumage sur ''ON''.
2) Appuyer sur la pédale de frein puis la relâcher plus de 10 fois.
3) Mettre le contact d'allumage sur 'OFF', attendre au moins 5 secondes, puis remettre le contact sur 'ON'.
4) Effectuer le 'Test de diagnostic mode II (résultats d'autodiagnostic)' avec l'ECM.
5) Si le DTC est détecté, effectuer une 'Procédure de diagnostic', voir page EC-3630.

Simpo PDF Merge and Split Unregistered Version - http://www.simpopdf.com

Schéma de câblage

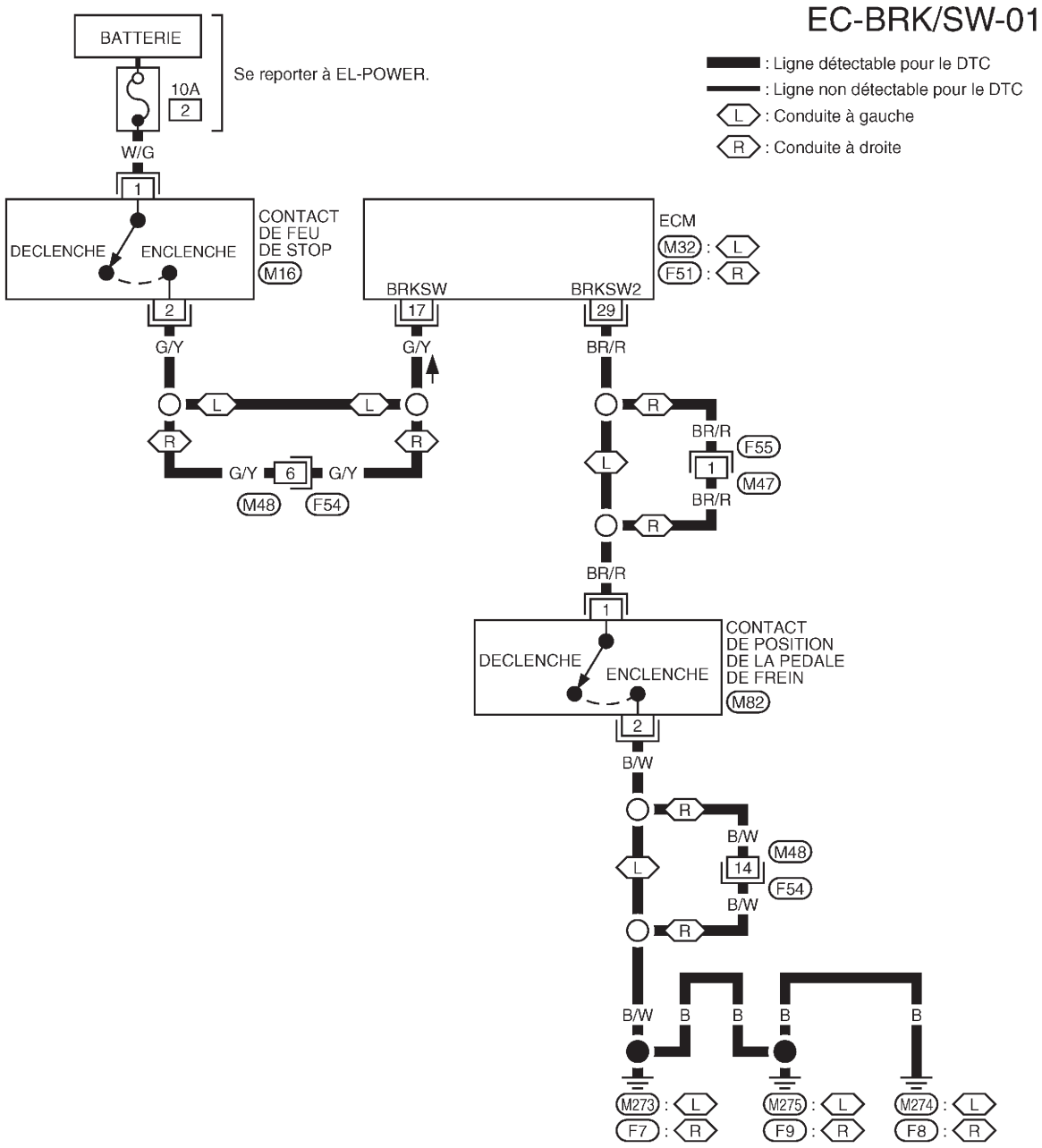

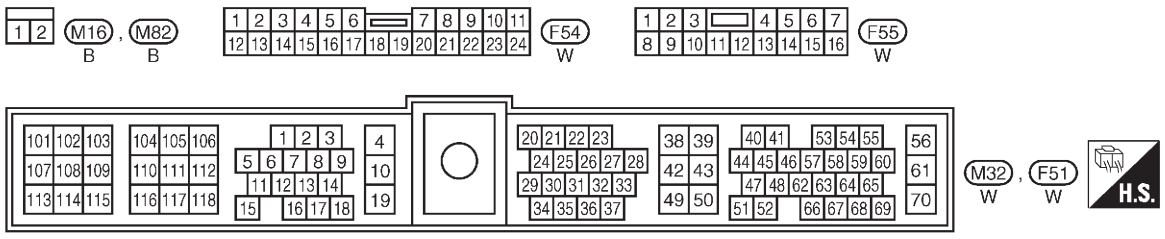

GEC282A

Simpo PDF Merge and Split Unregistered Version - http://www.simpopdf.com

Procédure de diagnostic

1	VERIFIER LE FONCTIONNEMENT DU CONTACT DU FEU STOP

Avec CONSULT-II

1. Mettre le contact d'allumage sur ''ON''.
2. Sélectionner ''CONT FREIN'' avec CONSULT-II en mode ''CONTROLE DE DONNEES''.
3. Vérifier le signal ''CONT FREIN'' dans les conditions suivantes.

CONTROLE DES DONNEES	
CONTROLE	AUCUN DTC
COMMANDE DE FREIN	ON

Conditions	COMMANDE DE FREIN
Pédale de frein relâchée	ARR
Pédale de frein enfoncée	MAR

SEC256D

Sans CONSULT-II

1. Mettre le contact d'allumage sur ''ON''.
2. Vérifier la tension entre la borne 17 de l'ECM et la masse dans les conditions suivantes.

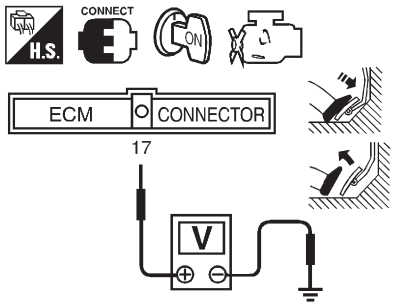

Conditions	Tension
Pédale de frein relâchée	Environ 0V
Pédale de frein enfoncée	Tension de batterie

SEC257D

Bon ou mauvais

Bon	▶	PASSER A L'ETAPE 2.
Mauvais	▶	PASSER A L'ETAPE 3.

Simpo PDF Merge and Split Unregistered Version - http://www.simpopdf.com

Procédure de diagnostic (Suite)

	VERIFIER LE FONCTIONNEMENT DU CONTACT DE POSITION DE LA PEDALE DE FREIN.

Avec CONSULT-II

1. Sélectionner ‘‘CONT FREIN2’’ avec CONSULT-II en mode ‘‘CONTROLE DE DONNEES’’.
2. Vérifier le signal ‘‘CONT FREIN2’’ dans les conditions suivantes.

CONTROLE DES DONNEES	
CONTROLE	AUCUN DTC
COMMANDE DE FREIN	ON

Conditions	OFF ACCEL SW
Pédale de frein relâchée	ARR
Pédale de frein enfoncée	MAR

SEC258D

Sans CONSULT-II

Vérifier la tension entre la borne 29 de l’ECM et la masse dans les conditions suivantes.

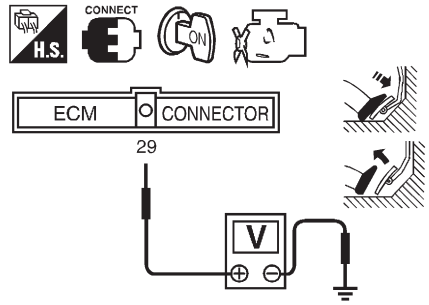

Conditions	Tension (Borne ECM 435)
Pédale de frein relâchée	Tension de batterie
Pédale de frein enfoncée	Environ 0V

SEC259D

Bon ou mauvais

Bon	▶	PASSER A L’ETAPE 14.
Mauvais	▶	PASSER A L’ETAPE 9.

3	**VERIFIER LE CIRCUIT DU CONTACT DU FEU STOP**

Vérifier le fonctionnement du feu stop en appuyant sur le contact du feu stop puis en le relâchant.

Contact de feux de stop	Feux de stop
Complètement relâchée	Eteints
Enfoncée	Allumés

MTBL0443

Bon ou mauvais

Bon	▶	PASSER A L’ETAPE 6.
Mauvais	▶	PASSER A L’ETAPE 4.

Simpo PDF Merge and Split Unregistered Version - http://www.simpopdf.com

Procédure de diagnostic (Suite)

4	VERIFIER LE CIRCUIT D'ALIMENTATION DU CONTACT DU FEU STOP

1. Mettre le contact d'allumage sur ''OFF''.
2. Débrancher le connecteur de faisceau du contact de feux de stop.

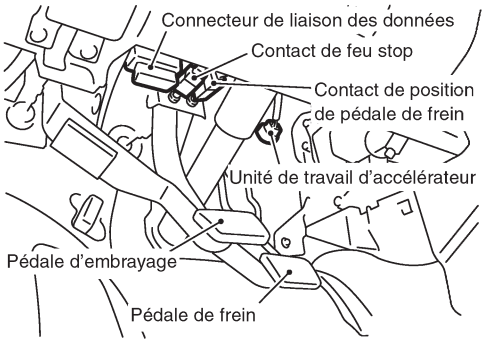

SEC233D

3. Mettre le contact d'allumage sur ''ON''.
4. Vérifier la tension entre la borne 1 du contact du feu stop et la masse avec le CONSULT-II ou avec un contrôleur.



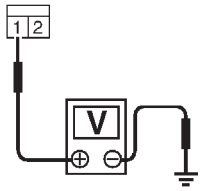

Tension : tension de la batterie

SEF435Y

Bon ou mauvais

Bon	▶	PASSER A L'ETAPE 6.
Mauvais	▶	PASSER A L'ETAPE 5.

5	DETECTER LA PIECE DEFECTUEUSE

Vérifier les points suivants.
- Fusible de 10 A
- Faisceau en circuit ouvert ou en court-circuit entre le contact de feu stop et le fusible.

	▶	Réparer les faisceaux ou connecteurs en circuit ouvert ou en court-circuit à la masse ou à l'alimentation.

Simpo PDF Merge and Split Unregistered Version - http://www.simpopdf.com

Procédure de diagnostic (Suite)

6	VERIFIER SI LE CIRCUIT DU SIGNAL D'ENTREE DU CONTACT DU FEU STOP EST OUVERT OU EN COURT-CIRCUIT

1. Mettre le contact d'allumage sur ''OFF''.
2. Débrancher le connecteur de faisceau de l'ECM.
3. Débrancher le connecteur de faisceau du contact de feux de stop.

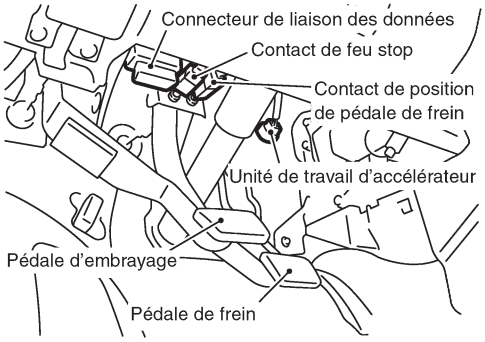

SEC233D

4. Vérifier la continuité du faisceau entre la borne 17 de l'ECM et la borne 2 du connecteur de contact de feux stop. Se reporter au schéma de câblage.
   Il doit y avoir continuité.
5. Vérifier également que le faisceau n'est pas ouvert ou en court-circuit à l'alimentation.

Bon ou mauvais

Bon	▶	PASSER A L'ETAPE 8.
Mauvais	▶	PASSER A L'ETAPE 7.

7	DETECTER LA PIECE DEFECTUEUSE

Vérifier les points suivants.
- Connecteurs de faisceaux M48, F54 (conduite à droite)
- Faisceau ouvert ou en court-circuit entre le contact du feu stop et l'ECM..

	▶	Réparer les faisceaux ou connecteurs en circuit ouvert ou en court-circuit à la masse ou à l'alimentation.

8	VERIFIER LE CONTACT DE FEUX DE STOP

Vérifier la continuité entre les bornes 1 et 2 du contact de feux de stop dans les conditions suivantes.

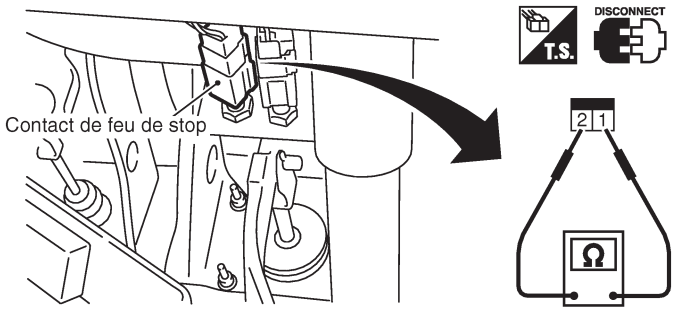

Conditions	Continuité
Pédale de frein complètement relâchée	Ne doit pas exister.
Pédale de frein enfoncée	Doit exister.

SEC260D

Bon ou mauvais

Bon	▶	PASSER A L'ETAPE 14.
Mauvais	▶	Remplacer le contact de feux de stop.

Simpo PDF Merge and Split Unregistered Version - http://www.simpopdf.com

Procédure de diagnostic (Suite)

9	CONTROLER SI LE CIRCUIT DE MASSE DU CONTACT DE POSITION DE LA PEDALE DE FREIN N'EST PAS OUVERT OU EN COURT-CIRCUIT

1. Mettre le contact d'allumage sur ''OFF''.
2. Débrancher le connecteur de faisceau du contact de position de la pédale de frein.

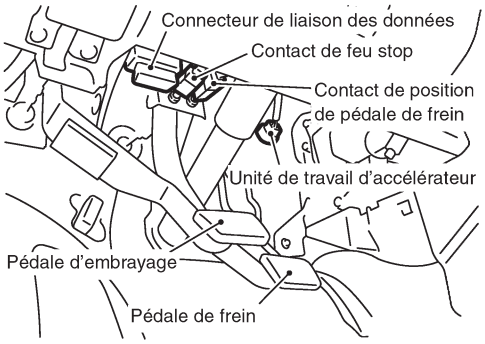

SEC233D

3. Vérifier la continuité du faisceau entre la borne 2 du contact de position de pédale de frein et la masse. Se reporter au schéma de câblage.
   Il doit y avoir continuité.
4. Vérifier également que le faisceau n'est pas en circuit ouvert ou en court-circuit à l'alimentation.

Bon ou mauvais

Bon	►	PASSER A L'ETAPE 11.
Mauvais	►	PASSER A L'ETAPE 10.

10	DETECTER LA PIECE DEFECTUEUSE

Vérifier les points suivants.
- Connecteurs de faisceaux M48, F54 (conduite à droite)
- Faisceau ouvert ou en court-circuit entre le contact de position de la pédale de frein et la masse.

	►	Réparer les faisceaux ou connecteurs en circuit ouvert ou en court-circuit à la masse ou à l'alimentation.

11	CONTROLER SI LE CIRCUIT DU SIGNAL D'ENTREE DU CONTACT DE POSITION DE LA PEDALE DE FREIN N'EST PAS OUVERT OU EN COURT-CIRCUIT.

1. Débrancher le connecteur de faisceau de l'ECM.
2. Vérifier la continuité du faisceau entre la borne 29 de l'ECM et la borne 1 du contact de position de pédale de frein. Se référer au schéma de câblage.
   Il doit y avoir continuité.
3. Vérifier également que le faisceau n'est pas ouvert ou en court-circuit à l'alimentation.

Bon ou mauvais

Bon	►	PASSER A L'ETAPE 13.
Mauvais	►	PASSER A L'ETAPE 12.

12	DETECTER LA PIECE DEFECTUEUSE

Vérifier les points suivants.
- Connecteurs de faisceaux F55, M47 (conduite à droite)
- Faisceau ouvert ou en court-circuit entre le contact de position de la pédale de frein et l'ECM.

	►	Réparer les faisceaux ou connecteurs en circuit ouvert ou en court-circuit à la masse ou à l'alimentation.

Simpo PDF Merge and Split Unregistered Version - http://www.simpopdf.com

Procédure de diagnostic (Suite)

13	CONTROLER LE CONTACT DE POSITION DE LA PEDALE DE FREIN

Vérifier la continuité entre les bornes 1 et 2 du contact de la position de la pédale de frein dans les conditions suivantes.

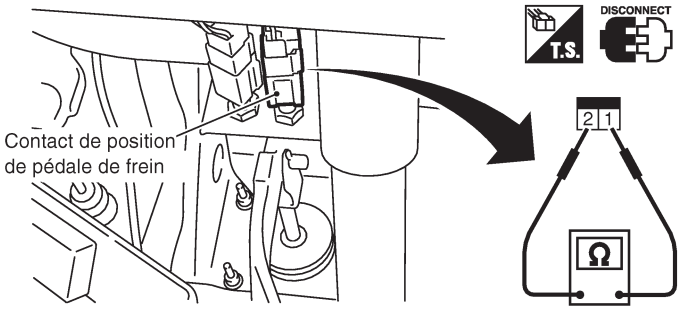

Conditions	Continuité
Pédale de frein complètement relâchée	Ne doit pas exister.
Pédale de frein enfoncée	Doit exister.

SEC261D

Bon ou mauvais

Bon	▶	PASSER A L'ETAPE 14.
Mauvais	▶	Remplacer le contact de position de la pédale de frein.

14	VERIFIER SI L'INCIDENT EST INTERMITTENT
Se référer à ''DIAGNOSTIC DES DEFAUTS EN CAS D'INCIDENT INTERMITTENT'', page EC-3502.	
	▶ **FIN DE L'INSPECTION**

Simpo PDF Merge and Split Unregistered Version - http://www.simpopdf.com

Bornes de l'ECM et valeurs de référence

Données de référence relevées entre chaque borne et la masse.

PRECAUTION :
Lors de la mesure de la tension d'entrée/sortie, ne pas utiliser les bornes de masse de l'ECM sous peine d'endommager le transistor de l'ECM. Utiliser une autre masse que celle des bornes de l'ECM.

BORNE N°	COULEUR DE CABLE	ELEMENT	CONDITION	DONNEES (tension continue)
4	G	Relais d'ECM (arrêt automatique)	Contact d'allumage sur ''ON''	Environ 0,9 V
			Contact d'allumage ''OFF'' → Pendant quelques secondes après avoir mis le contact d'allumage sur 'OFF'	
			Contact d'allumage ''OFF'' → Quelques secondes après avoir mis le contact d'allumage sur 'OFF'	TENSION BATTERIE (11 V - 14 V)
38	W/R	Contact d'allumage	Contact d'allumage ''OFF''	0V
			Contact d'allumage sur ''ON''	TENSION BATTERIE (11 V - 14 V)
56 61	R R	Alimentation électrique de l'ECM	Contact d'allumage sur ''ON''	TENSION BATTERIE (11 V - 14 V)

Logique de diagnostic de bord

Le défaut est détecté quand ...	Eléments de contrôles (causes possibles)
● Le signal de tension envoyé par le relais de l'ECM à l'ECM est irrégulier.	● Faisceau ou connecteurs (le relais d'ECM est ouvert ou en court-circuit). ● Relais d'ECM

2

CONTROLE DE DONNEES	
CONTROLE	PAS DE DTC
CPV-TR/MN (PMH)	XXX TR/MN

SEF817Y

Procédure de confirmation de code de défaut (DTC)

AVEC CONSULT-II

1) Mettre le contact d'allumage sur ''ON''.
2) Régler CONSULT-II en mode ''CONTROLE DE DONNEES''.
3) Mettre le contact d'allumage sur ''OFF'', attendre au moins 20 secondes, puis remettre le contact sur ''ON''.
4) Si le DTC est détecté, effectuer une ''Procédure de diagnostic'', voir page EC-3639.

SANS CONSULT-II

1) Mettre le contact d'allumage sur ''ON''.
2) Mettre le contact d'allumage sur ''OFF'', attendre au moins 20 secondes, puis remettre le contact sur ''ON''.
3) Effectuer le ''Test de diagnostic mode II (résultats d'autodiagnostic)'' avec l'ECM.
4) Si le DTC est détecté, effectuer une ''Procédure de diagnostic'', voir page EC-3639.

Simpo PDF Merge and Split Unregistered Version - http://www.simpopdf.com

Schéma de câblage

MODELES A DIRECTION A GAUCHE

EC-ECMRLY-01

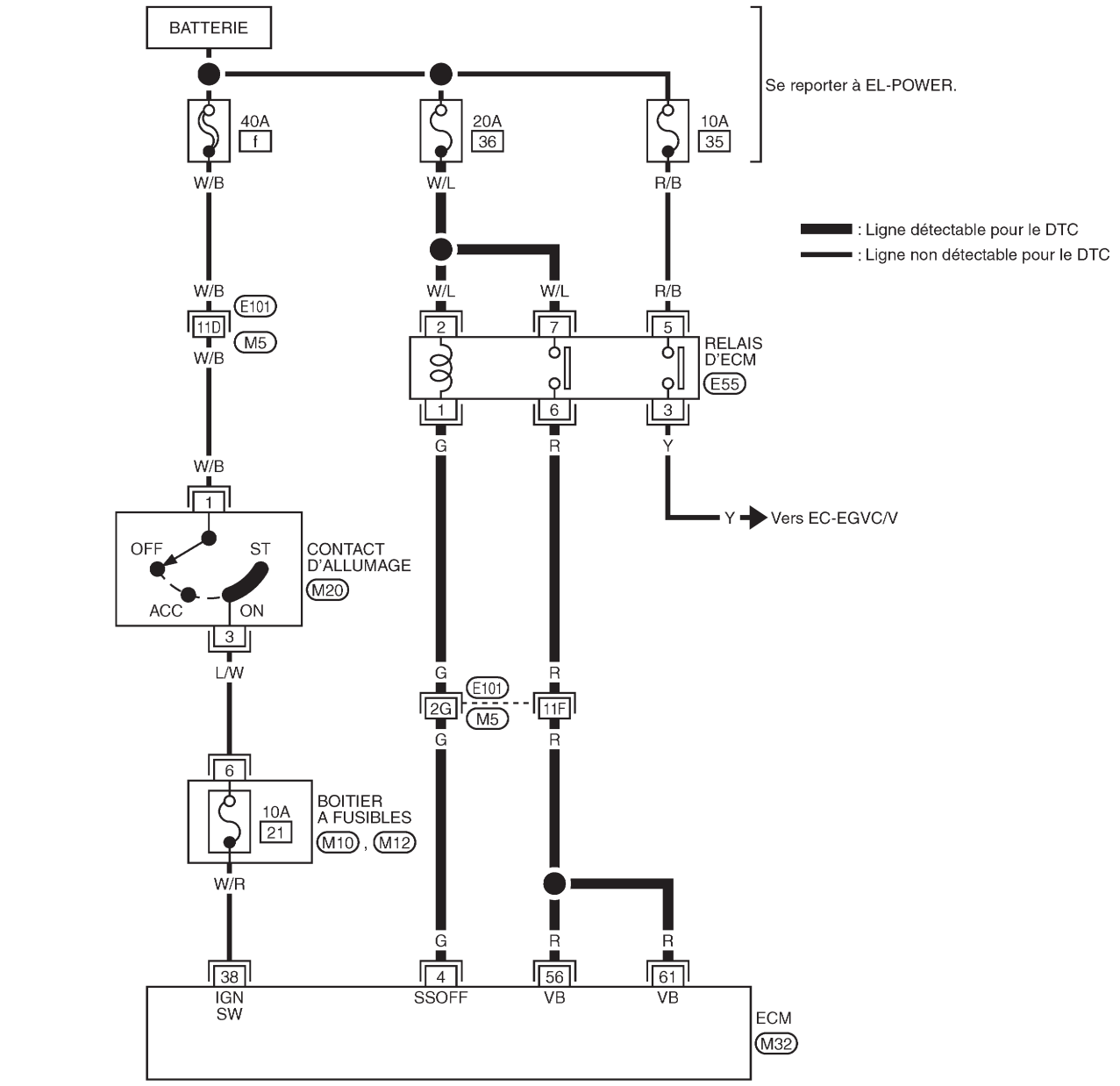

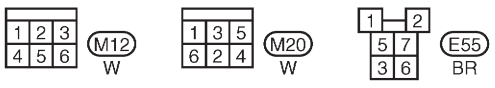

Consulter la dernière page dépliante.
M5 , E101
M10

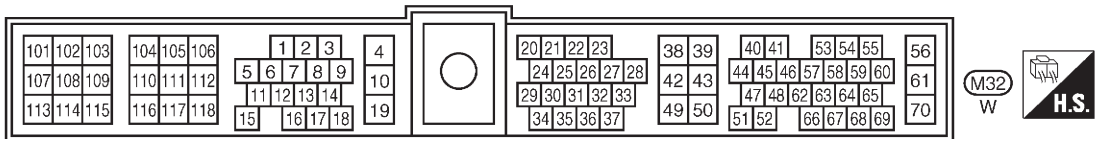

GEC142A

Simpo PDF Merge and Split Unregistered Version - http://www.simpopdf.com

Schéma de câblage (Suite)

MODELES A DIRECTION A DROITE

EC-ECMRLY-02

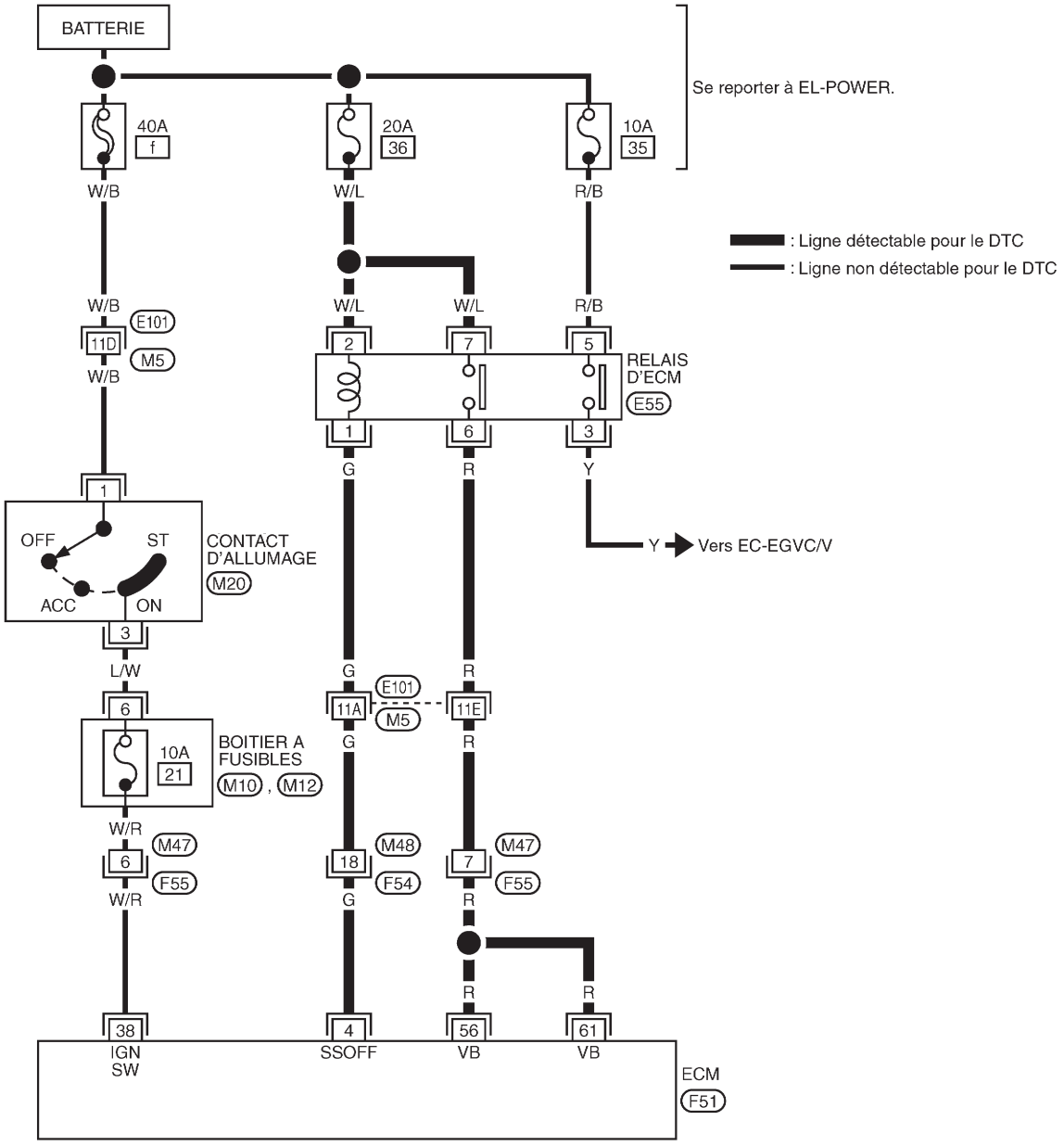

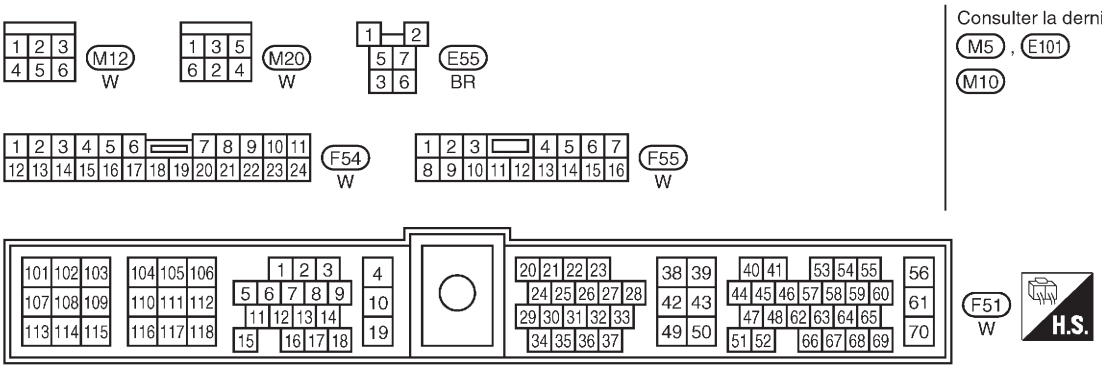

GEC143A

Simpo PDF Merge and Split Unregistered Version - http://www.simpopdf.com

Procédure de diagnostic

1	VERIFIER LE CIRCUIT D'ALIMENTATION DE L'ECM

1. Mettre le contact d'allumage sur ''OFF''.
2. Débrancher le relais d'ECM.

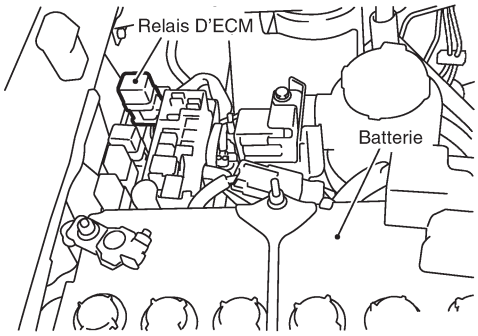

SEC950C

3. Vérifier la tension entre les bornes 2, 7 de l'ECM et la masse avec le CONSULT-II ou avec un contrôleur.

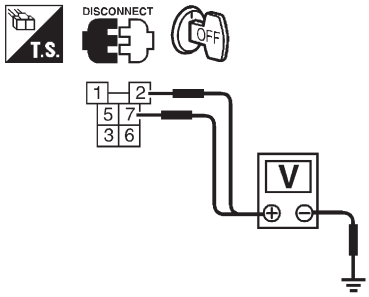

Tension: Tension de la batterie

SEC241D

Bon ou mauvais

Bon	▶	PASSER A L'ETAPE 3.
Mauvais	▶	PASSER A L'ETAPE 2.

2	DETECTER LA PIECE DEFECTUEUSE

Vérifier les points suivants.
- Fusible de 20 A
- Faisceau en circuit ouvert ou en court-circuit entre le relais de l'ECM et la batterie

	▶	Réparer les faisceaux ou connecteurs en circuit ouvert ou en court-circuit à la masse ou à l'alimentation.

3	VERIFIER SI LE CIRCUIT DE SIGNAL D'ENTREE DE L'ECM EST OUVERT OU EN COURT-CIRCUIT

1. Mettre le contact d'allumage sur ''OFF''.
2. Débrancher le connecteur de faisceau de l'ECM.
3. Vérifier la continuité du faisceau entre les bornes 56, 61 de l'ECM et la borne 6 du relais d'ECM. Se référer au schéma de câblage.
   Il doit y avoir continuité.
4. Vérifier également que le faisceau n'est pas ouvert ou en court-circuit à l'alimentation.

Bon ou mauvais

Bon	▶	PASSER A L'ETAPE 5.
Mauvais	▶	PASSER A L'ETAPE 4.

Simpo PDF Merge and Split Unregistered Version - http://www.simpopdf.com

Procédure de diagnostic (Suite)

4	DETECTER LA PIECE DEFECTUEUSE
Vérifier les points suivants. ● Connecteurs de faisceaux E101, M5 ● Connecteurs de faisceaux M47, F55 (conduite à droite) ● Faisceau ouvert ou en court-circuit entre l'ECM et le relais de l'ECM	
►	Réparer les faisceaux ou connecteurs en circuit ouvert ou en court-circuit à la masse ou à l'alimentation.

5	VERIFIER SI LE CIRCUIT DE SIGNAL DE SORTIE DE L'ECM EST OUVERT OU EN COURT-CIRCUIT
1. Vérifier la continuité du faisceau entre la borne 4 de l'ECM et la borne 1 du relais d'ECM. Se référer au schéma de câblage. **Il doit y avoir continuité.** 2. Vérifier également que le faisceau n'est pas ouvert ou en court-circuit à l'alimentation.	
Bon ou mauvais	
Bon ►	PASSER A L'ETAPE 7.
Mauvais ►	PASSER A L'ETAPE 6.

6	DETECTER LA PIECE DEFECTUEUSE
Vérifier les points suivants. ● Connecteurs de faisceaux E101, M5 ● Connecteurs de faisceaux M48, F54 (conduite à droite) ● Faisceau ouvert ou en court-circuit entre l'ECM et le relais de l'ECM	
►	Réparer les faisceaux ou connecteurs en circuit ouvert ou en court-circuit à la masse ou à l'alimentation.

7	VERIFIER LE RELAIS D'ECM.
1. Appliquer une tension continue de 12 V entre les bornes 1 et 2 du relais d'ECM. 2. Vérifier la continuité entre les bornes 3 et 5, 6 et 7 du relais d'ECM	

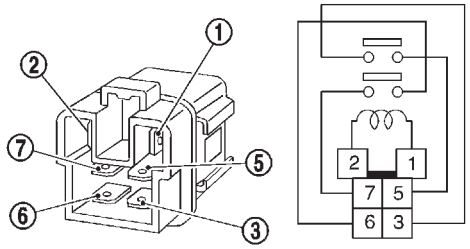

Condition	Continuité
Courant continu de 12V entre les bornes 1 et 2 du relais	Oui
ETEINT	Non

SEF296X

Bon ou mauvais	
Bon ►	PASSER A L'ETAPE 8.
Mauvais ►	Remplacer le relais d'ECM.

8	VERIFIER SI L'INCIDENT EST INTERMITTENT
Se reporter à ''DIAGNOSTIC DES DEFAUTS EN CAS D'INCIDENT INTERMITTENT'', page EC-3502.	
►	**FIN DE L'INSPECTION**

Simpo PDF Merge and Split Unregistered Version - http://www.simpopdf.com

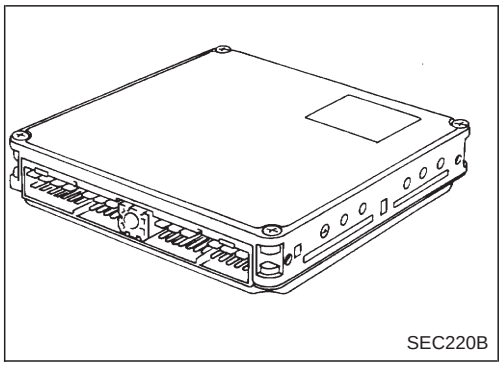
SEC220B

Description

Le module de commande du moteur est constitué d'un micro-ordinateur et de connecteurs pour l'entrée et la sortie des signaux et le raccordement de l'alimentation. Le boîtier commande le fonctionnement du moteur.

Logique de diagnostic de bord

Le défaut est détecté quand ...	Eléments de contrôles (causes possibles)
● Le traitement des signaux d'entrée de l'ECM n'est pas correct.	● ECM (module de commande de l'ECCS-D)

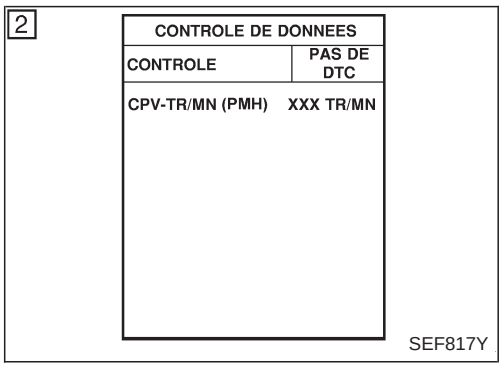

SEF817Y

Procédure de confirmation de code de défaut (DTC)

AVEC CONSULT-II

1) Mettre le contact d'allumage sur ''ON''.
2) Régler CONSULT-II en mode ''CONTROLE DE DONNEES''.
3) Mettre le contact d'allumage sur ''OFF'', attendre au moins 20 secondes, puis remettre le contact sur ''ON''.
4) Si le DTC est détecté, effectuer une ''Procédure de diagnostic'', voir page EC-3642.

SANS CONSULT-II

1) Mettre le contact d'allumage sur ''ON'', puis attendre au moins 2 secondes.
2) Mettre le contact d'allumage sur ''OFF'', attendre au moins 20 secondes, puis remettre le contact sur ''ON''.
3) Effectuer le ''Test de diagnostic mode II (résultats d'autodiagnostic)'' avec l'ECM.
4) Si le DTC est détecté, effectuer une ''Procédure de diagnostic'', voir page EC-3642.

Simpo PDF Merge and Split Unregistered Version - http://www.simpopdf.com

Procédure de diagnostic

1	DEBUT DE L'INSPECTION

Avec CONSULT-II

1. Mettre le contact d'allumage sur ''ON''.
2. Sélectionner le mode ''RESULTATS AUTO-DIAG'' sur CONSULT-II.
3. Appuyer ''EFFAC''.
4. Effectuer de nouveau une ''Procédure de confirmation de DTC'', voir page EC-3642.
5. Le défaut est-il toujours affiché ?

Sans CONSULT-II

1. Mettre le contact d'allumage sur ''ON''.
2. Effacer les données de la mémoire du mode II de diagnostic (résultats de l'autodiagnostic).
3. Effectuer de nouveau une ''Procédure de confirmation de DTC'', voir page EC-3642.
4. Effectuer le ''Test de diagnostic mode II (résultats d'autodiagnostic)''.
5. Le DTC 0903 est-il de nouveau affiché ?

Oui ou Non		
Oui	▶	PASSER A L'ETAPE 2.
Non	▶	**FIN DE L'INSPECTION** 2

	REMPLACER l'ECM.

1. Remplacer l'ECM.
2. Initialiser le système NATS et enregistrer tous les codes de clés de contact NATS. Se reporter à la page EC-3458. (Modèles avec NATS)
3. Effectuer ''l'Apprentissage de position de ralenti du capteur de position d'accélérateur'' de la ''PROCEDURE D'ENTRETIEN DE BASE''. Consulter la page EC-3456.

	▶	**FIN DE L'INSPECTION**

Simpo PDF Merge and Split Unregistered Version - http://www.simpopdf.com

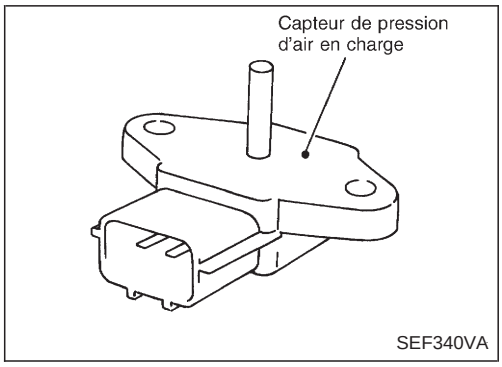

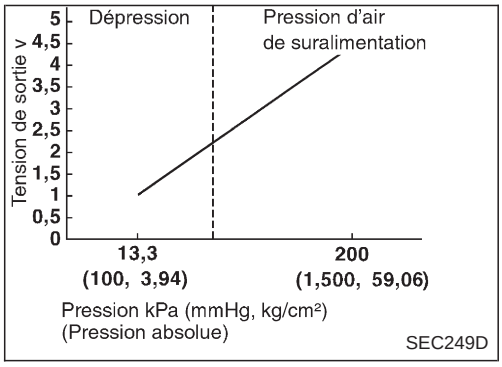

Description des composants

Le capteur de la pression d'air de suralimentation mesure la pression de l'air du turbocompresseur. La tension de sortie du capteur envoyée à l'ECM augmente avec la pression. Dans les conditions normales, le capteur de la pression d'air de suralimentation n'est pas utilisé par le système de gestion moteur.

Bornes de l'ECM et valeurs de référence

Données de référence relevées entre chaque borne et la masse.

PRECAUTION :

Lors de la mesure de la tension d'entrée/sortie, ne pas utiliser les bornes de masse de l'ECM sous peine d'endommager le transistor de l'ECM. Utiliser une autre masse que celle des bornes de l'ECM.

BORNE N°	COULEUR DE CABLE	ELEMENT	CONDITION	DONNEES (tension continue)
46	P/L	Capteur de pression d'air de suralimentation	Moteur en marche. └ **Pendant la montée en température** Régime de ralenti	Environ 2,7 V

Logique de diagnostic de bord

Le défaut est détecté quand ...	Eléments de contrôles (causes possibles)
● Une tension anormalement élevée ou basse provenant du capteur est adressée à l'ECM.	● Faisceau ou connecteurs (le circuit de capteur est ouvert ou en court-circuit). ● Capteur de pression d'air de suralimentation

Simpo PDF Merge and Split Unregistered Version - http://www.simpopdf.com

3

CONTROLE DE DONNEES	
CONTROLE	PAS DE DTC
CPV-TR/MN (PMH)	XXX TR/MN

SEF817Y

Procédure de confirmation de code de défaut (DTC)

AVEC CONSULT-II

1) Mettre le contact d'allumage sur ''ON''.
2) Régler CONSULT-II en mode ''CONTROLE DE DONNEES''.
3) Attendre au moins 1 seconde.
4) Si le DTC est détecté, effectuer une ''Procédure de diagnostic'', voir page EC-3646.

SANS CONSULT-II

1) Mettre le contact d'allumage sur ''ON'', puis attendre au moins 1 seconde.
2) Mettre le contact d'allumage sur ''OFF'', attendre au moins 5 secondes, puis remettre le contact sur ''ON''.
3) Effectuer le ''Test de diagnostic mode II (résultats d'autodiagnostic)'' avec l'ECM.
4) Si le DTC est détecté, effectuer une ''Procédure de diagnostic'', voir page EC-3646.

Simpo PDF Merge and Split Unregistered Version - http://www.simpopdf.com

Schéma de câblage

EC-BOOST-01

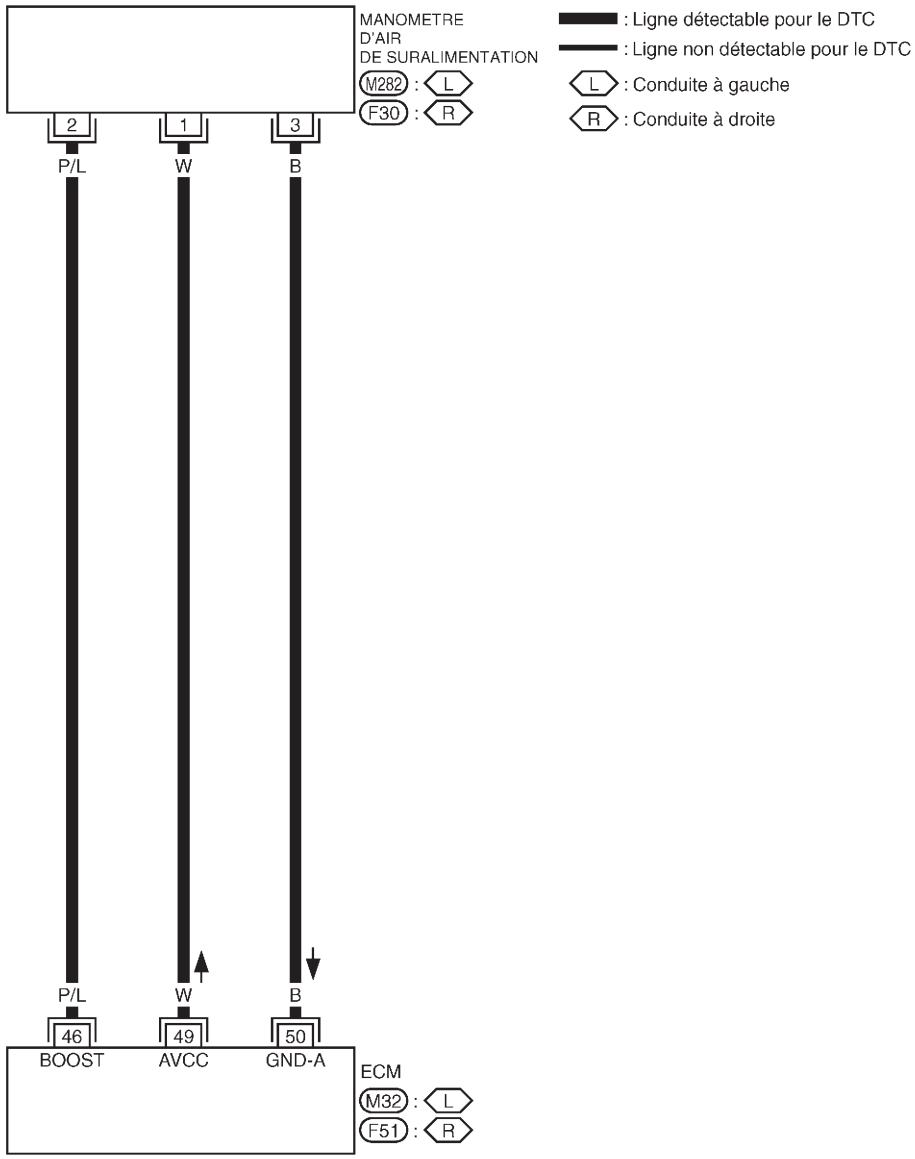

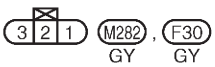

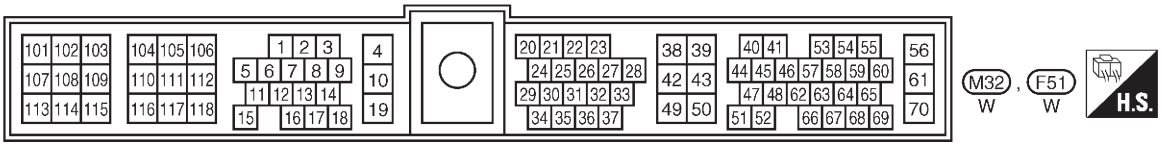

GEC283A

Simpo PDF Merge and Split Unregistered Version - http://www.simpopdf.com

Procédure de diagnostic

1	VERIFIER LE CIRCUIT D'ALIMENTATION DU CAPTEUR D'AIR DE SURALIMENTATION

1. Arrêter le moteur.
2. Débrancher le connecteur de faisceau de capteur de pression d'air de suralimentation.

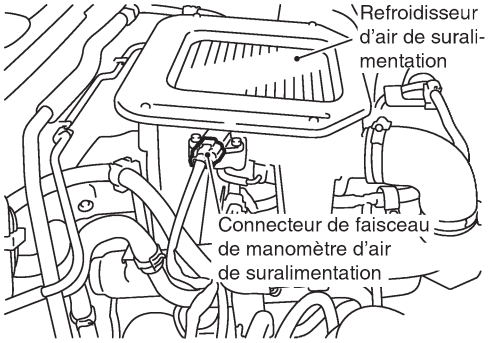

SEC234D

3. Mettre le contact d'allumage sur ''ON''.
4. Vérifier la tension entre la borne 1 du capteur de pression d'air de suralimentation et la masse avec le CONSULT-II ou avec un contrôleur.

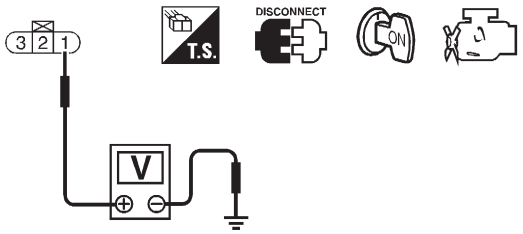

Tension : Environ 5 V

SEF306Z

Bon ou mauvais

Bon	▶	PASSER A L'ETAPE 2.
Mauvais	▶	Réparer le faisceau ou les connecteurs.

2	VERIFIER SI LE CIRCUIT DE MASSE DU CAPTEUR DE PRESSION D'AIR DE SURALIMENTATION EST OUVERT OU EN COURT-CIRCUIT

1. Mettre le contact d'allumage sur ''OFF''.
2. Vérifier la continuité du faisceau entre la borne 3 du capteur de pression d'air de suralimentation et la masse du moteur. Se référer au schéma de câblage.
   Il doit y avoir continuité.
3. Vérifier également que le faisceau n'est pas en court-circuit à l'alimentation.

Bon ou mauvais

Bon	▶	PASSER A L'ETAPE 3.
Mauvais	▶	Réparer les faisceaux ou connecteurs en circuit ouvert ou en court-circuit à la masse ou à l'alimentation.

Simpo PDF Merge and Split Unregistered Version - http://www.simpopdf.com

Procédure de diagnostic (Suite)

3	VERIFIER SI LE CIRCUIT DE SIGNAL D'ENTREE DU CAPTEUR DE PRESSION D'AIR DE SURALIMENTATION EST OUVERT OU EN COURT-CIRCUIT

1. Débrancher le connecteur de faisceau de l'ECM.
2. Vérifier la continuité du faisceau entre la borne 46 de l'ECM et la borne 2 du capteur de pression d'air de suralimentation. Se référer au schéma de câblage.
   Il doit y avoir continuité.
3. Vérifier également que le faisceau n'est pas ouvert ou en court-circuit à l'alimentation.

Bon ou mauvais

Bon	▶	PASSER A L'ETAPE 4.
Mauvais	▶	Réparer les faisceaux ou connecteurs en circuit ouvert ou en court-circuit à la masse ou à l'alimentation.

4	VERIFIER LE CAPTEUR DE PRESSION D'AIR DE SURALIMENTATION

1. Déposer le capteur de pression d'air de suralimentation avec son connecteur de faisceau branché.
2. Mettre le contact d'allumage sur ''ON''.
3. Appliquer une pression au capteur de pression d'air de suralimentation avec une pompe génératrice de pression comme indiqué sur l'illustration.

PRECAUTION :

- **Toujours étalonner la jauge de la pompe au moment de l'utiliser.**
- **Effectuer la vérification à température ambiante [10°C - 30°C].**

4. Vérifier la tension de sortie entre la borne 2 du capteur d'air de suralimentation et la masse du moteur.

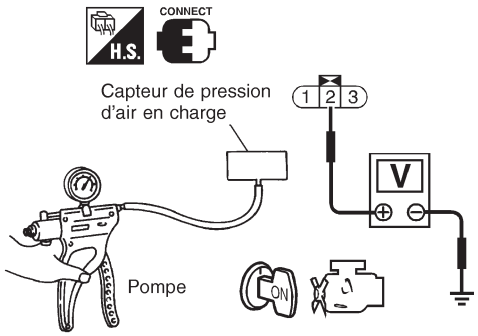

Pression (Relative à la pression atmosphérique)	Tension V
0 kPa (0 mbar, 0 mmHg)	1,9 - 3,0
+40 kPa (400 mbar, 300 mmHg)	La tension devrait être entre 0,6 et 1,0V supérieure à la valeur mesurée ci-dessus.

SEF449Z

Bon ou mauvais

Bon	▶	PASSER A L'ETAPE 5.
Mauvais	▶	Remplacer le capteur de pression d'air de suralimentation

5	VERIFIER SI L'INCIDENT EST INTERMITTENT
Se référer à ''DIAGNOSTIC DES DEFAUTS POUR INCIDENT INTERMITTENT'', page EC-3502.	
	▶ **FIN DE L'INSPECTION**

Simpo PDF Merge and Split Unregistered Version - http://www.simpopdf.com

Description

DESCRIPTION DU SYSTEME

Capteur	Signal d'entrée à l'ECM	Fonction de l'ECM	Actionneur
Pompe d'injection de carburant à commande électronique	Signal d'injection de carburant	Commande de volume EGR	Soupape de commande de volume EGR
Capteur d'angle de vilebrequin (PMH)	Régime du moteur		
Capteur de vitesse du véhicule	Vitesse du véhicule		
Capteur de température du liquide de refroidissement moteur	Température du liquide de refroidissement moteur		
Contact d'allumage	Signal de démarrage		
Capteur de position d'accélérateur	Position de l'accélérateur		
Batterie	Tension de la batterie		
Interrupteur de climatiseur	Fonctionnement de climatiseur		
Contact de position stationnement/ point mort (PNP)	Signal de position de stationnement/ point mort		
Capteur de pression atmosphérique (intégré dans l'ECM)	Pression atmosphérique :		

Ce système commande le débit des gaz d'échappement recyclés depuis le collecteur d'échappement vers le collecteur d'admission. La commande du débit se fait par variation de l'ouverture du by-pass de la soupape de commande de volume de l'EGR. Un moteur pas-à-pas intégré à la soupape ouvre celle-ci par étapes en fonction d'impulsions transmises par l'ECM. L'ouverture de la soupape varie pour optimiser la gestion moteur. La valeur optimale programmée dans l'ECM est déterminée en tenant compte de diverses conditions moteur.
La soupape de commande de volume de l'EGR reste fermée dans les conditions suivantes.

- Moteur arrêté
- Démarrage du moteur
- Moteur froid
- Température trop élevée du moteur
- Régime moteur élevé
- Papillon en position plein gaz
- Tension de la batterie faible
- Pression atmosphérique basse

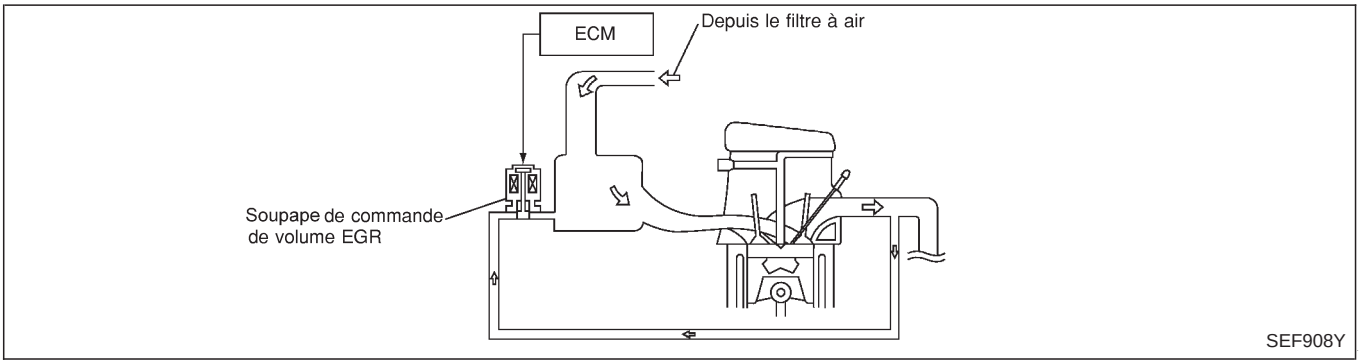

Simpo PDF Merge and Split Unregistered Version - http://www.simpopdf.com

Description (Suite)

DESCRIPTION DES COMPOSANTS

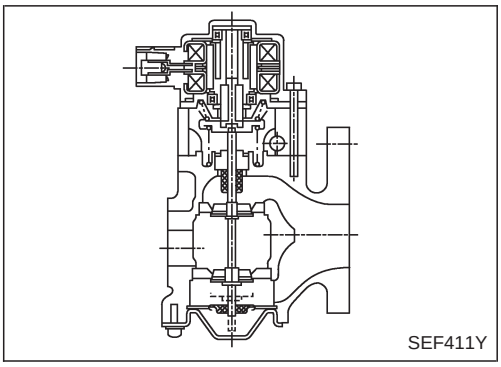
SEF411Y

Soupape de contrôle de volume de l'EGR

La soupape de commande de volume EGR utilise un moteur pas-à-pas pour réguler le débit des gaz d'échappement recyclés depuis le collecteur d'échappement. Ce moteur dispose d'enroulements à 4 phases. Il est commandé par des signaux d'impulsion de sortie envoyés par l'ECM. Deux enroulements sont activés et désactivés l'un après l'autre. Chaque fois qu'une impulsion d'excitation est émise, la soupape s'ouvre ou se ferme pour modifier le débit de gaz. Lorsqu'aucune variation du débit de gaz n'est nécessaire, l'ECM ne transmet aucune impulsion. Un signal de tension particulier est émis de telle sorte que la soupape reste dans la même position d'ouverture.

Valeur de référence de CONSULT-II en mode de contrôle de données

Les données de spécification sont des valeurs de référence.

ELEMENT DE CONTROLE	CONDITION		SPECIFICATION
SOUP COMM VOL EGR	● moteur : Une fois le moteur chaud ● Interrupteur de climatiseur : ''OFF'' ● Levier de changement de vitesses : Position de point mort ● A vide	Après 1 minute au ralenti	Plus de 10 paliers
		Montée en régime rapide jusqu'à 3 200 tr/mn	0 degré

Bornes de l'ECM et valeurs de référence

Données de référence relevées entre chaque borne et la masse.

PRECAUTION :

Lors de la mesure de la tension d'entrée/sortie, ne pas utiliser les bornes de masse de l'ECM sous peine d'endommager le transistor de l'ECM. Utiliser une autre masse que celle des bornes de l'ECM.

BORNE N°	COULEUR DE CABLE	ELEMENT	CONDITION	DONNEES (tension continue)
103 105 109 115	GY OR/B W/L SB	Soupape de contrôle de volume EGR	Moteur en marche. └ **Pendant la montée en température** Régime de ralenti	0,1 V - 14 V

2

CONTROLE DE DONNEES	
CONTROLE	PAS DE DTC
CPV-TR/MN (PMH)	XXX TR/MN

SEF817Y

Procédure de confirmation de code de défaut (DTC)

AVEC CONSULT-II

1) Démarrer le moteur et l'amener à température normale de fonctionnement.
2) Régler CONSULT-II en mode ''CONTROLE DE DONNEES''.
3) Mettre le contact d'allumage sur ''OFF'' puis de nouveau sur ''ON'' en l'espace de 1 seconde.
4) Démarrer le moteur et le laisser tourner au ralenti.
5) Si le DTC est détecté, effectuer une ''Procédure de diagnostic'', voir page EC-3653.

Simpo PDF Merge and Split Unregistered Version - http://www.simpopdf.com

Procédure de confirmation de code de défaut (DTC) (Suite)

SANS CONSULT-II

1) Démarrer le moteur et l'amener à température normale de fonctionnement.
2) Mettre le contact d'allumage sur ''OFF'' puis de nouveau sur ''ON'' en l'espace de 1 seconde.
3) Démarrer le moteur et le laisser tourner au ralenti.
4) Mettre le contact d'allumage sur ''OFF'', attendre au moins 5 secondes, puis remettre le contact sur ''ON''.
5) Effectuer le ''Test de diagnostic mode II (résultats d'autodiagnostic)'' avec l'ECM.
6) Si le DTC est détecté, effectuer une ''Procédure de diagnostic'', voir page EC-3653.

Simpo PDF Merge and Split Unregistered Version - http://www.simpopdf.com

Schéma de câblage

MODELES A DIRECTION A GAUCHE

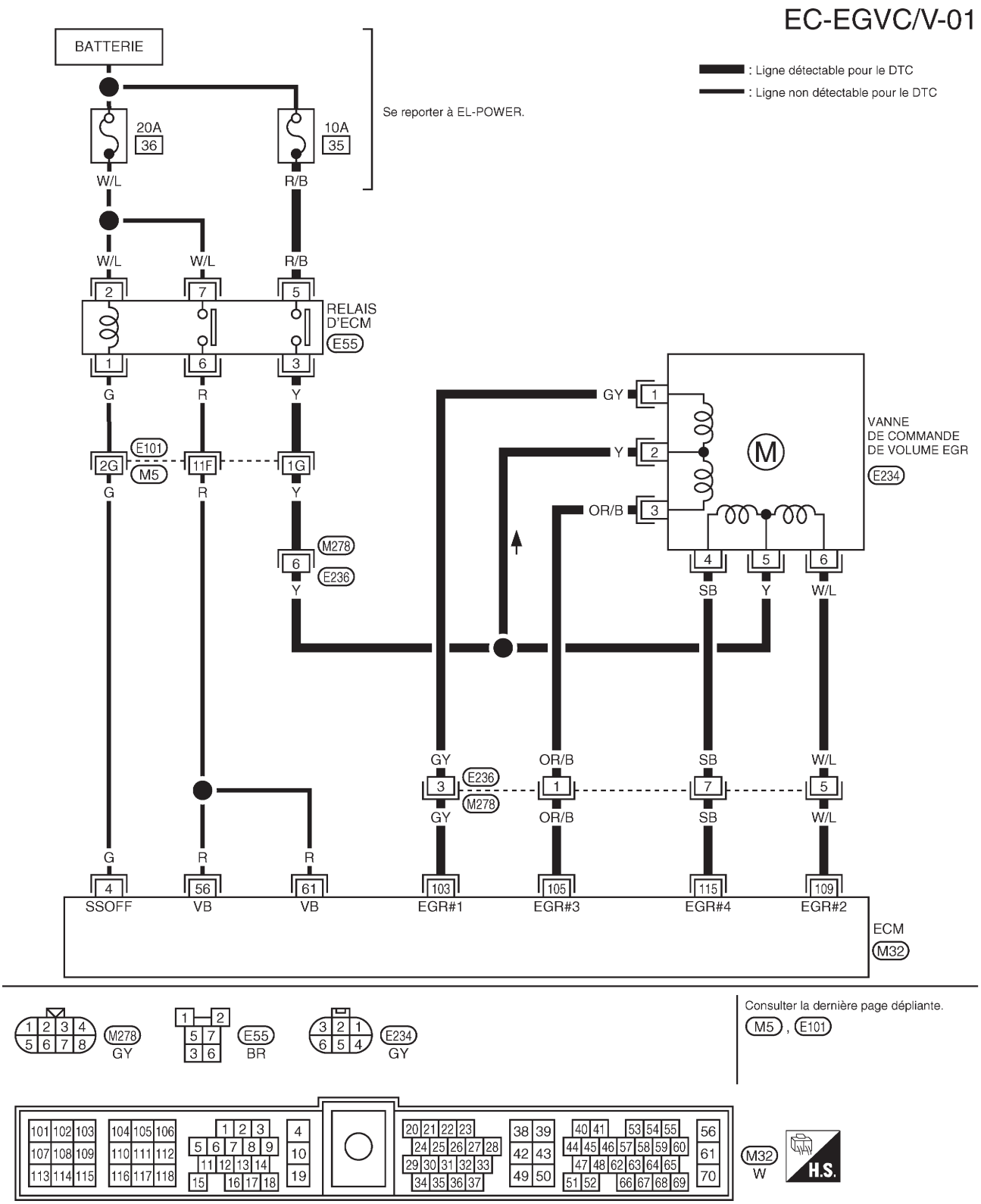

Simpo PDF Merge and Split Unregistered Version - http://www.simpopdf.com

Schéma de câblage (Suite)

MODELES A DIRECTION A DROITE

EC-EGVC/V-02

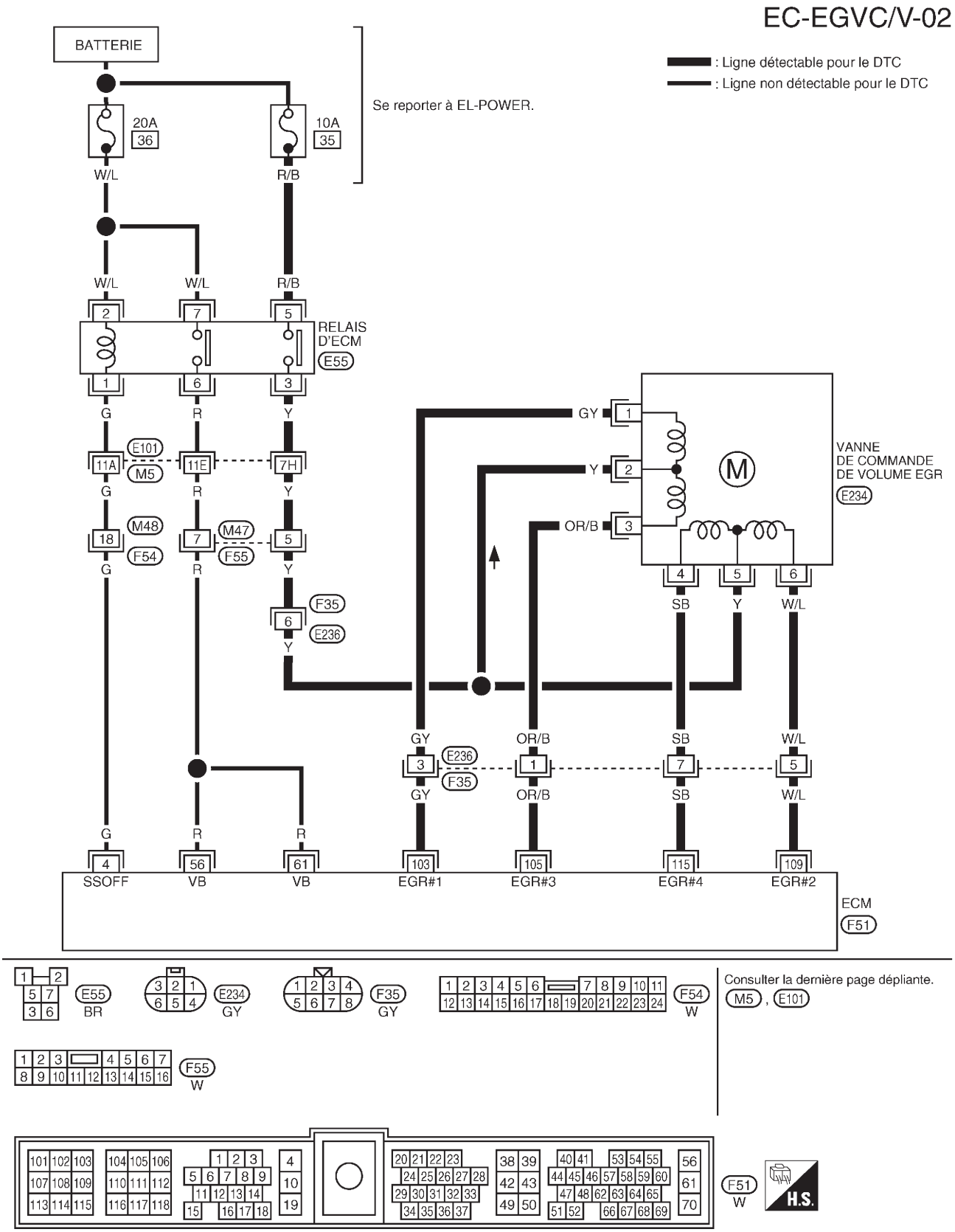

GEC285A

Simpo PDF Merge and Split Unregistered Version - http://www.simpopdf.com

Procédure de diagnostic

1	VERIFIER LE CIRCUIT D'ALIMENTATION DE LA SOUPAPE DE COMMANDE DE VOLUME EGR I

1. Mettre le contact d'allumage sur ''OFF''.
2. Débrancher le connecteur de la soupape de commande du volume EGR.

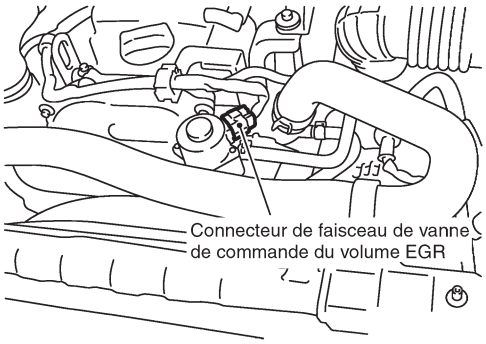

SEC231D

3. Mettre le contact d'allumage sur ''ON''.
4. Vérifier la tension entre les bornes 2 et 5 de la soupape de commande du volume EGR et la masse avec le CONSULT-II ou avec un testeur.

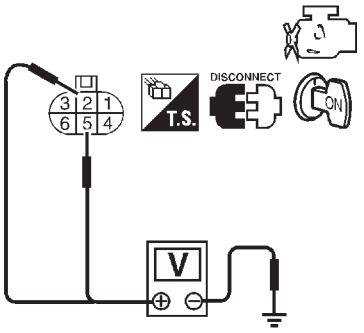

Tension : tension de la batterie

SEF412Y

Bon ou mauvais

Bon	▶	PASSER A L'ETAPE 7.
Mauvais	▶	PASSER A L'ETAPE 2.

Simpo PDF Merge and Split Unregistered Version - http://www.simpopdf.com

Procédure de diagnostic (Suite)

2	VERIFIER LE CIRCUIT D'ALIMENTATION DE LA SOUPAPE DE COMMANDE DE VOLUME EGR II

1. Mettre le contact d'allumage sur ''OFF''.
2. Débrancher le relais d'ECM.

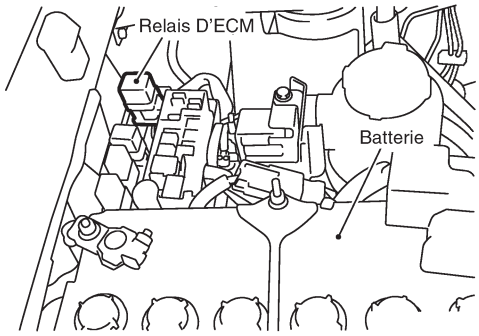

SEC950C

3. Vérifier la tension entre la borne 3 du relais d'ECM et les bornes 2 et 5 de la soupape de commande du volume EGR . Se référer au schéma de câblage.
   Il doit y avoir continuité.

Bon ou mauvais

Bon	▶	PASSER A L'ETAPE 4.
Mauvais	▶	PASSER A L'ETAPE 3.

3	DETECTER LA PIECE DEFECTUEUSE

Vérifier les points suivants.
- Connecteurs de faisceaux E101, M5
- Connecteurs de faisceaux M278, E236(conduite à gauche)
- Connecteurs de faisceaux M47, F55 (conduite à droite)
- Connecteurs de faisceaux F35, E236 (conduite à droite)
- Faisceau entre la soupape de commande de volume EGR et le relais d'ECM en circuit ouvert ou en court-circuit

	▶	Réparer les faisceaux ou connecteurs en circuit ouvert ou en court-circuit à la masse ou à l'alimentation.

4	VERIFIER LE CIRCUIT D'ALIMENTATION DE LA SOUPAPE DE COMMANDE DE VOLUME EGR III

Contrôler la tension entre la borne 5 du relais de l'ECM et la masse à l'aide de CONSULT-II ou du testeur.

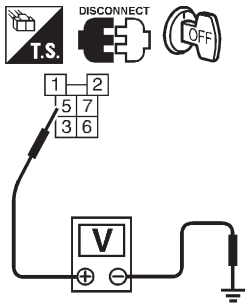

Tension: Tension de la batterie

SEC167D

Bon ou mauvais

Bon	▶	PASSER A L'ETAPE 6.
Mauvais	▶	PASSER A L'ETAPE 5.

Simpo PDF Merge and Split Unregistered Version - http://www.simpopdf.com

Procédure de diagnostic (Suite)

5	DETECTER LA PIECE DEFECTUEUSE
Vérifier les points suivants. ● Fusible de 10 A ● Faisceau ouvert ou en court-circuit entre le relais d'ECM et la batterie	
►	Réparer les faisceaux ou connecteurs en circuit ouvert ou en court-circuit à la masse ou à l'alimentation.

6	VERIFIER LE RELAIS D'ECM.

1. Appliquer une tension continue de 12 V entre les bornes 1 et 2 du relais d'ECM.
2. Vérifier la continuité entre les bornes 3 et 5, 6 et 7 du relais d'ECM

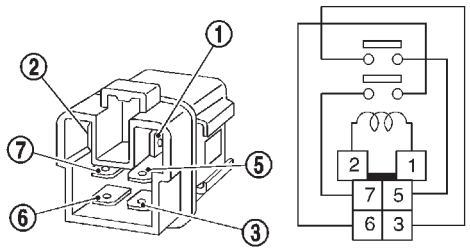

Condition	Continuité
Courant continu de 12V entre les bornes 1 et 2 du relais	Oui
ETEINT	Non

SEF296X

Bon ou mauvais

Bon ►	PASSER A L'ETAPE 7.
Mauvais ►	Remplacer le relais d'ECM.

7	VERIFIER SI LE CIRCUIT DU SIGNAL DE SORTIE DE LA SOUPAPE DE COMMANDE DE VOLUME EGR EST OUVERT OU EN COURT-CIRCUIT

1. Mettre le contact d'allumage sur ''OFF''.
2. Débrancher le connecteur de faisceau de l'ECM.
3. Vérifier la continuité du faisceau entre les bornes de l'ECM et les bornes de la soupape de commande du volume EGR, comme suit.
   Se référer au schéma de câblage.

Borne TCM	Soupape de commande de volume de l'EGR
103	1
105	3
109	6
115	4

MTBL0442

Il doit y avoir continuité.

4. Vérifier également que le faisceau n'est pas en circuit ouvert ou en court-circuit à l'alimentation.

Bon ou mauvais

Bon ►	PASSER A L'ETAPE 9.
Mauvais ►	PASSER A L'ETAPE 8.

Simpo PDF Merge and Split Unregistered Version - http://www.simpopdf.com

Procédure de diagnostic (Suite)

8	DETECTER LA PIECE DEFECTUEUSE
Vérifier les points suivants. ● Connecteurs de faisceaux E236, M278 (conduite à gauche) ● Connecteurs de faisceaux E236, F35 (conduite à droite) ● Faisceau ouvert ou en court-circuit entre l'ECM et la soupape de commande de volume EGR	
	► Réparer les faisceaux ou connecteurs en circuit ouvert ou en court-circuit à la masse ou à l'alimentation.

9	VERIFIER LA SOUPAPE DE COMMANDE DE VOLUME EGR I

Vérifier la résistance entre la borne 2 de la soupape de commande du volume EGR et les bornes 1, 3, la borne 5 et les bornes 4, 6.

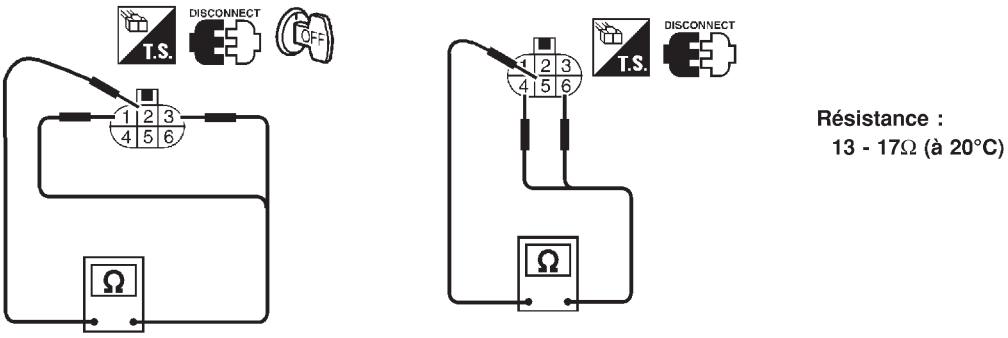

Résistance :
13 - 17Ω (à 20°C)

SEF414Y

Bon ou mauvais

Bon (avec CONSULT-II)	►	PASSER A L'ETAPE 10.
Bon (sans CONSULT-II)	►	PASSER A L'ETAPE 11.
Mauvais	►	Remplacer la soupape de commande du volume EGR.

10	VERIFIER LA SOUPAPE DE COMMANDE DU VOLUME EGR II

Avec CONSULT-II

1. Déposer la soupape de commande de volume d'EGR
2. Rebrancher le connecteur de faisceau de l'ECM et le connecteur de la soupape de commande du volume EGR.
3. Mettre le contact d'allumage sur ''ON''.
4. Effectuer le test ''SOUP COMM VOL EGR'' dans le mode ''TEST ACTIF'' de CONSULT-II.
5. Vérifier que l'axe de la soupape de commande de volume EGR se déplace effectivement d'avant en arrière en fonction des étapes d'ouverture demandées.

TEST ACTIF	
SOUP COMM VOL EGR	20 ETAPE
CONTROLE	
CPV-TR/MN (PMH)	XXX TR/MN

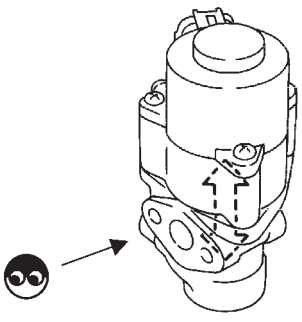

SEF819Y

BON OU MAUVAIS

Bon	►	PASSER A L'ETAPE 12.
Mauvais	►	Remplacer la soupape de commande du volume EGR.

Simpo PDF Merge and Split Unregistered Version - http://www.simpopdf.com

Procédure de diagnostic (Suite)

11	VERIFIER LA SOUPAPE DE COMMANDE DU VOLUME EGR II

Sans CONSULT-II

1. Déposer la soupape de commande de volume d'EGR
2. Rebrancher le connecteur de faisceau de l'ECM et le connecteur de la soupape de commande du volume EGR.
3. Mettre le contact sur ''ON'' puis sur ''OFF''.
4. Vérifier que l'axe de la soupape de commande de volume EGR se déplace effectivement d'avant en arrière en réponse à la position de la clé de contact.

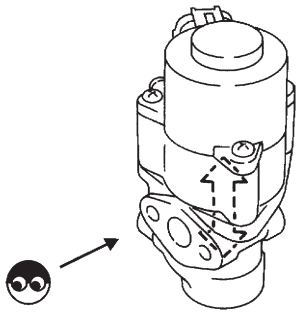

SEF560W

Bon ou mauvais

Bon	►	PASSER A L'ETAPE 12.
Mauvais	►	Remplacer la soupape de commande du volume EGR.

12	VERIFIER SI L'INCIDENT EST INTERMITTENT
Se référer à ''DIAGNOSTIC DES DEFAUTS EN CAS D'INCIDENT INTERMITTENT'', page EC-3502.	
►	**FIN DE L'INSPECTION**

Simpo PDF Merge and Split Unregistered Version - http://www.simpopdf.com

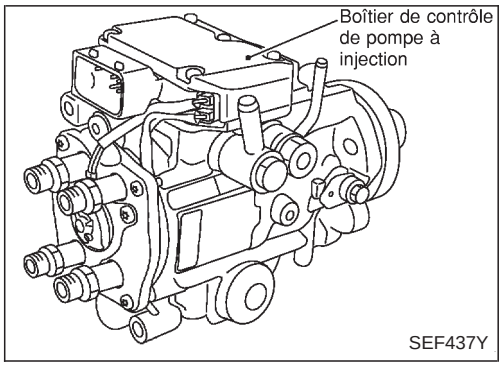

Description

DESCRIPTION DU SYSTEME

L'ECM et l'ensemble de la pompe d'injection de carburant à commande électronique (abrégé ensuite en pompe d'injection) communiquent en temps réel (échange de signaux).
L'ECM transmet les signaux de la quantité d'injection de carburant cible, d'avance à l'injection de carburant cible, de vitesse du moteur, etc., et reçoit les signaux de vitesse de la pompe et de la température du carburant, etc. du boîtier de commande de la pompe d'injection.
Avec ces signaux, la pompe d'injection commande de manière optimale le débit d'injection et l'avance de l'injection au niveau de la soupape de décharge et de la soupape de commande.
La pompe d'injection possède un système de diagnostic intégré qui détecte les défauts des capteurs ou des actionneurs qui se trouvent dans la pompe. Ces informations concernant le défaut sont transférées via la ligne (circuit) du boîtier de commande de la pompe d'injection vers l'ECM.

COMMANDE DU DEBIT D'INJECTION

En fonction de la valeur théorique envoyée par l'ECM, le débit d'injection dépend de la commande de la soupape de décharge de la pompe d'injection et de la modification du temps d'ouverture de l'aiguille.

COMMANDE DE L'AVANCE A L'INJECTION DE CARBURANT

Sur la base de la valeur théorique envoyée par l'ECM, l'avance de l'injection dépend, en fonction du tarage ressort du système d'avance, du cycle de fonctionnement de la soupape de commande d'avance qui se trouve dans la pompe d'injection et du réglage de la pression dans la chambre haute pression du piston du système d'avance.

CAPTEUR DE TEMPERATURE DU CARBURANT

Le capteur relève la température du carburant dans la pompe d'injection et calibre le débit d'injection en fonction de la température du carburant.

CAPTEUR DE LA POSITION DE L'ANNEAU A CAME

Le capteur détecte le passage du bossage qui se trouve sur l'anneau à came de la pompe d'injection à l'aide d'un élément semi-conducteur à réluctance variable. Le capteur de position de l'anneau à cames assure la synchronisation de l'anneau à cames, et détecte l'avance réelle. Le boîtier de commande de la pompe d'injection mesure la révolution de la pompe d'injection grâce au signal du capteur de position de l'anneau à cames.

Simpo PDF Merge and Split Unregistered Version - http://www.simpopdf.com

Valeur de référence de CONSULT-II en mode de contrôle de données

Remarques : Les données de spécification sont des valeurs de référence.

ELEMENT DE CONTROLE	CONDITION		SPECIFICATION
CAP TEMP CARB	● moteur : Une fois le moteur chaud		Plus de 40°C
SOUPAPE/FUITE (soupape de décharge)	● moteur : Une fois le moteur chaud	Ralenti	Environ 13°CA
INJ TIMG C/V	● moteur : faire chauffer le moteur, puis le faire tourner au ralenti.		Environ 50 % - 70 %
COUP/C DECELER	● moteur : Une fois le moteur chaud	Ralenti	OFF
CAP BARO	● Contact d'allumage : ON		Altitude Environ 0 m : Environ 100,62 kPa (1,0062 bar, 1,026 kg/cm^2) Environ 1 000 m : Environ 88,95 kPa (0,8895 bar, 0,907 kg/cm^2) Environ 1 500 m : Environ 83,16 kPa (0,8316 bar, 0,848 kg/cm^2) Environ 2 000 m : Environ 78,36 kPa (0,7836 bar, 0,799 kg/cm^2)

Bornes de l'ECM et valeurs de référence

Données de référence relevées entre chaque borne et la masse.

PRECAUTION :

Lors de la mesure de la tension d'entrée/sortie, ne pas utiliser les bornes de masse de l'ECM sous peine d'endommager le transistor de l'ECM. Utiliser une autre masse que celle des bornes de l'ECM.

BORNE N°	COULEUR DE CABLE	ELEMENT	CONDITION	DONNEES (tension continue)
33	G/Y	Pompe d'injection de carburant à commande électronique	Moteur en marche. └ **Pendant la montée en température** Régime de ralenti	Environ 2,4 V
40	PU	Pompe d'injection de carburant à commande électronique	Moteur en marche. └ **Pendant la montée en température** Régime de ralenti	Environ 2,4 V
52	L/W	Pompe d'injection de carburant à commande électronique	Moteur en marche. └ Régime de ralenti	Environ 0,1 V
53	L/R	Pompe d'injection de carburant à commande électronique	Moteur en marche. └ Régime de ralenti	Environ 0,45 V
			Moteur en marche. └ Le régime moteur est de 2 000 tr/mn.	Environ 0,7 V

Simpo PDF Merge and Split Unregistered Version - http://www.simpopdf.com

Logique de diagnostic de bord

Le défaut est détecté quand ...	Eléments de contrôles (causes possibles)
● Le système de coupure du carburant ne fonctionne pas correctement.	● Faisceau ou connecteurs (le circuit électronique de coupure du carburant est ouvert ou en court-circuit) ● Commande électronique de carburant

2

CONTROLE DE DONNEES	
CONTROLE	PAS DE DTC
CPV-TR/MN (PMH)	XXX TR/MN

SEF817Y

Procédure de confirmation de code de défaut (DTC)

AVEC CONSULT-II

1) Mettre le contact d'allumage sur ''ON'', puis attendre au moins 2 secondes.
2) Régler CONSULT-II en mode ''CONTROLE DE DONNEES''.
3) Démarrer le moteur et le faire tourner pendant au moins 2 secondes au régime ralenti.
   (si le moteur ne tourne pas, mettre le contact d'allumage sur ''START'' pendant 2 secondes au moins)
4) Mettre le contact d'allumage sur ''OFF'', attendre au moins 5 secondes, puis remettre le contact sur ''ON''.
5) Si le DTC est détecté, effectuer une ''Procédure de diagnostic'', voir page EC-3663.

SANS CONSULT-II

1) Mettre le contact d'allumage sur ''ON'', puis attendre au moins 2 secondes.
2) Démarrer le moteur et le faire tourner pendant au moins 2 secondes au régime ralenti.
   (si le moteur ne tourne pas, mettre le contact d'allumage sur ''START'' pendant 2 secondes au moins)
3) Mettre le contact d'allumage sur ''OFF'', attendre au moins 5 secondes, puis remettre le contact sur ''ON''.
4) Effectuer le ''Test de diagnostic mode II (résultats d'autodiagnostic)'' avec l'ECM.
5) Si le DTC est détecté, effectuer une ''Procédure de diagnostic'', voir page EC-3663.

Simpo PDF Merge and Split Unregistered Version - http://www.simpopdf.com

Schéma de câblage

MODELES A DIRECTION A GAUCHE

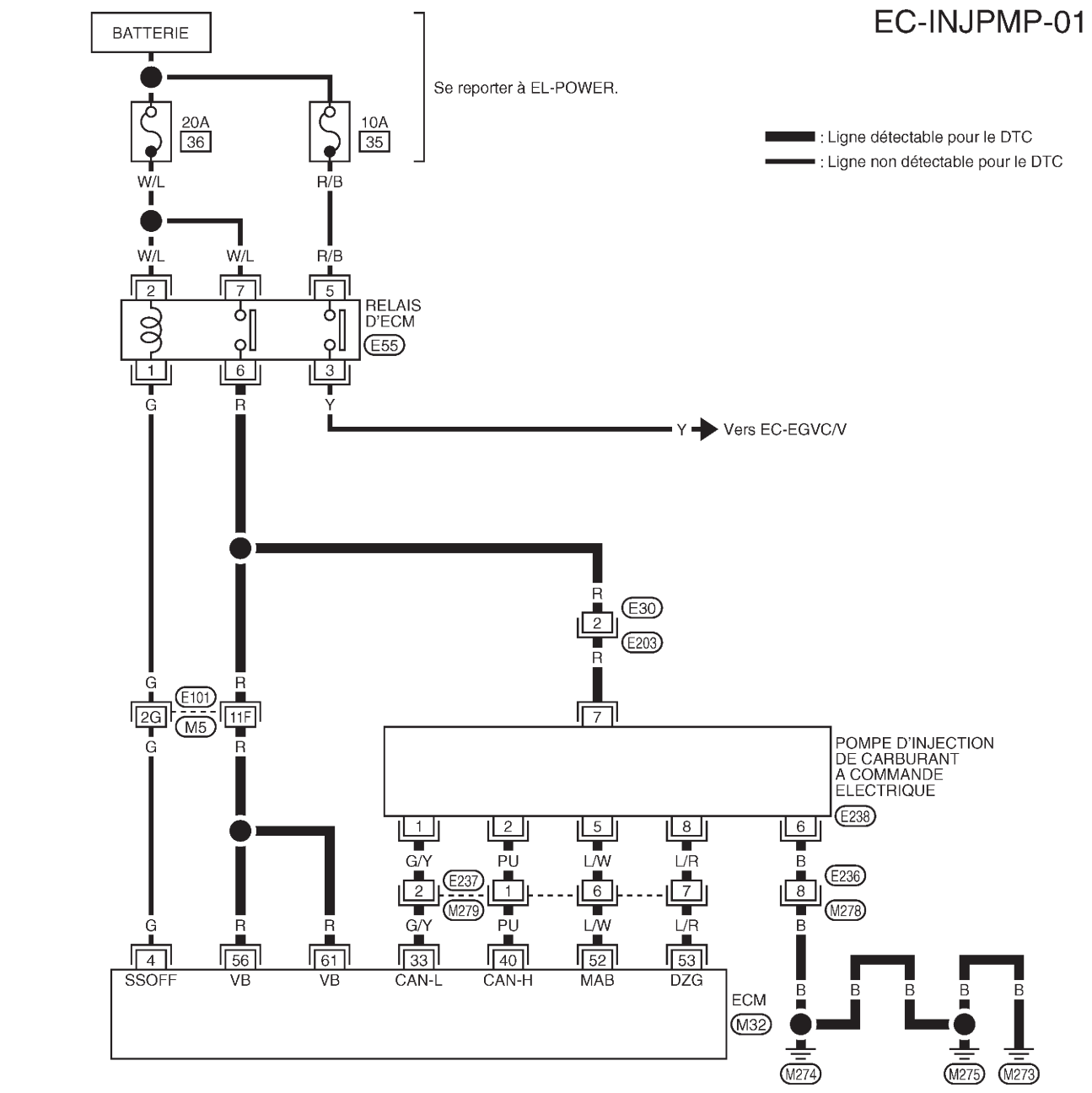

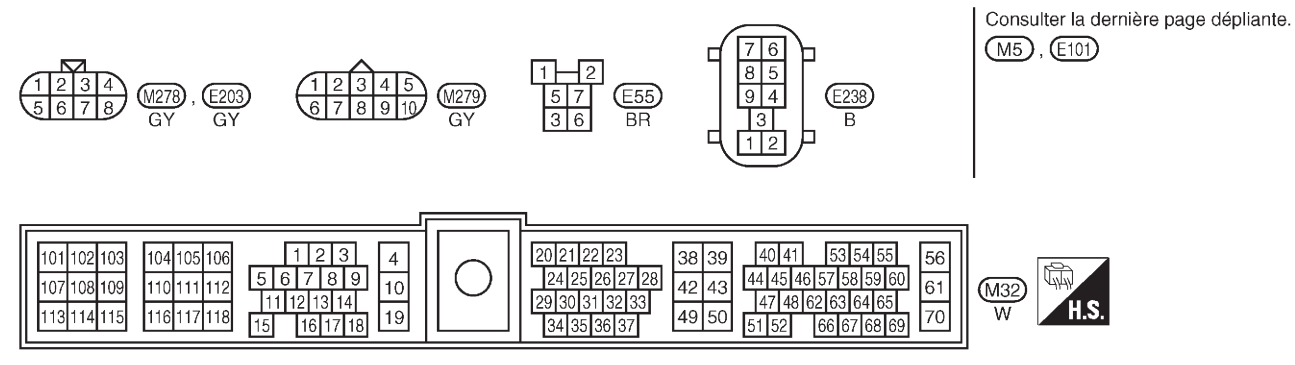

GEC275A

Simpo PDF Merge and Split Unregistered Version - http://www.simpopdf.com

Schéma de câblage (Suite)

MODELES A DIRECTION A DROITE

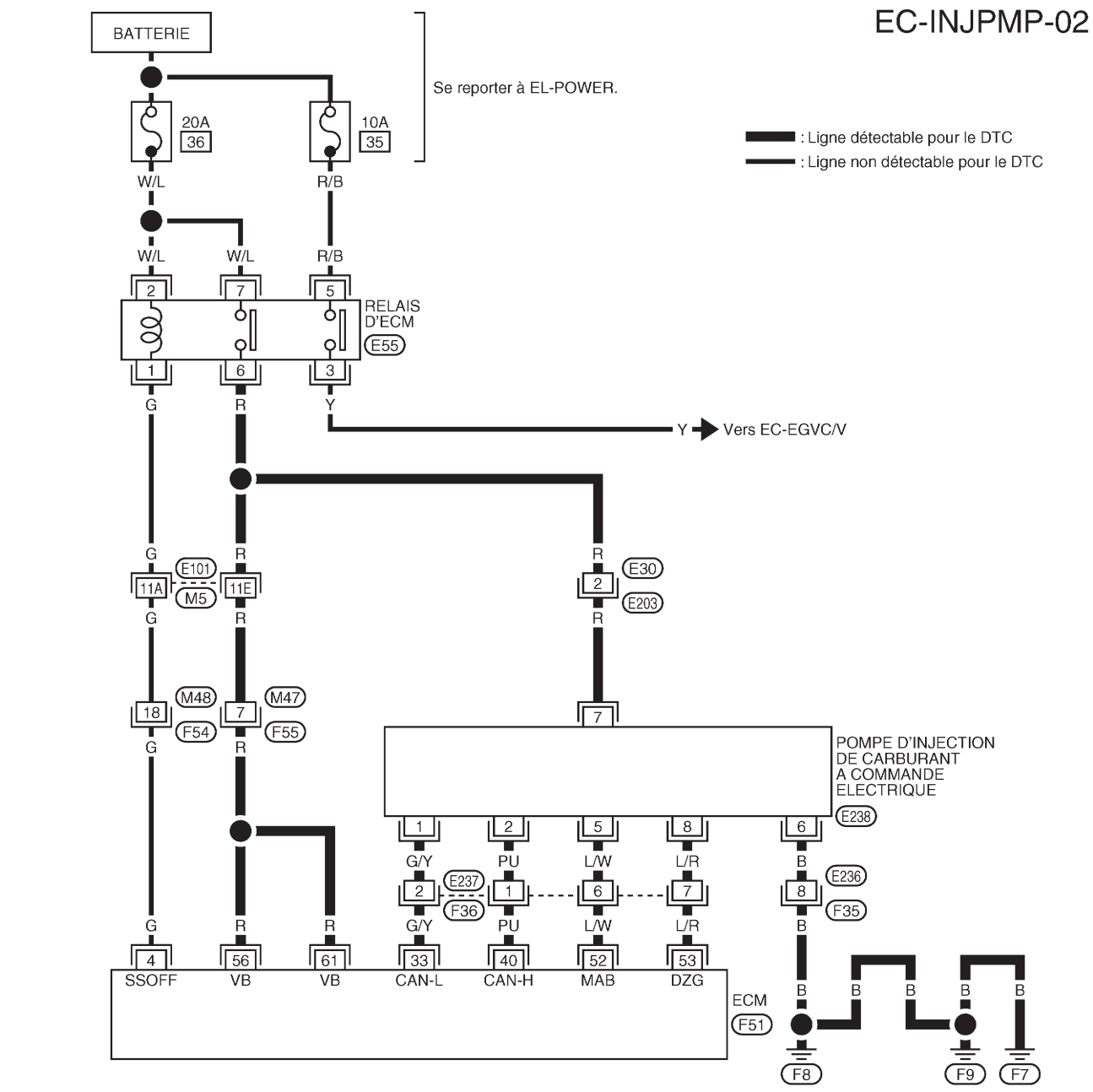

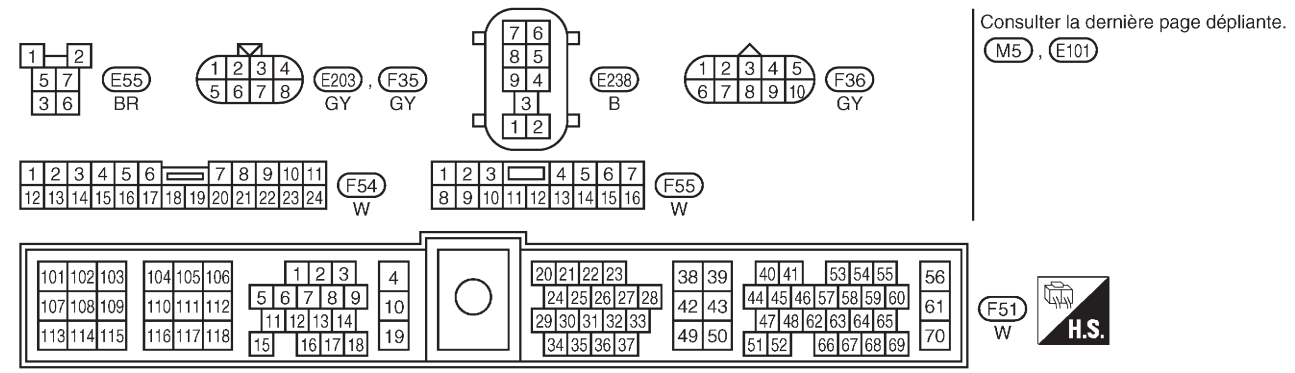

Consulter la dernière page dépliante.
M5 , E101

GEC276A

Simpo PDF Merge and Split Unregistered Version - http://www.simpopdf.com

Procédure de diagnostic

1	VERIFIER LE CIRCUIT D'ALIMENTATION DE LA POMPE D'INJECTION A COMMANDE ELECTRONIQUE

1. Mettre le contact d'allumage sur ''OFF''.
2. Débrancher le connecteur de la pompe d'injection.

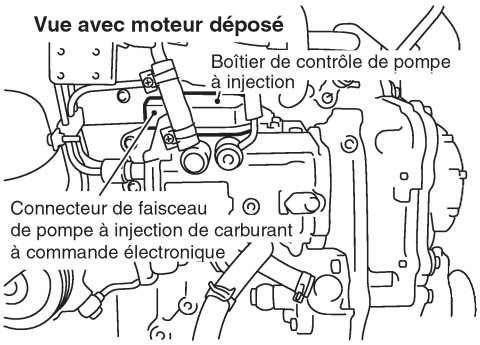

SEC228D

3. Mettre le contact d'allumage sur ''ON''.
4. Vérifier la tension entre la borne 7 de la pompe et la masse.

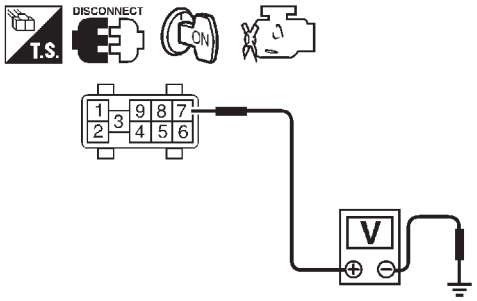

Tension : tension de la batterie

SEF438Y

Bon ou mauvais

Bon	▶	PASSER A L'ETAPE 3.
Mauvais	▶	PASSER A L'ETAPE 2.

2	DETECTER LA PIECE DEFECTUEUSE

Vérifier les points suivants.
- Connecteurs de faisceaux E30, E203
- Connecteurs de faisceaux E101, M5
- Connecteurs de faisceaux M47, F55 (conduite à droite)
- Faisceau en circuit ouvert ou en court-circuit entre la pompe d'injection et l'ECM
- Faisceau en circuit ouvert ou en court-circuit entre la pompe d'injection et le relais d'ECM

	▶	Réparer les faisceaux ou connecteurs en circuit ouvert ou en court-circuit à la masse ou à l'alimentation.

3	VERIFIER SI LE CIRCUIT DE MASSE DE LA POMPE D'INJECTION EST OUVERT OU EN COURT-CIRCUIT

1. Mettre le contact d'allumage sur ''OFF''.
2. Vérifier la continuité du faisceau entre la borne 6 de la pompe d'injection et la masse. Se référer au schéma de câblage.
   Il doit y avoir continuité.
3. Vérifier également que le faisceau n'est pas ouvert ou en court-circuit à l'alimentation.

Bon ou mauvais

Bon	▶	PASSER A L'ETAPE 5.
Mauvais	▶	PASSER A L'ETAPE 4.

Simpo PDF Merge and Split Unregistered Version - http://www.simpopdf.com

Procédure de diagnostic (Suite)

4	DETECTER LA PIECE DEFECTUEUSE
Vérifier les points suivants. ● Connecteurs de faisceaux E236, M278 (conduite à gauche) ● Connecteurs de faisceaux E236, F35 (conduite à droite) ● Faisceau ouvert ou en court-circuit entre la pompe d'injection et la masse du moteur	
►	Réparer les faisceaux ou connecteurs en circuit ouvert ou en court-circuit à la masse ou à l'alimentation.

5	VERIFIER SI LA LIGNE DE COMMUNICATION EST OUVERTE OU EN COURT-CIRCUIT

1. Vérifier la continuité entre les bornes suivantes. Se reporter au schéma de câblage.

Pompe à injection de carburant à commande électronique	ECM
1	33
2	40
5	52
8	53

MTBL0444

Il doit y avoir continuité.

2. Vérifier également que le faisceau n'est pas ouvert ou en court-circuit à l'alimentation.

Bon ou mauvais

Bon	►	PASSER A L'ETAPE 7.
Mauvais	►	PASSER A L'ETAPE 6.

6	DETECTER LA PIECE DEFECTUEUSE
Vérifier les points suivants. ● Connecteurs de faisceaux E237, M279 (conduite à gauche) ● Connecteurs de faisceaux E237, F36 (conduite à droite) ● Faisceau en circuit ouvert ou en court-circuit entre la pompe d'injection et l'ECM	
►	Réparer les faisceaux ou connecteurs en circuit ouvert ou en court-circuit à la masse ou à l'alimentation.

7	VERIFIER SI L'INCIDENT EST INTERMITTENT
Se référer à ''DIAGNOSTIC DES DEFAUTS EN CAS D'INCIDENT INTERMITTENT'', page EC-3502.	

Bon ou mauvais

Bon	►	Remplacer la pompe d'injection de carburant.
Mauvais	►	Réparer les faisceaux ou connecteurs en circuit ouvert ou en court-circuit à la masse ou à l'alimentation.

Simpo PDF Merge and Split Unregistered Version - http://www.simpopdf.com

Description

DESCRIPTION DU SYSTEME

Capteur	Signal d'entrée à l'ECM	Fonction de l'ECM	Actionneur
Capteur d'angle de vilebrequin (PMH)	Régime du moteur	Commande de préchauffage	Témoin de préchauffage, Relais de préchauffage ↓ Bougies de préchauffage
Capteur de température du liquide de refroidissement moteur	Température du liquide de refroidissement moteur		

Lorsque la température du liquide de refroidissement du moteur est supérieure à 75°C environ, le relais de préchauffage est coupé, désactivant le préchauffage rapide jusqu'à ce que la température du liquide de refroidissement retombe en dessous de 55°C environ.
Lorsque la température du liquide de refroidissement du moteur est inférieure à 75°C environ :

- Contact d'allumage : ''ON''
  Après que le contact d'allumage a été mis sur 'ON', le relais de préchauffage se met en marche pour une certaine durée qui dépend de la température du liquide de refroidissement moteur, permettant alors au courant de passer à travers les bougies de préchauffage.
- Démarrage
  Le relais de préchauffage se met en marche, permettant au courant de passer à travers les bougies de préchauffage.
- Démarrage
  Après le démarrage du moteur, le courant continue de passer par les bougies de préchauffage (mode post-préchauffage) pendant une certaine durée correspondant à la température du liquide de refroidissement moteur.
  Lorsque le régime moteur est supérieur à 4 800 tr/min environ, le courant des bougies de préchauffage est coupé.

Au moment où le relais de préchauffage est activé, le témoin de préchauffage s'allume pendant un certain temps en fonction de la température du liquide de refroidissement.

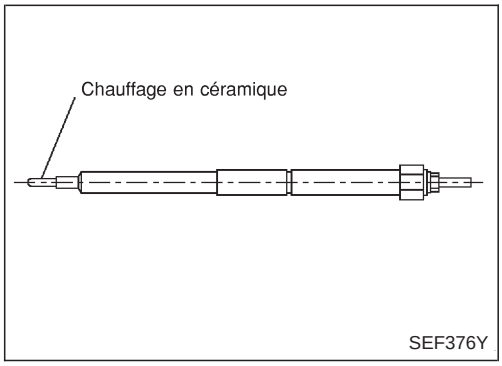

DESCRIPTION DES COMPOSANTS

Bougie de préchauffage

- La bougie de préchauffage est fournie avec un élément de chauffage en céramique pour obtenir une résistance à haute température. Il s'allume en réponse à un signal envoyé par l'ECM, permettant au courant de passer à travers la bougie de préchauffage en passant par le relais de préchauffage.

Simpo PDF Merge and Split Unregistered Version - http://www.simpopdf.com

Bornes de l'ECM et valeurs de référence

Données de référence relevées entre chaque borne et la masse.

PRECAUTION :
Lors de la mesure de la tension d'entrée/sortie, ne pas utiliser les bornes de masse de l'ECM sous peine d'en endommager le transistor de l'ECM. Utiliser une autre masse que celle des bornes de l'ECM.

BORNE N°	COULEUR DE CABLE	ELEMENT	CONDITION	DONNEES (tension continue)
16	L/W	Témoin de préchauffage	Contact d'allumage sur ''ON'' → Le témoin de préchauffage est allumé ('ON').	Environ 1 V
			Contact d'allumage sur ''ON'' → Le témoin de préchauffage est éteint ''OFF')	TENSION BATTERIE (11 V - 14 V)
111	W/R	Relais de préchauffage	Se référer à 'DESCRIPTION DU SYSTEME', page EC-3666.	

Simpo PDF Merge and Split Unregistered Version - http://www.simpopdf.com

Schéma de câblage

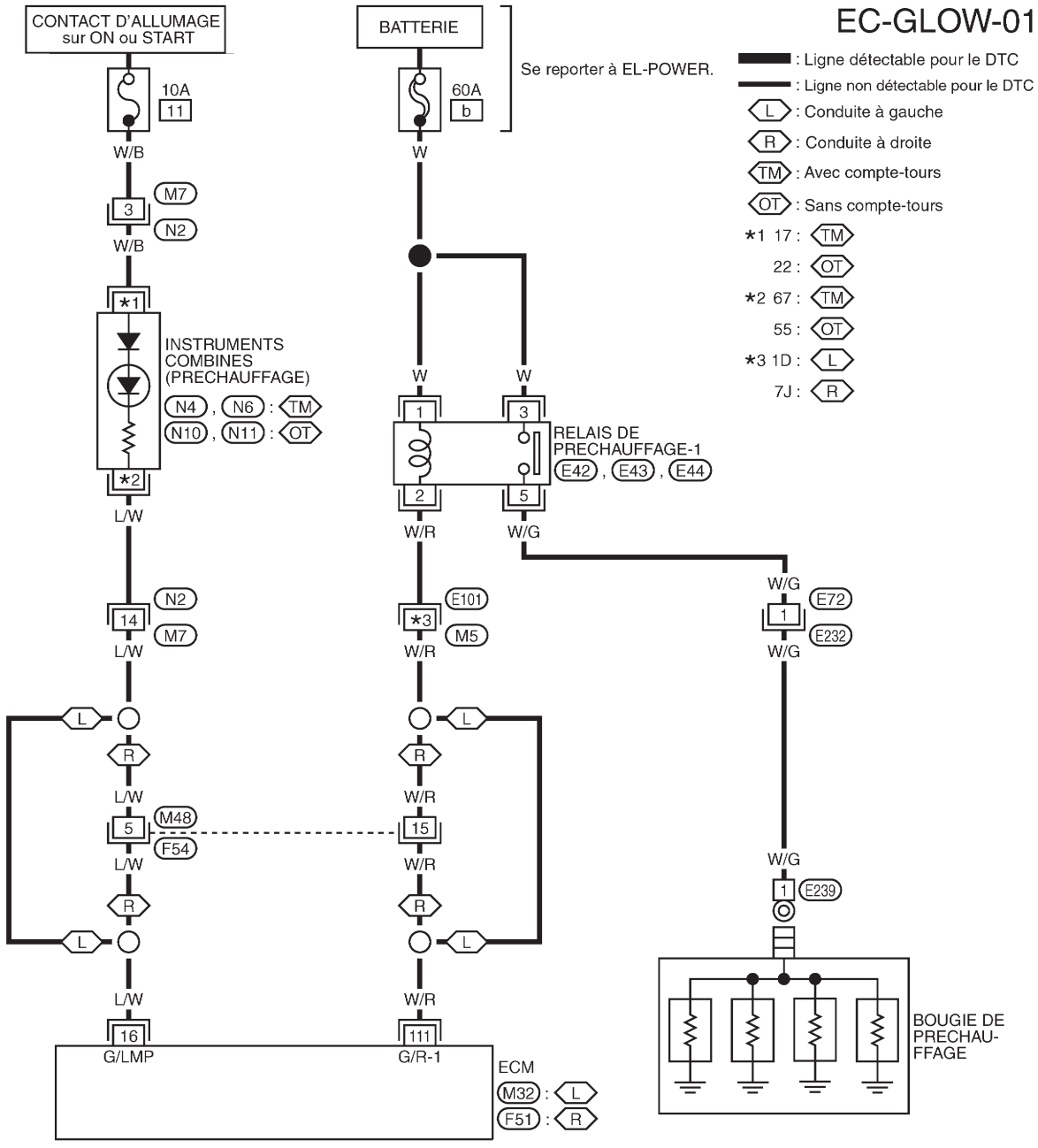

GEC286A

Simpo PDF Merge and Split Unregistered Version - http://www.simpopdf.com

Procédure de diagnostic

1	DEBUT DE L'INSPECTION

Vérifier le niveau de carburant, le système d'alimentation en carburant, le moteur du démarreur, etc.

Bon ou mauvais

Bon	▶	PASSER A L'ETAPE 2.
Mauvais	▶	Correct.

	VERIFIER LE MONTAGE

Vérifier que tous les écrous de la barre de connexion des bougies de préchauffage sont correctement montés.

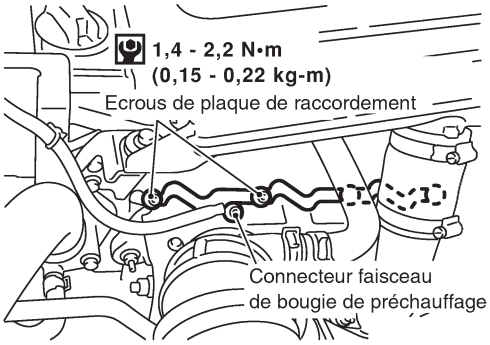

SEC250D

Bon ou mauvais

Bon (avec CONSULT-II)	▶	PASSER A L'ETAPE 3.
Bon (sans CONSULT-II)	▶	PASSER A L'ETAPE 4.
Mauvais	▶	Reposer correctement.

3	VERIFIER LE FONCTIONNEMENT DU TEMOIN DE PRECHAUFFAGE

Avec CONSULT-II

1. Mettre le contact d'allumage sur ''ON''.
2. Sélectionner ''CAP TEMP MOT'' (température liquide refroidissement) dans le mode ''CONTROLE DE DONNEES'' de CONSULT-II.
3. Vérifier que ''CAP TEMP MOT'' indique une température inférieure à 75°C. Si la température indiquée est supérieure à 75°C, faire refroidir le moteur.

Contrôle des données	
CONTROLE	Aucun DTC
CAP TEMP MOT	XXX°C

SEF013Y

4. Mettre le contact d'allumage sur ''OFF'', attendre au moins 5 secondes, puis remettre le contact sur ''ON''.
5. S'assurer que le témoin de préchauffage est ''ON'' (allumé) pendant 1,5 seconde ou plus après que le contact a été mis sur ''ON'' puis sur ''OFF''.

Bon ou mauvais

Bon	▶	PASSER A L'ETAPE 5.
Mauvais	▶	PASSER A L'ETAPE 6.

Simpo PDF Merge and Split Unregistered Version - http://www.simpopdf.com

Procédure de diagnostic (Suite)

4	VERIFIER LE FONCTIONNEMENT DU TEMOIN DE PRECHAUFFAGE

Sans CONSULT-II

1. Mettre le contact d'allumage sur ''ON''.
2. Vérifier que la tension entre la borne 19 de l' ECM et la masse est supérieure à 1,36 V. Si elle est inférieure à 1,36 V, refroidir le moteur.

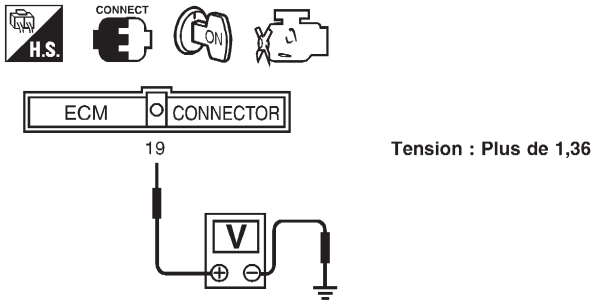

Tension : Plus de 1,36

SEF430Y

3. Mettre le contact d'allumage sur ''OFF', attendre au moins 5 secondes, puis remettre le contact sur ''ON''.
4. S'assurer que le témoin de préchauffage est ''ON'' (allumé) pendant 1,5 seconde ou plus après que le contact a été mis sur ''ON'' puis sur ''OFF''.

Bon ou mauvais

Bon	▶	PASSER A L'ETAPE 5.
Mauvais	▶	PASSER A L'ETAPE 6.

5	VERIFIER LE FONCTIONNEMENT GENERAL DU SYSTEME DE COMMANDE DU PRECHAUFFAGE

1. Mettre le contact d'allumage sur ''OFF''.
2. Brancher le voltmètre entre la bougie et le carter du moteur.
3. Mettre le contact d'allumage sur ''ON''.
4. Vérifier la tension entre les bougies de préchauffage et le carter du moteur dans les conditions suivantes.

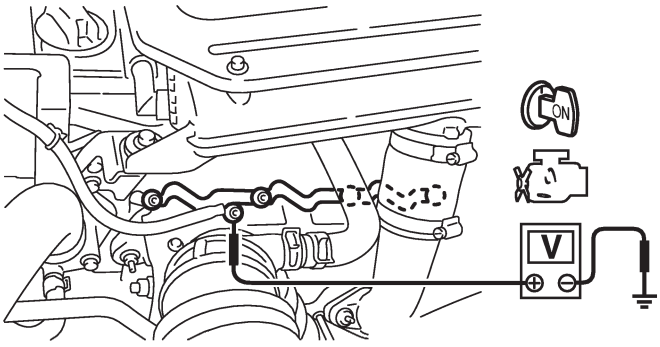

Conditions	Tensión
Plus de 20 secondes après avoir mis le contact d'allumage sur 'ON'	Tension de batterie
Plus de 20 secondes après avoir mis le contact d'allumage sur 'ON'	Environ 0 V

SEC251D

BON OU MAUVAIS

Bon	▶	**FIN DE L'INSPECTION**
Mauvais	▶	PASSER A L'ETAPE 11.

Simpo PDF Merge and Split Unregistered Version - http://www.simpopdf.com

Procédure de diagnostic (Suite)

6	VERIFIER LE CIRCUIT D'ALIMENTATION DU TEMOIN DE PRECHAUFFAGE

1. Mettre le contact d'allumage sur ''OFF''.
2. Débrancher le connecteur de faisceaux des instruments combinés N4 (avec compte-tours) ou N10 (sans compte-tours).
3. Mettre le contact d'allumage sur ''ON''.
4. Contrôler la tension entre la borne 17 (N4) ou 22 (N10) des instruments combinés et la masse à l'aide de CONSULT-II ou du testeur.

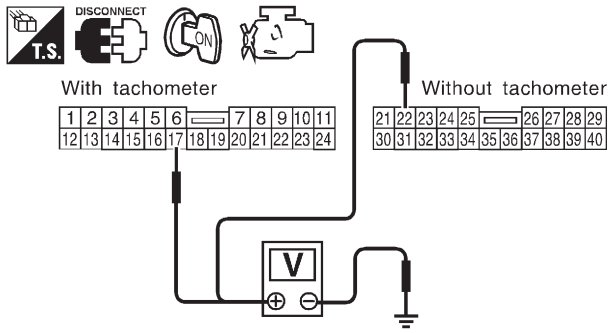

Tension: Tension de la batterie

SEC252D

Bon ou mauvais

Bon	▶	PASSER A L'ETAPE 8.
Mauvais	▶	PASSER A L'ETAPE 7.

7	DETECTER LA PIECE DEFECTUEUSE

Vérifier les points suivants.
1. Connecteurs de faisceaux M7, N2
2. Fusible de 10A
3. Faisceau ouvert ou court-circuité entre les instruments combinés et le fusible

	▶	Réparer les faisceaux ou connecteurs en circuit ouvert ou en court-circuit à la masse ou à l'alimentation.

8	VERIFIER SI LE CIRCUIT DU SIGNAL DE SORTIE DU TEMOIN DE PRECHAUFFAGE EST OUVERT OU EN COURT-CIRCUIT

1. Mettre le contact d'allumage sur ''OFF''.
2. Débrancher le connecteur de faisceau de l'ECM.
3. Débrancher le connecteur de faisceau N6 ou N11 des instruments combinés.
4. Vérifier la continuité du faisceau entre la borne 16 de l'ECM et la borne 67 (N6) ou 55 (N11) du combiné d'instruments.
   Se référer au schéma de câblage.
   Il doit y avoir continuité.
5. Vérifier également que le faisceau n'est pas ouvert ou en court-circuit à l'alimentation.

Bon ou mauvais

Bon	▶	PASSER A L'ETAPE 10.
Mauvais	▶	PASSER A L'ETAPE 9.

9	DETECTER LA PIECE DEFECTUEUSE

Vérifier les points suivants.
- Connecteurs de faisceaux N2, M7
- Connecteur de faisceaux M48, F54 (conduite à droite)
- Faisceau ouvert ou en court-circuit entre l'ECM et les instruments combinés

	▶	Réparer les faisceaux ou connecteurs en circuit ouvert ou en court-circuit à la masse ou à l'alimentation.

Simpo PDF Merge and Split Unregistered Version - http://www.simpopdf.com

Procédure de diagnostic (Suite)

10	VERIFIER LE COMBINE D'INSTRUMENTS
Vérifier les instruments combinés et le témoin de préchauffage. Se reporter à la section EL ('INSTRUMENTS').	
Bon ou mauvais	
Bon ▶	PASSER A L'ETAPE 19.
Mauvais ▶	Réparer ou remplacer les d'instruments combinés ou le témoin de préchauffage.

11	VERIFIER LE CIRCUIT D'ALIMENTATION DU RELAIS DE PRECHAUFFAGE

1. Mettre le contact d'allumage sur ''OFF''.
2. Débrancher le relais de préchauffage.

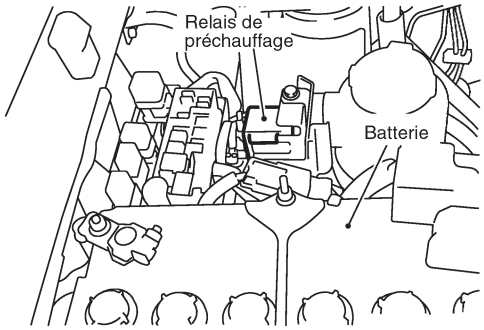

SEC965C

3. Vérifier la tension entre les bornes 1 et 3 du relais de préchauffage et la masse avec le CONSULT-II ou avec un contrôleur.

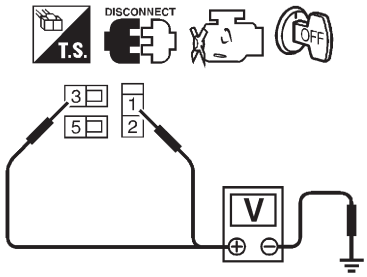

Tension: Tension de batterie

SEF451Z

Bon ou mauvais

Bon ▶	PASSER A L'ETAPE 13.
Mauvais ▶	PASSER A L'ETAPE 12.

12	DETECTER LA PIECE DEFECTUEUSE
Vérifier les points suivants. ● Raccord à fusibles de 60 A ● Faisceau ouvert ou en court-circuit entre le relais de préchauffage et la batterie	
▶	Réparer le faisceau ou les connecteurs.

Simpo PDF Merge and Split Unregistered Version - http://www.simpopdf.com

Procédure de diagnostic (Suite)

13	VERIFIER SI LE CIRCUIT DU SIGNAL DE SORTIE DU RELAIS DE PRECHAUFFAGE EST OUVERT OU EN COURT-CIRCUIT

1. Débrancher le connecteur de faisceau de l'ECM.
2. Vérifier la continuité du faisceau entre la borne 111 de l'ECM et la borne du relais de préchauffage. Se référer au schéma de câblage.
   Il doit y avoir continuité.
3. Vérifier également que le faisceau n'est pas ouvert ou en court-circuit à l'alimentation.

Bon ou mauvais

Bon ▶	PASSER A L'ETAPE 15.
Mauvais ▶	PASSER A L'ETAPE 14.

14	DETECTER LA PIECE DEFECTUEUSE

Vérifier les points suivants.
- Connecteurs de faisceaux E101, M5
- Connecteurs de faisceaux M48, F54 (conduite à droite)
- Faisceau ouvert ou en court-circuit entre le relais de préchauffage et l'ECM

▶	Réparer les faisceaux ou connecteurs en circuit ouvert ou en court-circuit à la masse ou à l'alimentation.

15	VERIFIER SI LE FAISCEAU ENTRE LE RELAIS ET LES BOUGIES DE PRECHAUFFAGE EST OUVERT OU EN COURT-CIRCUIT

1. Débrancher le connecteur de faisceau de la bougie de préchauffage.
2. Vérifier la continuité du faisceau entre la borne 5 du relais de préchauffage et les connecteurs de bougie de préchauffage. Se référer au schéma de câblage.
   Il doit y avoir continuité.
3. Vérifier également que le faisceau n'est pas ouvert ou en court-circuit à l'alimentation.

Bon ou mauvais

Bon ▶	PASSER A L'ETAPE 16.
Mauvais ▶	Réparer les faisceaux ou connecteurs en circuit ouvert ou en court-circuit à la masse ou à l'alimentation.

16	DETECTER LA PIECE DEFECTUEUSE

Vérifier les points suivants.
- Connecteurs de faisceaux E72, E232
- Faisceau ouvert ou en court-circuit entre le relais et les bougies de préchauffage

▶	Réparer les faisceaux ou connecteurs en circuit ouvert ou en court-circuit à la masse ou à l'alimentation.

Simpo PDF Merge and Split Unregistered Version - http://www.simpopdf.com

Procédure de diagnostic (Suite)

17	VERIFIER LE RELAIS DE PRECHAUFFAGE

Vérifier la continuité entre les bornes 3 et 5 du relais de préchauffage dans les conditions suivantes.

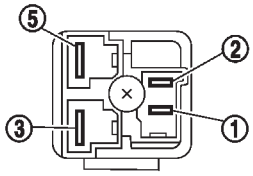

Conditions	Continuité
Courant continu de 12V entre les bornes 1 et 2 du relais	Oui
Aucun courant alimenté	Non

L'opération dure moins de 1 seconde.

SEF433Y

Bon ou mauvais

Bon	▶	PASSER A L'ETAPE 18.
Mauvais	▶	Remplacer le relais de préchauffage.

Simpo PDF Merge and Split Unregistered Version - http://www.simpopdf.com

Procédure de diagnostic (Suite)

18	VERIFIER LES BOUGIES DE PRECHAUFFAGE

1. Déposer la barre de connexion des bougies de préchauffage.
2. Vérifier la résistance des bougies de préchauffage.

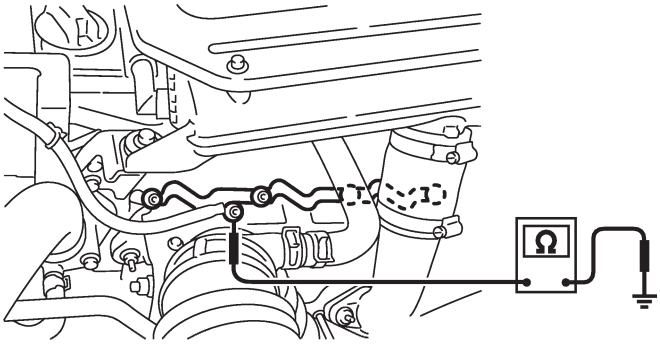

Résistance:
Environ 0,8 Ω
(à 20˚C)

SEC253D

REMARQUE :
- **Ne pas cogner la résistance chauffante de la bougie de préchauffage. Si elle a reçu un coup, remplacer la bougie de préchauffage par une pièce neuve.**
- **Si une bougie de préchauffage est tombée d'une hauteur de 0,1 m ou plus, la remplacer.**
- **Si le logement d'une bougie de préchauffage est calaminé, le nettoyer avec un alésoir ou un outil approprié.**
- **Serrer à la main la bougie de préchauffage en la tournant deux ou trois fois, puis serrer à l'aide d'un outil jusqu'au couple spécifié.**
  : 1,4 - 2,2 N·m (0,15 kgm - 0,22 kgm)

Bon ou mauvais

Bon	▶	PASSER A L'ETAPE 19.
Mauvais	▶	Remplacer la bougie de préchauffage défectueuse.

19	VERIFIER SI L'INCIDENT EST INTERMITTENT
Se référer à ''DIAGNOSTIC DES DEFAUTS EN CAS D'INCIDENT INTERMITTENT'', page EC-3502.	
▶	**FIN DE L'INSPECTION**

Simpo PDF Merge and Split Unregistered Version - http://www.simpopdf.com

Schéma de câblage

EC-S/SIG-01

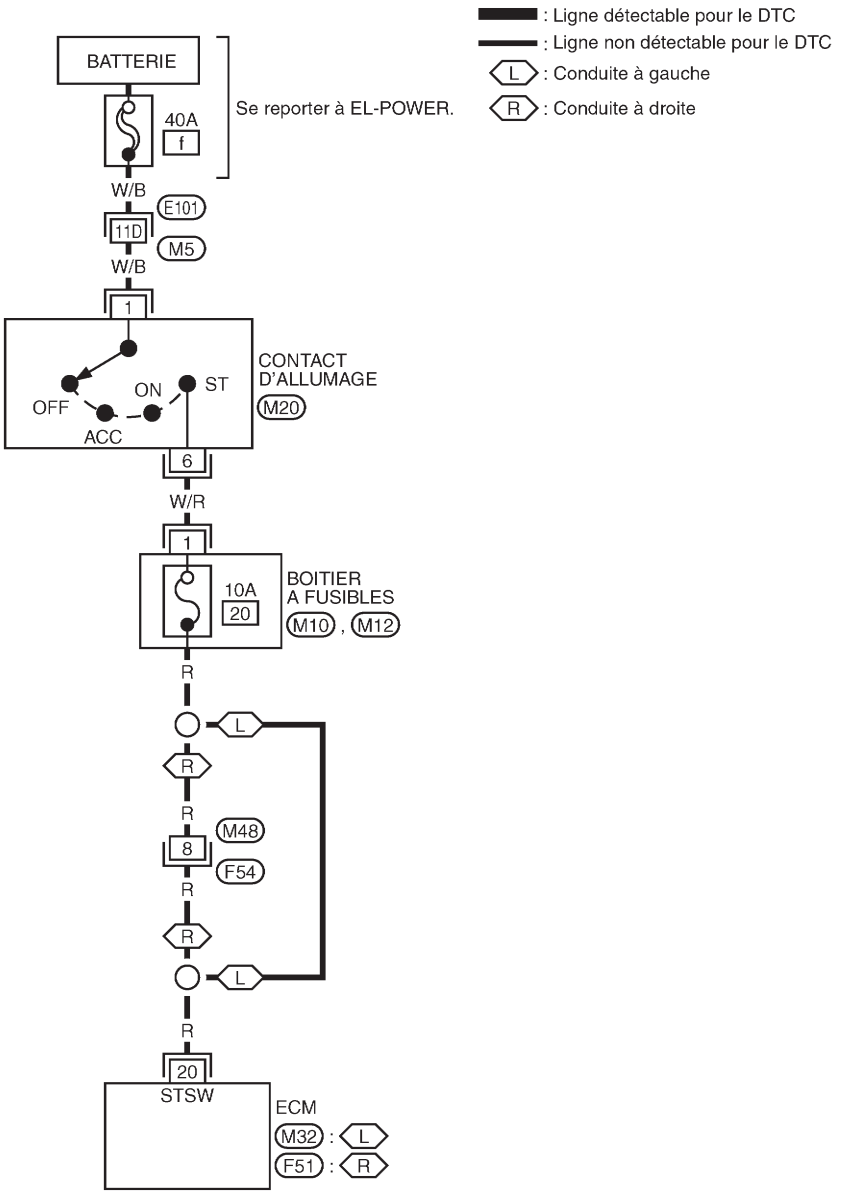

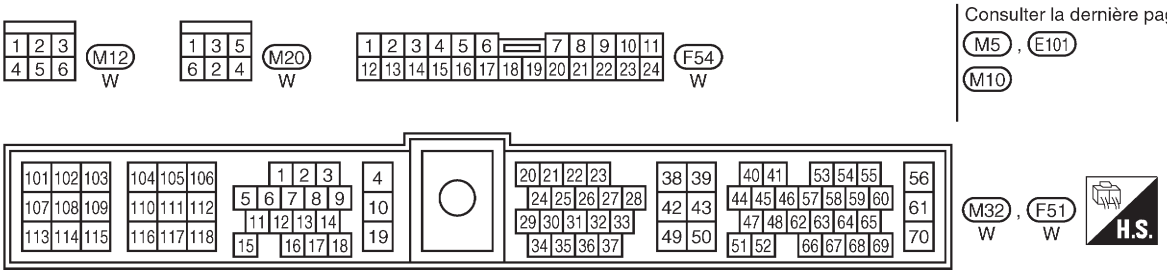

GEC148A

Simpo PDF Merge and Split Unregistered Version - http://www.simpopdf.com

Procédure de diagnostic

1	VERIFIER LE FONCTIONNEMENT GENERAL DU SIGNAL DE DEMARRAGE

Avec CONSULT-II

1. Mettre le contact d'allumage sur ''ON''.
2. Faire le test ''SIGNAL DEMAR'' (signal de démarrage) dans le mode ''CONTROLE DE DONNEES'' de CONSULT-II dans les conditions suivantes.

CONTROLE DES DONNEES	
EN COURS DE CONTROLE	AUCUN DTC
SIGNAL DE DEMARRAGE	OFF

Condition	'SIGNAL DE DEMARRAGE'
Contact d'allumage sur 'ON'	OFF
Contact d'allumage sur 'START'	ON

SEC254D

Sans CONSULT-II

Vérifier la tension entre la borne 20 de l'ECM et la masse dans les conditions suivantes.

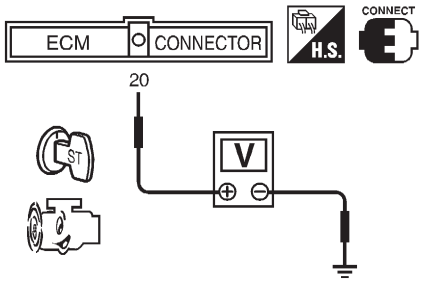

Conditions	Tension
Contact d'allumage sur "START".	Tension de la batterie
Autres positons	Environ 0 V

SEF415Y

BON OU MAUVAIS

Bon	▶	**FIN DE L'INSPECTION**
Mauvais	▶	PASSER A L'ETAPE 2

	VERIFIER LE CIRCUIT DU SIGNAL D'ENTREE DU SIGNAL DE DEMARRAGE

1. Mettre le contact d'allumage sur ''OFF''.
2. Débrancher le connecteur de faisceau de l'ECM et le connecteur de faisceau du contact d'allumage.
3. Vérifier la continuité du faisceau entre la borne 20 de l'ECM et la borne 6 du contact d'allumage. Se référer au schéma de câblage.
   Il doit y avoir continuité.
4. Vérifier également que le faisceau n'est pas ouvert ou en court-circuit à l'alimentation.

BON OU MAUVAIS

Bon	▶	PASSER A L'ETAPE 4.
Mauvais	▶	PASSER A L'ETAPE 3.

Simpo PDF Merge and Split Unregistered Version - http://www.simpopdf.com

Procédure de diagnostic (Suite)

3	DETECTER LA PIECE DEFECTUEUSE
Vérifier les points suivants. ● Connecteurs de faisceaux M48, F54 (conduite à droite) ● Fusible 10 A ● Connecteurs M10 et M12 du boîtier à fusibles (J/B) ● Faisceau ouvert ou court-circuit entre l'ECM et le contact d'allumage	
►	Réparer les faisceaux ou connecteurs en circuit ouvert ou en court-circuit à la masse ou à l'alimentation.

4	VERIFIER SI L'INCIDENT EST INTERMITTENT
Se référer à ''DIAGNOSTIC DES DEFAUTS EN CAS D'INCIDENT INTERMITTENT'', page EC-3502.	
►	**FIN DE L'INSPECTION**

Simpo PDF Merge and Split Unregistered Version - http://www.simpopdf.com

Description

Lorsque la boîte de vitesses est au point mort, le contact de stationnement/point mort est fermé. L'ECM détecte la position du fait qu'il y a continuité de ligne (signal ''ON'').

Valeur de référence de CONSULT-II en mode de contrôle de données

Les données de spécification sont des valeurs de référence.

ELEMENT DE CONTROLE	CONDITION		SPECIFICATION
CON NEUTRE	● Contact d'allumage : ON	Levier de changement de vitesses : Position de stationnement/point mort	ON
		Sauf ci-dessus	OFF (contact ouvert)

Bornes de l'ECM et valeurs de référence

Données de référence relevées entre chaque borne et la masse.

PRECAUTION :

Lors de la mesure de la tension d'entrée/sortie, ne pas utiliser les bornes de masse de l'ECM sous peine d'en endommager le transistor. Utiliser une autre masse que celle des bornes de l'ECM.

BORNE N°	COULEUR DE CABLE	ELEMENT	CONDITION	DONNEES (tension continue)
22	G/OR	Contact de position stationnement/point mort	Contact d'allumage sur ''ON'' └ Boîte de vitesses sur ''Point mort'' (modèles T/M)	Environ 0 V
			Contact d'allumage sur ''ON'' └ Autres positions	TENSION BATTERIE (11 V - 14 V)

Simpo PDF Merge and Split Unregistered Version - http://www.simpopdf.com

Schéma de câblage

EC-PNP/SW-01

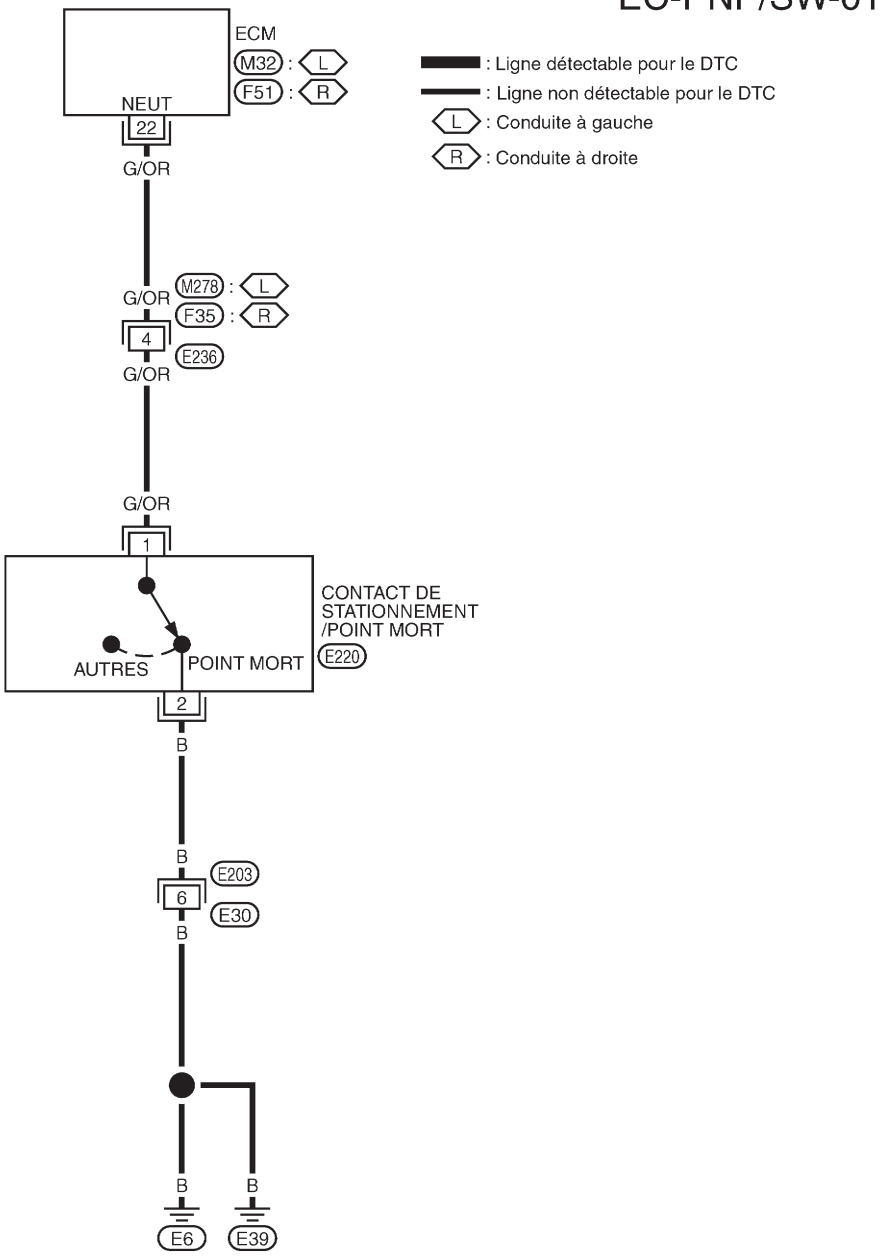

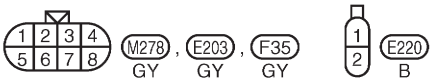

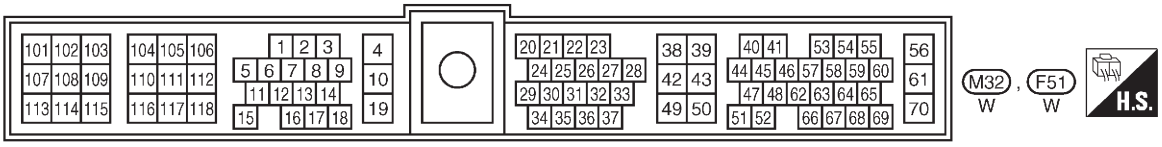

GEC287A

Simpo PDF Merge and Split Unregistered Version - http://www.simpopdf.com

Procédure de diagnostic

1	VERIFIER LE FONCTIONNEMENT GENERAL

Avec CONSULT-II

1. Mettre le contact d'allumage sur ''ON''.
2. Sélectionner ''CON NEUTRE'' (contact PNP) dans le mode ''CONTROLE DE DONNEES'' de CONSULT-II.
3. Vérifier le signal ''CON NEUTRE'' dans les conditions suivantes.

Contrôle des données	
CONTROLE	Aucun DTC
CON NEUTRE	ON

Position du levier de vitesses	CON NEUTRE
Position de point mort	MAR
Sauf position ci-dessus	ARR

SEF049Y

Sans CONSULT-II

1. Mettre le contact d'allumage sur ''ON''.
2. Vérifier la tension entre la borne 22 de l'ECM et la masse dans les conditions suivantes.

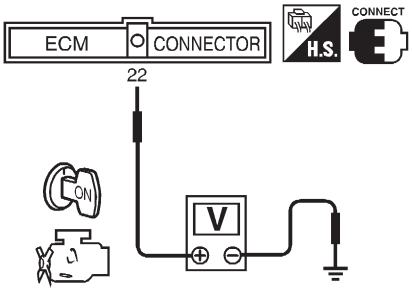

Condition (Position de boîte de vitesses)	Tension V
Position de point mort	Environ 0V
Sauf position ci-dessus	Tension de batterie

SEF419Y

BON OU MAUVAIS

Bon	▶	**FIN DE L'INSPECTION**
Mauvais	▶	PASSER A L'ETAPE 2.

Simpo PDF Merge and Split Unregistered Version - http://www.simpopdf.com

Procédure de diagnostic (Suite)

2	VERIFIER SI LE CIRCUIT DU CONTACT PNP EST OUVERT OU EN COURT-CIRCUIT

1. Mettre le contact d'allumage sur ''OFF''.
2. Débrancher le connecteur de faisceau du contact de stationnement/point mort (PNP).

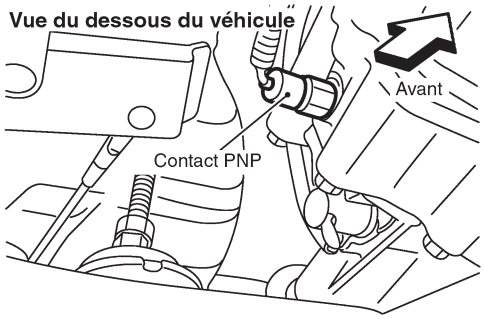

SEC170D

3. Vérifier la continuité du faisceau entre la borne 2 du contact PNP et la masse de la carrosserie. Se reporter au schéma de câblage.
   Il doit y avoir continuité.
4. Vérifier également que le faisceau n'est pas en circuit ouvert ou en court-circuit à l'alimentation.

Bon ou mauvais

Bon	►	PASSER A L'ETAPE 4.
Mauvais	►	PASSER A L'ETAPE 3.

3	DETECTER LA PIECE DEFECTUEUSE

Vérifier les points suivants.
- Connecteurs de faisceaux E203, E30
- Faisceau ouvert ou en court-circuit entre le contact PNP et la masse de carrosserie

	►	Réparer les faisceaux ou connecteurs en circuit ouvert ou en court-circuit à la masse ou à l'alimentation.

4	VERIFIER SI LE CIRCUIT DU SIGNAL D'ENTREE DU CONTACT PNP EST OUVERT OU EN COURT-CIRCUIT

1. Débrancher le connecteur de faisceau de l'ECM.
2. Vérifier la continuité du faisceau entre la borne 22 de l'ECM et la borne 1 du contact PNP. Se référer au schéma de câblage.
   Il doit y avoir continuité.
3. Vérifier également que le faisceau n'est pas ouvert ou en court-circuit à l'alimentation.

Bon ou mauvais

Bon	►	PASSER A L'ETAPE 6.
Mauvais	►	PASSER A L'ETAPE 5.

5	DETECTER LA PIECE DEFECTUEUSE

Vérifier les points suivants.
- Connecteurs de faisceaux M278, E236 (conduite à gauche)
- Connecteurs de faisceaux F35, E236 (conduite à droite)
- Faisceau ouvert ou court-circuit entre le contact PNP et l'ECM

	►	Réparer les faisceaux ou connecteurs en circuit ouvert ou en court-circuit à la masse ou à l'alimentation.

6	VERIFIER LE CONTACT DE STATIONNEMENT/POINT MORT (PNP)

Se référer à la section MT (''VERIFIER CONTACT DE POSITION'').

Bon ou mauvais

Simpo PDF Merge and Split Unregistered Version - http://www.simpopdf.com

Procédure de diagnostic (Suite)

Bon	►	PASSER A L'ETAPE 7.
Mauvais	►	Remplacer le contact de stationnement/point mort

7		**VERIFIER SI L'INCIDENT EST INTERMITTENT**
Se référer à ''DIAGNOSTIC DES DEFAUTS EN CAS D'INCIDENT INTERMITTENT'', page EC-3502.		
	►	**FIN DE L'INSPECTION**

Simpo PDF Merge and Split Unregistered Version - http://www.simpopdf.com



Description des composants

L'interrupteur de chauffage rapide se trouve en bas du tableau de bord. Il permet d'accélérer le fonctionnement du chauffage lorsque le moteur est froid.
Lorsque l'ECM reçoit le signal ''ON'' (marche) de l'interrupteur, il fait passer le régime moteur à 1 100 tr/min - 1 200 tr/min afin que le moteur chauffe rapidement.
Le système fonctionne lorsque les conditions suivantes sont réunies.

Interrupteur de chauffage rapide	ON
Température du liquide de refroidissement moteur	Inférieure à 105°C
Levier de boîte de vitesses	Positions ''P'' ou ''N''
Pédale d'accélérateur	Complètement relâchée

Valeur de référence de CONSULT-II en mode de contrôle de données

Les données de spécification sont des valeurs de référence.

ELEMENT DE CONTROLE	CONDITION		SPECIFICATION
INT CHAUF	● Contact d'allumage : ON	Interrupteur de chauffage rapide : MAR	ALLUME
		Interrupteur de chauffage rapide : ARR	ETEINT

Bornes de l'ECM et valeurs de référence

Données de référence relevées entre chaque borne et la masse.

PRECAUTION :
Lors de la mesure de la tension d'entrée/sortie, ne pas utiliser les bornes de masse de l'ECM sous peine d'endommager le transistor de l'ECM. Utiliser une autre masse que celle des bornes de l'ECM.

BORNE N°	COULEUR DE CABLE	ELEMENT	CONDITION	DONNEE (tension continue ou impulsion)
59	BR/R	Interrupteur de chauffage rapide	Contact d'allumage sur ''ON'' └ Interrupteur de chauffage rapide sur ''OFF'' (arrêt),	OV
			Contact d'allumage sur ''ON'' └ Interrupteur de chauffage rapide sur ''ON'' (marche),	TENSION BATTERIE (11 V - 14 V)

Simpo PDF Merge and Split Unregistered Version - http://www.simpopdf.com

Schéma de câblage

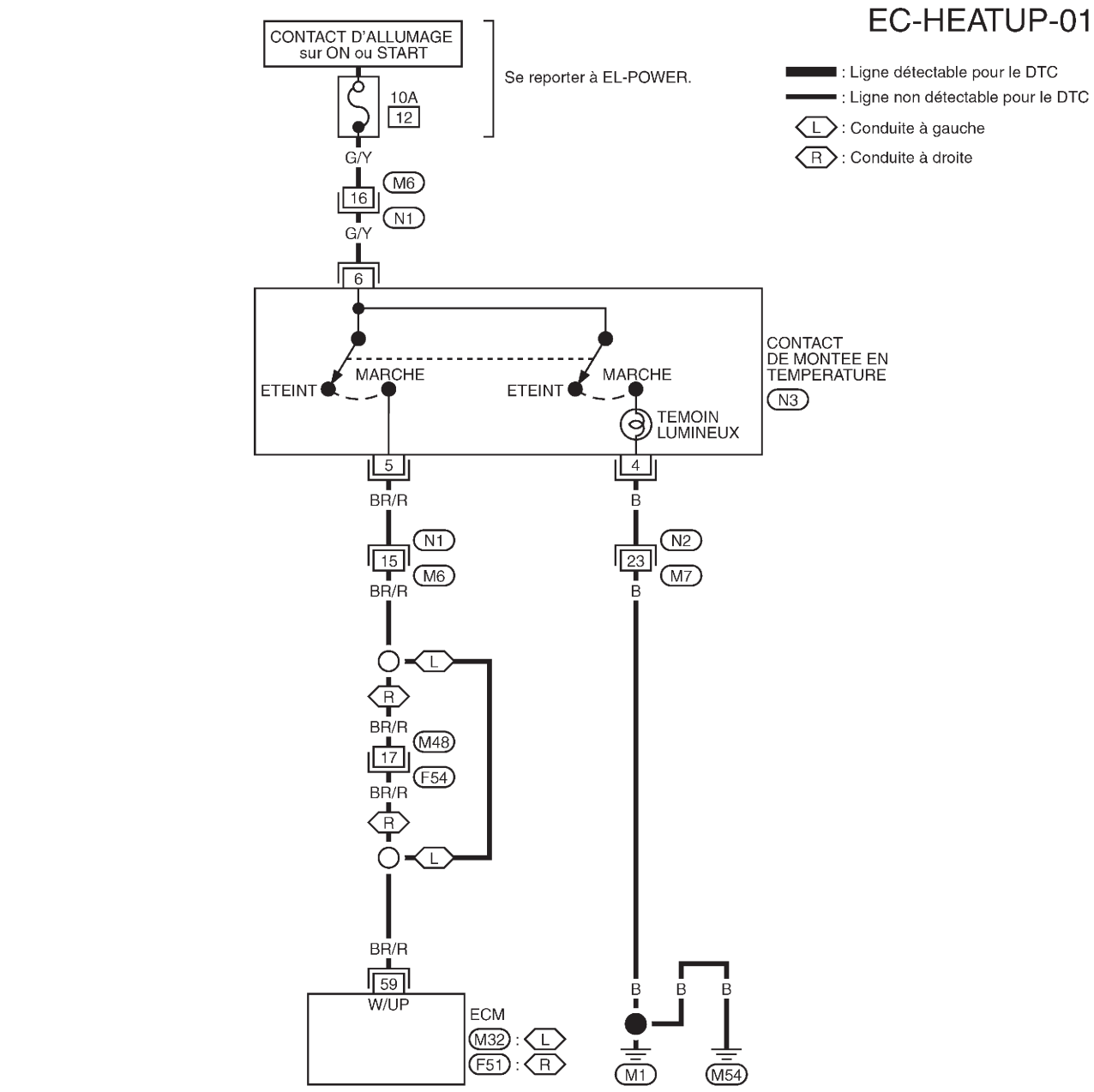

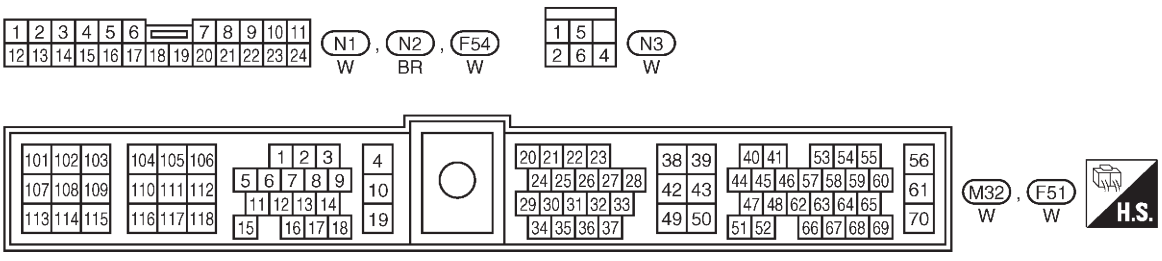

GEC150A

Simpo PDF Merge and Split Unregistered Version - http://www.simpopdf.com

Procédure de diagnostic

1	DEBUT DE L'INSPECTION
CONSULT-II est-il disponible ?	
Oui ou Non	
Oui ▶	PASSER A L'ETAPE 2.
Non ▶	PASSER A L'ETAPE 3.

	VERIFICATION DU FONCTIONNEMENT GENERAL I

Avec CONSULT-II

1. Mettre le contact d'allumage sur ''ON''.
2. Faire le test ''INT CHAUF'' dans le mode ''CONTROLE DE DONNEES'' de CONSULT-II dans les conditions suivantes.

Contrôle des données	
CONTROLE	Aucun DTC
INT CHAUF	OFF

Conditions	INT CHAUF
Contact de réchauffement sur "OFF".	OFF
Contact de réchauffement sur "ON"	ON

SEF302Z

Bon ou mauvais

Bon ▶	PASSER A L'ETAPE 4.
Mauvais ▶	PASSER A L'ETAPE 5.

3	VERIFICATION DU FONCTIONNEMENT GENERAL I

Sans CONSULT-II

1. Mettre le contact d'allumage sur ''ON''.
2. Vérifier la tension entre la borne 59 de l'ECM et la masse dans les conditions suivantes.

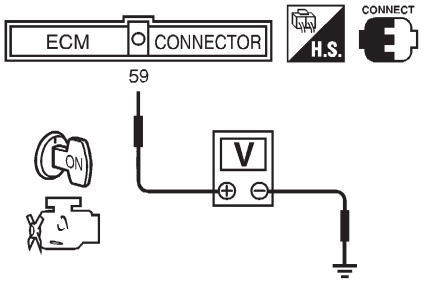

Conditions	Tension
Contact de réchauffement sur "OFF".	Environ 0V
Contact de réchauffement sur "ON"	Tension de batterie

SEF303Z

Bon ou mauvais

Bon ▶	PASSER A L'ETAPE 4.
Mauvais ▶	PASSER A L'ETAPE 5.

Simpo PDF Merge and Split Unregistered Version - http://www.simpopdf.com

Procédure de diagnostic (Suite)

4	VERIFICATION DU FONCTIONNEMENT GENERAL II

Vérifier le témoin en mettant l'interrupteur de chauffage sur ''ON'' et ''OFF''.

Contact de montée en température	Témoin
MAR	Eclairé
ARR	Non éclairé

MTBL1314

BON OU MAUVAIS

Bon	▶	**FIN DE L'INSPECTION**
Mauvais	▶	PASSER A L'ETAPE 10.

5	VERIFIER LE CIRCUIT D'ALIMENTATION DE L'INTERRUPTEUR DE CHAUFFAGE RAPIDE

1. Interrupteur de chauffage rapide sur ''OFF'' (arrêt).
2. Mettre le contact d'allumage sur ''OFF''.
3. Débrancher le connecteur de faisceau de l'interrupteur de chauffage rapide.
4. Mettre le contact d'allumage sur ''ON'' (marche).
5. Vérifier la tension entre la borne 6 de l'interrupteur de mise en température et la masse avec le CONSULT-II ou avec un testeur.

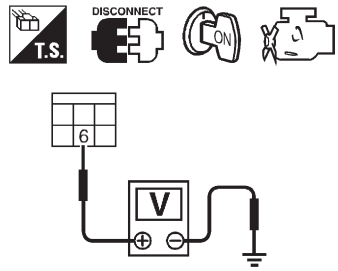

Tension: Tension de la batterie

SEF304Z

BON OU MAUVAIS

Bon	▶	PASSER A L'ETAPE 7.
Mauvais	▶	PASSER A L'ETAPE 6.

6	DETECTER LA PIECE DEFECTUEUSE

Vérifier les points suivants.
- Connecteurs de faisceaux N1, M6
- Fusible de 10 A
- Faisceau en circuit ouvert ou en court-circuit entre l'interrupteur de chauffage rapide et le fusible.

	▶	Réparer les faisceaux ou connecteurs en circuit ouvert ou en court-circuit à la masse ou à l'alimentation.

Simpo PDF Merge and Split Unregistered Version - http://www.simpopdf.com

Procédure de diagnostic (Suite)

7	VERIFIER SI LE CIRCUIT DU SIGNAL D'ENTREE DE L'INTERRUPTEUR DE CHAUFFAGE RAPIDE EST OUVERT OU EN COURT-CIRCUIT II

1. Mettre le contact d'allumage sur ''OFF''.
2. Débrancher le connecteur de faisceau de l'ECM.
3. Vérifier la continuité du faisceau entre la borne 59 de l'ECM et la borne 5 de l'interrupteur de chauffage rapide. Se reporter au schéma de câblage.
   Il doit y avoir continuité.
4. Vérifier également que le faisceau n'est pas ouvert ou en court-circuit à l'alimentation.

BON OU MAUVAIS

Bon	▶	PASSER A L'ETAPE 9.
Mauvais	▶	PASSER A L'ETAPE 8.

8	DETECTER LA PIECE DEFECTUEUSE

Vérifier les points suivants.
- Connecteurs de faisceaux N1, M6
- Connecteurs de faisceaux M48, F54 (conduite à droite)
- Faisceau ouvert ou en court-circuit entre l'interrupteur de chauffage rapide et l'ECM.

	▶	Réparer les faisceaux ou connecteurs en circuit ouvert ou en court-circuit à la masse ou à l'alimentation.

9	VERIFIER L'INTERRUPTEUR DE CHAUFFAGE RAPIDE

Vérifier la continuité entre les bornes 5 et 6 de l'interrupteur de chauffage rapide dans les conditions suivantes.

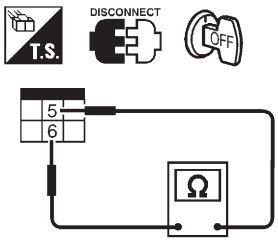

Conditions	Continuité
Contacteur de montée en température sur 'OFF'	Ne doit pas exister
Contacteur de montée en température sur 'ON'	Doit exister

SEF305Z

Bon ou mauvais

Bon	▶	PASSER A L'ETAPE 13.
Mauvais	▶	Remplacer l'interrupteur de chauffage rapide.

10	VERIFIER SI LE CIRCUIT DE MASSE DU TEMOIN DE L'INTERRUPTEUR DE CHAUFFAGE EST OUVERT OU EN COURT-CIRCUIT

1. Mettre l'interrupteur de chauffage rapide sur ''OFF'' (arrêt),
2. Mettre le contact d'allumage sur ''OFF''.
3. Débrancher le connecteur de faisceau de l'interrupteur de chauffage rapide.
4. Vérifier la continuité du faisceau entre la borne 4 de l'interrupteur de chauffage rapide et la masse.
   Se référer au schéma de câblage.
   Il doit y avoir continuité.
5. Vérifier également que le faisceau n'est pas en court-circuit à l'alimentation.

Bon ou mauvais

Bon	▶	PASSER A L'ETAPE 12.
Mauvais	▶	PASSER A L'ETAPE 11.

Simpo PDF Merge and Split Unregistered Version - http://www.simpopdf.com

Procédure de diagnostic (Suite)

11	DETECTER LA PIECE DEFECTUEUSE
Vérifier les points suivants. ● Connecteurs de faisceaux N2, M7 ● Faisceau ouvert ou en court-circuit entre l'interrupteur de chauffage rapide et la masse.	
►	Réparer les faisceaux ou connecteurs en circuit ouvert ou court-circuit.

12	VERIFIER LE TEMOIN DE L'INTERRUPTEUR DE CHAUFFAGE
Appliquer une tension de 12 V entre les bornes 4 et 6 de l'interrupteur de chauffage rapide. **Le témoin doit s'allumer.**	
Bon ou mauvais	
Bon ►	PASSER A L'ETAPE 13.
Mauvais ►	Remplacer l'interrupteur de chauffage rapide.

13	VERIFIER SI L'INCIDENT EST INTERMITTENT
Se référer à ''DIAGNOSTIC DES DEFAUTS EN CAS D'INCIDENT INTERMITTENT'', page EC-3502.	
►	**FIN DE L'INSPECTION**

Simpo PDF Merge and Split Unregistered Version - http://www.simpopdf.com

Schéma de câblage

MODELES A DIRECTION A GAUCHE

EC-A/CCUT-01

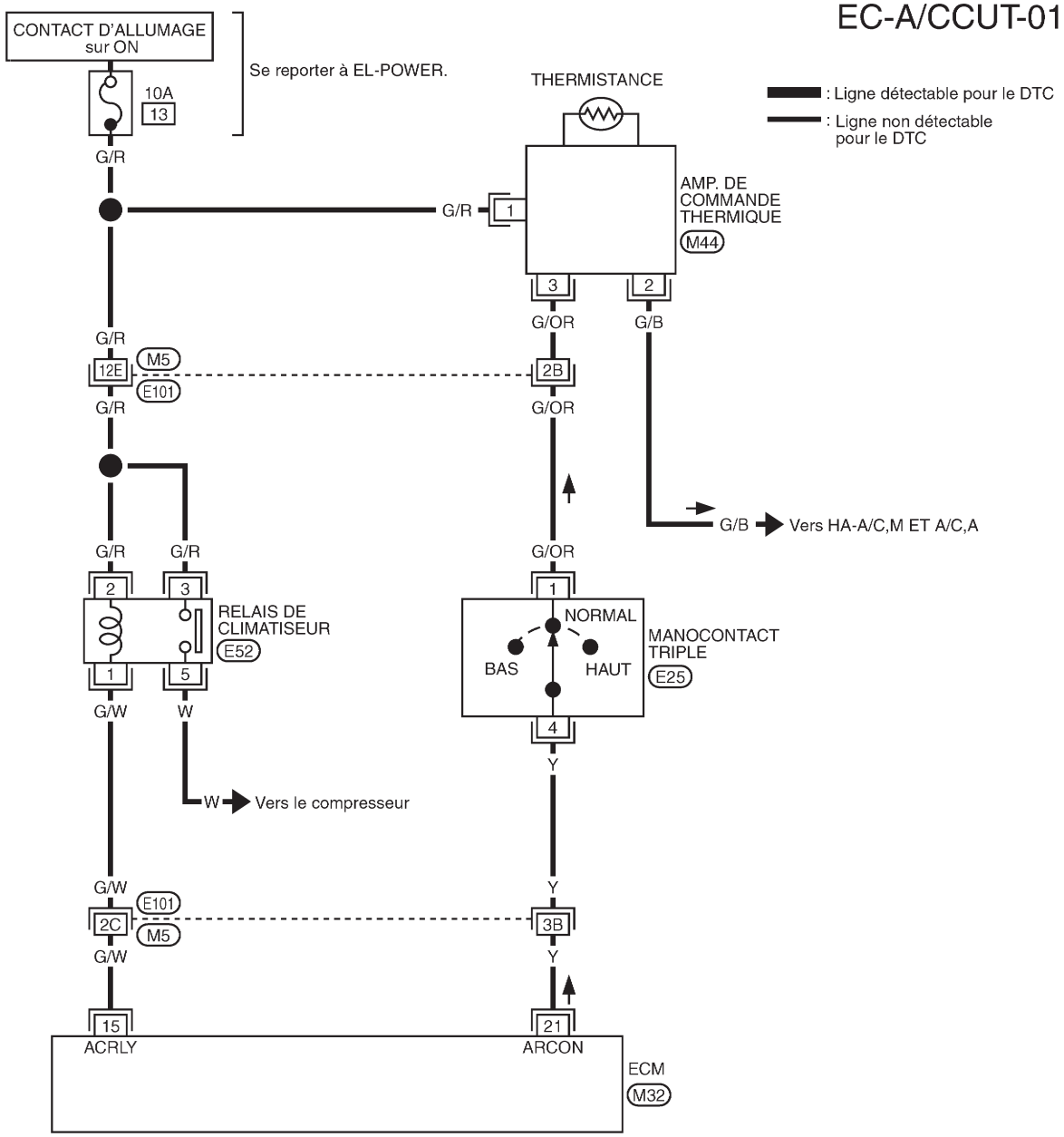



Consulter la dernière page dépliante.
(M5), (E101)

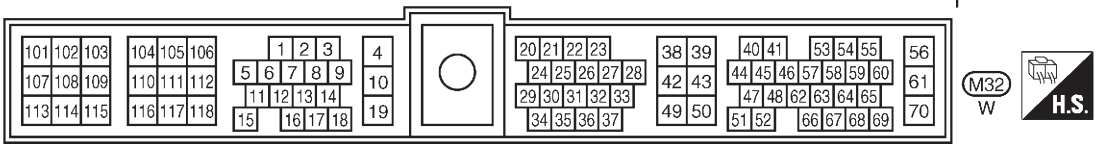

GEC288A

Simpo PDF Merge and Split Unregistered Version - http://www.simpopdf.com

Schéma de câblage (Suite)

MODELES A DIRECTION A DROITE

EC-A/CCUT-02

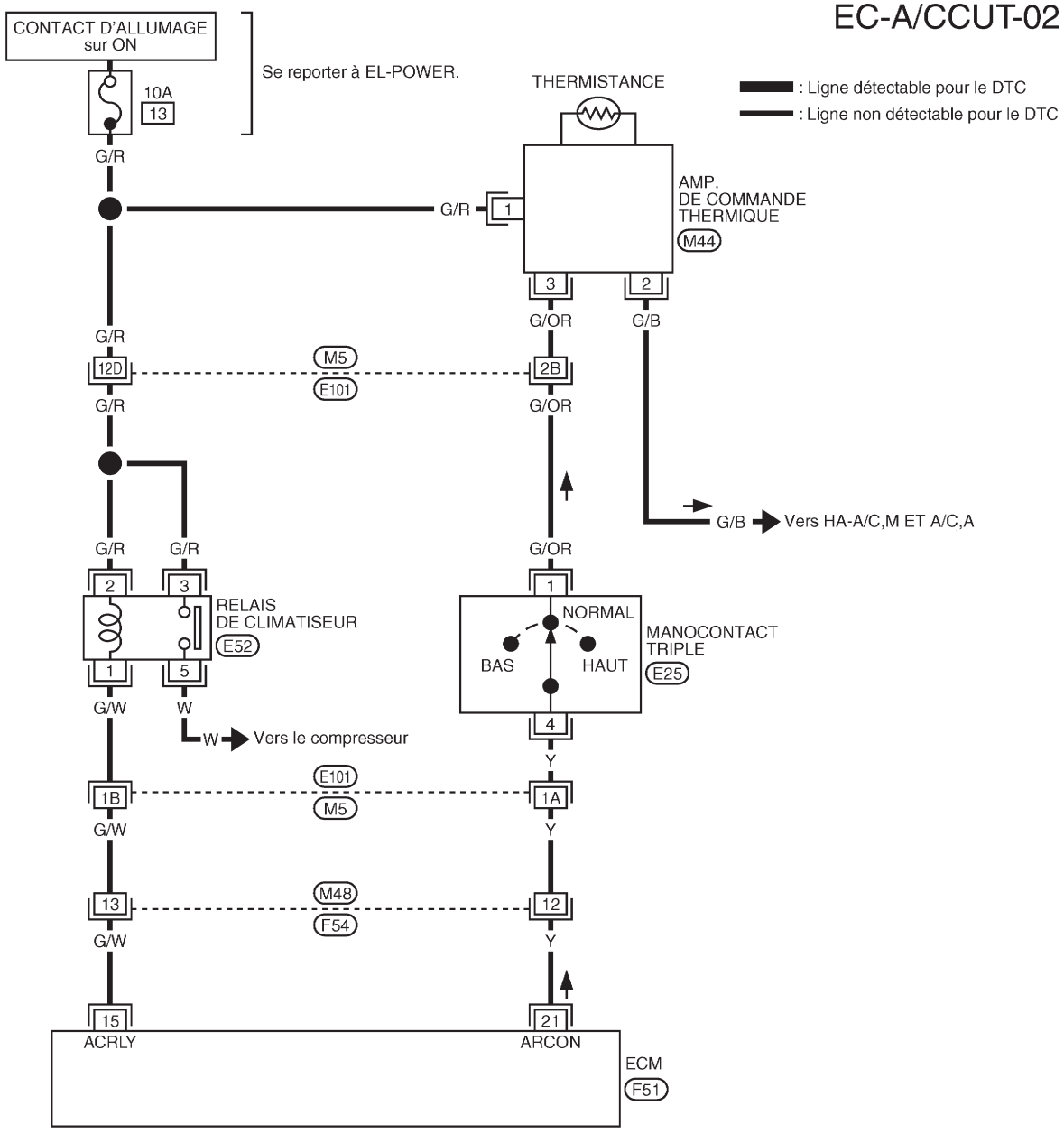

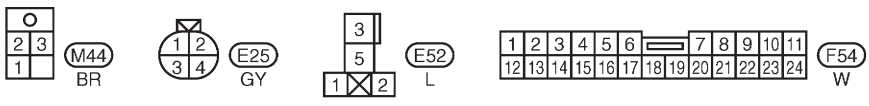

Consulter la dernière page dépliante.
M5 , E101

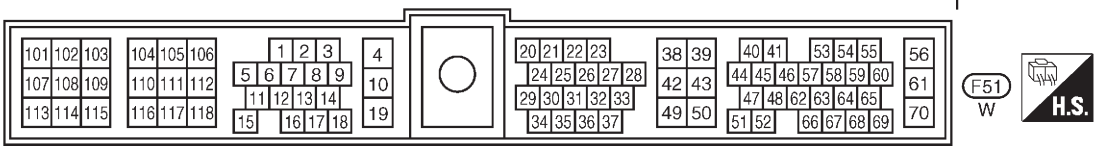

GEC289A

Simpo PDF Merge and Split Unregistered Version - http://www.simpopdf.com

Schéma de câblage

MODELES A DIRECTION A GAUCHE

EC-MIL/DL-01

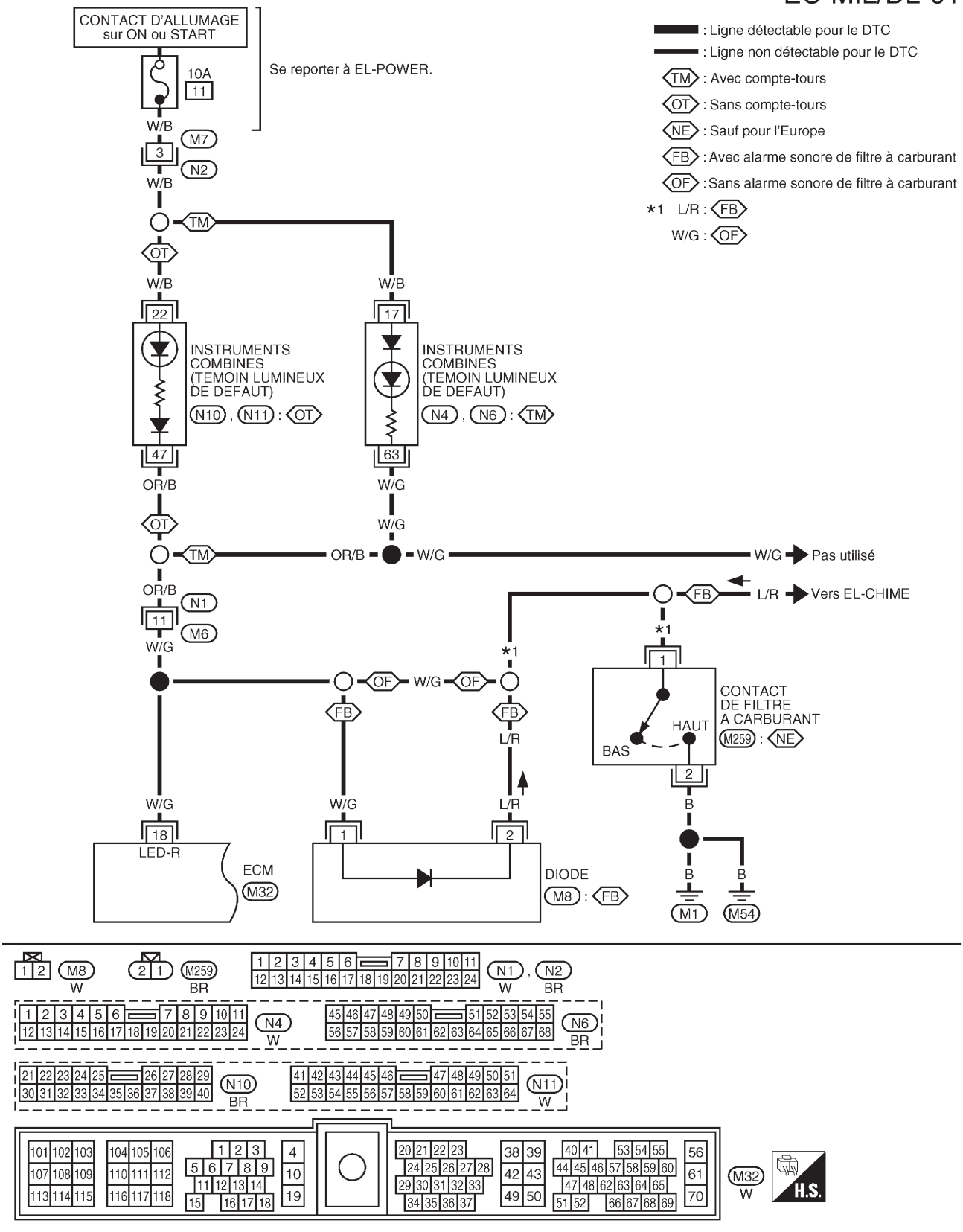

GEC290A

Simpo PDF Merge and Split Unregistered Version - http://www.simpopdf.com

Schéma de câblage (Suite)

EC-MIL/DL-02

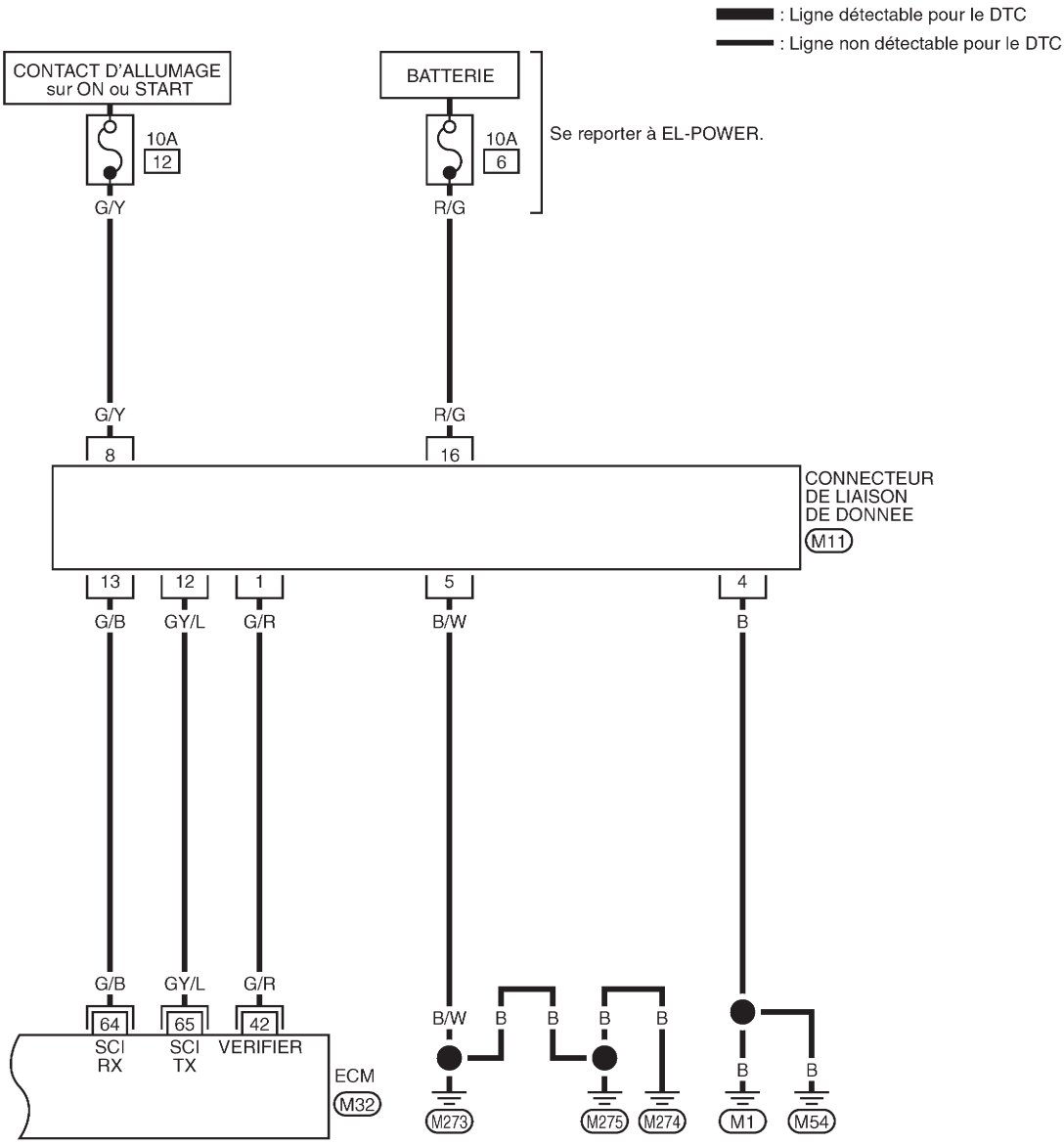

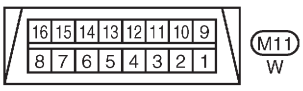

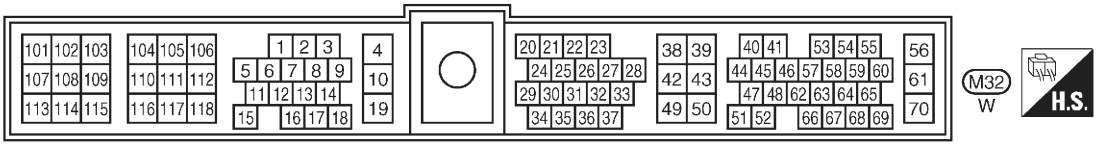

GEC157A

Simpo PDF Merge and Split Unregistered Version - http://www.simpopdf.com

Schéma de câblage (Suite)

MODELES A DIRECTION A DROITE

EC-MIL/DL-03

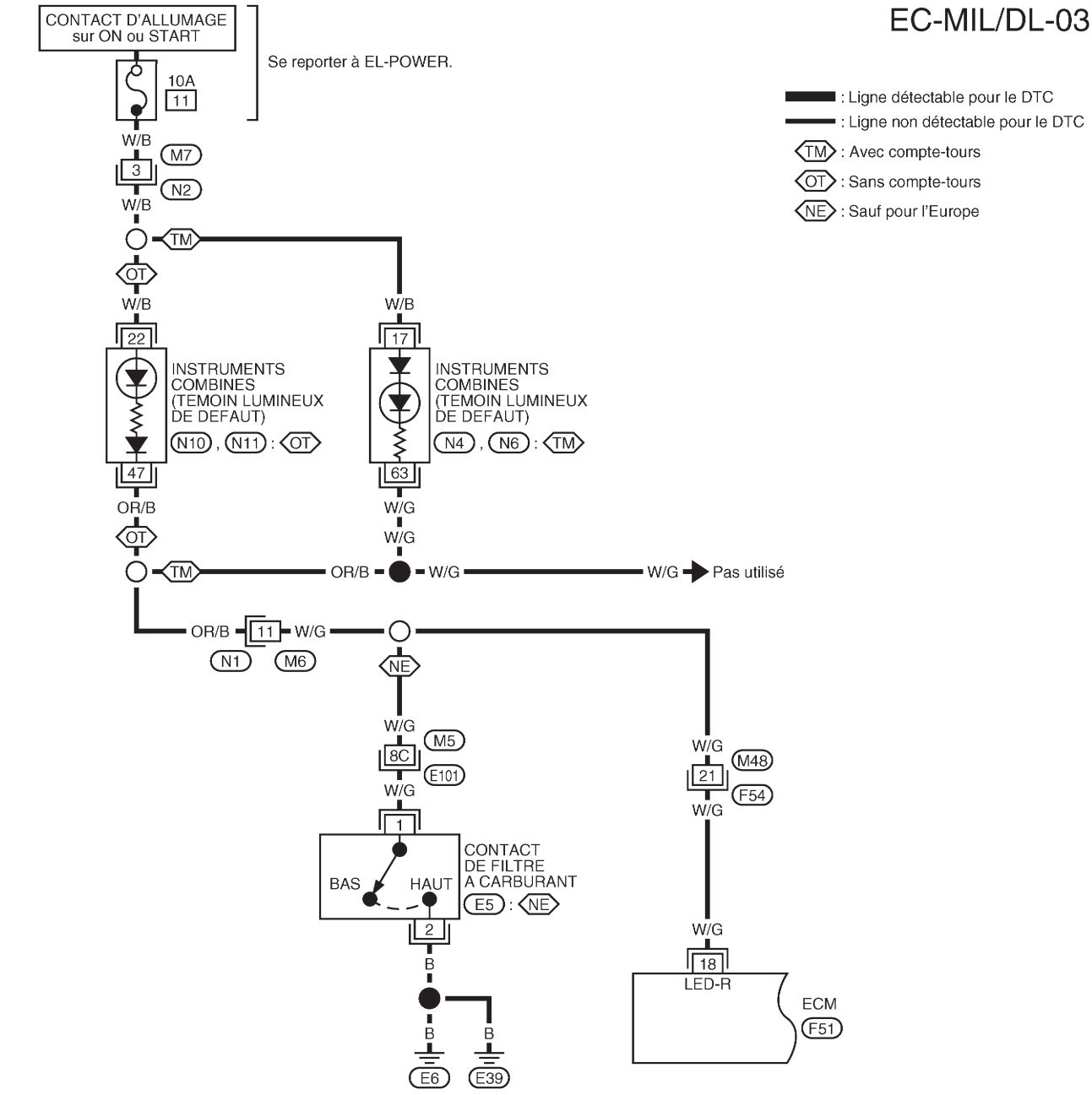

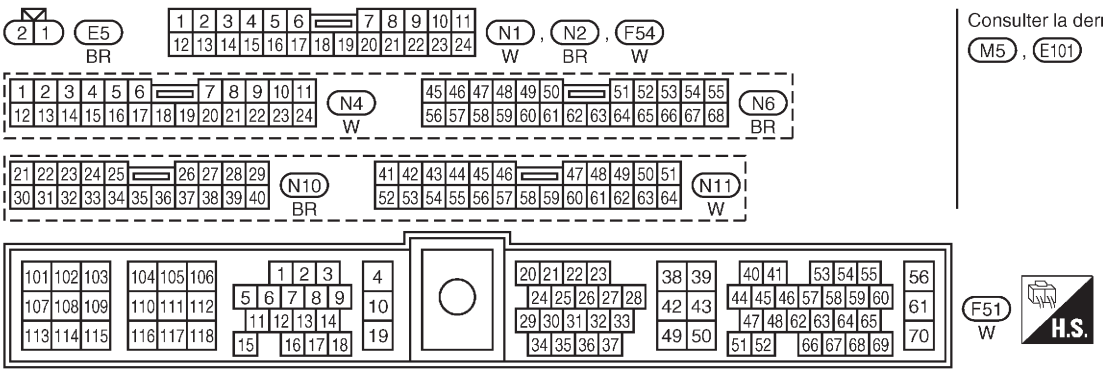

Consulter la dernière page dépliante.
M5 , E101

GEC291A

Simpo PDF Merge and Split Unregistered Version - http://www.simpopdf.com

Schéma de câblage (Suite)

EC-MIL/DL-04

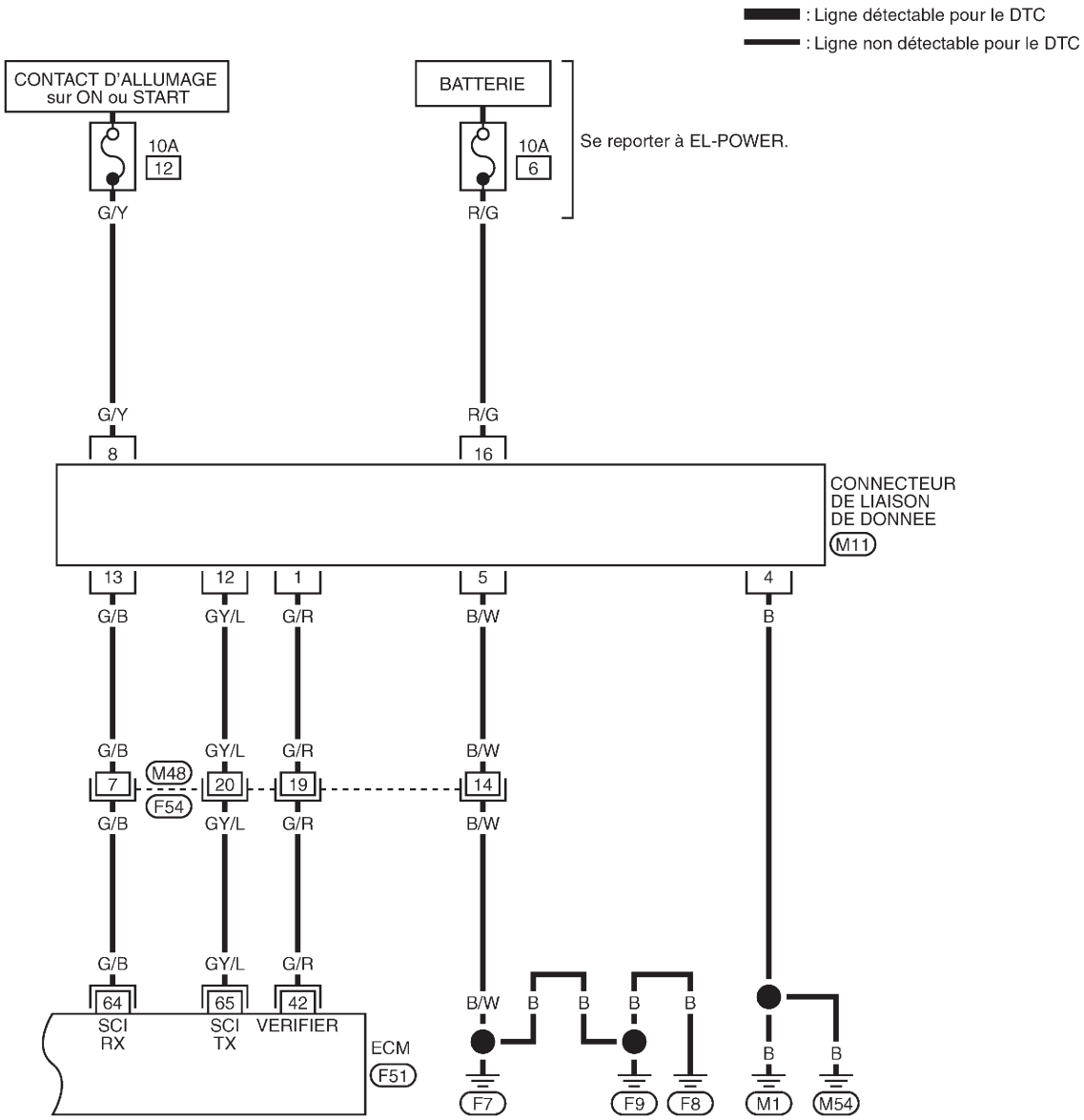

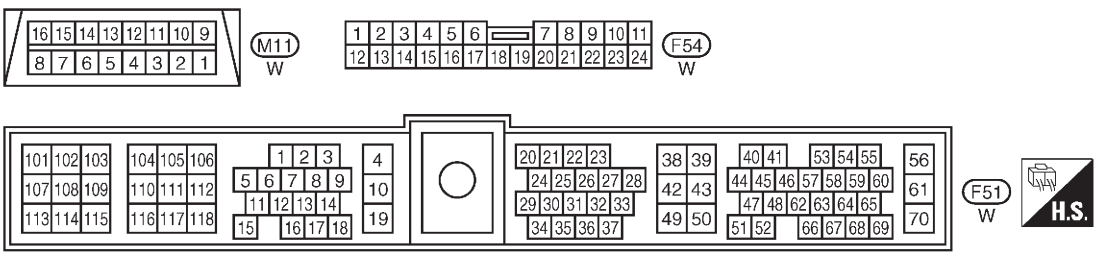

GEC159A

Simpo PDF Merge and Split Unregistered Version - http://www.simpopdf.com

Caractéristiques générales

Unité : tr/mn

Moteur	YD25DDTi
Régime de ralenti	750±25
Régime maxi du moteur	4.900

Références de la pompe d'injection

Moteur	Numéro de pièce
YD25DDTi	16700 VK500

Injecteur

Unité : kPa (bar, kg/cm^2)

Pression d'injection initiale	Usagé	18 500 - 19 500 (185 - 195, 189 - 199)
	Neuf	19 500 - 20 500 (195 - 205, 199 - 209)
	Limite	16 200 (162, 165)

Capteur de température du liquide de refroidissement du moteur

Température °C	Résistance kΩ
20	2,1 - 2,9
50	0,68 - 1,0
90	0,236 - 0,260

Capteur de température d'air d'admission

Température d'air d'admission °C	Résistance kΩ
20	2,1 - 2,9
80	0,27 - 0,38

Capteur d'angle du vilebrequin (PMH)

Résistance Ω (à 20°C)	495 - 605

Bougie de préchauffage

Résistance Ω (à 20°C)	Environ 0,8

Capteur de position d'accélérateur

Conditions de soupape de papillon	Tension (à la température de fonctionnement normale, moteur arrêté, contact d'allumage sur 'ON')
Pédale d'accélérateur entièrement relâchée (A)	0,29 V - 0,79 V
Partiellement ouverte	entre A et B
Pédale d'accélérateur complètement enfoncée (B)	3,48 V - 4,64 V

Soupape de contrôle de volume EGR

Résistance Ω (à 20°C)	13 - 17

Simpo PDF Merge and Split Unregistered Version - http://www.simpopdf.com

<SUPPLEMENT-III>

SYSTEME ELECTRIQUE

SECTION EL

AVIS DE MODIFICATION :

- Les schémas de câblage ont été modifiés.
- Les intruments combinés ont été changés.
- Les phares ont été changés.
- La commande de réglage des faisceaux a été ajoutée.
- Les lave-phares ont été ajoutés.
- Une caractéristique de rappel de feux de détresse a été ajouté au système de télécommande à fonctions multiples.
- Le Système antivol Nissan (NATS) a été changé.

TABLE DES MATIERES

PRECAUTIONS 3004
Système de retenue supplémentaire (SRS) ''COUSSIN GONFLABLE'' et ''PRETENSIONNEUR DE CEINTURE DE SECURITE'' 3004
DISPOSITION DE L'ALIMENTATION ELECTRIQUE 3005
Schéma 3005
Schéma de câblage - POWER - 3006
BATTERIE 3013
Caractéristiques et valeurs de réglage (SDS) . 3013
CIRCUIT DE DEMARRAGE 3014
Schéma de câblage - START -/Modèles avec T/M 3014
Construction 3015
Caractéristiques et valeurs de réglage (SDS) . 3017
CIRCUIT DE CHARGE 3018
Schéma de câblage - CHARGE -/Moteur diesel 3018
Schéma de câblage - CHARGE -(Moteur KA) 3019
Construction 3020
Caractéristiques et valeurs de réglage (SDS) . 3022
PHARES - Type conventionnel - 3023
Schéma de câblage - H/LAMP -/Conduite à gauche 3023
Schéma de câblage - H/LAMP -/Conduite à droite 3025
Remplacement des ampoules 3027
Réglage des faisceaux 3027
Feu de code 3029
PHARES - Circuit d'éclairage de jour - 3030
Schéma de câblage - DTRL - 3030
Remplacement des ampoules 3033
Réglage des faisceaux 3033
PHARES - Circuit de mise en veilleuse des codes - 3034
Schéma de câblage - DIMDIP - 3034
Remplacement des ampoules 3037
Réglage des faisceaux 3037
PHARES - Commande de réglage des faisceaux - 3038
Schéma de câblage - H/AIM - 3038
FEUX DE STATIONNEMENT, ECLAIRAGE DE PLAQUE D'IMMATRICULATION ET FEUX ARRIERE 3040
Schéma de câblage - TAIL/L -/Sauf conduite à gauche pour l'Europe 3040
Schéma de câblage - TAIL/L -/Conduite à gauche pour l'Europe 3042
FEUX DE STOP 3044
Schéma de câblage - STOP/L - 3044
FEUX DE MARCHE ARRIERE 3045
Schéma de câblage - BACK/L -/Modèles avec T/M 3045
FEU ANTIBROUILLARD ARRIERE 3046
Schéma de câblage - R/FOG -/Conduite à gauche 3046

Simpo PDF Merge and Split Unregistered Version - http://www.simpopdf.com

Schéma de câblage - R/FOG -/Conduite à droite 3047
CLIGNOTANTS ET FEUX DE DETRESSE 3048
Schéma de câblage - TURN - 3048
Diagnostics des défauts 3050
ECLAIRAGE 3051
Schéma de câblage - ILL -/Conduite à gauche 3051
Schéma de câblage - ILL -/Conduite à droite . 3053
PLAFONNIER 3055
Schéma de câblage - ROOM/L - 3055
SPOT DE LECTURE 3056
Schéma de câblage - INT/L - 3056
INSTRUMENTS ET JAUGES 3057
Description du système 3057
Instruments combinés/Avec compte-tours 3058
Instruments combinés/Sans compte-tours 3059
Schéma/Avec compte-tours 3060
Schéma/Sans compte-tours 3061
Construction 3062
Schéma de câblage - METER -/Moteur essence avec compte-tours 3063
Schéma de câblage - METER -/Moteur essence sans compte-tours 3065
Schéma de câblage - METER -/Conduite à gauche moteur diesel avec compte-tours 3066
Schéma de câblage - METER -/Conduite à droite moteur diesel avec compte-tours 3068
Schéma de câblage - METER -/Moteur diesel sans compte-tours 3070
Fonctionnement des instruments/jauges et contrôle des segments de compteur kilométrique/journalier en mode de diagnostic. 3071
Diagnostics de défaut/Avec compte-tours 3072
Diagnostic des défauts/Sans compte-tours 3078
TEMOINS D'AVERTISSEMENT 3084
Schéma/Avec compte-tours 3084
Schéma/Sans compte-tours 3085
Schéma de câblage - WARN -/Moteur essence avec compte-tours 3086
Schéma de câblage - WARN -/Moteur essence sans compte-tours 3090
Schéma de câblage - WARN -/Moteur diesel avec compte-tours 3094
Schéma de câblage - WARN -/Moteur diesel sans compte-tours 3098
TEMOIN DE T/A 3103
Schéma de câblage - AT/IND -/Conduite à droite 3103
Schéma de câblage - CHIME -/Conduite à gauche 3104
Schéma de câblage - CHIME -/Conduite à droite 3105
ESSUIE-GLACE ET LAVE-VITRE AVANT 3106
Schéma de câblage - WIPER -/Sans Balayage intermittent pour changement des vitesses au plancher 3106
Schéma de câblage - WIPER -/Avec balayage intermittent pour conduite à droite avec changement des vitesses au volant 3109
LAVE-PHARES 3111
Schéma de câblage - HLC - 3111
AVERTISSEUR SONORE 3112
Schéma de câblage - HORN - 3112
ALLUME-CIGARE 3113
Schéma de câblage - CIGAR - 3113
MONTRE 3114
Schéma de câblage - CLOCK - 3114
DESEMBUAGE DE LUNETTE ARRIERE ET DE RETROVISEUR 3115
Schéma de câblage - DEF - 3115
AUDIO 3116
Schéma de câblage -AUDIO -/Conduite à gauche 3116
Schéma de câblage -AUDIO -/Conduite à droite 3117
ANTENNE AUDIO 3118
Antenne électrique/Schéma de câblage - P/ANT - 3118
RETROVISEUR ELECTRIQUE DE PORTE 3119
Schéma de câblage - MIRROR -/Conduite à gauche 3119
Schéma de câblage - MIRROR -/Conduite à droite 3120
SIEGE CHAUFFANT 3121
Schéma de câblage - H/SEAT - 3121
LEVE-VITRE ELECTRIQUE 3123
Schéma/Sans fonction de détection d'interruption 3123
Schéma/Avec fonction de détection d'interruption 3124
Schéma de câblage - WINDOW -/Sans fonction de détection d'interruption 3125
Schéma de câblage - WINDOW -/Avec fonction de détection d'interruption 3129
Diagnostic des défauts/Sans fonction de détection d'interruption 3133
Diagnostic des défauts/Avec fonction de détection d'interruption 3134
VERROUILLAGE ELECTRIQUE DE PORTE 3136
Schéma de câblage - D/LOCK - 3136
SYSTEME DE MULTI-TELECOMMANDE 3138
Description du système 3138
SYSTEME DE MULTI-TELECOMMANDE 3139
Schéma de câblage - MULTI - 3139
Diagnostics des défauts 3140
Procédure d'entrée du code d'identification 3142
Remplacement de la pile de la télécommande à fonctions multiples 3143

Simpo PDF Merge and Split Unregistered Version - http://www.simpopdf.com

SYSTEME D'ALARME ANTIVOL 3144
Schéma de câblage - PRWIRE - 3144
NATS (système Antivol NISSAN) 3145
Emplacement des composants et des connecteurs de faisceau 3145
Description du système 3146
Composition du système 3147
Schéma de câblage - NATS -/Conduite à gauche 3148
Schéma de câblage - NATS -/Conduite à droite avec moteur diesel 3149
CONSULT-II 3150
Diagnostics des défauts 3153
Comment remplacer l'IMMO NATS 3164
EMPLACEMENT DES DISPOSITIFS ELECTRIQUES 3165
Compartiment moteur 3165
Compartiment passager 3166
DISPOSITION DES FAISCEAUX 3168
Faisceau principal 3168
Faisceau de compartiment moteur 3178
Faisceau de contrôle du moteur/Moteur KA 3186
Faisceau de commande du moteur 3188
Faisceau de moteur 3189
Faisceau d'alternateur 3191
Faisceau des instruments 3193
Faisceau de châssis et faisceau arrière 3194
Faisceau de porte avant (côté gauche) 3195
Faisceau de porte avant (côté droit) 3196
Faisceau de porte arrière 3197
CODES DE SCHEMA DE CABLAGE (CODES DE CELLULES) 3198

Simpo PDF Merge and Split Unregistered Version - http://www.simpopdf.com

Système de retenue supplémentaire (SRS) ‘‘COUSSIN GONFLABLE’’ et ‘‘PRETENSIONNEUR DE CEINTURE DE SECURITE’’

Utilisés avec une ceinture de sécurité, le COUSSIN GONFLABLE et le PRETENSIONNEUR DE CEINTURE DE SECURITE du système de retenue supplémentaire contribuent à réduire les risques et la gravité des blessures subies par le conducteur et le passager avant lors de collisions frontales. Le système SRS disponible sur le MODELE NISSAN D22 se compose des éléments suivants (la composition varie selon le pays de destination et l’équipement optionnel) :
Un module de coussin gonflable côté conducteur (situé dans le moyeu du volant), un module de coussin gonflable côté passager avant (situé sur le tableau de bord, côté passager), un prétensionneur de ceintures de sécurité, un boîtier de capteurs de diagnostic, un témoin d’avertissement, un faisceau de câblage et un câble spiralé.
Toute information nécessaire à l’entretien du système en toute sécurité est comprise dans la **section RS** de ce Manuel de Réparation.

ATTENTION :

- **Pour ne pas affecter le fonctionnement du SRS, ce qui augmenterait les risques de blessures graves ou mortelles en cas de collision entraînant le déploiement du coussin gonflable, toutes les opérations d’entretien doivent être effectuées par un concessionnaire NISSAN agréé.**
- **Un entretien incorrect, y compris une dépose et une repose incorrectes du système de retenue supplémentaire (SRS), peut être à l’origine de blessures provoquées par une activation involontaire du système. Pour la dépose du câble spiralé et du module de coussin gonflable, se reporter à la section RS.**
- **Ne pas utiliser d’équipement d’essai électrique sur les circuits connexes du SRS sauf si indiqué dans ce Manuel de Réparation. Le faisceau de câblage du SRS peut être identifié à l’aide d’un connecteur de faisceau jaune.**

Simpo PDF Merge and Split Unregistered Version - http://www.simpopdf.com

Schéma

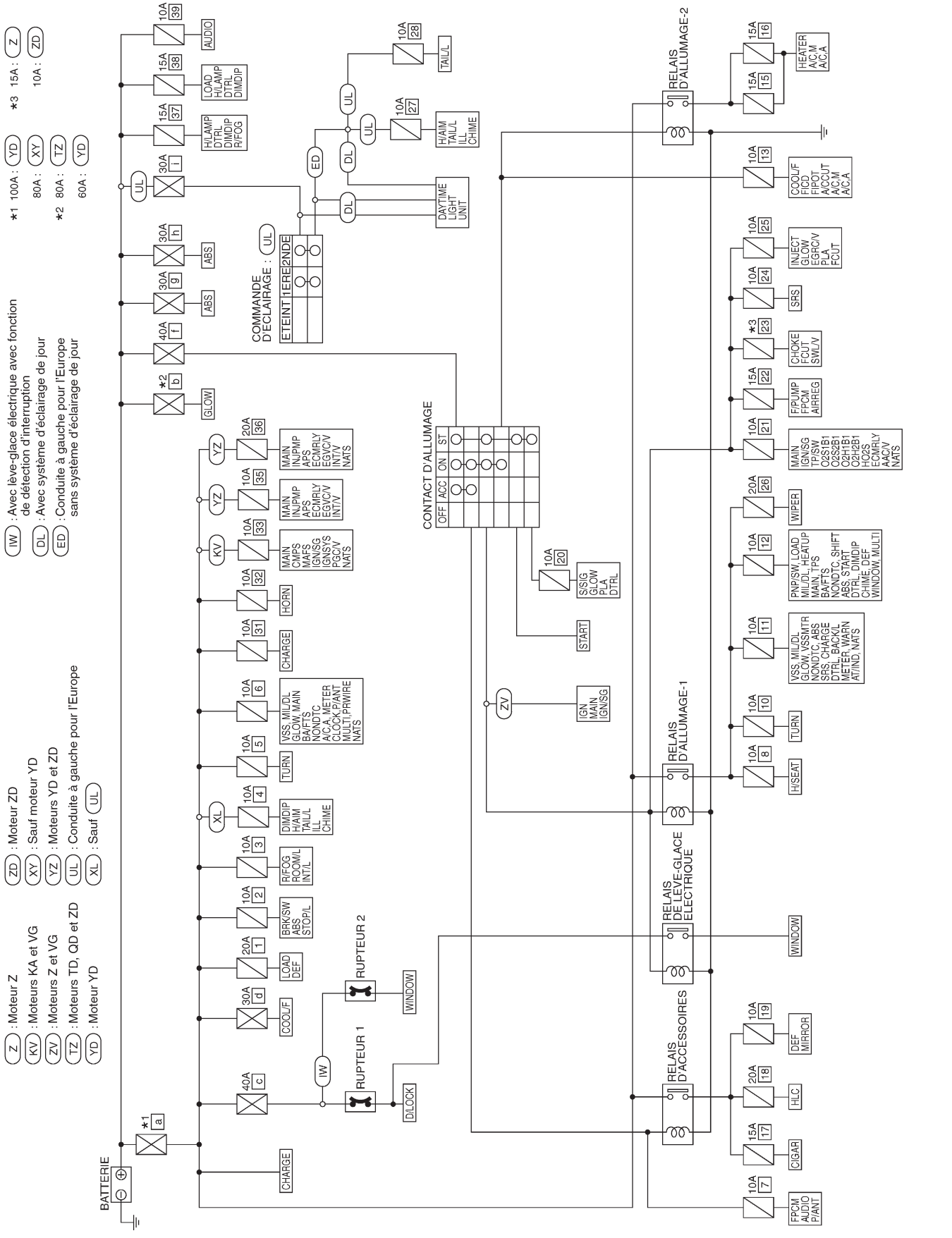

GEL358A

Simpo PDF Merge and Split Unregistered Version - http://www.simpopdf.com

Schéma de câblage — POWER —

ALIMENTATION ELECTRIQUE DE LA BATTERIE — CLE DE CONTACT DANS N'IMPORTE QUELLE POSITION

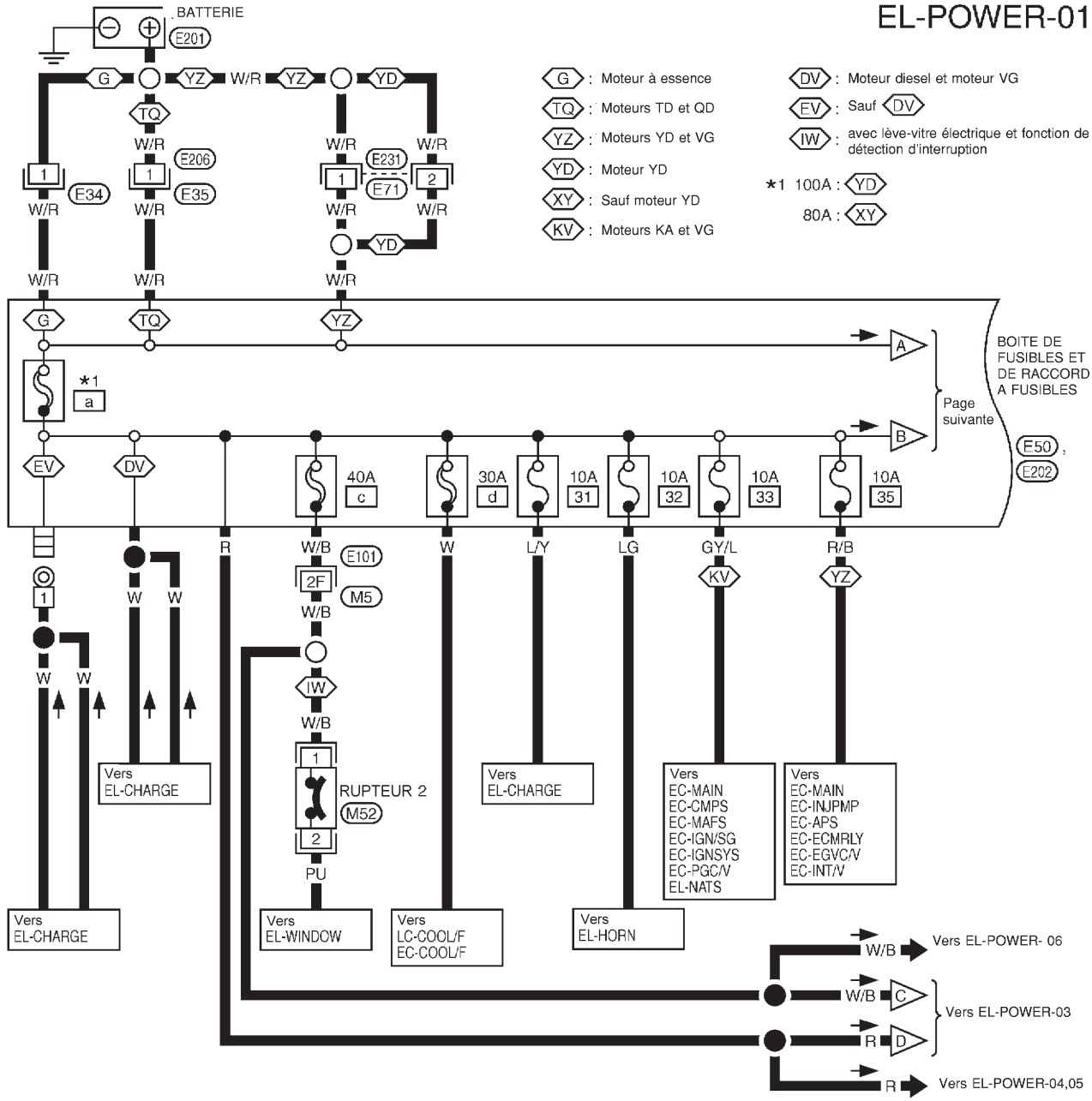

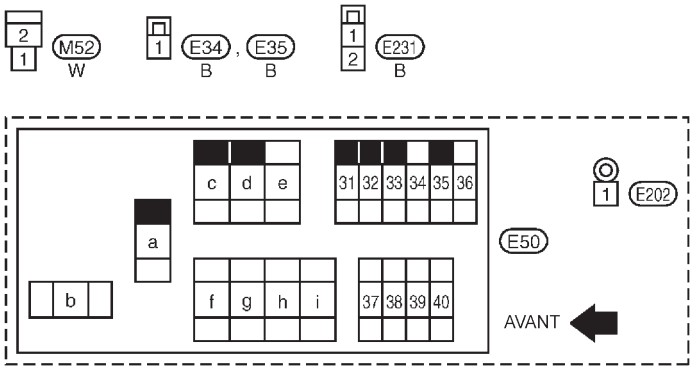

Consulter la dernière page dépliante.
M5 , E101

GEL359A

Simpo PDF Merge and Split Unregistered Version - http://www.simpopdf.com

Schéma de câblage — POWER — (Suite)

EL-POWER-02

YZ : Moteurs YD et ZD
UL : Conduite à gauche pour l'Europe
YD : Moteur YD
TZ : Moteurs TD, QD et ZD
*1 80A : TZ
60A : YD

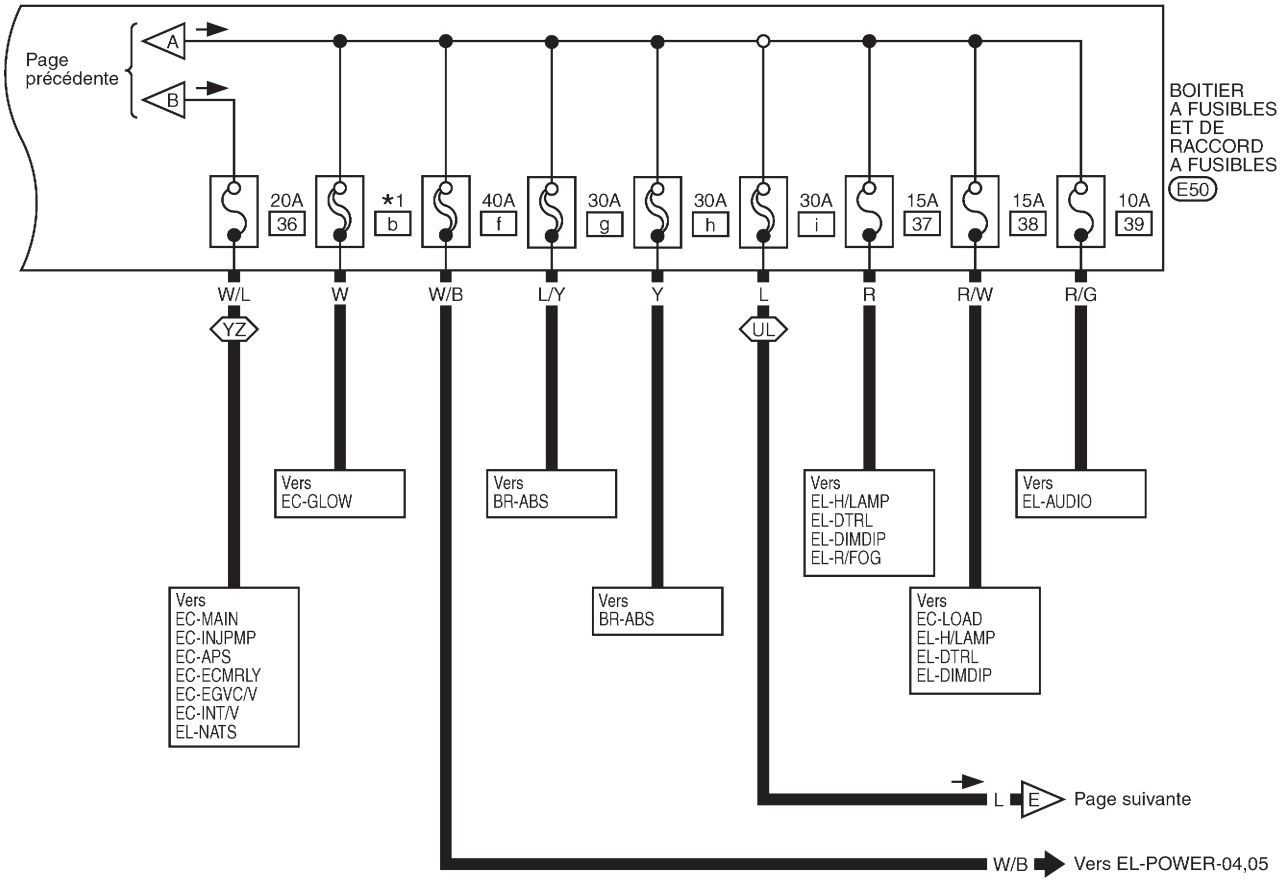

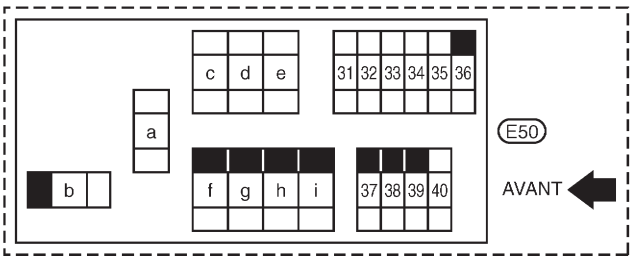

GEL360A

Simpo PDF Merge and Split Unregistered Version - http://www.simpopdf.com

Schéma de câblage — POWER — (Suite)

EL-POWER-03

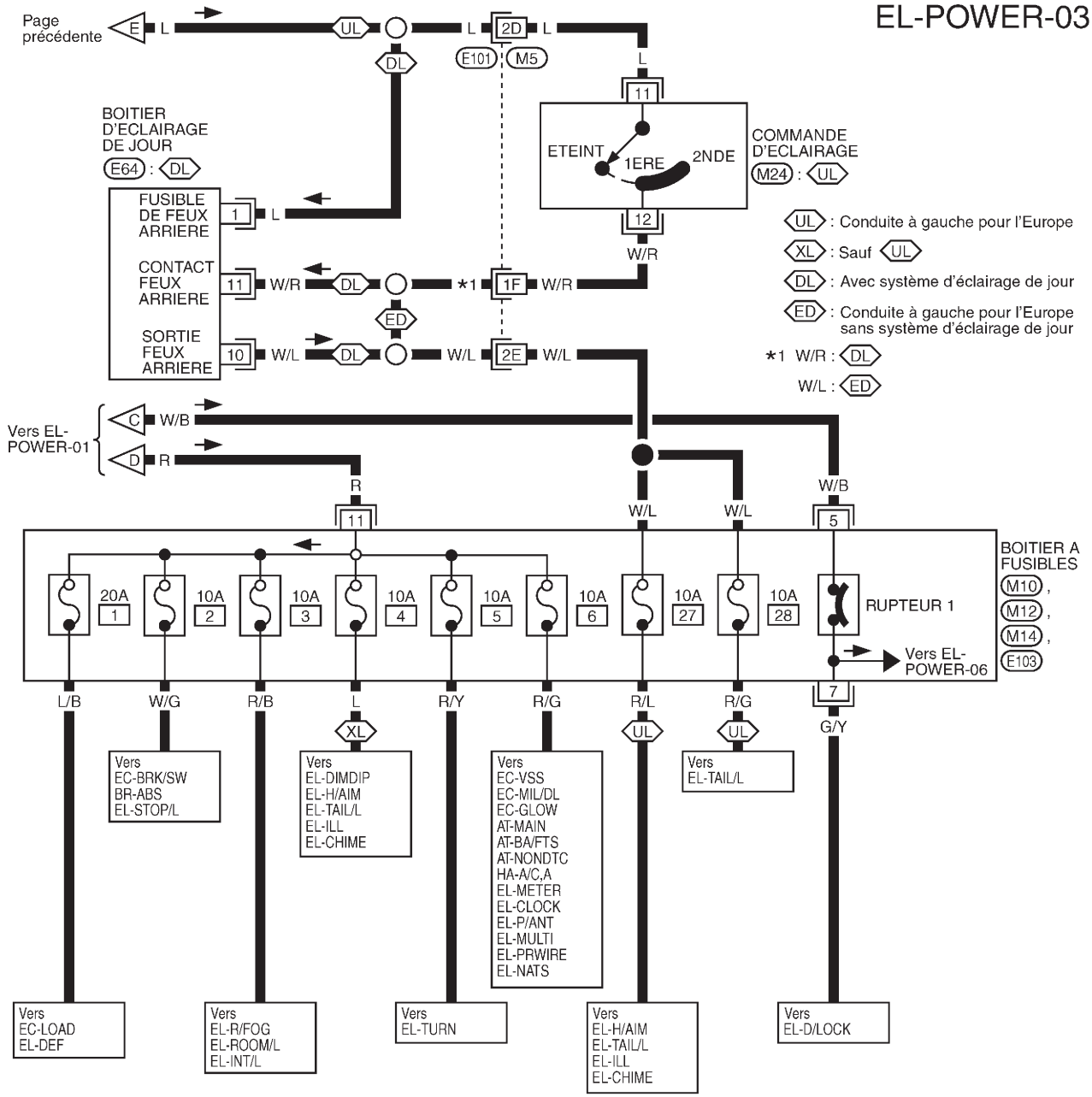

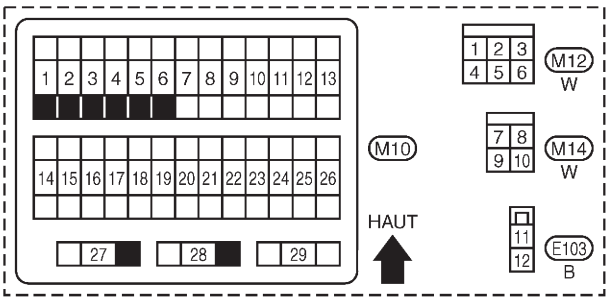

Consulter la dernière page dépliante.
M5 , E101

GEL361A

Simpo PDF Merge and Split Unregistered Version - http://www.simpopdf.com

Schéma de câblage — POWER — (Suite)

ALIMENTATION AUXILIAIRE CONTACT D'ALLUMAGE SUR "ACC" OU "ON"

EL-POWER-04

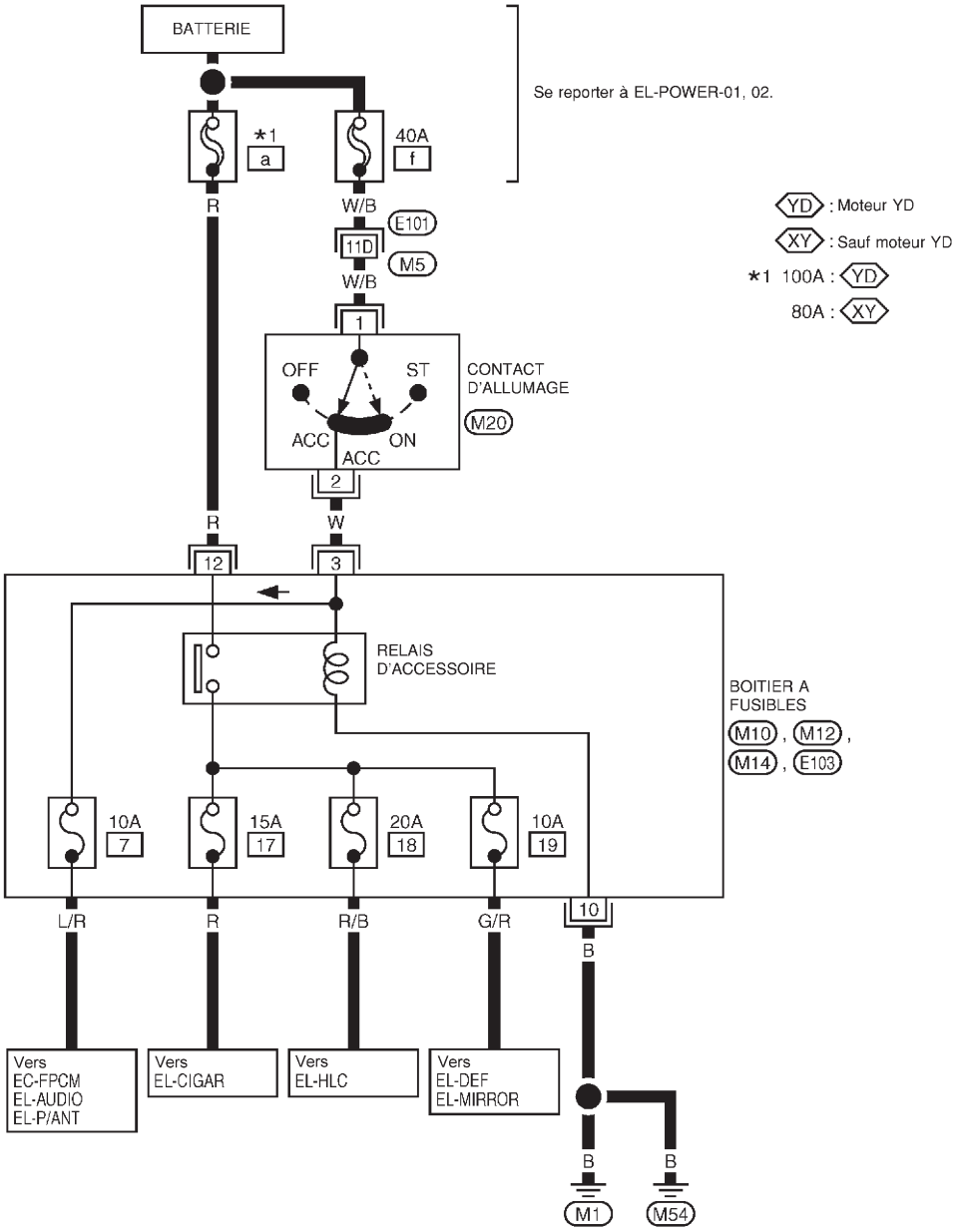

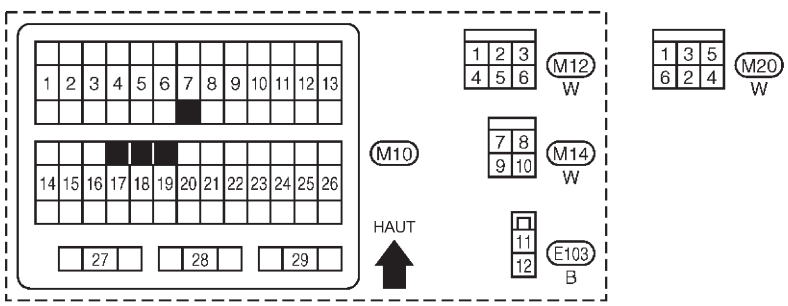

Consulter la dernière page dépliante.
M5 , E101

GEL362A

Simpo PDF Merge and Split Unregistered Version - http://www.simpopdf.com

Schéma de câblage — POWER — (Suite)

ALIMENTATION PAR BATTERIE CONTACT D'ALLUMAGE SUR "ON" ET/OU "START"

EL-POWER-05

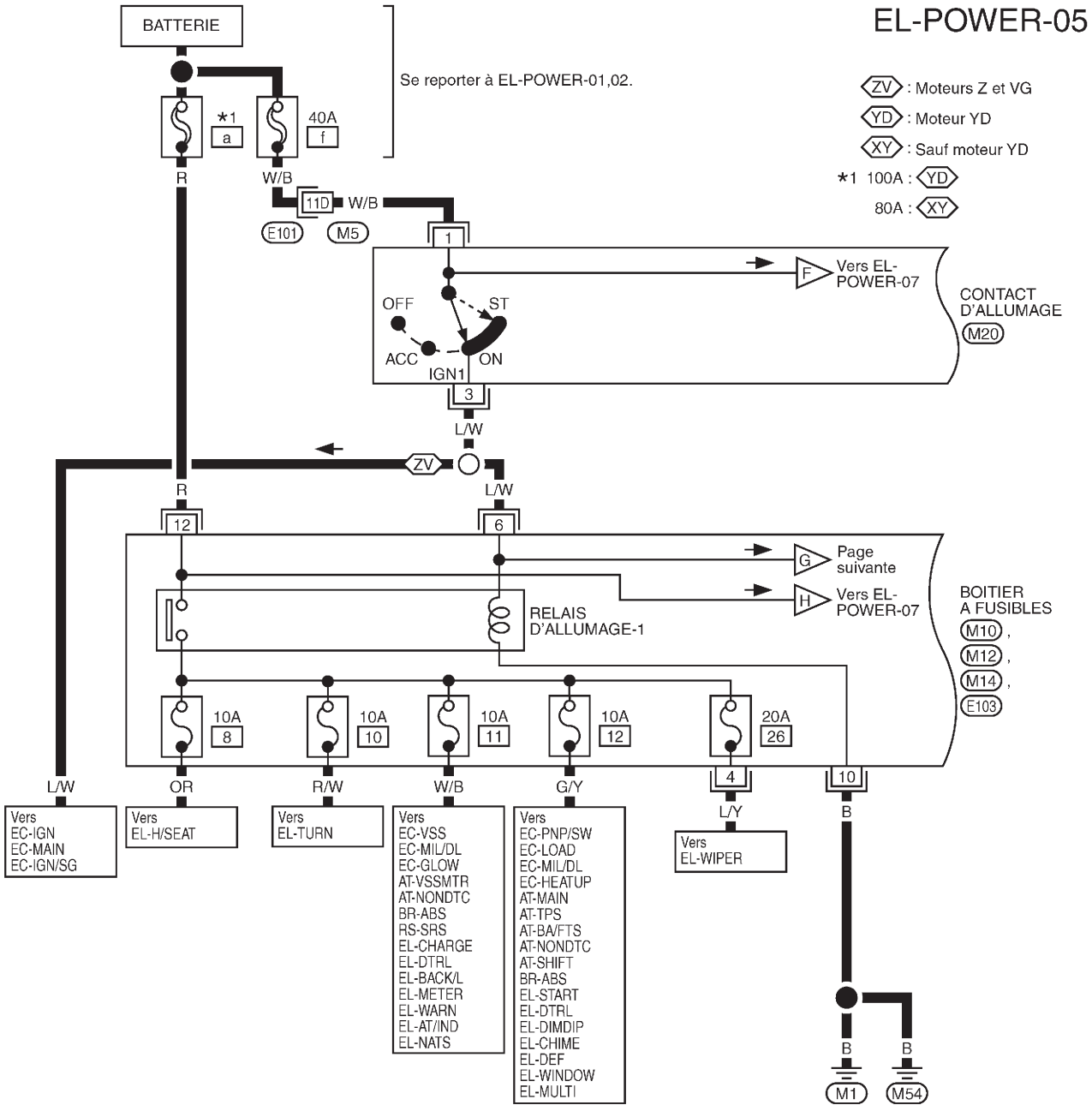

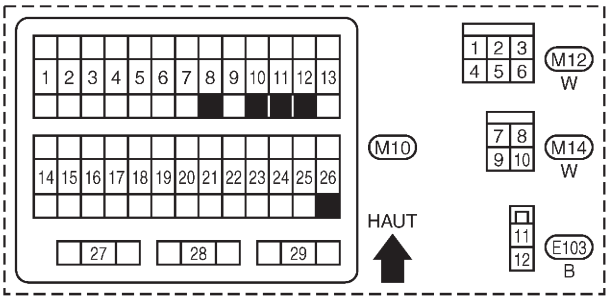

Consulter la dernière page dépliante.
M5 , E101

GEL363A

Simpo PDF Merge and Split Unregistered Version - http://www.simpopdf.com

Schéma de câblage — POWER — (Suite)

EL-POWER-06

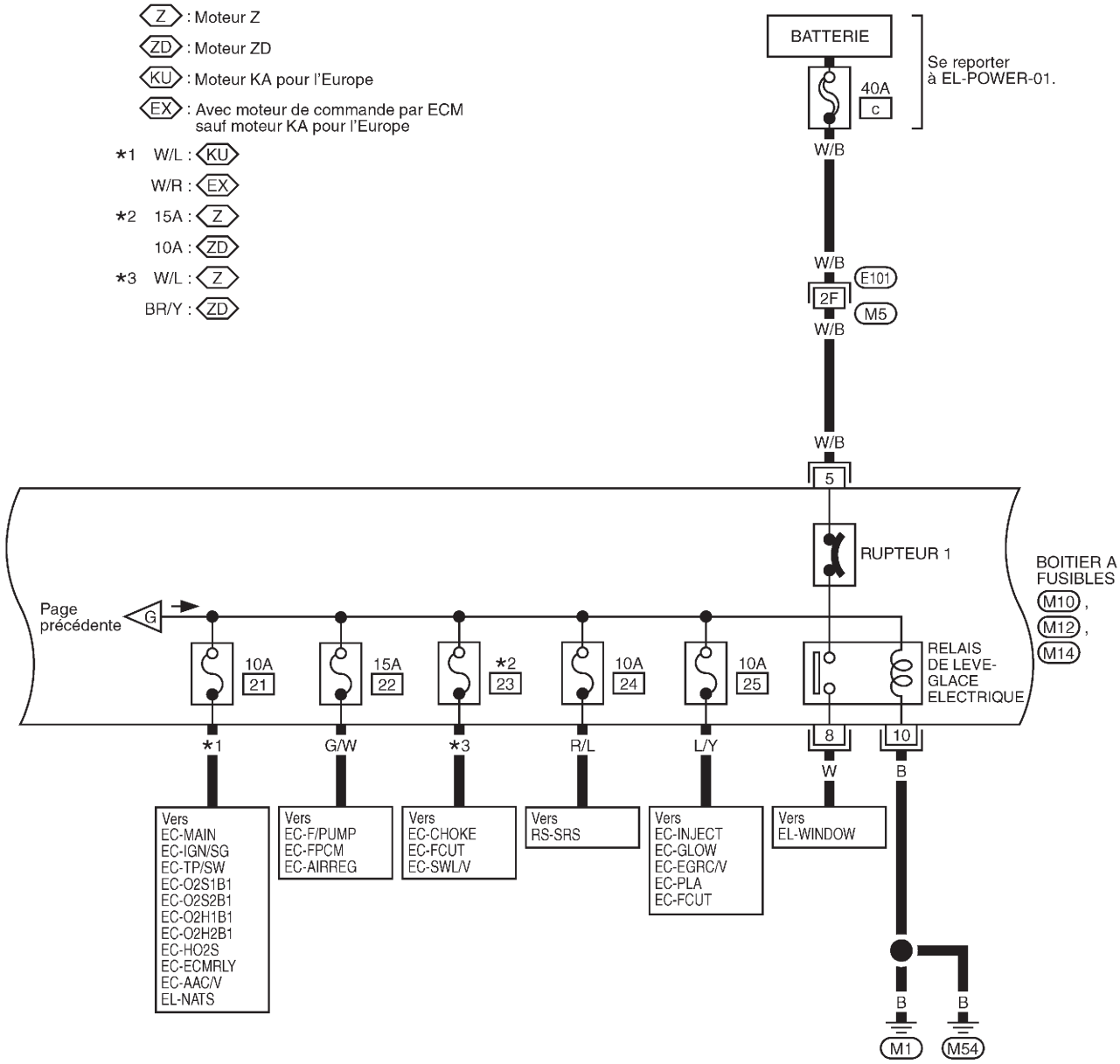

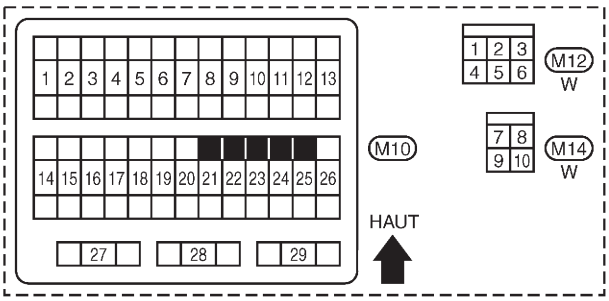

Consulter la dernière page dépliante.
M5, E101

GEL364A

Simpo PDF Merge and Split Unregistered Version - http://www.simpopdf.com

Schéma de câblage — POWER — (Suite)

EL-POWER-07

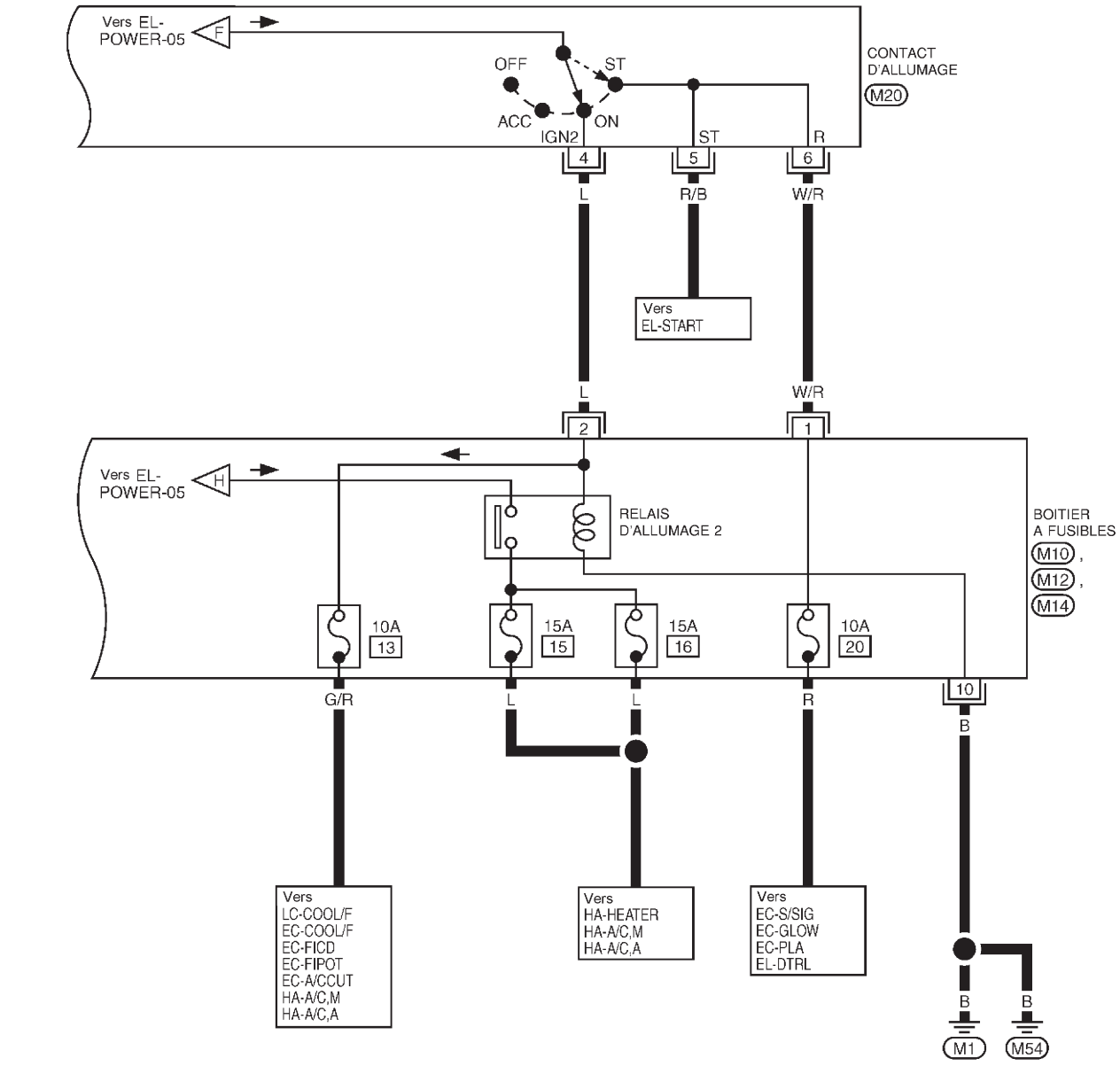

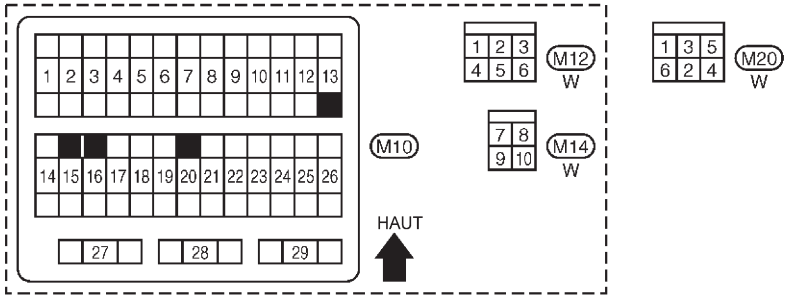

GEL365A

Simpo PDF Merge and Split Unregistered Version - http://www.simpopdf.com

Caractéristiques et valeurs de réglage (SDS)

Modèle concerné		Europe
		YD25
		Standard
Type		110D26R
Capacité	V-AH	12-64

Simpo PDF Merge and Split Unregistered Version - http://www.simpopdf.com

Schéma de câblage — START —/Modèles avec T/M

EL-START-01

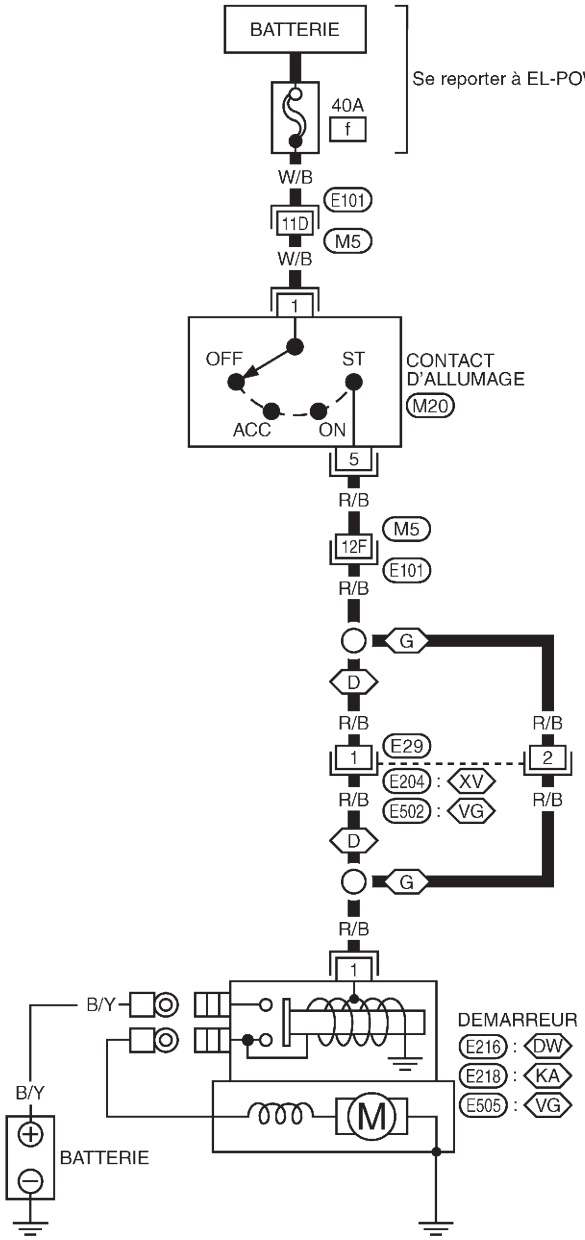

G : Moteur à essence
D : Moteur diesel
KA : Moteur KA
VG : Moteur VG
XV : Sauf VG
DW : Moteur diesel et moteur de carburateur



Consulter la dernière page dépliante.
M5 , E101

GEL366A

Simpo PDF Merge and Split Unregistered Version - http://www.simpopdf.com

Construction

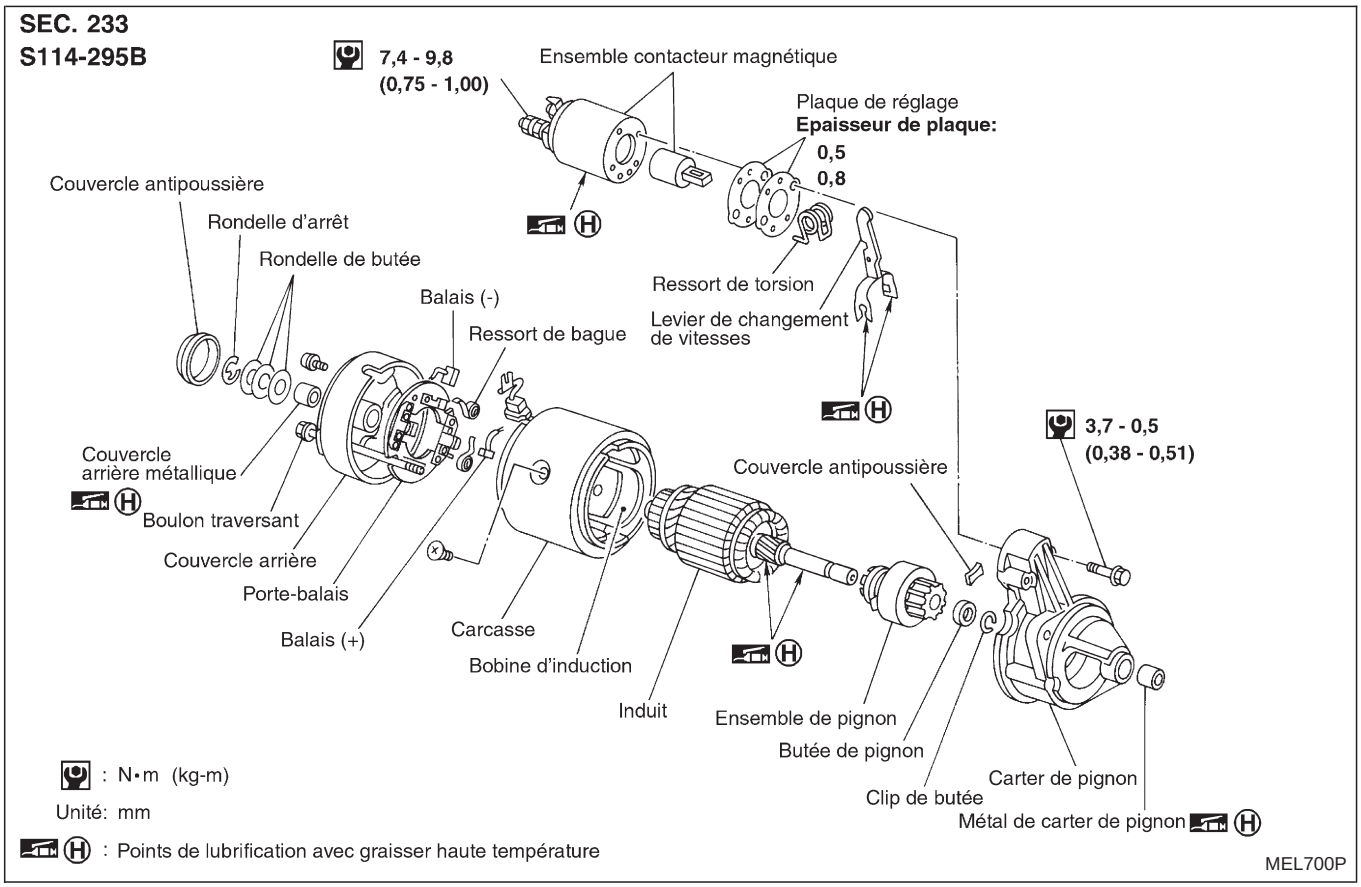

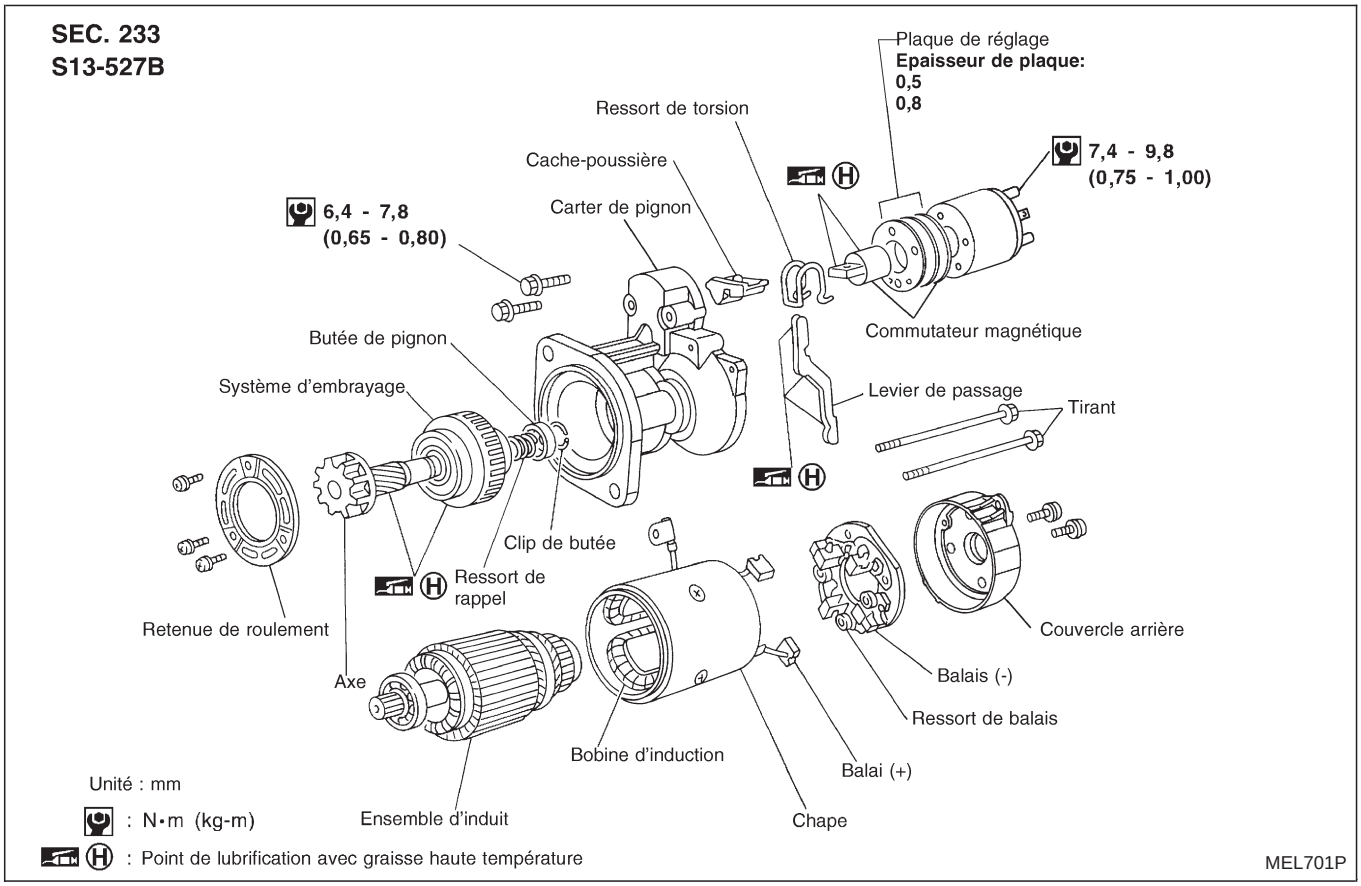

Simpo PDF Merge and Split Unregistered Version - http://www.simpopdf.com

Construction (Suite)

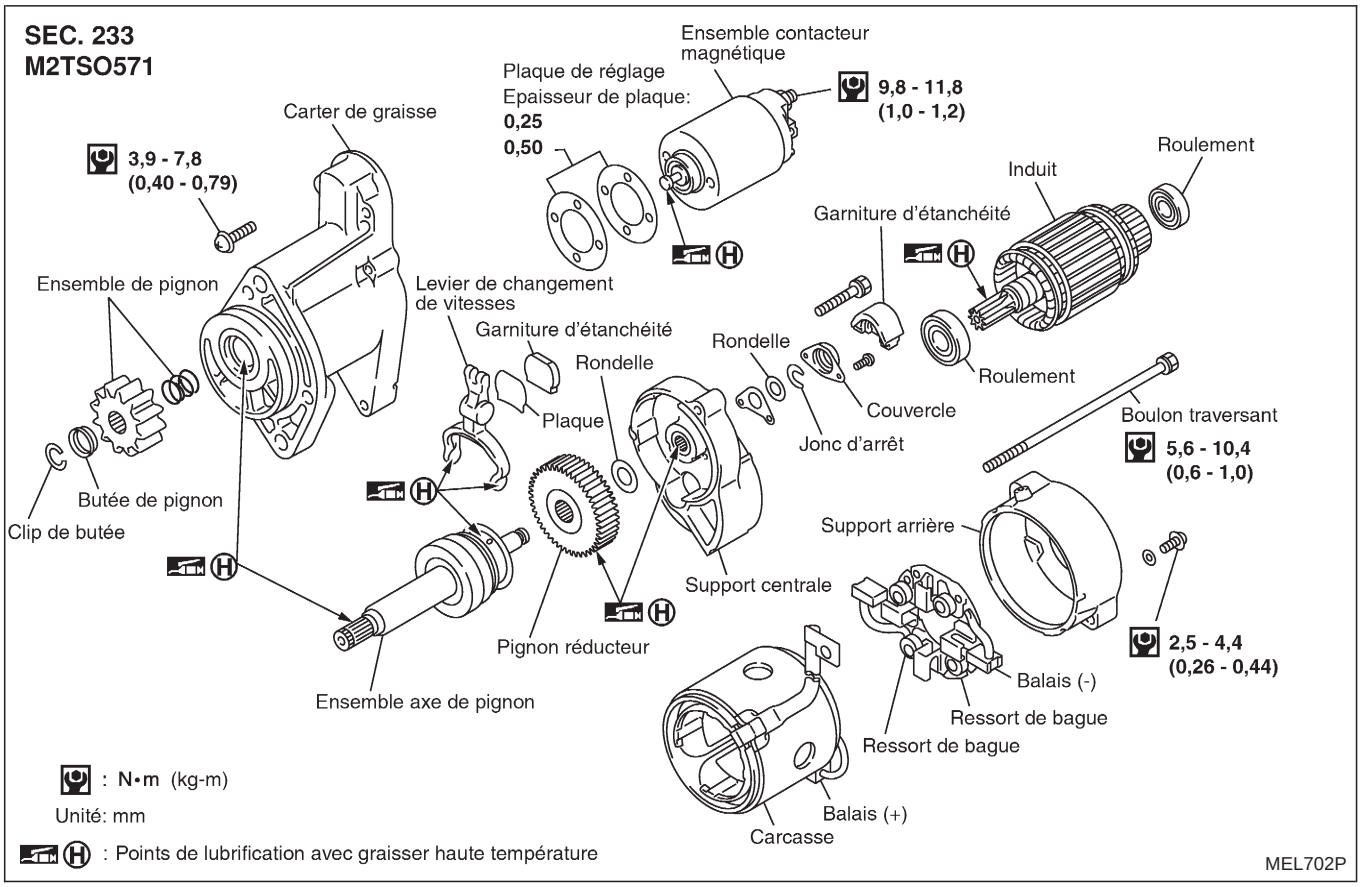

Simpo PDF Merge and Split Unregistered Version - http://www.simpopdf.com

Caractéristiques et valeurs de réglage (SDS)

DEMARREUR

Type			M2TS0571		M3T29482D	S114-348A	S114-295B	S13-527B
			MITSUBISHI			HITACHI		
			Réduction		Pas de réduction			Réduction
Modèle concerné			4X2	4X4	4X2			4X4
			YD25		Z24			ZD30
			Standard		Standard		Option	Standard
Tension du système		V	12					
A vide								
	Tension de la borne	V	11,0		11,5			11,0
	Courant	A	Moins de 145		Moins de 60			Moins de 160*
	Révolution	tr/mn	Plus de 3.200		Plus de 6.500	Plus de 7.000	Plus de 6.000	Plus de 3 300
Diamètre minimum du commutateur		mm	31,4			39,0		35,5
Longueur minimum des balais		mm	11,0		11,5	12,0	11,0	
Tension de ressort de balais		N (kg)	26,7 - 36,1 (2,7 - 3,7)		13,7 - 25,5 (1,4 - 2,6)	17,7 - 21,6 (1,8 - 2,2)	17,6 - 21,6 (1,8 - 2,2)	28,4 - 34,3 (2,9 - 3,5)
Jeu entre métal du roulement et axe d'induit.		mm	inférieure à 0,2					—
Jeu "ℓ" entre l'extrémité avant du pignon et la butée de pignon		mm	—		0,5 - 2,0	0,3 - 2,5		—
Mouvement "ℓ" en hauteur du pignon		mm	0,5 - 2,0		—			0,3 - 2,0

* : Comprend le courant de l'interrupteur magnétique.

Simpo PDF Merge and Split Unregistered Version - http://www.simpopdf.com

Schéma de câblage — CHARGE —/Moteur diesel

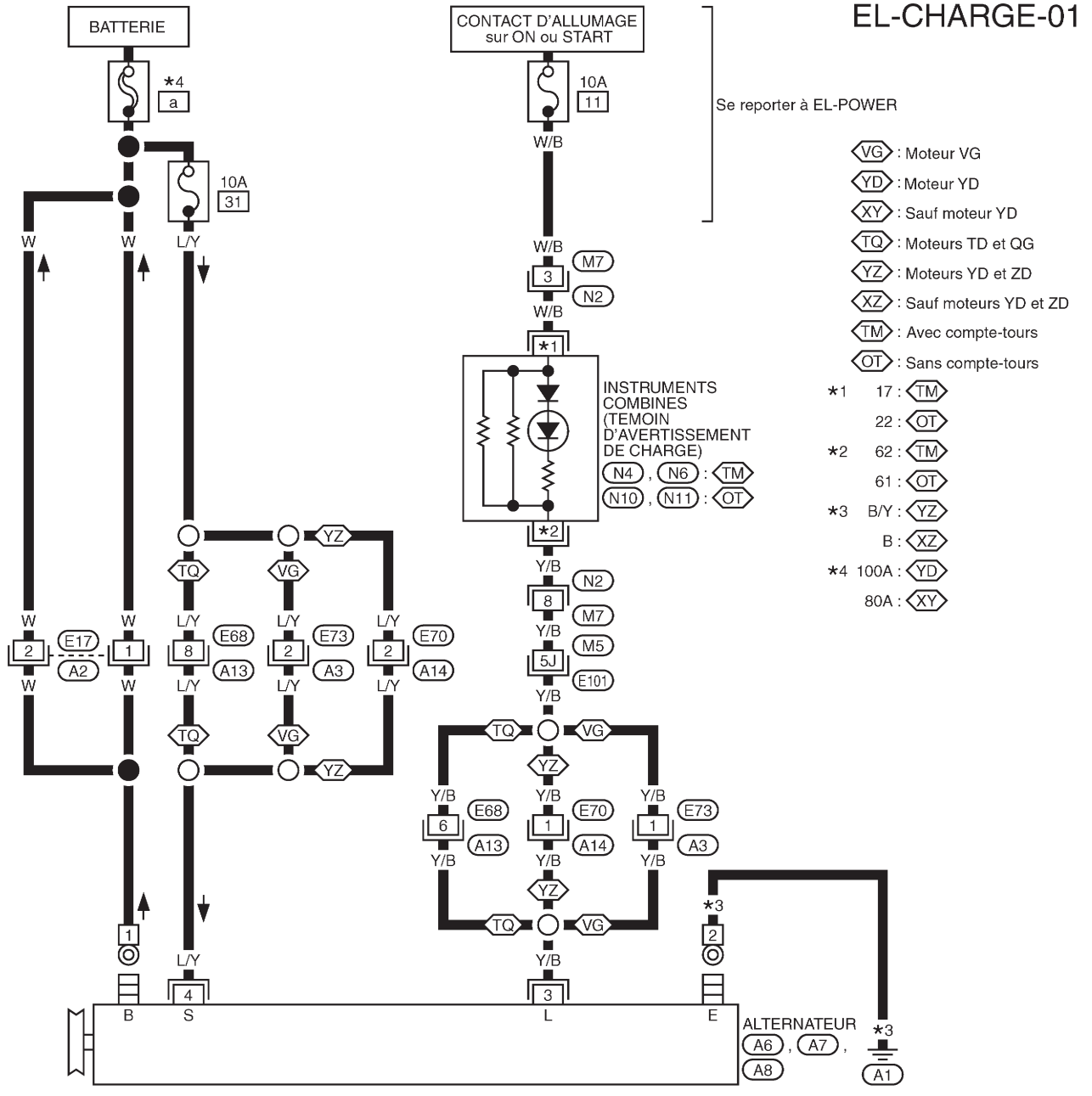

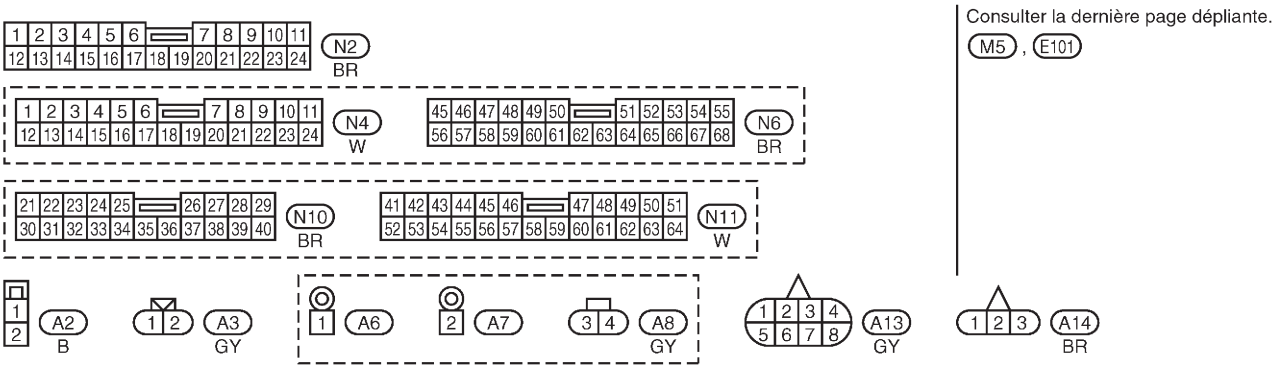

GEL368A

Simpo PDF Merge and Split Unregistered Version - http://www.simpopdf.com

Schéma de câblage — CHARGE —(Moteur KA)

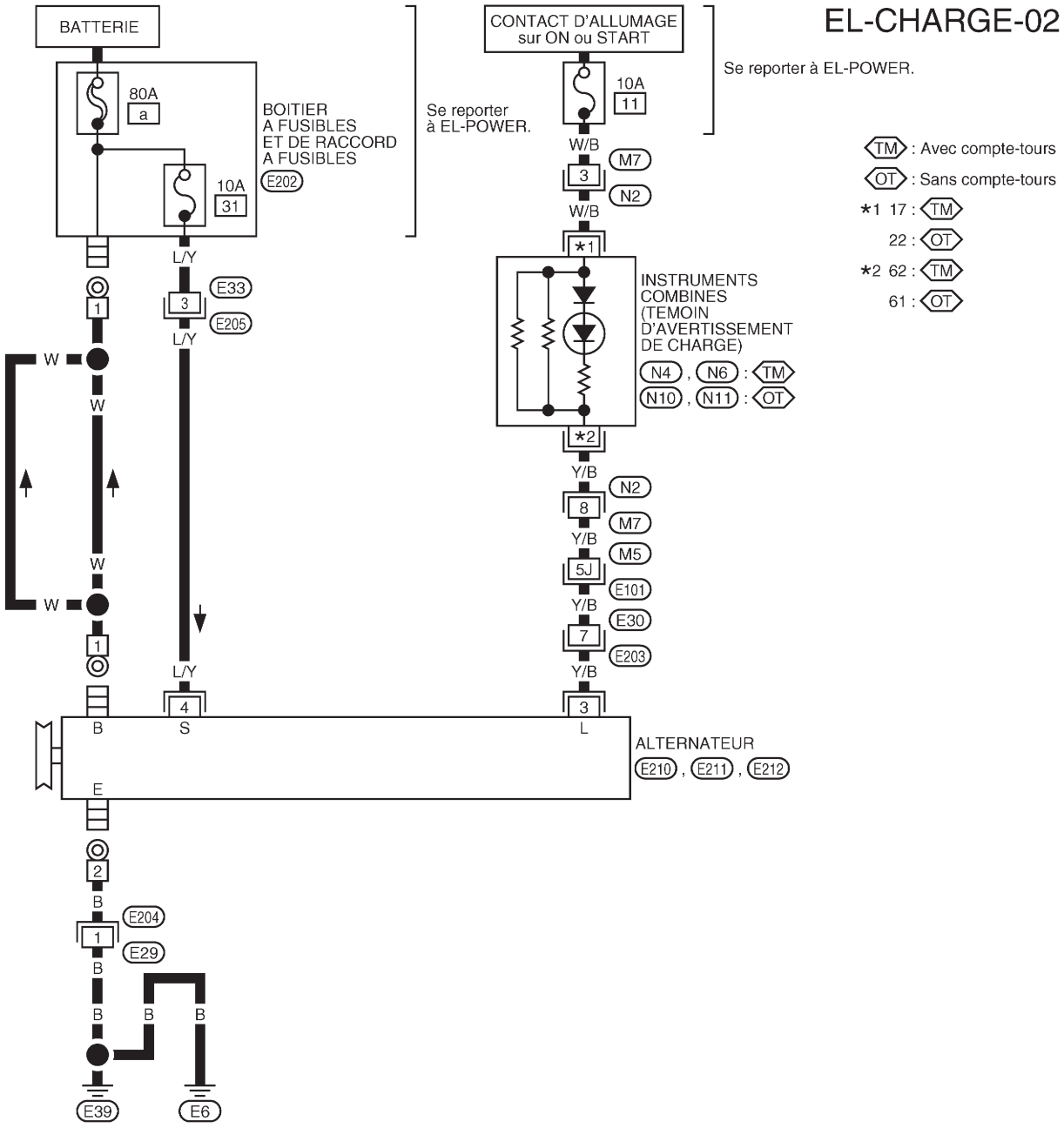

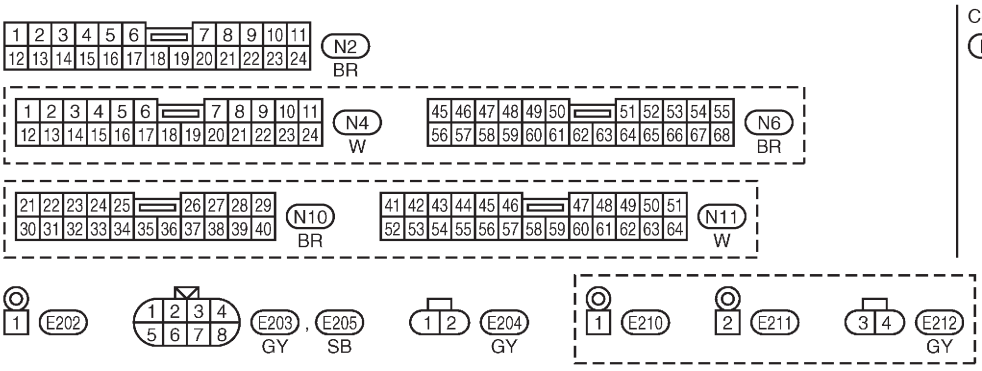

Consulter la dernière page dépliante.
M5 , E101

GEL238A

Simpo PDF Merge and Split Unregistered Version - http://www.simpopdf.com

Construction

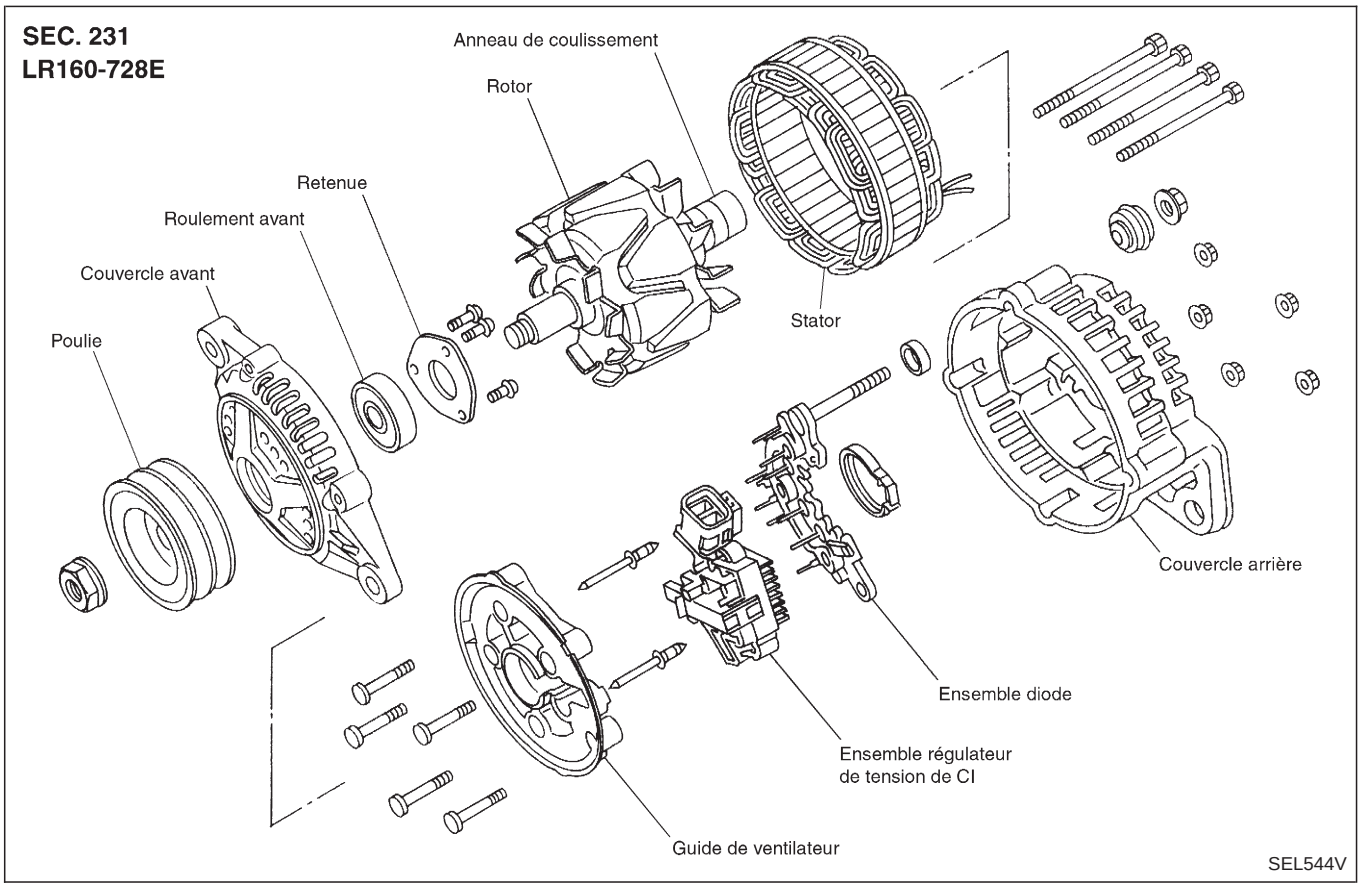

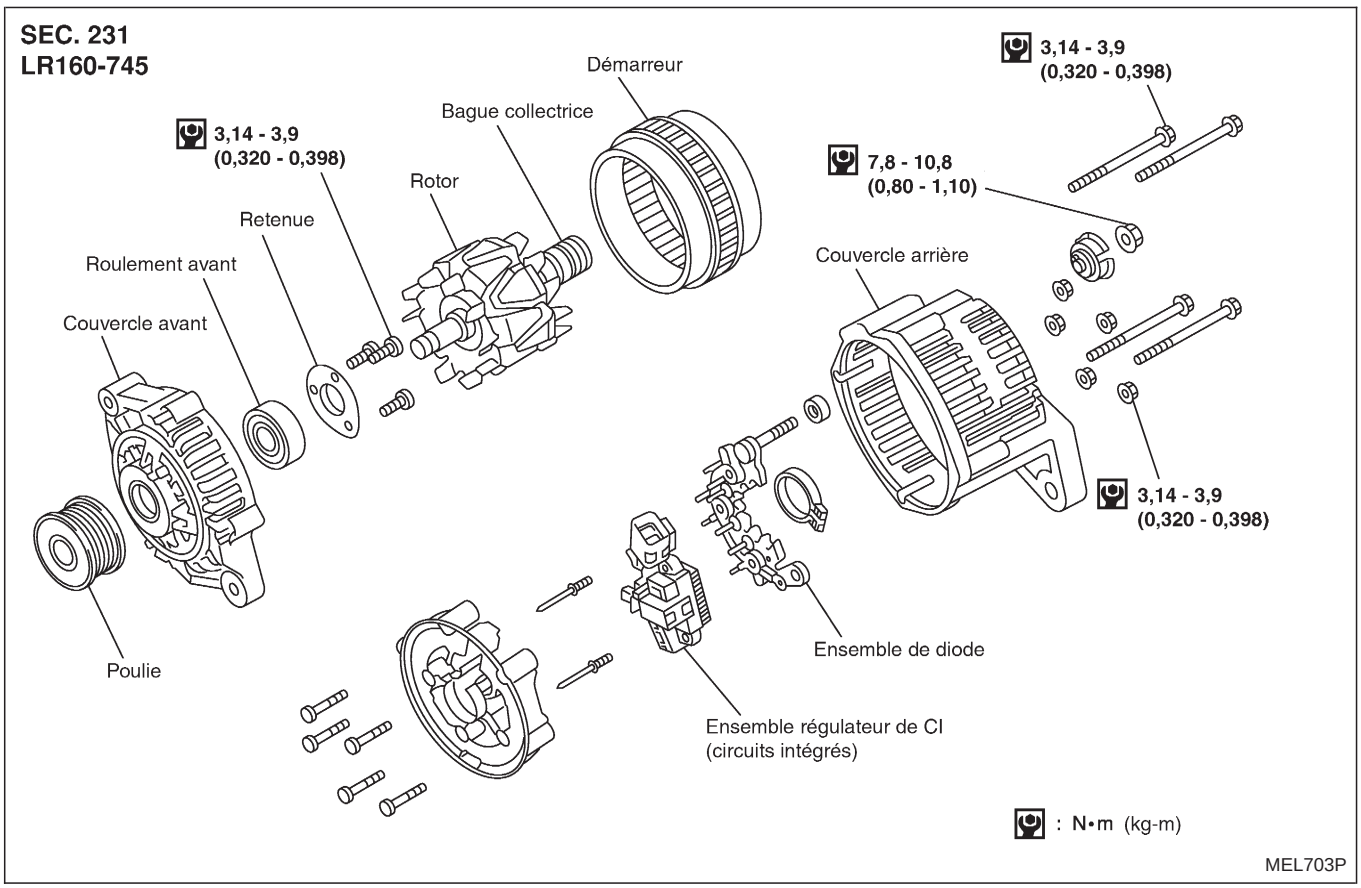

Simpo PDF Merge and Split Unregistered Version - http://www.simpopdf.com

Construction (Suite)

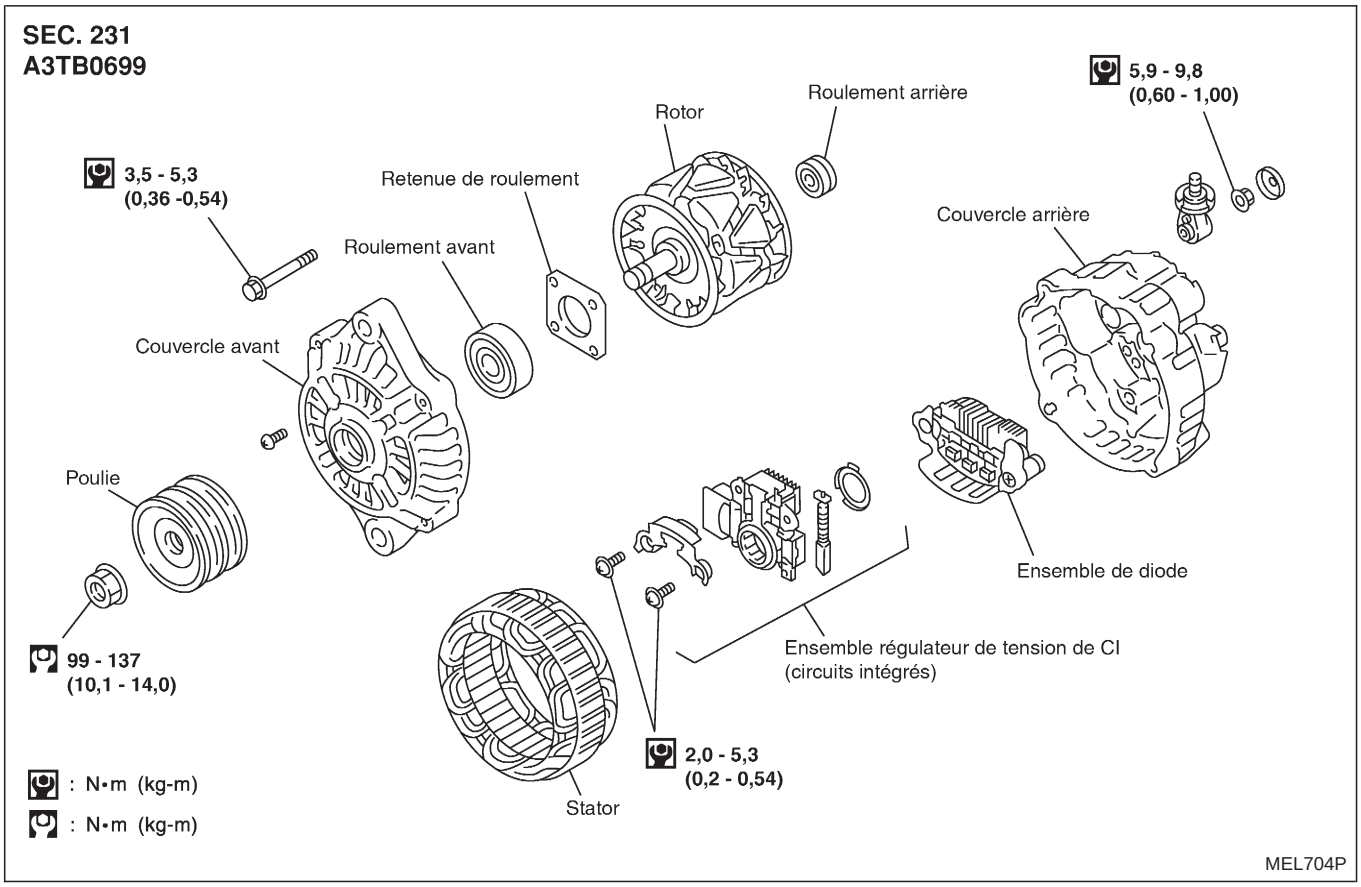

Simpo PDF Merge and Split Unregistered Version - http://www.simpopdf.com

Caractéristiques et valeurs de réglage (SDS)

ALTERNATEUR

Type	A5TA5271	A7TA8471	A5TA5372	A3TB0699	LR160-745	LR160-728E
	MITSUBISHI				HITACHI	
Modèle concerné	KA24DE	Z24		YD25	ZD30	TD27, QD32
		Standard	Option*			
Puissance nominale V-A	12-70	12-35	12-70	12-90	12-60	
Polarité de masse	Négative					
Régime minimum à vide (Avec une tension de 13,5V) tr/mn	Moins de 1 300				Moins de 1 000	
Courant de sortie à chaud (Avec une tension de 13,5V) Amp./tr/mn	Plus de 14/1 300 Plus de 54/2 500	Plus de 27/2 500	Plus de 18/1 300 Plus de 51/2 500	Plus de 29/1 300 Plus de 76/2 500 Plus de 88/5 000	Plus de 17/1 300 Plus de 48/2 500 Plus de 57/5 000	
Tension de sortie réglée V	14,1 - 14,7					
Longueur minimale des balais mm	5,0				6,0	
Pression de ressort de balais N (g)	4,8 - 6,0 (487 - 612)				1,0 - 3,43 (102 - 350)	
Diamètre extérieur minimum de l'anneau coulissant mm	22,1				26,0	
Résistance de rotor (bobine d'induction) Ω	2,5 - 2,9	2,7 - 3,2	2,5 - 2,9	2,1 - 2,5	2,6	2,58

* : Modèles avec direction assistée et climatisation

Simpo PDF Merge and Split Unregistered Version - http://www.simpopdf.com

Schéma de câblage — H/LAMP —/Conduite à gauche

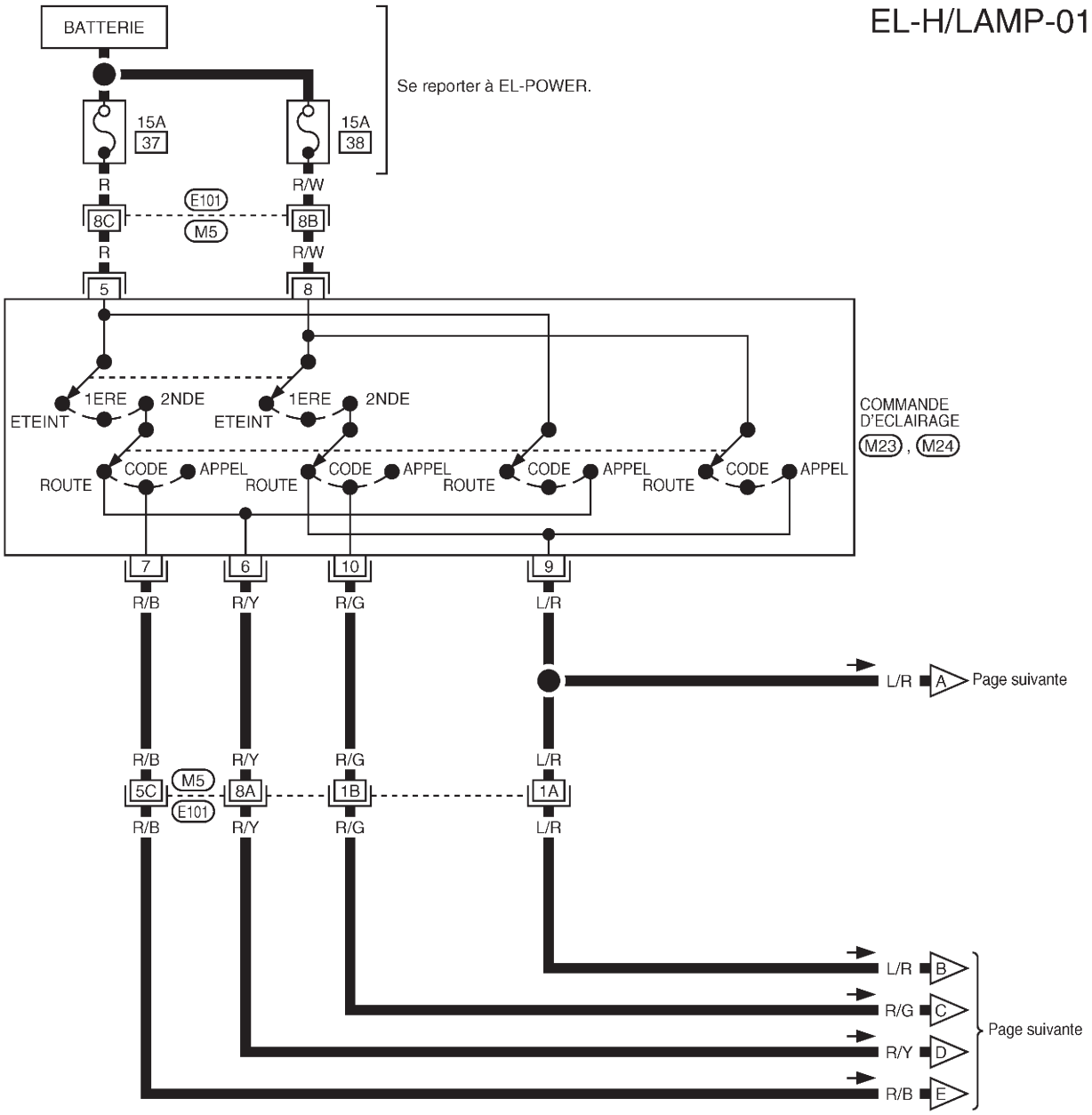

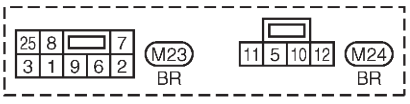

Consulter la dernière page dépliante.
M5 , E101

GEL239A

Simpo PDF Merge and Split Unregistered Version - http://www.simpopdf.com

Schéma de câblage — H/LAMP —/Conduite à gauche (Suite)

EL-H/LAMP-02

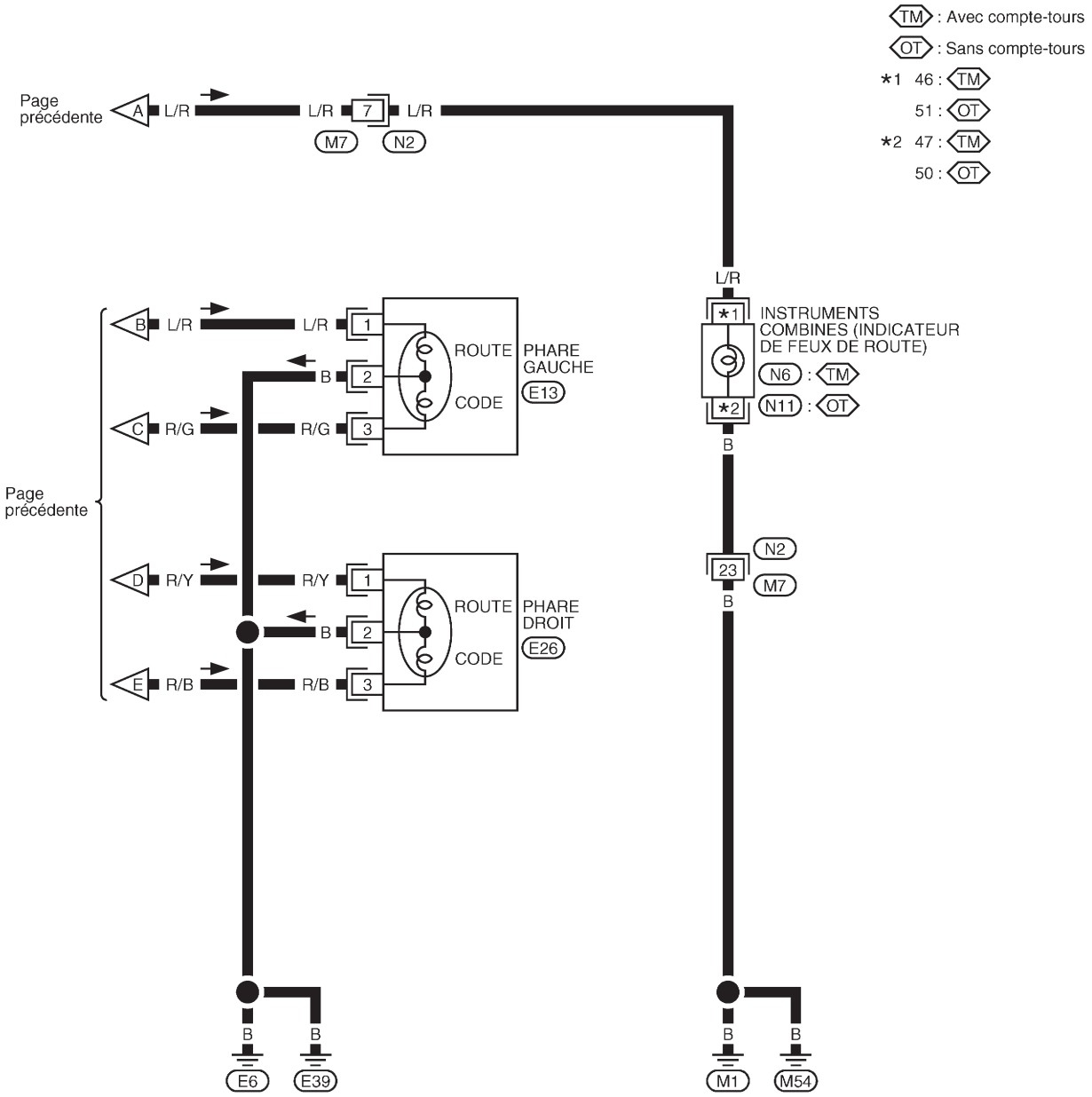

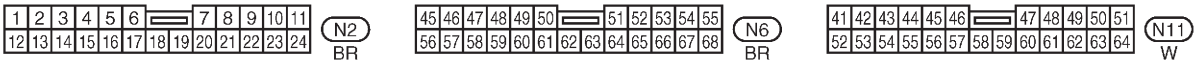

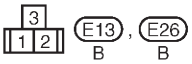

GEL240A

Simpo PDF Merge and Split Unregistered Version - http://www.simpopdf.com

Schéma de câblage — H/LAMP —/Conduite à droite

EL-H/LAMP-03

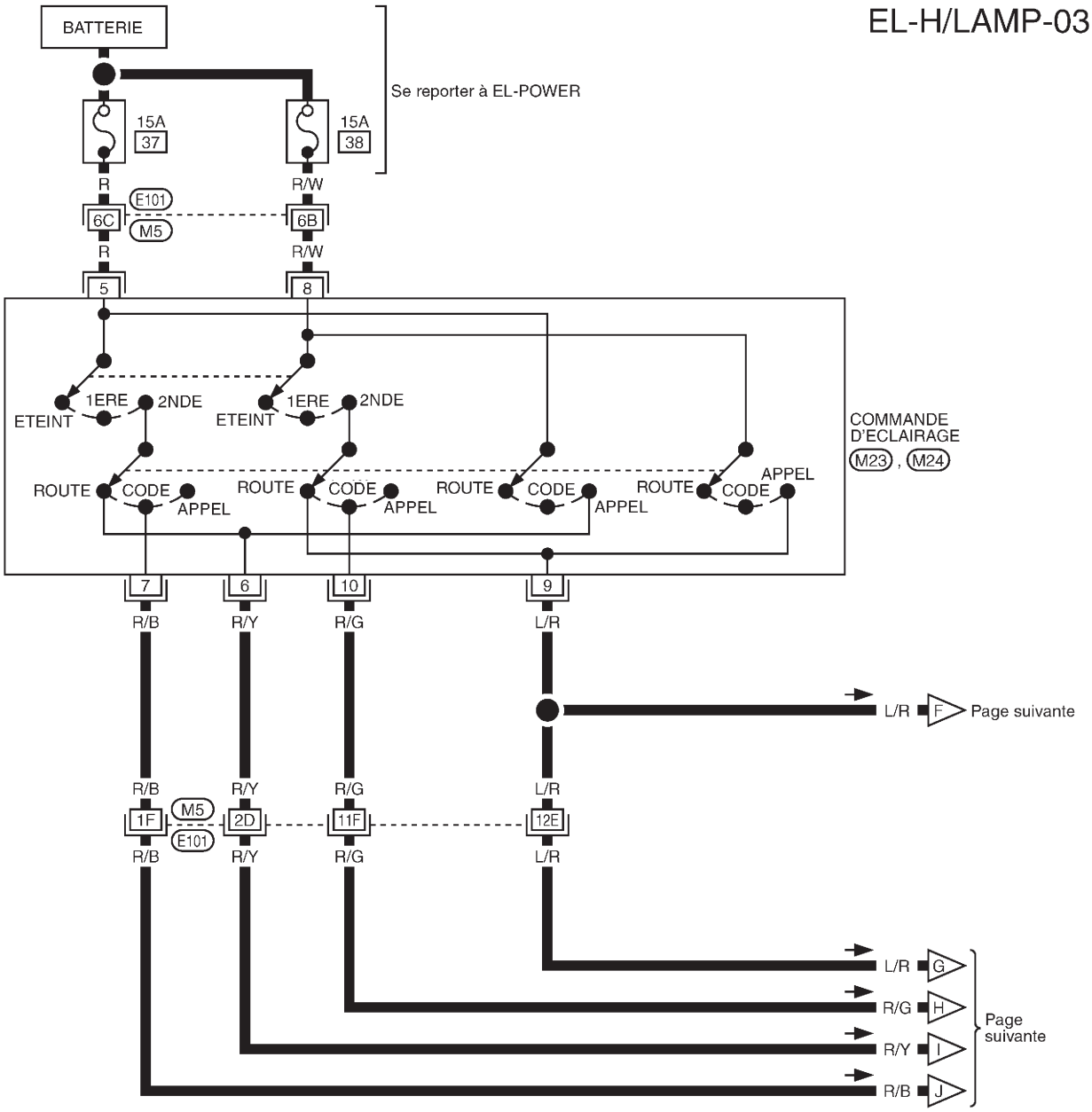

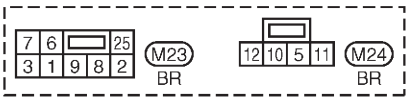

Consulter la dernière page dépliante.
M5 , E101

GEL369A

Simpo PDF Merge and Split Unregistered Version - http://www.simpopdf.com

Schéma de câblage — H/LAMP —/Conduite à droite (Suite)

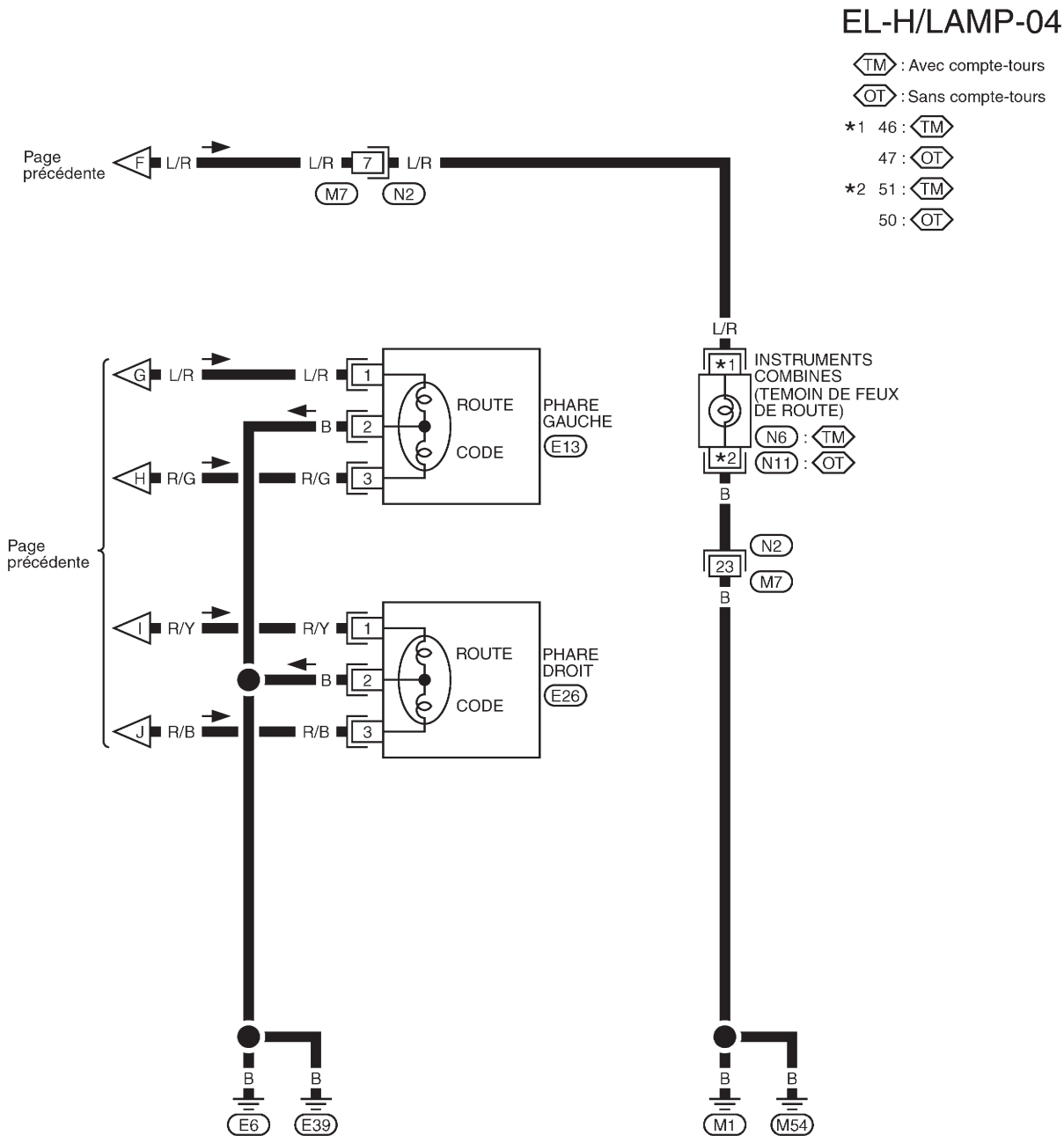

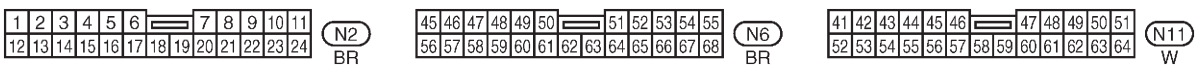

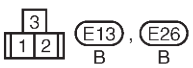

GEL370A

Simpo PDF Merge and Split Unregistered Version - http://www.simpopdf.com

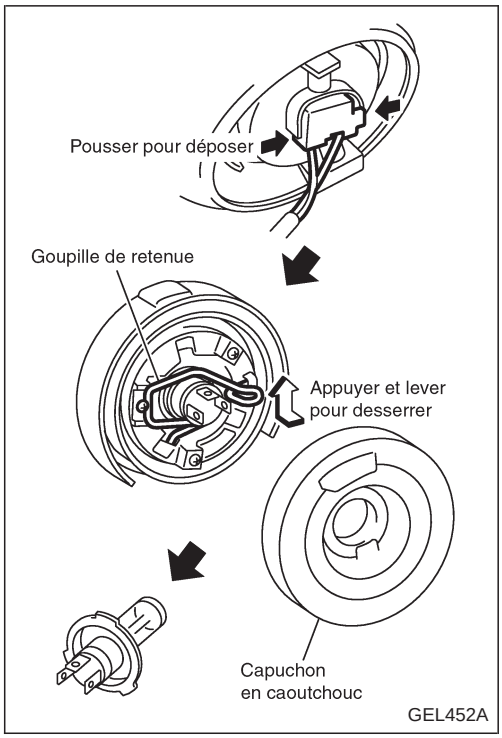

Remplacement des ampoules

Le phare est de type faisceau semi-étanche utilisant une ampoule halogène remplaçable. L'ampoule peut être remplacée depuis le compartiment moteur sans avoir à déposer le phare du véhicule.

- **Lors de la manipulation de la lampe halogène, ne toucher que le culot en plastique. Ne jamais toucher l'ampoule en verre.**

1. Débrancher le câble de batterie.
2. Débrancher le connecteur de faisceau à l'arrière de l'ampoule.
3. Enlever le capuchon en caoutchouc.
4. Poussez et tournez la goupille de retenue pour la desserrer.
5. Retirer l'ampoule du phare avec précaution. Ne pas secouer ou tourner l'ampoule pour l'enlever.
6. Reposer les pièces dans l'ordre inverse de la dépose.

PRECAUTION :

Ne pas laisser le réflecteur de phare sans ampoule pendant une période prolongée. La poussière, l'humidité, la fumée, etc. pénétrant dans le corps du phare peuvent affecter les performances du phare. L'ampoule de phare ne doit être déposée de l'optique que juste avant le remplacement de l'ampoule.

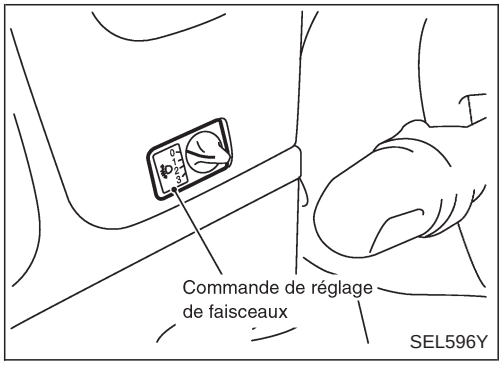

Réglage des faisceaux

Lors du réglage des faisceaux, utiliser une machine de réglage, un écran de protection de réglage ou un appareil de contrôle des projecteurs. Le dispositif de réglage de projecteurs doit être en bon état, calibré et opérant tel que décrit dans le manuel de fonctionnement.

En l'absence de dispositif de réglage, le réglage des faisceaux doit être effectué comme indiqué ci-dessous :

Pour plus de détails, consulter la réglementation du pays concerné.

a. Tous les pneumatiques doivent être correctement gonflés.

b. Amener le véhicule ainsi que l'appareil d'essai sur une seule et même surface parfaitement plane.

c. S'assurer que le véhicule est à vide (liquide de refroidissement, huile moteur au bon niveau et réservoir de carburant plein) à l'exception du conducteur (ou poids équivalent mis à la place du conducteur).

Simpo PDF Merge and Split Unregistered Version - http://www.simpopdf.com

Réglage des faisceaux (Suite)

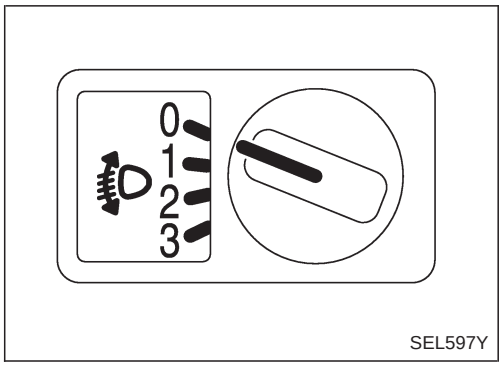

SEL597Y

PRECAUTION :

Vérifier que le commutateur de réglage des faisceaux est en position ‘‘0’’ lors du réglage des faisceaux sur les véhicules équipés d’un dispositif de contrôle de réglage des faisceaux.

Simpo PDF Merge and Split Unregistered Version - http://www.simpopdf.com

Projecteur de type multi-faisceaux

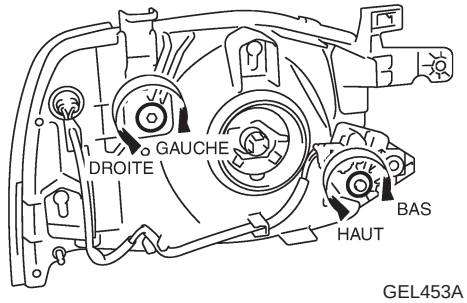

GEL453A

Projecteur non de type multi-faisceaux

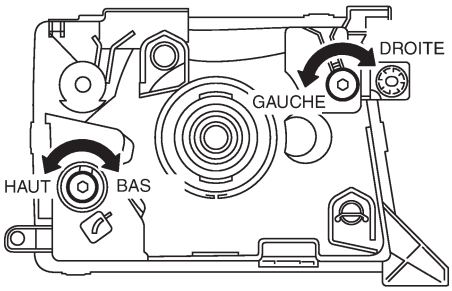

GEL454A

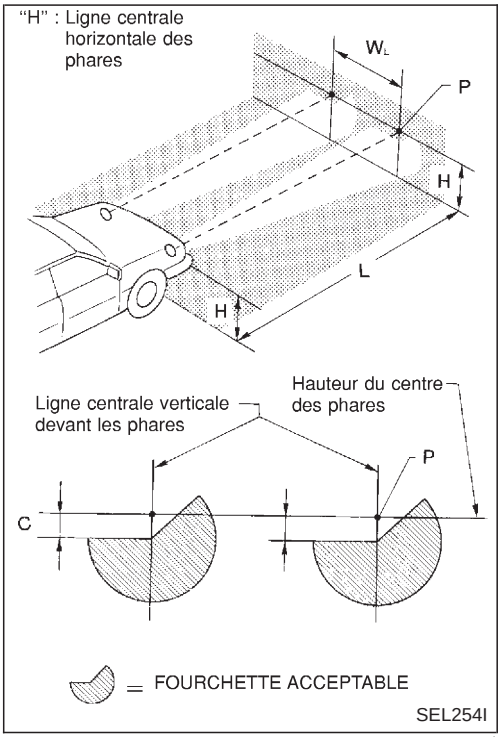

SEL254I

Feu de code

1. Tourner les feux de codes sur ON.
2. Utiliser des vis de réglage pour effectuer le réglage des faisceaux.

- **Commencer par serrer la vis de réglage à fond puis régler en desserrant progressivement la vis.**

- **Régler les phares de manière à ce que l'axe principal du faisceau soit parallèle à la ligne centrale de la carrosserie et aligné sur le point P de l'illustration.**
- **La figure à gauche montre le profil de réglage des faisceaux pour une conduite sur la partie droite de la route ; pour une conduite sur la partie gauche de la route, le profil de réglage des faisceaux est inversé.**
- **Les lignes pointillées dirigées vers le point P de l'illustration représentent le centre de chaque phare.**

"H" : Ligne centrale horizontale des phares
"W_L" : Distance entre les axes des phares
"L" : 5 000 mm
"C" : 65 mm

Simpo PDF Merge and Split Unregistered Version - http://www.simpopdf.com

Schéma de câblage — DTRL —

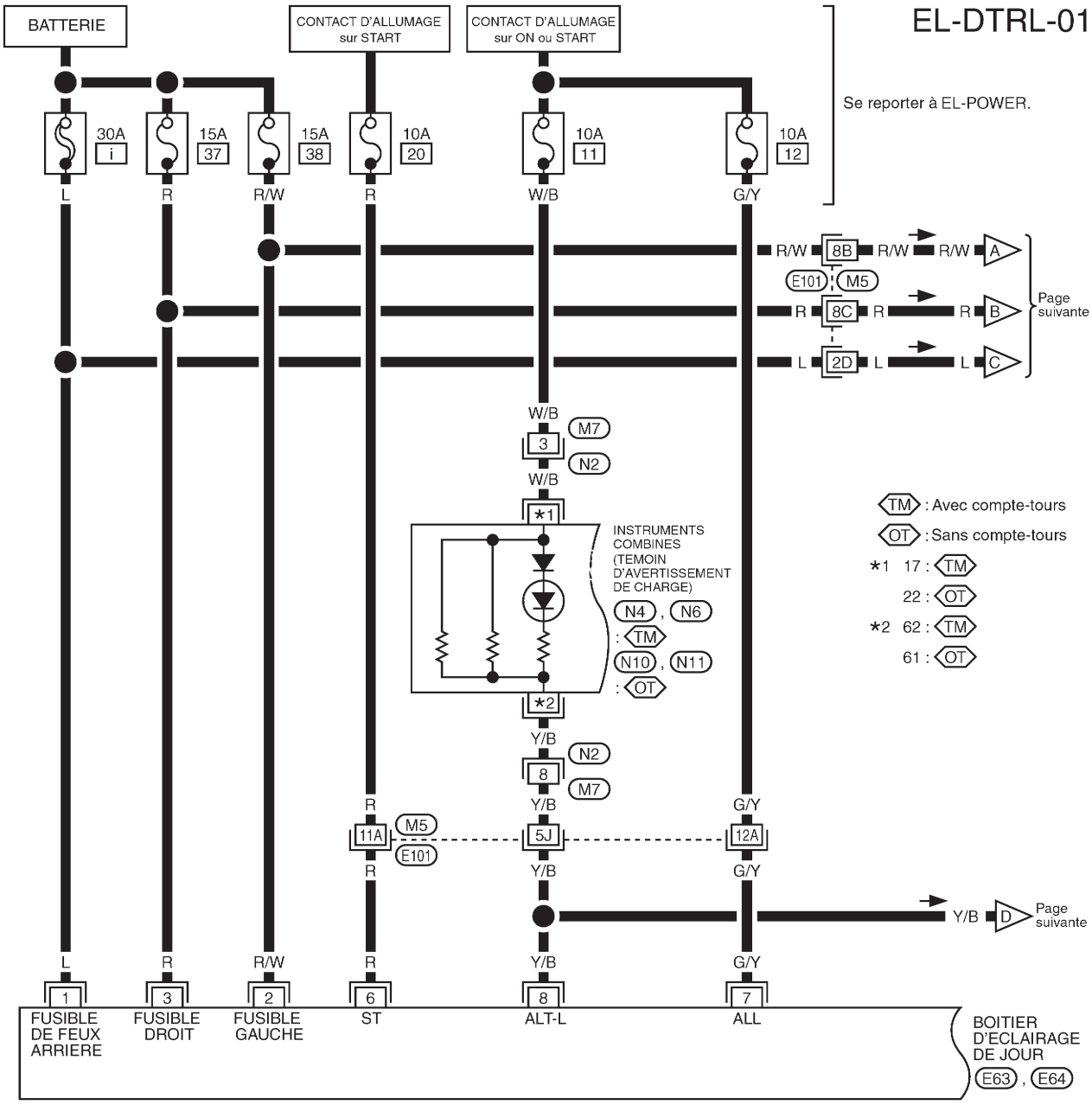

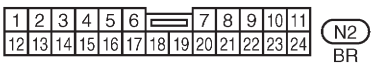

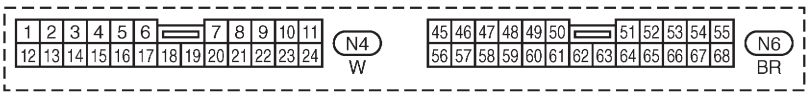

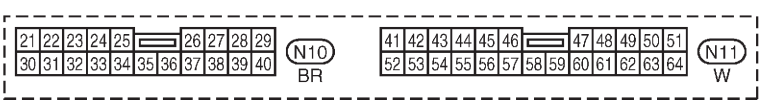

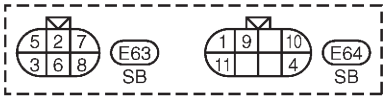

Consulter la dernière page dépliante.
M5 , E101

GEL371A

Simpo PDF Merge and Split Unregistered Version - http://www.simpopdf.com

Schéma de câblage — DTRL — (Suite)

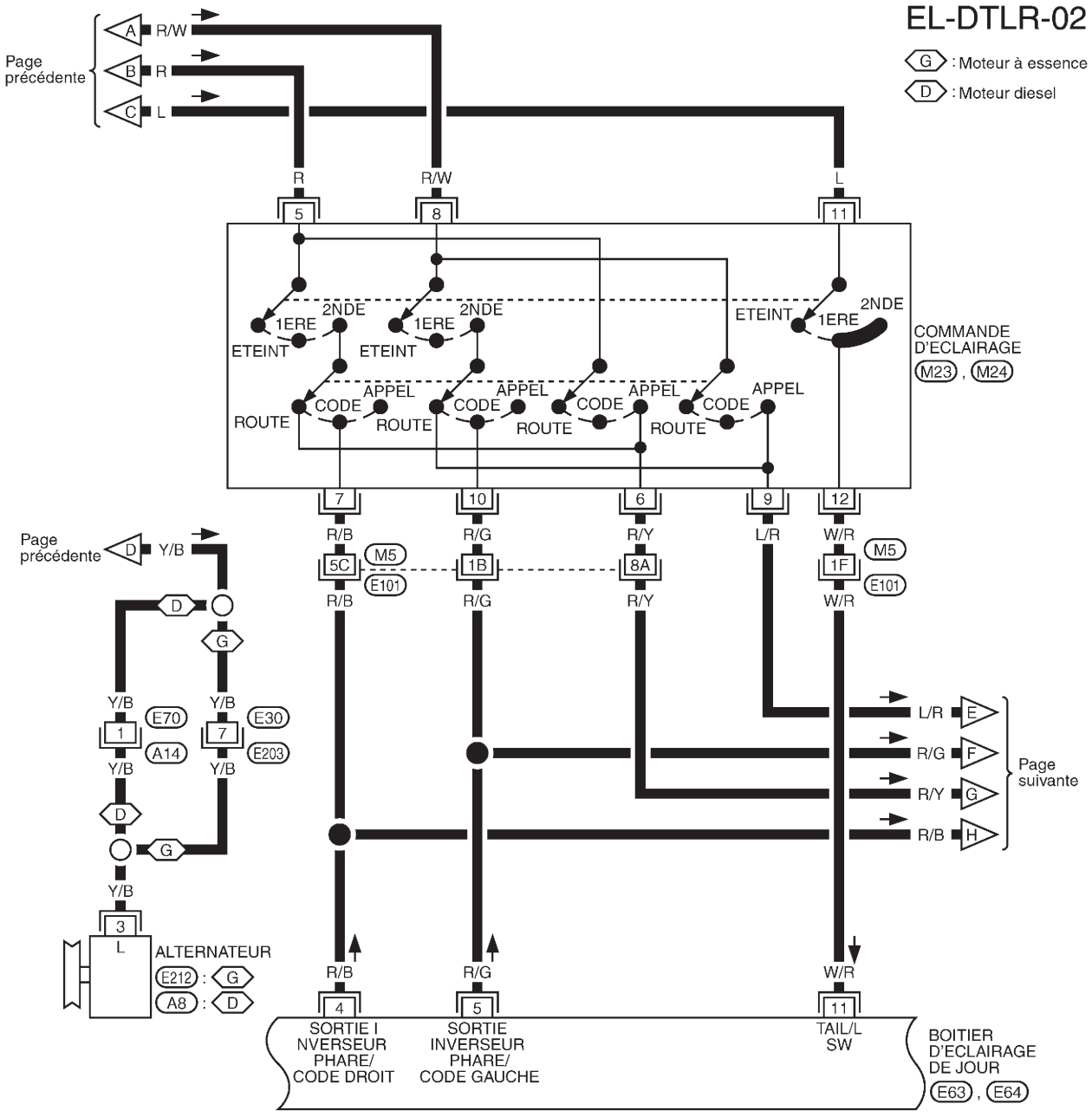

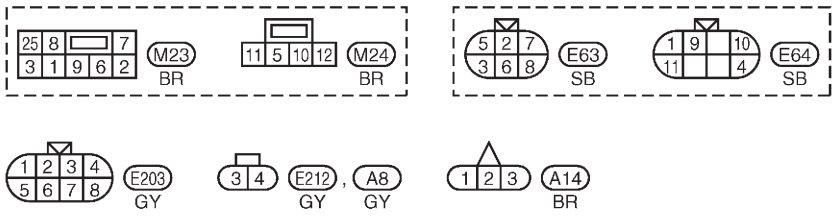

Consulter la dernière page dépliante.
M5 , E101

GEL372A

Simpo PDF Merge and Split Unregistered Version - http://www.simpopdf.com

Schéma de câblage — DTRL — (Suite)

EL-DTRL-03

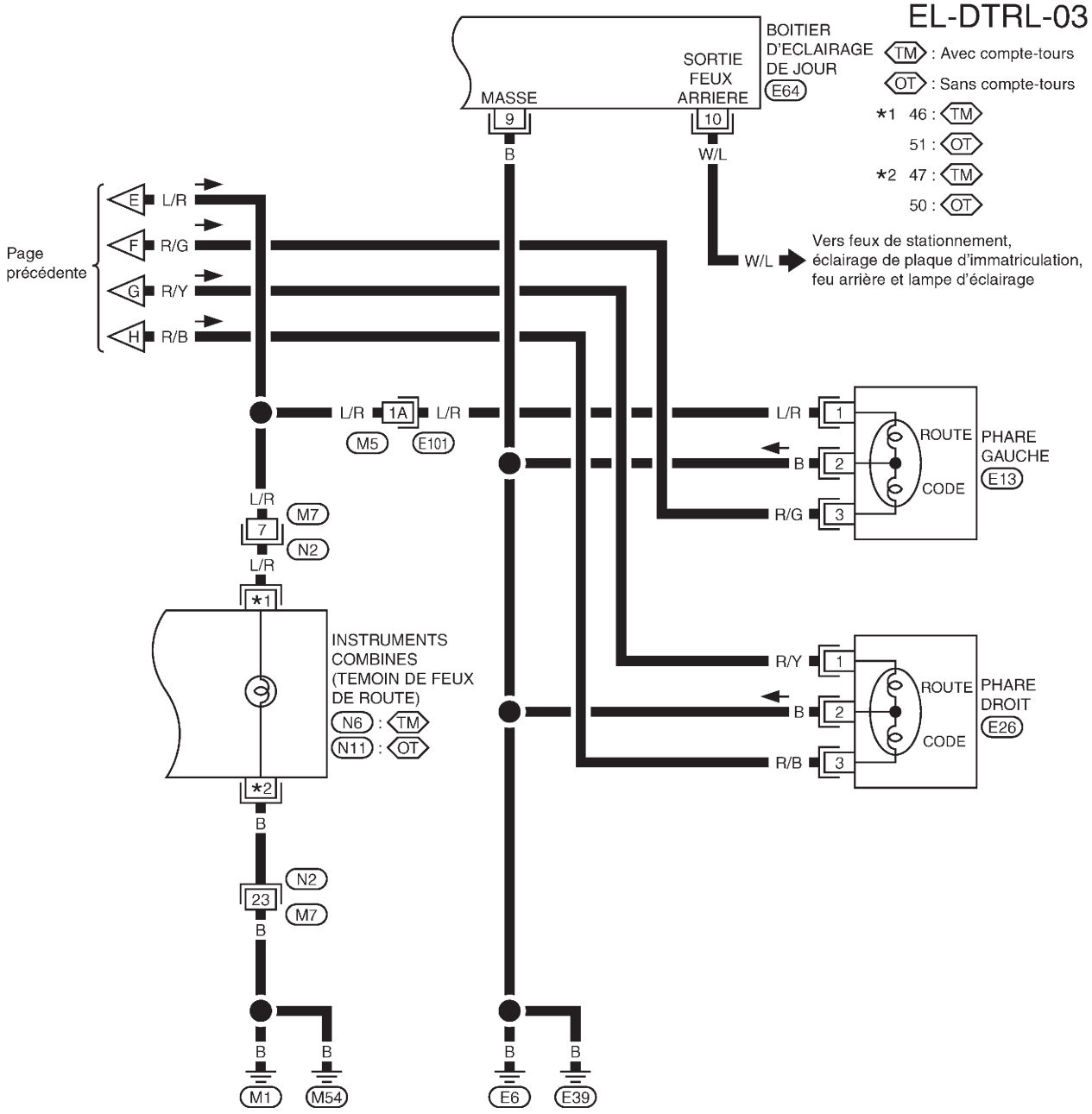

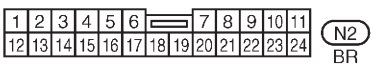

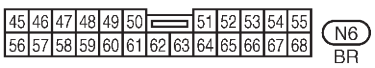

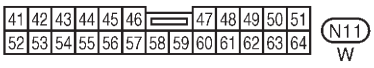

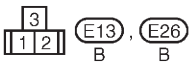

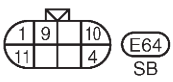

Consulter la dernière page dépliante.
M5 , E101

GEL373A

Simpo PDF Merge and Split Unregistered Version - http://www.simpopdf.com

Remplacement des ampoules

Pour un changement d’ampoule, se référer à ‘‘AMPOULE — Type conventionnel —’’ EL-3027.

Réglage des faisceaux

Pour le réglage des faisceaux, se référer à ‘‘PHARES— Type conventionnel —’’ EL-3027.

Simpo PDF Merge and Split Unregistered Version - http://www.simpopdf.com

Schéma de câblage — DIMDIP —

EL-DIMDIP-01

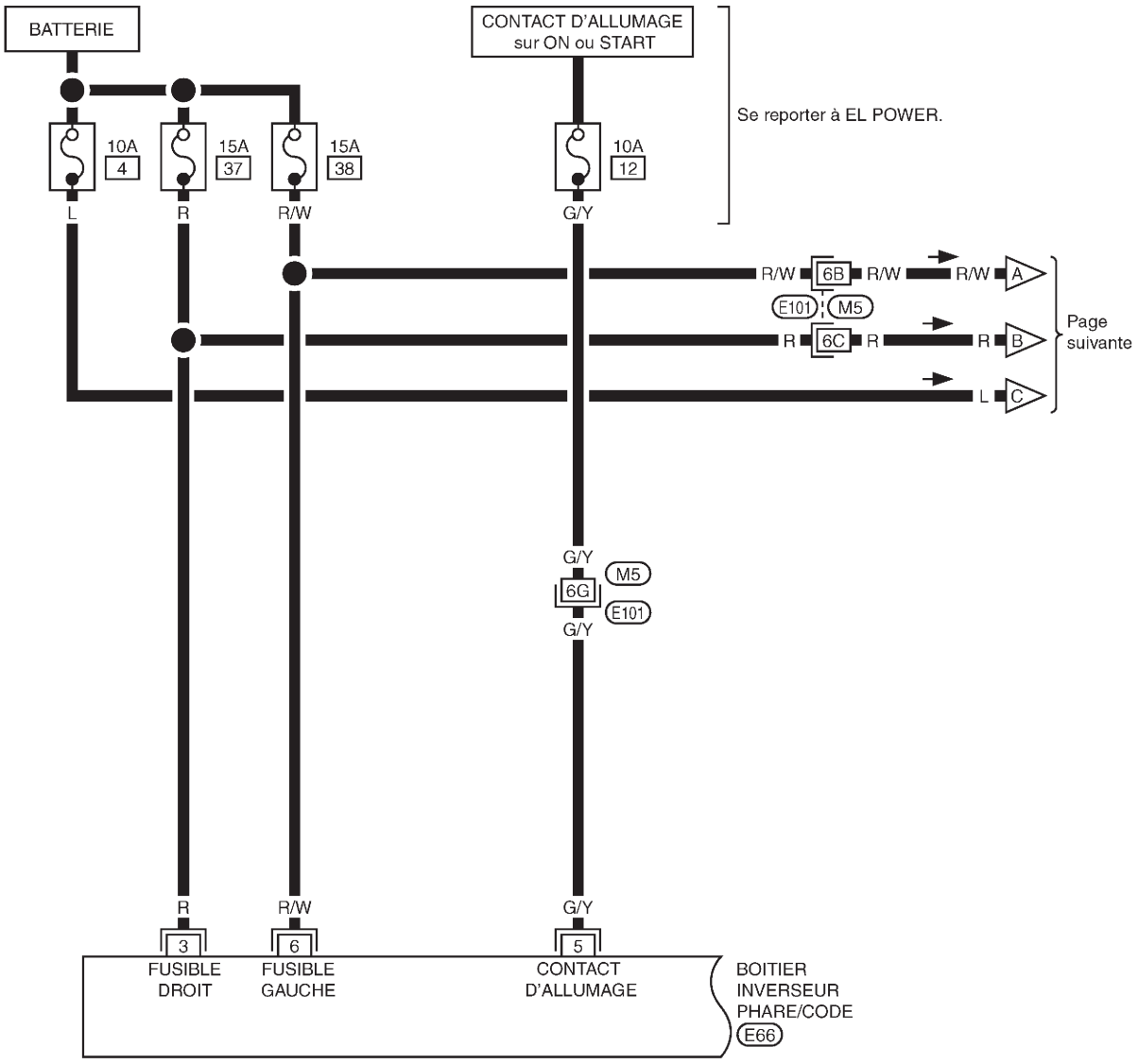

8 7 6
2 5 3 E66
GY

Consulter la dernière page dépliante.
M5 , E101

GEL374A

Simpo PDF Merge and Split Unregistered Version - http://www.simpopdf.com

Schéma de câblage — DIMDIP — (Suite)

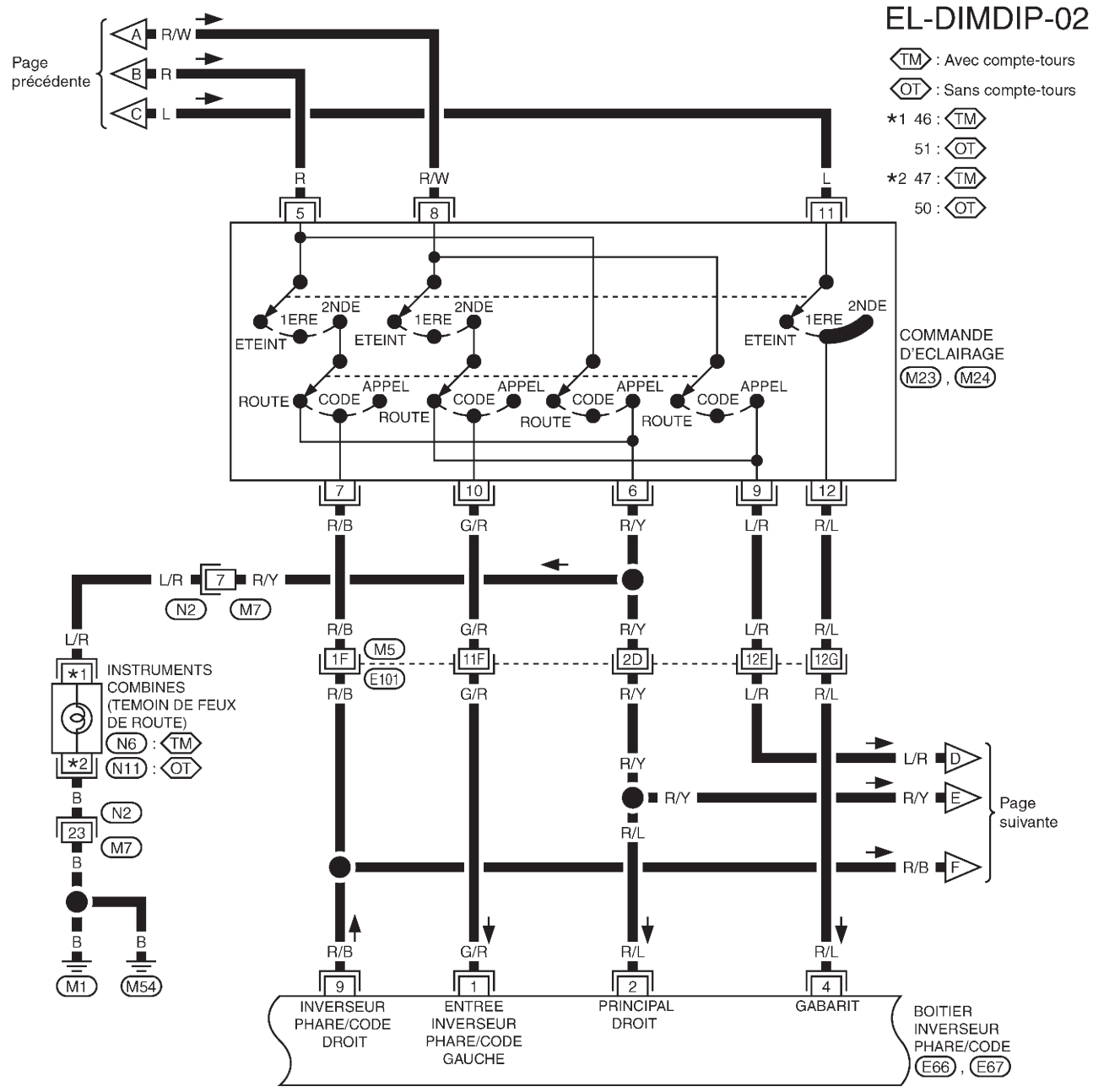



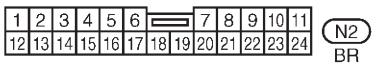

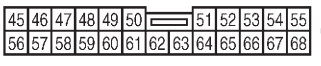



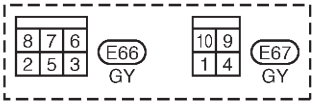

Consulter la dernière page dépliante.
M5 , E101

GEL375A

Simpo PDF Merge and Split Unregistered Version - http://www.simpopdf.com

Schéma de câblage — DIMDIP — (Suite)

EL-DIMDIP-03

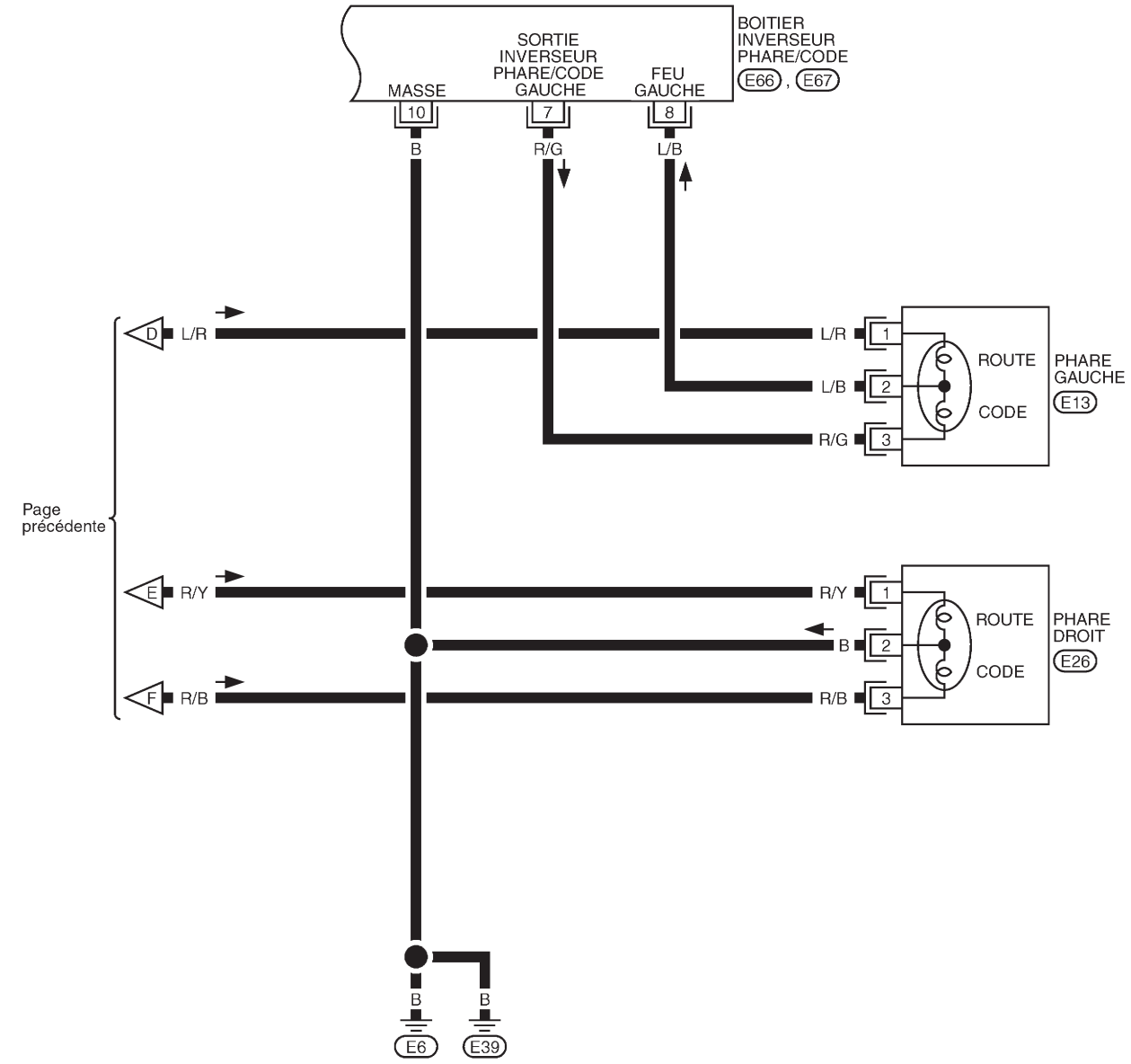

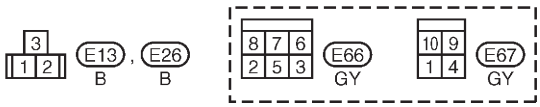

GEL376A

Simpo PDF Merge and Split Unregistered Version - http://www.simpopdf.com

Remplacement des ampoules

Pour un changement d'ampoule, se référer à EL-3027.

Réglage des faisceaux

Pour un changement d'ampoule, se référer EL-3027.

Simpo PDF Merge and Split Unregistered Version - http://www.simpopdf.com

Schéma de câblage — H/AIM —

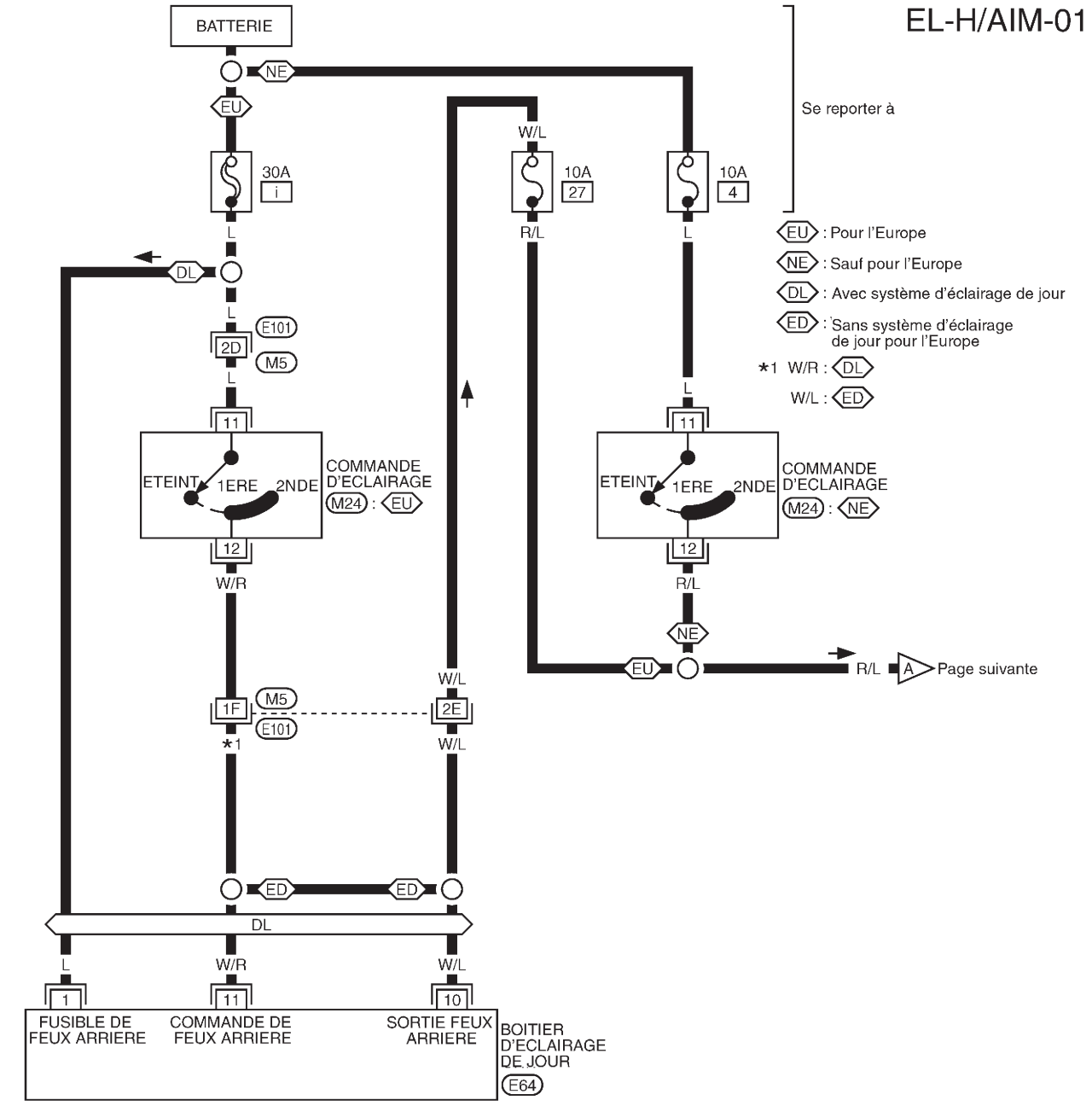

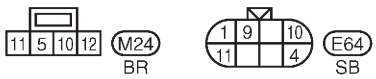

Consulter la dernière page dépliante.
M5, E101

GEL377A

Simpo PDF Merge and Split Unregistered Version - http://www.simpopdf.com

Schéma de câblage — H/AIM — (Suite)

EL-H/AIM-02

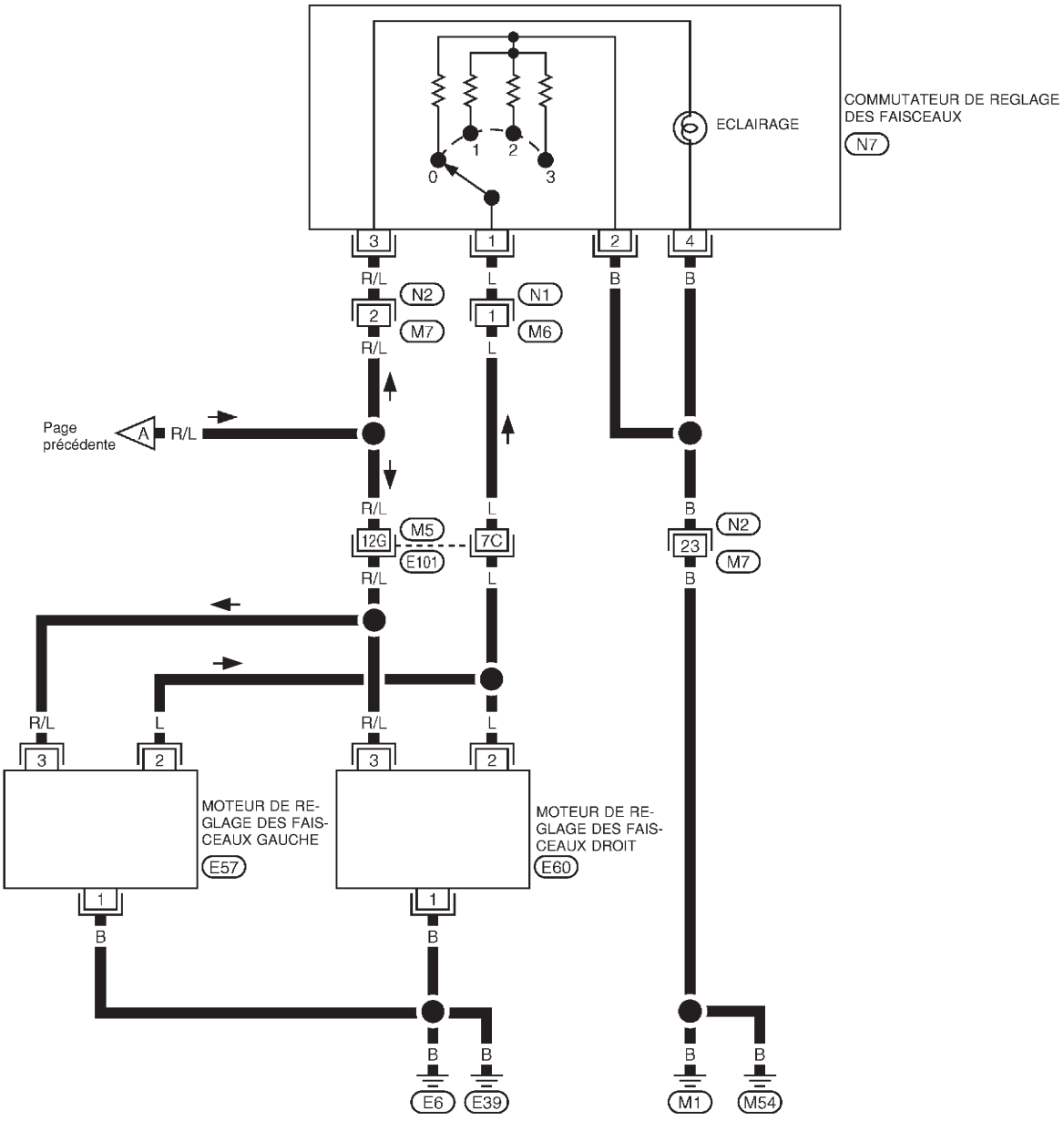

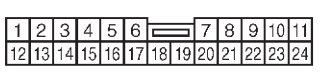

N1 (W), N2 (BR)



N7 (W)



E57, E60

Consulter la dernière page dépliante.
M5, E101

GEL378A

Simpo PDF Merge and Split Unregistered Version - http://www.simpopdf.com

Schéma de câblage — TAIL/L —/Sauf conduite à gauche pour l'Europe

EL-TAIL/L-01

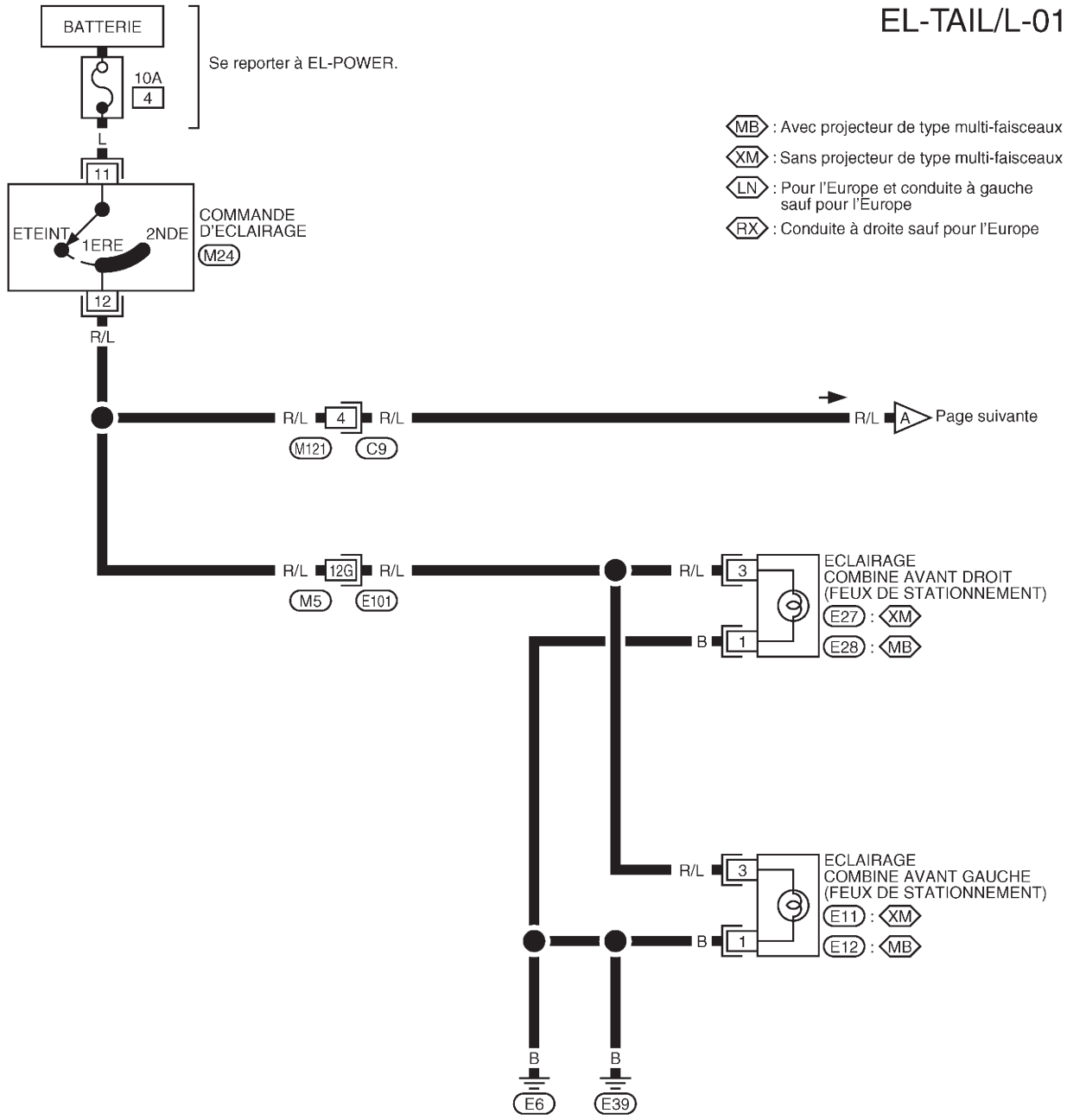

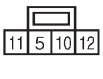





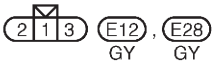

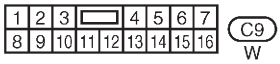

Consulter la dernière page dépliante.
M5 , E101

GEL242A

Simpo PDF Merge and Split Unregistered Version - http://www.simpopdf.com

Schéma de câblage — TAIL/L —/Sauf conduite à gauche pour l'Europe (Suite)

EL-TAIL/L-02

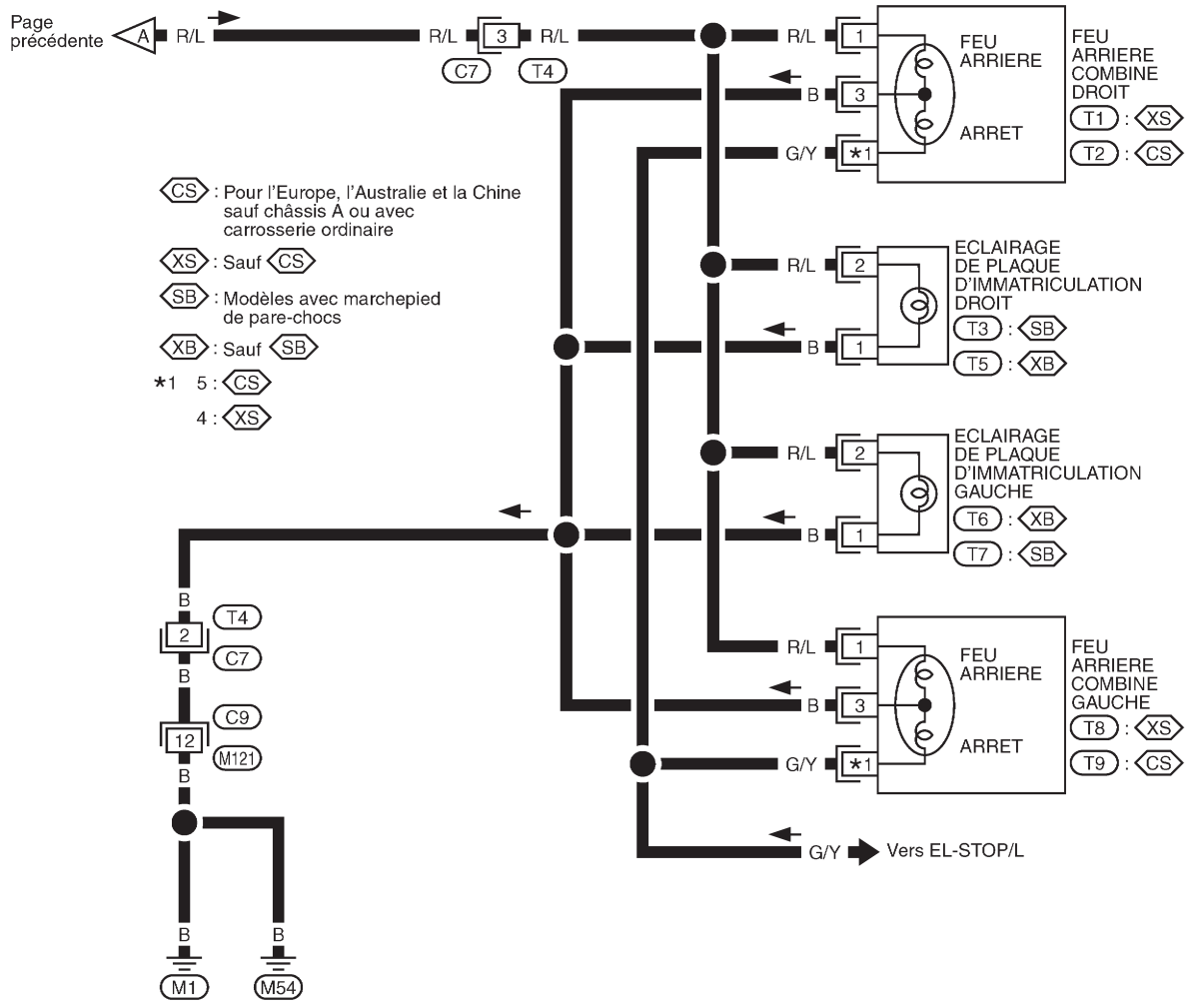

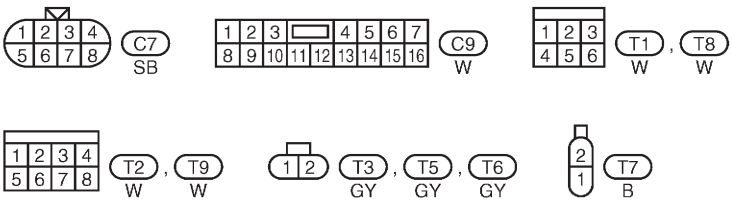

GEL460A

Simpo PDF Merge and Split Unregistered Version - http://www.simpopdf.com

Schéma de câblage — TAIL/L —/Conduite à gauche pour l'Europe

EL-TAIL/L-03

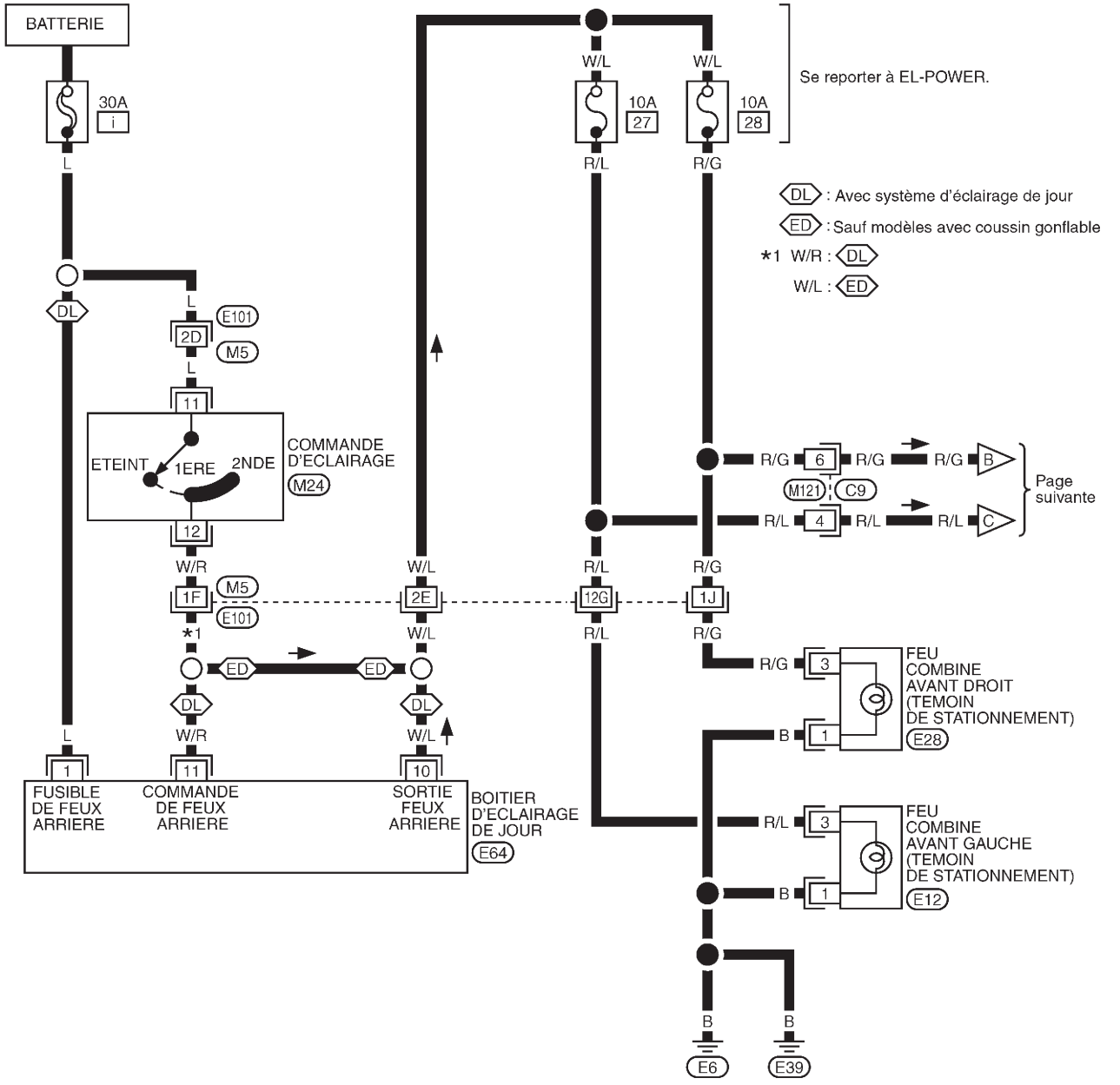

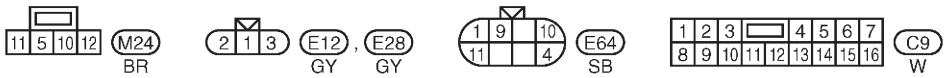

Consulter la dernière page dépliante.
M5 , E101

GEL379A

Simpo PDF Merge and Split Unregistered Version - http://www.simpopdf.com

Schéma de câblage — TAIL/L —/Conduite à gauche pour l'Europe (Suite)

EL-TAIL/L-04

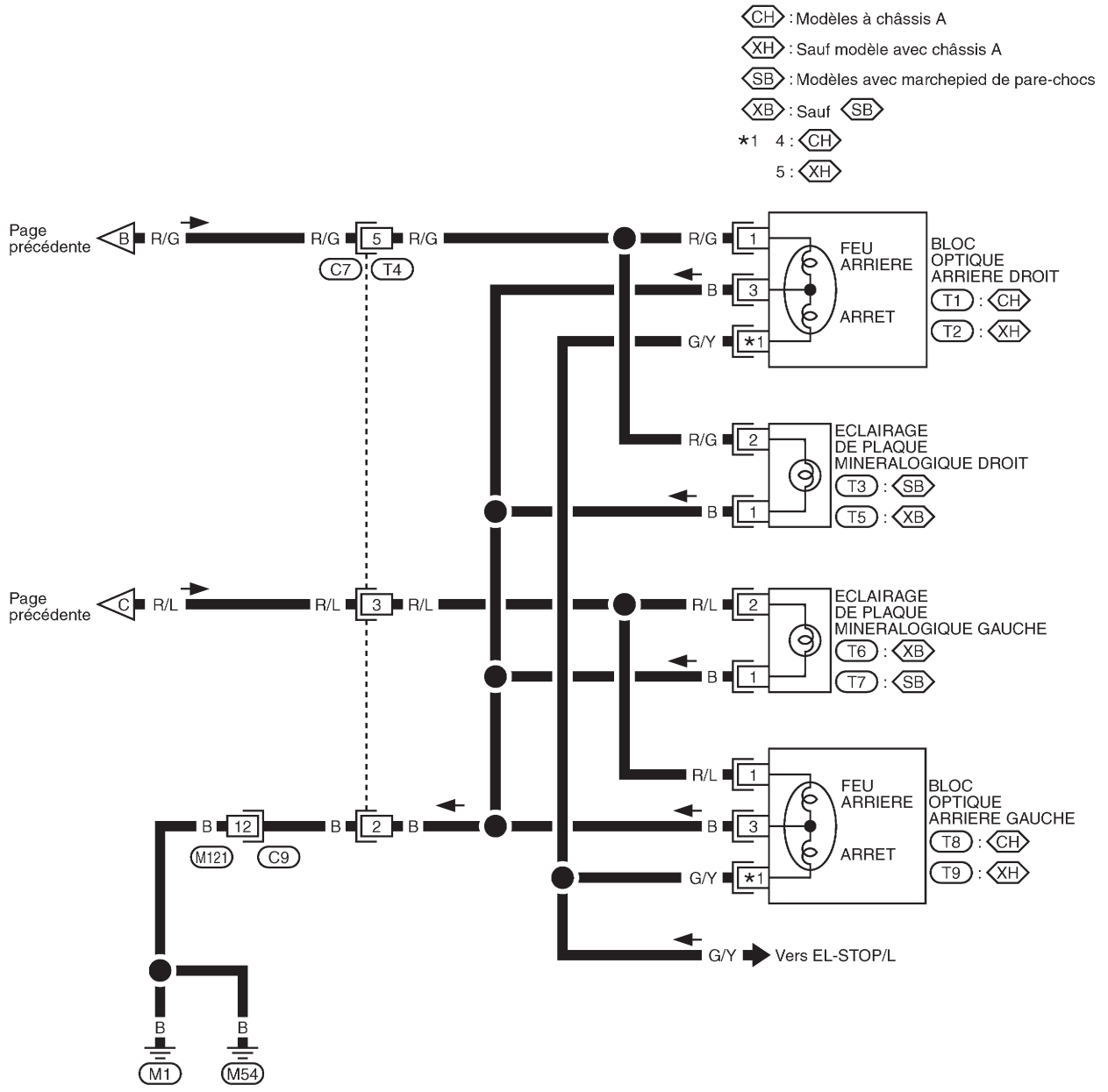

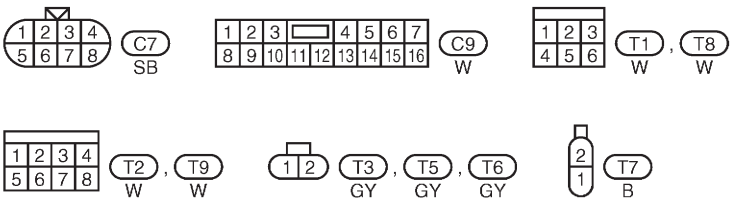

GEL380A

Simpo PDF Merge and Split Unregistered Version - http://www.simpopdf.com

Schéma de câblage — STOP/L —

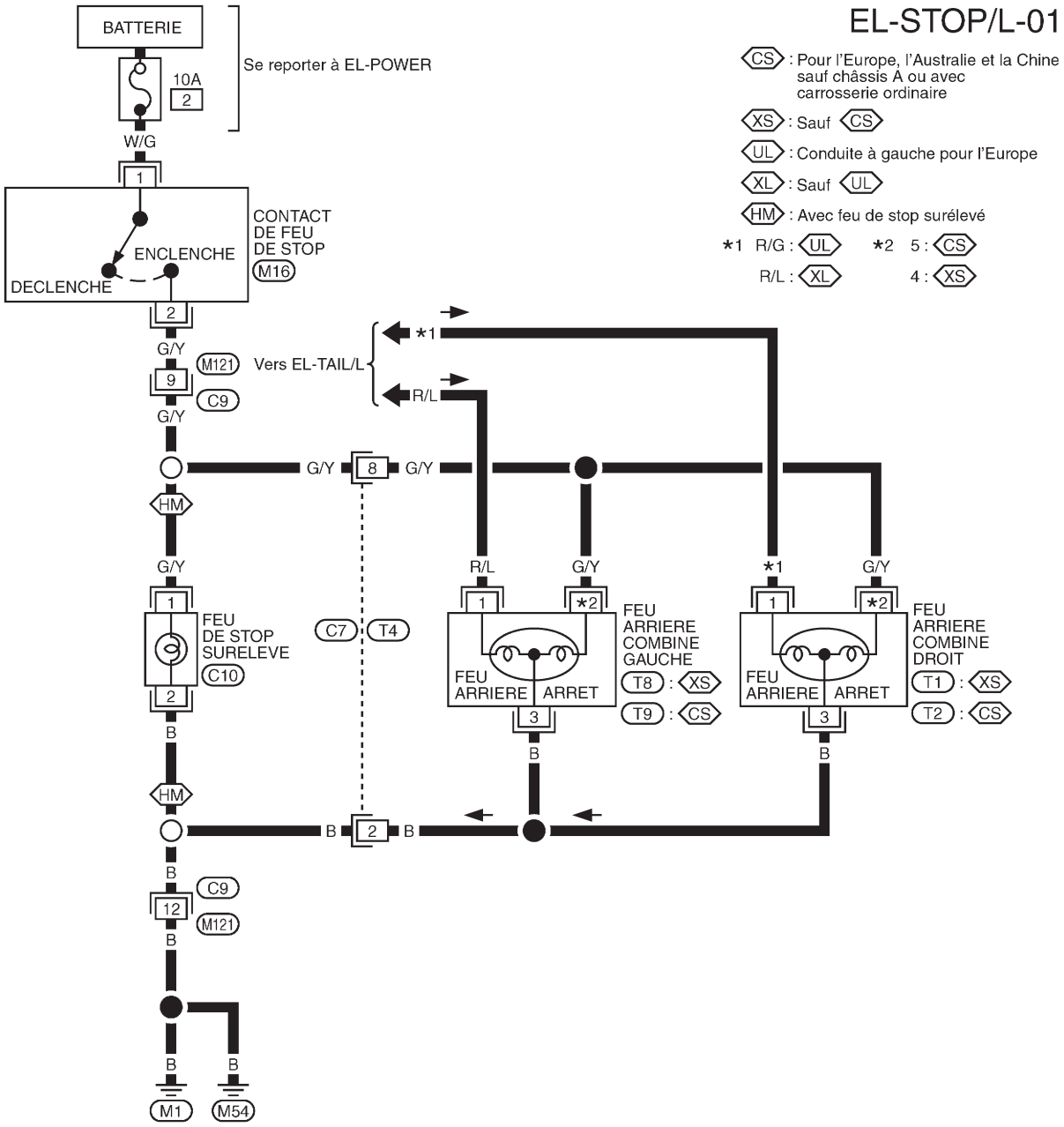

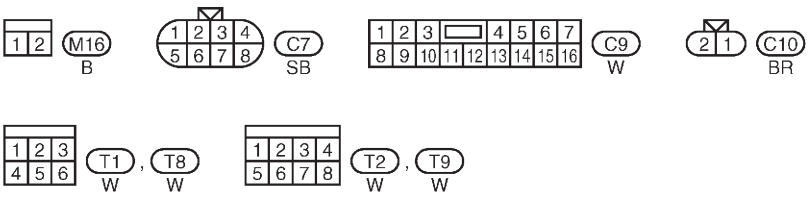

GEL461A

Simpo PDF Merge and Split Unregistered Version - http://www.simpopdf.com

Schéma de câblage — BACK/L —/Modèles avec T/M

EL-BACK/L-01

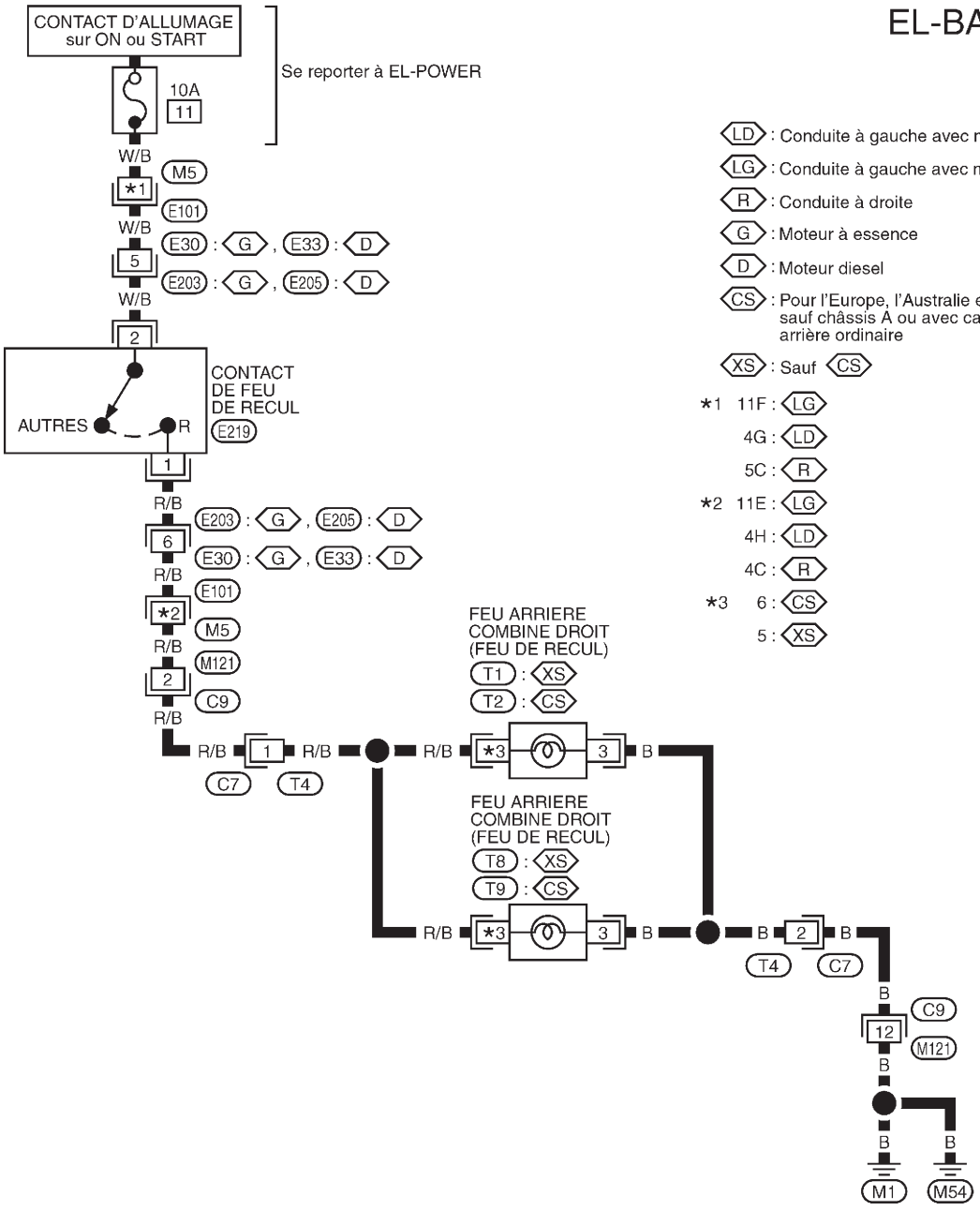

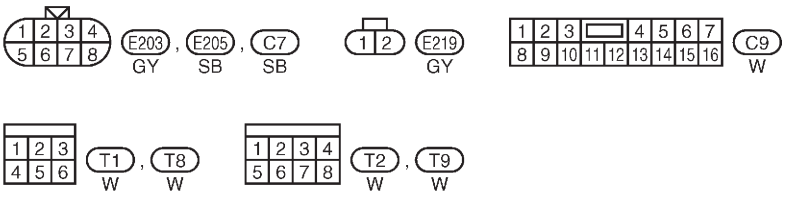

Consulter la dernière page dépliante.
M5 , E101

GEL462A

Simpo PDF Merge and Split Unregistered Version - http://www.simpopdf.com

Schéma de câblage — R/FOG —/Conduite à gauche

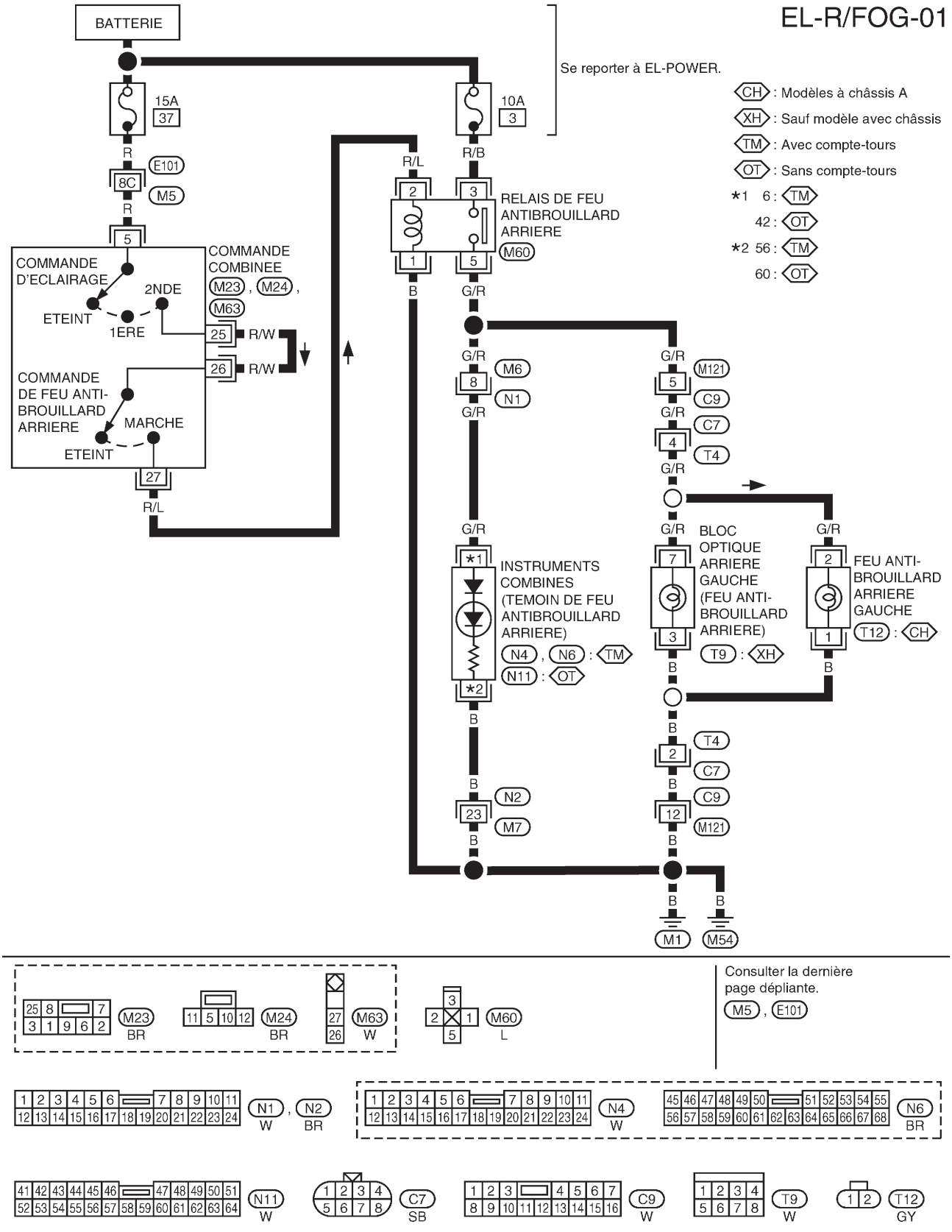

GEL383A

Simpo PDF Merge and Split Unregistered Version - http://www.simpopdf.com

Schéma de câblage — R/FOG —/Conduite à droite

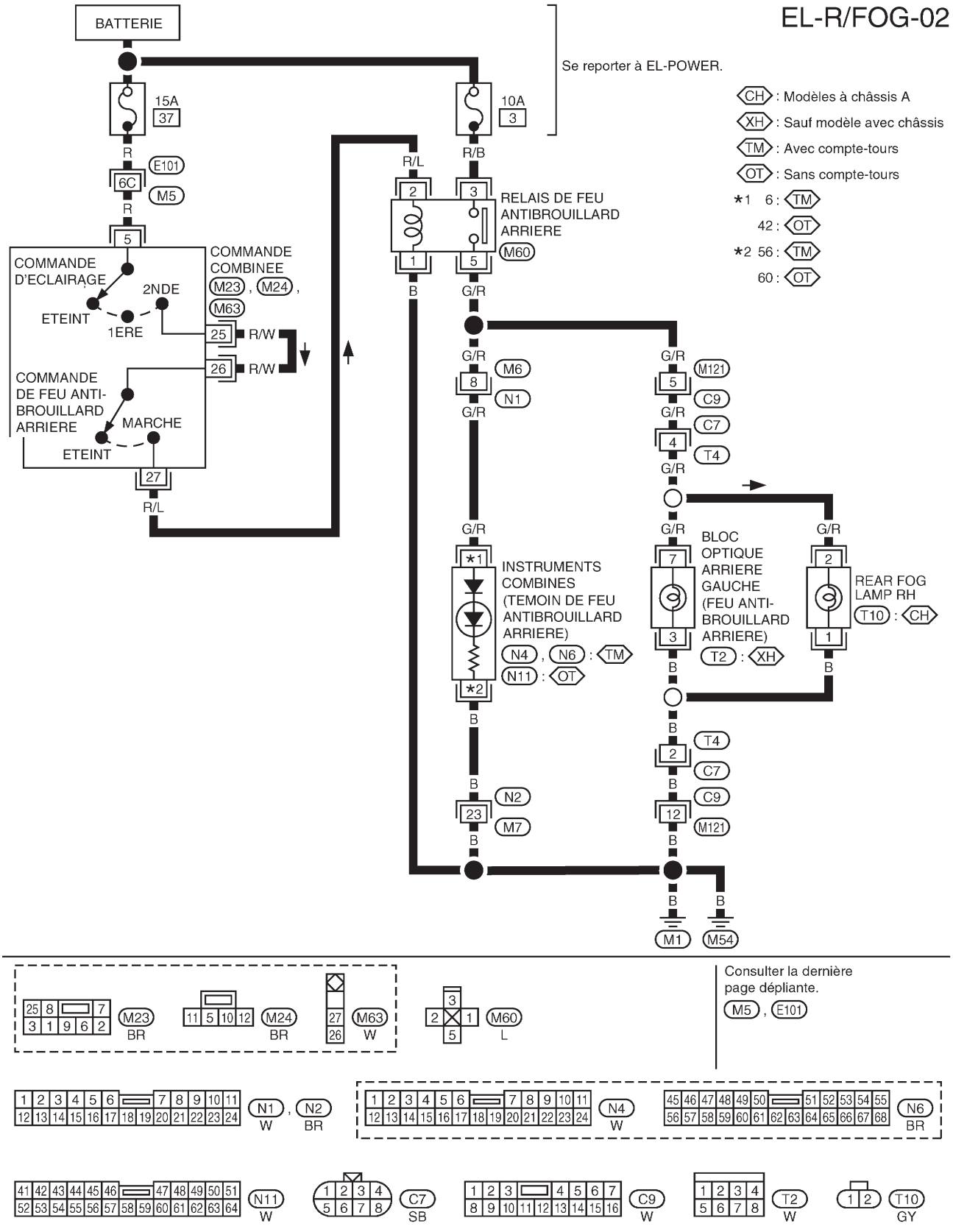

GEL384A

Simpo PDF Merge and Split Unregistered Version - http://www.simpopdf.com

Schéma de câblage — TURN —

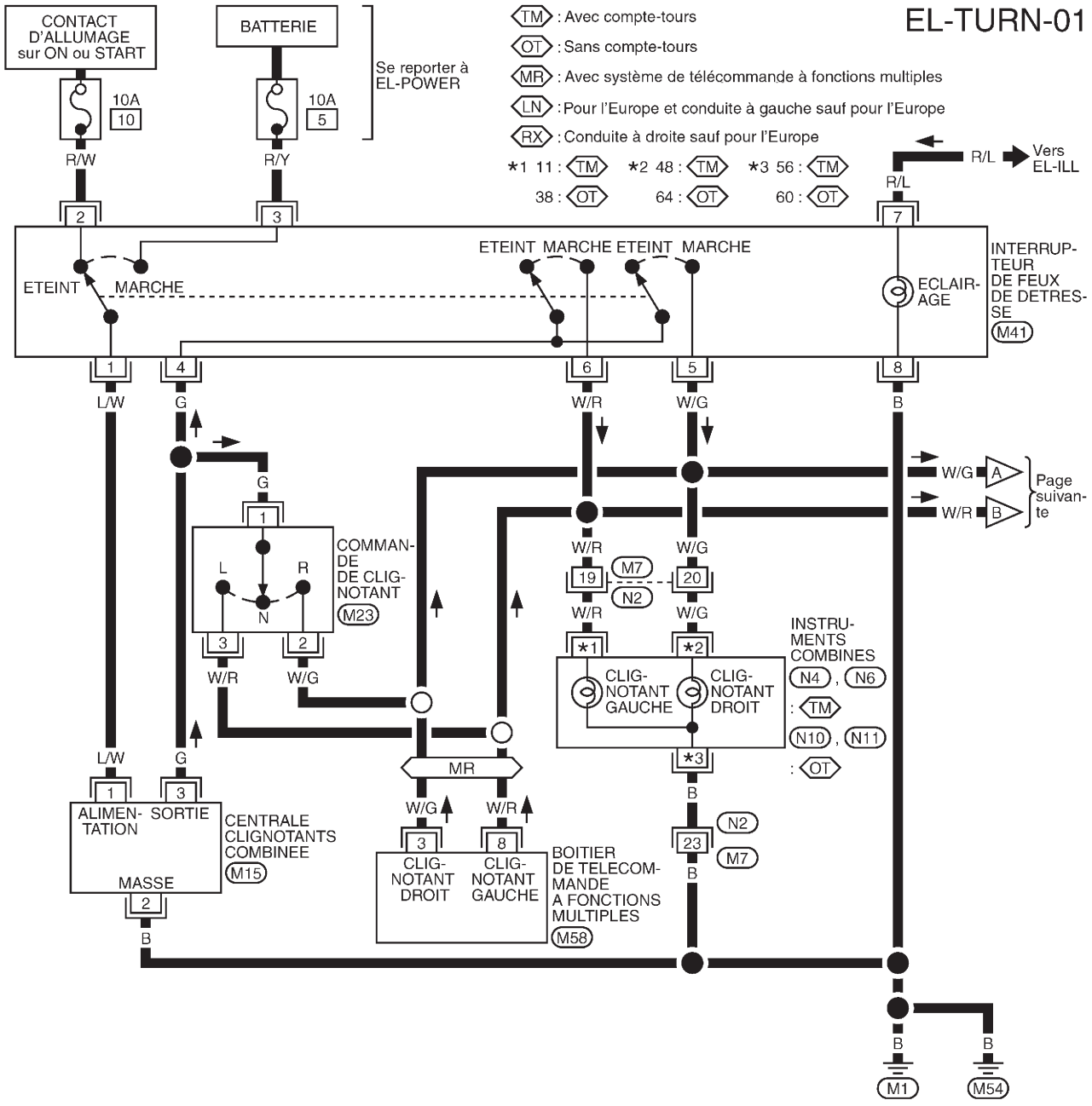

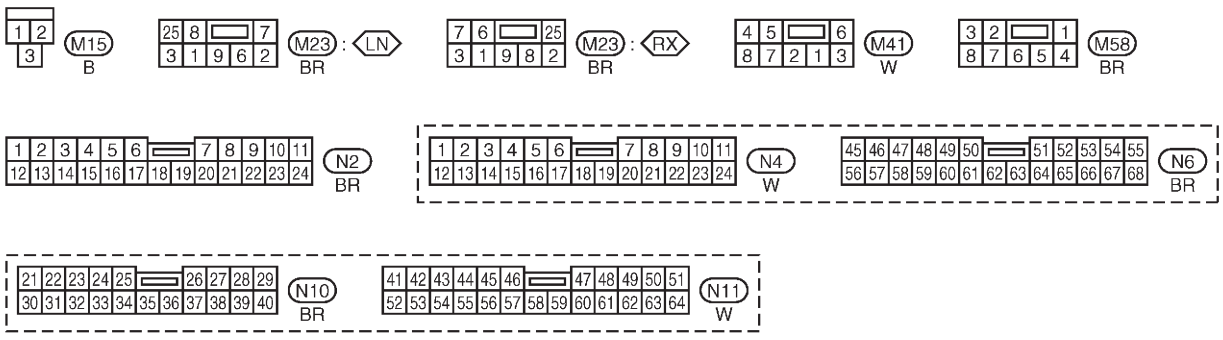

GEL385A

Simpo PDF Merge and Split Unregistered Version - http://www.simpopdf.com

Schéma de câblage — TURN — (Suite)

EL-TURN-02

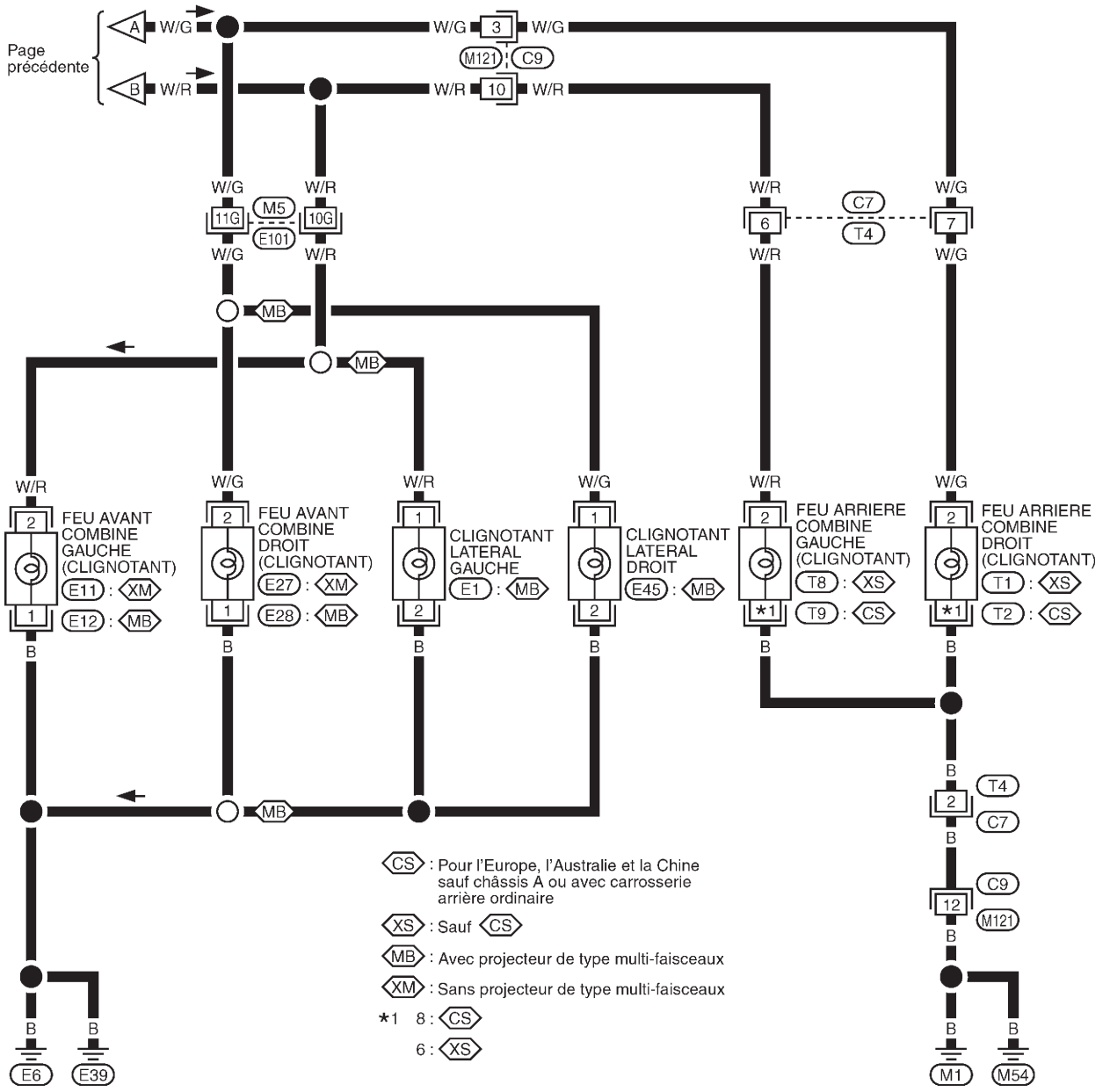

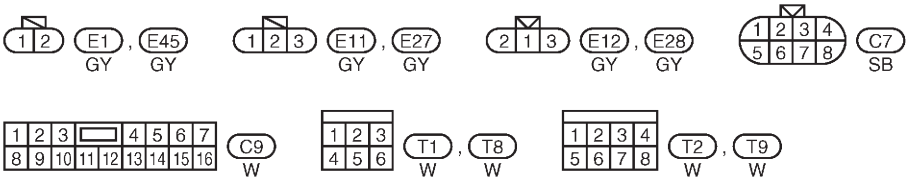

Consulter la dernière page dépliante.

M5 , E101

GEL463A

Simpo PDF Merge and Split Unregistered Version - http://www.simpopdf.com

Diagnostics des défauts

Symptôme	Cause possible	Ordre de réparation
Les clignotants et les feux de détresse ne fonctionnent pas.	1. Interrupteur de feux de détresse 2. Centrale de clignotants combinée 3. Circuit de centrale de clignotants combinée ouvert	1. Vérifier l'interrupteur de feux de détresse. 2. Se reporter à la vérification de la centrale de clignotants combinés. 3. Vérifier le câblage jusqu'au boîtier de clignotants combinés afin de détecter un circuit ouvert.
Les clignotants ne fonctionnent pas, mais les feux de détresse fonctionnent.	1. Fusible de 10A 2. Interrupteur de feux de détresse 3. Commande de clignotant 4. Circuit de la commande de clignotant ouvert	1. Vérifier le fusible de 10A (n° 10, situé dans le boîtier à fusibles). Mettre le contact d'allumage en position ON et vérifier que la tension positive de la batterie est présente à la borne ② R/W de l'interrupteur de feux de détresse. 2. Vérifier l'interrupteur de feux de détresse. 3. Vérifier la commande de clignotant. 4. Vérifier le câble G entre la borne du boîtier de clignotants combinés et la borne de la commande de clignotant afin de détecter un circuit ouvert.
Les clignotants ne fonctionnent pas, mais les feux de détresse fonctionnent.	1. Fusible de 10A 2. Interrupteur de feux de détresse 3. Circuit de l'interrupteur de feux de détresse ouvert	1. Vérifier le fusible de 10A (n° 5, situé dans le boîtier à fusibles). Vérifier que la tension positive de la batterie est présente au niveau de la borne ③ (R/Y) de l'interrupteur de feux de détresse. 2. Vérifier l'interrupteur de feux de détresse. 3. Vérifier le câble G entre la borne du boîtier de clignotants combinés et la borne de l'interrupteur de feux de détresse afin de détecter un circuit ouvert.
Le clignotant avant gauche ou droit ne fonctionne pas.	1. Ampoule 2. Masses E6 et E39	1. Vérifier l'ampoule. 2. Vérifier les masses E6 et E39
Le clignotant arrière gauche ou droit ne fonctionne pas.	1. Ampoule 2. Masses M1 et M54	1. Vérifier l'ampoule. 2. Vérifier les masses M1 et M54.
Les clignotants gauche et droit ne fonctionnent pas.	1. Masse	1. Vérifier les masses M1 et M54.
Le clignotant gauche ou droit ne fonctionne pas.	1. Ampoule	1. Vérifier l'ampoule des instruments combinés.

Simpo PDF Merge and Split Unregistered Version - http://www.simpopdf.com

Schéma de câblage — ILL —/Conduite à gauche

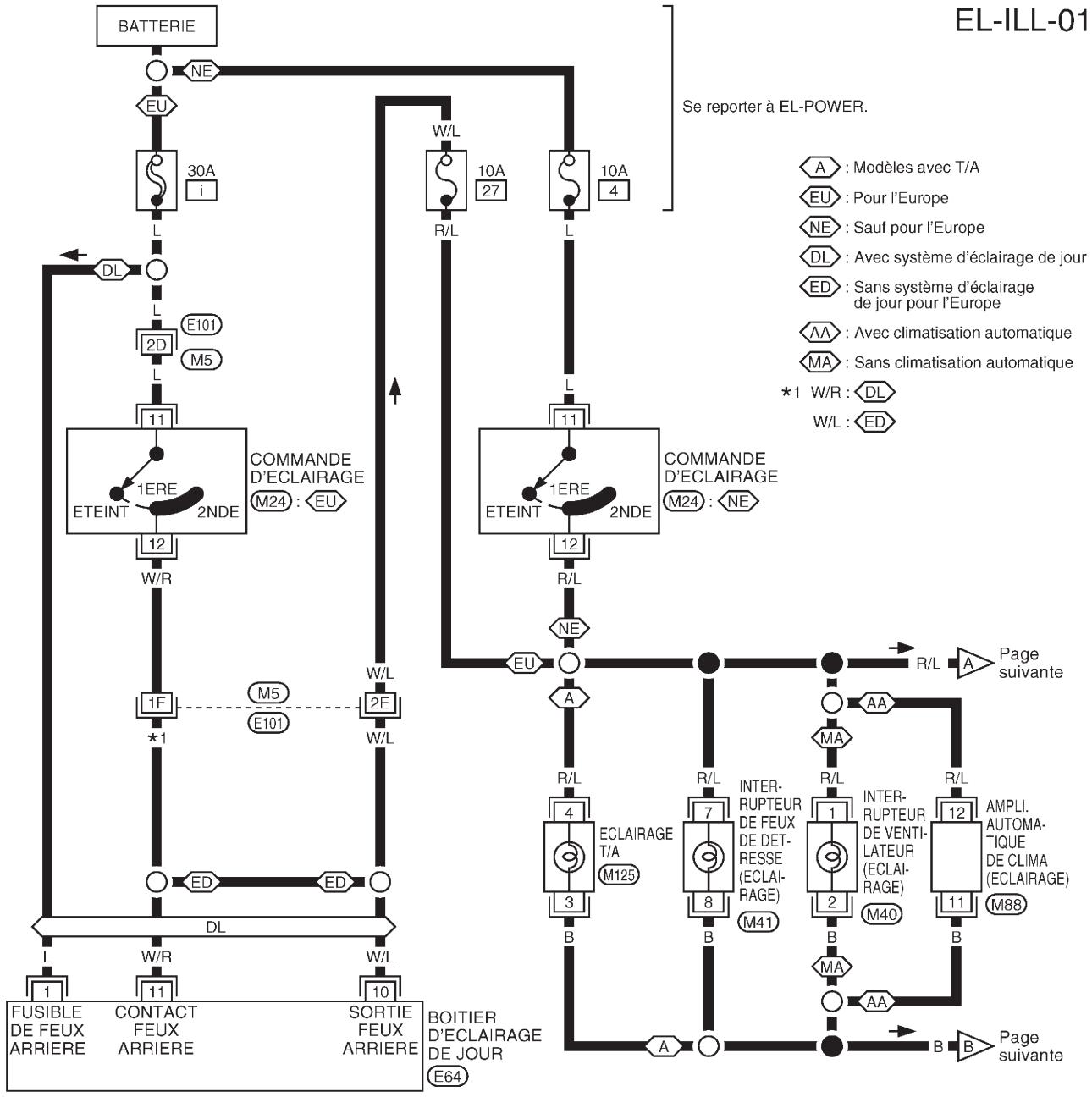

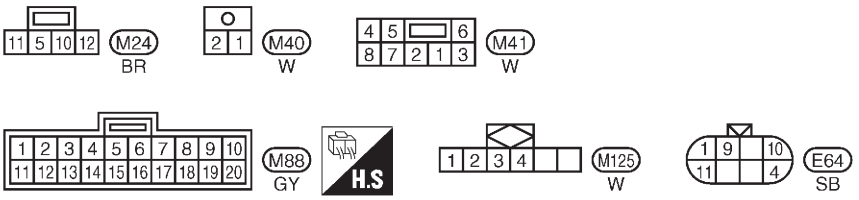

Consulter la dernière page dépliante.

M5 , E101

GEL249A

Simpo PDF Merge and Split Unregistered Version - http://www.simpopdf.com

Schéma de câblage — ILL —/Conduite à gauche (Suite)

EL-ILL-02

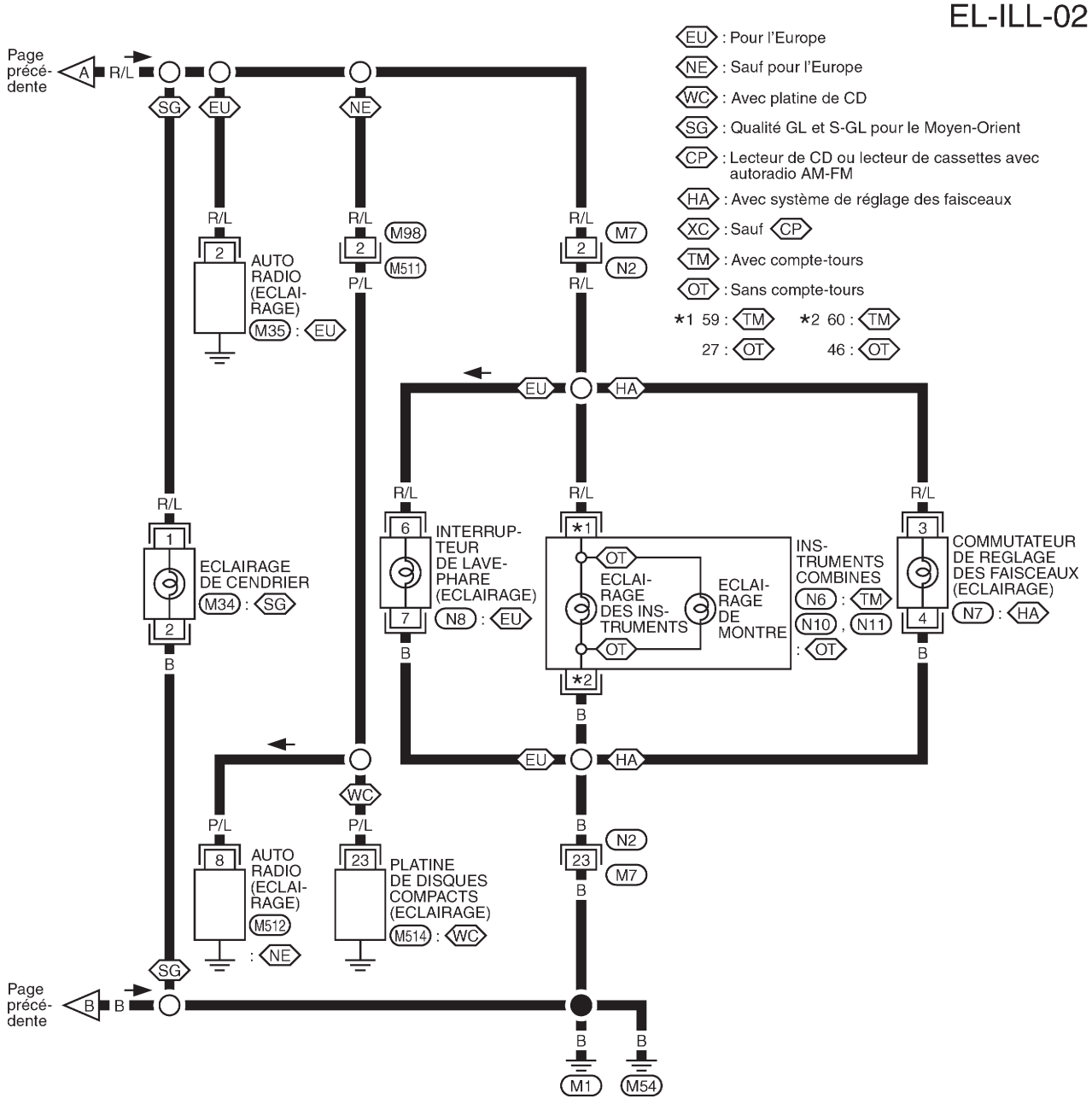

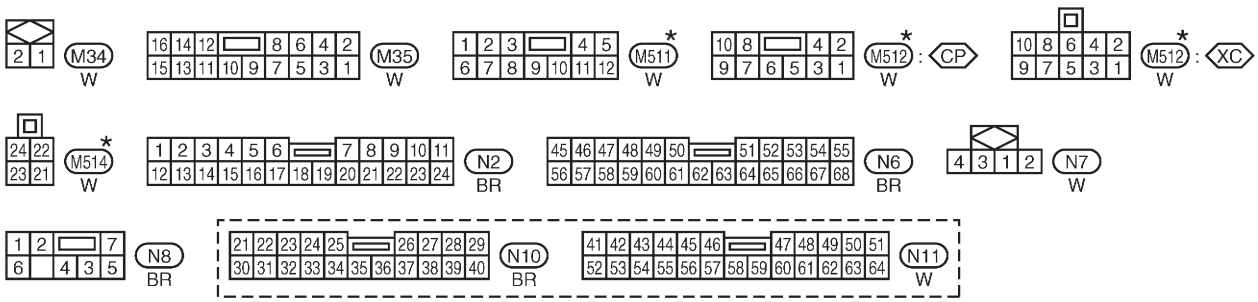

*: Ce connecteur ne figure pas dans la 'DISPOSITION DES FAISCEAUX'.

GEL386A

Simpo PDF Merge and Split Unregistered Version - http://www.simpopdf.com

Schéma de câblage — ILL —/Conduite à droite

EL-ILL-03

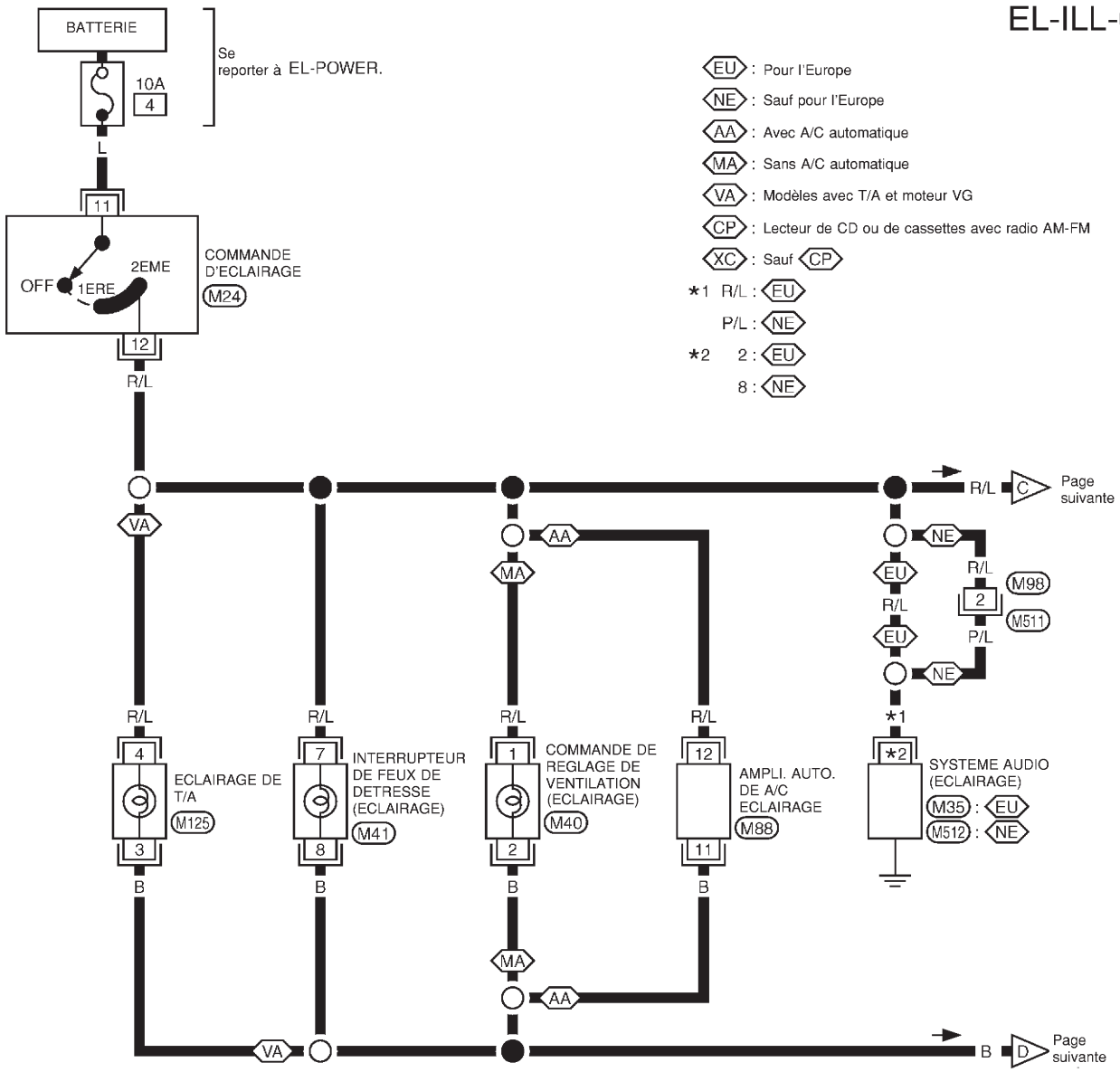

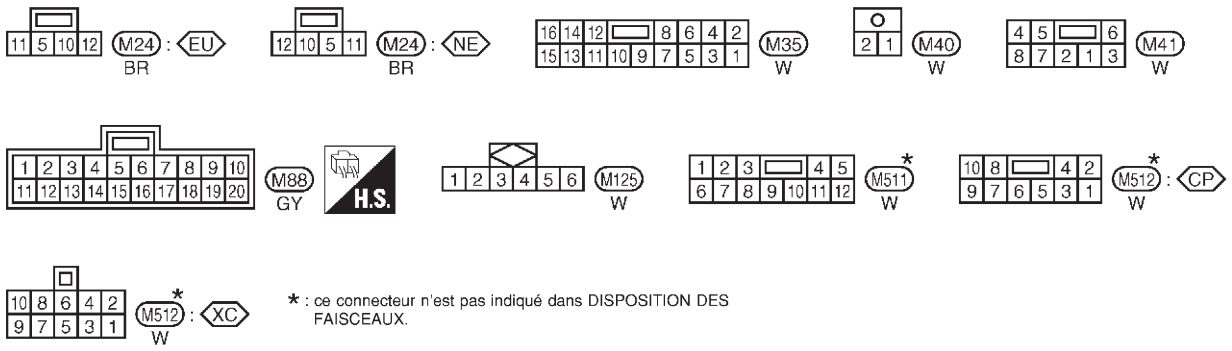

* : ce connecteur n'est pas indiqué dans DISPOSITION DES FAISCEAUX.

GEL387A

Simpo PDF Merge and Split Unregistered Version - http://www.simpopdf.com

Schéma de câblage — ILL —/Conduite à droite (Suite)

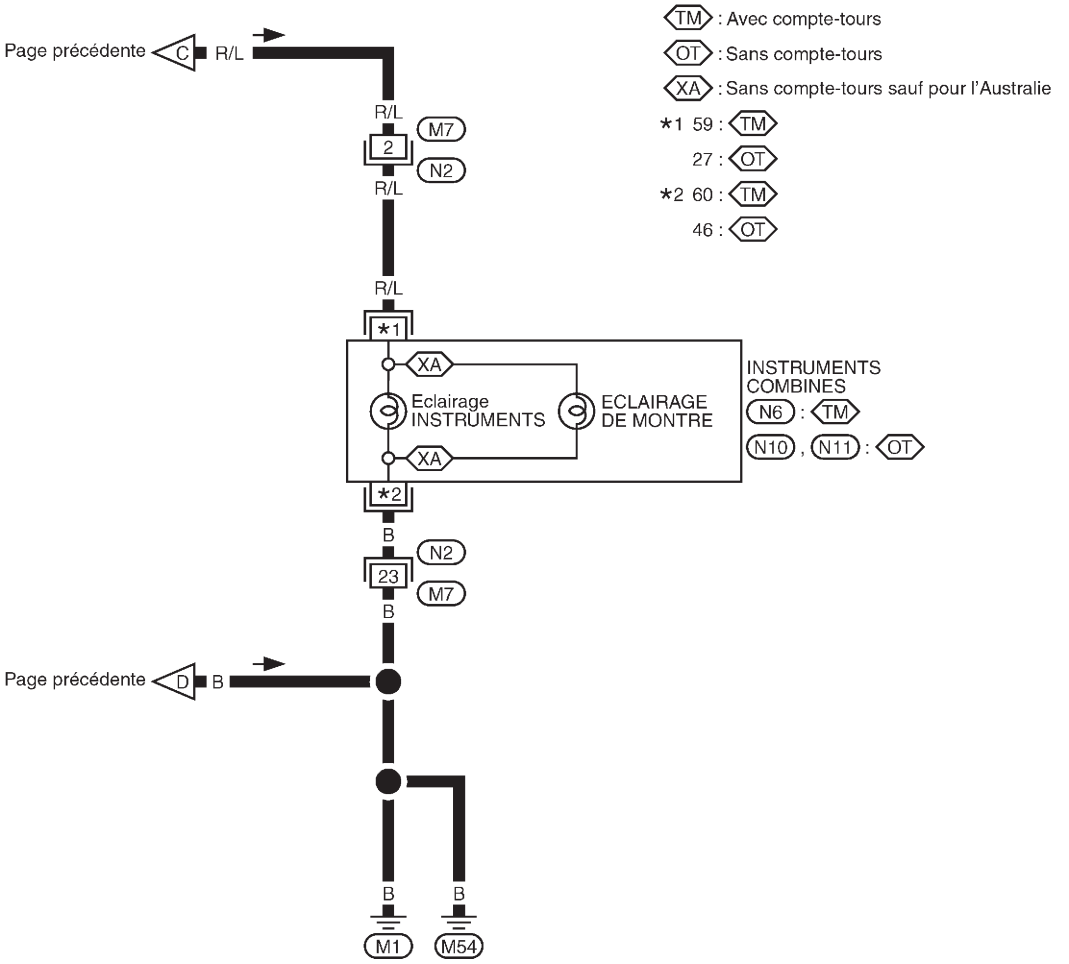

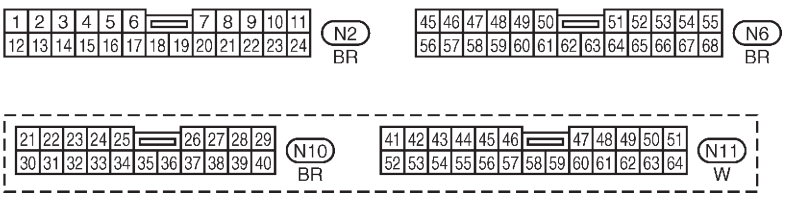

GEL388A

Simpo PDF Merge and Split Unregistered Version - http://www.simpopdf.com

Schéma de câblage — ROOM/L —

EL-ROOM/L-01

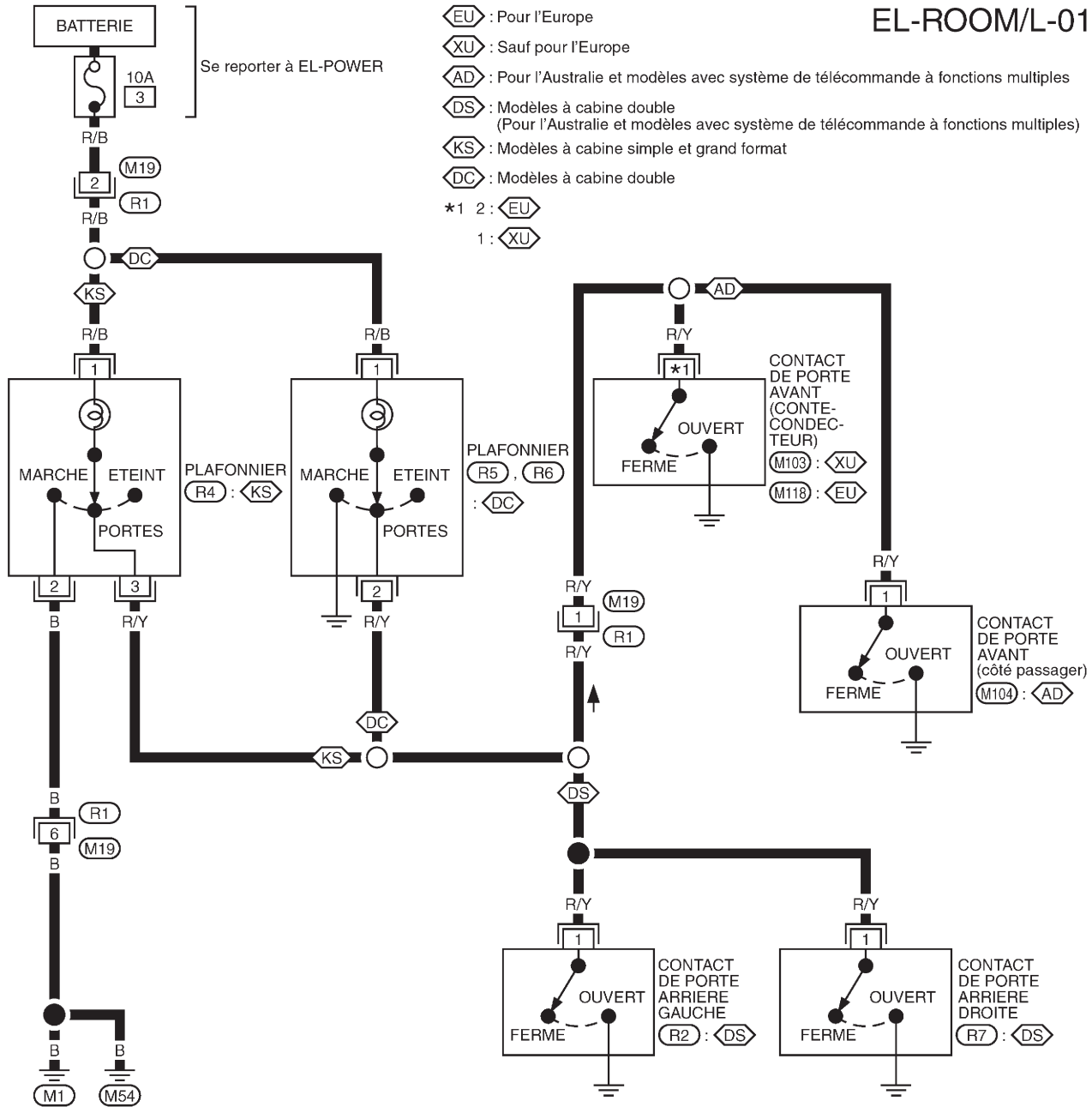

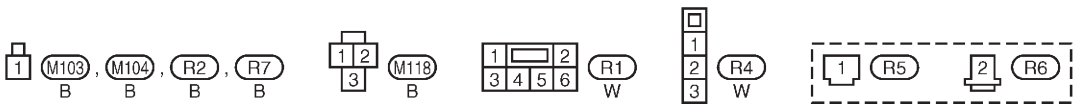

GEL389A

Simpo PDF Merge and Split Unregistered Version - http://www.simpopdf.com

Schéma de câblage — INT/L —

EL-INT/L-01

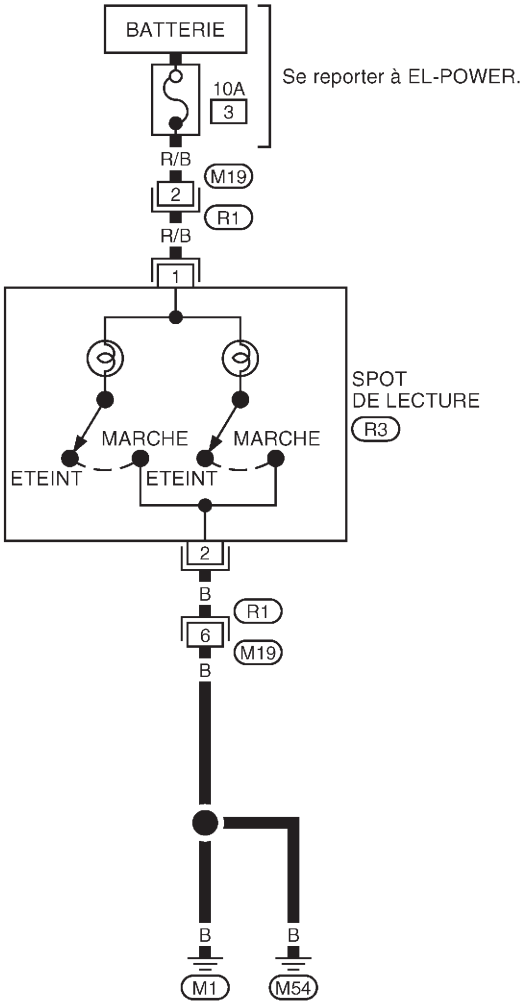

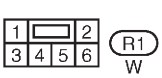

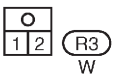

GEL252A

Simpo PDF Merge and Split Unregistered Version - http://www.simpopdf.com

Description du système

INSTRUMENTS COMBINES

●Le compteur de vitesse, le compteur kilométrique/journalier, le compte-tours, la jauge de réservoir à carburant et la jauge de température d'eau sont entièrement contrôlés par le boîtier de commande des instruments combinés.

- Un compteur kilométrique/journalier numérique a été adopté.
  *Les données du compteur kilométrique sont conservées, même lorsque le câble de la batterie est débranché. Les données du compteur journalier sont effacées lorsque le câble de la batterie est débranché.
- Les segments du compteur kilométrique/journalier peuvent être vérifiés en mode diagnostic.
- Les instruments/jauges peuvent être vérifiés en mode de diagnostic.

COMMENT MODIFIER L'AFFICHAGE DU COMPTEUR KILOMETRIQUE/JOURNALIER

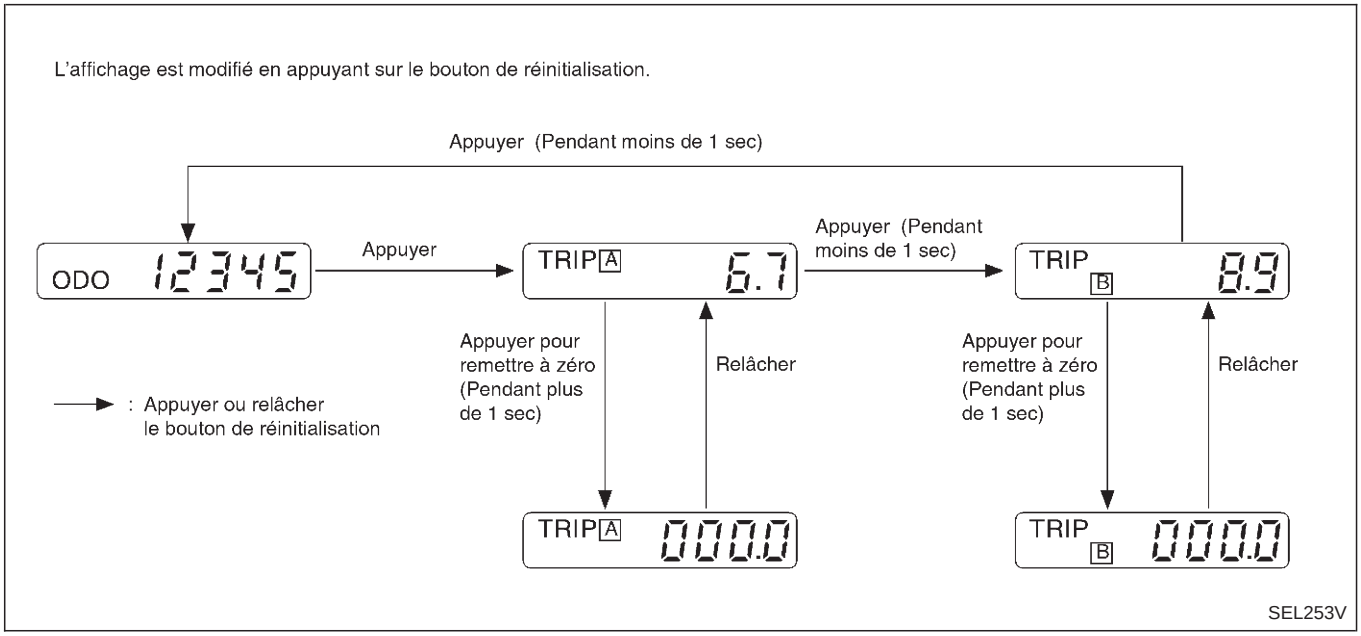

Remarque :
Mettre le contact d'allumage sur ON pour actionner le compteur kilométrique/journalier.

Simpo PDF Merge and Split Unregistered Version - http://www.simpopdf.com

Instruments combinés/Avec compte-tours.

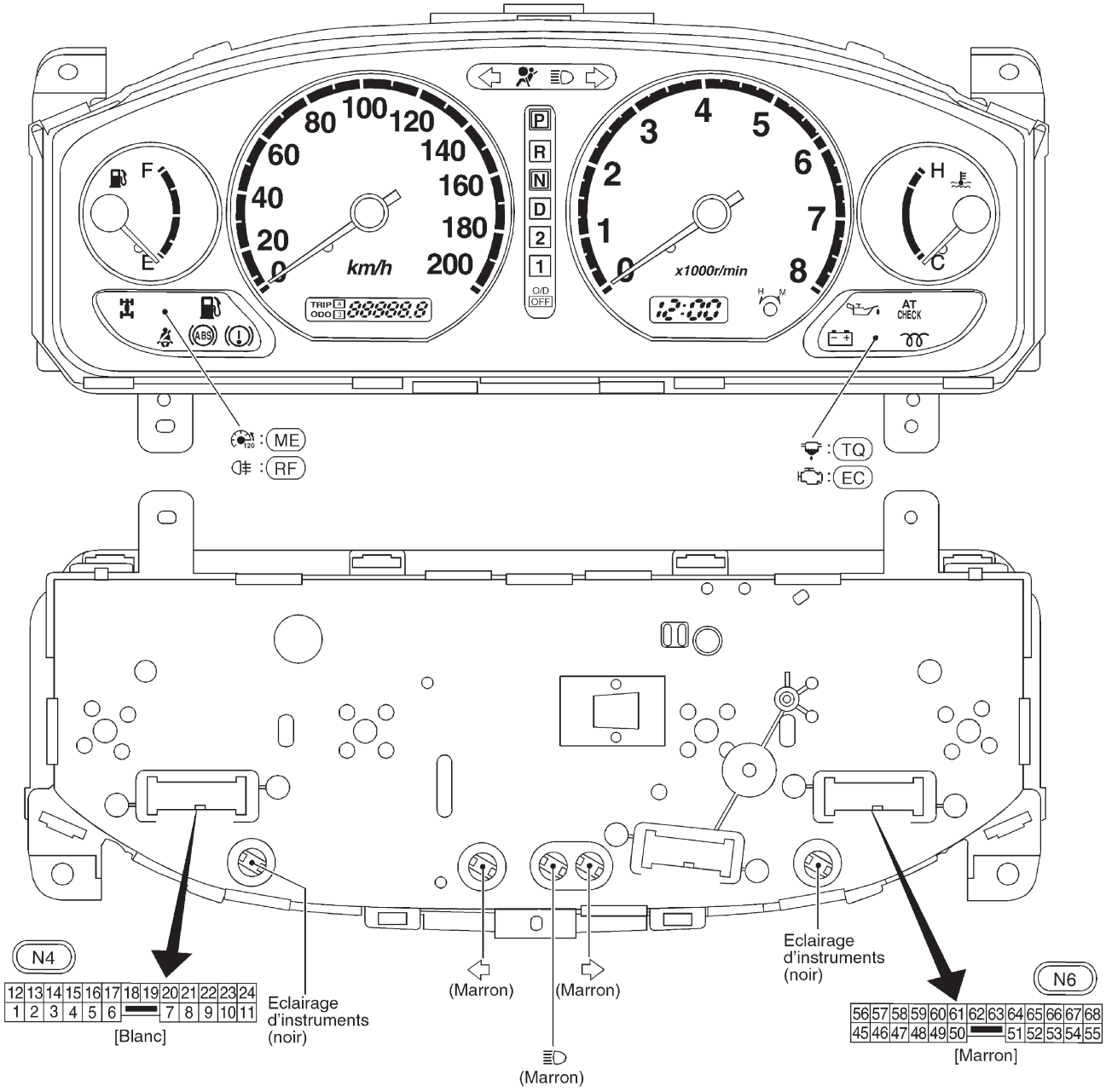

Couleur de douille d'ampoule	Puissance de la lampe
Marron	1,4 W
Noir	3,0 W

( ) : Pour le Moyen-Orient

(ME) : Pour le Moyen-Orient
(RF) : Avec feu antibrouillard arrière
(TQ) : Moteurs TD et QD
(EC) : Avec moteur de commande par ECM

HEL890B

Simpo PDF Merge and Split Unregistered Version - http://www.simpopdf.com

Instruments combinés/Sans compte-tours

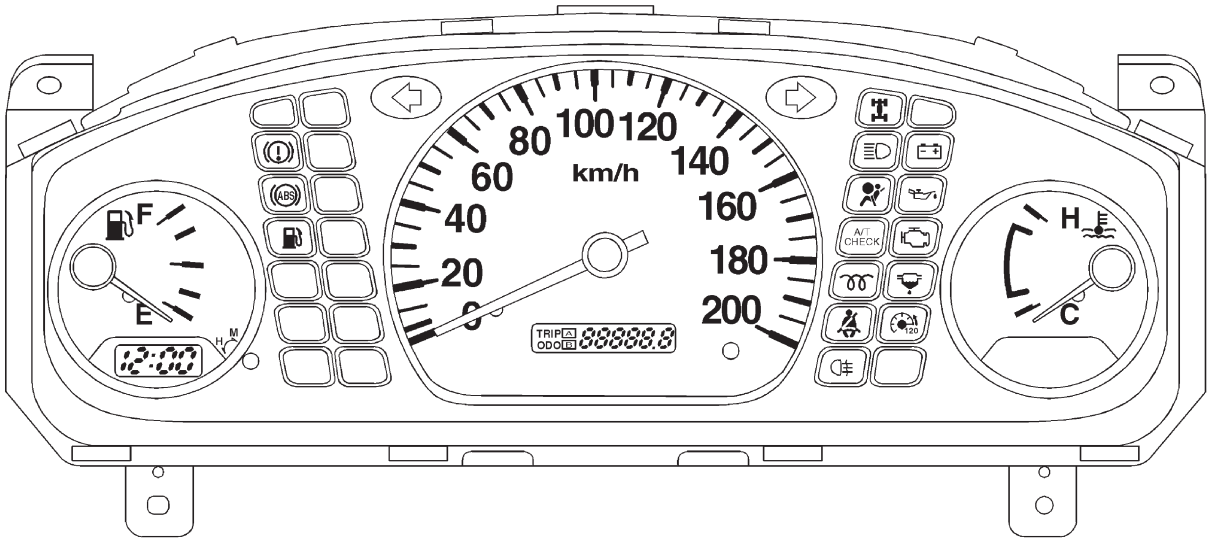

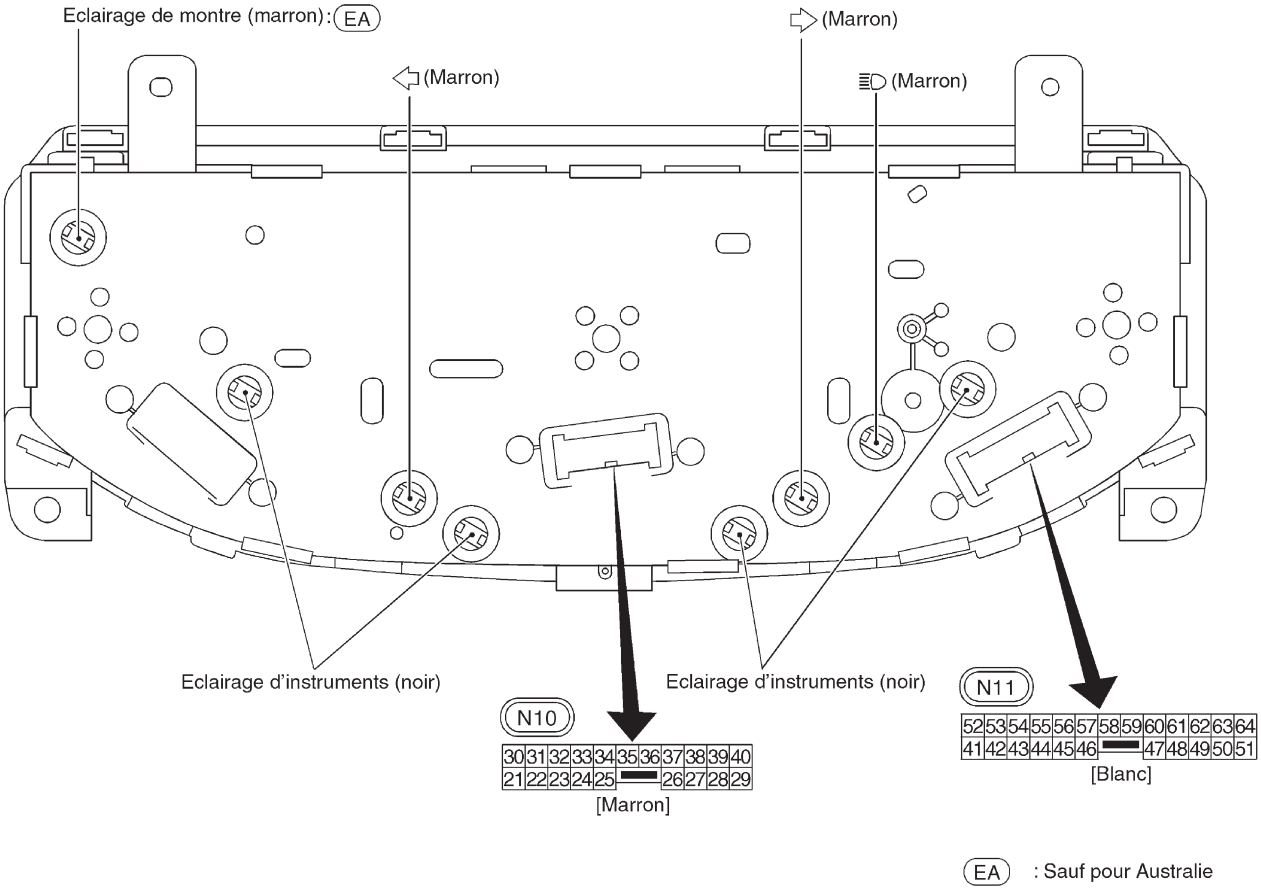

EA : Sauf pour Australie

Couleur de douille d'ampoule	Puissance de la lampe
Marron	1,4 W
Noir	3,0 W

( ) : Couleur de douille d'ampoule

HEL891B

Simpo PDF Merge and Split Unregistered Version - http://www.simpopdf.com

Schéma/Avec compte-tours

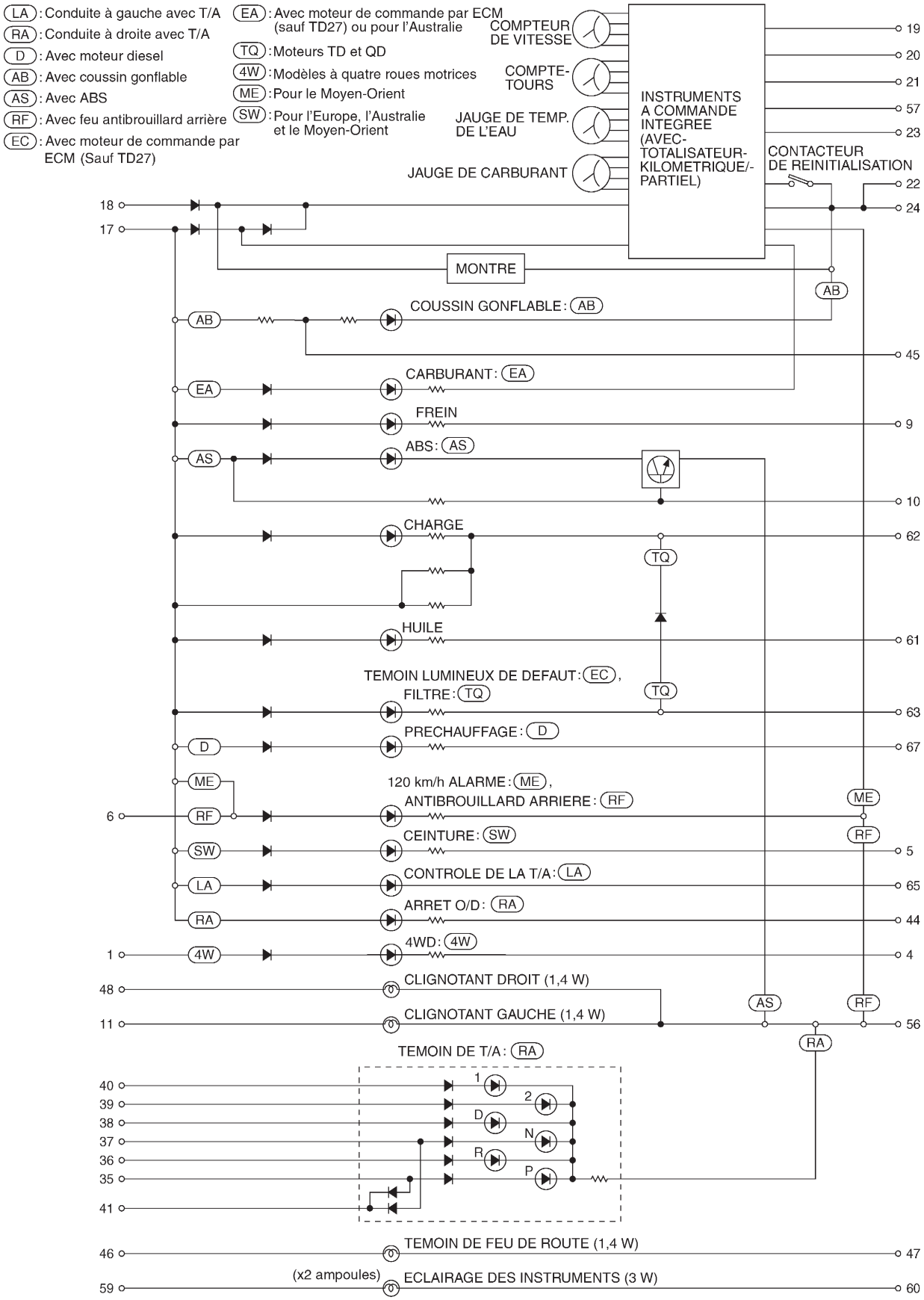

GEL390A

Simpo PDF Merge and Split Unregistered Version - http://www.simpopdf.com

Schéma/Sans compte-tours

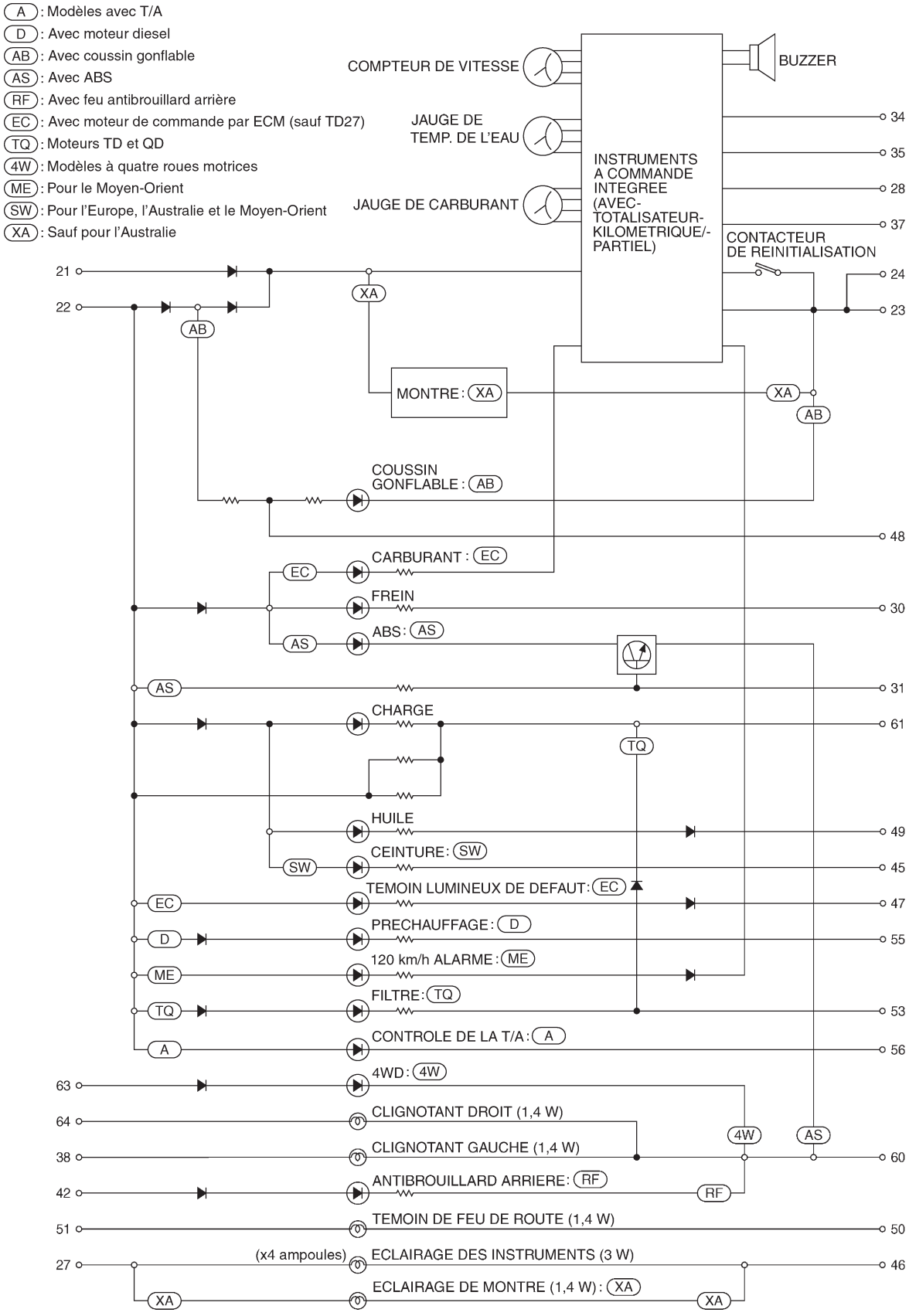

GEL391A

Simpo PDF Merge and Split Unregistered Version - http://www.simpopdf.com

Construction

AVEC COMPTE-TOURS

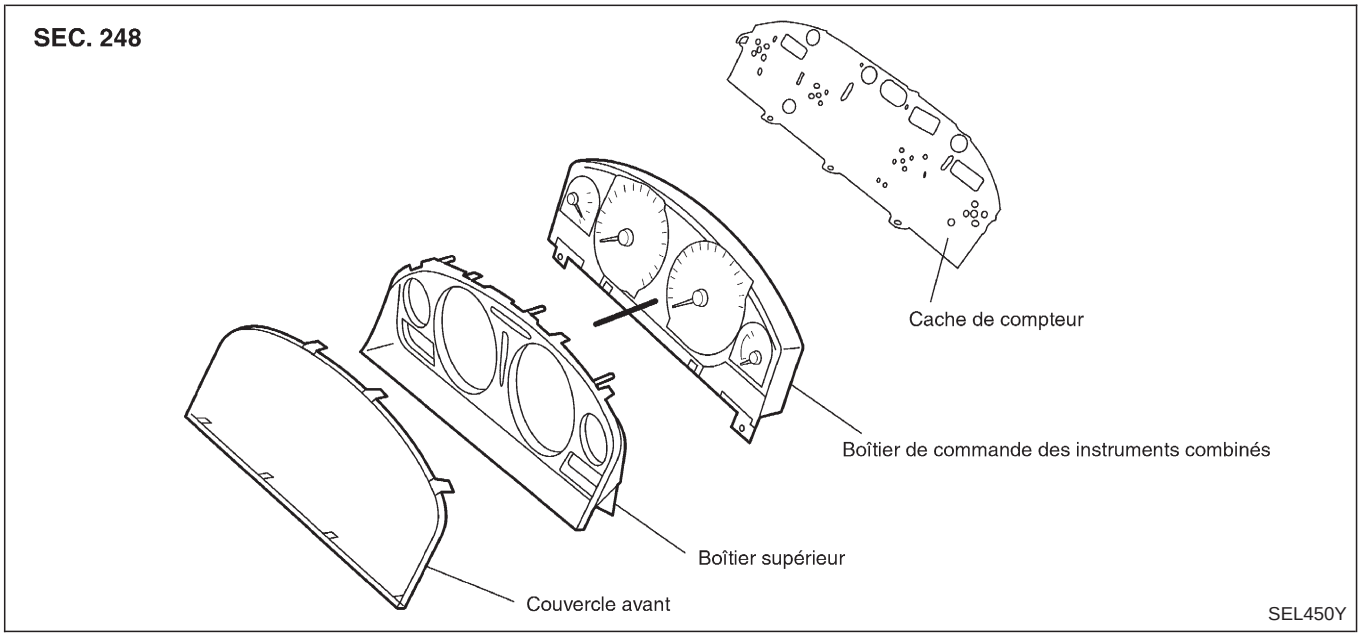

SANS COMPTE-TOURS

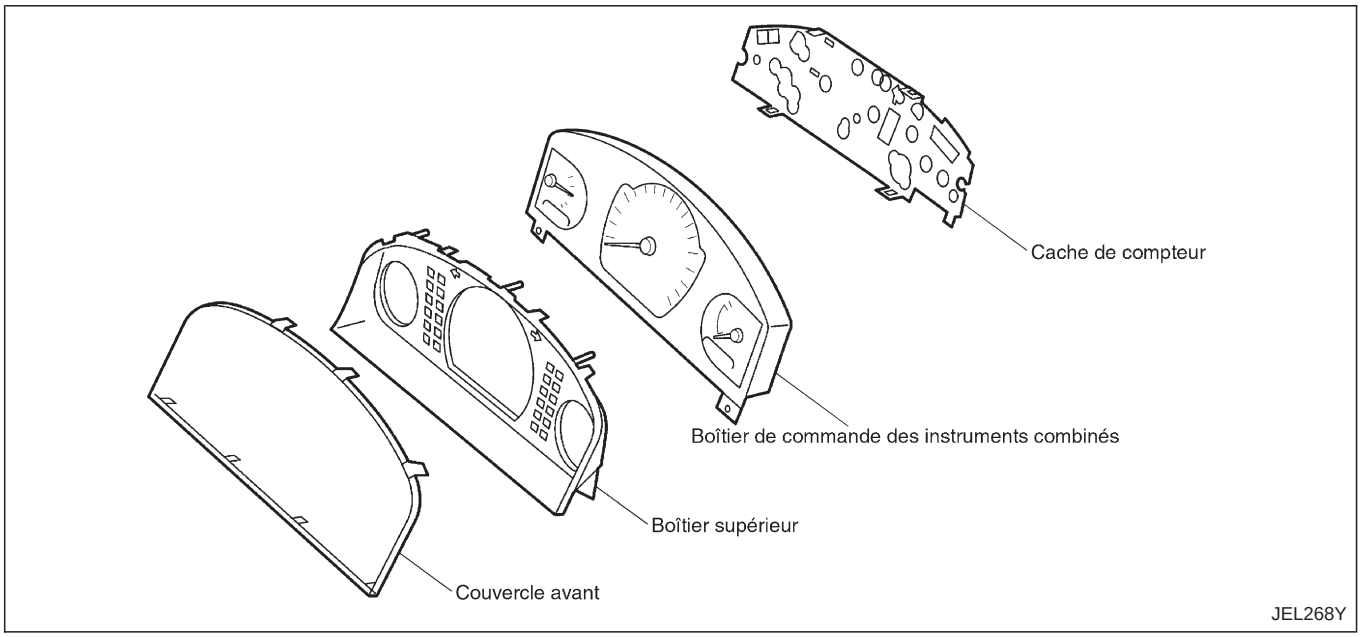

Simpo PDF Merge and Split Unregistered Version - http://www.simpopdf.com

Schéma de câblage — METER —/Moteur essence avec compte-tours

EL-METER-01

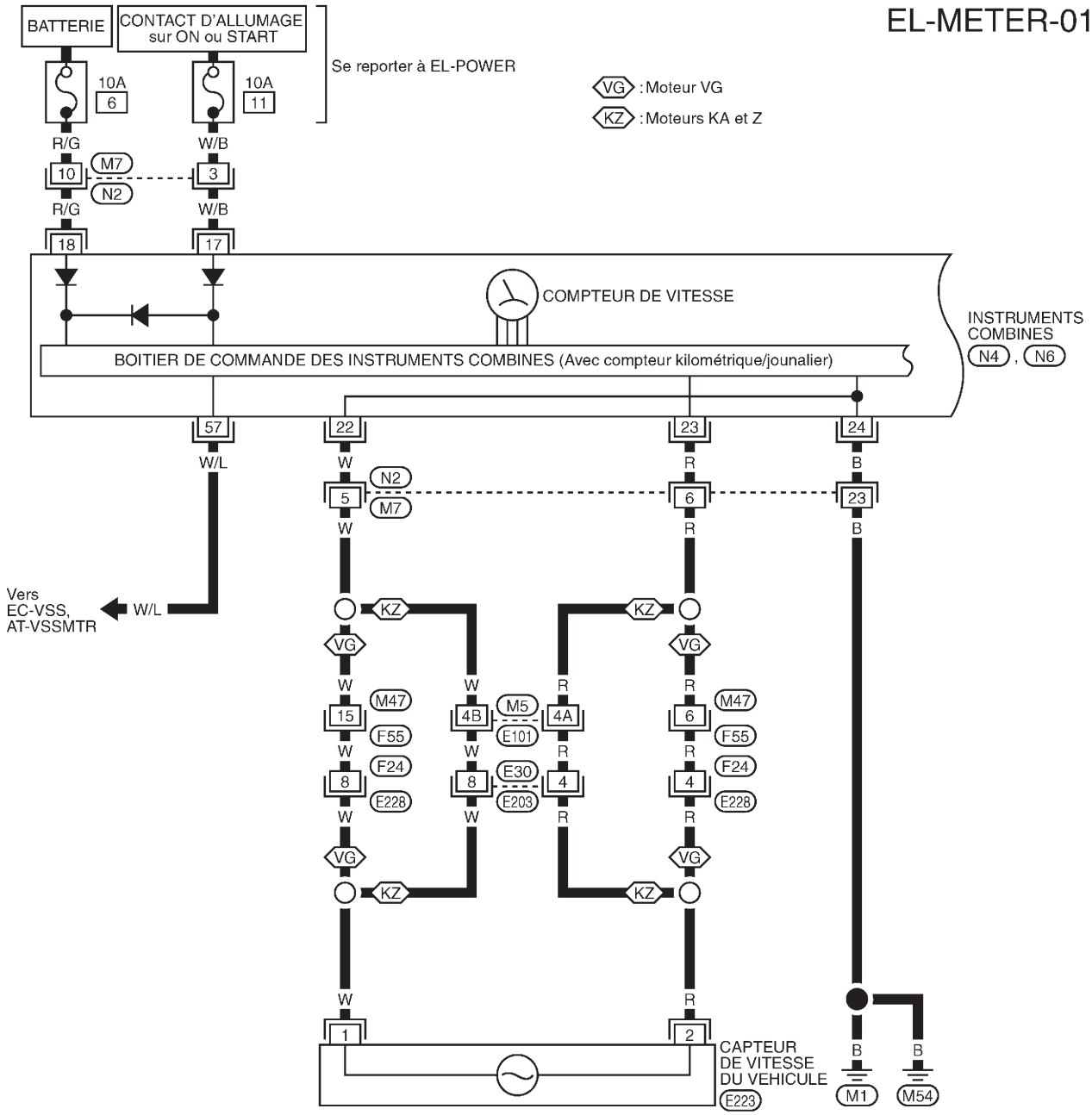

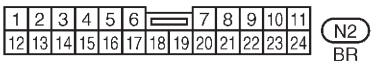

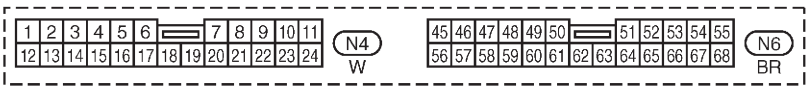



Consulter la dernière page dépliante.
M5 , E101

GEL392A

Simpo PDF Merge and Split Unregistered Version - http://www.simpopdf.com

Schéma de câblage — METER —/Moteur essence avec compte-tours (Suite)

EL-METER-02

L : Conduite à gauche
R : Conduite à droite
EU : Pour l'Europe
NE : Sauf pour l'Europe
CB : Moteur de carburateur
VG : Moteur VG
LK : Conduite à gauche avec moteur KA
RK : Conduite à droite avec moteur KA
RV : Conduite à droite avec moteurs KA et VG
*1 3C : L 6A : R
*2 3 : EU 18 : NE
*3 18 : RK 7 : VG

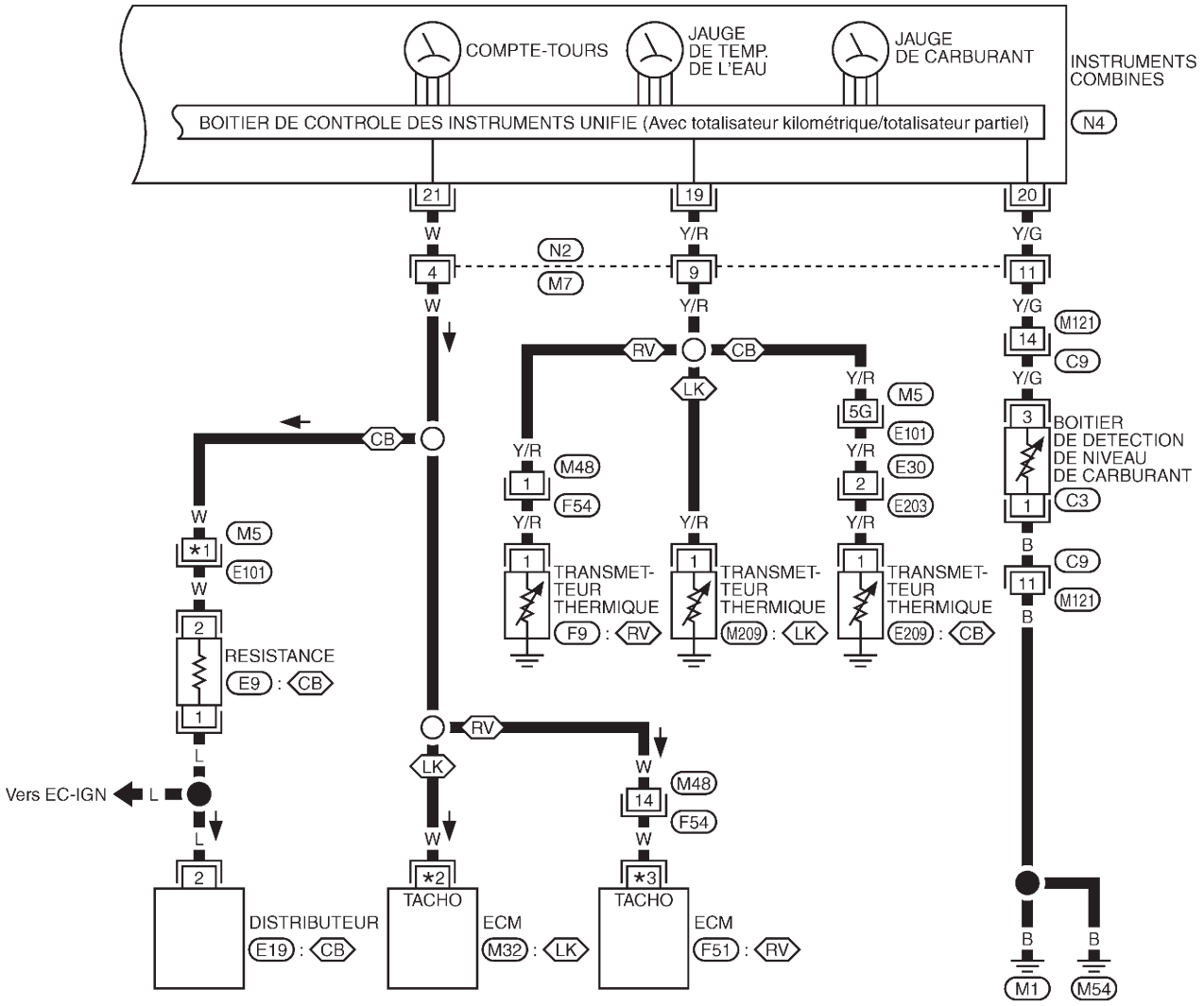

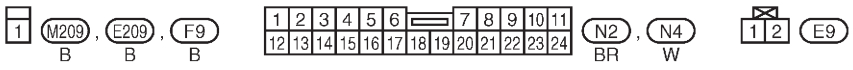

Consulter la dernière page dépliante.
M5 , E101
M32
F51

GEL256A

Simpo PDF Merge and Split Unregistered Version - http://www.simpopdf.com

Schéma de câblage — METER —/Moteur essence sans compte-tours

EL-METER-03

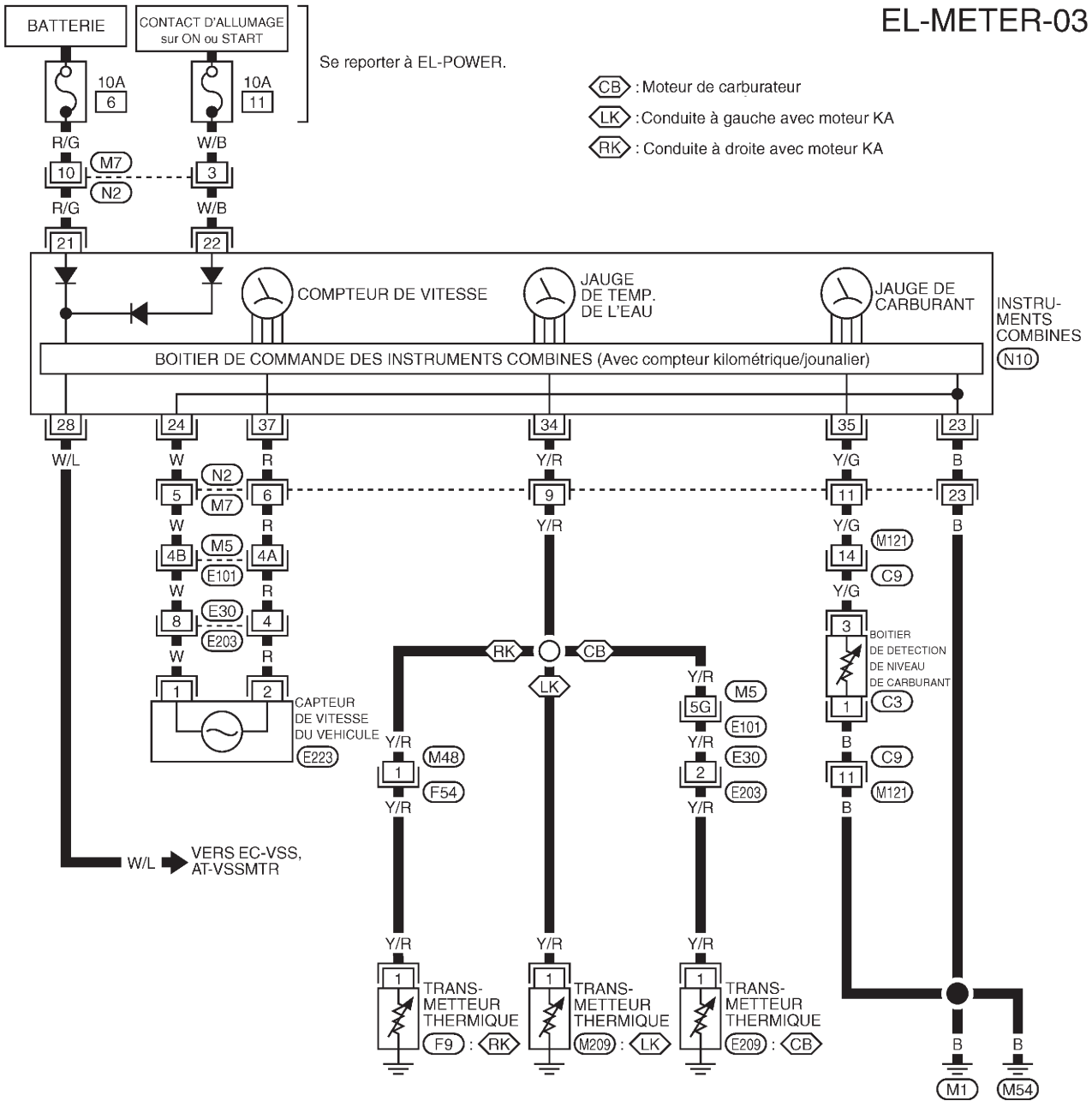

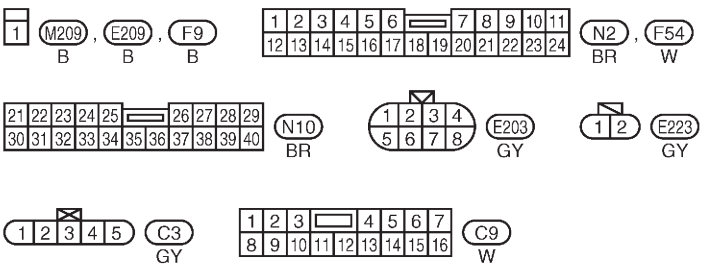

Consulter la dernière page dépliante.
M5 , E101

GEL397A

Simpo PDF Merge and Split Unregistered Version - http://www.simpopdf.com

Schéma de câblage — METER —/Conduite à gauche moteur diesel avec compte-tours

EL-METER-04

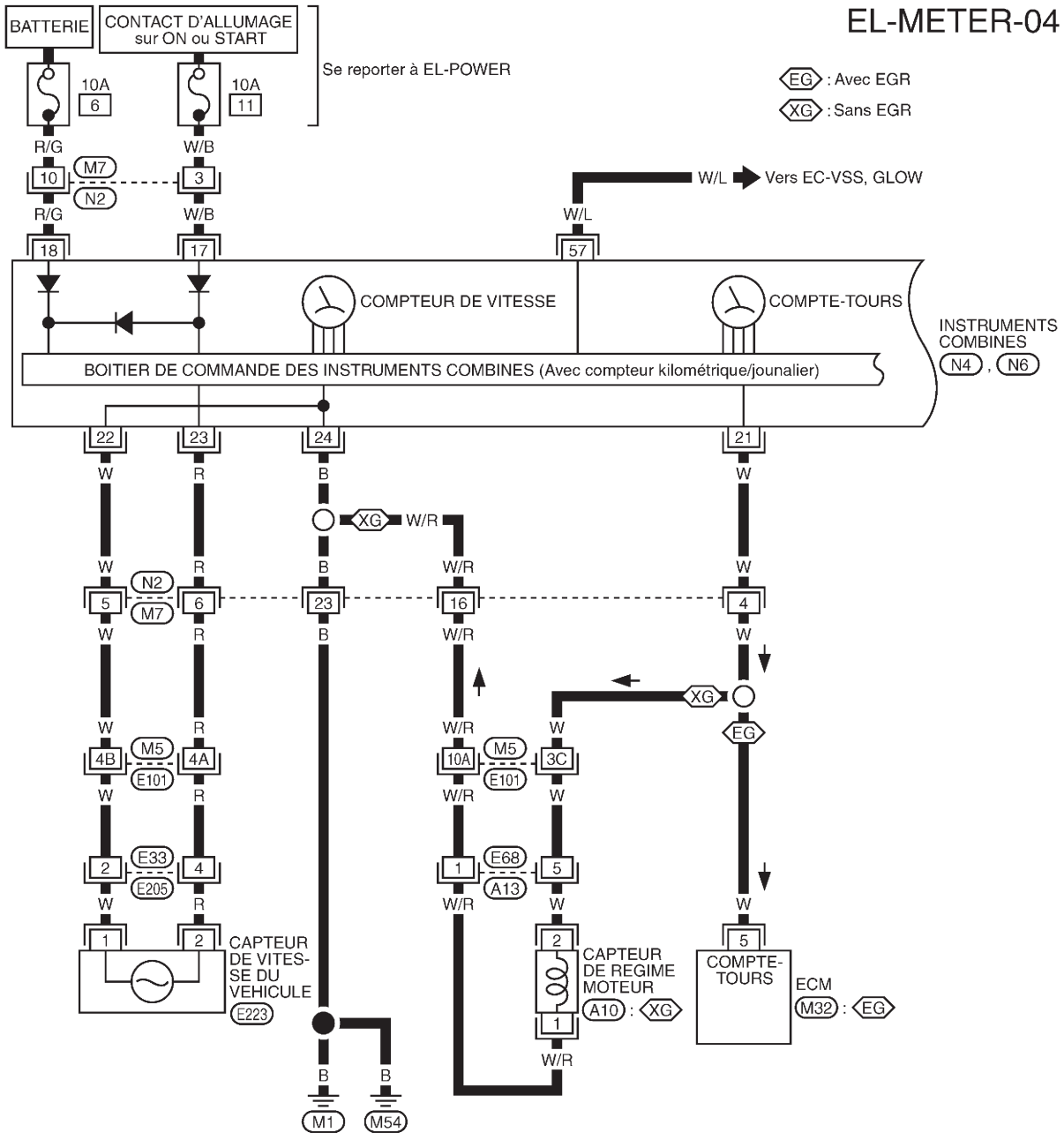

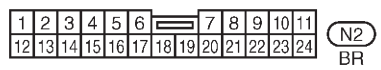

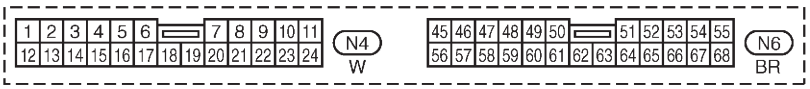

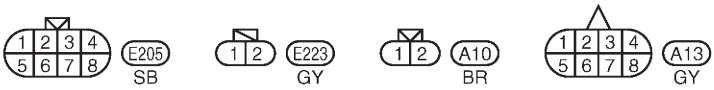

Consulter la dernière page dépliante.
M5 , E101
M32

GEL393A

Simpo PDF Merge and Split Unregistered Version - http://www.simpopdf.com

Schéma de câblage — METER —/Conduite à gauche moteur diesel avec compte-tours (Suite)

YD : Moteur YD
ZD : Moteur ZD
YZ : Moteurs YD et ZD
TQ : Moteurs TD et QD

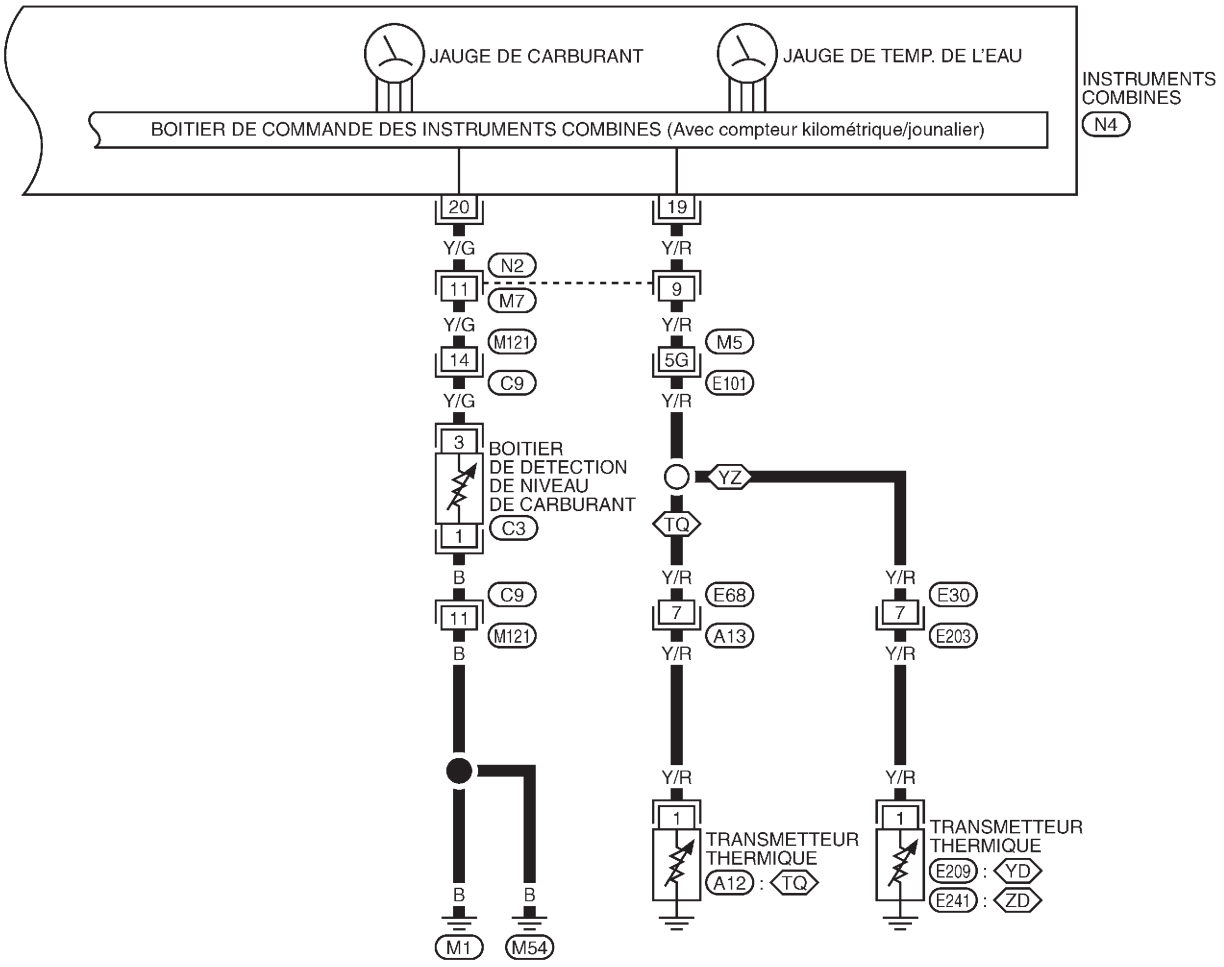

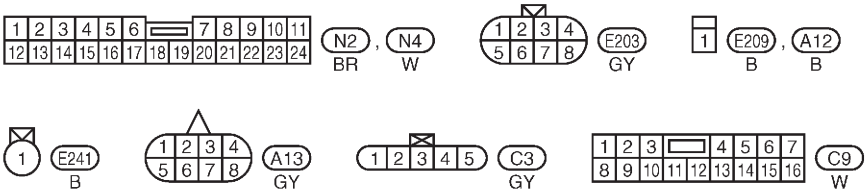

Consulter la dernière page dépliante.
M5 , E101

GEL394A

Simpo PDF Merge and Split Unregistered Version - http://www.simpopdf.com

Schéma de câblage — METER —/Conduite à droite moteur diesel avec compte-tours

EL-METER-06

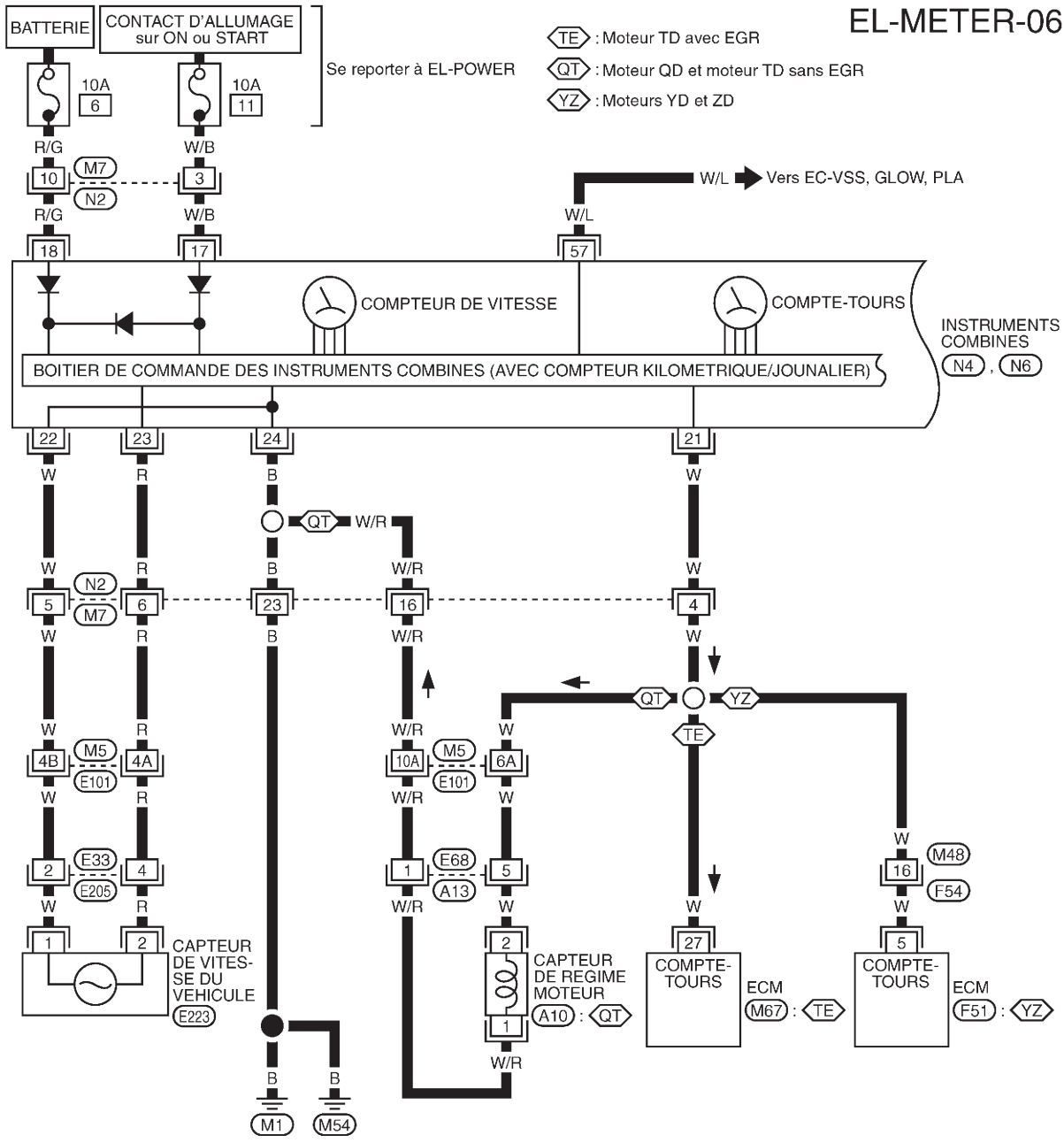

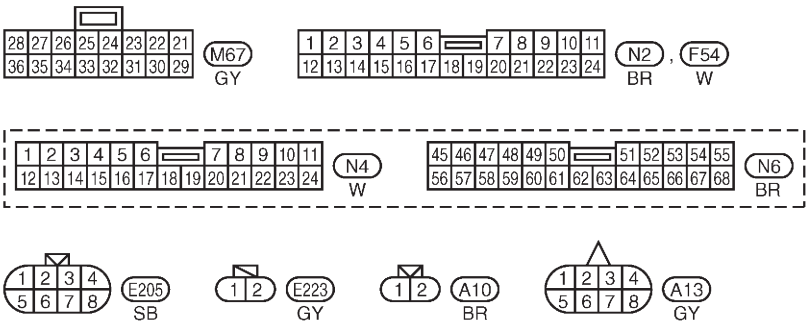

Consulter la dernière page dépliante.
M5, E101
F51

GEL395A

Simpo PDF Merge and Split Unregistered Version - http://www.simpopdf.com

Schéma de câblage — METER —/Conduite à droite moteur diesel avec compte-tours (Suite)

YD : Moteur YD
ZD : Moteur ZD
YZ : Moteurs YD et ZD
TQ : Moteurs TD et QD

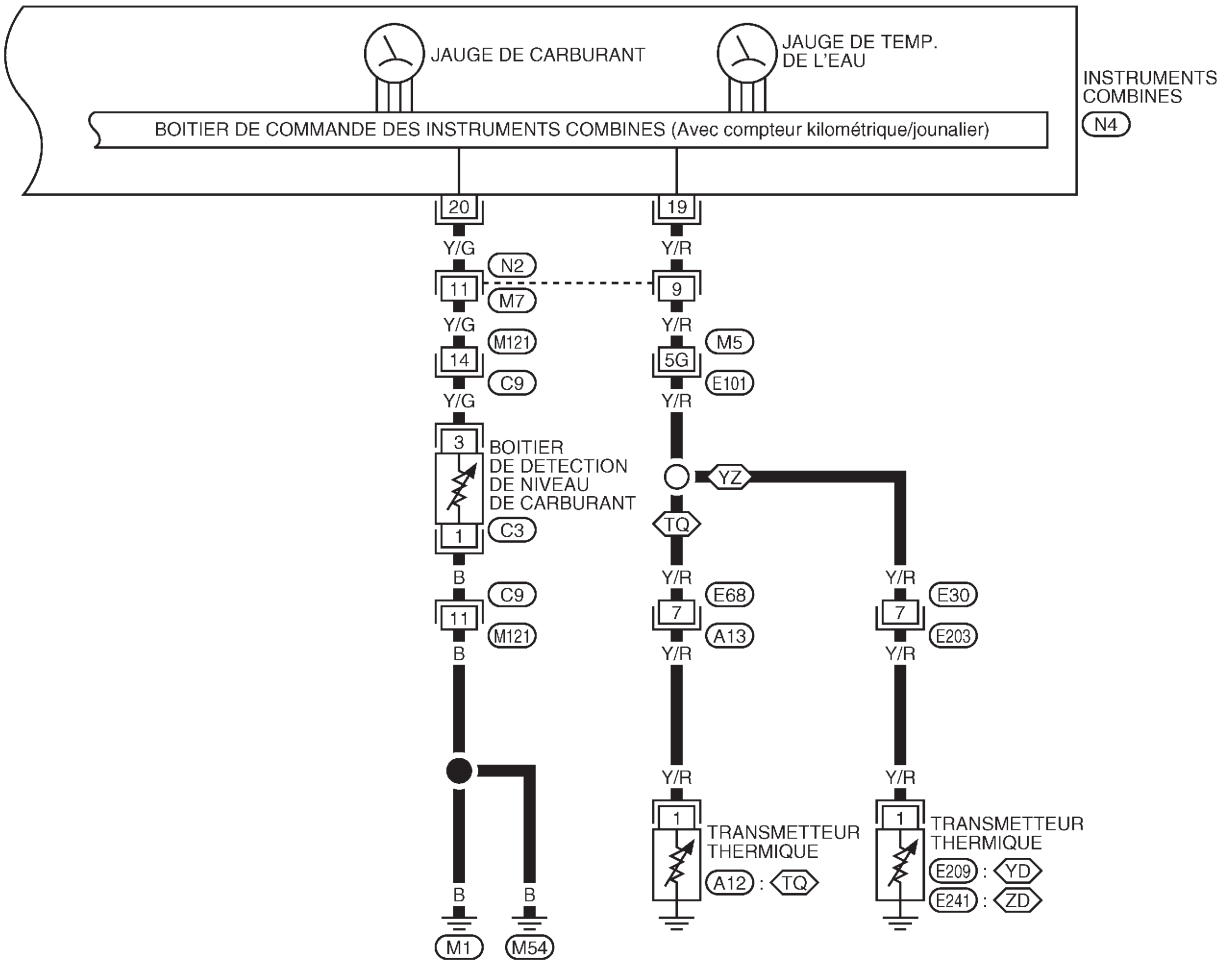

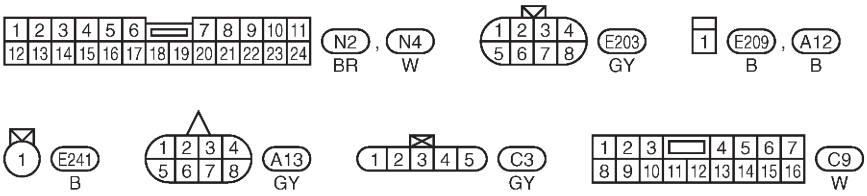

Consulter la dernière page dépliante.
M5 , E101

GEL396A

Simpo PDF Merge and Split Unregistered Version - http://www.simpopdf.com

Schéma de câblage — METER —/Moteur diesel sans compte-tours

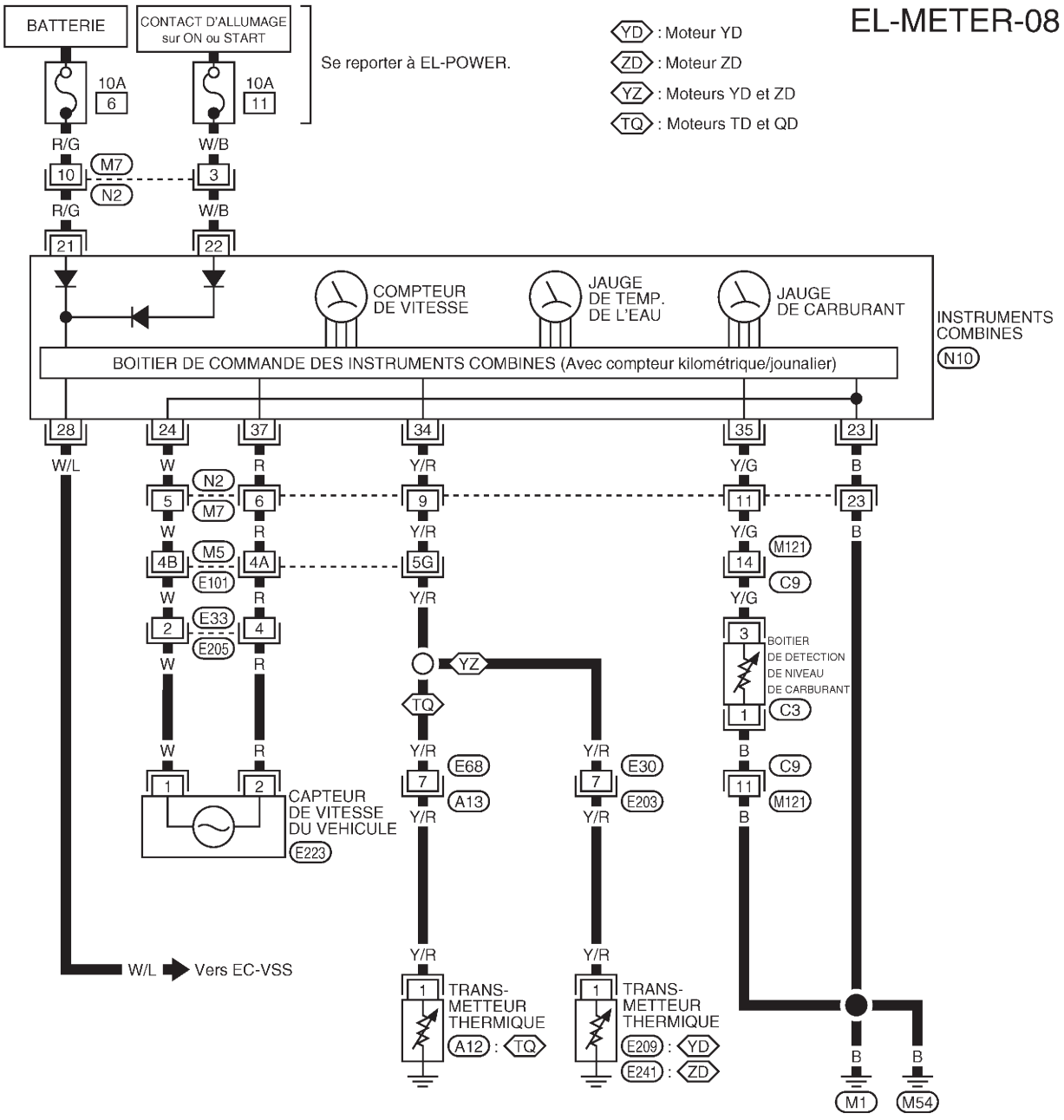

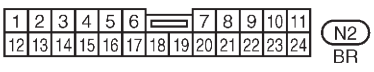

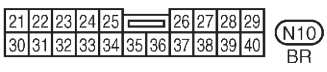



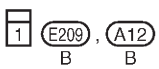

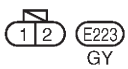

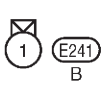

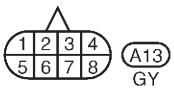

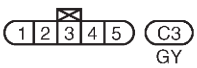

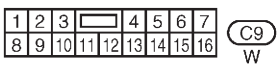

Consulter la dernière page dépliante.
M5 , E101

Simpo PDF Merge and Split Unregistered Version - http://www.simpopdf.com

Fonctionnement des instruments/jauges et contrôle des segments de compteur kilométrique/journalier en mode de diagnostic.

FONCTION DE DIAGNOSTIC

- Les segments du compteur kilométrique/journalier peuvent être vérifiés en mode diagnostic.
- Les instruments/Jauges peuvent être vérifiés en mode de diagnostic.

COMMENT PASSER EN MODE DE DIAGNOSTIC

1. Mettre le contact d'allumage sur ON et faire passer le compteur kilométrique/journalier en position ''TRIP A'' ou ''TRIP B''.
2. Couper le contact d'allumage.
3. Mettre le contact d'allumage sur ON tout en poussant sur le bouton de réglage du compteur kilométrique/journalier.
4. Vérifier que le compteur kilométrique journalier indique ''000,0''.
5. Appuyer sur le bouton de réglage du compteur kilométrique/journalier plus de trois fois en 5 secondes.

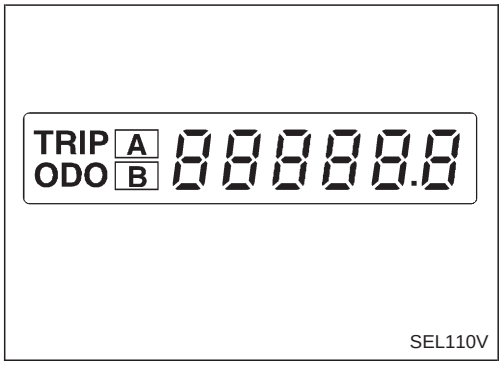

SEL110V

6. Tous les segments du compteur kilométrique/journalier numérique sont en marche.

NOTE : Si certains segments ne se mettent pas en marche, il convient de remplacer le boîtier de commande des instruments combinés ainsi que le compteur kilométrique/journalier.

A ce stade, les instruments combinés sont en mode de diagnostic.

Avec compte-tours

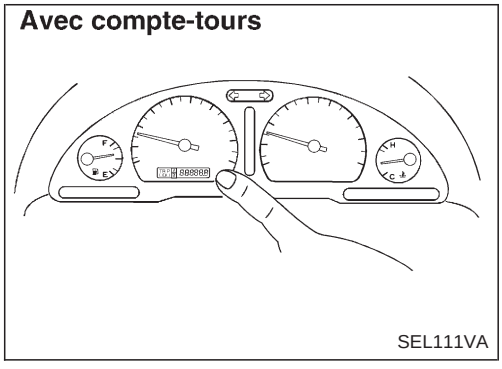
SEL111VA

7. Appuyer sur le bouton de réglage du compteur kilométrique/journalier. Lorsque le bouton de réglage du compteur électrique/journalier est enclenché, l'indication de chaque instrument/jauge devrait être comme celle illustrée à gauche, s'il n'y a pas de défaut.

NOTE : Il faut environ quelques secondes pour que l'indicateur de la jauge de réservoir à carburant se stabilise.

Sans compte-tours

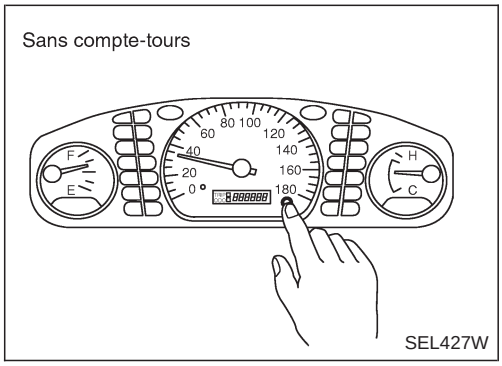

SEL427W

Simpo PDF Merge and Split Unregistered Version - http://www.simpopdf.com

Diagnostics de défaut/Avec compte-tours

VERIFICATION PRELIMINAIRE

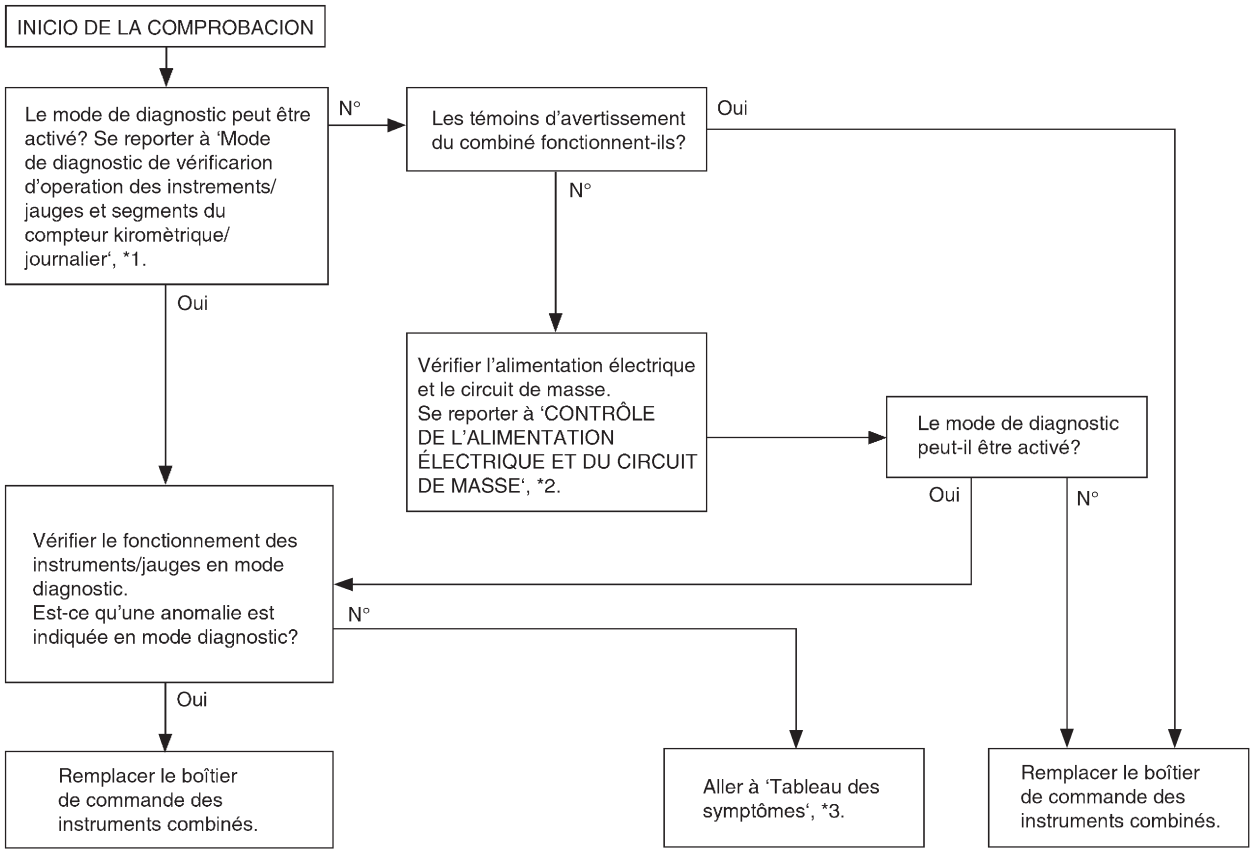

SEL269Y

*1 : Se reporter à ''Fonctionnement des instruments/jauges et contrôle des segments de compteur kilométrique/ journalier en mode de diagnostic (EL-3071)

*2 : ALIMENTATION ELECTRIQUE ET VERIFICATION DU CIRCUIT DE MISE A LA MASSE (EL-0)

*3 : Tableau des symptômes (EL- 0)

Simpo PDF Merge and Split Unregistered Version - http://www.simpopdf.com

Diagnostics de défaut/Avec compte-tours (Suite)

ORGANIGRAMME

Symptôme	Causes possibles	Ordre de réparation
Le compte-tours, la jauge à carburant ou la jauge de température d'eau est défectueux.	1. Signal du capteur - Signal de vitesse du véhicule - Jauge de carburant - Jauge de température d'eau 2. Boîtier de contrôle des instruments combinés	1. Vérifier le capteur de défauts des jauges et instruments. INSPECTION/ CAPTEUR DE VITESSE DU VEHICULE (se reporter à la section EL ''Capteur de vitesse du véhicule'' dans le Manuel de réparation original.) INSPECTION/INSPECTION DU BOITIER DE CAPTEURS DE NIVEAU DE CARBURANT/TRANSMETTEUR THERMIQUE 2. Remplacer le boîtier de contrôle des instruments combinés.
Plusieurs instruments/jauges sont défectueux (sauf le compteur kilométrique/ journalier)		

Avant de commencer le diagnostic décrit ci-dessous, effectuer la VERIFICATION PRELIMINAIRE, EL-3072

Simpo PDF Merge and Split Unregistered Version - http://www.simpopdf.com

Diagnostics de défaut/Avec compte-tours (Suite)

CONTROLE DE L'ALIMENTATION ELECTRIQUE ET DU CIRCUIT DE MISE A LA MASSE

Vérification du circuit de l'alimentation électrique

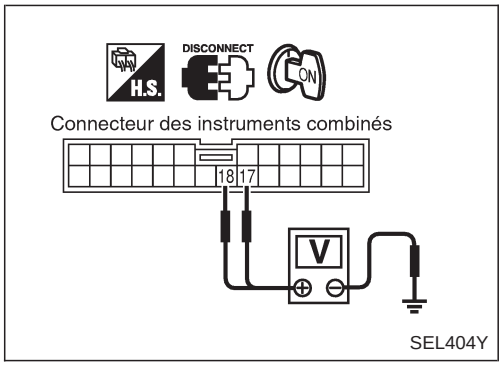

Bornes		Position du contact d'allumage		
⊕	⊖	OFF	ACC	ON
⑱ (R/G)	Masse	Tension de la batterie	Tension de la batterie	Tension de la batterie
⑰ (W/B)	Masse	0V	0V	Tension de la batterie

Si le résultat n'est pas satisfaisant, vérifier les points suivants .

- Fusible de 10A [n° 11, situé dans le boîtier à fusibles(J/B)].
- Fusible de 10A [n° 6, situé dans le boîtier à fusibles(J/B)].
- Faisceau en circuit ouvert ou court-circuité entre le fusible et les instruments combinés

Vérification du circuit de masse

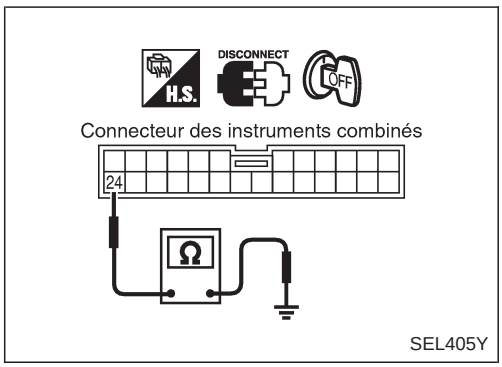

Bornes	Il y a continuité
㉔ - Masse (B)	Oui

Simpo PDF Merge and Split Unregistered Version - http://www.simpopdf.com

Diagnostics de défaut/Avec compte-tours (Suite)

INSPECTION/CAPTEUR DE VITESSE DU VEHICULE

Sans ABS pour le Moyen-Orient et sauf pour le Moyen-Orient

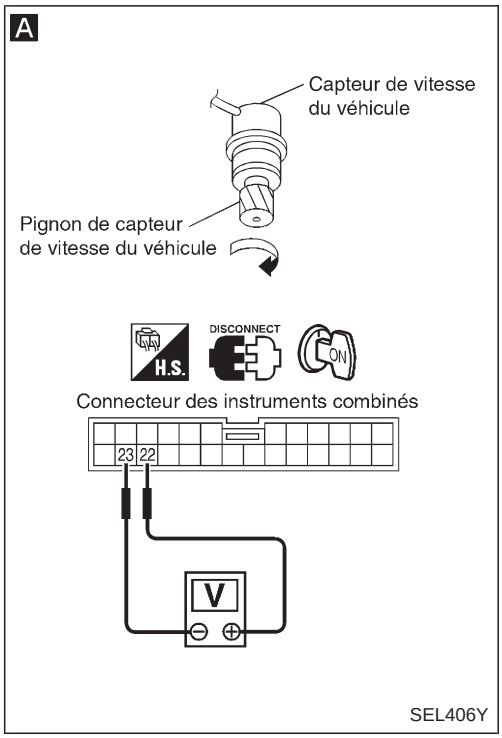

A

VERIFICATION DE LA SORTIE DU CAPTEUR DE VITESSE DU VEHICULE.
1. Déposer le capteur de vitesse du véhicule de la transmission.
2. Vérifier la tension entre le connecteur (N4) des bornes (22) (W) et (23) (R) des instruments combinés tout en tournant rapidement le pignon du capteur de vitesse.
   Tension : Environ 0,5V

Bon → Le capteur de vitesse du véhicule fonctionne correctement.

Mauvais ↓

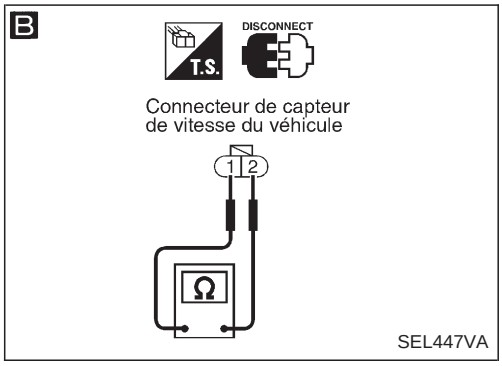

B

VERIFICATION DU CAPTEUR DE VITESSE DU VEHICULE.
Vérifier la résistance entre les bornes de connecteur (E223) de capteur de vitesse du véhicule ① (W) et ② (R).
Résistance : Environ 250Ω

Mauvais → Remplacer le capteur de vitesse du véhicule.

Bon ↓

Vérifier que le faisceau ne soit ni en circuit ouvert ni cout-circuité entre les instruments combinés et le capteur de vitesse du véhicule.

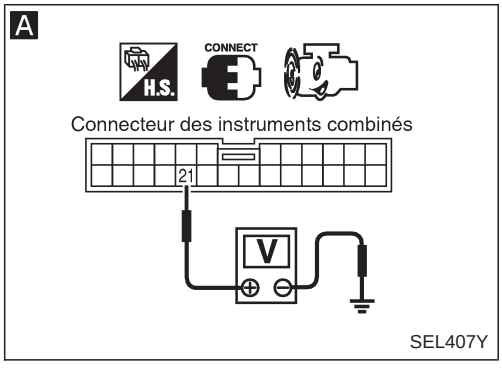

INSPECTION/SIGNAL DE REGIME MOTEUR

A

VERIFIER SORTIE ECM.
1. Démarrer le moteur.
2. Vérifier la tension entre les bornes (21) (W) des instruments combinés et la masse au ralenti et à 2 000 tr/mn.
   Tr/mn élevé = tension élevée
   Tr/mn faible = tension basse
   La tension variera en fonction du régime moteur.

Bon → Le signal de régime moteur est bon.

Mauvais ↓

Vérifier les points suivants.
- Faisceau en circuit ouvert ou court-circuit entre l'ECM et les instruments combinés.

Simpo PDF Merge and Split Unregistered Version - http://www.simpopdf.com

Diagnostics de défaut/Avec compte-tours (Suite)

INSPECTION/BOITIER DE CAPTEURS DE NIVEAU DE CARBURANT

A

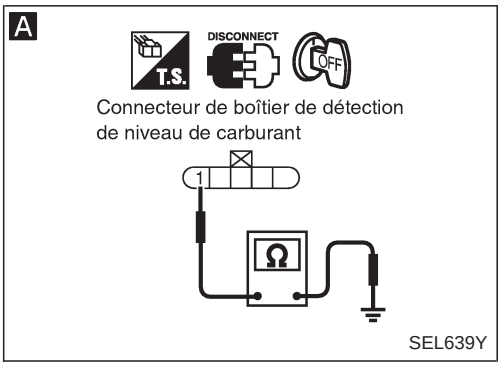

B

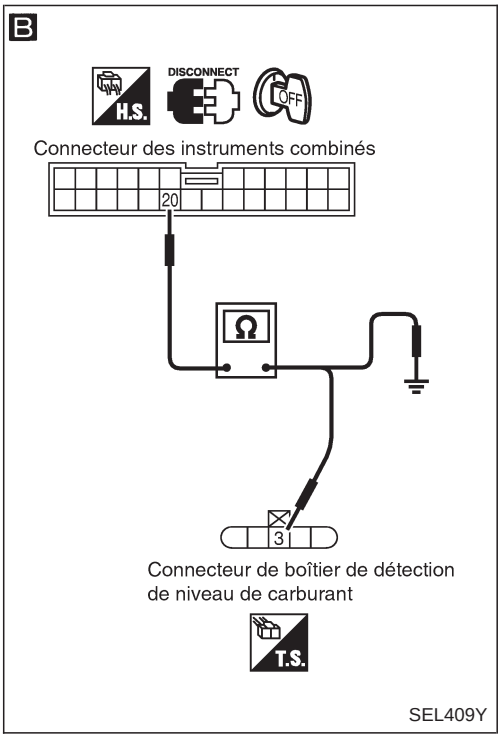

A

VERIFIER LE CIRCUIT DE MISE A LA MASSE DU BOITIER DU CAPTEUR DE NIVEAU DE CARBURANT.
Vérifier la continuité du faisceau entre la borne ① (B) de connecteur C3 du boîtier du capteur de niveau de carburant et la masse
Il doit y avoir continuité.

Mauvais → Réparer le faisceau ou le connecteur.

Bon ↓

CONTROLE DES BOITIERS DE JAUGE
Se référer à la section EL "BOITIER DE CAPTEURS DE NIVEAU DE CARBURANT" du manuel de réparation, n° de publication SM7F-0D22G1.

Mauvais → Réparer ou remplacer. Se référer à la section FE du manuel de réparation, n° de publication SM7F-0D22G1.

Bon ↓

B

CONTROLER LE FAISCEAU POUR DETECTER LES CIRCUITS OUVERTS OU LES COURTS-CIRCUITS

1. Débrancher le connecteur des instruments combinés et le connecteur du boîtier du capteurs de niveau de carburant.
2. Vérifier la continuité entre la borne ⑳ (Y/G) de connecteur des instruments combinés et la borne ③ (Y/G) du connecteur C3 du boîtier de capteurs de niveau.

Il doit y avoir continuité.

3. Vérifier la continuité entre la borne ⑳ (Y/G) des instruments combinés et la masse.

Il ne doit pas y avoir continuité.

Mauvais → Réparer le faisceau ou le connecteur.

Bon ↓

Le boîtier de capteurs de niveau de carburant fonctionne correctement.

Simpo PDF Merge and Split Unregistered Version - http://www.simpopdf.com

Diagnostics de défaut/Avec compte-tours (Suite)

INSPECTION/TRANSMETTEUR THERMIQUE

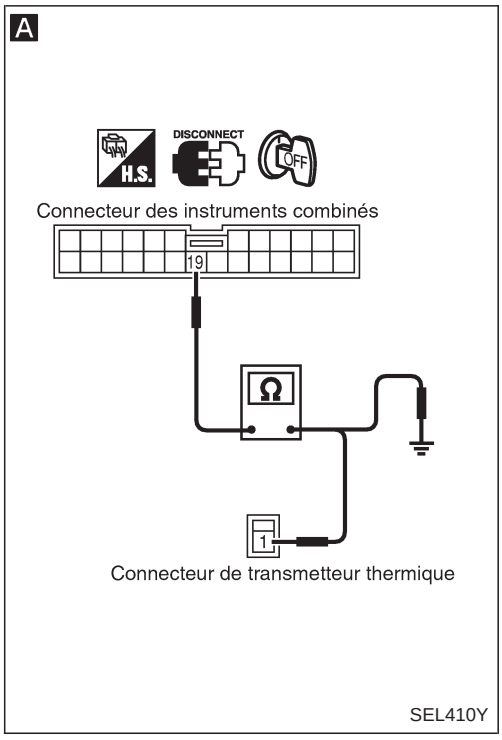

VERIFIER LE TRANSMETTEUR THERMIQUE.
Se référer à la section ''TRANSMETTEUR THERMIQUE'' dans la publication originale du manuel de réparation, N°SM7F-0D22G1.

Mauvais → Réparer ou remplacer.

Bon ↓

A

CONTROLER LE FAISCEAU POUR DETECTER LES CIRCUITS OUVERTS OU LES COURTS-CIRCUITS

1. Débrancher le connecteur des instruments combinés ainsi que le connecteur du transmetteur thermique.
2. Vérifier la continuité entre la borne ⑲ (Y/R) de connecteur des instruments combinés et la borne ① du connecteur E9, M209, E209 du transmetteur thermique.

Il doit y avoir continuité.

3. Vérifier la continuité entre la borne ⑲ (Y/R) des instruments combinés et la masse.

Il ne doit pas y avoir continuité.

Mauvais → Réparer le faisceau ou le connecteur.

Bon ↓

Le transmetteur thermique fonctionne correctement.

Simpo PDF Merge and Split Unregistered Version - http://www.simpopdf.com

Diagnostic des défauts/Sans compte-tours

VERIFICATION PRELIMINAIRE

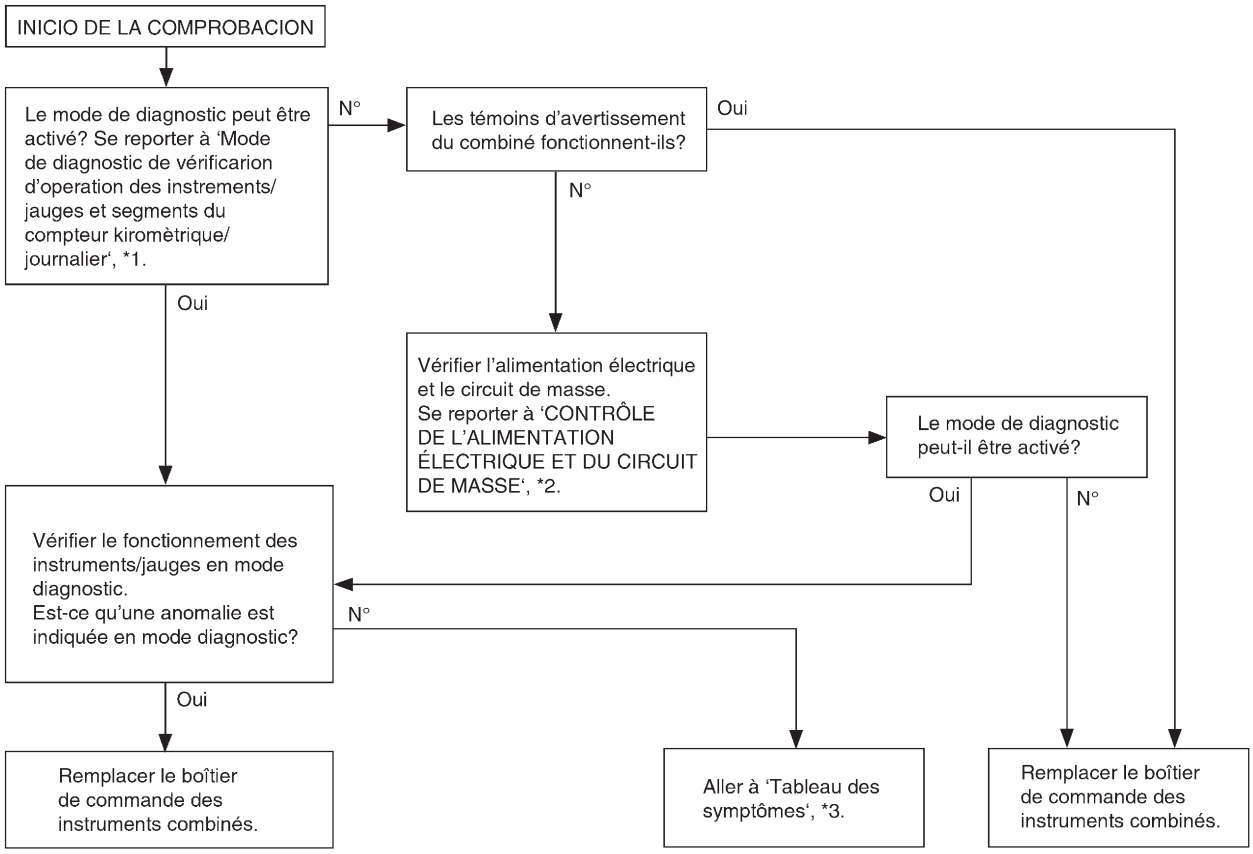

SEL269Y

*1 : Fonctionnement des instruments/ jauges et contrôle des segments de compteur kilométrique/journalier en mode de diagnostic, EL-3071

*2 : VERIFICATION DE L'ALIMENTATION ELECTRIQUE ET DU CIRCUIT DE MISE A LA MASSE (EL-0)

*3 : Tableau des symptômes (EL-0)

Simpo PDF Merge and Split Unregistered Version - http://www.simpopdf.com

Diagnostic des défauts/Sans compte-tours (Suite)

ORGANIGRAMME

Symptôme	Causes possibles	Ordre de réparation
Le compte-tours, la jauge à carburant ou la jauge de température d'eau est défectueux.	1. Signal du capteur - Signal de vitesse du véhicule - Jauge à carburant - Jauge de température d'eau 2. Boîtier de contrôle des instruments combinés	1.Vérifier le capteur de défauts des jauges et instruments. INSPECTION/ SIGNAL DE VITESSE DU VEHICULE (Se référer à la section ''Signal de vitesse du véhicule'' dans l'original du manuel de réparation.) INSPECTION/VERIFICATION DU BOITIER DE CAPTEURS DE NIVEAU DE CARBURANT/TRANSMETTEUR THERMIQUE 2. Remplacer le boîtier de contrôle des instruments combinés.
Plusieurs instruments/jauges sont défectueux. (sauf compteur kilométrique/ journalier)		

Avant de commencer le diagnostic décrit ci-dessous, effectuer la VERIFICATION PRELIMINAIRE, EL-3078

Simpo PDF Merge and Split Unregistered Version - http://www.simpopdf.com

Diagnostic des défauts/Sans compte-tours (Suite)

CONTROLE DE L'ALIMENTATION ELECTRIQUE ET DU CIRCUIT DE MISE A LA MASSE

Vérification du circuit de l'alimentation électrique

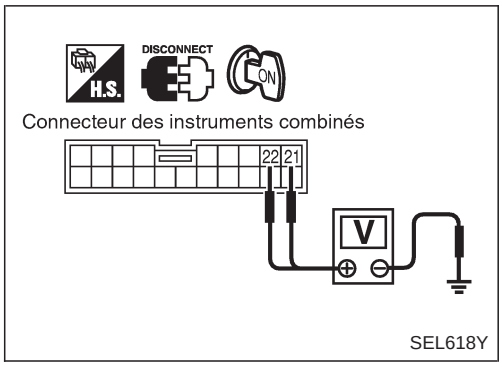

SEL618Y

Bornes		Position du contact d'allumage		
⊕	⊖	OFF	ACC	ON
㉑ (R/G)	Masse	Tension de la batterie	Tension de la batterie	Tension de la batterie
㉒ (W/B)	Masse	0V	0V	Tension de la batterie

Si le résultat n'est pas satisfaisant, vérifier les points suivants.

- Fusible de 10A [n° 6, situé dans le boîtier à fusibles(J/B)].
- Fusible de 10A [n° 11, situé dans le boîtier à fusibles(J/B)].
- Faisceau en circuit ouvert ou court-circuité entre le fusible et les instruments combinés

Vérification du circuit de masse

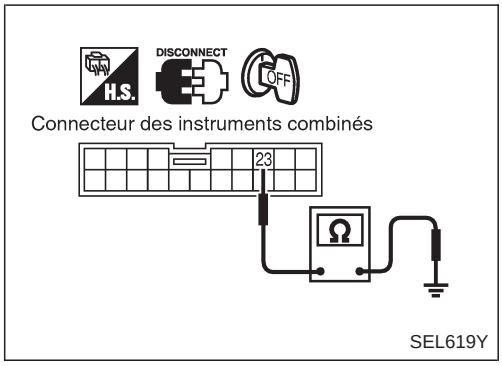

SEL619Y

Bornes	Il y a continuité
㉓ - Masse (B)	Oui

Simpo PDF Merge and Split Unregistered Version - http://www.simpopdf.com

Diagnostic des défauts/Sans compte-tours (Suite)

INSPECTION/CAPTEUR DE VITESSE DU VEHICULE

Sans ABS pour le Moyen-Orient et sauf pour le Moyen-Orient

A

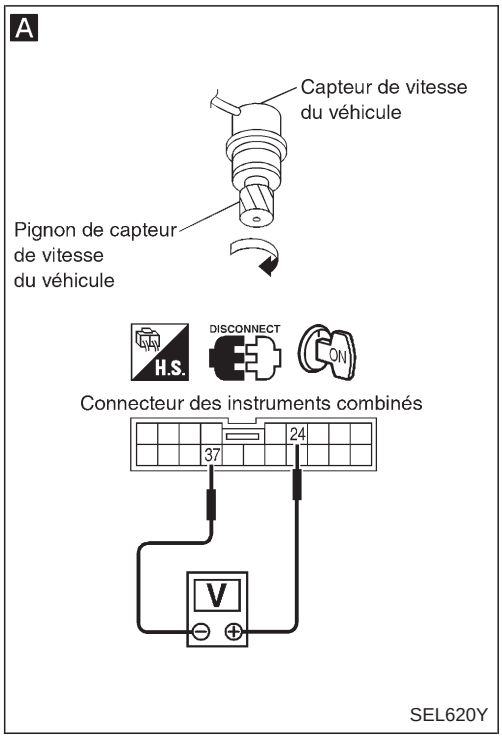

VERIFICATION DE LA SORTIE DU CAPTEUR DE VITESSE DU VEHICULE.

1. Déposer le capteur de vitesse du véhicule de la transmission.
2. Vérifier la tension entre les bornes ㉔ (W) et ㊲ (R) de connecteur (N10) des instruments combinés tout en tournant rapidement le pignon du capteur de vitesse.
   Tension : Environ 0,5 V

Bon → Le capteur de vitesse du véhicule fonctionne correctement.

Mauvais ↓

B

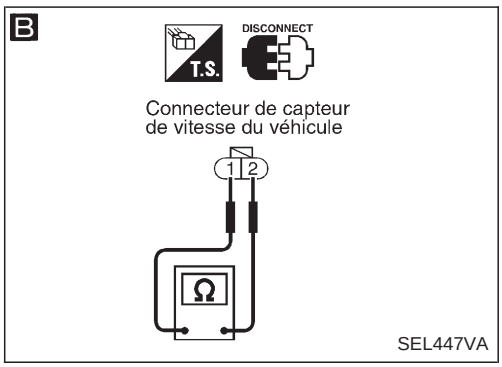

VERIFICATION DU CAPTEUR DE VITESSE DU VEHICULE.

Vérifier la résistance entre les bornes ① (W) et ② (R) de connecteur du capteur de vitesse du véhicule. (E223)
Résistance : Environ 250Ω

Mauvais → Remplacer le capteur de vitesse du véhicule.

Bon ↓

Vérifier que le faisceau ne soit ni en circuit ouvert ni en court-circuit entre les instruments combinés et le capteur de vitesse du véhicule.

Simpo PDF Merge and Split Unregistered Version - http://www.simpopdf.com

Diagnostic des défauts/Sans compte-tours (Suite)

INSPECTION/BOITIER DE CAPTEURS DE NIVEAU DE CARBURANT

A

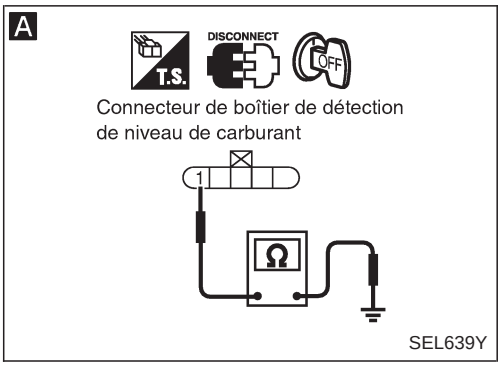

B

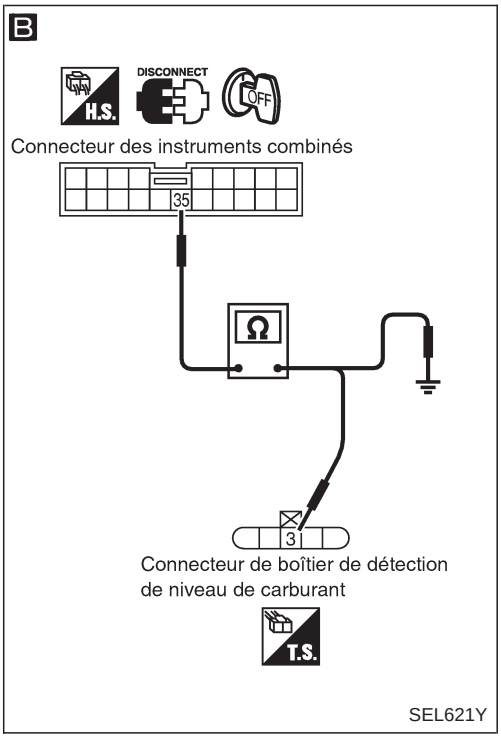

A

VERIFIER LE CIRCUIT DE MISE A LA MASSE DU BOITIER DU CAPTEUR DE NIVEAU DE CARBURANT.
Vérifier la continuité du faisceau entre la borne ① (B) de connecteur C3 du boîtier du capteur de niveau de carburant et la masse.
Il doit y avoir continuité.

Mauvais → Réparer le faisceau ou le connecteur.

Bon ↓

CONTROLE DES BOITIERS DE JAUGE
Se référer à la section EL "BOITIER DE CAPTEURS DE NIVEAU DE CARBURANT" dans la publication originale du manuel de réparation, N°SM7F-0D22G1.

Mauvais → Réparer ou remplacer. Se référer à la section FE de la publication originale du manuel de réparation, N° SM7F-0D22G1.

Bon ↓

B

CONTROLER LE FAISCEAU POUR DETECTER LES CIRCUITS OUVERTS OU LES COURTS-CIRCUITS
1. Débrancher le connecteur des instruments combinés et le connecteur du boîtier du capteur de niveau de carburant.
2. Vérifier la continuité entre la borne ㉟ (Y/G) du connecteur des instruments combinés et la borne ③ (Y/G) du connecteur C3 de boîtier de capteurs de niveau de carburant.

Il doit y avoir continuité.

3. Vérifier la continuité du faisceau entre la borne 35(Y/G) des instruments combinés et la masse.

Il ne doit pas y avoir continuité.

Mauvais → Réparer le faisceau ou le connecteur.

Bon ↓

Le boîtier de capteurs de niveau de carburant fonctionne correctement.

Simpo PDF Merge and Split Unregistered Version - http://www.simpopdf.com

Diagnostic des défauts/Sans compte-tours (Suite)

INSPECTION/TRANSMETTEUR THERMIQUE

A

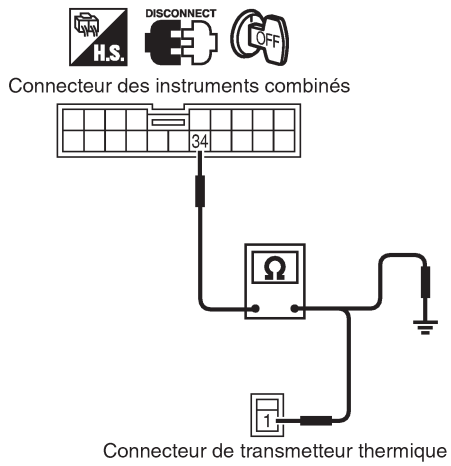

SEL622Y

VERIFIER LE TRANSMETTEUR THERMIQUE.
Se référer à la section EL ''TRANSMETTEUR THERMIQUE'' dans la publication originale du manuel de réparation, N°SM7F-0D22G1.

Mauvais → Réparer ou remplacer.

Bon ↓

A

CONTROLER LE FAISCEAU POUR DETECTER LES CIRCUITS OUVERTS OU LES COURTS-CIRCUITS

1. Débrancher le connecteur des instruments combinés ainsi que le connecteur du transmetteur thermique.
2. Vérifier la continuité entre la borne ㉞ (Y/R) du connecteur des instruments combinés et la borne ① de connecteur du transmetteur thermique E9, M209, E209.

Il doit y avoir continuité.

3. Vérifier la continuité entre la borne ㉞ (Y/R) des instruments combinés et la masse.

Il ne doit pas y avoir continuité.

Mauvais → Réparer le faisceau ou le connecteur.

Bon ↓

Le transmetteur thermique fonctionne correctement.

Simpo PDF Merge and Split Unregistered Version - http://www.simpopdf.com

Schéma/Avec compte-tours

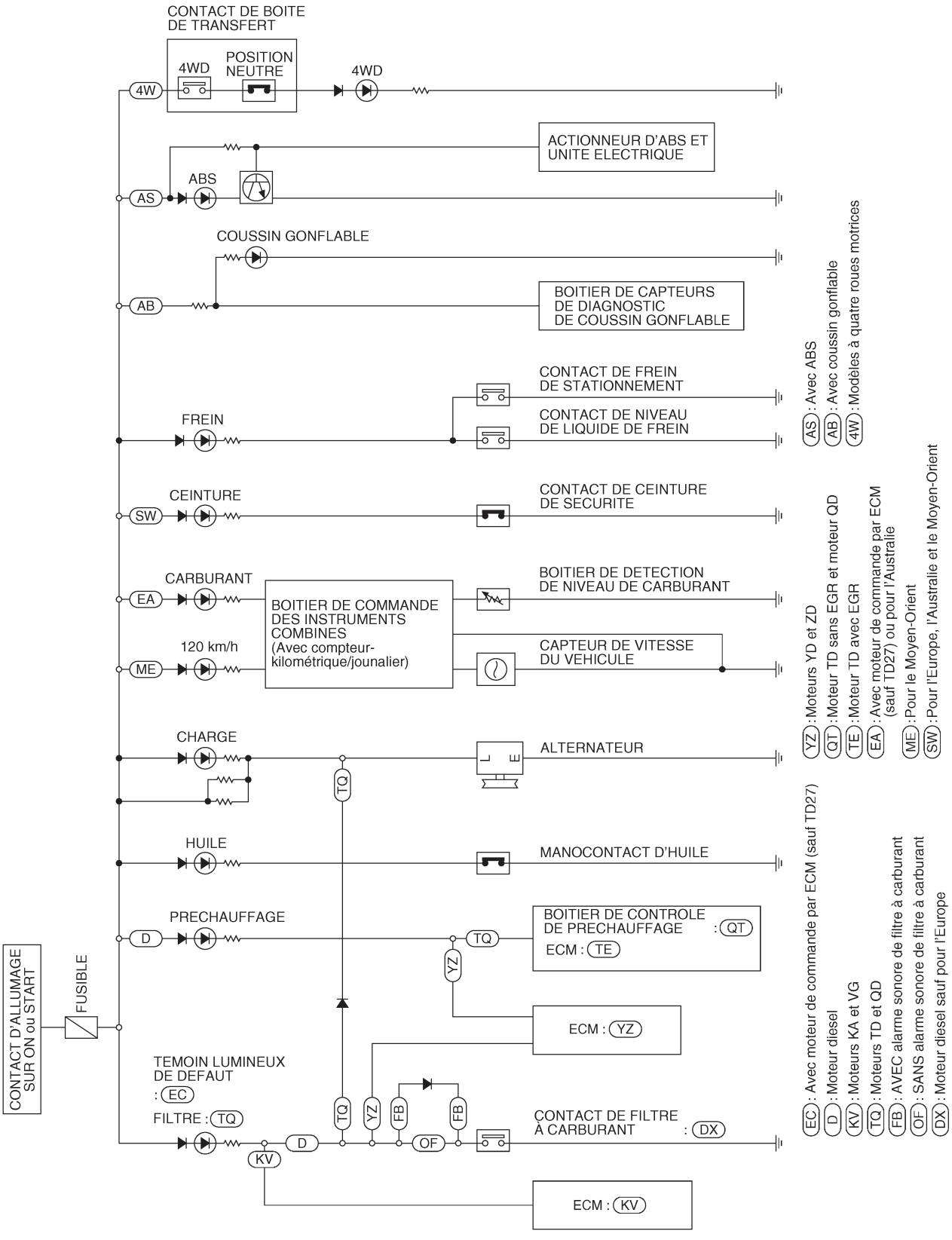

GEL399A

Simpo PDF Merge and Split Unregistered Version - http://www.simpopdf.com

Schéma/Sans compte-tours

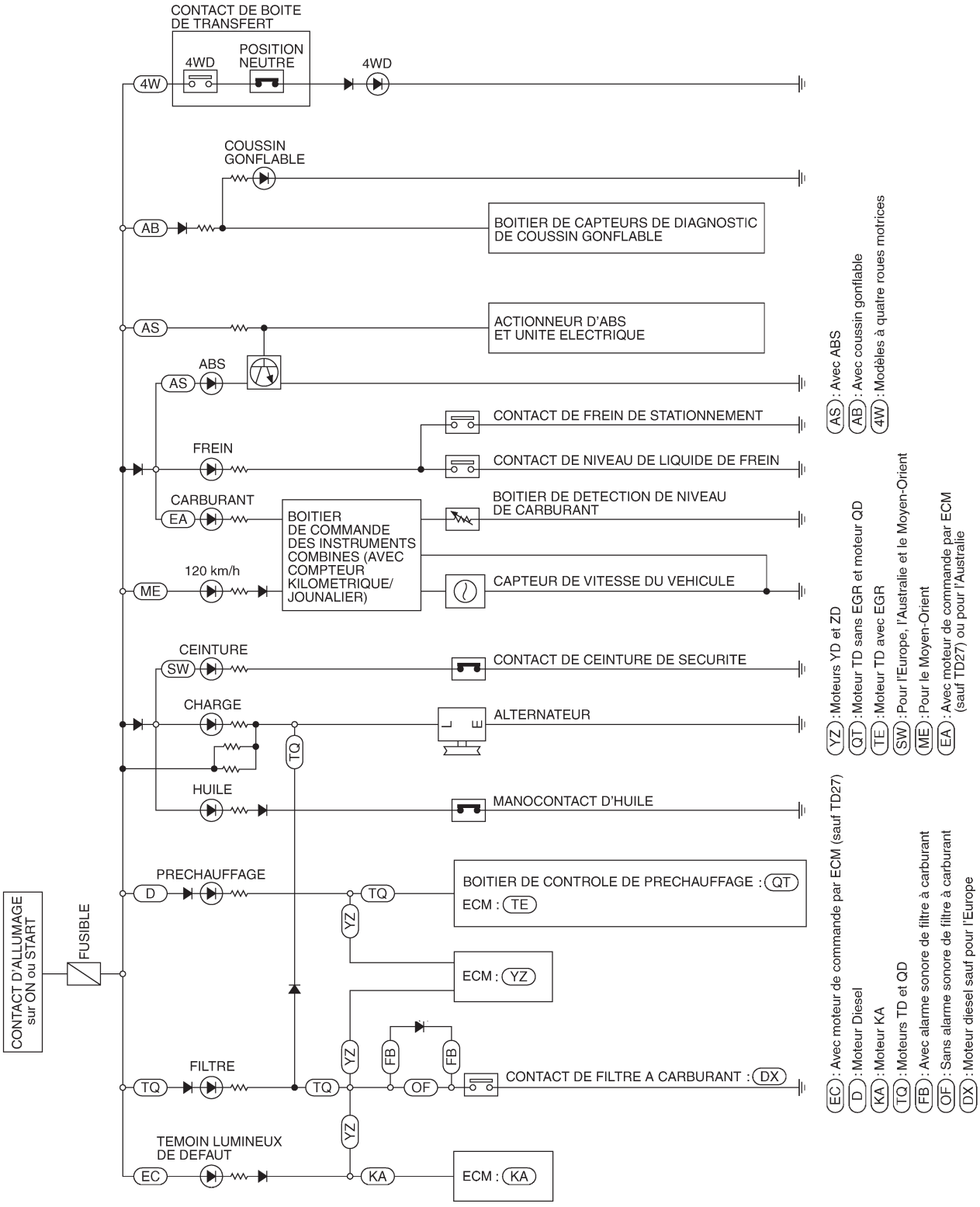

GEL408A

Simpo PDF Merge and Split Unregistered Version - http://www.simpopdf.com

Schéma de câblage — WARN —/Moteur essence avec compte-tours

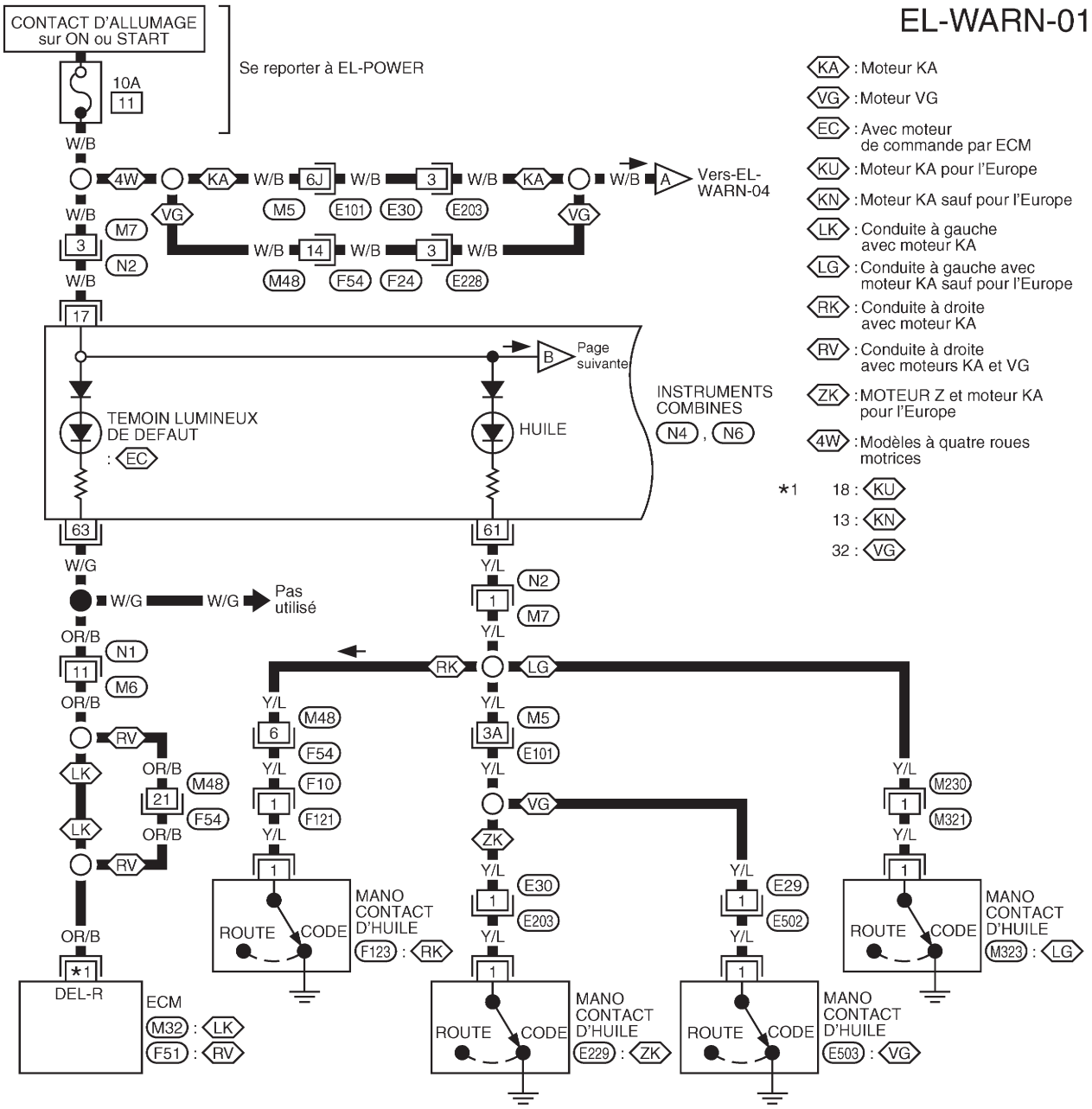

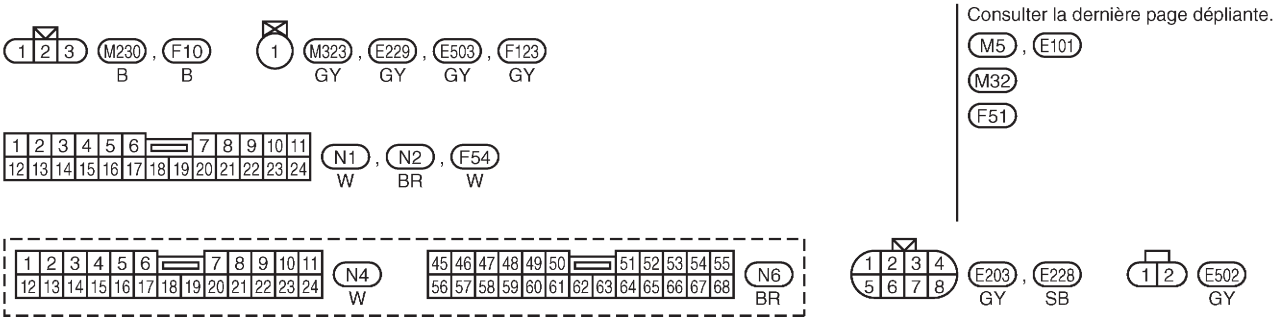

GEL400A

Simpo PDF Merge and Split Unregistered Version - http://www.simpopdf.com

Schéma de câblage — WARN —/Moteur essence avec compte-tours (Suite)

EL-WARN-02

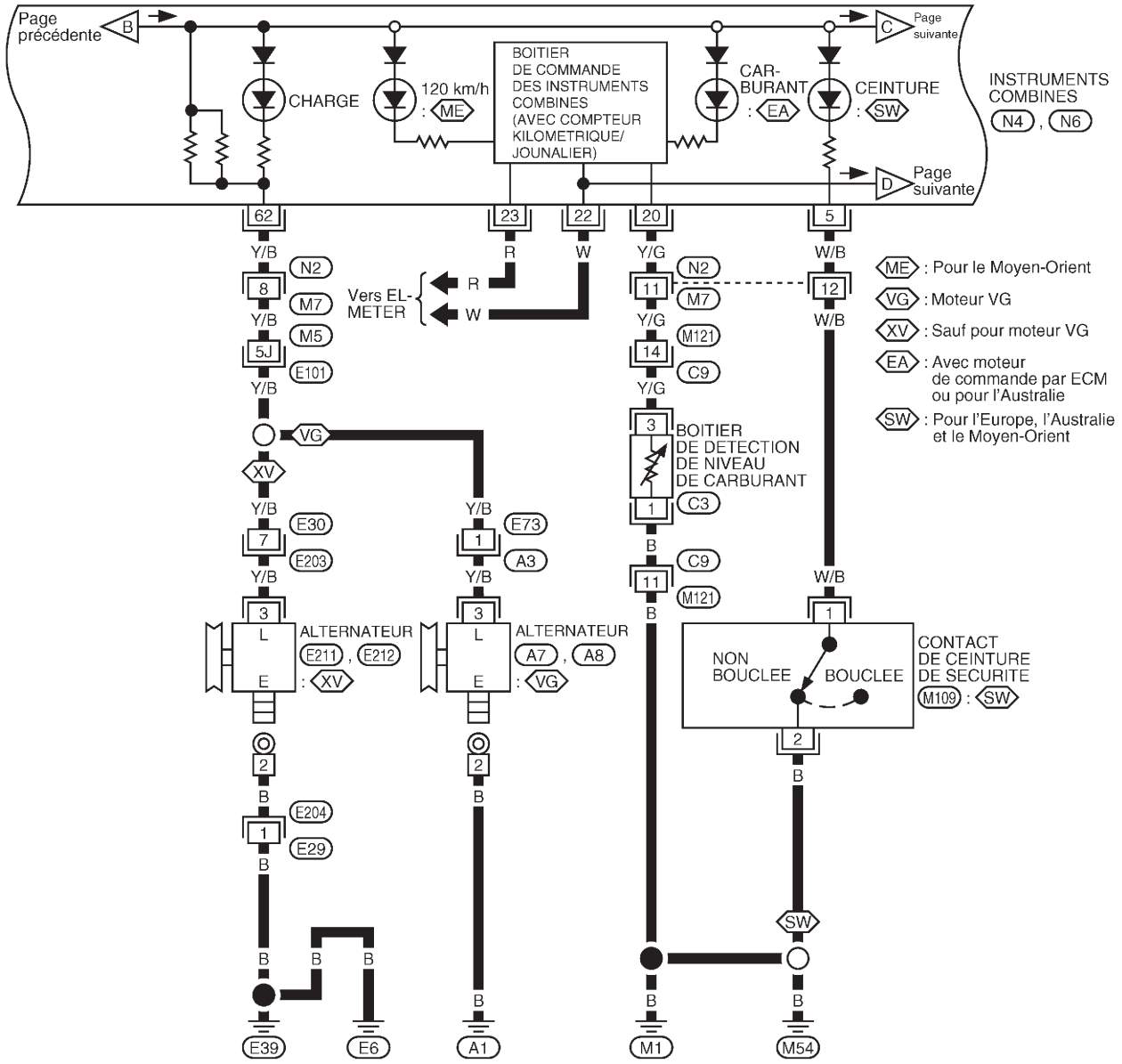

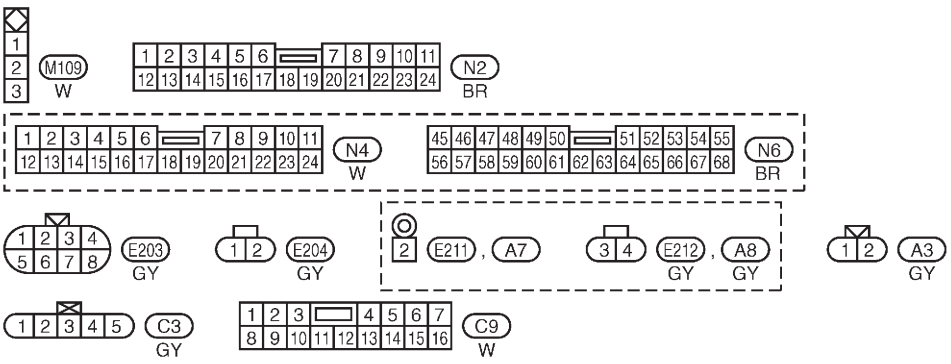

Consulter la dernière page dépliante.
M5, E101

GEL401A

Simpo PDF Merge and Split Unregistered Version - http://www.simpopdf.com

Schéma de câblage — WARN —/Moteur essence avec compte-tours (Suite)

EL-WARN-03

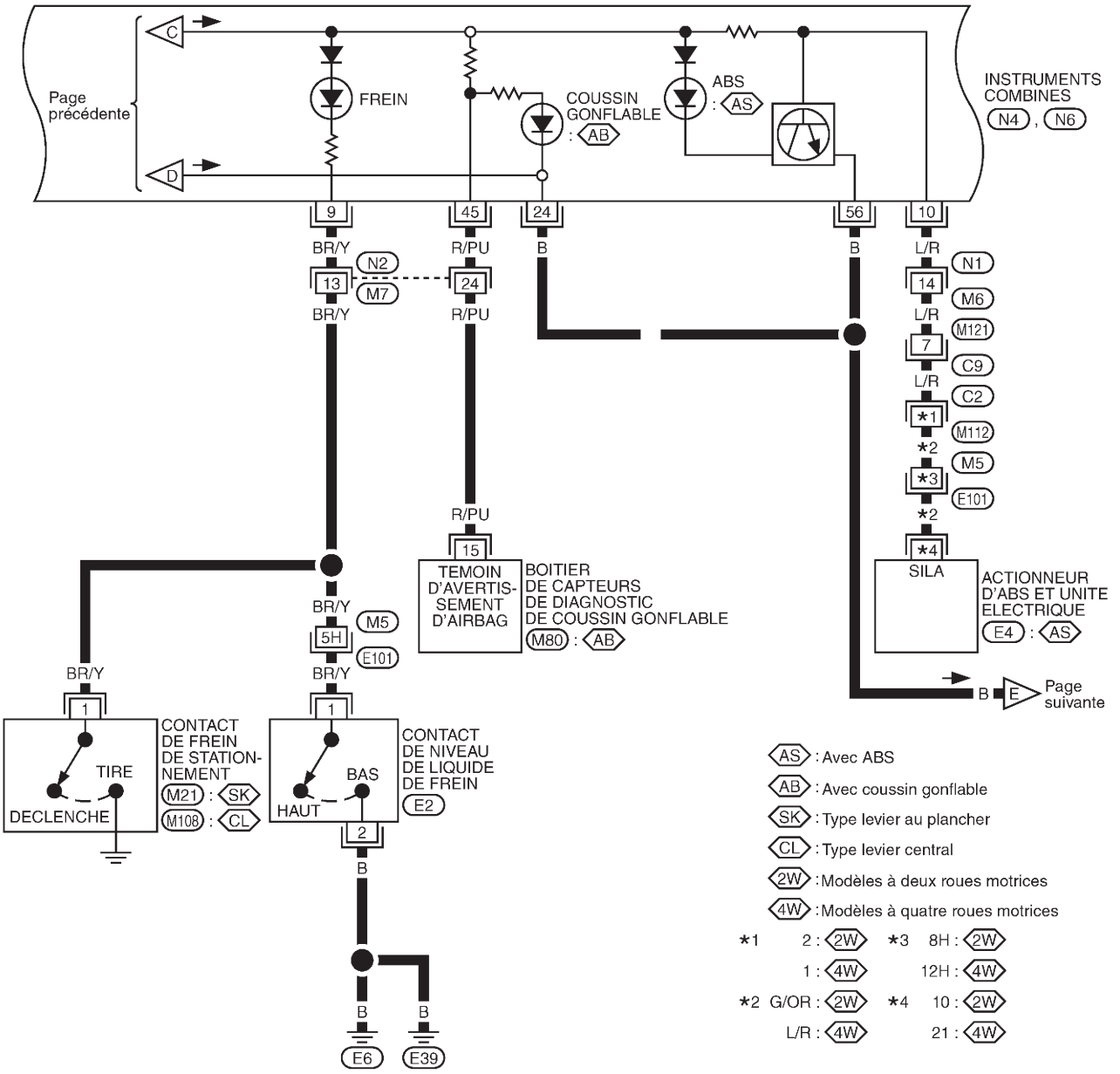

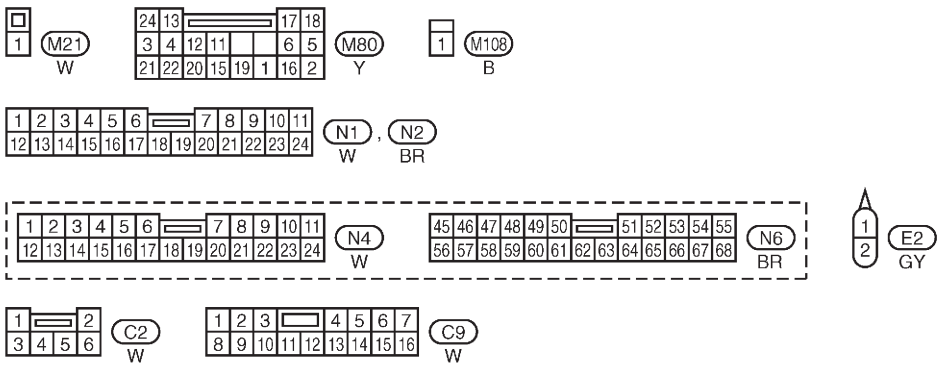

Consulter la dernière page dépliante.
M5, E101
E4

Simpo PDF Merge and Split Unregistered Version - http://www.simpopdf.com

Schéma de câblage — WARN —/Moteur essence avec compte-tours (Suite)

EL-WARN-04

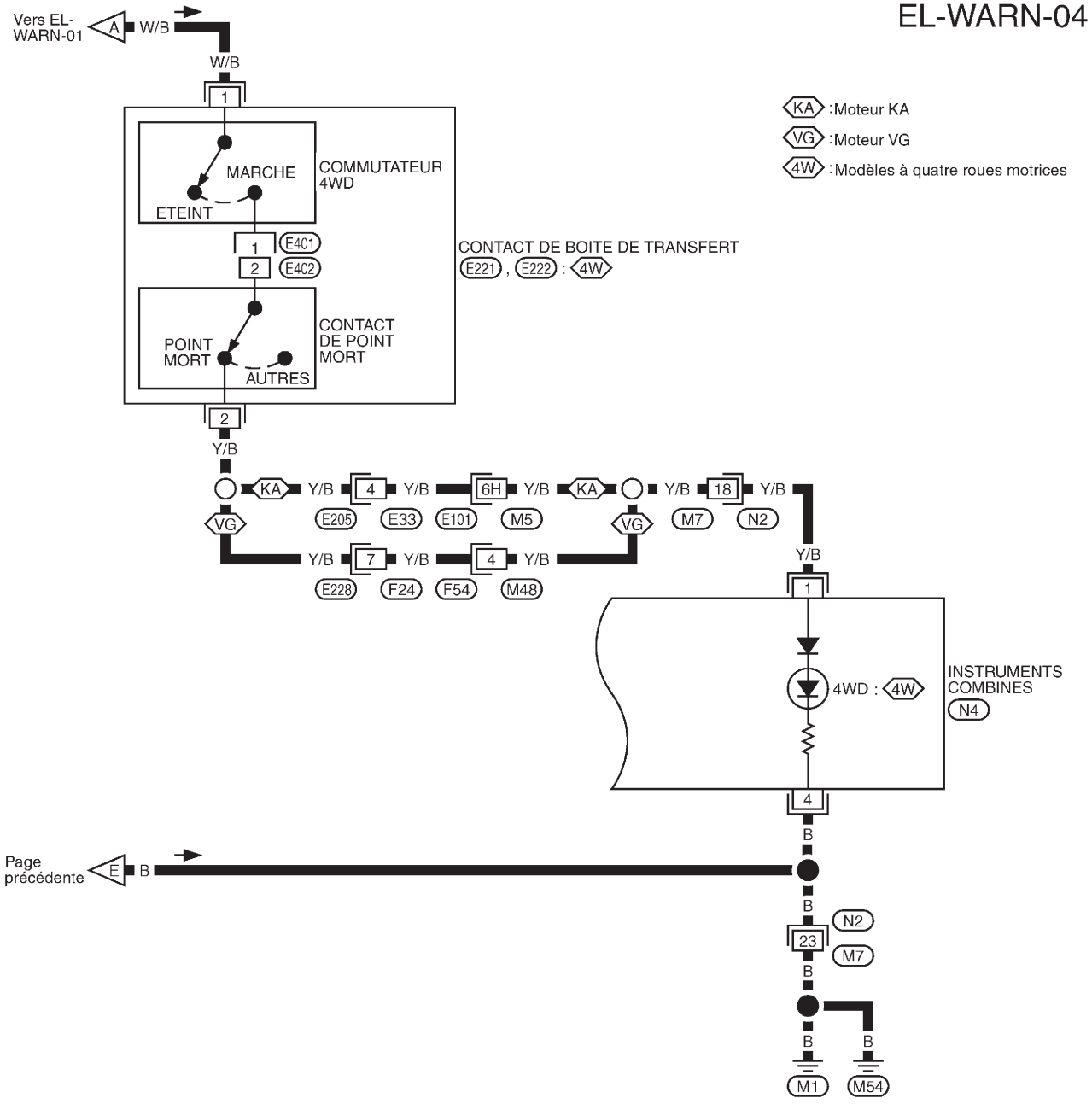

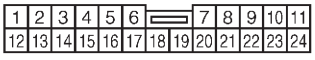

N2 , N4 , F54
BR W W

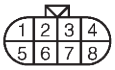

E205 , E228
SB SB

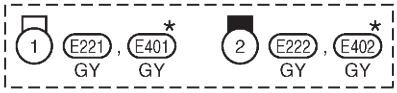

*: Ce connecteur ne figure pas dans la 'DISPOSITION DES FAISCEAUX'.

Consulter la dernière page dépliante.
M5 , E101

GEL403A

Simpo PDF Merge and Split Unregistered Version - http://www.simpopdf.com

Schéma de câblage — WARN —/Moteur essence sans compte-tours

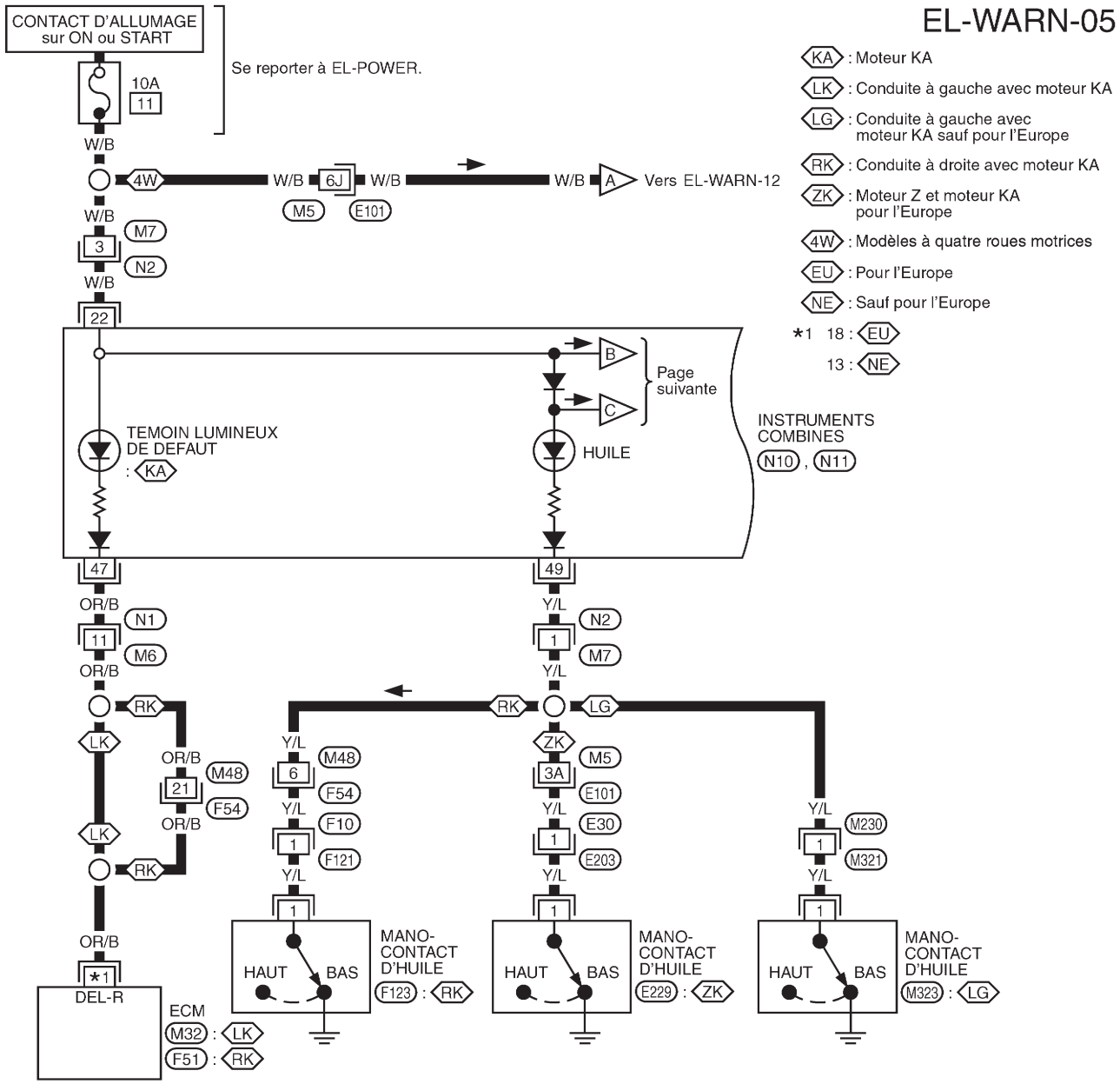

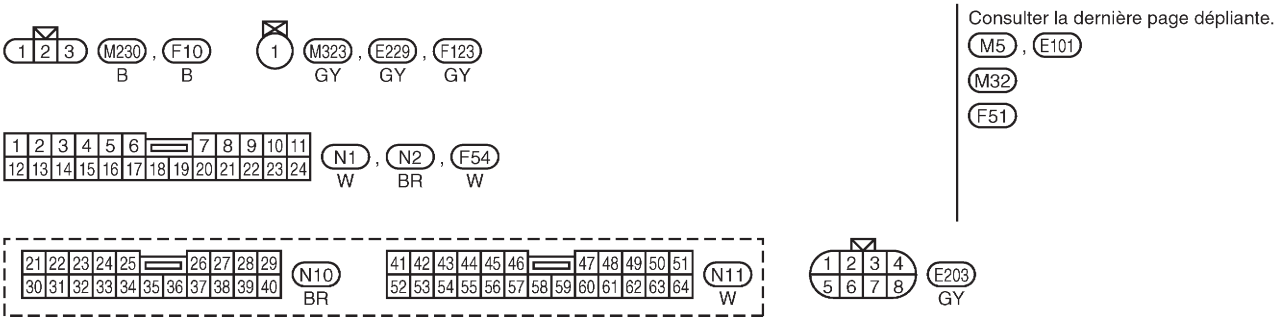

Consulter la dernière page dépliante.
M5 , E101
M32
F51

GEL409A

Simpo PDF Merge and Split Unregistered Version - http://www.simpopdf.com

Schéma de câblage — WARN —/Moteur essence sans compte-tours (Suite)

EL-WARN-06

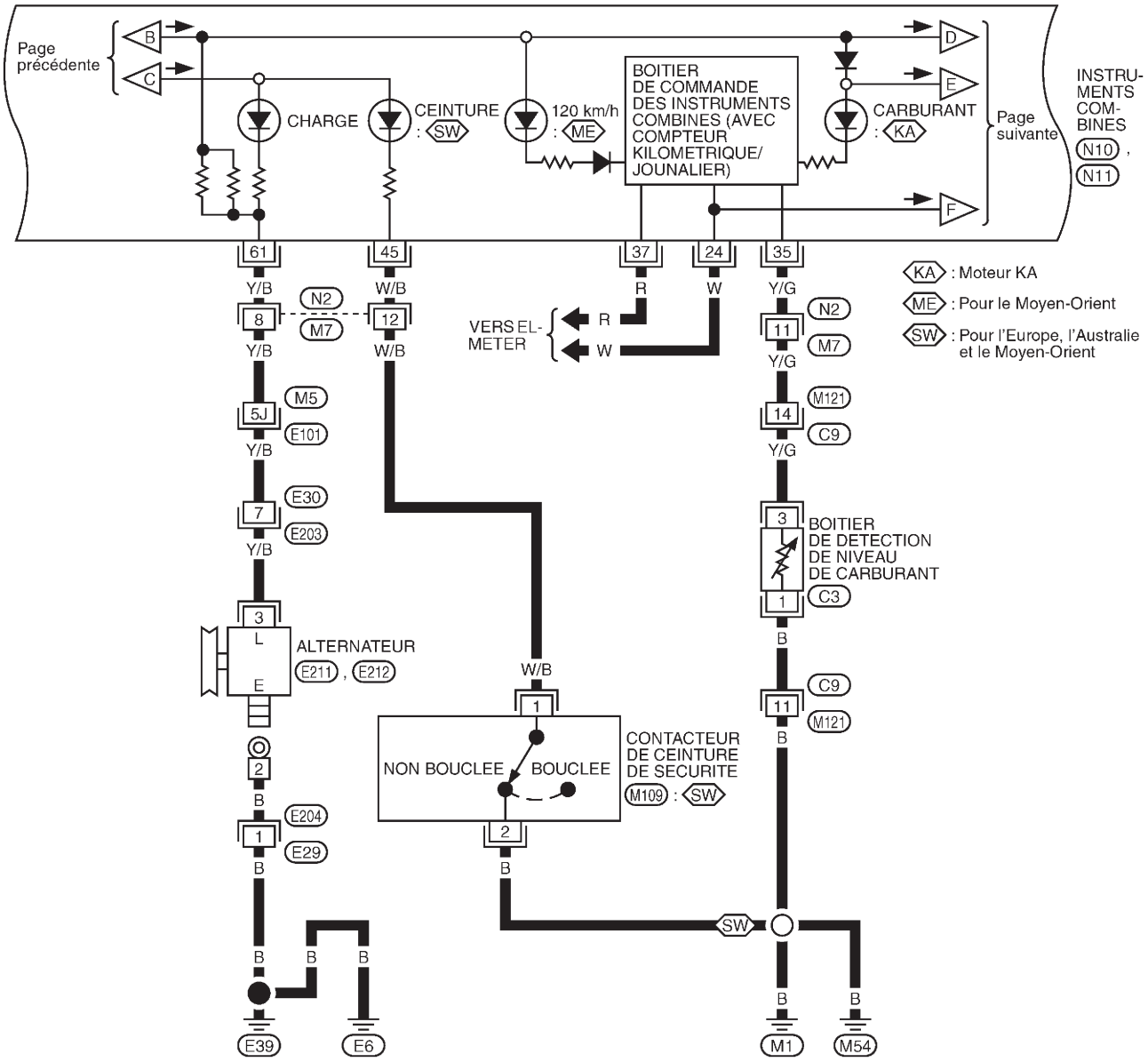

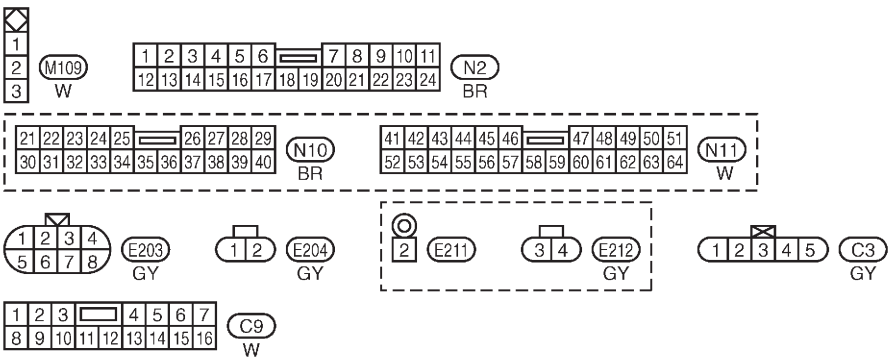

Consulter la dernière page dépliante.
M5, E101

GEL410A

Simpo PDF Merge and Split Unregistered Version - http://www.simpopdf.com

Schéma de câblage — WARN —/Moteur essence sans compte-tours (Suite)

EL-WARN-07

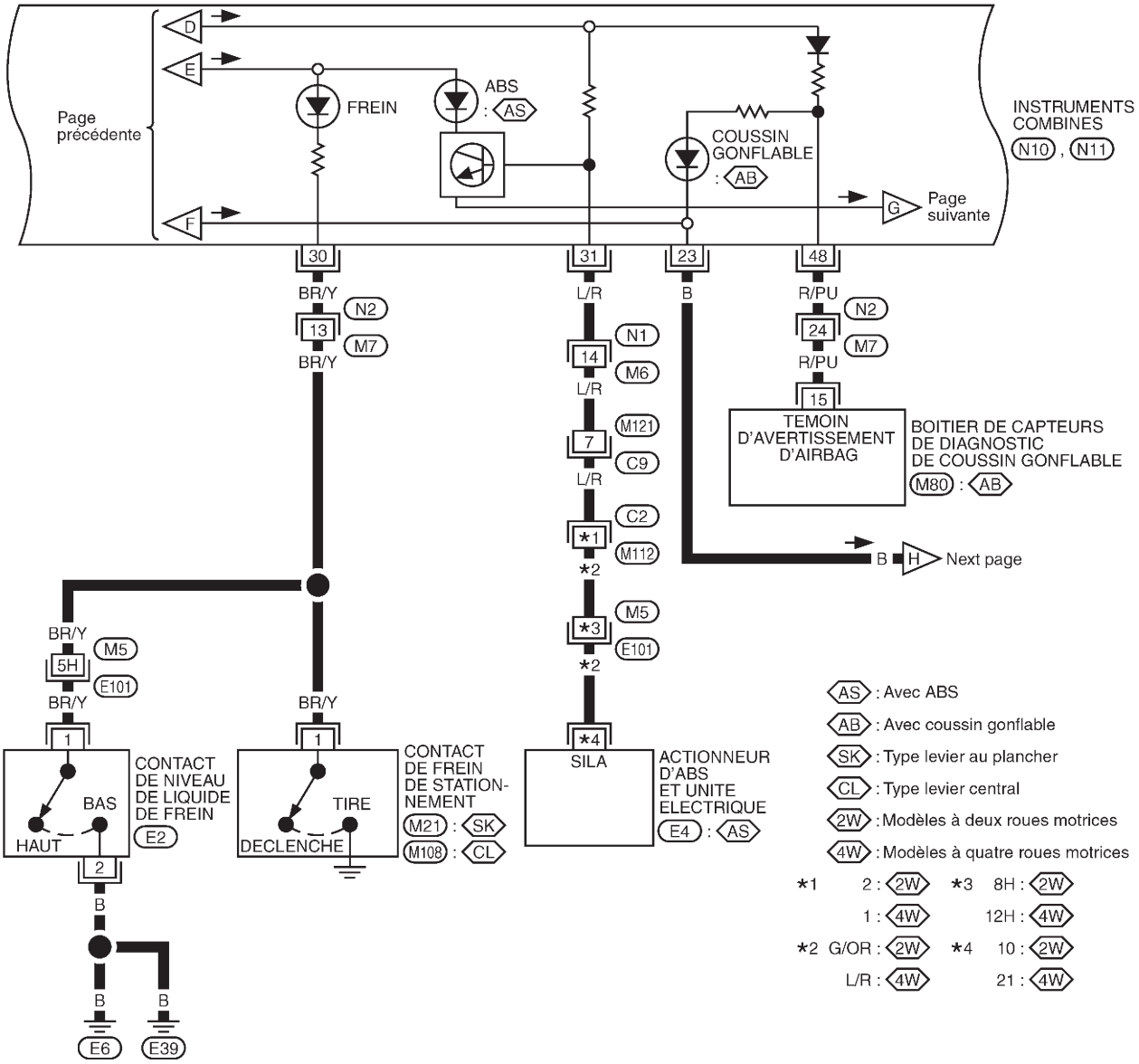

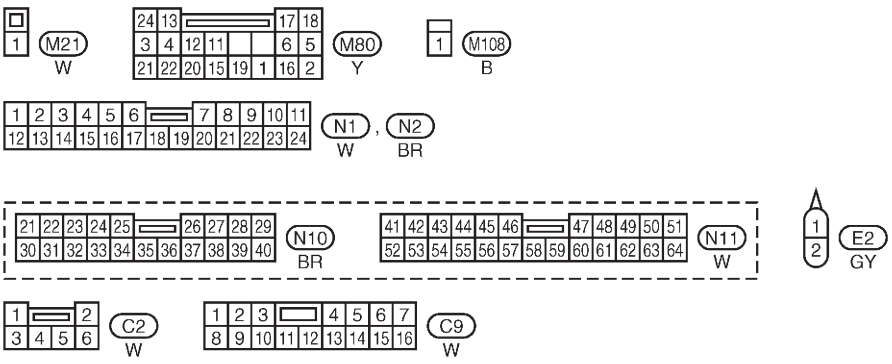

Consulter la dernière page dépliante.
M5 , E101
E4

GEL411A

Simpo PDF Merge and Split Unregistered Version - http://www.simpopdf.com

Schéma de câblage — WARN —/Moteur essence sans compte-tours (Suite)

EL-WARN-08

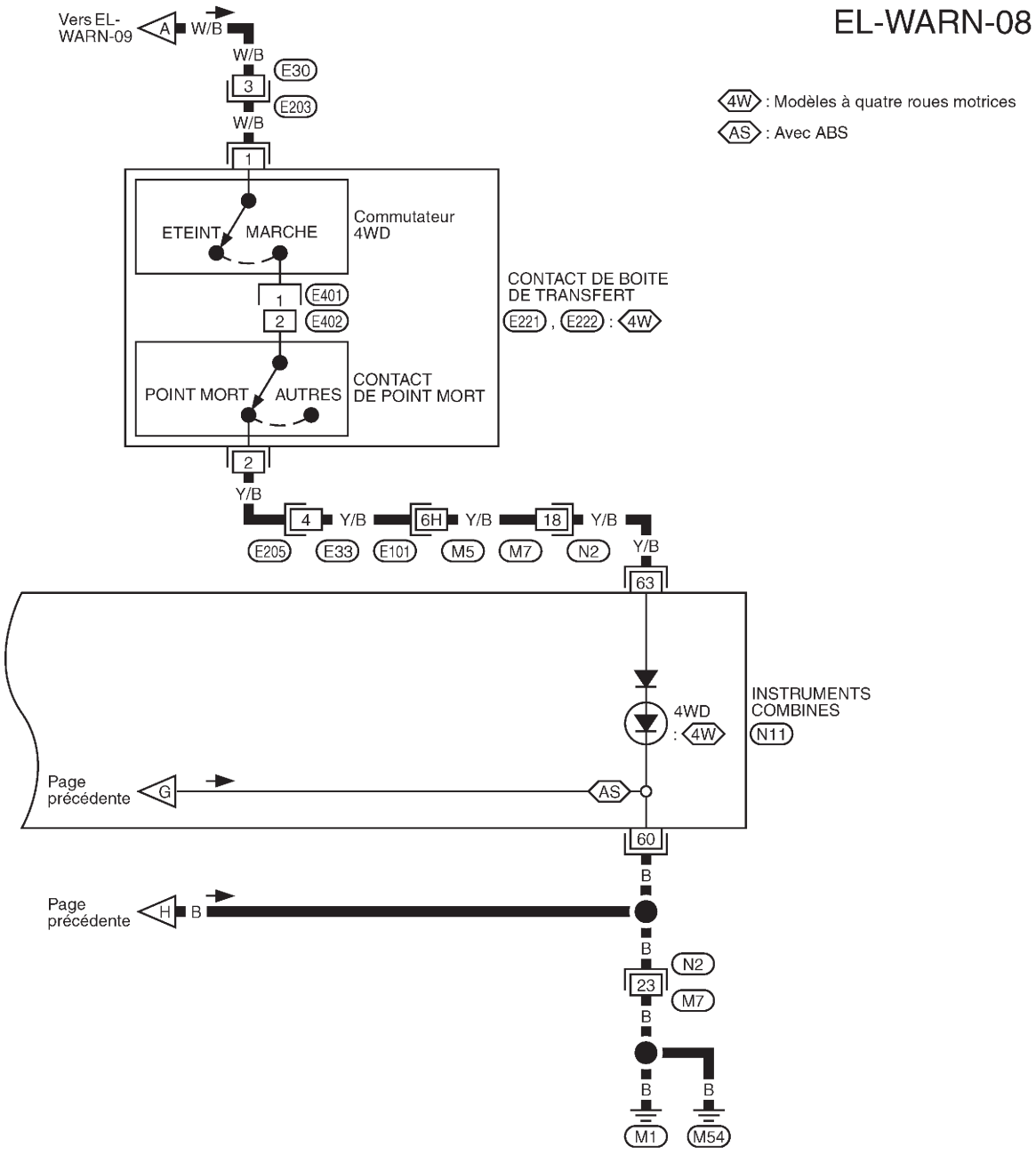

4W : Modèles à quatre roues motrices

AS : Avec ABS

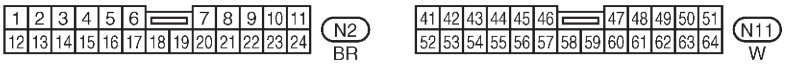



*: Ce connecteur ne figure pas dans la 'DISPOSITION DES FAISCEAUX'.

Consulter la dernière page dépliante.

M5 , E101

GEL412A

Simpo PDF Merge and Split Unregistered Version - http://www.simpopdf.com

Schéma de câblage — WARN —/Moteur diesel avec compte-tours

EL-WARN-09

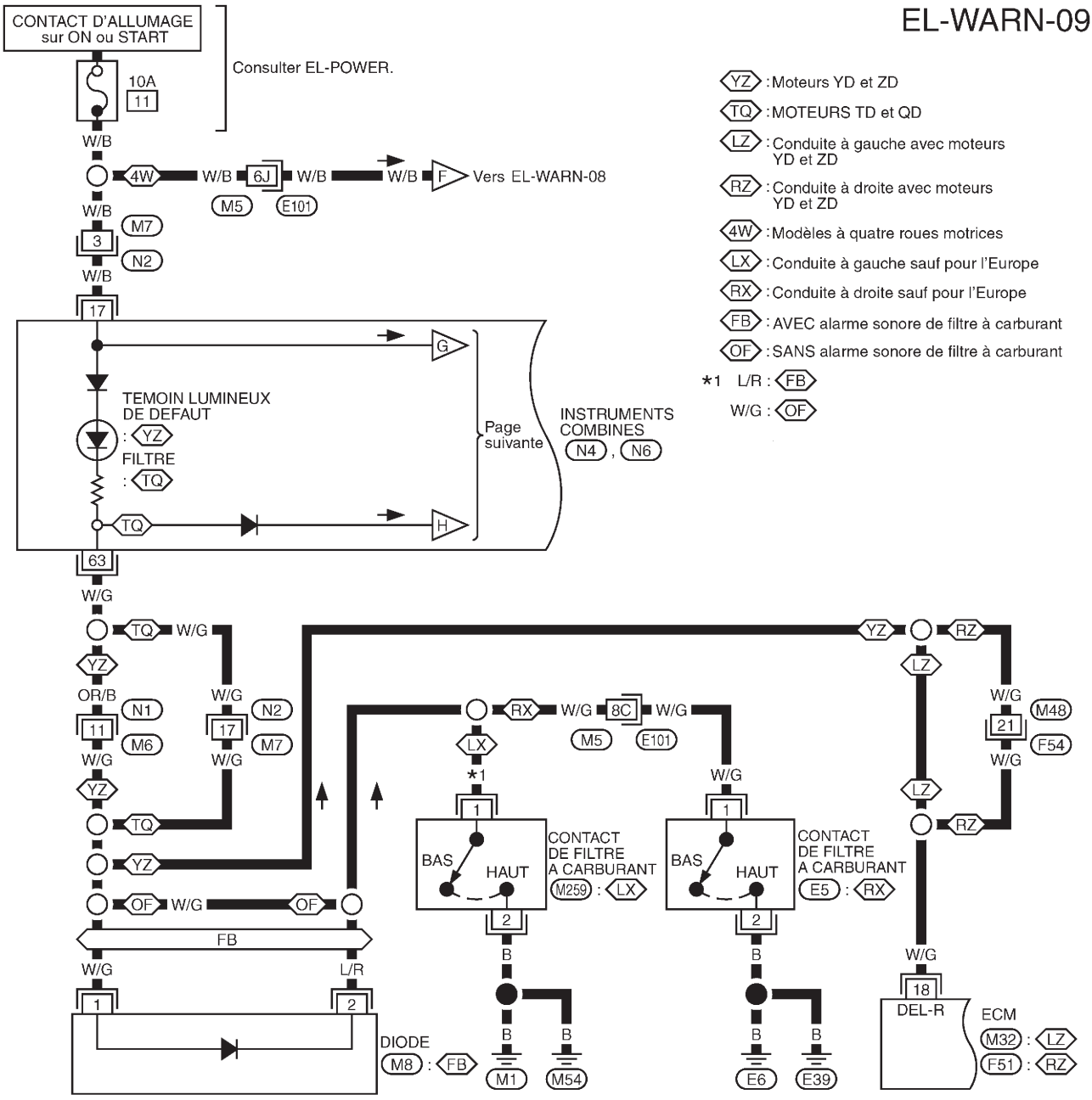

YZ : Moteurs YD et ZD
TQ : MOTEURS TD et QD
LZ : Conduite à gauche avec moteurs YD et ZD
RZ : Conduite à droite avec moteurs YD et ZD
4W : Modèles à quatre roues motrices
LX : Conduite à gauche sauf pour l'Europe
RX : Conduite à droite sauf pour l'Europe
FB : AVEC alarme sonore de filtre à carburant
OF : SANS alarme sonore de filtre à carburant
*1 L/R : FB
W/G : OF

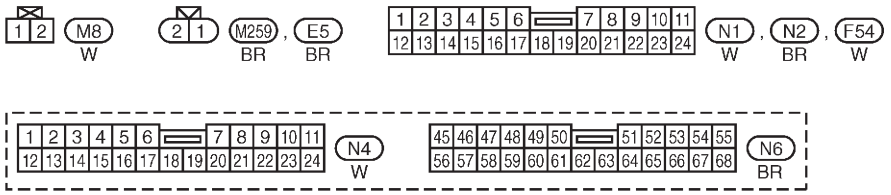

Consulter la dernière page dépliante.
M5 , E101
M32
F51

GEL404A

Simpo PDF Merge and Split Unregistered Version - http://www.simpopdf.com

Schéma de câblage — WARN —/Moteur diesel avec compte-tours (Suite)

EL-WARN-10

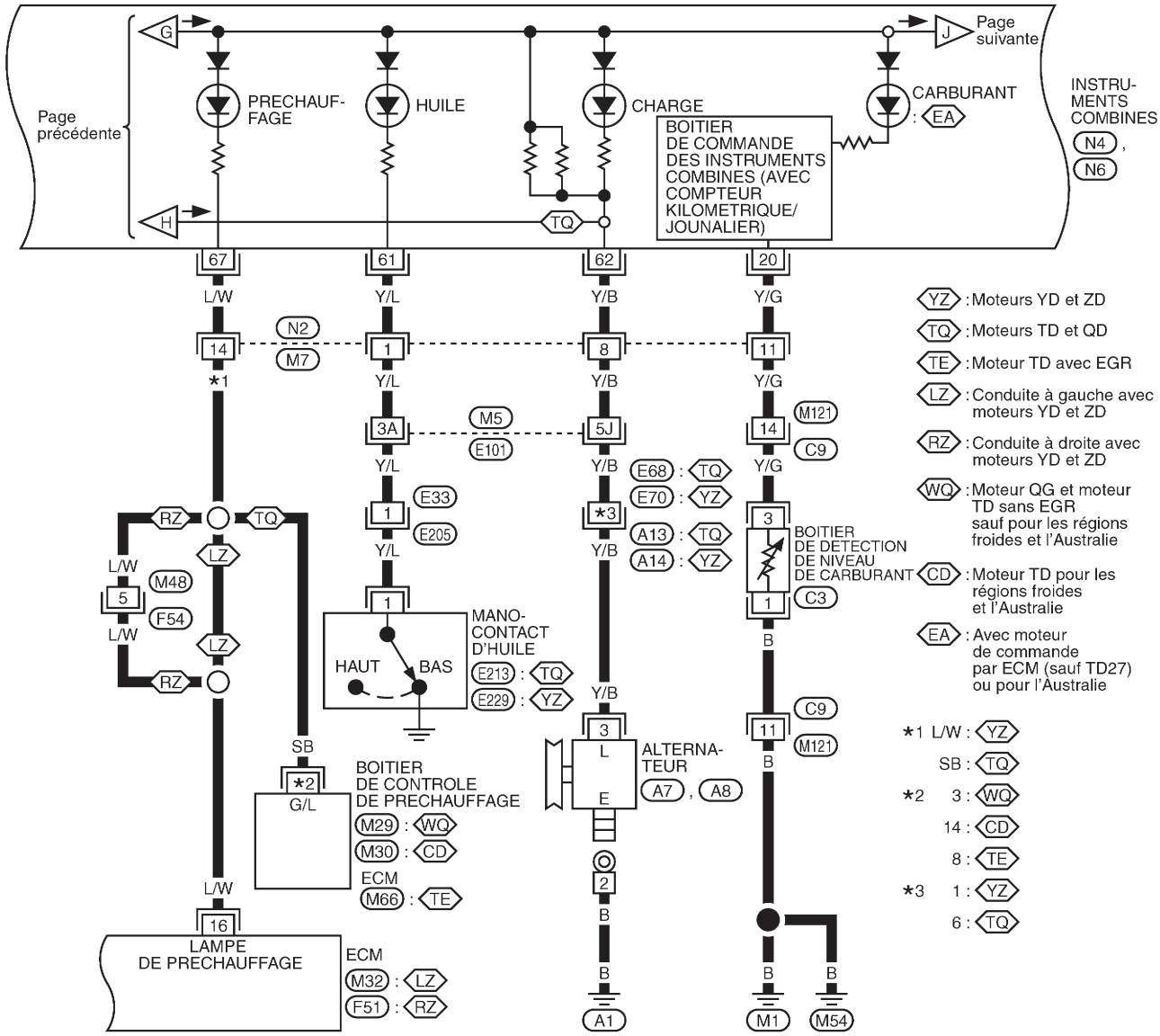

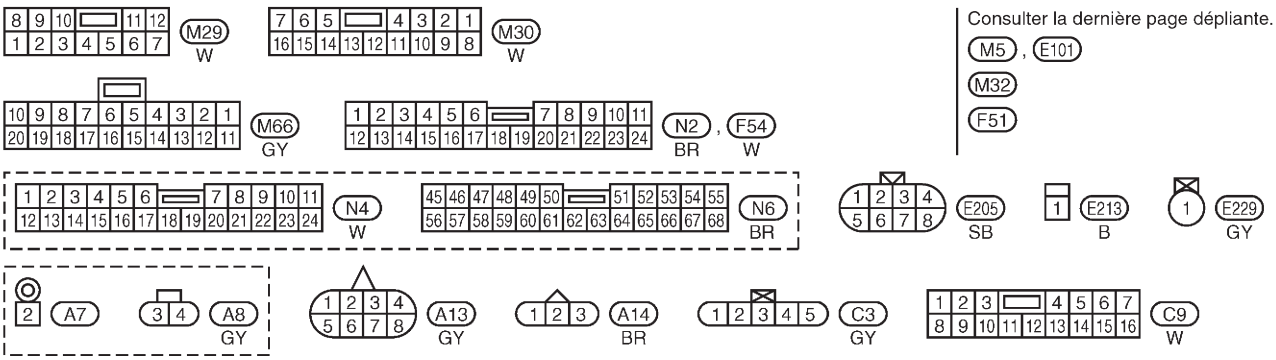

GEL405A

Simpo PDF Merge and Split Unregistered Version - http://www.simpopdf.com

Schéma de câblage — WARN —/Moteur diesel avec compte-tours (Suite)

EL-WARN-11

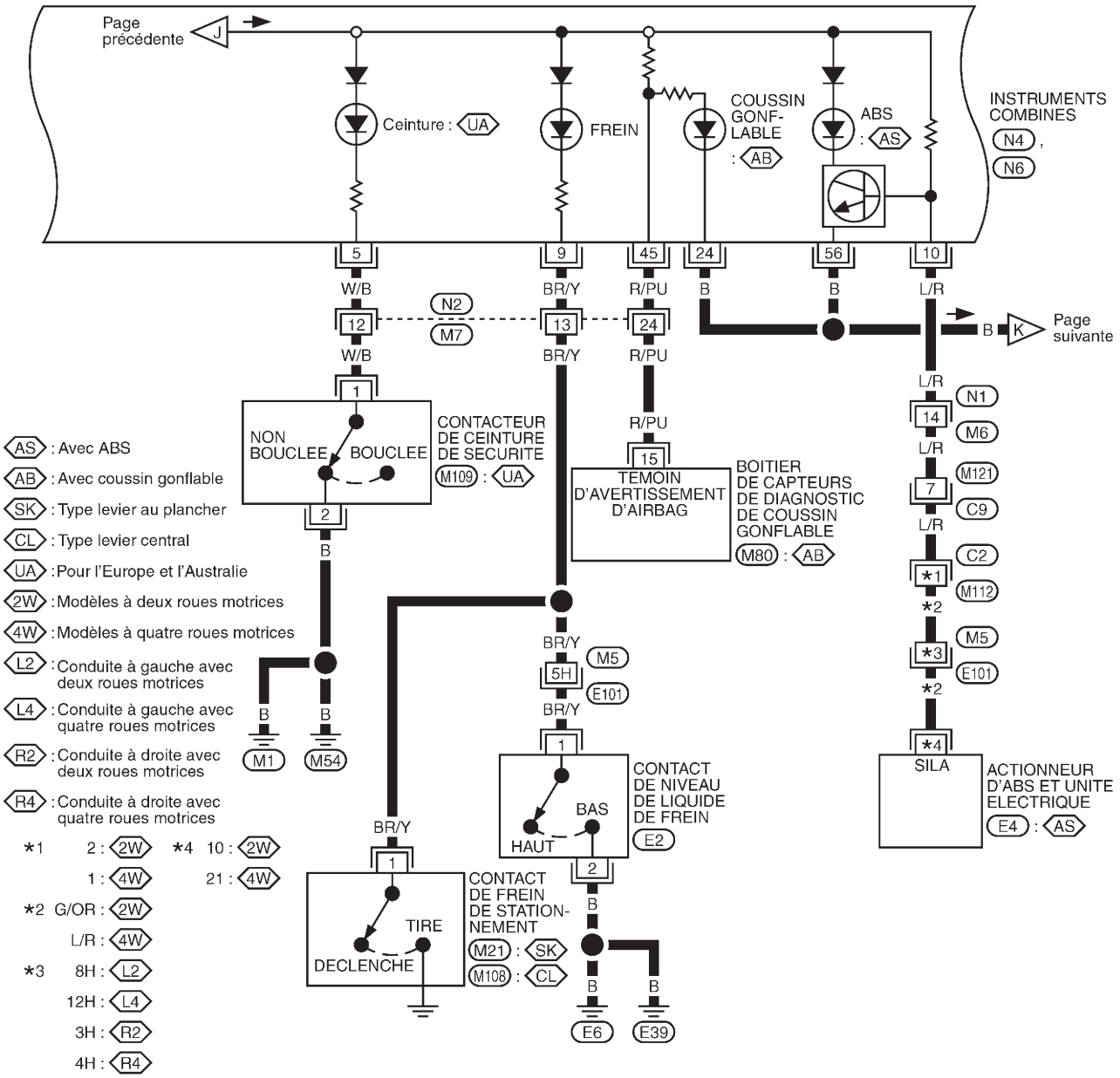

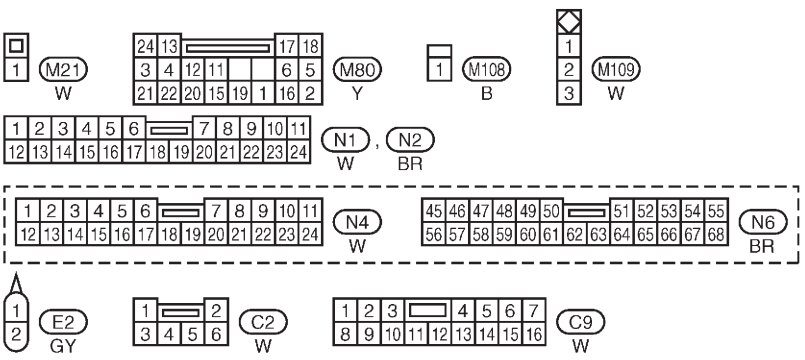

Consulter la dernière page dépliante.
M5, E101
E4

GEL406A

Simpo PDF Merge and Split Unregistered Version - http://www.simpopdf.com

Schéma de câblage — WARN —/Moteur diesel avec compte-tours (Suite)

EL-WARN-12

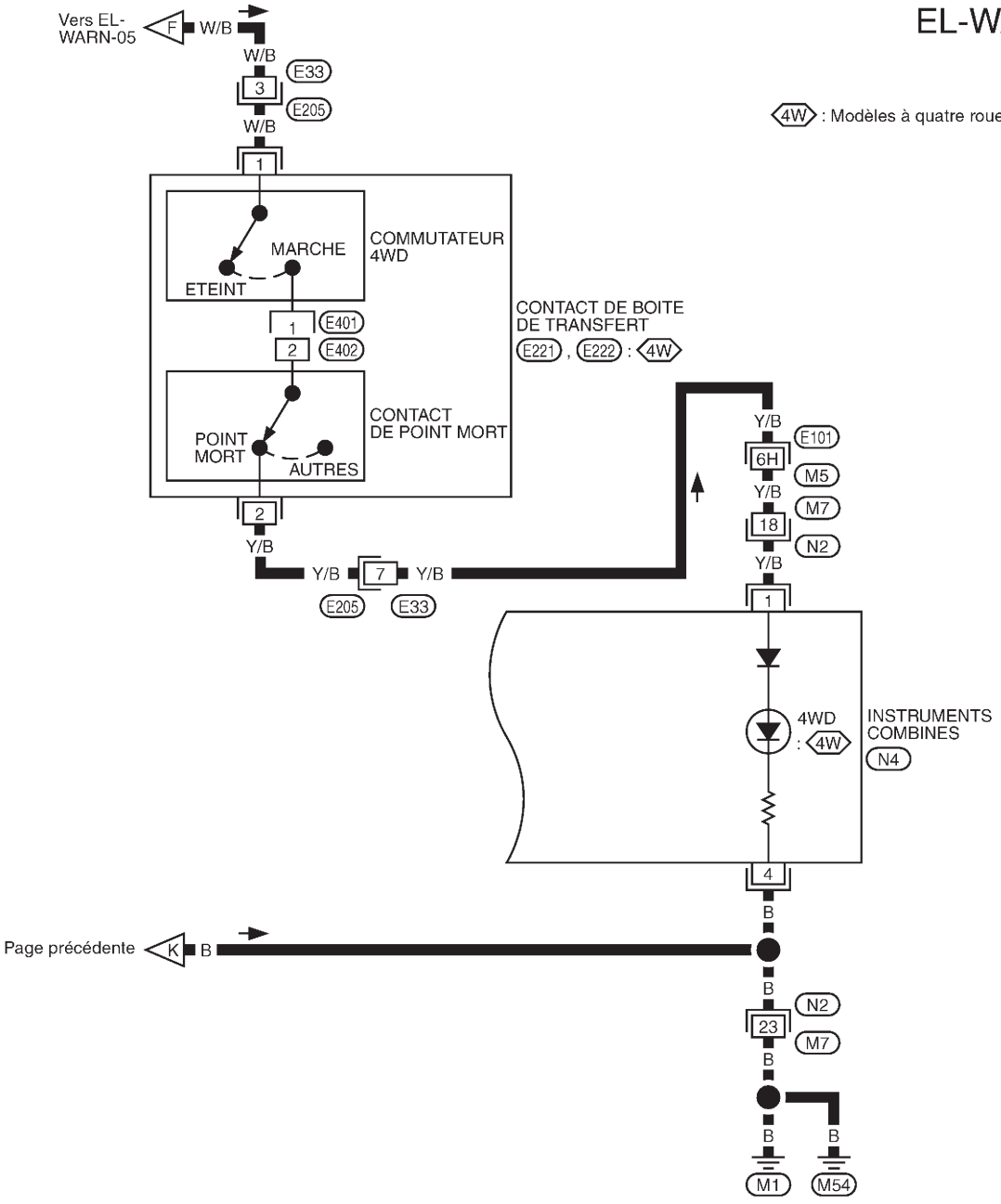

4W : Modèles à quatre roues motrices

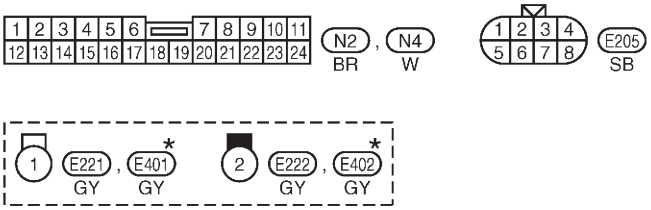

*: Ce connecteur ne figure pas dans la 'DISPOSITION DES FAISCEAUX'.

Consulter la dernière page dépliante.
M5 , E101

GEL407A

Simpo PDF Merge and Split Unregistered Version - http://www.simpopdf.com

Schéma de câblage — WARN —/Moteur diesel sans compte-tours

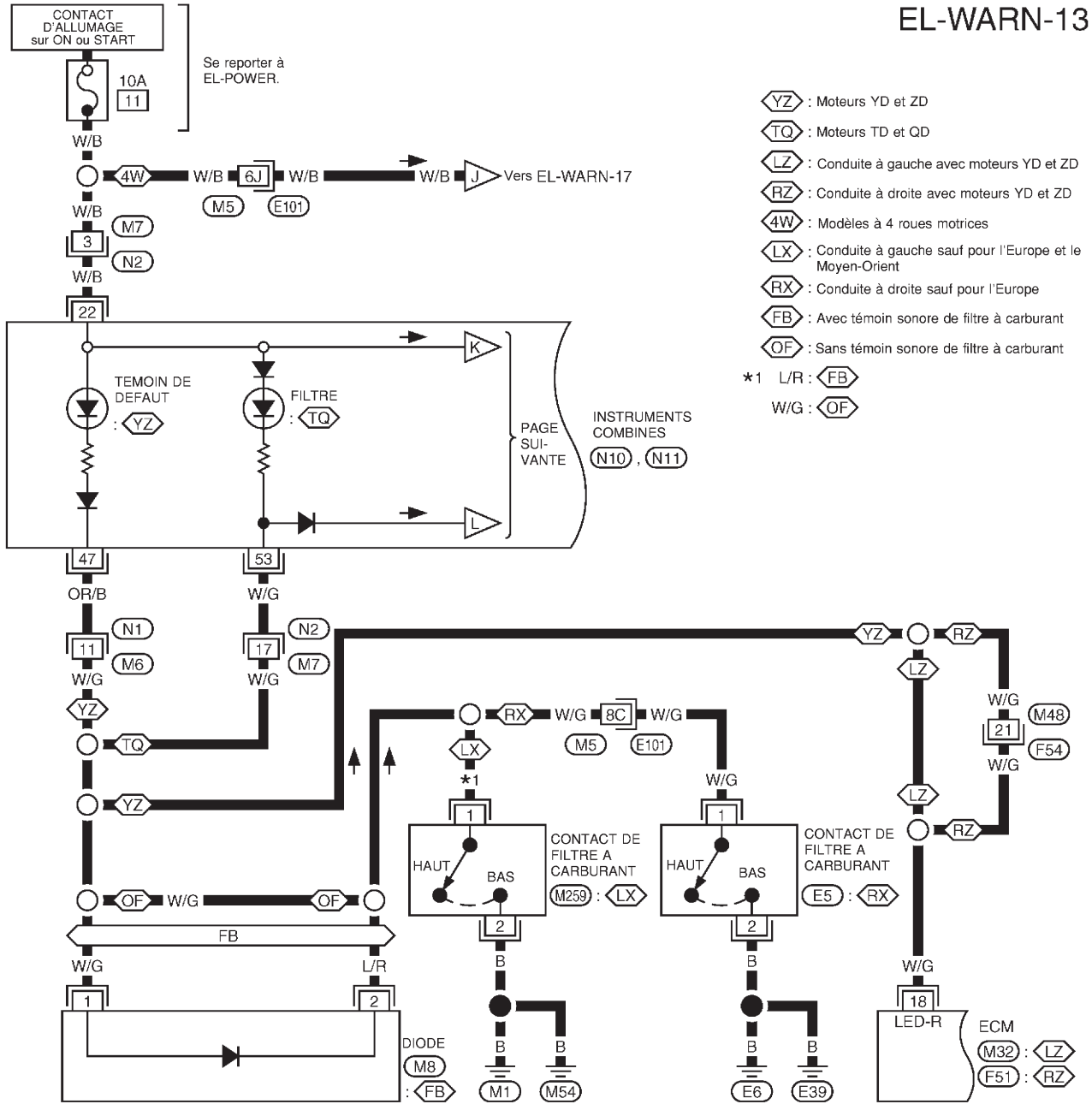

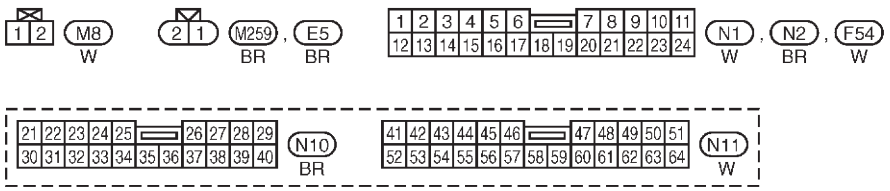

Consulter la dernière page dépliante.
M5 , E101
M32
F51

GEL413A

Simpo PDF Merge and Split Unregistered Version - http://www.simpopdf.com

Schéma de câblage — WARN —/Moteur diesel sans compte-tours (Suite)

EL-WARN-14

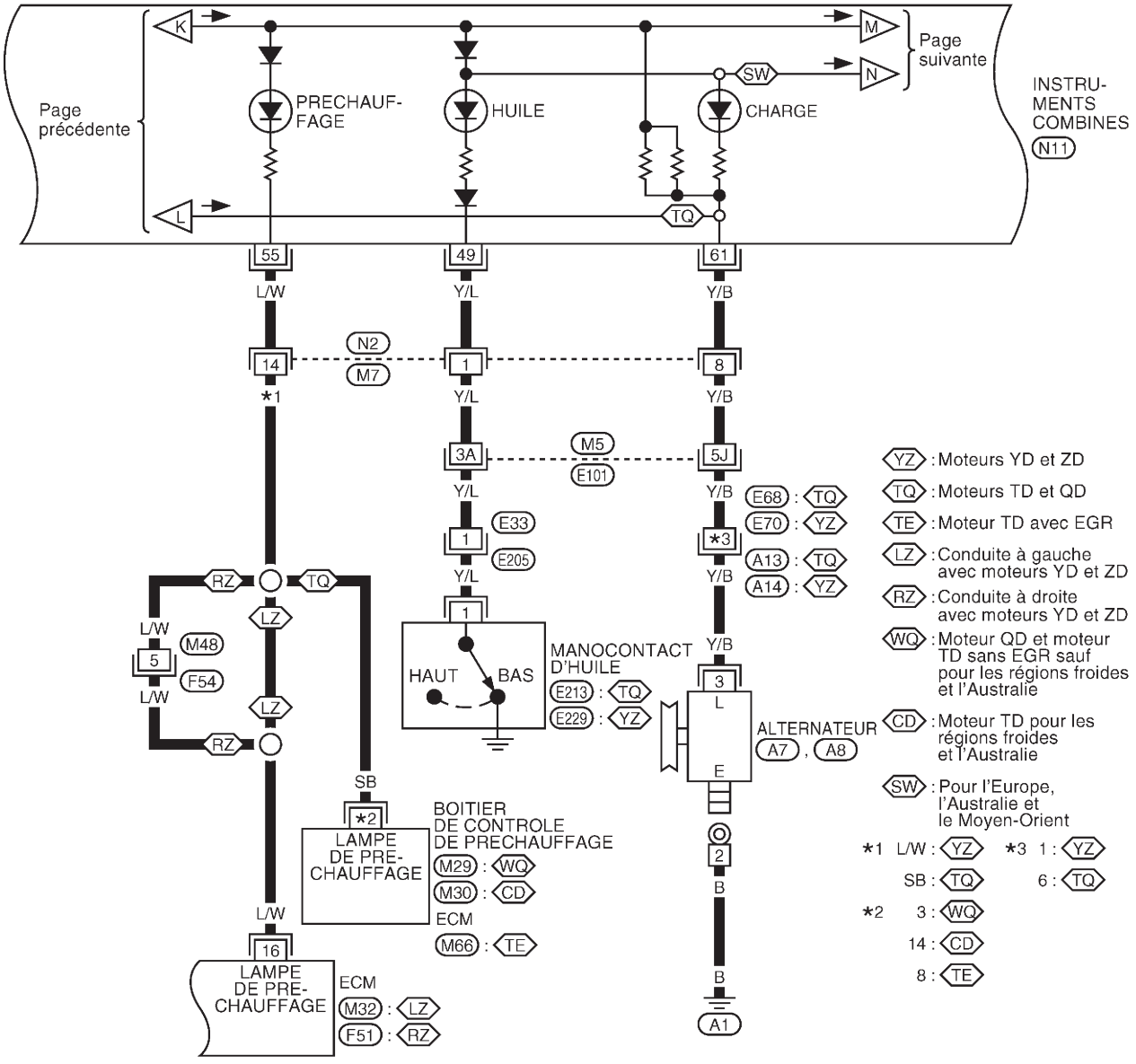

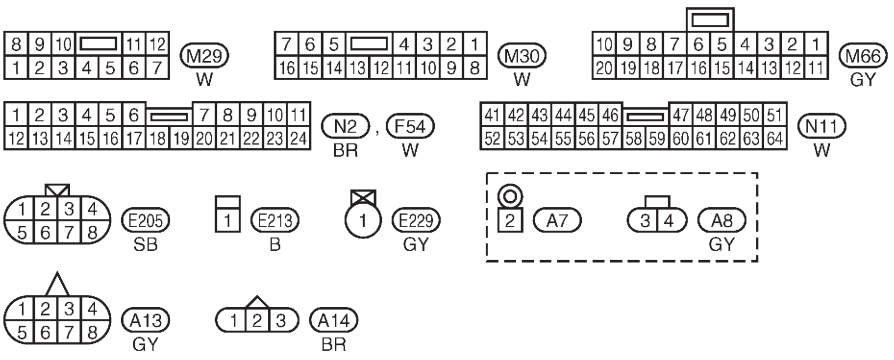

Consulter la dernière page dépliante.

M5 , E101

M32

F51

Simpo PDF Merge and Split Unregistered Version - http://www.simpopdf.com

Schéma de câblage — WARN —/Moteur diesel sans compte-tours (Suite)

EL-WARN-15

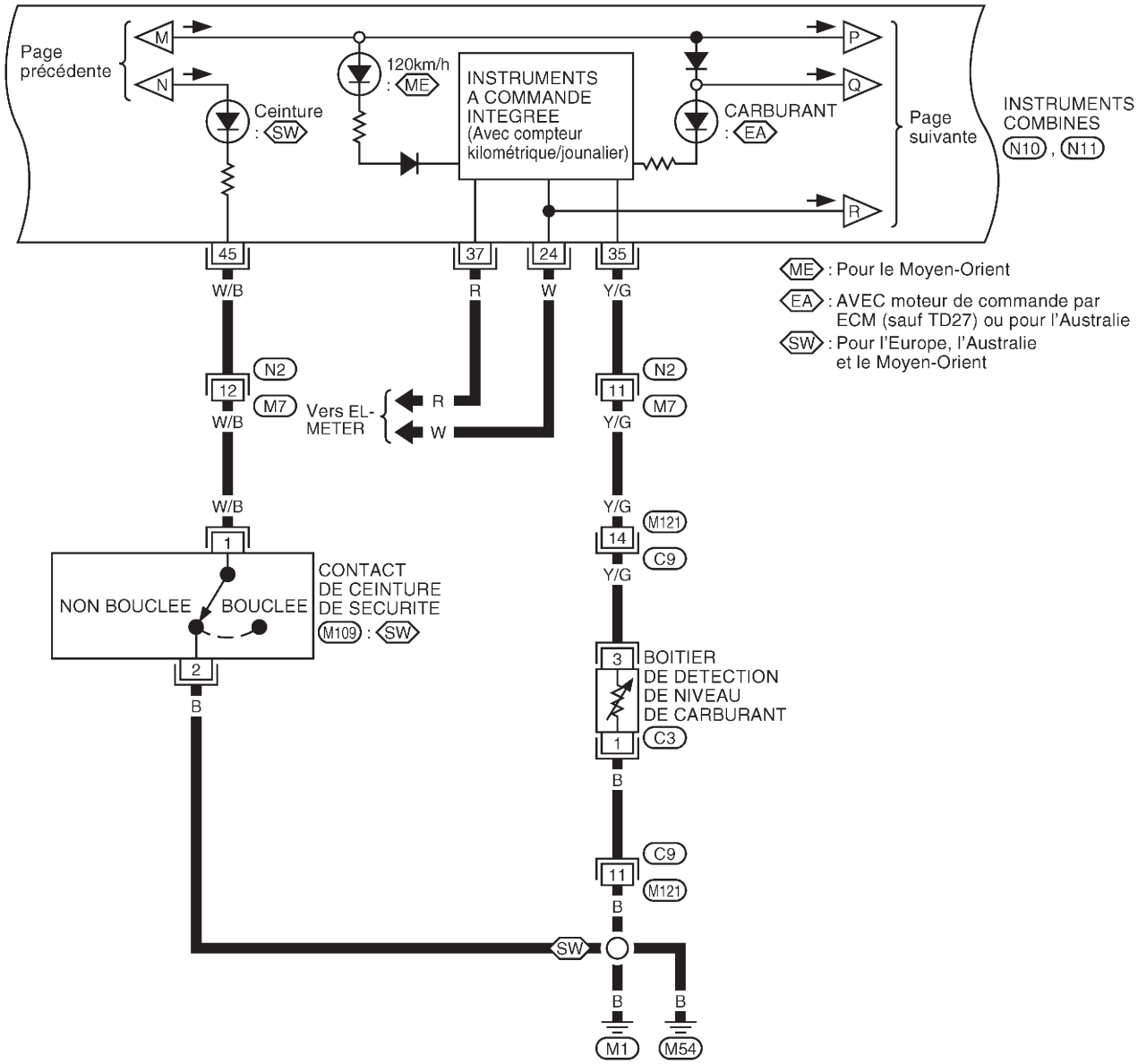

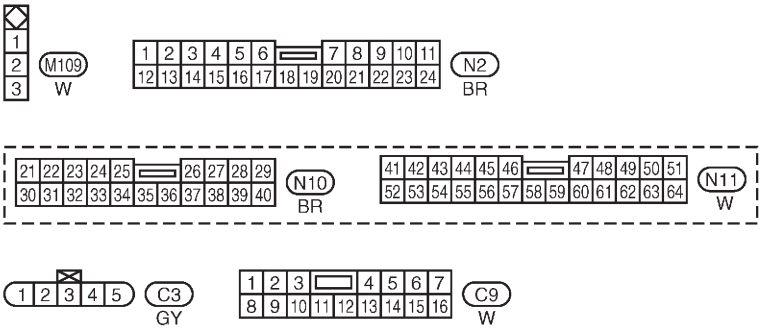

GEL415A

Simpo PDF Merge and Split Unregistered Version - http://www.simpopdf.com

Schéma de câblage — WARN —/Moteur diesel sans compte-tours (Suite)

EL-WARN-16

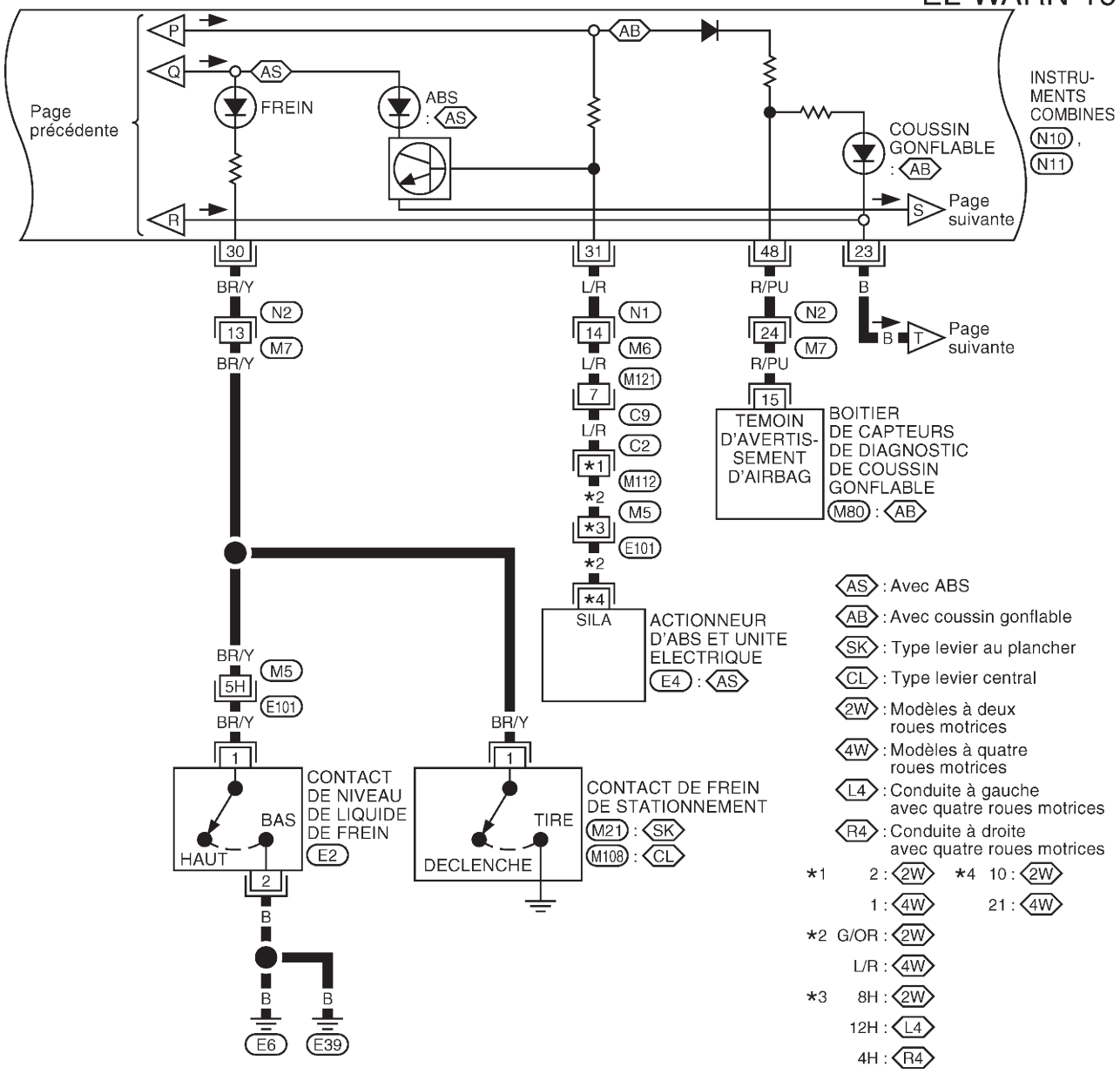

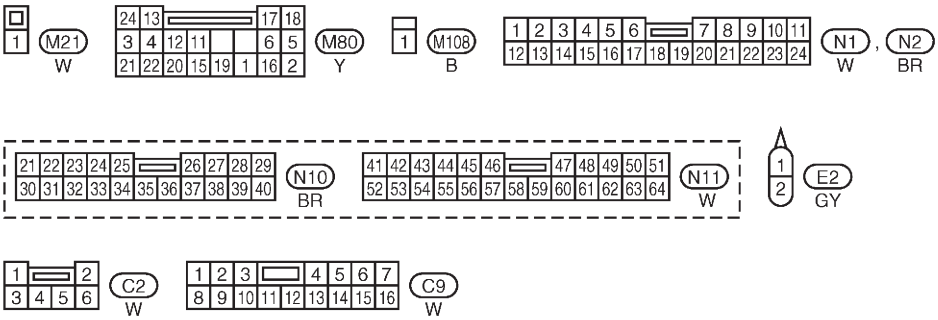

Consulter la dernière page dépliante.
M5, E101
E4

Simpo PDF Merge and Split Unregistered Version - http://www.simpopdf.com

Schéma de câblage — WARN —/Moteur diesel sans compte-tours (Suite)

EL-WARN-17

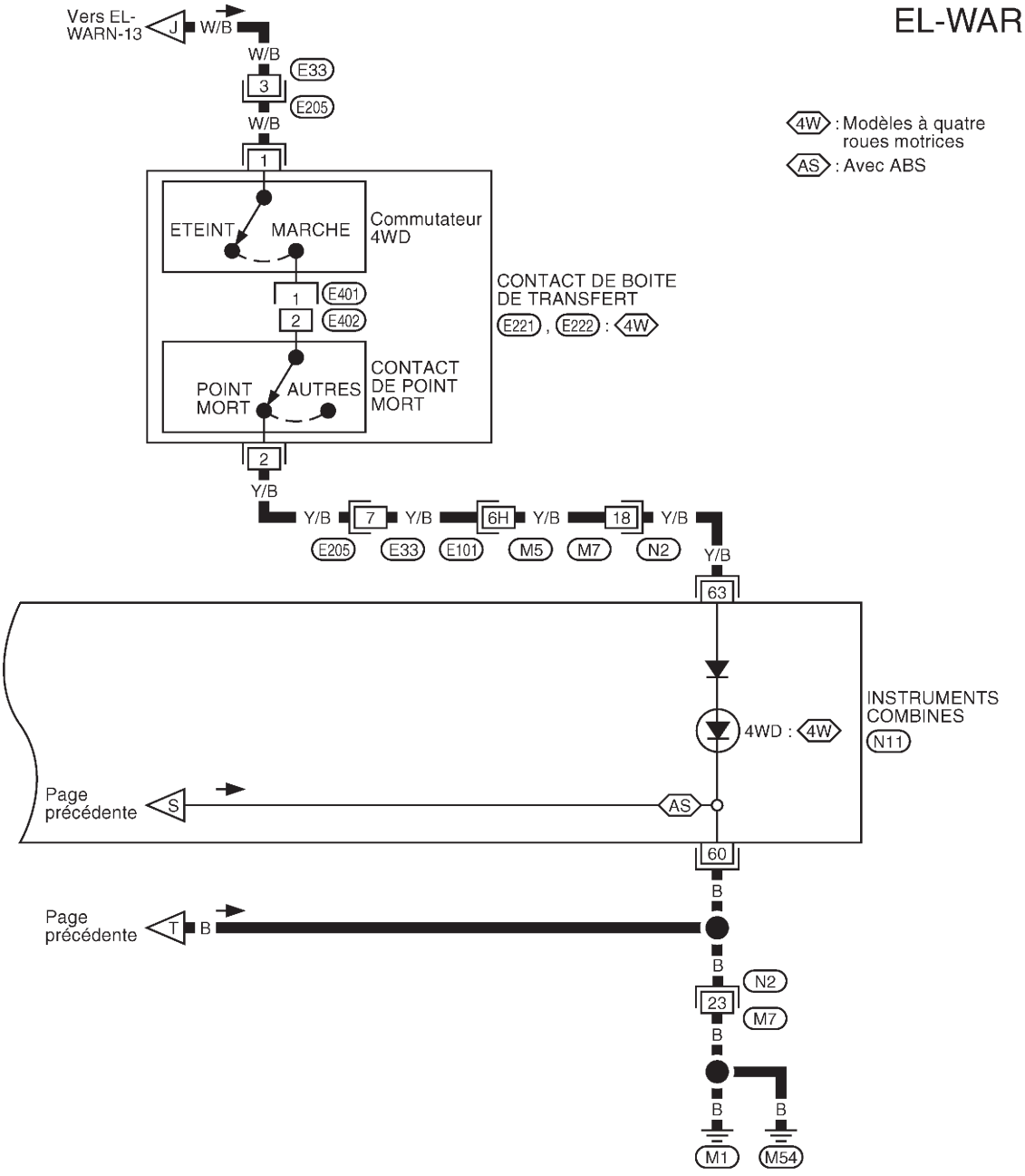

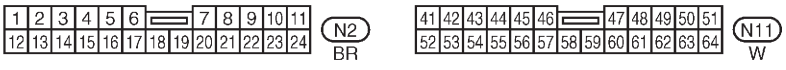



*: Ce connecteur ne figure pas dans la 'DISPOSITION DES FAISCEAUX'.

Consulter la dernière page dépliante.
M5 , E101

GEL417A

Simpo PDF Merge and Split Unregistered Version - http://www.simpopdf.com

Schéma de câblage — AT/IND —/Conduite à droite

EL-AT/IND-01

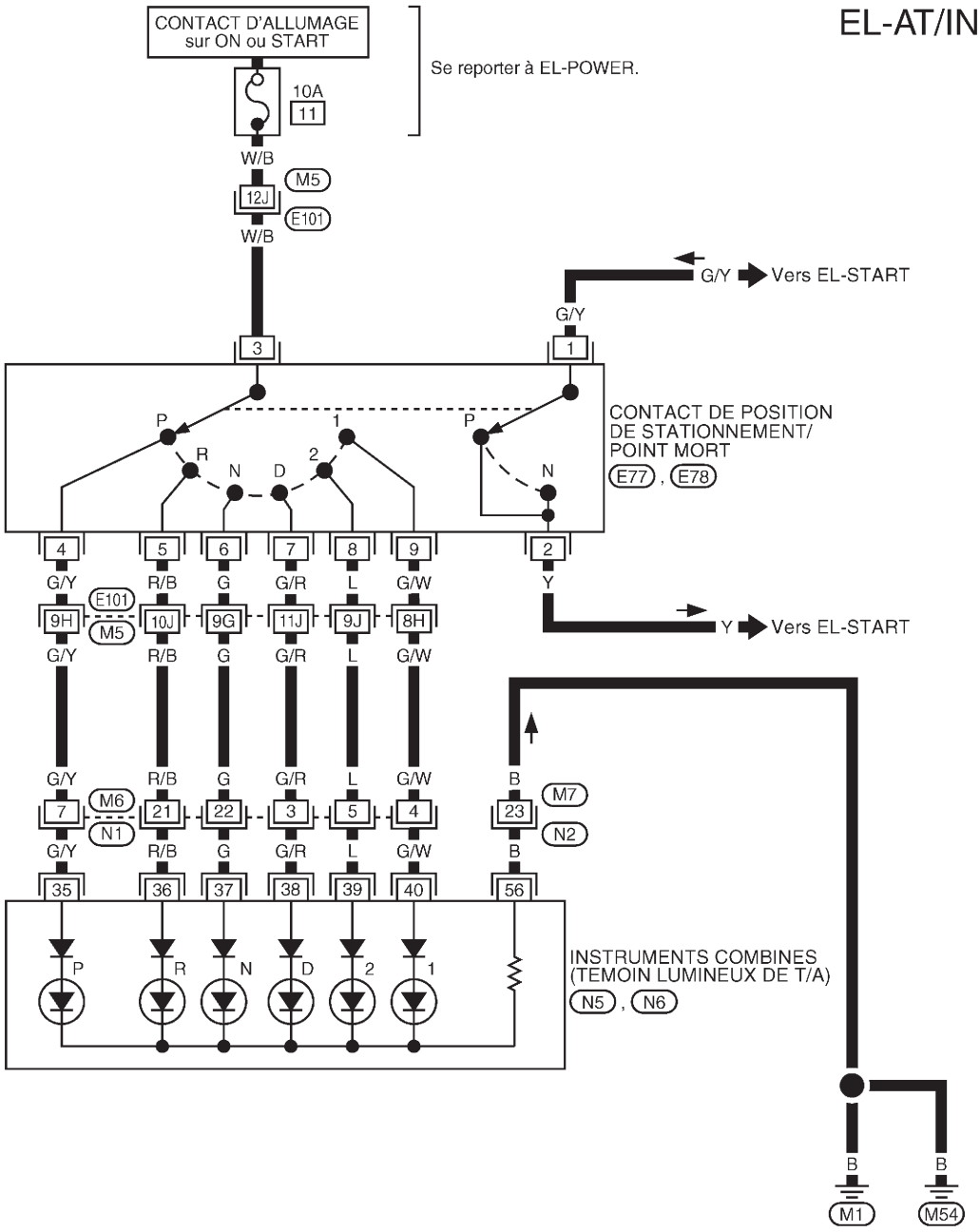

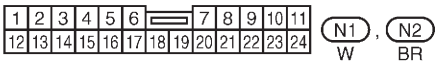

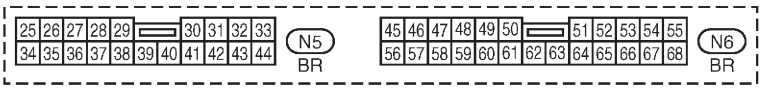

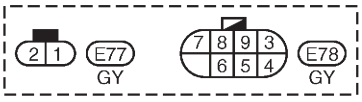

Consulter la dernière page dépliante.
M5 , E101

GEL418A

Simpo PDF Merge and Split Unregistered Version - http://www.simpopdf.com

Schéma de câblage — CHIME —/Conduite à gauche

TEMOIN SONORE DE RAPPEL D'ECLAIRAGE

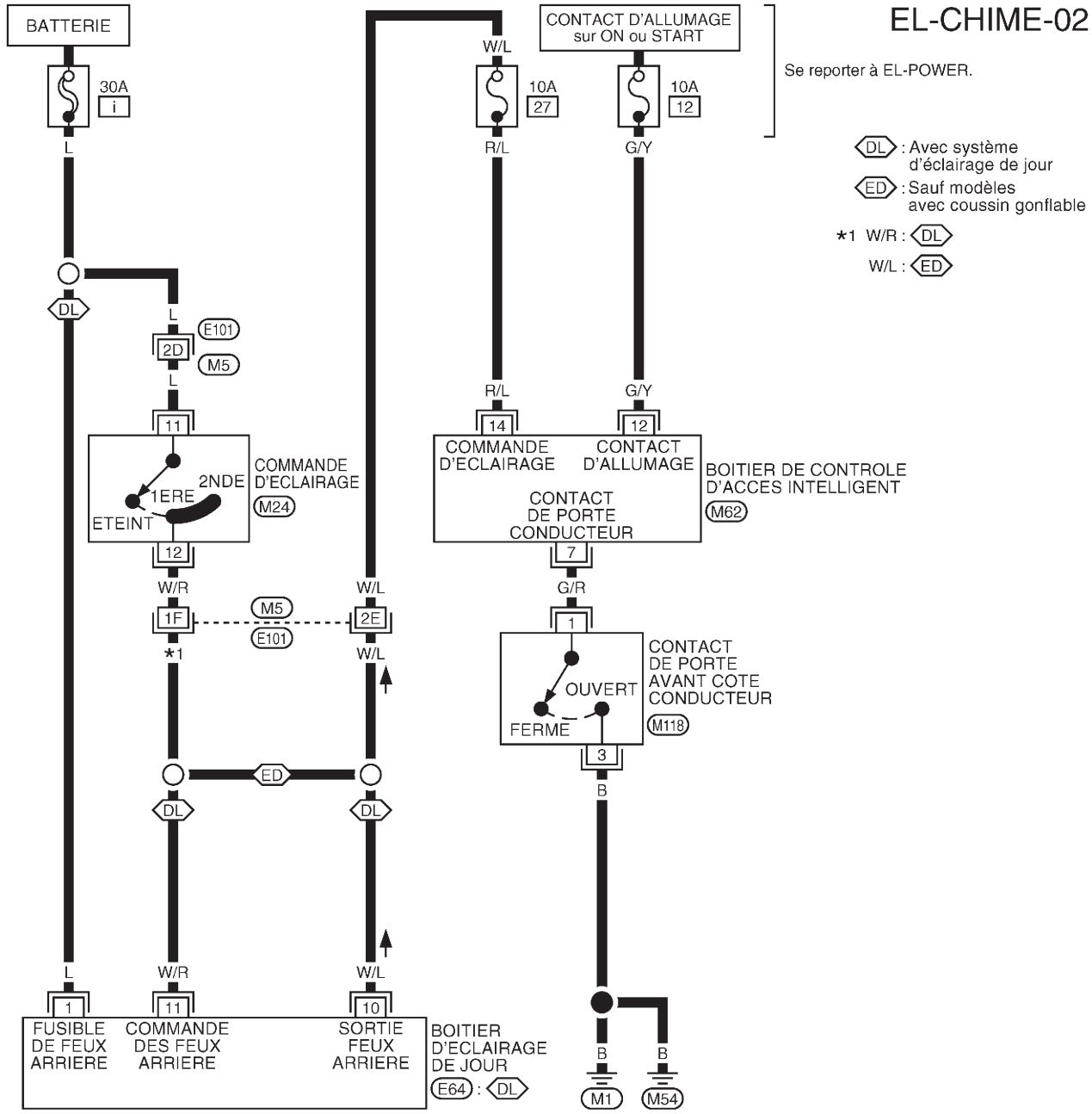

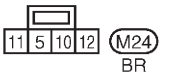

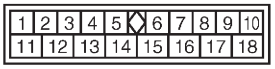



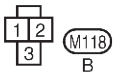

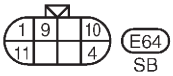

Consulter la dernière page dépliante.
M5 , E101

GEL420A

Simpo PDF Merge and Split Unregistered Version - http://www.simpopdf.com

Schéma de câblage — CHIME —/Conduite à droite

TEMOIN SONORE DE RAPPEL D'ECLAIRAGE

EL-CHIME-03

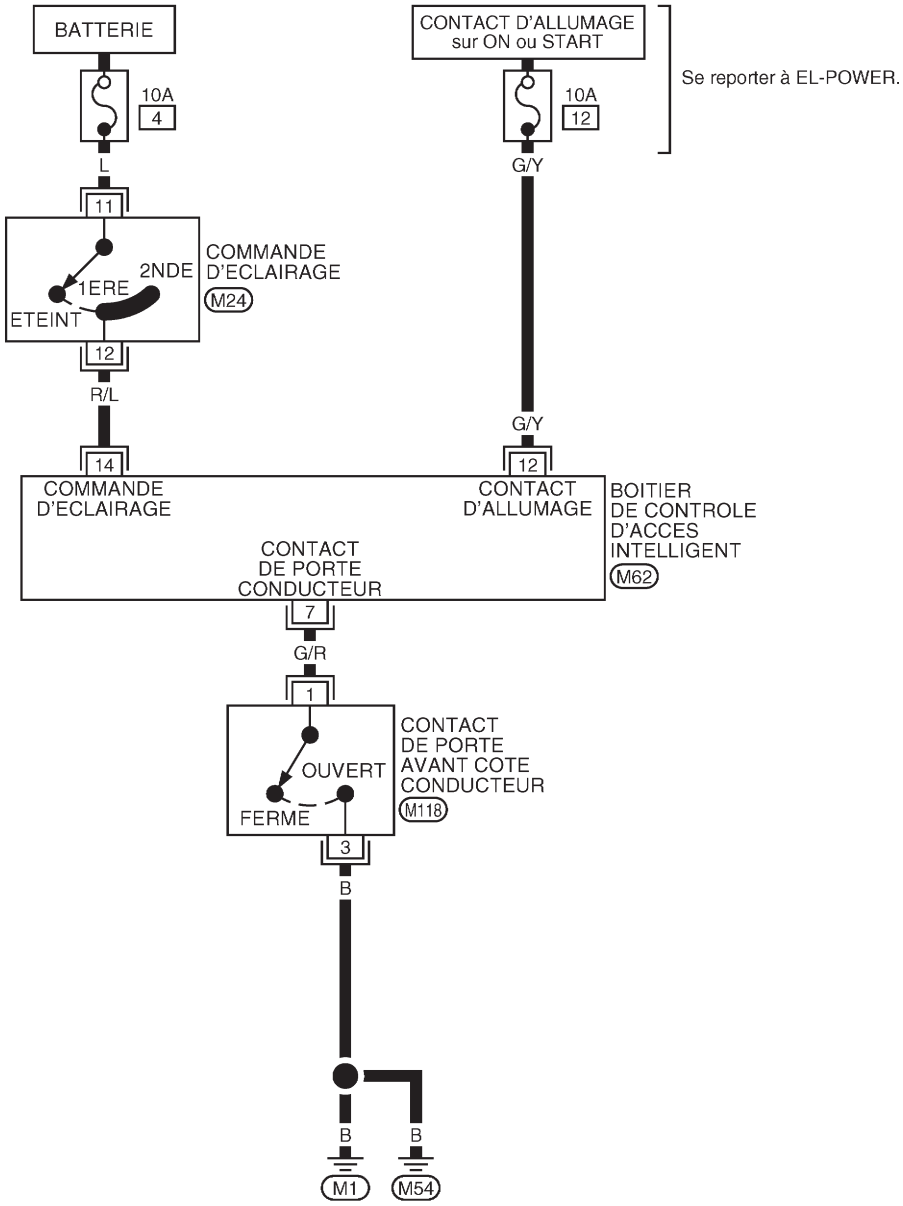

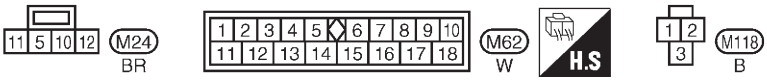

GEL421A

Simpo PDF Merge and Split Unregistered Version - http://www.simpopdf.com

Schéma de câblage — WIPER —/Sans Balayage intermittent pour changement des vitesses au plancher

CONDUITE A DROITE MOTEUR KA

EL-WIPER-03

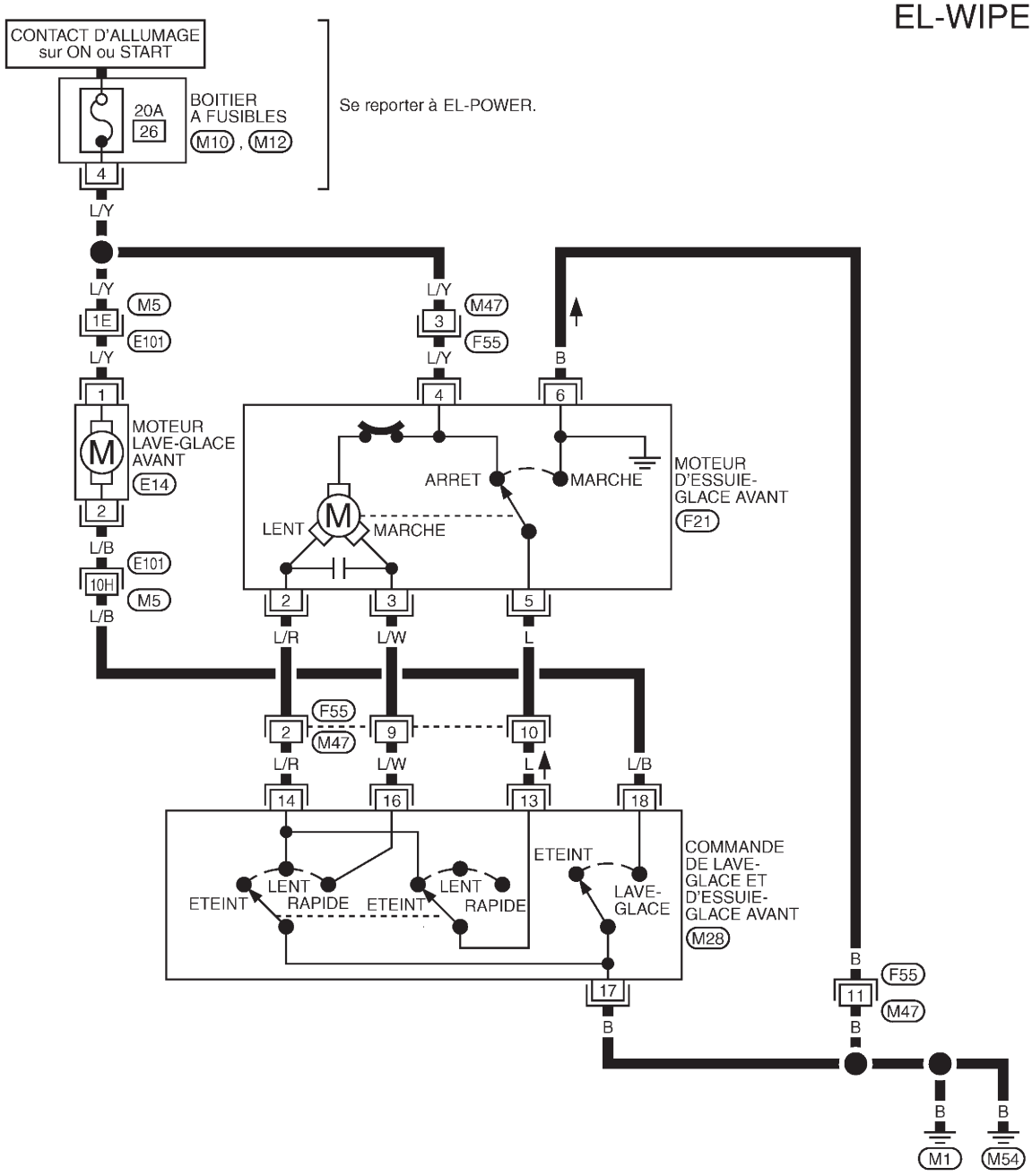

M12 W

M28 GY

E14 GY

F21 W

F55 W

Consulter la dernière page dépliante.

M5 , E101

M10

GEL423A

Simpo PDF Merge and Split Unregistered Version - http://www.simpopdf.com

Schéma de câblage — WIPER —/Sans Balayage intermittent pour changement des vitesses au plancher (Suite)

CONDUITE A DROITE

EL-WIPER-04

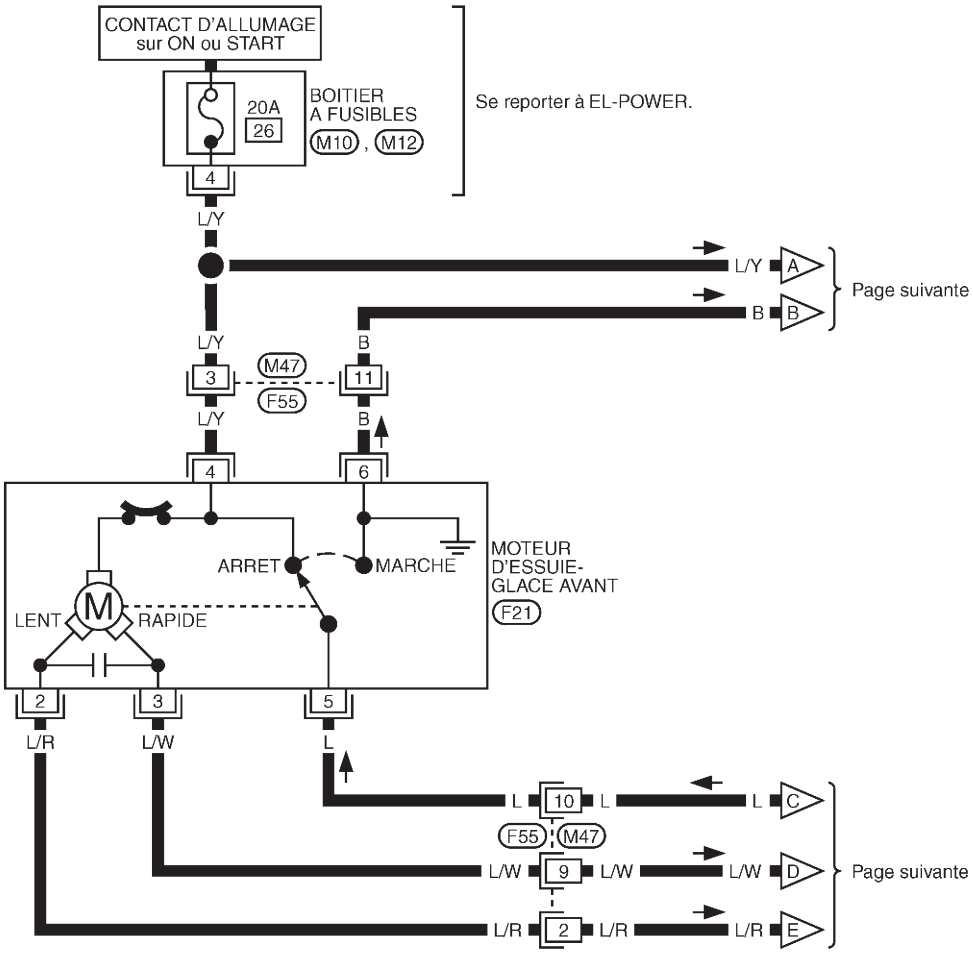

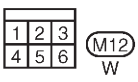

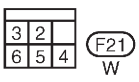

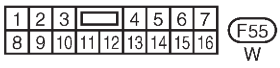

Consulter la dernière page dépliante.

M10

GEL425A

Simpo PDF Merge and Split Unregistered Version - http://www.simpopdf.com

Schéma de câblage — WIPER —/Sans Balayage intermittent pour changement des vitesses au plancher (Suite)

EL-WIPER-05

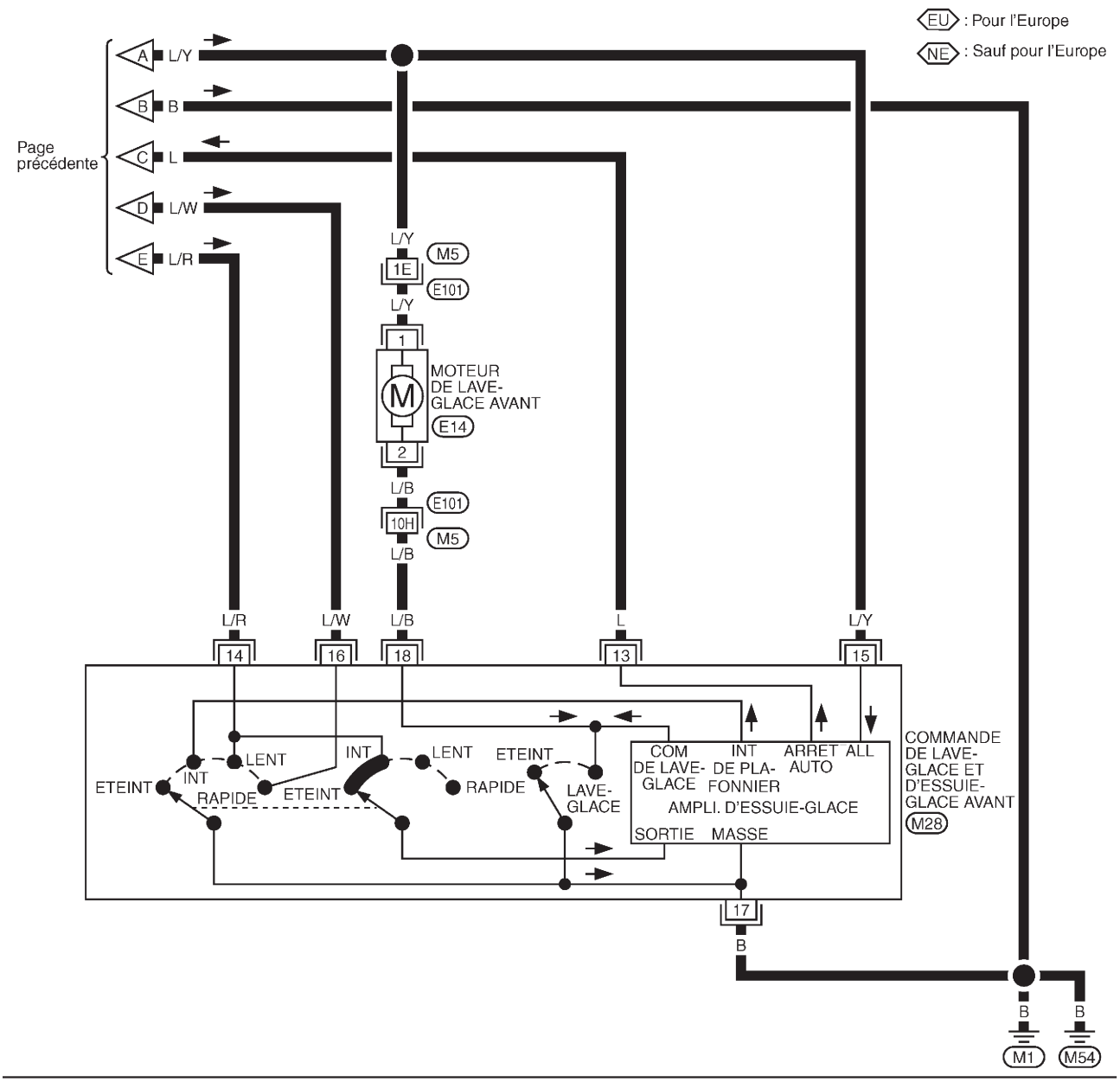

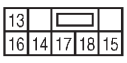

M28 : EU
GY

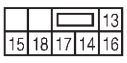

M28 : NE
GY



E14
GY

Consulter la dernière page dépliante.
M5 , E101

GEL426A

Simpo PDF Merge and Split Unregistered Version - http://www.simpopdf.com

Schéma de câblage — WIPER —/Avec balayage intermittent pour conduite à droite avec changement des vitesses au volant

EL-WIPER-06

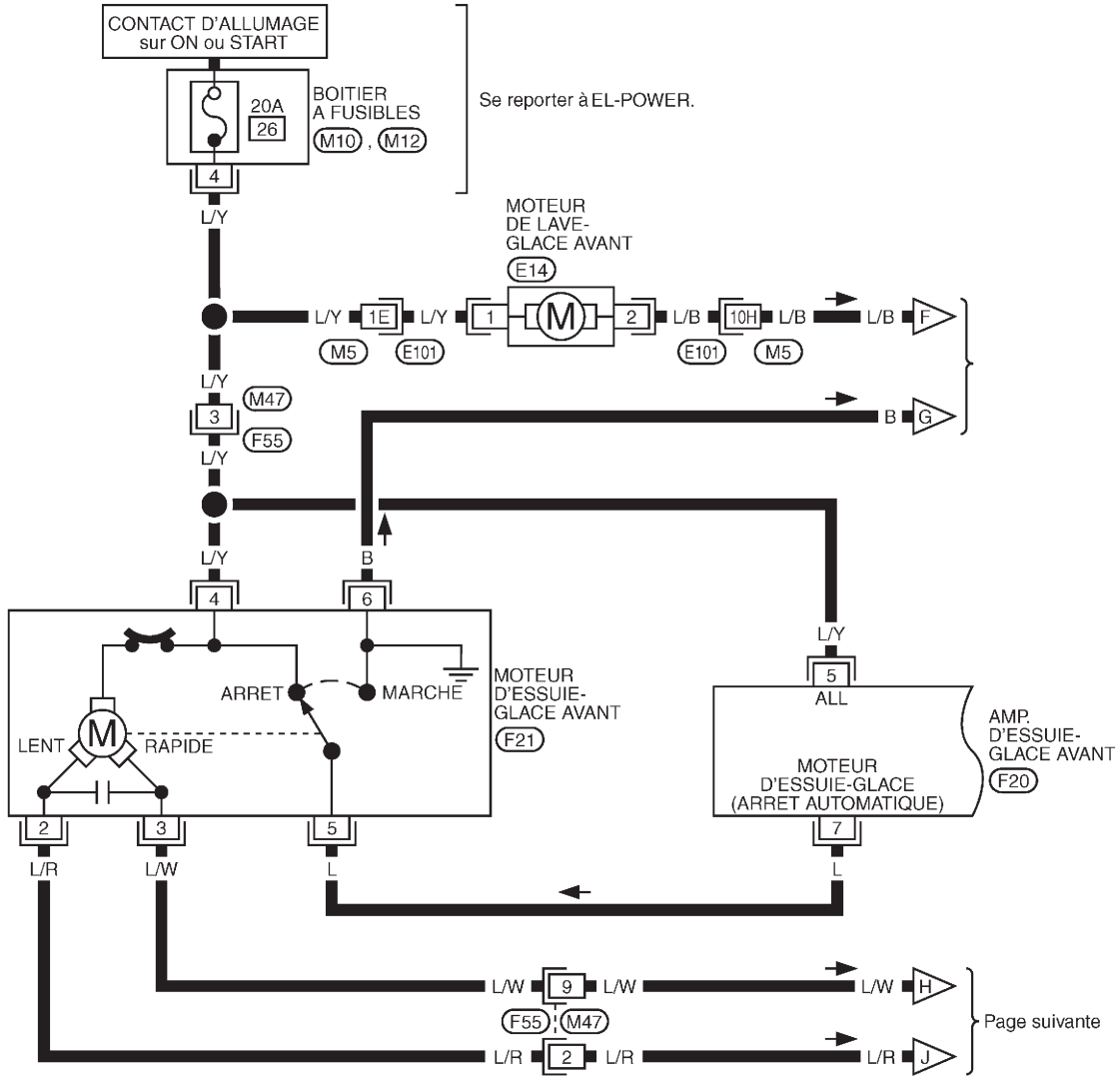

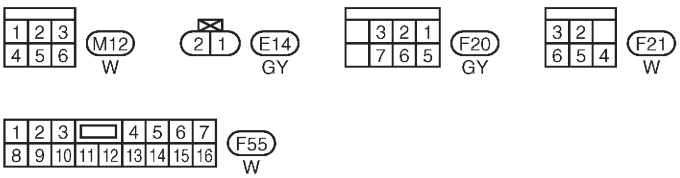

Consulter la dernière page dépliante.
M5 , E101
M10

GEL427A

Simpo PDF Merge and Split Unregistered Version - http://www.simpopdf.com

Schéma de câblage — WIPER —/Avec balayage intermittent pour conduite à droite avec changement des vitesses au volant (Suite)

EL-WIPER-07

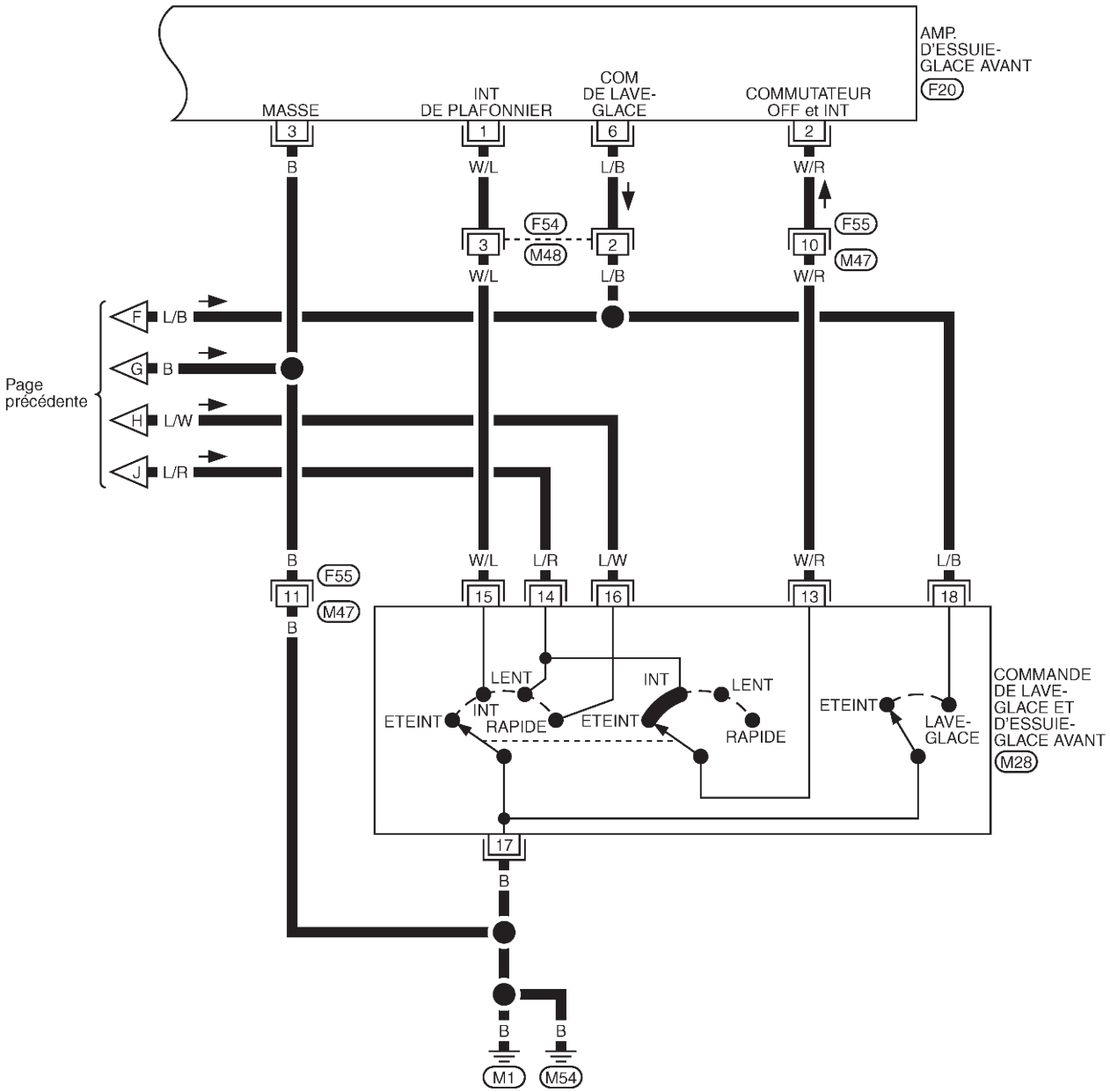

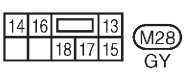

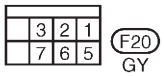



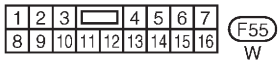

GEL428A

Simpo PDF Merge and Split Unregistered Version - http://www.simpopdf.com

Schéma de câblage — HLC —

EL-HLC-01

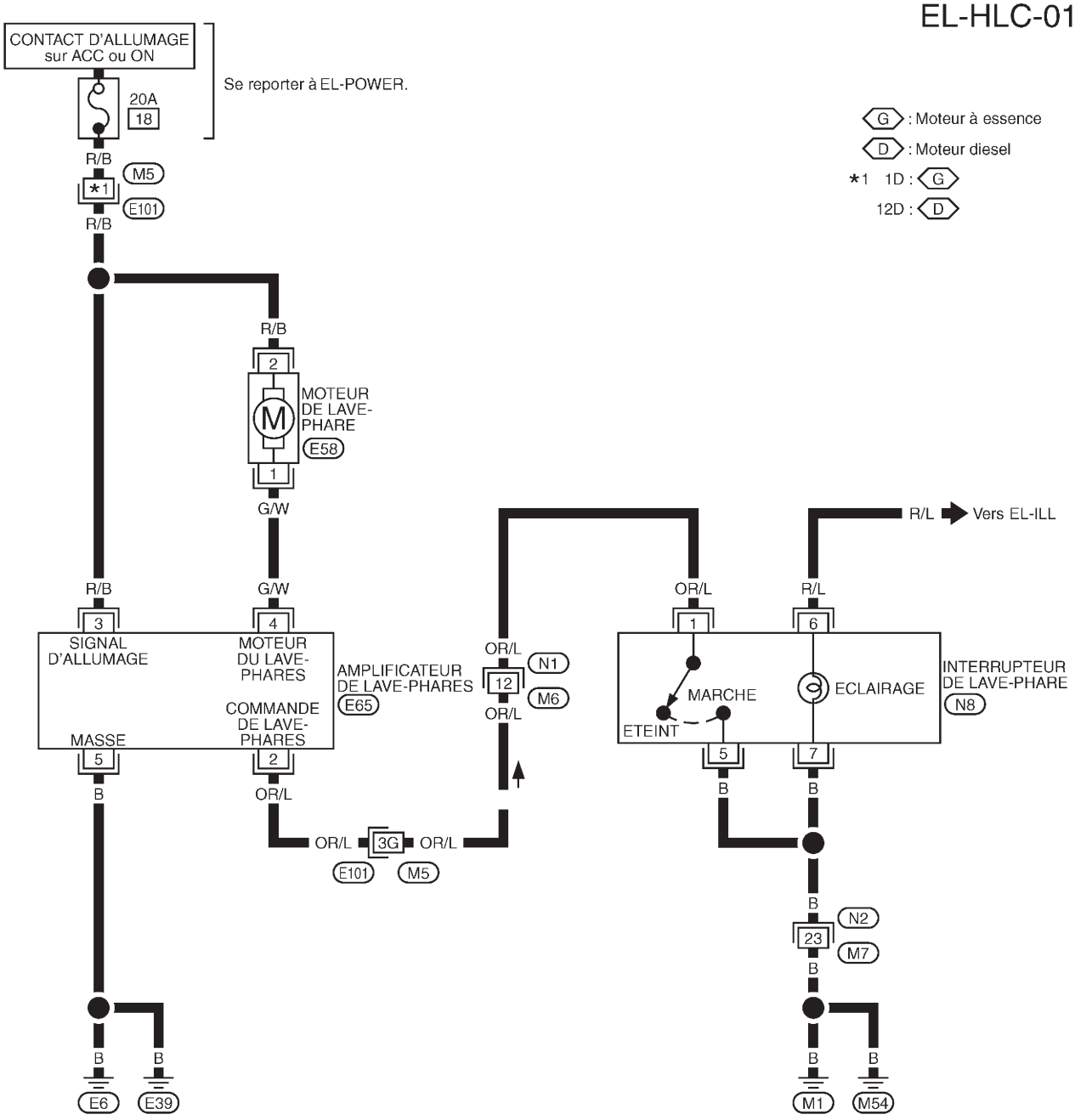

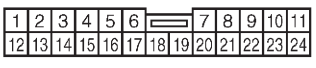

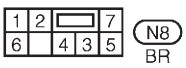



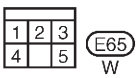

Consulter la dernière page dépliante.
M5 , E101

GEL429A

Simpo PDF Merge and Split Unregistered Version - http://www.simpopdf.com

Schéma de câblage — HORN —

EL-HORN-01

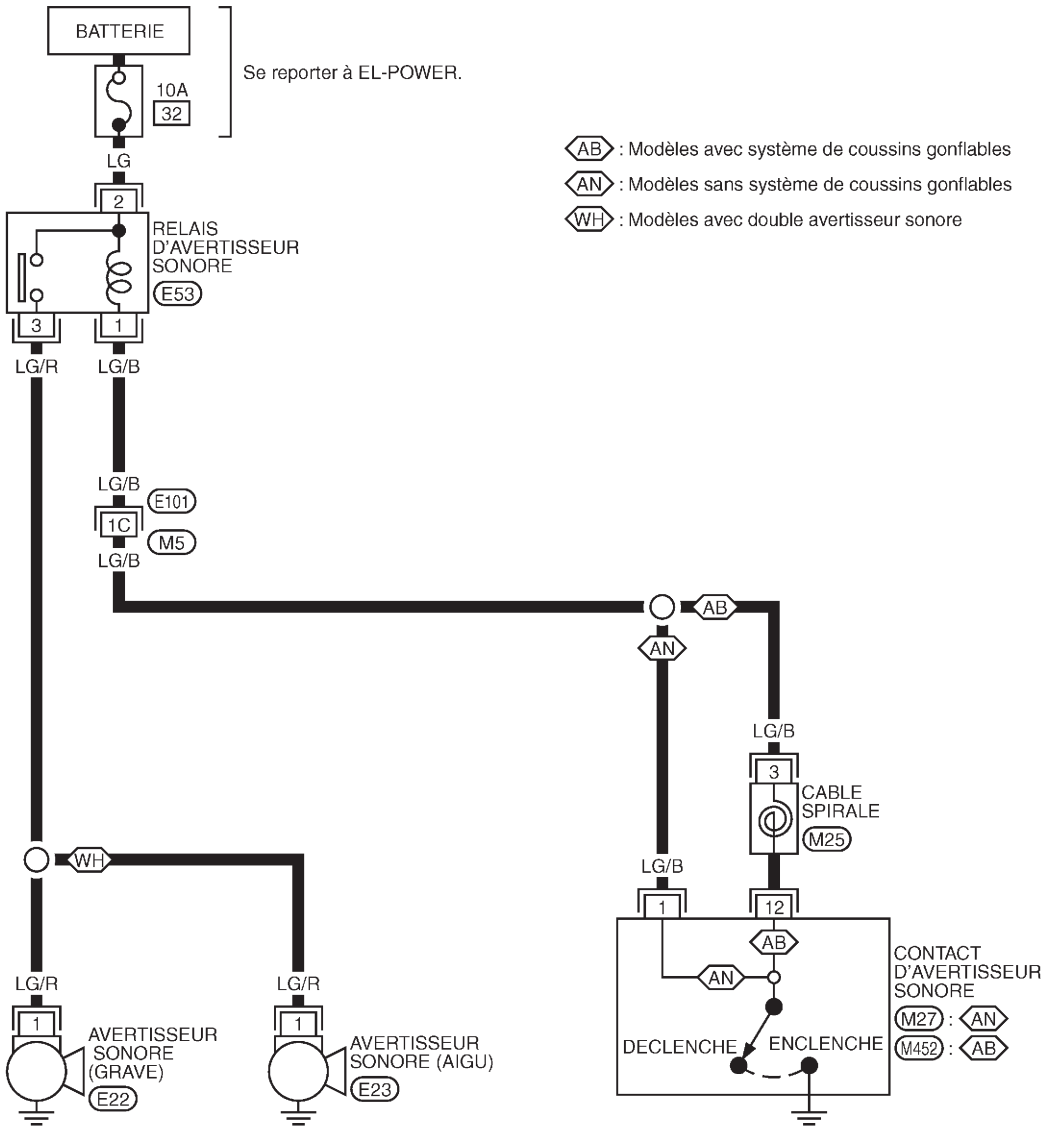

: Modèles avec système de coussins gonflables

: Modèles sans système de coussins gonflables

: Modèles avec double avertisseur sonore

6 4 5 2 1 7 3 M25 Y

1 M27 B , E22 B , E23 B

13 14 12 M452 * B

2 1 3 E53 W

Consulter la dernière page dépliante.

M5 , E101

*: Ce connecteur ne figure pas dans la 'DISPOSITION DES FAISCEAUX'.

GEL274A

Simpo PDF Merge and Split Unregistered Version - http://www.simpopdf.com

Schéma de câblage — CIGAR —

EL-CIGAR-01

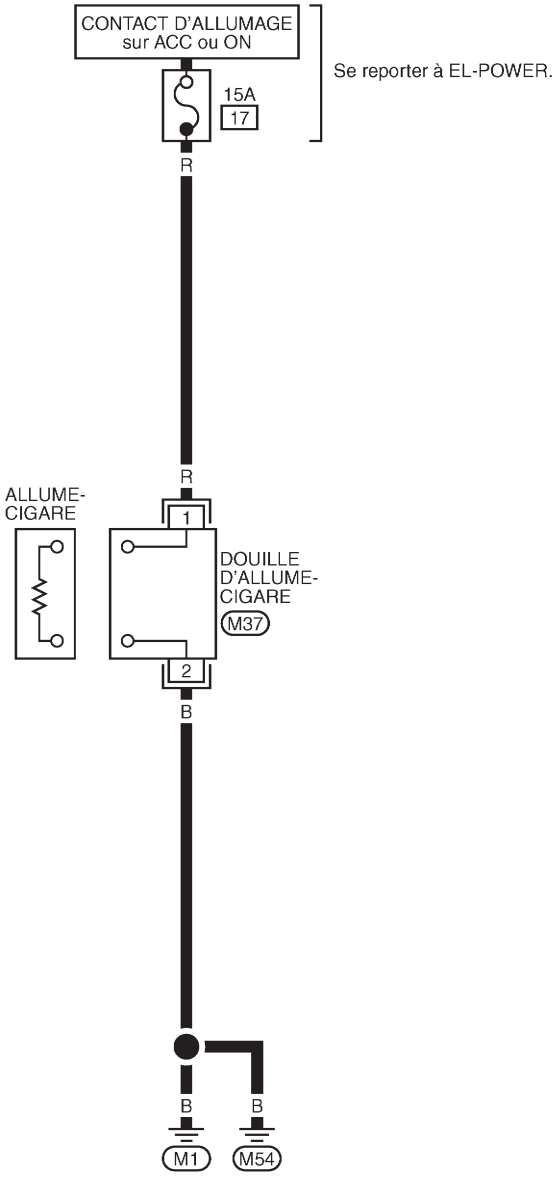

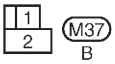

GEL275A

Simpo PDF Merge and Split Unregistered Version - http://www.simpopdf.com

Schéma de câblage — CLOCK —

EL-CLOCK-01

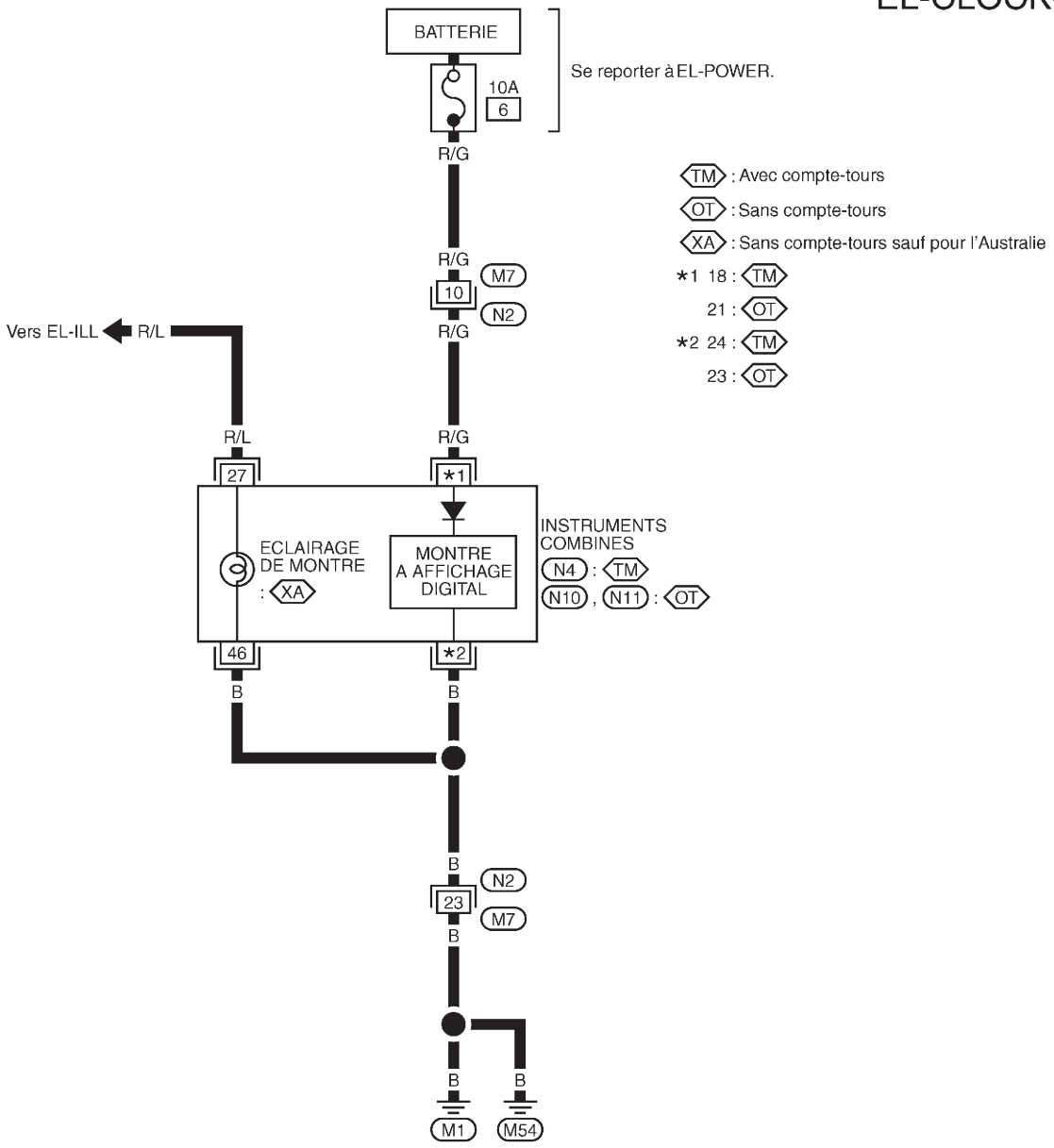

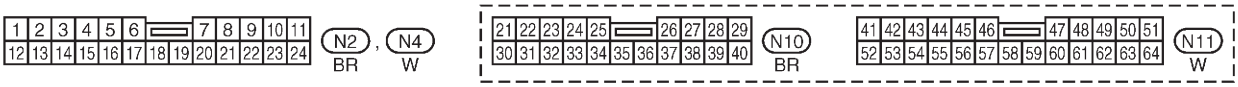

GEL430A

Simpo PDF Merge and Split Unregistered Version - http://www.simpopdf.com

Schéma de câblage — DEF —

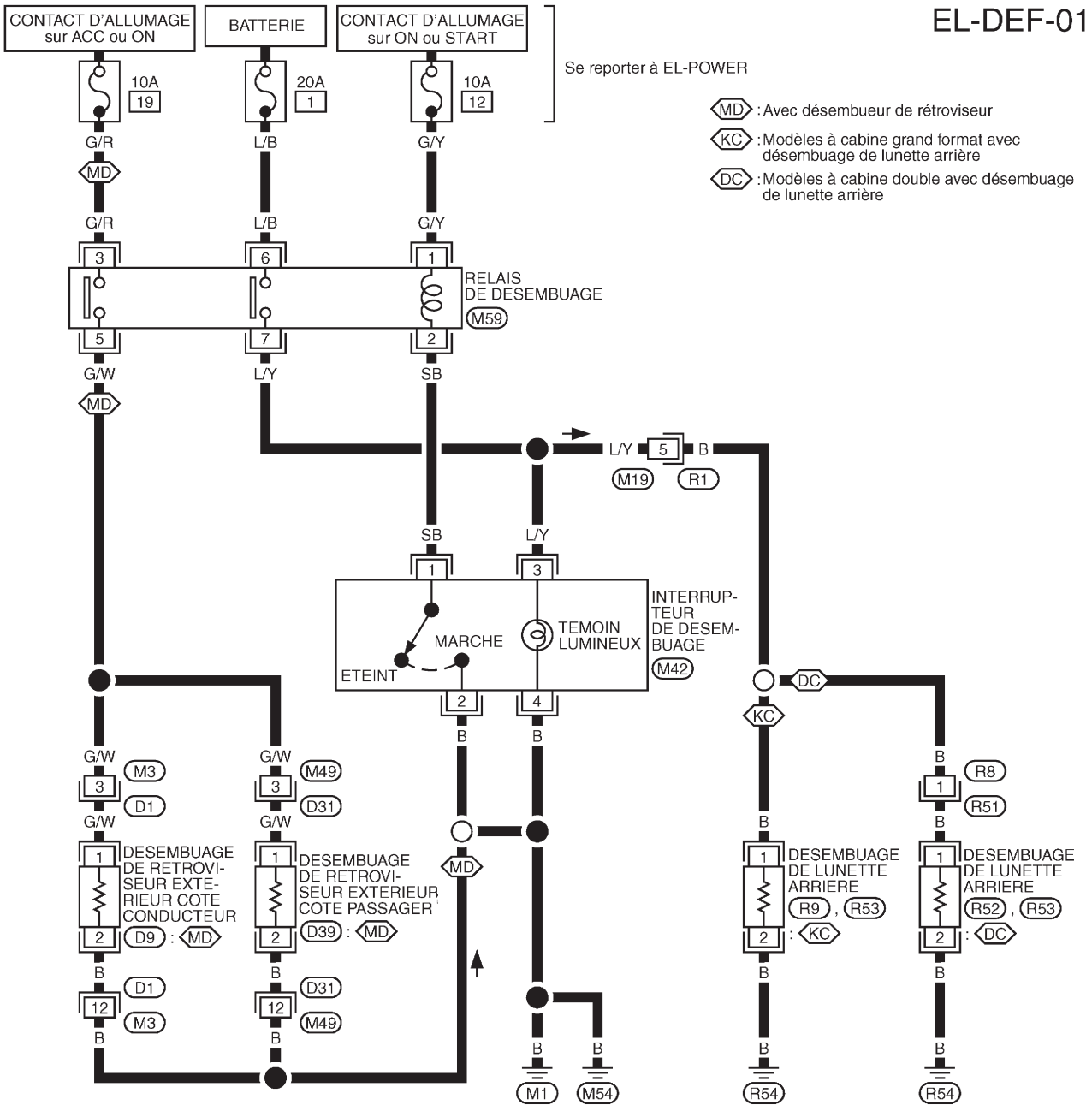

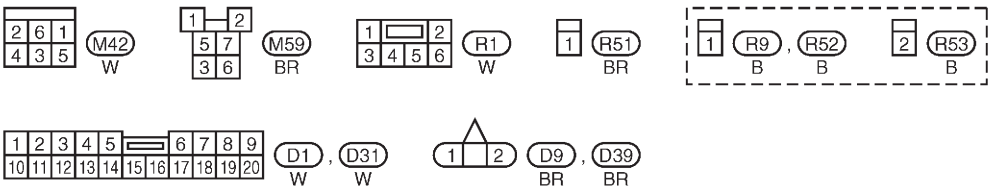

GEL431A

Simpo PDF Merge and Split Unregistered Version - http://www.simpopdf.com

Schéma de câblage —AUDIO —/Conduite à gauche

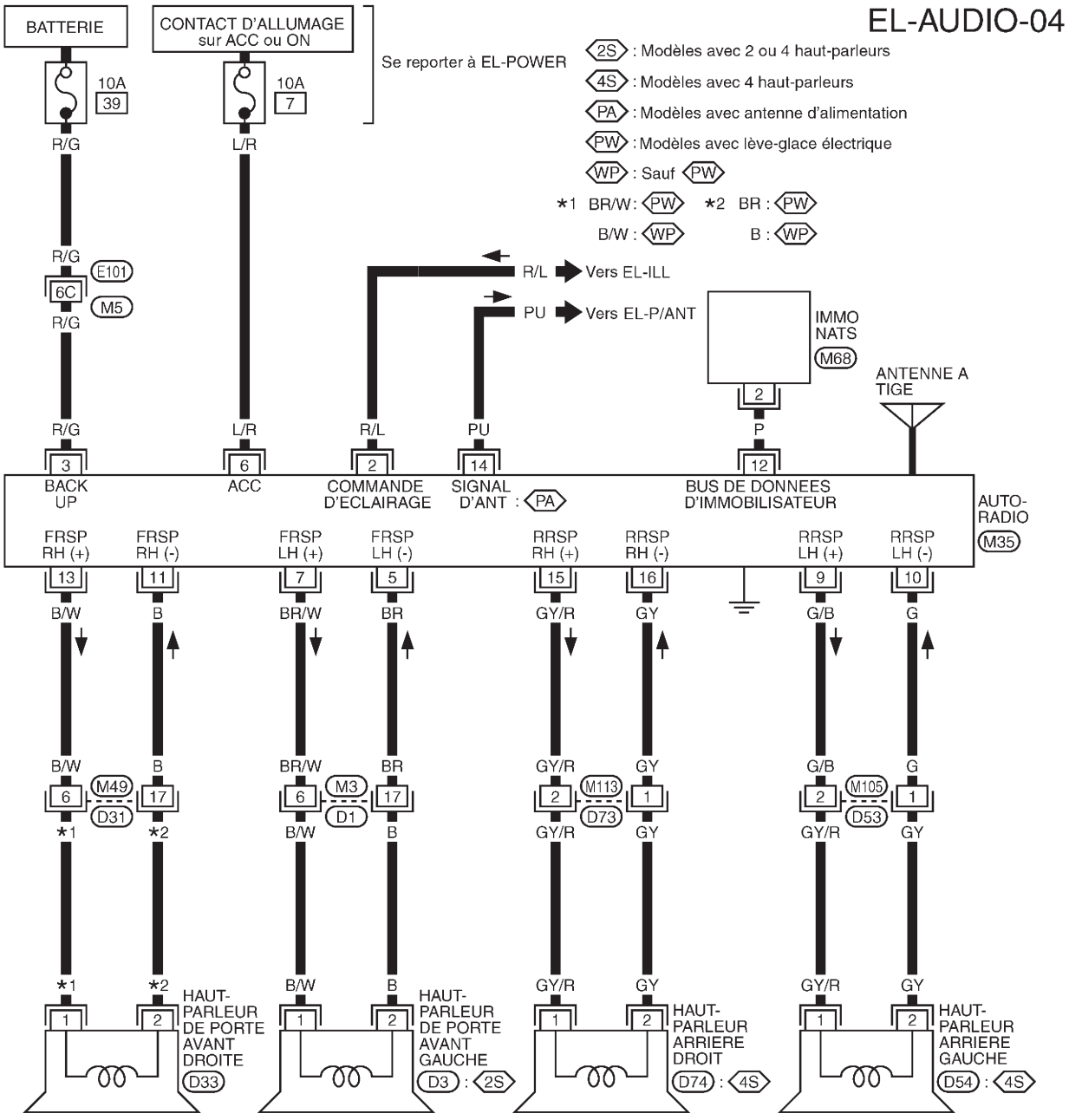

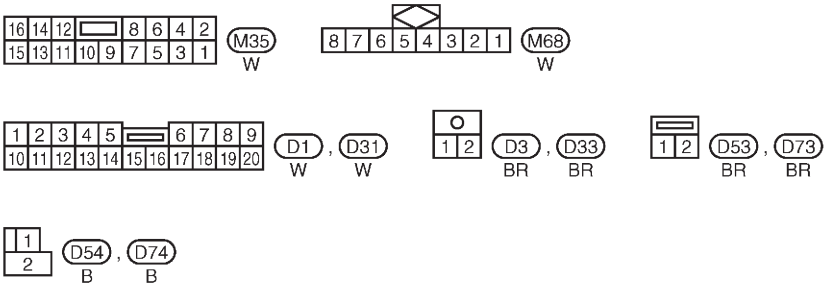

Consulter la dernière page dépliante.
M5 , E101

Simpo PDF Merge and Split Unregistered Version - http://www.simpopdf.com

Schéma de câblage —AUDIO —/Conduite à droite

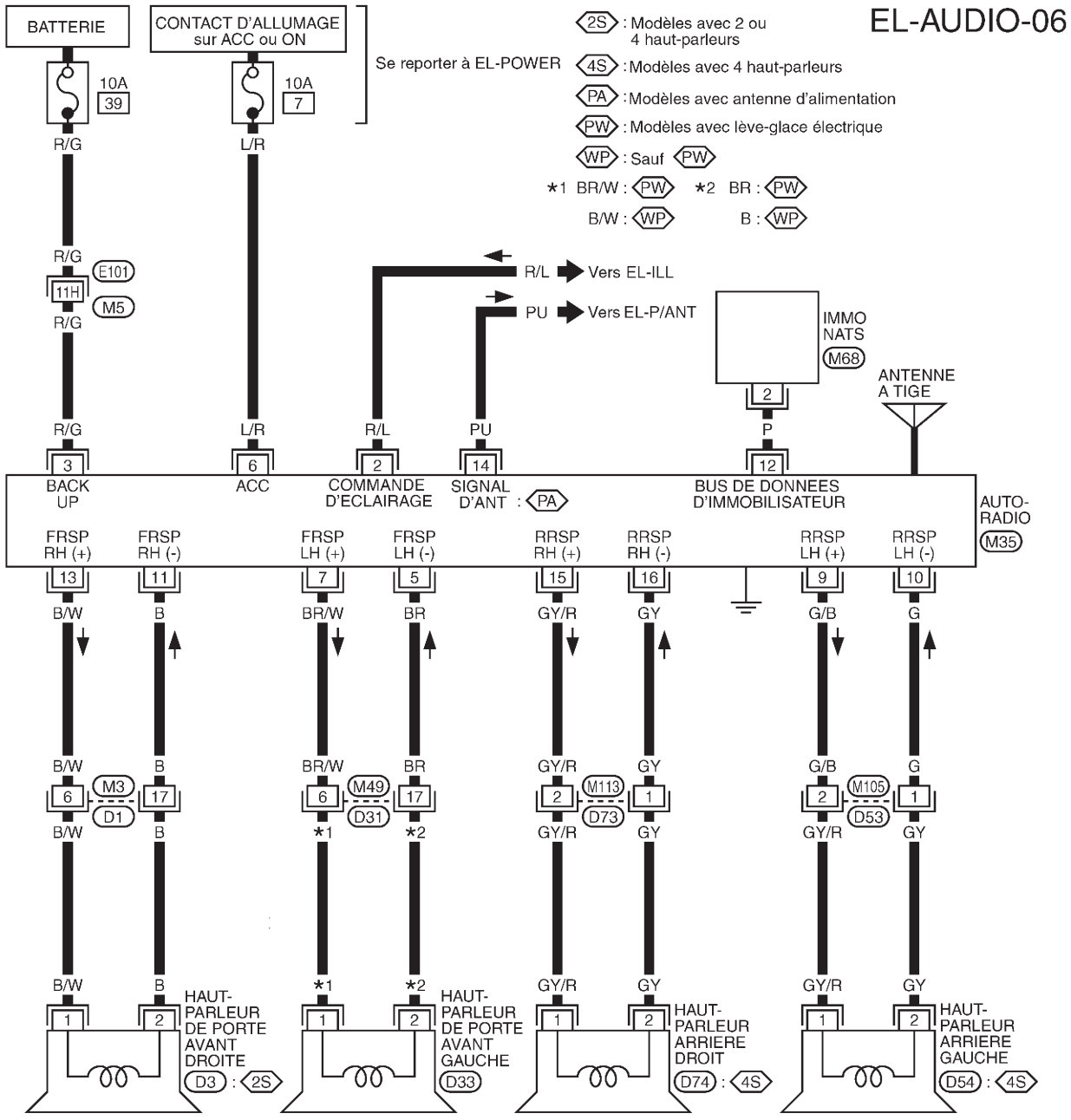

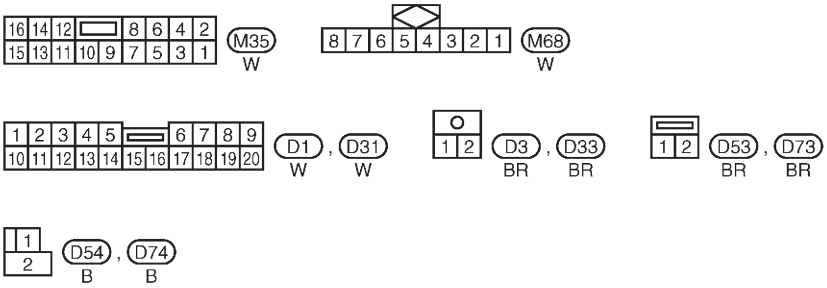

Consulter la dernière page dépliante.
M5 , E101

GEL437A

Simpo PDF Merge and Split Unregistered Version - http://www.simpopdf.com

Antenne électrique/Schéma de câblage — P/ANT —

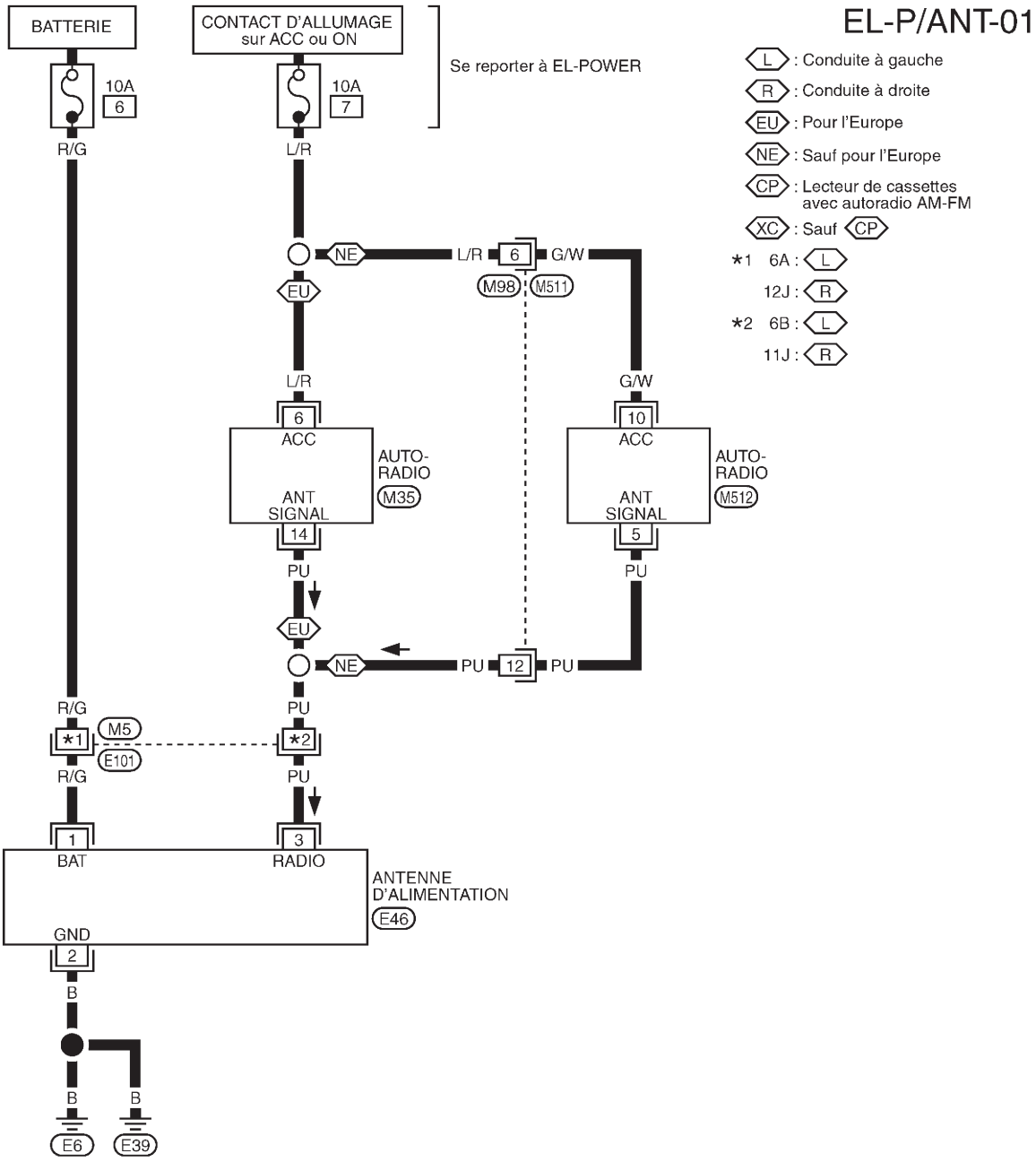

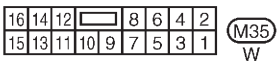

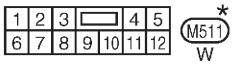

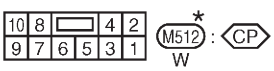

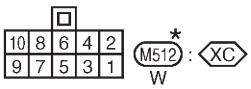



*: Ce connecteur ne figure pas dans la 'DISPOSITION DES FAISCEAUX'.

Consulter la dernière page dépliante.
M5 , E101

GEL438A

Simpo PDF Merge and Split Unregistered Version - http://www.simpopdf.com

Schéma de câblage — MIRROR —/Conduite à gauche

EL-MIRROR-01

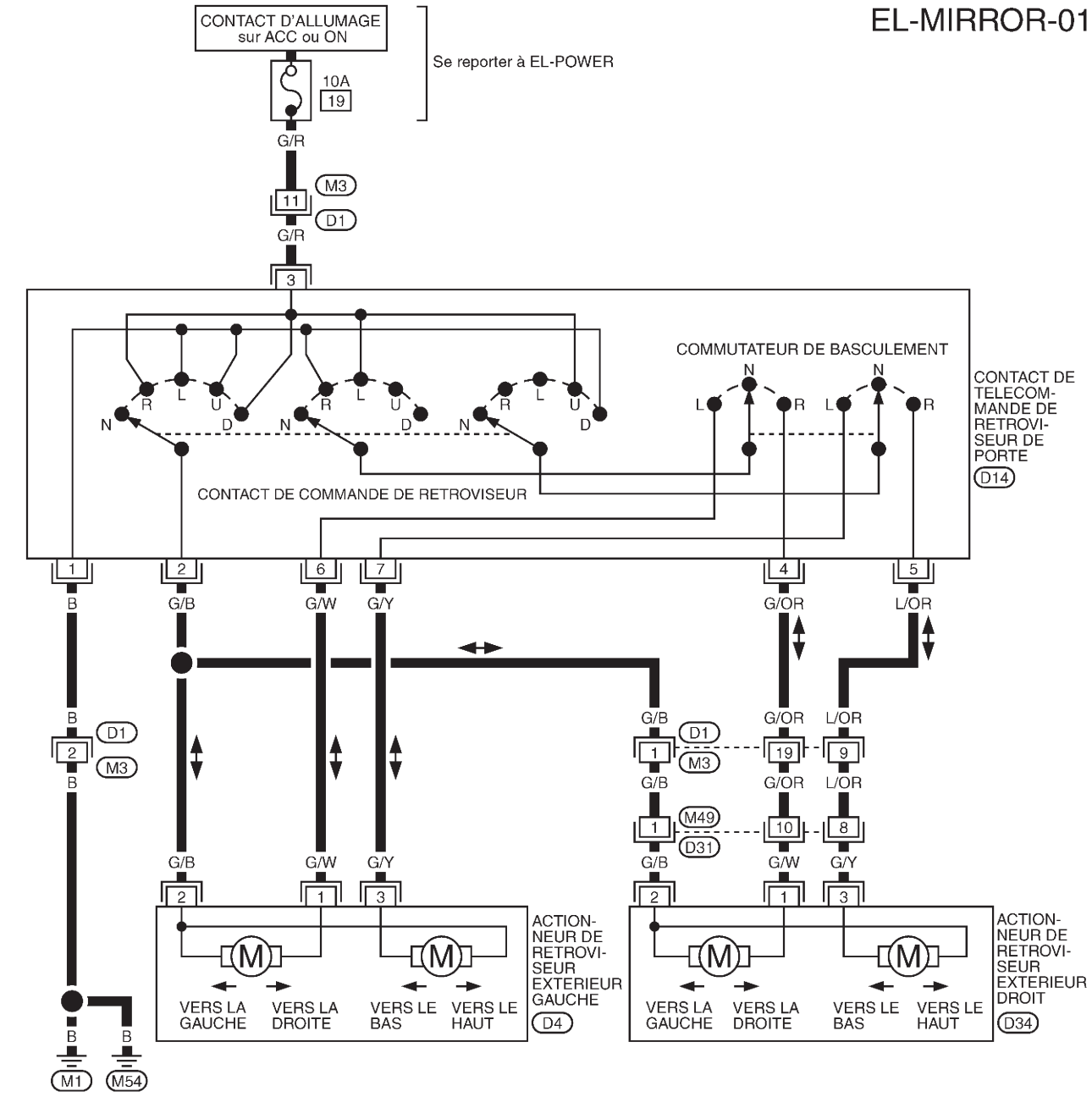

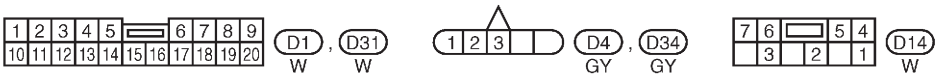

GEL439A

Simpo PDF Merge and Split Unregistered Version - http://www.simpopdf.com

Schéma de câblage — MIRROR —/Conduite à droite

EL-MIRROR-03

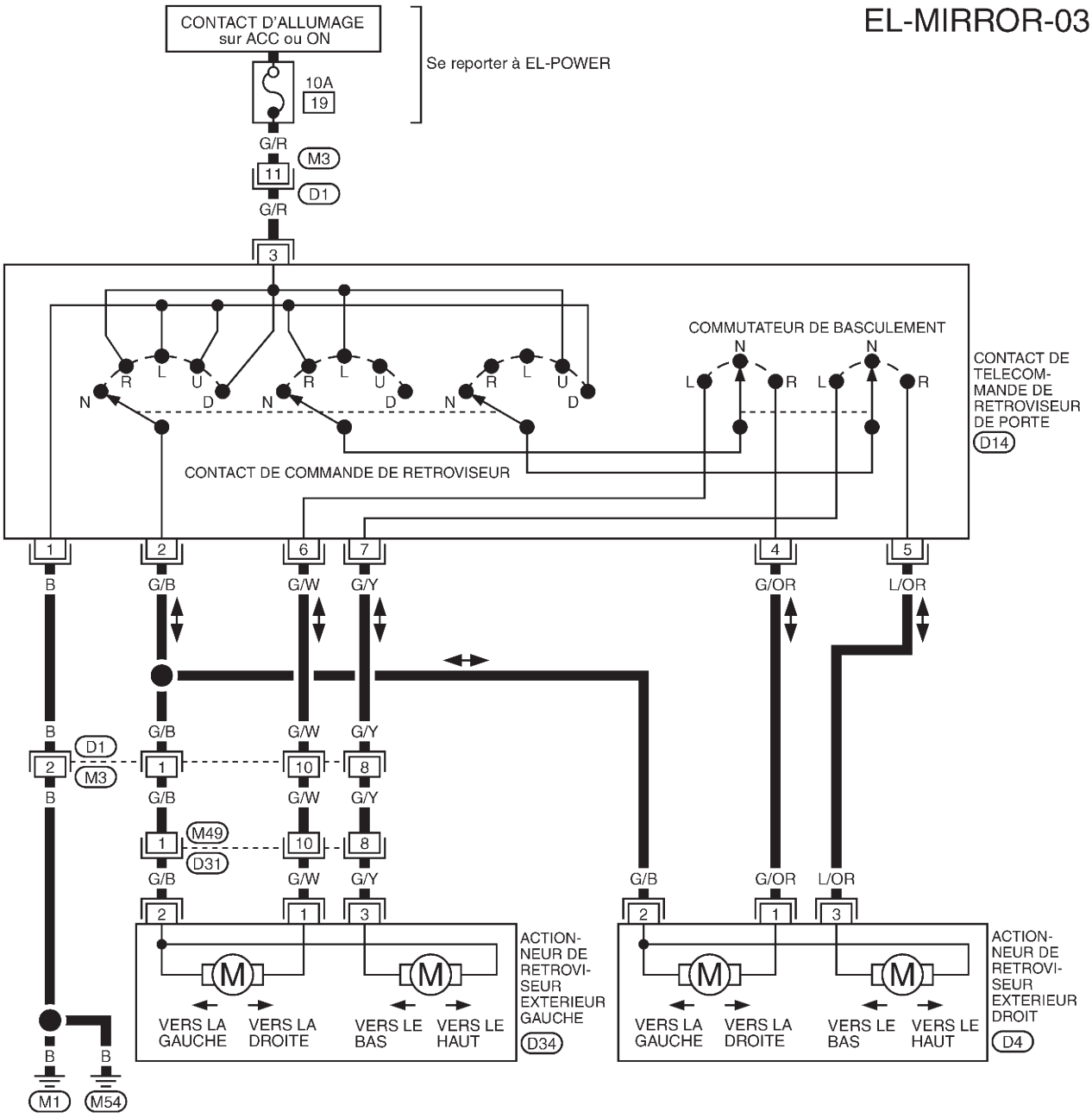

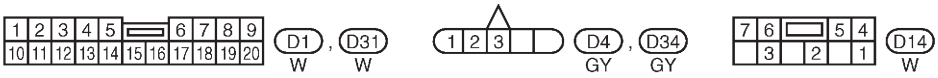

GEL440A

Simpo PDF Merge and Split Unregistered Version - http://www.simpopdf.com

Schéma de câblage — H/SEAT —

EL-H/SEAT-01

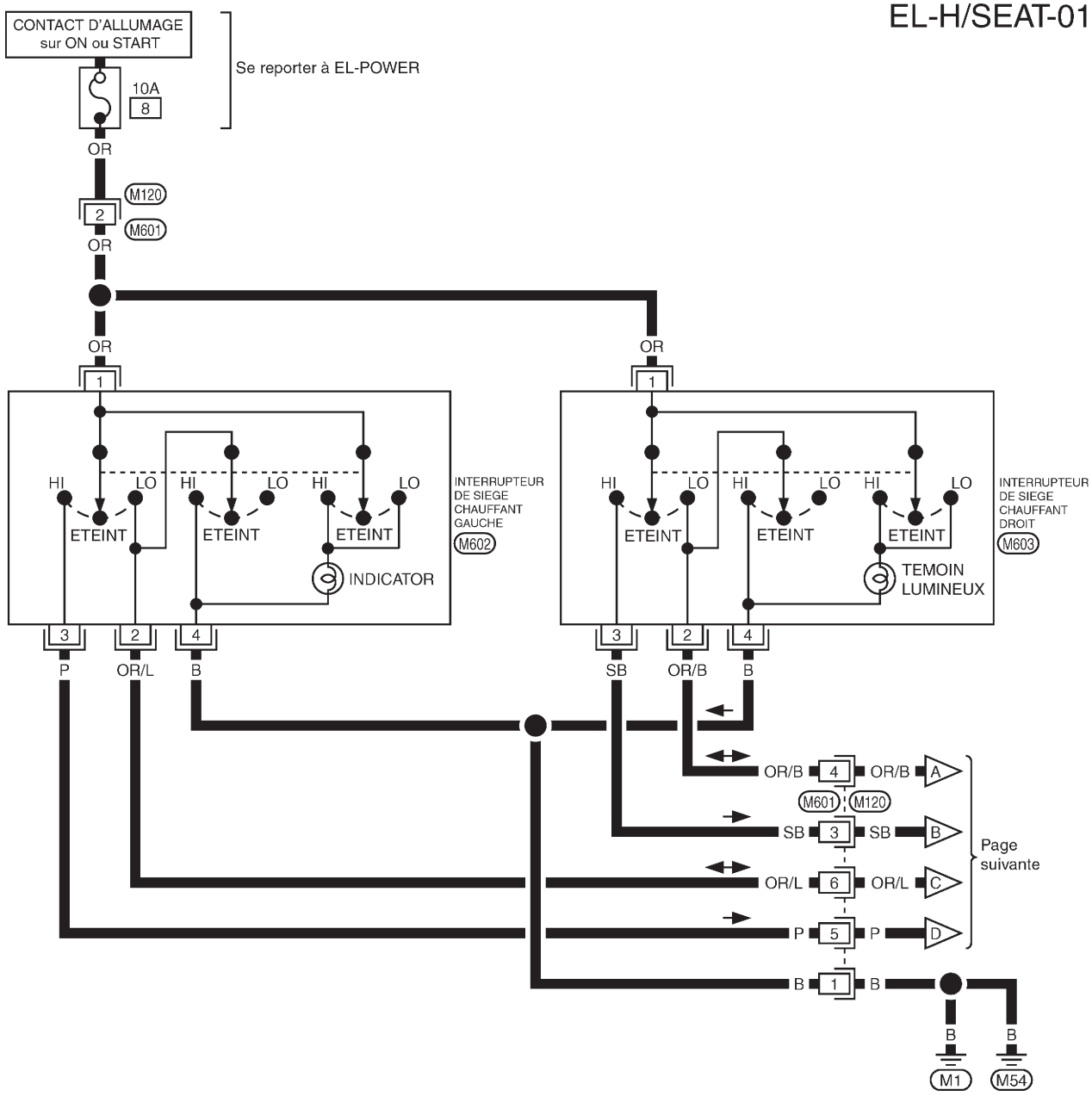

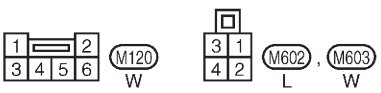

GEL441A

Simpo PDF Merge and Split Unregistered Version - http://www.simpopdf.com

Schéma de câblage — H/SEAT — (Suite)

EL-H/SEAT-02

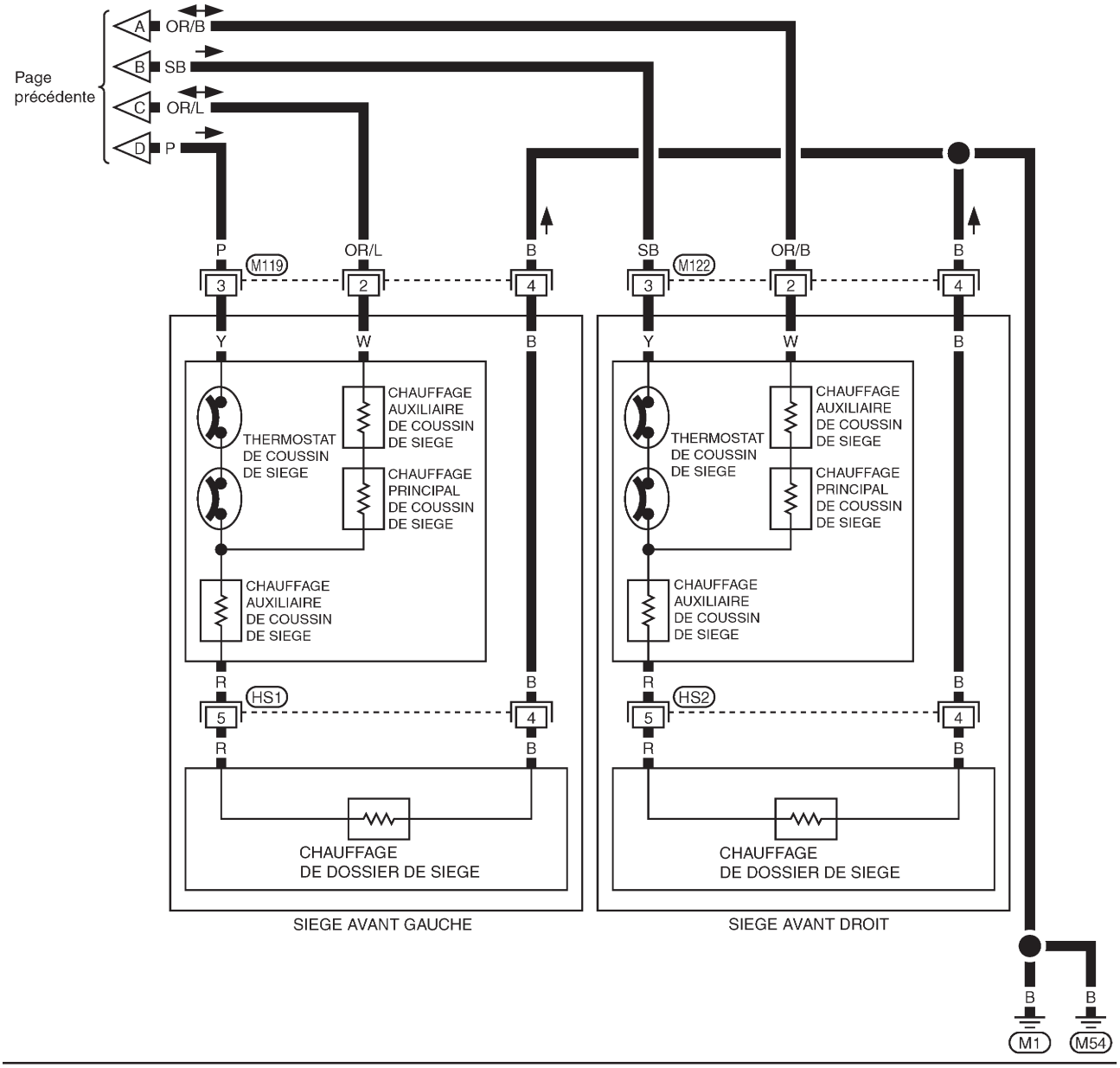

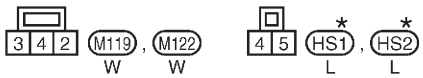

★: Ce connecteur ne figure pas dans la 'DISPOSITION DES FAISCEAUX'.

GEL442A

Simpo PDF Merge and Split Unregistered Version - http://www.simpopdf.com

Schéma/Sans fonction de détection d'interruption

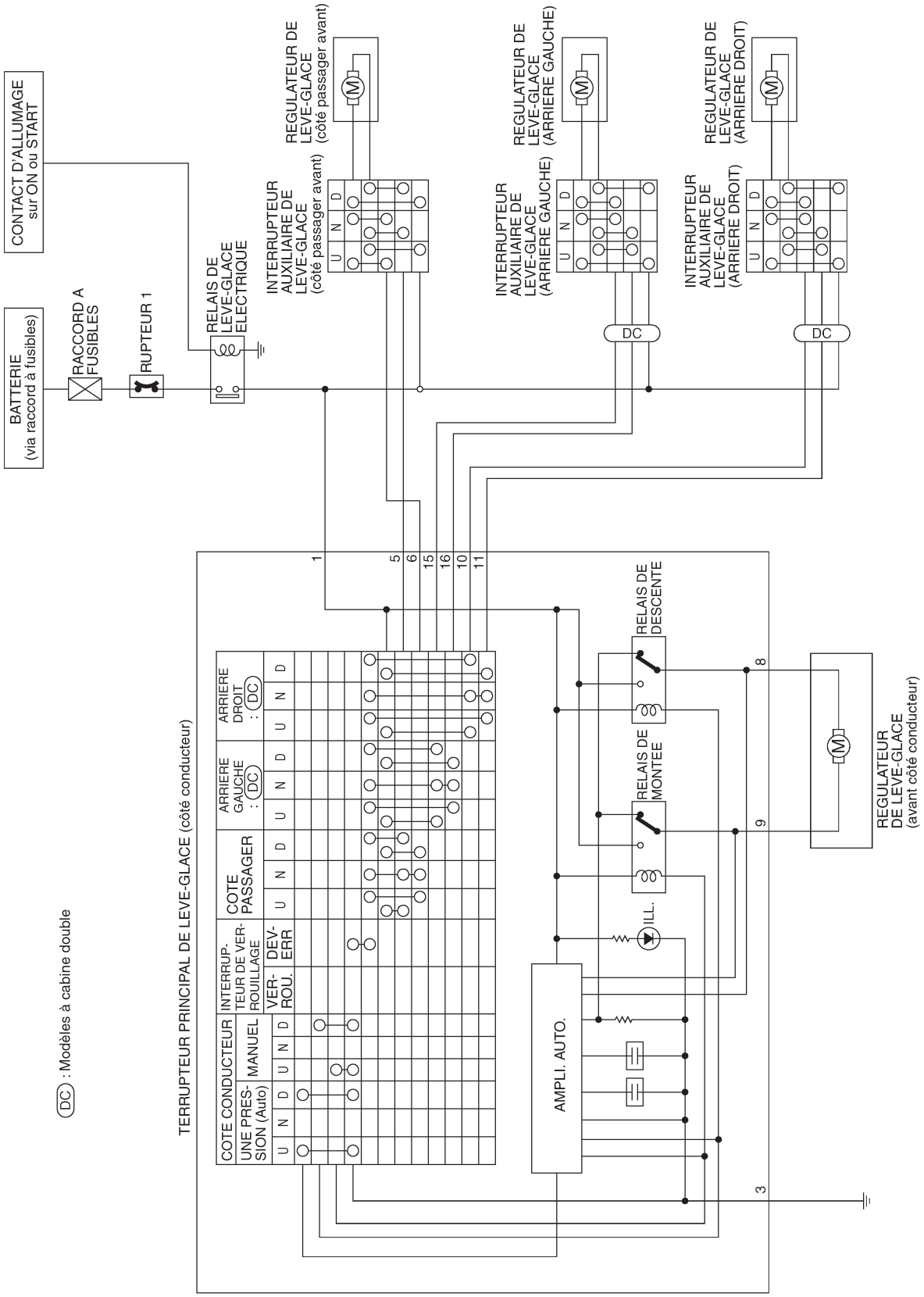

GEL281A

Simpo PDF Merge and Split Unregistered Version - http://www.simpopdf.com

Schéma/Avec fonction de détection d'interruption

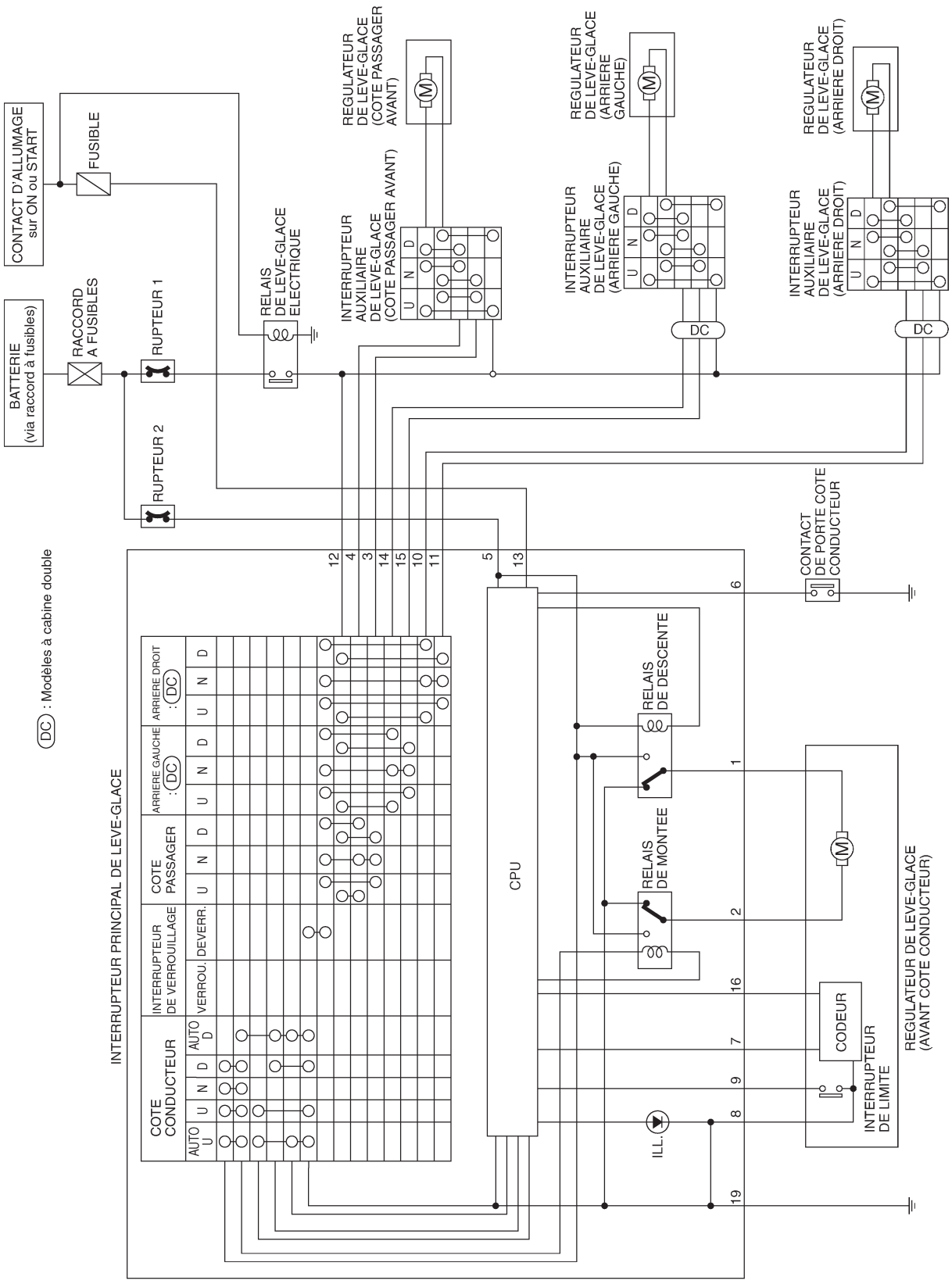

GEL286A

Simpo PDF Merge and Split Unregistered Version - http://www.simpopdf.com

Schéma de câblage — WINDOW —/Sans fonction de détection d'interruption

EL-WINDOW-01

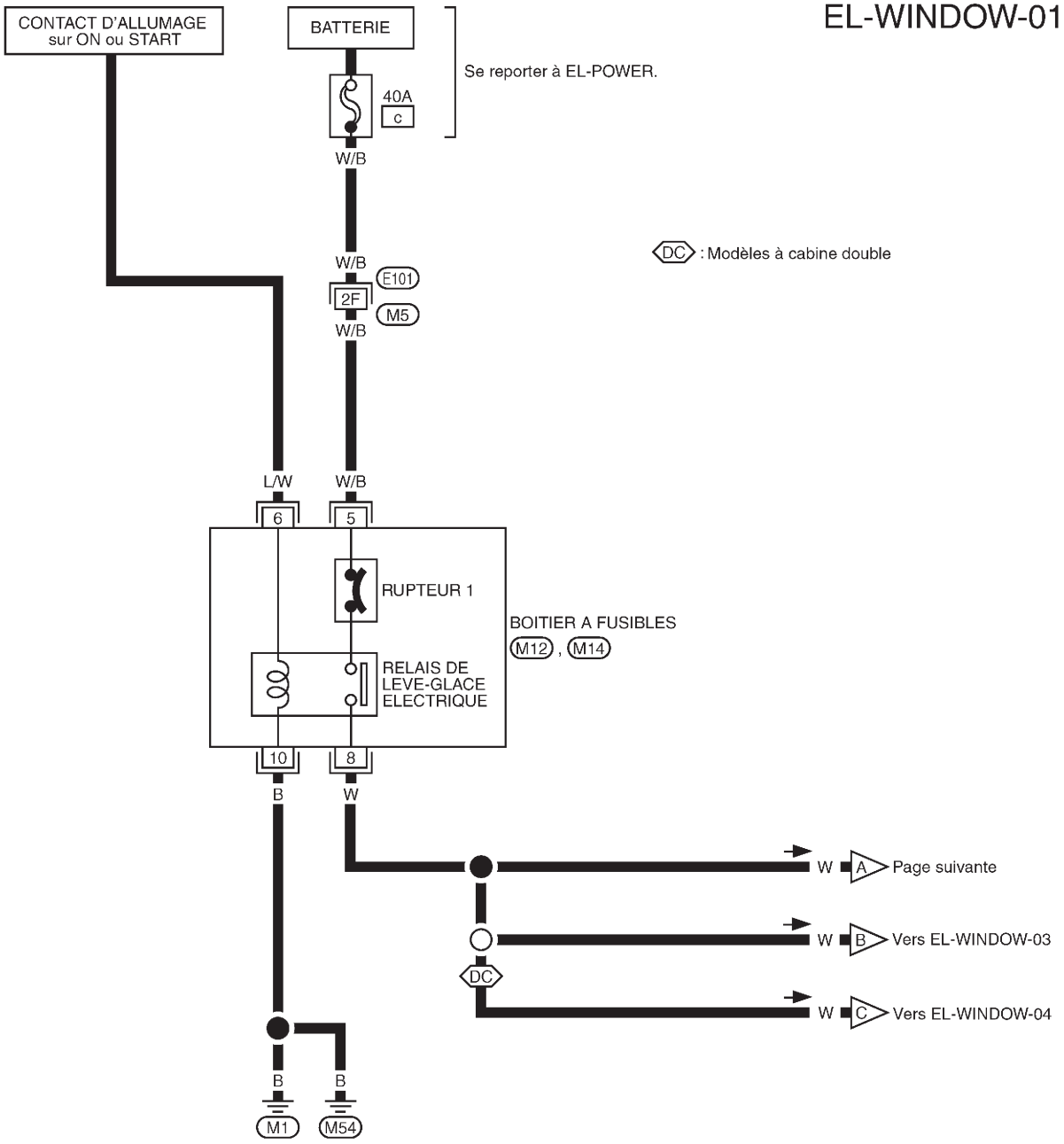

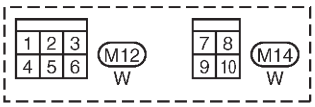

Consulter la dernière page dépliante.
M5 , E101

GEL282A

Simpo PDF Merge and Split Unregistered Version - http://www.simpopdf.com

Schéma de câblage — WINDOW —/Sans fonction de détection d'interruption (Suite)

EL-WINDOW-02

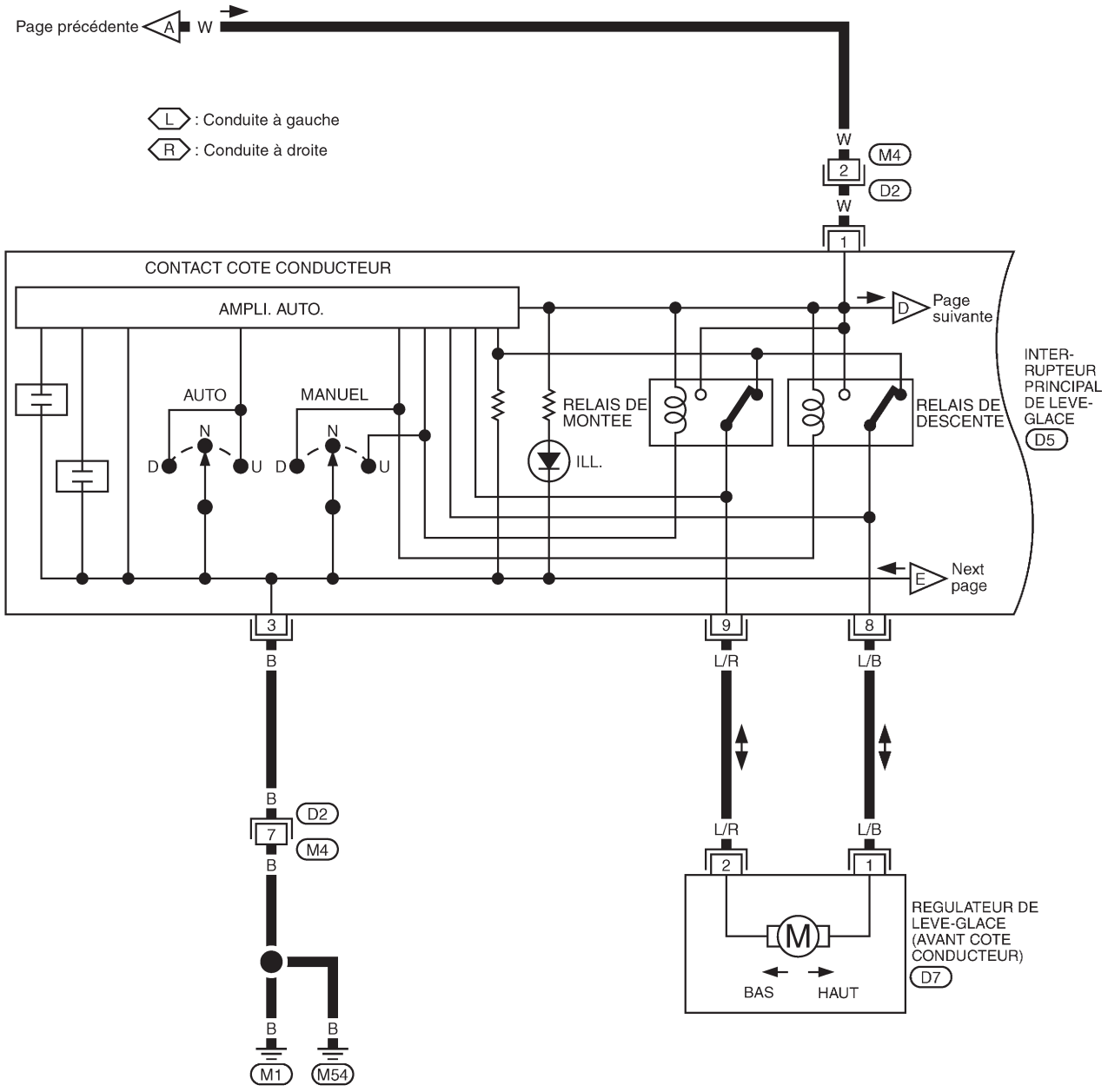

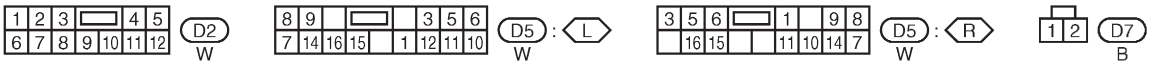

GEL283A

Simpo PDF Merge and Split Unregistered Version - http://www.simpopdf.com

Schéma de câblage — WINDOW —/Sans fonction de détection d'interruption (Suite)

EL-WINDOW-03

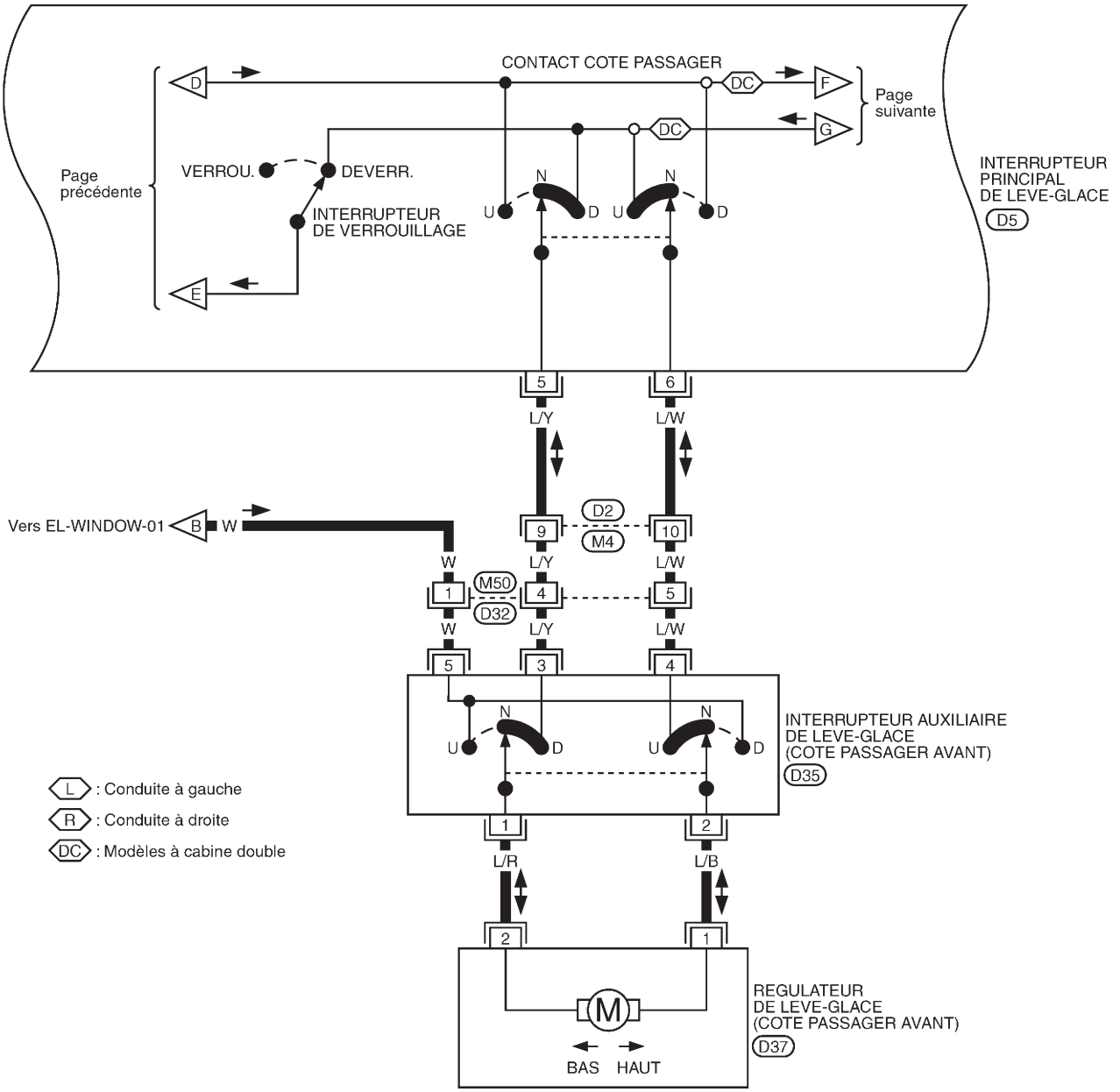



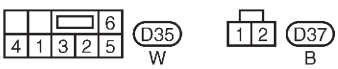

GEL284A

Simpo PDF Merge and Split Unregistered Version - http://www.simpopdf.com

Schéma de câblage — WINDOW —/Sans fonction de détection d'interruption (Suite)

EL-WINDOW-04

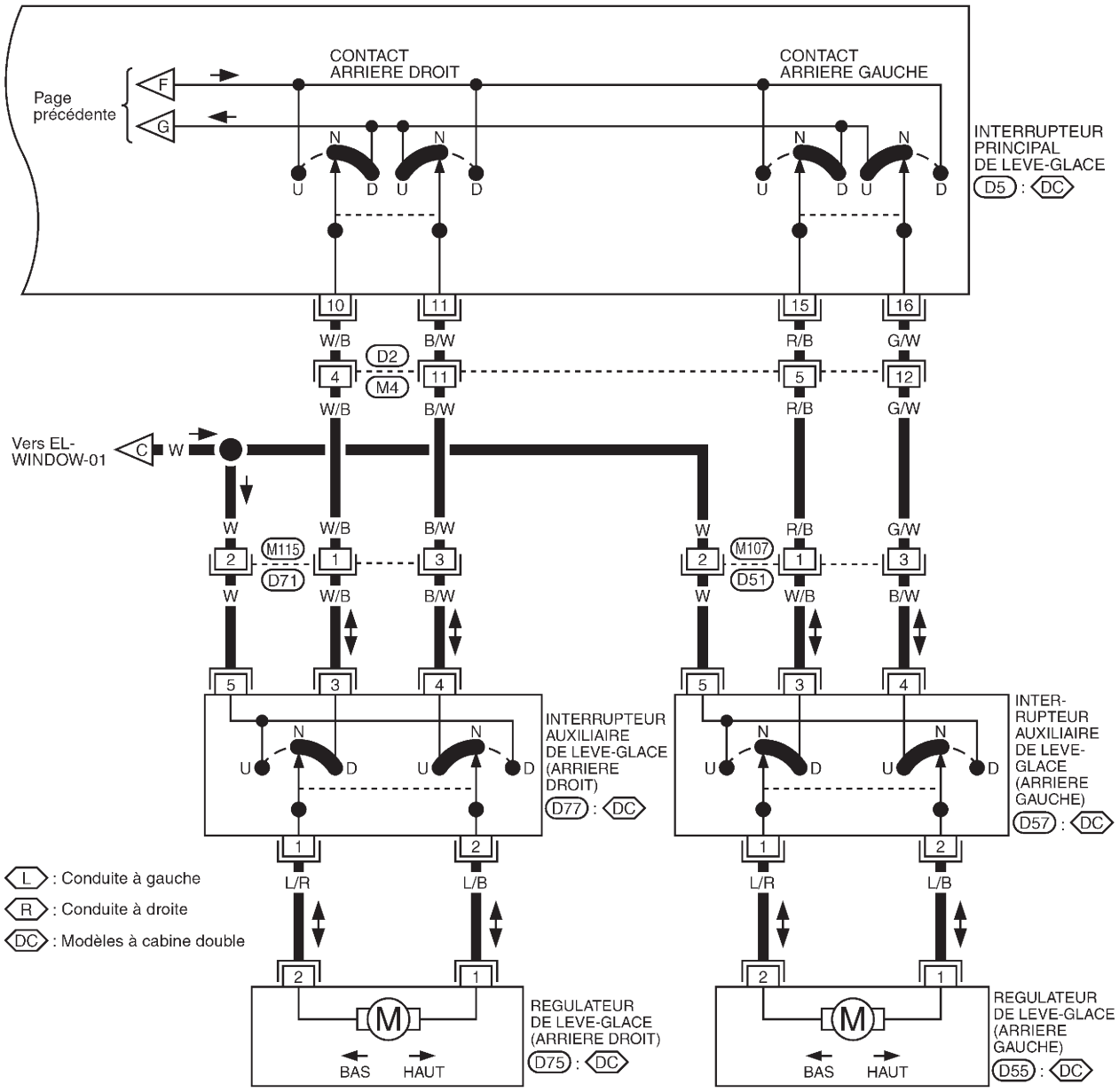

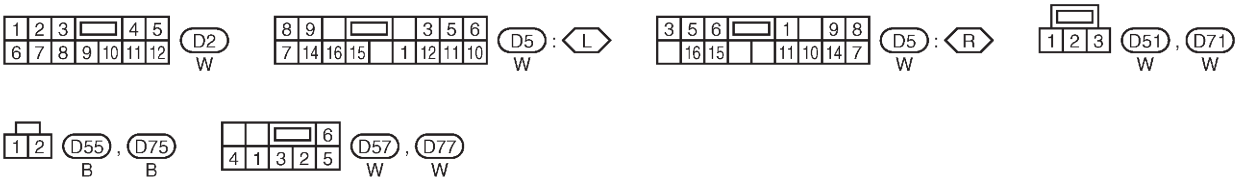

GEL285A

Simpo PDF Merge and Split Unregistered Version - http://www.simpopdf.com

Schéma de câblage — WINDOW —/Avec fonction de détection d'interruption

EL-WINDOW-05

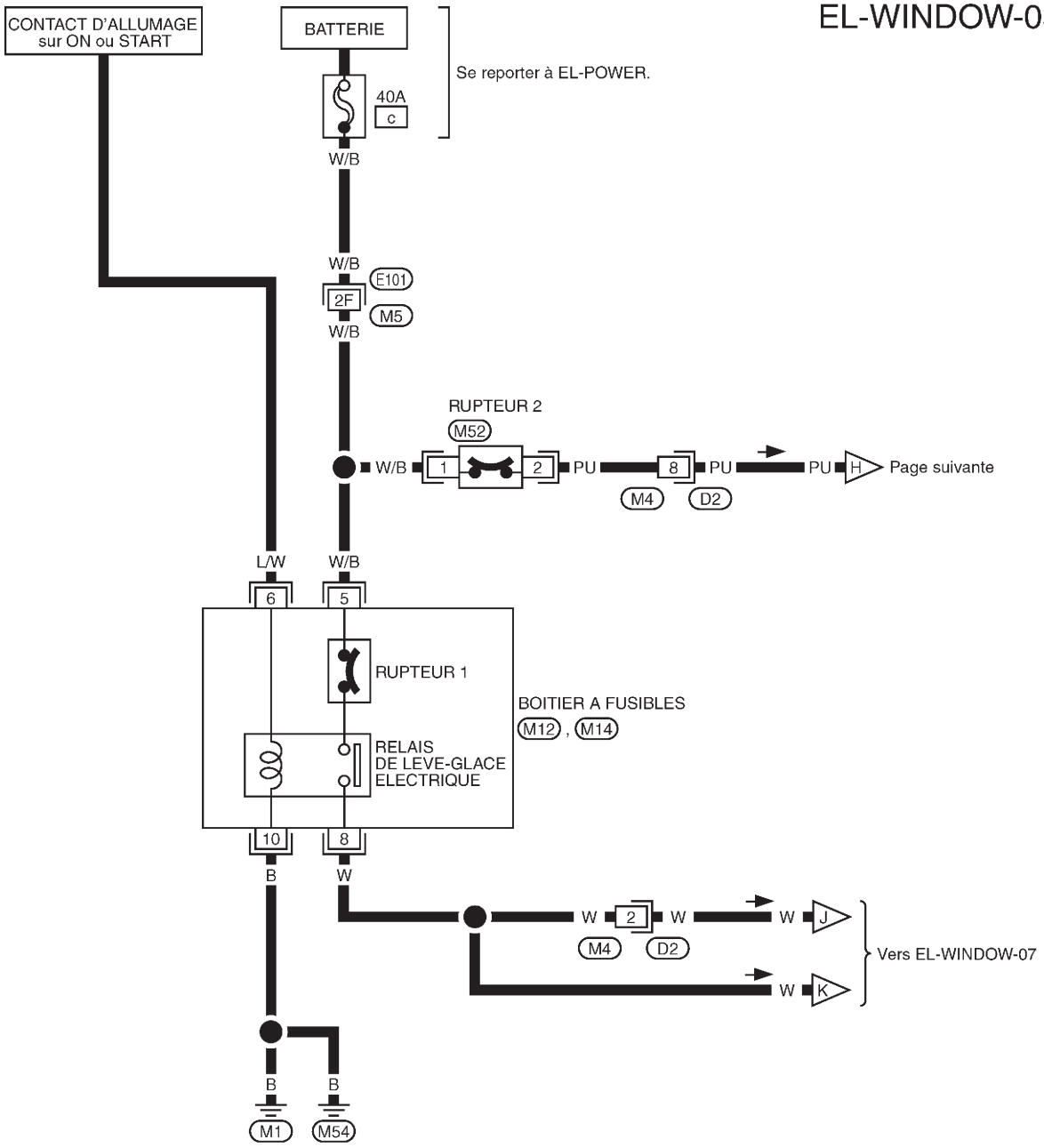

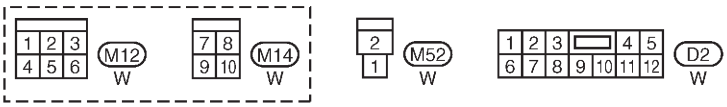

Consulter la dernière page dépliante.
M5 , E101

GEL287A

Simpo PDF Merge and Split Unregistered Version - http://www.simpopdf.com

Schéma de câblage — WINDOW —/Avec fonction de détection d'interruption (Suite)

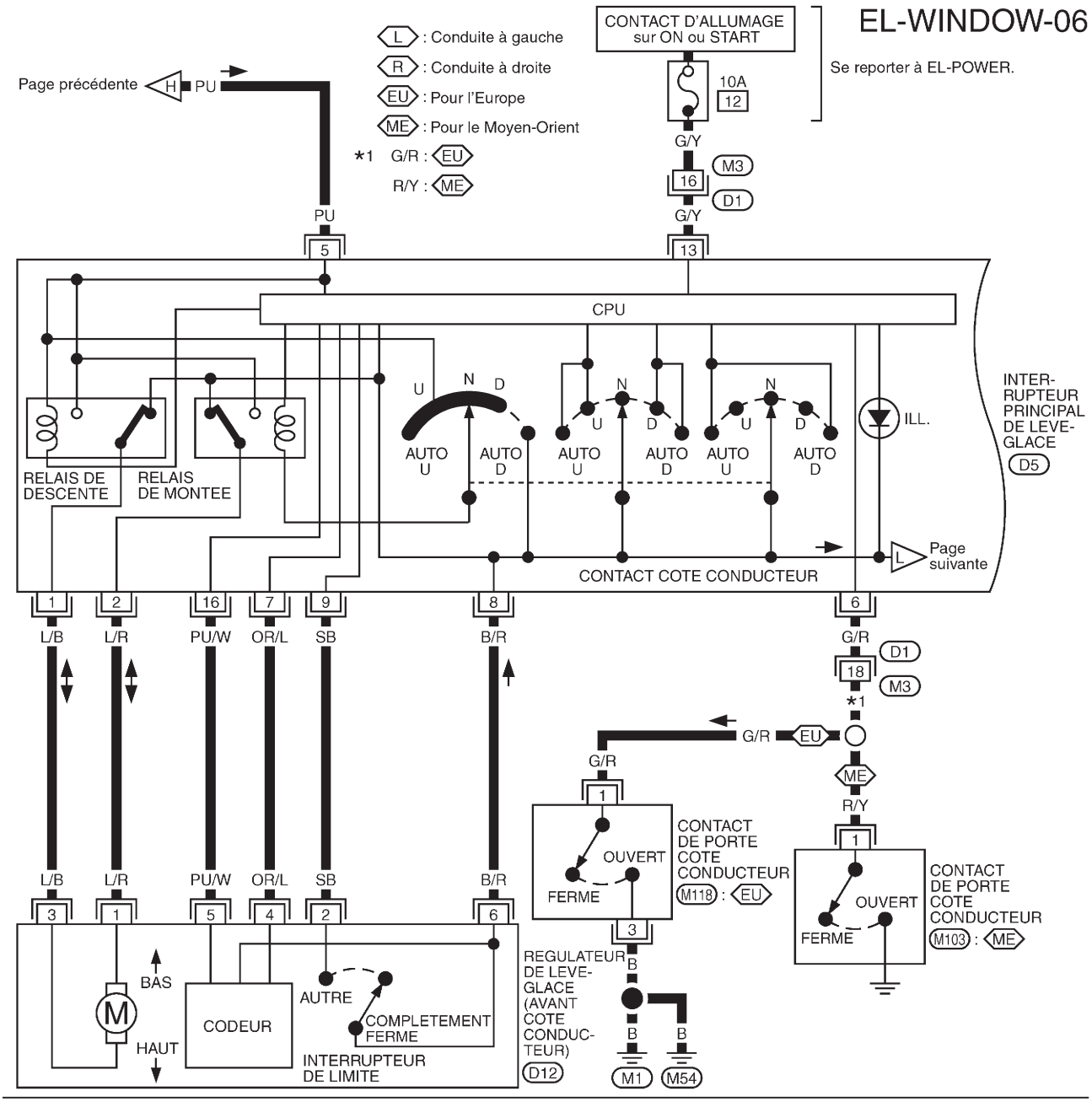

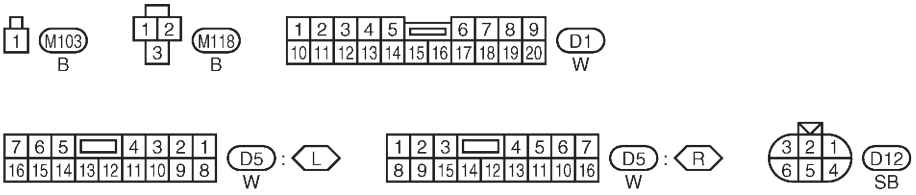

GEL288A

Simpo PDF Merge and Split Unregistered Version - http://www.simpopdf.com

Schéma de câblage — WINDOW —/Avec fonction de détection d'interruption (Suite)

EL-WINDOW-07

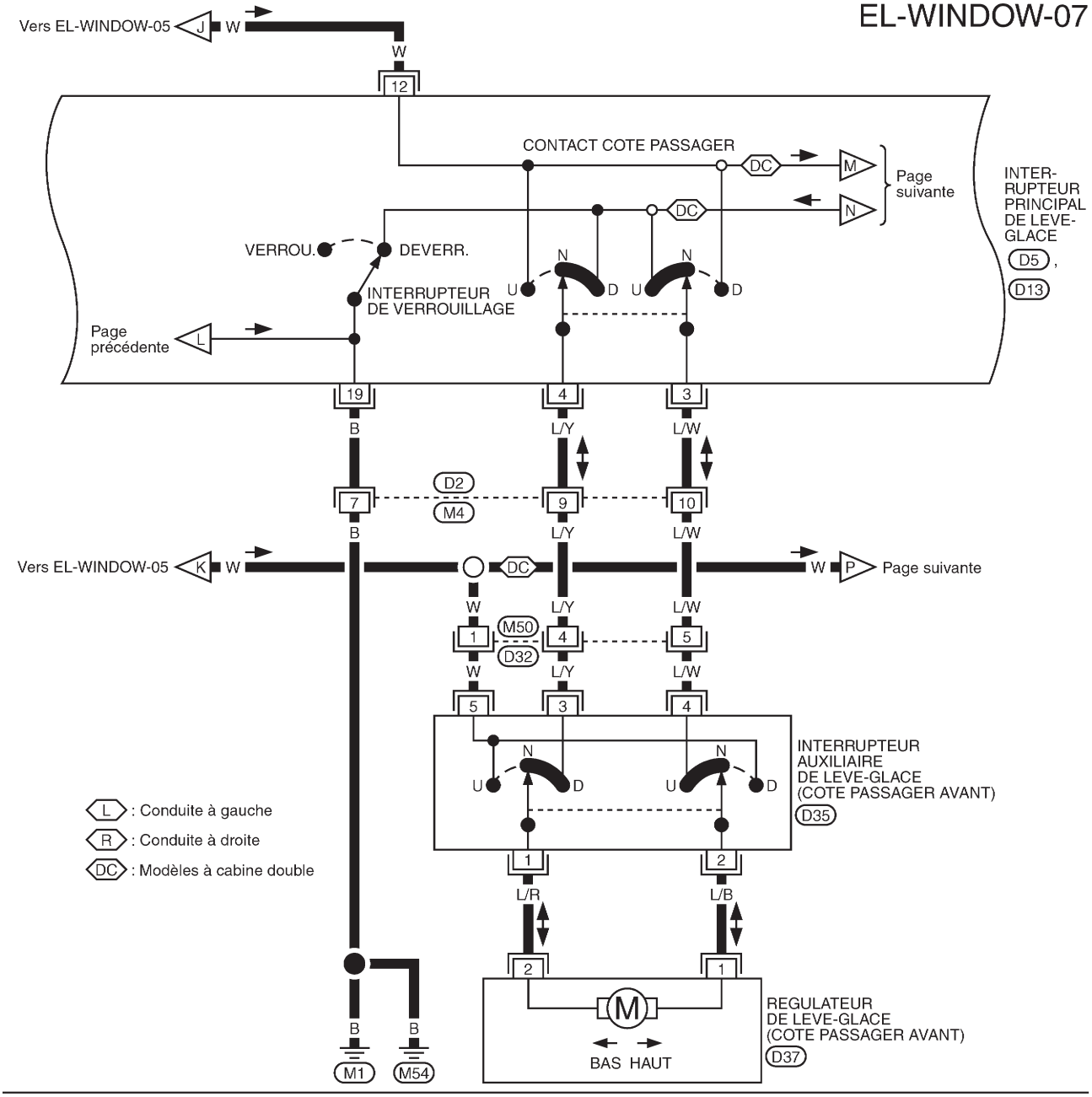

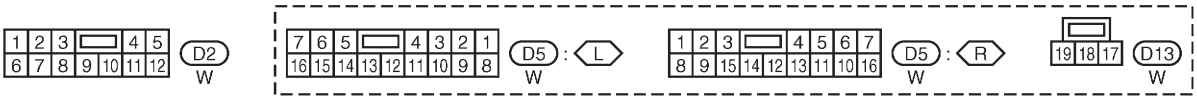

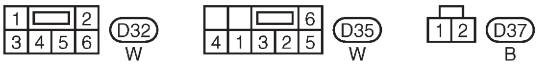

GEL289A

Simpo PDF Merge and Split Unregistered Version - http://www.simpopdf.com

Schéma de câblage — WINDOW —/Avec fonction de détection d'interruption (Suite)

EL-WINDOW-08

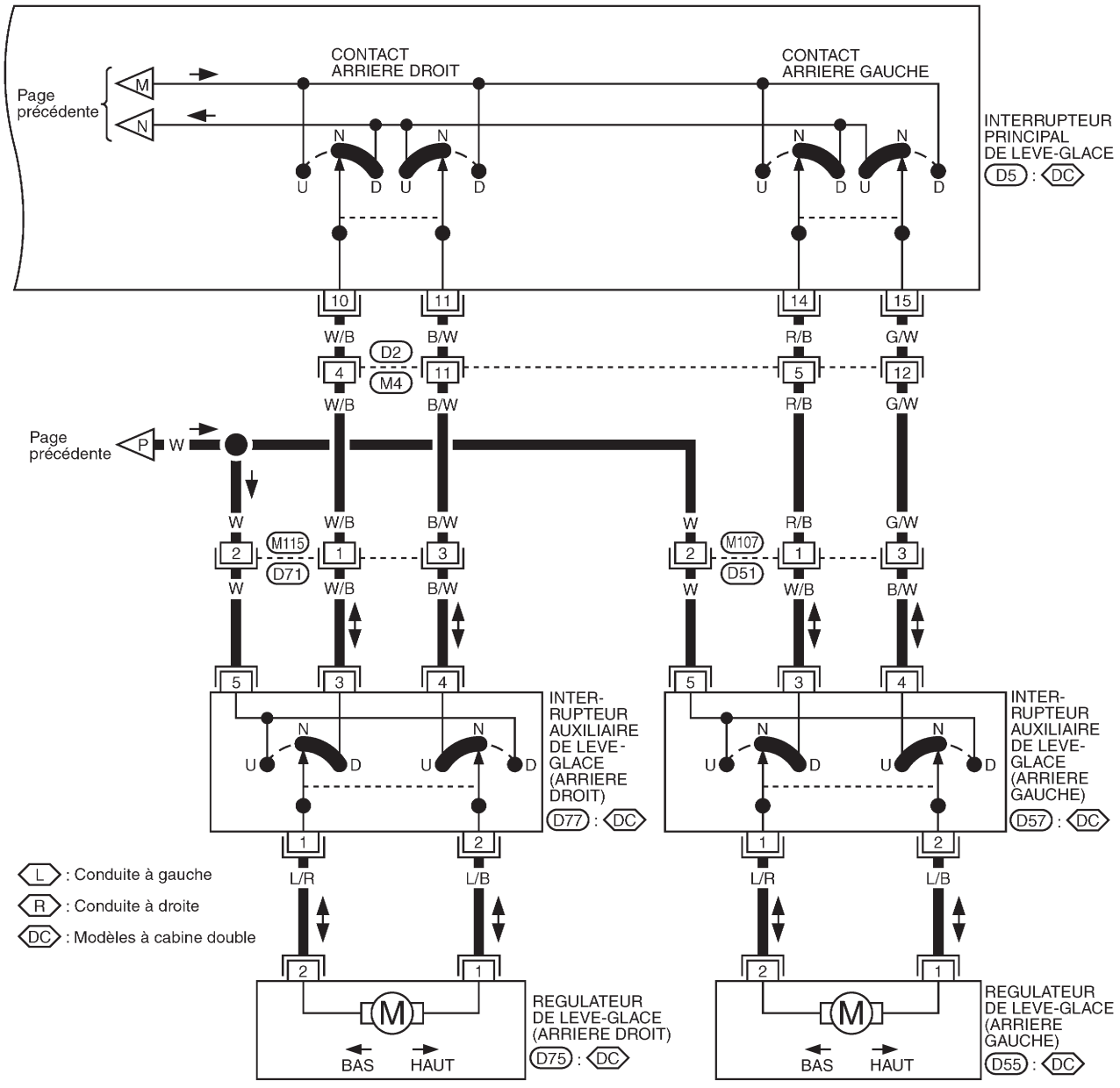

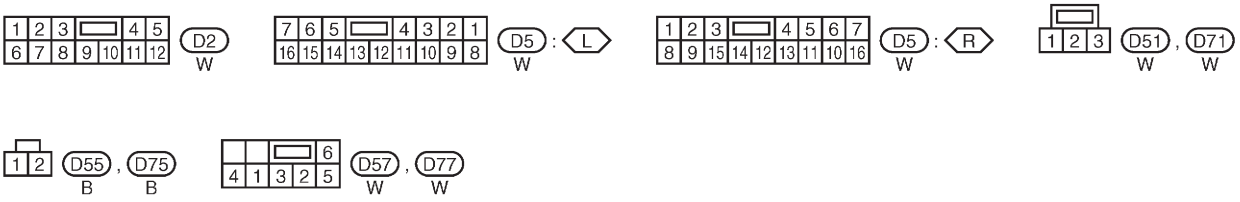

Simpo PDF Merge and Split Unregistered Version - http://www.simpopdf.com

Diagnostic des défauts/Sans fonction de détection d'interruption

Symptôme	Cause possible	Ordre de réparation
Aucun des lève-vitres électriques ne peut être actionné quelle que soit la commande utilisée.	1. Raccord à fusible de 40A et rupteur de circuit 1. 2. Masses (M1) et (M54) 3. Relais de lève-vitre électrique 4. Circuit de l'interrupteur principal de lève-vitre électrique ouvert ou en court-circuit	1. Vérifier le raccord à fusible de 40A (lettre C, situé dans le raccord à fusible et la boîtier à fusibles) et le rupteur-1, situé dans le boîtier à fusibles. Mettre le contact d'allumage sur "ON" et vérifier qu'une tension positive de la batterie est appliquée à la borne ① de l'interrupteur principal de lève-vitre électrique et à la borne ⑤ des interrupteurs auxiliaires. 2. Vérifier les masses (M1) et (M54). 3. Vérifier le relais de lève-vitre électrique. 4. Vérifier que le faisceau ne soit ni en circuit ouvert ni court-circuité entre l'interrupteur principal et le relais de lève-vitre électrique.
Le lève-vitre électrique côté conducteur ne peut pas être actionné, mais les autres lève-vitres peuvent être actionnés.	1. Circuit du régulateur de lève-vitre électrique du conducteur 2. Régulateur de lève-vitre électrique du conducteur	1. Vérifier que le faisceau ne soit ni en circuit ouvert ni court-circuité entre l'interrupteur principal et le régulateur de lève-vitre électrique. 2. Vérifier le régulateur de lève-vitre électrique côté conducteur.
Un ou plusieurs lève-vitre électrique, sauf celui côté conducteur, ne peut pas être actionné.	1. Interrupteur auxiliaire de lève-vitre électrique 2. Régulateur de lève-vitre électrique du passager 3. Interrupteur principal de lève-vitre électrique 4. Circuit de lève-vitre électrique	1. Vérifier les interrupteurs auxiliaires de lève-vitre électrique. 2. Vérifier le régulateur du lève-vitre électrique défectueux. 3. Vérifier l'interrupteur principal de lève-vitre électrique. 4-1. Vérifier que les faisceaux ne soient pas en circuit ouvert ni court-circuités entre l'interrupteur principal et les interrupteurs auxiliaires de lève-vitre électriques. 4-2. Vérifier que les faisceaux ne soient ni en circuit ouvert ni court-circuités entre les interrupteurs auxiliaires et le régulateur de lève-vitre électrique.
Le lève-vitre électrique côté passager ne peut pas être actionné à l'aide de l'interrupteur principal de lève-vitre mais peut l'être à l'aide des interrupteurs auxiliaires.	1. Interrupteur principal de lève-vitre électrique	1. Vérifier l'interrupteur principal de lève-vitre électrique.
La fonction automatique du lève-vitre électrique côté conducteur ne peut être actionnée à l'aide de l'interrupteur principal de lève-vitre électrique.	1. Interrupteur principal de lève-vitre électrique	1. Vérifier l'interrupteur principal de lève-vitre électrique.

Simpo PDF Merge and Split Unregistered Version - http://www.simpopdf.com

Diagnostic des défauts/Avec fonction de détection d'interruption

Symptôme	Cause possible	Ordre de réparation
Aucun des lève-vitres électriques ne peut être actionné quelle que soit la commande utilisée.	1. Fusible de 10A, raccord à fusible de 40A 2. Circuit de la masse 3. Interrupteur principal de lève-vitre électrique	1. Vérifier le fusible de 10A [n° 12, situé dans la boîte à fusible (J/B)], le raccord à fusible de 40A (lettre C , situé dans la boîte de raccord à fusible). 2. Vérifier le circuit de mise à la masse de la borne de l'interrupteur principal de lève-vitre électrique 19. 3. Vérifier l'interrupteur principal de lève-vitre électrique.
Le lève-vitre électrique côté conducteur ne peut pas être actionné, mais les autres lève-vitres peuvent être actionnés.	1. Circuit du régulateur de lève-vitre électrique côté conducteur 2. Régulateur de lève-vitre électrique côté conducteur 3. (M52) Rupteur 2 4. (M52) Circuit du rupteur 2 5. Circuit de l'interrupteur principal de lève-vitre électrique	1. Vérifier que le faisceau ne soient ni en circuit ouvert ni court-circuité entre l'interrupteur principal et le régulateur de lève-vitre électrique côté conducteur. 2. Vérifier le régulateur de lève-vitre électrique côté conducteur. 3. Vérifier le rupteur 2 (M52). 4. Vérifier le faisceau entre (M52) le rupteur 2 et le raccord à fusible de 40A (lettre C , situé dans la boîte à fusible et à raccord à fusible). 5-1. Vérifier le faisceau entre la borne (13) de l'interrupteur principal de lève-vitre électrique et le fusible de 10A [n° 12, situé dans le boîtier à fusible(J/B)]. 5-2. Vérifier le faisceau entre la borne (5) de l'interrupteur principal de lève-vitre électrique et le rupteur (M52).
Un ou plusieurs lève-vitre électrique, sauf celui côté conducteur, ne peut être actionné.	1. Interrupteurs auxiliaires de lève-vitre 2. Régulateurs de lève-vitre électrique 3. Interrupteur principal de lève-vitre électrique 4. Circuit de lève-vitre électrique	1. Vérifier les interrupteurs auxiliaires de lève-vitre électrique. 2. Vérifier le régulateur de lève-vitre électrique. 3. Vérifier l'interrupteur principal de lève-vitre électrique. 4-1. Vérifier que les faisceaux entre l'interrupteur principal de lève-vitre et l'interrupteur auxiliaire de lève-vitre ne soient ni en circuit ouvert ni cout-circuités. 4-2. Vérifier que les faisceaux entre l'interrupteur auxiliaire de lève-vitre et le régulateur de lève-vitre ne soient ni en circuit ouvert ni court-circuités.
Les lève-vitre électriques, excepté celui du conducteur, ne peuvent pas être actionnés à l'aide de l'interrupteur principal de lève-vitre mais peuvent l'être à l'aide des interrupteurs auxiliaires.	1. Interrupteur principal de lève-vitre électrique	1. Vérifier l'interrupteur principal de lève-vitre électrique.
La mise en marche automatique du lève-vitre électrique côté conducteur ne fonctionne pas correctement.	1. Interrupteur principal de lève-vitre électrique 2. Encodeur et interrupteur de fin de course.	1. Vérifier l'interrupteur principal de lève-vitre électrique. 2. Vérifier l'encodeur et l'interrupteur de fin de course. (EL-0)
Le temporisateur qui permet l'alimentation électrique après que le contact d'allumage ait été mis sur la position OFF ne fonctionne pas correctement. (Sauf modèles pour l'Europe)	1. Circuit du contact de porte côté conducteur 2. Contact de porte côté conducteur 3. Circuit du signal du contact d'allumage ON 4. Interrupteur principal de lève-vitre électrique	1. Vérifier le faisceau entre le contact de porte du conducteur et l'interrupteur principal de lève-vitre électrique. 2. Vérifier le contact de porte côté conducteur. 3. Vérifier le circuit du signal du contact d'allumage (sur ON) à l'interrupteur principal de lève-vitre électrique. 4. Vérifier l'interrupteur principal de lève-vitre électrique.

Simpo PDF Merge and Split Unregistered Version - http://www.simpopdf.com

Diagnostic des défauts/Avec fonction de détection d'interruption (Suite)

ENCODEUR ET INTERRUPTEUR DE FIN DE COURSE

A

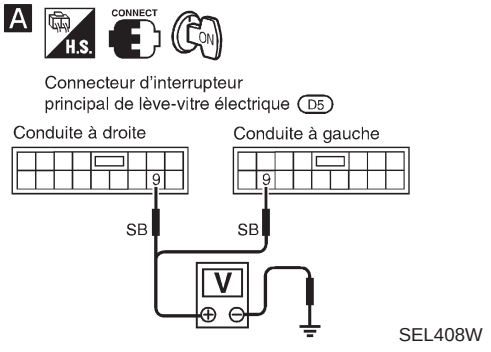

B

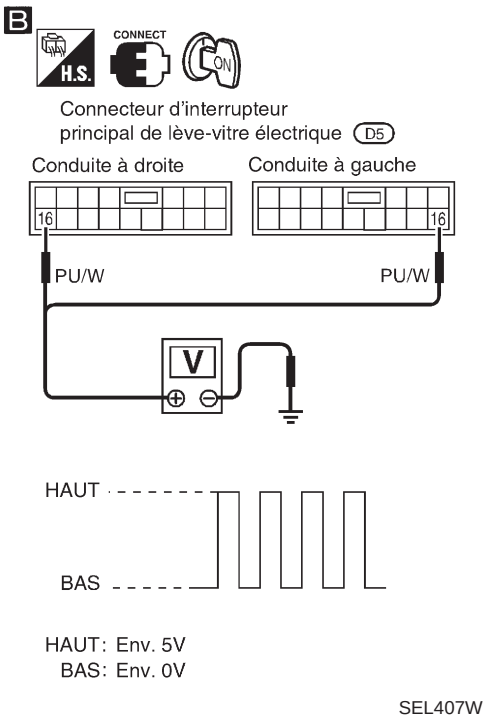

VERIFIER LE MECANISME DE COULISSEMENT DE VITRE DE PORTE
Vérifier les points suivants.
- Obstacles dans la vitre, moulure de la vitre, etc.
- Moulure de la vitre usée ou déformée
- Guillotine de porte trop penchée vers l'intérieur ou l'extérieur
- Régulateur de vitre de porte

Mauvais → Retirer les obstacles ou réparer le mécanisme de coulissement de vitre de porte.

Bon ↓

A

VERIFIER L'ALIMENTATION ELECTRIQUE DE L'INTERRUPTEUR DE FIN DE COURSE
1. Débrancher le connecteur du régulateur de lève-vitre électrique côté conducteur.
2. Mettre le contact d'allumage sur ON.
3. Vérifier la tension entre la borne ⑨ de l'interrupteur principal de lève-vitre électrique et la masse.
   Il doit y avoir environ 5V.

Mauvais → Remplacer l'interrupteur principal de lève-vitre électrique.

Bon ↓

VERIFIER LE FONCTIONNEMENT DE L'INTERRUPTEUR DE FIN DE COURSE
1. Couper le contact.
2. Brancher le connecteur du régulateur de lève-vitre électrique côté conducteur.
3. Mettre le contact d'allumage sur ON.
4. Vérifier la tension entre la borne ⑨ de l'interrupteur principal de lève-vitre électrique et la masse pendant l'opération de fermeture du lève-vitre électrique.

N° de borne	Condition	Tension (DCV)
⑨	Environ 15 mm au dessous de la position complètement fermée à la position fermée	Environ 5
	Autres positions	Environ 0

Bon → B

B

VERIFIER L'ENCODEUR
Mesurer la tension entre la borne ⑯ de l'interrupteur principal de lève-vitre électrique et la masse avec un oscilloscope pendant l'opération de fermeture automatique du lève-vitre électrique.
Si le résultat est mauvais, remplacer le moteur du régulateur de lève-vitre électrique (côté conducteur).
Si le résultat est bon, remplacer l'interrupteur principal de lève-vitre électrique.

Mauvais ↓

REGLER L'INTERRUPTEUR DE FIN DE COURSE
Régler l'interrupteur de fin de course. Se reporter à la section BT. Mesurer la tension entre la borne ⑨ de l'interrupteur principal de lève-vitre électrique et la masse pendant l'opération de fermeture du lève-vitre électrique au moins dix fois.

N° de borne	Condition	Tension (DCV)
⑨	Environ 15 mm au dessous de la position complètement fermée à la position fermée	Environ 5
	Autres positions	Environ 0

Mauvais → Remplacer le moteur du régulateur de lève-vitre électrique (côté conducteur).

Bon ↓

B

VERIFIER L'ENCODEUR
Mesurer la tension entre la borne ⑯ de l'interrupteur principal de lève-vitre électrique et la masse avec un oscilloscope pendant l'opération de fermeture automatique du lève-vitre électrique.

Mauvais → Remplacer le moteur du régulateur de lève-vitre électrique (côté conducteur).

Bon ↓

Remplacer l'interrupteur principal de lève-vitre électrique.

Simpo PDF Merge and Split Unregistered Version - http://www.simpopdf.com

Schéma de câblage — D/LOCK —

EL-D/LOCK-03

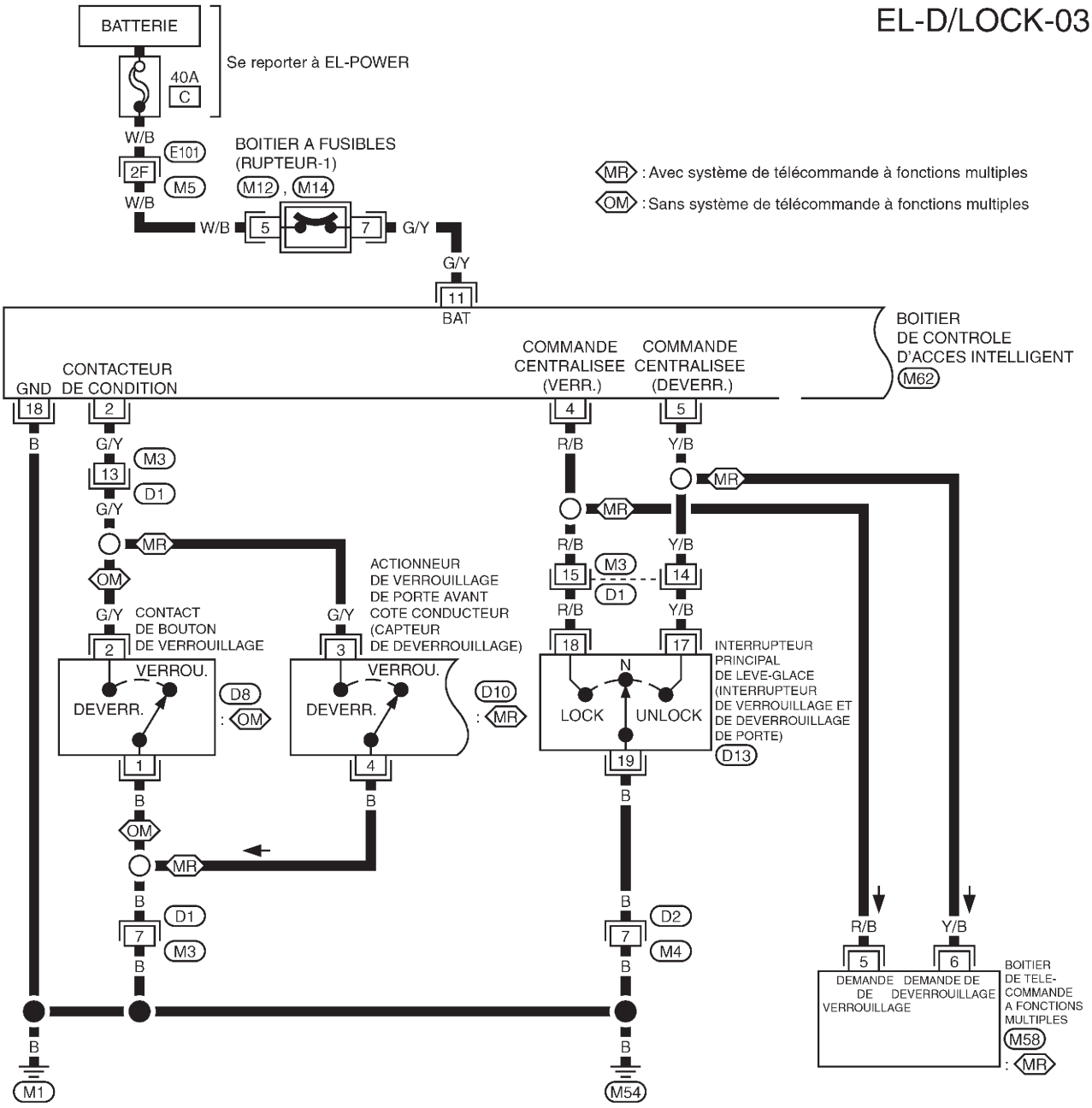

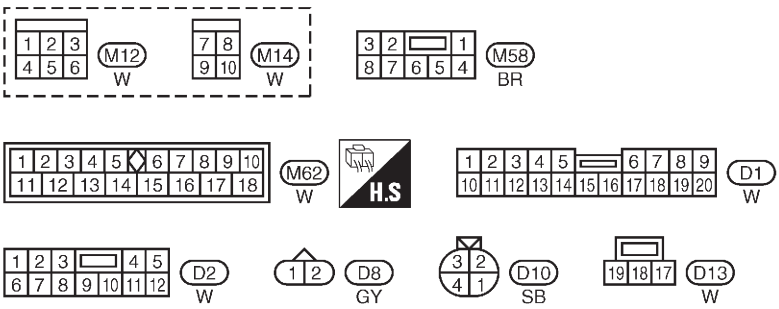

Consulter la dernière page dépliante.
M5 , E101

GEL443A

Simpo PDF Merge and Split Unregistered Version - http://www.simpopdf.com

Schéma de câblage — D/LOCK — (Suite)

EL-D/LOCK-04

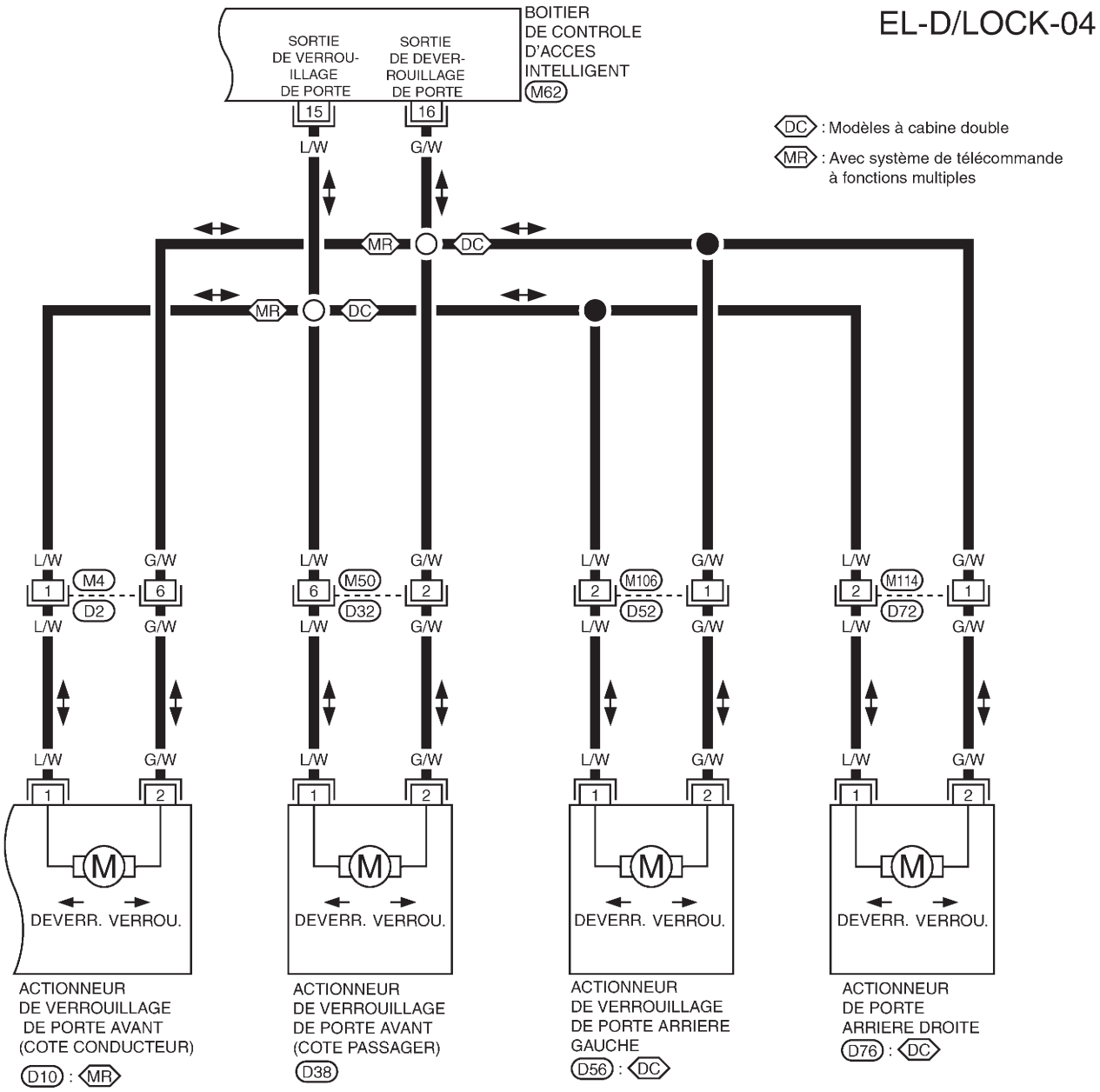

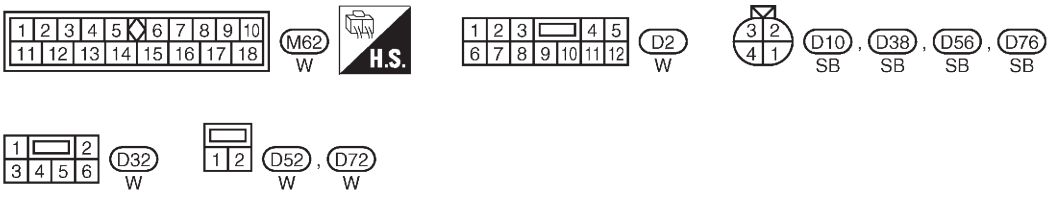

GEL444A

Simpo PDF Merge and Split Unregistered Version - http://www.simpopdf.com

Description du système

FONCTION

Le système de télécommande à fonctions multiples est doté des fonctions suivantes.

- Verrouillage de porte
- Déverrouillage de porte
- Rappel de feux de détresse

FONCTIONNEMENT DU VERROUILLAGE

Lorsque le signal de fermeture (LOCK) est envoyé à l'unité de contrôle de télécommande à fonctions multiples (l'antenne du système est combinée avec l'unité de contrôle de télécommande à fonctions multiples), la masse est fournie

- à travers la borne ⑤ de l'unité de contrôle de télécommande à fonctions multiples
- à la borne ④ de la centrale de commande intelligente.

La borne de la centrale de commande intelligente fourni alors l'alimentation et la masse à chacun des actionneurs de fermeture de porte.

FONCTIONNEMENT DU DEVERROUILLAGE

Lorsque le signal d'ouverture (UNLOCK) est envoyé à l'unité de contrôle de télécommande à fonctions multiples (l'antenne du système est combinée avec l'unité de contrôle de télécommande à fonctions multiples), la masse est fournie

- à travers la borne ⑥ de la télécommande à fonctions multiples
- à la borne ⑤ de la centrale de commande intelligente.

La borne de la centrale de commande intelligente fourni alors l'alimentation et la masse à chacun des actionneurs de fermeture de porte.

RAPPEL DE FEUX DE DETRESSE

Lorsque les portes sont verrouillées ou déverrouillées (signal provenant du capteur de déverrouillage de la porte conducteur) par la télécommande à fonctions multiples, l'alimentation est fournie

- à travers les bornes ③ et ⑧ de la télécommande à fonctions multiples
- aux feux de détresse.

Les feux de détresse clignotent alors de la façon suivante.

- Verrouillage : un clignotement
- Déverrouillage : deux clignotements

SAISIE DU CODE D'IDENTIFICATION DE LA TELECOMMANDE MULTI-TELECOMMANDE

Un maximum de quatre télécommandes peut être entré. Toute tentative pour introduire une télécommande effacera les codes d'identification entrés précédemment. Il faut par conséquent s'assurer que le propriétaire du véhicule a remis toutes les télécommandes à fonctions multiples lorsqu'une saisie de code d'identification est effectuée.

Pour saisir le code d'identification, il faut que les signaux suivants soient transmis au boîtier de contrôle de la télécommande à fonctions multiples.

- Signal du contact d'allumage ON
- Alimentation électrique de la batterie
- Signal de la télécommande à fonctions multiples

Pour la procédure détaillée, se reporter à ''Procédure d'entrée du code d'identification'' dans la section EL-0

Simpo PDF Merge and Split Unregistered Version - http://www.simpopdf.com

Schéma de câblage — MULTI —

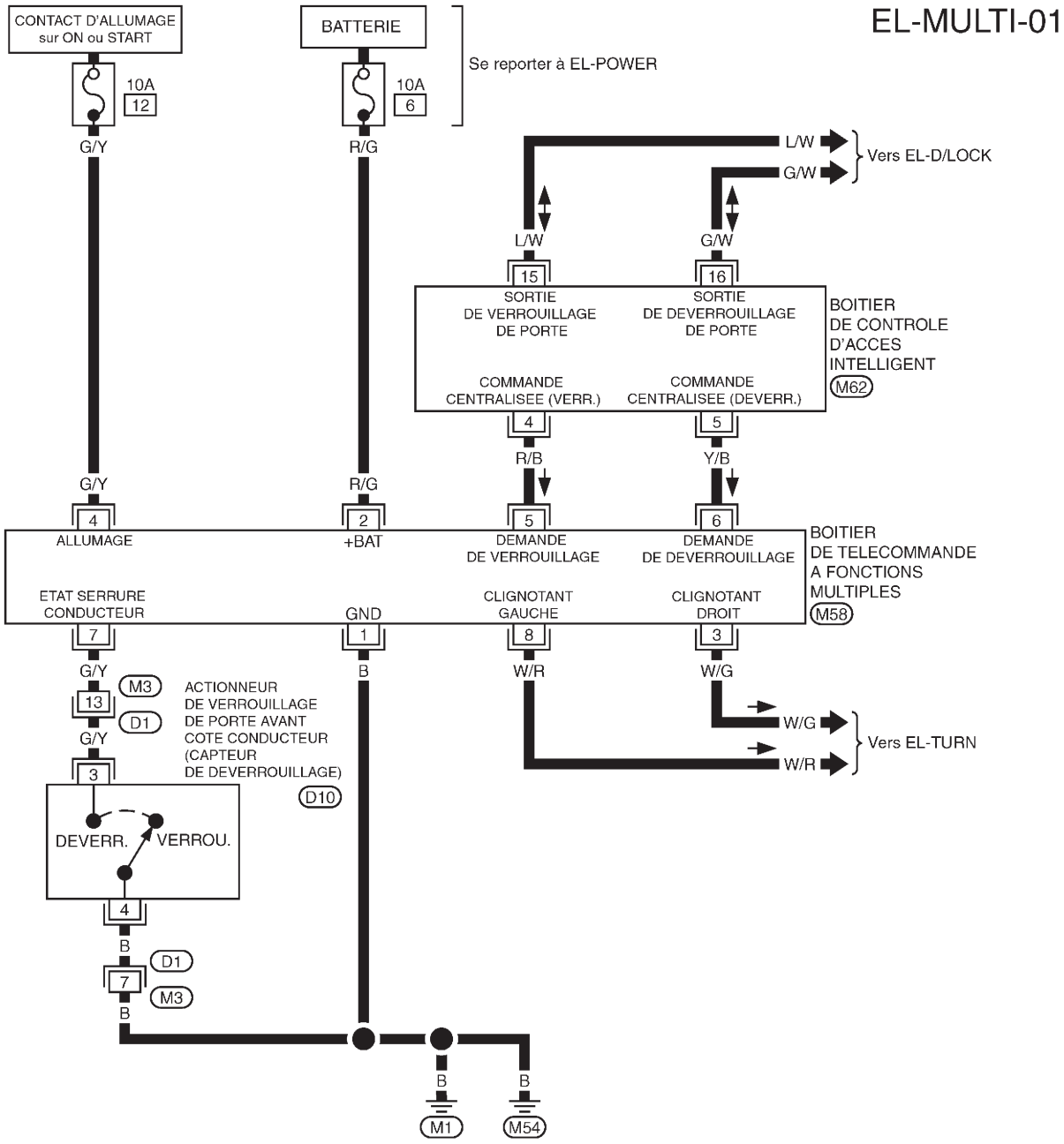



GEL445A

Simpo PDF Merge and Split Unregistered Version - http://www.simpopdf.com

Diagnostics des défauts

ORGANIGRAMME

Symptôme	Cause possible	Diagnostic/procédure d'entretien
Aucune porte ne peut être verrouillée ou déverrouillée par commande à distance. (Voir NOTE).	1. Système de verrouillage électrique de porte 2. Batterie de la télécommande 3. Circuit de Verr./déverr. de porte 4. Circuit de l'alimentation électrique de l'allumage pour l'unité de contrôle de télécommande à fonctions multiples 5. Circuit d'alimentation électrique pour l'unité de contrôle de télécommande à fonctions multiples 6. Circuit de masse pour le boîtier de contrôle de télécommande à fonctions multiples 7. Télécommande	1. Vérifier le fonctionnement du verrouillage électrique de porte. 2. Vérifier la pile de la télécommande. Se reporter à la page EL-0. 3. Vérifier que les faisceaux ne soient ni en circuit ouvert ni court-circuités entre l'unité de télécommande à fonctions multiples et la centrale de commande intelligente. 4. S'assurer qu'une tension existe à la borne ④ de l'unité de contrôle de télécommande à fonctions multiples lorsque le contact d'allumage est sur la position ALL. 5. S'assurer qu'une tension existe à la borne ② de l'unité de contrôle de télécommande à fonctions multiples. 6. Vérifier la continuité entre la borne ① de l'unité de contrôle de télécommande à fonctions multiples et la masse. 7. Remplacer la télécommande à fonctions multiples. Se reporter à la page EL-0
Le témoin de feux de détresse ne fonctionne pas correctement.	1. Sortie de témoin de feux de détresse vers les feux de détresse 2. Circuit du témoin de feux de détresse 3. Capteur de déverrouillage de porte côté conducteur	1. Vérifier la sortie de témoin de feux de détresse vers les feux de détresse aux bornes ③ et ⑧ de l'unité de contrôle de télécommande à fonctions multiples. 2. Vérifier que le faisceau ne soit ni en circuit ouvert ni court-circuité entre les témoins d'avertissement des feux de détresse et l'unité de contrôle de télécommande à fonctions multiples. 3. Vérifier le signal de capteur de déverrouillage de porte (côté conducteur) à la borne ⑦ de l'unité de contrôle de télécommande à fonctions multiples.
Le nouveau code d'identification de la télécommande à fonctions multiples ne peut pas être entré.	1. Pile de la télécommande 2. Circuit d'alimentation électrique de l'allumage du boîtier de contrôle de télécommande à fonctions multiples 3. Capteur de déverrouillage de porte côté conducteur 4. Télécommande	1. Vérifier la pile de la télécommande. Se reporter à la page EL- 0 2. S'assurer qu'une tension existe à la borne ④ de l'unité de contrôle de télécommande à fonctions multiples lorsque le contact d'allumage est sur la position ALL. 3. Vérifier le signal de capteur de déverrouillage de porte (côté conducteur) à la borne ⑦ de l'unité de contrôle de télécommande à fonctions multiples. 4. Remplacer la télécommande à fonctions multiples. Se reporter à la page EL- 0

Se reporter au ''TABLEAU D'INSPECTION DU BOITIER DE CONTROLE DE TELECOMMANDE MULTI-TELECOMMANDE'' de la page suivante pour vérifier les signaux du boîtier de contrôle.
NOTE :

- Le fonctionnement du verrouillage de la télécommande ne fonctionne pas quand la clé d'allumage est sur la position ''ON''.

Simpo PDF Merge and Split Unregistered Version - http://www.simpopdf.com

Diagnostics des défauts (Suite)

TABLEAU D'INSPECTION DU BOITIER DE CONTROLE DE TELECOMMANDE MULTI-TELECOMMANDE

Borne N°	Connexions	Condition		Tension (V) (valeurs approximatives)
1	Masse	—		—
2	Alimentation électrique (BAT)	—		12
3	Témoin d'avertissement des feux de détresse de droite	Le bouton LOCK (VERR.)/UNLOCK (DEVERR.) de la télécommande est enclenché (Toutes les portes sont fermées et la clé ne se trouve pas dans le cylindre de contact d'allumage)		12
		Autres que celles ci-dessus.		0
4	Alimentation électrique de l'allumage	Contact d'allumage	OFF	0
			sur ON ou START	12
5	Signal de verrouillage	Le bouton LOCK (VERR). de la télécommande est enclenché (Toutes les portes sont fermées et la clé ne se trouve pas dans le cylindre de contact d'allumage)		0
		Autres que celles ci-dessus.		5
6	Signal de déverrouillage	Le bouton UNLOCK (DEVERR.) de la télécommande est enclenché (la clé n'est pas dans le cylindre de contact d'allumage).		0
		Autres que celles ci-dessus.		5
7	Capteur de déverrouillage de porte côté conducteur	Porte côté conducteur	Verrouillée	5
			Déverrouillée	0
8	Témoin d'avertissement des feux de détresse de gauche	Le bouton LOCK (VERR.)/UNLOCK (DEVERR.) de la télécommande est enclenché (Toutes les portes sont fermées et la clé ne se trouve pas dans le cylindre de contact d'allumage)		12
		Autres que celles ci-dessus.		0

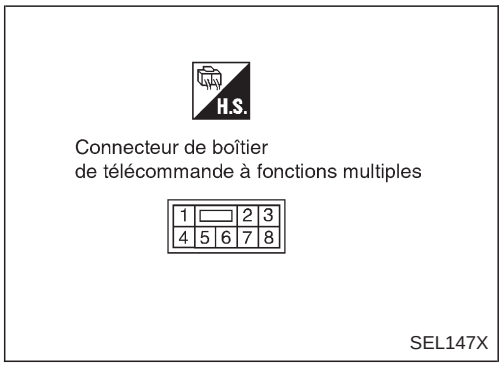

Simpo PDF Merge and Split Unregistered Version - http://www.simpopdf.com

Procédure d'entrée du code d'identification

Activation du mode d'enregistrement :

Le véhicule doit avoir été déverrouillé soit par la télécommande à fonctions multiples, soit par un signal Bon du transpondeur (TP) venant du système d'immobilisation du véhicule.
Préparation : - S'assurer que toutes les portes se déverrouillent.
- S'assurer que l'on dispose de toutes les télécommandes à fonctions multiples à enregistrer.
- S'assurer que les piles de la multi-télécommande ne sont pas usées.
- S'assurer qu'aucune source d'émission d'ondes n'est en activité à proximité du véhicule.
- S'assurer que la batterie du véhicule est chargée.

↓

Tourner le contact d'allumage exactement six fois successivement de la position ''LOCK'' (verrouillage) à la position ''ON'' (contact) en 10 secondes, et ramener le contact d'allumage en position ''LOCK'' (en laissant la clé dans le contact d'allumage).

↓

Après 2 secondes, le mode d'enregistrement est activé. Les clignotants clignotent deux fois successivement. — Mauvais → (retour)

↓ Bon

Procéder au mode d'enregistrement.

REMARQUE
Le mode d'enregistrement est activé quand :
- Le contact d'allumage est mis sur la position ''ON''.
- 4 télécommandes à fonctions multiples ont été enregistrées par le système.
- Aucun signal d'entrée de télécommande à fonctions multiples ou de contact d'allumage n'est reçu pendant 120 secondes.

Mode enregistrement

Enfoncer et maintenir enfoncé le bouton ''DEVERROUILLAGE'' de la télécommande à fonctions multiples.

↓

Enfoncer le bouton VERROUILLAGE 3 fois.

↓

Relâcher le bouton ''DEVERROUILLAGE''.

→ Si le code de la télécommande à fonctions multiples est enregistré correctement, les clignotants vont clignoter une fois. — Mauvais → (retour)

↓

Voulez-vous enregistrer une autre télécommande à fonctions multiples ? (max. 4)

Bon ← (depuis Si le code…)

Non ↓

Oui → (retour)

Après enregistrement des n° nécessaires des télécommande(s), confirmer le(s) code(s) d'identification en mettant le contact d'allumage sur la position ON.

→ Si l'enregistrement des télécommandes à fonctions multiples a été effectué correctement, les clignotants vont clignoter deux fois.

Bon ↓ Mauvais → (retour)

Retirer la clé de contact du contact d'allumage et confirmer le fonctionnement de toutes les télécommandes à fonctions multiples en verrouillant et déverrouillant les portes du véhicule avec chaque télécommande tour à tour.

↓

FIN

Simpo PDF Merge and Split Unregistered Version - http://www.simpopdf.com

Remplacement de la pile de la télécommande à fonctions multiples

REMARQUE :
- **Veiller à ne pas toucher au tableau de circuit ou à la borne batterie.**
- **La télécommande est étanche. Toutefois, en cas de contact avec l'eau, essuyer immédiatement.**
- **Appuyer deux ou trois fois sur le bouton de la télécommande pour vérifier son fonctionnement après en avoir remplacé la pile.**

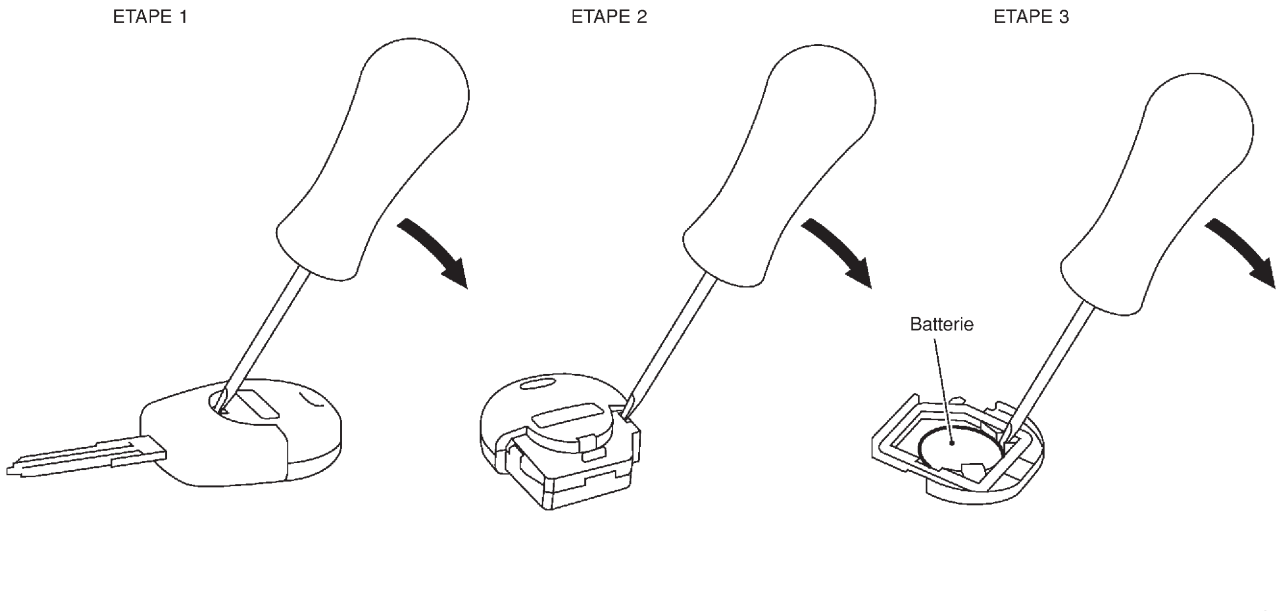

Simpo PDF Merge and Split Unregistered Version - http://www.simpopdf.com

Schéma de câblage — PRWIRE —

EL-PRWIRE-01

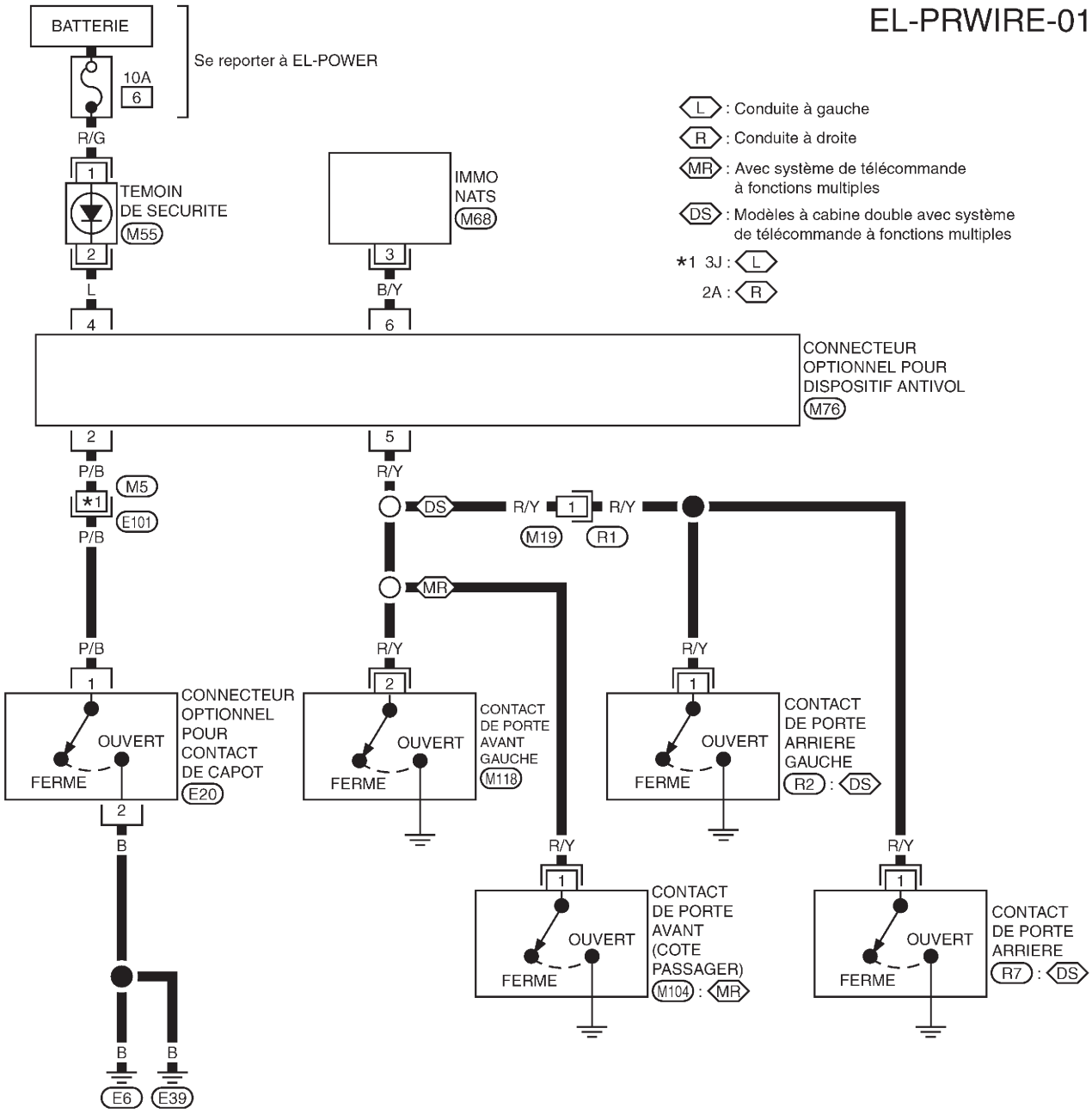

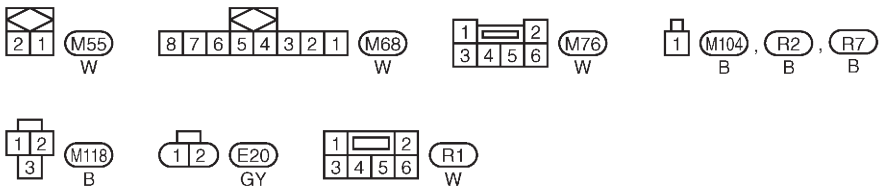

Consulter la dernière page dépliante.
M5 , E101

GEL446A

Simpo PDF Merge and Split Unregistered Version - http://www.simpopdf.com

Emplacement des composants et des connecteurs de faisceau

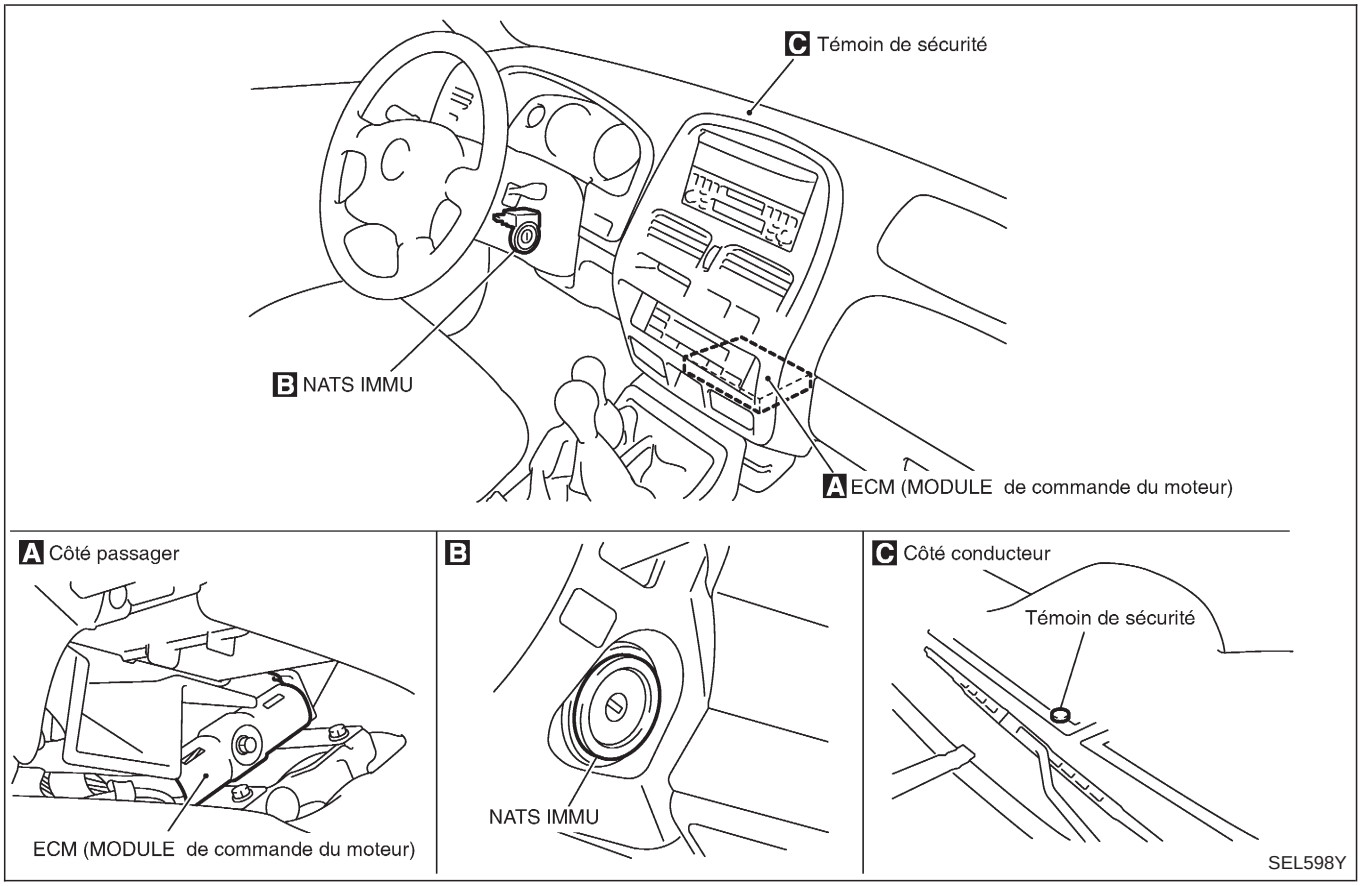

NOTE :
Si le client fait état d'un problème de 'non démarrage', demander à ce que TOUTES LES CLES soient amenées au concessionnaire au cas où le NATS serait en cause.

Simpo PDF Merge and Split Unregistered Version - http://www.simpopdf.com

Description du système

Le système NATS présente les fonctions d'immobilisation suivantes :

- Comme seules les clés de contact NATS dont les numéros d'identification ont été enregistrés dans l'ECM et IMMO de NATS permettent de démarrer le moteur, le vol du véhicule sans une clé enregistrée NATS sera empêché grâce à NATS.
  Cela signifie que le système NATS immobilisera le véhicule si quelqu'un tente de le démarrer sans utiliser une clé NATS enregistrée.
- Cette version de système NATS est dotée d'un boîtier de prise de sécurité pour améliorer les performances antivol (modèles à conduite à droite pour l'Europe). Le boîtier de prise de sécurité a son propre numéro d'identification, qui est enregistré dans l'IMMO du système NATS. En conséquence, si le boîtier de prise de sécurité est remplacé, une initialisation du système doit être effectuée.
- Quand un défaut de fonctionnement du boîtier de prise de sécurité est détecté :
  — Le témoin de sécurité s'allume pendant environ 15 minutes après que le contact d'allumage ait été mis sur ON.
  — Quand le boîtier de prise de sécurité est affecté d'un défaut de fonctionnement et que le témoin de sécurité est allumé, il est impossible de démarrer le moteur. Le moteur peut cependant être démarré une seule fois, quand le témoin de sécurité s'éteint, environ 15 minutes après que le contact d'allumage a été tourné sur la position ON.
- Les deux numéros d'identification des clés délivrées initialement ont été enregistrés dans le système NATS.
  A la demande du propriétaire du véhicule, un maximum de cinq identifications de clé peut être enregistré dans le système NATS.
- Le témoin de sécurité NATS (Témoin de sécurité NATS) clignote lorsque le contact d'allumage est sur la position ''OFF'' ou ''ACC'' . De cette façon, le système NATS indique à toute personne extérieure que le véhicule est équipé d'un système antivol.
- Quand le système NATS détecte un défaut, le témoin de sécurité s'allume de la façon suivante.

Condition ALL sur ON et	Avec boîtier de prise de sécurité	Sans boîtier de prise de sécurité
	Témoin de sécurité	Témoin de sécurité
Défaut de fonctionnement NATS (excepté boîtier de prise de sécurité) détecté	1. 6 clignotements 2. Reste allumé après que le contact d'allumage est été mis sur ON	Reste allumé
Seul le défaut de fonctionnement du boîtier de prise de sécurité est détecté	Reste allumé **pendant environ 15 minutes** après que le contact d'allumage est été mis sur ON.	—
Défaut de fonctionnement du NATS et d'accessoires du moteur détecté	1. 6 clignotements 2. Reste allumé après que le contact d'allumage est été mis sur ON	Reste allumé
Immédiatement après l'initialisation du NATS	6 clignotements	—

- Le diagnostic des défauts du système NATS, l'initialisation du système et l'enregistrement de numéros d'identification de clés NATS supplémentaires doivent être effectués à l'aide du matériel CONSULT-II et du logiciel CONSULT-II NATS.
  Concernant les procédures d'initialisation du NATS et l'enregistrement de numéros d'identification de clés de contact NATS, se reporter au manuel d'entretien du NATS CONSULT-II pour NATS.
- **Lors de la réparation d'une panne du système NATS (indiquée par l'allumage du témoin de sécurité) ou lors de l'enregistrement du numéro d'identification d'une autre clé de contact NATS, il est nécessaire de ré-enregistrer le numéro d'identification de la clé d'origine. C'est pourquoi il est indispensable que le propriétaire du véhicule restitue TOUTES LES CLES.**

Simpo PDF Merge and Split Unregistered Version - http://www.simpopdf.com

Composition du système

Le NATS offre les fonctions d'immobilisation suivantes :

- Clé de contact NATS
- Un boîtier de commande d'immobilisation NATS (IMMO NATS), situé dans le canon de clé de contact
- Un module de contrôle du moteur (ECM)
- Un boîtier de prise de sécurité (Modèle à conduite à droite pour l'Europe)
- Témoin de sécurité NATS

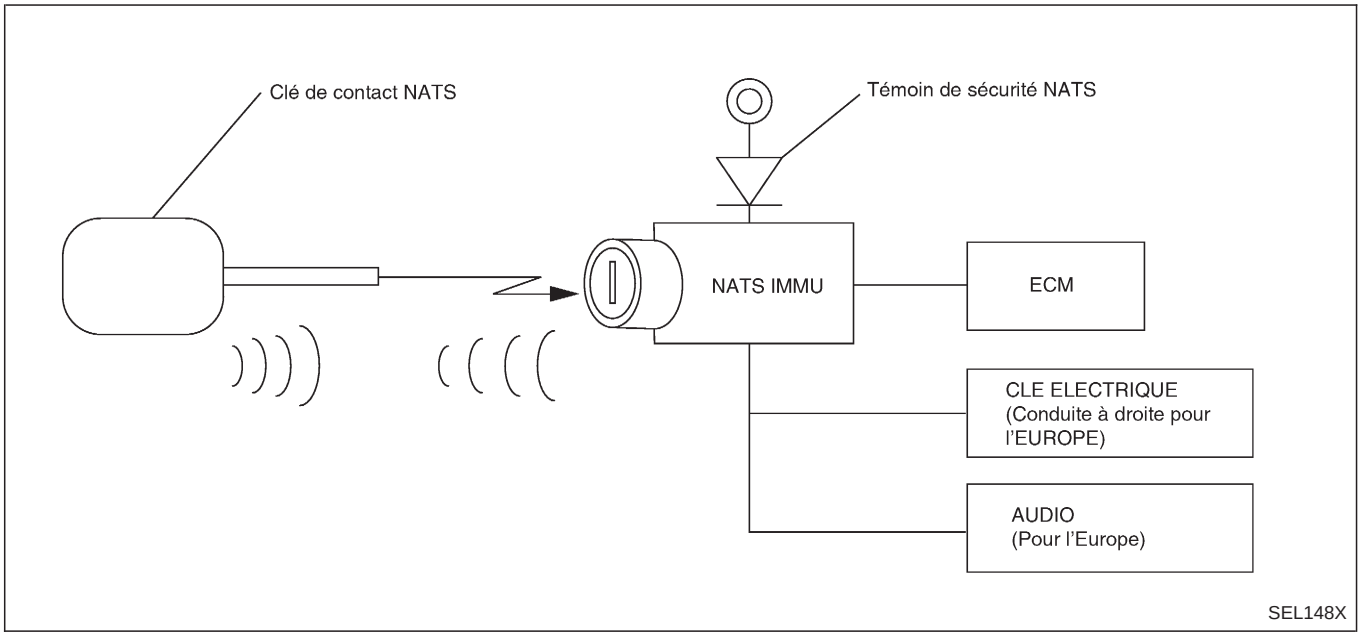

Simpo PDF Merge and Split Unregistered Version - http://www.simpopdf.com

Schéma de câblage — NATS —/Conduite à gauche

EL-NATS-01

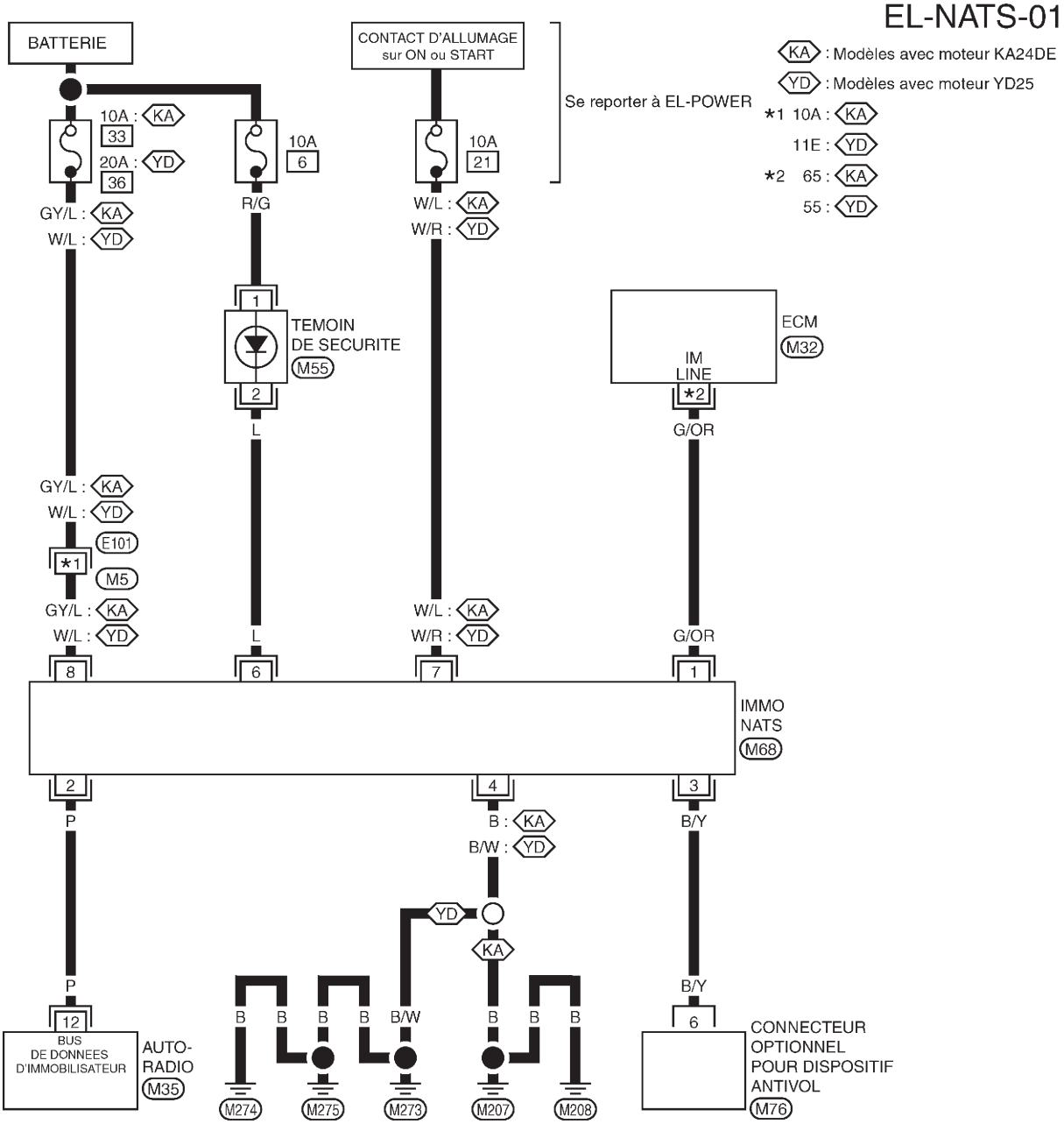

M35 W · M55 W · M68 W · M76 W

Consulter la dernière page dépliante.

M5 , E101

M32

GEL447A

Simpo PDF Merge and Split Unregistered Version - http://www.simpopdf.com

Schéma de câblage — NATS —/Conduite à droite avec moteur diesel

EL-NATS-02

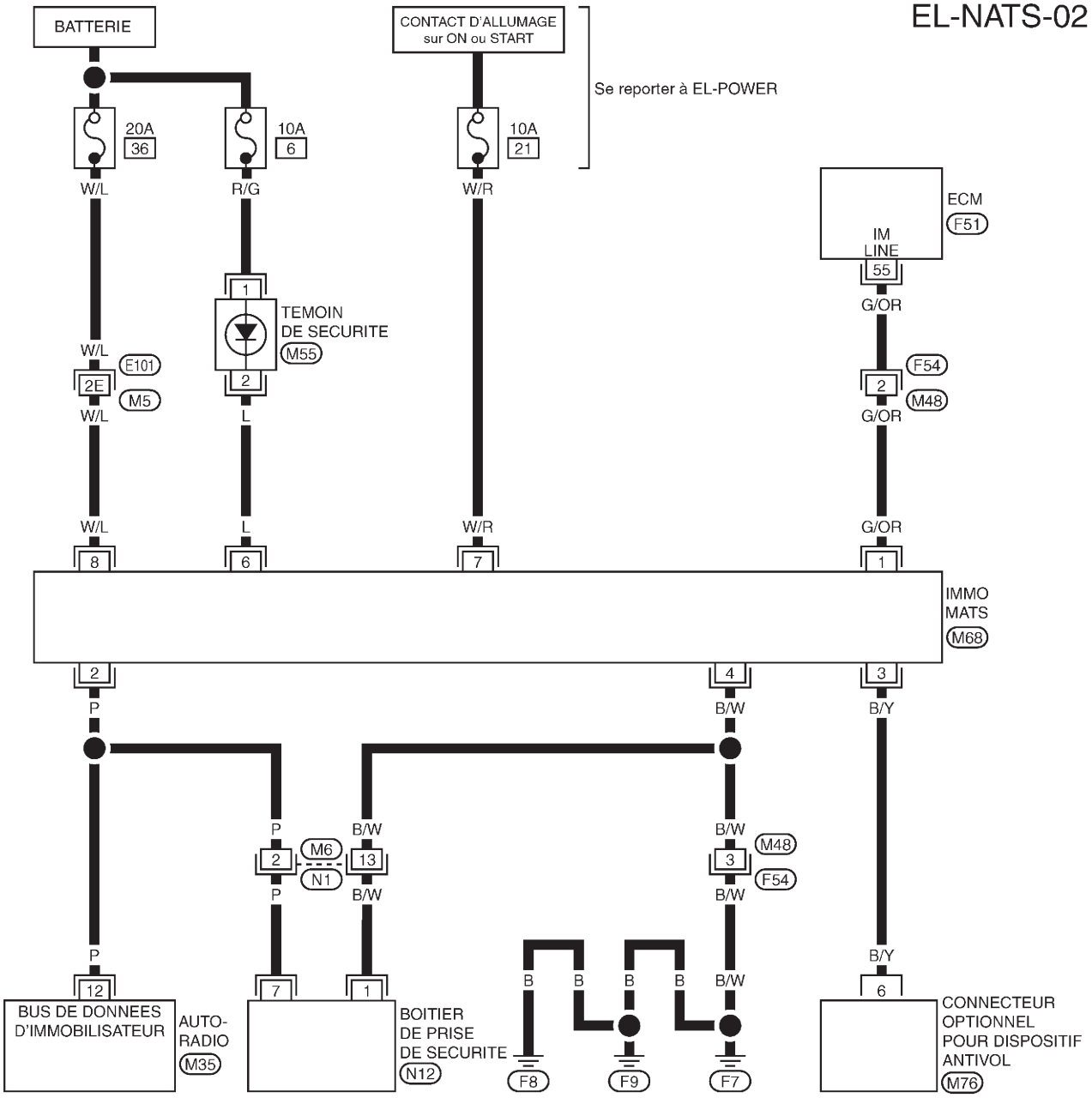

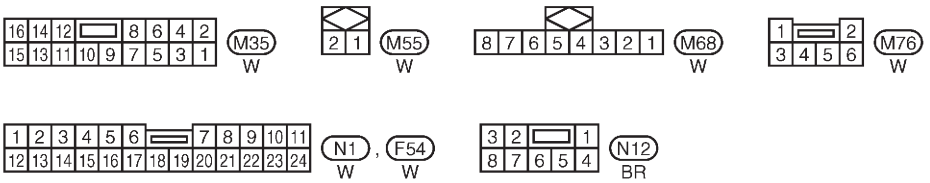

Consulter la dernière page dépliante.
M5 , E101
F51

GEL449A

Simpo PDF Merge and Split Unregistered Version - http://www.simpopdf.com

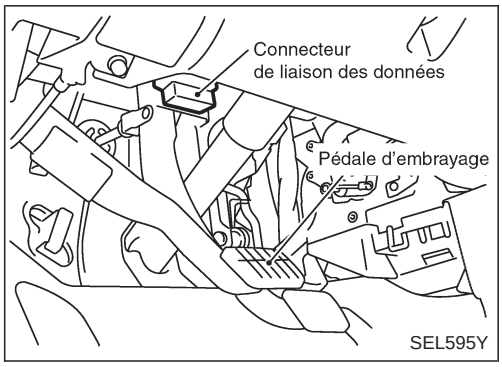

SEL595Y

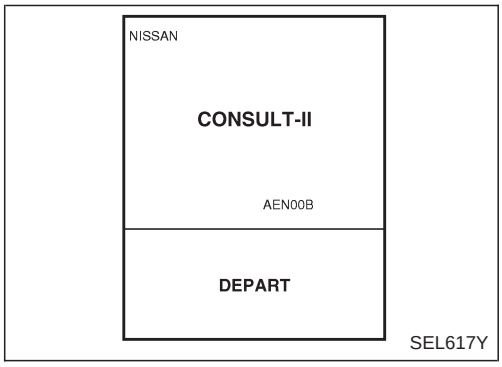

SEL617Y

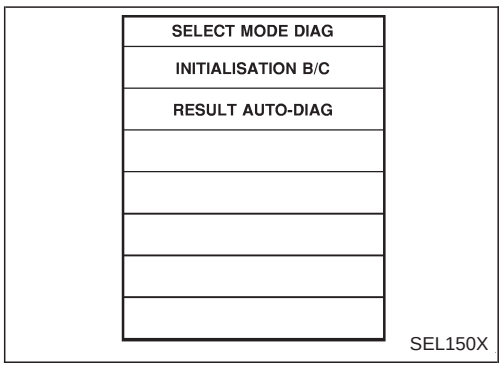

SEL150X

CONSULT-II

PROCEDURE D'INSPECTION AVEC CONSULT-II

1. Couper le contact.
2. Insérer la carte programme NATS dans CONSULT-II.

Carte programme
AEN00A/B

3. Connecter CONSULT-II sur le connecteur de liaison des données situé derrière le couvercle de boîte à fusibles.
4. Mettre le contact d'allumage sur ON.
5. Appuyer sur ''DEPART''.
6. Effectuer chaque mode d'essai de diagnostic conformément à chaque procédure d'entretien.

Pour de plus amples informations, se reporter au manuel d'utilisation CONSULT-II, NATS.

Simpo PDF Merge and Split Unregistered Version - http://www.simpopdf.com

CONSULT-II (Suite)

FONCTION DE MODE D'ESSAI DE DIAGNOSTIC DE CONSULT-II

MODE D'ESSAI DE DIAGNOSTIC DE CONSULT-II	Description
INITIALISATION B/C	Lors du remplacement de l'un des composants suivants, il est nécessaire d'initialiser le B/C. (Clé de contact NATS/IMMO/ECM/boîtier de prise de sécurité)
RESULTATS DE L'AUTODIAGNOSTIC	Les éléments détectés (affichés sur l'écran) sont indiqués dans le tableau ci-dessous.

NOTE :
Lorsqu'une nouvelle initialisation est effectuée, tous les numéros d'identification enregistrés auparavant seront effacés. Par conséquent, toutes les clés de contact NATS doivent être ré-enregistrées. Le moteur ne peut être démarré avec une clé non enregistrée. Dans ce cas, le système peut indiquer ''DIFFERENCE DE CLES'' ou ''MODE VERR'', comme résultat d'autodiagnostic affiché sur l'écran de CONSULT-II.
Quand l'initialisation est effectuée (conduite à droite), le témoin de sécurité clignote six fois pour confirmer la reconnaissance de l'identification du boîtier de prise de sécurité.

COMMENT LIRE LES RESULTATS D'AUTODIAGNOSTIC

Ecran d'affichage de résultat (Lorsqu'aucune panne n'est détectée)

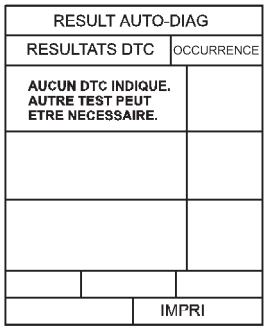

Ecran d'affichage de résultat (Lorsqu'une panne est détectée)

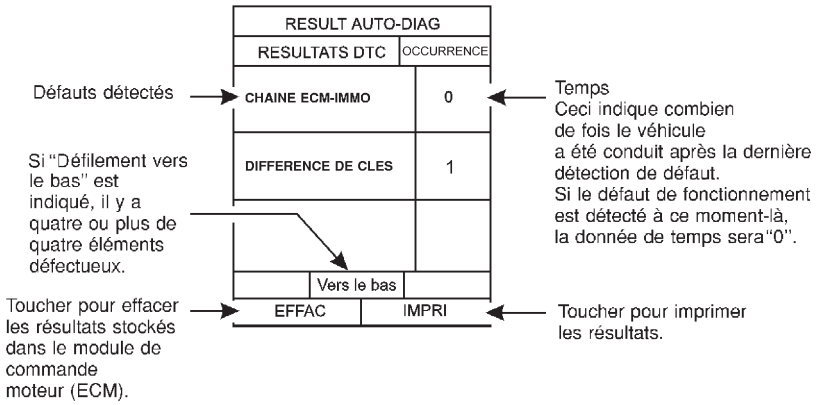

SEL151X

Simpo PDF Merge and Split Unregistered Version - http://www.simpopdf.com

CONSULT-II (Suite)

TABLEAU DES RESULTATS D'AUTODIAGNOSTIC

Eléments détectés (termes affichés sur l'écran)	Description	Page de référence
CIRC INT ECM-IMMU	Un défaut du circuit interne d'ECM de la ligne de communication IMMO est détecté.	EL-0
LIGNE ECM/IMMO	Communication impossible entre l'ECM et l'IMMO. (Exceptionnellement, ''LIGNE ECM-IMMO'' peut être mémorisé au cours de l'enregistrement de la clé, même si le système ne connaît pas de défaut de fonctionnement.)	EL-0
DIFFERENCE DE CLE	L'IMMO peut recevoir le signal d'identification de la clé mais le résultat de la vérification entre le code d'identification de la clé et l'IMMO est mauvais.	EL-0
LIGNE IMMO/CLE	L'IMMO ne reçoit pas le signal d'identification de la clé. Autrement le signal d'identification du boîtier de prise de sécurité enregistré ne peut pas être reçu quand l'IMMO demande cette identité.	EL-0
CONTRAD ID IMM/ECM	Le résultat de la vérification du code d'identification entre l'IMMO et l'ECM est mauvais. L'initialisation du système est exigée.	EL-0
NE PAS EFFACER AV. VERIF. DIAG. MOTEUR	Des données de défauts du moteur et du système NATS ont été détectées dans l'ECM.	EL-0
MODE VERR	Dans la cas de 5 démarrages consécutifs ou plus dans les conditions suivantes, le NATS passera automatiquement dans un mode empêchant le démarrage du moteur. ●utilisation d'une clé de contact non enregistrée. ●Défaut de l'IMMO ou de l'ECM.	EL-0

Simpo PDF Merge and Split Unregistered Version - http://www.simpopdf.com

Diagnostics des défauts

MARCHE A SUIVRE

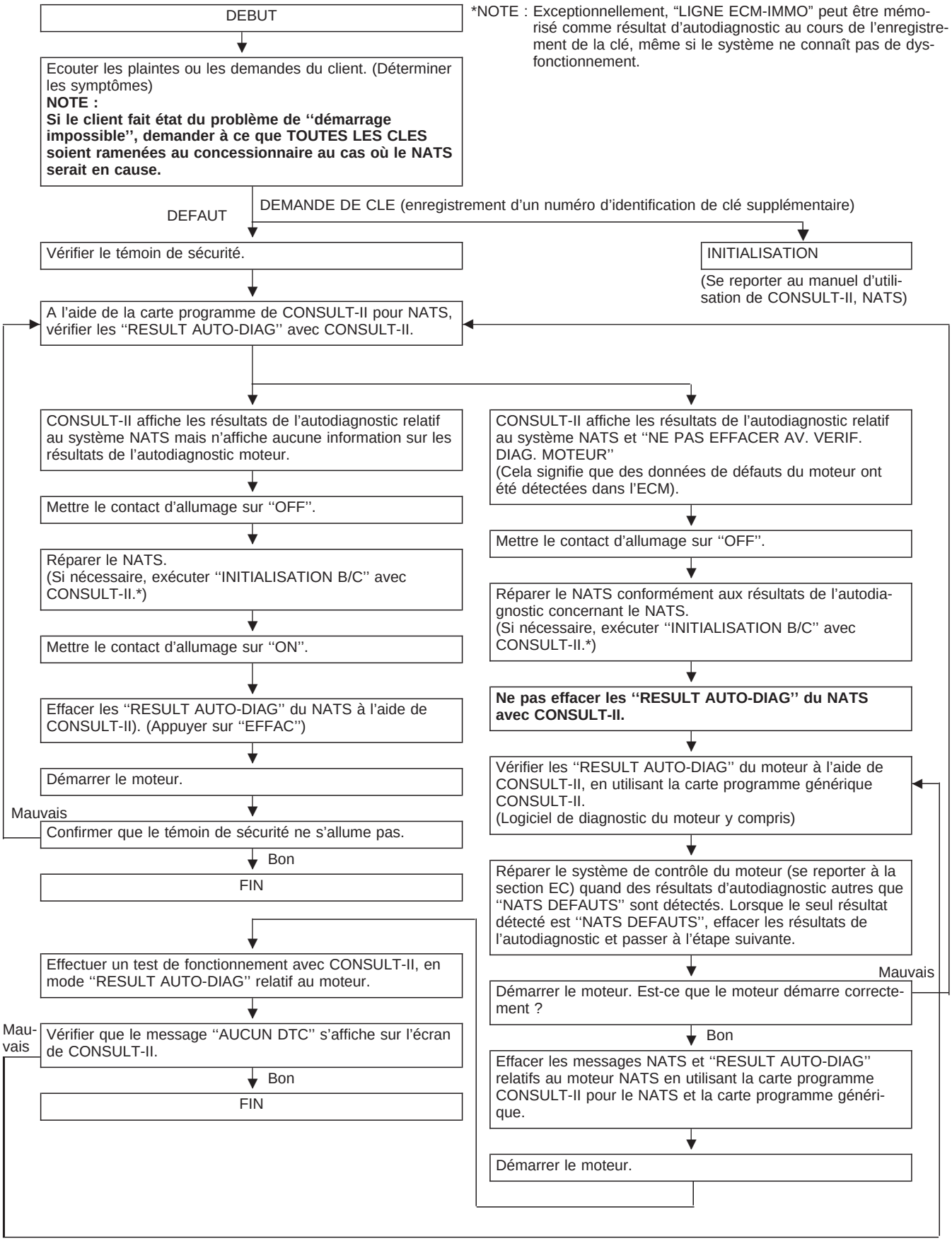

Simpo PDF Merge and Split Unregistered Version - http://www.simpopdf.com

TABLEAU 1 DES CARACTERISTIQUES DES SYMPTOMES (Eléments d'autodiagnostic)

SYMPTOME	''RESULT AUTO-DIAG'' affiché sur l'écran de CONSULT-II	PROCEDURE DE DIAGNOSTIC (Page de référence)	SYSTEME (Elément ou mode défectueux)	N° D'ELEMENT DE REFERENCE SUR L'ILLUSTRATION DU DIAGRAMME DES DIAGNOSTICS
● Allumage du témoin de sécurité* ● Le moteur ne démarre pas.	CIRC INT ECM-IMMU	PROCEDURE 1 (EL-0)	ECM	B
	LIGNE ECM/IMMO	PROCEDURE 2 (EL-0)	(Exceptionnellement, "LIGNE ECM-IMMO" peut être mémorisé comme résultat d'autodiagnostic au cours de l'enregistrement de la clé, même si le système fonctionne correctement.)	—
			Circuit ouvert dans la ligne de tension de la batterie du circuit de l'IMMO	C1
			Circuit ouvert dans la ligne d'allumage du circuit de l'IMMO	C2
			Circuit ouvert dans la ligne de masse du circuit de l'IMMO	C3
			Circuit ouvert dans la ligne de communication entre l'IMMO et l'ECM	C4
			Court-circuit entre la ligne de communication de l'IMMO et de l'ECM et la ligne de tension de la batterie.	C4
			Court-circuit entre la ligne de communication de l'IMMO et de l'ECM et la ligne de masse.	C4
			ECM	B
			IMMO	A
	DIFFERENCE DE CLE	PROCEDURE 3 (EL-0)	Clé non enregistrée	D
			IMMO	A
	LIGNE IMMO/CLE	PROCEDURE 4 (EL-0)	Anomalie de fonctionnement de la puce d'identification de clé	E
			IMMO	A
			Circuit ouvert dans la ligne de masse du circuit du boîtier de prise de sécurité	C6
			Circuit ouvert ou court-circuit dans la ligne de communication entre l'IMMO et le boîtier de prise de sécurité	C5
			Boîtier de prise de sécurité	G
● Allumage du témoin de sécurité* ● Moteur difficile à démarrer	CONTRAD ID IMM/ECM	PROCEDURE 5 (EL-0)	L'initialisation du système n'est pas encore terminée.	F
			ECM	B
	MODE VERR	PROCEDURE 6 (EL-0)	MODE VERR	D

* : Lorsque le NATS détecte un défaut, le témoin de sécurité s'allume quand la clé de contact d'allumage est mise sur la position ''ON''.
* : Sur les véhicules équipés d'un boîtier de prise de sécurité, le témoin de sécurité clignote six fois immédiatement après que le contact d'allumage ait été mis sur la position 'ON''. Le témoin de sécurité s'allume ensuite pendant que la clé de contact est sur la position ''ON''.

Simpo PDF Merge and Split Unregistered Version - http://www.simpopdf.com

TABLEAU 2 DES CARACTERISTIQUES DES SYMPTOMES (Elément non lié à l'autodiagnostic)

SYMPTOME	PROCEDURE DE DIAGNOSTIC (Page de référence)	SYSTEME (pièce ou mode défectueux)	N° D'ELEMENT DE REFERENCESUR L'ILLUSTRATION DU DIAGRAMME DES DIAGNOSTICS
Témoin de sécurité ne s'allume pas.	PROCEDURE 7 (EL-0)	Témoin de sécurité	—
		Circuit ouvert entre le fusible et l'IMMO NATS	—
		Poursuite du mode d'initialisation	—
		IMMO NATS	A
Témoin de sécurité ne clignote pas immédiatement après l'initialisation, même si le véhicule est équipé du boîtier de prise de sécurité.	PROCEDURE 8 (EL-0)	NATS peut avoir été initialisé sans connecter correctement le boîtier de prise de sécurité.	—
		Circuit ouvert dans la ligne de masse du circuit du boîtier de prise de sécurité	C6
Témoin de sécurité ne clignote pas immédiatement après que le contact d'allumage est été mis sur ON quand un défaut ayant trait au NATS est détecté, même si le véhicule est équipé du boîtier de prise de sécurité.		Circuit ouvert ou court-circuit dans la ligne de communication entre l'IMMO et le boîtier de prise de sécurité	C5
		Boîtier de prise de sécurité	G

SCHEMA DU SYSTEME DE DIAGNOSTIC

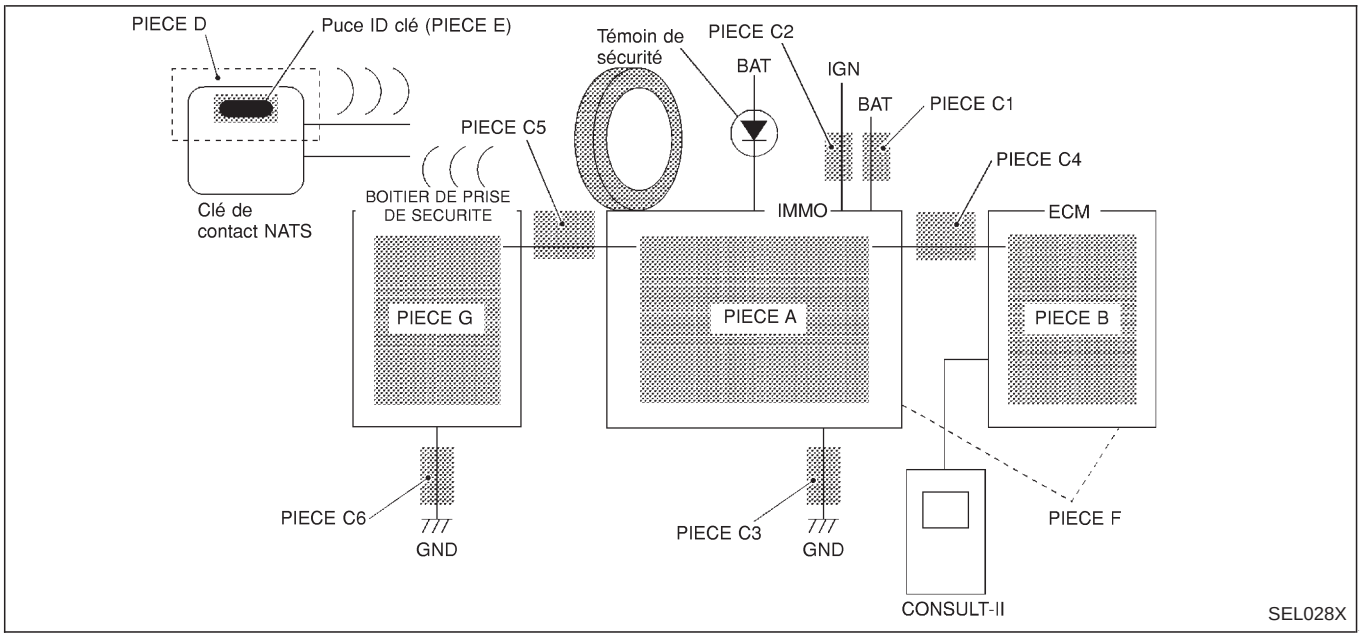

Simpo PDF Merge and Split Unregistered Version - http://www.simpopdf.com

Diagnostics des défauts (Suite)

PROCEDURE DE DIAGNOSTIC 1

Résultats de l’autodiagnostic : ’’LIGNE ECM-IMMO’’ affiché sur l’écran de CONSULT-II

A

RESULT AUTO-DIAG	
RESULTATS DTC	OCCURRENCE
CIRC INT ECM-IMMO	0

SEL152X

A

Confirmer les RESULTATS D’AUTO-DIAGNOSTIC ’’LIGNE ECM-IMMO’’ affichés sur l’écran de CONSULT-II.
N° de pièce de réf. : B.

↓

Remplacer l’ECM.

↓

Effectuer l’initialisation avec CONSULT-II
Pour l’exécution de la procédure d’initialisation, se reporter au ’’Manuel d’utilisation CONSULT-II NATS’’.

Simpo PDF Merge and Split Unregistered Version - http://www.simpopdf.com

Diagnostics des défauts (Suite)

PROCEDURE DE DIAGNOSTIC 2

Résultats de l'autodiagnostic : ''LIGNE ECM-IMMO'' affiché sur l'écran de CONSULT-II

A

RESULT AUTO-DIAG	
RESULTATS DTC	HEURE
CIRC INT ECM-IMMO	0

SEL153X

B

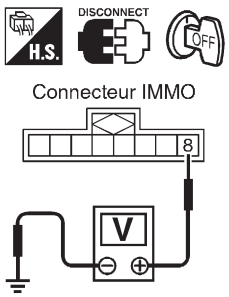

SEL154XC

C

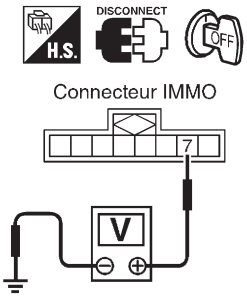

SEL155XC

D

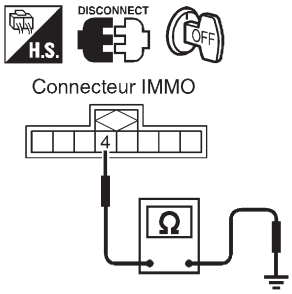

SEL156XB

E

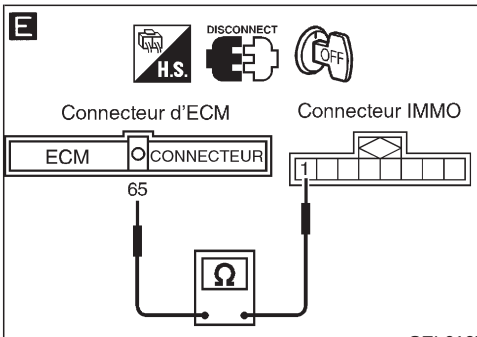

SEL610Y

A

Confirmer les RESULTATS D'AUTODIAGNOSTIC ''LIGNE ECM-IMMO'' * affichés sur l'écran de CONSULT-II.

* : Exceptionnellement, ''LIGNE ECM-IMMO'' peut être mémorisé comme résultat d'autodiagnostic au cours de l'enregistrement de la clé, même si le système fonctionne correctement.

↓ Bon

B

VERIFIER LE CIRCUIT DE L'ALIMENTATION ELECTRIQUE DE L'IMMO.
Vérifier la tension entre la borne ⑧ (W/L)du connecteur M68 de l'IMMO (témoin) et la masse.
Tension : Tension de la batterie

Mauvais → Vérifier les éléments suivants :
- Fusible de 20A (n° 36, situé dans le boîtier de raccord à fusibles et à fusibles) (Moteurs diesel)
- Fusible de 10A (n° 33, situé dans le boîtier de raccord à fusibles ou à fusibles) (Moteurs essence)
- Faisceau ouvert ou court-circuité entre le fusible et le connecteur de l'IMMO

N° de pièce de réf. : C1

↓ Bon

C

VERIFIER SI LE SIGNAL DU CONTACT D'ALLUMAGE EST ALLUME.
Vérifier la tension entre la borne ⑦ du connecteur M68 de l'IMMO et la masse lorsque le contact d'allumage est sur la position ''ON''.
Tension : Tension de la batterie

Mauvais → Vérifier les éléments suivants :
- Fusible de 10A (n° 21, situé dans le boîtier à fusibles et à raccord à fusibles)
- Faisceau ouvert ou court-circuité entre le fusible et le connecteur de l'IMMO

N° de pièce de réf. : C2

↓ Bon

D

VERIFIER LE CIRCUIT DE MISE A LA MASSE DE L'IMMO.
Vérifier la continuité du faisceau entre les bornes ④ du connecteur M68 de l'IMMO et la masse.
Il doit y avoir continuité.

Mauvais → Réparer le faisceau.
N° de pièce de réf. : C3

↓ Bon

E

VERIFIER SI LA LIGNE DE COMMUNICATION EST EN CIRCUIT OUVERT.
Vérifier la continuité du faisceau entre les bornes suivantes de l'ECM et de l'IMMO.
Borne ⑥⑤ (G/OR) du connecteur M32 de l'ECM ou borne ① (G/OR) du connecteur M68 de l'IMMO
Il doit y avoir continuité.

Mauvais → Réparer le faisceau.
N° de pièce de réf. : C4

↓ Bon

Ⓐ

Simpo PDF Merge and Split Unregistered Version - http://www.simpopdf.com

Diagnostics des défauts (Suite)

F

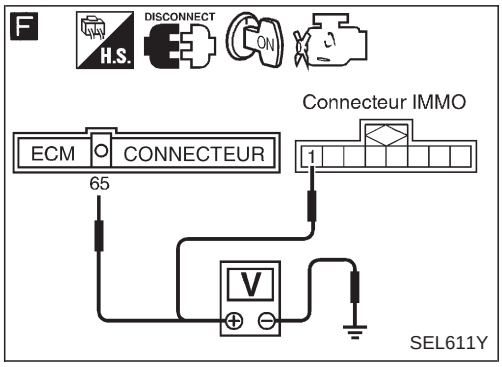

G

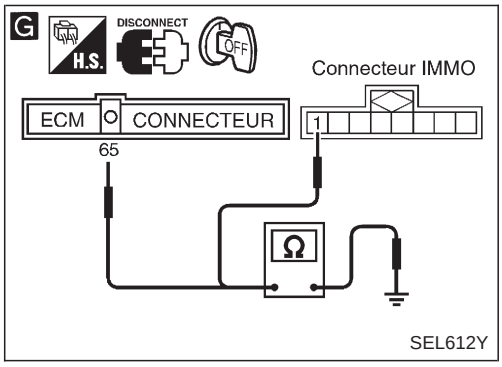

H

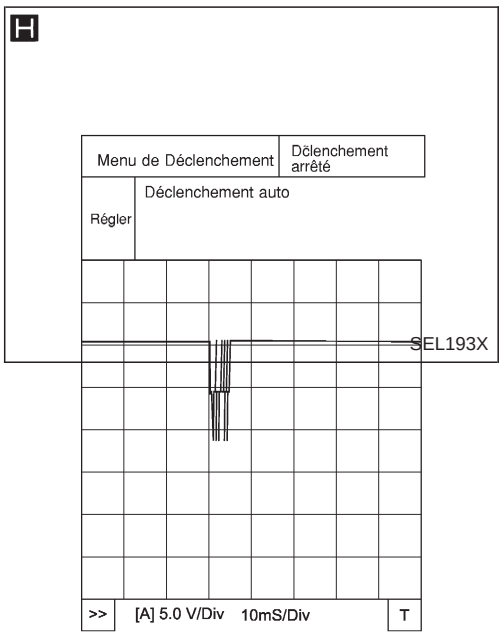

Ⓐ

F

VERIFIER SI LA LIGNE DE COMMUNICATION AVEC LA BATTERIE EST EN COURT-CIRCUIT.

1. Débrancher le connecteur de l'ECM et le connecteur de l'IMMO.
2. Mettre le contact d'allumage sur ''ON''.
3. Vérifier la tension entre les bornes 65 (G/OR) du connecteur M32 ou la borne 1 (G/OR) du connecteur M68 de l'IMMO et la masse.
   Il ne doit pas y avoir de tension.

Mauvais → Réparer le faisceau. **N° de pièce de réf. : C4**

Bon

G

VERIFIER SI LA LIGNE DE COMMUNICATION AVEC LA MASSE EST EN COURT-CIRCUIT

1. Débrancher le connecteur de l'ECM et le connecteur de l'IMMO.
2. Couper le contact.
3. Vérifier la continuité du faisceau entre la borne 65 (G/OR) du connecteur M32 de l'IMMO et la borne 1 (G/OR) du connecteur M68 de l'ECM et la masse.
   Il ne doit pas y avoir continuité.

Mauvais → Réparer le faisceau. **N° de pièce de réf. : C4**

Bon

H

VERIFICATION DU SIGNAL ALLANT DE L'ECM A L'IMMO

1. Vérifier le signal entre la borne 65 (G/OR) du connecteur M32 de l'ECM et la masse avec CONSULT-II ou un oscilloscope quand le contact d'allumage est sur la position ON.
2. S'assurer que les signaux qui sont indiqués sur l'illustration ci-dessous peuvent être détectés pendant 750 ms juste après que le contact d'allumage est tourné sur ''ON''.

Mauvais →
- L'ECM est défectueux.
1. Remplacer l'ECM. **N° de pièce de réf. : B**
2. Effectuer l'initialisation avec CONSULT-II. Pour la procédure d'initialisation, se reporter au ''Manuel d'utilisation de CONSULT-II, NATS''

Bon

- L'IMMO est défectueux.
1. Remplacer l'IMMO. **N° de pièce de réf. : A**
2. Effectuer l'initialisation avec CONSULT-II. Pour la procédure d'initialisation, se reporter au ''Manuel d'utilisation de CONSULT-II, NATS''.

Simpo PDF Merge and Split Unregistered Version - http://www.simpopdf.com

Diagnostics des défauts (Suite)

PROCEDURE DE DIAGNOSTIC 3

Résultats de l’autodiagnostic : ‘‘DIFFERENCE DE CLES’’ affiché sur l’écran de CONSULT-II

A

RESULT AUTO-DIAG	
RESULTATS DTC	HEURE
DIFFERENCE DE CLES	0

SEL163X

B

INITIALISATION IMMO
PANNE D’INITIALISATION
Ensuite le contact d’allumage est sur ‘‘ARR’’ et ‘‘MAR’’. Après confirmation de AUTO-DIAG et du mot de passe, recommencer initialisation B/C.

SEL566W

A

Confirmer les RESULTATS D’AUTODIAGNOSTIC ’’DIFFERENCE DE CLES’’ affichés sur l’écran de CONSULT-II.

Bon

EFFECTUER L’INITIALISATION.
Effectuer l’initialisation avec CONSULT-II.
Réenregistrer tous les numéros d’identification de clé de contact NATS.
Pour la procédure d’initialisation, se reporter au ’’Manuel d’utilisation de CONSULT-II, NATS’’.

Initialisation incomplète ou ratée de CONSULT-II → B

- L’IMMO est défectueux.

1. Remplacer l’IMMO. **N° de pièce de réf. : A**
2. Effectuer l’initialisation avec CONSULT-II. Pour la procédure d’initialisation, se reporter au ’’Manuel d’utilisation de CONSULT-II, NATS’’

INITIALISATION achevée

Démarrer le moteur.

FIN.
(la clé de contact n’était pas enregistrée).
N° de pièce de réf. : D

Simpo PDF Merge and Split Unregistered Version - http://www.simpopdf.com

Diagnostics des défauts (Suite)

PROCEDURE DE DIAGNOSTIC 4

Résultats de l'autodiagnostic : ''LIGNE IMMO-CLE'' est affiché sur l'écran de CONSULT-II

A

RESULT AUTO-DIAG	
RESULTATS DTC	HEURE
CHAINE ECM-IMMU	0

SEL165X

B

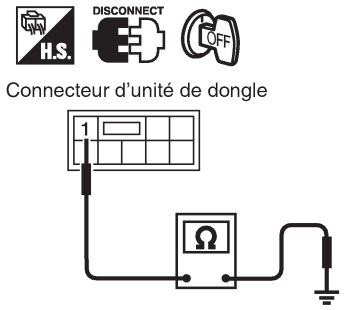

Connecteur d'unité de dongle

SEL160XA

C

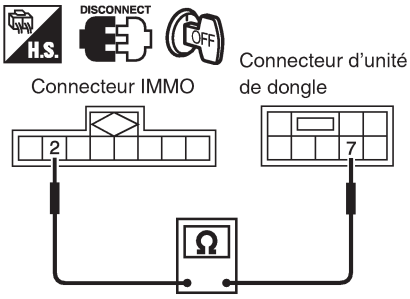

Connecteur IMMO — Connecteur d'unité de dongle

Contrôle de circuit ouvert

SEL161XA

D

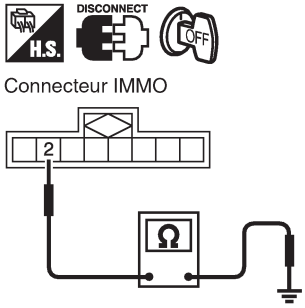

Connecteur IMMO

Contrôle de court-circuit

SEL162XA

A

Confirmer les RESULTATS D'AUTO-DIAGNOSTIC ''LIGNE IMMO-CLE'' affichés sur l'écran de CONSULT-II.

Bon

VERIFICATION DE LA PUCE D'IDENTIFICATION DE CLE DE CONTACT NATS.
Démarrer le moteur avec une autre clé de contact NATS enregistrée.
Le moteur démarre-t-il ?

Oui →
- Mauvais fonctionnement de la puce d'identification de la clé.
1. Remplacer la clé de contact. **N° de pièce de réf. : E**
2. Effectuer l'initialisation avec CONSULT-II. Pour la procédure d'initialisation, se reporter au ''Manuel d'utilisation de CONSULT-II, NATS''.

Non

Est-ce que ce véhicule est équipé d'un boîtier de sécurité (modèles à conduite à droite pour l'Europe) ?

Non →
- L'IMMO est défectueux.
1. Remplacer l'IMMO. **N° de pièce de réf. A**
2. Effectuer l'initialisation avec CONSULT-II. Pour la procédure d'initialisation, se reporter au ''Manuel d'utilisation de CONSULT-II, NATS''.

Oui

VERIFIER LE BRANCHEMENT DU CONNECTEUR DE FAISCEAU.
Vérifier le branchement des connecteurs de faisceau suivants (M68), (N12).
Le moteur démarre-t-il ?

Oui → Le système fonctionne normalement. (Le défaut est causé par le branchement incorrect d'un connecteur).

Non

B

VERIFIER LE CIRCUIT DE MASSE DU BOITIER DE SECURITE.
Vérifier la continuité entre la borne ① (B/W) du boîtier de prise de sécurité et la masse.
Il doit y avoir continuité.

Non → Réparer le faisceau. **N° de pièce de réf. : C6**

Oui

C **D**

VERIFIER LE CIRCUIT D'INTERFACE.
1. Vérifier la continuité entre les bornes ② (P) du connecteur (M68) de faisceau et la borne ⑦ du boîtier de commande. (Contrôler les circuits ouverts.) **Il doit y avoir continuité.**
2. Vérifier la continuité entre la borne ② (P) du connecteur (M68) de boîtier de commande et la masse. (Contrôler tout court-circuit.) **Il ne doit pas y avoir continuité.**

Non → Réparer le faisceau. **N° de pièce de réf. : C5**

Oui

Mauvais fonctionnement du boîtier de prise de sécurité.
1. Remplacer le boîtier de sécurité. **N° de pièce de réf. : G**
2. Effectuer l'initialisation avec CONSULT-II. Pour la procédure d'initialisation, se reporter au ''Manuel d'utilisation de CONSULT-II, NATS''

Simpo PDF Merge and Split Unregistered Version - http://www.simpopdf.com

Diagnostics des défauts (Suite)

PROCEDURE DE DIAGNOSTIC 5

Résultats de l’autodiagnostic : ‘‘CONTRAD ID IMMO-ECM’’ affiché sur l’écran de CONSULT-II

A

RESULT AUTO-DIAG	
RESULTATS DTC	HEURE
CONTRAD ID IMM/ECM	0

SEL166X

B

INITIALISATION IMMO
PANNE D’INITIALISATION
Ensuite le contact d’allumage est sur ‘‘ARR’’ et ‘‘MAR’’. Après confirmation de AUTO-DIAG et du mot de passe, recommencer initialisation B/C.

SEL566W

A

S’assurer que ‘‘CONTRAD ID IMMO-ECM*’’ de RESULTAT AUTO-DIAG est affiché sur l’écran de CONSULT-II.

* ‘‘ID DISCORD, IMM-ECM’’ : Le code d’identification enregistré de l’IMMO est en contradiction avec celui de l’ECM.

↓

EFFECTUER L’INITIALISATION.
Effectuer l’initialisation avec CONSULT-II.
Réenregistrer tous les numéros d’identification de clé de contact NATS.
Pour la procédure d’initialisation, se reporter au ’’Manuel d’utilisation de CONSULT-II, NATS’’.

Initialisation incomplète ou ratée de CONSULT-II → B

- L’ECM est défectueux.

1. Remplacer l’ECM. **N° de pièce de réf. : B**
2. Effectuer l’initialisation avec CONSULT-II. Pour la procédure d’initialisation, se reporter au ’’Manuel d’utilisation de CONSULT-II, NATS’’.

↓ INITIALISATION achevée

Démarrer le moteur. (FIN)
(L’initialisation du système n’a pas été terminée. **N° de pièce de réf. : F**)

Simpo PDF Merge and Split Unregistered Version - http://www.simpopdf.com

Diagnostics des défauts (Suite)

PROCEDURE DE DIAGNOSTIC 6

Résultats de l’autodiagnostic : ‘‘MODE VERR’’ affiché sur l’écran de CONSULT-II

A

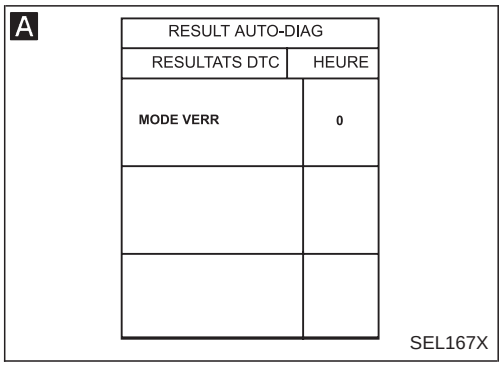

B

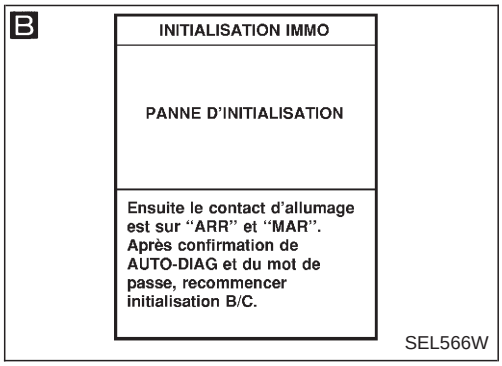

A

S’assurer que ’’MODE VERR’’ de RESULTAT AUTO-DIAG est affiché sur l’écran de CONSULT-II.

1. Couper le contact.
2. Mettre le contact d’allumage à l’aide d’une clé enregistrée. (Ne pas démarrer le moteur). Attendre 5 secondes.
3. Couper le contact d’allumage.
4. Répéter à deux reprises les étapes 2 et 3 (trois cycles au total).
5. Démarrer le moteur.

Le moteur démarre-t-il ?

Oui → Le système fonctionne normalement. (Le système n’est plus en ’’MODE VERR’’).

Non

VERIFIER L’INSTALLATION DE L’IMMO NATS. Se reporter à ’’Comment remplacer l’IMMO NATS’’ dans la section EL-0.

Mauvais → Reposer correctement l’IMMO NATS.

Bon

EFFECTUER L’INITIALISATION. Effectuer l’initialisation avec CONSULT-II. Pour la procédure d’initialisation, se reporter au ‘‘Manuel d’utilisation de CONSULT-II, NATS’’. Le système peut-il être initialisé ?
Remarque : Si la procédure d’initialisation est inachevée ou échoue, CONSULT-II affiche le message B sur l’écran.

Oui → Le système fonctionne normalement.

Non

Passer à la PROCEDURE DE DIAGNOSTIC 4, EL-3160 pour contrôler ‘‘LIGNE IMMO-CLE’’.

Simpo PDF Merge and Split Unregistered Version - http://www.simpopdf.com

Diagnostics des défauts (Suite)

PROCEDURE DE DIAGNOSTIC 7

''TEMOIN DE SECURITE NE S'ALLUME PAS''

Vérifier le fusible de 10A (n° 6, situé dans le boîtier à fusibles).

Mauvais → Remplacer le fusible.

Bon ↓

INITIALISATION NATS
1) Monter le fusible de 10A.
2) Effectuer l'initialisation avec CONSULT-II.
Pour l'exécution de la procédure d'initialisation, se reporter au ''Manuel d'utilisation CONSULT-II NATS''.

↓

Mettre le contact d'allumage sur ''OFF''.

↓

Démarrer le moteur et mettre le contact d'allumage sur ''OFF''.

↓

Vérifier l'allumage du témoin de sécurité.

Bon → FIN

Mauvais ↓

A

Vérifier la tension entre la borne ① (R/G) du connecteur M55 du témoin de sécurité et la masse.
Tension : Tension de la batterie

Mauvais → Vérifier si le faisceau est ouvert ou en court-circuit entre le fusible et le témoin de sécurité.

Bon ↓

VERIFIER LE TEMOIN.

Mauvais → Réparer le faisceau.

Bon ↓

B

VERIFICATION DU FONCTIONNEMENT DE L'IMMO NATS.
1. Brancher le connecteur M68 de l'IMMO NATS.
2. Débrancher le connecteur M55 du témoin de sécurité.
3. Vérifier la continuité entre la borne ⑥ (L) du connecteur M68 de l'IMMO NATS et la masse.
Il doit y avoir continuité par intermittence.

Mauvais → L'IMMO NATS est défectueux. Remplacer l'IMMO.

↓

Effectuer l'initialisation avec CONSULT-II.
Pour l'exécution de la procédure d'initialisation, se reporter au ''Manuel d'utilisation CONSULT-II NATS''.

Bon ↓

Vérifier que le faisceau ne soit ni en circuits ouvert ni court-circuités entre le témoin de sécurité et l'IMMO NATS.

A

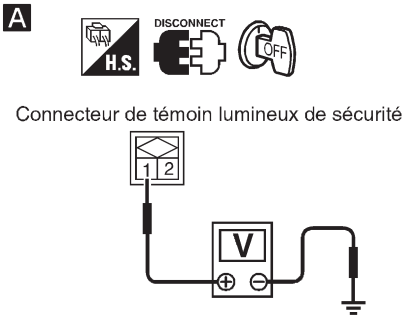

Connecteur de témoin lumineux de sécurité

SEL931UC

B

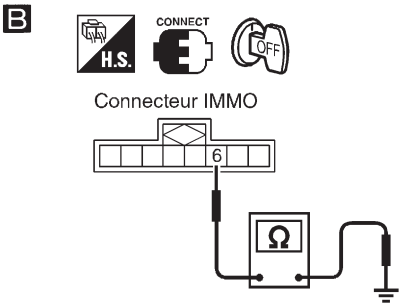

Connecteur IMMO

SEL164XA

Simpo PDF Merge and Split Unregistered Version - http://www.simpopdf.com

Diagnostics des défauts (Suite)

PROCEDURE DE DIAGNOSTIC 8

A

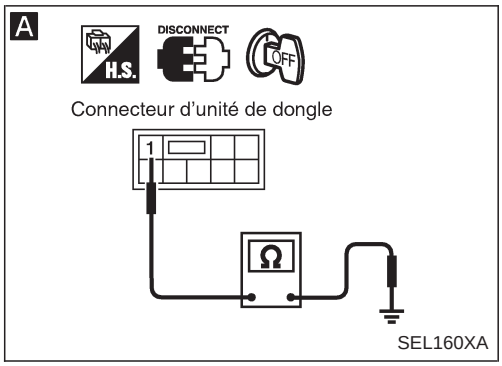

VERIFIER LE CIRCUIT DE MASSE DU BOITIER DE SECURITE.
Vérifier la continuité entre la borne ① (B/W) du connecteur (N12) de boîtier de prise de sécurité et la masse.
Il doit y avoir continuité.

Non → Réparer le faisceau.
N° de pièce de réf. : C6

Oui ↓

B

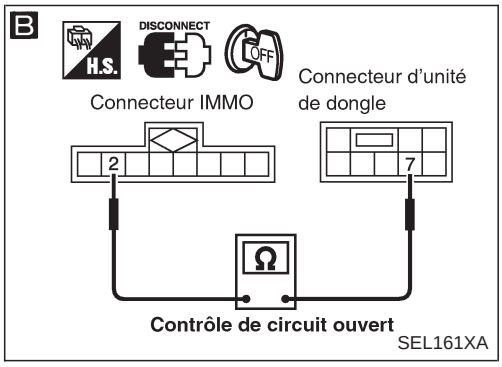

VERIFIER LE CIRCUIT D'INTERFACE.
1. Vérifier la continuité entre la borne ② (P) du connecteur (M68) de l'IMMO et la borne ⑦ (P) du connecteur (N12) du boîtier de commande de prise de sécurité et la masse.
   (Contrôler tout circuit ouvert)
   Il doit y avoir continuité.
2. Vérifier la continuité entre la borne ② (P) du connecteur (M68) de l'IMMO et la masse. (Contrôler tout court-circuit)
   Il doit y avoir continuité.

Non → Réparer le faisceau.
N° de pièce de réf. : C5

Oui ↓

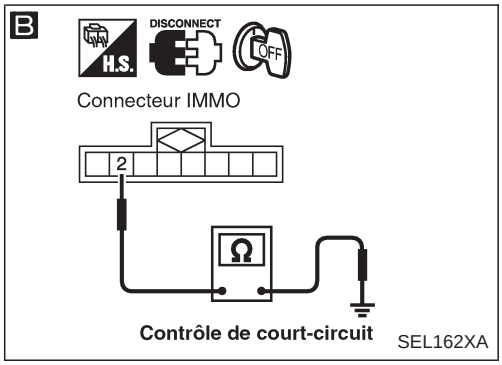

Mauvais fonctionnement du boîtier de prise de sécurité.
1. Remplacer le boîtier de sécurité.
   N° de pièce de réf. : G
2. Effectuer l'initialisation avec CONSULT-II.
   Pour la procédure d'initialisation, se reporter au ''Manuel d'utilisation de CONSULT-II, NATS''.

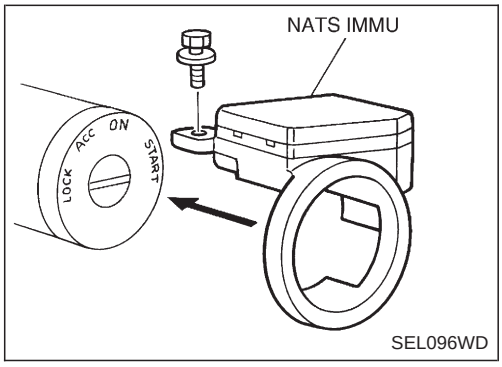

Comment remplacer l'IMMO NATS

NOTE :

- **Si l'IMMO NATS n'est pas installé correctement, le système NATS ne fonctionnera pas correctement et RESULT AUTO-DIAG sur l'écran de CONSULT-II affichera ''MODE VERR''.**

Simpo PDF Merge and Split Unregistered Version - http://www.simpopdf.com

Compartiment moteur

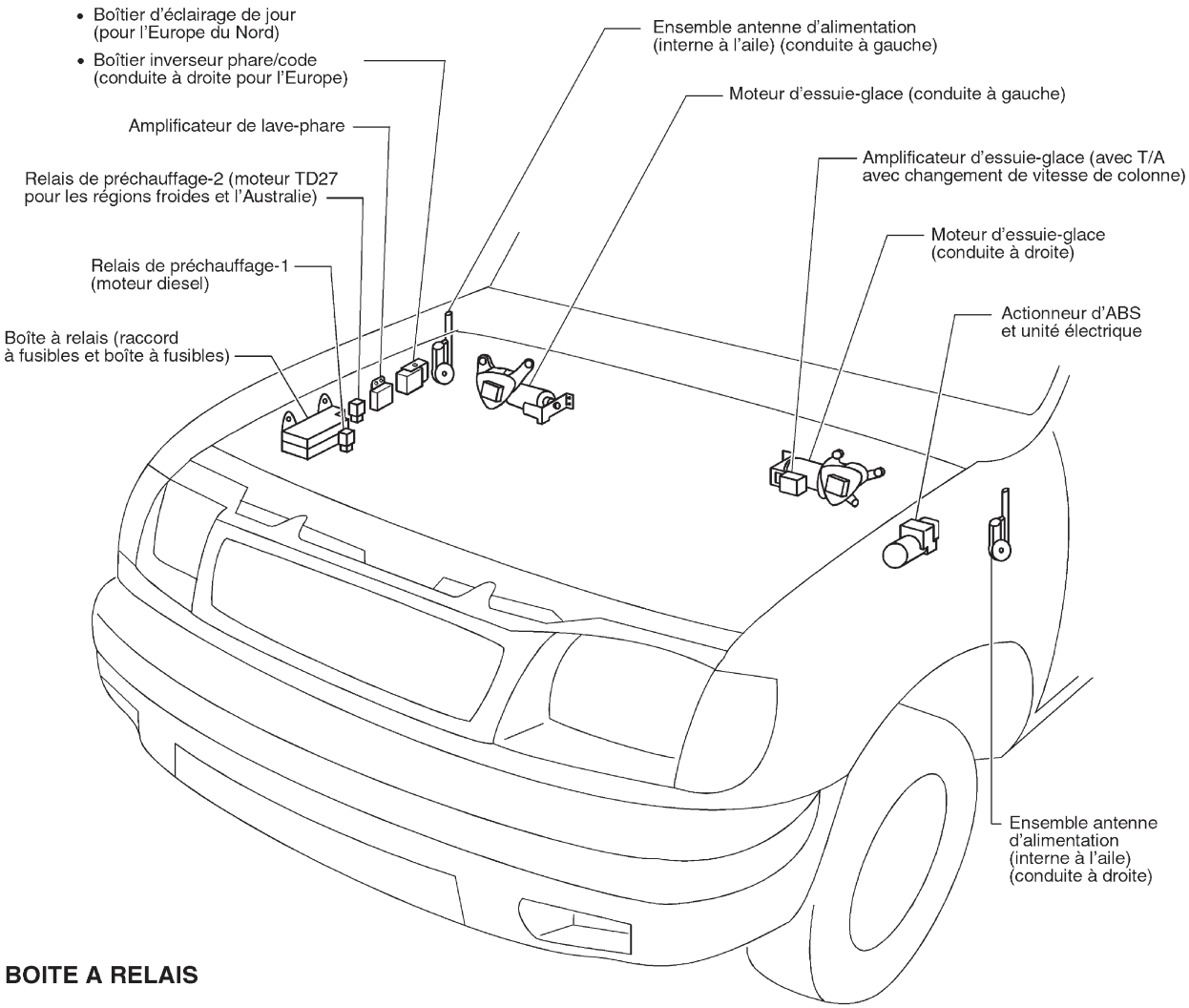

BOITE A RELAIS

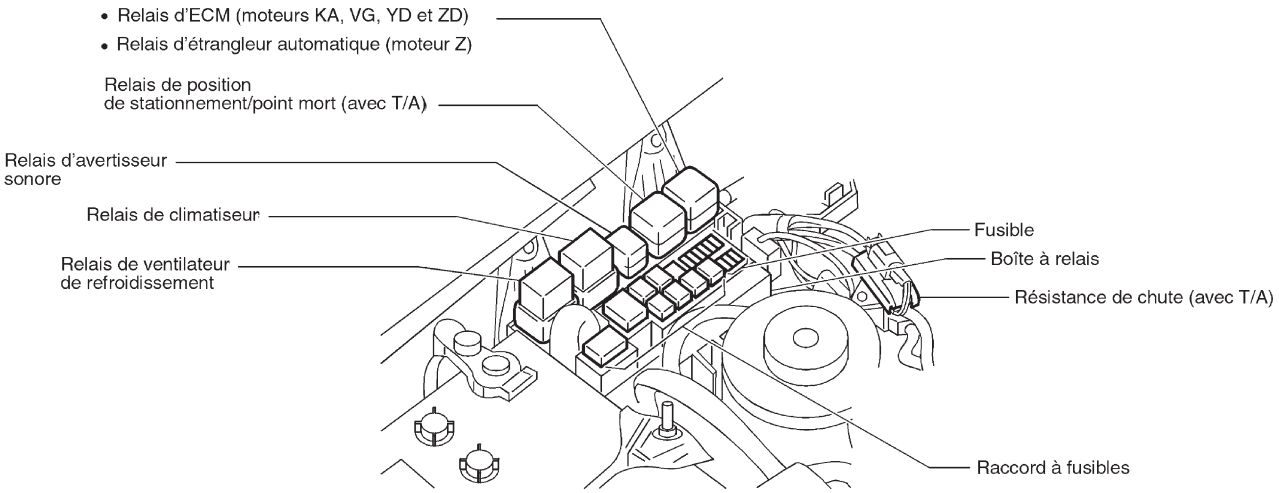

HEL848B

Simpo PDF Merge and Split Unregistered Version - http://www.simpopdf.com

Compartiment passager

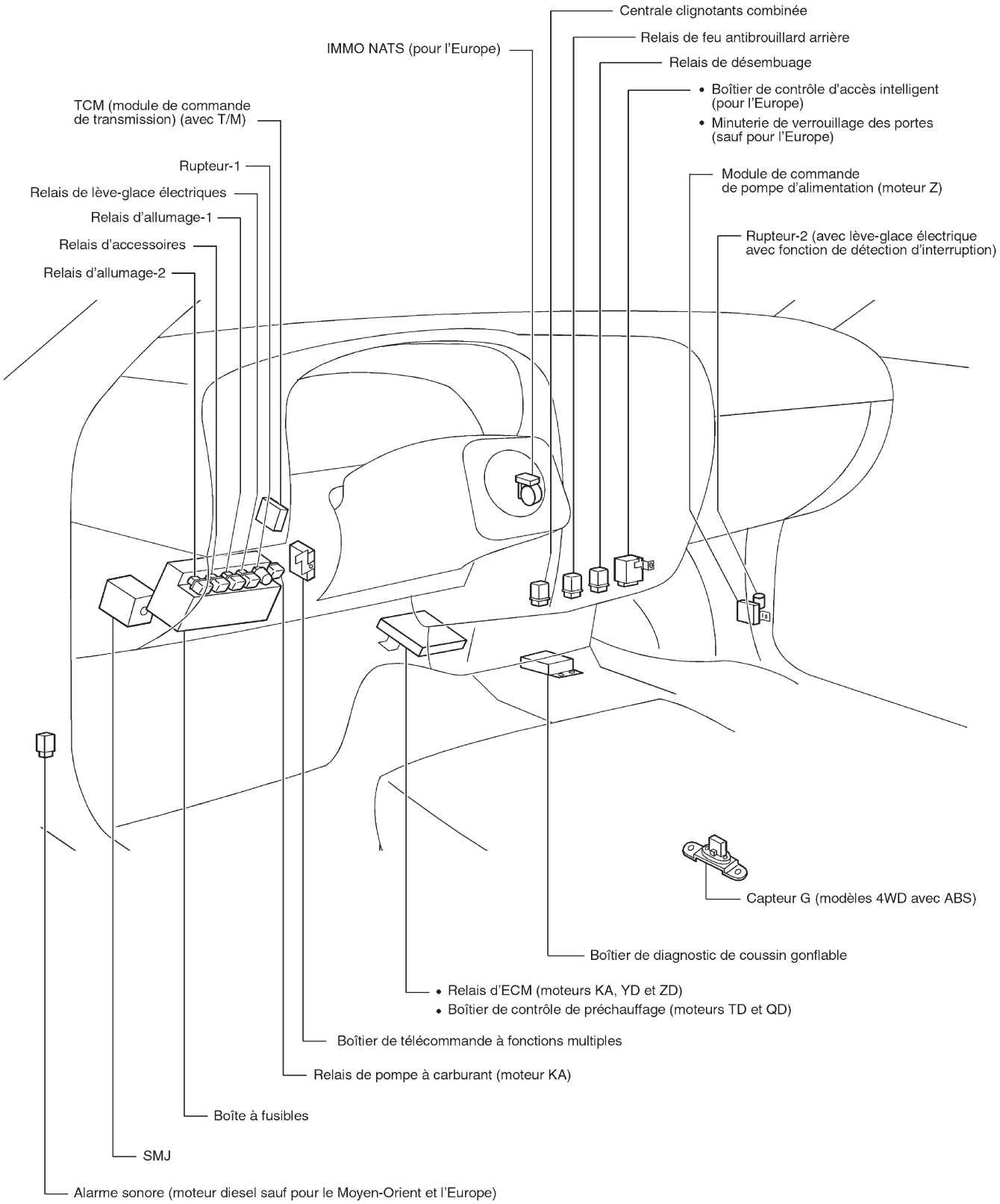

HEL849B

Simpo PDF Merge and Split Unregistered Version - http://www.simpopdf.com

Compartiment passager (Suite)

CONDUITE A DROITE

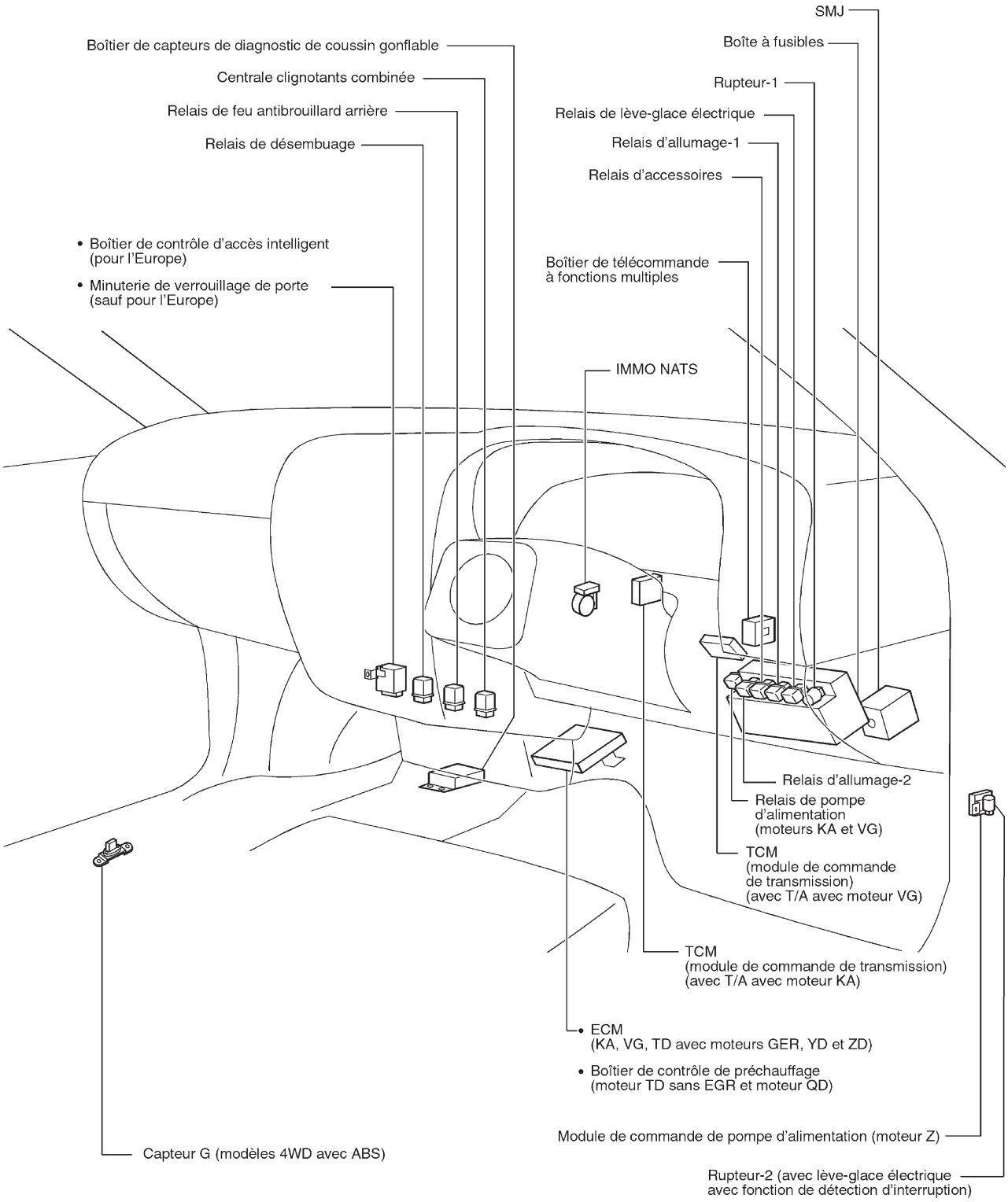

HEL850B

Simpo PDF Merge and Split Unregistered Version - http://www.simpopdf.com

Faisceau principal

TABLEAU DE BORD — CONDUITE A GAUCHE

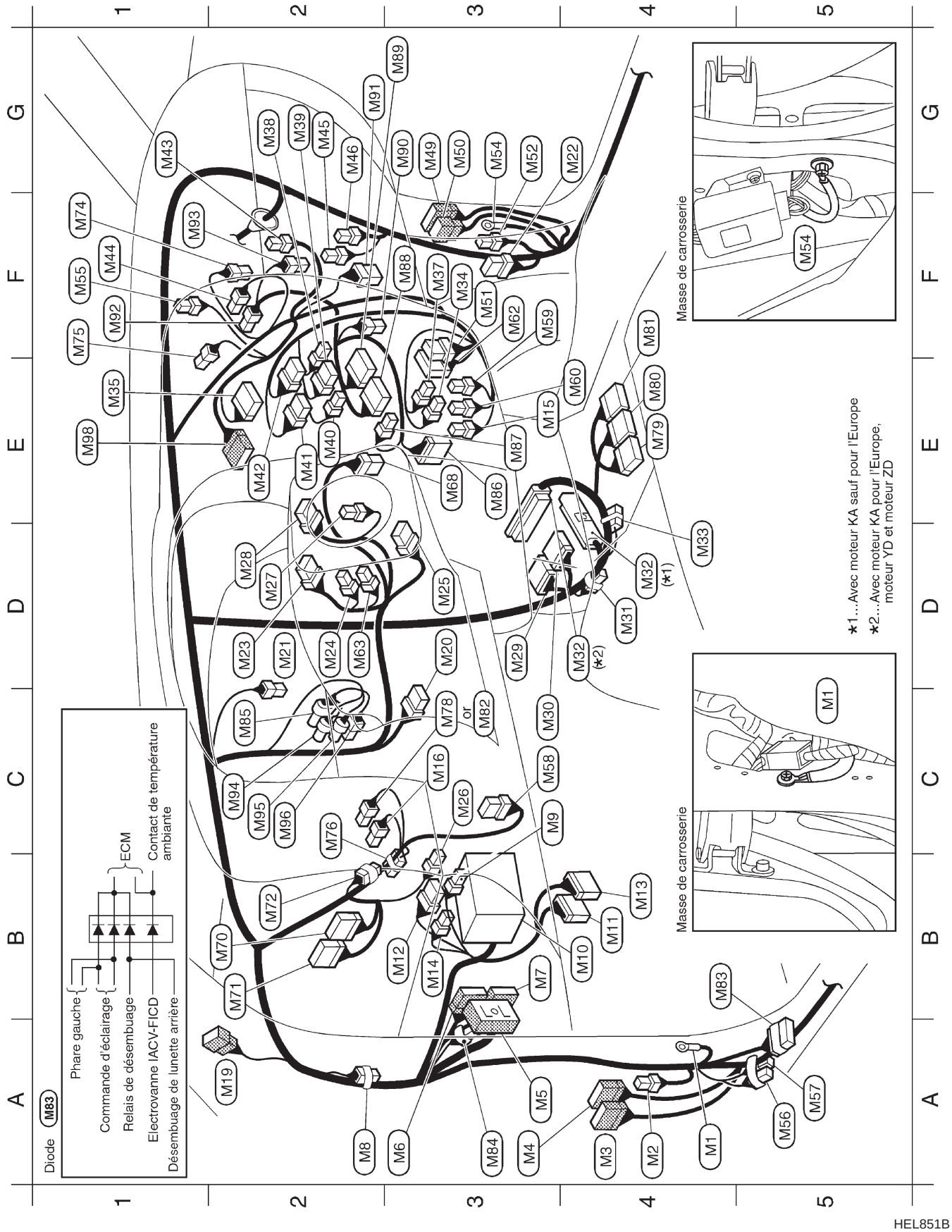

HEL851B

Simpo PDF Merge and Split Unregistered Version - http://www.simpopdf.com

Faisceau principal (Suite)

A4 (M1) — : Masse de carrosserie
A4 (M2) W/2 : Alarme sonore (moteur diesel sauf pour l'Europe et le Moyen-Orient)
A4 (M3) W/20 : Vers (D1)
A3 (M4) W/12 : Vers (D1) (avec lève-glace électrique)
A3 (M5) SMJ : Vers (E101)
A3 (M6) W/24 : Vers (N1)
B3 (M7) BR/24 : Vers (N2)
A2 (M8) –/2 : Diode (moteur diesel sauf pour l'Europe et le Moyen-Orient)
C3 (M9) L/4 : Relais de pompe d'alimentation (moteur KA)
B4 (M10) — : Boîte à fusibles
B4 (M11) W/16 : Connecteur de liaison des données
B3 (M12) W/6 : Boîte à fusibles
B4 (M13) B/10 : Vérifier le connecteur (Z24S)
B3 (M14) W/4 : Boîte à fusibles
E3 (M15) B/3 : Centrale clignotants combinée
C3 (M16) B/2 : Contact de feux de stop
A2 (M19) W/6 : Vers (R1)
D3 (M20) W/6 : Contact d'allumage
D2 (M21) W/1 : Commande de frein de stationnement (type levier au plancher)
G4 (M22) W/6 : Module de commande de pompe d'alimentation (Z24S)
D2 (M23) BR/8 : Commande d'éclairage
Commande de clignotant
D2 (M24) BR/4 : Commande d'éclairage
D3 (M25) Y/7 : Câble en spirale (avec coussin gonflable)
C3 (M26) L/2 : Contact de contrôle de T/A (avec T/A)
D2 (M27) B/1 : Commande d'avertisseur sonore (sans coussin gonflable)
D2 (M28) GY/8 : Commande d'essuie-glace et de lave-glace
D3 (M29) W/12 : Boîtier de contrôle de préchauffage(moteur TD sauf régions froides et moteur QD)
C3 (M30) W/16 : Boîtier de contrôle de préchauffage (moteur TD pour régions froides)
D4 (M31) GY/6 : Connecteur de raccord-1 (moteur KA)
D4 (M32) SMJ : ECM (moteurs KA, YD et ZD)
D4 (M33) — : Connecteur de raccord-3 (moteur KA pour l'Europe)
F3 (M34) W/2 : Eclairage de cendrier (avec moteur à essence pour le Moyen-Orient)
E1 (M35) W/10 : Autoradio (pour l'Europe)

F3 (M37) B/2 : Allume-cigare
G2 (M38) W/3 : Interrupteur de climatisation (sans climatisation automatique)
G2 (M39) W/6 : Commutateur de ventilateur (sans climatisation automatique)
E2 (M40) W/2 : Eclairage de commutateur de ventilateur (sans climatisation automatique)
E2 (M41) W/8 : Interrupteur de feux de détresse
E2 (M42) W/6 : Interrupteur de désembuage (sauf pour le Moyen-Orient sauf cabine simple avec moteur TD)
G1 (M43) Y/2 : Module de coussin gonflable passager avant
F1 (M44) BR/4 : Amplificateur de commande thermique
G2 (M45) BR/4 : Résistance de ventilateur (sans climatisation automatique)
G2 (M46) W/2 : Moteur de soufflerie
G3 (M49) W/20 : Vers (D31)
G3 (M50) W/6 : Vers (D32) (avec lève-glace électrique)
F3 (M51) W/8 : Minuterie de verrouillage de porte (avec lève-glace électrique sauf pour l'Europe)
G3 (M52) W/2 : Rupteur-2 (pour l'Europe et avec moteur à essence pour le Moyen-Orient)
G3 (M54) — : Masse de carrosserie
F1 (M55) W/2 : Témoin de sécurité (avec NATS)
A5 (M56) –/2 : Diode (Z24S)
A5 (M57) –/2 : Diode (Z24S)
C3 (M58) BR/8 : Boîtier de télécommande à fonctions multiples (pour l'Europe)
F3 (M59) BR/6 : Relais de désembuage (Sauf pour le Moyen-Orient)
E4 (M60) L/4 : Relais de feu antibrouillard arrière (pour l'Europe et avec moteur KA sauf pour le Moyen-Orient)
F3 (M62) W/18 : Boîtier de contrôle d'accès intelligent (pour l'Europe)
D2 (M63) W/3 : Commande de feu antibrouillard arrière (pour l'Europe et avec moteur KA sauf pour le Moyen-Orient)
E3 (M68) W/8 : IMMO NATS (pour l'Europe)
B2 (M70) W/24 : TCM (module de commande de transmission) (avec T/A)
B2 (M71) GY/24 : TCM (module de commande de transmission) (avec T/A)
B2 (M72) –/6 : Connecteur de raccord-2 (avec T/A)

F1 (M74) W/2 : Capteur de température d'air d'admission (avec climatisation automatique)
F1 (M75) B/2 : Sonde d'ensoleillement (avec climatisation automatique)
C2 (M76) W/6 : Connecteur optionnel (pour l'Europe)
C3 (M78) L/2 : Contact de verrouillage de changement de vitesses (avec T/A)
E4 (M79) Y/12 : Boîtier de capteurs de diagnostic de coussin gonflable (pour ceinture de sécurité à prétensionneurs)
E4 (M80) Y/20 : Contact de verrouillage de changement de vitesses (avec T/A)
F4 (M81) Y/12 : Boîtier de capteurs de diagnostic de coussin gonflable (pour ceinture de sécurité à prétensionneurs)
C3 (M82) B/2 : Contact de position de pédale de frein (YD25)
B4 (M83) L/10 : Diode (KA24DE)
A3 (M84) BR/2 : Résistance (avec T/A)
C2 (M85) GY/6 : Unité de travail d'accélérateur (YD25)
E3 (M86) BR/10 : Rétroviseur de porte à mode (avec climatisation automatique)
E3 (M87) W/2 : Capteur d'habitacle (avec climatisation automatique)
F3 (M88) GY/20 : Témoin de climatisation automatique (avec climatisation automatique)
G3 (M89) GY/16 : Témoin de climatisation automatique (avec climatisation automatique)
G3 (M90) L/2 : Moteur d'aspiration (avec climatisation automatique)
G2 (M91) B/6 : Moteur de volet de mélange d'air (avec climatisation automatique)
F1 (M92) W/4 : Amp. de commande de ventilateur (Avec climatisation automatique)
F1 (M93) W/4 : Moteur de volet d'admission (avec climatisation automatique)
C2 (M94) BR/3 : Capteur de position d'accélérateur (ZD30)
C2 (M95) GY/3 : Capteur de position d'accélérateur (ZD30)
C2 (M96) W/3 : Contact d'accélérateur (F/C) (D30)
E1 (M98) W/12 : Autoradio (via le faisceau auxiliaire) (sauf pour l'Europe)

Diode (M8)

Témoin d'avertissement de filtre (FILTER) — Contact de filtre à carburant — Alarme sonore

Diode (M56), (M57)

Module de commande de carburant — (M56) — Témoin d'avertissement de charge (CHARGE) — Alternateur (L)
(M57) — Témoin d'avertissement d'huile (OIL) — Manocontact d'huile (OIL)

HEL852B

Simpo PDF Merge and Split Unregistered Version - http://www.simpopdf.com

Faisceau principal (Suite)

TABLEAU DE BORD — CONDUITE A DROITE

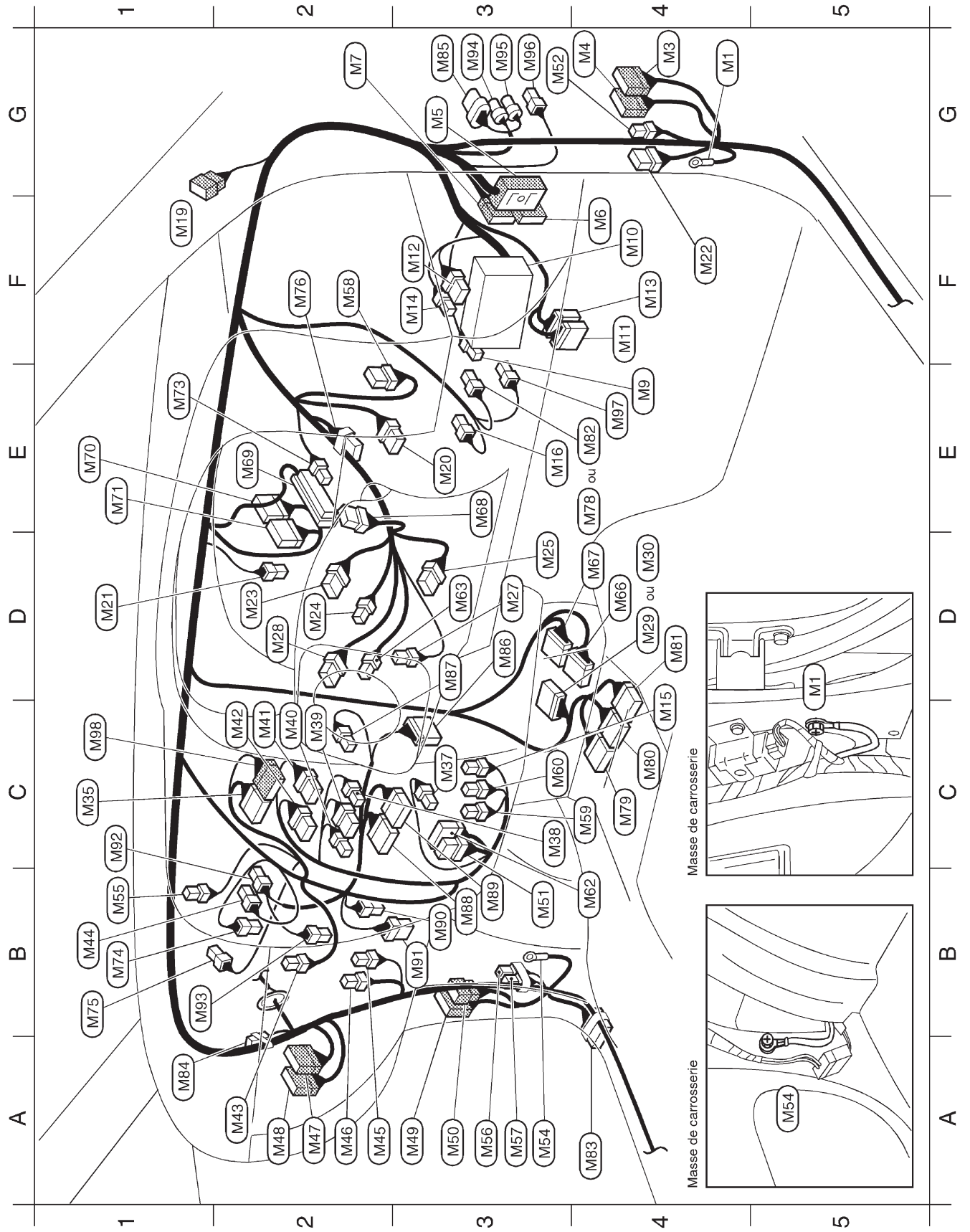

HEL853B

Simpo PDF Merge and Split Unregistered Version - http://www.simpopdf.com

Faisceau principal (Suite)

G4 (M1) — : Masse de carrosserie A2 (M46) W/2
G4 (M3) W/20 : Vers (D1) A2 (M47) W/16
G4 (M4) W/12 : Vers (D2) (Avec lève-glace électrique) A2 (M48) W/24
G3 (M5) SMJ : Vers (E101) A3 (M49) W/20
F4 (M6) W/24 : Vers (N1) A3 (M50) W/6
G2 (M7) BR/24 : Vers (N2) B3 (M51) W/8
E4 (M9) L/4 : Relais de pompe d'alimentation (moteurs KA et VG)
F4 (M10) — : Boîte à fusibles G3 (M52) W/2
F4 (M11) W/16 : Connecteur de liaison des données A3 (M54) —
F3 (M12) W/6 : Boîte à fusibles B1 (M55) W/2
F4 (M13) B/10 : Vérifier le connecteur (moteur Z) A3 (M56) –/2
F3 (M14) W/4 : Boîte à fusibles A3 (M57) –/2
C4 (M15) B/3 : Centrale clignotants combinée F2 (M58) BR/8
E3 (M16) B/2 : Contact de feux de stop C4 (M59) BR/6
F1 (M19) W/6 : Vers (R1) C3 (M60) L/4
E3 (M20) W/6 : Contact d'allumage B4 (M62) W/18
D1 (M21) W/1 : Commande de frein de stationnement (type levier au plancher) D3 (M63) W/3
F4 (M22) W/6 : Module de commande de pompe d'alimentation (moteur Z) D4 (M66) GY/20
D2 (M23) BR/8 : Commande d'éclairage D4 (M67) GY/16
D2 (M24) BR/4 : Commande de clignotant E3 (M68) W/8
D3 (M25) Y/7 : Commande d'éclairage E2 (M69) W/48
D3 (M27) B/1 : Câble en spirale (avec coussin gonflable) E1 (M70) W/24
D2 (M28) GY/8 : Commande d'avertisseur sonore (sans coussin gonflable) E1 (M71) GY/24
D4 (M29) W/12 : Commande de lave-glace et d'essuie-glace avant E1 (M73) W/4
D4 (M30) W/16 : Boîtier de contrôle de préchauffage (moteur TD27 sans ER sauf pour l'Australie et Moteur QD) B1 (M74) W/2
C1 (M35) W/16 : Boîtier de contrôle de préchauffage (moteur TD27 pour l'Australie) B1 (M75) B/2
C3 (M37) B/2 : Autoradio (pour l'Europe) F2 (M76) W/6
C3 (M38) W/3 : Allume-cigare E4 (M78) L/2
C2 (M39) W/6 : Interrupteur de climatisation (sans climatisation automatique) C4 (M79) Y/12
C2 (M40) W/2 : Commutateur de ventilateur (sans climatisation automatique) C4 (M80) Y/20
C2 (M41) W/8 : Eclairage de commutateur de ventilateur (sans climatisation automatique) D4 (M81) Y/12
C2 (M42) W/6 : Interrupteur de feux de détresse A2 (M43) Y/2
B1 (M44) BR/4 : Contact de désembuage (sauf modèles sans essuie-glace intermittent pour l'Australie) E4 (M82) B/2
A2 (M45) BR/4 : Module de coussin gonflable côté passager A4 (M83) L/10
Amplificateur de commande thermique A1 (M84) BR/2
Résistance de ventilateur (sans climatisation automatique)
G3 (M85) GY/6 : Moteur de soufflerie
D3 (M86) BR/10 : Vers (F55) (Moteurs KA, VG, YD et ZD)
D3 (M87) W/2 : Vers (F54) (Moteurs KA, VG, YD et ZD)
B3 (M88) GY/20 : Vers (D31)
B3 (M89) GY/16 : Vers (D32) (Avec lève-glace électrique)
B3 (M90) L/2 : Minuterie de verrouillage de porte (avec lève-glace électrique sauf pour l'Europe)
B3 (M91) B/6 : Rupteur-2 (pour l'Europe)
C1 (M92) W/4 : Masse de carrosserie
B1 (M93) W/4 : Témoin de sécurité (pour l'Europe)
G3 (M94) BR/3 : Diode (moteur Z)
G3 (M95) GY/3 : Diode (moteur Z)
G3 (M96) W/3 : Boîtier de télécommande à fonctions multiples (pour l'Europe)
E4 (M97) W/2 : Relais de désembuage (sauf modèles sans essuie-glace intermittent pour l'Australie)
C1 (M98) W/12 : Relais de feu antibrouillard arrière (pour l'Europe)
Boîtier de contrôle d'accès intelligent (pour l'Europe)
Commande de feu antibrouillard arrière (pour l'Europe)
ECM (moteur diesel avec EGR)
ECM (moteur diesel avec EGR)
IMMO NATS (pour l'Europe)
TCM (module de commande de transmission) (avec T/A avec moteur VG)
TCM (module de commande de transmission) (avec T/A avec moteur KA)
TCM (module de commande de transmission) (avec T/A avec moteur KA)
Dispositif de T/A (avec T/A avec levier de changement de colonne)
Capteur de température d'air d'admission (avec climatisation automatique)
Sonde d'ensoleillement (avec climatisation automatique)
Connecteur optionnel pour le dispositif antivol (pour l'Europe)
Contact de verrouillage de changement de vitesses (avec T/A)
Boîtier de capteurs de diagnostic de coussin gonflable (avec coussin gonflable pour l'Europe et l'Australie)
Boîtier de capteurs de diagnostic de coussin gonflable (avec coussin gonflable)
Boîtier de capteurs de diagnostic de coussin gonflable (avec coussin gonflable pour l'Europe et l'Australie)
Contact de position de pédale de frein (moteur YD)
Diode (moteur KA)
Résistance (avec T/A)
Unité de travail d'accélérateur (YD25)
Rrétroviseur de porte à mode (avec climatisation automatique)
Capteur d'habitacle (avec climatisation automatique)
Moteur d'aspiration (avec climatisation automatique)
Volet de mélange d'air (avec climatisation automatique)
Amp. de commande de ventilateur (Avec climatisation automatique)
Moteur de volet d'admission (avec climatisation automatique)
Capteur de position d'accélérateur (moteur ZD)
Contact de position d'accélérateur (moteur ZD)
Commande d'accélérateur (F/C) (moteur ZD)
Contact Kick-down (avec T/A avec moteur VG)
Autoradio (via le faisceau auxiliaire) (sauf pour l'Europe)

HEL854B

Simpo PDF Merge and Split Unregistered Version - http://www.simpopdf.com

Faisceau principal (Suite)

COTE CARROSSERIE — CONDUITE A GAUCHE

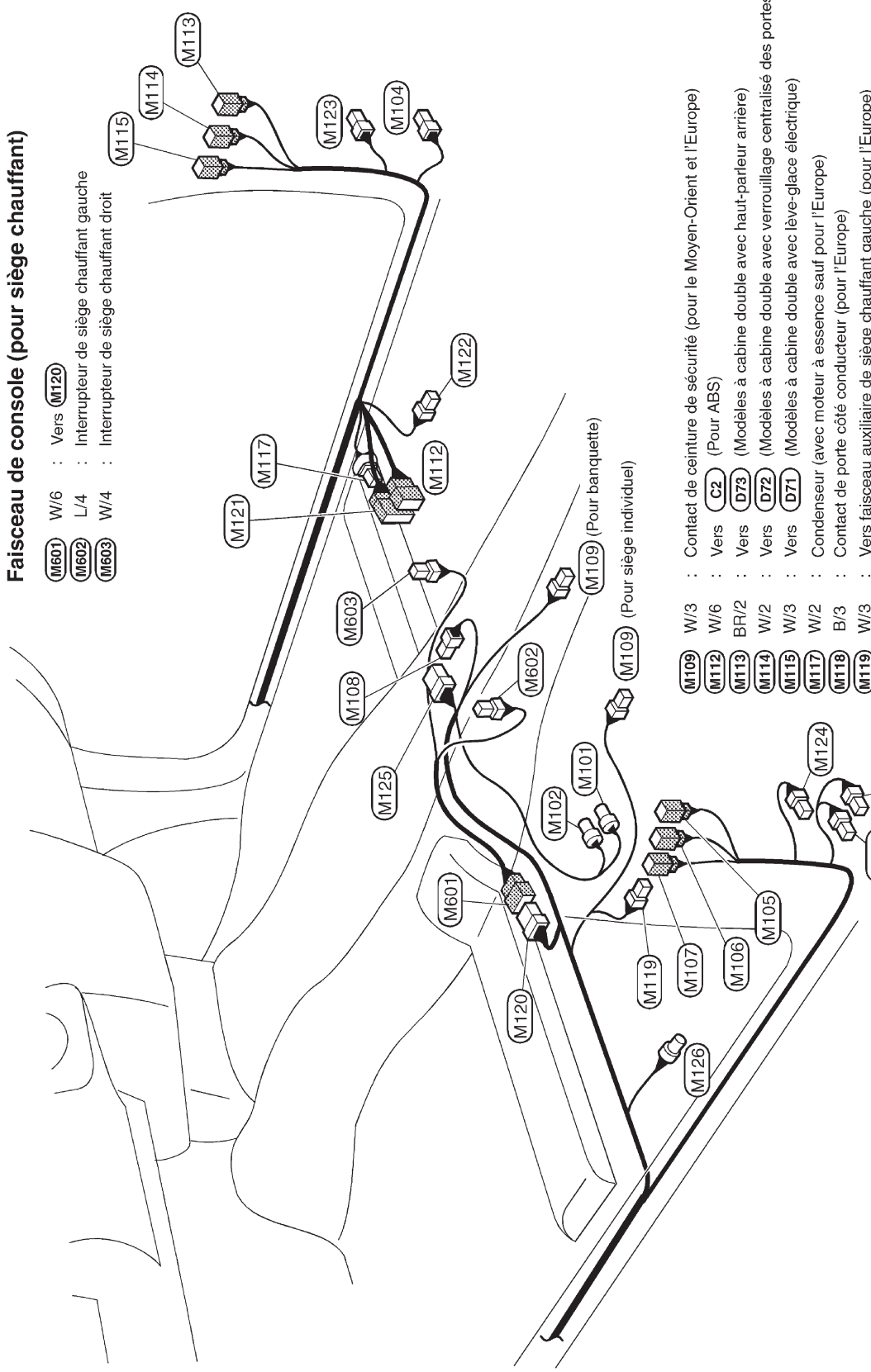

M109 W/3 : Contact de ceinture de sécurité (pour le Moyen-Orient et l'Europe)
M112 W/6 : Vers C2 (Pour ABS)
M113 BR/2 : Vers D73 (Modèles à cabine double avec haut-parleur arrière)
M114 W/2 : Vers D72 (Modèles à cabine double avec verrouillage centralisé des portes)
M115 W/3 : Vers D71 (Modèles à cabine double avec lève-glace électrique)
M117 W/2 : Condenseur (avec moteur à essence sauf pour l'Europe)
M118 B/3 : Contact de porte côté conducteur (pour l'Europe)
M119 W/3 : Vers faisceau auxiliaire de siège chauffant gauche (pour l'Europe)
M120 W/6 : Vers M601 (Pour l'Europe)
M121 W/16 : Vers C9
M122 W/3 : Vers faisceau auxiliaire de siège chauffant droit (pour l'Europe)
M123 W/4 : Prétensionneur de ceinture de sécurité avant droit (avec coussin gonflable pour l'Europe et le Moyen-Orient ou avec coussin gonflable avec moteur KA)
M124 W/4 : Prétensionneur de ceinture de sécurité avant gauche (avec coussin gonflable pour l'Europe et le Moyen-Orient ou avec coussin gonflable avec moteur KA)
M125 W/6 : Dispositif de T/A (avec T/A)
M126 G/4 : Sonde à oxygène chauffée-2 (avec moteur KA pour l'Europe)

M101 GY/2 : Capteur G (pour ABS)
M102 BR/2 : Capteur G (pour ABS) (pour l'Europe)
M103 B/1 : Contact de porte côté conducteur (sauf Europe)
M104 B/1 : Contact de porte côté passager (pour l'Europe)
M105 BR/2 : Vers D53 (Modèles à cabine double avec haut-parleur arrière)
M106 W/2 : Vers D52 (Modèles à cabine double avec verrouillage centralisé des portes)
M107 W/3 : Vers D51 (Modèles à cabine double avec lève-glace électrique)
M108 B/1 : Commande de frein de stationnement (type à levier central)

HEL855B

Simpo PDF Merge and Split Unregistered Version - http://www.simpopdf.com

Faisceau principal (Suite)

COTE CARROSSERIE — CONDUITE A DROITE

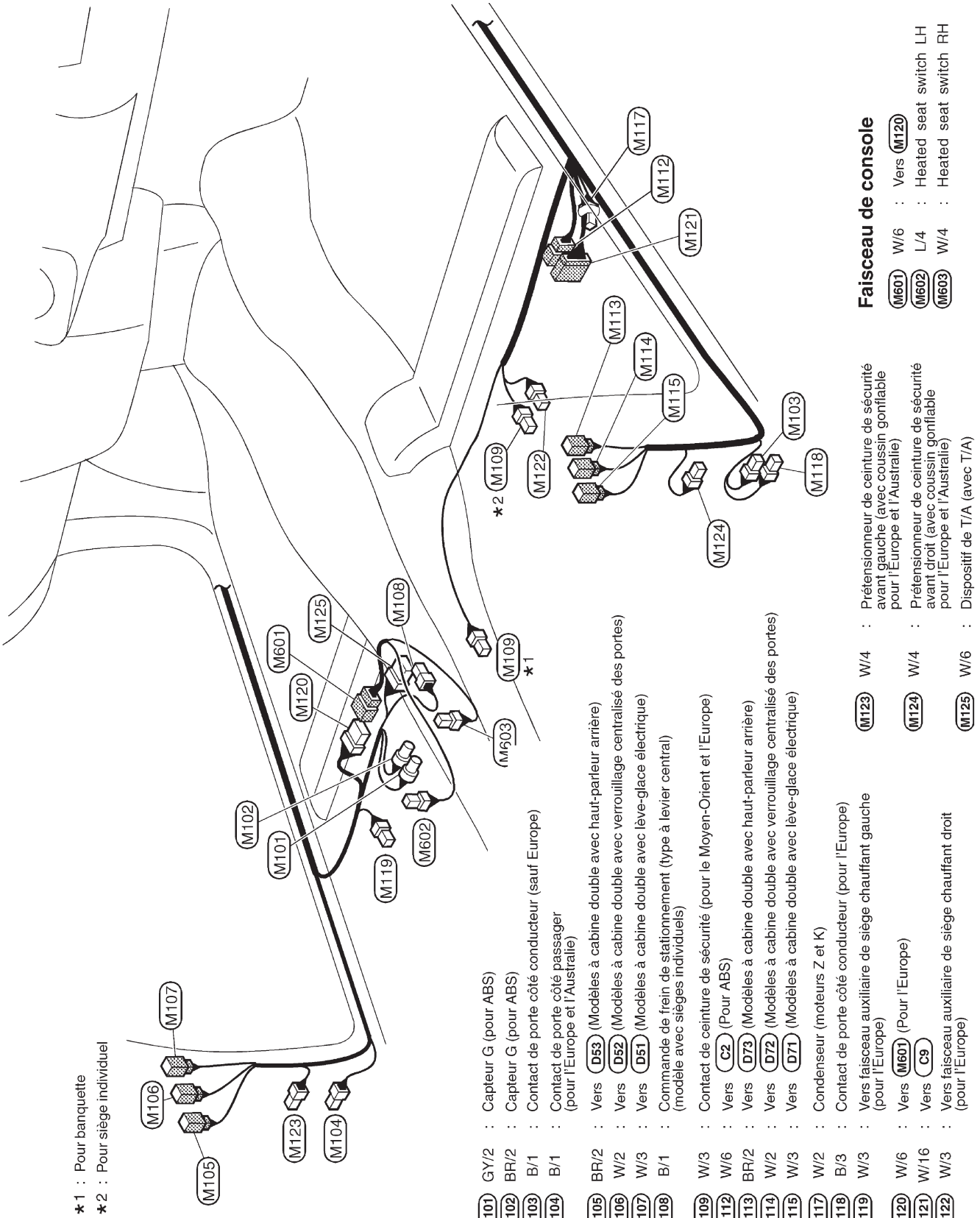

*1 : Pour banquette
*2 : Pour siège individuel

M101	GY/2	: Capteur G (pour ABS)
M102	BR/2	: Capteur G (pour ABS)
M103	B/1	: Contact de porte côté conducteur (sauf Europe)
M104	B/1	: Contact de porte côté passager (pour l'Europe et l'Australie)
M105	BR/2	: Vers D53 (Modèles à cabine double avec haut-parleur arrière)
M106	W/2	: Vers D52 (Modèles à cabine double avec verrouillage centralisé des portes)
M107	W/3	: Vers D51 (Modèles à cabine double avec lève-glace électrique)
M108	B/1	: Commande de frein de stationnement (type à levier central) (modèle avec sièges individuels)
M109	W/3	: Contact de ceinture de sécurité (pour le Moyen-Orient et l'Europe)
M112	W/6	: Vers C2 (Pour ABS)
M113	BR/2	: Vers D73 (Modèles à cabine double avec haut-parleur arrière)
M114	W/2	: Vers D72 (Modèles à cabine double avec verrouillage centralisé des portes)
M115	W/3	: Vers D71 (Modèles à cabine double avec lève-glace électrique)
M117	W/2	: Condenseur (moteurs Z et K)
M118	B/3	: Contact de porte côté conducteur (pour l'Europe)
M119	W/3	: Vers faisceau auxiliaire de siège chauffant gauche (pour l'Europe) M123 W/4
M120	W/6	: Vers M601 (Pour l'Europe) M124 W/4
M121	W/16	: Vers C9
M122	W/3	: Vers faisceau auxiliaire de siège chauffant droit (pour l'Europe) M125 W/6

: Prétensionneur de ceinture de sécurité avant gauche (avec coussin gonflable pour l'Europe et l'Australie)
: Prétensionneur de ceinture de sécurité avant droit (avec coussin gonflable pour l'Europe et l'Australie)
: Dispositif de T/A (avec T/A)

Faisceau de console

M601	W/6	: Vers M120
M602	L/4	: Heated seat switch LH
M603	W/4	: Heated seat switch RH

HEL856B

Simpo PDF Merge and Split Unregistered Version - http://www.simpopdf.com

Faisceau principal (Suite)

COMPARTIMENT MOTEUR — CONDUITE A GAUCHE

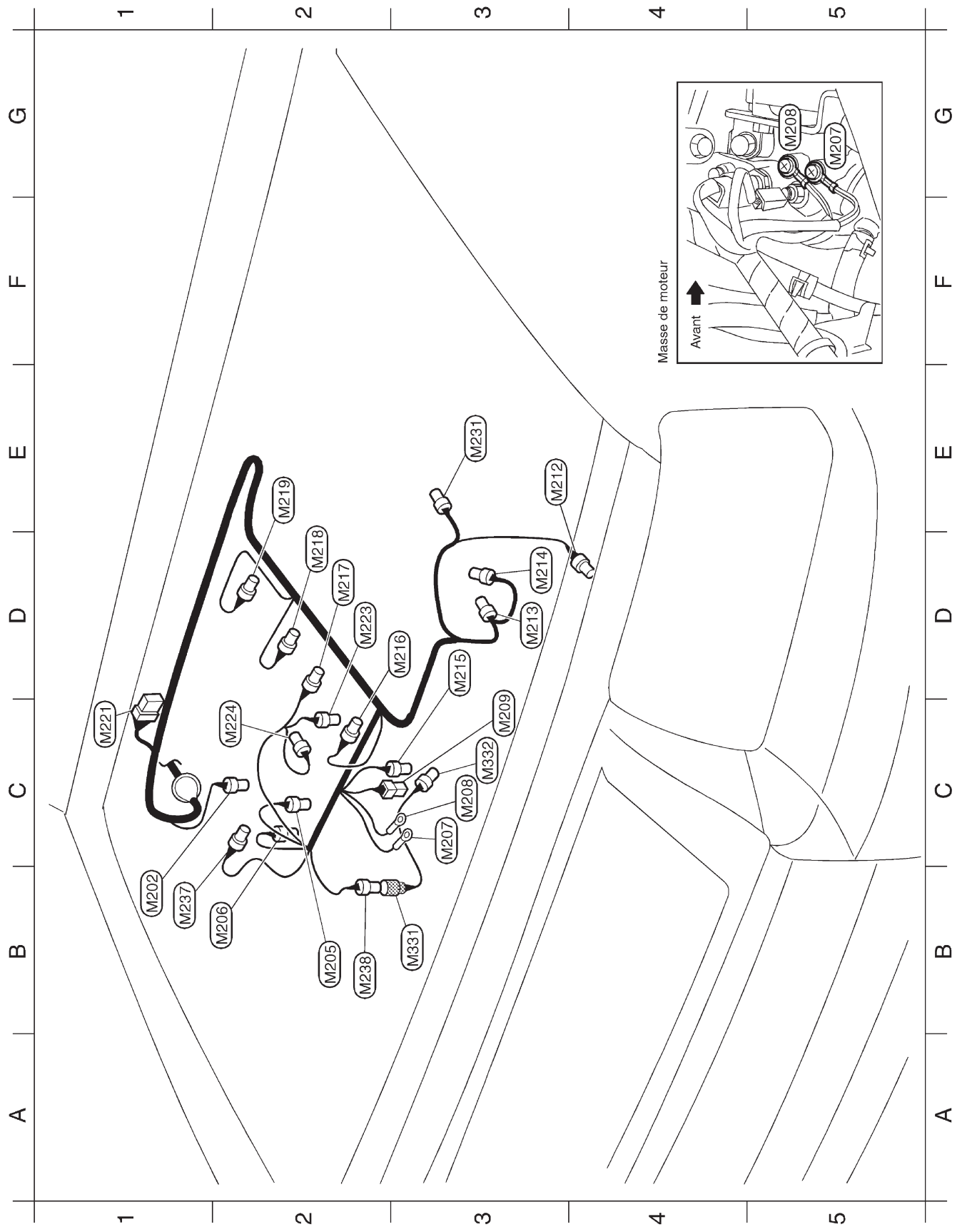

HEL857B

Simpo PDF Merge and Split Unregistered Version - http://www.simpopdf.com

Faisceau principal (Suite)

B1 (M202) L/2 : Electrovanne de commande de purge de la cartouche EVAP
B2 (M205) BR/3 : Capteur de position du papillon
B2 (M206) GY/3 : Contact de position de papillon
C3 (M207) — : Masse de moteur
C3 (M208) — : Masse de moteur
C3 (M209) B/1 : Transmetteur thermique
E3 (M212) B/1 : Compresseur
D3 (M213) GY/2 : Distributeur
D3 (M214) GY/6 : Distributeur
D3 (M215) GY/2 : Capteur de température de liquide de refroidissement moteur
D3 (M216) B/2 : Injecteur n°1
D2 (M217) B/2 : Injecteur n° 2
D2 (M218) B/2 : Injecteur n° 3
E2 (M219) B/2 : Injecteur n°4
C1 (M221) W/6 : Moteur d'essuie-glace
D2 (M223) BR/2 : Soupape IACV-ACC
C2 (M224) PU/2 : Electrovanne IACV-FICD
E3 (M231) SB/3 : Sonde à oxygène chauffée 1
B1 (M237) BR/4 : Capteur de débitmètre d'air
B2 (M238) GY/2 : Vers (M331)

Faisceau auxiliaire

B3 (M331) GY/2 : Vers (M238)
C3 (M332) GY/2 : Capteur de détonation

HEL858B

Simpo PDF Merge and Split Unregistered Version - http://www.simpopdf.com

Faisceau principal (Suite)

COMPARTIMENT MOTEUR — MOTEUR YD (CONDUITE A GAUCHE)

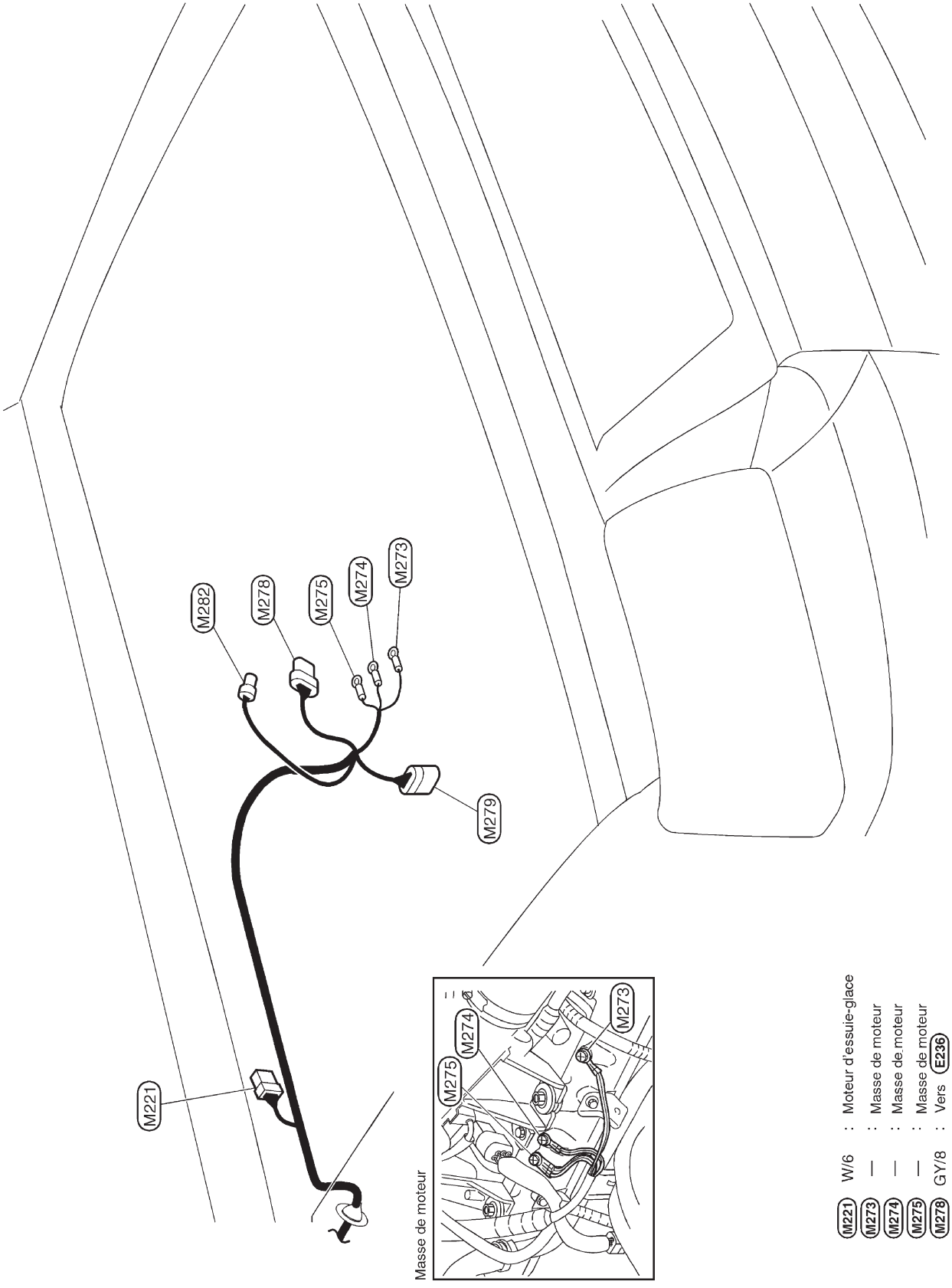

M221	W/6	:	Moteur d'essuie-glace
M273	—	:	Masse de moteur
M274	—	:	Masse de moteur
M275	—	:	Masse de moteur
M278	GY/8	:	Vers E236
M279	GY/10	:	Vers E237
M282	GY/3	:	Manomètre d'air de suralimentation

HEL861B

Simpo PDF Merge and Split Unregistered Version - http://www.simpopdf.com

Faisceau principal (Suite)

REMARQUE

Simpo PDF Merge and Split Unregistered Version - http://www.simpopdf.com

Faisceau de compartiment moteur

CONDUITE A GAUCHE — MOTEUR A ESSENCE

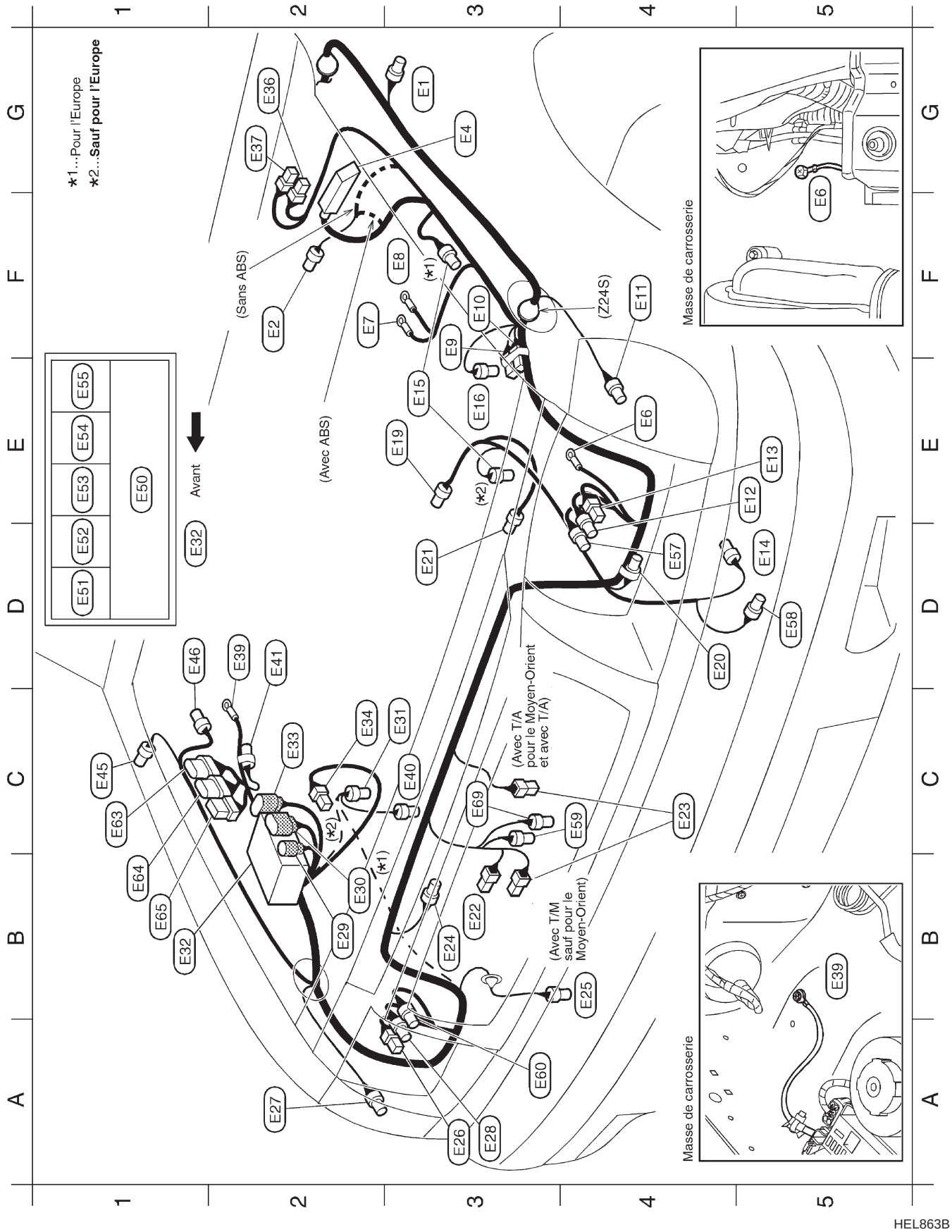

HEL863B

Simpo PDF Merge and Split Unregistered Version - http://www.simpopdf.com

Faisceau de compartiment moteur (Suite)

G3 E1 GY/2 : Clignotant latéral gauche (avec phare de type multi-faisceaux)
F2 E2 GY/2 : Contact de niveau de liquide de frein
G3 E4 B/31 : Actionneur d'ABS et unité électrique (pour ABS)
E4 E6 — : Masse de carrosserie
F2 E7 — : Bobine d'allumage (moteur Z)
F3 E8 — : Bobine d'allumage (moteur Z)
F3 E9 –/2 : Résistance (moteur Z)
F3 E10 W/2 : Condenseur (moteur Z)
F4 E11 GY/3 : Feu combiné avant gauche (sans phare de type multi-faisceaux)
E5 E12 GY/3 : Feu combiné avant gauche (avec phare de type multi-faisceaux)
E5 E13 B/3 : Phare gauche
D5 E14 GY/2 : Moteur de lave-glace
E3 E15 BR/2 : Capteur de roue avant gauche (pour ABS)
E3 E16 BR/2 : Capteur de température d'air d'admission (moteur KA pour l'Europe)
E3 E19 GY/3 : Distributeur (moteur Z)
D4 E20 GY/2 : Connecteur optionnel (pour contact de capot) (pour l'Europe)
D3 E21 B/1 : Compresseur (moteur Z)
B3 E22 B/1 : Avertisseur sonore à timbre bas
C4 E23 B/1 : Avertisseur sonore à timbre élevé
B3 E24 GY/2 : Moteur de ventilateur de refroidissement (moteur KA pour le Moyen-Orient et l'Europe)
B4 E25 GY/4 : Manocontact triple
A3 E26 B/3 : Phare droit
A2 E27 GY/3 : Feu combiné avant droit (sans phare de type multi-faisceaux)
A3 E28 GY/3 : Feu combiné avant droit (avec phare de type multi-faisceaux)
B2 E29 GY/2 : Vers E204
B2 E30 GY/8 : Vers E203
C3 E31 GY/2 : Capteur de roue avant droit (pour ABS)
B1 E32 — : Boîte à relais (raccord à fusibles et boîte à fusibles)
C2 E33 SB/8 : Vers E205
C2 E34 B/1 : Batterie
G2 E36 B/1 : Electrovanne de commande de pot ISC-FI (moteur Z)
G2 E37 B/1 : Electrovanne de commande de pot ISC-FI (moteur Z)
D2 E39 — : Masse de carrosserie
C3 E40 B/2 : Manocontact d'huile de direction assistée (pour l'Europe)
D2 E41 B/1 : Connecteur optionnel (pour feu antibrouillard avant) (pour l'Europe)
C1 E45 GY/2 : Clignotant latéral droit (avec phare de type multi-faisceaux)
D1 E46 GY/3 : Antenne électrique (pour le Moyen-Orient et l'Europe)
E1 E50 — : Raccord à fusibles et boîte à fusibles
D1 E51 L/4 : Relais de ventilateur de refroidissement (moteur KA pour le Moyen-Orient et l'Europe)
D1 E52 L/4 : Relais de climatiseur
E1 E53 W/3 : Relais d'avertisseur sonore
E1 E54 BR/6 : Contact de position de stationnement/point mort (avec T/A)
E1 E55 B/5 : Relais d'étrangleur automatique (moteur Z)
BR/6 : Relais d'ECM (moteur KA)
D4 E57 –/3 : Moteur de réglage de faisceau gauche (pour le Moyen-Orient et l'Europe)
D5 E58 GY/2 : Moteur de lave-phare (pour l'Europe)
C4 E59 B/2 : Capteur ambiant (pour l'Europe)
A3 E60 –/3 : Moteur de réglage de faisceau droit (pour le Moyen-Orient et l'Europe)
C1 E63 SB/6 : Boîtier d'éclairage de jour (avec système d'éclairage de jour)
B1 E64 SB/8 : Boîtier d'éclairage de jour (avec système d'éclairage de jour)
B1 E65 W/6 : Amplificateur de lave-phare (pour l'Europe)
C3 E69 BR/2 : Contact de temp. ambiante (Moteur KA)

HABITACLE

E101 SMJ : Vers M5
E103 B/2 : Boîte à fusibles

Résistance E9

HEL864B

Simpo PDF Merge and Split Unregistered Version - http://www.simpopdf.com

Faisceau de compartiment moteur (Suite)

CONDUITE A GAUCHE — MOTEUR DIESEL

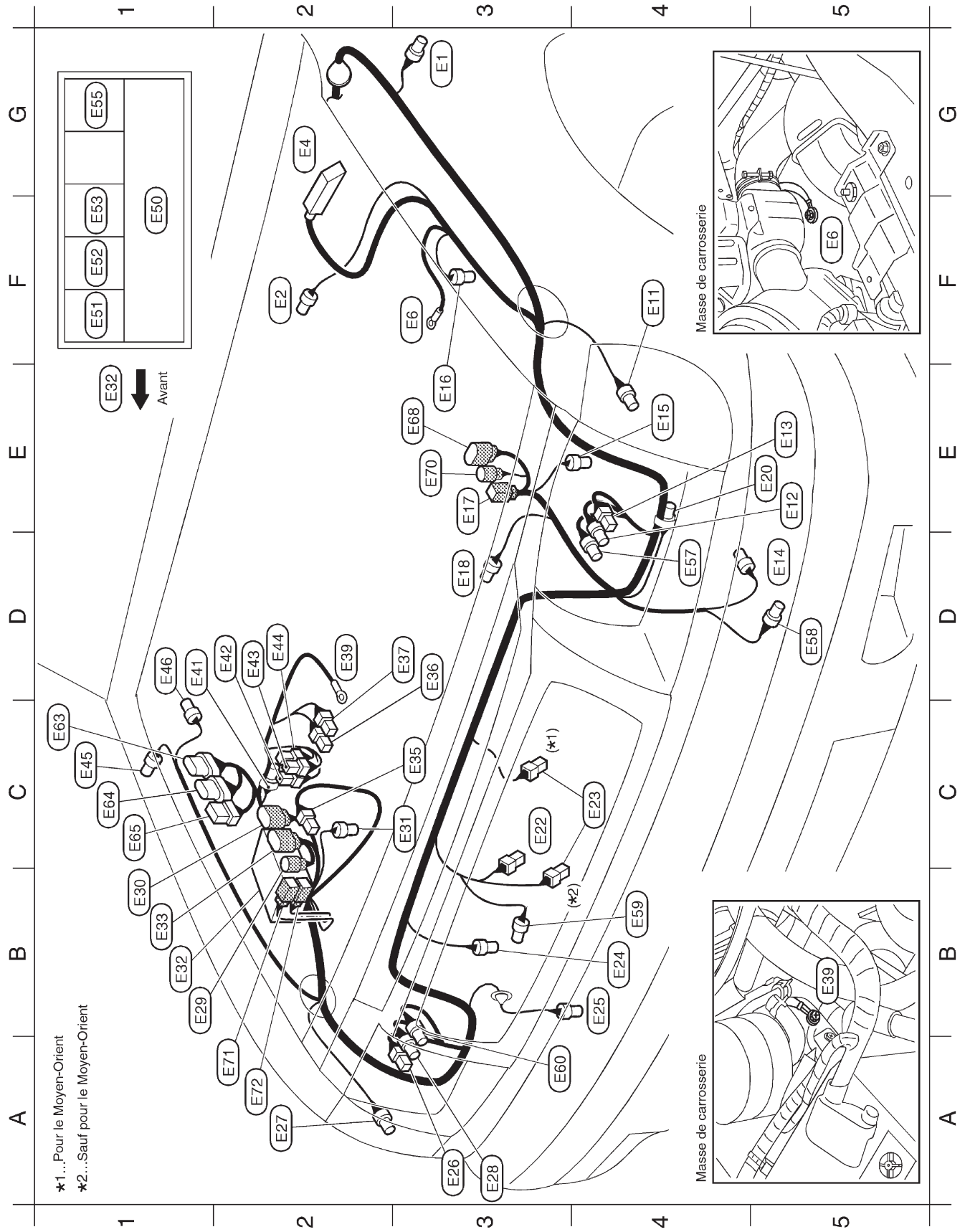

HEL865B

Simpo PDF Merge and Split Unregistered Version - http://www.simpopdf.com

Faisceau de compartiment moteur (Suite)

G3 (E1) GY/2 : Clignotant latéral gauche (avec phare type multi-faisceaux)
F2 (E2) GY/2 : Contact de niveau de liquide de frein
G2 (E4) B/31 : Actionneur d'ABS et unité électrique (pour ABS)
F3 (E6) — : Masse de carrosserie
F4 (E11) GY/3 : Feu combiné avant gauche (pour le Moyen-Orient)
E5 (E12) GY/3 : Feu combiné avant gauche (sauf pour le Moyen-Orient)
E5 (E13) B/3 : Phare gauche
D5 (E14) GY/2 : Moteur de lave-glace
E4 (E15) BR/2 : Capteur de roue avant gauche (pour ABS)
E3 (E16) GY/2 : Capteur de température d'air d'admission (moteurs YD et ZD)
E3 (E17) B/2 : Vers (A2)
D3 (E18) GY/2 : Commande de thermostat (moteur TD pour le Moyen-Orient et moteurs QD)
E5 (E20) GY/2 : Connecteur optionnel (pour contact de capot) (pour l'Europe)
C3 (E22) B/1 : Avertisseur sonore à timbre bas
C4 (E23) B/1 : Avertisseur sonore à timbre élevé
B4 (E24) GY/2 : Moteur de ventilateur de refroidissement (moteur TD pour le Moyen-Orient, moteurs QD, YD et ZD)

B4 (E25) GY/4 : Manocontact triple
A3 (E26) B/3 : Phare droit
A2 (E27) GY/3 : Feu combiné avant droit (pour le Moyen-Orient)
A3 (E28) GY/3 : Feu combiné avant droit (sauf pour le Moyen-Orient)
B1 (E29) GY/2 : Vers (E204)
B1 (E30) GY/8 : Vers (E203) (Moteurs YD et ZD)
C3 (E31) GY/2 : Capteur de roue avant droit (pour ABS)
B1 (E32) — : Boîte à relais (raccord à fusibles et boîte à fusibles)
B1 (E33) SB/8 : Vers (E205)
C3 (E35) B/1 : Vers (E206) (Moteurs TD et QD)
D3 (E36) B/1 : Electrovanne IACV-FICD (moteurs TD et QD)
D3 (E37) B/1 : Electrovanne IACV-FICD (moteurs TD et QD)
D2 (E39) — : Masse de carrosserie
D1 (E41) B/1 : Connecteur optionnel (pour feu antibrouillard avant) (pour l'Europe)
D2 (E42) W/1 : Relais de préchauffage-1 (moteurs YZ et ZD)
D2 (E43) W/1 : Relais de préchauffage-1 (Moteurs YZ et ZD)
D2 (E44) G/2 : Relais de préchauffage-1 (moteurs YZ et ZD)
C1 (E45) GY/2 : Clignotant latéral droit (sauf pour le Moyen-Orient)
D1 (E46) GY/3 : Antenne électrique (pour l'Europe)
F1 (E50) — : Raccord à fusibles et boîte à fusibles
F1 (E51) L/4 : Relais de ventilateur de refroidissement (moteur TD pour le Moyen-Orient , moteurs QD, YD et ZD)
F1 (E52) L/4 : Relais de climatiseur
F1 (E53) W/3 : Relais d'avertisseur sonore
G1 (E55) BR/6 : Relais d'ECM (moteurs YD et ZD)

D4 (E57) –/3 : Moteur de réglage de faisceau gauche (pour le Moyen-Orient et l'Europe)
D5 (E58) GY/2 : Moteur de lave-phare (pour l'Europe)
B4 (E59) B/2 : Capteur ambiant (pour la climatisation automatique) (Moteurs YZ et ZD)
A3 (E60) –/3 : Moteur de réglage de faisceau droit (pour le Moyen-Orient et l'Europe)

C1 (E63) SB/6 : Boîtier d'éclairage de jour (avec système d'éclairage de jour)
C1 (E64) SB/8 : Boîtier d'éclairage de jour (avec système d'éclairage de jour)
C1 (E65) W/6 : Amplificateur de lave-phare (pour l'Europe)
E3 (E68) GY/8 : Vers (A13) (Moteurs TD et QD)
E3 (E70) BR/3 : Vers (A14) (Moteurs YD et ZD)
A2 (E71) B/2 : Vers (E231) (Moteurs YD et ZD)
A2 (E72) B/1 : Vers (E232) (Moteurs YD et ZD)

HABITACLE

(E101) SMJ : *Vers* (M5)
(E103) B/2 : *Boîte à fusibles*

HEL866B

Simpo PDF Merge and Split Unregistered Version - http://www.simpopdf.com

Faisceau de compartiment moteur (Suite)

CONDUITE A DROITE — MOTEUR A ESSENCE

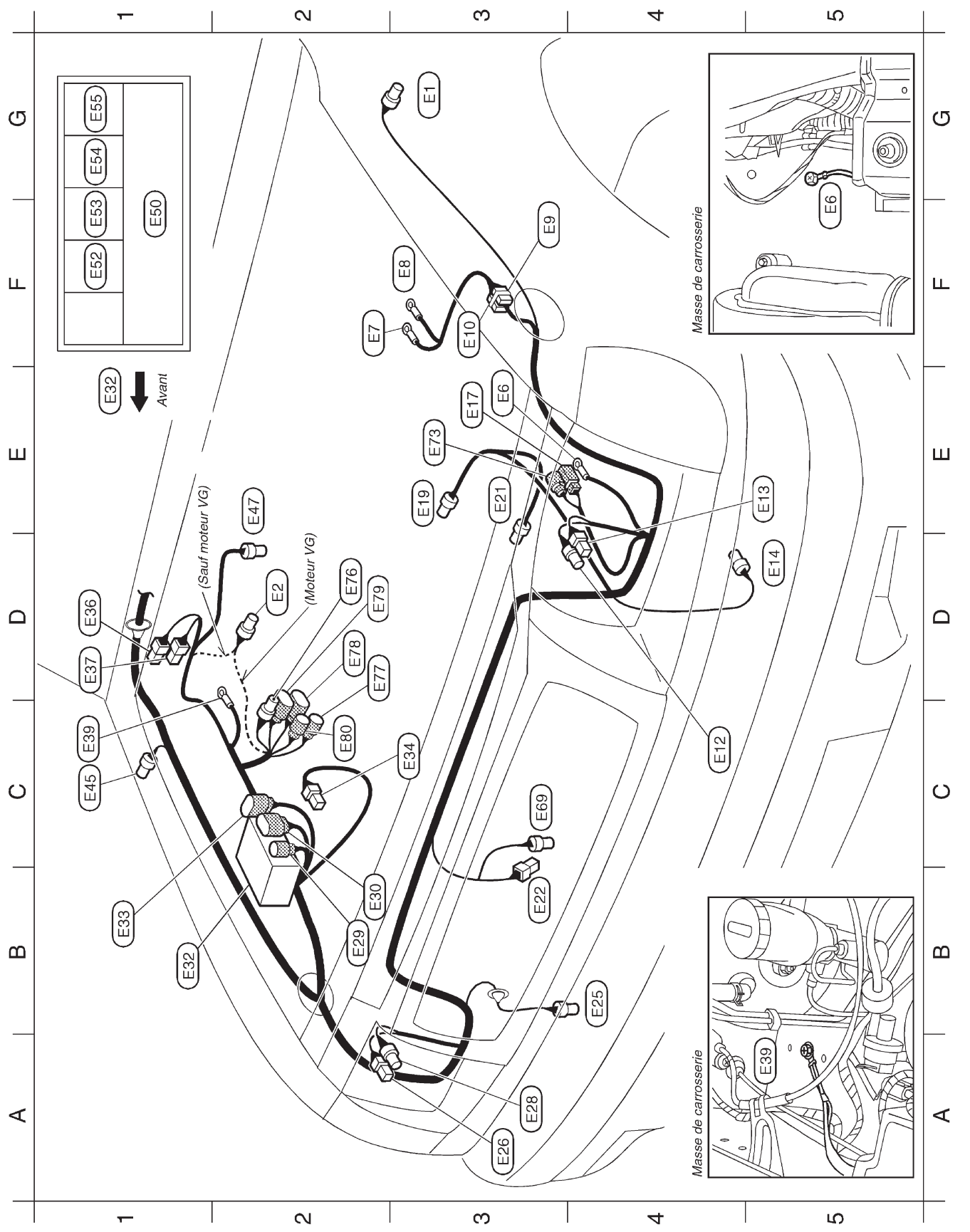

HEL867B

Simpo PDF Merge and Split Unregistered Version - http://www.simpopdf.com

Faisceau de compartiment moteur (Suite)

G3 E1 GY/2 : Clignotant latéral gauche
D2 E2 GY/2 : Contact de niveau de liquide de frein
E3 E6 — : Masse de carrosserie
F2 E7 — : Bobine d'allumage (moteur Z)
F3 E8 — : Bobine d'allumage (moteur Z)
F3 E9 –/2 : Résistance (moteur Z)
F3 E10 W/2 : Condenseur (moteur Z)
C4 E12 GY/3 : Feu combiné avant gauche
E5 E13 B/3 : Phare gauche
D5 E14 GY/2 : Moteur de lave-glace
E3 E17 B/2 : Vers A2 (Moteur VZ)
E3 E19 GY/3 : Distributeur (moteur Z)
E3 E21 B/1 : Compresseur (moteur Z)
B3 E22 B/1 : Avertisseur sonore à timbre bas
B4 E25 GY/4 : Manocontact triple
A3 E26 B/3 : Phare droit
A3 E28 GY/3 : Feu combiné avant droit (pour l'Australie)
B2 E29 GY/2 : Vers E204 (Sauf moteur VG)
Vers E502 (Moteur VG)
B2 E30 GY/8 : Vers E203 (Sauf moteur VG)
B1 E32 — : Boîte à relais (raccord à fusibles et boîte à fusibles)
B1 E33 SB/8 : Vers E205 (Sauf moteur VG)
C3 E34 B/1 : Batterie
D1 E36 B/1 : Electrovanne de commande de pot ISC-FI (moteur Z)
D1 E37 B/1 : Electrovanne de commande de pot ISC-FI (moteur Z)
C1 E39 — : Masse de carrosserie
C1 E45 GY/2 : Clignotant latéral droit
E2 E47 GY/3 : Carburateur (moteur Z)
F1 E50 — : Raccord à fusibles et boîte à fusibles
F1 E52 L/4 : Relais de climatiseur
F1 E53 W/3 : Relais d'avertisseur sonore
G1 E54 BR/6 : Contact de position de stationnement/point mort (avec T/A)
G1 E55 BR/6 : Relais d'ECM (moteur KA)
L/4 : Relais d'ECM (moteur VG)
B/5 : Relais d'étrangleur automatique (moteur Z)
C3 E69 BR/2 : Contact de temp. ambiante (moteur KA)

E3 E73 GY/2 : Vers A3 (Moteur VG)
D2 E76 GY/2 : Résistance de chute (avec T/A)
D2 E77 GY/2 : Contact de position de stationnement/point mort (avec T/A)
D2 E78 GY/8 : Contact de position de stationnement/point mort (avec T/A)
D2 E79 BR/8 : Vers l'ensemble code de borne (avec T/A)
C2 E80 GY/3 : Capteur de régime (avec T/A)

HABITACLE

E101 SMJ : Vers M5
E103 B/2 : Boîte à fusibles

HEL868B

Simpo PDF Merge and Split Unregistered Version - http://www.simpopdf.com

Faisceau de compartiment moteur (Suite)

CONDUITE A DROITE — MOTEUR DIESEL

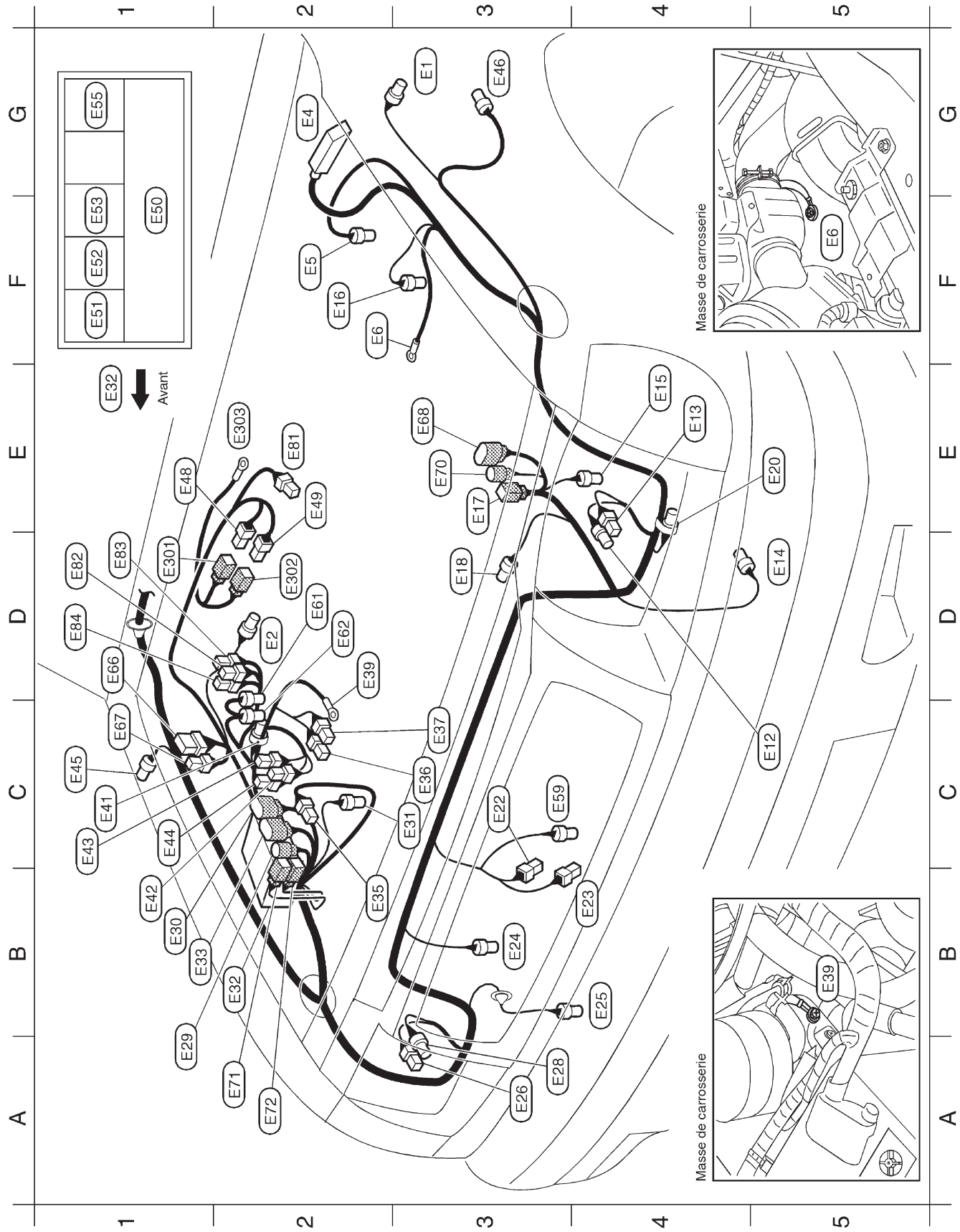

HEL869B

Simpo PDF Merge and Split Unregistered Version - http://www.simpopdf.com

Faisceau de compartiment moteur (Suite)

G3 E1 GY/2 : Clignotant latéral gauche
D2 E2 GY/2 : Contact de niveau de liquide de frein
G2 E4 B/31 : Actionneur d'ABS et unité électrique (pour ABS)
F2 E5 BR/2 : Contact de filtre à carburant (sauf pour l'Europe)
F2 E6 — : Masse de carrosserie
C5 E12 GY/3 : Feu combiné avant gauche
E4 E13 B/3 : Phare gauche
D5 E14 GY/2 : Moteur de lave-glace
E4 E15 BR/2 : Capteur de roue avant gauche (pour ABS)
F2 E16 GY/2 : Capteur de température d'air d'admission (Moteurs YZ et ZD s)
E3 E17 B/2 : Vers A2
D3 E18 GY/2 : Commande de thermostat (moteurs QD)
E5 E20 GY/2 : Connecteur optionnel (pour contact de capot) (pour l'Europe)
C3 E22 B/1 : Avertisseur sonore à timbre bas
B4 E23 B/1 : Avertisseur à timbre élevé (moteur ZD sauf pour l'Australie, moteurs YD et QD)
B3 E24 GY/2 : Moteur de ventilateur de refroidissement (sauf moteur TD)
B4 E25 GY/4 : Manocontact triple
A3 E26 B/3 : Phare droit
A3 E28 BR/3 : Feu combiné avant droit
A1 E29 GY/2 : Vers E204
B1 E30 GY/8 : Vers E203 (Avec moteur de commande par ECM)
C3 E31 GY/2 : Capteur de roue avant droit (pour ABS)
B2 E32 — : Boîte à relais (raccord à fusibles et boîte à fusibles)
B1 E33 SB/8 : Vers E205
B2 E35 B/1 : Vers E206 (Moteurs TD et QZ)
C3 E36 B/1 : Electrovanne IACV-FICD (moteurs TD et QZ)
C3 E37 B/1 : Electrovanne IACV-FICD (moteurs TD et QZ)
D2 E39 — : Masse de carrosserie
C1 E41 B/1 : Connecteur optionnel (pour feu antibrouillard avant) (pour l'Europe)
B1 E42 W/1 : Relais de préchauffage-1
C1 E43 W/1 : Relais de préchauffage-1
C1 E44 G/2 : Relais de préchauffage-1
C1 E45 GY/2 : Clignotant latéral droit
G3 E46 GY/3 : Antenne électrique (pour l'Europe)
E1 E48 B/1 : Vers E301 (Moteur QD)
E2 E49 L/2 : Vers E302 (Moteur TD)
F1 E50 — : Raccord à fusibles et boîte à fusibles
F1 E51 L/4 : Relais de ventilateur de refroidissement (sauf moteur TD)
F1 E52 L/4 : Relais de climatiseur
F1 E53 W/3 : Relais d'avertisseur sonore
G1 E55 BR/6 : Relais d'ECM (moteurs YD et ZD)
C3 E59 B/2 : Capteur ambiant (moteurs YD et ZD)

D2 E61 B/2 : Electrovanne EGRC (boisseau de papillon) (moteur TD avec EGR)
D2 E62 BR/2 : Electrovanne EGRC (soupape EGR) (moteur TD avec EGR)
D1 E66 GY/6 : Boîtier inverseur phare/code (pour l'Europe)
C1 E67 GY/4 : Boîtier inverseur phare/code (pour l'Europe)
E3 E68 GY/8 : Vers A13 (Moteurs TD et QZ)
E3 E70 BR/3 : Vers A14 (Moteurs YD et ZD)
A2 E71 B/2 : Vers E231 (Moteurs YD et ZD)
A2 E72 B/1 : Vers E232 (Moteurs YD et ZD)
E2 E81 B/2 : Résistance à la chute (moteur TD pour l'Australie)
D1 E82 W/1 : Relais de préchauffage-2 (Moteur TD pour l'Australie)
D1 E83 W/1 : Relais de préchauffage-2 (Moteur TD pour l'Australie)
D1 E84 G/2 : Relais de préchauffage-2 (Moteur TD pour l'Australie)

HABITACLE

E101 SMJ : Vers M5
E103 B/2 : Boîte à fusibles

Faisceau auxiliaire

D1 E301 B/1 : Vers E48 (Moteur QD)
D2 E302 L/2 : Vers E49 (Moteur TD)
E2 E303 — : Bougie de préchauffage (moteurs TD et QD)

HEL870B

Simpo PDF Merge and Split Unregistered Version - http://www.simpopdf.com

Faisceau de contrôle du moteur/Moteur KA

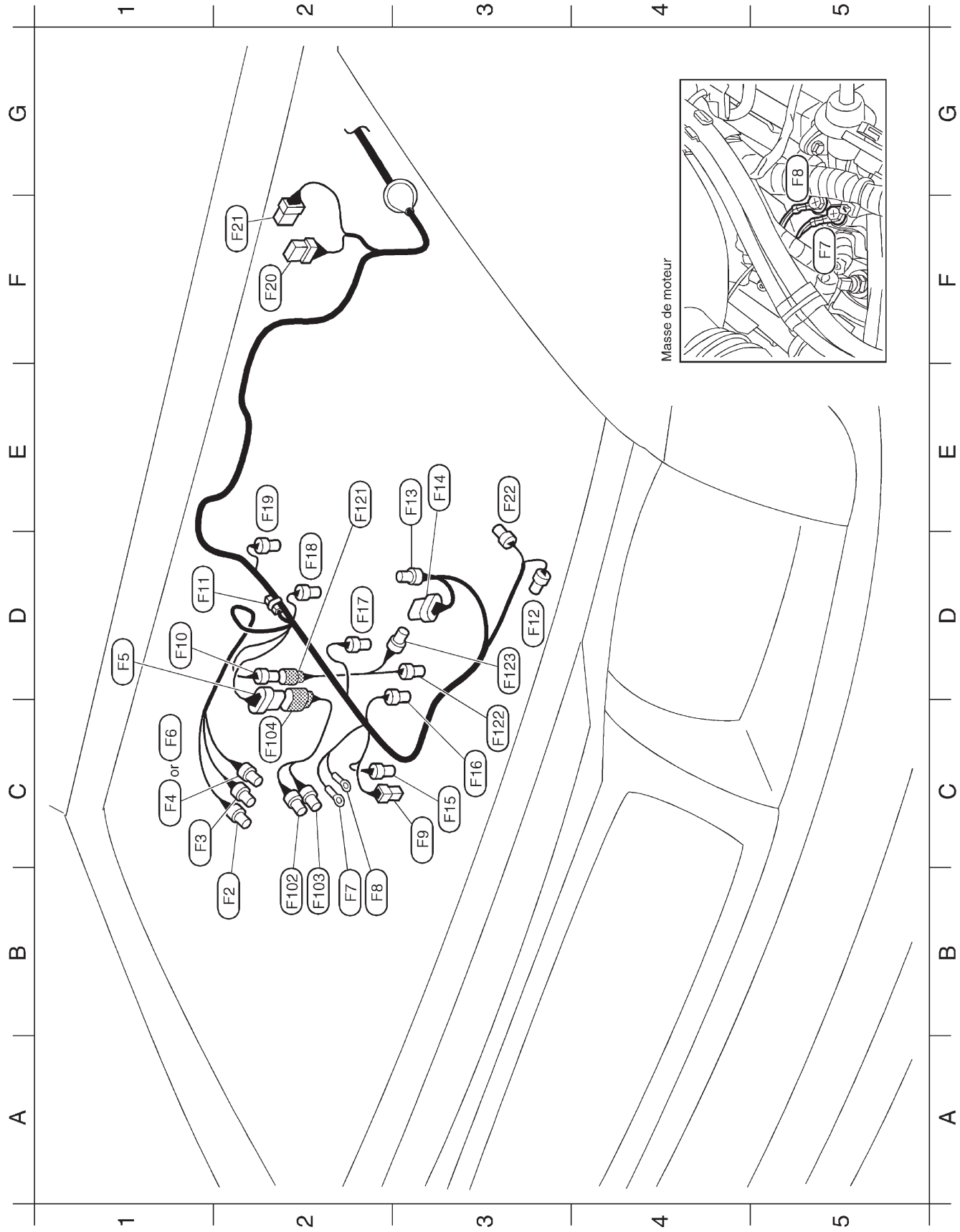

HEL871B

Simpo PDF Merge and Split Unregistered Version - http://www.simpopdf.com

Faisceau de contrôle du moteur/Moteur KA (Suite)

HABITACLE

F51 W/48 : ECM
F53 GY/6 : Connecteur de raccord-1
F54 W/24 : Vers M48
F55 W/16 : Vers M47
F56 –/2 : Diode

Résistance F11

Diode F56

B2 F2 B/2 : Electrovanne IACV-FICD
C1 F3 BR/2 : Soupape IACV-ACC
C1 F4 GY/3 : Capteur de débitmètre d'air (avec catalyseur à trois voies)
D1 F5 GY/6 : Vers F104
C1 F6 BR/4 : Débitmètre d'air (sans catalyseur à trois voies)
B2 F7 — : Masse de moteur
B2 F8 — : Masse de moteur
C3 F9 B/1 : Transmetteur thermique
D1 F10 B/3 : Vers F121
D1 F11 –/2 : Résistance
D3 F12 B/1 : Compresseur
E3 F13 GY/2 : Distributeur
E3 F14 GY/6 : Distributeur
C3 F15 GY/2 : Capteur de température de liquide de refroidissement moteur
C3 F16 GY/2 : Injecteur n°1
D2 F17 GY/2 : Injecteur n°2
D2 F18 GY/2 : Injecteur n°3
E2 F19 GY/2 : Injecteur n°4
F2 F20 GY/8 : Amplificateur d'essuie-glace (Modèles avec T/A)
F2 F21 W/6 : Moteur d'essuie-glace
E2 F22 B/3 : Sonde à oxygène chauffée 1 (avec catalyseur à trois voies)

Faisceau auxiliaire

B2 F102 BR/3 : Capteur de position du papillon
B2 F103 GY/3 : Contact de position de papillon (Modèles avec T/A)
C2 F104 B/6 : Vers F5
E2 F121 B/3 : Vers F10
C3 F122 –/2 : Capteur de détonation
D3 F123 GY/1 : Manocontact d'huile

HEL872B

Simpo PDF Merge and Split Unregistered Version - http://www.simpopdf.com

Faisceau de commande du moteur

COMPARTIMENT MOTEUR — MOTEUR YD (conduite à droite)

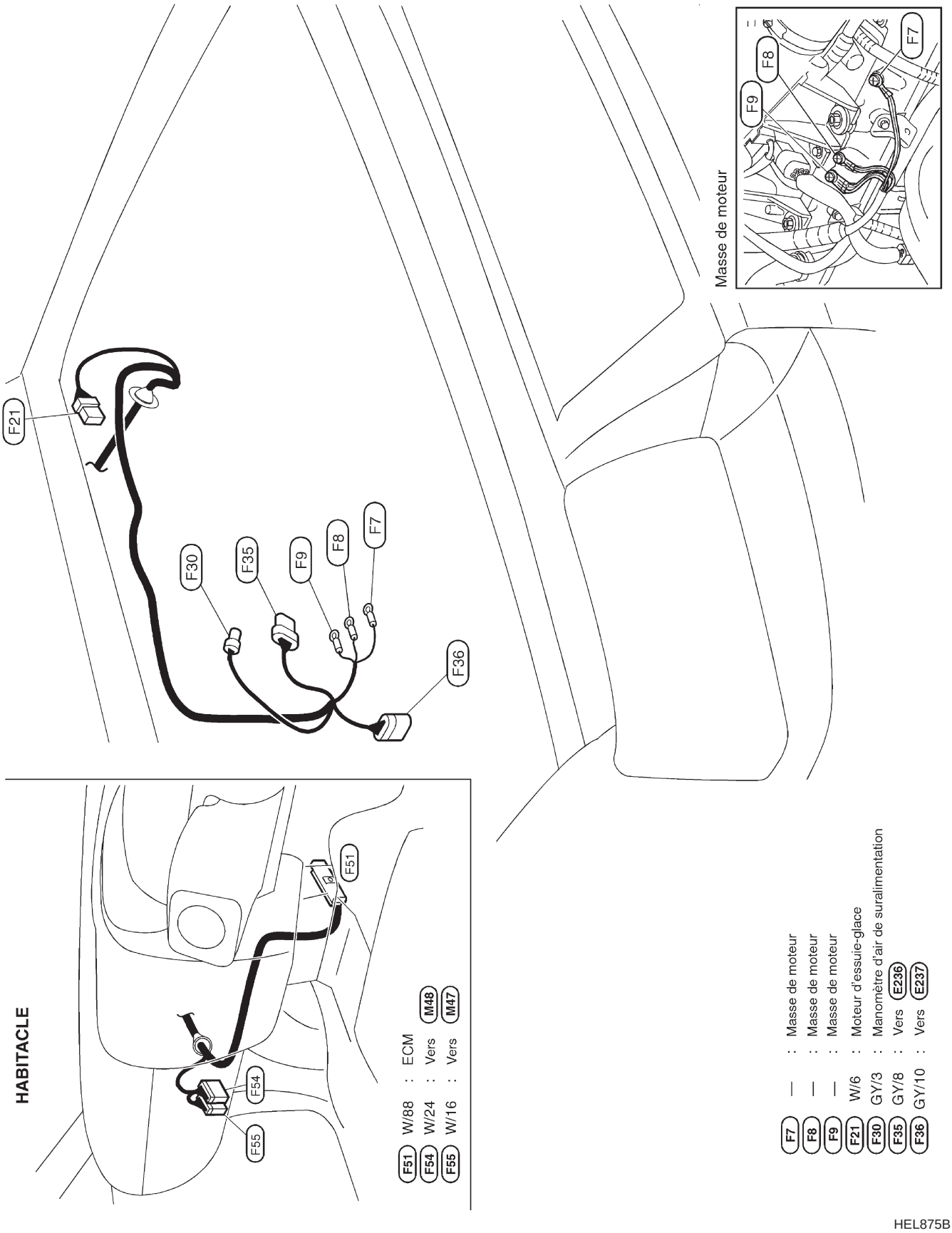

HEL875B

Simpo PDF Merge and Split Unregistered Version - http://www.simpopdf.com

Faisceau de moteur

MOTEUR KA

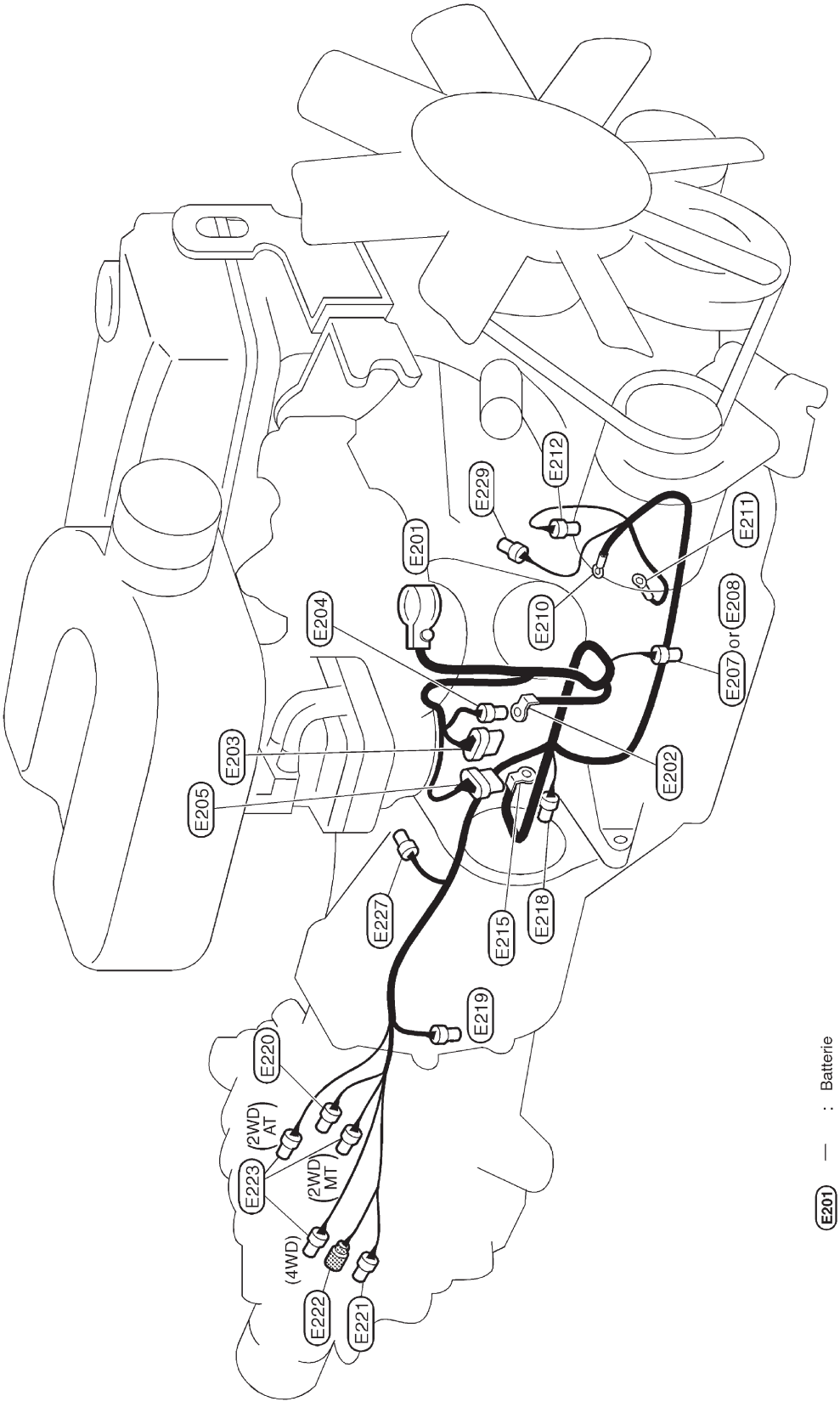

E201 : — : Batterie
E202 : — : Raccord à fusibles et boîte à fusibles
E203 : GY/8 : Vers E30
E204 : GY/2 : Vers E29
E205 : SB/8 : Vers E33
E207 : GY/2 : Manocontact d'huile de direction assistée (Modèles 4WD à conduite à droite sauf pour l'Europe)
E208 : B/2 : Manocontact d'huile de direction assistée (sauf modèles 4WD avec conduite à droite sauf pour l'Europe)
E210 : — : Alternateur (B)
E211 : — : Alternateur (E)
E212 : GY/2 : Alternateur (S, L)
E215 : — : Démarreur
E218 : GY/1 : Démarreur
E219 : GY/2 : Contacteur du feu de recu (avec T/M)
E220 : B/2 : Contact de position de stationnement/point mort (avec T/M)
E221 : GY/1 : Contact de boîte de transfert (modèles 4WD)
E222 : GY/1 : Contact de boîte de transfert (modèles 4WD)
E223 : GY/2 : Capteur de vitesse du véhicule
E227 : GY/2 : Capteur de position de vilebrequin (OBD) (pour l'Europe)
E229 : GY/1 : Manocontact d'huile (pour l'Europe)

HEL877B

Simpo PDF Merge and Split Unregistered Version - http://www.simpopdf.com

Faisceau de moteur (Suite)

MOTEUR YD

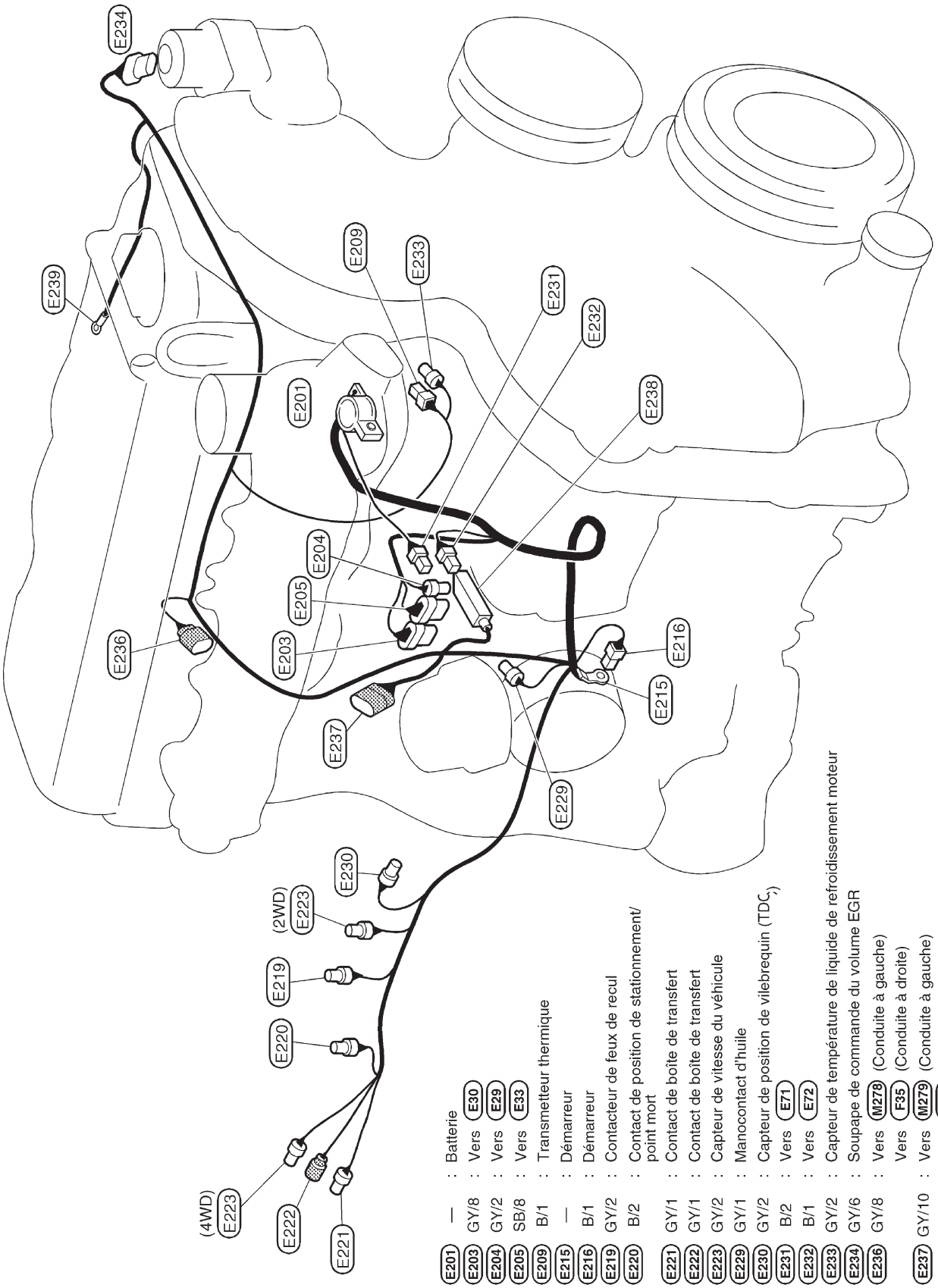

E201	—	: Batterie
E203	GY/8	: Vers E30
E204	GY/2	: Vers E29
E205	SB/8	: Vers E33
E209	B/1	: Transmetteur thermique
E215	—	: Démarreur
E216	B/1	: Démarreur
E219	GY/2	: Contacteur de feux de recul
E220	B/2	: Contact de position de stationnement/ point mort
E221	GY/1	: Contact de boîte de transfert
E222	GY/1	: Contact de boîte de transfert
E223	GY/2	: Capteur de vitesse du véhicule
E229	GY/1	: Manocontact d'huile
E230	GY/2	: Capteur de position de vilebrequin (TDC_2)
E231	B/2	: Vers E71
E232	B/1	: Vers E72
E233	GY/2	: Capteur de température de liquide de refroidissement moteur
E234	GY/6	: Soupape de commande du volume EGR
E236	GY/8	: Vers M278 (Conduite à gauche)
		Vers F35 (Conduite à droite)
E237	GY/10	: Vers M279 (Conduite à gauche)
		Vers F36 (Conduite à droite)
E238	B/9	: Pompe à injection de carburant à commande électronique
E239	—	: Bougie de préchauffage

HEL880B

Simpo PDF Merge and Split Unregistered Version - http://www.simpopdf.com

Faisceau d'alternateur

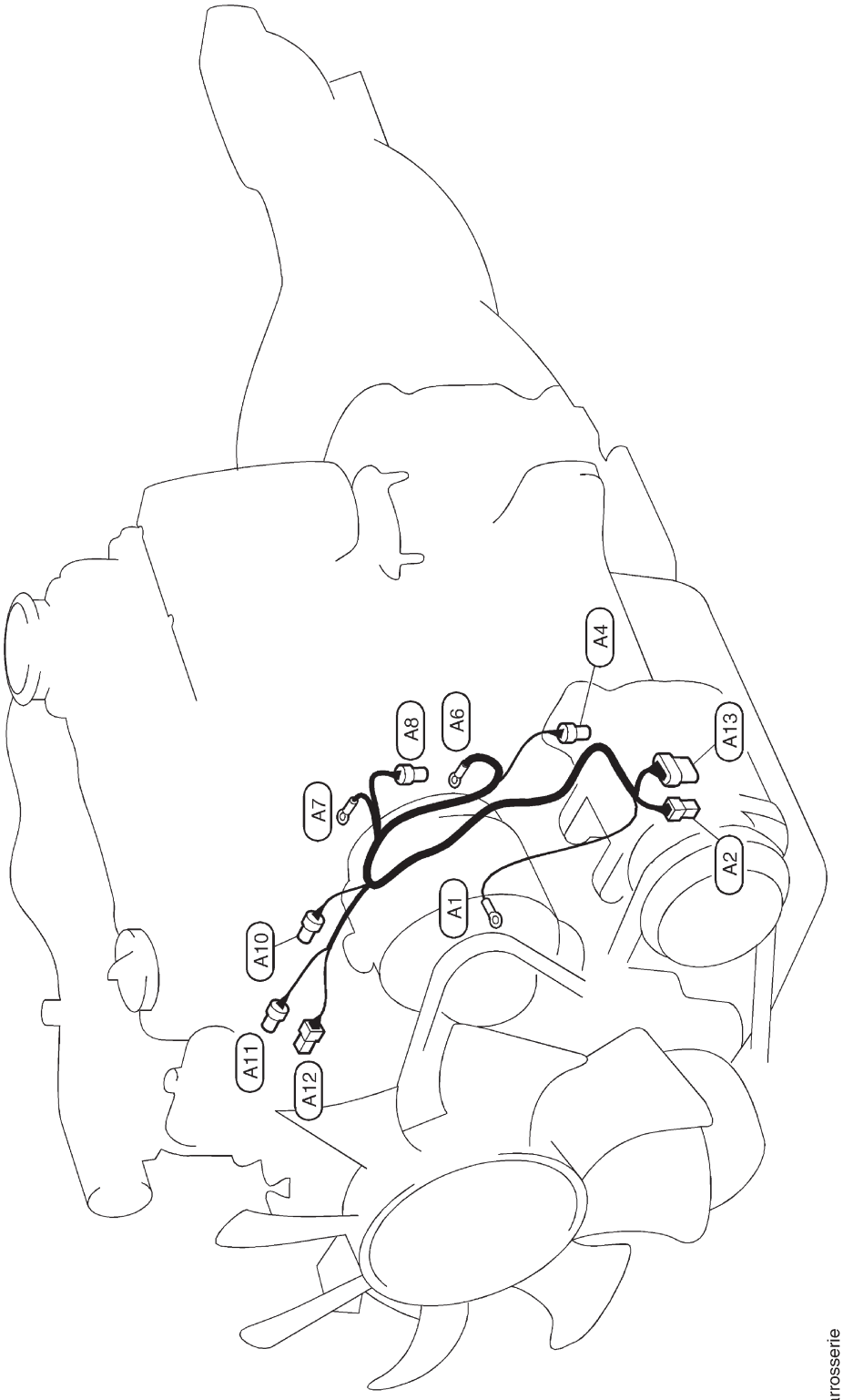

A1 — : Masse de carrosserie
A2 B/2 : Vers E17
A4 B/1 : Compresseur
A6 — : Alternateur (B)
A7 — : Alternateur (E)
A8 GY/2 : Alternateur (S, L)
A10 BR/2 : Capteur de régime
A11 GY/2 : Capteur de température de liquide de refroidissement moteur
A12 B/1 : Transmetteur thermique
A13 GY/8 : Vers E68

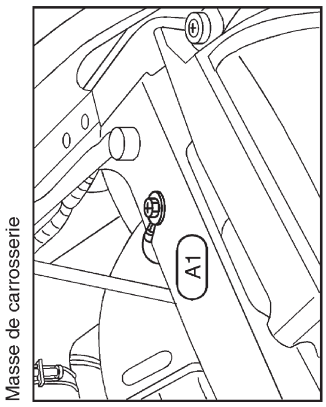

HEL808B

Simpo PDF Merge and Split Unregistered Version - http://www.simpopdf.com

Faisceau d'alternateur (Suite)

MOTEUR YD

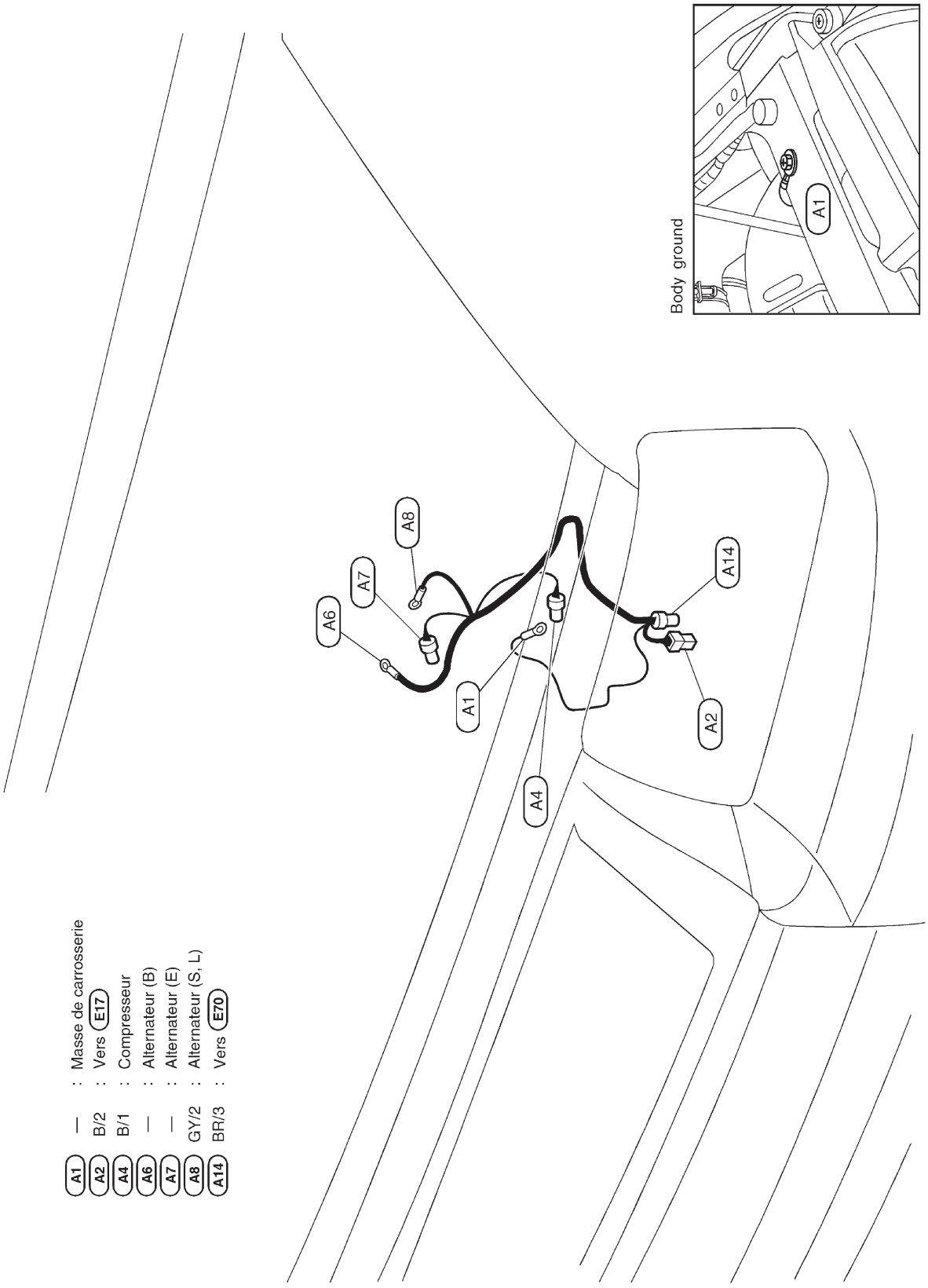

HEL882B

Simpo PDF Merge and Split Unregistered Version - http://www.simpopdf.com

CONDUITE A GAUCHE

Faisceau des instruments

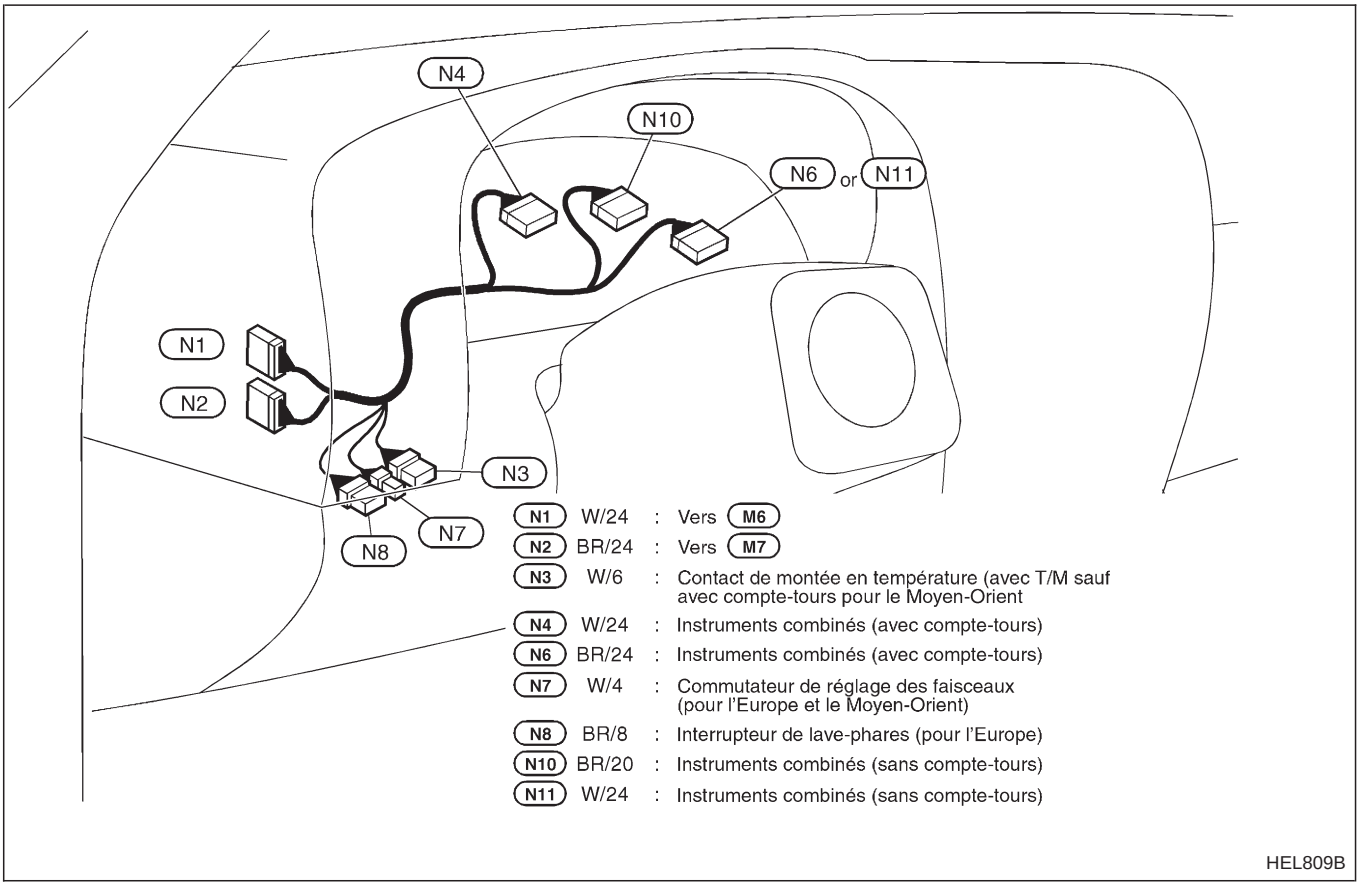

N1	W/24	:	Vers M6
N2	BR/24	:	Vers M7
N3	W/6	:	Contact de montée en température (avec T/M sauf avec compte-tours pour le Moyen-Orient
N4	W/24	:	Instruments combinés (avec compte-tours)
N6	BR/24	:	Instruments combinés (avec compte-tours)
N7	W/4	:	Commutateur de réglage des faisceaux (pour l'Europe et le Moyen-Orient)
N8	BR/8	:	Interrupteur de lave-phares (pour l'Europe)
N10	BR/20	:	Instruments combinés (sans compte-tours)
N11	W/24	:	Instruments combinés (sans compte-tours)

HEL809B

CONDUITE A DROITE

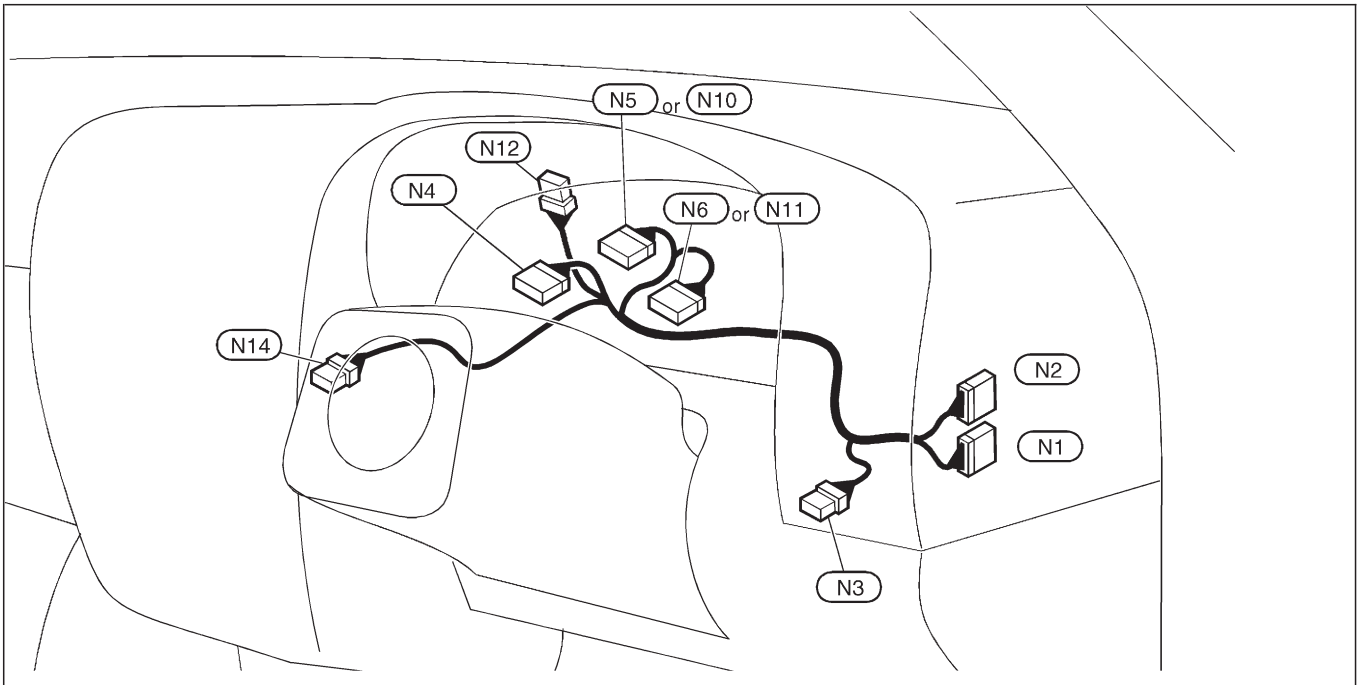

N1	W/24	:	Vers M6	N6	BR/24	:	Instruments combinés (avec compte-tours)
N2	BR/24	:	Vers M7	N10	BR/20	:	Instruments combinés (sans compte-tours)
N3	W/6	:	Contact de montée en température (avec T/M)	N11	W/24	:	Unité de dongle (pour l'Europe)
N4	W/24	:	Instruments combinés (avec compte-tours)	N12	BR/8	:	Unité de dongle (pour l'Europe)
N5	BR/20	:	Instruments combinés (avec T/A avec compte-tours)	N14	GY/6	:	Commande de mode de T/A (avec T/A)

HEL883B

Simpo PDF Merge and Split Unregistered Version - http://www.simpopdf.com

Faisceau de châssis et faisceau arrière

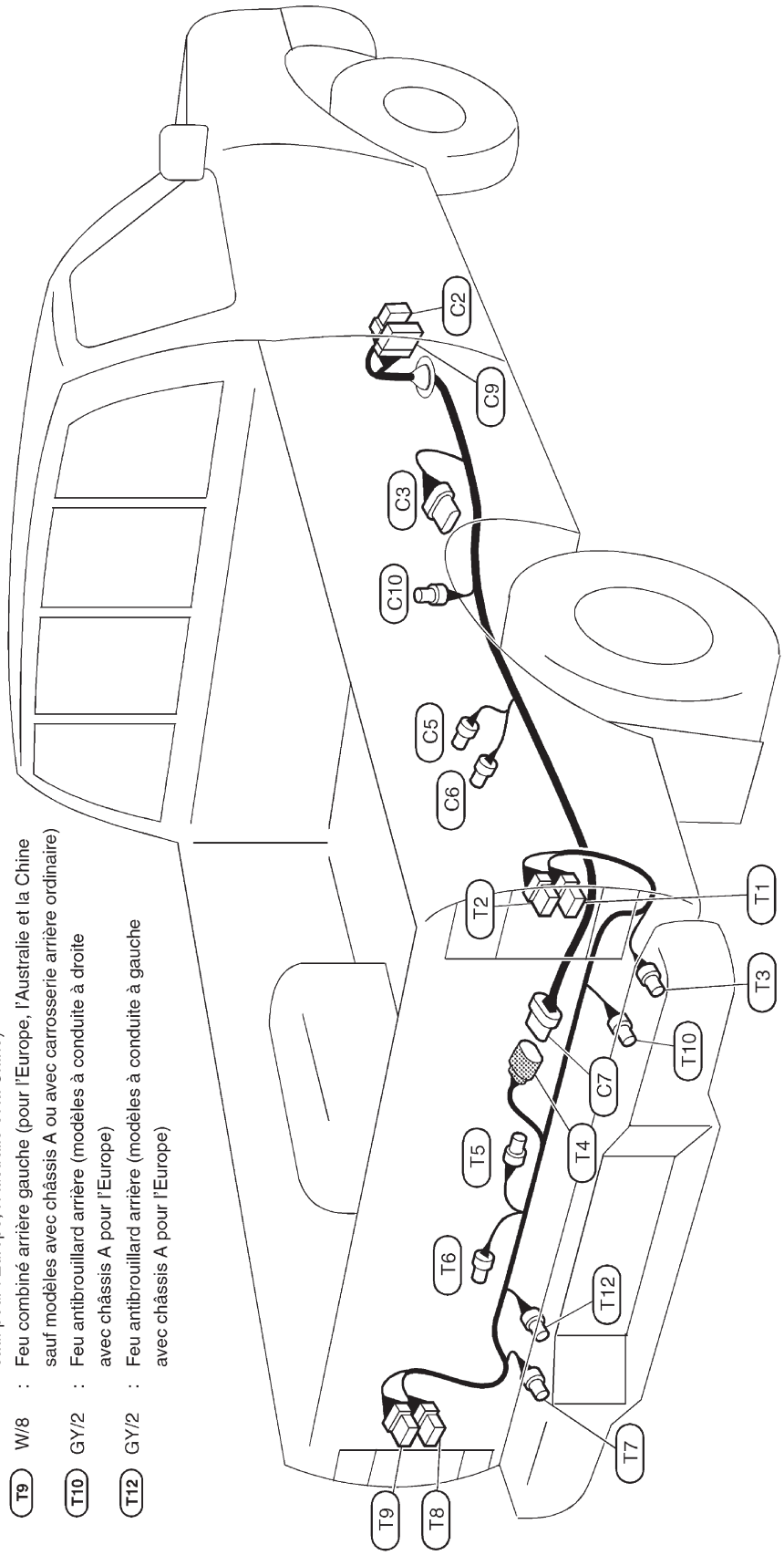

Faisceau de feux arrière

- (T1) W/6 : Feu combiné arrière droit (modèles avec châssis A ou avec carrosserie arrière ordinaire sauf pour l'Europe, l'Australie et la Chine)
- (T2) W/8 : Feu combiné arrière droit (pour l'Europe, l'Australie et la Chine sauf modèles avec châssis A ou avec carrosserie arrière ordinaire)
- (T3) GY/2 : Eclairage de plaque d'immatriculation droit (avec marchepied de pare-chocs)
- (T4) SB/8 : Vers (C7)
- (T5) GY/2 : Eclairage de plaque d'immatriculation droit (sans marchepied de pare-chocs)
- (T6) GY/2 : Eclairage de plaque d'immatriculation gauche (sans marchepied de pare-chocs)
- (T7) B/2 : Eclairage de plaque d'immatriculation gauche (avec marchepied de pare-chocs)
- (T8) W/6 : Feu combiné arrière gauche (modèles avec châssis A ou avec carrosserie arrière ordinaire sauf pour l'Europe, l'Australie et la Chine)
- (T9) W/8 : Feu combiné arrière gauche (pour l'Europe, l'Australie et la Chine sauf modèles avec châssis A ou avec carrosserie arrière ordinaire)
- (T10) GY/2 : Feu antibrouillard arrière (modèles à conduite à droite avec châssis A pour l'Europe)
- (T12) GY/2 : Feu antibrouillard arrière (modèles à conduite à gauche avec châssis A pour l'Europe)

Faisceau de châssis

- (C2) W/6 : Vers (M112) (avec ABS)
- (C3) GY/5 : Boîtier de détection de niveau de carburant et pompe d'alimentation
- (C5) SB/4 : Vers le faisceau auxiliaire de capteur de roue arrière (pour ABS) (modèles 4 roues motrices et 2 roues motrices-avec frein arrière LT30)
- (C6) GY/2 : Vers capteur de roue arrière (pour ABS) (modèles 2 roues motrices avec frein arrière LT26B)
- (C7) SB/8 : Vers (T4)
- (C9) W/16 : Vers (M121)
- (C10) BR/2 : Feu stop surélevé (avec barre de protection pour le Moyen-Orient)

HEL889B

Simpo PDF Merge and Split Unregistered Version - http://www.simpopdf.com

CONDUITE A GAUCHE

Faisceau de porte avant (côté gauche)

- D1 W/20 : Vers M3
- D2 W/12 : Vers M4 (avec lève-glace électrique)
- D3 BR/2 : Haut-parleur avant
- D4 GY/5 : Actionneur de rétroviseur de porte (avec rétroviseur de porte électrique sauf pour le Moyen-Orient)
- D5 W/16 : Interrupteur principal de lève-glace électrique
- D7 B/2 : Régulateur de lève-glace électrique (avec lève-glace électrique sans fonction de détection d'interruption)
- D8 GY/2 : Commande de bouton de verrouillage (avec verrouillage centralisé des portes sans système de télécommande à fonctions multiples)
- D9 BR/3 : Désembuage de rétroviseur de porte (avec lève-glace électrique pour l'Europe)
- D10 SB/4 : Actionneur de verrouillage de porte (avec système de télécommande à fonctions multiples)
- D11 GY/3 : Actionneur de verrouillage de porte (avec rétroviseur de porte électrique pour le Moyen-Orient)
- D12 SB/6 : Régulateur de lève-glace électrique (avec lève-glace électrique avec fonction de détection d'interruption)
- D13 W/3 : Interrupteur principal de lève-glace électrique (avec lève-glace électrique avec fonction de détection d'interruption)
- D14 W/10 : Commande de réglage de rétroviseur de porte

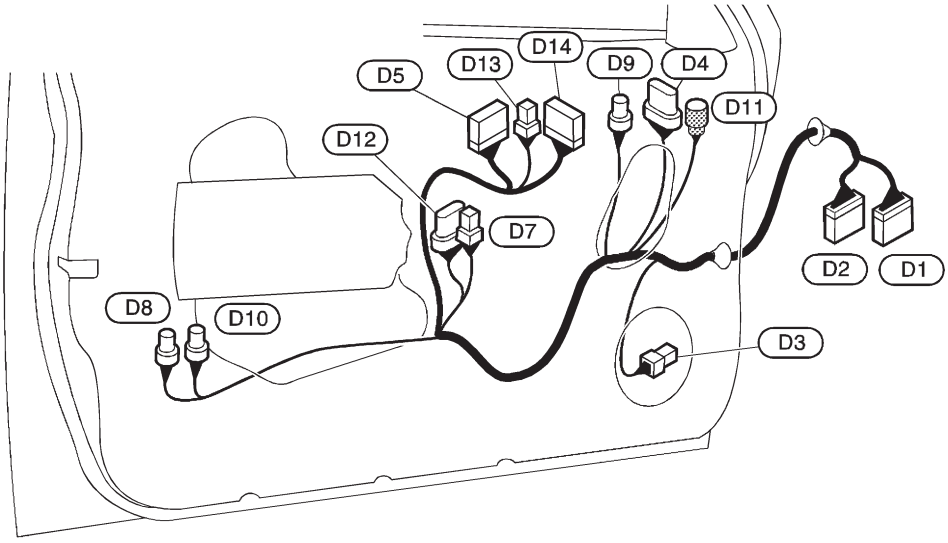

HEL811B

CONDUITE A DROITE

- D31 W/20 : Vers M49
- D32 W/6 : Vers M50 (Avec lève-glace électrique)
- D33 BR/2 : Haut-parleur avant
- D34 GY/5 : Actionneur de rétroviseur de porte (avec rétroviseur de porte électrique)
- D35 W/8 : Interrupteur auxiliaire de lève-glace électrique (avec lève-glace électrique)
- D37 B/2 : Régulateur de lève-glace électrique (avec lève-glace électrique)
- D38 SB/4 : Actionneur de verrouillage de porte (avec verrouillage centralisé des portes)
- D39 BR/3 : Désembuage de rétroviseur de porte (avec rétroviseur de porte électrique)

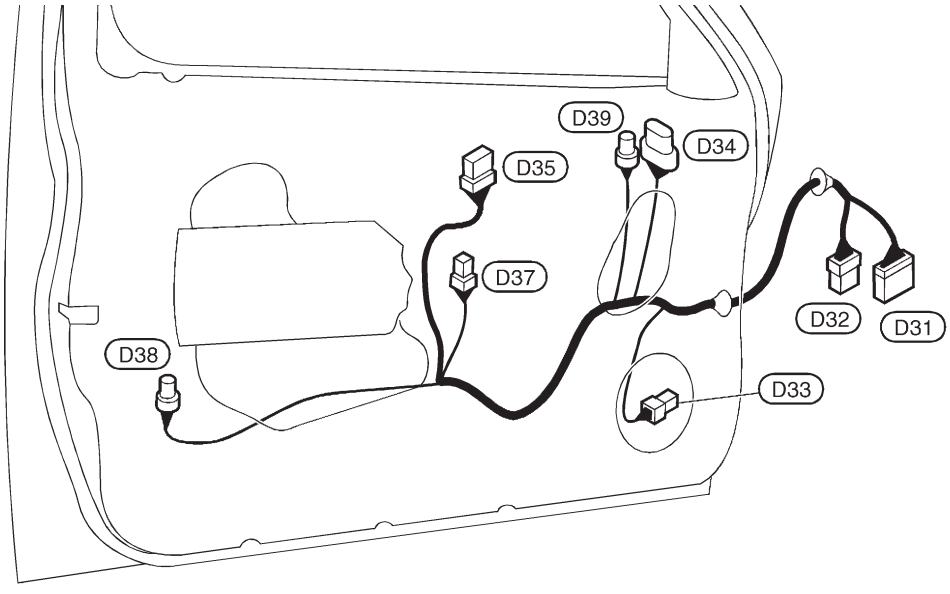

HEL885B

Simpo PDF Merge and Split Unregistered Version - http://www.simpopdf.com

Faisceau de porte avant (côté droit)

CONDUITE A GAUCHE

- D31 W/20 : Vers M49
- D32 W/6 : Vers M50 (avec lève-glace électrique)
- D33 BR/2 : Haut-parleur avant
- D34 GY/5 : Actionneur de rétroviseur de porte (avec rétroviseur de porte électrique sauf pour le Moyen-Orient)
- D35 W/8 : Interrupteur auxiliaire de lève-glace électrique (avec lève-glace électrique)
- D37 B/2 : Régulateur de lève-glace électrique (avec lève-glace électrique)
- D38 SB/4 : Actionneur de verrouillage de porte (avec verrouillage centralisé des portes)
- D39 BR/3 : Désembuage de verrouillage de porte (avec rétroviseur de porte électrique sauf pour le Moyen-Orient)
- D41 BR/3 : Actionneur de verrouillage de porte (avec rétroviseur de porte électrique pour le Moyen-Orient)

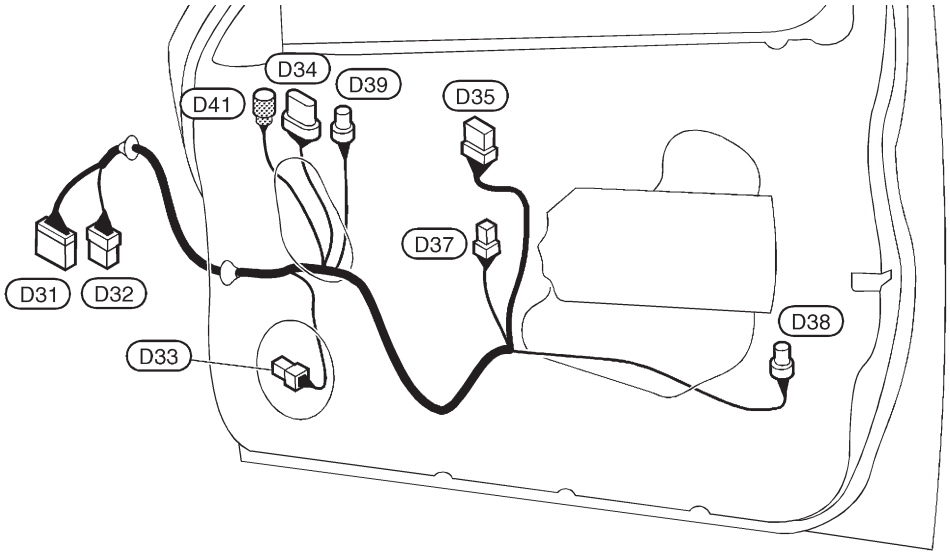

HEL812B

CONDUITE A DROITE

- D1 W/20 : Vers M3
- D2 W/12 : Vers M4 (Avec lève-glace électrique)
- D3 BR/2 : Haut-parleur avant
- D4 GY/5 : Actionneur de rétroviseur de porte (avec lève-glace électrique)
- D5 W/16 : Interrupteur principal de lève-glace électrique
- D7 B/2 : Régulateur de lève-glace électrique (avec lève-glace électrique sauf pour l'Europe)
- D8 GY/2 : Commande de bouton de verrouillage (avec verrouillage centralisé des portes sans système de télécommande à fonctions multiples)
- D9 BR/3 : Désembuage de rétroviseur de porte (avec lève-glace électrique pour l'Europe)
- D10 SB/4 : Actionneur de verrouillage de porte (avec système de télécommande à fonctions multiples)
- D12 SB/6 : Régulateur de lève-glace électrique (avec lève-glace électrique sauf pour l'Europe)
- D13 W/3 : Interrupteur principal de lève-glace électrique (avec lève-glace électrique pour l'Europe)
- D14 W/10 : Commande de réglage de rétroviseur de porte (avec lève-glace électrique)

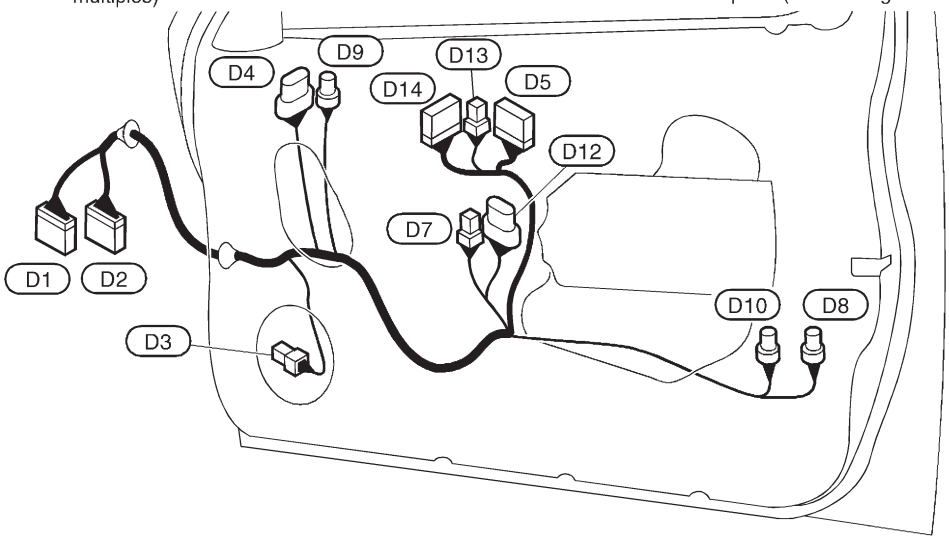

HEL884B

Simpo PDF Merge and Split Unregistered Version - http://www.simpopdf.com

COTE GAUCHE

Faisceau de porte arrière

D51 W/3 : Vers M107
D52 W/2 : Vers M106
D53 BR/2 : Vers M105
D54 B/2 : Haut-parleur arrière
D55 B/2 : Régulateur de lève-glace électrique
D56 SB/4 : Actionneur de verrouillage de porte
D57 W/8 : Interrupteur auxiliaire de lève-glace électrique

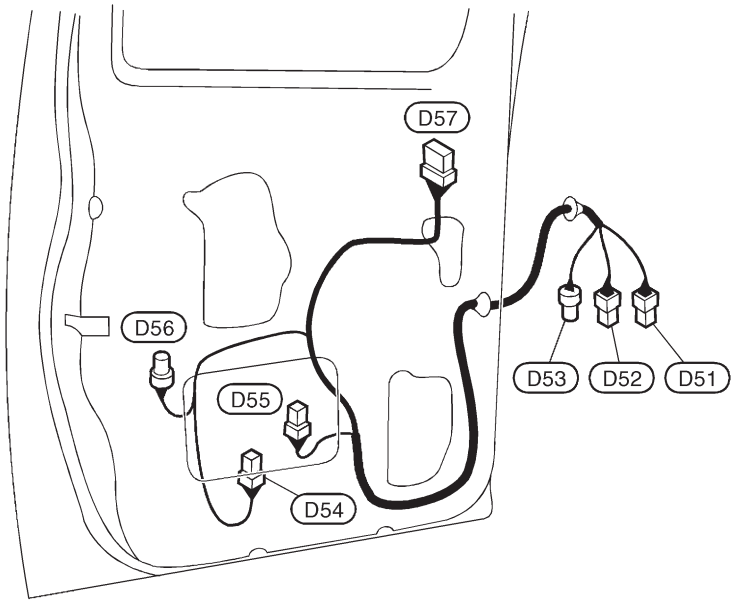

HEL886B

COTE DROITE

D71 W/3 : Vers M115
D72 W/2 : Vers M114
D73 BR/2 : Vers M113
D74 B/2 : Haut-parleur arrière
D75 B/2 : Régulateur de lève-glace électrique
D76 SB/4 : Actionneur de verrouillage de porte
D77 W/8 : Interrupteur auxiliaire de lève-glace électrique

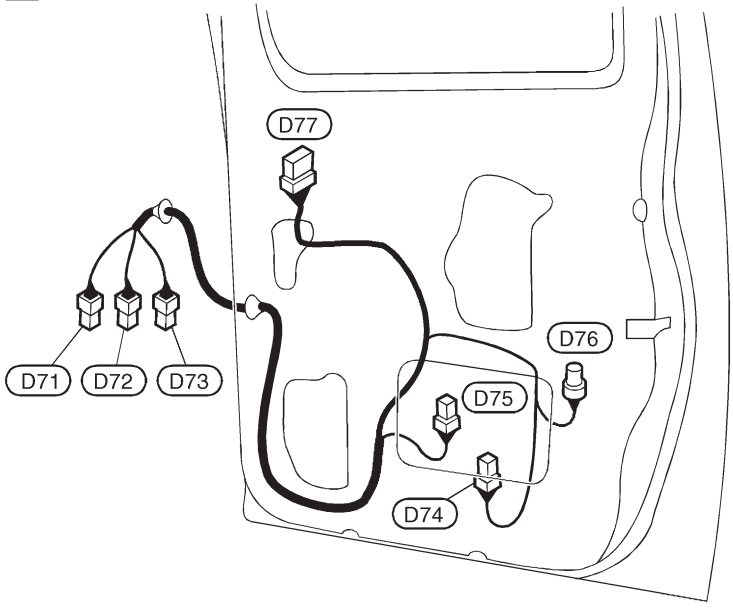

HEL887B

Simpo PDF Merge and Split Unregistered Version - http://www.simpopdf.com

Utiliser l'organigramme ci-dessous pour trouver chaque signification de code de schéma de câblage.
Consulter le code du schéma de câblage dans l'index alphabétique pour trouver l'emplacement (numéro de page) de chaque schéma de câblage.

Code	Section	Nonm du schéma de câblage
AAC/V	EC	Soupape IACV-AAC
ABS	BR	Système anti-enrayeur des freins
A/C, A	HA	Climatiseur automatique
A/C, M	HA	Climatiseur manuel
ACC/SW	EC	Contact d'accélérateur
A/CCOT	EC	Commande de climatiseur
AIRREG	EC	IACV-Régulateur d'air
APS	EC	Capteur de position d'accélérateur
AT/IND	EL	Voyant de boîte automatique
AUDIO	EL	Audio
BACK/L	EL	Feux de recul
BA/FTS	AT	BATT/capteur de température de liquide de T/A et alimentation du TCM (boîtier de commande de transmission)
BOOTS	EC	Capteur de suralimentation du turbocompresseur
BRK/SW	EC	Signal de contact de frein
CHARGE	EL	Système de charge
CHIME	EL	Témoin sonore
CHBonE	EC	Starter automatique
CIGAR	EL	Allume-cigare
CKPS	EC	Capteur de position de vilebrequin
MONTRE	EL	Montre
CMPS	EC	Capteur d'angle d'arbre à cames
COOL/F	LC, EC	Commande du ventilateur de refroidissement
DEF	EL	Désembuage de lunette arrière et de rétroviseur
DIMDIP	EL	Phares — Avec système de mise en veilleuse des codes
D/LOCK	EL	Verrouillage élec. de porte
DTRL	EL	Phare — Avec système d'éclairage de jour
ECMRLY	EC	Relais ECM
ECTS	EC	Capteur de température de liquide de refroidissement moteur
EGRC/V	EC	EGRC — Electrovanne
EGVC/V	EC	Soupape de contrôle de volume EGR

Code	Section	Nonm du schéma de câblage
EMauvaisSS	AT	Signal du régime moteur
FCUT	EC	Electrovanne de coupure de carburant
FICD	EC	Electrovanne FICD
FIPOT	EC	Pot ISC-FI
FPCM	EC	Module de commande de la pompe à carburant
F/PUMP	EC	Pompe d'alimentation en carburant
GLOW	EC	Système de préchauffage rapide
H/AIM	EL	Commande de réglage des faisceaux
HEATER	HA	Dispositif de chauffage
CHAUFFAGE	EC	Interrupteur de chauffage
H/LAMP	EL	Phares
HLC	EL	Lave-phares
HO2S	EC	Sonde à oxygène chauffée
AVERTISSEUR SONORE	EL	HORN
H/SEAT	EL	Siège chauffant
IATS	EC	Capteur de température d'air d'admission
IGN	EC	Système d'allumage
IGN/SG	EC	Signal d'allumage
ILL	EL	Eclairage
INJECT	EC	Injecteur
INJPMP	EC	Pompe à injection à carburant à commande électronique
INT/L	EL	Spot de lecture
INT/V	EC	Electrovanne de commande d'air d'admission
KS	EC	Capteur de détonation
LOAD	EC	Signal de charge électrique
LPSV	AT	Electrovanne de pression de canalisation
MAFS	EC	Débitmètre d'air
MAIN	EC, AT	Circuit d'alimentation électrique principal et de mise à la masse

Simpo PDF Merge and Split Unregistered Version - http://www.simpopdf.com

Code	Section	Nonm du schéma de câblage
METER	EL	Compteur de vitesse, compte-tours, jauges de température et de carburant
MIL/DL	EC	MIL et connecteurs de diagnostic
MIRROR	EL	Rétroviseur de porte électrique
MULTI	EL	Système de multitélécommande
NATS	EL	Système antivol Nissan
NONDTC	AT	Eléments non détectables
O2H1B1	EC	Réchauffeur de sonde à oxygène chauffée 1 (avant)
O2H2B1	EC	Réchauffeur de sonde à oxygène chauffée 2 (arrière)
O2S1B1	EC	Sonde à oxygène chauffée 1
O2S2B1	EC	Sonde à oxygène chauffée 2
OVRCSV	AT	Electrovanne d'embrayage à roue libre
P/ANT	EL	Antenne électrique
PGC/V	EC	Electrovanne de commande de purge de cartouche EVAP
PLA	EC	Commande d'avance à charge partielle
PNP/SW	EC	Contact de position de stationnement/point mort
POWER	EL	Disposition de l'alimentation électrique
PRWIRE	EL	Système d'alarme antivol (précâblé)
PST/SW	EC	Manocontact d'huile de direction assistée
R/FOG	EL	Feu antibrouillard arrière

Code	Section	Nonm du schéma de câblage
ROOM/L	EL	Plafonnier
SHIFT	AT	Système de verrouillage de passage de vitesse
SSV/A	AT	Electrovanne A de passage
SSV/B	AT	Electrovanne B de passage
SRS	RS	Système de retenue supplémentaire
S/SIG	EC	Signal de démarrage
START	EL	Système de démarrage
STOP/L	EL	Feu de stop
SWL/V	EC	Electrovanne de contrôle de vanne de commande de tourbillon
TAIL/L	EL	Feux de stationnement, éclairage de plaque d'immatriculation et feux arrière
TCV	AT	Electrovanne d'embrayage de convertisseur de couple
TPS	EC, AT	Capteur de position de papillon
TP/SW	EC	Capteur de position de papillon
CLIGNOTANT	EL	Clignotants et feux de détresse
VSS	EC	Capteur de vitesse du véhicule
VSSA/T	AT	Capteur de vitesses de véhicule T/A (capteur de tours)
VSSMTR	AT	Compteur du capteur de vitesse du véhicule
WARN	EL	Témoins d'avertissement
WINDOW	EL	Lève-vitre électrique
WIPER	EL	Essuie-glace et lave-vitre avant

Simpo PDF Merge and Split Unregistered Version - http://www.simpopdf.com

<SUPPLEMENT-III>

ELEMENTS DU MOTEUR

SECTION EM

AVIS DE MODIFICATION :

- Les informations concernant le moteur KA24DE ont été ajoutées.
  Pour les informations non inclues ici, se reporter aux informations pour le moteur KA24DE dans le manuel de réparation D22 Supplément-II (SM9F-D22BE0E).
- Le moteur YD25DDTi a été récemment ajouté.

TABLE DES MATIERES

PRECAUTIONS 3003
Pièces nécessitant un serrage angulaire 3003
Procédé d'application du joint liquide 3003
PREPARATION 3004
Outillage spécial (moteur YD25DDTi) 3004
Outillage en vente dans le commerce (moteur YD25DDTi) 3007

KA24E

COMPOSANTS EXTERNES 3008

YD25DDTi

DEPISTAGE DES PANNES DE BRUIT, VIBRATIONS ET DE DURETE (NVH) 3011
Dépistage des pannes de bruit, vibration et dureté (NVH) - Bruit de moteur 3011
MESURE DE LA PRESSION DE COMPRESSION 3014
REFROIDISSEUR D'AIR DE SURALIMENTATION 3015
Dépose et repose 3015
Inspection 3015
CARTER D'HUILE 3016
Composants 3016
Dépose 3017
Repose 3019
CHAINE DE DISTRIBUTION 3022
Chaîne de distribution secondaire 3022
Chaîne de distribution primaire 3027
COLLECTEUR D'ADMISSION 3036
Dépose et repose 3036
Inspection 3037
CATALYSEUR 3038
Dépose et repose 3038
COLLECTEUR D'ECHAPPEMENT, TURBOCOMPRESSEUR 3040
Dépose et repose 3040
Démontage et remontage 3042
Inspection 3042
CACHE-CULBUTEURS 3046
Dépose et repose 3046
CULASSE 3047
Composants 3047
Dépose 3048
Démontage 3049
Inspection 3051
Remontage 3057
Repose 3057
Jeu de soupape 3062
DEPOSE DU MOTEUR 3066
Dépose 3067
Repose 3068
Inspection 3068
BLOC-CYLINDRES 3069
Composants 3069
Dépose et repose 3070
Démontage 3070
Inspection 3073
Remontage 3084

KA24DE

CARACTERISTIQUES ET VALEURS DE REGLAGE (SDS) 3089

Simpo PDF Merge and Split Unregistered Version - http://www.simpopdf.com

Inspection et réglage 3089

YD25DDTi

CARACTERISTIQUES ET VALEURS DE REGLAGE (SDS) 3091
Caractéristiques générales 3091
Pression de compression 3091
Culasse 3091
Soupape 3092
Siège de soupape 3095
Arbre à cames et palier d'arbre à cames 3096
Bloc-cylindres 3097
Piston, segment de piston et axe de piston 3097
Bielle 3098
Vilebrequin 3099
Palier principal disponible 3099
Palier de bielle disponible 3100
Eléments divers 3100

Simpo PDF Merge and Split Unregistered Version - http://www.simpopdf.com

Pièces nécessitant un serrage angulaire

- Utiliser une clé angulaire pour le serrage final des pièces de moteur suivantes :

a) Boulons de culasse
b) Boulons de chapeau de palier principal (séries YD)
c) Ecrous de chapeau de bielle (séries KA et YD)
d) Boulons de poulie de vilebrequin (séries YD)

- Ne pas utiliser une valeur de serrage pour le serrage final.
- La valeur de serrage de ces pièces est valable pour une étape préliminaire.
- S'assurer que le filetage et les surfaces de siège sont propres et enduits d'une couche d'huile-moteur.

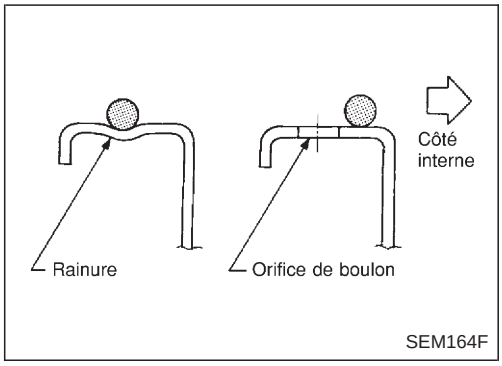

Procédé d'application du joint liquide

1. **Utiliser un grattoir pour déposer toutes les traces de l'ancien joint liquide des surfaces de contact et des rainures. Nettoyer également toutes les taches d'huile présentes sur ces zones.**
2. **Appliquer un cordon régulier de joint liquide sur les surfaces de contact (utiliser un joint liquide d'origine ou équivalent).**

- S'assurer que l'épaisseur de joint liquide correspond à la valeur spécifiée dans ce manuel.

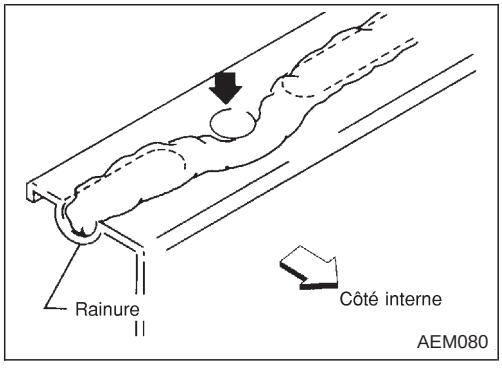

3. **Appliquer du joint liquide autour du côté interne des orifices de boulons (sauf indication contraire).**
4. **Le montage doit être fait dans les 5 minutes qui suivent l'application du joint.**
5. **Attendre au moins 30 minutes avant de faire le plein d'huile moteur et de liquide de refroidissement.**

Simpo PDF Merge and Split Unregistered Version - http://www.simpopdf.com

Outillage spécial (moteur YD25DDTi)

Numéro de l'outil Nom de l'outil	Description	
ST0501S000 Ensemble de support de moteur 1 ST05011000 Support de moteur 2 ST05012000 Base	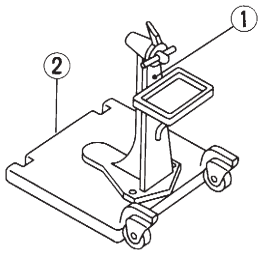 NT042	Démontage et remontage
KV10106500 Fixation de moteur	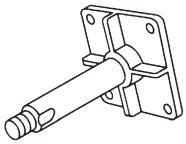 NT028	
KV11105900 Fixation auxiliaire de moteur	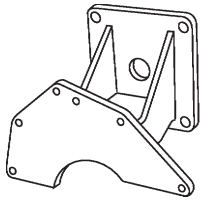 NT799	KV10115900 a été remplacé par KV10106500.
KV10115600 Chassoir de joint d'huile de soupape	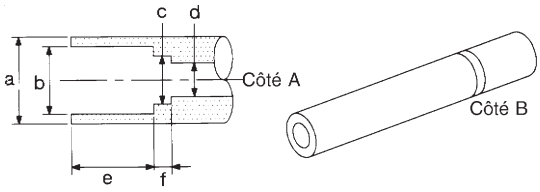 NT603	Repose du joint d'huile de soupape **Utiliser le côté A.** **Côté A** **a : 20 dia.** **b : 13 dia.** **c : 10,3 dia.** **d : 8 dia.** **e : 10,7** **f : 5** Unité : mm
KV10107902 Extracteur de joint d'huile de soupape 1 KV10116100 Adaptateur d'extracteur de joint d'huile de soupape	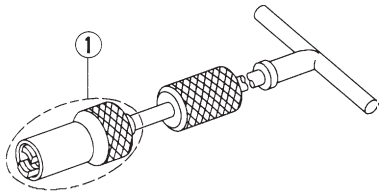 NT605	Dépose du joint d'huile de soupape
KV11103000 Extracteur de pignon d'entraînement de pompe à injection	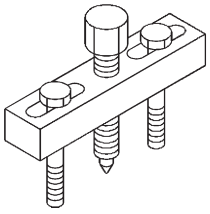 NT676	Dépose de la poulie de vilebrequin.

Simpo PDF Merge and Split Unregistered Version - http://www.simpopdf.com

Outillage spécial (moteur YD25DDTi) (Suite)

Numéro de l'outil Nom de l'outil	Description	
KV101056S0 Dispositif d'arrêt de couronne dentée 1 KV10105630 Adaptateur 2 KV10105610 Plaque	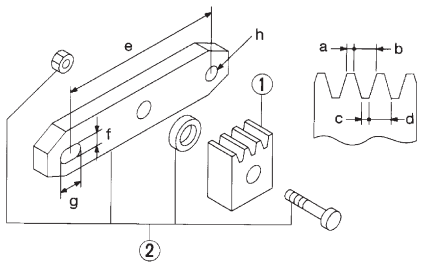 NT617	Pour empêcher le vilebrequin de tourner **a : 3** **b : 6,4** **c : 2,8** **d : 6,6** **e : 107** **f : 14** **g : 20** **h : 14 de dia.** Unité : mm
KV101151S0 Jeu de butée de lève-soupape 1 KV10115110 Pinces d'arbre à cames 2 KV10115120 Butée de lève-soupape	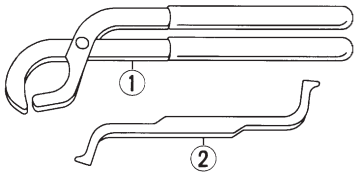 NT041	Pour changer les cales de poussoir de soupape
ST16610001 Extracteur de bague pilote	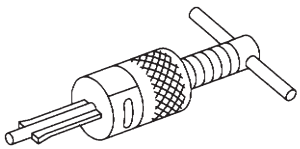 NT045	Dépose de la bague pilote de vilebrequin
KV10111100 Fraise pour joint	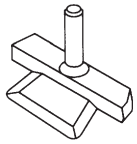 NT046	Dépose du carter d'huile en acier et boîtier de chaîne de distribution arrière
WS39930000 Presse-tube	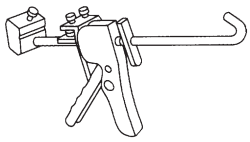 NT052	Pression du tube de joint liquide
KV10112100 Clé angulaire	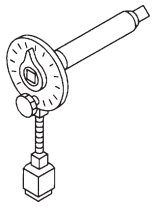 NT014	Serrage des boulons de chapeau de palier, de culasse, etc.
KV10109300 Outil d'immobilisation de poulie	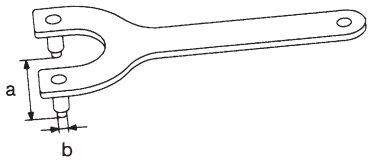 NT628	**a : 68 mm** **b : 8 mm de dia.**

Simpo PDF Merge and Split Unregistered Version - http://www.simpopdf.com

Outillage spécial (moteur YD25DDTi) (Suite)

Numéro de l'outil Nom de l'outil	Description	
KV11106010 Clé hexagonale	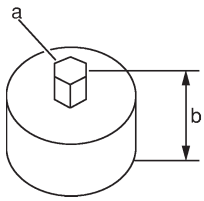 NT801	**a : 5 mm (face à face)** **b : 20 mm**
KV11106020 Clé hexagonale	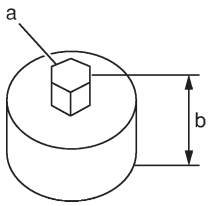 NT803	**a : 6 mm (face à face)** **b : 20 mm**
KV11106030 Goupille d'arrêt de positionnement	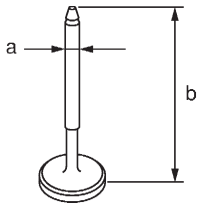 NT804	**a : 6 mm de dia.** **b : 80 mm**
KV11106040 Clé TORX	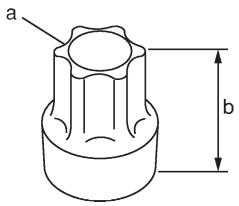 NT805	**a : T70** **b : 26 mm**
KV11106050 Clé hexagonale	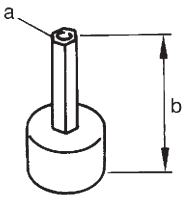 SBIA0224E	**a : 6 mm (face à face)** **b : 42 mm** Dépose et repose des boulons de montage du pignon de la pompe à injection à carburant

Simpo PDF Merge and Split Unregistered Version - http://www.simpopdf.com

Outillage en vente dans le commerce (moteur YD25DDTi)

Nom de l'outil	Description	
Jeu de fraises pour siège de soupape	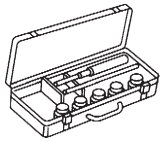 NT048	Finition aux cotes du siège de soupape
Compresseur de segment de piston	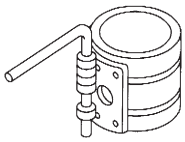 NT044	Repose du piston dans l'alésage du cylindre
Pinces d'écartement de segment de piston	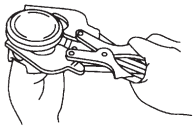 NT030	Dépose et repose du segment de piston
Douille TORX	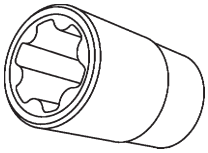 NT807	
Standard Universel	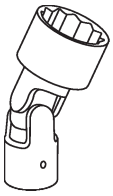 NT808	

Simpo PDF Merge and Split Unregistered Version - http://www.simpopdf.com

SEC. 120•140•150•163•164•210•220•221•230•231
Pour l'Europe

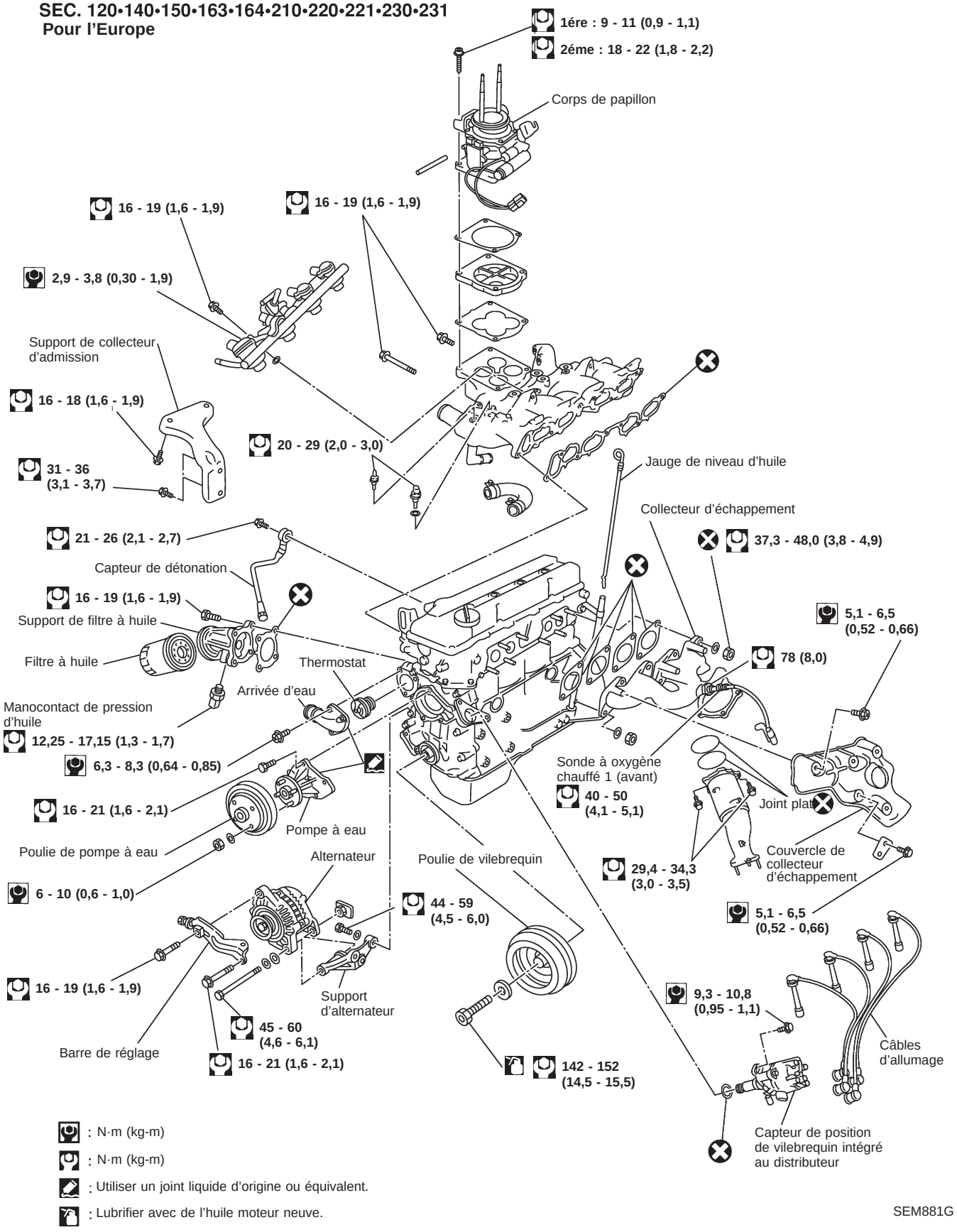

: N·m (kg-m)
: N·m (kg-m)
: Utiliser un joint liquide d'origine ou équivalent.
: Lubrifier avec de l'huile moteur neuve.

SEM881G

Simpo PDF Merge and Split Unregistered Version - http://www.simpopdf.com

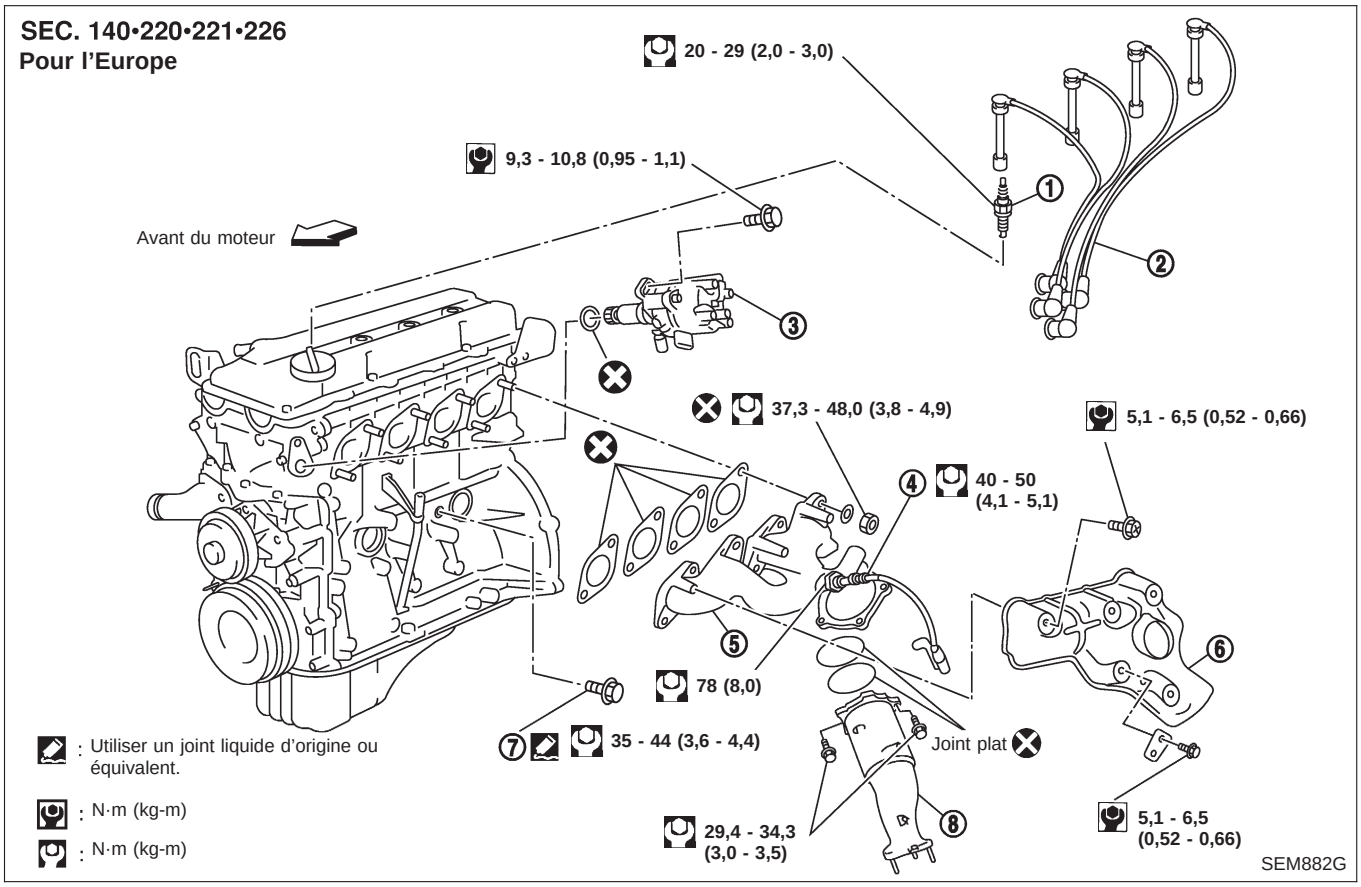

① Bougie d'allumage
② Câble d'allumage
③ Capteur d'angle d'arbre à cames intégré au distributeur
④ Sonde à oxygène chauffé 1 (avant)
⑤ Collecteur d'échappement
⑥ Couvercle de collecteur d'échappement
⑦ Bouchon de vidange d'eau
⑧ TWC (collecteur)

Simpo PDF Merge and Split Unregistered Version - http://www.simpopdf.com

Pour l'Europe

Collecteur d'admission

Avant du moteur

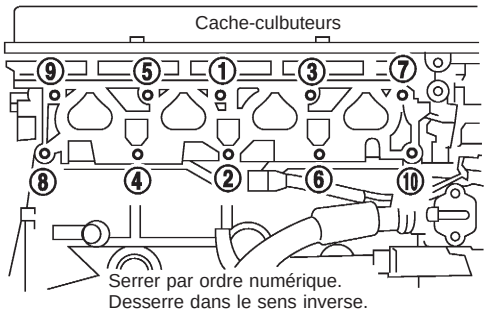

Serrer par ordre numérique.
Desserre dans le sens inverse.

15,7 - 18,6 (1,6 - 1,9)

Collecteur d'échappement

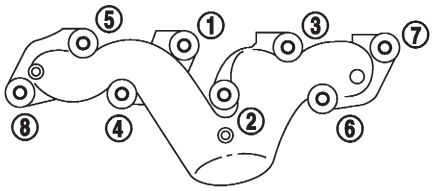

Serrer par ordre numérique. Desserrer dans le sens inverse.

37,3 - 48,0 (3,8 - 4,9)

: N·m (kg-m)

Corps de papillon

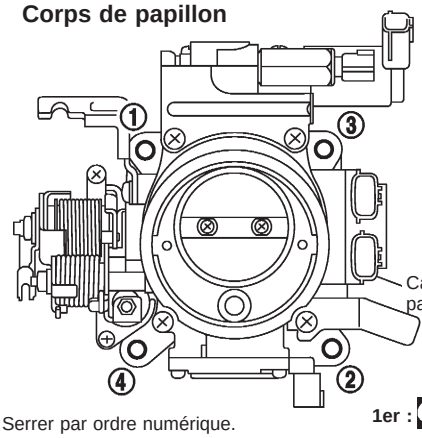

Capteur de position de papillon

Serrer par ordre numérique.
Desserrer dans le sens inverse.

1er : 9 - 11 (0,9 - 1,1)

2éme : 18 - 22 (1,8 - 2,2)

SEM883G

Simpo PDF Merge and Split Unregistered Version - http://www.simpopdf.com

Dépistage des pannes de bruit, vibration et dureté (NVH) — Bruit de moteur

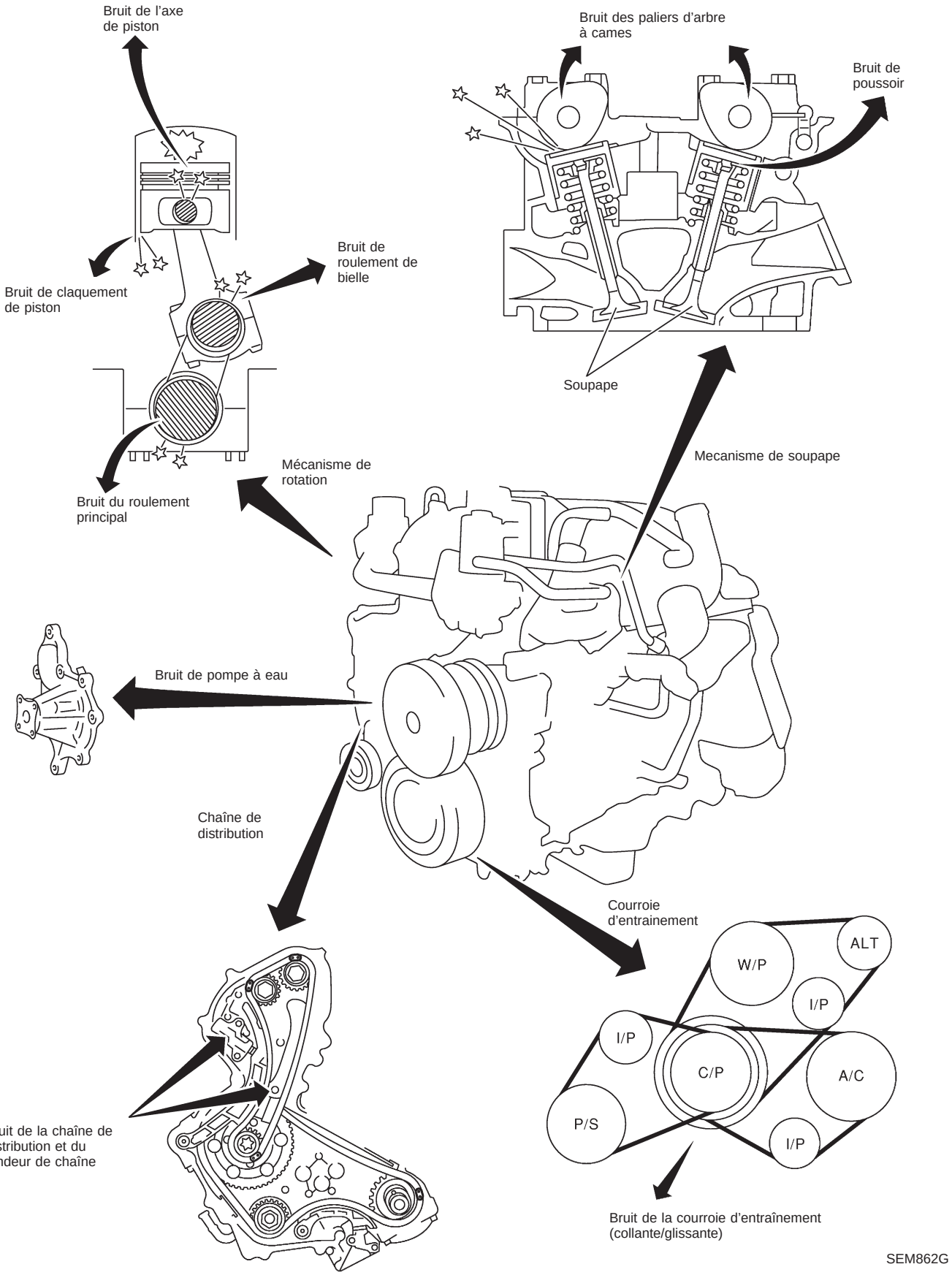

SEM862G

Simpo PDF Merge and Split Unregistered Version - http://www.simpopdf.com

Dépistage des pannes de bruit, vibration et dureté (NVH) — Bruit de moteur (Suite)

Utiliser l'organigramme ci-dessous pour trouver la cause du symptôme.

1. Situer l'endroit où le bruit se produit.
2. Vérifier le type de bruit.
3. Préciser les conditions de fonctionnement du moteur.
4. Vérifier la source du bruit spécifié.

Si nécessaire, réparer ou remplacer ces pièces.

Emplacement du bruit	Type de bruit	Conditions de fonctionnement du moteur						Source du bruit	Elément à vérifier	Page de référence
		Avant montée en température du moteur	Après montée en température du moteur	Au démarrage	Au ralenti	Au lancement	Lors de la conduite			
Extrémité du moteur Cache-culbuteurs Culasse	Bruit sec ou cliquetis	C	A	—	A	B	—	Bruit de poussoir	Jeu de soupape	EM-3062
	Bruit de ferraille	C	A	—	A	B	C	Bruit des paliers d'arbre à cames	Jeu du tourillon d'arbre à cames Voile de l'arbre à cames	EM-3052, 3051
Poulie de vilebrequin Bloc-cylindre (côté du moteur) Carter d'huile	Claquement ou détonation	—	A	—	B	B	—	Bruit de l'axe de piston	Jeu entre le piston et l'axe de piston Jeu de la bague de bielle	EM-3074, 3082
	Claquement ou bruit sec	A	—	—	B	B	A	Bruit de claquement de piston	Jeu entre piston et alésage Jeu latéral des segments Ouverture de segment de piston Courbure et torsion des bielles	EM- 3074, 3075, 3076, 3075
	Détonation	A	B	C	B	B	B	Bruit de palier de bielle	Jeu de la bague de bielle (pied de bielle) Jeu de palier de bielle (tête de bielle)	EM-3082, 3080
	Détonation	A	B	—	A	B	C	Bruit du palier principal	Jeu d'huile du palier principal Voile de vilebrequin	EM-3078, 3078
Avant du moteur Protection de la chaîne de distribution	Frappement ou bruit sec	A	A	—	B	B	B	Bruit de la chaîne de distribution et du tendeur de chaîne	Fissures et usure de la chaîne de distribution Fonctionnement du tendeur de chaîne de distribution	EM-3025, 3027

Simpo PDF Merge and Split Unregistered Version - http://www.simpopdf.com

Dépistage des pannes de bruit, vibration et dureté (NVH) — Bruit de moteur (Suite)

Emplacement du bruit	Type de bruit	Conditions de fonctionnement du moteur						Source du bruit	Elément à vérifier	Page de référence
		Avant montée en température du moteur	Après montée en température du moteur	Au démarrage	Au ralenti	Au lancement	Lors de la conduite			
Avant du moteur	Grincement ou sifflement	A	B	—	B	—	C	Autres courroies d'entraînement (grippées ou glissantes)	Déflexion des courroies d'entraînement	Section MA (“Vérifications des courroies d'entraînement”, “ENTRETIEN DU MOTEUR”)
	Craquement	A	B	A	B	A	B	Autres courroies d'entraînement (glissantes)	Fonctionnement du roulement de la poulie intermédiaire	
	Craquement et grincement	A	B	—	B	A	B	Bruit de pompe à eau	Fonctionnement de la pompe à eau	Section LC (“Inspection de la pompe à eau”, “SYSTEME DE REFROIDISSEMENT DU MOTEUR”)

A : Etroitement relié B : Relié C : Quelquefois relié — : Pas relié

Simpo PDF Merge and Split Unregistered Version - http://www.simpopdf.com

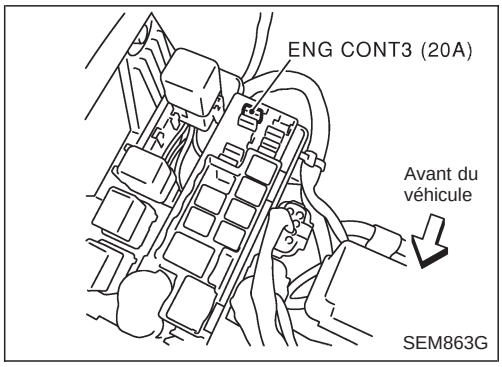

1. Faire chauffer le moteur.
2. Couper le contact.
3. Utiliser CONSULT-II pour vérifier qu'il n'y ait pas d'erreur de codes pour les éléments d'autodiagnostic. Se reporter à ''DIAGNOSTIC DES DEFAUTS — INDEX'' dans la section EC.

- Ne pas débrancher CONSULT-II avant la fin de cette opération ; il sera utilisé pour le contrôle moteur tr/mn et détecter les erreurs à la fin.

4. Débrancher la borne négative de la batterie.
5. Pour éviter que le carburant soit injecté pendant l'inspection, déposer le fusible de la pompe à injection de carburant [ENG CONT3 (20A)] du boîtier à fusibles à droite dans le compartiment moteur.
6. Déposer les bougies de préchauffage de chaque cylindre.

- **Avant la dépose, nettoyer la zone environnante pour éviter que des corps étrangers n'entrent dans le moteur.**
- **Enlever avec précaution la bougie de préchauffage pour éviter tout endommagement ou toute casse.**
- **Manipuler avec soins pour éviter d'heurter les bougies de préchauffage.**

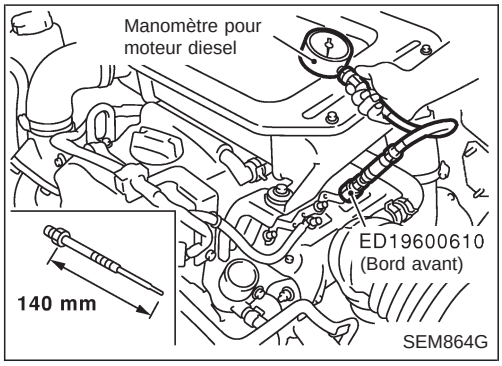

7. Reposer un adaptateur (SST) pour l'installation des orifices des bougies de préchauffage et connecter la jauge de compression pour le moteur diesel.
   : 18 - 21 N·m (1,8 - 2,2 kg-m)
8. Connecter la borne négative de la batterie.
9. Placer le contact d'allumage sur ''START'' et démarrer le moteur. Quand l'aiguille de la jauge se stabilise, lire la pression de compression et le régime (tr/mn) du moteur. Répéter les étapes ci-dessus pour chaque cylindre.

- **Toujours utiliser une batterie en charge pleine pour obtenir le régime moteur spécifié.**

Unité : kPa (bar, kg/cm^2)/tr/mn

Standard	Minimum	Limite de différence entre les cylindres
3 100 (31,00, 31,6)/200	2 500 (25,00, 25,5)/200	490 (4,90, 5,0)/200

- Quand le régime (tr/mn) du moteur est en dehors de la position spécifiée, vérifier la densité spécifique du liquide de batterie. Mesurer à nouveau après correction.
- Si les tr/mn du moteur dépassent la limite, contrôler le jeu de soupape et les composants de la chambre de combustion (soupapes, sièges de soupape, joints de culasse, segments, pistons, alésages de cylindre, côtés interne et externe du bloc-cylindre) et mesurer à nouveau.

10. Compléter cette opération comme suit :

a. Tourner le contact d'allumage sur ''OFF''.
b. Débrancher la borne négative de la batterie.
c. Reposer les bougies de préchauffage.
d. Reposer le fusible de la pompe à injection de carburant [ENG CONT3 (20A)].
e. Connecter la borne de batterie négative.
f. Utiliser CONSULT-II pour vérifier qu'il n'y a pas d'erreur de code pour les éléments de l'autodiagnostic. Se reporter à ''Diagnostic des défauts — INDEX'' dans la section EC.

Simpo PDF Merge and Split Unregistered Version - http://www.simpopdf.com

Dépose et repose

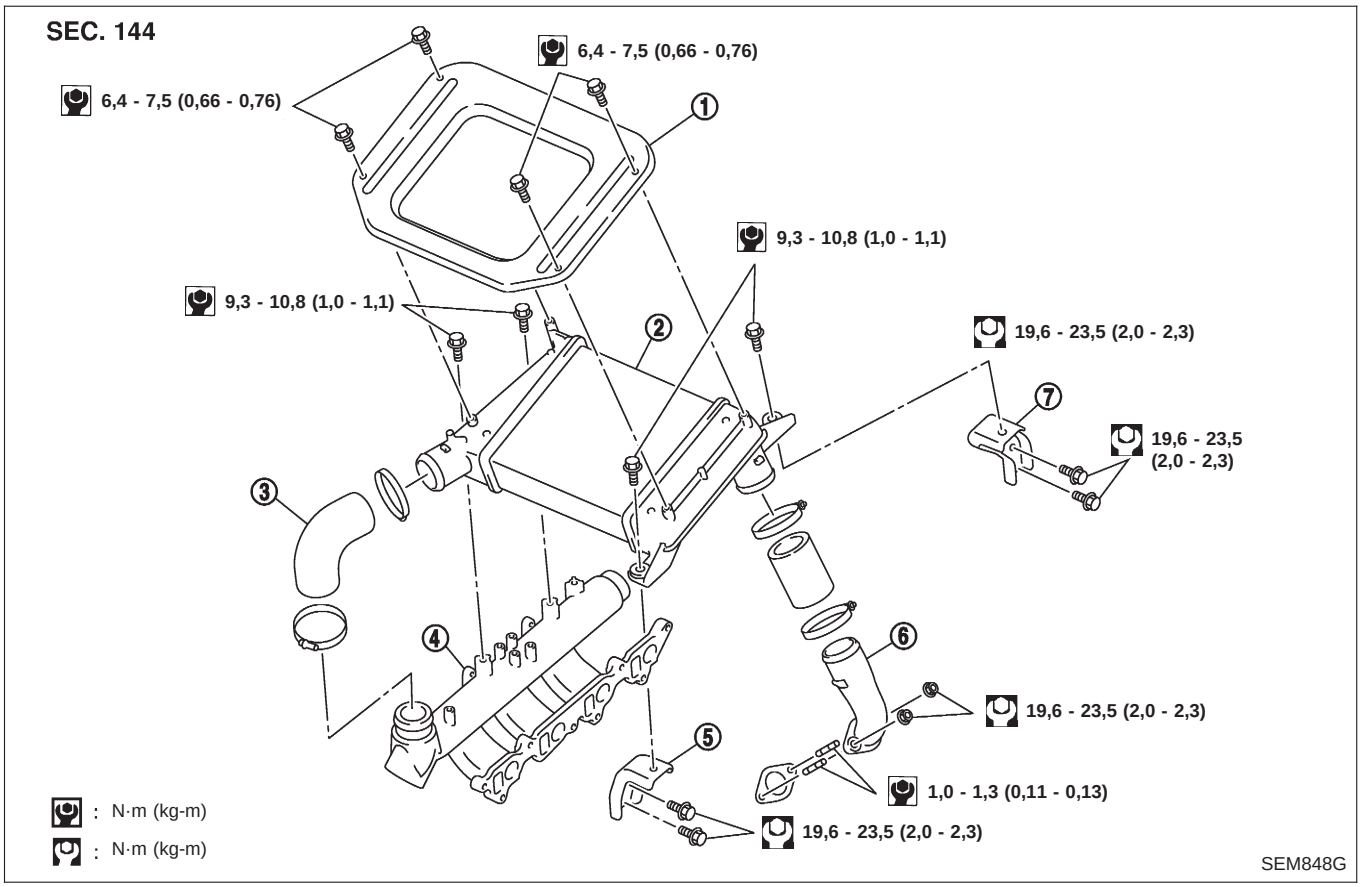

1. Couvercle du refroidisseur à air de suralimentation
2. Refroidisseur d'air de suralimentation
3. Flexible d'entrée d'air
4. Collecteur d'admission
5. Support
6. Tuyau d'entrée d'air
7. Support

Inspection

Vérifier que les passages d'air du noyau du refroidisseur et les ailettes ne sont pas bouchés, ne fuient pas et ne sont pas déformés. Nettoyer ou remplacer le refroidisseur d'air de suralimentation si nécessaire.

- **Veiller à ne pas déformer les ailettes du noyau.**
- **Pour la procédure de nettoyage du noyau de refroidisseur d'air de suralimentation, se reporter à ''VERIFICATION DU RADIATEUR'' dans la section LC.**

Simpo PDF Merge and Split Unregistered Version - http://www.simpopdf.com

Composants

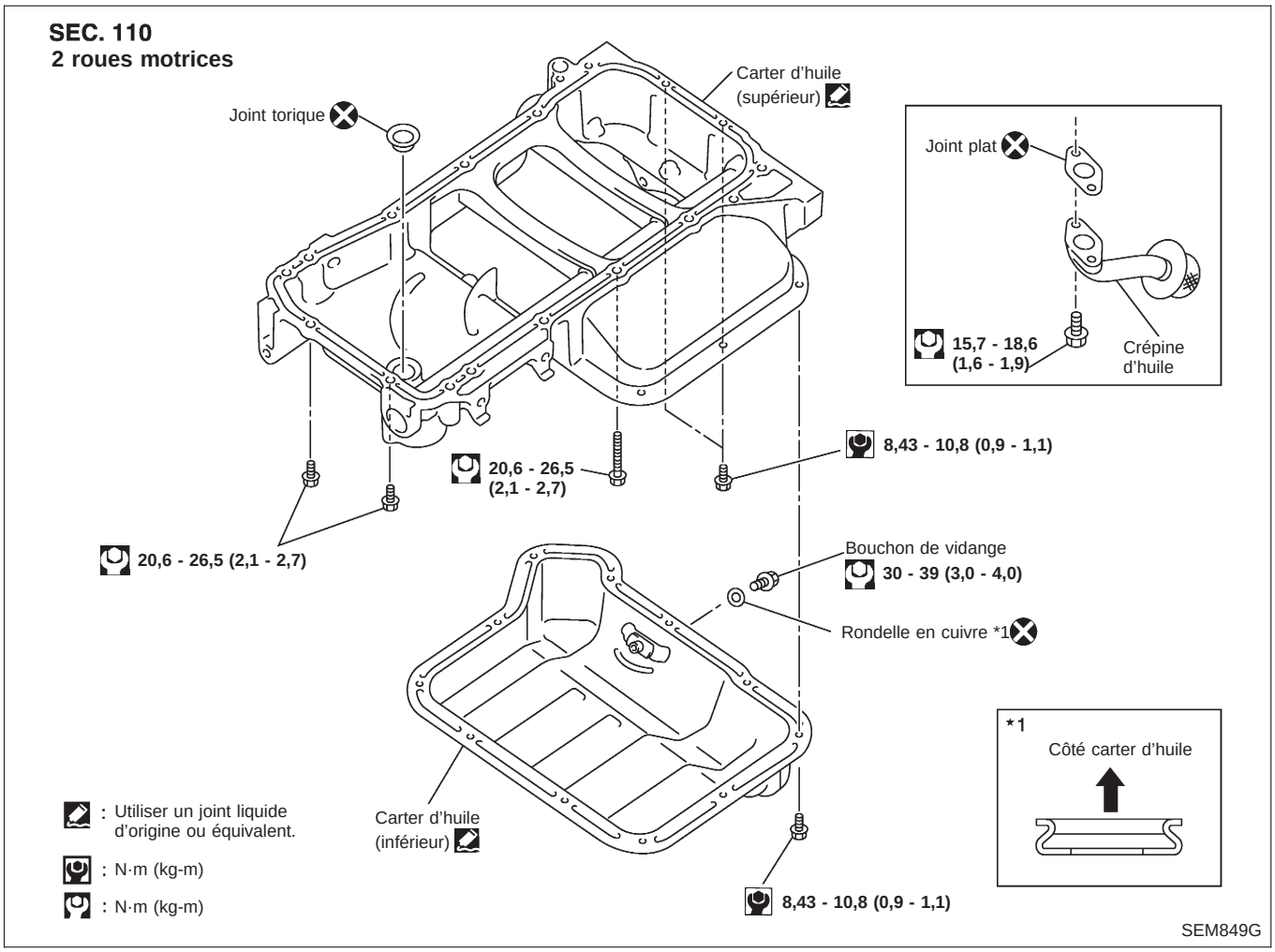

Simpo PDF Merge and Split Unregistered Version - http://www.simpopdf.com

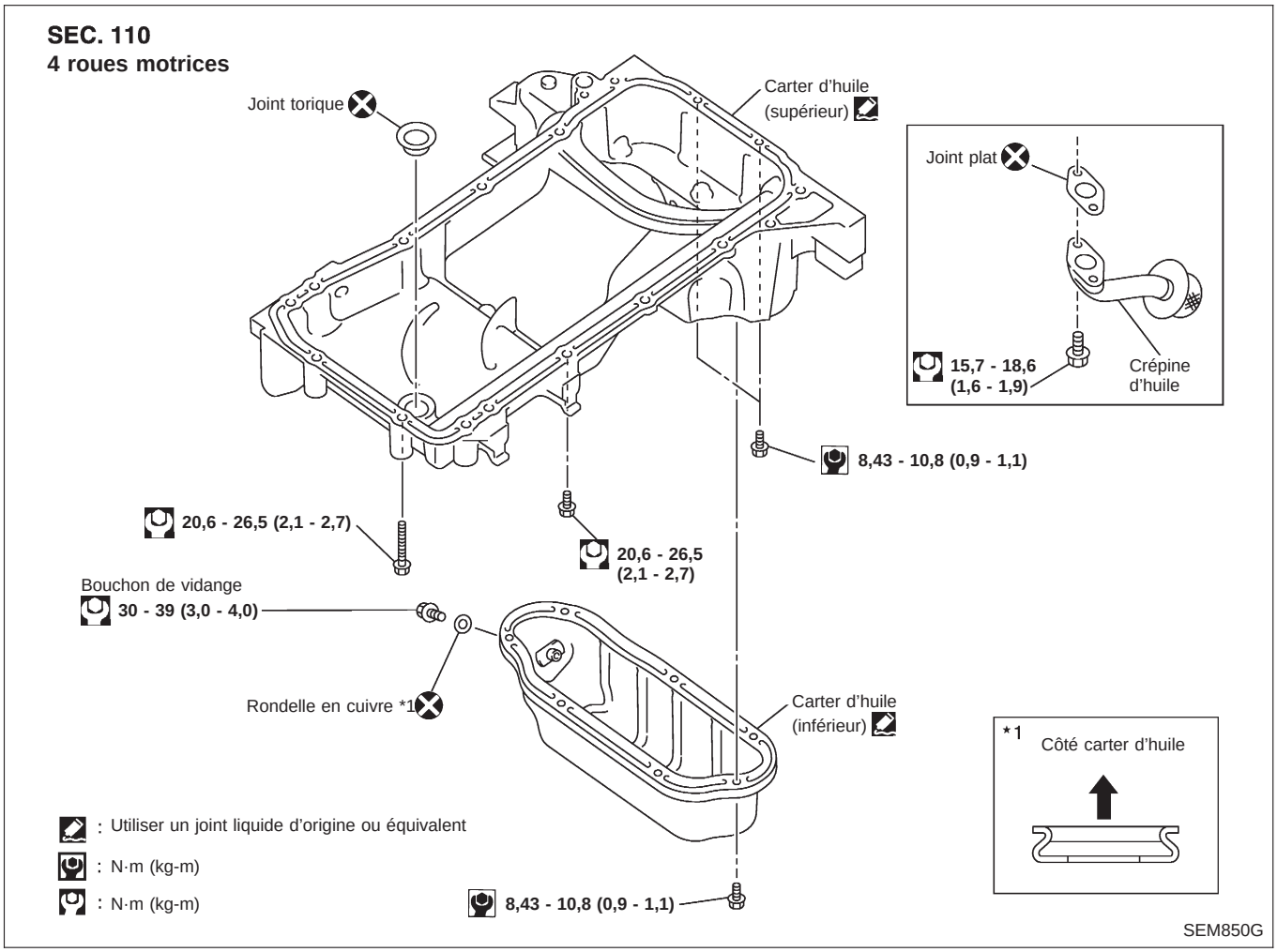

Dépose

AVERTISSEMENT :
Pour éviter tout risque de brûlures, ne jamais vidanger l'huile moteur lorsque le moteur est chaud.

1. Lever le véhicule et placer des chandelles de sécurité comme support.
2. Déposer le couvercle inférieur du moteur.
3. Vidanger l'huile moteur.

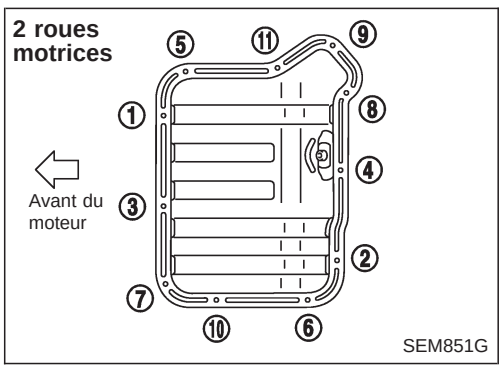

4. Déposer les boulons du carter d'huile inférieur.

- Desserrer les boulons dans l'ordre inverse de celui indiqué sur l'illustration.

Simpo PDF Merge and Split Unregistered Version - http://www.simpopdf.com

Dépose (Suite)

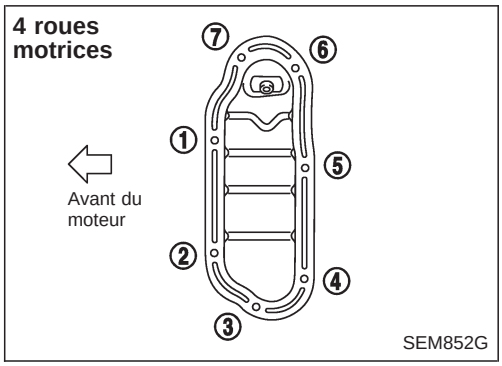

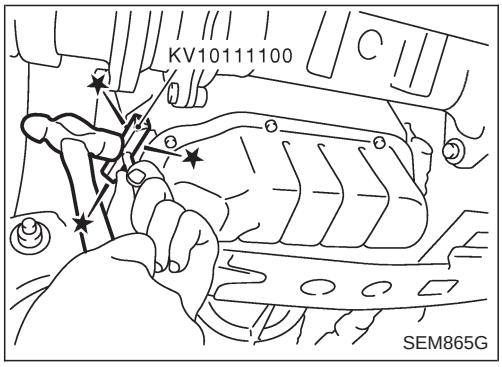

5. Déposer le carter d'huile inférieur.

a. Insérer l'outil entre le carter d'huile supérieur et le carter d'huile inférieur.

- **Prendre garde de ne pas endommager la surface de contact en aluminium.**
- **Ne pas insérer de tournevis pour ne pas déformer la bride du carter d'huile.**

b. Faire coulisser l'outil en tapant sur le côté de l'outil avec un marteau.

c. Déposer le carter d'huile inférieur.

6. Déposer la crépine d'huile.
7. Déposer le compresseur et le support du climatiseur.
8. Déposer le côté gauche de l'extrémité de la barre d'accouplement — modèles 2 roues motrices uniquement.

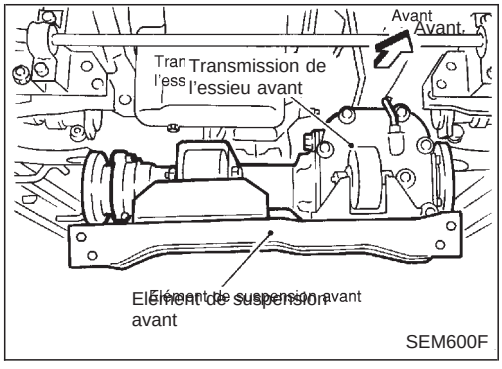

9. Déposer la transmission de l'essieu avant ainsi que l'élément de fixation de différentiel. Se reporter à la section PD (''Dépose et repose'', ''Transmission de l'essieu avant'') — modèles 4 roues motrices uniquement.
10. Déposer le boulon de l'élément de suspension avant (droit & gauche) — modèles 4 roues motrices uniquement.

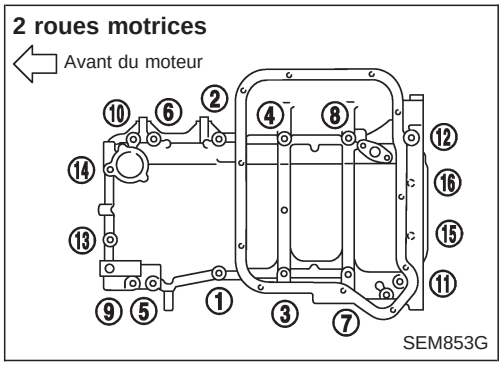

11. Déposer les boulons du carter d'huile supérieur dans l'ordre contraire de l'ordre indiqué.

Simpo PDF Merge and Split Unregistered Version - http://www.simpopdf.com

Dépose (Suite)

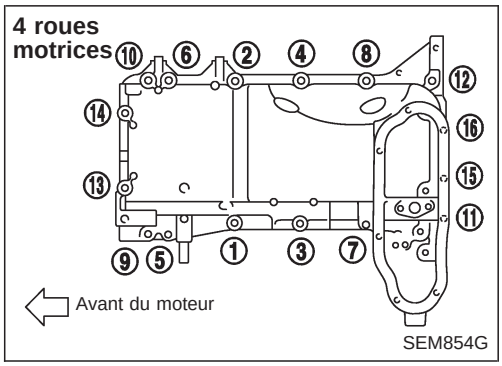

12. Déposer le carter d'huile supérieur.
a. Insérer un outil à la taille adéquate dans le cran du carter d'huile supérieur.
- **Prendre garde de ne pas endommager la surface de contact d'aluminum.**
- **Ne pas insérer de tournevis pour ne pas déformer la bride du carter d'huile.**

b. Faire riper le carter d'huile supérieur en bougeant l'outil de haut en bas.
c. Déposer le carter d'huile supérieur.
- **Faire attention de ne pas laisser le boulons n°15 et 16 tomber dans le carter de boîte-pont.**

Repose

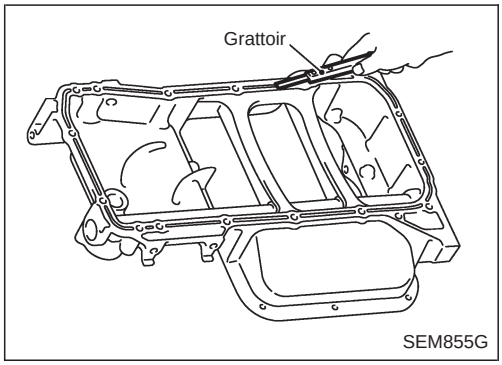

1. Reposer le carter d'huile supérieur.
a. Utiliser un grattoir pour enlever l'ancien joint liquide des surfaces de contact.
- **Retirer aussi l'ancien joint liquide des surfaces de contact du bloc-cylindre, du couvercle avant et du carter d'huile inférieur.**
- **Retirer le joint plat usé de l'orifice de boulon et du filetage.**

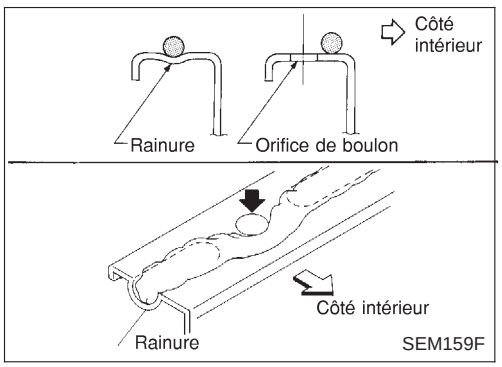

b. Appliquer un cordon régulier de joint liquide sur la surface de contact du carter d'huile.
- **Utiliser le joint liquide d'origine ou un produit équivalent.**

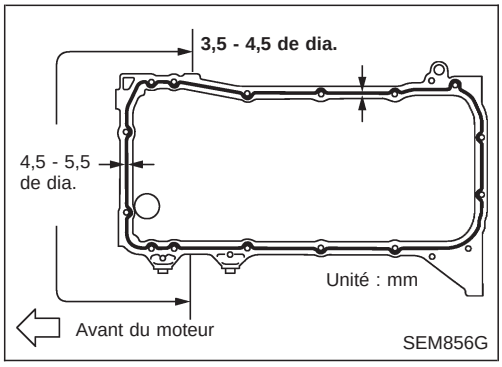

- **Appliquer du joint liquide sur les endroits indiqués sur l'illustration.**
- **Vérifier que la largeur du joint liquide est de 3,5 à 4,5 mm ou 4,5 à 5,5 mm comme indiqué sur l'illustration. (S'assurer que le diamètre du cordon de silicone soit différent autour de l'avant du véhicule.)**
- **Le montage doit être fait dans les 5 minutes qui suivent l'application du joint.**

Simpo PDF Merge and Split Unregistered Version - http://www.simpopdf.com

Repose (Suite)

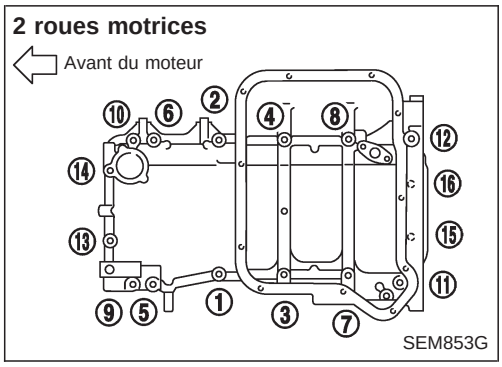

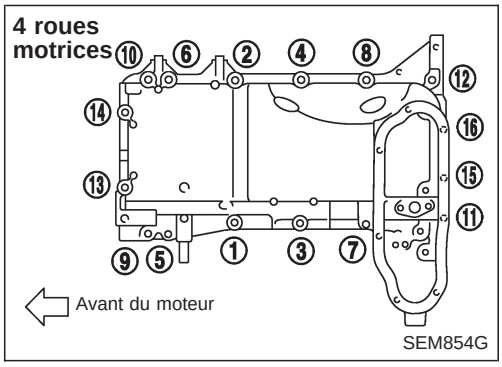

c. Reposer le carter d'huile supérieur.
- Serrer les boulons en suivant l'ordre numérique.
- La dimension des boulons varie en fonction de l'emplacement de la pose. Se reporter à ce qui suit et utiliser les boulons appropriés.

Modèles 2 roues motrices :
M6 x 12 mm : Boulon n° 11, 14
M6 x 30 mm : Boulon n° 15, 16
M8 x 25 mm : Boulon n° 1, 5, 9, 13
M8 x 60 mm : Boulon n° 2, 3, 4, 6, 7, 8, 10, 12

Modèles 4 roues motrices :
M6 x 30 mm : Boulon n° 15, 16
M8 x 25 mm : Boulon n° 1, 2, 4, 5, 8, 9
M8 x 60 mm : Boulon n° 3, 6, 7, 10, 11, 12, 13, 14

- La longueur de la tige sous le collet du boulon est la longueur de la partie filetée (la partie de guidage n'est pas incluse).

2. Reposer le compresseur et le support du climatiseur.
: 56,9 - 65,7 N·m (5,9 - 6,7 kg-m)
3. Reposer les courroies d'entraînement.
4. Reposer la crépine d'huile.

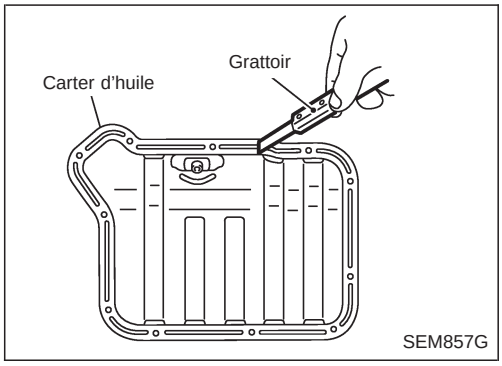

5. Reposer le carter d'huile inférieur.
a. Utiliser un grattoir pour enlever l'ancien joint liquide des surfaces de contact.
- **Retirer aussi l'ancien joint liquide des surfaces de contact du carter d'huile supérieur.**

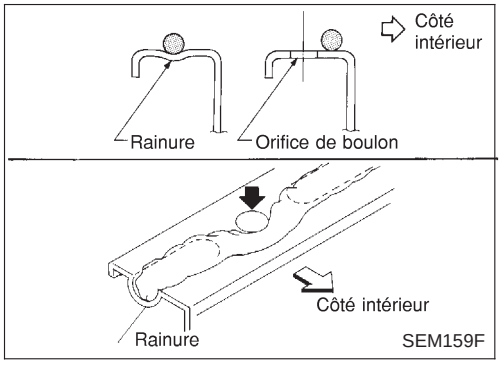

b. Appliquer un cordon régulier de joint liquide sur la surface de contact du carter d'huile inférieur.
- **Utiliser le joint liquide d'origine ou un produit équivalent.**

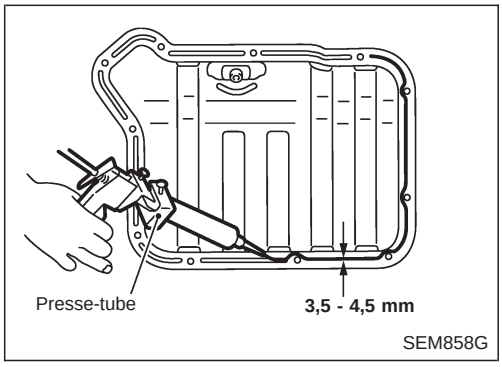

- **S'assurer que la largeur du joint liquide est de 3,5 à 4,5 mm.**
- **Le montage doit être fait dans les 5 minutes qui suivent l'application du joint.**

Simpo PDF Merge and Split Unregistered Version - http://www.simpopdf.com

Repose (Suite)

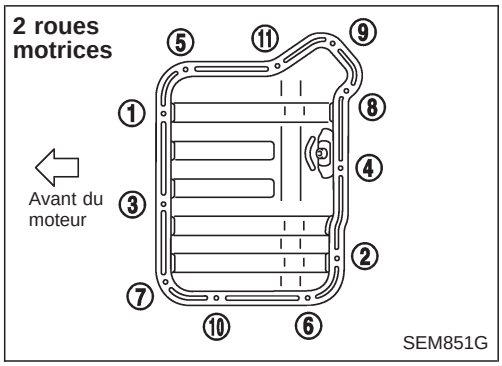

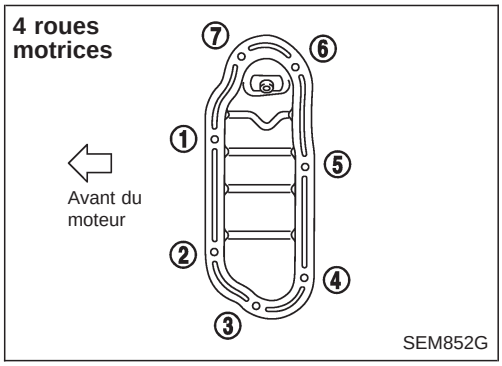

c. Reposer le carter d'huile inférieur.
- **Serrer dans l'ordre numérique indiqué sur l'illustration.**
- **Attendre au moins 30 minutes avant de remplir d'huile moteur.**

6. Reposer dans l'ordre inverse de la dépose.

Simpo PDF Merge and Split Unregistered Version - http://www.simpopdf.com

Chaîne de distribution secondaire

PRECAUTION :

- **Après avoir déposé la chaîne de distribution, ne pas faire tourner séparément le vilebrequin et l'arbre à cames car les soupapes heurteraient les têtes de piston.**
- **Lors de la repose des arbres à cames, tendeurs de chaîne, joints d'huile, ou d'autres pièces coulissantes, lubrifier les surfaces de contact avec de l'huile moteur neuve.**
- **Appliquer de l'huile moteur neuve sur les boulons de filetage et les surfaces d'appui lors de la repose des pignons d'arbre à cames, de la poulie de vilebrequin, et des supports d'arbre à cames.**
- **Ne pas renverser de liquide de refroidissement moteur sur les courroies d'entraînement.**

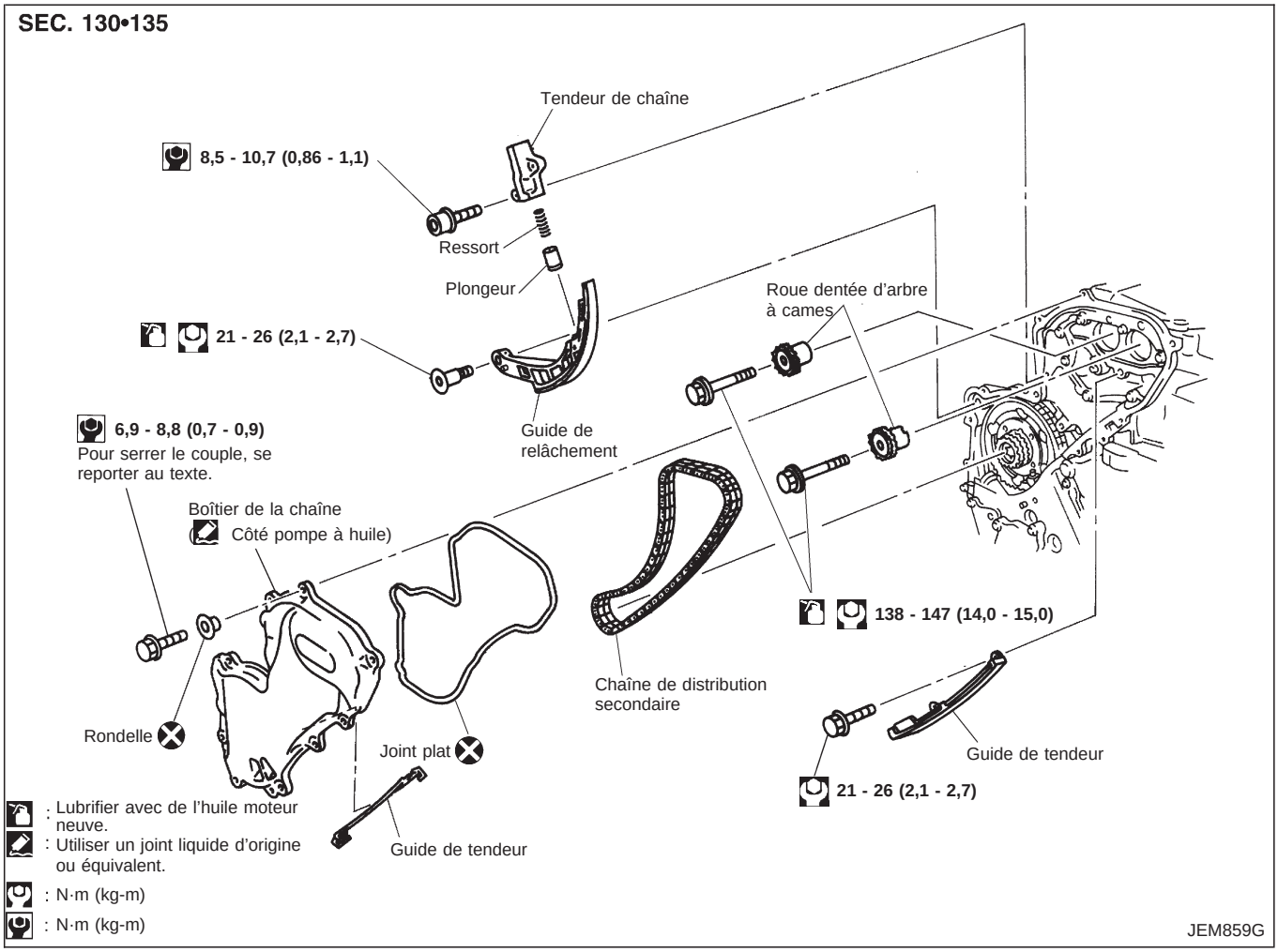

DEPOSE

- Concernant le travail préparatif pour la dépose/repose de la chaîne de distribution secondaire en vue de déposer/reposer la pompe à injection de carburant, se reporter à la section EC, ''Pompe à injection de carburant à commande électronique''.

Simpo PDF Merge and Split Unregistered Version - http://www.simpopdf.com

Chaîne de distribution secondaire (Suite)

- Concernant le travail préparatif pour la dépose/repose de la chaîne de distribution secondaire en vue de la dépose/repose de l'arbre à cames, se reporter à EM-3048, ''ARBRE A CAMES''.

1. Vidanger l'huile moteur.
2. Vidanger le liquide de refroidissement en déposant les bouchons de vidange du bloc-cylindre. Se reporter à la section LC, ''Remplacement du liquide de refroidissement du moteur''.
3. Déposer le tube de guidage de l'EGR.
4. Déposer les flexibles inférieur et supérieur.
5. Déposer la protection de radiateur et le radiateur. Se reporter à la section LC, ''DEPOSE ET REPOSE'', ''Radiateur''.

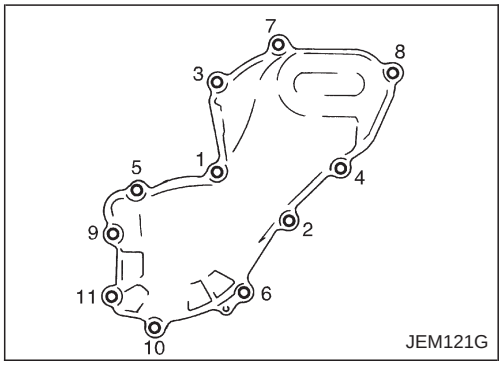

JEM121G

6. Déposer le boîtier de la chaîne avant.

- Séparer le réservoir de liquide de direction assistée du support.
- Desserrer les boulons de fixation dans l'ordre inverse de celui indiqué sur l'illustration et les déposer.
- Déposer tous les boulons avec la rondelle de caoutchouc car l'espace est limité pour les retirer.

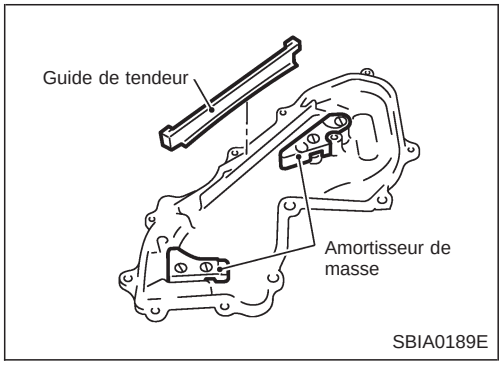

SBIA0189E

PRECAUTION :

- **Pendant la dépose du carter de chaîne avant, couvrir les ouvertures pour éviter que des corps étrangers n'entrent dans le moteur.**
- **Ne pas déposer les deux amortisseurs de masse au dos du couvercle.**

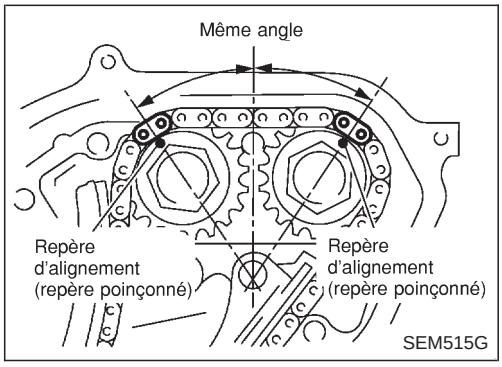

SEM515G

7. Placer le piston n° 1 à son PMH dans sa course de compression.

- Tourner la poulie de vilebrequin dans le sens des aiguilles d'une montre pour que le repère d'alignement (repère poinçonné) sur chaque roue dentée d'arbre à cames soit dans la position indiquée sur l'illustration.
- **Aucune indication de position n'apparait sur la poulie de vilebrequin.**
- **Lors de la repose, des correspondances de couleurs peuvent être utilisées sur la chaîne de distribution secondaire comme repères d'alignement. La présence de repère n'est pas nécessaire pour la dépose ;**

Simpo PDF Merge and Split Unregistered Version - http://www.simpopdf.com

Chaîne de distribution secondaire (Suite)

toutefois, faire des repères d'alignement comme exigé parce qu'il se peut que le repère d'alignement sur la roue dentée de la pompe à injection de carburant ne soit pas facile à voir.

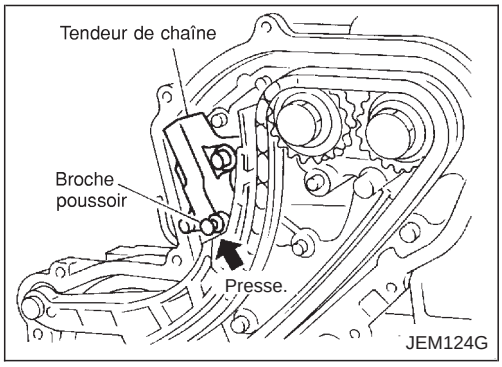

8. Déposer le tendeur de chaîne.
a. Pousser le plongeur du tendeur de chaîne et le maintenir enfoncé grâce à une broche poussoir.

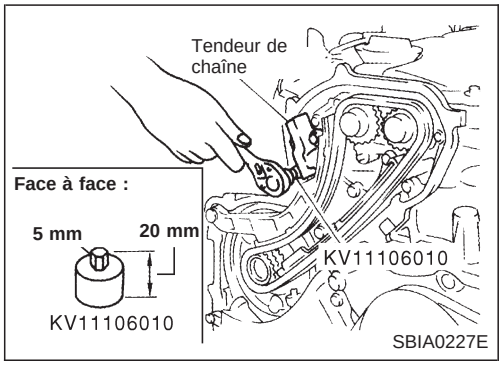

b. Utiliser une clé à tête hexagonale [face à face : 5 mm, SST] pour déposer les boulons en vue de déposer le tendeur de chaîne.

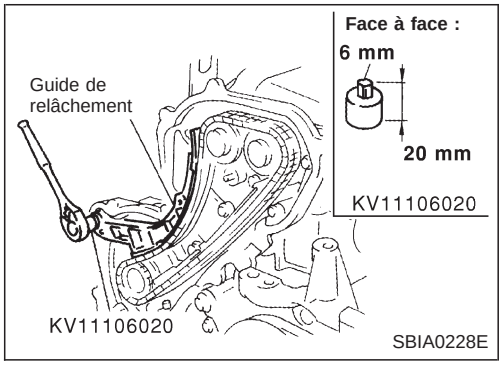

9. Déposer le guide du mouvement de la courroie de distribution.
- Utiliser une clé à tête hexagonale (face à face : 6 mm, SST) pour déposer les boulons en vue de déposer le guide de relâchement de chaîne de distribution.

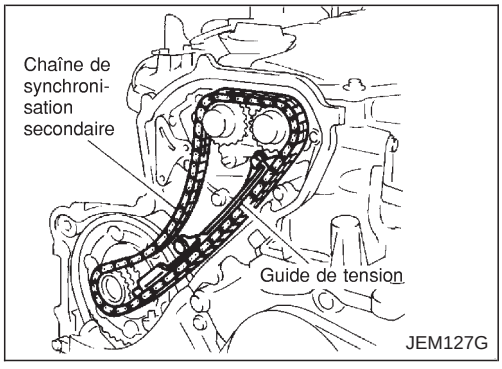

10. Déposer le guide de tension de la courroie de distribution.
11. Déposer chaîne de distribution secondaire.
- Seule la chaîne de distribution peut être déposée sans déposer les pignons.

Simpo PDF Merge and Split Unregistered Version - http://www.simpopdf.com

Chaîne de distribution secondaire (Suite)

INSPECTION

Contrôler la présence de fissures ou les signes d'usure excessive sur les chaînons. Remplacer la chaîne si nécessaire.

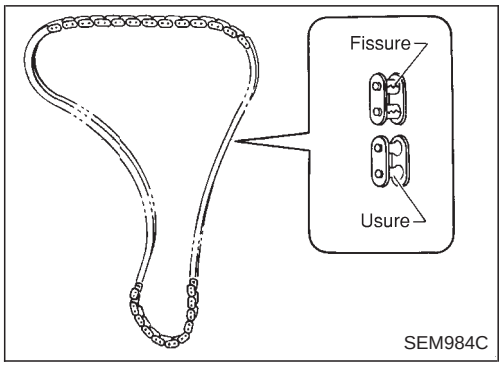

REPOSE

1. Reposer la chaîne de distribution secondaire.
- Lors de la repose, faire correspondre les repères d'alignement sur les pignons avec les repères d'alignement de couleurs (correspondances colorées) sur la chaîne.
2. Reposer le guide de tension de la courroie de distribution.
- Le boulon supérieur a une tige plus longue que le boulon inférieur.

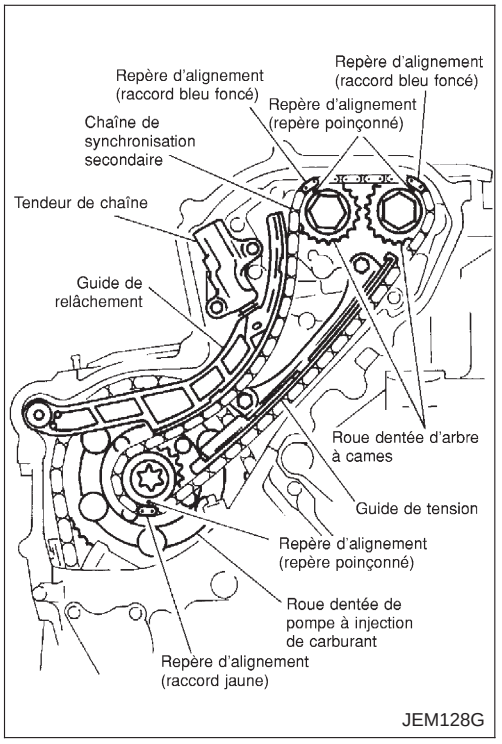

3. Utiliser une clé à tête hexagonale (face à face : 6 mm, SST) pour reposer le guide de relâchement de chaîne de distribution.

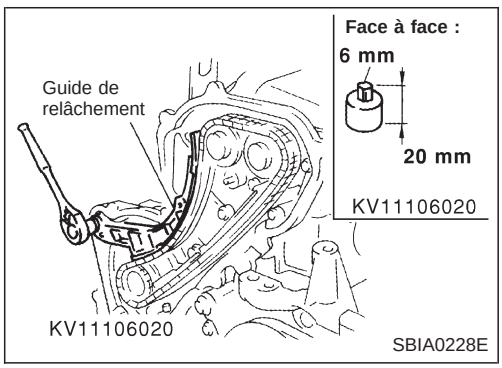

4. Reposer le tendeur de chaîne.
a. Pousser le plongeur du tendeur de chaîne. Tout en le maintenant enfoncé grâce à une broche poussoir, reposer le tendeur de chaîne.
b. Utiliser une clé à tête hexagonale (face à face : 5 mm, SST) pour serrer les boulons.
c. Extraire la broche poussoir, etc. en maintenant le plongeur.
- **S'assurer à nouveau que les repères d'alignement sur les pignons et les repères d'alignement colorés sur la chaîne de distribution sont alignés.**

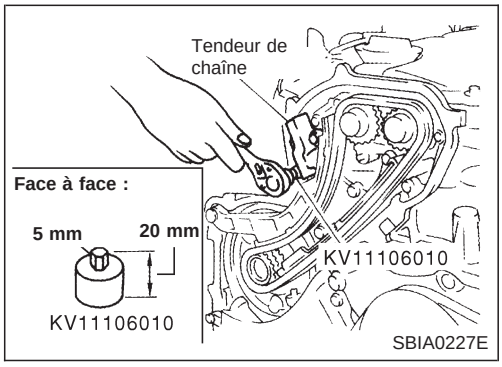

Simpo PDF Merge and Split Unregistered Version - http://www.simpopdf.com

Chaîne de distribution secondaire (Suite)

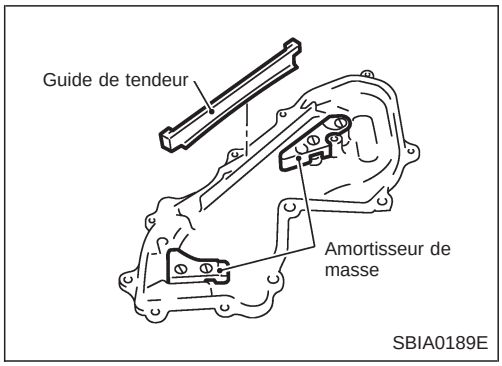

5. Reposer le boîtier de la chaîne avant.

a. Reposer le guide de tension sur l'arrière de la surface du boîtier de la chaîne avant.

- Maintenir le boîtier de la chaîne avant verticalement lors de la repose. Le guide de tension risque de s'enlever si le boîtier de la chaîne avant est incliné.

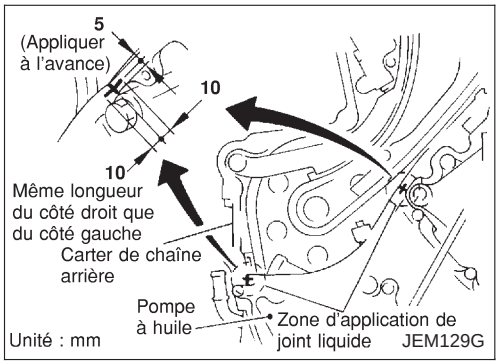

b. Enduire de joint liquide spécifié (se reporter à EM-3003, ''Procédure d'application du joint liquide''.) les deux extrémités des zones arquées (aux endroits où le boîtier de la chaîne arrière est contigu) comme indiqué indiqué sur l'illustration.

c. Reposer le nouveau joint plat du boîtier de la chaîne dans la rainure du boîtier de la chaîne.

d. Reposer le boîtier de la chaîne avant.

- Lors de la repose, aligner la cheville de positionnement sur le boîtier de pompe à huile avec le perçage de goupille.

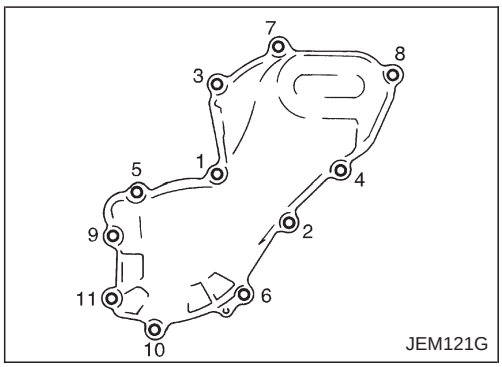

- Reposer tous les boulons avec la rondelle de caoutchouc sur boîtier de la chaîne avant.

e. Serrer les boulons de fixation selon l'ordre numérique indiqué sur l'illustration.

f. Après le serrage de tous les boulons, resserrer les boulons n° 1, 2, et 6.

6. Ensuite, reposer dans l'ordre inverse de celui de la dépose.

Simpo PDF Merge and Split Unregistered Version - http://www.simpopdf.com

Chaîne de distribution primaire

SEC. 120•130•135•186

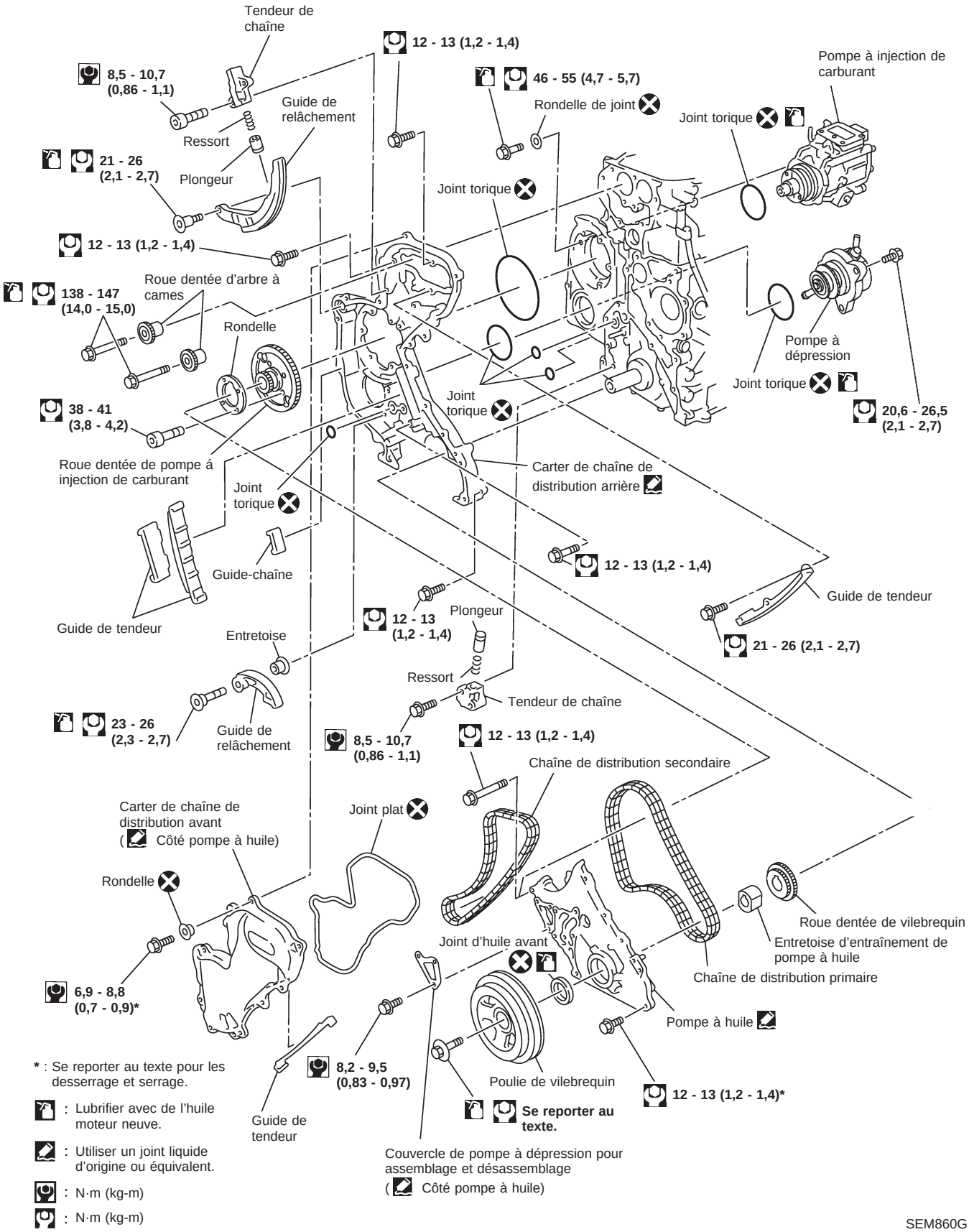

* : Se reporter au texte pour les desserrage et serrage.

: Lubrifier avec de l'huile moteur neuve.

: Utiliser un joint liquide d'origine ou équivalent.

: N·m (kg-m)

: N·m (kg-m)

SEM860G

Simpo PDF Merge and Split Unregistered Version - http://www.simpopdf.com

Chaîne de distribution primaire (Suite)

PRECAUTION :

- **Après avoir déposé la chaîne de distribution, ne pas faire tourner séparément le vilebrequin et l'arbre à cames car les soupapes heurteraient les têtes de piston.**
- **Lors de la repose des arbres à cames, tendeurs de chaîne, joints d'huile, ou d'autres pièces coulissantes, lubrifier les surfaces de contact avec de l'huile moteur neuve.**
- **Appliquer de l'huile moteur neuve sur les boulons de filetage et les surfaces d'appui lors de la repose des pignons d'arbre à cames, de la poulie de vilebrequin, et des supports d'arbre à cames.**
- **Ne pas renverser de liquide de refroidissement moteur sur les courroies d'entraînement.**

DEPOSE

1. Déposer le refroidisseur à air de suralimentation et le support.
2. Déposer le cache-culbuteurs. Se reporter à EM-3046, ''Dépose et repose'', ''CACHE-CULBUTEURS''.
3. Déposer le tube de guidage de l'EGR.
4. Déposer la protection de radiateur et le radiateur. Se reporter à la section LC, ''DEPOSE ET REPOSE'', ''Radiateur''.
5. Déposer la poulie de tension, le support de poulie de tension et les courroies d'entraînement.
6. Déposer les carters d'huile supérieur et inférieur. Se reporter à EM-3016, ''Dépose et repose'', ''CARTER D'HUILE''.
7. Enlever le tube d'injection.
   Se reporter à la section EC, ''Tube d'injection et injecteur''.
8. Déposer la chaîne de distribution secondaire et les pièces associées.
   Se reporter à EM-3022, ''Chaîne de distribution secondaire''.
9. Lors de la dépose du boîtier de la chaîne arrière, déposer les roues dentées d'arbre à cames.
   Se reporter à la section EM-3048, ''ARBRE A CAMES''.

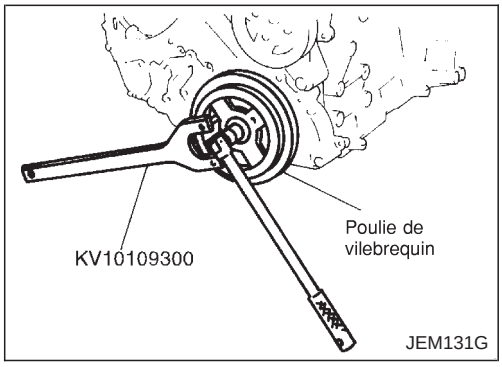

10. Déposer la poulie de vilebrequin.

a. Tenir la poulie de vilebrequin avec l'outil de maintien de poulie (SST).
b. Desserrer le boulon de fixation de poulie de vilebrequin et extraire le boulon d'environ 10 mm.

Simpo PDF Merge and Split Unregistered Version - http://www.simpopdf.com

Chaîne de distribution primaire (Suite)

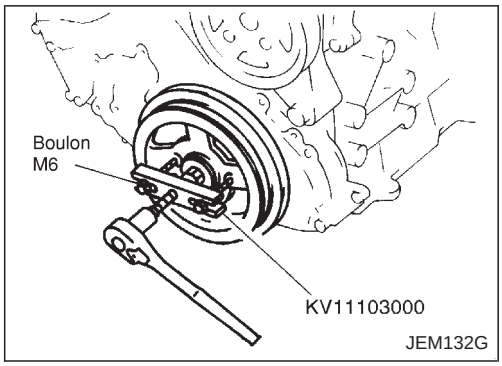

c. Déposer la poulie de vilebrequin á l'aide d'un extracteur de poulie (SST).
- Fixer la poulie de vilebrequin au moyen de deux boulons M6 avec une longueur de tige d'environ 60 mm.

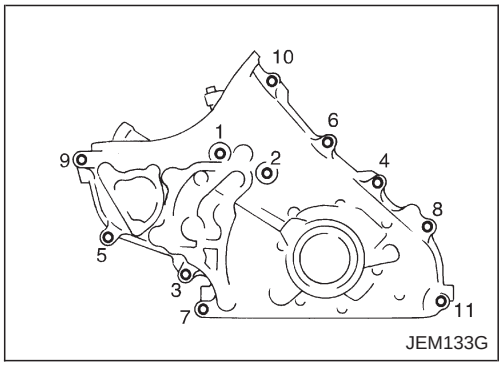

11. Déposer la pompe à huile.
- Desserrer les boulons dans l'ordre inverse de celui indiqué sur l'illustration et les déposer.
- Utiliser la fraise pour joint (SST) etc. pour la dépose.

12. Déposer le joint d'huile avant de la pompe à huile.
- Découper le joint de la surface arrière de la pompe à huile avec un tournevis à lame plate.
- **Prendre garde de ne pas endommager la pompe à huile.**

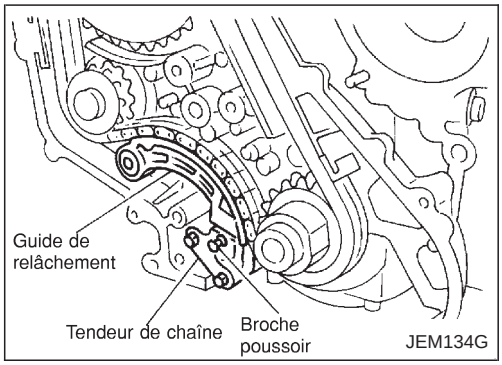

13. Déposer le tendeur de chaîne.
- Lors de la dépose du tendeur de chaîne, pousser le manchon du tendeur de chaîne et le maintenir enfoncé grâce à une broche poussoir, etc.

14. Déposer le guide du mouvement de la chaîne de distribution.

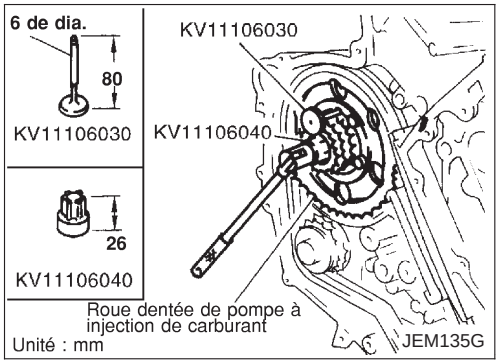

15. Maintenir le pignon de la pompe à injection de carburant.
a. Insérer la goupille d'arrêt de positionnement (SST) dans l'orifice de 6mm de diamètre sur le pignon de la pompe à injection de carburant.
b. Utiliser une clé TORX (SST) pour tourner le manche de la pompe petit à petit pour régler la position du pignon de la pompe à injection de carburant pour que les orifices soient alignés.
c. Insérer la goupille d'arrêt de positionnement à travers le pignon de la pompe à injection de carburant sur le corps de la pompe à injection de carburant pour fixer le pignon.
- Insérer la goupille d'arrêt de positionnement jusqu'à ce que la bride entre en contact avec le pignon de la pompe à injection de carburant.

Simpo PDF Merge and Split Unregistered Version - http://www.simpopdf.com

Chaîne de distribution primaire (Suite)

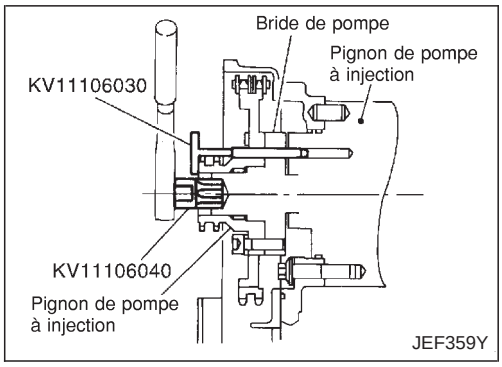

d. Déposer la clé TORX (SST).

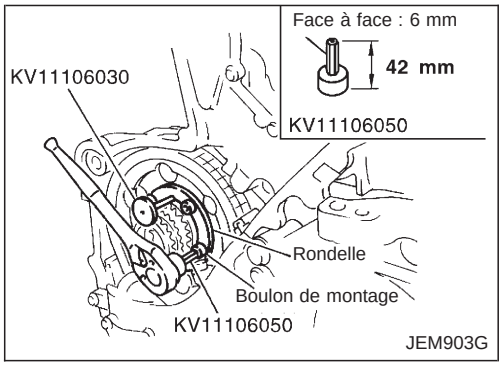

16. Utiliser une clé hexagonale (face à face : 6 mm, de type long) (SST) pour déposer les boulons de montage du pignon de la pompe à injection de carburant.
    - Il n'est pas nécessaire de déposer la rondelle du pignon de la pompe à injection de carburant.

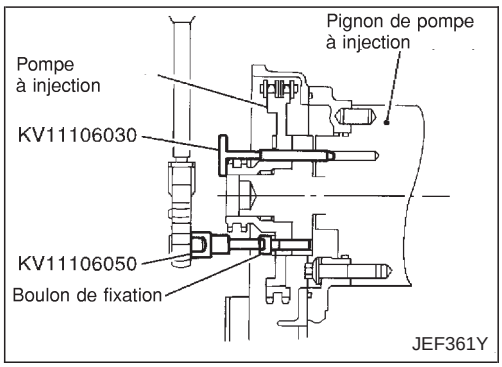

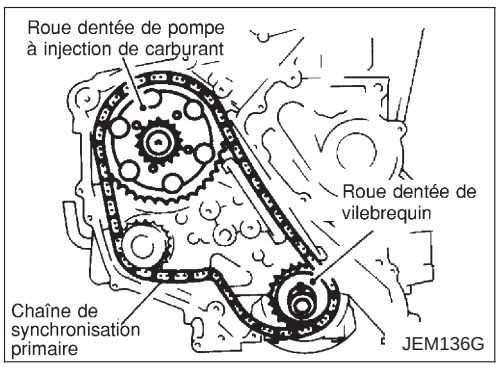

17. Déposer la chaîne de distribution primaire avec le pignon de la pompe à injection de carburant et la roue dentée de vilebrequin.

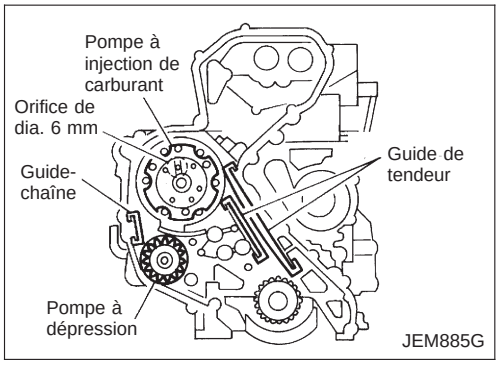

18. Déposer le guide-chaîne et les guides de tension.
19. Déposer la pompe à dépression.

Simpo PDF Merge and Split Unregistered Version - http://www.simpopdf.com

Chaîne de distribution primaire (Suite)

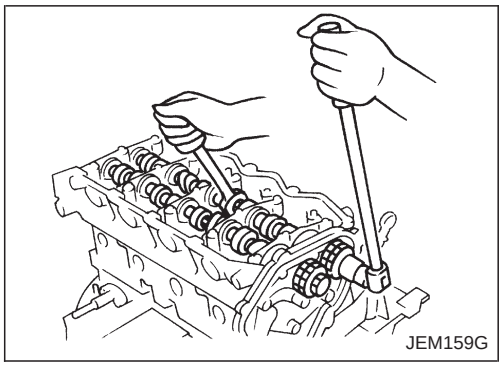
JEM159G

20. Déposer les roues dentées d'arbre à cames.
- Desserrer les boulons de repose des roues dentées d'arbre à cames en maintenant la portion hexagonale de l'arbre à cames.

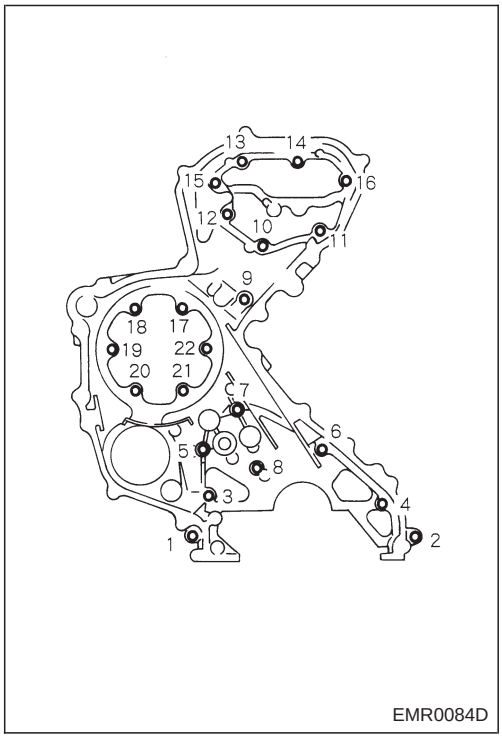

EMR0084D

21. Déposer le boîtier de la chaîne arrière.
- Desserrer les boulons de fixation dans l'ordre inverse de celui indiqué sur l'illustration et les déposer.
- Utiliser la fraise pour joint (SST) pour la dépose.

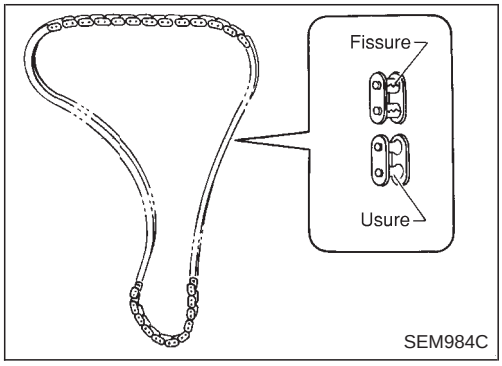

SEM984C

INSPECTION

Contrôler la présence de fissures ou les signes d'usure excessive sur les chaînons. Remplacer la chaîne si nécessaire.

Simpo PDF Merge and Split Unregistered Version - http://www.simpopdf.com

Chaîne de distribution primaire (Suite)

REPOSE

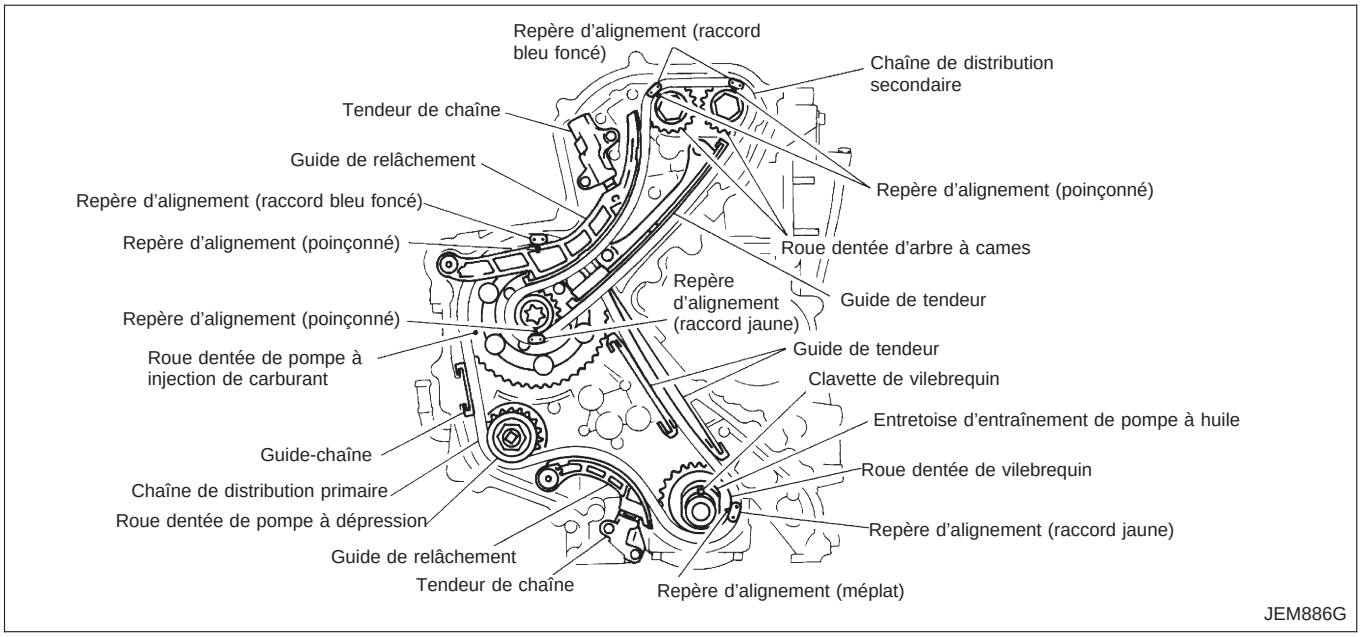

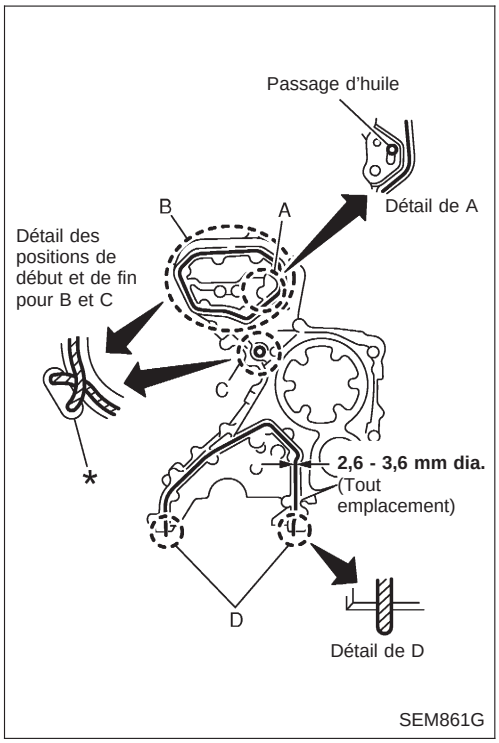

1. Reposer le boîtier de la chaîne arrière.

a. Appliquer un cordon régulier de joint liquide spécifié (se reporter à EM-3003, ''Procédure d'application du joint liquide''.) aux endroits indiqués sur l'illustration.
A : Appliquer le cordon pour qu'il ne dépasse pas dans le passage de l'huile
B, C : Minimiser la zone de chevauchement du cordon, au début et à la fin du cordon comme indiqué sur l'illustration. Appliquer pour que la portion marquée * dépasse à l'extérieur sans que celle-ci ne soit visible de l'extérieur après le montage du moteur.
D : Laisser le début et la fin du cordon dépasser légèrement de la surface du carter.

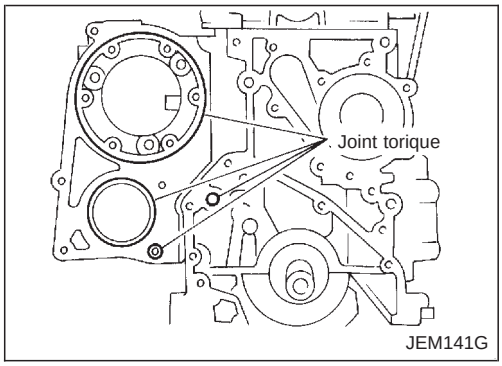

b. Reposer les quatre joints toriques sur les rainures du bloc-cylindre et du support de la pompe à injection de carburant.

Simpo PDF Merge and Split Unregistered Version - http://www.simpopdf.com

Chaîne de distribution primaire (Suite)

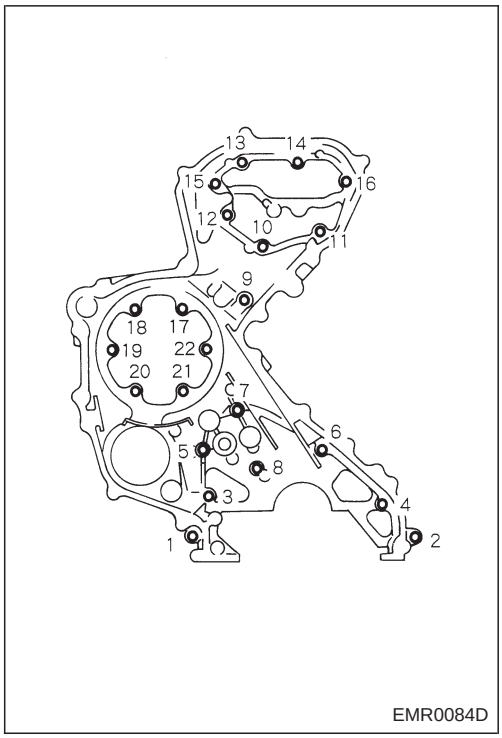

c. Reposer le boîtier de la chaîne arrière.
- Lors de la repose, aligner la cheville de positionnement avec le perçage de goupille.

d. Serrer les boulons selon l'ordre numérique indiqué sur l'illustration.
- Reposer les quatre types de boulons suivants en se reportant à l'illustration.
  16 mm : Boulon n° 1, 2, 16, 17, 18, 19, 20, 21, 22
  20 mm : Boulon n° 3, 4, 6, 9, 10, 11, 13, 14
  25 mm : Boulon n° 12, 15
  35 mm : Boulon n° 5, 7, 8
- La longueur de la tige sous le collet du boulon est la longueur de la partie filetée (la partie de guidage n'est pas incluse).

e. Après le serrage de tous les boulons, resserrer dans le même ordre.

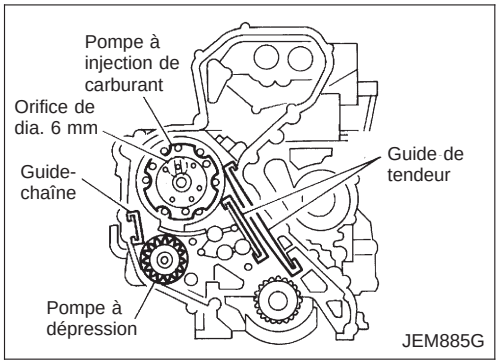

2. Reposer la pompe à dépression.
- Avant la repose, s'assurer que le cran sur la bride de la pompe à injection de carburant et le trou de 6 mm de diamètre sur le corps de la pompe sont alignés.

3. Reposer le guide-chaîne et les guides de tension.
4. Reposer la roue dentée de vilebrequin en l'alignant avec la clavette de vilebrequin sur le côté le plus éloigné.

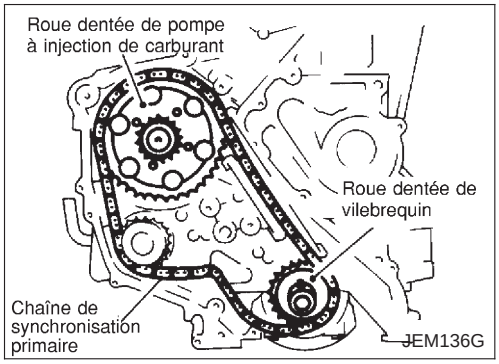

5. Reposer la chaîne de distribution primaire avec le pignon de la pompe à injection de carburant.
- Lors de la repose, faire correspondre les repères d'alignement sur les pignons avec les repères d'alignement de couleurs (correspondances colorées) sur la chaîne.
- Reposer la rondelle de pignon de la pompe à injection de carburant avec la surface marquée ''F'' (repère avant) orienté vers l'avant du moteur.

6. Reposer la chaîne de distribution sur le pignon de la pompe à dépression et à travers le guide-chaîne.

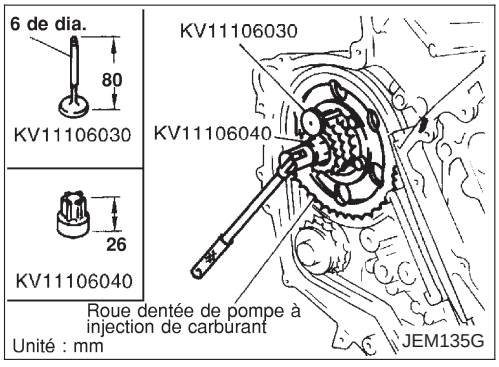

7. Utiliser la goupille d'arrêt de positionnement (SST) pour maintenir le pignon de la pompe à injection de carburant et reposer le boulon pour fixer le pignon.
- Utiliser une clé TORX (SST) pour tourner le manchon petit à petit pour régler la position de la bride de la bride de la pompe. Insérer la goupille d'arrêt de positionnement (SST) dans l'orifice de 6mm dans le diamètre sur le pignon de la pompe à injection de carburant pour que la goupille d'arrêt traverse la bride de la pompe jusqu'au corps de la pompe. Pendant que la goupille d'arrêt est en place, reposer les boulons.

Simpo PDF Merge and Split Unregistered Version - http://www.simpopdf.com

Chaîne de distribution primaire (Suite)

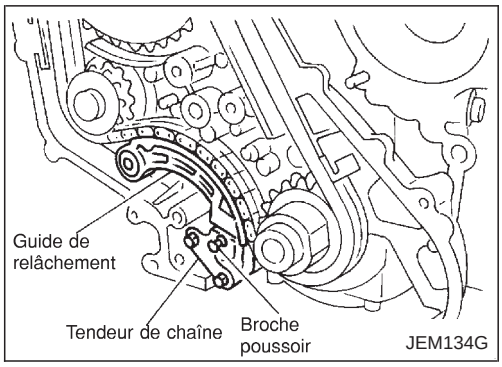

8. Reposer le guide de la tension de la courroie de distribution.
9. Reposer le tendeur de chaîne.
- Pousser le plongeur du tendeur de chaîne. Tout en maintenant le plongeur enfoncé grâce à une broche poussoir, etc., reposer le tendeur de chaîne.
- Après la repose, extraire la broche poussoir en maintenant le plongeur.
- **S'assurer à nouveau que les repères d'alignement sur les pignons et les repères d'alignement colorés sur la chaîne de distribution sont alignés.**

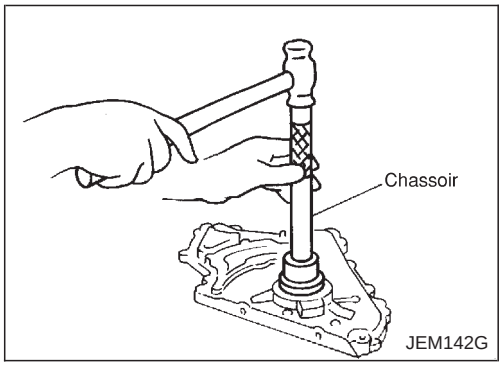

10. Reposer le joint d'huile avant sur la pompe à huile.
- Utiliser un poussoir adéquat (62 mm de dia.) pour pousser le joint jusqu'à ce qu'il touche le fond.
- **Ne pas toucher les lèvres du joint d'huile. S'assurer qu'il n'y ait pas de corps étrangers sur la surface du joint.**

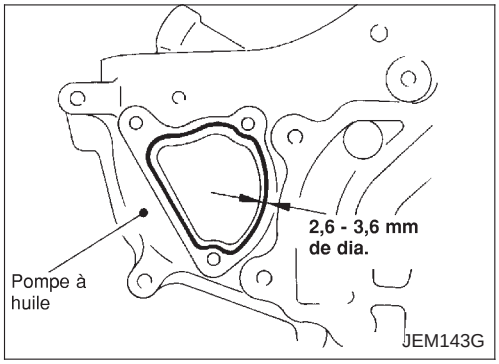

11. Reposer le couvercle de la pompe à dépression (pour l'ouverture de la pompe à dépression lors de repose et dépose) sur la pompe à huile si le couvercle est déposé.
- Appliquer un cordon régulier de joint liquide spécifié (se reporter à EM-3003, ''Procédure d'application du joint liquide''.) comme indiqué sur l'illustration.
- Appliquer du joint liquide sur la surface latérale de la pompe à huile.

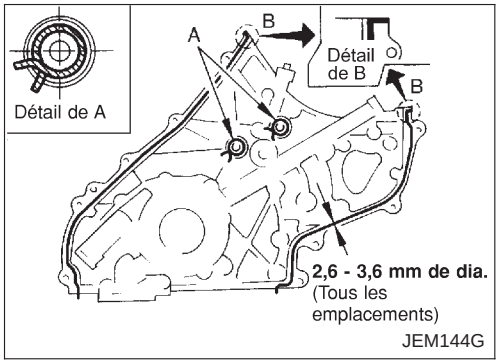

12. Reposer la pompe à huile.
a. Appliquer un cordon régulier de joint liquide spécifié (se reporter à EM-3003, ''Procédure d'application du joint liquide''.) aux endroits indiqués sur l'illustration.
A : Laisser le début et la fin du cordon dépasser légèrement de la surface.
B : Appliquer du joint liquide le long de l'extrémité supérieure de la pompe à huile.

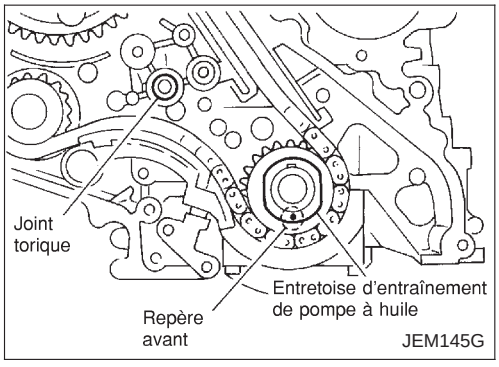

b. Reposer l'entretoise d'entraînement de la pompe à huile sur le vilebrequin.
- Reposer avec le repère avant (repère poinçonné) orienté vers l'avant du moteur.

c. Reposer le joint torique sur la rainure du carter de chaîne arrière.

Simpo PDF Merge and Split Unregistered Version - http://www.simpopdf.com

Chaîne de distribution primaire (Suite)

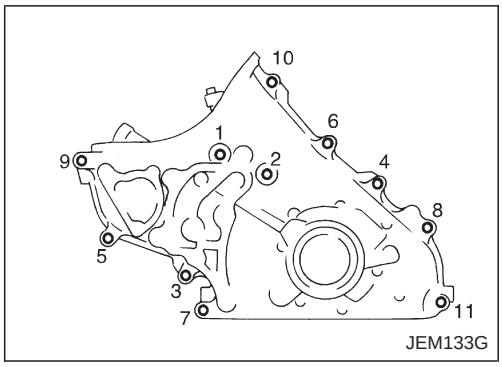

d. Reposer la pompe à huile.
- Lors de la repose, aligner le rotor interne dans la direction des deux plateaux de parement de l'entretoise d'entraînement de la pompe à huile.
- Lors de la repose, aligner la cheville de positionnement avec le perçage de goupille.

e. Serrer les boulons de fixation selon l'ordre numérique indiqué sur l'illustration.
f. Après le serrage de tous les boulons, resserrer dans le même ordre.

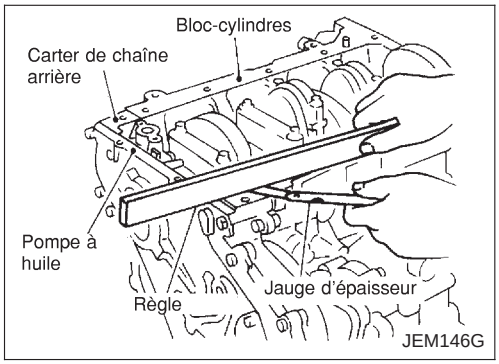

13. Vérifier les écartements sur la surface de montage du carter d'huile supérieur.
- Avec une règle et une jauge d'épaisseur, mesurer les écartements entre les emplacements des pièces suivantes :

Standard :

Carter de pompe à huile et chaîne arrière
−0,14 à 0,14 mm
Carter de chaîne arrière et bloc-cylindre
−0,25 à 0,13 mm

- Si la valeur mesurée est en dehors des limites ci-dessus, reposer à nouveau.

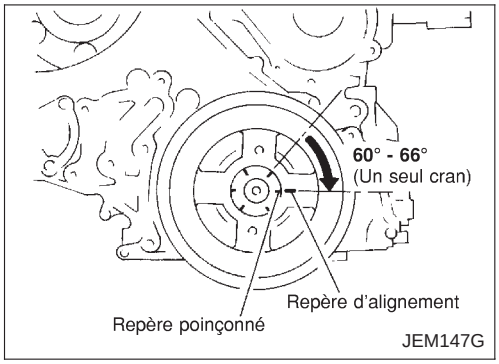

14. Reposer la poulie de vilebrequin.
a. Reposer la poulie de vilebrequin sur le vilebrequin.
b. Tenir la poulie de vilebrequin avec l'outil de maintien de poulie (SST).
c. Serrer le boulon de 20 à 29 N·m (2,0 à 3,0 kg-m).
d. Faire un repère d'alignement sur la poulie de vilebrequin qui s'aligne avec un des repères poinçonnés sur le boulon.
e. Serrer à nouveau le boulon de fixation sur 60° - 66° [cible : 60° (tourner d'un cran)].
15. Reposer la chaîne de distribution secondaire et les pièces associées.
Se reporter à EM-3025, ''Chaîne de distribution secondaire'', ''REPOSE''.
16. Ensuite, reposer dans l'ordre inverse de celui de la dépose.

Simpo PDF Merge and Split Unregistered Version - http://www.simpopdf.com

Dépose et repose

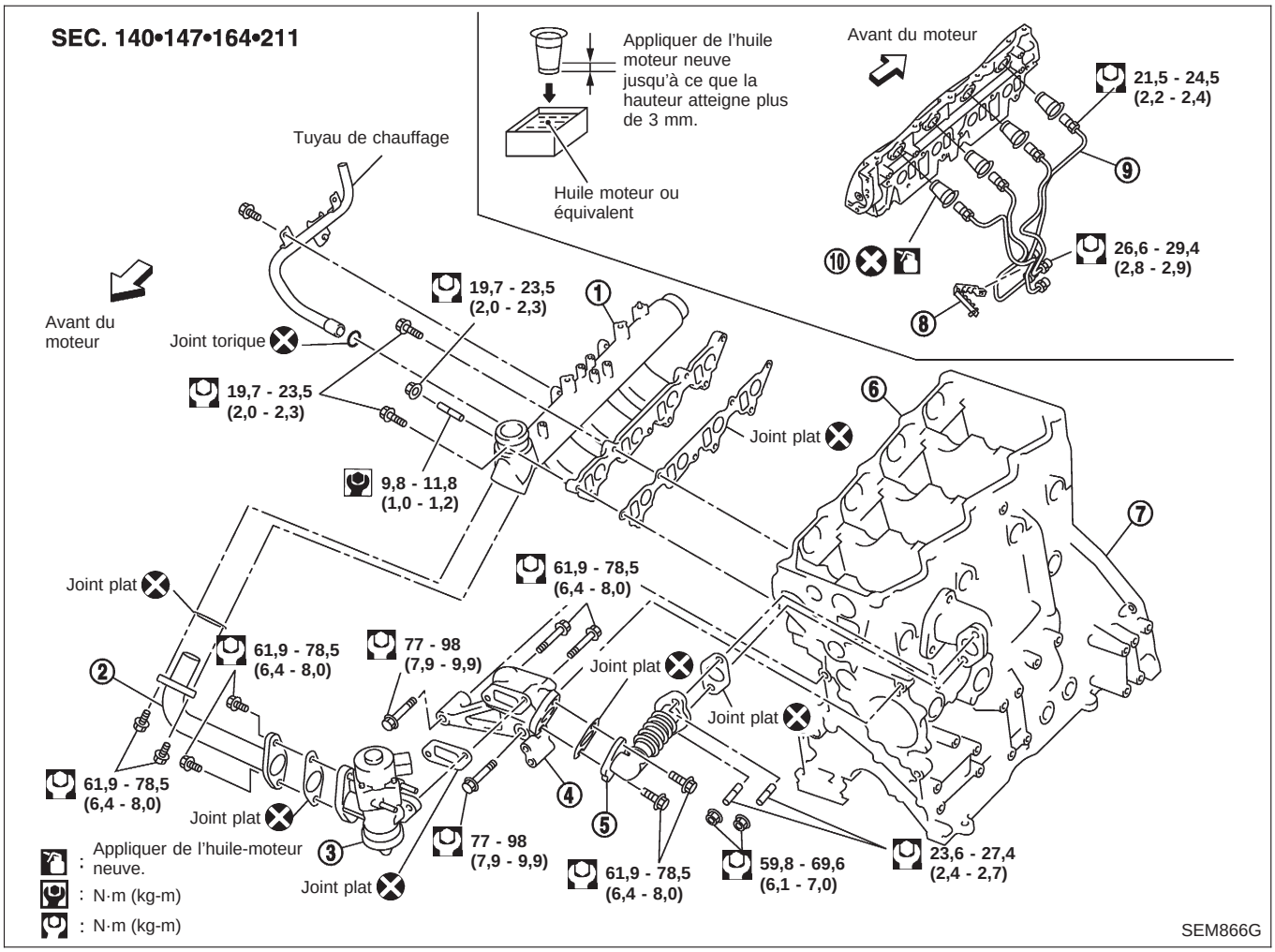

1. Collecteur d'admission
2. Tube de guidage de l'EGR
3. Soupape de commande de volume de l'EGR
4. Entretoise de l'EGR
5. Tuyau de l'EGR
6. Culasse
7. Bloc-cylindre
8. Collier du tube d'injection
9. Tube d'injection
10 Joint à huile de l'injecteur

DEPOSE

1. Vidanger le liquide de refroidissement. Se reporter à la section LC, ''Remplacement du liquide de refroidissement du moteur''.
2. Déposer le refroidisseur d'air de suralimentation. Se reporter à EM-3015, ''Dépose et repose''.
3. Déposer la soupape de commande de volume de l'EGR, de l'entretoise de l'EGR et du tube de guidage de l'EGR.
4. Déposer les tuyaux d'injection de carburant et le collecteur d'admission.

Simpo PDF Merge and Split Unregistered Version - http://www.simpopdf.com

Dépose et repose (Suite)

TUYAUTERIE D'ALIMENTATION

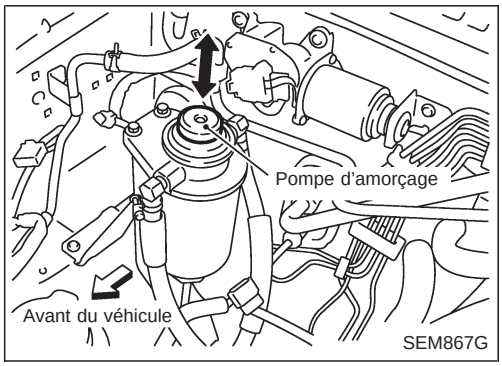

Dépose

- Pour empêcher le carburant de déborder, boucher l'ouverture du flexible avec un bouchon aveugle après l'avoir débranché.
- **Prendre garde de ne pas renverser de carburant dans le compartiment moteur.**

Repose

Après la réparation, purger l'air des tuyaux en tirant vers le haut et poussant vers le bas la pompe d'amorçage jusqu'à sentir une résistance.
Pour une purge d'air supplémentaire, actionner le démarreur tout en actionnant la pompe d'amorçage vers le haut et vers le bas. Ne pas actionner le démarreur pendant plus de 10 secondes à la fois.

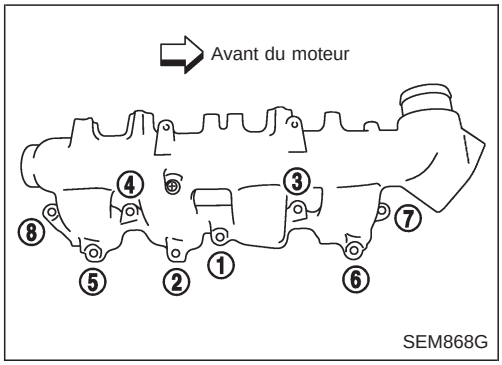

COLLECTEUR D'ADMISSION

Dépose

- Desserrer les boulons et écrous dans l'ordre inverse de celui indiqué sur l'illustration.

Repose

- Lorsque les boulons filetés sont retirés, reposer en fonction du couple suivant :
  : 10 - 11 N·m (1,0 - 1,2 kg-m)
- Serrer les boulons de fixation selon l'ordre numérique indiqué sur l'illustration.

SOUPAPE DE COMMANDE DE VOLUME DE L'EGR

- **Manipuler avec précaution pour éviter tout choc.**
- **Ne pas démonter ni régler.**

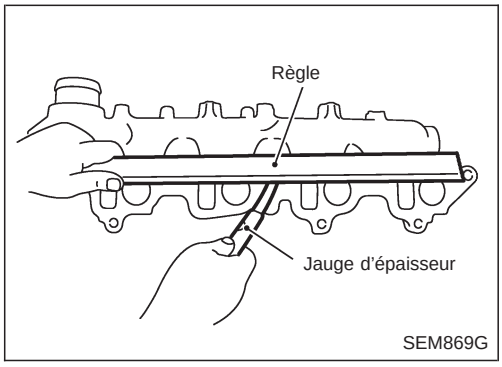

Inspection

COLLECTEUR D'ADMISSION

Contrôler la déformation sur la surface de montage avec une règle et une jauge d'épaisseur.

Limite : 0,1 mm

Simpo PDF Merge and Split Unregistered Version - http://www.simpopdf.com

Dépose et repose

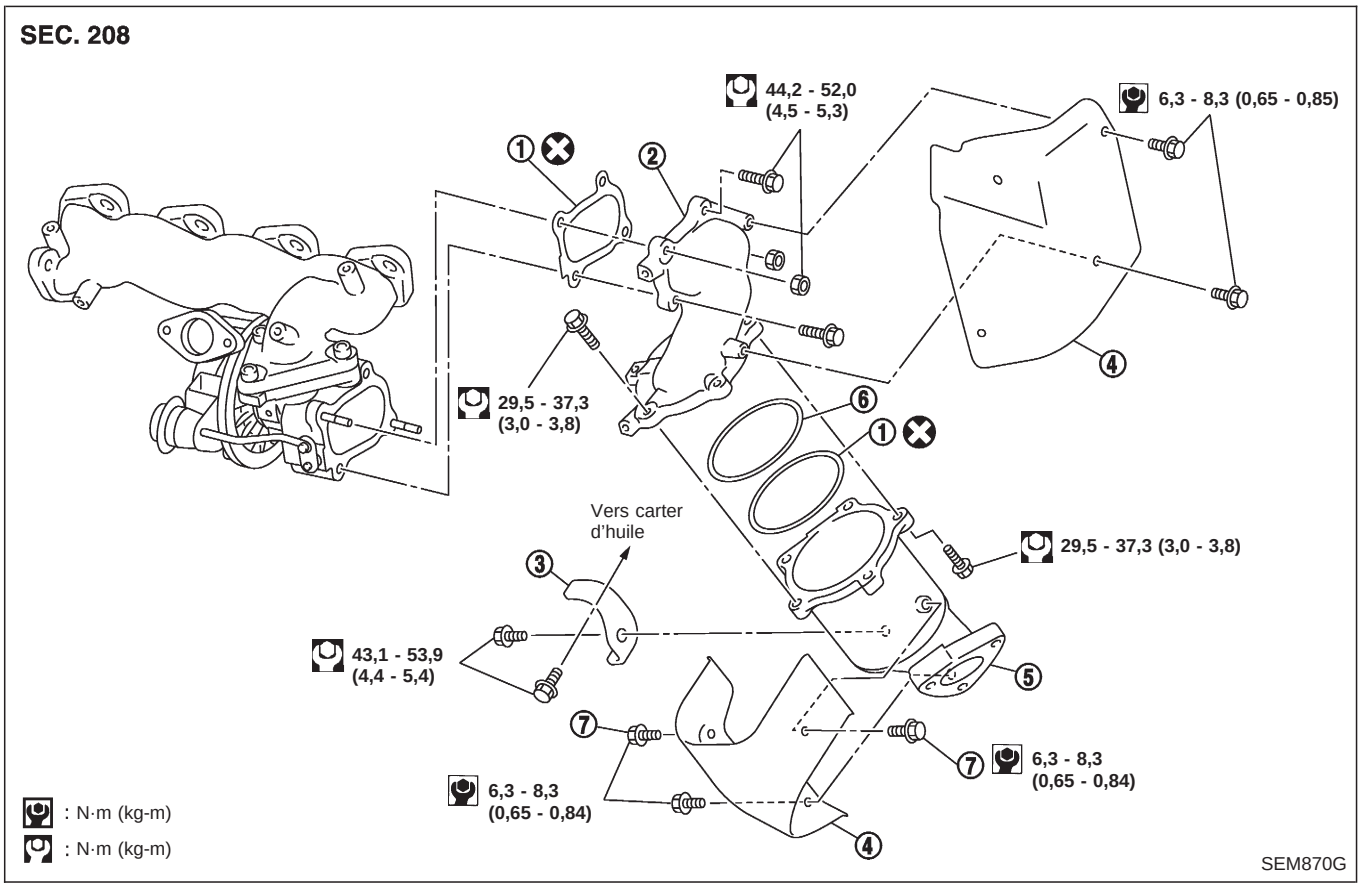

1. Joint plat
2. Sortie des gaz d'échappement
3. Gousset
4. Isolateur
5. Catalyseur
6. Chapeau de joint plat
7. Goupille d'arrêt

TRAVAIL PREPARATIF

Déposer les pièces suivantes :

- Refroidisseur d'air de suralimentation
- Conduit d'air, tuyau d'entrée d'air
- Isolateurs du catalyseur
- Couvercle de collecteur d'échappement
- Tuyau avant de l'échappement (débrancher)
  Se reporter à ''Dépose et repose'' dans la section FE, ''SYSTEME D'ECHAPPEMENT''.
- Tuyau d'entrée d'huile
- Collecteur d'échappement
- Convertisseur du catalyseur et ensemble turbocompresseur

CATALYSEUR

Dépose

PRECAUTION :
Ne pas démonter.

Repose

Reposer deux goupilles d'arrêt sur les deux côtés du catalyseur. Prendre garde de ne pas mélanger les goupilles d'arrêt avec les boulons de fixation de l'isolateur.

Goupille d'arrêt du catalyseur :
Boulon à bride (noir)

Simpo PDF Merge and Split Unregistered Version - http://www.simpopdf.com

Dépose et repose (Suite)

Boulon de fixation de l'isolateur :
Boulon à rondelle (argent ou jaune)

GOUSSET

Repose

Pousser les goussets contre le carter d'huile et le catalyseur et serrer temporairement les boulons de fixation. Ensuite le serrer au couple spécifié.

Simpo PDF Merge and Split Unregistered Version - http://www.simpopdf.com

Dépose et repose

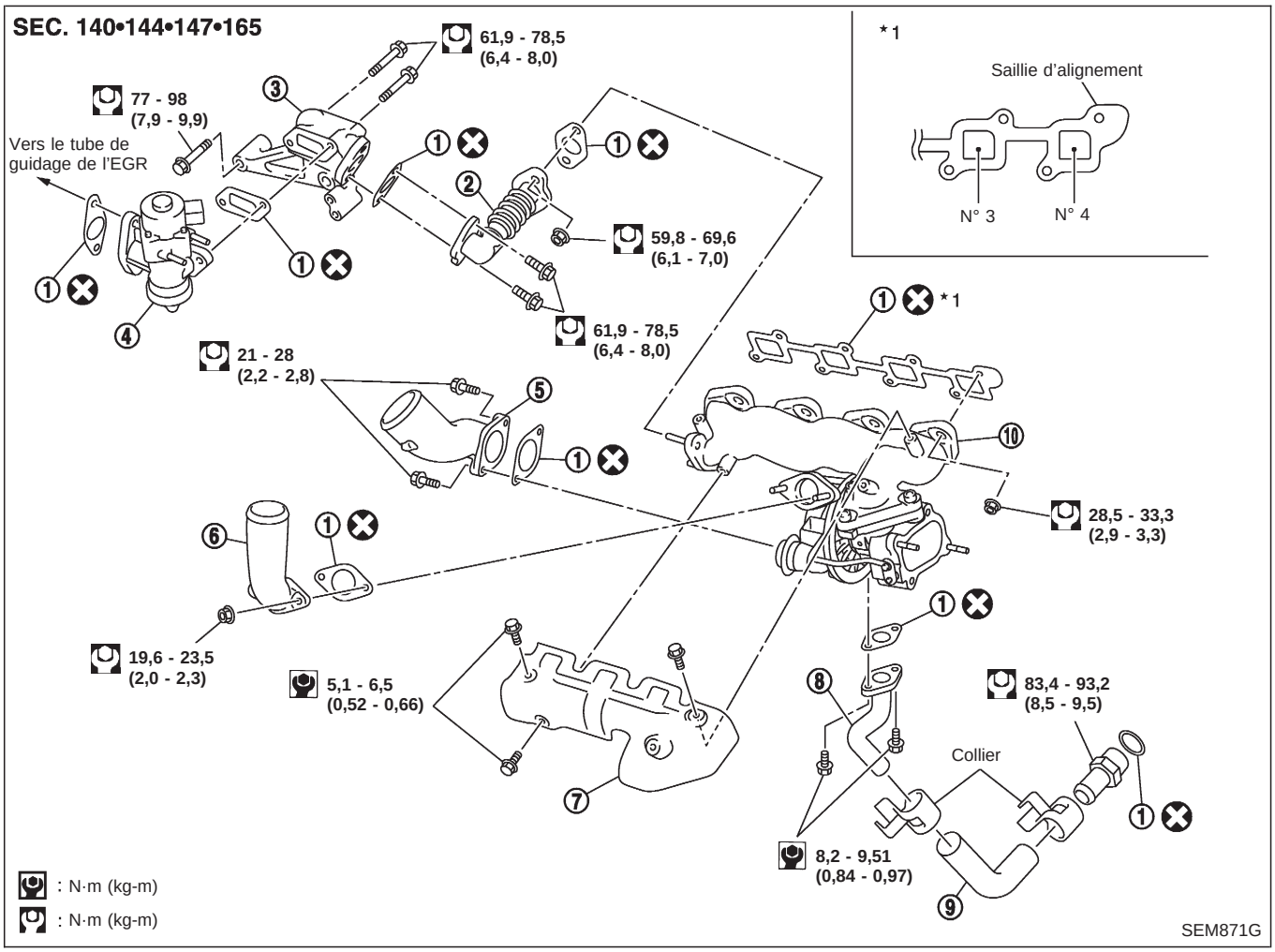

1. Joint plat
2. Tuyau de l'EGR
3. Entretoise de l'EGR
4. Soupape de commande de volume de l'EGR
5. Tuyau d'entrée d'air
6. Entrée d'air
7. Couvercle de collecteur d'échappement
8. Tuyau de sortie d'huile
9. Flexible de retour d'huile
10. Collecteur d'échappement et ensemble turbocompresseur

TRAVAIL PREPARATIF

Déposer les pièces suivantes :

- Refroidisseur d'air de suralimentation
- Conduit d'air, tuyau d'entrée d'air
- Isolateurs du catalyseur
- Couvercle de collecteur d'échappement
- Tuyau avant de l'échappement (débrancher)
  Se reporter à ''Dépose et repose'' dans la section FE, ''SYSTEME D'ECHAPPEMENT''.
- Tuyaux d'entrée et de sortie d'huile
- Couvercle de collecteur d'échappement
- Catalyseur et ensemble turbocompresseur (mettre de côté jusqu'à ce que le collecteur d'échappement soit déposé.)

Simpo PDF Merge and Split Unregistered Version - http://www.simpopdf.com

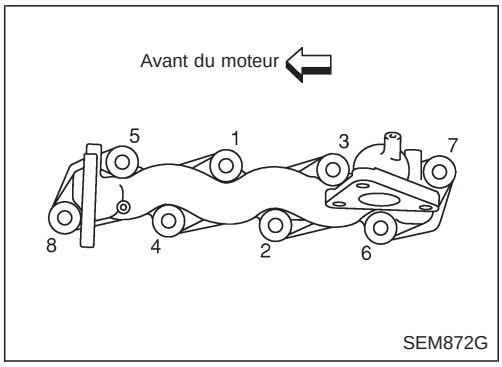

Dépose et repose (Suite)

COLLECTEUR D'ECHAPPEMENT ET TURBOCOMPRESSEUR

Dépose

- Desserrer les écrous de fixation du collecteur d'échappement dans l'ordre inverse spécifié sur l'illustration.
- Après avoir déposé le collecteur d'échappement, extraire l'ensemble du catalyseur et du turbocompresseur.

PRECAUTION :
Prendre garde de ne pas déformer les tuyaux du turbocompresseur pendant l'extraction de l'ensemble.

Repose

- Lorsque le boulon fileté est déposé, le serrer au couple suivant :
  : 12,7 - 16,7 N·m (1,3 - 1,7 kg-m)
- Serrer les écrous de fixation du collecteur d'échappement selon la procédure suivante :

a) Serrer les écrous dans l'ordre spécifié sur l'illustration.
b) Resserrer les écrous 1 à 4.

JOINT PLAT DU COLLECTEUR D'ECHAPPEMENT

Repose

Reposer le joint de manière à ce que les saillies d'alignement se trouvent face à l'orifice n° 4.

Simpo PDF Merge and Split Unregistered Version - http://www.simpopdf.com

Démontage et remontage

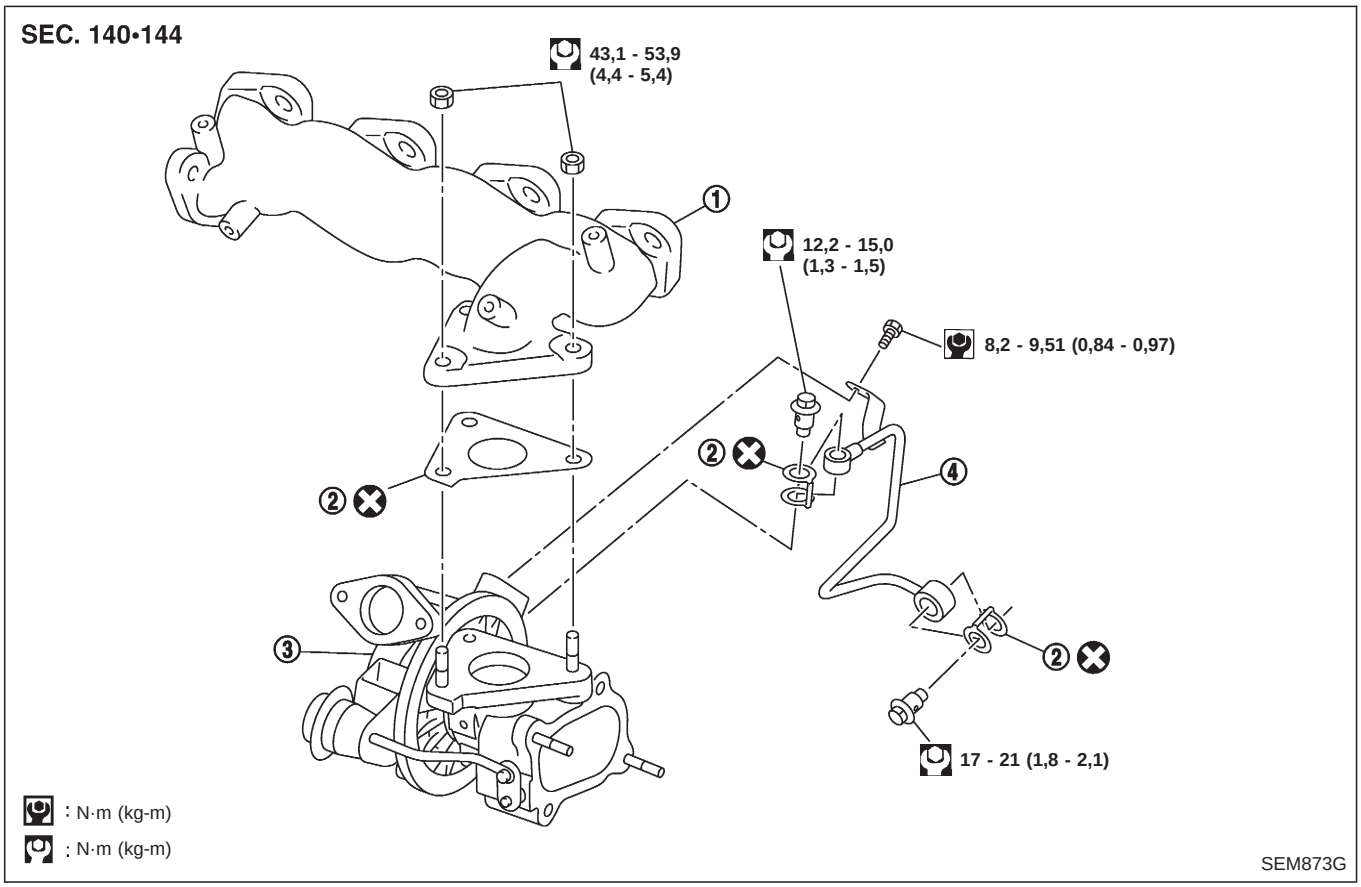

1. Collecteur d'échappement
2. Joint plat
3. Turbocompresseur
4. Tuyau d'entrée d'huile

TURBOCOMPRESSEUR

Démontage

Après avoir appliqué du lubrifiant de montage (Lucen, etc.) sur les écrous de fixation, vérifier que le lubrifiant ait bien pénétré, et ensuite desserrer les écrous pour les déposer.

PRECAUTION :

Ne pas démonter ou régler le corps du turbocompresseur.

Remontage

Lorsque le boulon fileté est déposé, le serrer au couple suivant :

: 24 - 27 N·m (2,4 - 2,8 kg-m)

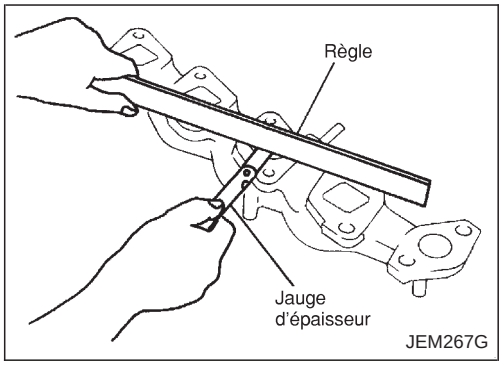

Inspection

Collecteur d'échappement

Contrôler la déformation sur la surface de montage dans les six directions en utilisant une règle et une jauge d'épaisseur.

Limite : 0,3 mm

Simpo PDF Merge and Split Unregistered Version - http://www.simpopdf.com

Inspection (Suite)

TURBOCOMPRESSEUR

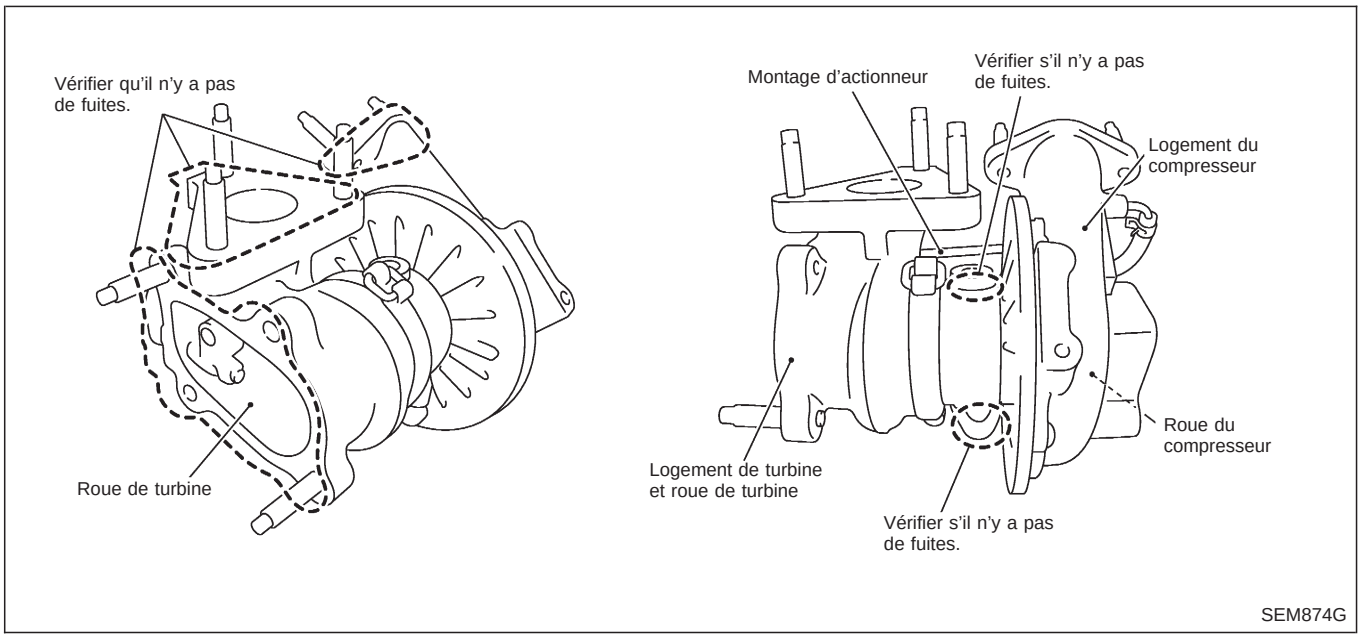

PRECAUTION :

Lorsque la roue du compresseur, la roue de la turbine ou l'arbre du rotor est endommagé, enlever tous les fragments et corps étrangers qui sont restés dans les passages suivants afin d'empêcher une défaillance secondaire :

Côté aspiration : Entre le turbocompresseur et le filtre à air

Côté échappement : Entre le turbocompresseur et le catalyseur

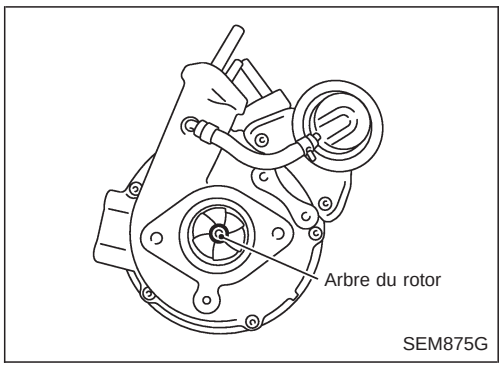

Arbre du rotor

- Vérifier si l'arbre du rotor tourne facilement sans aucune résistance lorsque vous le faites tourner du bout des doigts.
- Vérifier que l'arbre du rotor n'est pas desserré lorsqu'il se déplace verticalement ou horizontalement.
- Vérifier que l'arbre du rotor n'interfère pas avec le logement du compresseur.

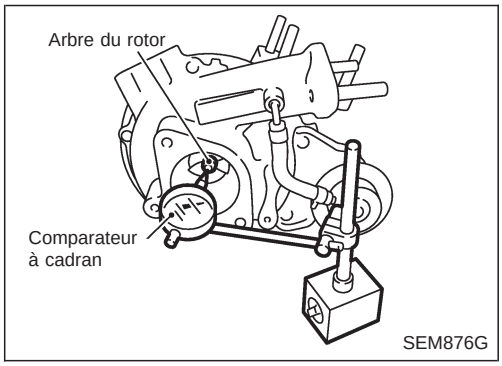

Jeu axial de l'arbre du rotor

Placer un comparateur à cadran à l'extrémité de l'arbre du rotor dans la direction axiale afin de mesurer le jeu axial.

- Vérifier que l'arbre du rotor n'interfère pas avec le logement du compresseur.

Simpo PDF Merge and Split Unregistered Version - http://www.simpopdf.com

Inspection (Suite)

Roue de turbine

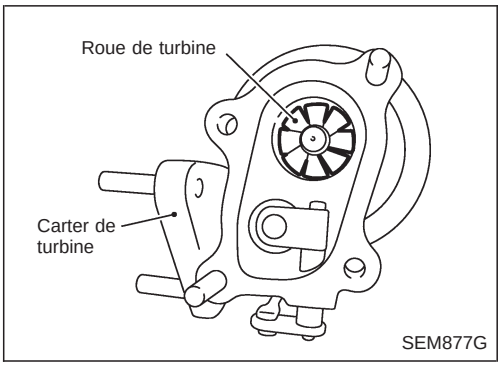

- Contrôler qu'il n'y a pas d'adhésion d'huile.
- Contrôler qu'il n'y a pas d'accumulation de carbone.
- Vérifier si les lames de la roue de la turbine ne sont pas courbées ou cassées.
- Vérifier si la roue de la turbine n'interfère pas avec le logement de la turbine.

Roue du compresseur

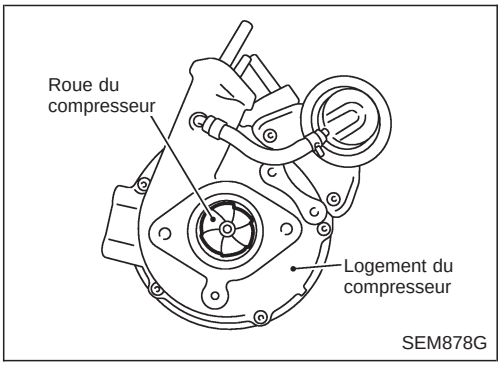

- Contrôler qu'il n'y a pas d'adhésion d'huile à l'intérieur du conduit d'air.
- Vérifier si la roue du compresseur n'interfère pas avec le logement du compresseur.
- Vérifier si la roue n'est pas voilée ou cassée.

Actionneur de la soupape Wastegate

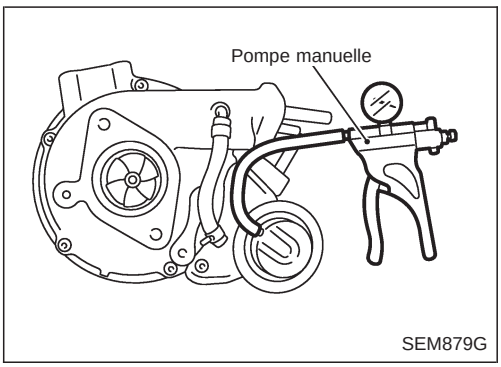

- Connecter la pompe manuelle à l'actionneur, et contrôler que la tige se déplace sans difficulté en conformité avec la pression suivante.
- Pression à appliquer sur l'actionneur afin de déplacer l'extrémité de la tige comme suit :

  Standard (Quantité de pression/course de la tige)

  143,7 - 152,9 kPa
  (1 437 - 1 529 mbar, 1 077,8 - 1 146,8 mmHg)
  161,4 - 174,8 kPa
  (1 614 - 1 748 mbar, 1 210,5 - 1 311,0 mmHg)

Simpo PDF Merge and Split Unregistered Version - http://www.simpopdf.com

Inspection (Suite)

Diagnostic des défauts du turbochargeur

Contrôle préliminaire :

- Vérifier si le niveau d'huile du moteur est entre le MIN et MAX de la jauge. (Lorsque la quantité d'huile du moteur est supérieure au maximum (MAX), l'huile coule dans le conduit d'entrée via le passage de gaz de carter, et la panne du turbocompresseur est mal interprétée.)
- Demander au client si il/elle fait toujours tourner le véhicule au ralenti pour refroidir l'huile après la conduite.
- Remplacer l'ensemble du turbocompresseur lorsque un dysfonctionnement est trouvé après avoir inspecté les unités spécifiées dans le tableau ci-dessous.
- Si aucun défaut n'est trouvé après inspections des unités, estimer que le corps du turbocompresseur ne présente aucune panne. Contrôler à nouveau les autres pièces.

Elément d'inspection	Résultat de l'inspection	Symptôme (lorsque chaque élément d'inspection s'accorde à chaque résultat d'inspection)			
		Fuite d'huile	Fumée	Bruit	Courant insuffisant/ panne d'accélération
Roue de turbine	Fuites d'huile.	△	◎	△	△
	Accumulation de carbone.	△	◎	○	○
	Friction avec le logement.	△	○	◎	○
	Les ailettes sont tordues ou cassées.			◎	◎
Roue du compresseur	L'intérieur du conduit d'air est fortement contaminé par de l'huile.	○	○		
	Friction avec le logement.	△	○	◎	○
	Les ailettes sont tordues ou cassées.			◎	◎
Après vérification de la turbine et du compresseur, inspecter le jeu axial de l'arbre du rotor.	Il y a une résistance lorsque l'arbre du rotor est tourné du bout des doigts.		△	△	○
	L'arbre du rotor résiste parfois à tourner du bout des doigts.				◎
	Il y a trop de jeu dans le palier.	△	△	○	△
Orifice de retour d'huile	Le carbone ou la boue s'est accumulé(e) dans le trou d'huile usagée.	△	◎	△	△

◎: Grande possibilité
○ : Moyenne possibilité
△ : Faible possibilité

Simpo PDF Merge and Split Unregistered Version - http://www.simpopdf.com

Dépose et repose

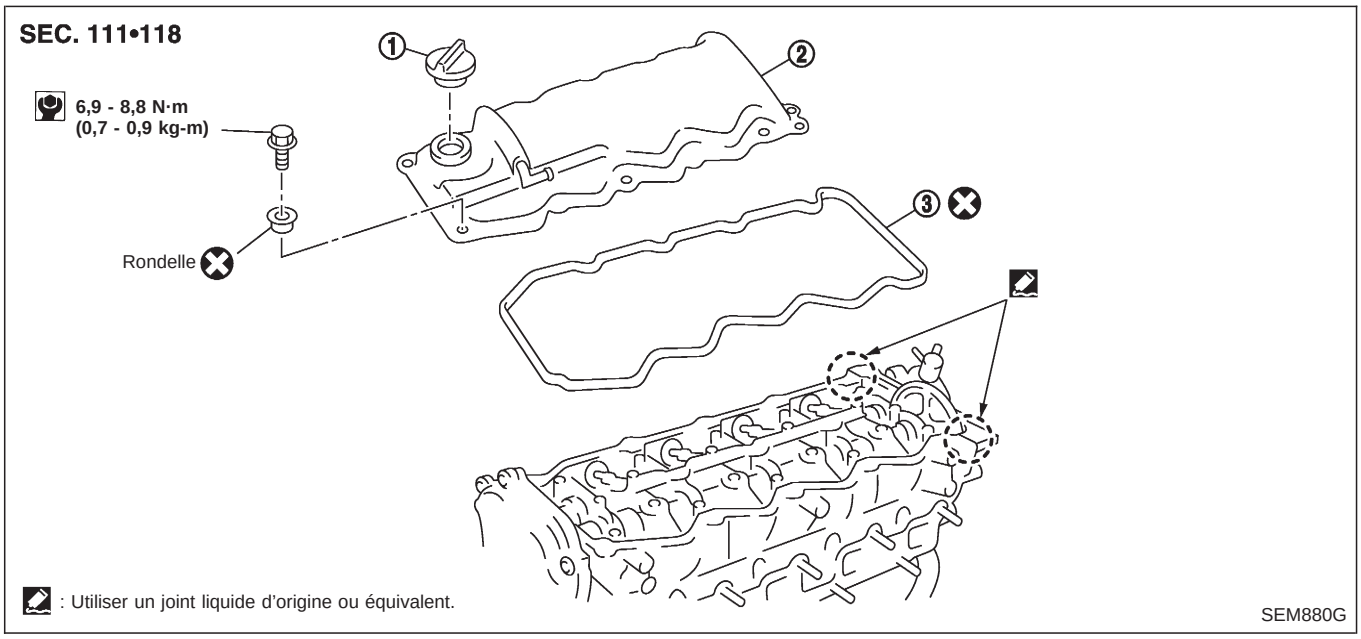

1. Bouchon de remplissage d'huile
2. Cache-culbuteurs
3. Joint plat

TRAVAIL PREPARATIF

Déposer les pièces du moteur suivantes.
- Refroidisseur d'air de suralimentation
- Support du refroidisseur d'air de suralimentation

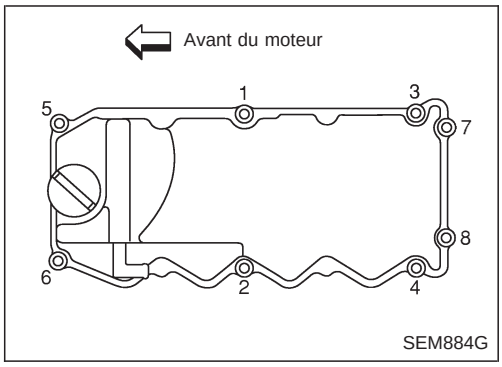

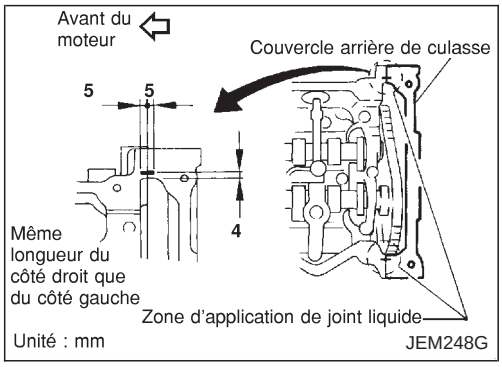

CACHE-CULBUTEURS

Dépose

Desserrer les boulons dans l'ordre inverse de celui indiqué sur l'illustration et les déposer.

Repose

- Serrer les boulons selon l'ordre numérique indiqué sur l'illustration.
- Resserrer au même couple et dans le même ordre que celui ci-dessus.

- Appliquer 3,0 mm de dia. de joint liquide spécifié (se reporter à EM-3003, ''Procédure d'application du joint liquide''.) aux endroits indiqués sur l'illustration.
- Reposer dans l'ordre inverse de la dépose.

Composants

SEC. 111•210•220•253

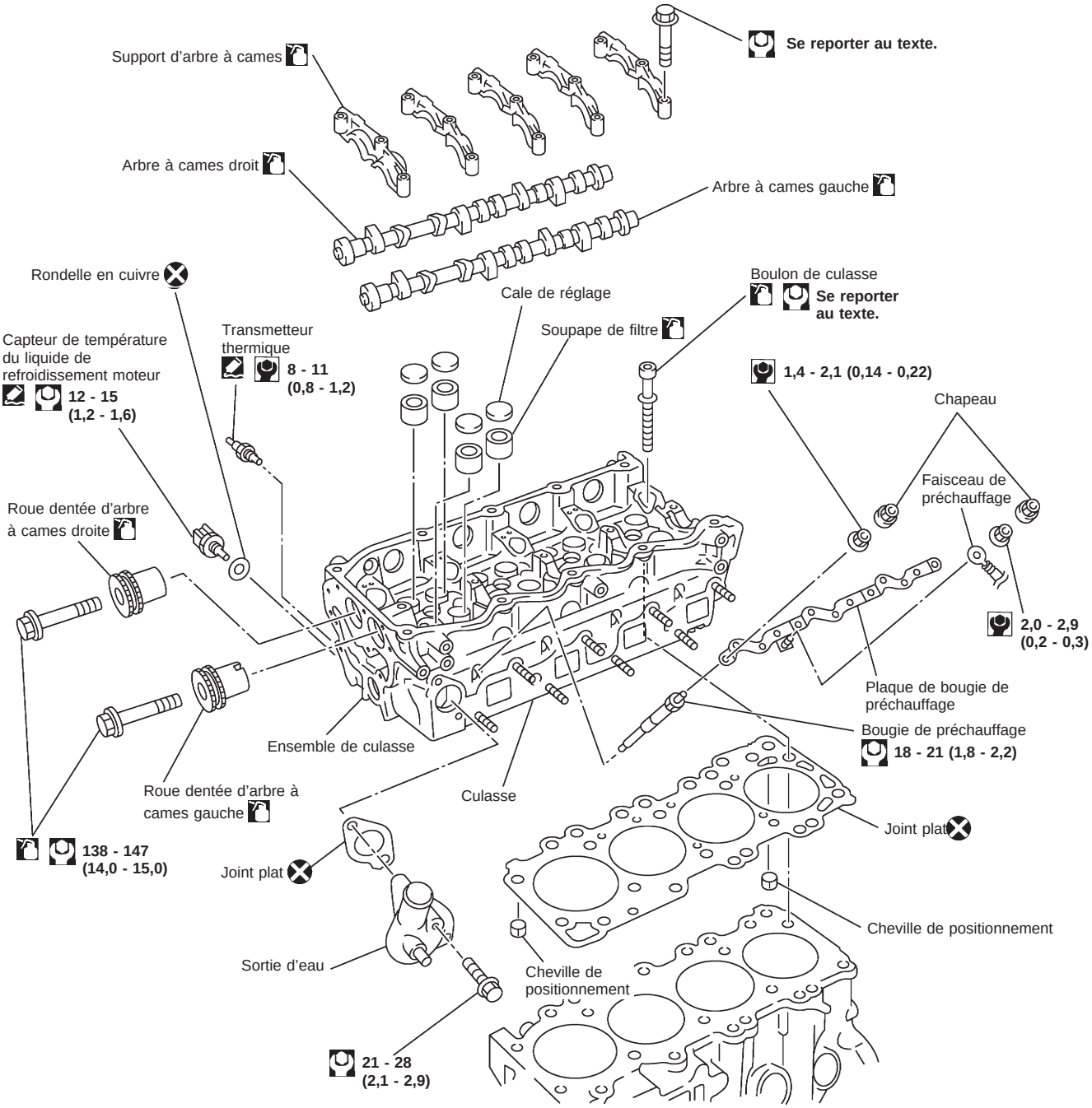

★ : Sélectionner avec l'épaisseur adéquate.

: Lubrifier avec de l'huile de moteur neuve.

: Utiliser du joint liquide d'origine ou équivalent.

: N•m (kg-m)

: N•m (kg-m)

SEM887G

Simpo PDF Merge and Split Unregistered Version - http://www.simpopdf.com

Composants (Suite)

PRECAUTION :

- **Lors de la repose des arbres à cames, tendeurs de chaîne, joints d'huile, ou d'autres pièces coulissantes, lubrifier les surfaces de contact avec de l'huile moteur neuve.**
- **Appliquer de l'huile moteur neuve sur les parties filetées et les surfaces d'appui lors de la repose de la culasse, de la roue dentée d'arbre à cames, de la poulie de vilebrequin et du support de l'arbre à cames.**
- **Attacher des étiquettes sur les poussoirs de soupapes afin de ne pas les mélanger par la suite.**

Dépose

1. Vidanger le liquide de refroidissement. Se reporter à la section LC, ''Remplacement du liquide de refroidissement du moteur''.
2. Déposer le collecteur d'échappement, Turbocompresseur. Se reporter à EM-3040, ''Dépose et repose''.
3. Déposer le collecteur d'admission. Se reporter à EM-3036, ''Dépose et repose''.

- **Appliquer de la peinture sur les roues dentées d'arbre à cames pour l'alignement pendant la repose.**

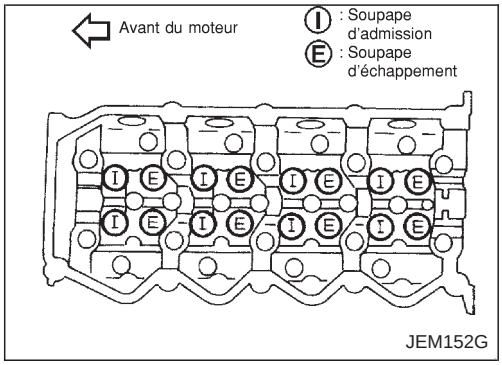

ARBRE A CAMES

1. Déposer les pièces suivantes en se référant aux parties appropriées dans cette section.

- Couvercle du refroidisseur d'air de suralimentation
- Refroidisseur d'air de suralimentation et support du refroidisseur de l'air de suralimentation
- Tube de guidage de l'EGR et l'entretoise de l'EGR
- Cache-culbuteurs
- Tube de trop-plein
- Tube d'injection
- Joint à huile de l'injecteur
- Ensemble d'injecteur à haute pression
- Chaîne de distribution secondaire et pièces associées

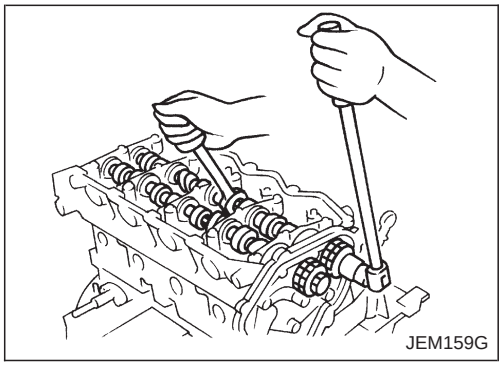

2. Déposer les roues dentées d'arbre à cames.

- Tout en fixant la partie hexagonale de l'arbre à cames avec une clé ayant une largeur de 21 mm entre les plateaux de parement, desserrer le boulon de la roue dentée d'arbre à cames.

Simpo PDF Merge and Split Unregistered Version - http://www.simpopdf.com

Dépose (Suite)

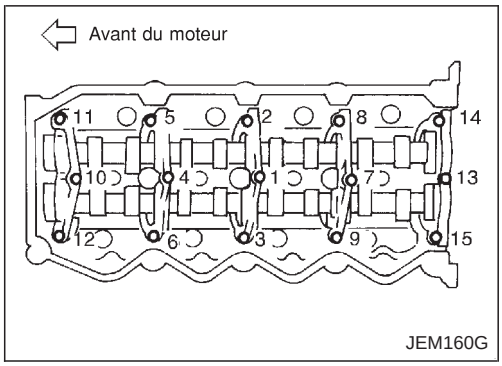

3. Déposer les arbres à cames.
- Desserrer les boulons du support en plusieurs étapes dans l'ordre inverse de celui indiqué sur l'illustration et les déposer.
4. Enlever les cales de réglage et les poussoirs de soupapes.
- Confirmer les bons emplacements de chaque pièce déposée. Les garder soigneusement afin d'éviter qu'elles ne se mélangent.
- **Pour la repose, s'assurer de faire des repères sur le support de l'arbre à cames avant la dépose.**

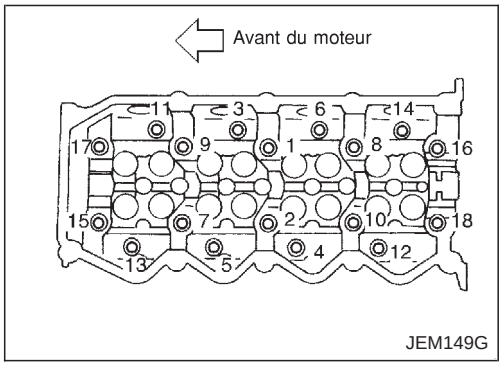

CULASSE

- Desserrer les boulons dans l'ordre inverse de celui indiqué sur l'illustration et les déposer.
- **Prendre garde de ne pas endommager les têtes des bougies de préchauffage qui s'avancent hors de la surface inférieure de la culasse. Pour ne pas endommager les bougies de préchauffage, soit les déposer auparavant, soit soutenir la culasse avec des blocs de bois pour créer un espace en dessous de la surface inférieure.**

Démontage

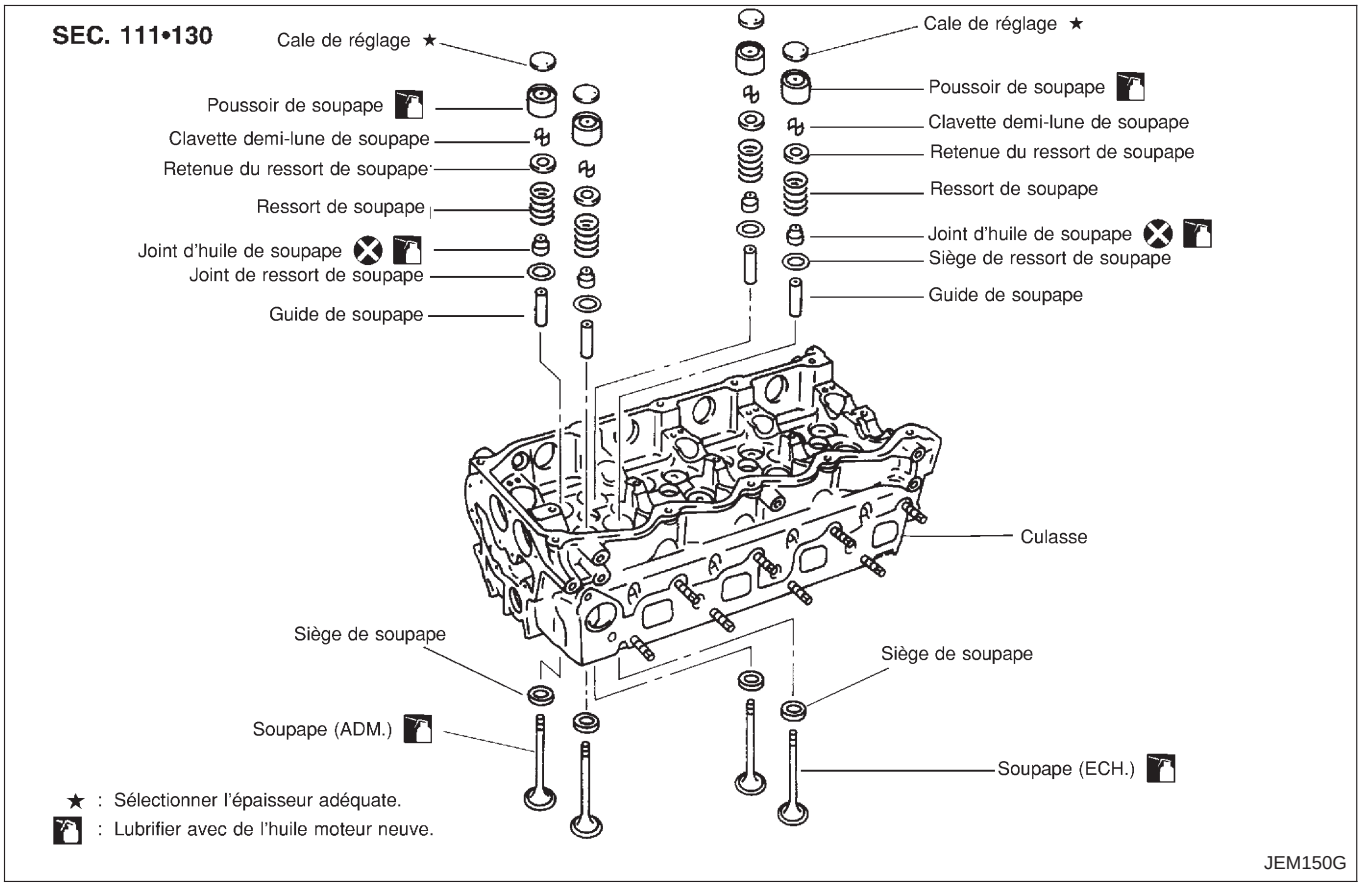

1. Enlever les cales de réglage et les poussoirs de soupapes. Confirmer les bons emplacements de chaque pièce déposée. Les mettre de côté pour éviter de les mélanger.

Simpo PDF Merge and Split Unregistered Version - http://www.simpopdf.com

Démontage (Suite)

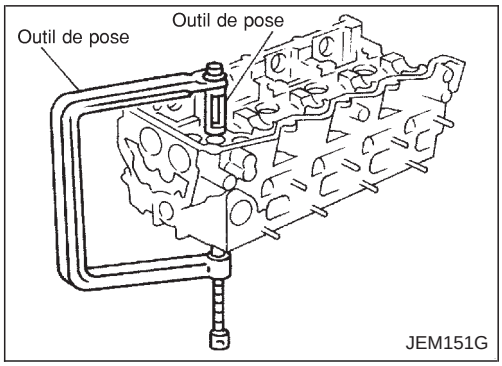

2. Déposer les clavettes de soupape.
- Compresser le ressort de soupape avec un compresseur de ressort de soupape, et déposer la clavette de soupape avec une main aimantée.
3. Enlever la coupelle du ressort de soupape et les ressorts de soupape.
4. Pousser la queue de la soupape vers la chambre de combustion, et déposer la soupape.
- Avant de déposer les soupapes, vérifier le jeu du guide de soupape. Se reporter à EM-3053, ‘‘JEU DU GUIDE DE SOUPAPE’’.
- Confirmer les bons emplacements de chaque soupape. Les ranger soigneusement afin d’éviter qu’elles ne se mélangent.

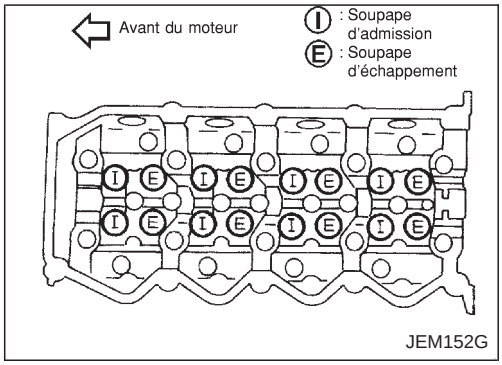

- Pour la disposition des soupapes d’admission et d’échappement, se reporter à l’illustration.

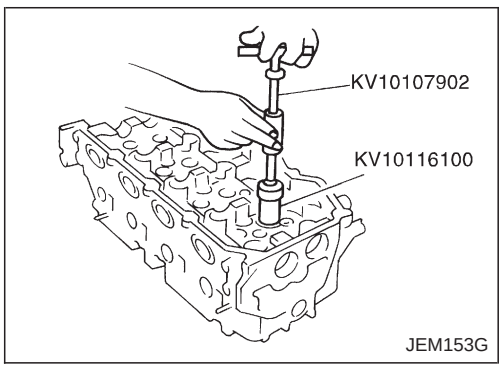

5. Déposer les joints d’huile de soupape.
- Utiliser un extracteur de joint d’huile de soupape (SST) pour la dépose.
6. Enlever les sièges du ressort de soupape.
7. Lors de la dépose des sièges de soupape, vérifier le contact du siège du ressort. Se reporter à EM-3054.
8. Avant la dépose des guides de soupape, vérifier le jeu du guide de soupape. Se reporter à EM-3053, ‘‘JEU DU GUIDE DE SOUPAPE’’.
9. Déposer les bougies de préchauffage.
- **Pour éviter tout endommagement, les bougies de préchauffage devrait être déposées uniquement si nécessaire.**
- **Manipuler la soupape avec précaution pour éviter les chocs. (Si la chute est d’environ 100 mm ou plus haute, toujours la remplacer par une neuve.)**

Simpo PDF Merge and Split Unregistered Version - http://www.simpopdf.com

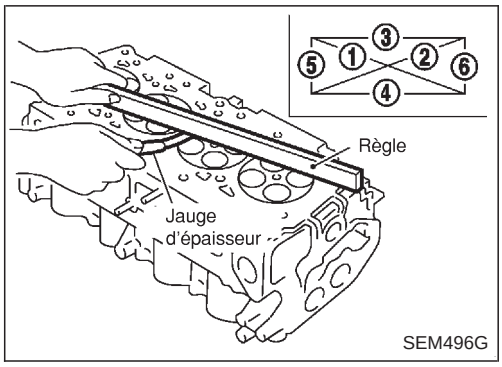

Inspection

DEFORMATION DE LA CULASSE

Nettoyer la surface de la culasse. Utiliser une règle et une jauge d'épaisseur fiables pour contrôler l'égalité de la surface de la culasse. Vérifier les 6 endroits indiqués sur l'illustration.

Egalité de la surface de la culasse : Limite 0,1 mm

Si au delà de la limite spécifiée, la rectifier ou la remplacer.

La limite de la rectification de la culasse est déterminée par la rectification du bloc-cylindre.

Limite de rectification :

L'etendue de la rectification de la culasse est ''A''.
L'etendue de la rectification du bloc-cylindre est ''B''.

La limite maximum est : A + B = 0,07 mm

Après rectification de la culasse, vérifier à la main que l'arbre à cames tourne librement. S'il y a résistance, la culasse doit être remplacée.

Hauteur nominale de la culasse :
153,9 - 154,1 mm

VERIFICATION VISUELLE DE L'ARBRE DE CAMES

Vérifier que l'arbre à cames n'est pas éraflé, grippé ou rayé.

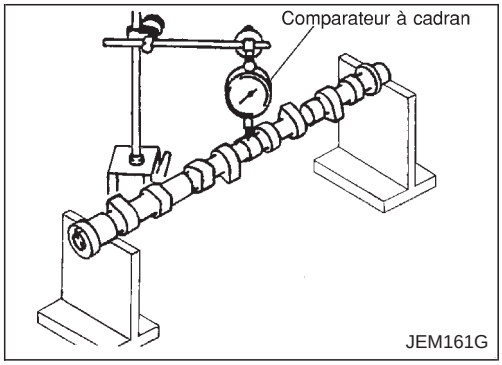

VOILE DE L'ARBRE A CAMES

1. Placer des blocs en V sur un établi et le support de l'arbre à cames aux tourillons n° 1 et n° 5.
2. Placer la jauge à cadran de manière perpendiculaire au tourillon de l'arbre à cames n° 3.
3. Tourner l'arbre à cames à la main dans une direction et mesurer la valeur du voile sur la jauge à cadran.
   Voile (indication totale du comparateur) : Limite 0,02 mm
4. Si la valeur excède la limite, remplacer l'arbre à cames.

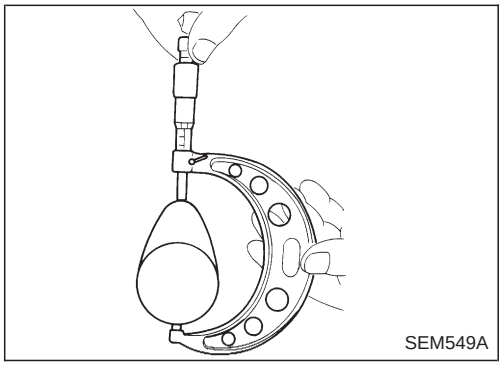

HAUTEUR DE CAMES DE L'ARBRE A CAMES

1. Mesurer la hauteur de cames de l'arbre à cames.
   Hauteur standard des cames :
   Admission
   39,505 - 39,695 mm
   Echappement
   39,905 - 40,095 mm
   Limite d'usure des cames:
   0,15mm
2. Si l'usure dépasse la limite, remplacer l'arbre à cames.

Simpo PDF Merge and Split Unregistered Version - http://www.simpopdf.com

Inspection (Suite)

JEU DU TOURILLON D'ARBRE A CAMES

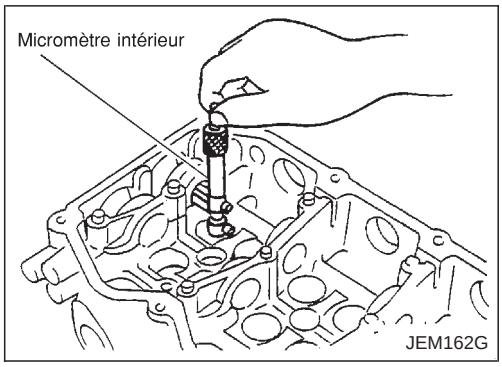

1. Reposer le support d'arbre à cames et serrer les boulons au couple spécifié.
2. Mesurer le diamètre interne du roulement d'arbre à cames.
   Diamètre interne standard :
   N° 1 : 30,500 - 30,521 mm
   N° 2, 3, 4, 5 : 24,000 - 24,021 mm

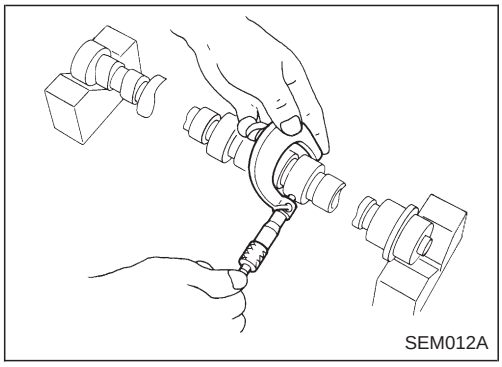

3. Mesurer le diamètre externe du tourillon d'arbre à cames.
   Diamètre externe standard :
   N° 1 : 30,435 - 30,455 mm
   N° 2, 3, 4, 5 : 23,935 - 23,955 mm
4. Si le jeu dépasse la limite, remplacer l'arbre de cames et/ou la culasse.
   Jeu du tourillon d'arbre à cames :
   Standard
   N° 1 - 5 : 0,045 - 0,086 mm
   Limite
   0,045 - 0,086 mm

JEU AXIAL DE L'ARBRE A CAMES

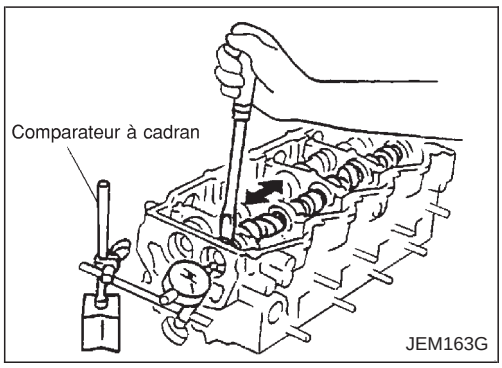

1. Reposer l'arbre à cames sur la culasse.
2. Mesurer le jeu axial de l'arbre à cames.
   Jeu axial de l'arbre à cames :
   Standard
   0,070 - 0,148 mm
   Limite
   0,24 mm

- Si la valeur dépasse la limite, remplacer l'arbre à cames et mesurer à nouveau.
- Si la mesure excède une nouvelle fois la limite, remplacer la culasse.

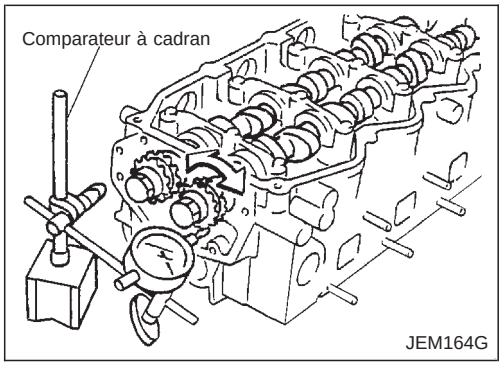

VOILE DE ROUE DENTEE D'ARBRE A CAMES

1. Reposer la roue dentée sur l'arbre à cames.
2. Mesurer le voile de la roue dentée d'arbre à cames.
   Voile (indication totale du comparateur) : Moins de 0,15 mm
3. Si la valeur excède la limite, remplacer la roue dentée d'arbre à cames.

Simpo PDF Merge and Split Unregistered Version - http://www.simpopdf.com

Inspection (Suite)

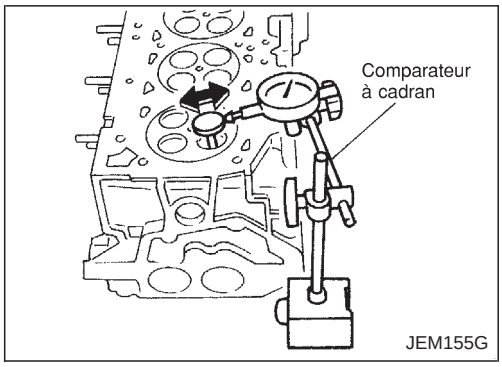

JEU DU GUIDE DE SOUPAPE

1. Vérifier si le diamètre de la queue de soupape est dans la plage spécifiée.
2. Pousser la soupape d'environ 25 mm vers la chambre de combustion. Faire balancer la soupape dans la direction de la jauge à cadran pour mesure le voile.

- Cette inspection doit être effectuée avant de déposer les guides de soupape.
- La moitié de la mesure du voile sur la jauge à cadran représente le jeu du guide de soupape.

Standard :
Admission 0,020 - 0,053 mm
Echappement 0,040 - 0,073 mm

3. Si la valeur dépasse la limite, vérifier le jeu de guide de soupape à la soupape.

a. Mesurer le diamètre de la queue de soupape et le diamètre interne du guide de soupape.
b. Vérifier que le jeu est dans les spécifications.

Limite du jeu du guide de soupape à la soupape :
Admission 0,08 mm
Echappement 0,1 mm

c. Si la valeur dépasse la limite, remplacer la valve ou le guide de soupape.

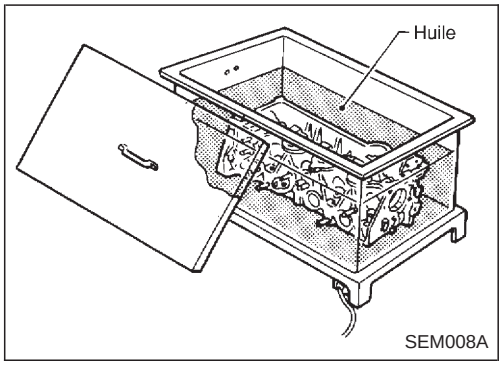

REMPLACEMENT DU GUIDE DE SOUPAPE

- Lorsqu'un guide de soupape est déposé, le remplacer avec un guide de soupape surdimensionné (0,2 mm).

1. Pour déposer le guide de la soupape, chauffer la culasse de 110 à 130°C en la faisant tremper dans de l'huile chauffée.

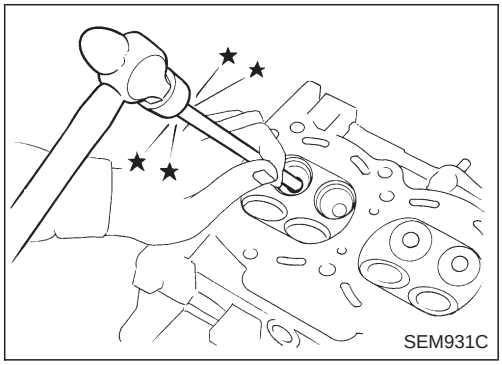

2. Chasser le guide de soupape à la presse [à une pression de 20 kN (2 tonnes)] ou avec un marteau et un outil approprié.

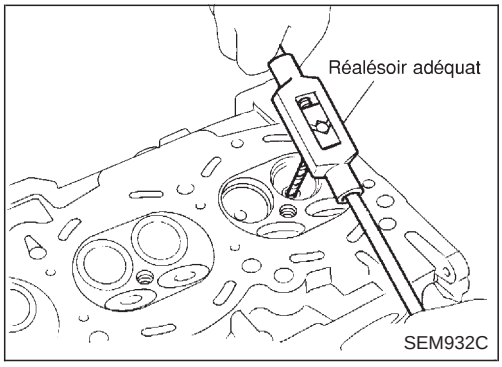

3. Aléser l'orifice du guide de soupape de la culasse.

Diamètre de l'orifice de guide de soupape (pour les pièces détachées) :
10,175 - 10,196 mm

Simpo PDF Merge and Split Unregistered Version - http://www.simpopdf.com

Inspection (Suite)

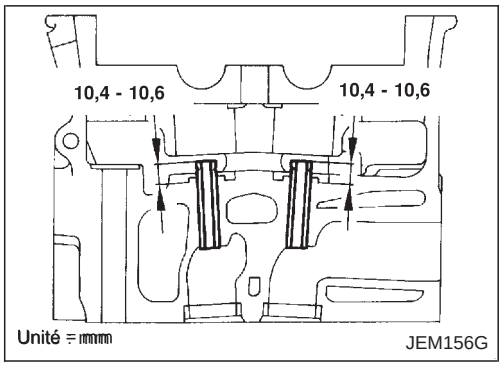

4. Chauffer la culasse de 110 à 130°C et pousser le guide de soupape de service dans la culasse.
   Saillie "L" :
   10,4 - 10,6 mm
5. Aléser le guide de soupape.
   Dimensions de finition:
   6,000 - 6,018 mm

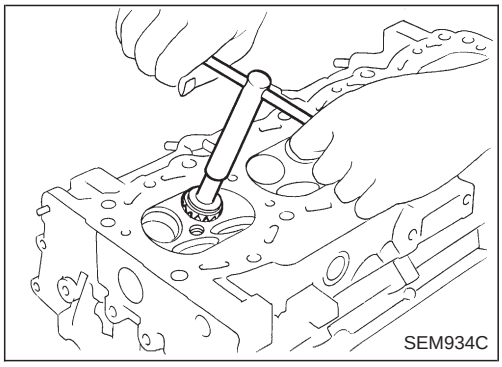

SIEGES DE SOUPAPE

- Avant de commencer cette vérification, confirmer que la taille de la soupape et des guides de soupapes est conforme aux spécifications.
- Appliquer de la peinture rouge sur les surfaces de contact du siège des soupapes et sur les surfaces des soupapes afin d'examiner les conditions des surfaces de contact.
- Vérifier si la peinture sur les surfaces de contact est uniforme sur toute la circonférence.
- Si des indications anormales apparaissent, meuler la soupape et contrôler à nouveau le contact. Si des indications anormales persistent encore, remplacer le siège de soupape.

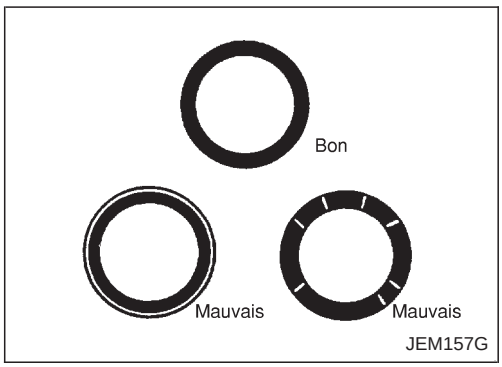

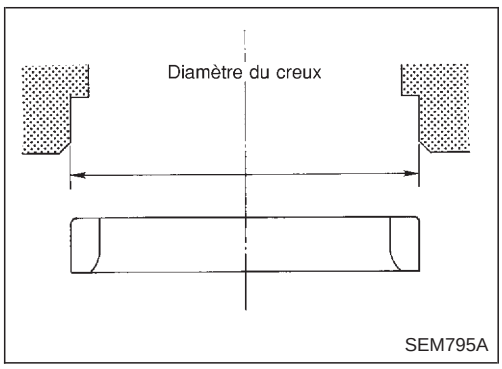

REMPLACER LE SIEGE DE SOUPAPE PAR DES PIECES DETACHEES

1. Aléser l'ancien siège jusqu'à ce qu'il tombe. Ne pas descendre au-delà du fond du creux de la culasse. Pour cela, régler la butée de profondeur de l'outil.
2. Aléser le diamètre du creux de la culasse pour l'entretien du siège de soupape.
   Surdimensionné (0,5 mm) :
   Admission 30,500 - 30,516 mm
   Echappement 29,500 - 29,516 mm
   Veiller à aléser en cercles concentriques par rapport au centre du guide de soupape.

Cela permettra au siège de soupape de s'adapter correctement.

Simpo PDF Merge and Split Unregistered Version - http://www.simpopdf.com

Inspection (Suite)

3. Chauffer la culasse de 110 à 120°C en la faisant tremper dans de l'huile chauffée.
4. Faire refroidir suffisamment le siège de soupape avec de la neige carbonique. Forcer le siège de soupape à rentrer dans la culasse.

AVERTISSEMENT :

Ne pas toucher le siège de soupape refroidi à mains nues.

5. Tailler ou fraiser le siège de soupape en utilisant un outil adéquat aux dimensions comme indiqué dans le SDS (EM-3095).

PRECAUTION :

Utiliser la fraise pour siège de soupape correctement. En maintenant fermement le manche de la fraise avec les deux mains, pousser la fraise vers le bas sur la circonférence totale de la surface de contact et exécuter la découpe en une seule fois. Une mauvaise pression ou une découpe en plusieurs fois peut résulter en une surface irrégulière du siège de surface.

6. Après la découpe, roder les sièges de soupape avec un composant abrasif.
7. Vérifier la condition de l'assise de la soupape. Se reporter à EM-3054, ''Sièges de soupape''.

Admission

Unité : mm

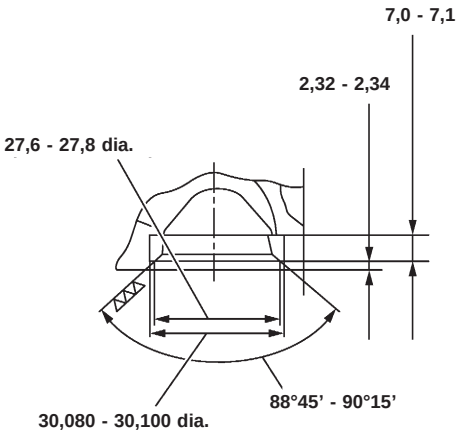

SEM888G

Echappement

Unité : mm

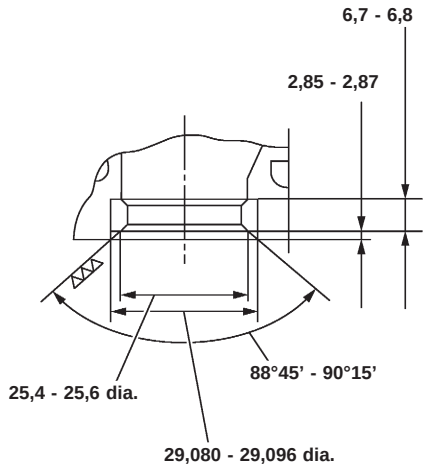

SEM889G

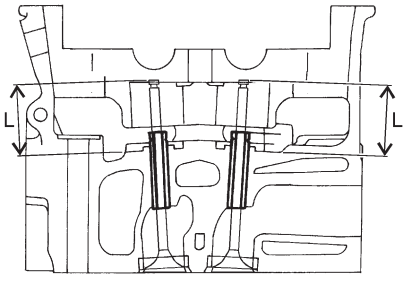

JEM253G

8. Utiliser une jauge de profondeur pour mesurer la distance entre la surface de montage du siège du ressort de la culasse et l'extrémité de la queue de soupape. Si la distance est plus courte que spécifiée, répéter l'étape 5 ci-dessus pour la régler. Si elle est plus longue, remplacer le siège de soupape par une pièce neuve.

Limite de rectification du siège de soupape ''L'' :

Admission 36,53 - 36,98 mm

Echappement 36,53 - 37,01 mm

Simpo PDF Merge and Split Unregistered Version - http://www.simpopdf.com

Inspection (Suite)

DIMENSIONS DE LA SOUPAPE

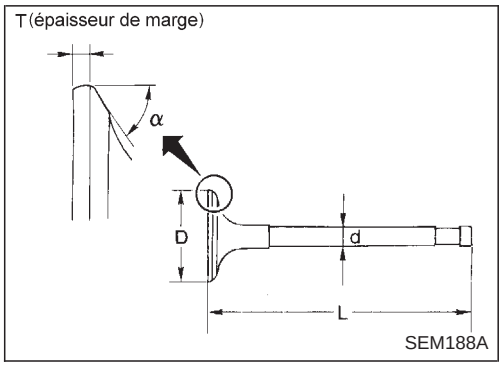

Vérifier les dimensions de chaque soupape. Pour les dimensions, consulter les SDS. Lorsque l'épaisseur de marge de la tête de soupape est usée au-delà de 0,5 mm, remplacer la soupape.

La tolérance de rectification de la queue de soupape est de 0,2 mm maximum.

RESSORT DE SOUPAPE

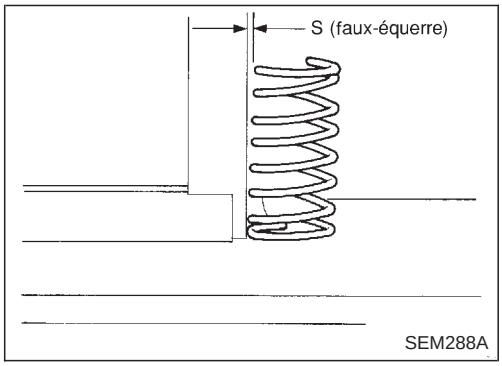

Equerrage

1. Mesurer la dimension ''S''.
   Faux-équerre ''S'' :
   Limite 1,9 mm
2. Si la valeur excède la limite, remplacer le ressort.

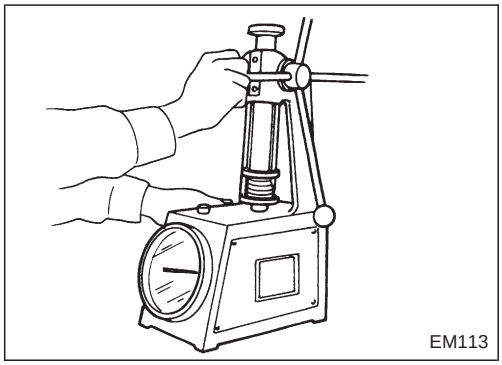

Pression

Vérifier la pression du ressort de soupape à la hauteur de ressort spécifiée.

Standard :
Hauteur libre 43,7 mm
Hauteur de repose 32,82 mm
Charge de repose 184 - 208 N (18,77 - 21,22 kg)
Hauteur pendant l'ouverture de la soupape 24,82 mm
Charge avec ouverture de la soupape 320 - 360 N (32,65 - 36,73 kg)

Si la valeur excède le standard, remplacer le ressort.

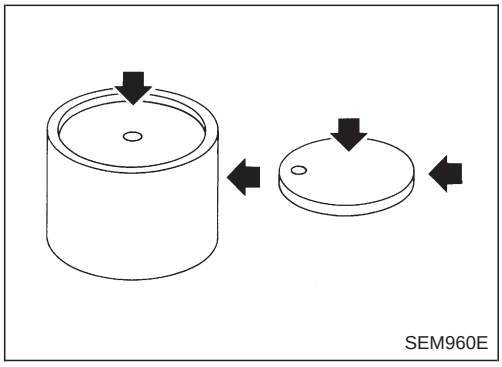

POUSSOIR DE SOUPAPE

1. Vérifier si les surfaces de contact et de glissement ne sont pas excessivement usées ou éraflées.

Simpo PDF Merge and Split Unregistered Version - http://www.simpopdf.com

Inspection (Suite)

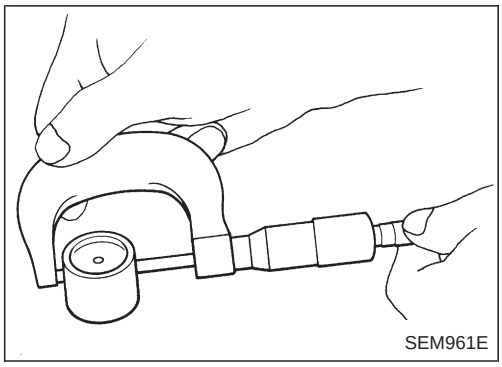
SEM961E

2. Vérifier le diamètre du poussoir de soupape et de l'alésage du guide de poussoir de soupape.

Diamètre externe du poussoir de soupape :
29,960 - 29,975 mm

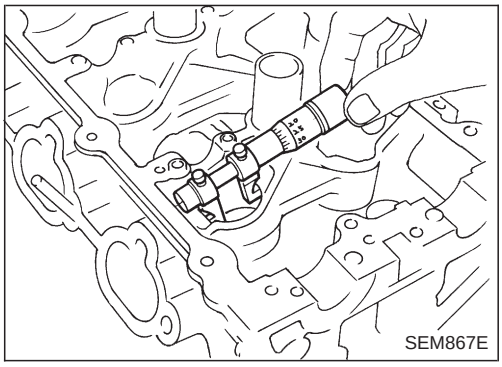
SEM867E

Diamètre de l'alésage du guide de poussoir :
30,000 - 30,021 mm
Jeu entre poussoir et guide de poussoir :
Standard 0,025 - 0,061 mm

- Si la valeur est en dehors des limites, remplacer le poussoir de soupape et/ou la culasse en se reportant aux valeurs spécifiées pour le diamètre externe et le diamètre de l'alésage.

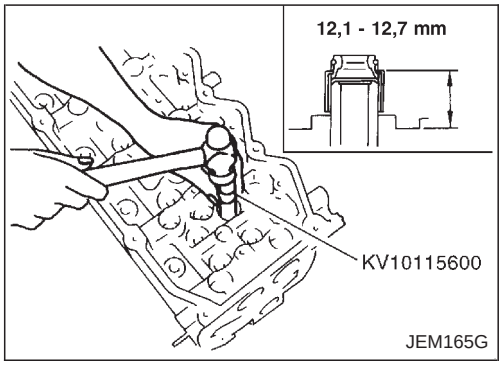

JEM165G

Remontage

1. Reposer le joint d'huile de soupape.

- Utiliser le chassoir de joint d'huile de soupape (SST) pour reposer et obtenir les dimensions indiquées sur l'illustration. La dimension sur l'illustration correspond à la dimension avant de reposer le siège du ressort de soupape.
- Des pièces différentes doivent être utilisées en fonction de la disposition du joint d'huile de soupape. Les identifier par la couleur du caoutchouc.

Pour l'admission : Noir
Pour l'échappement : Marron

- **Toujours utiliser un nouveau joint d'huile de soupape.**
- **Avant la repose du joint d'huile de soupape, reposer le siège du ressort de soupape.**

2. Reposer les autres pièces des composants de la soupape. Se reporter à ''DEMONTAGE'', EM-3049.

- Après avoir reposé les clavettes de soupape, taper légèrement sur l'extrémité de la queue de soupape avec un maillet en plastique pour s'assurer qu'elle s'emboîte bien.

Repose

- **Avant repose, enlever l'ancien joint liquide de la surface de contact de toute les pièces sur lesquelles il a été appliqué.**

Simpo PDF Merge and Split Unregistered Version - http://www.simpopdf.com

Repose (Suite)

SELECTION DU JOINT DE CULASSE

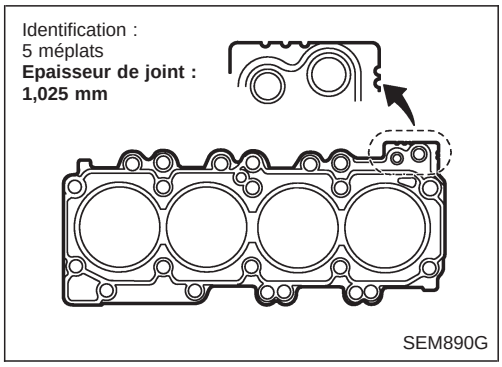

- Sélectionner et reposer le joint de culasse avec l'épaisseur appropriée selon la procédure suivante :

Lors du remplacement du joint seul :

- Reposer un joint de la même épaisseur que celui qui a été enlevé.
- Identifier l'épaisseur du joint par le nombre de crans et orifices sur le côté arrière droit.

Simpo PDF Merge and Split Unregistered Version - http://www.simpopdf.com

Repose (Suite)

Epaisseur du joint* mm	Numéro de catégorie	Nombre de crans
0,900	1	0
0,925	2	1
0,950	3	2
0,975	4	3
1,000	5	4
1,025	6	5

* : Mesuré avec les boulons de culasse serrés

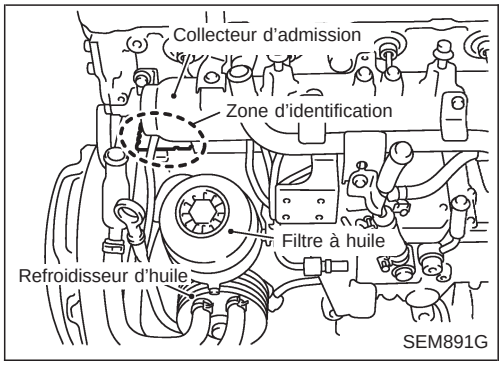

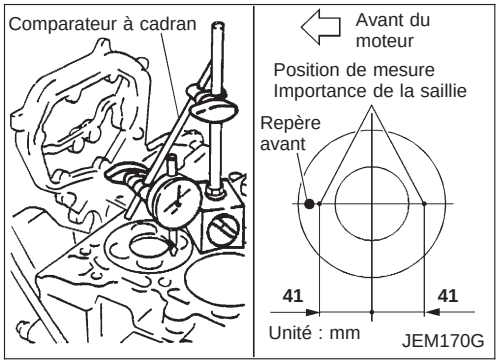

- L'épaisseur du joint peut être identifiée à l'emplacement indiqué sur l'illustration par le nombre de crans avant la dépose.

Lorsque les pièces suivantes ont été réparées/remplacées :

- Avec la surface supérieure du bloc-cylindres et/ou la masse du tourillon de l'axe du vilebrequin
- Avec le bloc-cylindres, les pistons, les bielles, et/ou le vilebrequin remplacés

1. Placer le piston au point proche de PMH.
2. Placer une jauge à cadran à l'endroit indiqué sur l'illustration. Tourner graduellement le vilebrequin et régler l'échelle de la jauge sur ''0'' où l'avancée du piston est maximisée.
3. Déplacer le support de la jauge à cadran de façon à ce que le bout de la jauge à cadran puisse entrer en contact avec le bloc-cylindres. Lire la différence.
4. Prendre les mesures à deux endroits par cylindre, ce qui fait huit endroits pour quatre cylindres. Sélectionner le joint sur la base de l'avancée maximale de huit mesures.

Saillie de piston mm	Epaisseur du joint* mm	Identification
		Nombre de crans
Moins de 0,255	0,900	0
Moins de 0,255 - 0,280	0,925	1
Moins de 0,280 - 0,305	0,950	2
Moins de 0,305 - 0,330	0,975	3
Moins de 0,330 - 0,355	1,000	4
Plus de 0,355	1,025	5

* : Mesuré avec les boulons de culasse serrés

Simpo PDF Merge and Split Unregistered Version - http://www.simpopdf.com

Repose (Suite)

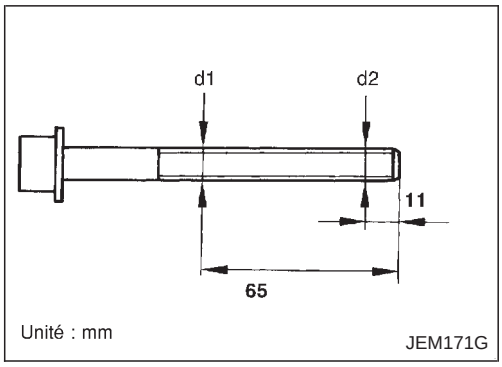

CONTROLE DE LA DEFORMATION DU BOULON DE CULASSE

- Mesurer le diamètre externe de la zone filetée, d1 et d2, aux points spécifiés sur l'illustration.
- Lorsque le point en collet est identifié à un point autre que les points spécifiés, mesurer au point comme pour d1.
- Calculer la différence entre d1 et d2. Si la valeur dépasse la limite, remplacer par des neufs.
  Limite : 0,15 mm

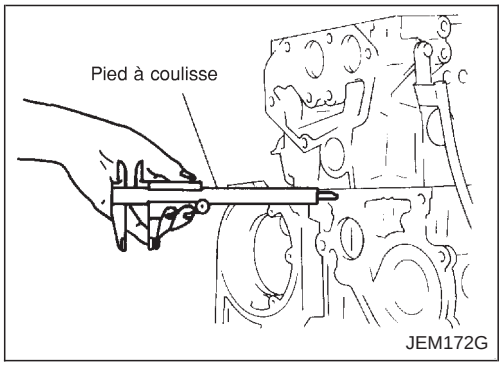

CONTROLE DE LA DIFFERENCE ENTRE LA CULASSE ET LE BLOC

- Après repose de la culasse, mesurer la dimension depuis la surface de l'extrémité avant du bloc-cylindres jusqu'à celle de la culasse.
  Standard : 23,53 - 24,07 mm
- Si la différence excède cette fourchette, contrôler le réglage des chevilles de positionnement et de la culasse.

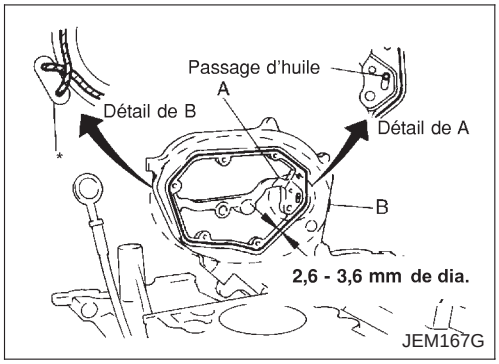

APPLICATION DE JOINT LIQUIDE SUR LE BOITIER DE LA CHAINE ARRIERE

Appliquer un cordon régulier de joint liquide spécifié (se reporter à EM-3003, ''Procédure d'application du joint liquide''.) sur la surface indiquée sur l'illustration.
A : Appliquer un cordon de manière à ce qu'il ne dépasse pas dans le passage d'huile.
B : Diminuer les parties du cordon qui dépassent, avec le début et la fin du cordon comme sur l'illustration.
Appliquer le joint pour que la portion marquée * dépasse à l'extérieur sans que celle-ci ne soit visible de l'extérieur après le montage du moteur.

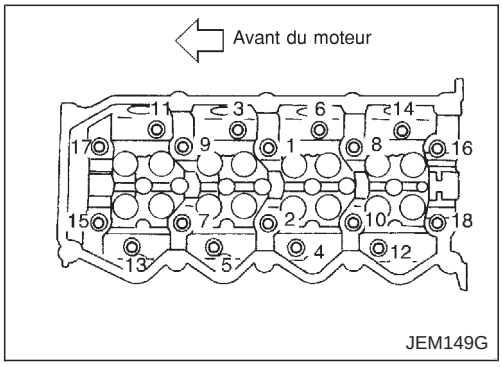

REPOSE DE LA CULASSE

- Serrer les boulons dans l'ordre numérique comme indiqué sur l'illustration selon la procédure suivante :

1. Appliquer de l'huile moteur sur les parties filetées des boulons et les surfaces d'appui.
2. Serrer les boulons de 35 à 44 N·m (3,5 à 4,5 kg-m).
3. Serrer de 180° à 185° [cible : 180°] (serrage angulaire).
4. Desserrer complètement à 0 N·m (0 kg-m) dans l'ordre inverse de celui qui est indiqué sur l'illustration.
5. Serrer les boulons de 35 à 44 N·m (3,5 à 4,5 kg-m).
6. Serrer de 90° à 95° [cible : 90°] (serrage angulaire).

Simpo PDF Merge and Split Unregistered Version - http://www.simpopdf.com

Repose (Suite)

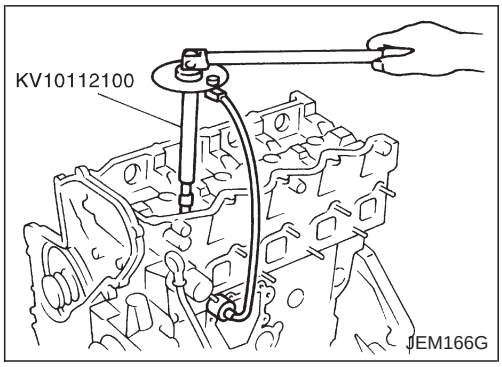

7. Serrer à nouveau de 90° à 95° (cible : 90°) (serrage angulaire).

- **Lorsqu'aucune clé angulaire n'est utilisée, peindre une marque d'alignement sur la tête du boulon de culasse et la surface de la culasse avant de serrer. Contrôler l'angle avec un rapporteur.**

REPOSE DE LA BOUGIE DE PRECHAUFFAGE

- **Pour éviter tout endommagement, la bougie de préchauffage devrait être déposée uniquement si nécessaire.**
- **La manipuler avec précaution pour éviter les chocs. (Lorsque la chute est d'environ 100 mm ou plus, toujours la remplacer par une neuve.)**
- **Avant la repose, enlever le dépôt de carbone de l'orifice de montage de la bougie de préchauffage avec un alésoir.**

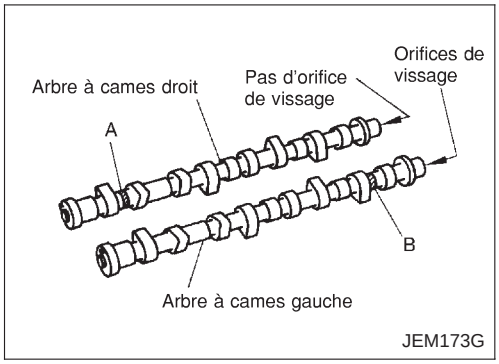

REPOSE DE L'ARBRE A CAMES

1. Reposer les poussoirs de soupapes et les cales de réglage.

- Reposer aux emplacements corrects (aux mêmes emplacements qu'avant la dépose).

2. Reposer les arbres à cames.

- Identifier les arbres à cames à l'aide de la position de la marque peinte ainsi que les orifices de vissage à l'extrémité arrière.

  Arbre à cames droit : La peinture est à l'emplacement A sans orifice de vissage

  Arbre à cames gauche : La peinture est à l'emplacement B avec orifice de vissage.

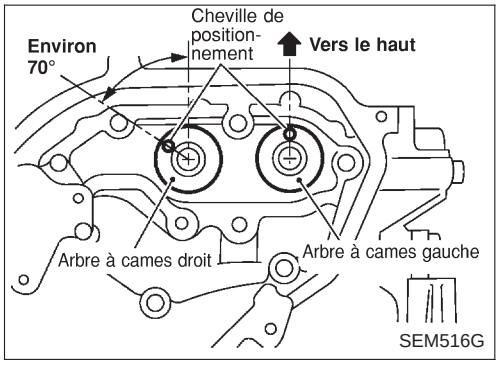

- Reposer de manière à ce que les chevilles de positionnement soient placées dans les directions indiquées sur l'illustration.

Simpo PDF Merge and Split Unregistered Version - http://www.simpopdf.com

Repose (Suite)

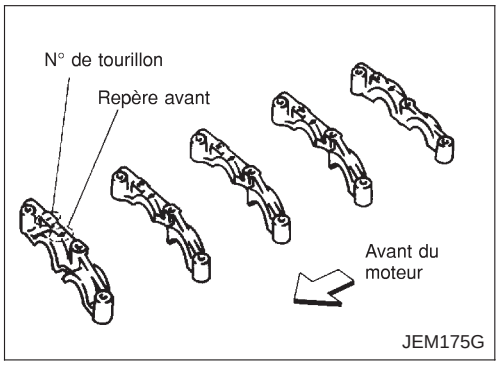

3. Reposer les supports d'arbre à cames.
- Reposer correctement, en identifiant les supports par le n° de tourillon et le repère avant sur la surface supérieure.

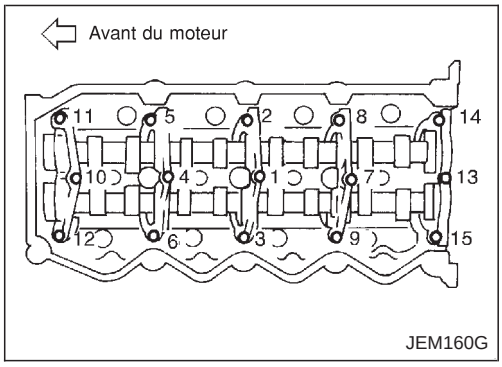

4. Serrer les boulons dans l'ordre indiqué sur l'illustration selon la procédure suivante :

a. Serrer à 2,0 N·m (0,2 kg-m).
- S'assurer que les pièces de soutien de l'arbre à cames (sur le côté arrière) soient reposés fermement dans leurs pièces d'appui sur la culasse.

b. Serrer à 6 N·m (0,6 kg-m).
c. Serrer à 12 - 13 N·m (1,2 - 1,4 kg-m).

5. Reposer les roues dentées de l'arbre à cames.
- Les roues de l'arbre à cames sont habituellement utilisées pour la gauche et la droite.
- Aligner la roue de l'arbre à cames et la cheville de positionnement sur l'arbre à cames, et reposer.
- En maintenant la partie hexagonale de l'arbre à cames avec une clé, serrer le boulon retenant la roue dentée de l'arbre à cames.

6. Avant de reposer le tube de trop-plein après avoir reposé la chaîne de distribution secondaire, vérifier et régler le jeu de soupape. Se reporter à EM-3062, ''Jeu de soupape''.
7. Ensuite, reposer dans l'ordre inverse de la dépose.

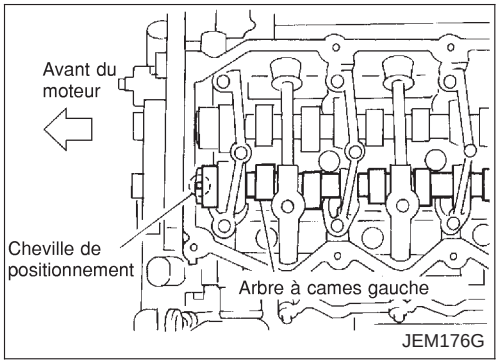

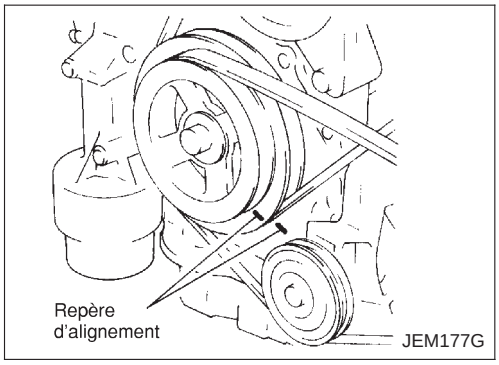

Jeu de soupape

CONTROLE

Vérifier le jeu de soupape lorsque le moteur est froid et à l'arrêt.

1. Placer le piston n° 1 au PMH sur sa course de compression.
- Tourner la poulie de vilebrequin dans le sens des aiguilles d'une montre de sorte que la cheville de positionnement sur l'arbre à cames gauche soit orientée vers le haut (le n° d'indicateur de position, etc, est fourni sur la poulie du vilebrequin).

2. Faire un repère d'alignement à la peinture, etc. sur la poulie du vilebrequin et sur la pompe à huile en tant qu'indicateur d'angle.

Simpo PDF Merge and Split Unregistered Version - http://www.simpopdf.com

Jeu de soupape (Suite)

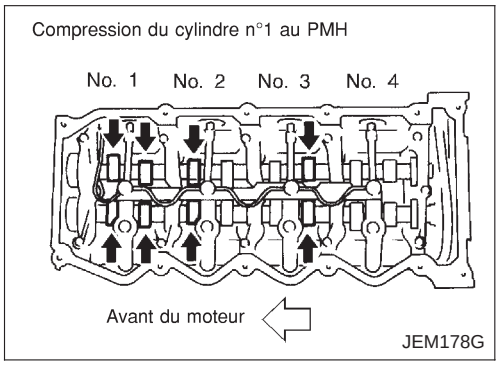

3. Vérifier uniquement les soupapes indiquées sur l'illustration.

Angle de vilebrequin	Soupape							
	N° 1		N° 2		N° 3		N° 4	
	ADM.	ECHAP.	ADM.	ECHAP.	ADM.	ECHAP.	ADM.	ECHAP.
PMH n°1 (Course de compression)	○	○	○			○		

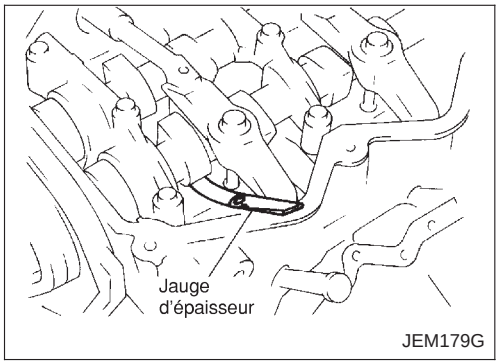

- A l'aide d'une jauge d'épaisseur, mesurer le jeu entre le poussoir de soupape et l'arbre à cames.
- Enregistrer les mesures de tous les jeux de la soupape qui sont en dehors des limites spécifiées. Elles seront utilisées plus tard pour déterminer les remplacements nécessaires des cales de réglage.

Jeu de soupape pour vérification :
Intake
0,24 - 0,32 mm
Echappement
0,26 - 0,34 mm

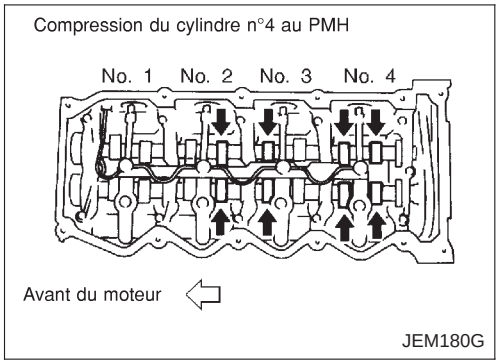

4. Faire pivoter le vilebrequin dans le sens des aiguilles d'une montre une fois pour mettre le piston n°4 sur le TDC sur la course de compression.
5. Vérifier uniquement les soupapes indiquées sur l'illustration.

Angle de vilebrequin	Soupape							
	N° 1		N° 2		N° 3		N° 4	
	ADM.	ECHAP.	ADM.	ECHAP.	ADM.	ECHAP.	ADM.	ECHAP.
PMH n°4 (course de compression)				○	○		○	○

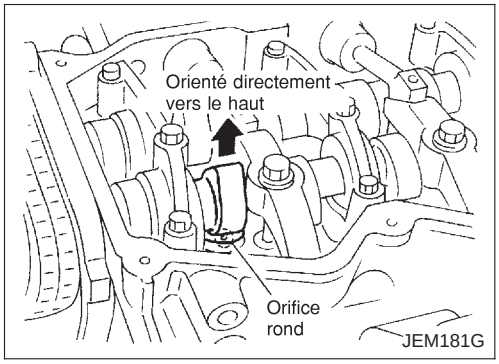

REGLAGE

Vérifier le jeu de soupape lorsque le moteur est froid.

1. Tourner le vilebrequin pour positionner vers le haut le lobe de la came sur l'arbre à cames de la soupape.
2. Placer l'outil (A) autour de l'arbre à cames comme indiqué sur l'illustration.
   Avant de placer l'outil (A) (SST), faire tourner le cran vers le centre de la culasse (voir illustration), pour simplifier la dépose de la cale plus tard.

PRECAUTION :
Prendre garde de ne pas endommager la surface de la came avec l'outil (A).

Simpo PDF Merge and Split Unregistered Version - http://www.simpopdf.com

Jeu de soupape (Suite)

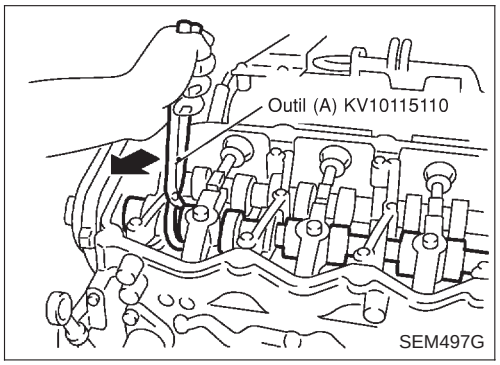

3. Faire tourner l'outil (A) (voir illustration) pour que le poussoir de soupape soit poussé vers le bas.

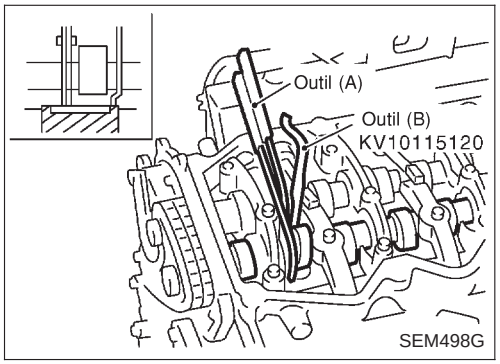

4. Placer l'outil (B) (SST) entre l'arbre à cames et le bord du poussoir de soupape pour maintenir le poussoir de soupape.

PRECAUTION :

- **L'outil (B) doit être placé aussi près que possible du support de l'arbre à cames.**
- **Prendre garde de ne pas endommager la surface de la came avec l'outil (B).**

5. Déposer l'outil (A).

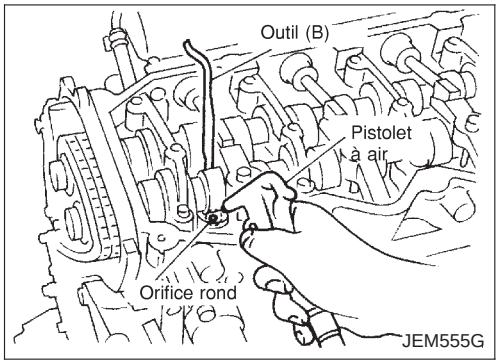

6. Souffler de l'air dans l'orifice pour séparer la cale de réglage du poussoir de soupape.

- **Pour éviter de renverser de l'huile moteur, essuyer l'huile complètement auparavant. Porter des lunettes de protection, etc. pendant le travail si nécessaire.**

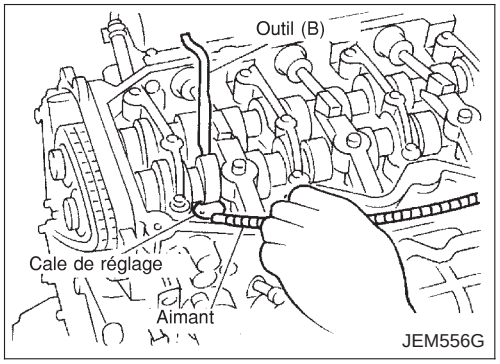

7. Déposer la cale de réglage à l'aide d'un petit tournevis et d'un doigt aimanté.
8. Déterminer la taille de la cale de réglage de remplacement en fonction de la formule.

- A l'aide d'un micromètre, déterminer l'épaisseur de la cale déposée.
- Calculer l'épaisseur de la cale de réglage neuve pour que le jeu de la soupape soit dans les valeurs spécifiées.

R = Epaisseur de la cale déposée
N = Epaisseur de la cale neuve
M = Jeu de la soupape mesuré

Admission :

N = R + (M − 0,28 mm)

Echappement :

N = R + (M − 0,30 mm)

33 tailles de cales sont disponibles de 2,10 mm à 2,74 mm, par étapes de 0,02 mm.

- Sélectionner la cale neuve avec une épaisseur aussi proche que possible de la valeur calculée.

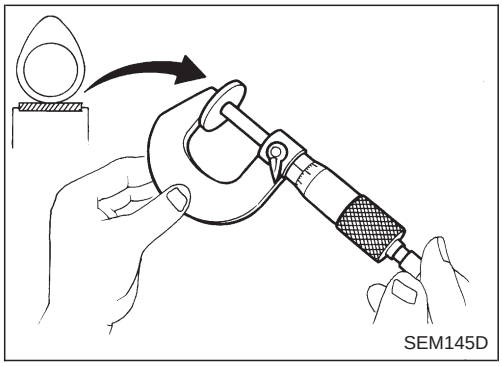

Simpo PDF Merge and Split Unregistered Version - http://www.simpopdf.com

Jeu de soupape (Suite)

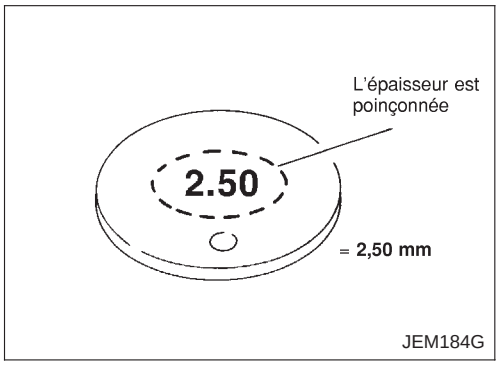

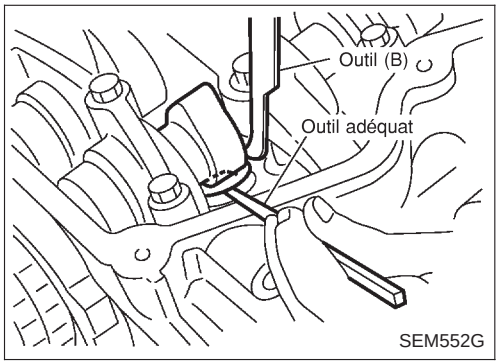

9. Reposer la cale neuve à l'aide d'un outil adéquat.
- **Reposer avec la surface sur laquelle l'épaisseur est poinçonnée tournée vers le bas.**

10. Placer l'outil (A) comme mentionné dans les étapes 2 et 3.
11. Déposer l'outil (B).
12. Déposer l'outil (A).
13. Vérifier à nouveau le jeu de soupape.

Jeu de soupape :

Unité : mm

	Froid	Chaud* (données de référence)
Admission	0,24 - 0,32	0,29 - 0,37
Echappement	0,26 - 0,34	0,33 - 0,41

* : Approximativement 80° C

Simpo PDF Merge and Split Unregistered Version - http://www.simpopdf.com

Fixation de moteur avant

SEC. 112

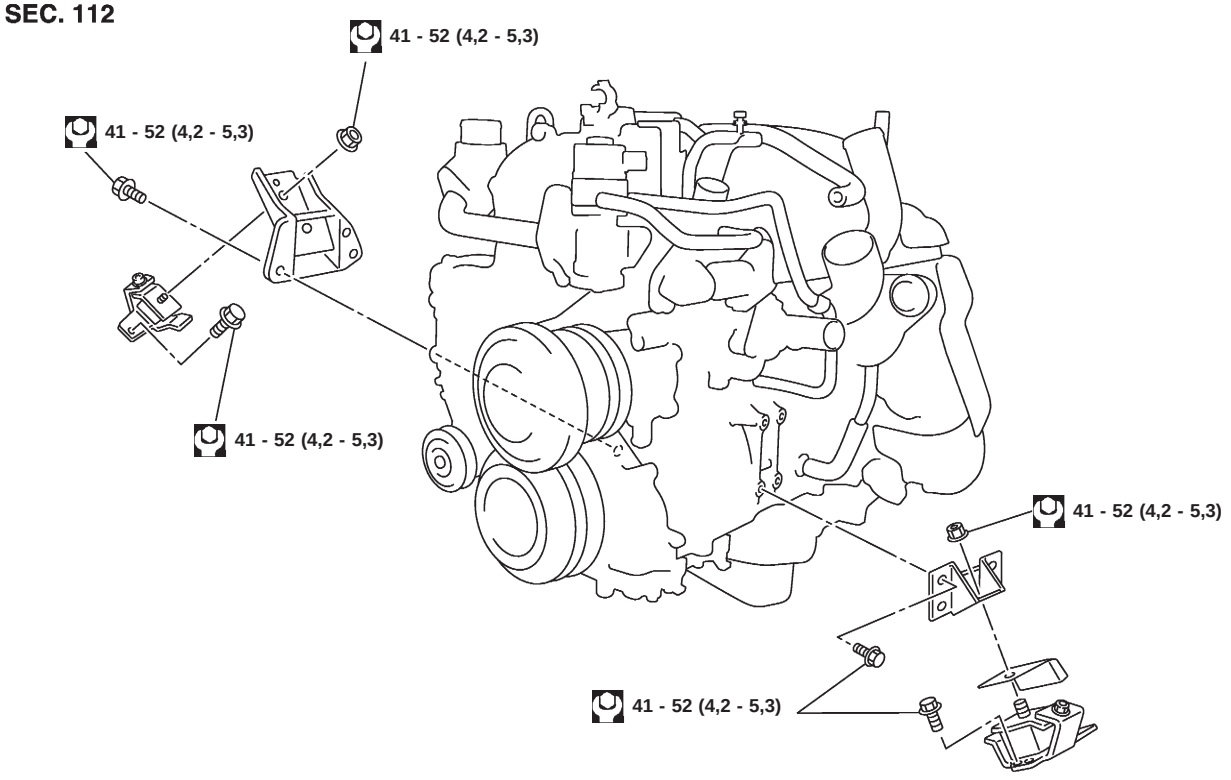

Fixation de moteur arrière

SEC. 112

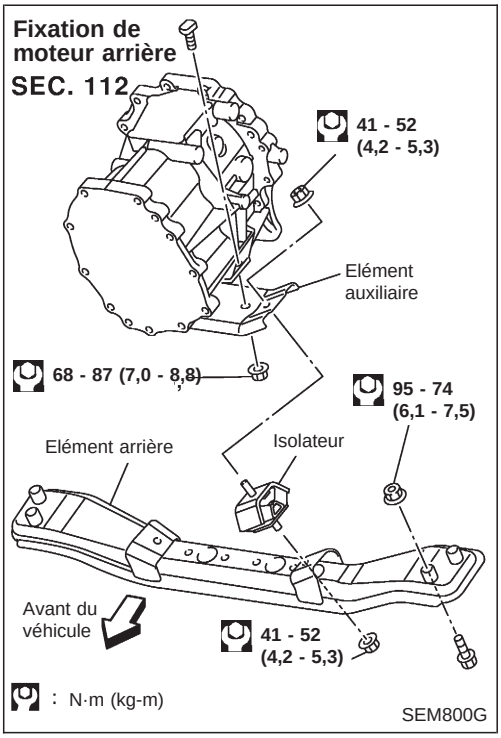

AVERTISSEMENT :

- **Garer le véhicule sur une surface plane et dure.**
- **Placer des cales à l'avant et à l'arrière des roues arrière.**
- **Ne pas déposer le moteur jusqu'à ce que le système d'échappement ait complètement refroidi. Sinon vous risquez de vous brûler et/ou un incendie pourrait se déclarer dans la canalisation de carburant.**
- **S'assurer de lever le moteur et la transmission de manière sûre.**
- **Pour les moteurs qui ne sont pas équipés d'élingues de moteur, utiliser les élingues et les boulons de levage appropriés décrits dans le CATALOGUE DES PIECES DETACHEES.**

PRECAUTION :

- **Lors de levage du moteur, prendre garde de ne pas heurter des pièces adjacentes, particulièrement les suivantes : le boîtier du câble d'accélérateur, la conduite de frein, et le maître-cylindre de frein.**
- **En levant le moteur, utiliser toujours des élingues de moteur de manière sûre.**
- **Pour les modèles 4X4, enduire de produit d'étanchéité la zone figurant entre le moteur et la transmission. Se reporter à la section MT (''Dépose et repose'').**
- **Pour le couple de serrage, se reporter aux sections M/T et PD.**
- **Avant de séparer le moteur et la transmission, déposer le capteur de position de vilebrequin (capteur PMH) de l'ensemble.**
- **S'assurer de ne jamais endommager l'extrémité du cap-**

Simpo PDF Merge and Split Unregistered Version - http://www.simpopdf.com

teur de position de vilebrequin (capteur PMH) ou la dent de la couronne dentée.

Dépose

Préparation

1. Vidanger le liquide de refroidissement des bouchons de vidange du radiateur.
2. Déposer les pièces suivantes :

- Capot du moteur
- Refroidisseur d'air de suralimentation
- Sous protecteur
- Batterie
- Capot de radiateur
- Radiateur
- Courroie secondaire
- Ventilateur de refroidissement
- Tuyau avant d'échappement

Compartiment moteur (gauche)

3. Déposer le conduit d'air et le boîtier de filtre à air.
4. Débrancher les connecteurs de faisceau de l'alternateur et du compresseur du climatiseur.
5. Déposer l'alternateur.
6. Déposer les boulons de repose. Déplacer le compresseur du climatiseur. Utiliser une corde pour l'ancrer temporairement au côté du véhicule.
7. Débrancher et déplacer le flexible de chauffage, reposer le capuchon sur le flexible pour éviter que le liquide de refroidissement ne se repande.
8. Déposer l'isolateur thermique.

Compartiment de moteur (droit)

9. Déposer l'alimentation du carburant et les flexibles de carburant.

PRECAUTION :
Reposer les capuchons immédiatement pour éviter les fuites de carburant.

10. Déposer tous les connecteurs de faisceau sur le moteur, et placer les faisceaux sur le côté du véhicule.

Sous le plancher du véhicule

11. Déposer le démarreur.
12. Déposer l'arbre de transmission avant.
13. Déposer la transmission de l'essieu avant ainsi que l'élément de suspension de différentiel. Se reporter à la section PD (''Dépose et repose'', ''Transmission de l'essieu avant'') — modèles 4 roues motrices uniquement.

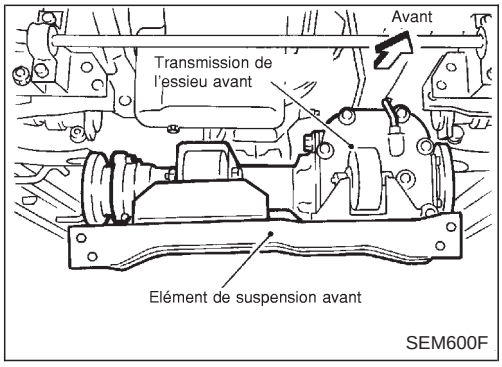

14. Déposer les boulons de montage pour assurer la transmission du moteur.

1) Lever le dessus de la transmission avec un cric, et réinstaller les pièces du montant arrière du véhicule.
2) Placer le cric devant la transmission.
3) Déposer les boulons de montage qui restent pour assurer la transmission du moteur.

Simpo PDF Merge and Split Unregistered Version - http://www.simpopdf.com

Dépose (Suite)

Opération de dépose

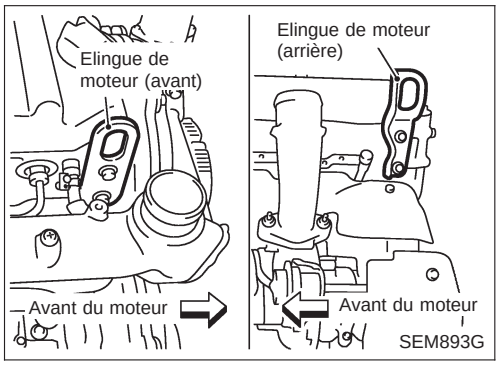

15. Reposer les élingues de moteur (pièces détachées standard) sur l'avant gauche et l'arrière droite.
    : 29,5 - 37,3 N·m (3,0 - 3,8 kg-m)

AVERTISSEMENT :
Pour les moteurs qui ne sont pas équipés d'élingues de levage moteur, utiliser les élingues et les boulons de levage appropriés décrits dans le CATALOGUE DES PIECES DETACHEES.

16. Accrocher les palans à l'élingue pour maintenir la position.
17. Déposer les écrous d'installation des isolateurs du montant du moteur gauche et droite.
18. Déposer le capteur de position de vilebrequin (capteur PMH) de la transmission.

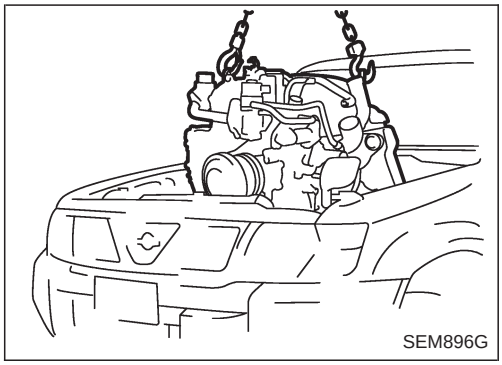

19. Séparer le moteur et la transmission, déposer le moteur.

PRECAUTION :
- **Pendant l'opération, vérifier que tous les câbles nécessaires et les tuyaux sont débranchés.**
- **Eviter une interférence avec les pièces sur le véhicule.**

Repose

Reposer le moteur dans l'ordre inverse de la dépose.
- Eloigner chaque isolateur de montant de l'adhérence et des dommages causés par l'huile.
- Quant à l'emplacement de l'axe de positionnement, insérer l'axe correctement dans l'orifice de la pièce de surface.
- Pour que les isolateurs ne se tordent pas, serrer les boulons de maintien et les écrous du support du moteur.

Inspection

- Avant de démarrer le moteur, vérifier les niveaux du liquide de refroidissement, de l'huile moteur, et autres liquides de fonctionnement, et si nécessaire, les remplir jusqu'au niveau spécifié.
- Démarrer le moteur, et vérifier qu'il n'y a pas de bruit ou de vibration anormale.
- Réchauffer le moteur à une température suffisante, et vérifier s'il n'y pas de fuite de liquide de refroidissement, de graisse, de carburant, ou de gaz d'échappement.

Simpo PDF Merge and Split Unregistered Version - http://www.simpopdf.com

Composants

SEC. 110•120•186

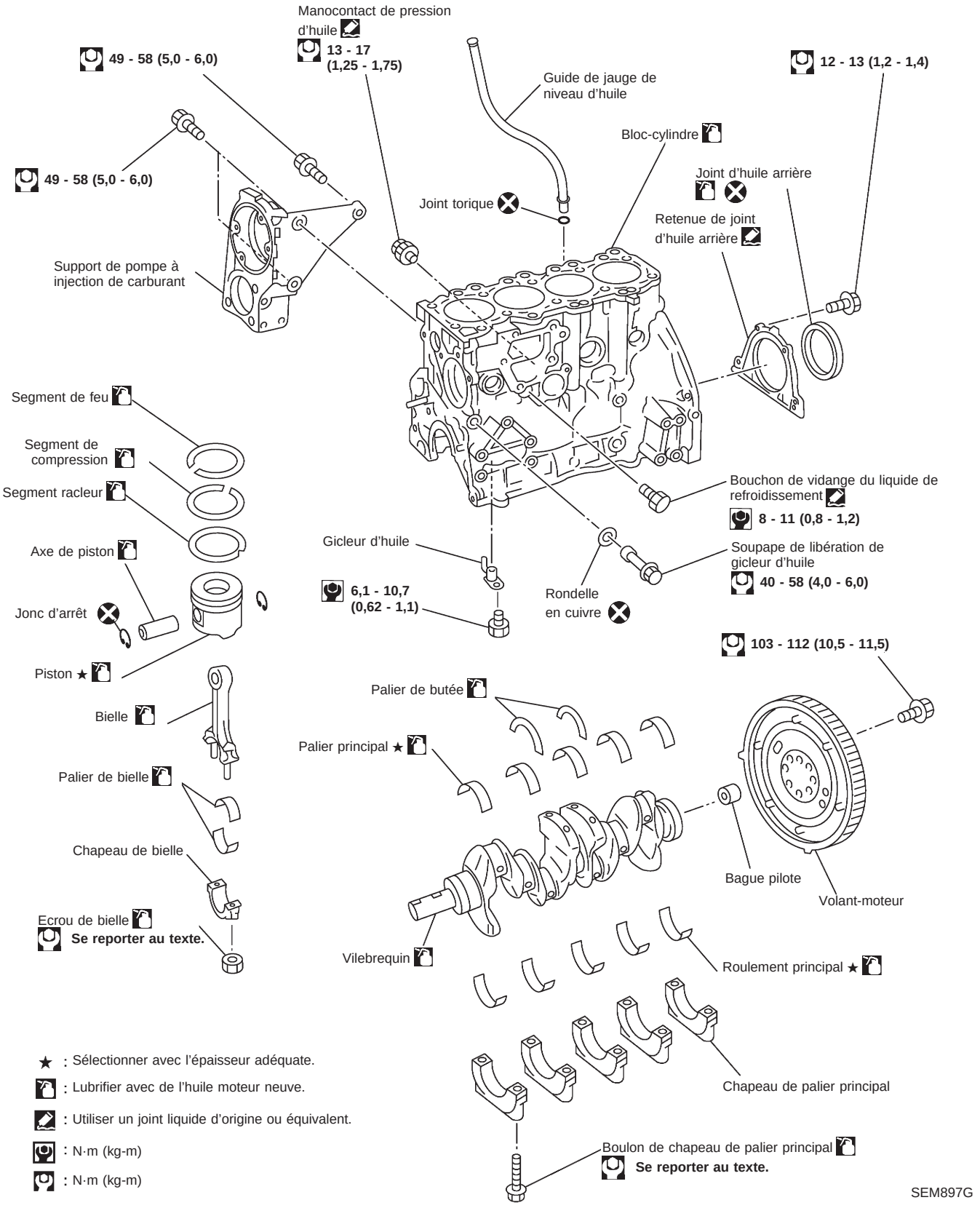

Simpo PDF Merge and Split Unregistered Version - http://www.simpopdf.com

Dépose et repose

PRECAUTION :

- **Au moment de la repose des roulements, pistons, ou autres pièces coulissantes, lubrifier les surfaces de contact avec de l'huile moteur neuve.**
- **Placer les pièces déposées telles que les roulements et les chapeaux de roulements dans le bon ordre et dans la bonne direction.**
- **Lors de la repose de l'écrou de la bielle, et des boulons du chapeau de palier principal, appliquer de l'huile moteur neuve aux filetages et surfaces d'assise.**
- **Ne laisser aucun matériau magnétique entrer en contact avec la plaque de signal du volant moteur.**
- **Ne pas déposer la plaque de signal à l'arrière.**
- **Ne pas placer le côté de la plaque de signal orienté vers le bas.**
- **Manipuler avec précaution pour ne pas endommager la plaque de signal [particulièrement les 4 emplacements sur les saillies pour le signal du capteur de position de vilebrequin (capteur PMH)].**

Démontage

PISTON ET VILEBREQUIN

1. Déposer le moteur. Se reporter à EM-3066 ''DEPOSE DU MOTEUR''.
2. Placer le moteur sur un plan de travail.

a. Déposer le volant-moteur.

- Maintenir la couronne dentée avec le dispositif d'arrêt de la couronne dentée (KV10105630, KV10105610). Ensuite, desserrer les boulons de sécurité avec la douille TORX (taille : Q8 E20, outillage en vente dans le commerce) et les déposer. Comme alternative, tenir la poulie du vilebrequin avec un support de poulie (SST) pour déposer le volant-moteur.

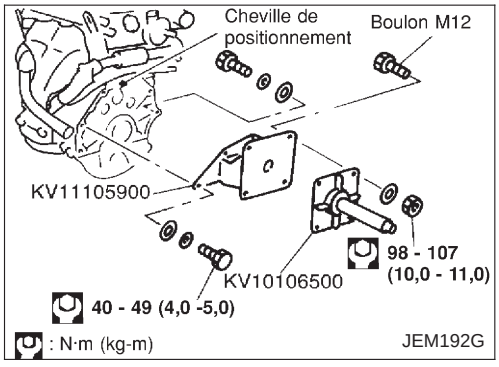

b. Reposer la fixation auxiliaire du moteur (SST) sur la surface arrière du bloc-cylindre.

- Pour reposer, aligner l'orifice sur la fixation auxiliaire avec la cheville de positionnement sur le bloc-cylindres.
- Il y a cinq boulons sur la fixation auxiliaire.

c. Reposer la fixation du moteur (SST).

- Les quatre séries de boulons et d'écrous sont des produits à usages multiples.

Simpo PDF Merge and Split Unregistered Version - http://www.simpopdf.com

Démontage (Suite)

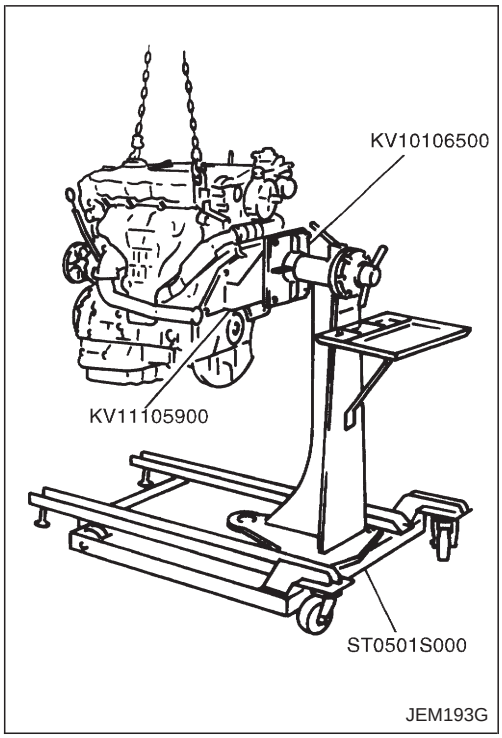

d. Soulever le moteur et le placer sur le support de moteur (SST).
- Une autre méthode est de mettre la fixation auxiliaire de moteur et la fixation de moteur sur le support de moteur avant et ensuite de reposer le moteur.

3. Vidanger l'huile moteur et le liquide de refroidissement du moteur.
4. Déposer les pièces suivantes et les pièces associées :
- Collecteur d'échappement
- Ensemble turbocompresseur
- Tube d'injection
- Collecteur d'admission
- Pompe à eau
- Carter d'huile (supérieur et inférieur)
- Soupape de commande de volume de l'EGR et tuyau de l'EGR & ensemble de tube de guidage de l'EGR
- Chaîne de distribution secondaire
- Pompe à injection de carburant
- Chaîne de distribution primaire
- Cache-culbuteurs
- Pompe à dépression
- Assemblage de l'embouchure d'injection à haute pression
- Arbre à cames
- Culasse
- Thermostat, tuyaux d'eau
- Refroidisseur d'huile
- Supports des composants secondaires

5. Déposer le support de pompe à injection de carburant.

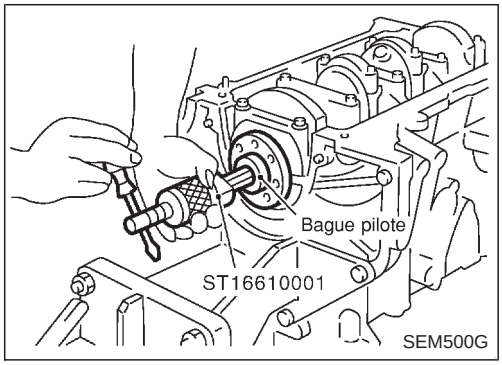

6. Si le remplacement de la bague pilote est nécessaire, la déposer en utilisant l'extracteur de bague pilote (SST).
7. Déposer la retenue de joint d'huile arrière.
- Insérer un tournevis à lame plate entre le chapeau de roulement principal et la retenue du joint d'huile arrière pour déposer le dispositif de retenue.

8. Déposer le joint de l'huile arrière de la retenue de joint d'huile arrière.
- Perforer à l'aide d'un tournevis à lame plate.
- **Veiller à ne pas endommager la retenue du joint d'huile arrière.**

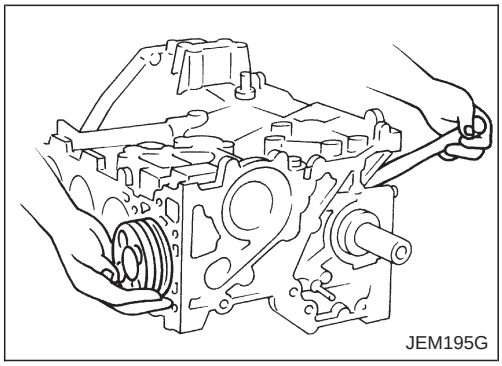

9. Déposer le piston et l'ensemble de bielle.

a. Placer l'axe de vilebrequin pour la dépose dans une position proche du PMB.
b. Déposer les chapeaux de bielle.
c. Pousser le piston et l'ensemble de bielle vers la culasse en utilisant la poignée d'un marteau.
- Avant d'enlever le piston et l'ensemble de la bielle, vérifier le jeu latéral de la bielle. Se reporter à EM-3074 ''JEU LATERAL DE LA BIELLE''.

Simpo PDF Merge and Split Unregistered Version - http://www.simpopdf.com

Démontage (Suite)

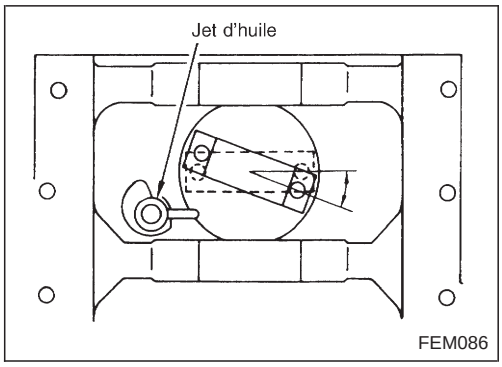

PRECAUTION :

Pour déposer le piston et la bielle, empêcher la tête de la bielle d'interférer avec le jet d'huile.

10. Déposer les paliers de bielle de la bielle et du chapeau de bielle.

- Faire des séries des pièces déposées en fonction du n° de cylindre pour éviter de les mélanger.

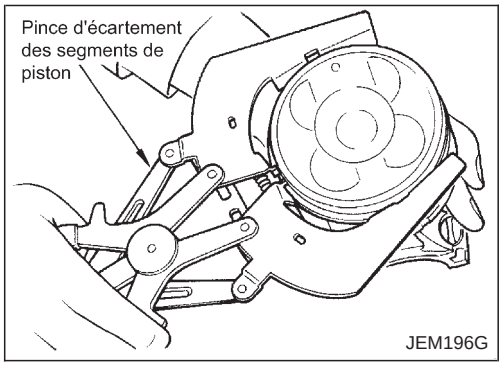

11. Déposer les segments de piston des pistons.

- Utiliser des pinces d'écartement de segment de piston (outillage en vente dans le commerce).
- **Eviter de griffer les pistons pendant la dépose.**
- **Prendre garde de ne pas endommager les segments de piston en les écartant de manière excessive.**

PRECAUTION :

- **Si les segments de piston ne sont pas remplacés, s'assurer que les segments de piston sont reposés dans leur position originale.**

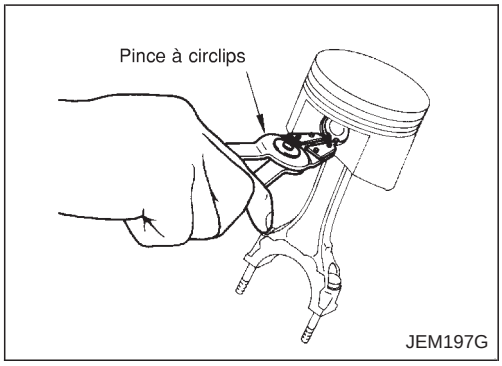

12. Déposer les pistons des bielles.

a. Déposer les joncs d'arrêt à l'aide des pinces pour jonc d'arrêt.

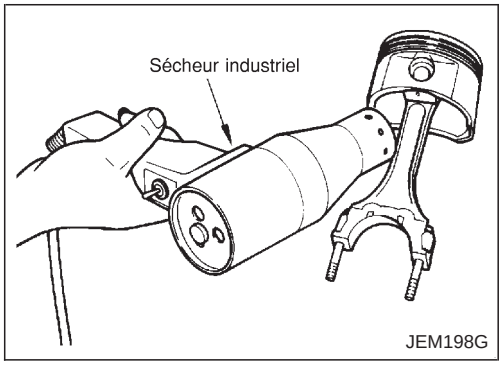

b. En utilisant un séchoir industriel, chauffer les pistons jusqu'à 60 à 70°C.

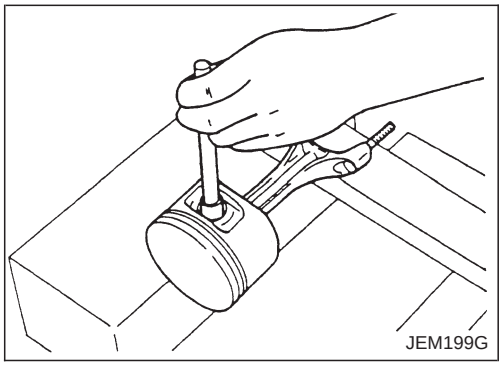

c. Extraire l'axe de piston en poussant avec une tige d'environ 26 mm de diamètre.

Simpo PDF Merge and Split Unregistered Version - http://www.simpopdf.com

Démontage (Suite)

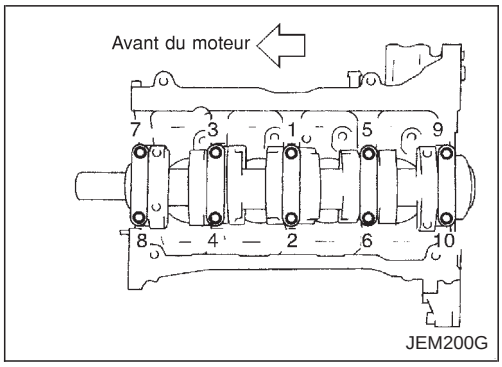

13. Déposer les boulons du chapeau de roulement principal.
- Avec une douille TORX (taille : E-14, outillage en vente dans le commerce), desserrer les boulons du chapeau de palier principal en plusieurs étapes dans l'ordre inverse de celui indiqué sur l'illustration et les déposer.
- Avant de desserrer les boulons de chapeau de roulement principal, mesurer le jeu axial du vilebrequin. Se reporter à EM-3073, ''JEU AXIAL DU VILEBREQUIN''.

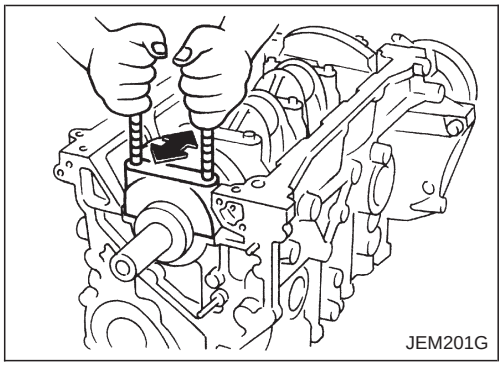

14. Déposer les chapeaux de roulement principal.
- A l'aide des boulons du chapeau de roulement principal, déposer en déplaçant le chapeau de roulement d'avant en arrière.

15. Déposer le vilebrequin.
16. Enlever les paliers principaux et de butée hors des bloc-cylindres et des chapeau de roulement principal.
- **Noter les bons emplacements de repose des pièces démontées. Les ranger soigneusement afin d'éviter qu'ils ne se mélangent.**

17. Déposer l'injecteur d'huile.
18. Déposer le soupape de contrôle du jet d'huile.

Inspection

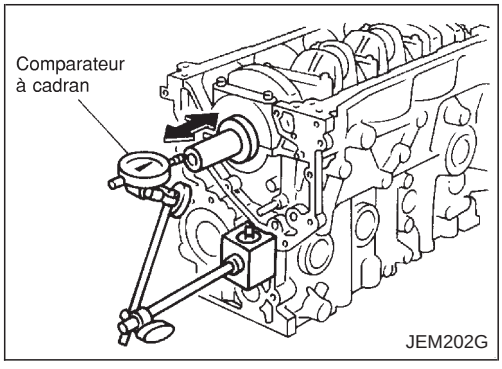

JEU AXIAL DU VILEBREQUIN

- Mesurer la distance de déplacement du vilebrequin avec la jauge à cadran lorsque le vilebrequin est déplacé complètement d'avant en arrière.
  Standard : 0,085 - 0,25 mm
  Limite : 0,30 mm
- Si la valeur dépasse la limite, remplacer les paliers de butée par des pièces neuves et mesurer de nouveau. Si la mesure excède de nouveau la limite, remplacer le vilebrequin par une pièce neuve.

Simpo PDF Merge and Split Unregistered Version - http://www.simpopdf.com

Inspection (Suite)

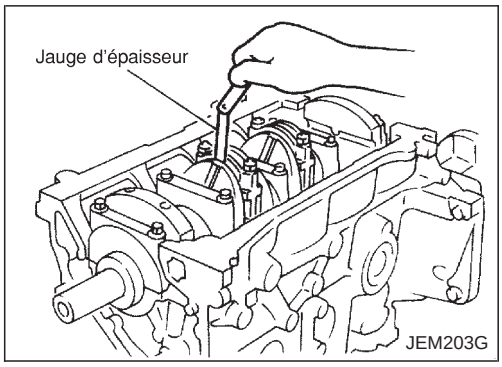

JEU LATERAL DE LA BIELLE

- Mesurer le jeu latéral entre la bielle et le bras du vilebrequin avec la jauge d'épaisseur.
  Standard : 0,200 - 0,350 mm
  Limite : 0,4 mm
- Si la valeur dépasse la limite, remplacer la bielle et mesurer à nouveau. Si la mesure excède de nouveau la limite, remplacer le vilebrequin.

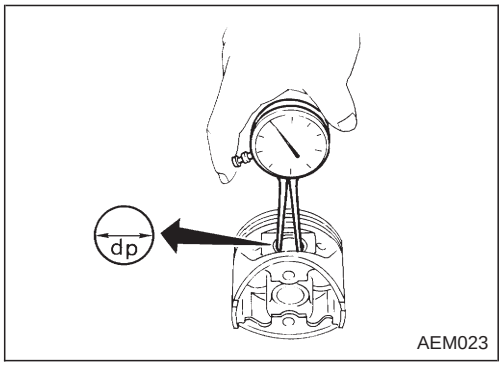

JEU ENTRE LE PISTON ET L'AXE DE PISTON

1. Mesurer le diamètre interne de l'axe du trou de piston ''dp''.
   Diamètre standard ''dp'' :
   27,997 - 28,005 mm

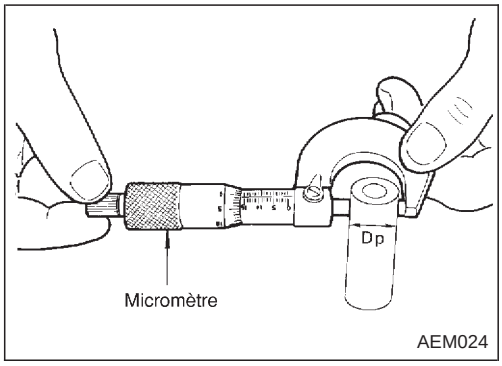

2. Mesurer le diamètre externe de l'axe de piston ''Dp''.
   Diamètre standard ''Dp'' :
   27,994 - 28,000 mm
3. Calculer l'ajustement serré de l'axe de piston au piston.
   Dp − dp = 0,002 - 0,006 mm

S'il est supérieur à la valeur ci-dessus, remplacer l'ensemble du piston avec l'axe.

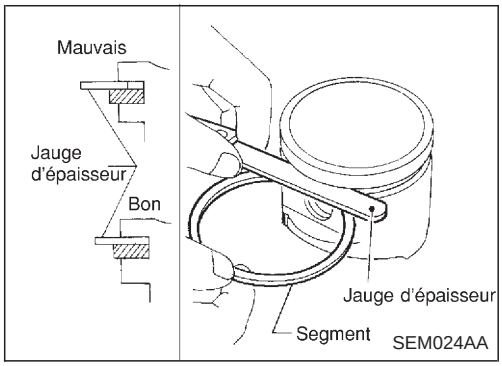

JEU LATERAL DES SEGMENTS DE PISTON

Jeu latéral :
Segment de feu
0,050 - 0,090 mm
Segment de compression
0,050 - 0,090 mm
Segment racleur
0,030 - 0,070 mm
Limite maximum de jeu latéral :
Segment de feu 0,1 mm
Segment de compression 0,1 mm

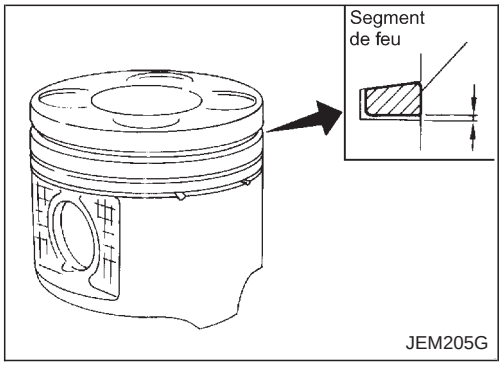

- Pour mesurer le jeu latéral du segment de feu, aligner les circonférences externes du segment et du piston tout en pressant le segment vers le haut contre la surface supérieure de la gorge pour segment. Dans ces conditions, mesurer le jeu entre le segment et la surface inférieure de la gorge pour segment.
- Remplacer les segments de piston si la valeur n'est pas conforme aux spécifications. Si le jeu dépasse la limite maximum avec le segment neuf, remplacer le piston.

Simpo PDF Merge and Split Unregistered Version - http://www.simpopdf.com

Inspection (Suite)

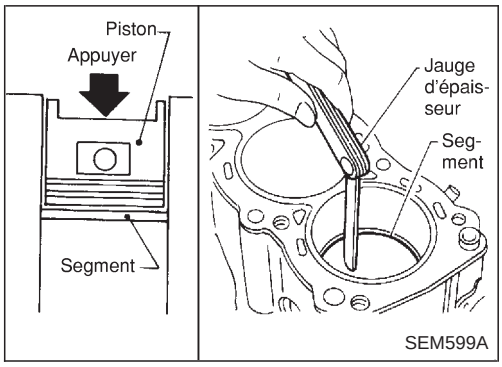

ECARTEMENT DE SEGMENT DE PISTON

Ecartement :
Segment de feu 0,21 - 0,31 mm
Segment de compression 0,37 - 0,52 mm
Segment racleur 0,30 - 0,55 mm
Limite maximum de coupe de segment :
Segment de feu 1,0 mm
Segment de compression 1,0 mm
Segment racleur 1,0 mm

Remplacer les segments de piston si la valeur n'est pas conforme aux spécifications. Si l'écartement est toujours supérieur à la limite même avec un segment neuf, faire ce qui suit. Aléser à nouveau le cylindre et utiliser un piston et des segments de pistons surdimensionnés.

Se reporter aux SDS (EM-3097).

- Lors du changement du piston, vérifier que la surface du bloc-cylindres n'est pas éraflée ou grippée. Si elle est éraflée ou grippée, roder à nouveau ou remplacer le bloc-cylindres.

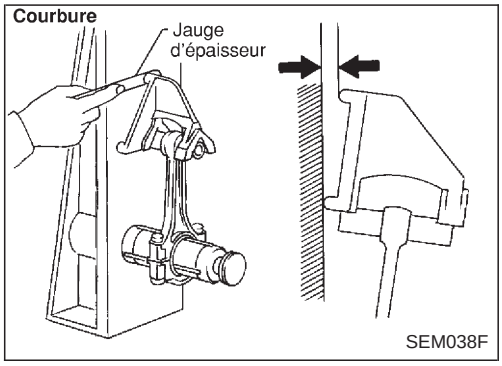

COURBURE ET TORSION DES BIELLES

Courbe :
Limite 0,12 mm
sur une longueur de 100 mm
Torsion :
Limite 0,12 mm
sur une longueur de 100 mm

En cas de dépassement de ces valeurs, remplacer l'ensemble de bielle.

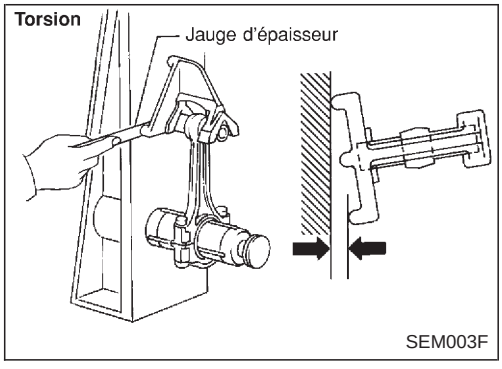

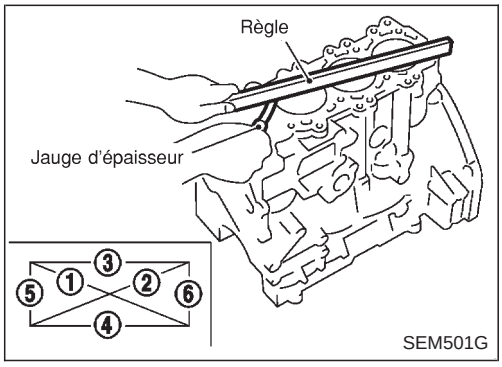

DEFORMATION ET USURE DU BLOC-CYLINDRES

- Nettoyer la surface supérieure du bloc-cylindres. Utiliser une règle et une jauge d'épaisseur fiables pour contrôler la planéité de la surface du bloc-cylindres. Effectuer le contrôle dans les six positions indiquées sur l'illustration.
  Limite de déformation : 0,04 mm
- Si la valeur n'est pas conforme aux spécifications, la rectifier. La limite de la rectification du bloc-cylindres est déterminée par la réctification de la culasse dans le moteur.

Simpo PDF Merge and Split Unregistered Version - http://www.simpopdf.com

Inspection (Suite)

Limite de rectification :
La quantité de rectification de la culasse est ‘‘A’’.
La quantité de rectification du bloc-cylindres est ‘‘B’’.
La limite maximum est la suivante :
A + B = 0,07 mm
Hauteur nominale du bloc-cylindres depuis le centre du vilebrequin :
252,95 - 253,05 mm

- Si nécessaire, remplacer le bloc-cylindres.

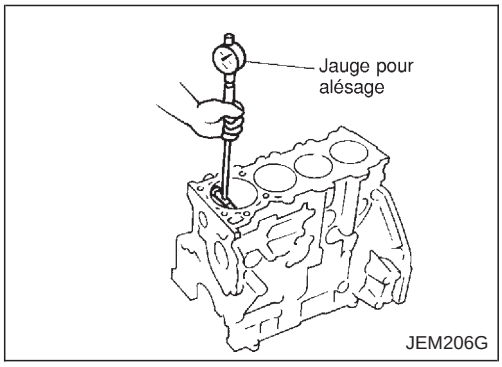

JEU ENTRE LE PISTON ET L’ALESAGE

1. A l’aide d’un comparateur à cadran, mesurer l’alésage du cylindre dans les directions X et Y aux points A, B et C pour rechercher usure, faux-rond ou conicité.
   Diamètre intérieur de l’alésage du cylindre
   Standard
   89,000 - 89,030 mm
   Limite d’usure
   0,07 mm
   Réaléser tous les cylindres quand la limite est dépassée. Remplacer le bloc-cylindres si nécessaire.
   Faux-rond (X - Y) :
   Limite 0,015 mm
   Conicité (C - A)
   Limite 0,010 mm

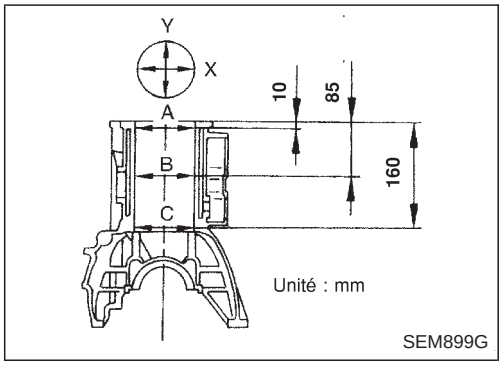

2. Rechercher toutes traces de rayures et de grippage. S’il est grippé, le roder.

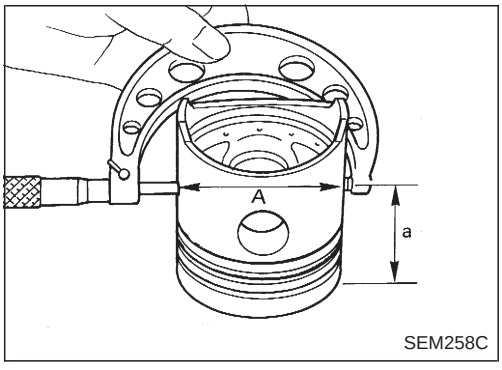

3. Mesurer le diamètre de jupe de piston.
   Diamètre de piston ‘‘A’’ :
   Standard
   88,940 - 88,970 mm
   Point de mesure ‘‘a’’ (Distance à partir du sommet) :
   59,0 mm
4. Vérifier que le jeu entre le piston et l’alésage est conforme aux spécifications.

- Calculer le jeu en utilisant le diamètre externe au niveau de la jupe de piston et le diamètre externe du cylindre (direction de X, point B) :
  Jeu entre le piston et l’alésage = alésage de cylindre − diamètre de piston ‘‘A’’
  Standard (température ambiante 20°C) :
  0,050 - 0,070 mm
- Si la valeur est en dehors de la plage spécifiée, remplacer le piston et l’ensemble d’axe de piston.

Simpo PDF Merge and Split Unregistered Version - http://www.simpopdf.com

Inspection (Suite)

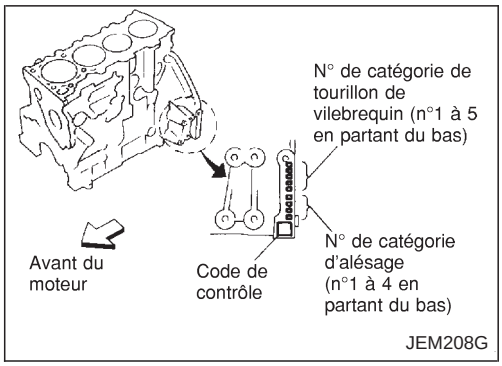

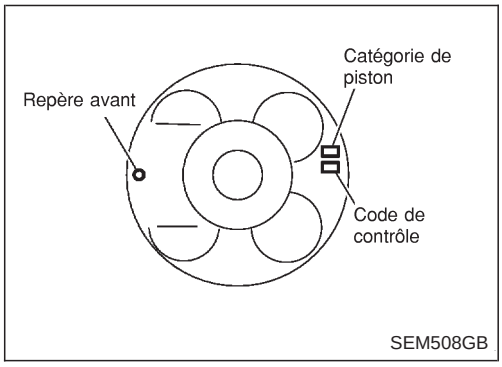

- Si le bloc-cylindres ou les pistons sont remplacés par des neufs, sélectionner le piston comme suit :

Lors de l'usage d'un bloc-cylindres neuf :

- Identifier la classe d'alésage du cylindre (n° 1, 2, ou 3) sur la surface arrière gauche du bloc-cylindres et sélectionner le piston correspondant à cette catégorie.
- Le n° de pièce du piston est spécifié avec l'axe du piston comme un ensemble.

Lors de la réutilisation d'un bloc-cylindres déposé :

- Mesurer le diamètre interne de l'alésage du bloc-cylindres.
- Déterminer l'alésage en comparant les mesures avec les valeurs sous ''Type d'alésage de cylindre'' dans le tableau ci-dessous. Sélectionner un piston de la même taille.

Sélection appropriée des pistons :

Unité : mm

Catégorie (perforée)	1	2	3
Diamètre interne de l'alésage du cylindre	89,000 - 89,010	89,010 - 89,020	89,020 - 89,030
Diamètre externe du piston	88,940 - 88,950	88,950 - 88,960	88,960 - 88,970

5. Déterminer la surdimension du piston en fonction de l'étendue de l'usure du cylindre.

- **Des pistons surdimensionnés de 0,25 et 0,5 (Surdimensionnement de 0,25 mm, 0,5 mm) sont disponibles en pièces détachées. Se reporter aux SDS, EM-3097. Lors de l'utilisation d'un piston surdimensionné, roder le cylindre pour que le jeu entre le piston et le cylindre soit à la valeur spécifiée. S'assurer d'utiliser le segment de piston surdimensionné approprié pour le piston surdimensionné.**

6. La dimension de l'alésage de cylindre est déterminée en ajoutant le jeu entre le piston et l'alésage au diamètre du piston ''A''.

Calcul du réalésage : D = A + B − C

où,
D : Diamètre alésé
A : Diamètre de piston mesuré
B : Jeu entre piston et alésage
C : Tolérance de finition 0,02 mm

7. Aléser les cylindres.

- **Quand un cylindre doit être alésé, tous les autres cylindres doivent également l'être.**
- **Ne pas aléser trop profondément un cylindre en une fois. Rectifier seulement 0,05 mm dans le diamètre en une seule fois.**

8. Roder les cylindres pour obtenir le jeu spécifié du piston à l'alésage.
9. Mesurer l'alésage final du cylindre en recherchant s'il y a un faux-rond ou une conicité.

- **La mesure doit être prise une fois que l'alésage du cylindre a refroidi.**

Simpo PDF Merge and Split Unregistered Version - http://www.simpopdf.com

Inspection (Suite)

VILEBREQUIN

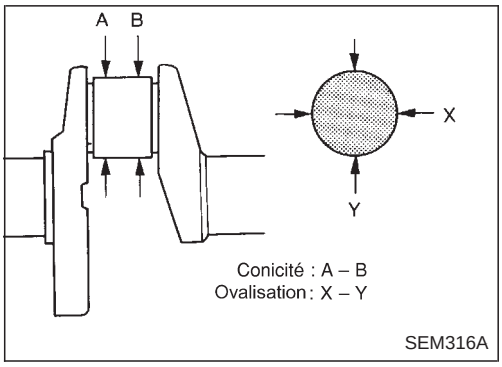

1. Vérifier si les tourillons principaux et manetons de vilebrequin ne sont pas rayés, usés ou fissurés.
2. Mesurer les tourillons avec un micromètre, pour rechercher conicité ou faux-rond.
   Faux-rond (X - Y) :
   Standard
   0,003 mm
   Limite
   0,005 mm
   Conicité (A - B) :
   Standard
   0,003 mm
   Limite
   0,005 mm

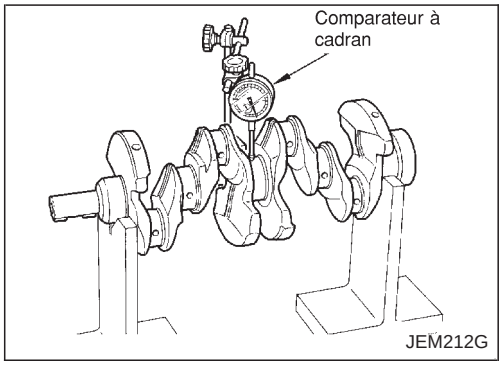

3. Mesurer le voile du vilebrequin au tourillon (central) n° 3
   Voile (Indication totale du comparateur) :
   Standard 0,05 mm
   Limite, 0,10 mm

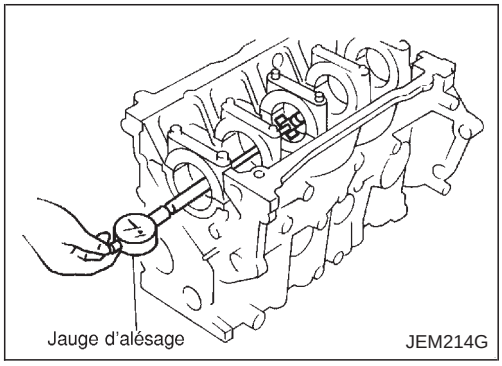

DIAMETRE INTERIEUR DU BOITIER DU PALIER PRINCIPAL

- Sans reposer les paliers principaux, reposer les bouchons du roulement principal et serrer les boulons au couple spécifié.
- Mesurer le diamètre interne du logement du roulement principal avec une jauge d'alésage.
  Standard :
  66,654 - 66,681 mm de dia.
- Si la mesure n'est pas dans la fourchette spécifiée, remplacer le bloc-cylindres et les chapeaux du roulement principal.

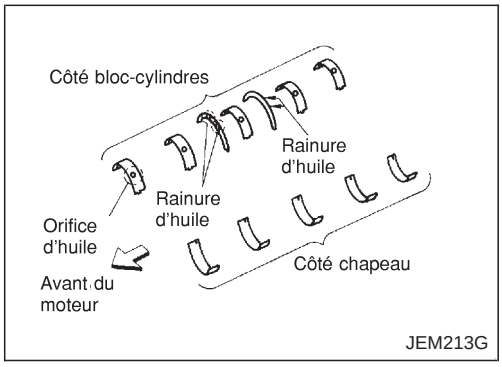

JEU DE PALIER

- Utiliser l'une des méthodes suivantes, néanmoins, la méthode ''A'' donne des résultats plus sûr et est préférable.

Méthode A (avec une jauge d'alésage et un micromètre)

Palier principal

1. Reposer les paliers principaux sur le bloc-cylindre et les chapeaux de palier principal, et serrer les boulons au couple spécifié. Puis mesurer le diamètre interne des paliers principaux.
   Jeu d'huile = diamètre interne du palier − diamètre externe du tourillon de vilebrequin

Simpo PDF Merge and Split Unregistered Version - http://www.simpopdf.com

Inspection (Suite)

Standard : 0,039 - 0,066 mm

2. Si la valeur est en dehors de la plage spécifiée, sélectionner les paliers principaux pour obtenir le jeu d'huile spécifié, correspondant aux mesures du diamètre interne du logement du palier principal et du diamètre externe du tourillon de vilebrequin.

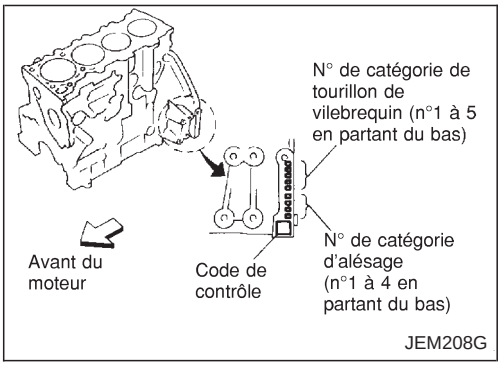

Lorsque l'on utilise un bloc-cylindres et un vilebrequin neuf

1) Identifier la classe du logement de palier (n° 0, 1, ou 2) sur la surface gauche arrière du bloc-cylindres, et déterminer la catégorie applicable sur la ligne ''Catégorie'' dans le tableau ci-dessous.
2) Identifier la classe de tourillon (n° 0, 1, ou 2) sur la surface avant du vilebrequin, et déterminer la catégorie applicable dans la colonne ''Catégorie'' du tableau.
3) Le palier principal à utiliser (STD 0 à STD 4) est indiqué dans la case où la ligne et la colonne se croisent.

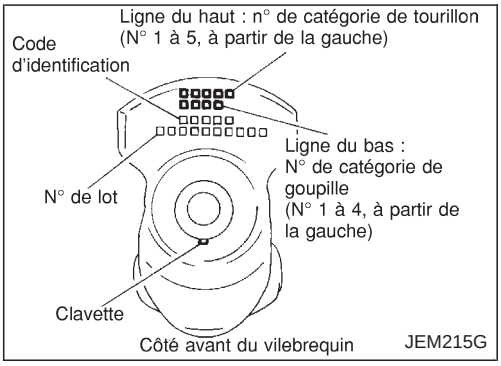

Lorsque l'on réutilise le bloc-cylindres et le vilebrequin déposés

1) Mesurer le diamètre interne du boîtier du palier principal de bloc-cylindres.
2) Sélectionner la case applicable correspondant à la mesure sur la ligne ''Diamètre interne du logement de palier principal du bloc-cylindres'' dans le tableau.
3) Mesurer le diamètre externe du tourillon du vilebrequin.
4) Sélectionner la case applicable à la mesure dans la colonne ''Diamètre extérieur du tourillon de vilebrequin'' dans le tableau.
5) Le palier principal à utiliser (STD 0 à STD 4) est indiqué dans la case où la ligne et la colonne se croisent.

Sélection appropriée du palier principal

Unité : mm

Diamètre intérieur du logement du palier principal du bloc-cylindres			66,654 - 66,663	66,663 - 66,672	66,672 - 66,681
Diamètre externe du tourillon de vilebrequin	Catégorie (perforée)		0	1	2
62,967 - 62,975	0	● N° de catégorie de palier ● Epaisseur de palier ● Jeu d'huile ● Couleur d'identification	STD 0 1,816 - 1,820 0,039 - 0,066 Noir	STD 1 1,820 - 1,824 0,039 - 0,066 Marron	STD 2 1,824 - 1,828 0,039 - 0,066 Vert
62,959 - 62,967	1	● N° de catégorie de palier ● Epaisseur de palier ● Jeu d'huile ● Couleur d'identification	STD 1 1,820 - 1,824 0,039 - 0,066 Marron	STD 2 1,824 - 1,828 0,039 - 0,066 Vert	STD 3 1,828 - 1,832 0,039 - 0,066 Jaune
62,951 - 62,959	2	● N° de catégorie de palier ● Epaisseur de palier ● Jeu l'huile ● Couleur d'identification	STD 2 1,824 - 1,828 0,039 - 0,066 Vert	STD 3 1,828 - 1,832 0,039 - 0,066 Jaune	STD 4 1,832 - 1,836 0,039 - 0,066 Bleu

Simpo PDF Merge and Split Unregistered Version - http://www.simpopdf.com

Inspection (Suite)

3. Lorsque l'on ne peut pas obtenir le jeu d'huile spécifié avec des paliers principaux de taille standard, utiliser des paliers sous-dimensionnés.

- Lorsqu'un palier sous-dimensionné est utilisé, mesurer le diamètre interne du palier quand le palier est reposé. Meuler le tourillon de vilebrequin pour que le jeu d'huile spécifié soit obtenu.

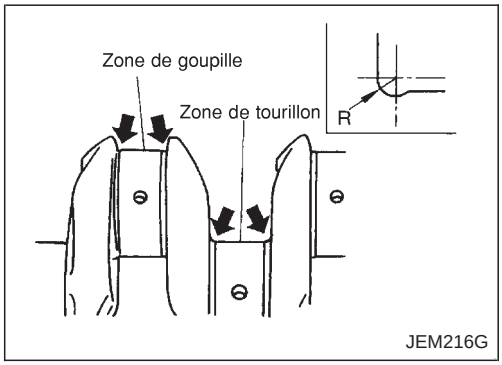

Palier sous-dimensionné

Unité : mm

Taille	Epaisseur
US 0,25	1,949 - 1,953

PRECAUTION :
Lors du meulage du tourillon de vilebrequin pour utiliser un palier sous-dimensionné, éviter d'endommager le filet R.

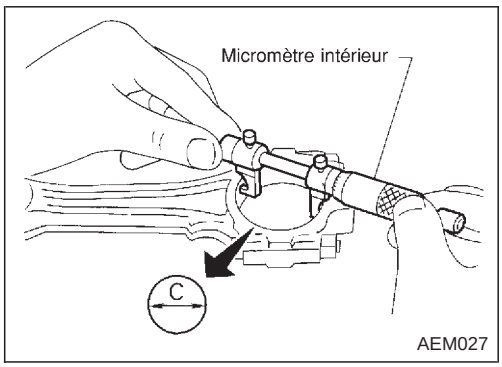

Palier de bielle (tête de bielle)

1. Reposer le palier de bielle sur la bielle et le chapeau.
2. Reposer le chapeau de bielle sur la bielle.
   Serrer les boulons au couple spécifié.
3. Mesurer le diamètre intérieur ''C'' de la bielle.
   Diamètre intérieur:
   Standard 55,000 - 55,013 mm

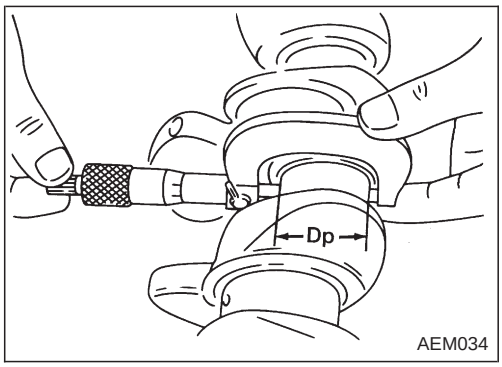

4. Mesurer le diamètre extérieur ''Dp'' de chaque maneton de vilebrequin.
5. Calculer le jeu de palier de bielle.
   Jeu de palier de bielle = C − Dp
   Standard : 0,031 - 0,061 mm
6. Remplacer le palier si les limites sont dépassées.

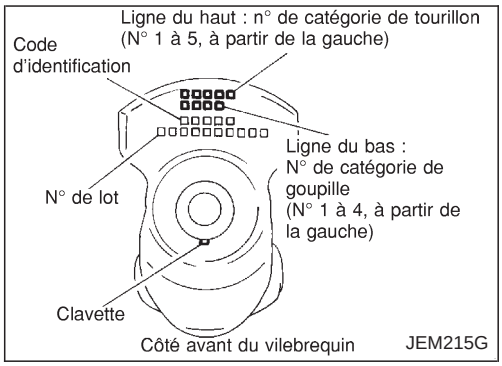

Lors de l'utilisation de bielles et de vilebrequin neufs :

- Identifier la classe de diamètre de l'axe (n° 0, 1, ou 2) sur la surface avant du vilebrequin et sélectionner le palier de bielle de la même catégorie.
- Il n'y a pas de graduation pour le diamètre intérieur de la tête de bielle.

Lors de la réutilisation du vilebrequin et de la bielle déposés

- Mesurer le diamètre intérieur de la tête de bielle et s'assurer qu'elle se trouve dans la plage spécifiée.
- Mesurer le diamètre extérieur de l'axe du vilebrequin.

Simpo PDF Merge and Split Unregistered Version - http://www.simpopdf.com

Inspection (Suite)

- Déterminer la classe de l'axe de vilebrequin en comparant la mesure dans la colonne ''Diamètre extérieur de l'axe du vilebrequin'' dans le tableau ci-dessous. Choisir des paliers de la même catégorie.

Sélection appropriée du palier de bielle

Unité : mm

Diamètre extérieur de la tête de bielle		55,000 - 55,013	
Diamètre extérieur de l'axe de vilebrequin	Catégorie (perforé)	0 (non perforé)	
51,968 - 51,974	0	● N° de catégorie de palier ● Epaisseur de palier ● Jeu d'huile ● Couleur d'identification	STD 0 1,492 - 1,496 0,031 - 0,061 Noir
51,961 - 51,968	1	● N° de catégorie de palier ● Epaisseur de palier ● Jeu d'huile ● Couleur d'identification	STD 1 1,496 - 1,500 0,031 - 0,061 Marron
51,954 - 51,961	2	● N° de catégorie de palier ● Epaisseur de palier ● Jeu d'huile ● Couleur d'identification	STD 2 1,500 - 1,504 0,031 - 0,061 Vert

7. Si le jeu ne peut pas être ajusté au standard de n'importe quel palier, meuler le tourillon de vilebrequin et utiliser un palier sous-dimensionné.

- Lorsqu'un palier sous-dimensionné est utilisé, mesurer le diamètre intérieur du palier quand le palier est reposé. Meuler les axes pour obtenir le jeu d'huile spécifié.

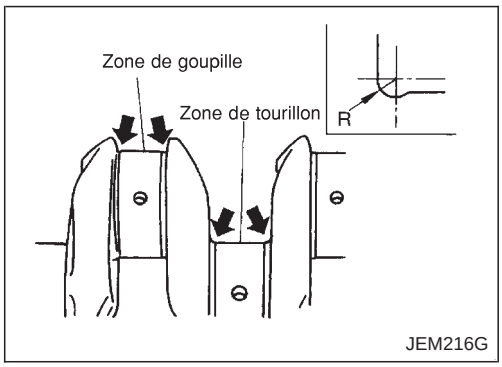

Palier sous-dimensionné

Unité : mm

Taille	Epaisseur
US 0,08	1,536 - 1,540
US 0,12	1,556 - 1,560
US 0,25	1,621 - 1,625

PRECAUTION :
Lors du meulage du tourillon de vilebrequin pour utiliser un palier sous-dimensionné, éviter d'endommager le filet R.
Taille standard R :
1,5 - 1,7 mm

Simpo PDF Merge and Split Unregistered Version - http://www.simpopdf.com

Inspection (Suite)

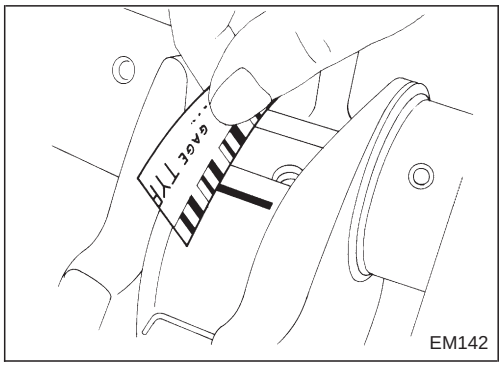

EM142

Méthode B (utilisation de la cale plastique)

PRECAUTION :

- **Ne pas tourner le vilebrequin ni la bielle pendant l'insertion de la cale en plastique.**
- **Lorsque le jeu de palier dépasse la limite spécifiée, s'assurer que le bon palier a bien été reposé. Si le jeu de palier est incorrect, utiliser un palier principal sous-dimensionné ou plus épais pour assurer le jeu spécifié.**

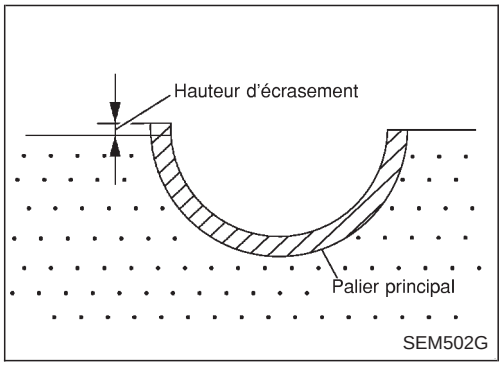

SEM502G

HAUTEUR D'ECRASEMENT DU PALIER PRINCIPAL

- Lorsque le chapeau de palier est enlevé, après avoir été serré au couple spécifié et une fois les paliers principaux reposés, le bout du palier doit être en saillie.
  Standard : Il doit y avoir une hauteur d'écrasement
- Si la norme n'est pas respectée, remplacer les paliers principaux.

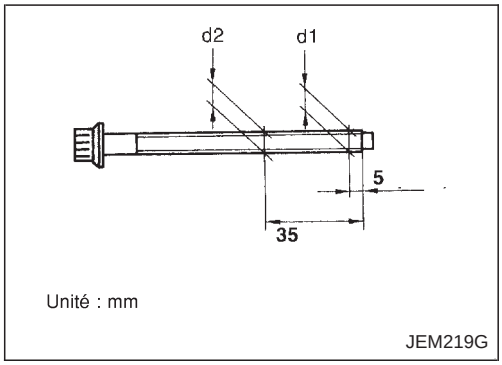

JEM219G

DEFORMATION DU BOULON DU CHAPEAU DU PALIER PRINCIPAL

- Mesurer le diamètre externe de la zone filetée, d1 et d2, aux points spécifiés sur l'illustration.
- Lorsque le point en collet est identifié à un point autre que les points spécifiés, mesurer au point comme pour d2.
- Calculer la différence entre d1 et d2.
  Limite : 0,13 mm

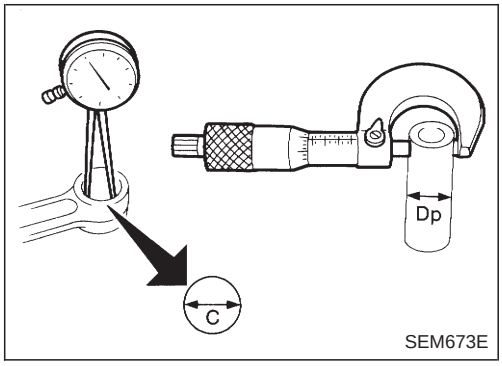

SEM673E

JEU DE LA BAGUE DE BIELLE (PIED DE BIELLE)

1. Mesurer le diamètre intérieur ''C'' de la bague.
   Diamètre intérieur ''C'' :
   Standard 28,026 - 28,038 mm
2. Mesurer le diamètre extérieur ''Dp'' de l'axe de piston.
   Diamètre extérieur ''Dp'' :
   Standard 27,994 - 28,000 mm
3. Calculer le jeu de la bague de bielle.
   Jeu de la bague de bielle = C − Dp
   Standard : 0,026 - 0,044 mm
   Limite : 0,057 mm
   Si le jeu dépasse la valeur limite, remplacer l'ensemble de bielle et/ou l'ensemble piston avec l'axe.

Simpo PDF Merge and Split Unregistered Version - http://www.simpopdf.com

Inspection (Suite)

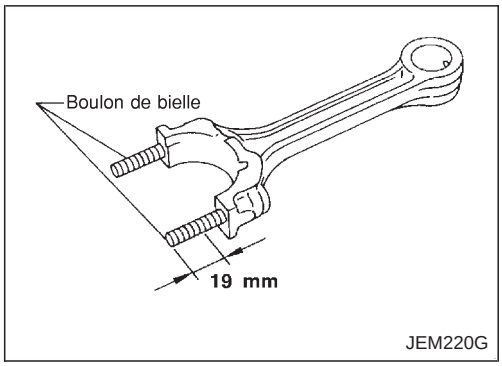

DEFORMATION DU BOULON DE LA BIELLE

- Reposer des écrous aux boulons de la bielle. Vérifier si l'écrou peut être vissé à la main sans accroc sur les parties filetées des boulons jusqu'au dernier filetage du boulon.
- Si l'écrou ne se visse pas facilement, mesurer le diamètre externe de la partie filetée du boulon au point spécifié sur l'illustration.
- Si un point en collet est identifié, mesurer au niveau de ce point.
  Standard : 8,90 - 9,00 mm de dia.
  Limite : 8,75 mm de dia.
- Si la mesure excède la limite, remplacer les boulons et écrous de la bielle.

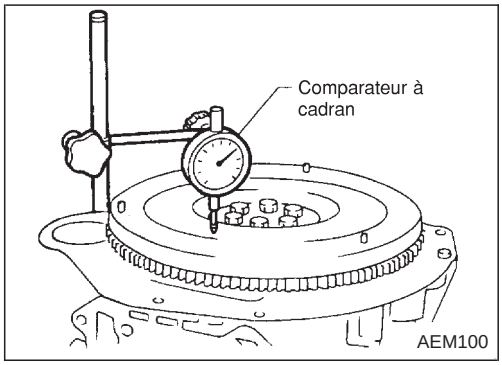

VOILE DU VOLANT MOTEUR

Voile (Indication totale du comparateur) :
Moins de 0,15 mm

PRECAUTION :

- **La plaque de signal est intégrée à l'ensemble du volant moteur. Prendre garde de ne pas endommager la plaque de signal, particulièrement les dents.**
- **Vérifier que la plaque de signal n'est pas endommagée ou fissurée.**
- **Ne jamais placer l'ensemble de volant moteur avec la plaque de signal orientée vers le bas.**
- **Maintenir tout objet magnétique hors de portée de la plaque de signal.**
- **Ne laisser aucun matériau magnétique en contact avec les dents de la plaque de signal.**

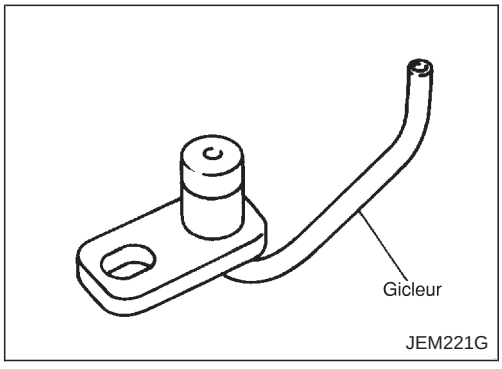

GICLEUR D'HUILE

- Vérifier que le gicleur n'est pas déformé ou endommagé.
- Vérifier que le passage d'huile n'est pas bouché en insufflant de l'air par le côté du gicleur.
- En cas d'anormalités, nettoyer ou remplacer.

Simpo PDF Merge and Split Unregistered Version - http://www.simpopdf.com

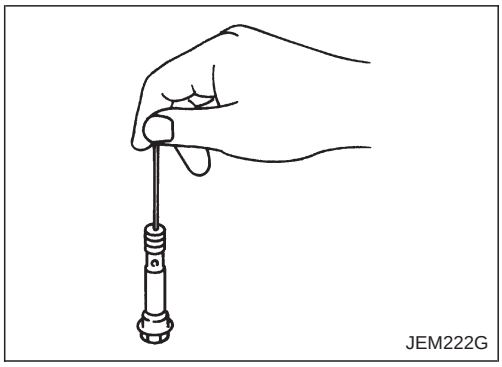
JEM222G

SOUPAPE DE DECHARGE DU JET D'HUILE

A l'aide d'une tige en résine propre, appuyer sur le clapet de retenue dans la soupape de décharge. Vérifier qu'elle revienne bien à sa position initiale sans résistance.

Remontage

PISTON

1. A l'aide d'une pince à circlips, reposer les joncs d'arrêt sur les rainures du côté arrière du piston.
- Reposer fermement pour l'insérer complètement dans la rainure.
2. Reposer le piston sur la bielle.
- Chauffer le piston avec un séchoir industriel jusqu'à 60 à 70°C pour que l'axe de piston s'enfonce facilement avec le doigt. Ensuite, insérer l'axe de piston en commençant par l'avant du piston dans le piston et dans la bielle.

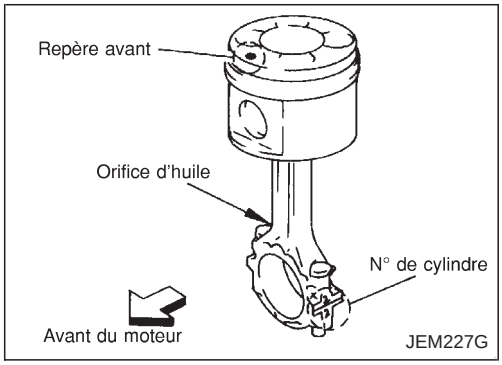

JEM227G

- Monter pour que le repère avant sur la surface supérieure du piston et le n° de cylindre poinçonné sur la bielle soient dans la position indiquée par l'illustration.
3. Reposer les joncs d'arrêt sur l'avant du piston.
- Se reporter à l'étape 1. ci-dessus pour les remarques concernant la repose.
- Après repose, vérifier que la bielle se déplace sans à-coups.
4. Reposer les segments de piston en utilisant les pinces d'écartement de segments de piston (outillage en vente dans le commerce).
- **Faire très attention de ne pas endommager le piston.**

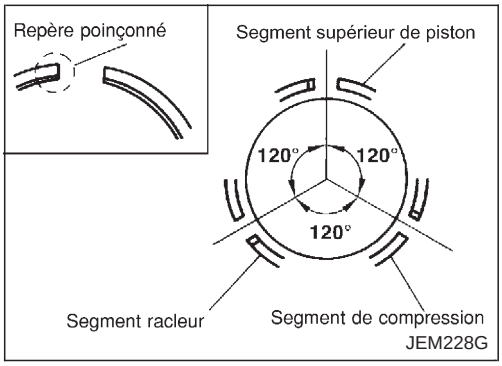

JEM228G

- Reposer le segment de feu et le segment de compression avec la surface perforée orientée vers le haut.
  Repère d'identification
  Segment de feu R
  Segment de compression 2R
- Reposer les segments de manière à ce que les trois orifices fermés se trouvent à 120° l'un de l'autre.
- Les orifices fermés ne doivent pas se trouver dans des directions spécifiques, pour autant que chacun soit placé avec un écart de 120°.

Simpo PDF Merge and Split Unregistered Version - http://www.simpopdf.com

Remontage (Suite)

VILEBREQUIN

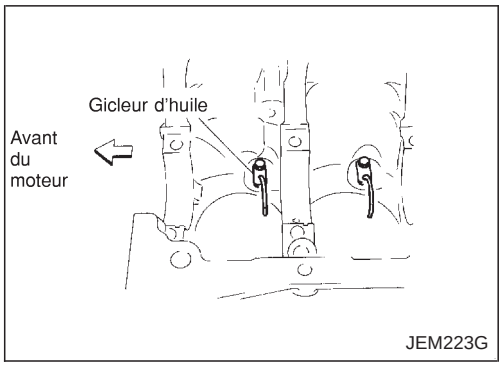

1. Souffler suffisamment d'air dans le passage de liquide de refroidissement, le passage d'huile dans le bloc-cylindres, et dans le carter de vilebrequin, et dans l'alésage des cylindres afin d'éliminer tous corps étrangers.
2. Reposer les soupapes de décharge du jet d'huile.
3. Reposer les jets d'huile.

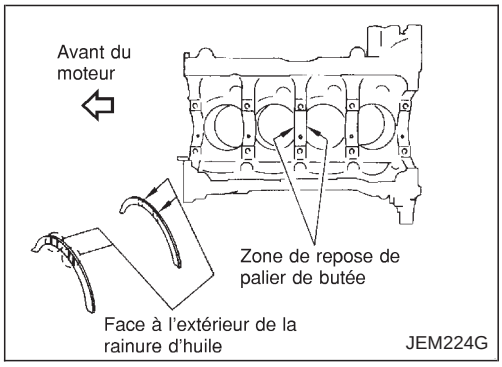

4. Reposer les paliers principaux et les paliers de poussée.

a. Déposer les débris, les impuretés, l'huile des endroits sur le bloc-cylindres et sur les chapeaux de paliers principaux où les paliers sont reposés.

b. Reposer le palier de butée de chaque côté du logement du bloc-cylindres n° 3.

- Reposer les paliers de butée avec la rainure d'huile orientée vers le bras de vilebrequin (extérieur).

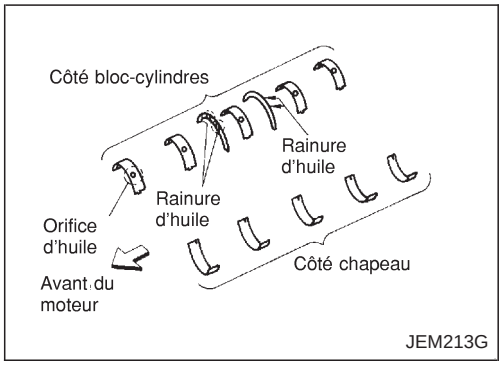

c. S'assurer de reposer les paliers principaux dans la bonne direction.

- S'assurer que ceux avec des orifices d'huile ou rainures d'huile sont montés sur le côté du bloc-cylindres, et ceux sans orifices d'huile ou rainures sur le côté du chapeau principal.
- Avant la repose, appliquer de l'huile-moteur sur les surfaces avant (internes) des paliers. Ne pas appliquer d'huile sur les surfaces arrière, mais bien les nettoyer.
- Aligner les crans de butée sur les paliers et procéder à la repose.
- S'assurer que les orifices d'huile sur le bloc-cylindres et ceux des paliers correspondants sont alignés.

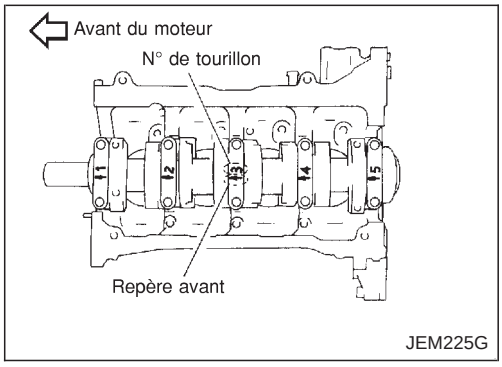

5. Reposer le vilebrequin sur le bloc-cylindres.

- S'assurer que le vilebrequin tourne sans à-coups à la main.

6. Reposer les chapeaux de palier principal.

- Identifier les chapeaux de palier principal à l'aide de la marque perforée. Reposer de façon correcte en faisant correspondre le n° de tourillon sur le chapeau de palier et le tourillon, avec le repère avant orienté vers l'avant.
- Les chapeaux de roulement principal sont généralement traités avec le bloc-cylindres. Par conséquent, les chapeaux et le bloc-cylindres devraient être remplacés comme un ensemble.

Simpo PDF Merge and Split Unregistered Version - http://www.simpopdf.com

Remontage (Suite)

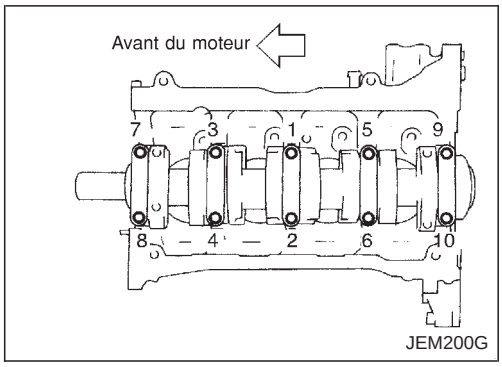

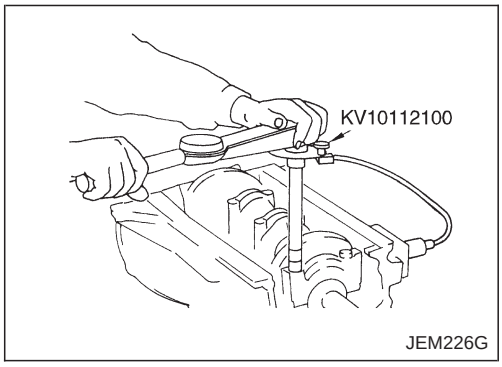

7. Vérifier que les boulons du chapeau de palier principal ne sont pas déformés.
   Se reporter à EM-3082, ‘‘DEFORMATION DU BOULON DU CHAPEAU DE PALIER PRINCIPAL’’.
8. Serrer les boulons de chapeau de palier principal selon la procédure suivante :

a. Appliquer de l’huile moteur sur la partie filetée et la surface d’appui de chaque boulon.
b. Serrer de 25 à 30 N·m (2,5 à 3,1 kg-m) dans l’ordre numérique indiqué sur illustration.
c. Placer des marques d’alignement (avec de la peinture) sur chaque boulon et sur le bouchon de palier principal, toutes dans la même direction (en utilisant un rapporteur).
d. Ensuite, serrer de 90° à 95° (cible : 90°).

- **Toujours utiliser une clé angulaire (SST) ou un rapporteur pendant le serrage angulaire. Eviter les serrages sur la base de simples contrôles visuels.**
- **Après avoir serré les boulons au couple spécifié, s’assurer que le vilebrequin tourne sans à-coups.**
- **Vérifier le jeu axial du vilebrequin. Se reporter à EM-3073, ‘‘JEU AXIAL DU VILEBREQUIN’’.**

9. Contrôler le diamètre extérieur des boulons de la bielle. Se reporter à EM-3083, ‘‘DEFORMATION DU BOULON DE LA BIELLE’’.
10. Reposer le piston sur la bielle.

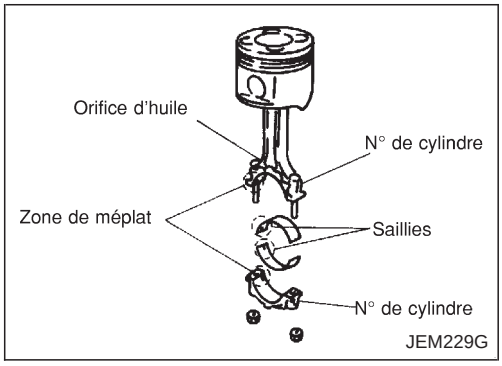

11. Reposer le palier de bielle sur la bielle et le chapeau de bielle.

- Avant la repose, appliquer de l’huile-moteur sur la surface avant intérieure du palier. N’appliquer aucune huile sur la surface arrière, mais bien la nettoyer.
- Aligner les crans d’arrêt sur la bielle et les saillies du roulement et procéder à la repose.

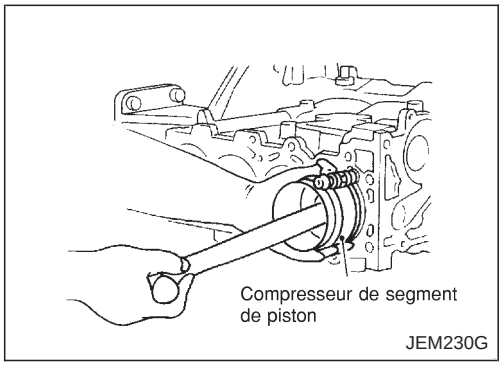

12. Reposer le piston et l’ensemble de la bielle sur le vilebrequin.

- Régler l’axe du vilebrequin de l’emplacement de montage au PMB.
- Faire correspondre le n° de cylindre de la bielle à la position du cylindre.
- En utilisant le compresseur de segment de piston (outillage en vente dans le commerce), reposer de manière à ce que la marque vers l’avant sur la surface supérieure du piston soit orientée vers l’avant du moteur.

Simpo PDF Merge and Split Unregistered Version - http://www.simpopdf.com

Remontage (Suite)

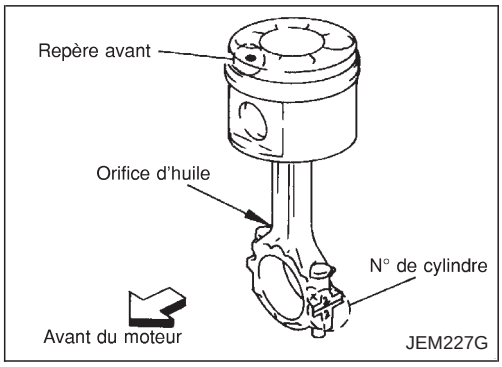

13. Reposer les chapeaux de bielle.
- Faire correspondre le n° de cylindre à la bielle et celà sur le chapeau.
- S'assurer que le repère avant du chapeau de bielle soit orienté vers l'avant du véhicule.

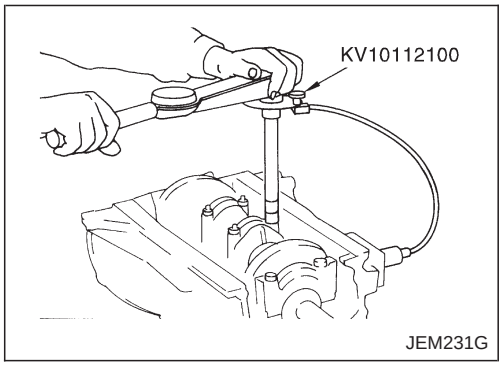

14. Serrer les écrous de bielle en suivant la procédure suivante.
a. Appliquer de l'huile moteur neuve sur les filets et les surfaces d'appui des boulons.
b. Serrer de 29 à 30 N·m (2,9 à 3,1 kg-m).
c. Desserrer totalement à 0 N.m (0 kg-m).
d. Serrer de 19 à 20 N·m (1,9 à 2,1 kg-m).
e. Serrer de 120° à 125° (objectif : 120°). (serrage angulaire)
- **Toujours utiliser soit une clé angulaire soit un rapporteur pour le serrage angulaire. Eviter tout serrage basé seulement sur un contrôle visuel.**
- Après avoir serré les écrous, vérifier que le vilebrequin tourne facilement.
- Vérifier le jeu latéral de la bielle. Se reporter à EM-3074 ''JEU LATERAL DE LA BIELLE''.

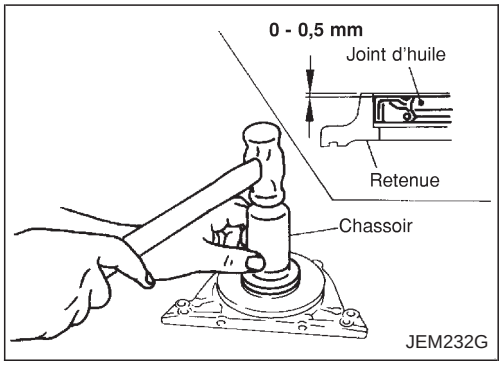

15. Installer soigneusement le joint d'huile arrière dans la bague de retenue de joint d'huile arrière.
- A l'aide d'un poussoir (105 mm dia.), l'enfoncer de manière à respecter les cotes indiquées sur l'illustration.
- Eviter de l'installer de travers. L'enfoncer perpendiculairement à son axe.

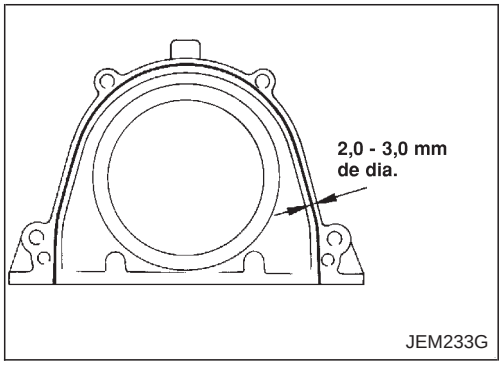

16. Reposer la bague de retenue arrière du joint d'huile.
- Appliquer un cordon de joint liquide approprié (se reporter à EM-3003, ''Procédure d'application du joint liquide''.) aux endroits indiqués sur l'illustration.

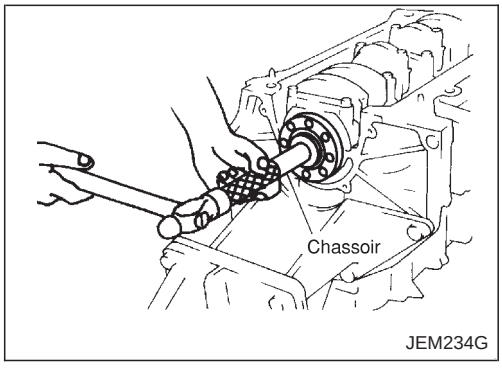

17. Reposer la bague pilote.
- L'enfoncer avec le poussoir (de 19 mm de dia environ).

Simpo PDF Merge and Split Unregistered Version - http://www.simpopdf.com

Remontage (Suite)

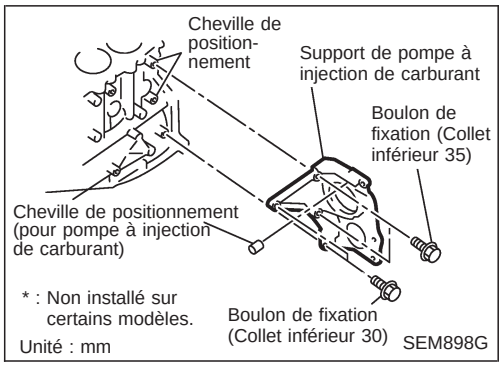

18. Reposer le support de pompe à injection de carburant.
- Aligner le support avec les chevilles de positionnement du bloc à installer.
- Les deux écrous utilisés pour les chevilles de positionnement ont une plus grande longueur sous tête que les autres.
- Vérifier la longueur de saillie des chevilles de positionnement pour la pompe à injection de carburant.
  Standard : 13,0 - 15,0 mm
19. Reposer les éléments du moteur dans l'ordre inverse de démontage.
- Serrer les écrous maintenant les supports des éléments complémentaires (compresseur de climatiseur, alternateur au couple spécifié.
  : 57 - 65 N·m (5,8 - 6,7 kg-m)
20. Déposer le moteur du support moteur dans l'ordre inverse de montage.
21. Reposer le volant-moteur.
- En maintenant la couronne dentée avec le goupille d'arrêt à bague (SST), serrer les boulons de sécurité à l'aide d'une clé TORX (taille : Q8 E20, Outillage en vente dans le commerce).
- Serrer les boulons de manière uniforme et entrecroisée.

REMPLACEMENT DE LA BAGUE PILOTE

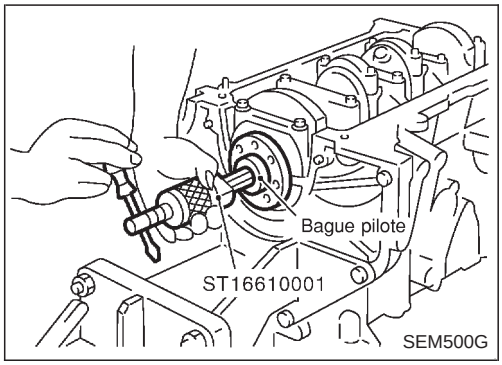

1. Déposer la bague pilote à l'aide de l'outil de dépose approprié.

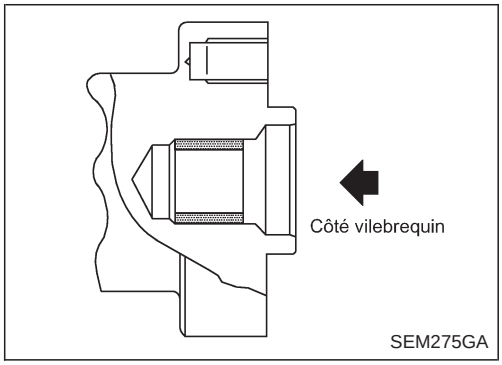

2. Reposer la bague pilote comme illustré.

Simpo PDF Merge and Split Unregistered Version - http://www.simpopdf.com

Inspection et réglage

SOUPAPE

Réglage du jeu de soupape

Unité : mm

Jeu de soupape (à chaud)	
Admission	0,31 - 0,39
Echappement	0,33 - 0,41 (Sauf pour l'Europe) 0,39 - 0,47 (Pour l'Europe)

ARBRE A CAMES ET PALIER D'ARBRE A CAMES

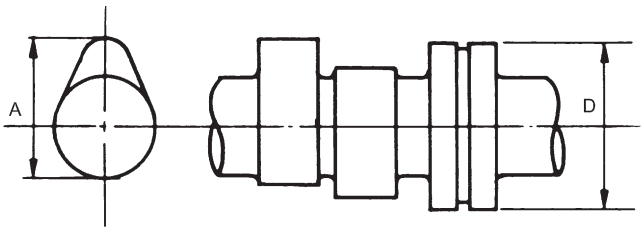

SEM568A

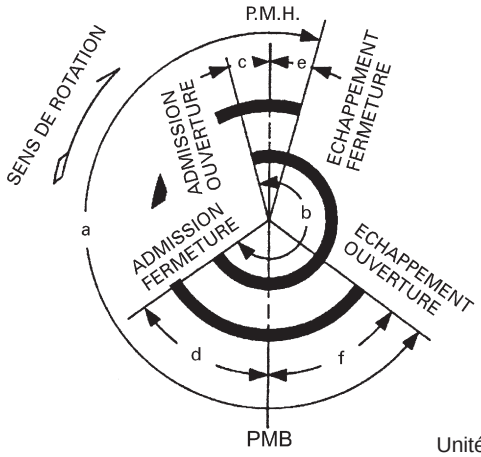

EM120

Unité : mm

		Standard		Limite
Hauteur de came (A)	Admission	42,505 - 42,695		—
	Echappement	40,905 - 41,095		—
Limite d'usure de hauteur de came		—		0,2
Jeu entre tourillon d'arbre à cames et palier		0,045 - 0,090		0,12
Diamètre interne du palier d'arbre à cames	Tourillons #1 à #5	28,000 - 28,025		—
Diamètre extérieur du tourillon d'arbre à cames (D)	Tourillons #1 à #5	27,935 - 27,955		—
Voile de l'arbre à cames*		Moins de 0,02		0,04
Jeu axial de l'arbre à cames		0,070 - 0,148		0,2
Réglage des soupapes (degré sur le vilebrequin)		Sauf pour l'Europe	Pour l'Europe	—
	a	216	224	
	b	232	224	—
	c	−1	−1	—
	d	54	46	—
	e	4	7	—
	f	32	37	

* : Indication totale du comparateur

Simpo PDF Merge and Split Unregistered Version - http://www.simpopdf.com

Inspection et réglage (Suite)

PISTON, SEGMENT DE PISTON ET AXE DE PISTON

Segment de piston

Unité : mm

		Standard	Limite
Jeu latéral	Segment de feu	0,040 - 0,080	0,1
	Segment de compression	0,030 - 0,070	0,1
	Segment racleur	0,065 - 0,135	0,1
Coupe de segment	Segment de feu	0,28 - 0,52	1,0
	Segment de compression	0,45 - 0,69	1,0
	Segment racleur	0,20 - 0,69	1,0

Simpo PDF Merge and Split Unregistered Version - http://www.simpopdf.com

Caractéristiques générales

Disposition des cylindres		4 en ligne
Cylindrée cm^3		2,488
Alésage et course mm		89,0 x 100
Disposition des soupapes		DOHC
Ordre d'allumage		1-3-4-2
Nombre de segments de piston	Compression	2
	Racleur	1
Nombre de paliers principaux		5
Rapport de compression		18,0

Pression de compression

Unité : kPa (bar, kg/cm^2)/200 tr/mn

Pression de compression	Standard	3.100 (31,00, 31,6)
	Minimale	2.500 (25,00, 25,5)
	Limite de différence entre les cylindres	490 (4,90, 5,0)

Culasse

Unité : mm

	Standard	Limite
Déformation de la surface de culasse	Moins de 0,03	0,1

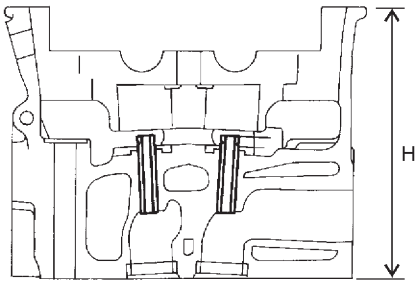

Hauteur nominale de culasse :
H = 153,9 - 154,1 mm

JEM204G

Simpo PDF Merge and Split Unregistered Version - http://www.simpopdf.com

Soupape

SOUPAPE

Unité : mm

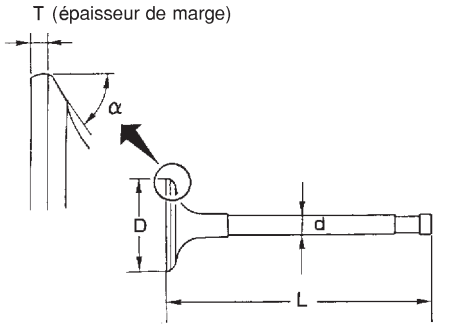

SEM188

Diamètre de la tête de soupape "D"	Admission	28,0 - 28,3
	Echappement	26,0 - 26,3
Longueur de la soupape "L"	Admission	106,72
	Echappement	106,36
Diamètre de la queue de soupape "d"	Admission	5,965 - 5,980
	Echappement	5,945 - 5,960
Angle du siège de soupape "α"	Admission	45°15′ - 45°45′
	Echappement	
Marge de soupape "T"	Admission	1,38
	Echappement	1,48
Limite de marge de soupape "T"		Plus de 1,0
Limite de meulage de la surface d'extrémité de la queue de soupape		Moins de 0,2

JEU DE SOUPAPE

Unité : mm

	A froid	A chaud* (valeurs de référence)
Admission	0,24 - 0,32	0,29 - 0,37
Echappement	0,26 - 0,34	0,33 - 0,41

CALES DISPONIBLES

Epaisseur mm	Repère d'identification
2,10	2,10
2,12	2,12
2,14	2,14
2,16	2,16
2,18	2,18
2,20	2,20
2,22	2,22
2,24	2,24
2,26	2,26
2,28	2,28
2,30	2,30
2,32	2,32
2,34	2,34

Simpo PDF Merge and Split Unregistered Version - http://www.simpopdf.com

Soupape (Suite)

2,36	2,36
2,38	2,38
2,40	2,40
2,42	2,42
2,44	2,44
2,46	2,46
2,48	2,48
2,50	2,50
2,52	2,52
2,54	2,54
2,56	2,56
2,58	2,58
2,60	2,60
2,62	2,62
2,64	2,64
2,66	2,66
2,68	2,68
2,70	2,70
2,72	2,72
2,74	2,74

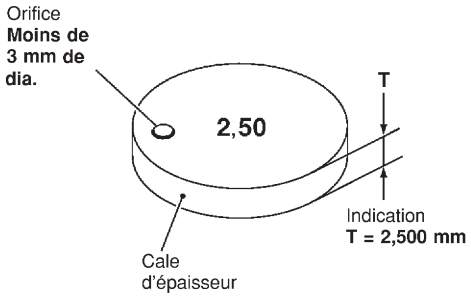

SEM512G

RESSORT DE SOUPAPE

Hauteur libre mm	Externe	43,7 mm
Pression N(kg) à une hauteur de -mm	Externe	320 - 360 (32,6 - 36,7) à 24,82
Faux-équerre mm	Externe	Limite 1,9

POUSSOIR DE SOUPAPE

Unité : mm

Diamètre externe du poussoir de soupape	29,960 - 29,975
Diamètre interne du guide de poussoir	30,000 - 30,021
Jeu entre poussoir et guide de poussoir	0,025 - 0,061

Simpo PDF Merge and Split Unregistered Version - http://www.simpopdf.com

Soupape (Suite)

GUIDE DE SOUPAPE

Unité : mm

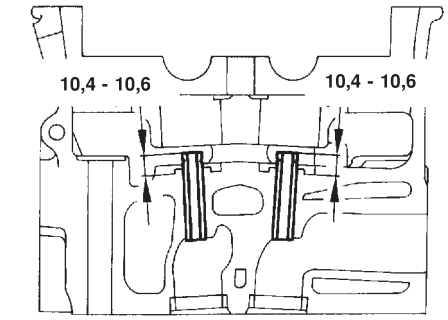

Unité = mm

JEM156G

		Standard	Entretien
Guide de soupape	Diamètre externe	10,023 - 10,034	10,223 - 10,234
Guide de soupape	Diamètre interne (taille finie)	6,000 - 6,018	
Diamètre de l'orifice de guide de soupape dans la culasse		9,975 - 9,996	10,175 - 10,196
Ajustement serré du guide de soupape		0,027 - 0,059	
		Standard	Limite
Jeu entre queue de soupape et guide de soupape	Admission	0,020 - 0,053	0,08
	Echappement	0,040 - 0,073	0,1
Limite de déflexion de la soupape		0,15	
Longueur de dépassement		10,4 - 10,6	

Simpo PDF Merge and Split Unregistered Version - http://www.simpopdf.com

Siège de soupape

Unité : mm

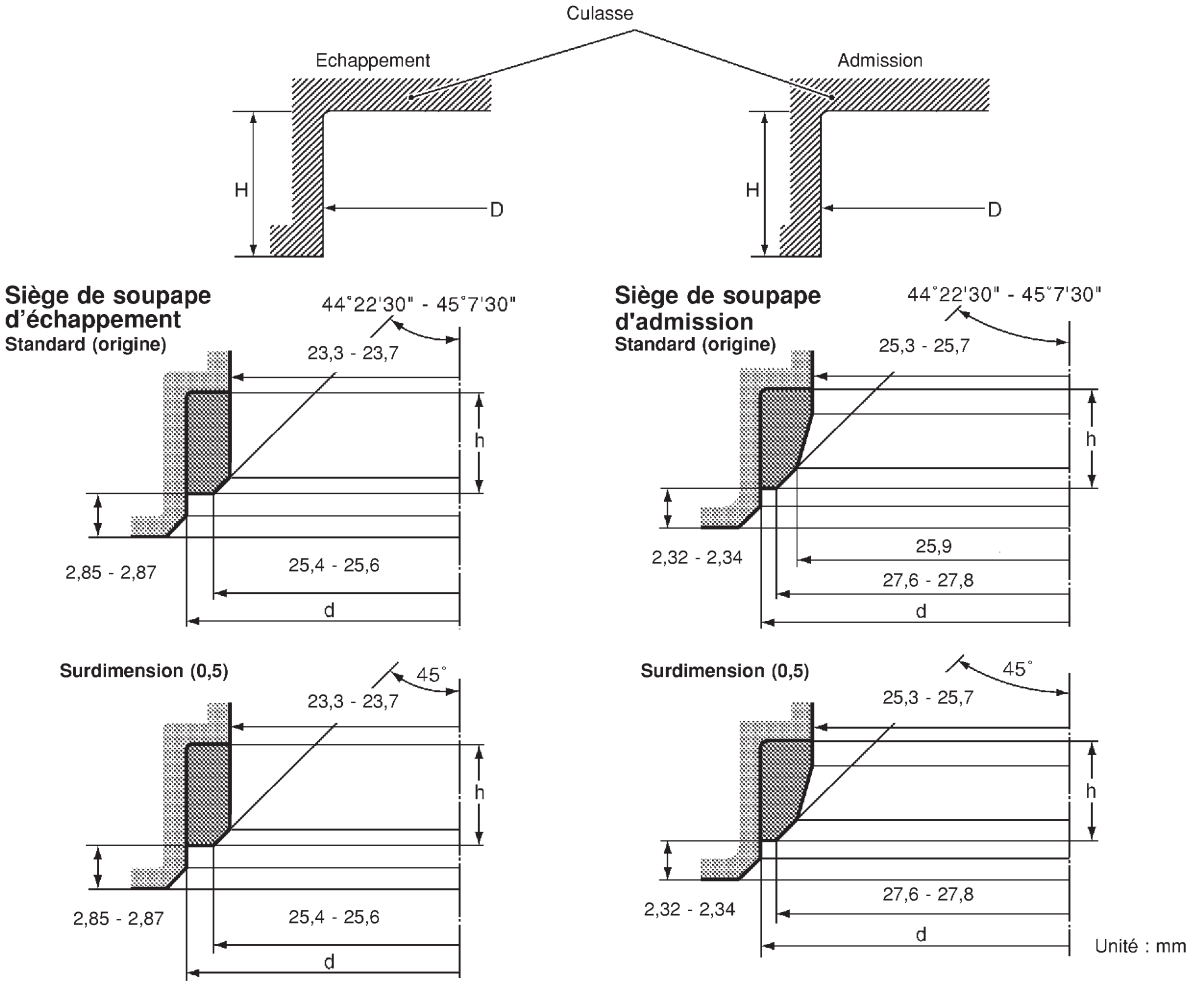

SEM546G

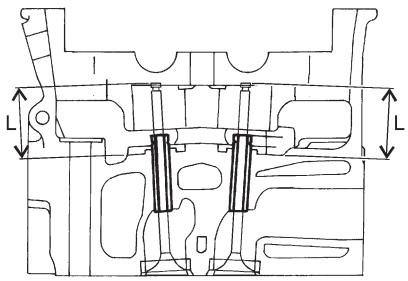

JEM253G

		Standard	Entretien
Diamètre de l'encoche du siège de culasse (D)	Admission	30,000 - 30,016	30,500 - 30,516
	Echappement	29,000 - 29,016	29,500 - 29,516
Ajustement serré du siège de soupape	Admission	0,064 - 0,100	
	Echappement	0,064 - 0,096	
Diamètre externe du siège de soupape (d)	Admission	30,080 - 30,100	30,580 - 30,600
	Echappement	29,080 - 29,096	29,580 - 29,596
Hauteur (h)	Admission	7,0 - 7,1	6,60 - 6,70
	Echappement	6,7 - 6,8	6,3 - 6,4

Simpo PDF Merge and Split Unregistered Version - http://www.simpopdf.com

Siège de soupape (Suite)

Profondeur (L)	Admission	8,83 - 9,13
	Echappement	9,06 - 9,36
Profondeur (L)	Admission	36,53 - 36,98
	Echappement	36,53 - 37,01

Arbre à cames et palier d'arbre à cames

Unité : mm

	Standard	Limite
Jeu entre tourillon d'arbre à cames et palier	0,045 - 0,086	0,045 - 0,086
Diamètre interne du palier d'arbre à cames	n° 1 30,500 - 30,521 n° 2, 3, 4, 5 24,000 - 24,021	—
Diamètre externe du tourillon d'arbre à cames	n° 1 30,435 - 30,455 n° 2, 3, 4, 5 23,935 - 23,955	—
Voile de l'arbre à cames [TIR *]	—	0,02
Voile de la roue d'arbre à cames [TIR*]	Moins de 0,15	—
Jeu axial de l'arbre à cames	0,070 - 0,148	0,24

* : Indication totale du comparateur

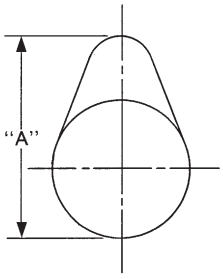

EM671

Hauteur de came "A"	Admission	39,505 - 39,695
	Echappement	39,905 - 40,095
Limite d'usure de hauteur de came		0,15
Réglage des soupapes		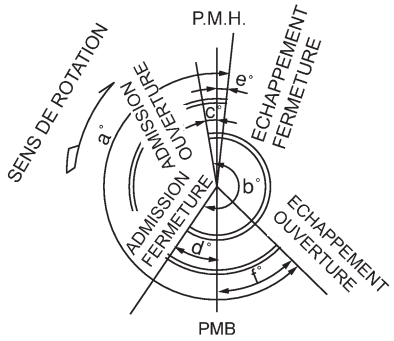

PBIC0187E-R

Unité : degré

a	b	c	d	e	f
224	212	2	30	−2	46

Simpo PDF Merge and Split Unregistered Version - http://www.simpopdf.com

Bloc-cylindres

Unité : mm

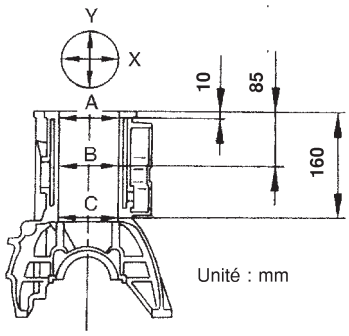

SEM899G

Planéité de la surface	Standard			Moins de 0,03
	Limite			0,1
Alésage de cylindre	Diamètre interne	Standard	Classe n° 1	89,000 - 89,010
			Classe n° 2	89,010 - 89,020
			Classe n° 3	89,020 - 89,030
		Limite d'usure		0,07
Faux-rond (X − Y)				Moins de 0,015
Conicité (C − A)				Moins de 0,010
Classe du diamètre interne du tourillon principal (sans palier)	Classe n° 0 Classe n° 1 Classe n° 2			66,654 - 66,663 66,663 - 66,672 66,672 - 66,681
Différence de diamètre interne entre les cylindres	Limite			Moins de 0,05

Piston, segment de piston et axe de piston

PISTONS DISPONIBLES

Unité : mm

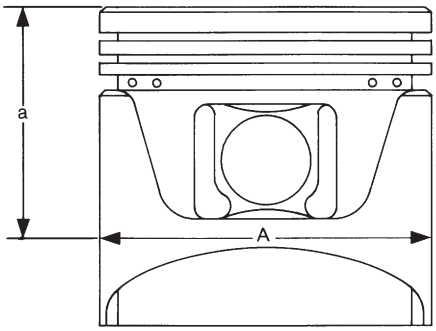

SEM882E

Diamètre de la jupe du piston "A"	Standard	Classe n° 1	88,940 - 88,950
		Classe n° 2	88,950 - 88,960
		Classe n° 3	88,960 - 88,970
		0,25 surdimensionné (Entretien)	89,190 - 89,220
		0,50 surdimensionné (Entretien)	89,440 - 89,470
hauteur "a"			59,0
Diamètre de l'orifice de l'axe de piston			27,997 - 28,005
Jeu entre piston et bloc-cylindres			0,050 - 0,070

Simpo PDF Merge and Split Unregistered Version - http://www.simpopdf.com

Piston, segment de piston et axe de piston (Suite)

SEGMENT DE PISTON

Unité : mm

		Standard	Limite
Jeu latéral	Segment de feu	0,050 - 0,090	0,1
	Segment de compression	0,050 - 0,090	0,1
	Segment racleur	0,030 - 0,070	—
Ecartement	Segment de feu	0,21 - 0,31	1,0
	Segment de compression	0,37 - 0,52	1,0
	Segment racleur	0,30 - 0,55	1,0

AXE DE PISTON

Unité : mm

Diamètre externe de l'axe de piston		27,994 - 28,000
Ajustement serré entre l'axe de piston et le piston		0,002 - 0,006
Jeu entre l'axe de piston et la bague de bielle	Standard	0,026 - 0,044
	Limite	0,057

* : Mesures prises à une température ambiante de 20°C

Bielle

Unité : mm

Distance de centre à centre		154,47 - 154,53
Courbe [pour 100 (3,94)]	Limite	0,12
Torsion [pour 100 (3,94)]	Limite	0,12
Diamètre interne du pied de bielle		30,080 - 31,000
Diamètre interne de la bague de l'axe de piston*		28,026 - 28,038
Diamètre interne de la tête de bielle		55,000 - 55,013
Jeu latéral	Standard	0,200 - 0,350
	Limite	0,4

* : Après repose dans la bielle

Simpo PDF Merge and Split Unregistered Version - http://www.simpopdf.com

Vilebrequin

Unité : mm

Classe du diamètre du tourillon principal ''Dm''	Classe n° 0 Classe n° 1 Classe n° 2	62,967 - 62,975 62,959 - 62,967 62,951 - 62,959
Diamètre du maneton ''Dp''	Classe n° 0	51,968 - 51,974
	Classe n° 1	51,961 - 51,968
	Classe n° 2	51,954 - 51,961
Distance de centre à centre ''r''		49,97 - 50,03
Faux-rond (X − Y)	Standard/Limite	Moins de 0,003/Moins de 0,005
Conicité (A − B)	Standard/Limite	Moins de 0,003/Moins de 0,005
Voile [TIR*]	Standard	Moins de 0,05
	Limite	Moins de 0,10
Jeu axial	Standard	0,085 - 0,25
	Limite	0,30

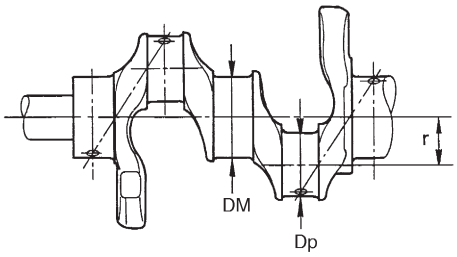

SEM645

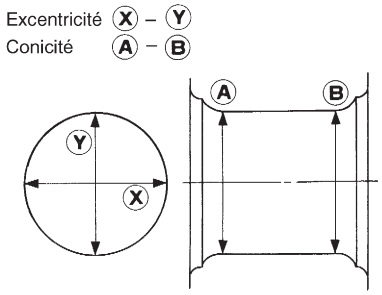

EM715

* : Indication totale du comparateur

Palier principal disponible

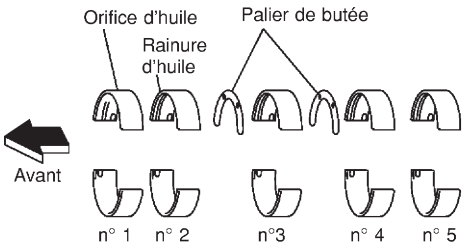

SEM255G

Classe n°	Epaisseur ''T'' mm	Largeur ''W'' mm	Couleur d'identification
0	1,816 - 1,820	19,9 - 20,1	Noir
1	1,820 - 1,824		Marron
2	1,824 - 1,828		Vert
3	1,828 - 1,832		Jaune
4	1,832 - 1,836		Bleu

Simpo PDF Merge and Split Unregistered Version - http://www.simpopdf.com

Palier principal disponible (Suite)

SOUS-DIMENSIONNE

Unité : mm

	Epaisseur	Diamètre de tourillon principal ''Dm''
0,25	1,949 - 1,953	Meuler jusqu'à ce que le jeu soit dans les tolérances spécifiées.

Palier de bielle disponible

PALIER DE BIELLE

Classe n°	Epaisseur ''T'' mm	Largeur ''W'' mm	Couleur d'identification (repère)
0	1,492 - 1,496	22,9 - 23,1	Noir
1	1,496 - 1,500		Marron
2	1,500 - 1,504		Vert

SOUS-DIMENSIONNE

Unité : mm

	Epaisseur	Diamètre du maneton ''Dp''
0,08	1,536 - 1,540	Meuler jusqu'à ce que le jeu soit dans les tolérances spécifiées.
0,12	1,556 - 1,560	
0,25	1,621 - 1,625	

Eléments divers

Unité : mm

Voile de volant-moteur [TIR]*	Moins de 0,15

* : Indication totale du comparateur

JEU DE PALIER

Unité : mm

Jeu du palier principal	Standard	0,039 - 0,066
	Limite	0,10
Jeu du palier de bielle	Standard	0,031 - 0,061
	Limite	0,09

Simpo PDF Merge and Split Unregistered Version - http://www.simpopdf.com

<SUPPLEMENT-III>

SYSTEME DE COMMANDE D'ACCELERATEUR, D'ALIMENTATION ET D'ECHAPPEMENT

SECTION FE

AVIS DE MODIFICATION :

- Les informations concernant le moteur KA24DE ont été ajoutées pour l'Europe. Pour les informations non inclues ici, se reporter à la section concernant le moteur KA24E.
- Le moteur YD25DDTi a été ajouté.

TABLE DES MATIERES

SYSTEME DE COMMANDE D'ACCELERATEUR 3002
Dépose et repose 3002
SYSTEME D'ALIMENTATION 3003
SYSTEME D'ECHAPPEMENT 3005

Simpo PDF Merge and Split Unregistered Version - http://www.simpopdf.com

Dépose et repose

Moteur YD25DDTi

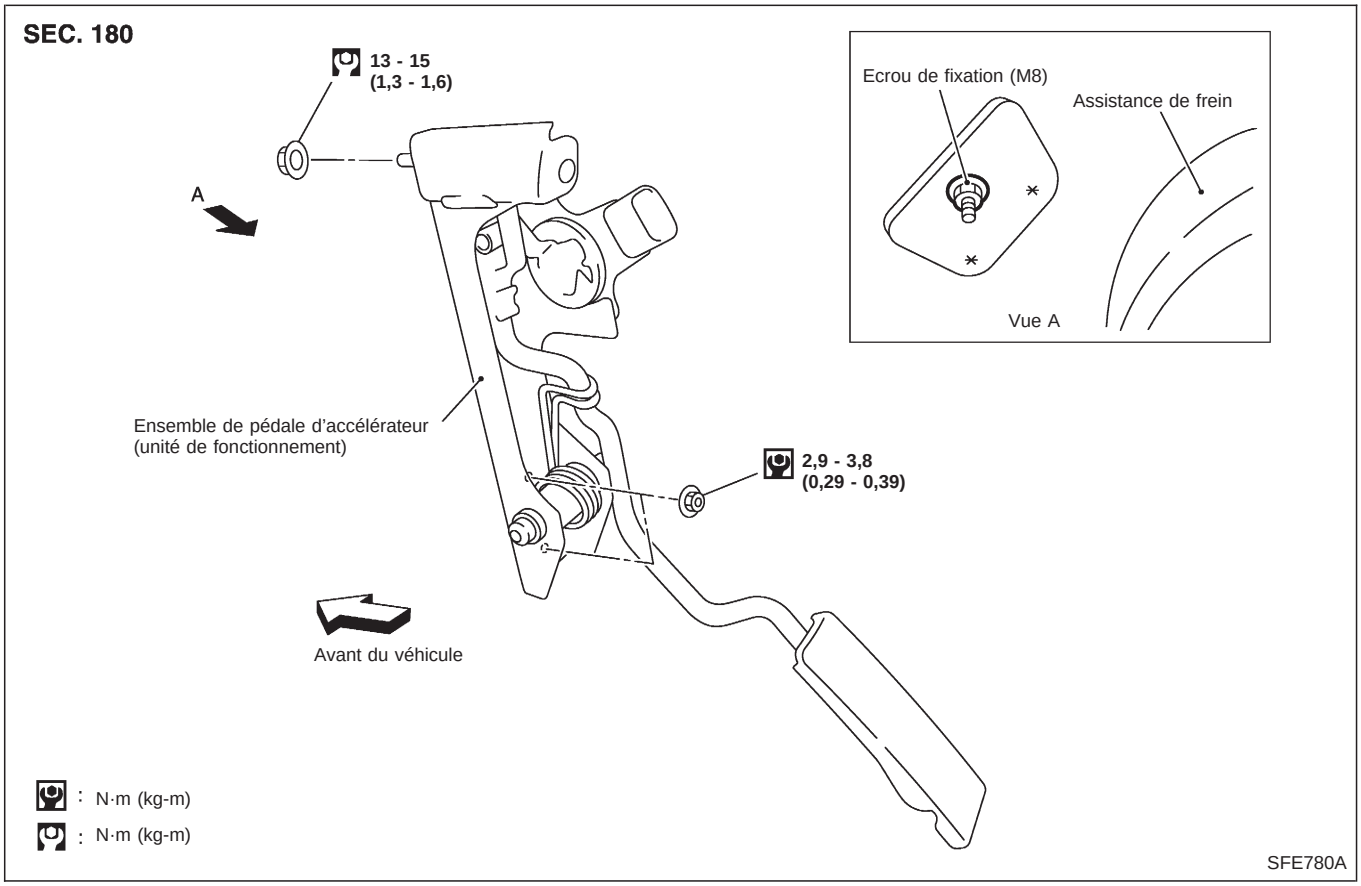

DEPOSE

1. Déposer le connecteur de faisceau.
2. Desserrer les écrous, et déposer l'ensemble de pédale d'accélérateur.

PRECAUTION :

- **Ne pas démonter l'ensemble de pédale d'accélérateur. Ne pas déposer les capteurs et les contacts de l'ensemble.**
- **Eviter les impacts dus aux chutes, etc. lors des manipulations.**
- **Protéger l'ensemble de pédale d'accélérateur de toute humidité.**
- **Ne pas serrer la vis de réglage (peinte en blanc) du boîtier d'accélérateur.**
- **Lorsque le connecteur de faisceau du capteur d'accélérateur est débranché, effectuer ''Initialisation de la position débrayée de la pédale d'accélérateur''. Se reporter à ''Procédure d'entretien de base'' dans la section EC.**

REPOSE

Reposer dans l'ordre inverse de la dépose.

INSPECTION APRES LA REPOSE

- Vérifier que la pédale d'accélérateur effectue toute sa course sans à-coups.
- Vérifier que la pédale d'accélérateur revienne bien dans sa position initiale.
- Pour l'inspection électrique du boîtier d'accélérateur, se reporter à la section EC, ''DTC 0403 CAPTEUR DE POSITION DE LA PEDALE D'ACCELERATEUR''.
- Vérifier que le tambour du boîtier d'accélérateur peut être complètement ouvert.

Simpo PDF Merge and Split Unregistered Version - http://www.simpopdf.com

MOTEUR KA24DE

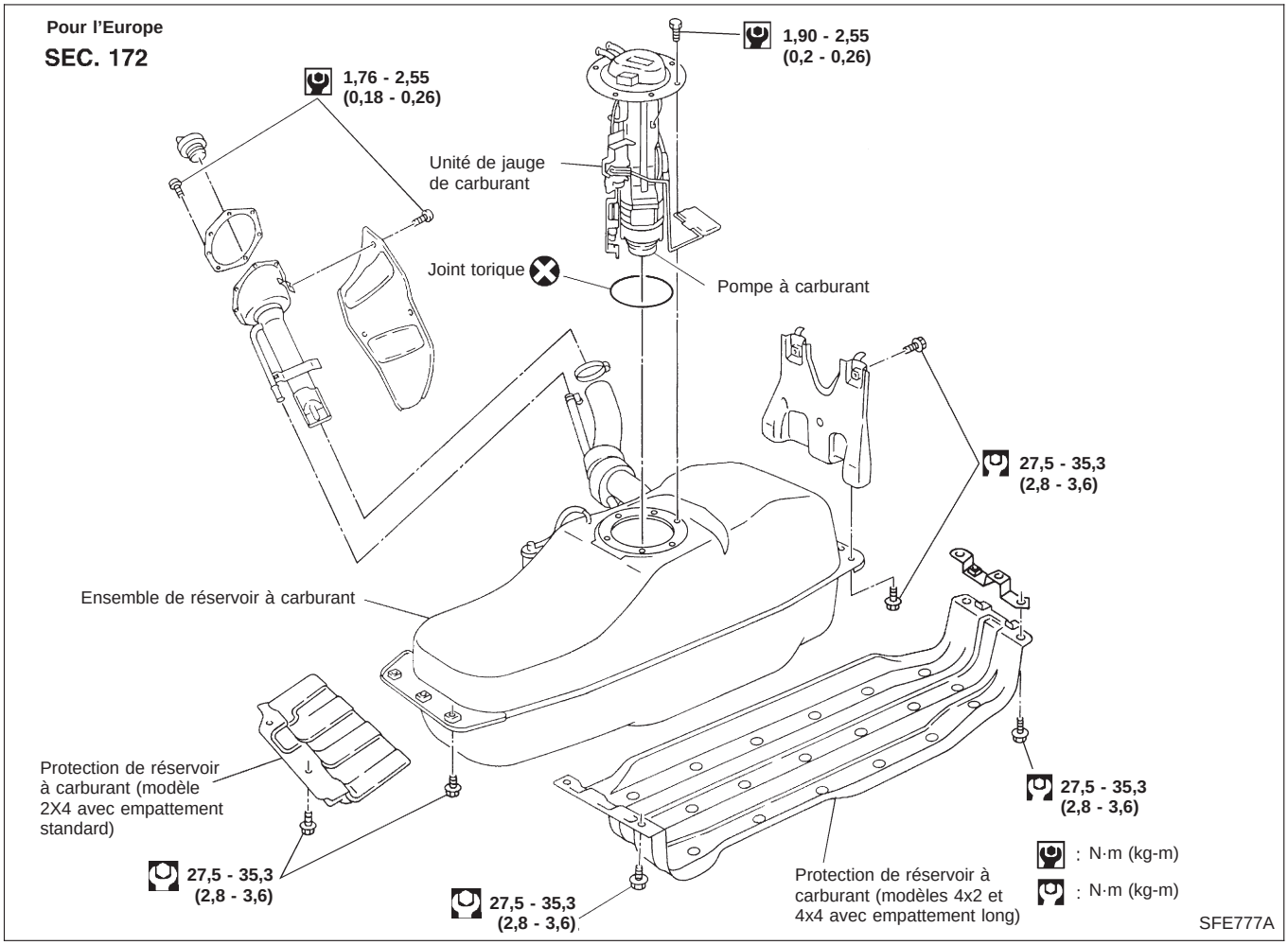

Simpo PDF Merge and Split Unregistered Version - http://www.simpopdf.com

MOTEUR YD25DDTi

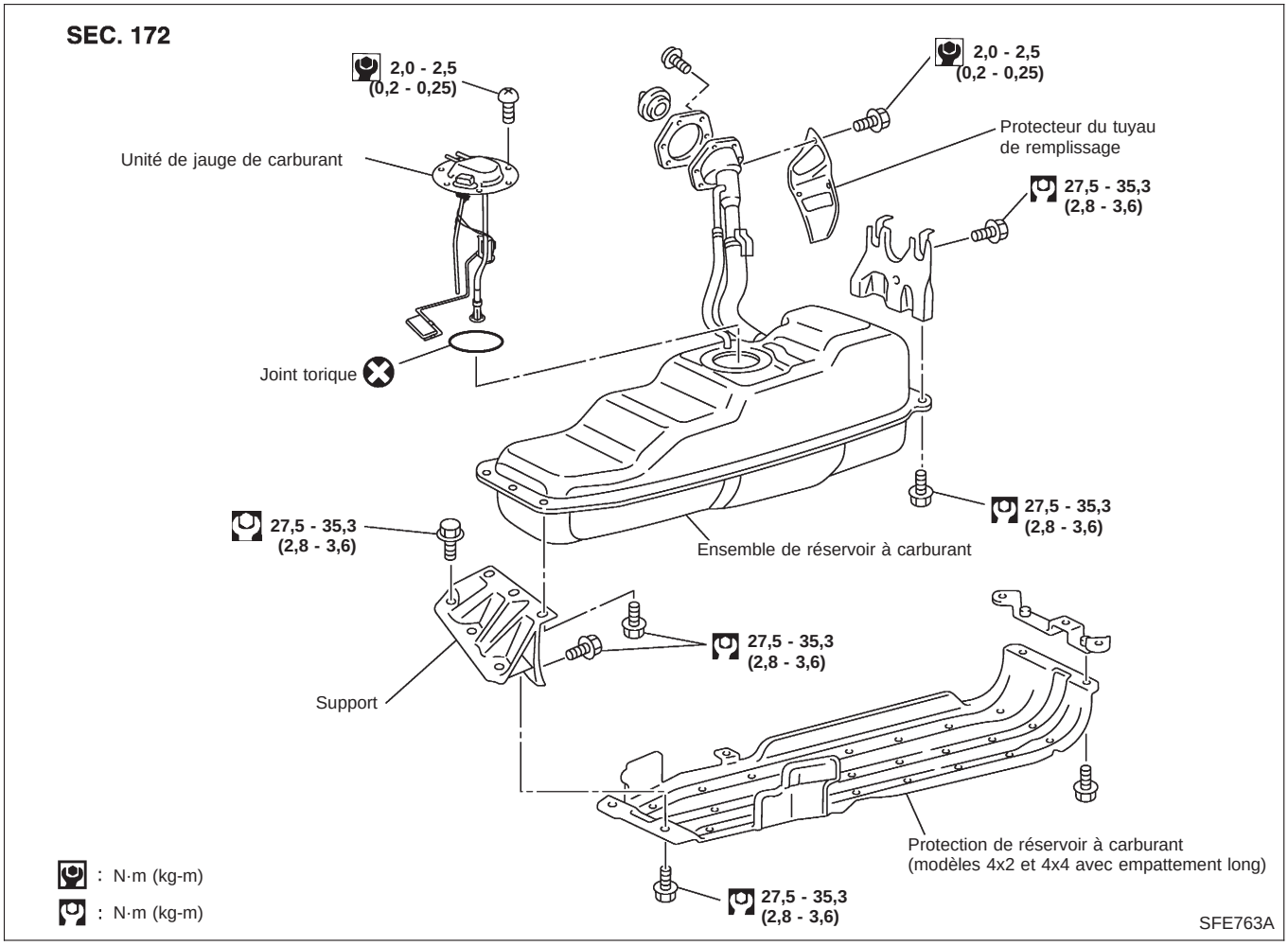

Simpo PDF Merge and Split Unregistered Version - http://www.simpopdf.com

MOTEUR KA24DE (4X2)

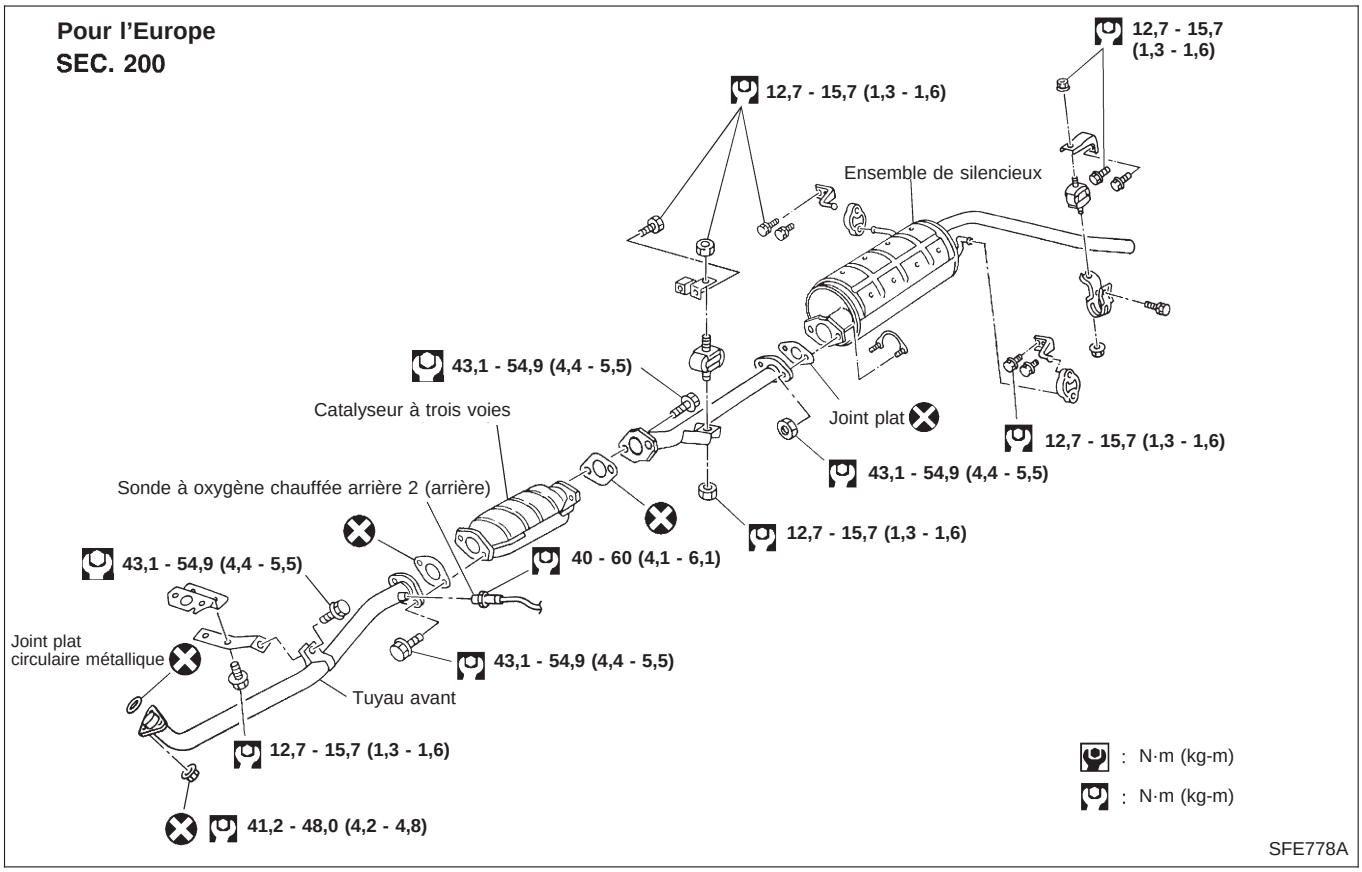

MOTEUR KA24DE (4X4)

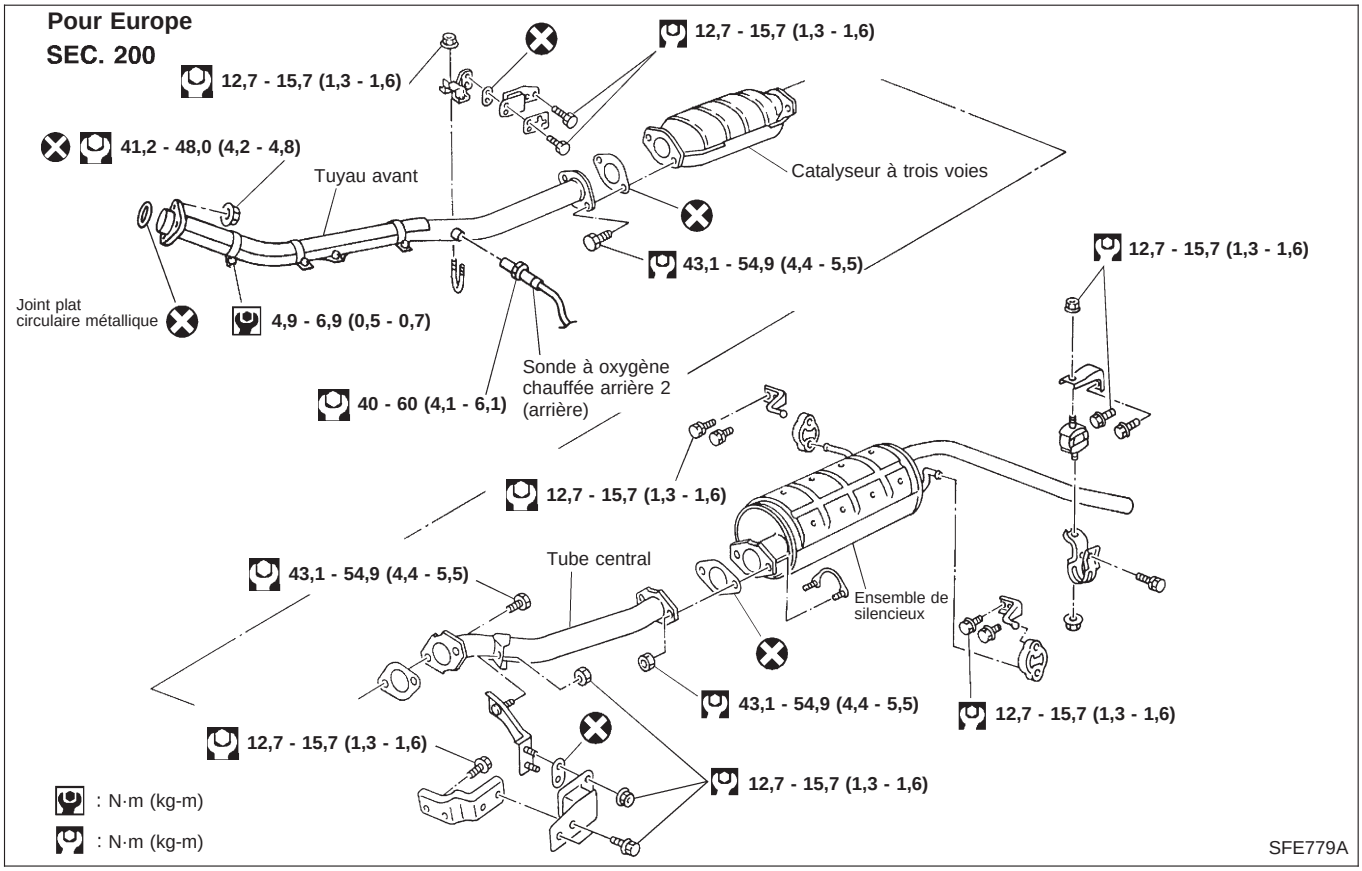

Simpo PDF Merge and Split Unregistered Version - http://www.simpopdf.com

MOTEUR YD25DDTi (4X2)

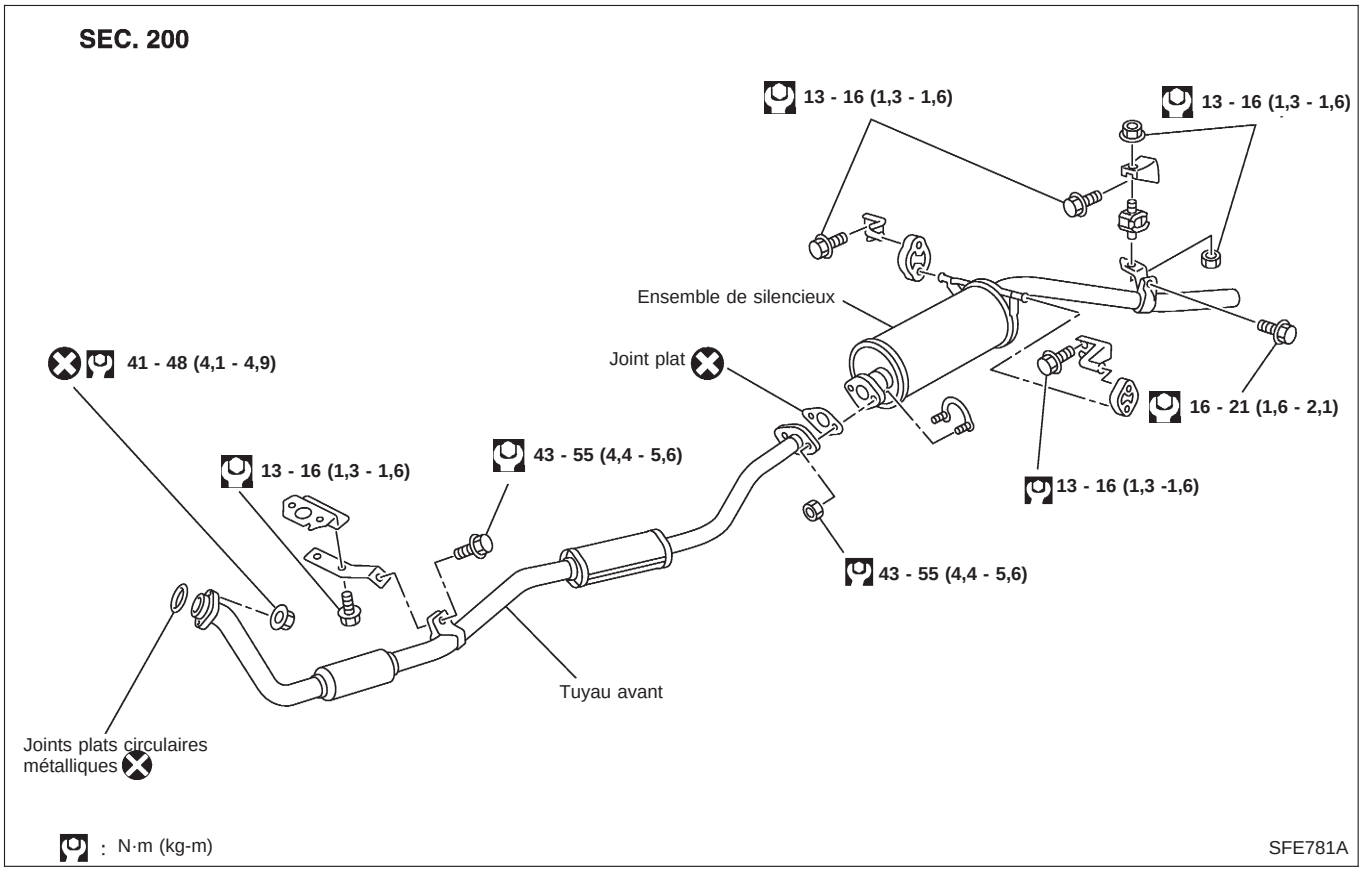

MOTEUR YD25DDTi (4X4 APPARENCE 4X2)

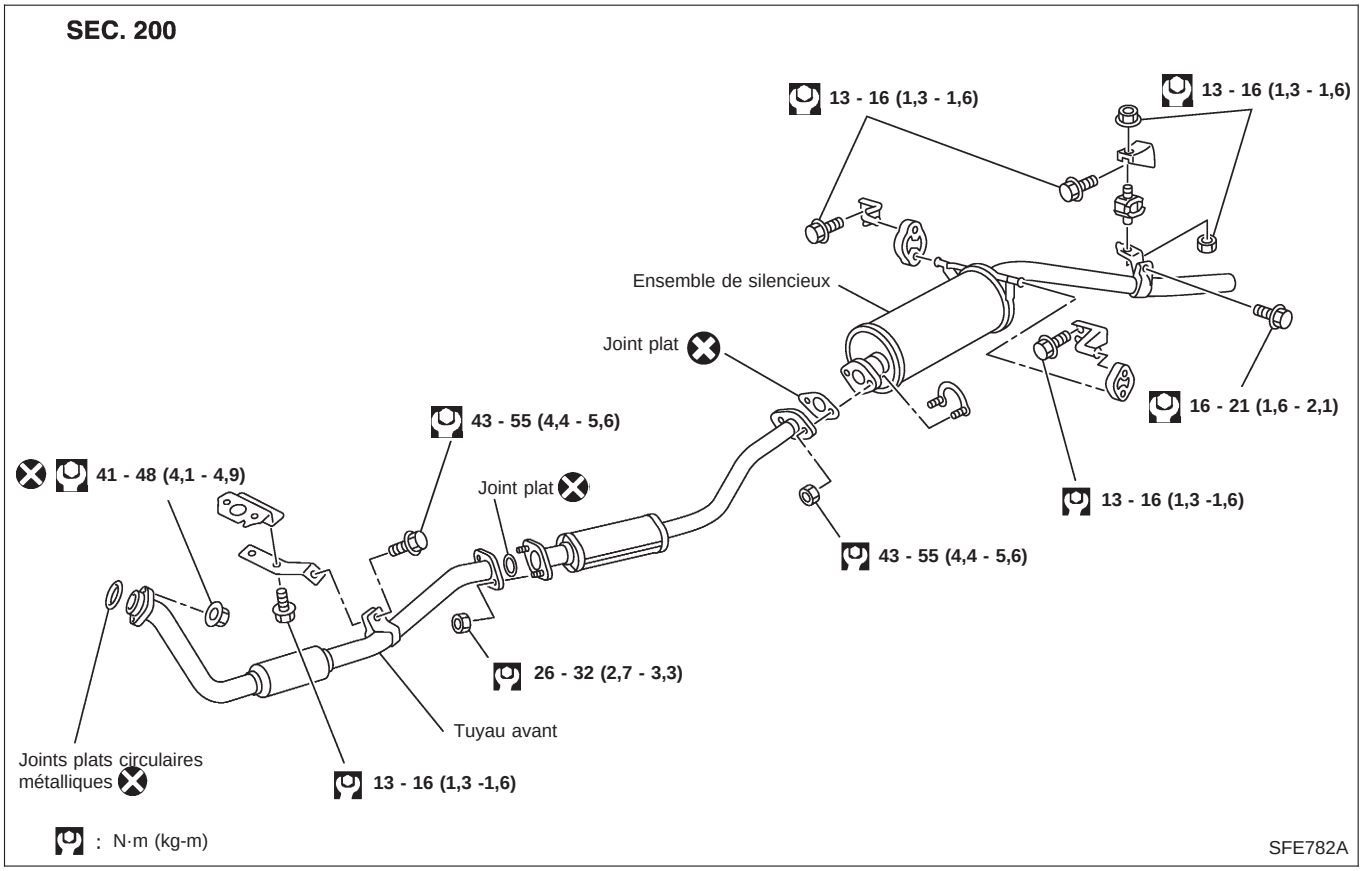

Simpo PDF Merge and Split Unregistered Version - http://www.simpopdf.com

MOTEUR YD25DDTi (4X4)

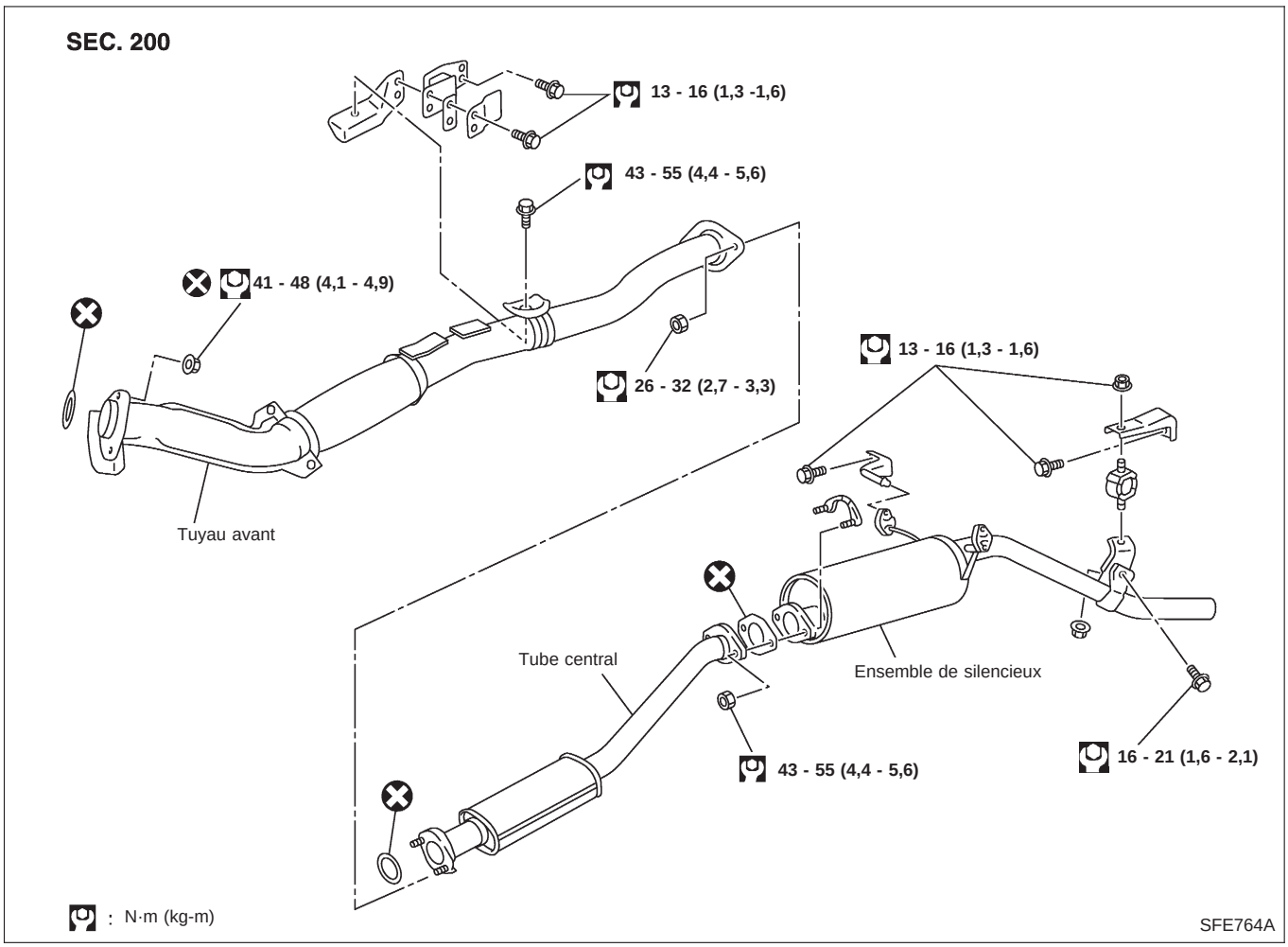

Simpo PDF Merge and Split Unregistered Version - http://www.simpopdf.com

Disposition des bornes

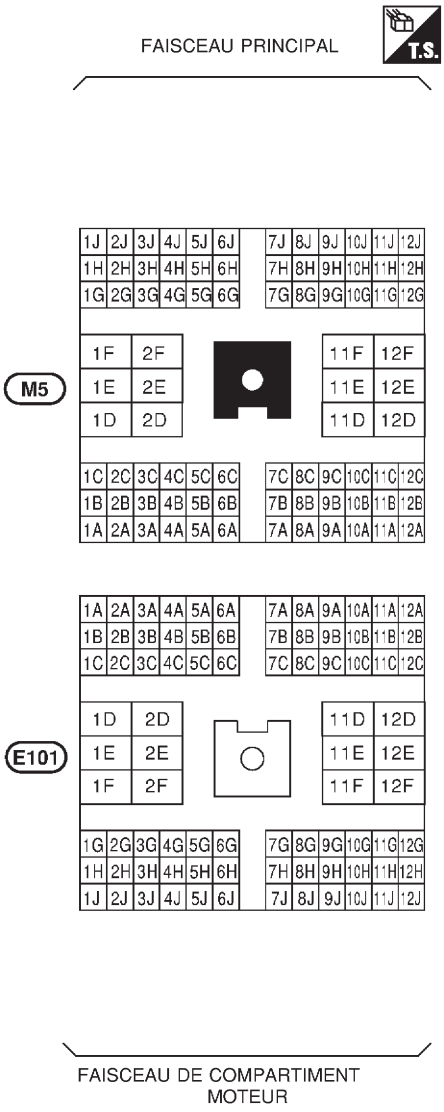

Simpo PDF Merge and Split Unregistered Version - http://www.simpopdf.com

Disposition des bornes

BOITIER A FUSIBLES

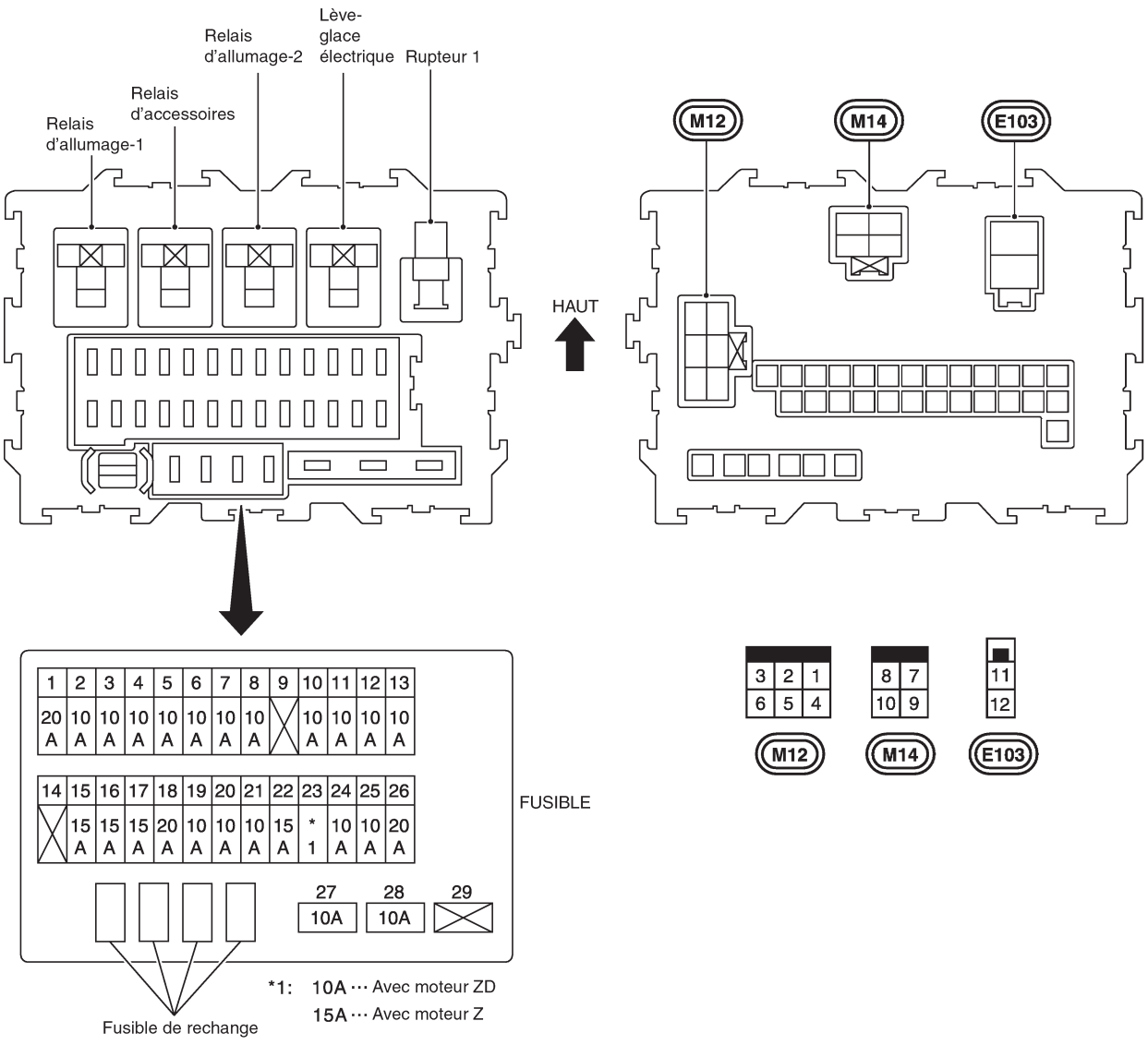

*1: 10A ··· Avec moteur ZD
15A ··· Avec moteur Z

BOITIER A FUSIBLES ET DE RACCORD A FUSIBLES

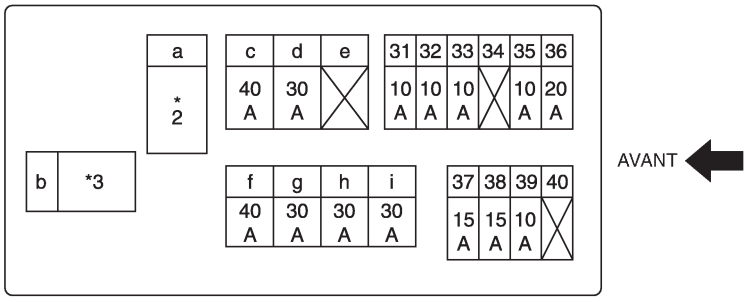

No. 31 - 40: Fusible a - i: Raccord à fusible

*2: 80A ··· Avec moteurs Z, KA, VG, TD, QD, et ZD
100A ··· Avec moteur YD

*3: 60A ··· Avec moteur YD
80A ··· Avec moteurs TD, QD et ZD

Simpo PDF Merge and Split Unregistered Version - http://www.simpopdf.com

Disposition des bornes

ECM M32 (Conduite à gauche avec moteur KA pour l'Europe)

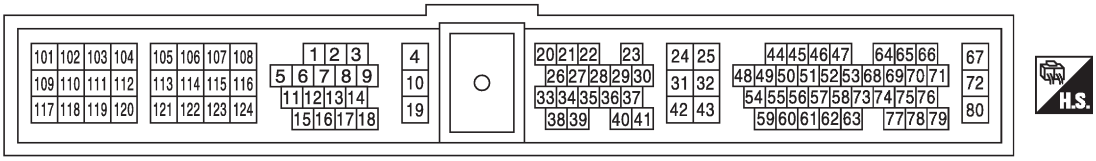

ECM F51 (Moteur VG)

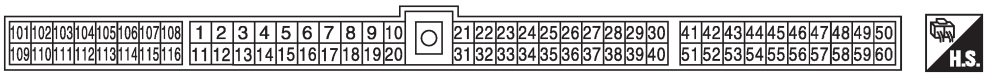

ECM M32 (Conduite à gauche avec moteurs YD et ZD),
F51 (Conduite à droite avec moteurs YD et ZD)

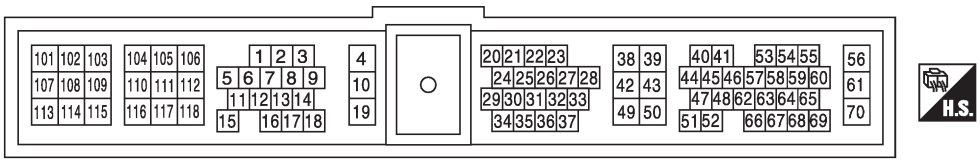

ECM M32 (Conduite à gauche avec moteur KA sauf pour l'Europe), F51 (Conduite à droite avec moteur KA)
TCM (Module de commande de transmission) M69 (Modèles avec T/A avec moteur KA)

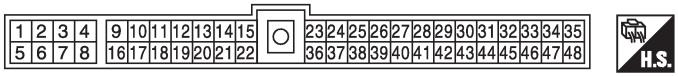

TCM (Module de commande de transmission) (Modèles avec T/A avec moteur KA)

M70

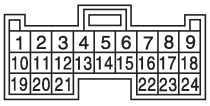

(Blanc)

M71

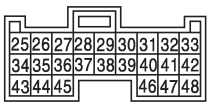

(Gris)



Ensemble actionneur d'ABS E4

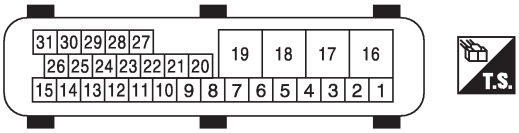

BOITIER DE CONTROLE DE CLIMATISATION AUTOMATIQUE

M88

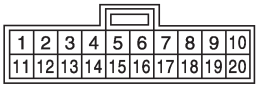

(Gris)

M89

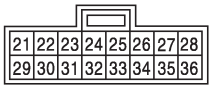

(Gris)



BOITIER DE CONTROLE D'ACCES INTELLIGENT M62

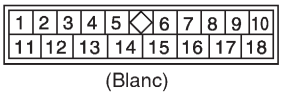

(Blanc)



GEL456A

Simpo PDF Merge and Split Unregistered Version - http://www.simpopdf.com

Disposition des bornes

Connecteur de raccord 1

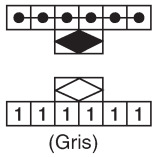

M31 (Conduite à gauche)
F53 (Conduite à droite)

Connecteur de raccord-2

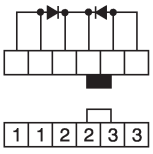

M72

Connecteur de raccord-3

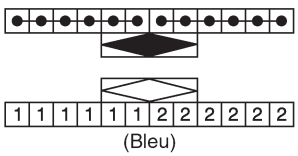

M33

Simpl PDF Merge and Split Unregistered Version - http://www.simpopdf.com

NISSAN

PICKUP

SERIE DES MODELES D22

AVANT-PROPOS

Ce supplément contient des informations sur les opérations d'entretien nécessaires, ainsi que les caractéristiques qui se rapportent à la nouvelle version des séries D22.

Toutes les informations, illustrations et caractéristiques contenues dans ce supplément sont basées sur les derniers renseignements disponibles au moment de la publication. Si le véhicule NISSAN ne répond pas aux caractéristiques indiquées dans ce supplément, consulter son concessionnaire NISSAN.

Nous nous réservons tous droits d'effectuer des changements dans les caractéristiques et les méthodes, à tout moment et sans préavis.

Edition : Novembre 2001
Imprimé : Novembre 2001 (01)
Numéro de Publication : SM1F-D22CE0E

NISSAN EUROPE S.A.S.

© 2001 NISSAN EUROPE S.A.S. Imprimé aux Pays-Bas
Cette publication ne peut être reproduite, que ce soit en tout ou en partie, sans la permission préalable écrite de Nissan Europe S.A.S., Paris, France.

TABLE DE REFERENCE RAPIDE

GENERALITES	GI
ENTRETIEN	MA
ELEMENTS DU MOTEUR	EM
CIRCUIT DE LUBRIFICATION DU MOTEUR ET CIRCUIT DE REFROIDISSEMENT	LC
SYSTEME DE GESTION MOTEUR	EC
SYSTEMES DE COMMANDE D'ACCELERATEUR, D'ALIMENTATION ET D'ECHAPPEMENT	FE
EMBRAYAGE	CL
BOITE DE VITESSES MANUELLE	MT
BOITE DE TRANSFERT	TF
ARBRE DE TRANSMISSION ET PORTE-DIFFERENTIEL	PD
ESSIEU ET SUSPENSION AVANT	FA
ESSIEU ET SUSPENSION ARRIERE	RA
SYSTEME DE FREINAGE	BR
DIRECTION	ST
SYSTEME DE RETENUE	RS
CARROSSERIE ET GARNITURE	BT
CHAUFFAGE ET CLIMATISEUR	HA
EQUIPEMENT ELECTRIQUE	EL
TABLE ALPHABETIQUE	IDX

Simpo PDF Merge and Split Unregistered Version - http://www.simpopdf.com

AVANT-PROPOS

Ce manuel contient les travaux d'entretien et de réparation concernant les véhicules NISSAN PICKUP, série des modèles D22.

A des fins de sécurité et pour que le rendement des véhicules concernés soit optimal, prière de lire ce manuel complètement. Avant de commencer à entreprendre des travaux, il est particulièrement important d'avoir parfaitement assimilé les PRECAUTIONS signalées dans la section GI.

Toutes les informations contenues dans ce manuel sont basées sur les données de production les plus récentes au moment de la réalisation du manuel. Nous nous réservons le droit de modifier les caractéristiques et les méthodes de travail à n'importe quel moment et sans avis préalable.

NOTE IMPORTANTE DE SECURITE

Un entretien correctement effectué est essentiel, aussi bien pour la sécurité des mécaniciens que pour le fonctionnement adéquat du moteur. Les méthodes d'entretien reprises dans ce manuel de réparation sont décrites de telle manière que le travail puisse être effectué en sécurité et avec précision. Les entretiens varient selon les procédures, les connaissances du technicien et l'outillage, ainsi que les pièces disponibles. Dès lors, toute personne utilisant les procédures d'entretien, un outillage ou des pièces qui ne sont pas spécifiquement recommandées par NISSAN doit auparavant être absolument certain que ceci n'entraîne de danger ni pour sa propre sécurité, ni pour celle du moteur.

NISSAN EUROPE S.A.S.

Service Engineering Section

Paris, France

Simpo PDF Merge and Split Unregistered Version - http://www.simpopdf.com

<SUPPLEMENT-III>

SECTION **GI**

AVIS DE MODIFICATION :

- Choix d'un moteur YD25DDTi.
- Moteur KA24E remplacé par moteur KA24DE.
- L'aspect extérieur du moteur a été changé.

TABLE DES MATIERES

SYSTEME DE VERIFICATION CONSULT-II 3002
Application de la fonction du système 3002
Remplacement de la pile à hydrure composée de nickel 3002
Equipement de vérification 3003
Circuit (DLC) du connecteur de diagnostic pour CONSULT-II 3003

IDENTIFICATIONS 3004
Variantes de modèles 3004
Numéro d'identification 3005
Roues et pneus 3007
Dimensions 3007

Cette modification a été prise en compte dans la production en commençant par les numéros d'identification du véhicule (numéro de châssis) :

- JN1APGD22U0050001
- JN1BPGD22U0030001
- JN1APUD22U0030001
- JN1BPUD22U0070001
- JN1CPUD22U0070001
- JN1ADGD22U0020001
- JN1BDGD22U0030001
- JN1BDUD22U0030001
- JN1CDUD22U0030001
- JN1CPGD22U0040001
- JN1CPGD22U0740101
- JN1CDUD22U0740101
- JN1CPUD22U0765101

Simpo PDF Merge and Split Unregistered Version - http://www.simpopdf.com

Application de la fonction du système

Mode de test de diagnostic	Fonctionnement	MOTEUR	T/A	ABS	AIRBAG
Support de travail	Ce mode permet au technicien de régler certains dispositifs de façon plus rapide et plus exacte en suivant les indications fournies par CONSULT-II.	x	x	—	—
Résultats de l'auto-diagnostic	Les résultats de l'auto-diagnostic peuvent être rapidement lus et effacés.	x	x	x	x
Enregistrement du diagnostic des défauts	Les résultats actuels de l'auto-diagnostic et tous les diagnostics des défauts précédemment enregistrés peuvent être lus.	—	—	—	x
N° d'ECU choisi	La lecture du numéro de classification d'un ECU de rechange permet d'éviter la repose éventuelle d'un mauvais ECU.	—	—	—	x
contrôle de données	Les données à l'entrée et à la sortie de l'ECU (ECM) sont lisibles.	x	x	x	—
Support travail DTC	Ce mode permet au technicien de régler les conditions de fonctionnement permettant de confirmer les états/résultats d'autodiagnostic.	—	x	—	—
Test actif	Mode d'essai de diagnostic dans lequel CONSULT-II sépare certains actionneurs (dispositifs de commande) et décale aussi certains paramètres dans une gamme spécifiée.	x	—	x	—
Numéro de pièce de l'ECU (ECM)	Le numéro de pièce de l'ECU (ECM) est lisible.	x	x	x	—

x: S'applique

Remplacement de la pile à hydrure composée de nickel

CONSULT-II se compose d'une pile à hydrure composée de nickel. Lors du remplacement de la pile, respecter les points suivants :

ATTENTION :

Remplacer la pile à hydrure composé de nickel uniquement avec une véritable pile CONSULT-II. L'utilisation d'une autre pile peut entraîner un risque de feu ou d'explosion. Un mauvais traitement de la pile peut entraîner un risque de feu ou de brûlure chimique. Ne pas recharger, démonter ou jeter au feu.

Veiller à placer la pile hors de portée des enfants et mettre les piles usées au rebut conformément aux réglementations locales.

Simpo PDF Merge and Split Unregistered Version - http://www.simpopdf.com

Equipement de vérification

Pour commander les accessoires ci-dessous, contacter un distributeur NISSAN.

Nom de l'outil	Description
NISSAN CONSULT-II ① Unité CONSULT-II (Software de testeur interne : version Resident 3,2.0)et accessoires ② Carte programme AED01B-1 pour diagnostic, AEN00A/00B pour NATS. Afin de confirmer la meilleure combinaison de ces softwares, se reporter au manuel d'utilisation de CONSULT-II.	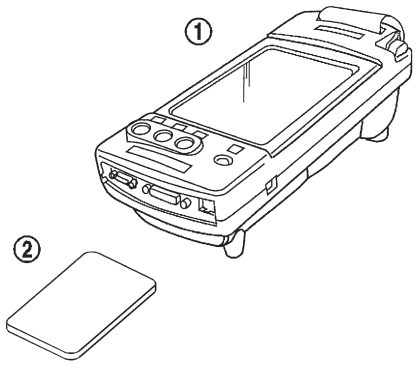 SGI083A

NOTE :

- **CONSULT-II doit être utilisé conjointement avec une carte programme. CONSULT-II ne nécessite pas de procédure de charge (initialisation).**
- **S'assurer que CONSULT-II est éteint avant de reposer ou de déposer la carte programme.**

Circuit (DLC) du connecteur de diagnostic pour CONSULT-II

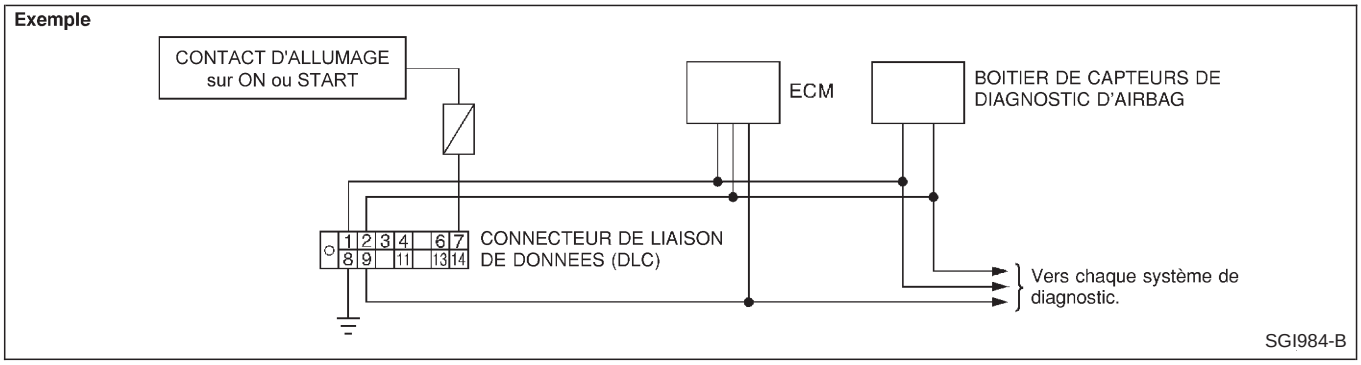

SGI984-B

PROCEDURE D'INSPECTION

Si CONSULT-II ne peut pas effectuer un diagnostic correct du système, vérifier les points suivants :

Symptôme	Elément à contrôler
CONSULT-II ne peut accéder à aucun système.	● Circuit d'alimentation électrique (borne 8) du connecteur de diagnostic pour CONSULT-II (borne 7) et circuit de mise à la masse (borne 8) (Pour le détail du circuit, se reporter au ''Schéma de câblage des connecteurs de liaison des données et MIL'' dans la section EC) ● Câble CONSULT-II DDL
CONSULT-II ne peut accéder à aucun système individuel. (Mais peut accéder à d'autres systèmes.)	● Carte de programme de CONSULT-II (Vérifier la carte de programme CONSULT-II correspondant au système. Se reporter à "Equipement de vérification" ci-dessus). ● Alimentation électrique et circuit de mise à la masse du boîtier de commande du système (pour le circuit détaillé, se reporter au schéma de câblage de chaque système). ● Circuit ouvert ou court-circuit entre le système et le connecteur de diagnostic pour CONSULT-II DLC (pour le circuit détaillé, se reporter au schéma de câblage de chaque système).

PICKUP (2 roues motrices)

Destination	Catégorie			Modèle		Moteur	Boîte de vitesses	Porte-différentiel
	Empattement	Cabine	Classe	Conduite à gauche	Conduite à droite			
Europe	Long	Cabine simple	STD	ABGGLCFD22EQL	—	KA24DE	FS5W71C	C200*
				AVLGLCFD22UQL		YD25DDTi	FS5R30A	
			DX	ABGGLDFD22EQL	—	KA24DE	FS5W71C	
				AVLGLDFD22UQL	AVLGRDFD22UQL	YD25DDTi	FS5R30A	
		Grande cabine	DX	BBGGLDFD22EQN	—	KA24DE	FS5W71C	
				BVLGLDFD22UQN	BVLGRDFD22UQN	YD25DDTi	FS5R30A	
			ST	BBGGLEFD22EQN	—	KA24DE	FS5W71C	
		Apparence 4 X 4	DX	BVLGLDFD22UQG	—	YD25DDTi	FS5R30A	
			ST	BVLGLEFD22UQG	—			
		Cabine double	DX	CVLGLDFD22UQN	CVLGRDFD22UQN			
		Apparence 4 X 4	DX	CVLGLDFD22UQG	—			
			ST	CVLGLEFD22UQG	—			

* : H233B est en option pour l'Europe (Portugal).

PICKUP (4 roues motrices)

Destination	Catégorie			Modèle		Moteur	Boîte de vitesses	Porte-différentiel		Boîte de transfert
	Empattement	Cabine	Classe	Conduite à gauche	Conduite à droite			Avant	Arrière	
Europe	Long	Cabine simple	STD	AVLULCFD22UQL	AVLURCFD22UQL	YD25DDTi	FS5R30A	R180A	C200*	TX10
			DX	AVLULDFD22UQL	AVLURDFD22UQL					
		Grande cabine	DX	BBGULDFD22EQN	—	KA24DE	FS5W71C			
				BVLULDFD22UQN	BVLURDFD22UQN	YD25DDTi	FS5R30A			
			ST	BBGULEFD22EQN	—	KA24DE	FS5W71C			
				BVLULEFD22UQN	BVLUREFD22UQN	YD25DDTi	FS5R30A			
		Cabine double	DX	CBGULDFD22EQN	—	KA24DE	FS5W71C			
				CVLULDFD22UQN	CVLURDFD22UQN	YD25DDTi	FS5R30A			
			ST	CBGULEFD22EQN	—	KA24DE	FS5W71C			
				CVLULEFD22UQN	CVLUREFD22UQN	YD25DDTi	FS5R30A			

* : H233B est en option pour l'Europe (Portugal).

Simpo PDF Merge and Split Unregistered Version - http://www.simpopdf.com

Simpo PDF Merge and Split Unregistered Version - http://www.simpopdf.com

Variantes de modèles (Suite)

Significations des préfixes et des suffixes (Pick-up)

A BE A L C F D22 S W L

L : Carrosserie arrière normale
N : Carrosserie arrière régulière
G : Modèles apparence 4 X 4 (4 X 2)

W : Sauf pour le Moyen-Orient et l'Australie
M : Australie
K : Moyen Orient
Q : Europe

S : Moteur à carburateur
E : Moteur à injection de carburant multipoint
N : Moteur diesel
T : Moteur à turbocompresseur
U : Moteur à turbocompresseur avec refroidisseur intermédiaire

F : Boîte de vitesses manuelle à 5 vitesses avec commande au plancher
B : Transmission automatique à 4 vitesses avec levier à colonne
A : Transmission automatique à 4 vitesses avec levier au plancher

C : Modèle STD D : Modèle DX E : Modèles ST, GL F : Modèles SGL, SE

L : Conduite à gauche R : Conduite à droite

A : Empattement standard (2 roues motrices) G : Empattement long (2 roues motrices)
U : Empattement long (4 roues motrices)

BE : Moteur Z24S BG : Moteur KA24DE LB : Moteur VG30E
VL : Moteur YD25DDTi VP : Moteur TD27 WS : Moteur ZD30DDT VR : Moteur QD32

A : Cabine simple B : Grande cabine C : Cabine double

Numéro d'identification

NUMERO D'IDENTIFICATION DU VEHICULE

Significations des préfixes et des suffixes

JN1 B P U D22 U O XXXXXX

Numéro de série du véhicule

O : Bouche-trou (aucune signification)

U : Pour l'Europe

Modèle

G : Empattement long (2 roues motrices) U : Empattement long (4 roues motrices)

D : Moteur KA24DE P : Moteur YD25DDTi

A : Cabine simple B : Grande cabine C : Cabine double

JN1 : Véhicule produit au Japon

Simpo PDF Merge and Split Unregistered Version - http://www.simpopdf.com

Numéro d’identification (Suite)

NUMERO DE SERIE DU MOTEUR

Moteur YD25DDTi

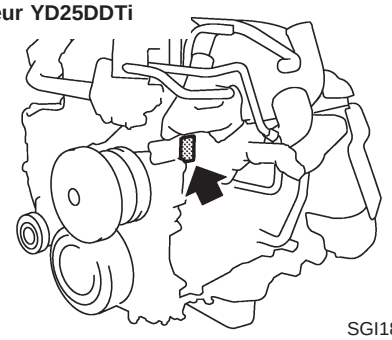

SGI182A

Simpo PDF Merge and Split Unregistered Version - http://www.simpopdf.com

Roues et pneus

PICKUP (2 roues motrices)

Pneu	Roue	Modèle à 2 roues motrices		
		Europe		
		Cabine simple	Grande cabine	Cabine double
195R14C-8PR	5J-14	X	X	X
195R15C-8PR	5-1/2K-15	X	X	X
255/70R16	7JJ-16	—	X*3	X*3
265/70R16LT	7JJ-16	—	X*3	X*3

X : S'applique
—: Ne s'applique pas

PICKUP (4 roues motrices)

Pneu	Roue	Modèle à 4 roues motrices
		Europe
205R16C-8PR	6J-16	X
255/70R16	7JJ-16	X
265/70R16LT	7JJ-16	X

X : S'applique
—: Ne s'applique pas

Dimensions

Destination			Europe					
Type de véhicule			Modèle à 2 roues motrices			Modèle à 4 roues motrices		
Empattement			Long			Long		
Type à cabine complète ou plateau			Cabine simple	Grande cabine	Cabine double	Cabine simple	Grande cabine	Cabine double
Longueur hors tout		mm	5,010 5,170 *1	5,035 5,170 *1	4,945 5,080 *1	5,010 5,170 *1	5,035 5,170 *1	4,945 5,080 *1
Largeur hors tout		mm	1,690	1,690 1,825 *2	1,690 1,825 *2	1,825	1,825	1,825
Hauteur hors tout		mm	1,610	1,610 1,695 *2	1,620 1,705 *2	1,700	1,700 *3	1,715 1,720 *3
Empattement		mm	2,950	2,950	2,950	2,950	2,950	2,950
Chape	Avant	mm	1,395	1,395 1,525 *2	1,395 1,525 *2	1,525	1,525	1,525
	Arrière	mm	1,390	1,390 1,505 *2	1,390 1,505 *2	1,505	1,505	1,505
Garde au sol minimum		mm	180	180 220 *2	180 220 *2	215	220	220

*1 : modèles équipés de pare-chocs en forme de marche
*2 : modèles apparence 4X4
*3 : avec pneus 255/70R16 en option

Simpo PDF Merge and Split Unregistered Version - http://www.simpopdf.com

<SUPPLEMENT-III>

CHAUFFAGE ET CLIMATISEUR

SECTION HA

AVIS DE MODIFICATION :

- Les schémas de câblage ont été changé.
- Le thermocontact a été supprimé.
- Le cycle A/C pour le moteur YD a été ajouté.

TABLE DES MATIERES

MANUEL ET AUTO

PRECAUTIONS ET PREPARATION 3002
Précautions pour les raccords de réfrigérant .. 3002

MANUEL

DIAGNOSTICS DES DEFAUTS 3004
Schéma de câblage - HEATER - 3004
Schéma du circuit - A/C, M - 3005
Schéma de câblage - A/C, M -/Conduite à gauche avec moteurs KA, YD 3006
Schéma de câblage - A/C, M -/Conduite à droite avec moteurs KA, YD 3009
Embrayage magnétique 3012

AUTO

DIAGNOSTICS DES DEFAUTS 3020
Schéma du circuit - A/C, A - 3020
Schéma de câblage - A/C, A - 3021
Embrayage magnétique 3026
PROCEDURES D'ENTRETIEN 3030
Canalisations de réfrigération 3030

MANUEL ET AUTO

PROCEDURES D'ENTRETIEN 3031
Vérification des fuites de réfrigérant 3031
PROCEDURES D'ENTRETIEN 3033
Fixation du compresseur 3033

MANUEL ET AUTO

CARACTERISTIQUES ET VALEURS DE REGLAGE 3034
Caractéristiques générales 3034
Inspection et réglage 3034

Simpo PDF Merge and Split Unregistered Version - http://www.simpopdf.com

Précautions pour les raccords de réfrigérant

Un nouveau type de raccord de réfrigérant a été introduit pour chaque conduit de réfrigération sauf pour les parties suivantes.

- Soupape d'expansion à unité de refroidissement

CARACTERISTIQUES DU NOUVEAU TYPE DE RACCORD DE REFRIGERANT

- Le joint torique a été déplacé. Il est désormais fourni avec une rainure pour une repose adéquate. Ceci élimine les risques de voir le joint torique être coincé ou endommagé dans la partie de raccordement. Le sens d'étanchéité du joint torique est maintenant vertical, en relation avec la surface de contact de la partie de raccordement, de façon à améliorer les caractéristiques de l'étanchéité.
- La force de réaction du joint torique n'apparaîtra pas dans le sens qui entraîne l'extraction du joint, facilitant ainsi les raccords de tuyauterie.

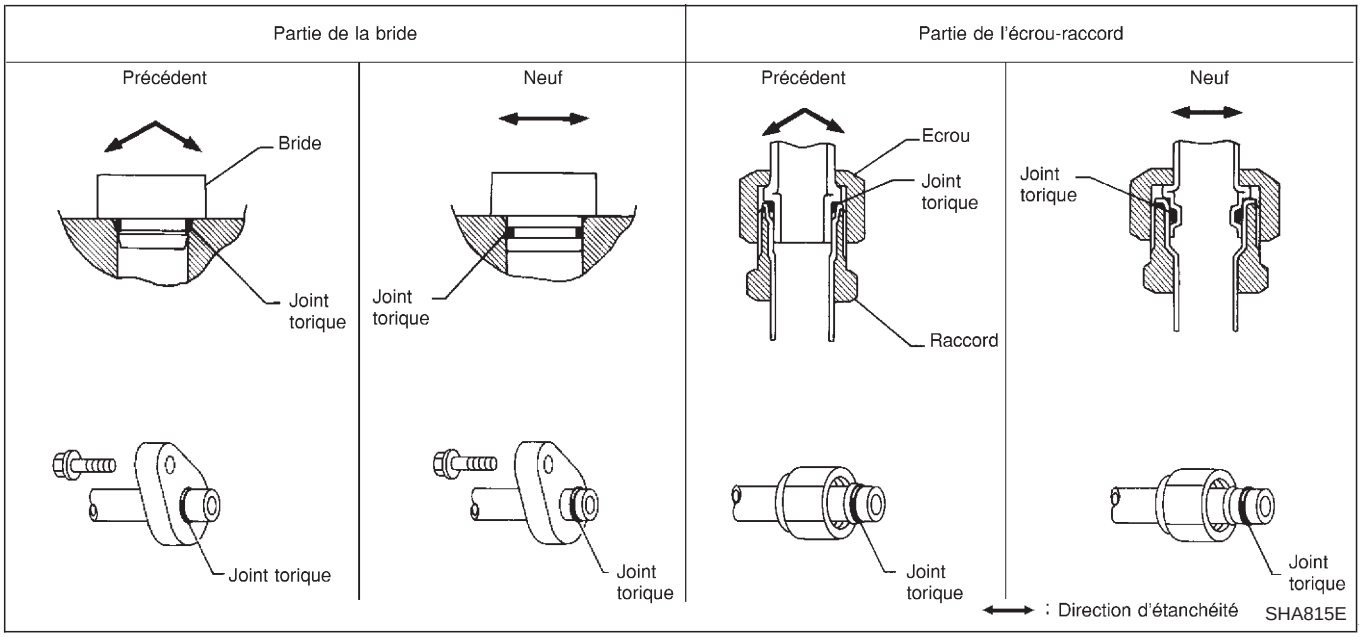

PRECAUTION :

Les nouveaux et les anciens raccords de liquide de refroidissement utilisent des configurations de joint torique différentes. Ne pas mélanger les joints toriques car ils ne sont pas interchangeables. Si un joint torique inadéquat est reposé, le liquide de refroidissement fuira au niveau ou autour du raccord.

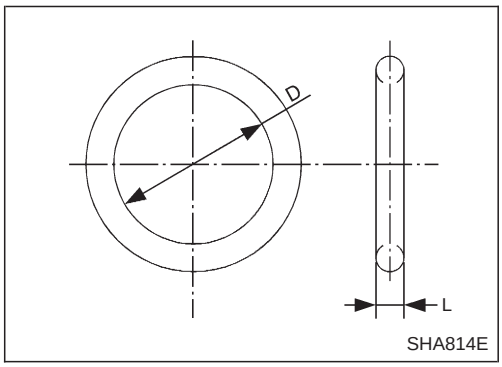

Numéros et caractéristiques des pièces de joint torique

Type de raccord	Taille de joint torique	Numéro de pièce	D mm	L mm
Nouveau	8	92471 N8210	6,8	1,87
Ancien		92470 N8200	6,07	1,78
Nouveau	12	92472 N8210	10,9	2,43
Ancien		92475 71L00	11,0	2,4
Nouveau	16	92473 N8210	13,6	2,43
Ancien		92475 72L00	14,3	2,3
Nouveau	19	92474 N8210	16,5	2,43
Ancien		92477 N8200	17,12	1,78

Simpo PDF Merge and Split Unregistered Version - http://www.simpopdf.com

Précautions pour les raccords de réfrigérant (Suite)

JOINT TORIQUE ET RACCORD DE REFRIGERANT

Moteur YD

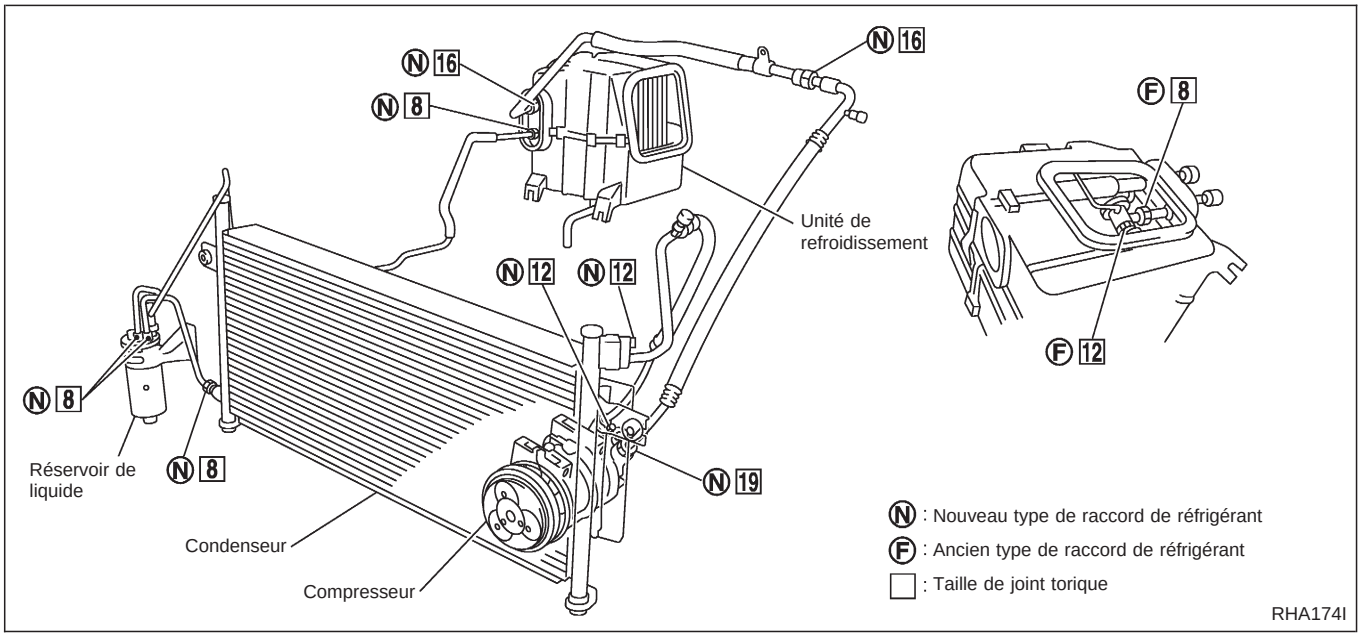

NOTE :
Cette illustration concerne les modèles avec conduite à gauche. Pour les modèles avec conduite à droite, l'emplacement de l'unité de refroidissement et le parcours de la tuyauterie de climatiseur sont différent.

Simpo PDF Merge and Split Unregistered Version - http://www.simpopdf.com

Schéma de câblage — HEATER —

HA-HEATER-01

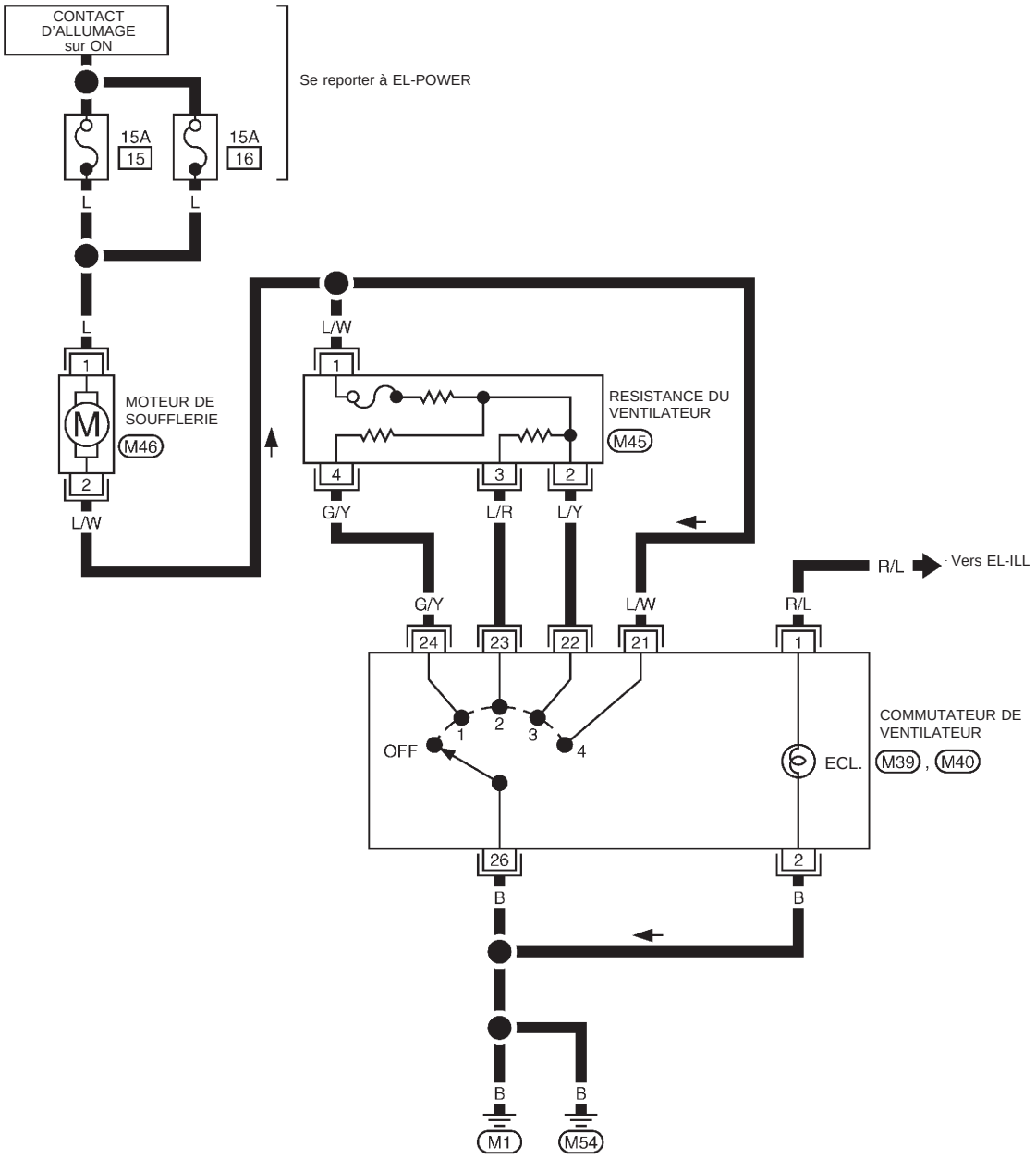

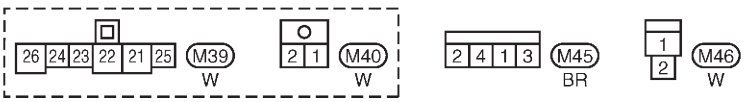

GHA018A

Simpo PDF Merge and Split Unregistered Version - http://www.simpopdf.com

Schéma du circuit — A/C, M —

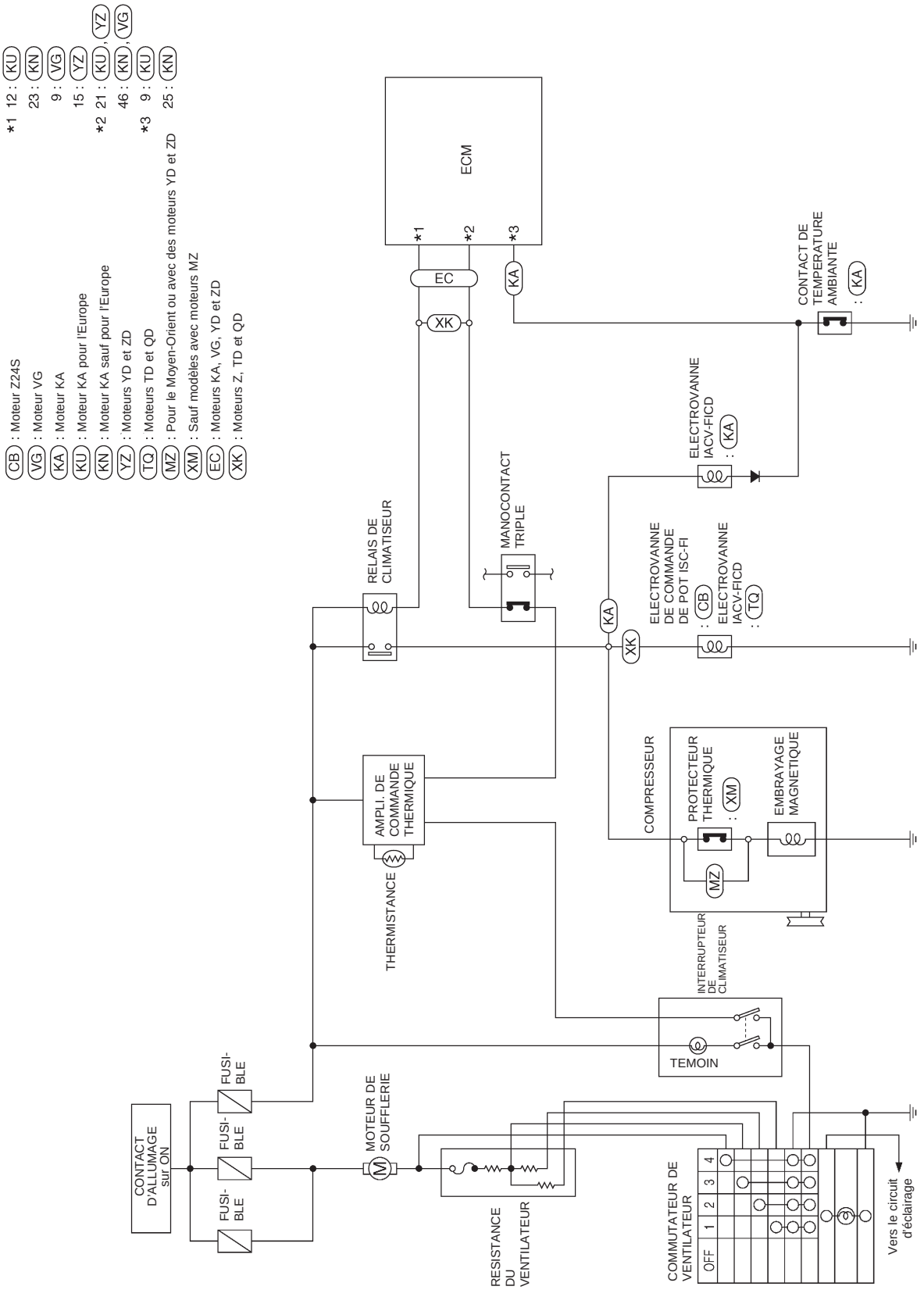

GHA038A

Simpo PDF Merge and Split Unregistered Version - http://www.simpopdf.com

Schéma de câblage — A/C, M —/Conduite à gauche avec moteurs KA, YD

HA-A/C,M-04

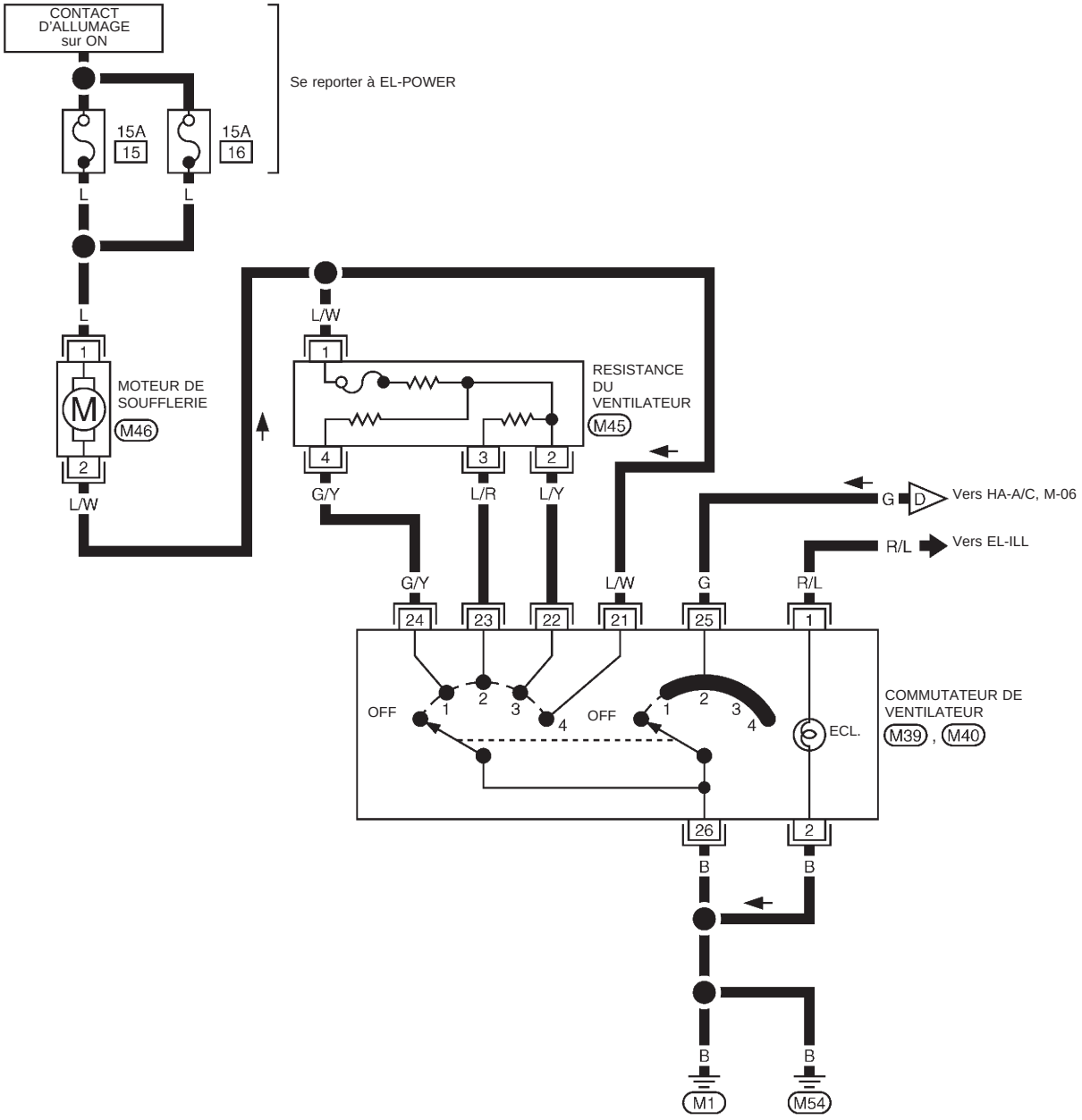

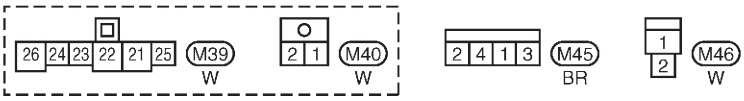

GHA023A

Simpo PDF Merge and Split Unregistered Version - http://www.simpopdf.com

Schéma de câblage — A/C, M —/Conduite à gauche avec moteurs KA, YD (Suite)

HA-A/C,M-05

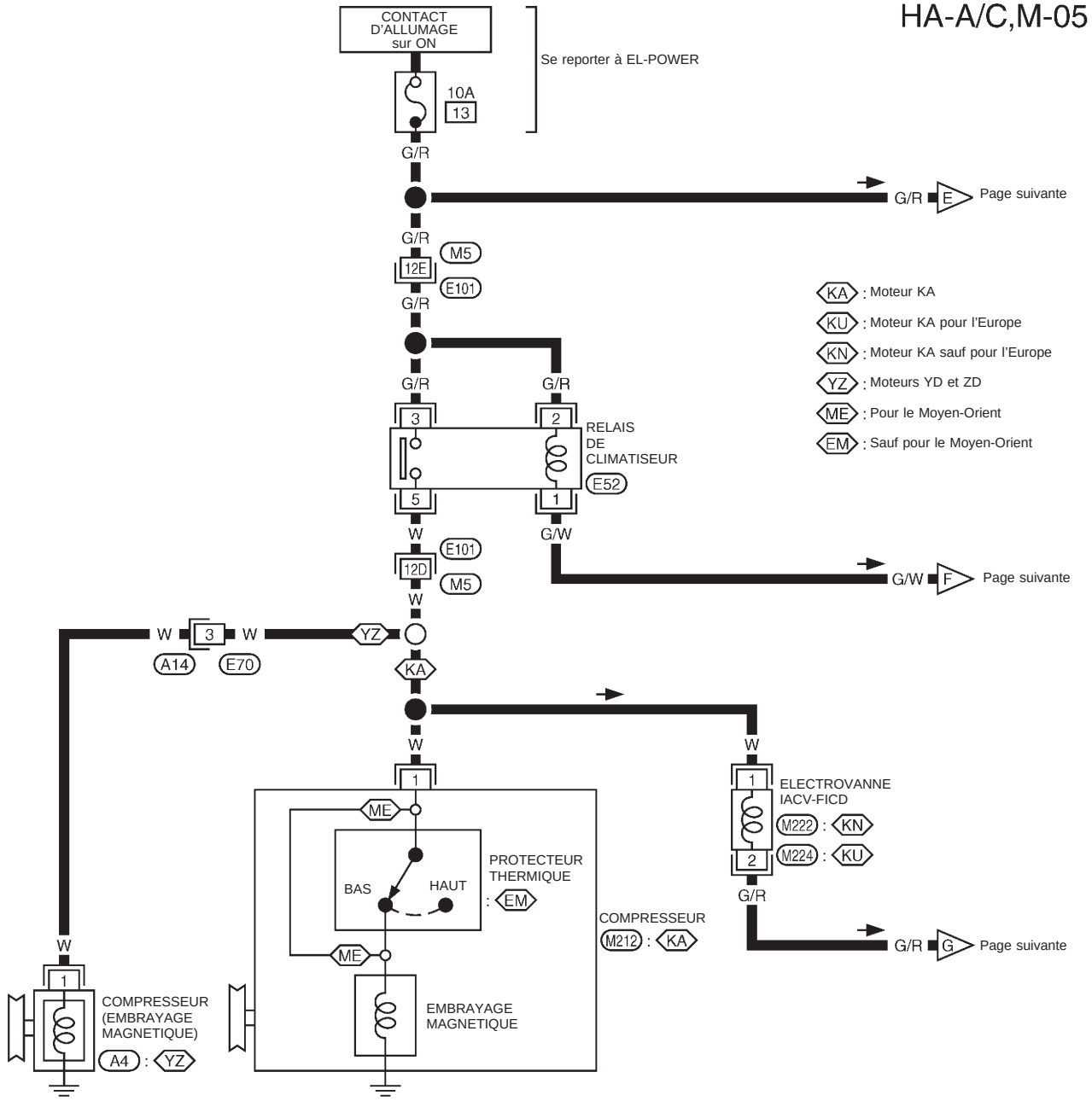

M212 , A4 — B, B
M222 — B
M224 — PU
E52 — L
A14 — BR

Se reporter à la dernière page dépliante.

M5 , E101

GHA040A

Simpo PDF Merge and Split Unregistered Version - http://www.simpopdf.com

Schéma de câblage — A/C, M —/Conduite à gauche avec moteurs KA, YD (Suite)

HA-A/C,M-06

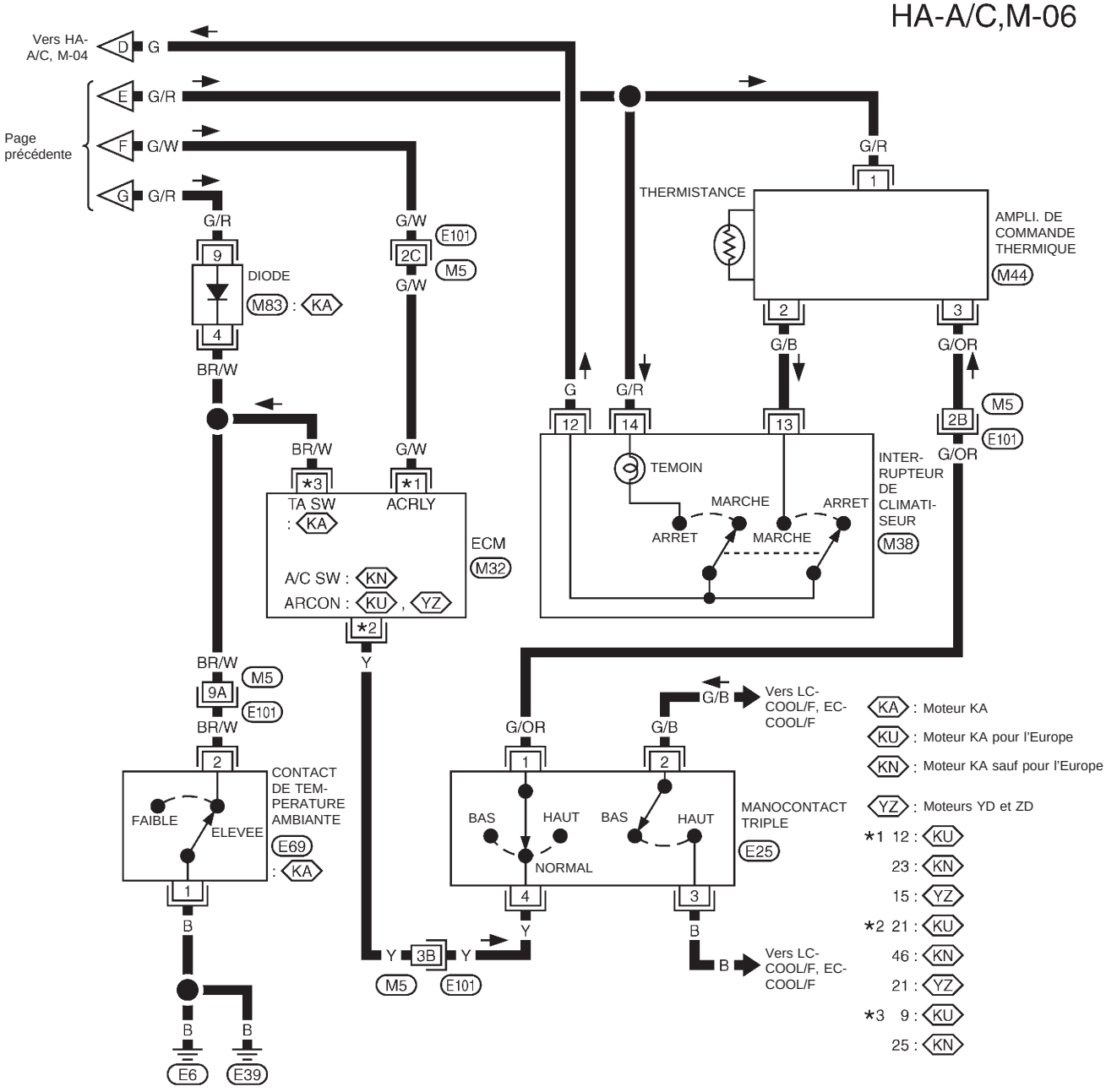

M38 W
M44 BR
M83 L
E25 GY
E69 BR

Consulter la dernière page dépliante.

M5 , E101
M32

GHA041A

Simpo PDF Merge and Split Unregistered Version - http://www.simpopdf.com

Schéma de câblage — A/C, M —/Conduite à droite avec moteurs KA, YD

HA-A/C,M-07

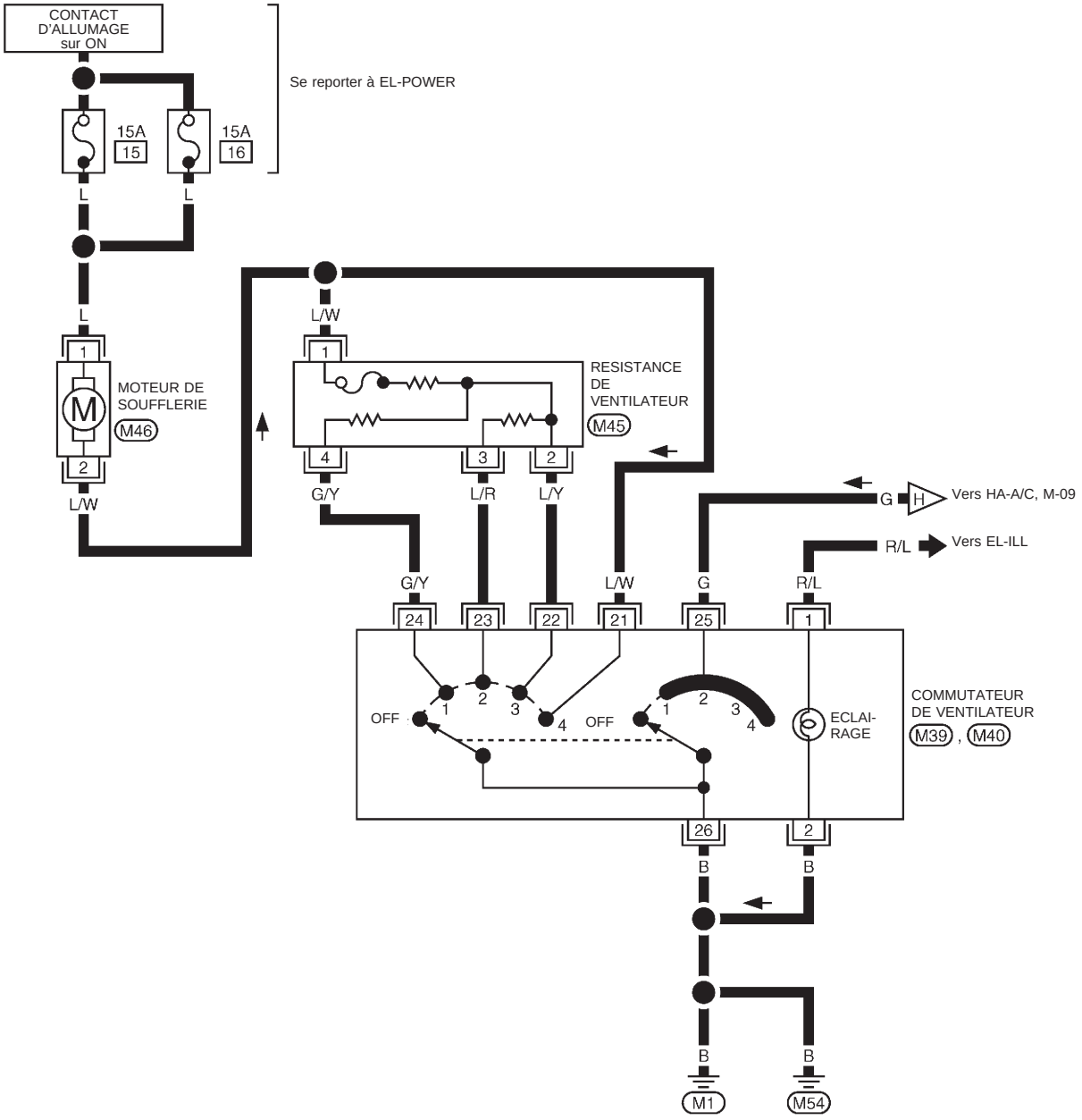

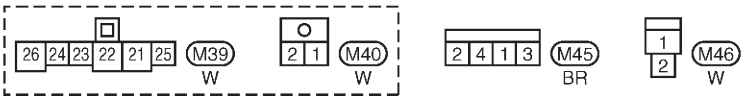

GHA042A

Simpo PDF Merge and Split Unregistered Version - http://www.simpopdf.com

Schéma de câblage — A/C, M —/Conduite à droite avec moteurs KA, YD (Suite)

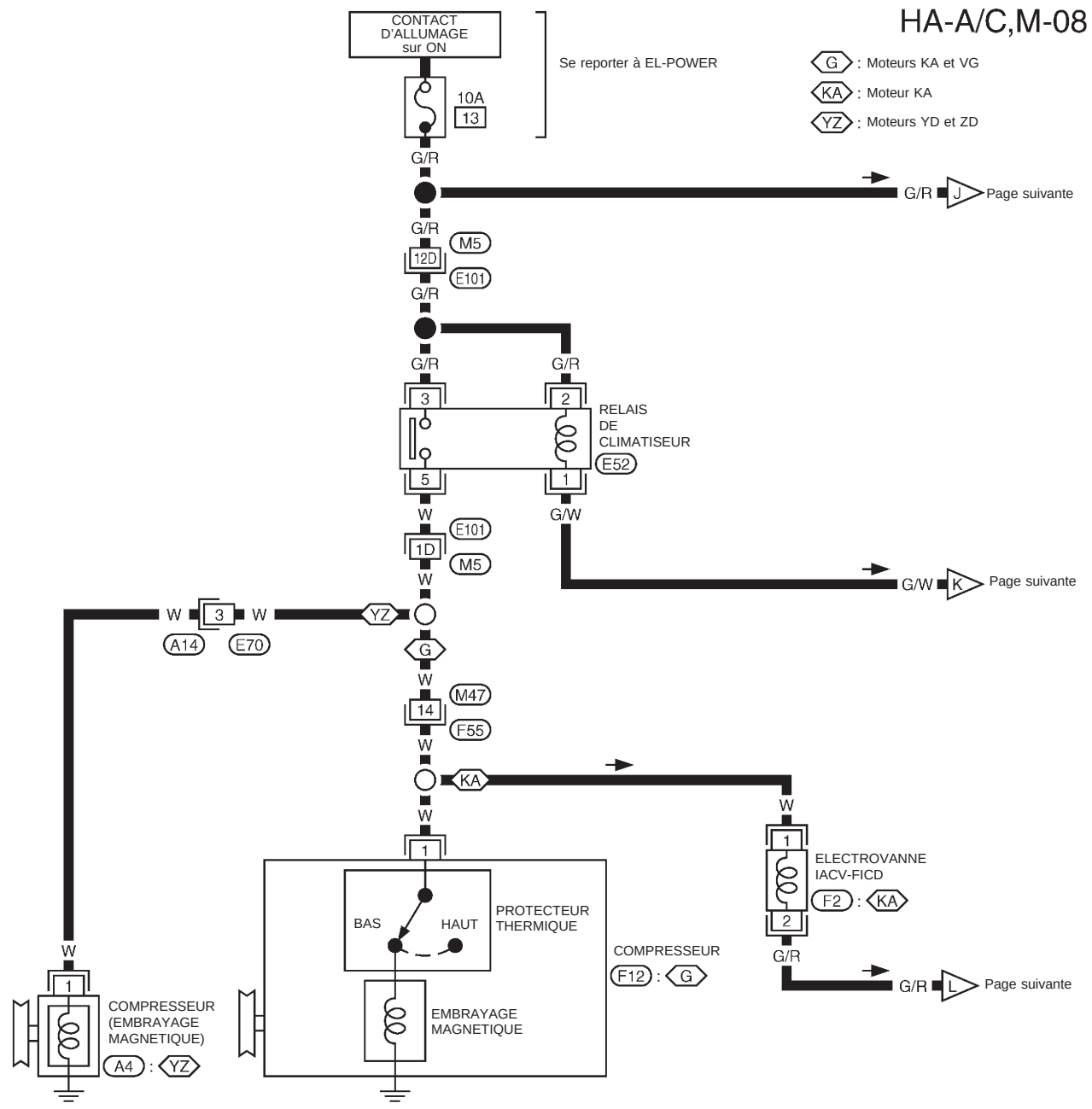

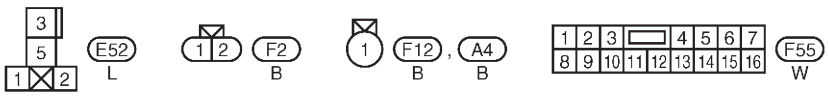

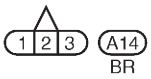

Se reporter à la dernière page dépliante..

M5 , E101

GHA043A

Simpo PDF Merge and Split Unregistered Version - http://www.simpopdf.com

Schéma de câblage — A/C, M —/Conduite à droite avec moteurs KA, YD (Suite)

HA-A/C,M-09

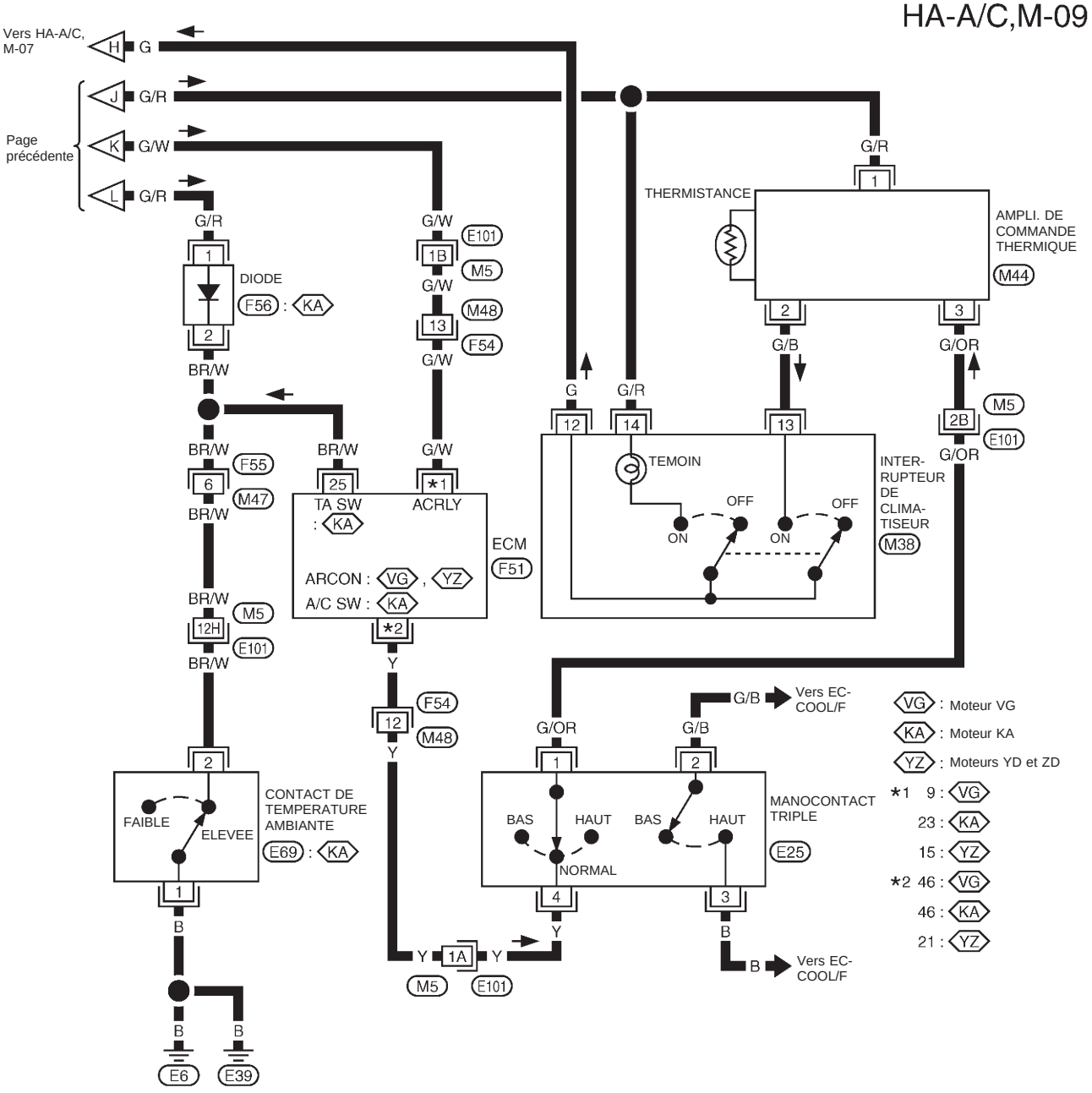

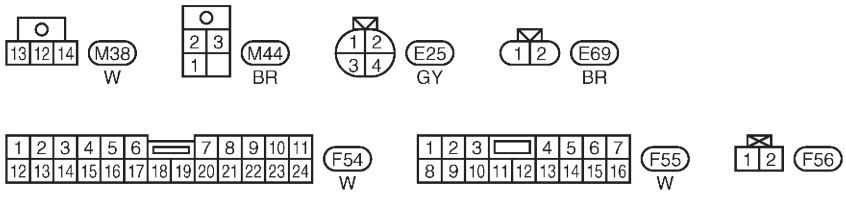

Consulter la dernière page dépliante

M5 , E101

F51

GHA044A

Simpo PDF Merge and Split Unregistered Version - http://www.simpopdf.com

A



Connecteur de compresseur
M212 : Moteur KA
A4 : Moteurs YD et ZD



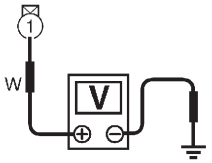

SHA616F

B



Connecteur de compresseur
M212 : Moteur KA
A4 : Moteurs YD et ZD

Connecteur de relais de A/C
E52

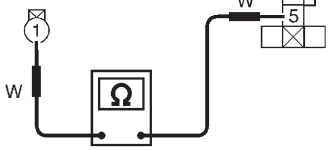

SHA617F

C



Connecteur de relais de A/C E52

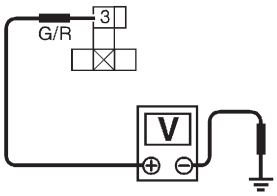

SHA596F

D



Connecteur de relais de A/C
E52

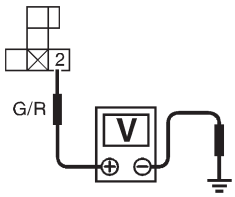

SHA597F

Embrayage magnétique

Conduite à gauche avec moteurs KA, YD

SYMPTOME : L'embrayage magnétique ne s'enclenche pas lorsque l'interrupteur de climatiseur et le commutateur de ventilateur sont enclenchés.

A

VERIFIER L'ALIMENTATION ELECTRIQUE DU COMPRESSEUR.
Débrancher le connecteur de faisceau du compresseur.
Y a-t-ilune tension d'environ 12 volts entre la borne n° ① du faisceau de compresseur et la masse de carrosserie ?

Oui → Vérifier les points suivants.
- Bobine d'embrayage magnétique
- Protecteur thermique (moteur KA sauf pour le Moyen-Orient)

Se reporter à HA-3019.

Mauvais → Remplacer l'embrayage magnétique. Se reporter au manuel de réparation D22, n° de publication SM8F-0D22E0E.

Non ↓

B

Remarque

Vérifier la continuité du circuit entre la borne ⑤ du faisceau de relais de climatiseur et la borne n° ① du faisceau de compresseur.
Il doit y avoir continuité.
Si le résultat est bon, vérifier si le faisceau n'est pas court-circuité.

Bon ↓

C

VERIFIER L'ALIMENTATION ELECTRIQUE DU RELAIS DE CLIMATISEUR.
Y a-t-il une tension d'environ 12 volts entre la borne n° ③ du faisceau de relais de climatiseur et la masse de carrosserie ?

Non → Vérifier le circuit de l'alimentation électrique et le fusible de 10A (n° 13, situé dans le boîtier à fusibles).
(Se reporter à ''DISPOSITION DE L'ALIMENTATION ELECTRIQUE'' dans la section EL et au schéma de câblage).

Oui ↓

D

VERIFIER L'ALIMENTATION ELECTRIQUE DU RELAIS DE CLIMATISEUR.
Y a-t-il une tension d'environ 12 volts entre la borne n° ② du faisceau de compresseur et la masse de carrosserie ?

Non → Vérifier le circuit de l'alimentation électrique et le fusible de 10A (n° 13, situé dans le boîtier à fusibles).
(Se reporter à ''DISPOSITION DE L'ALIMENTATION ELECTRIQUE'' dans la section EL et au schéma de câblage).

Oui ↓

VERIFIER LE RELAIS DE CLIMATISEUR APRES L'AVOIR DEBRANCHE.
Se reporter à HA-3019.

Mauvais → Remplacer le relais de climatiseur.

Bon ↓

Rebrancher le relais de climatiseur.

↓

Ⓐ
(Passer à la page suivante).

Remarque :
Si le résultat affiche mauvais ou ''Non'' après la vérification de la continuité du circuit, réparer le faisceau ou le connecteur.

Simpo PDF Merge and Split Unregistered Version - http://www.simpopdf.com

Embrayage magnétique (Suite)

E

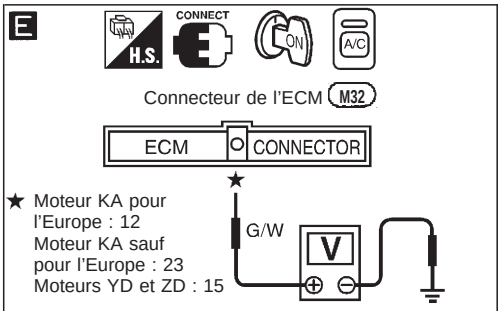

RHA335GE

F

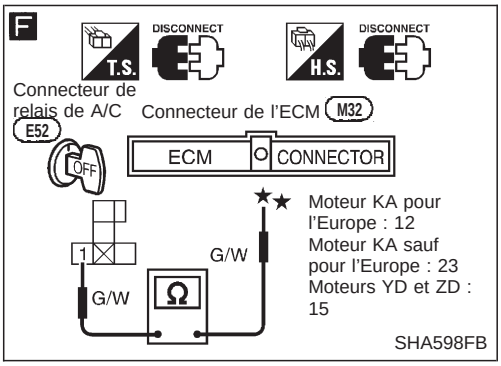

SHA598FB

G

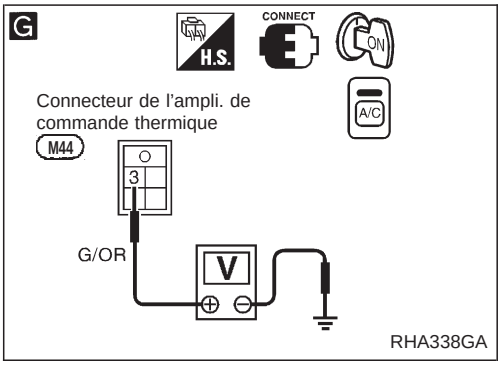

RHA338GA

H

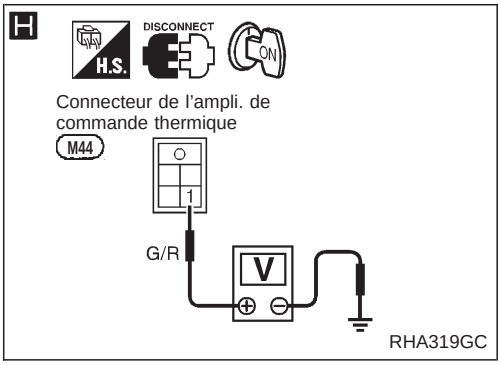

RHA319GC

I

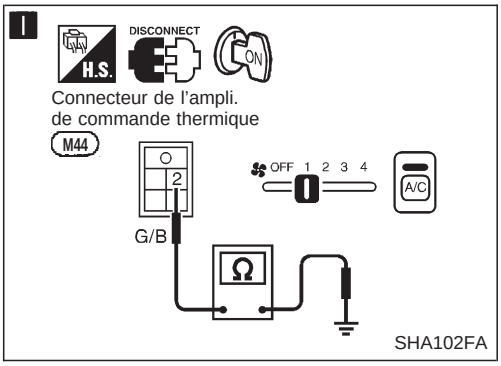

SHA102FA

Ⓐ

E Remarque

VERIFIER LE CIRCUIT COTE BOBINE DU RELAIS DE CLIMATISEUR.
Y a-t-il une tension d'environ 12 volts entre la borne n° ⑪, ⑮ ou ㉓ du faisceau de L'ECM et la masse de carrosserie ?

Non → **F** Remarque

Vérifier la continuité du circuit entre la borne ① du faisceau de relais de climatiseur et la borne n° ⑪, ⑮ ou ㉓ du faisceau de l'ECM.
Il doit y avoir continuité.
Si le résultat est bon, vérifier si le faisceau n'est pas court-circuité.

Oui ↓

G Remarque

VERIFIER LA TENSION DE L'AMPLI. DE COMMANDE THERMIQUE.
Y a-t-il une tension d'environ 12 volts entre la borne n° ③ de l'ampli. de commande thermique et la masse de carrosserie ?

Non → Ⓒ (Se reporter à HA-21.)

Oui ↓

H Remarque

VERIFIER L'ALIMENTATION ELECTRIQUE DE L'AMPLI. DE COMMANDE THERMIQUE.
Y a-t-il une tension d'environ 12 volts entre la borne n° ① de l'ampli de commande thermique et la masse de carrosserie ?

Non → Vérifier le circuit de l'alimentation électrique et le fusible de 10A (n° 13, situé dans le boîtier à fusibles).
(Se reporter à ''DISPOSITION DE L'ALIMENTATION ELECTRIQUE'' dans la section EL et au schéma de câblage).

Oui ↓

I Remarque

Vérifier la continuité entre la borne n° ② de l'ampli. de commande thermique et la masse de carrosserie.
Il doit y avoir continuité.
Si le résultat est bon, vérifier si le faisceau n'est pas court-circuité.

Bon → Remplacer l'ampli. de commande thermique.

Mauvais ↓

J Remarque

Vérifier la continuité entre la borne n° ② de l'ampli. de commande thermique et la borne n° ⑬ du faisceau de l'interrupteur de climatiseur.
Il doit y avoir continuité.
Si le résultat est bon, vérifier si le faisceau n'est pas court-circuité.

Bon ↓

Ⓑ

(Passer à la page suivante).

Remarque :
Si le résultat affiche mauvais ou ''Non'' après la vérification de la continuité du circuit, réparer le faisceau ou le connecteur.

Simpo PDF Merge and Split Unregistered Version - http://www.simpopdf.com

Embrayage magnétique (Suite)

H

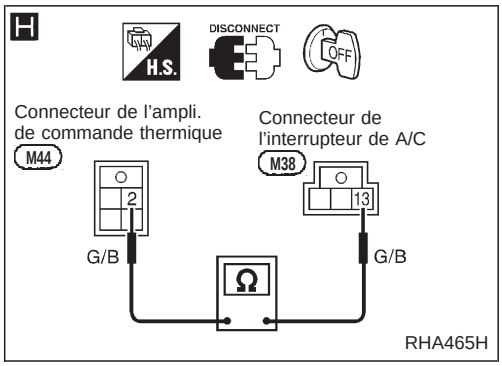

I

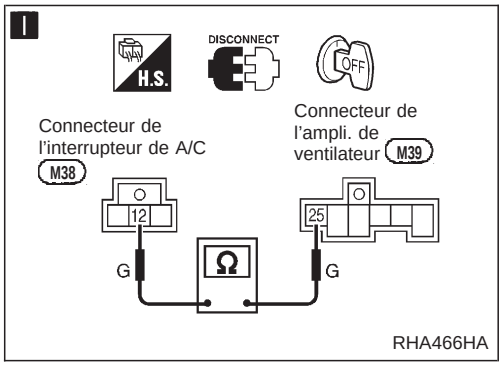

J

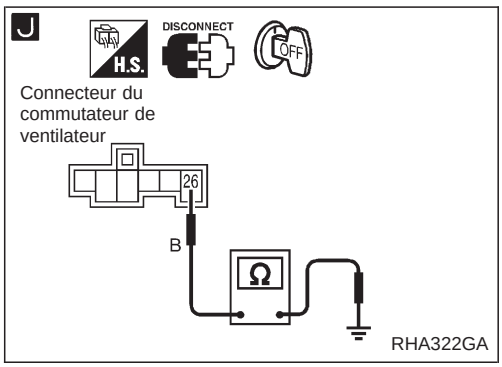

Ⓑ

VERIFIER L'INTERRUPTEUR DE CLIMATISEUR.
Se reporter au manuel de réparation D22, n° de publication SM9F-D22BE0E.

Mauvais → Remplacer l'interrupteur de climatiseur.

Bon

K Remarque

Vérifier la continuité du circuit entre la borne n° ⑫ du faisceau de l'interrupteur de climatiseur et la borne n° ㉕ du faisceau du commutateur de ventilateur.
Il doit y avoir continuité.
Si le résultat est bon, vérifier si le faisceau n'est pas court-circuité.

Bon

VERIFIER LE COMMUTATEUR DE VENTILATEUR
Se reporter au manuel de réparation D22, n° de publication SM9F-D22BE0E.

Mauvais → Remplacer le commutateur de ventilateur.

Bon

L Remarque

Vérifier la continuité du circuit entre la borne n° ㉖ du faisceau de commutateur de ventilateur et la masse de carrosserie.
Il doit y avoir continuité.
Si le résultat est bon, vérifier si le faisceau n'est pas court-circuité.

Remarque :
Si le résultat affiche mauvais ou ''Non'' après la vérification de la continuité du circuit, réparer le faisceau ou le connecteur.

Simpo PDF Merge and Split Unregistered Version - http://www.simpopdf.com

Embrayage magnétique (Suite)

M

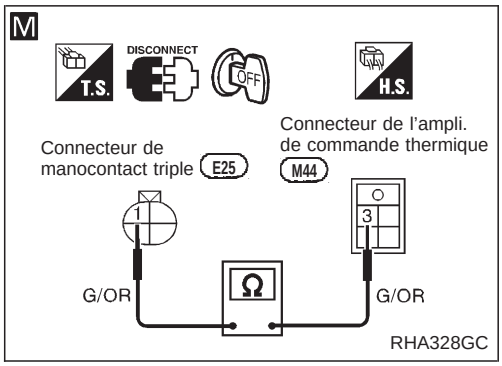

N

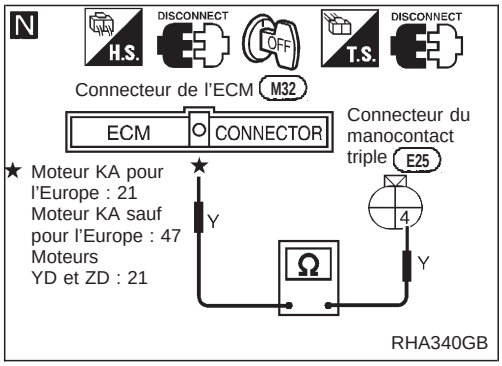

Ⓒ

M — Remarque

Vérifier la continuité entre la borne n° ③ du faisceau de l'ampli. de commande thermique et la borne n° ① du faisceau de manocontact triple.
Il doit y avoir continuité.
Si le résultat est bon, vérifier si le faisceau n'est pas court-circuité.

↓ Bon

VERIFIER LE MANOCONTACT TRIPLE.
Se reporter au manuel de réparation D22, n° de publication SM9F-D22BE0E.

→ Mauvais : Remplacer le manocontact triple.

↓ Bon

N — Remarque

Vérifier la continuité du circuit entre la borne n° ④ du faisceau de manocontact triple et la borne n° ㉑ ou ㊻ du faisceau de l'ECM.
Il doit y avoir continuité.
Si le résultat est bon, vérifier si le faisceau n'est pas court-circuité.

↓ Bon

Remplacer l'ECM.

Remarque :
Si le résultat affiche mauvais ou ''Non'' après la vérification de la continuité du circuit, réparer le faisceau ou le connecteur.

Simpo PDF Merge and Split Unregistered Version - http://www.simpopdf.com

Embrayage magnétique (Suite)

Conduite à droite avec moteurs KA, YD

SYMPTOME : L'embrayage magnétique ne s'enclenche pas lorsque l'interrupteur de climatiseur et le commutateur de ventilateur sont enclenchés.

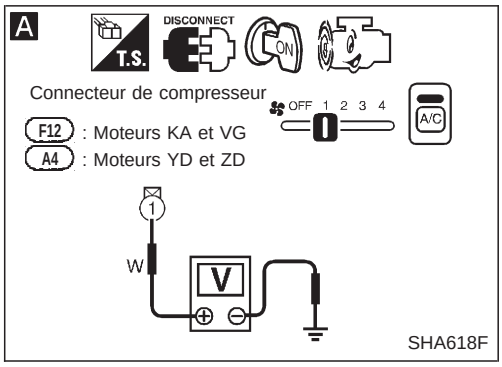

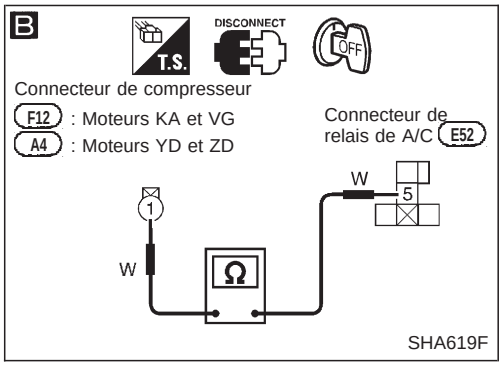

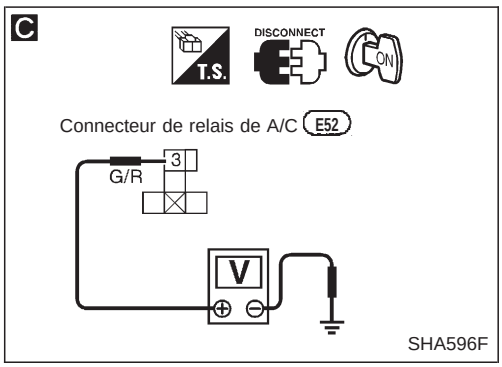

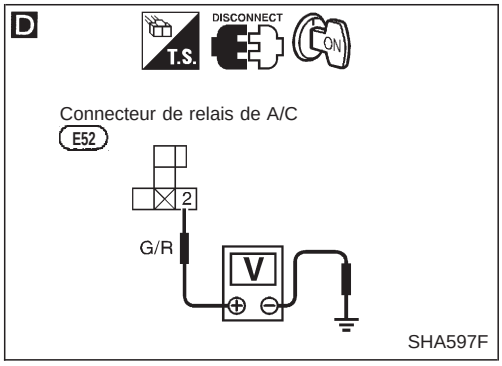

A

VERIFIER L'ALIMENTATION ELECTRIQUE DU COMPRESSEUR.
Débrancher le connecteur de faisceau du compresseur.
Y a-t-il une tension d'environ 12 volts entre la borne n° ① du faisceau de compresseur et la masse de carrosserie ?

Oui → Vérifier les points suivants.
- Bobine d'embrayage magnétique
- Protecteur thermique (moteur KA)

Se reporter au manuel de réparation D22, n° de publication SM9F-D22BE0E.

Mauvais → Remplacer l'embrayage magnétique. Se reporter au manuel de réparation D22, n° de publication SM8F-0D22E0E.

Non ↓

B

Remarque

Vérifier la continuité du circuit entre la borne n° ⑤ du faisceau de relais de climatiseur et la borne n° ① du faisceau de compresseur.
Il doit y avoir continuité.
Si le résultat est bon, vérifier si le faisceau n'est pas court-circuité.

Bon ↓

C

VERIFIER L'ALIMENTATION ELECTRIQUE DU RELAIS DE CLIMATISEUR.
Y a-t-il une tension d'environ 12 volts entre la borne n° ③ du faisceau de relais de climatiseur et la masse de carrosserie ?

Non → Vérifier le circuit de l'alimentation électrique et le fusible de 10A (n° 13, situé dans le boîtier à fusibles). (Se reporter à "DISPOSITION DE L'ALIMENTATION ELECTRIQUE" dans la section EL et au schéma de câblage).

Oui ↓

D

VERIFIER L'ALIMENTATION ELECTRIQUE DU RELAIS DE CLIMATISEUR.
Y a-t-il une tension d'environ 12 volts entre la borne n° ② du faisceau de relais de climatiseur et la masse de carrosserie ?

Non → Vérifier le circuit de l'alimentation électrique et le fusible de 10A (n° 13, situé dans le boîtier à fusibles). (Se reporter à "DISPOSITION DE L'ALIMENTATION ELECTRIQUE" dans la section EL et au schéma de câblage).

Oui ↓

VERIFIER LE RELAIS DE CLIMATISEUR APRES L'AVOIR DEBRANCHE.
Se reporter à la page HA-3019.

Mauvais → Remplacer le relais de climatiseur.

Bon ↓

Rebrancher le relais de climatiseur.

Ⓐ

(Passer à la page suivante).

Remarque :
Si le résultat affiche mauvais ou "Non" après la vérification de la continuité du circuit, réparer le faisceau ou le connecteur.

Simpo PDF Merge and Split Unregistered Version - http://www.simpopdf.com

Embrayage magnétique (Suite)

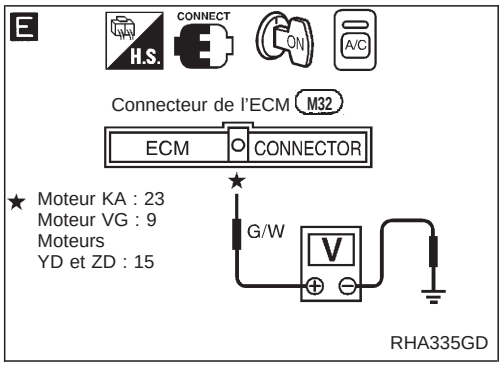

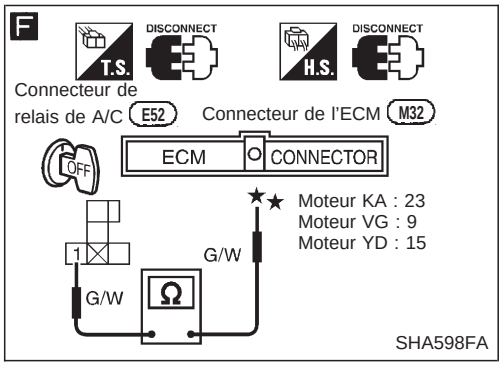

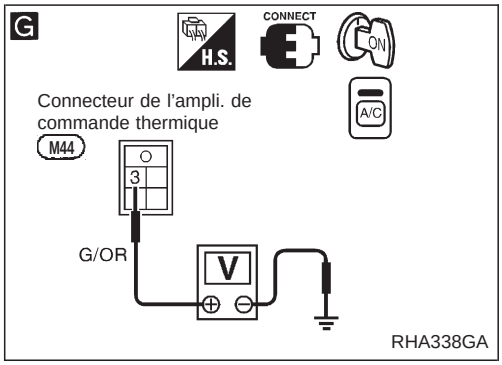

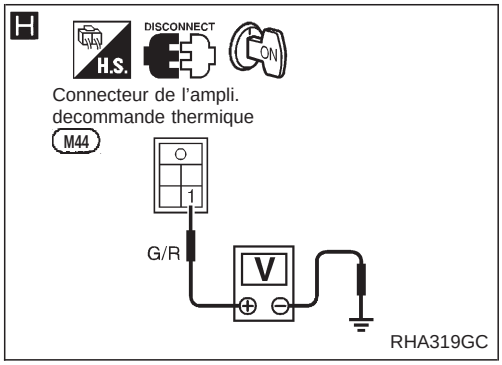

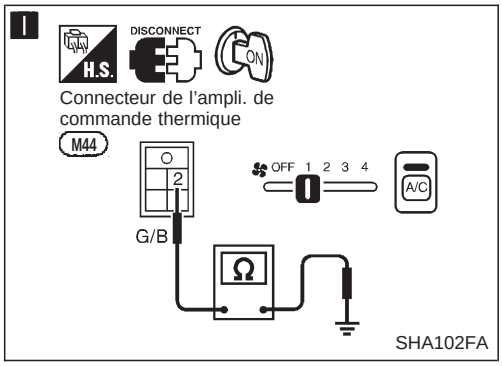

Ⓐ

E Remarque

VERIFIER LE CIRCUIT COTE BOBINE DU RELAIS DE CLIMATISEUR.
Y a-t-il une tension d'environ 12 volts entre la borne n° ⑨, ⑮ ou ㉓ et la masse de carrosserie ?

Non → **F** Remarque

Vérifier la continuité du circuit entre la borne n° ① du faisceau de relais de climatiseur et la borne n° ⑨, ⑮ ou ㉓ du faisceau de l'ECM.
Il doit y avoir continuité.
Si le résultat est bon, vérifier si le faisceau n'est pas court-circuité.

Oui ↓

G Remarque

VERIFIER LA TENSION DE L'AMPLI. DE COMMANDE THERMIQUE.
Y a-t-il une tension d'environ 12 volts entre la borne n° ③ du faisceau de l'ampli. de commande thermique et la masse de carrosserie ?

Non → Ⓒ (Se reporter à HA-25.)

Oui ↓

H

VERIFIER L'ALIMENTATION ELECTRIQUE DE L'AMPLI. DE COMMANDE THERMIQUE.
Y a-t-il une tension d'environ 12 volts entre la borne n° ① du faisceau de l'ampli. de commande thermique et la masse de carrosserie ?

Non → Vérifier le circuit de l'alimentation électrique et le fusible de 10A (n° 13, situé dans le boîtier à fusibles.)
(Se reporter à "DISPOSITION DE L'ALIMENTATION ELECTRIQUE" dans la section EL et au schéma de câblage).

Oui ↓

I Remarque

Vérifier la continuité entre la borne n° ② du faisceau de l'ampli. de commande thermique et la masse de carrosserie.
Il doit y avoir continuité.
Si le résultat est bon, vérifier si le faisceau n'est pas court-circuité.

Bon → Remplacer l'ampli. de commande thermique.

Mauvais ↓

J Remarque

Vérifier la continuité entre la borne n° ② de l'ampli. de commande thermique et la borne n° ⑬ du faisceau de l'interrupteur de climatiseur.
Il doit y avoir continuité.
Si le résultat est bon, vérifier si le faisceau n'est pas court-circuité.

Bon ↓

Ⓑ
(Passer à la page suivante).

Remarque :
Si le résultat affiche mauvais ou "Non" après la vérification de la continuité du circuit, réparer le faisceau ou le connecteur.

Simpo PDF Merge and Split Unregistered Version - http://www.simpopdf.com

Embrayage magnétique (Suite)

J

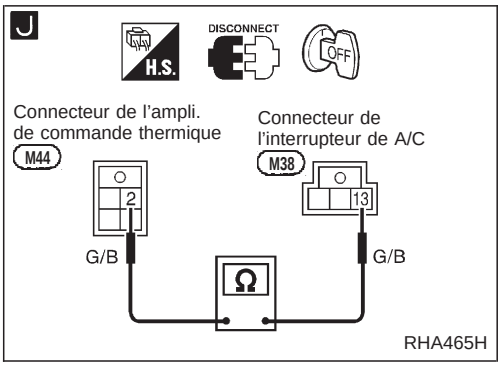

K

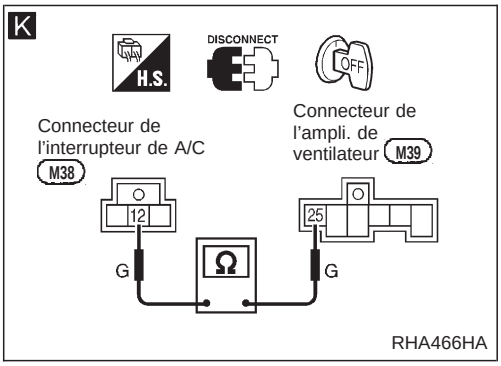

L

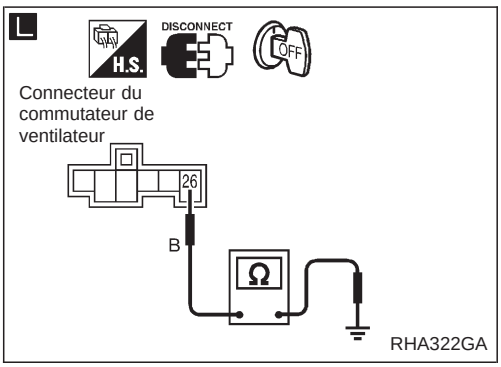

Ⓑ

VERIFIER L'INTERRUPTEUR DE CLIMATISEUR.
Se reporter au manuel de réparation D22, n° de publication SM9F-D22BE0E.

Mauvais → Remplacer l'interrupteur de climatiseur.

Bon

K Remarque

Vérifier la continuité du circuit entre la borne n° ⑫ du faisceau de l'interrupteur de climatiseur et la borne n° ㉕ du faisceau du commutateur de ventilateur.
Il doit y avoir continuité.
Si le résultat est bon, vérifier si le faisceau n'est pas court-circuité.

Bon

VERIFIER LE COMMUTATEUR DE VENTILATEUR
Se reporter au manuel de réparation D22, n° de publication SM9F-D22BE0E.

Mauvais → Remplacer le commutateur de ventilateur.

Bon

L Remarque

Vérifier la continuité du circuit entre la borne n° ㉖ du faisceau de commutateur de ventilateur et la masse de carrosserie.
Il doit y avoir continuité.
Si le résultat est bon, vérifier si le faisceau n'est pas court-circuité.

Remarque :
Si le résultat affiche mauvais ou ''Non'' après la vérification de la continuité du circuit, réparer le faisceau ou le connecteur.

Simpo PDF Merge and Split Unregistered Version - http://www.simpopdf.com

Embrayage magnétique (Suite)

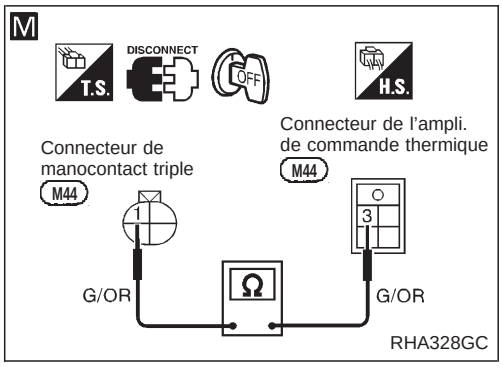

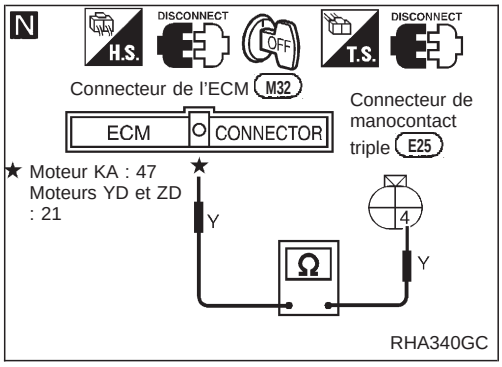

Ⓒ

M Remarque

Vérifier la continuité entre la borne n° ③ du faisceau de l'ampli. de commande thermique et la borne n° ① du faisceau de manocontact triple.
Il doit y avoir continuité.
Si le résultat est bon, vérifier si le faisceau n'est pas court-circuité.

↓ Bon

VERIFIER LE MANOCONTACT TRIPLE.
Se reporter au manuel de réparation D22, n° de publication SM9F-D22BE0E.

→ Mauvais : Remplacer le manocontact triple.

↓ Bon

N Remarque

Vérifier la continuité du circuit entre la borne n° ④ du faisceau de manocontact triple et la borne n° ㉑ ou ㊻ du faisceau de l'ECM.
Il doit y avoir continuité.
Si le résultat est bon, vérifier si le faisceau n'est pas court-circuité.

↓ Bon

Remplacer l'ECM.

Remarque :
Si le résultat affiche mauvais ou ''Non'' après la vérification de la continuité du circuit, réparer le faisceau ou le connecteur.

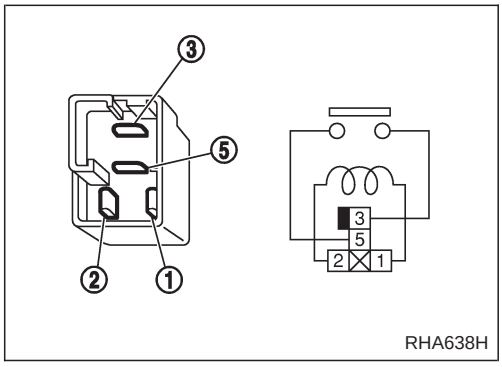

INSPECTION DES COMPOSANTS ELECTRIQUES

Relais de climatiseur

Vérifier la continuité entre les bornes 3 et 5.

Conditions	Il y a continuité
Alimentation en courant continu de 12 volts entre les bornes 1 et 2	Oui
Aucune alimentation électrique	Non

Si le résultat n'est pas satisfaisant, remplacer le relais.

Simpo PDF Merge and Split Unregistered Version - http://www.simpopdf.com

Schéma du circuit — A/C, A —

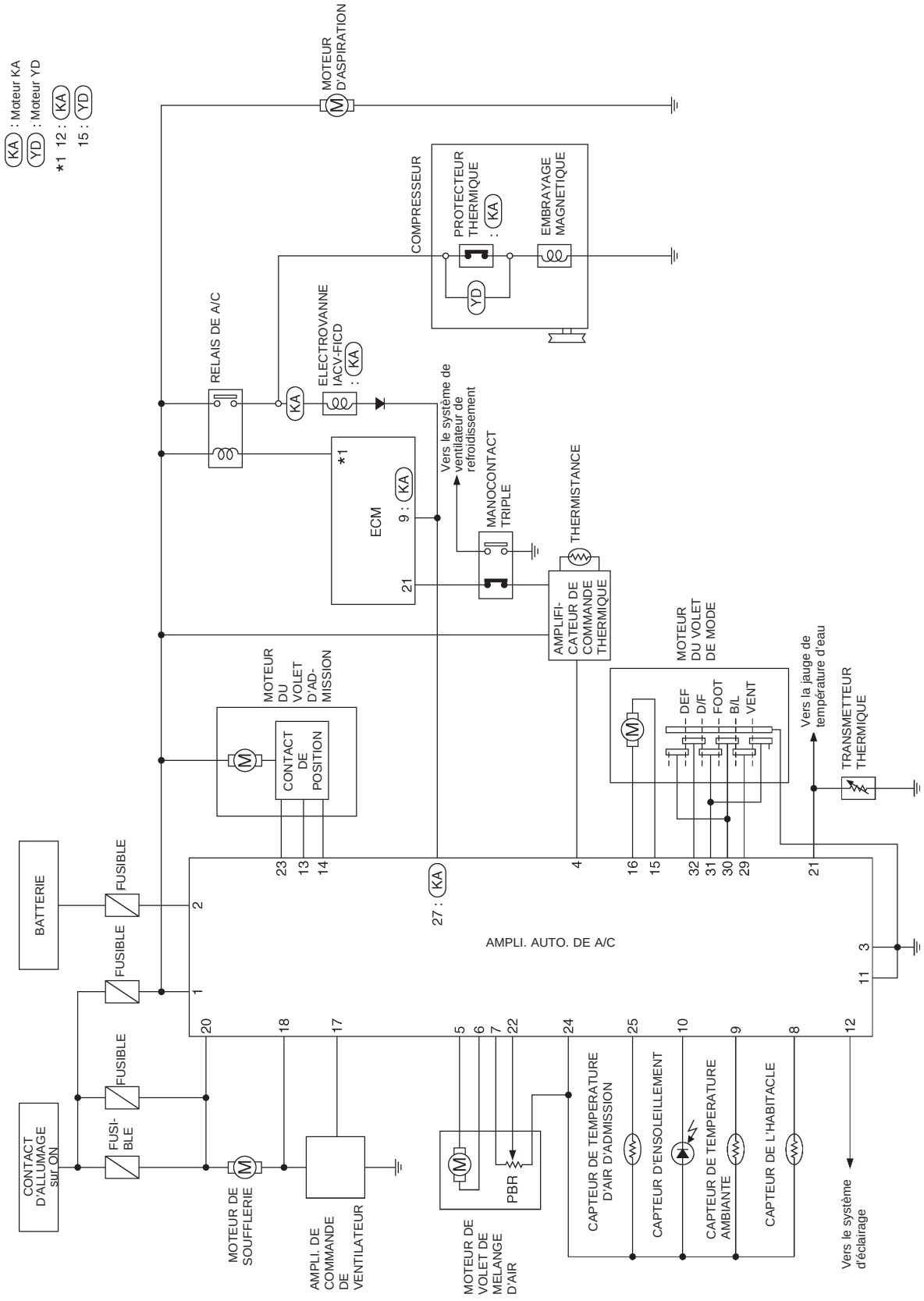

GHA045A

Simpo PDF Merge and Split Unregistered Version - http://www.simpopdf.com

Schéma de câblage — A/C, A —

HA-A/C,A-01

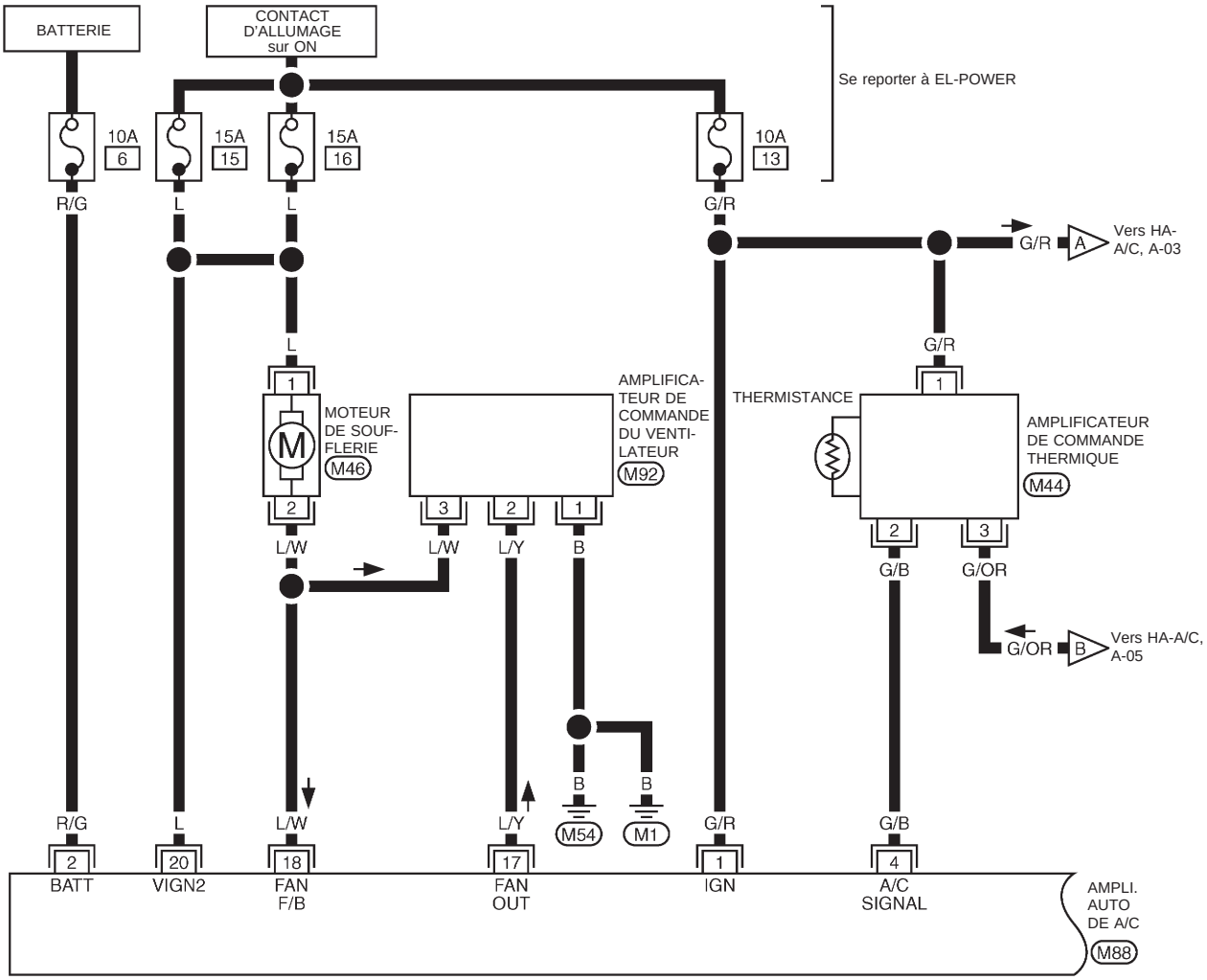

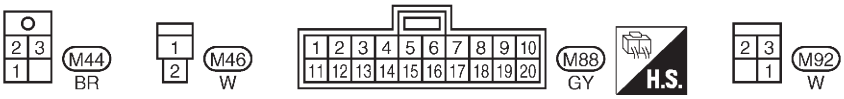

GHA046A

Simpo PDF Merge and Split Unregistered Version - http://www.simpopdf.com

Schéma de câblage — A/C, A — (Suite)

HA-A/C,A-02

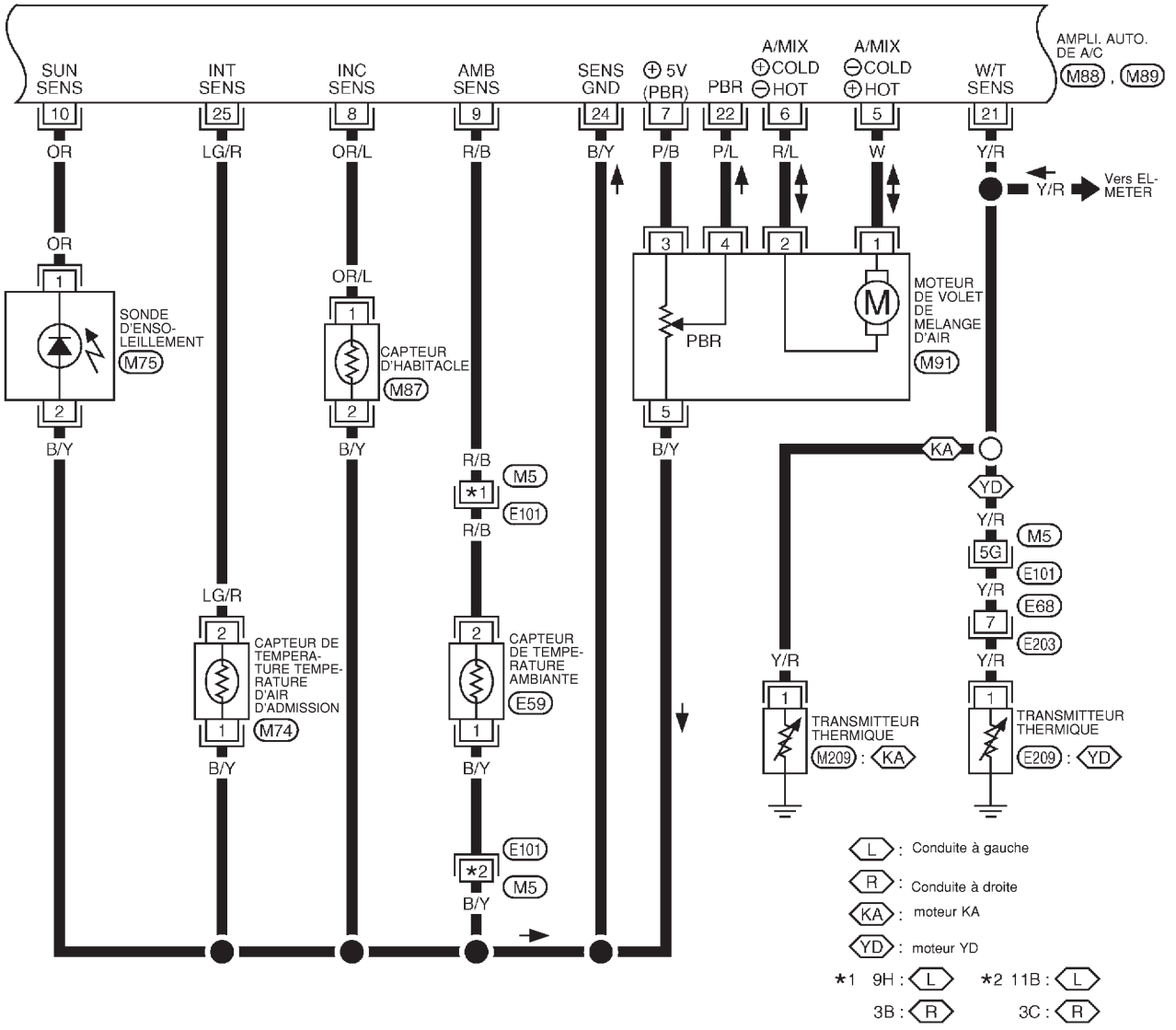

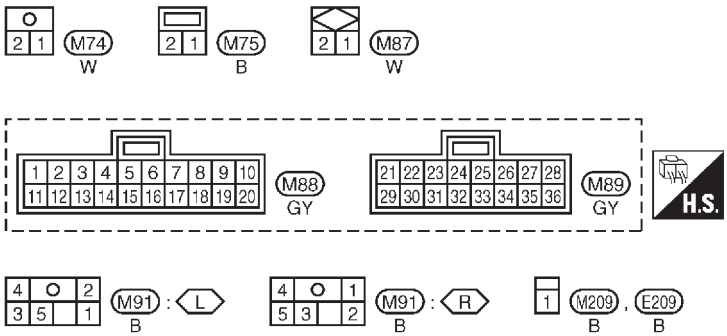

Consulter la dernière page dépliante.

M5 , E101

GHA047A

Simpo PDF Merge and Split Unregistered Version - http://www.simpopdf.com

Schéma de câblage — A/C, A — (Suite)

HA-A/C,A-03

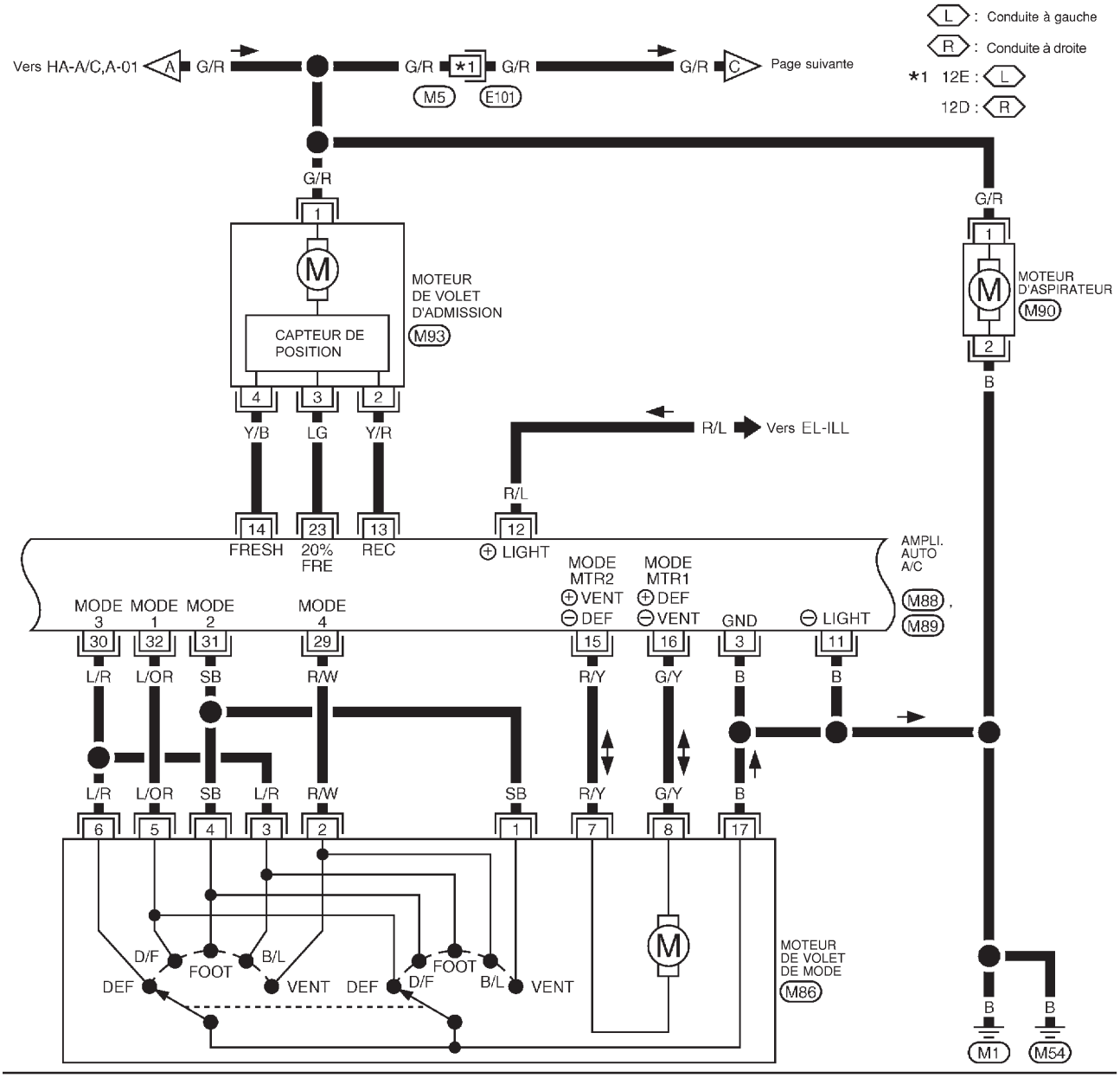

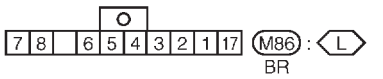

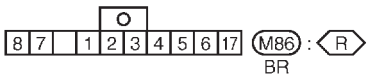

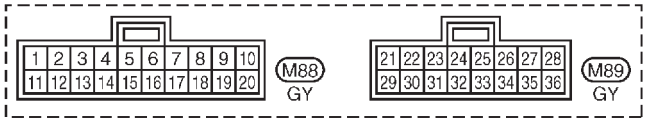





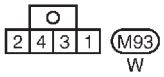

Consulter la dernière page dépliante.

M5 , E101

GHA048A

Simpo PDF Merge and Split Unregistered Version - http://www.simpopdf.com

Schéma de câblage — A/C, A — (Suite)

HA-A/C,A-04

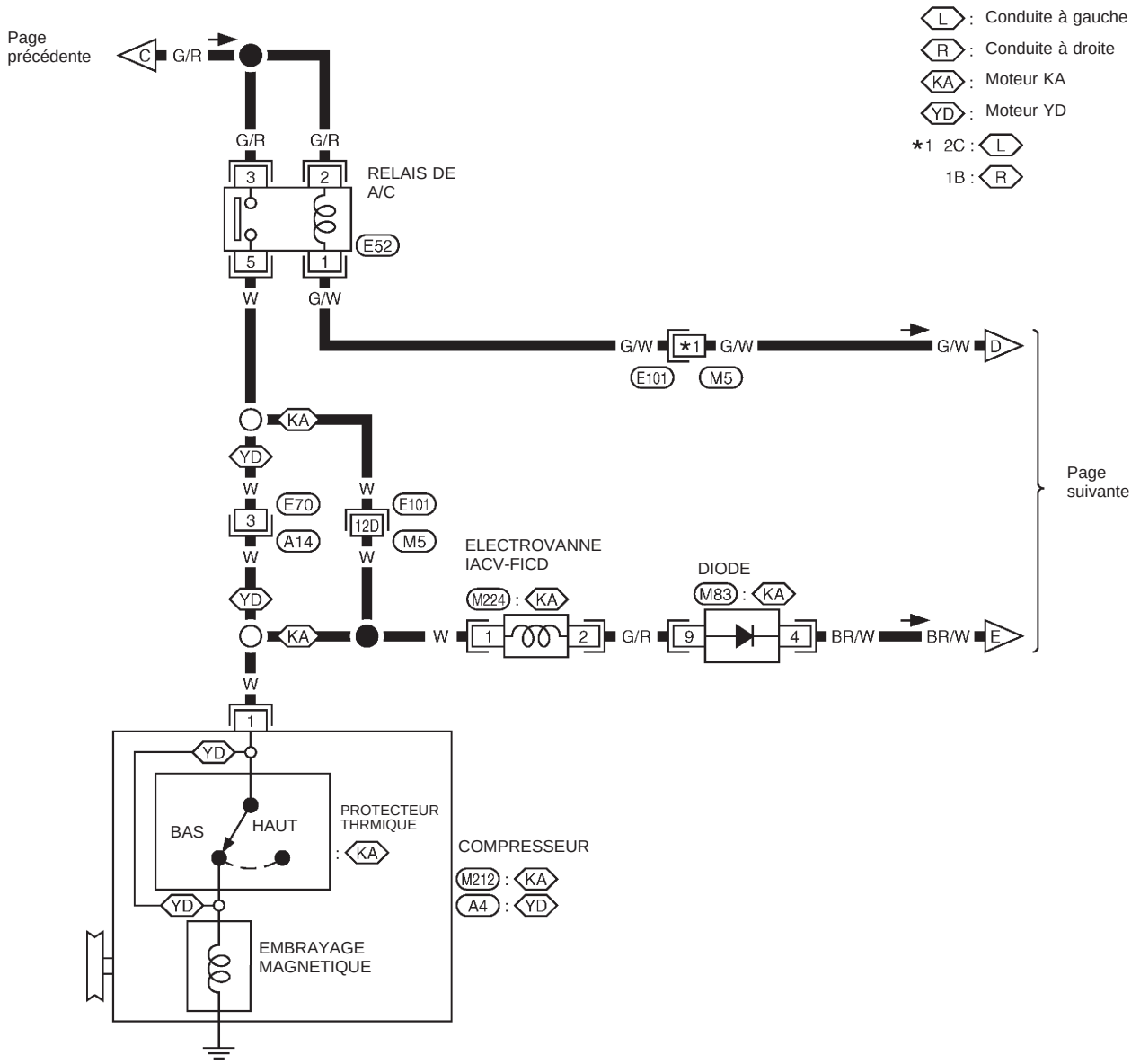

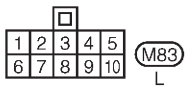

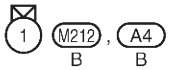



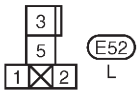

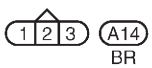

Consulter la dernière page dépliante

M5 , E101

GHA049A

Simpo PDF Merge and Split Unregistered Version - http://www.simpopdf.com

Schéma de câblage — A/C, A — (Suite)

HA-A/C,A-05

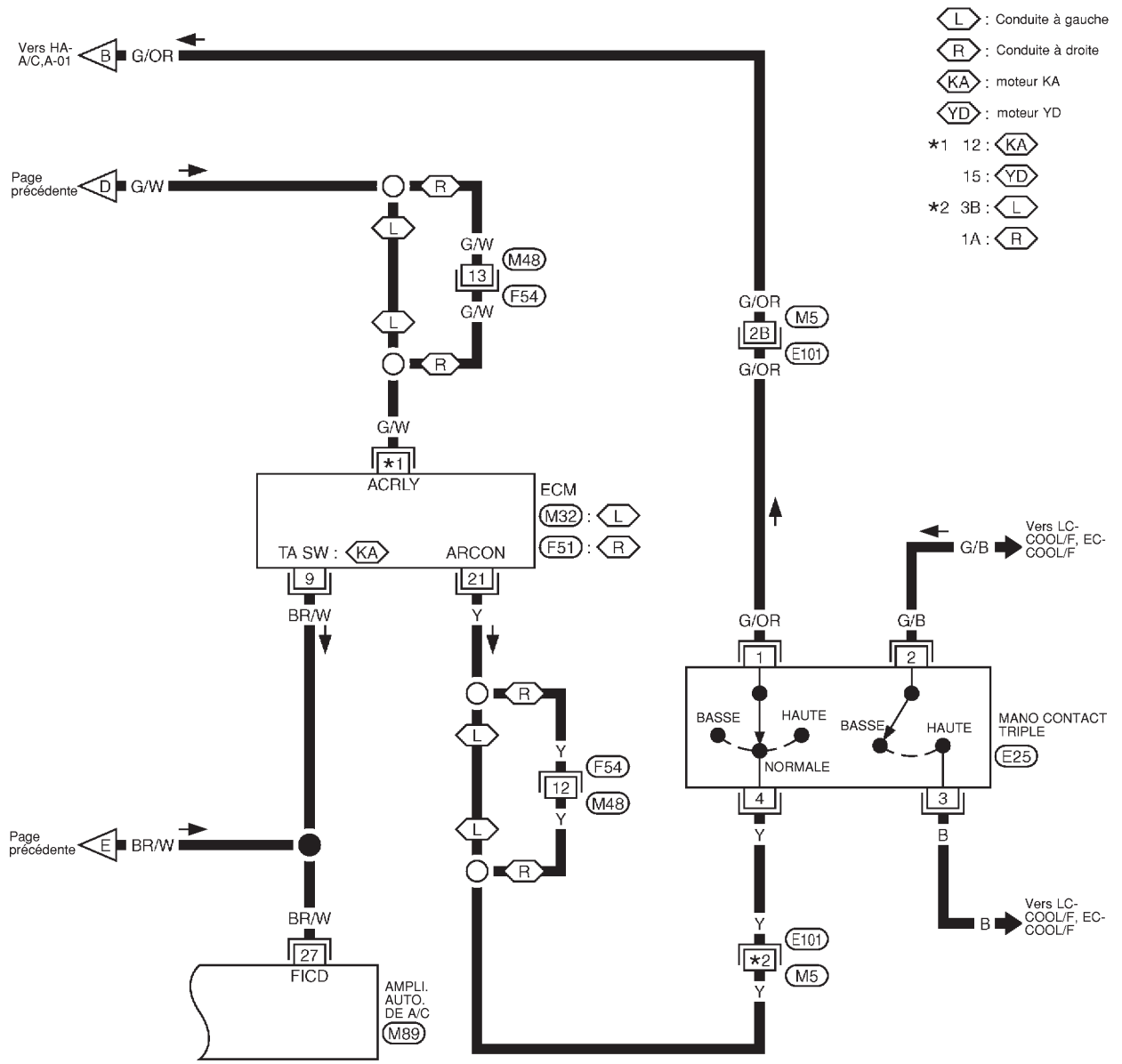



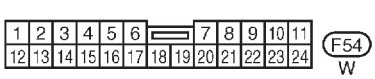





Consulter la dernière page dépliante.
M5, E101
M32
F51

GHA050A

Simpo PDF Merge and Split Unregistered Version - http://www.simpopdf.com

Embrayage magnétique

PROCEDURE DE DIAGNOSTIC DE DEFAUT DE L'EMBRAYAGE MAGNETIQUE

SYMPTOME :

- **L'embrayage magnétique ne s'enclenche pas.**

Ordre de l'inspection

1. Confirmer la présence du symptôme en exécutant la vérification de fonctionnement suivante.

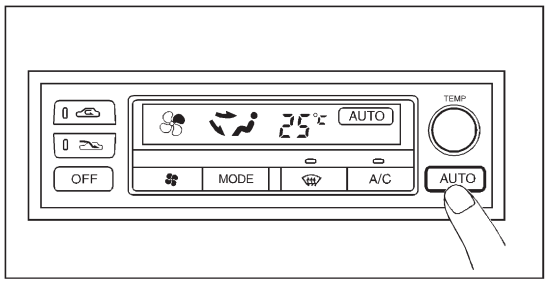

VERIFICATION DE FONCTIONNEMENT - Mode AUTO

a. Appuyer sur la touche AUTO.
b. L'affichage doit indiquer AUTO.
Vérifier que l'embrayage du compresseur est engagé.
(Inspection auditive ou visuelle).
(L'air de décharge et la vitesse de soufflerie dépendront des températures ambiante, de l'habitacle et de référence).

Si le résultat est satisfaisant (le symptôme ne peut pas être répété), effectuer une vérification complète du fonctionnement (*10).
Si le résultat n'est pas satisfaisant, (le symptôme est confirmé), continuer avec L'ETAPE 2 suivante.

2. Rechercher les bulletins d'entretien.
3. Effectuer L'ETAPE 1 de l'autodiagnostic. (*1)
Bon
4. Effectuer L'ETAPE 2 de l'autodiagnostic. (*2)
Mauvais → Se reporter au circuit du capteur de défaut approprié. (*2)
Bon
5. Effectuer L'ETAPE 4 de l'autodiagnostic. (*3)
Mauvais → Vérifier le mécanisme de l'embrayage magnétique.
Bon → Aller à PROCEDURE DE DIAGNOSTIC DE L'EMBRAYAGE MAGNETIQUE. (*11)
Mauvais → Vérifier la pression de réfrigérant. (*12)
Bon
La cause ne peut pas être confirmée par autodiagnostic.
6. Vérifier le circuit du capteur de température ambiante. (*5)
Bon
7. Vérifier le circuit du capteur de l'habitacle. (*6)
Bon
8. Vérifier le circuit du capteur d'ensoleillement. (*7)
Bon
9. Vérifier le circuit du capteur d'admission. (*8)
Bon
10. Vérifier le circuit PBR du moteur de volet de mélange d'air. (*9)
Bon
Si le symptôme existe toujours, effectuer une vérification (*10) de fonctionnement complète et vérifier s'il y a d'autres symptômes. [Se reporter au tableau des symptômes, (*4).] Existe-t-il un autre symptôme ?
Oui → Se reporter au diagnostic de défaut de symptômes connexes.
Un autre symptôme existe.
Non
Remplacer l'amplificateur automatique. → FIN DE L'INSPECTION

SHA341FA

*1 : HA-2035
*2 : HA-2036
*3 : HA-2038
*4 : HA-2040
*5 : HA-2080
*6 : HA-2082
*7 : HA-2084
*8 : HA-2087
*9 : HA-2053
*10 : HA-2041
*11 : HA-3027
*12 : HA-29 dans le manuel de réparation D22, n° de publication SM8F-0D22E0E

Remarque : *1 - *10 : se reporter au MANUEL DE REPARATION D22, n° de publication SM9F-D22BE0E.

Simpo PDF Merge and Split Unregistered Version - http://www.simpopdf.com

Embrayage magnétique (Suite)

PROCEDURE DE DIAGNOSTIC

SYMPTOME : L'embrayage magnétique ne s'enclenche pas lorsque l'interrupteur de climatiseur et le commutateur de ventilateur sont enclenchés.

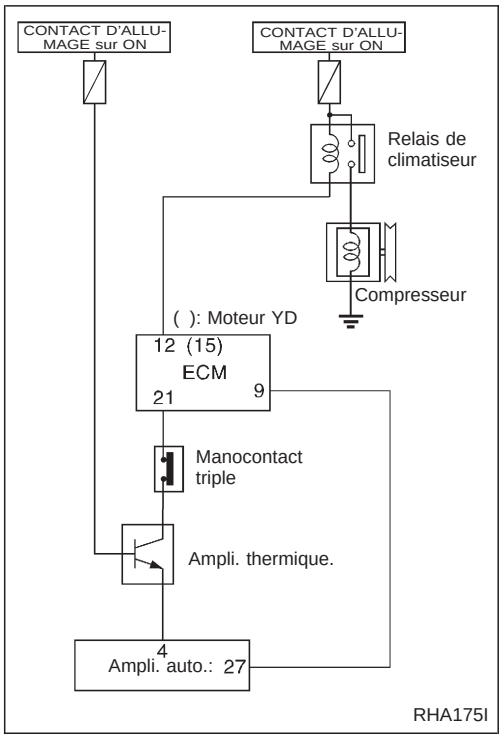

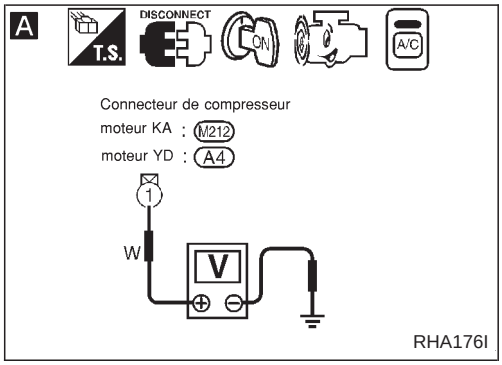

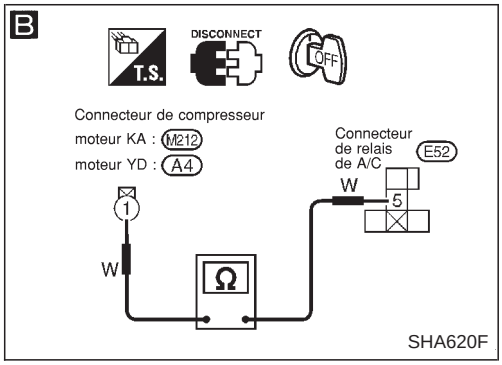

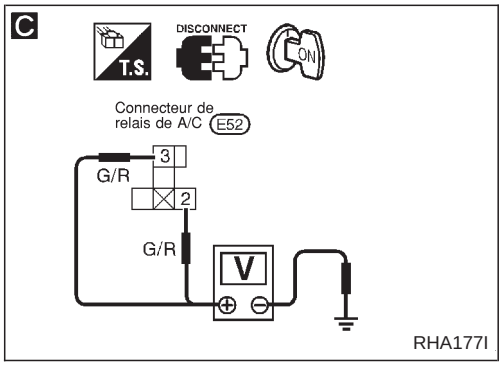

A

VERIFIER L'ALIMENTATION ELECTRIQUE DU COMPRESSEUR.
Débrancher le connecteur de faisceau du compresseur.
Y a-t-il une tension d'environ 12 volts entre la borne n° ① du faisceau de compresseur et la masse de carrosserie ?

Oui → Vérifier la bobine de l'embrayage magnétique.
Mauvais → Remplacer l'embrayage magnétique. Se reporter au manuel de réparation D22, n° de publication SM8F-0D22E0E.

Non → Débrancher le relais de climatiseur.

B

Remarque

VERIFIER LA CONTINUITE DU CIRCUIT ENTRE LA BORNE N° ⑤ DU FAISCEAU DE RELAIS DE CLIMATISEUR ET LA BORNE N° ① DU FAISCEAU DE COMPRESSEUR.
Il doit y avoir continuité.
Si le résultat est bon, vérifier si le faisceau n'est pas court-circuité.

Bon

C

VERIFIER L'ALIMENTATION ELECTRIQUE DU RELAIS DE CLIMATISEUR.
Débrancher le relais de climatiseur.
Y a-t-il une tension d'environ 12 volts entre les bornes n° ②, ③ du faisceau de relais de climatiseur et la masse de carrosserie ?

Non → VERIFIER LE CIRCUIT DE L'ALIMENTATION ELECTRIQUE ET LE FUSIBLE DE 10A (N° 13) DANS LE BOITIER A FUSIBLES.
Se reporter à la section EL (''Schéma de câblage'', ''DISPOSITION DE L'ALIMENTATION ELECTRIQUE'').

Oui

VERIFIER LE RELAIS DE CLIMATISEUR APRES L'AVOIR DEBRANCHE.
Se reporter à la page HA-3029.

Mauvais → Remplacer le relais de climatiseur.

Bon

Ⓐ

(Passer à la page suivante).

Remarque :
Si le résultat affiche mauvais ou ''Non'' après la vérification de la continuité du circuit, réparer le faisceau ou le connecteur.

Simpo PDF Merge and Split Unregistered Version - http://www.simpopdf.com

Embrayage magnétique (Suite)

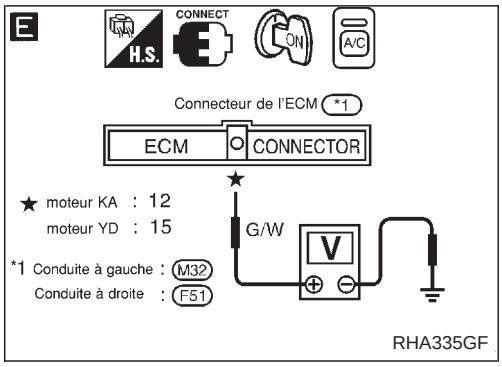

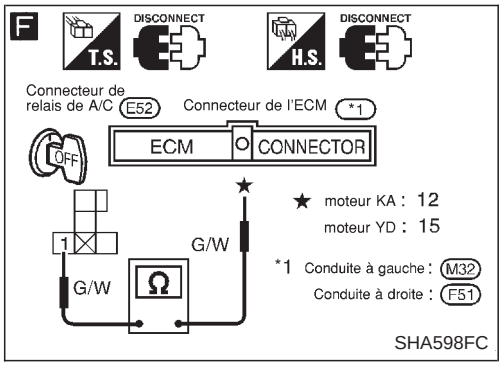

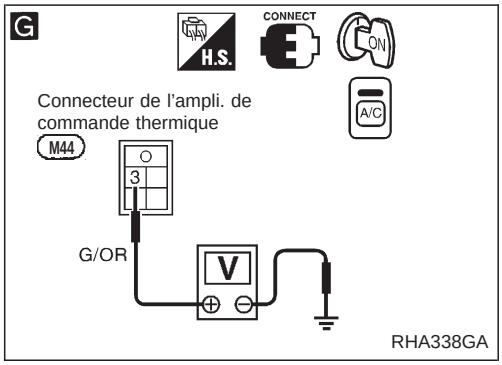

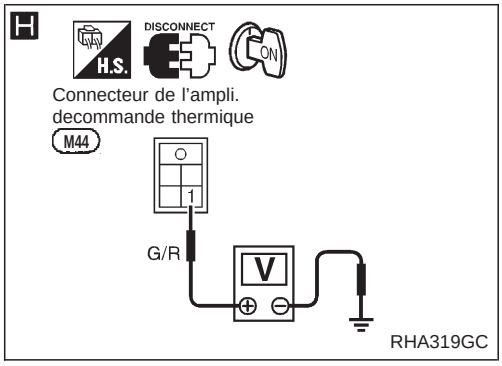

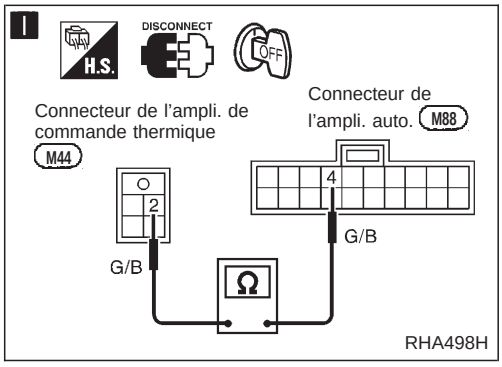

Ⓐ

E Remarque

VERIFIER LE CIRCUIT COTE BOBINE DU RELAIS DE CLIMATISEUR.
Y a-t-il une tension d'environ 12 volts entre la borne n° ⑫ ou ⑮ du faisceau de l'ECM et la masse de carrosserie ?

Non → **F** Remarque

Vérifier la continuité du circuit entre la borne ① du faisceau de relais de climatiseur et la borne n° ⑫ ou ⑮ du faisceau de l'ECM.
Il doit y avoir continuité.
Si le résultat est bon, vérifier si le faisceau n'est pas court-circuité.

Oui ↓

G Remarque

VERIFIER LA TENSION DE L'AMPLI. DE COMMANDE THERMIQUE.
Y a-t-il une tension d'environ 12 volts entre la borne n° ③ du faisceau de l'ampli. de commande thermique et la masse de carrosserie ?

Non → Ⓑ (Passer à la page suivante).

Oui ↓

H

VERIFIER L'ALIMENTATION ELECTRIQUE DE L'AMPLI. DE COMMANDE THERMIQUE.
Y a-t-il une tension d'environ 12 volts entre la borne n° ① du faisceau de l'ampli. de commande thermique et la masse de carrosserie ?

Non → Vérifier le circuit de l'alimentation électrique et le fusible de 10A (n° 13, situé dans le boîtier à fusibles.)
(Se reporter à "DISPOSITION DE L'ALIMENTATION ELECTRIQUE" dans la section EL et au schéma de câblage).

Oui ↓

Remarque

VERIFIER L'AMPLI. DE COMMANDE THERMIQUE.
Se reporter au manuel de réparation D22, n° de publication SM8F-0D22E0E.

Mauvais → Remplacer l'ampli. de commande thermique.

Bon ↓

I Remarque

Vérifier la continuité entre la borne n° ② du faisceau de l'ampli. de commande thermique et la borne n° ④ de l'ampli. auto. de climatiseur.
Il doit y avoir continuité.
Si le résultat est bon, vérifier si le faisceau n'est pas court-circuité.

Bon ↓

Remplacer l'amplificateur automatique.

Remarque :
Si le résultat affiche mauvais ou "Non" après la vérification de la continuité du circuit, réparer le faisceau ou le connecteur.

Simpo PDF Merge and Split Unregistered Version - http://www.simpopdf.com

Embrayage magnétique (Suite)

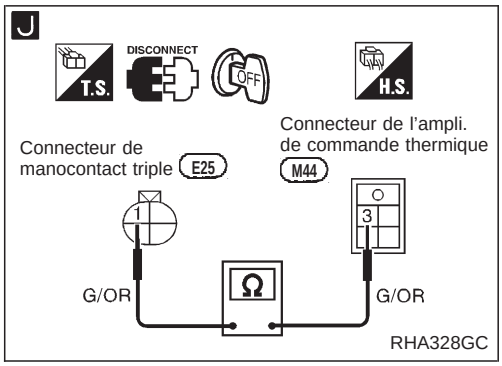

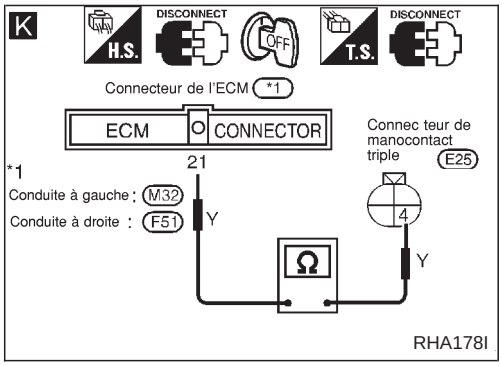

(B)

J Remarque

Vérifier la continuité du circuit entre la borne n° (3) du faisceau de l'ampli. de commande thermique et la borne n° (1) du faisceau de manocontact triple.
Il doit y avoir continuité.
Si le résultat est bon, vérifier si le faisceau n'est pas court-circuité.

↓ Bon

VERIFIER LE MANOCONTACT TRIPLE.
Se reporter au manuel de réparation D22, n° de publication SM9F-D22BE0E.

Mauvais → Remplacer le manocontact triple.

↓ Bon

K Remarque

Vérifier la continuité du circuit entre la borne n° (4) du faisceau de manocontact triple et la borne n° (21) du faisceau de l'ECM.
Il doit y avoir continuité.
Si le résultat est bon, vérifier si le faisceau n'est pas court-circuité.

↓ Bon

Remplacer l'ECM.

Remarque :
Si le résultat affiche mauvais ou ''Non'' après la vérification de la continuité du circuit, réparer le faisceau ou le connecteur.

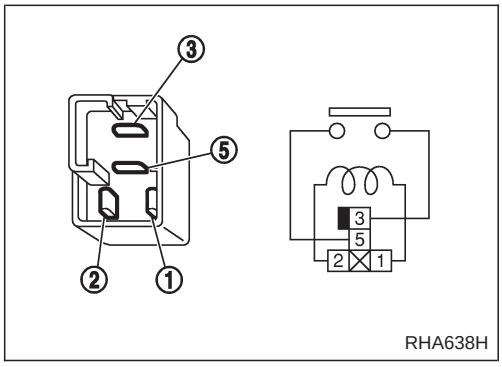

INSPECTION DES COMPOSANTS ELECTRIQUES

Relais de climatiseur

Vérifier la continuité entre les bornes 3 et 5.

Conditions	Il y a continuité
Alimentation en courant continu de 12 volts entre les bornes 1 et 2	Oui
Aucune alimentation électrique	Non

Si le résultat n'est pas satisfaisant, remplacer le relais.

Simpo PDF Merge and Split Unregistered Version - http://www.simpopdf.com

Canalisations de réfrigération

- Se reporter à ''Précautions pour les raccords de réfrigérant '' à la page HA-3002.

MOTEUR YD

CONDUITE A GAUCHE AVEC MOTEUR DIESEL

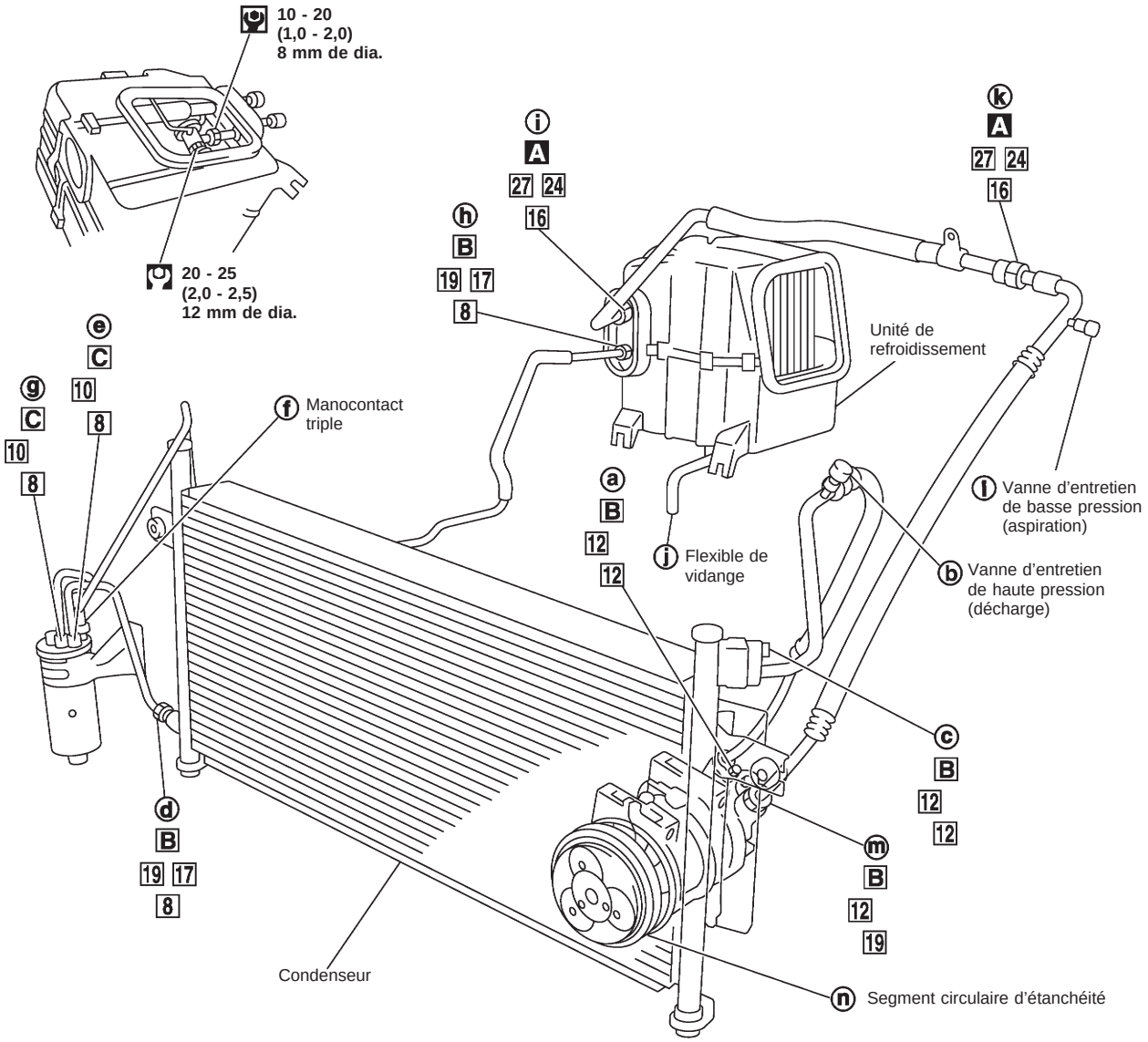

REMARQUE :
Cette illustration concerne les modèles avec conduite à gauche.
Pour les modèles avec conduite à droite, l'emplacement de l'unité de refroidissement et le parcours de la tuyauterie de A/C sont différents.

○ : Ordre de vérification des fuites de réfrigérant
□ : (Couple de serrage)
□ □ : (Taille de clé)
□ : (Taille de joint torique)
: N•m (kg-m)
A : 20 - 29 (2,0 - 3,0)
: N•m (kg-m)
B : 10 - 20 (1,0 - 2,0)
C : 3,42 - 5,88 (0,35 - 0,59)

RHA179I

Simpo PDF Merge and Split Unregistered Version - http://www.simpopdf.com

Vérification des fuites de réfrigérant

PROCEDURE DE VERIFICATION

Pour éviter une lecture fausse ou inexacte, s'assurer qu'il n'y a aucune vapeur de réfrigérant ou de fumée de cigarettes à proximité du véhicule. Effectuer le test d'étanchéité dans un lieu calme (à l'abri des courants d'air et du vent) de sorte que le réfrigérant qui fuit ne se disperse pas.

1. Arrêter le moteur.
2. Brancher un jeu de manomètre de collecteur de climatiseur adéquat aux orifices d'entretien du climatiseur.
3. Vérifier si la pression du réfrigérant du climatiseur atteint un minimum de 345 kPa (3,452 bar, 3,52 kg/cm^2) au dessus de 16°C. Si la pression est inférieure à la valeur spécifiée, purger le circuit et le recharger avec la quantité spécifiée de réfrigérant.
   REMARQUE : A des températures inférieures à 16°C, les fuites peuvent ne pas être détectées si le système n'atteint pas 345 kPa (3,452 bar, 3,52 kg/cm^2).
4. Conduire le test d'étanchéité de haut en bas en allant de ⓐ à ⓝ. Se reporter à la page HA-3030.

Effectuer avec précaution un test d'étanchéité dans les zones suivantes. Nettoyer le composant à contrôler et déplacer la sonde du détecteur de fuites tout autour du raccord/composant.

- **Compresseur**
  Vérifier les raccordements des flexibles de haute et basse pression, du limiteur de pression et du segment circulaire d'étanchéité.
- **Réservoir de liquide**
  Vérifier le manocontact, le raccordement du tube, les joints de soudure et les fixations des bougies de fusibles.
- **Soupapes d'entretien**
  Vérifier tout autour des soupapes d'entretien. S'assurer que les couvercles de soupapes d'entretien sont bien fixés sur les soupapes (afin d'éviter les fuites).
  REMARQUE : Après avoir déposé le jeu de manomètre de collecteur de climatiseur des soupapes d'entretien, essuyer toute trace de résidus sur les soupapes afin d'éviter une lecture fausse du détecteur.
- **Unité de refroidissement (évaporateur)**
  Mettre le ventilateur de soufflerie en position rapide pendant au moins 15 secondes pour éviter toute trace de réfrigérant de l'unité de refroidissement. Introduire la sonde du détecteur de fuite dans le flexible de vidange aussitôt après avoir coupé le contact. (Laisser la sonde à l'intérieur pendant au moins dix secondes.)

5. Si le détecteur détecte une fuite, vérifier au moins une fois en soufflant de l'air comprimé dans la zone de fuite suspectée avant de recommencer la vérification.
6. Ne pas arrêter lorsque une première fuite est trouvée. Continuer de vérifier qu'il n'existe pas d'autres fuites dans les autres composants du circuits.
7. Faire démarrer le moteur.
8. Régler la commande du climatiseur comme suit :
   a. Interrupteur de climatiseur sur MARCHE
   b. Mode facial

Simpo PDF Merge and Split Unregistered Version - http://www.simpopdf.com

Vérification des fuites de réfrigérant (Suite)

c. Touche de recyclage de l'air sur MARCHE
d. Température de froid. maxi.
e. Vitesse élevée du ventilateur

9. Faire tourner le moteur à un régime de 1500 tr/mn pendant au moins 2 minutes.
10. Arrêter le moteur et effectuer à nouveau une recherche de fuites éventuelles en répétant les étapes 4 à 6 décrites ci-dessus.

Simpo PDF Merge and Split Unregistered Version - http://www.simpopdf.com

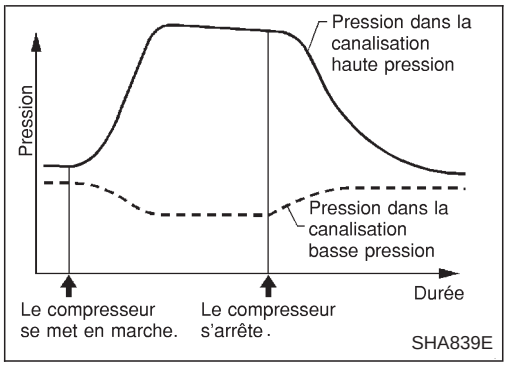

Les fuites de réfrigérant doivent être contrôlées immédiatement après l'arrêt du moteur. Commencer par détecter les fuites sur les canalisations haute pression. La pression dans la canalisation haute pression chute progressivement après que la circulation du réfrigérant s'est arrêtée et la pression dans la canalisation basse pression augmente progressivement comme décrit sur la courbe. Il est plus facile de détecter des fuites lorsque la pression est élevée.

11. Délester le circuit de A/C en utilisant un équipement de récupération de réfrigérant. Réparer les rapports ou composants comportant des fuites.
12. Purger et recharger le circuit de A/C, puis procéder à un test d'étanchéité pour vérifier qu'il n'y a pas de fuites de réfrigérant.
13. Effectuer le test de performance de A/C pour s'assurer que le système fonctionne correctement.

Fixation du compresseur

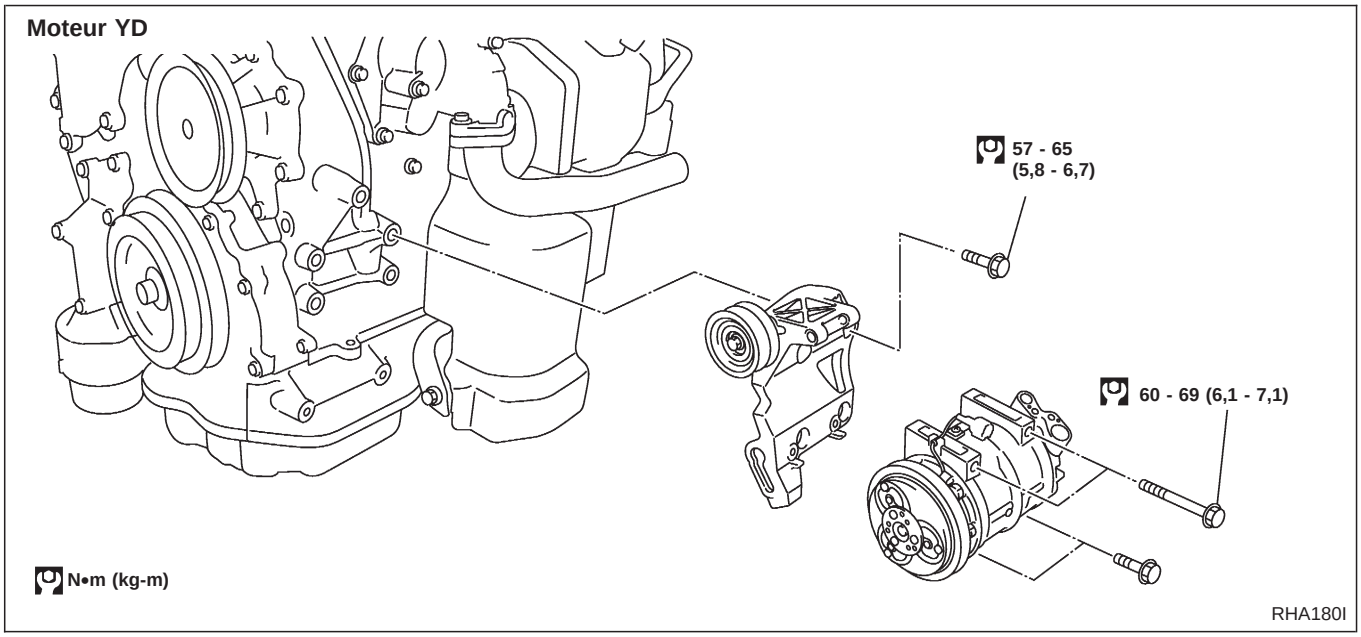

Simpo PDF Merge and Split Unregistered Version - http://www.simpopdf.com

Caractéristiques générales

COMPRESSEUR

		Moteur YD	Sauf pour les moteurs YD
Modèle		REGULATION DE LA CLIMATISATION DKS-17CH de marque VALEO ZEXEL	REGULATION DE LA CLIMATISATION DKV-14C de marque VALEO ZEXEL
Type		Plateau oscillant	Ailette rotative
Cylindrée	cm^3	168	140
Alésage du cylindre x course	mm	37,0 x 25,8	—
Sens de rotation		Dans le sens des aiguilles d'une montre (Vue de la courroie d'entraînement)	
Courroie d'entraînement		Type A	

LUBRIFIANT

		Moteur YD25	Sauf pour les moteurs YD25
Modèle		REGULATION DE LA CLIMATISATION DKS-17CH de marque VALEO ZEXEL	REGULATION DE LA CLIMATISATION DKV-14C de marque VALEO ZEXEL
Type		KLH00-PAGS0	KLH00-PAGR0
Capacité mℓ	Total dans le circuit	Sauf pour les moteurs ZD : 200 Moteurs ZD : 300	
	Quantité de la charge du compresseur (Pièces détachées)	Sauf pour les moteurs ZD : 200 Moteurs ZD : 300	

Inspection et réglage

REFRIGERANT

		Moteur YD	Sauf pour les moteurs YD25
Type		HFC-134a (R-134a)	
Capacité	kg	0,55 - 0,65	0,60 - 0,70

REGIME DE RALENTI DU MOTEUR (lorsque A/C est sur MARCHE).

- **Se reporter à la section EC**

TENSION DE LA COURROIE

- **Se reporter à la section MA, ''Vérification des courroies d'entraînement''.**

Simpo PDF Merge and Split Unregistered Version - http://www.simpopdf.com

<SUPPLEMENT-III>

TABLE ALPHABETIQUE

SECTION IDX

TABLE ALPHABETIQUE

Simpo PDF Merge and Split Unregistered Version - http://www.simpopdf.com

A

Allume-cigare EL-3113
Alternateur EL-3022
Antenne EL-3118
Application du joint liquide EM-3003
Application du serrage angulaire EM-3003
Avertisseur sonore EL-3112

B

Batterie EL-3013
Bielle EM-3075
Bloc-cylindres EM-3069
Bougie de préchauffage EC-3665
Boîtier de capteur de diagnostic RS-3005
Boîtier de contrôle de l'ECCS (ECM) ... EC-3330
Boîtier de contrôle de l'ECCS-D .....
Boîtier à fusibles EL-3201
Burinage des dents du capteur d'angle de vilebrequin (OBD) EC-3375

C

CONSULT pour l'ECCS .....
Calage d'allumage EC-3037
Came de ralenti accéléré (FIC) EC-3037
Canalisations de réfrigération HA-3030
Capteur d'angle d'arbre à cames (CMPS) EC-3286
Capteur d'angle de vilebrequin (OBD) EC-3280
Capteur d'angle de vilebrequin (PMH) EC-3567
Capteur d'explosion - Voir Capteur de détonation EC-3275
Capteur de détonation (KS) EC-3275, 3277
Capteur de position d'accélérateur EC-3548
Capteur de position de papillon (TPS) EC-3181, 3193
Capteur de température du moteur (ECTS) EC-3175, 3512
Capteur de vitesse du véhicule (VSS) EC-3308, 3516
Carter avant (Transfert) .....
Carter d'huile (moteur) EM-3016
Cartouche - Voir Cartouche EVAP EC-3030
Cartouche EVAP EC-3030
Catalyseur à trois voies EC-3295
Changement du liquide de refroidissement MA-3015
Chaîne de distribution EM-3022
Circuit de charge EL-3018
Circuit de démarrage EL-3014
Circuit de lubrification (moteur) .....
Circuit de préchauffage rapide EC-3665
Circuit de refroidissement du moteur LC-3010
Circuit du témoin de défaut et des connecteurs de liaison des données EC-3422
Clignotant EL-3048
Code de contrôle fonctionnel du système (SRT) EC-3054
Code de défaut de diagnostic (DTC) du système d'autodiagnostic de l'ECCS EC-3010, 3456
Commande de coupure du climatiseur EC-3029, 3441
Commande de passage (TF) TF-3005
Commande de réglage des faisceaux .....
Commande du ventilateur de refroidissement .....
Comment effacer le DTC du système de diagnostic de bord de l'ECCS EC-3064, 3456
Commutateur / Interrupteur de chauffage EC-3683
Connecteur de diagnostic pour Consult EC-3035, 3462
Contact de point mort EC-3381
Contact de position de papillon fermé EC-3321
Contact de position de papillon grand ouvert et fermé EC-3181, 3193
Contact de position de papillon EC-3321
Contact de stationnement/point mort ... EC-3381, 3678
Contrôle de la pression d'alimentation .....
Couple de serrage du collecteur (admission et échappement) MA-3011
Coussin gonflable côté passager avant RS-3009
Culasse EM-3047
Câble spiralé RS-3006

D

Diagnostic de collision RS-3042
Diagnostics des défauts du C/A (C/A manuel) HA-3004, 3020
Disposition de l'alimentation électrique EL-3005
Disposition des faisceaux EL-3168
Distributeur EC-3027
Données figées EC-3054
Débitmètre d'air (MAFS) DT-3152, EC-3152, 3161
Débitmètre d'air - Voir Débitmètre d'air EC-3161
Démarreur EL-3017
Dépose du moteur EM-3066
Dépose et repose T/M MT-3002
Dépose et repose de l'injecteur EC-3037
Désembuage de lunette arrière EL-3115
Détente de la pression d'alimentation EC-3035

TABLE ALPHABETIQUE

Simpo PDF Merge and Split Unregistered Version - http://www.simpopdf.com

E

Eclairage auxiliaire EL-3056
Eclairage de plaque minéralogique EL-3040
Eclairage EL-3051
Electrovanne FICD EC-3415
Electrovanne de commande de volume de purge de cartouche EVAP EC-3300
Eléments externes du moteur EM-3008
Emplacement des dispositifs électriques EL-3165
Entretien du moteur MA-3010, 3011
Extérieur BT-3006

F

Feu antibrouillard arrière EL-3046
Feu antibrouillard, arrière EL-3046
Feu arrière EL-3040
Feu de recul EL-3045
Feu de stop EL-3044
Feux de détresse EL-3048
Filtre à carburant EC-3035

G

Graisse MA-3008
Guide de soupape EM-3053

I

Injecteur de carburant .....
Injecteur EC-3443
Inspection de base de l'ECCS ... EC-3092, 3473
Inspection de l'arbre à cames EM-3051
Inspection de l'axe de piston EM-3074
Inspection de la courroie d'entraînement MA-3011
Inspection des canalisations d'alimentation MA-3020
Inspection du segment de piston EM-3074
Instruments combinés EL-3057
Instruments EL-3057

J

Jauges EL-3057
Jeu de la bague de bielle EM-3082
Jeu de palier de bielle EM-3080
Jeu de soupape EM-3062
Jeu entre le piston et l'alésage EM-3076

L

Lave-phare EL-3111
Liste (code de cellule) des schémas de câblage EL-3198
Logique de détection à deux voies EC-3052
Lubrifiants MA-3008
Lève-glace électrique EL-3123

M

Manocontact d'huile de direction assistée EC-3411
Mise au rebut du prétensionneur de ceinture de sécurité RS-3011
Montre EL-3114

N

NATS (système antivol Nissan) EL-3145
Numéro d'identification du véhicule GI-3005
Numéro de série du moteur GI-3006

O

Outil de balayage générique (GST) EC-3086

P

PCV (recyclage des gaz du carter) EC-3033, 3442
Pare-chocs avant BT-3002
Phares EL-3023
Piston EM-3084
Plafonnier EL-3055
Pompe d'alimentation EC-3404
Pompe d'amorçage EC-3473
Pompe à eau LC-3012
Pompe à huile (moteur) LC-3004
Pompe à injection de carburant électronique EC-3447, 3541, 3576, 3584, 3592, 3601, 3609, 3613, 3658
Pression d'huile (moteur) LC-3004
Pression de compression EM-3014
Précautions d'emploi pour les raccords de réfrigérant HA-3002
Prétensionneur de ceinture de sécurité RS-3003

R

Radiateur LC-3015
Ratés à l'allumage EC-3266
Refroidisseur d'huile moteur .....

Simpo PDF Merge and Split Unregistered Version - http://www.simpopdf.com

Relais de climatiseur HA-3019, 3029
Relais de pompe d'alimentation EC-3404
Relais de préchauffage EC-3665
Remplacement du filtre de PCV MA-3010
Remplacement du filtre à air MA-3010, 3020
Remplacement du filtre à carburant MA-3018
Remplacement du filtre à huile moteur MA-3014
Ressort de soupape EM-3056
Richesse de mélange de ralenti EC-3037
RAéchauffeur de sonde à oxygène chauffée (arrière) (H02S) .....
Réchauffeur de sonde à oxygène chauffée (H02S) (avant) .....
Régime de ralenti EC-3037, 3473
Réglage du capteur de position de papillon EC-3092
Régulateur de pression d'alimentation EC-3036
Résultats de l'autodiagnostic EC-3457
Rétroviseur électrique de porte EL-3119

S

SMJ (super raccord multiple) EL-3200
SUPPORT TRAVAIL DTC EC-3084
Schéma de câblage - A/C, A - HA-3021
Schéma de câblage - A/C, M - ... HA-3006, 3009
Schéma de câblage - A/T IND - EL-3103
Schéma de câblage - AAC/V - EC-3318
Schéma de câblage - ABS - BR-3003, 3010
Schéma de câblage - BACK/L - EL-3045
Schéma de câblage - BOOST - .....
Schéma de câblage - CHARGE - EL-3018
Schéma de câblage - CIGAR EL-3113
Schéma de câblage - CKPS - EC-3282, 3377
Schéma de câblage - CLOCK EL-3114
Schéma de câblage - CMPS - EC-3290
Schéma de câblage - DEF - EL-3115
Schéma de câblage - DTRL - EL-3030
Schéma de câblage - ECTS - EC-3178
Schéma de câblage - EGR - .....
Schéma de câblage - F/PUMP - EC-3406
Schéma de câblage - FICD - EC-3416
Schéma de câblage - FUEL - EC-3254, 3261
Schéma de câblage - H/AIM - EL-3038
Schéma de câblage - H/LAMP - EL-3023
Schéma de câblage - HEAT UP EC-3684
Schéma de câblage - HEATER - HA-3004
Schéma de câblage - HLC - EL-3111
Schéma de câblage - HORN - EL-3112
Schéma de câblage - HSEAT - EL-3121
Schéma de câblage - IATS - EC-3172, 3538
Schéma de câblage - ILL - EL-3051
Schéma de câblage - INJECT - EC-3396
Schéma de câblage - INT/L - EL-3056
Schéma de câblage - KS - EC-3277
Schéma de câblage - MAFS - EC-3156, 3164
Schéma de câblage - MAIN - .....
Schéma de câblage - METER - EL-3063
Schéma de câblage - MIL/DL - .. EC-3422, 3691
Schéma de câblage - MIRROR - EL-3119
Schéma de câblage - MULTI - EL-3139
Schéma de câblage - NATS - EL-3148
Schéma de câblage - P/ANT - EL-3118
Schéma de câblage - PGC/V - EC-3304
Schéma de câblage - PNP/SW - EC-3384
Schéma de câblage - POWER - EL-3006
Schéma de câblage - PST/SW - EC-3412
Schéma de câblage - R/FOG - EL-3046
Schéma de câblage - ROOM/L - EL-3055
Schéma de câblage - S/SIG - EC-3401
Schéma de câblage - SRS - RS-3019
Schéma de câblage - START - EL-3014
Schéma de câblage - STOP/L - EL-3044
Schéma de câblage - Système anti-blocage ABS des roues - BR-3002, 3009
Schéma de câblage - TAIL/L - .....
Schéma de câblage - THEFT - EL-3144
Schéma de câblage - TP/SW - EC-3324
Schéma de câblage - TPS - EC-3185, 3196
Schéma de câblage - TURN - EL-3048
Schéma de câblage - VSS - EC-3311
Schéma de câblage - WARN - EL-3086
Schéma de câblage - WINDOW - EL-3125
Schéma des flexibles à dépression (ECCS) EC-3023
Schéma du circuit de l'ECCS EC-3021, 3435
Signal d'entrée/sortie de l'ECM .. EC-3118, 3495
Signal de démarrage EC-3400
Siège chauffant EL-3121
Siège de soupape EM-3054
Sonde de température d'air d'admission EC-3170, 3204, 3536
Sonde à oxygène chauffée (H02S) (avant) .....
Sonde à oxygène chauffée (arrière) .....
Soupape de détente de dépression du réservoir EC-3031
Soupape régulatrice de pompe à huile moteur LC-3005
Système antivol EL-3144
Système d'alimentation FE-3003
Système d'allumage électrique EC-3027
Système d'entrée sans clé - Voir Système de multi-télécommande EL-3138
Système d'injection de carburant .....
Système d'échappement FE-3005
Système d'éclairage de jour EL-3030
Système d'évaporation des émissions (EVAP) EC-3030
Système de commande d'accélération FE-3002
Système de commande d'allumage EC-3387
Système de commande d'injection de carburant multipoint (MFI) EC-3025
Système de commande de calage d'allumage (DI) EC-3027
Système de commande de régime de

Simpo PDF Merge and Split Unregistered Version - http://www.simpopdf.com

ralenti (IAC) EC-3314
Système de commande du ventilateur de refroidissement LC-3002, 3017
Système de contrôle des émissions de carter - Voir Recyclage des gaz du carter EC-3033, 3442
Système de diagnostic de bord de l'ECCS EC-3052, 3456
Système de mise en veilleuse des codes EL-3034
Système de mode de sécurité de l'ECCS EC-3107
Système de multi-télécommande EL-3138
Système de retenue supplémentaire RS-3003
Système de ventilation des gaz de carter - Voir Recyclage des gaz de carter (PCV) EC-3033, 3442

T

Tableau de code de défaut de diagnostic (DTC) EC-3106
Tableau des caractéristiques des symptômes de l'ECCS EC-3108, 3479
Tableau et schéma du système de l'ECCS EC-3022, 3436
Taille de roue GI-3007
Thermostat LC-3014
Transfert d'arbre secondaire TF-3004
Transistor de puissance et bobine d'allumage EC-3387
Témoin T/A EL-3103
Témoin lumineux de défaut (MIL) EC-3457
Témoins EL-3084

V

Vanne IACV-AAC EC-3314
Vanne de commande d'air auxiliaire (AAC) EC-3314
Vanne de commande de régime de ralenti (IACV) EC-3314
Variantes de modèles GI-3004
Ventilateur de refroidissement LC-3016
Vidange de l'huile moteur MA-3012
Vilebrequin EM-3078
Voile du volant-moteur EM-3083

Simpo PDF Merge and Split Unregistered Version - http://www.simpopdf.com

<SUPPLEMENT-III>

CIRCUIT DE LUBRIFICATION DU MOTEUR ET CIRCUIT DE REFROIDISSEMENT

SECTION **LC**

AVIS DE MODIFICATION :

- Des informations sur le moteur KA24DE ont été ajoutées. Pour des spécifications autres que celles données ici, se référer au supplément-II du manuel de réparation de D22 (SM9F-D22BE0E).
- Le moteur YD25DDTi a été ajouté.

TABLE DES MATIERES

KA24DE

CIRCUIT ELECTRIQUE DU MOTEUR DE VENTILATEUR DE COMPARTIMENT MOTEUR 3002
Schéma de câblage 3002

YD

CIRCUIT DE LUBRIFICATION DU MOTEUR 3003
Circuit de lubrification 3003
Vérification de la pression d'huile 3004
Pompe à huile 3004
Support de filtre à huile 3006
Refroidisseur d'huile 3006
CIRCUIT DE REFROIDISSEMENT DU MOTEUR 3008
Analyse des causes de surchauffe 3008
Circuit de refroidissement 3010
Vérification du circuit 3011
Pompe à eau 3012
Thermostat et tuyauterie d'eau 3014
Radiateur 3015
Ventilateur de refroidissement (entraîné par vilebrequin) 3016
Ventilateur de refroidissement (entraîné par moteur) 3016
CARACTERISTIQUES ET VALEURS DE REGLAGE (SDS) 3018
Circuit de lubrification du moteur 3018
Circuit de refroidissement du moteur 3018

Simpo PDF Merge and Split Unregistered Version - http://www.simpopdf.com

Schéma de câblage

LC-COOL/F-01

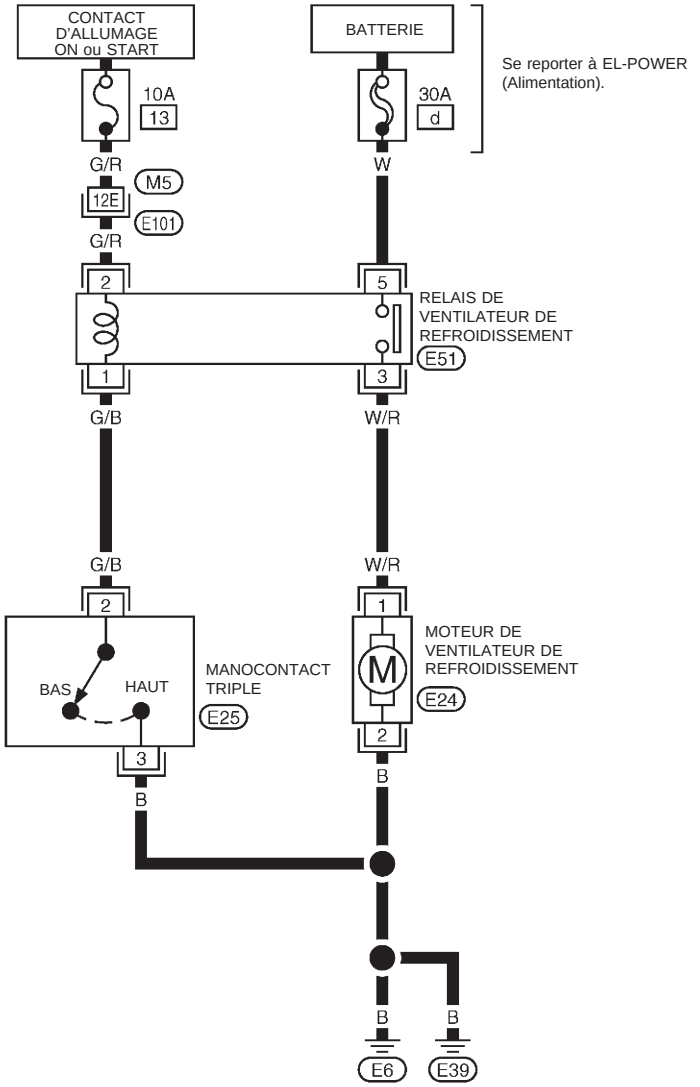

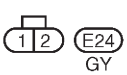

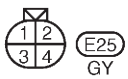

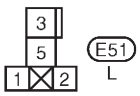

Consulter la dernière page dépliante.

M5 , E101

GLC001A

Simpo PDF Merge and Split Unregistered Version - http://www.simpopdf.com

Circuit de lubrification

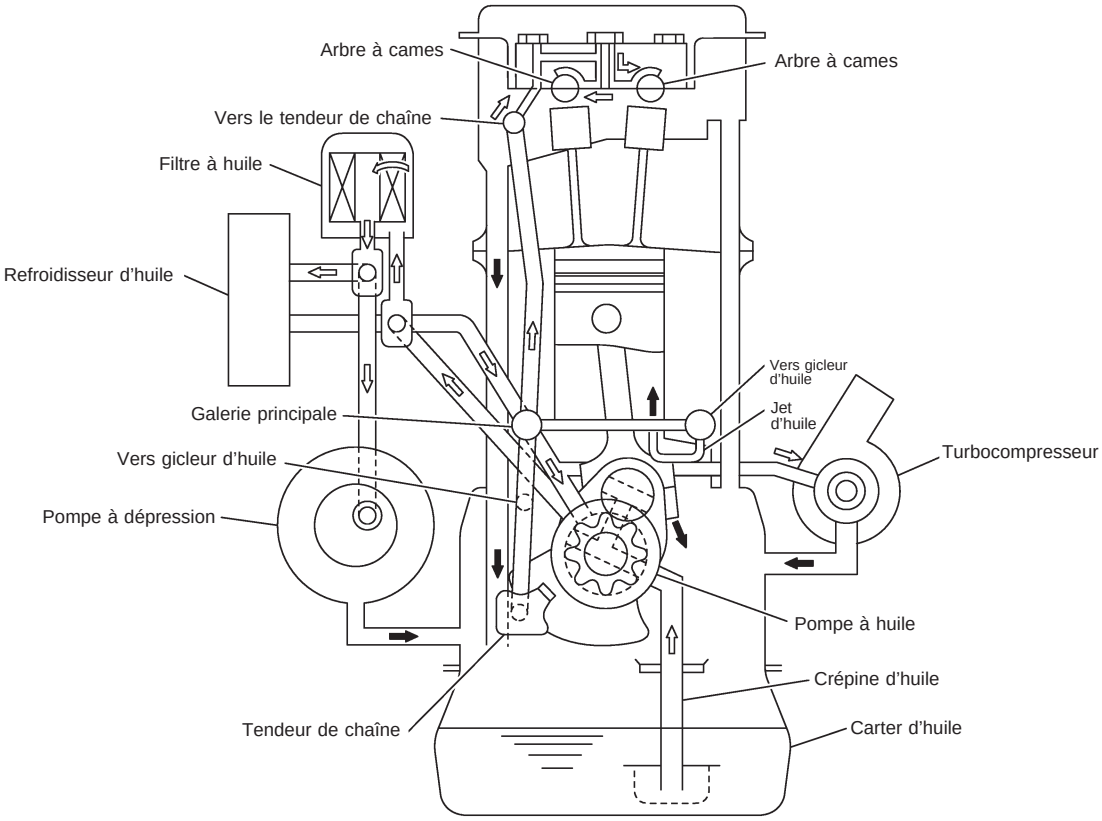

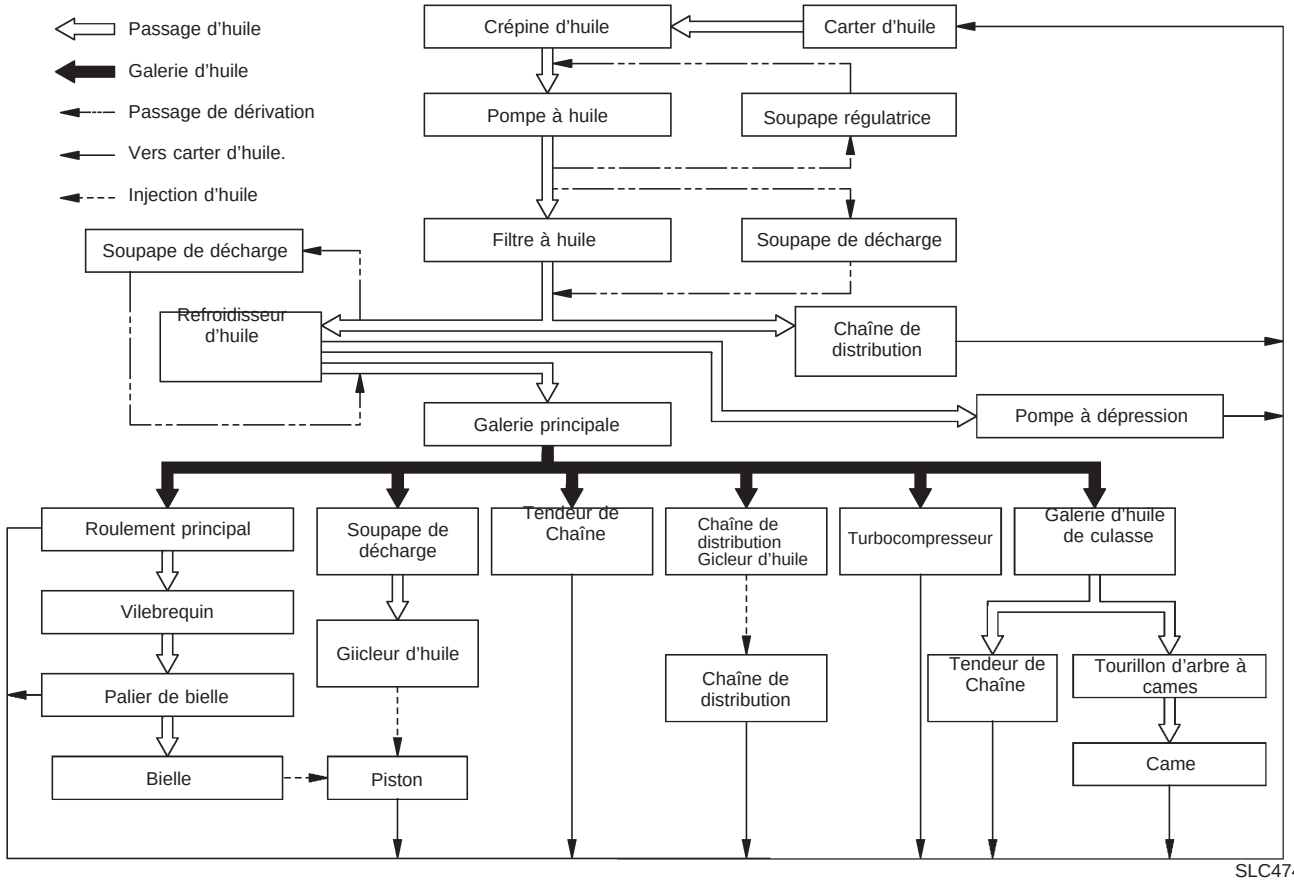

SLC474B

Simpo PDF Merge and Split Unregistered Version - http://www.simpopdf.com

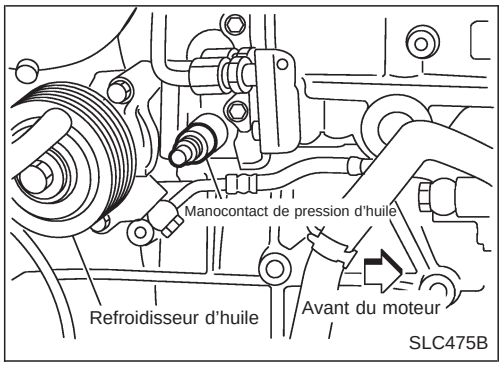

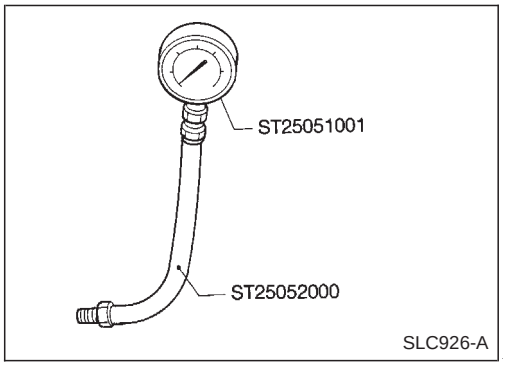

Vérification de la pression d'huile

AVERTISSEMENT :

- **Veiller à ne pas se brûler, car le moteur et l'huile risquent d'être très chauds.**
- **La pression d'huile doit être vérifiée au ''point mort''.**

1. Vérifier le niveau d'huile.
2. Déposer le manocontact d'huile.
3. Reposer le manomètre.
4. Démarrer le moteur et le faire chauffer à la température de fonctionnement normale.
5. Vérifier la pression d'huile sans imposer de charge au moteur.

Régime du moteur tr/min	Pression approximative de débit kPa (bar, kg/cm^2)
Régime de ralenti	Minimum 140 (1,40, 1,43)
2 000	Minimum 270 (2,69, 2,75)
4 000	Minimum 430 (4,29, 4,38)

Si la différence est trop grande, vérifier les fuites éventuelles des passages d'huile et de la pompe à huile.

6. Après inspections, reposer le manocontact d'huile comme suit.

a. Retirer l'ancien joint adhérant au manocontact et au moteur.
b. Appliquer du joint liquide garanti d'origine ou équivalent au filetage et serrer.

: 13 - 17 N·m (1,25 - 1,75 kg-m)

Pompe à huile

DEPOSE ET REPOSE

- **Lors de la repose de la pompe à huile, appliquer de l'huile moteur sur les rotors.**

Se reporter à ''Chaîne de distribution primaire'' dans la section EM.

Reposer toutes les pièces déposées dans l'ordre inverse de la dépose.

DEMONTAGE ET REMONTAGE

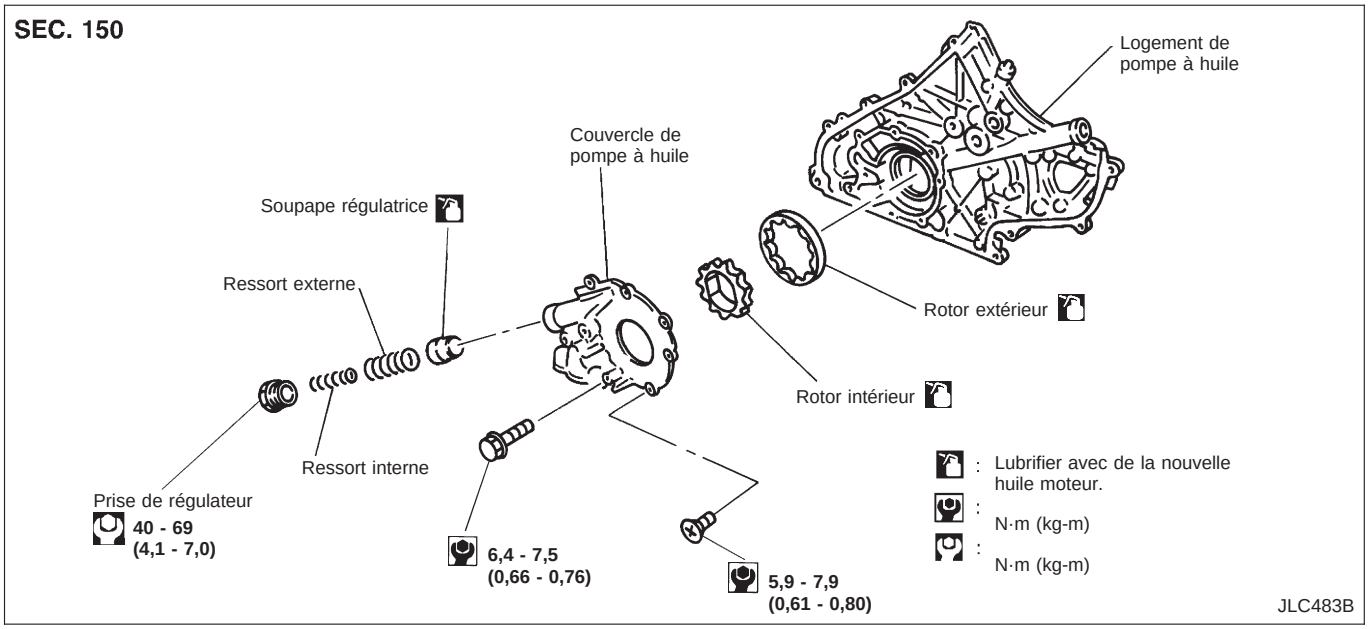

Simpo PDF Merge and Split Unregistered Version - http://www.simpopdf.com

Pompe à huile (Suite)

INSPECTION DE LA POMPE A HUILE

- **Reposer les rotors externe et interne avec les repères d'alignement sur le couvercle de la pompe à huile.**

En utilisant une jauge d'épaisseur, une règle et un micromètre, vérifier les jeux suivants :

Unité : mm

Jeu radial du logement du rotor extérieur **1**	0,114 - 0,260
Jeu à l'arête du rotor intérieur au rotor extérieur **2**	Inférieur à 0,180
Jeu axial du logement du rotor intérieur **3**	0,050 - 0,090
Jeu axial du logement du rotor extérieur **4**	0,030 - 0,190
Jeu du rotor intérieur à la partie du logement **5**	0,045 - 0,091

- **Si le jeu à l'arête (2) dépasse la limite, remplacer le couple de rotors.**
- **Si les jeux de logement de rotors (1, 3, 4, 5) dépassent la limite, remplacer l'ensemble de logement de pompe à huile.**

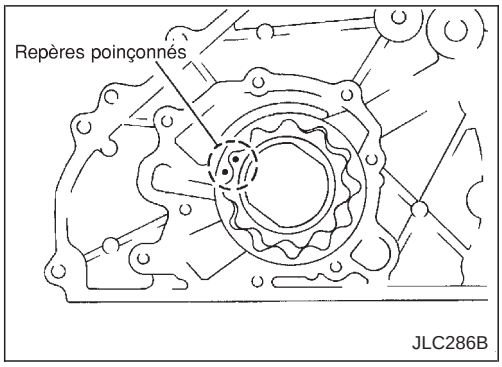

JLC286B

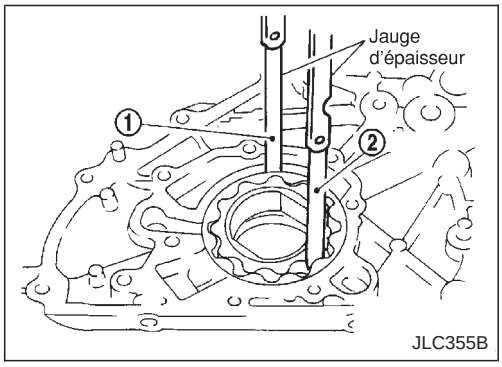

JLC355B

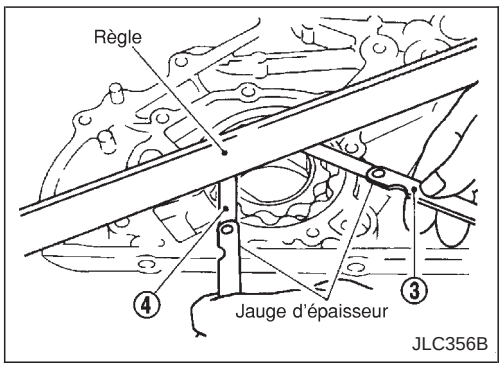

JLC356B

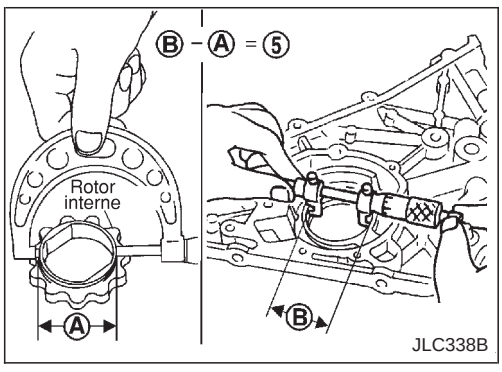

JLC338B

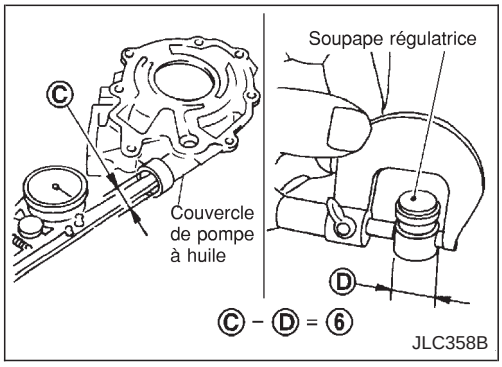

JLC358B

VERIFICATION DE LA SOUPAPE REGULATRICE

1. Vérifier visuellement si les composants ne sont pas usés ou endommagés.
2. Vérifier la surface de glissement de la soupape régulatrice de pression d'huile et le ressort de soupape.
3. Enduire la soupape régulatrice d'huile moteur. Vérifier qu'elle chute en douceur dans l'orifice de soupape sous l'effet de son propre poids.

Si endommagés, remplacer l'ensemble de soupape régulatrice ou le logement de pompe à huile.

Simpo PDF Merge and Split Unregistered Version - http://www.simpopdf.com

Pompe à huile (Suite)

4. Vérifier le jeu entre la soupape régulatrice et le couvercle de pompe à huile.
   Jeu 6 :
   6 : 0,040 - 0,097 mm

Si le jeu dépasse la limite, remplacer le logement de pompe à huile.

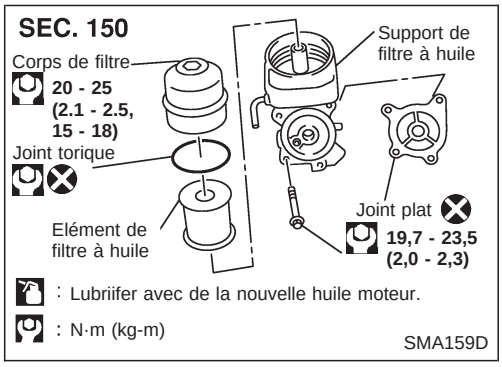

Support de filtre à huile

DEPOSE

1. Dépose du filtre à huile. Se reporter à ‘‘Changement du filtre à huile’’ dans la section MA.
2. Desserrer les écrous de montage du support de filtre à huile afin de purger l’huile.

● Placez une cuvette ou un chiffon pour récupérer l’huile.

3. Déposer le support de filtre huile.

INSTALLATION

1. Retirer complètement tout objet étranger adhérant aux surfaces de montage (bloc-cylindre et côtés du support).
2. Reposer la pompe à eau avec un joint neuf.
3. Reposer le filtre à d’huile. Se reporter à ‘‘Changement du filtre à huile’’ dans la section MA.

FILTRE A HUILE

Le filtre à huile est un élément type. Se reporter à ‘‘Changement du filtre à huile’’ dans la section MA.

Refroidisseur d’huile

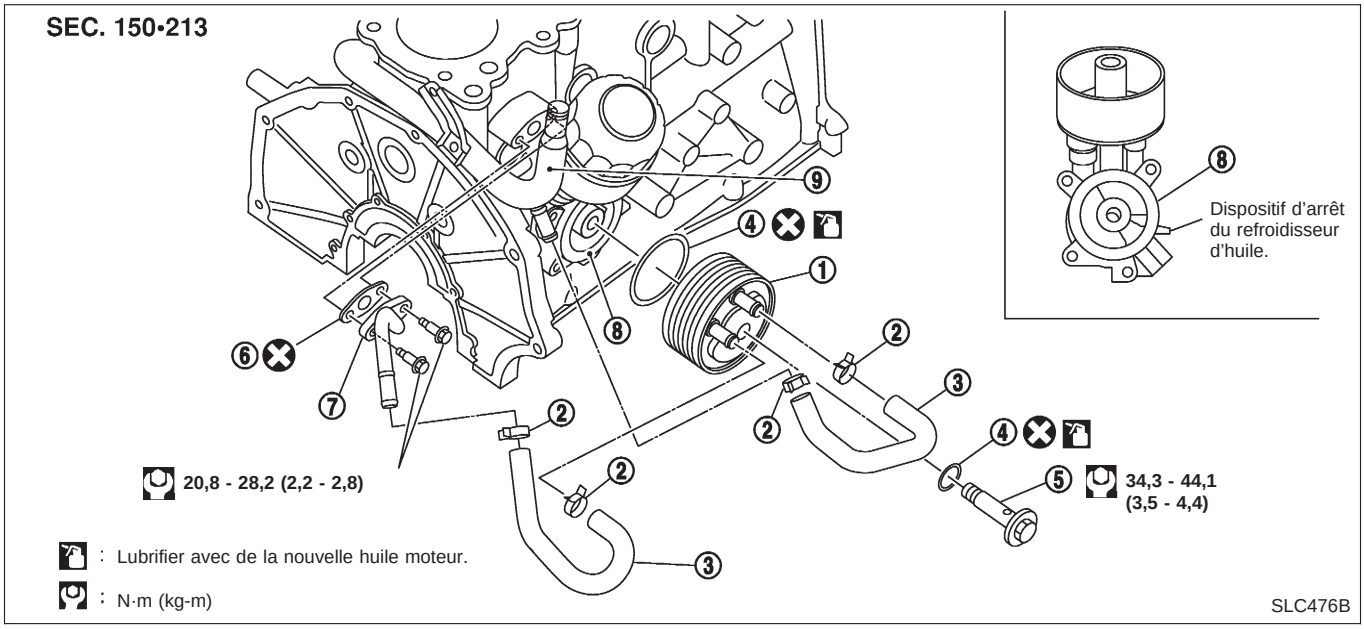

1. Refroidisseur d’huile
2. Collier
3. Flexible d’eau
4. Joint torique
5. Boulon de raccord
6. Joint plat
7. Connecteur de flexible d’eau
8. Support de filtre à huile
9. Tuyau de chauffage

Simpo PDF Merge and Split Unregistered Version - http://www.simpopdf.com

Refroidisseur d’huile (Suite)

DEPOSE ET REPOSE

1. Vidanger le liquide de refroidissement.
   Se reporter au chapitre ‘‘Changement du liquide de refroidissement’’ dans la section MA.

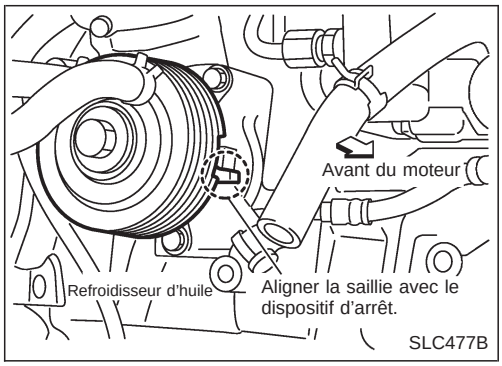

2. Reposer toutes les pièces déposées dans l’ordre inverse de la dépose.

- Vérifier qu’aucun objet étranger n’adhére sur les plans d’installation du refroidisseur d’huile ou bloc.
- Serrer les boulons de raccord après avoir aligner le dispositif d’arrêt sur le côté du bloc-cylindre avec la saillie du refroidisseur d’huile.

Simpo PDF Merge and Split Unregistered Version - http://www.simpopdf.com

Analyse des causes de surchauffe

TABLEAU DE DEPISTAGE DES PANNES

	Symptôme		Eléments à vérifier	
Dysfonctionnement d'éléments du circuit de refroidissement	Transfert de chauffage de pauvre qualité	Défaut de la pompe à eau	Courroie d'entraînement usée ou desserrée	—
		Thermostat bloqué sur la position de fermeture	—	
		Ailettes endommagées	Obstruction ou encrassement par poussière ou papier	
			Dommage mécanique	
		Obturation ou encrassement du tuyau de refroidissement du radiateur	Excès de particules étrangères (rouille, saleté, sable, etc.)	
	Débit d'air réduit	Le ventilateur de refroidissement ne fonctionne pas.	—	—
		Résistance élevée à la rotation de ventilateur		
		Ailettes de ventilateur endommagées		
	Protection de radiateur endommagée	—	—	—
	Richesse de mélange du liquide de refroidissement inadéquate	—	—	—
	Qualité pauvre du liquide de refroidissement	—	—	—
	Liquide de refroidissement insuffisant	Fuites de liquide de refroidissement	Flexible de refroidissement	Collier désserré
				Flexible fissuré
			Pompe à eau	Mauvaise étanchéité
			Bouchon de radiateur	Desserré
				Mauvaise étanchéité
			Radiateur	Dommage, détérioration ou mauvaise fixation du joint torique
				Réservoir de radiateur fissuré
				Nid du radiateur fissuré
			Réservoir	Réservoir fissuré
		Trop-plein de réservoir	Fuites de gaz d'échappement dans le circuit de refroidissement	Détérioration de culasse
				Détérioration du joint de culasse

Simpo PDF Merge and Split Unregistered Version - http://www.simpopdf.com

Analyse des causes de surchauffe (Suite)

	Symptôme		Eléments à vérifier	
Sauf le dysfonctionnement d'éléments du circuit de refroidissement	—	Surcharge du moteur	Conduite forcée	Régime moteur élevé sans charge
				Conduite en première vitesse pendant une durée prolongée
				Conduite à vitesse très rapide
			Défaut du système de transmission	—
			Monte de roues et pneus de taille incorrecte	
			Grippage des freins	
			Calage de l'allumage inadéquat	
	Débit d'air bloqué ou restreint	Bouclier bouché	—	—
		Grille de radiateur bloquée	Installation du bouclier de radiateur du véhicule	
			Obstruction ou encrassement par boue, papier ou autre matériau	
		Radiateur bloqué	—	
		Condenseur obstrué	—	
		Pose d'un feu antibrouillard large		

Simpo PDF Merge and Split Unregistered Version - http://www.simpopdf.com

Circuit de refroidissement

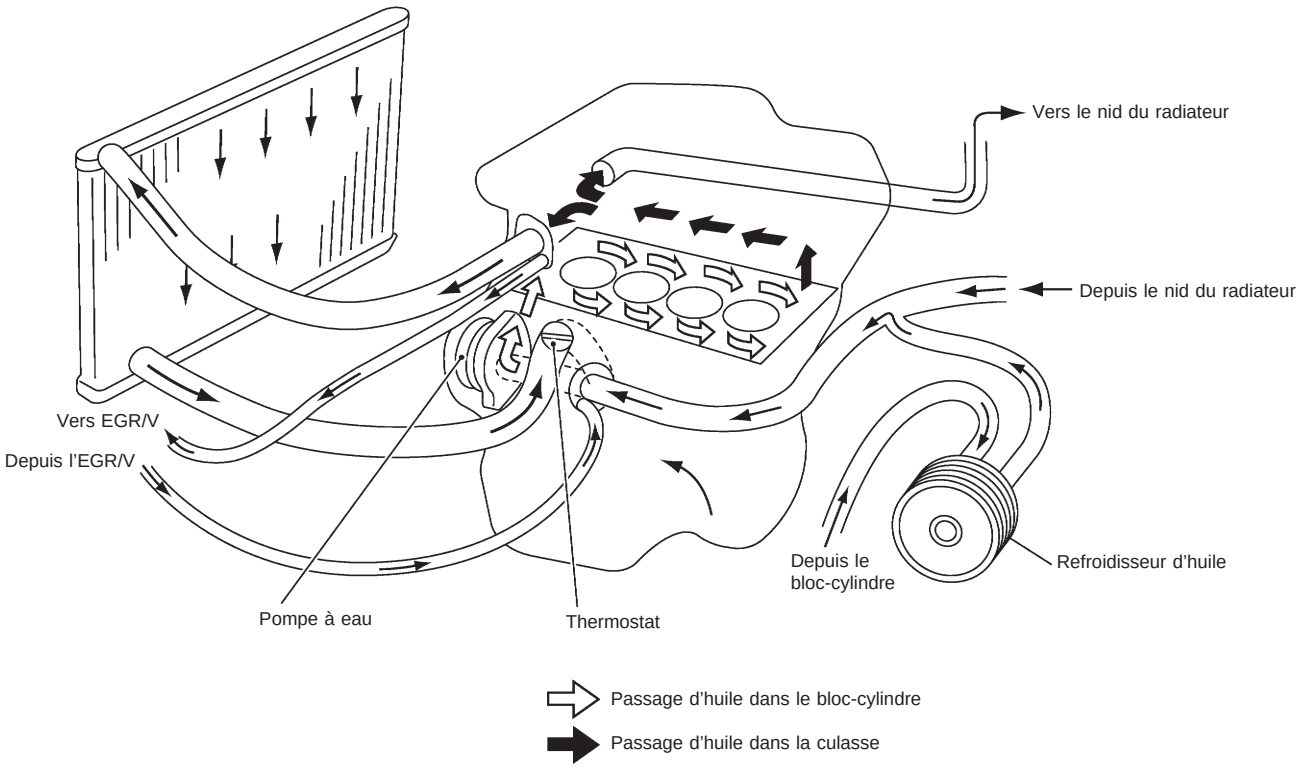

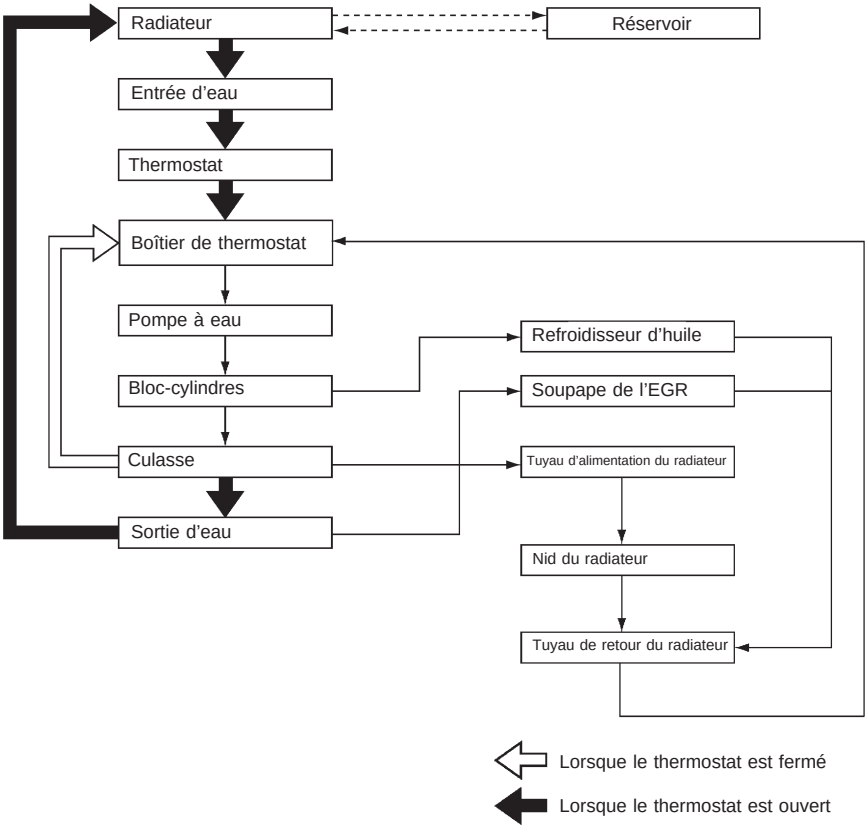

SLC478B

Simpo PDF Merge and Split Unregistered Version - http://www.simpopdf.com

Vérification du circuit

AVERTISSEMENT :
Ne jamais déposer le bouchon de radiateur lorsque le moteur est chaud. Ceci peut entraîner des brûlures graves provoquées par le liquide sous haute pression s'échappant du radiateur.
Enrouler un chiffon épais autour du bouchon et déposer doucement le bouchon en le tournant d'abord d'un quart de tour pour permettre à la pression de s'échapper, puis en le tournant à bout de course pour le déposer.

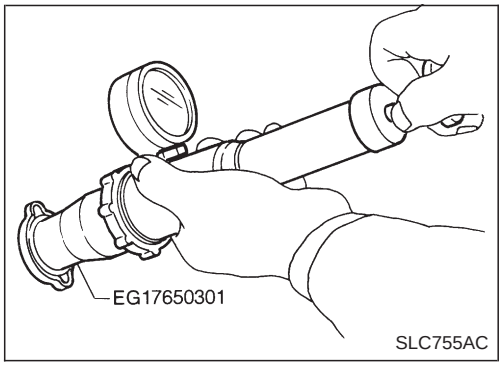

VERIFICATION DU BOUCHON DE RADIATEUR

Pour contrôler le bouchon de radiateur, exercer une pression sur le bouchon de radiateur avec un testeur.

Pression de décharge du bouchon de radiateur :
Standard
78 - 98 kPa
(0,78 - 0,98 bar, 0,8 - 1,0 kg/cm^2)
Limite
59 kPa (0,59 bar, 0,6 kg/cm^2)

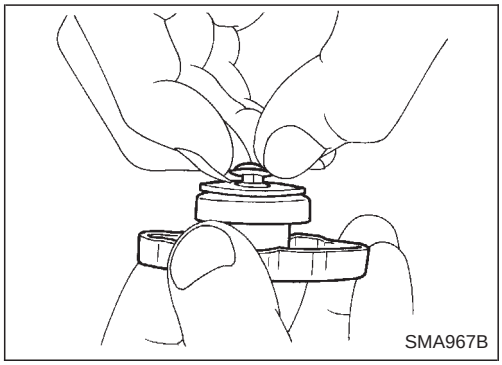

Tirer sur la soupape à dépression pour l'ouvrir.
Vérifier qu'elle se referme totalement une fois relâchée.

- Vérifier que la soupape à dépression n'est pas salie ou endommagée avec le siège de soupape.
- Déplacer la soupape à dépression pour vérifier que l'ouverture et la fermeture de la soupape s'effectue sans problème.

PRECAUTION :

- **S'assurer de procèder aux contrôles lorsque le moteur a refroidi.**
- **Avant de brancher le bouchon de radiateur au testeur, appliquer de l'eau ou du liquide de refroidissement longue durée (LLC) au joint de bouchon..**
- Replacer le bouchon de radiateur si le fonctionnement de la soupape de dépression est anormal ou si la pression d'ouverture de la soupape est en dehors de la fourchette standard.

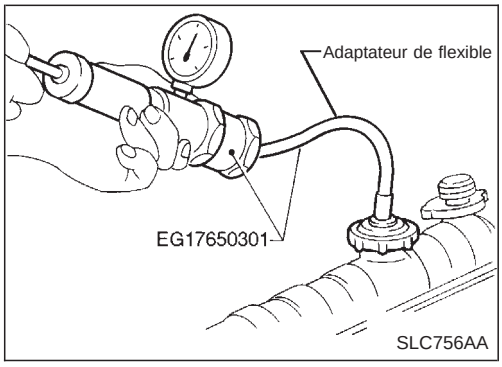

VERIFICATION DE L'ETANCHEITE DU CIRCUIT DE REFROIDISSEMENT

Vérifier s'il n'y a pas de fuites en exerçant une pression sur le circuit de refroidissement à l'aide d'un testeur.

Pression d'essai :
157 kPa (1,57 bar, 1,6 kg/cm^2)

PRECAUTION :

- **Une pression supérieure à celle spécifiée peut abîmer le radiateur.**
- **S'assurer de procéder aux contrôles lorsque le moteur a refroidi.**

Simpo PDF Merge and Split Unregistered Version - http://www.simpopdf.com

Vérification du circuit (Suite)

●Utiliser un adaptateur de flexible entre le testeur de capuchon et le goulot de remplissage pour éviter au goulot de remplissage du radiateur d'être déformé.

- Si des anormalités sont trouvées, réparer ou remplacer les pièces qui fonctionnent mal.

Pompe à eau

DEPOSE ET REPOSE

PRECAUTION :

- **Lors de la dépose de l'ensemble de pompe à eau, veiller à ne pas renverser de liquide de refroidissement sur la courroie d'entraînement.**
- **La pompe à eau ne peut pas être démontée et doit être remplacée dans sa totalité.**
- **Après avoir reposé la pompe à eau, rebrancher le flexible et le fixer correctement avec un collier, puis vérifier qu'il n'y a pas de fuites à l'aide d'un testeur de bouchon de radiateur.**

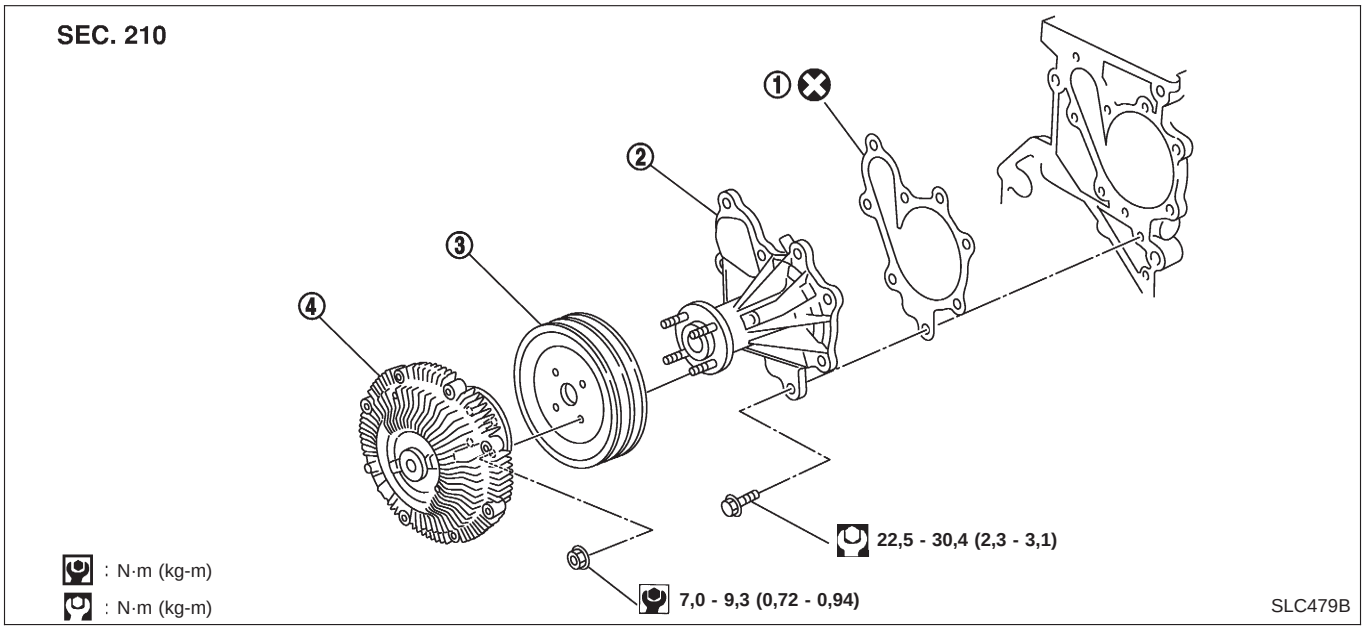

1. Joint plat
2. Pompe à eau
3. Poulie de la pompe à eau.
4. Accouplement de ventilateur

DEPOSE

1. Vidanger le liquide de refroidissement du moteur. Se reporter au chapitre ''Changement du liquide de refroidissement'' dans la section MA.
2. Déposer le bouclier du radiateur.
3. Déposer le ventilateur et l'accouplement.
4. Déposer les courroies d'entraînement. Se reporter à la section EM, ''Courroie d'entraînement''.
5. Déposer la poulie de la pompe à eau.
6. Déposer la pompe à eau.

INSPECTION

- Vérifier qu'il n'y ait pas de rouille ou de salissure adhérant à la pompe à eau ou aux ailettes.

Simpo PDF Merge and Split Unregistered Version - http://www.simpopdf.com

Pompe à eau (Suite)

- Tourner l'arbre de la pompe à la main et vérifier que la pompe tourne sans dureté ni jeu.

PRECAUTION :

Ne pas démonter l'accouplement du ventillateur.

REPOSE

- Reposer les pièces dans l'ordre inverse de la dépose.
- Reposer la poulie de la pompe à eau en positionnant la marque frontale (marquage blanc destiné à éviter les erreurs à la repose) face à l'avant du moteur. Se reporter à la figure de la page précédente.

Simpo PDF Merge and Split Unregistered Version - http://www.simpopdf.com

Thermostat et tuyauterie d'eau

DEPOSE ET REPOSE

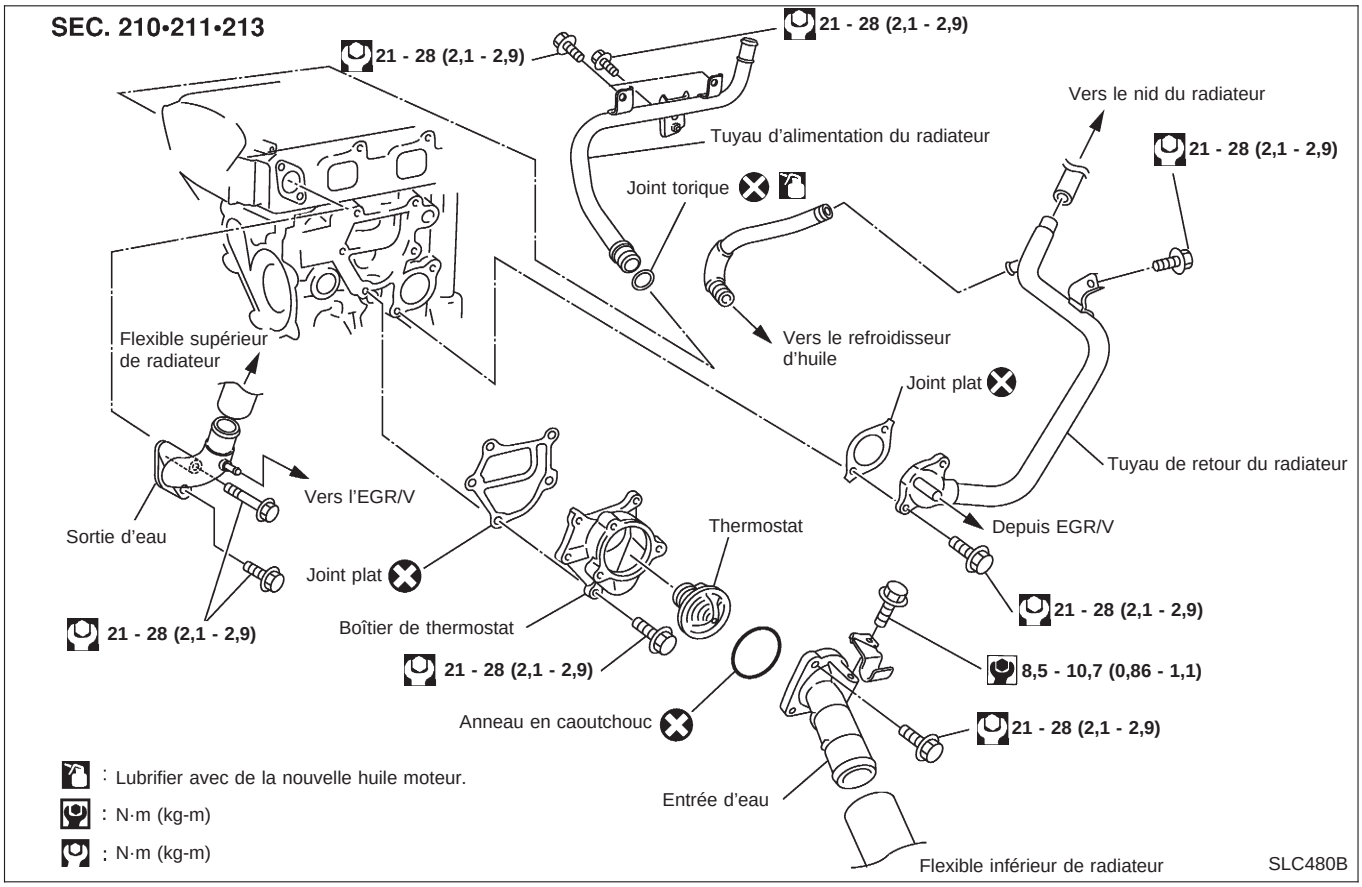

- **Veiller à ne pas renverser de liquide de refroidissement sur le compartiment moteur. Placer un chiffon pour absorber le liquide de refroidissement.**

1. Vidanger le liquide de refroidissement du moteur. Se reporter au chapitre ''Changement du liquide de refroidissement'' dans la section MA.
2. Déposer l'élément d'entrée d'eau.
3. Déposer le thermostat.

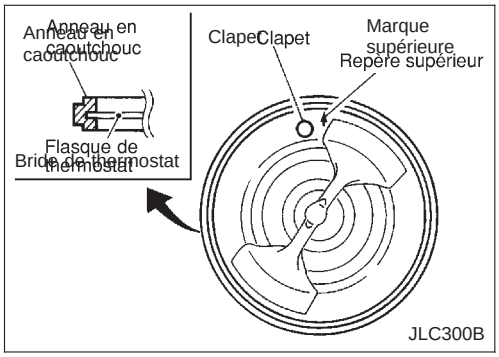

4. Reposer le thermostat en plaçant le clapet vers le haut.
- **Monter avec soin le joint coutchouc à la bride de thermostat en s'assurant qu'il reste en place.**
5. Après la repose et reremplissage en liquide de refroidissement, faire tourner le moteur pendant quelques minutes et vérifier qu'il n'y a pas de fuites d'huile.

Simpo PDF Merge and Split Unregistered Version - http://www.simpopdf.com

Thermostat et tuyauterie d'eau (Suite)

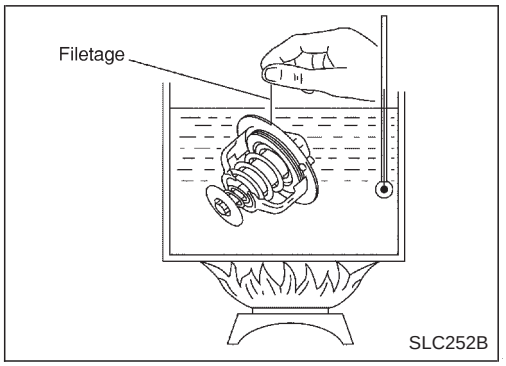

INSPECTION

1. Vérifier l'état du siège de soupape à température ambiante. Il doit avoir une bonne assise.
2. Vérifier la température d'ouverture de la soupape et sa course maximum vers le haut.

	Standard
Température d'ouverture de la soupape	Supérieure à 80 - 84°C
Levée de soupape	Supérieure à 10 mm/95°C

3. Vérifier ensuite si la soupape se ferme à 5°C en dessous de la température d'ouverture de la soupape.

Radiateur

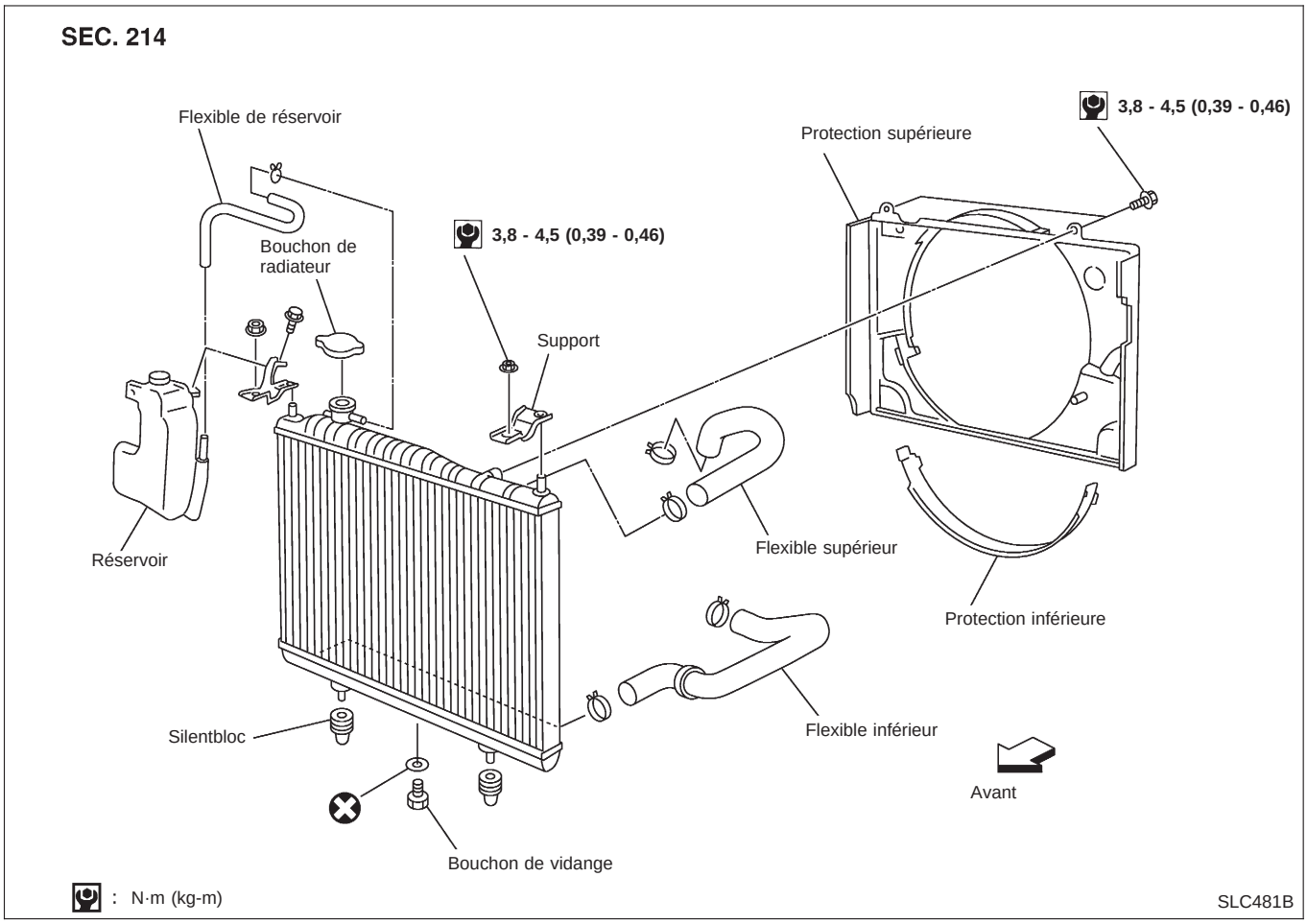

DEPOSE ET REPOSE

1. Déposer le couvercle inférieur.
2. Vidanger le liquide de refroidissement du moteur. Se reporter à la section MA ''Remplacement du liquide de refroidissement moteur''.
3. Déposer la protection (inférieure) du radiateur.
4. Déposer la protection (supérieure) du radiateur.
5. Débrancher le flexible (inférieur et supérieur) du radiateur.
6. Débrancher le flexible du réservoir.
7. Déposer le radiateur.
8. Après avoir réparé ou remplacé le radiateur, reposer toutes les pièces déposées dans l'ordre inverse de leur dépose.

Simpo PDF Merge and Split Unregistered Version - http://www.simpopdf.com

Ventilateur de refroidissement (entraîné par vilebrequin)

DEMONTER ET REPOSER

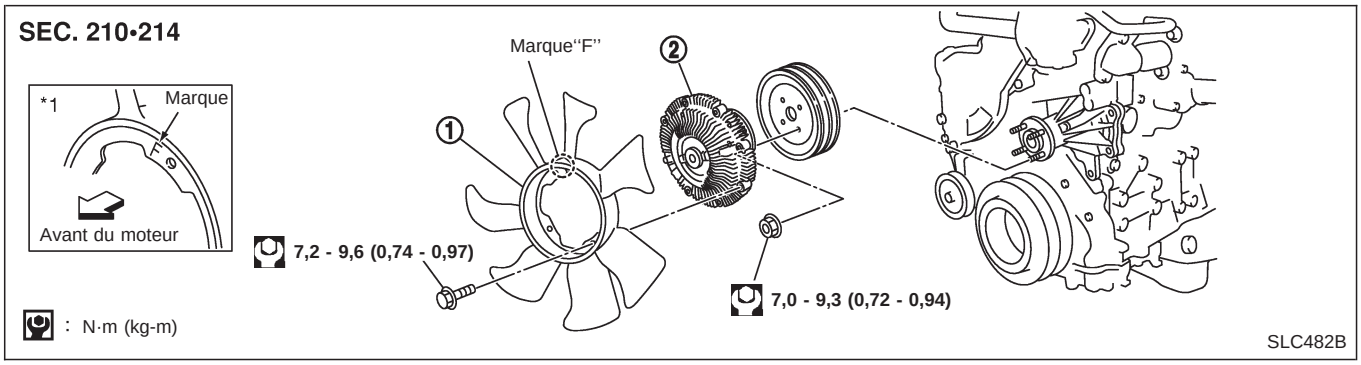

1. Ventilateur de refroidissement
2. Accouplement de ventilateur

- Ne pas relâcher la tension de la courroie d'entraînement lors de la dépose du ventilateur/de la poulie de pompe à eau.
- L'accouplement de ventilateur ne peut pas être démonté et devra être remplacé comme un ensemble. Si le repère avant Ⓕ existe, reposer le ventilateur de façon à ce que le côté indiqué par le repère Ⓕ soit disposé face vers l'avant.
- Un alignement correct de ces composants est indispensable. Un alignement incorrect provoquera une oscillation de ces derniers et pourra éventuellement déclencher un détachement du ventilateur de la pompe à eau, occasionnant ainsi des dégâts importants.

Ventilateur de refroidissement (entraîné par moteur)

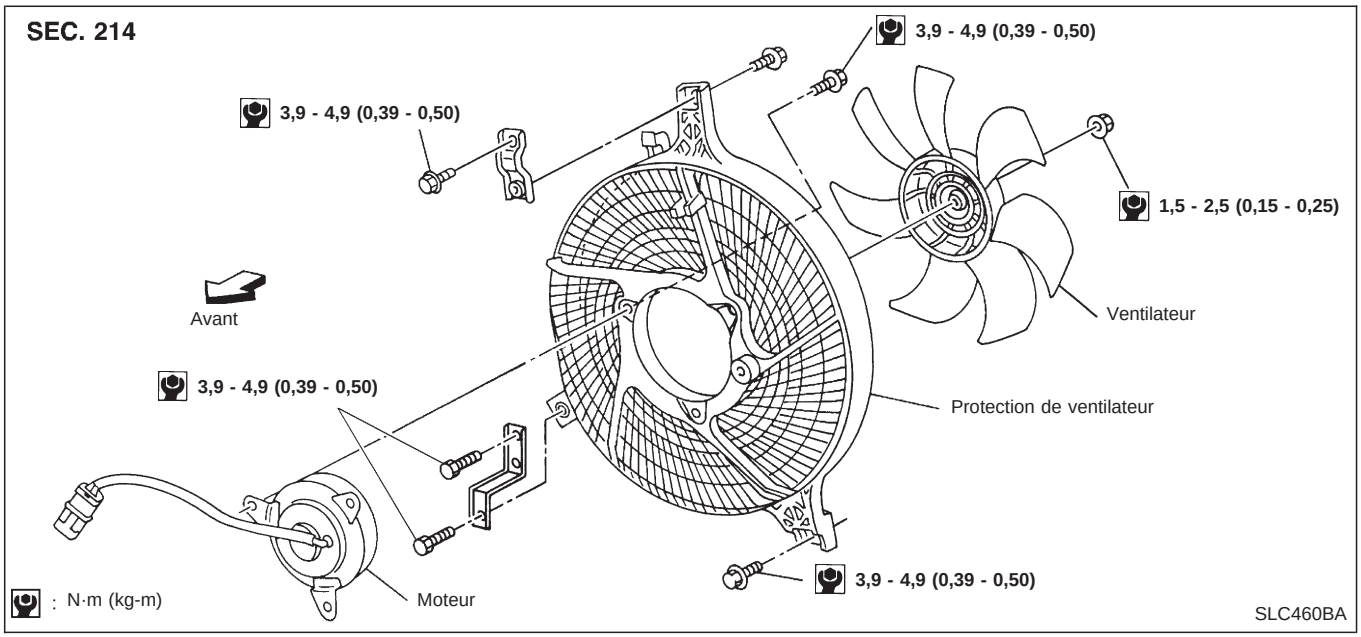

Simpo PDF Merge and Split Unregistered Version - http://www.simpopdf.com

Ventilateur de refroidissement (entraîné par moteur) (Suite)

DEPOSE ET REPOSE

1. Déposer la grille avant.
2. Débrancher le connecteur de faisceau du moteur de ventilateur de refroidissement.
3. Déposer le ventilateur de refroidissement.

PRECAUTION :

Prendre soin de ne pas érafler ou endommager le condenseur de climatiseur.

4. Reposer dans l'ordre inverse de la dépose.

SYSTEME DE COMMANDE DE VENTILATEUR DE REFROIDISSEMENT

Les ventilateurs de radiateur sont contrôlés par l'ECM. Pour plus de détails, se reporter à la section EC ''DTC 0208 SURCHAUFFE''.

Simpo PDF Merge and Split Unregistered Version - http://www.simpopdf.com

Circuit de lubrification du moteur

VERIFICATION DE LA PRESSION D'HUILE

Régime du moteur tr/min	Pression approximative de débit kPa (bar, kg/cm^2)
Régime de ralenti	Supérieure à 140 (1,40, 1,43)
2.000	Supérieure à 270 (2,69, 2,75)
4.000	Supérieure à 430 (4,29, 4,38)

POMPE A HUILE

Unité : mm

Jeu radial du logement du rotor extérieur **1**	0,114 - 0,260
Jeu à l'arête du rotor intérieur au rotor extérieur **2**	Inférieur à 0,180
Jeu axial du logement du rotor intérieur **3**	0,050 - 0,090
Jeu axial du logement du rotor supérieur **4**	0,030 - 0,190
Jeu du rotor intérieur à la partie brasée du logement **5**	0,045 - 0,091

SOUPAPE REGULATRICE DE POMPE A HUILE

Unité : mm

Jeu du régulateur de soupape au couvercle de pompe à huile **6**	0,040 - 0,097

Circuit de refroidissement du moteur

RADIATEUR

Unité : kPa (bar, kg/cm^2)

Pression de décharge du bouchon	Standard	78 - 98 (0,78 - 0,98, 0,8 - 1,0)
	Limite	59 (0,59, 0,6)
Pression d'essai de fuite		157 (1,57, 1,6)

THERMOSTAT

Température d'ouverture de la soupape	Supérieure à 80 - 84°C (176 - 183°F)
Levée de soupape	Supérieure à 10 mm/95°C

Simpo PDF Merge and Split Unregistered Version - http://www.simpopdf.com

<SUPPLEMENT-III>

SECTION MA

AVIS DE MODIFICATION :

- Les informations sur le moteur KA24DE ont été ajoutées. Se reporter au Manuel de Réparation de D22 Supplément-II (SM9E-D22BE0E) pour les procédures d'entretien qui ne figurent pas ici.
- Le moteur YD25DDTi a été ajouté.

TABLE DES MATIERES

ENTRETIEN PERIODIQUE 3002
Programme d'entretien pour les moteurs essence (kilométrage annuel < 30 000 km/an) 3002
Programme d'entretien pour les moteurs diesel (kilométrage annuel 30 000 km/an) 3003
Programme d'entretien dans des conditions de conduite sévères (kilométrage annuel 30 000 km/an) 3004
Programme d'entretien pour les moteurs essence (kilométrage annuel > 30 000 km/an) 3005
Programme d'entretien pour les moteurs diesel (kilométrage annuel 30 000 km/an) 3006
Entretien dans des conditions de conduite sévères (kilométrage annuel > 30 000 km/an) 3007
LIQUIDES ET LUBRIFIANTS CONSEILLES 3008
Liquides et lubrifiants 3008
Indice de viscosité SAE 3009

KA24DE

ENTRETIEN DU MOTEUR 3010
Remplacement du filtre à air 3010
Remplacement du filtre de ventilation positive du carter (PCV) 3010

YD

ENTRETIEN DU MOTEUR 3011
Vérification des couples de serrage 3011
Vérification des courroies d'entraînement 3011
Remplacement de l'huile moteur 3012
Remplacement du filtre à huile 3014
Remplacement du liquide de refroidissement du moteur 3015
Vérification du circuit de refroidissement 3017
Vérification et remplacement du filtre à carburant et vidange de l'eau 3018
Vérification des canalisations d'alimentation ... 3020
Nettoyage et remplacement du filtre à air 3020
Contrôler le filtre à air à cyclone 3020
CARACTERISTIQUES ET VALEURS DE REGLAGE (SDS) 3021
Entretien du moteur 3021

Simpo PDF Merge and Split Unregistered Version - http://www.simpopdf.com

Le programme d'entretien est présenté dans les tableaux ci-dessous. En fonction des conditions météorologiques et atmosphériques, des différents revêtements, des habitudes personnelles de conduite et de l'utilisation du véhicule, un programme d'entretien complémentaire ou plus fréquent peut être nécessaire.

Les entretiens périodiques au-delà du dernier mentionné dans les tableaux doivent continuer de manière similaire.

Programme d'entretien pour les moteurs essence (kilométrage annuel < 30 000 km/an)

MOTEUR KA24DE

Abréviations : R = Remplacer I = Inspecter : corriger ou remplacer si nécessaire

OPERATION D'ENTRETIEN		PERIODICITE DE L'ENTRETIEN								Pages de réference
A appliquer sur la base du kilométrage ou sur une base annuelle si le kilométrage est inférieur à 15 000 km par an	km x 1 000 Mois	15 12	30 24	45 36	60 48	75 60	90 72	105 84	120 96	
Compartiment moteur et dessous du véhicule										
Huile moteur (utiliser les huiles API SG, SH or SJ)★		R	R	R	R	R	R	R	R	—
Filtre d'huile moteur (Utiliser des pièces de rechange NISSAN ou équivalentes)★		R	R	R	R	R	R	R	R	—
Courroie d'entraînement		I	I	I	I	I	I	I	I	—
Système de refroidissement		I	I	I	I	I	I	I	I	—
Liquide de refroidissement antigel (utiliser le liquide de refroidissement d'origine NISSAN (L2N) ou un liquide équivalent)	Voir NOTE (1)			I			R		I	—
Filtre à air (type à papier visqueux)★					R				R	3010
Filtre de recyclage des gaz de ventilation (PCV) ★			R		R		R		R	3010
Jeu des soupapes d'admission et d'échappement	Voir NOTE (2)									—
Canalisation d'alimentation en carburant et d'évaporation			I		I		I		I	—
Bougies d'allumage			R		R		R		R	—
Câbles d'allumage				I			I			—
Filtre à carburant★							R			—

NOTE : (1) Premier remplacement à 90 000 km/60 mois, puis tous les 60 000 km/48 mois. Effectuer ''I'' (Contrôle de la richesse du mélange et correction de celle-ci si nécessaire) au milieu de la période de remplacement.

(2) L'entretien périodique n'est pas nécessaire. Toutefois, si le bruit de soupape augmente, contrôler le jeu des soupapes.

★ Les points d'entretien avec ''★'' doivent être effectués plus fréquemment d'après ''Entretien dans des conditions de conduite sévères''.

Simpo PDF Merge and Split Unregistered Version - http://www.simpopdf.com

Programme d'entretien pour les moteurs diesel (kilométrage annuel 30 000 km/an)

MOTEUR YD25DDTi

Abréviations : R = Remplacer I = Inspecter : corriger ou remplacer si nécessaire, C = Nettoyer, D = Vérifier le filtre et vidanger

OPERATION D'ENTRETIEN		PERIODICITE DE L'ENTRETIEN						Pages de référence
A appliquer sur la base du kilométrage ou sur une base annuelle si le kilométrage est inférieur à 20 000 km par an.	km x 1 000 Mois	20 12	40 24	60 36	80 48	100 60	120 72	
Compartiment moteur et sous véhicule								
Huile moteur (pour les modèles 4x2, utiliser l'huille API CF-4)★		R	R	R	R	R	R	3012
Huile moteur (Pour les modèles 4x4 ou 4x4 apparence 4x2, utiliser l'huile API CF-4)★		Remplacer tous les 10 000 km ou tous les 12 mois						3012
Filtre à huile moteur (Utiliser un filtre Eco ou équivalent)★	Voir NOTE (1)	R	R	R	R	R	R	3014
Courroie d'entraînement		I	I	I	I	I	I	3011
Système de refroidissement		I	I	I	I	I	I	3017
Liquide de refroidissement (Utiliser le liquide de refroidissement de rechange NISSAN (L2N) ou équivalent)	Voir NOTE (2)		I			R		3015
Filtre à air (Type à papier visqueux)★			R		R		R	3020
Filtre à air (Type à papier sec)★		C	R	C	R	C	R	3020
Filtre à air à cyclone★		I	I	I	I	I	I	3020
Jeu de soupape d'admission et d'échappement	Voir NOTE (3)							*1
Canalisation de carburant			I		I		I	3020
Injecteurs	Voir NOTE (4)							*2
Filtre à carburant★			R		R		R	3018

NOTE : (1) Elément de montage du filtre à huile (Pièce No. 15208 AD200) et joint torique (Pièce No. 15226 AD200) sont des pièces de rechange.
(2) Remplacer la première fois à 100.000 km/60 mois, puis tous les 60 000 km/36 mois. Après le premier remplacement, effectuer ''★'' (Contrôle de la richesse du mélange et correction de celle-ci si nécessaire) au milieu de la période de remplacement.
(3) Si le bruit des soupapes augmente, vérifier le jeu des soupapes.
(4) Si la puissance moteur diminue, si des fumées d'échappement noires sont émises ou si le bruit du moteur augmente, vérifier les injecteurs et remplacer les corps d'injecteurs si nécessaire.
★ Les points d'entretien avec ''★'' doivent être effectués plus fréquemment d'après ''Entretien dans des conditions de conduite sévères''.

*1: ''Inspection des jeux de soupape et ajustement'' dans la section EM
*2: ''Tube d'injection et injecteur'' dans la section EC

Simpo PDF Merge and Split Unregistered Version - http://www.simpopdf.com

Programme d'entretien dans des conditions de conduite sévères (kilométrage annuel 30 000 km/an)

La périodicité de l'entretien présentée dans les pages précédentes s'applique pour des conditions de fonctionnement normale. Si le véhicule est principalement utilisé dans les conditions de conduite difficiles suivantes, il est nécessaire d'augmenter la fréquence d'entretien comme indiquée dans le tableau.

A — Conduite dans un environnement poussiéreux
B — Conduite répétée sur de courtes distances
C — Traction d'une remorque ou d'une caravane
D — Ralenti excessif
E — Conduite dans des conditions climatiques extrêmement difficiles ou dans des endroits où les températures ambiantes sont soit extrêmement basses, soit extrêmement élevées
F — Conduites répétées à vitesses élevées et/ou avec une forte charge moteur

Condition de conduite						Elément d'entretien		OPERATIONS D'ENTRETIEN	FREQUENCE D'ENTRETIEN	Pages de réference
						Huile moteur				
A	B	C	D	.	.	Modèles essence (moteur KA)		Remplacer	Tous les 7 500 km ou 6 mois	—
						Modèles diesel (moteur YD)	Modèles 4x2	Remplacer	Tous les 10 000 km ou 6 mois	3012
							Modèles 4x4 ou 4x4 apparence 4x2	Remplacer	Tous les 5 000 km ou 6 mois	3012
.	.	.	.	.	F	Modèles Diesel (moteur YD)	Toutes versions 4x2 et 4x4	Verifier le niveau d'huile, corriger si nécessaire	Tous les 5000 km or 6 mois	—
						Filtre à huile moteur				
A	B	C	D	.	.	Modèles essence (moteur KA)		Remplacer	Tous les 7 500 km ou 6 mois	—
						Modèles diesel (moteur YD)		Remplacer	Tous les 10 000 km ou 6 mois	3014
						Filtre à air (type à papier visqueux)				
A	.	.	.	.	.	Modèles essence (moteur KA)		Remplacer	Tous les 30 000 km ou 24 mois	3010
						Modèles diesel (moteur YD)		Remplacer	Tous les 20 000 km ou 12 mois	3020
						Filtre à air (type à papier sec)				
A	.	.	.	.	.	Modèles diesel (moteur YD)		Nettoyer	Tous les 10 000 km ou 6 mois	3020
								Remplacer	Tous les 20 000 km ou 12 mois	3020
						Filtre à air à cyclone				
A	.	.	.	.	.	Modèles diesel (moteur YD)		Inspecter	Plus fréquemment	3020
						Filtre de ventilation positive du carter (PCV)				
A	.	.	.	.	.	Modèles essence (moteur KA)		Remplacer	Tous les 15 000 km ou 12 mois	3010
						Filtre à carburant				
A	.	.	.	E	.	Modèles essence (moteur KA)		Remplacer	Tous les 45 000 km ou 36 mois	—
						Modèles diesel (moteur YD)		Remplacer	Tous les 20 000 km ou 12 mois	3018
								Vérifier et vidanger l'eau	Tous les 10 000 km ou 6 mois	3018

Simpo PDF Merge and Split Unregistered Version - http://www.simpopdf.com

Programme d'entretien pour les moteurs essence (kilométrage annuel > 30 000 km/an)

MOTEUR KA24DE

Abréviations : R = Remplacer I = Inspecter : corriger ou remplacer si nécessaire

OPERATION D'ENTRETIEN		PERIODICITE DE L'ENTRETIEN								Pages de référence
Effectuer sur une base kilométrique seulement.	km x 1 000	15	30	45	60	75	90	105	120	
Compartiment moteur et sous véhicule										
Huile moteur (utiliser de l'huile SG, SH ou SJ) ★		R	R	R	R	R	R	R	R	—
Filtre d'huile moteur (Utiliser des pièces de rechange NISSAN ou équivalentes)★		R	R	R	R	R	R	R	R	—
Courroie d'entraînement		I	I	I	I	I	I	I	I	—
Système de refroidissement			I		I		I		I	—
Liquide de refroidissement antigel (Utiliser le liquide de refroidissement d'origine NISSAN (L2N) ou un liquide équivalent)	Voir NOTE (1)			I			R		I	—
Filtre à air (Type à papier visqueux)★					R				R	3010
Filtre de recyclage des gaz de ventillation (PCV) ★					R				R	3010
Jeu de soupape d'admission et d'échappement	Voir NOTE (2)									—
Canalisations de vapeur et de carburant					I				I	—
Bougies d'allumage			R		R		R		R	—
Câbles d'allumage							I			—
Filtre à carburant★							R			—

NOTE : (1) Remplacer d'abord à 90 000 km, puis tous les 60 000 km. Effectuer ''I'' (vérification de la richesse de mélange et rectification si nécessaire) à la moitié des intervalles de remplacement.

(2) L'entretien périodique n'est pas nécessaire. Toutefois, si le bruit de soupape augmente, contrôler le jeu des soupapes.

★ Les points d'entretien avec ''★'' doivent être effectués plus fréquemment d'après ''Entretien dans des conditions de conduite sévères''.

Simpo PDF Merge and Split Unregistered Version - http://www.simpopdf.com

Programme d'entretien pour les moteurs diesel (kilométrage annuel 30 000 km/an)

MOTEUR YD25DDTi

Abréviations : R = Remplacer I = Inspecter : corriger ou remplacer si nécessaire, C = Nettoyer, D = Vérifier le filtre et vidanger l'eau

OPERATION D'ENTRETIEN		PERIODICITE DE L'ENTRETIEN						Pages de référence
Effectuer sur une base kilométrique seulement.	km x 1 000	20	40	60	80	100	120	
Compartiment moteur et sous véhicule								
Huile moteur (pour les modèles 4x2, utiliser l'huille API CF-4)★		R	R	R	R	R	R	3012
Huile moteur (Pour les modèles 4x4 ou 4x4 apparence 4x2, utiliser l'huile API CF-4)★		Remplacer tous les 10 000 km.						3012
Filtre à huile moteur (Utiliser un filtre Eco ou équivalent)★	Voir NOTE (1)	R	R	R	R	R	R	3014
Courroie d'entraînement		I	I	I	I	I	I	3011
Système de refroidissement		I	I	I	I	I	I	3017
Liquide de refroidissement antigel (Utiliser le liquide de refroidissement d'origine NISSAN (L2N) ou un liquide équivalent)	Voir NOTE (2)		I			R		3015
Filtre à air (Type à papier visqueux)★				R			R	3020
Filtre à air (Type à papier sec)★		C	R	C	R	C	R	3020
Filtre à air à cyclone★		I	I	I	I	I	I	3020
Jeu de soupape d'admission et d'échappement	Voir NOTE (3)							*1
Canalisation de carburant				I			I	3020
Injecteurs	Voir NOTE (4)							*2
Filtre à carburant★				R			R	3018

NOTE : (1) Elément de montage du filtre à huile (Pièce No. 15208 AD200) et joint torique (Pièce No. 15226 AD200) sont des pièces de rechange.
(2) Remplacer d'abord à 100 000 km, puis tous les 60 000 km. Après le premier remplacement, effectuer ''I'' (Contrôle de la richesse du mélange et correction de celle-ci si nécessaire) au milieu de la période de remplacement.
(3) Si le bruit des soupapes augmente, vérifier le jeu des soupapes.
(4) Si la puissance moteur diminue, si des fumées d'échappement noires sont émises ou si le bruit du moteur, vérifier les injecteurs et remplacer les corps d'injecteurs si nécessaire.
★ Les points d'entretien avec ''★'' doivent être effectués plus fréquement d'après ''Entretien dans des conditions de conduite sévères''.

*1: ''Contrôle du jeu des soupapes et ajustement'' dans la section EM
*2: ''Tube d'injection et injecteur'' dans la section EC

Simpo PDF Merge and Split Unregistered Version - http://www.simpopdf.com

Entretien dans des conditions de conduite sévères (kilométrage annuel > 30 000 km/an)

La périodicité de l'entretien présentée dans les pages précédentes s'applique pour des conditions de fonctionnement normale. Si le véhicule est principalement utilisé dans les conditions de conduite difficiles suivantes, il est nécessaire d'augmenter la fréquence d'entretien comme indiquée dans le tableau.

A — Conduite dans un environnement poussiéreux
B — Conduite répétée sur de courtes distances
C — Traction d'une remorque ou d'une caravane
D — Ralenti excessif
E — Conduite dans des conditions climatiques extrêmement difficiles ou dans des endroits où les températures ambiantes sont soit extrêmement basses, soit extrêmement élevées
F — Conduites répétées à vitesses élevées et/ou avec une forte charge moteur

Condition de conduite						Elément d'entretien		OPERATIONS D'ENTRETIEN	FREQUENCE D'ENTRETIEN	Pages de référence
						Huile moteur				
A	B	C	D	.	.	Modèles essence (moteur KA)		Remplacer	Tous les 7 500 km	—
						Modèles diesel (moteur YD)	Modèles 4x2	Remplacer	Tous les 10 000 km	3012
							Modèles 4x4 ou 4x4 apparence 4x2	Remplacer	Tous les 5 000 km	3012
.	.	.	.	.	F	Modèles diesel (moteur YD)	Toutes versions 4x2 et 4x4	Vérifier le niveau d'huile, corriger si nécessaire	Tous les 5000 km	—
						Filtre à huile moteur				
A	B	C	D	.	.	Modèles essence (moteur KA)		Remplacer	Tous les 7 500 km	—
						Modèles diesel (moteur YD)		Remplacer	Tous les 10 000 km	3014
						Filtre à air (type à papier visqueux)				
A	.	.	.	.	.	Modèles essence (moteur KA)		Remplacer	Tous les 30 000 km	3010
						Modèles diesel (moteur YD)		Remplacer	Tous les 30 000 km	3020
						Filtre à air (type à papier sec)				
A	.	.	.	.	.	Modèles diesel (moteur YD)		Nettoyer	Tous les 10 000 km	3020
								Remplacer	Tous les 20 000 km	3020
						Filtre à air à cyclone				
A	.	.	.	.	.	Modèles diesel (moteur YD)		Inspecter	Plus fréquemment	3020
						Filtre de ventilation positive du carter (PCV)				
A	.	.	.	.	.	Modèles essence (moteur KA)		Remplacer	Tous les 30 000 km	3010
						Filtre à carburant				
A	.	.	.	E	.	Modèles essence (moteur KA)		Remplacer	Tous les 45 000 km	—
						Modèles diesel		Remplacer	Tous les 30 000 km	3018

Simpo PDF Merge and Split Unregistered Version - http://www.simpopdf.com

Liquides et lubrifiants

		Contenance (approximative) Litre	Liquides et lubrifiants recommandés
Huile moteur (remplissage)			
Avec filtre à huile			
	KA24DE	4x2 3,6 4x4 4,1	Moteur diesel : API SG, SH ou SJ*1 ILSAC de qualité GF-I ou GF-II*1 Moteur diesel : API CD, CE, CF, CF-4 pour moteur TD*1, *5 ACEA B3-96, 98 ou ACEA B3/E3 96, 98 pour moteur TD*4 API CF-4 pour moteur YD*1, *5 ACEA 98-B1 pour moteur YD
	YD25DDTi	4x2 5,6 4x4 4,3*7	
Sans filtre à huile			
	KA24DE	4x2 3,3 4x4 3,8	
	YD25DDTi	4x2 5,3 4x4 4,0*7	
Circuit de refroidissement (avec réservoir)			
	KA24DE	6,9	Liquide de refroidissement antigel Nissan d'origine (L2N) ou équivalent*6
	YD25DDTi	8,6	
Huile pour boîte de vitesses manuelle	FS5R30A	4x2 2,8 4x4 5,1	API GL-4, Viscosité SAE 75W-85 seulement
	FS5W71C	4x2 2,0 4x4 4,9	
Huile de boîte de transfert	TX10A	2,2	Nissan ATF d'origine ou équivalent*2 ou API GL-4*1
Huile de boîte de différentiel			
Avant	R180A	1,3	Engrenage standard de différentiel : API GL-5*1 Engrenage de différentiel à glissement limité (LSD) : Huile pour engrenage hypoïde LSD (Pièce No. : KLD31-14002) ou équivalent*3
Arrière	C200	1,3	
Liquide pour direction assistée		—	Type DEXRON™ III ou équivalent
Liquide de frein et d'embrayage		—	DOT 3 ou DOT 4 (U.S. FMVSS No. 116)
Graisse pour arbre de transmission		—	NLGI No. 2 (à base de savon de lithium)
Graisse à usages multiples		—	NLGI No. 2 (à base de savon de lithium)

*1 : Pour de plus amples détails, se reporter à ''Indice de viscosité SAE''.
*2 : Consulter un concessionnaire Nissan pour de plus amples informations sur les marques de liquides correctes, et les marques commerciales appropriées de fluides de transmission automatique DEXRON™ III/MERCON™.
*3 : API GL-5, SAE 140 et 10% du volume du modificateur de friction LSD (Pièce No. : 38469-C6000) sont équivalents.
*4 : Si les huiles ACEA B3-96, 98 ne sont pas disponibles, les huiles API CD, CE, CF, CF-4 peuvent être employées. Cependant, les huiles ACEA sont fortement recommandées si possible.
*5 : Ne jamais utiliser la qualité d'huile CG-4.
*6 : Utiliser du liquide de refroidissement antigel d'origine Nissan ou un équivalent de même qualité, afin d'éviter la formation possible de corrosion d'aluminium dans le système de refroidissement du moteur qui pourrait être causée par un liquide de refroidissement moteur d'une autre origine. **Noter que toute réparation du système de liquide de refroidissement moteur avec du liquide qui n'est pas d'origine peut ne pas être couverte par la garantie même si de tels incidents se produisent pendant la période de garantie.**
*7 : Y compris les modèles 4x4 apparence 4x2.

Simpo PDF Merge and Split Unregistered Version - http://www.simpopdf.com

Indice de viscosité SAE

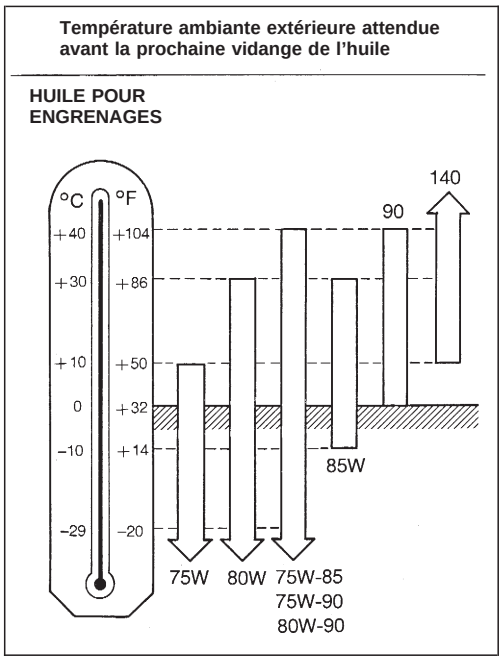

SLIA0015E

- **Pour les pays froids et tempérés : 75W-90 pour la boîte de transfert et 80W-90 pour le différentiel sont préférables.**
- **Pour les pays chauds : 90 convient pour des températures ambiantes inférieures à 40°C.**
- **Pour les pays très chauds : 140 pour le différentiel est préférable.**

Simpo PDF Merge and Split Unregistered Version - http://www.simpopdf.com

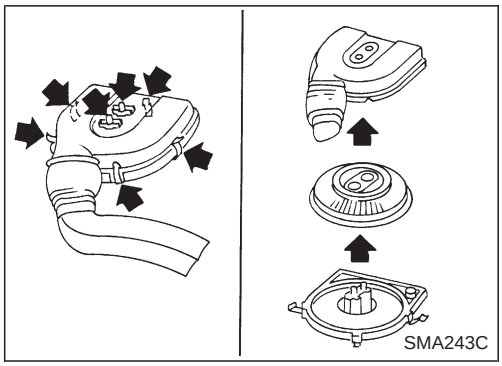
SMA243C

Remplacement du filtre à air

TYPE A PAPIER VISQUEUX

Le filtre à papier visqueux ne nécessite pas de nettoyage entre deux changements.

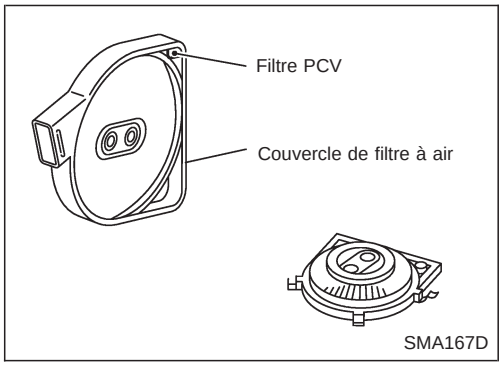

SMA167D

Remplacement du filtre de ventilation positive du carter (PCV)

Déposer le couvercle de filtre à air et retirer le filtre PCV logé à l'intérieur. Installer ensuite le nouveau filtre PCV.

Simpo PDF Merge and Split Unregistered Version - http://www.simpopdf.com

Vérification des couples de serrage

Le contrôle doit se faire lorsque le moteur est froid.

BOULONS ET ECROUS DE COLLECTEURS

Admission

: 19,7 - 23,5 N·m (2,0 - 2,3 kg-m)

Echappement

: 28,5 - 33,3 N·m (2,9 - 3,3 kg-m)

ECROU DE LIGNE D'ECHAPPEMENT

: 41 - 48,0 N·m (4,1 - 4,9 kg-m)

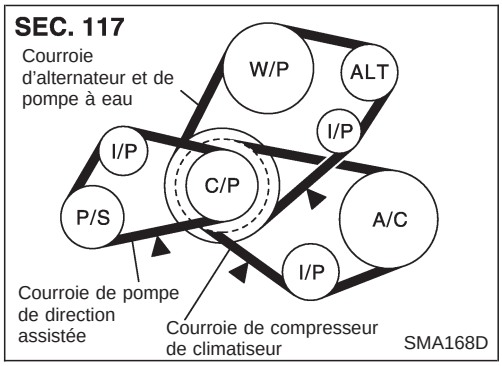

Vérification des courroies d'entraînement

INSPECTION

- Avant de faire des contrôles sur le moteur, s'assurer que le moteur ait refroidi ; attendre environ 30 minutes après que le moteur ait été arrêté.
- Contrôler visuellement tout usure, dommage, fissure des courroies au niveau des surfaces de contact et des arêtes.
- Vérifier la déflexion de la courroie d'entraînement en appliquant 98 N au point indiqué ▼.
- **Lors du contrôle de la déflection de la courroie juste après installation, ajuster la courroie d'abord à la valeur spécifiée. Tourner ensuite le vilebrequin au minimum de 2 tours, réajuster à la valeur spécifiée pour éviter des variations de déflexion entre deux poulies.**
- **Serrer le contre-écrou de poulie de tension et mesurer la déflection une fois tendue.**

Déflection de courroie d'entraînement :

Courroie	Déflection de la courroie sous une force de 98 N* mm		
	Neuve	Ajustée	Limite du réajustement
Courroie de compresseur de climatiseur	7 - 8	9,5 - 10,5	12,0
Courroie d'alternateur & et de pompe à eau	6,5 - 7,5	8 - 9,5	12,5
Courroie de direction assistée	6,5 - 7,5	8 - 10	11,5

*: Quand le moteur est froid.

AJUSTEMENT

- Ajuster les courroies avec les éléments mentionnés ci-dessous.

Courroie	Methode de serrage des courroies pour ajustage
Courroie de compresseur de climatiseur	Ecrou d'ajustage sur la poulie de tension
Courroie d'alternateur et de pompe à eau	Ecrou d'ajustage sur l'alternateur
Courroie de direction assistée	Ecrou d'ajustage sur la poulie de tension

Simpo PDF Merge and Split Unregistered Version - http://www.simpopdf.com

Vérification des courroies d'entraînement (Suite)

PRECAUTION :

- **Quand une courroie de rechange est installée, ajuster à la valeur spécifiée dans la colonne ''Neuve'' en raison de son adaptabilité insuffisante à la gorge de la poulie.**
- **Si la courroie de déflection est en dehors de la ''Limite du réajustement'', ajuster à la valeur ''Ajustée''.**
- **Lors du contrôle de la déflection de la courroie juste après installation, ajuster la courroie d'abord à la valeur spécifiée. Ensuite, après avoir tourné le vilebrequin au minimum de 2 tours, réajuster la courroie à la valeur spécifiée pour éviter une variation de déflection entre les poulies.**
- **S'assurer que les courroies épousent la gorge des poulies lors de l'installation.**
- **Manipuler avec précaution pour éviter de graisser les courroies avec de l'huile ou du liquide de refroidissement, etc...**
- **Ne pas tourner ni plier les courroies avec force.**

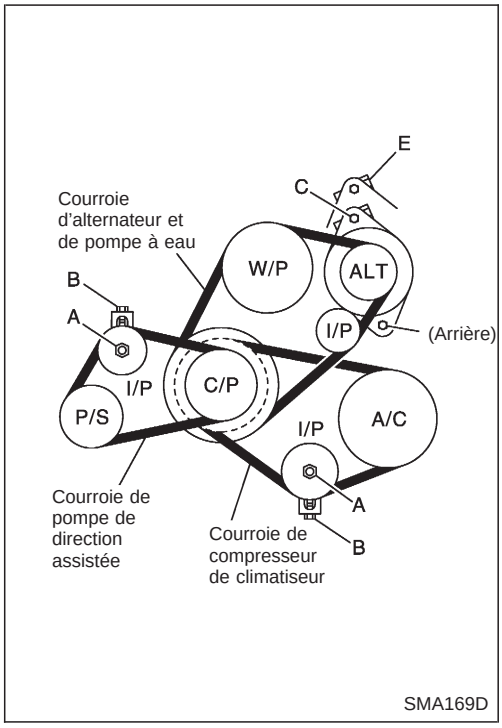

Courroie de compresseur de climatiseur et de pompe de direction assistée

1. Desserrer le contre-écrou de la poulie de tension (A).
2. Tourner l'écrou d'ajustage (B) pour régler.
   - Se référer à MA-3011, ''Inspection'' pour les valeurs d'ajustage.
3. Serrer le contre-écrou (A).

   Ecrou A :

   : 30,4 - 39,2 N·m (3,1 - 3,9 kg-m)

Courroie d'alternateur et de pompe à eau

1. Desserrer le contre-écrou d'ajustage (C).
2. Desserrer l'écrou de fixation de l'alternateur (D) (Arrière).
3. Tourner l'écrou (E) pour ajuster.
   - Se référer à MA-3011, ''Inspection'' pour les valeurs d'ajustage.
4. Serrer dans l'ordre l'écrou (C) puis l'écrou (D).

   Ecrou C :

   : 19,6 - 23,4 N·m (2,0 - 2,3 kg-m)

   Ecrou D :

   : 45,1 - 59,7 N·m (4,6 - 6,0 kg-m)

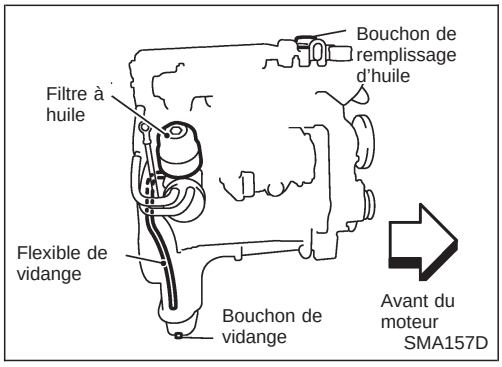

Remplacement de l'huile moteur

ATTENTION :

- **Faire attention aux risques de brûlures car l'huile moteur est chaude.**
- **Les contacts prolongés et répétés avec les huiles moteur usagées peuvent provoquer des cancers de la peau ; éviter tout contact direct avec les huiles moteur usagées. En cas de contact, laver soigneusement avec du savon ou un nettoyant à main aussi rapidement que possible.**

1. Mettre le véhicule horizontal.

Simpo PDF Merge and Split Unregistered Version - http://www.simpopdf.com

Remplacement de l'huile moteur (Suite)

2. Faire chauffer le moteur, et contrôler toute fuite d'huile des éléments du moteur.
3. Arrêter le moteur et attendre au minimum 10 minutes.
4. Déposer le bouchon de vidange et le bouchon de remplissage d'huile.
5. Vidanger l'huile et faire le plein d'huile moteur neuve.

Viscosité et caractéristiques de l'huile :

- **API CD, CE, CF ou CF-4 (Sauf pour l'Europe)**
- **API CF-4 ou ACEA 98-B1 (Pour l'Europe)**
  Se référer à MA-3008, ''LIQUIDES ET LUBRIFIANTS CONSEILLES''.

Contenance en huile de remplissage (environ) :

Unité : ℓ

		4x2	4x4*
Vidanger et remplir de nouveau	Sans remplacement du filtre à huile	5,3	4,0
	Avec remplacement du filtre à huile	5,6	4,3
Sécher le moteur (révision du moteur)		6,3	5,0

*: Inclus les modèles 4x4 apparence 4x2

PRECAUTION :

- **Veiller à nettoyer le bouchon de vidange et le reposer avec une rondelle neuve.**
  Bouchon de vidange :
  : 29 - 39 N·m (3,0 - 4,0 kg-m)
- **La capacité de remplissage varie selon la température de l'huile et le temps de vidange. N'utiliser ces spécifications que comme référence. Toujours utiliser la jauge pour déterminer si la quantité adéquate d'huile est dans le moteur.**

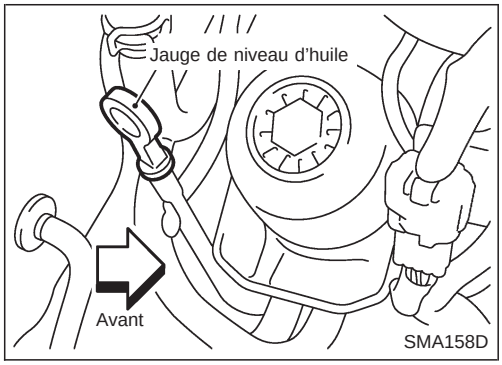

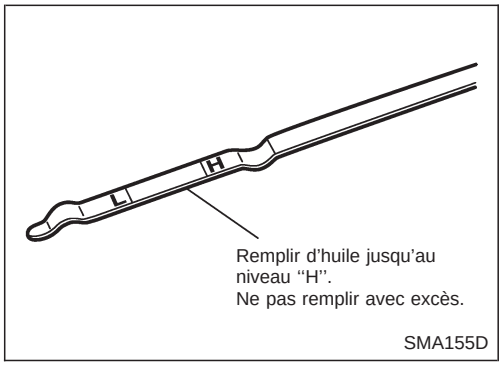

6. Vérifier le niveau d'huile de la manière suivante.

a. Démarrer le moteur et vérifier s'il n'y a pas de fuites d'huile autour du bouchon de vidange et du filtre à huile.

b. Faire tourner le moteur pendant quelques minutes, puis couper le contact. Attendre au minimum 10 minutes vérifier le niveau d'huile.

Simpo PDF Merge and Split Unregistered Version - http://www.simpopdf.com

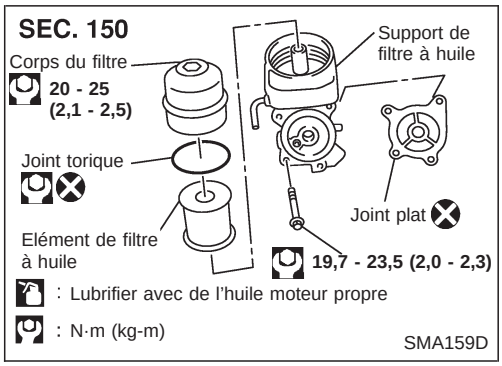

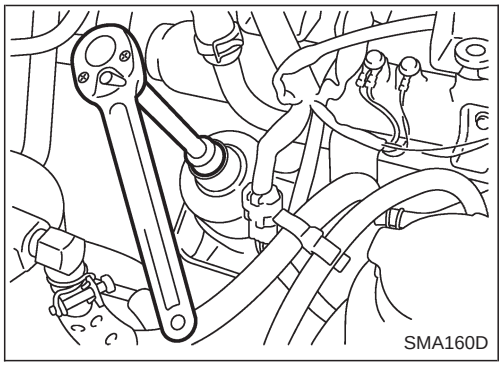

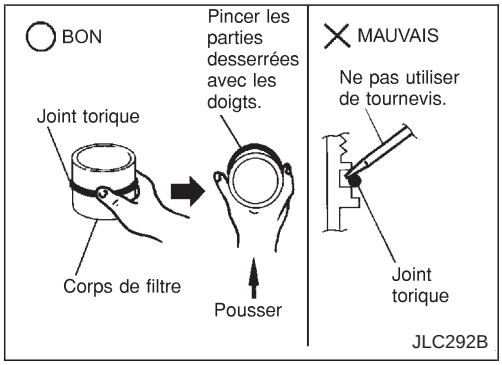

Remplacement du filtre à huile

DEPOSE

1. Placer un récipient pour récupérer l'huile sous la partie inférieure du flexible de vidange avant de déposer le corps du filtre.
2. A l'aide d'une clé hexagonale [largeur entre pans : 24 mm], desserrer le corps du filtre d'environ 4 tours.
3. Déposer le corps du filtre, puis les éléments du filtre à huile.
4. Retirer le joint torique du corps du filtre.

● Pousser sur le joint dans un sens, soulever la partie décollée avec vos doigts, et retirer le joint torique du corps du filtre.

PRECAUTION :

Ne pas utiliser de fils métalliques ou de tournevis plats, etc. qui pourraient endommager le corps du filtre.

INSTALLATION

1. Retirer tous corps étrangers adhérant à l'intérieur du corps du filtre et sur la surface de montage du joint torique (côté corps du filtre et côté support).
2. Reposer l'élément de filtre à huile et le joint torique sur le corps de filtre.

● Pousser complètement l'élément de filtre à huile dans le corps de filtre à huile.

3. Reposer le corps de filtre sur le support de filtre à huile.
   : 20 - 25 N·m (2,0 - 2,6 kg-m)
4. Faire chauffer le moteur, et vérifier s'il n'y a pas de fuites d'huile et contrôler le niveau d'huile.

PRECAUTION :

Si l'huile moteur se répand sur le moteur ou sur la carrosserie, l'essuyer complètement.

Simpo PDF Merge and Split Unregistered Version - http://www.simpopdf.com

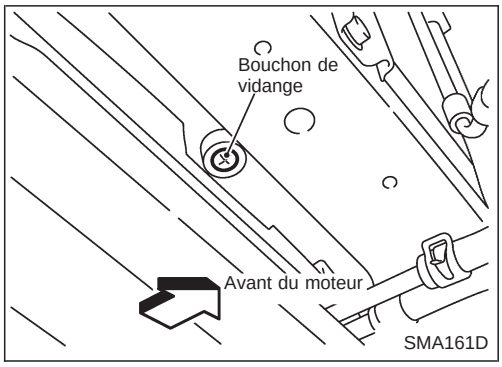

Remplacement du liquide de refroidissement du moteur

Pour éviter tout risque de brûlures, ne vidanger jamais le liquide de refroidissement lorsque le moteur est chaud.

—VIDANGE DU LIQUIDE DE REFROIDISSEMENT—

1. Placer le système de climatisation comme suit pour éviter au liquide de refroidissement de rester dans le système.

a. Mettre la clé de contact sur “ON” et régler la commande de température sur la position de chaud maximum.

b. Patienter 10 secondes avant de mettre le contact d’allumage sur ‘‘OFF’’.

2. Ouvrir le bouchon de vidange au bas du radiateur et retirer le bouchon de remplissage du radiateur pour vidanger le liquide de refroidissement.
3. Déposer le réservoir, vidanger le liquide de refroidissement, puis nettoyer le réservoir.

- **Veiller à ce que le liquide de refroidissement ne coule pas sur les courroies d’entraînement.**

4. Retirer le bouchon de purge du bloc-cylindres.
5. Vérifier si le liquide de refroidissement vidangé présente des traces de rouille, de corrosion ou de décoloration. Si le liquide est contaminé, rincer le circuit de refroidissement du moteur, se référer à MA-3016, ‘‘RINÇAGE DU CIRCUIT DE REFROIDISSEMENT’’.

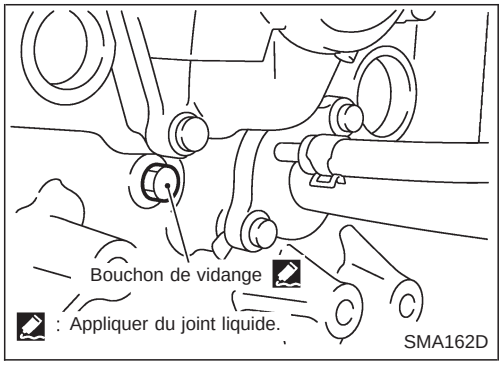

—REMPLISSAGE DE LIQUIDE DE REFROIDISSEMENT—

1. Reposer le réservoir, le bouchon de vidange du radiateur, et les bouchons de vidange du bloc-cylindres.

- Appliquer du produit d’étanchéité sur le filetage du bouchon de vidange du bloc-cylindres.
  : 8 - 11 N·m (0,8 - 1,2 kg-m)

2. Remplir le radiateur de liquide de refroidissement par le goulot de remplissge du bouchon de radiateur à une vitesse maximum de 2ℓ/min.

- **Utiliser du liquide de refroidissement antigel d’origine NISSAN ou équivalent mélangé avec de l’eau (distillée ou déminéralisée).**

Se référer à MA-3008, ‘‘LIQUIDES ET LUBRIFIANTS CONSEILLES’’.

PRECAUTION :

Si la vitesse de remplissage est trop importante, il se peut que de l’air s’introduise avec le liquide de refroidissement. S’assurer de respecter les vitesses de remplissage de liquide de refroidissement indiquées ci-dessus.

Simpo PDF Merge and Split Unregistered Version - http://www.simpopdf.com

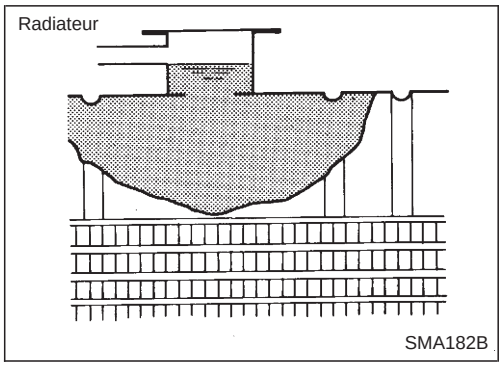

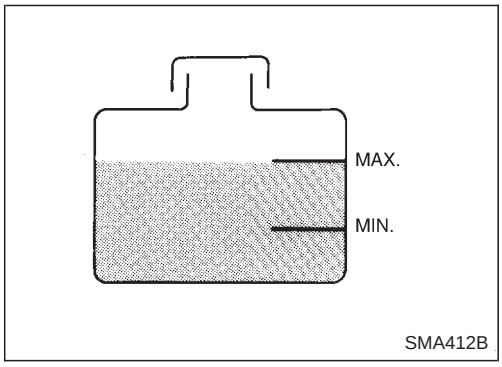

Remplacement du liquide de refroidissement du moteur (Suite)

Capacité en liquide de refroidissement
Capacité du réservoir :
0,7 ℓ

3. Remplir le réservoir jusqu'au repère MAX.
4. Faire chauffer le moteur à une température de fonctionnement normal sans que le bouchon du radiateur soit en place.

- **Si le liquide de refroidissement déborde de l'orifice de remplissage du radiateur, installer un bouchon de remplissage.**

5. Faire tourner le moteur à 3 000 tr/mn pendant 10 secondes puis revenir au régime de ralenti avec le bouchon de radiateur fermé.

- Répéter l'opération deux ou trois fois.

Surveiller la jauge de température du liquide de refroidissement pour éviter que le moteur ne surchauffe.

6. Arrêter le moteur et le laisser refroidir.

- Refroidir à l'aide d'un ventilateur pour réduire le temps de refroidissement.
- Si nécessaire, remplir le radiateur jusqu'au goulot de remplissage.

7. Remplir le réservoir avec du liquide de refroidissement jusqu'au repère ''MAX.''.
8. Répéter la procédure de l'étape 4 à l'étape 7 deux fois ou plus avec le bouchon de radiateur installé jusqu'à ce que le niveau de liquide de refroidissement ne diminue plus.
9. Vérifier si le circuit de refroidissement a des fuites lorsque le moteur tourne.
10. Faire chauffer le moteur, et vérifier le bruit d'écoulement du liquide de refroidissement tout en emballant le moteur du ralenti à 3 000 tours et en réglant la commande de température sur différentes positions entre ''COOL'' et ''HOT''.

- Le robinet d'eau du chauffage doit émettre des bruits.

11. Si un bruit se fait entendre, purger l'air du circuit de refroidissement en répétant les étapes 4 à 7 jusqu'à ce que le niveau du liquide de refroidissement ne diminue plus.

- **Nettoyer l'excédent de liquide de refroidissement moteur.**

— RINÇAGE DU CIRCUIT DE REFROIDISSEMENT —

1. Remplir le radiateur et le réservoir d'eau et reposer le bouchon de radiateur.
2. Le moteur doit tourner pour être amené à sa température normale de fonctionnement.
3. Lancer le moteur deux ou trois fois à vide.
4. Arrêter le moteur et attendre qu'il refroidisse.
5. Vidanger l'eau.
6. Répéter les étapes 1 à 5 jusqu'à ce que de l'eau claire s'écoule du radiateur.

Simpo PDF Merge and Split Unregistered Version - http://www.simpopdf.com

Vérification du circuit de refroidissement

ATTENTION :
Ne jamais retirer le bouchon de radiateur lorsque le moteur est encore chaud ; de serieuses brûlures pourraient être causées par un jet de liquide sous pression s'échappant du radiateur.
Envelopper le bouchon d'un épais chiffon et le retirer précautionneusement en le tournant d'abord d'un quart de tour afin de permettre à la pression accumulée de s'échapper puis en le dévissant totalement.

CONTROLE DES FLEXIBLES ET COLLIERS DU CIRCUIT DE REFROIDISSEMENT

Vérifier l'état général des flexibles et des colliers et voir s'il n'y a pas de fuites, de fissures, d'effilochages ou autres déteriorations ni de raccords desserrés.

VERIFICATION DU RADIATEUR

Vérifier si le radiateur est encrassé ou couvert de boue. Si nécessaire, nettoyer le radiateur comme suit.

- S'assurer de ne pas tordre ou endommager les ailettes du radiateur.
- Lorsque le radiateur est nettoyé sans dépose, retirer toutes les pièces environnantes tel que le ventilateur de refroidissement, la protection de ventilateur et l'avertisseur sonore. Puis entourer de bande adhésive le faisceau et les connecteurs afin de les imperméabiliser.

1. Verser de l'eau par le biais de flexible sur le côté arrière du noyau de radiateur de haut en bas.
2. Verser à nouveau de l'eau sur toutes les surfaces du noyau de radiateur une fois par minute.
3. Arrêter de laver si aucun liquide tâché ne coule du radiateur.
4. Insuffler de l'air dans le côté arrière du noyau de radiateur de haut en bas.

- Utiliser de l'air comprimé à moins de 490 kPa.

5. Insuffler à nouveau de l'air dans toutes les surfaces du noyau de radiateur une fois par minute jusqu'à que l'eau ne gicle plus.

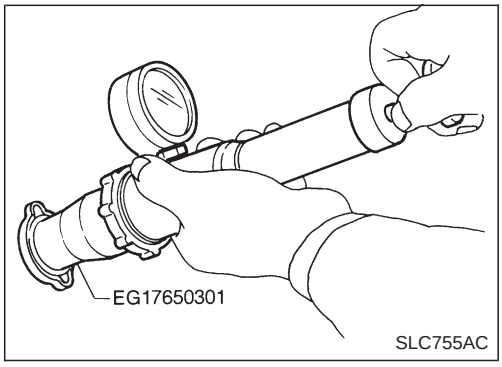

VERIFIER LE BOUCHON DU RADIATEUR

Pour vérifier le bouchon de radiateur, exerçer une pression au niveau du bouchon à l'aide d'un testeur.

Pression d'ouverture du bouchon de radiateur :
Standard
78 - 98 kPa
(0,78 - 0,98 bar, 0,8 - 1,0 kg/cm^2)
Limite
59 kPa (0,59 bar, 0,6 kg/cm^2)

Simpo PDF Merge and Split Unregistered Version - http://www.simpopdf.com

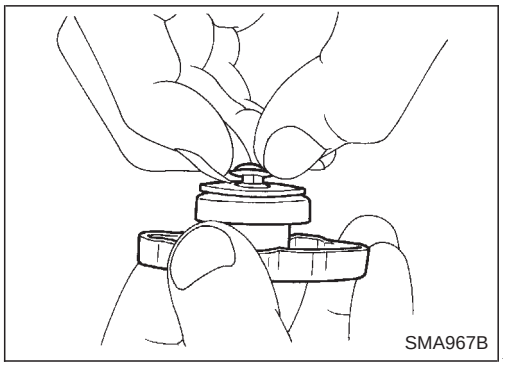
SMA967B

Vérification du circuit de refroidissement (Suite)

Tirer sur la soupape à dépression pour l'ouvrir.
Vérifier qu'elle se referme totalement une fois relâchée.

- Contrôler que la soupape à dépression n'ait pas été contaminé ou endommagée dans son logement.
- Déplacer la soupape à dépression et contrôler que les opérations d'ouverture et de fermeture se fassent nomalement.

PRECAUTION :

- **S'assurer que le moteur ait refroidi pour procéder aux contrôles.**
- **Avant de raccorder le testeur au radiateur, appliquer de l'eau ou du liquide de refroidissement longue durée (LLC) au joint.**
- Remplacer le bouchon de radiateur si des anomalies sont trouvées sur la soupape de dépression ou si la pression d'ouverture de la soupape est en dehors de la plage normale.

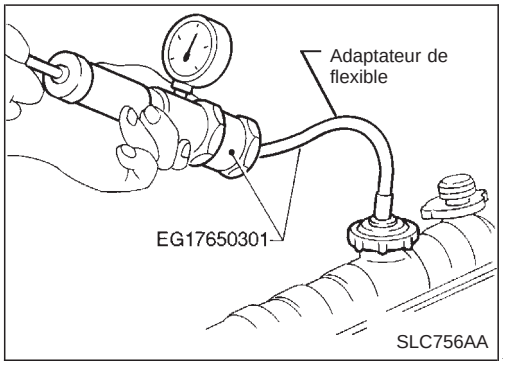

VERIFICATION DE FUITES DU CIRCUIT DE REFROIDISSEMENT

Vérifier s'il n'y a pas de fuites en appliquant une pression au circuit de refroidissement à l'aide du testeur de bouchon.

Pression d'essai :
157 kPa (1,57 bar, 1,6 kg/cm^2)

PRECAUTION :

- **Une pression supérieure à la pression spécifiée peut abîmer le radiateur.**
- **S'assurer que le moteur ait refroidi pour procéder aux contrôles.**
- **Utiliser un adaptateur de flexible entre le testeur de bouchon et le goulot de remplissage pour éviter toute déformation du goulot de remplissage.**
- **Si des anormalités sont trouvées, réparer ou remplacer les pièces défectueuses.**

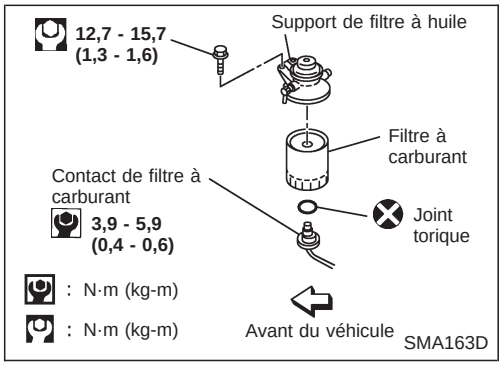

Vérification et remplacement du filtre à carburant et vidange de l'eau

Prendre garde de ne pas renverser de carburant dans le compartiment moteur. Placer un chiffon pour absorber le carburant.

VERIFICATION DU FILTRE A CARBURANT

Contrôler le filtre à carburant et vérifier s'il n'y a pas de fuites de carburant, de dommages et d'autres anomalies.

Simpo PDF Merge and Split Unregistered Version - http://www.simpopdf.com

Vérification et remplacement du filtre à carburant et vidange de l'eau (Suite)

REMPLACEMENT DU FILTRE A CARBURANT

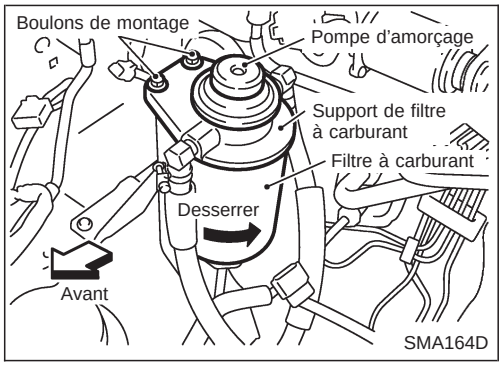

1. Débrancher le connecteur de faisceau et vidanger le carburant.
2. Retirer les deux écrous de repose. Retirer le filtre à carburant et le support du filtre à carburant du support latéral du véhicule. (Il n'est pas nécessaire de débrancher le flexible d'alimentation.)
3. Déposer le filtre à carburant à l'aide d'une clé à bande pour filtre.
4. Déposer le filtre à carburant et son capteur.

PRECAUTION :

Déposer le filtre à carburant sans renverser de carburant. Si du liquide a été renversé, nettoyer immédiatement. Faire surtout attention à ne pas renverser de carburant sur l'isolant de montage du moteur.

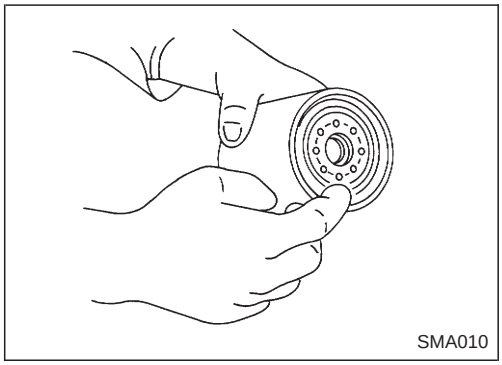

5. Essuyer la surface de montage du nouveau filtre à carburant sur le support de filtre et graisser légèrement sur le joint caoutchouc du filtre à carburant.
6. Visser le filtre à carburant jusqu'à ce qu'une légère résistance soit ressentie, puis le serrer de plus de 2/3 de tour supplémentaire.
7. Reposer le capteur du filtre à carburant sur le filtre à carburant neuf.
8. Purger l'air du filtre de carburant.

Se reporter à ''Purge d'air'' dans la section EC.

9. Démarrer le moteur et rechercher la présence de fuites.

VIDANGE DE L'EAU

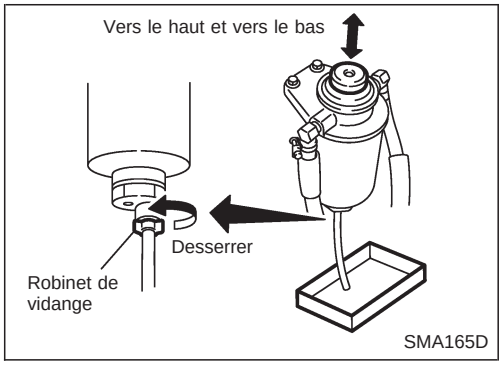

1. Vidanger l'eau comme suit.
   Desserrer le robinet de vidange et vidanger l'eau à l'aide de la pompe d'amorçage.
   Desserrer le robinet de vidange de quatre à cinq tours provoque le début de la vidange de l'eau. Ne pas déposer le robinet de vidange en le desserrant excessivement.

2. Purger l'air.

Se reporter à ''Purge d'air'' dans la section EC.

Simpo PDF Merge and Split Unregistered Version - http://www.simpopdf.com

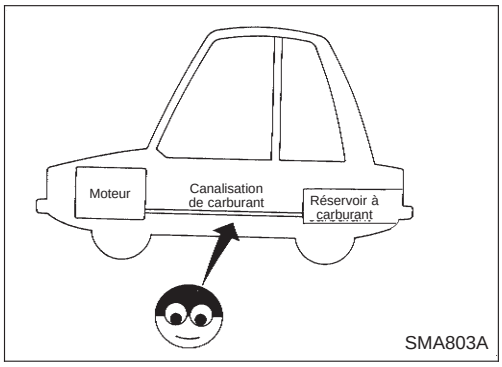

Vérification des canalisations d'alimentation

Vérifier les canalisations d'alimentation et le réservoir qui doivent être bien fixés, n'avoir ni fuites, ni fissures, ni dommages, ni raccords desserrés, ni usure, ni détériorations.

PRECAUTION :

Maintenir les pièces propres en utilisant de l'air comprimé lors du remontage.

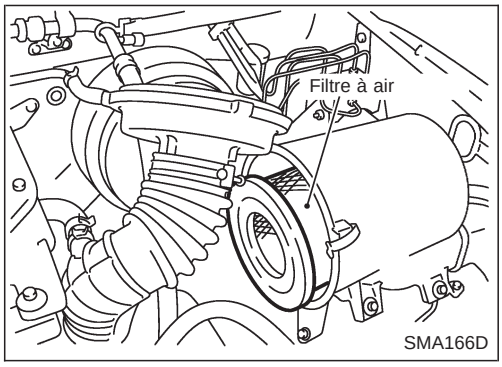

Nettoyage et remplacement du filtre à air

TYPE A PAPIER VISQUEUX

Le filtre à air à papier visqueux ne nécessite pas de nettoyage entre deux changements.

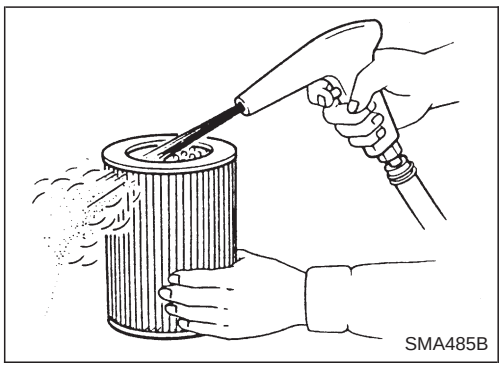

TYPE A PAPIER SEC

Nettoyer ou remplacer les pièces plus souvent en cas de conduite dans des environnements poussiéreux.

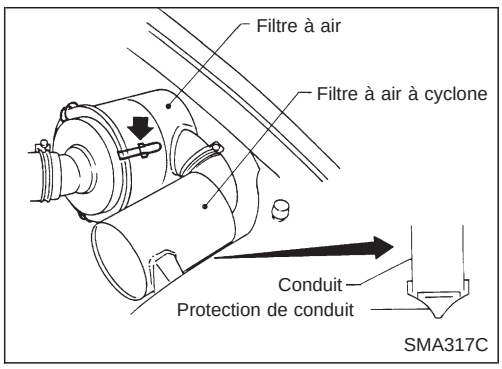

Contrôler le filtre à air à cyclone

Retirer la protection de la canalisation et contrôler l'encrassement de la canalisation. Retirer la poussière.

Simpo PDF Merge and Split Unregistered Version - http://www.simpopdf.com

Entretien du moteur

INSPECTION ET REGLAGE

Déflexion des courroies d'entraînement

Courroie	Déflexion de la courroie sous une charge de 98 N* mm		
	Courroie neuve	Courroie ajustée	Limite de resserrage
Courroie de compresseur de climatiseur	7 - 8	9,5 - 10,5	12,0
Courroie d'alternateur et de pompe à eau	6,5 - 7,5	8 - 9,5	12,5
Courroie de pompe de direction assistée	6,5 - 7,5	8 - 10	11,5

*: Moteur à froid

Vérification du circuit de refroidissement

Unité : kPa (bar, kg/cm^2)

Pression d'essai du circuit de refroidissement		157 (1,57, 1,6)
Pression de décharge du bouchon de radiateur	Standard	78 - 98 (0,78 - 0,98, 0,8 - 1,0)
	Limite	59 (0,59, 0,6)

Simpo PDF Merge and Split Unregistered Version - http://www.simpopdf.com

<SUPPLEMENT-III>

BOITE DE VITESSES MANUELLE

SECTION MT

AVIS DE MODIFICATION :

- Les informations concernant le moteur YD25DDTi ont été ajoutées.

TABLE DES MATIERES

FS5R30A

DEPOSE ET REPOSE.....3002
Repose.....3002

CARACTERISTIQUES ET VALEURS DE REGLAGE (SDS).....3004
Caractéristiques générales.....3004

Simpo PDF Merge and Split Unregistered Version - http://www.simpopdf.com

Repose

Moteurs YD25DDTi seulement (avec FS5R30A)

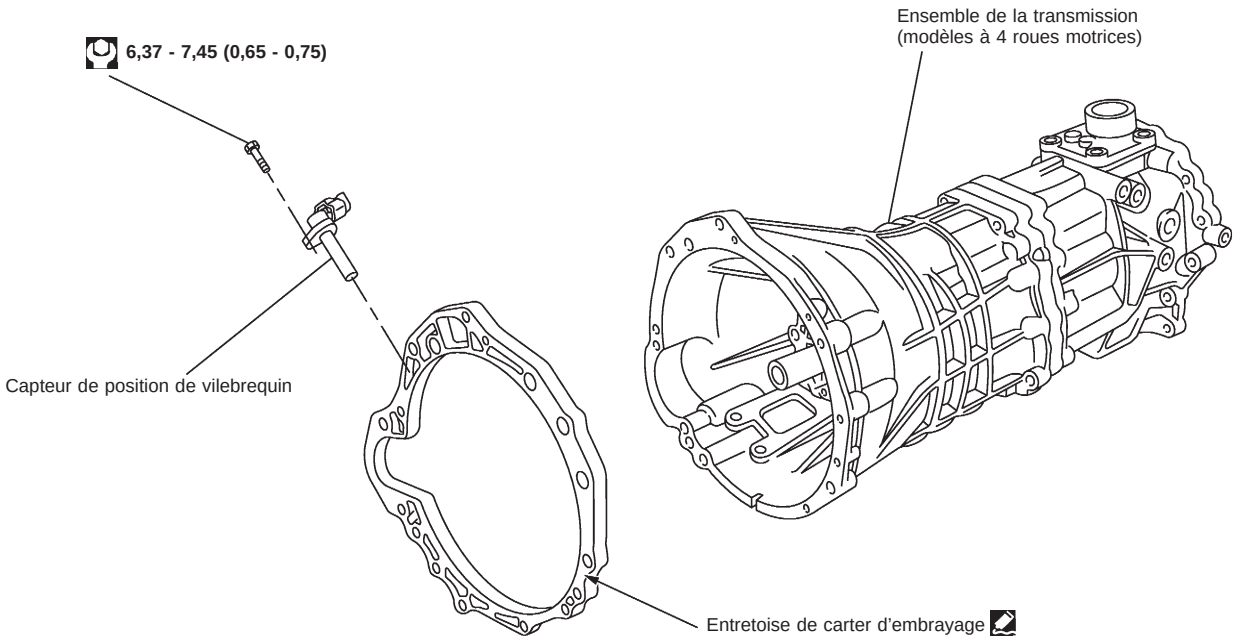

: N·m (kg-m)

: Enduire du joint liquide anaérobique d'origine, Three Bond TB1215, Loctite Pièce n° 51813 ou équivalent.

SMT141E

- Enduire de produit d'étanchéité comme indiqué ci-dessous.

Moteur YD25DDTi avec FS5R30A

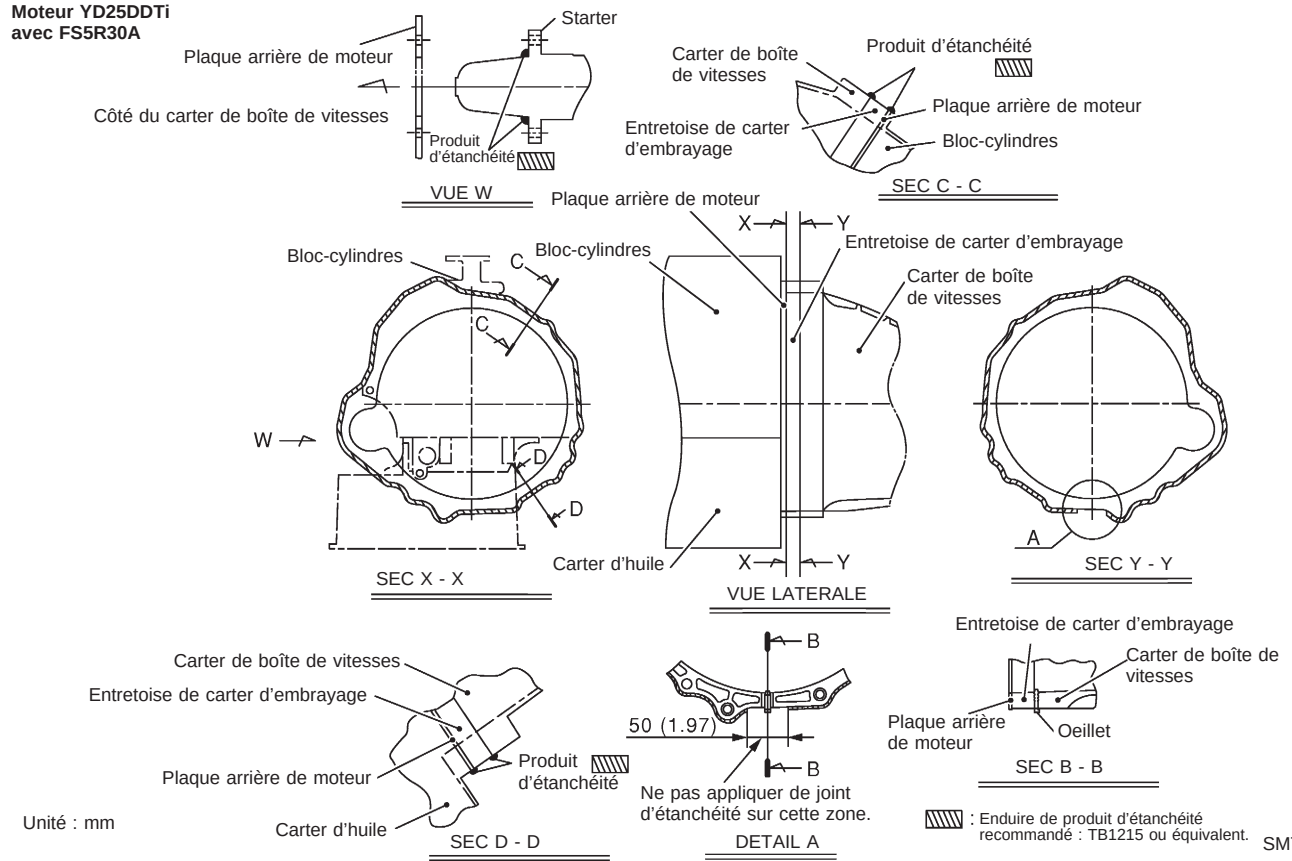

Unité : mm

: Enduire de produit d'étanchéité recommandé : TB1215 ou équivalent.

SMT142E

Simpo PDF Merge and Split Unregistered Version - http://www.simpopdf.com

Repose (Suite)

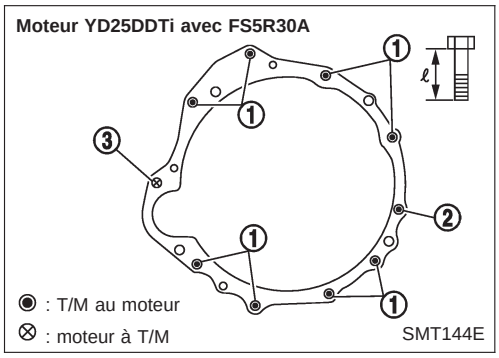

- Serrer les boulons fixant la boîte de vitesses.

Moteur YD25DDTi

Boulon n°	Couple de serrage N•m (kg-m)	ℓ mm
①	39 - 49 (4,0 - 5,0)	90 (3,54)
②	39 - 49 (4,0 - 5,0)	95 (3,74)
③	39 - 49 (4,0 - 5,0)	75 (2,95)

Simpo PDF Merge and Split Unregistered Version - http://www.simpopdf.com

Caractéristiques générales

Modèle concerné			2 roues motrices
			YD25DDTi
Boîte de vitesses			FS5R30A
Nombre de vitesses			5
Disposition des vitesses			
Type de synchronisation			Warner
Rapport de démultiplication			
	1ère		3,580
	2nde		2,077
	3ème		1,360
	4ème		1,000
	Surmultipliée		0,760
	Marche arrière		3,636
Nombre de dents			
	Arbre secondaire		
		Entraînement	22
		1ère	32
		2nde	30
		3ème	29
		Surmultipliée	23
		Marche arrière	30
	Arbre de renvoi		
		Entraînement	32
		1ère	13
		2nde	21
		3ème	31
		Surmultipliée	44
		Marche arrière	12
	Pignon intermédiaire de marche arrière		22
Contenance en huile		ℓ	2,8
Remarques	Pignon secondaire	Pignon de commande de renvoi	Reposé
		Pignon intermédiaire de marche arrière	Non reposé
	Synchro. de type anneau de synchro. double		Non reposé
	Synchro. de marche arrière		Reposé

Simpo PDF Merge and Split Unregistered Version - http://www.simpopdf.com

<SUPPLEMENT-III>

ARBRE DE TRANSMISSION & TRANSPORTATEUR DE DIFFERENTIEL

SECTION PD

AVIS DE MODIFICATION :
Les caractéristiques et valeurs de reglage (SDS) ont été changées.

TABLE DES MATIERES

CARACTERISTIQUES ET VALEURS DE REGLAGE (SDS) 3002
Arbre de transmission 3002
Pont 3003

Simpo PDF Merge and Split Unregistered Version - http://www.simpopdf.com

Arbre de transmission

CARACTERISTIQUES GENERALES

Modèles à deux roues motrices

Modèle concerné		YD25DDTi		
		Sans ABS (sauf roue 16-inch)	Sans ABS (roue 16-inch)	Avec ABS
Modèle d'arbre de transmission		3S80B		
Nombre de joints		3		
Type d'accouplement avec la boîte		Type à manchon		
Type de roulement de tourillons		Type solidaire (type démontable)		
Longueur d'arbre (entre croisillons) mm	1ère	642	667	642
	2nde	1 005	984	979
Diamètre externe de l'arbre mm	1ère	65	75	65
	2nde	65	75	65

Modèles à quatre roues motrices

Modèle concerné		YD25DDTi	YD25DDTi
Emplacement		Avant	Arrière
Modèle d'arbre de transmission		2F71H	3S80B
Nombre de joints		2	3
Type d'accouplement avec la boîte		Type à flasque	Type à manchon
Type de roulement de tourillons		Type solidaire (type démontable)	
Longueur d'arbre (entre croisillons) mm	1ère	565	372
	2nde	—	872
Diamètre externe de l'arbre mm	1ère	50,8	65,0
	2nde	—	65,0

Simpo PDF Merge and Split Unregistered Version - http://www.simpopdf.com

Pont

CARACTERISTIQUES GENERALES

Modèles deux roues motrices

Moteurs	YD25DDTi (sauf roue 16-inch)		YD25DDTi (roue 16-inch)	
Modèle de pont	Standard	Option	Standard	Option
	C200			
	4-pignons	LSD	2-pignons	LSD
Contenance en huile (environ) ℓ	1,3			
Rapport de démultiplication	3,9		4,625	
Nombre de dents (couronne/ pignon d'attaque)	39/10		37/8	

Modèles quatre roues motrices

Moteur	YD25DDTi		KA24DE
Modèle de pont avant	R180A		R180A
	4-pinion		
Contenance en huile (environ) ℓ	1,3		
Modèle de pont arrière	Standard	Option	Standard
	C200		
	4-pignons	LSD	4-pignons
Contenance en huile (environ) ℓ	2,8		
Rapport de démultiplication	4,625		
Nombre de dents (couronne/ pignon d'attaque)	37/8		

Simpo PDF Merge and Split Unregistered Version - http://www.simpopdf.com

<SUPPLEMENT-III>

SYSTEME DE RETENUE

SECTION RS

AVIS DE MODIFICATION :

- Le boulon de fixation du boîtier de capteurs de diagnostic a été changé.
- Le boulon de fixation du passager avant a été changé.
- Le module de coussin gonflable du conducteur a été changé.
- Le diagnostic des défauts a été modifié.
- La procédure de déploiement du module de coussin gonflable du conducteur a été modifiée.

TABLE DES MATIERES

PRECAUTION 3002
"COUSSIN GONFLABLE" et "PRETENSIONNEUR DE CEINTURE DE SECURITE" du système de retenue supplémentaire (SRS) 3002
SYSTEME DE RETENUE SUPPLEMENTAIRE (SRS) 3003
Précautions pour l'entretien du "COUSSIN GONFLABLE" (AIR BAG) et du "PRETENSIONNEUR DE CEINTURE DE SECURITE" du système de retenue supplémentaire 3003
Outillage spécial 3003
Outil en vente dans le commerce 3004
Dépose et repose - Boîtier de capteurs de diagnostic 3005
Dépose - Module de coussin gonflable du conducteur et câble spiralé 3006
Repose - Module de coussin gonflable du conducteur et câble spiralé 3007
Dépose - module de coussin gonflable avant côté passager 3009
Repose - Module de coussin gonflable du passager avant 3010
Mise au rebut du module de coussin gonflable et du prétensionneur de ceinture de sécurité .. 3011
DIAGNOSTICS DES DEFAUTS - Système de retenue supplémentaire (SRS) 3015
Introduction des diagnostics des défauts 3015
Comment effectuer les diagnostics de défaut pour effectuer une réparation rapide et précise 3017
Schéma de câblage - SRS -/Conduite à gauche 3019
Autodiagnostic 3021
Diagnostics des défauts du témoin d'avertissement "AIR BAG" 3040
DIAGNOSTIC DE COLLISION 3042

Simpo PDF Merge and Split Unregistered Version - http://www.simpopdf.com

‘‘COUSSIN GONFLABLE’’ et ‘‘PRETENSIONNEUR DE CEINTURE DE SECURITE’’ du système de retenue supplémentaire (SRS)

Utilisés avec une ceinture de sécurité, le ‘‘COUSSIN GONFLABLE’’ et le ‘‘PRETENSIONNEUR DE CEINTURE DE SECURITE’’ du système de retenue supplémentaire contribuent à réduire les risques et la gravité des blessures subies par le conducteur et le passager avant en cas de collision frontale. La composition du SRS disponible pour le MODELE D22 est la suivante (la composition varie selon les pays et l’équipement en option) :
module de coussin gonflable côté conducteur (situé dans le moyeu du volant), module de coussin gonflable passager avant (situé sur le tableau de bord côté passager), prétensionneurs de ceinture de sécurité, boîtier de capteurs de diagnostic, témoin, faisceau de câblage et câble spiralé.

ATTENTION :

- **Pour ne pas affecter le fonctionnement du SRS, ce qui augmenterait les risques de blessures graves ou mortelles en cas de collision entraînant le déploiement du coussin gonflable, toutes les opérations d’entretien doivent être effectuées par un concessionnaire NISSAN agréé.**
- **Un entretien incorrect, y compris une mauvaise dépose ou repose du SRS, peut entraîner des risques de blessures dus au déploiement accidentel du système.**
- **Ne pas utiliser d’équipement d’essai électrique sur les circuits connexes du SRS sauf sur indication de ce manuel de réparation. Le faisceau de câblage du SRS peut être identifié à l’aide d’un connecteur de faisceau jaune.**

Simpo PDF Merge and Split Unregistered Version - http://www.simpopdf.com

Précautions pour l'entretien du ''COUSSIN GONFLABLE'' (AIR BAG) et du ''PRETENSIONNEUR DE CEINTURE DE SECURITE'' du système de retenue supplémentaire.

●Ne pas utiliser d'équipement d'essai électrique pour vérifier le SRS, sauf instructions contraires données dans ce manuel de réparation.
●Avant de procéder à l'entretien du SRS, couper le contact, débrancher les câbles de masse de la batterie et attendre au moins 3 minutes.
Le coussin gonflable et le prétensionneur de ceinture de sécurité peuvent encore se déployer dans un délai de trois minutes environ après que les câbles aient été débranchés. Attendre par conséquent au moins 3 minutes avant de travailler sur les connecteurs ou les câbles du SRS.

- Le circuit du capteur de diagnostic doit toujours être reposé avec ses marques de flèche ''⇦'' dirigées vers l'avant du véhicule pour un fonctionnement adéquat. Vérifier également que le boîtier de capteurs de diagnostic ne présente pas de fissures, déformations ou traces de rouille avant de le reposer. Le remplacer le cas échéant.
- Le câble spiralé doit être aligné avec le point mort car le nombre de tours qu'il peut faire est limité. Ne pas tenter de tourner le volant ou la colonne de direction après la dépose du pignon de direction.
- Manipuler le module de coussin gonflable avec précaution. Toujours placer les modules de coussin gonflable conducteur et passager avec le côté rembourré dirigé vers le haut.
- Exécuter l'auto-diagnostic pour contrôler que l'ensemble du SRS fonctionne normalement après avoir remplacé n'importe quel composant.
- Après le déploiement du coussin gonflable, l'ensemble de tableau de bord avant devra être remplacé si endommagé.

Outillage spécial

Numéro de l'outil Nom de l'outil	Description	
KV99106 Outil de déploiement	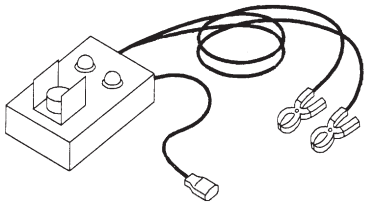 NT357	Mise au rebut du module de coussin gonflable
KV99105300 Support de module de coussin gonflable.	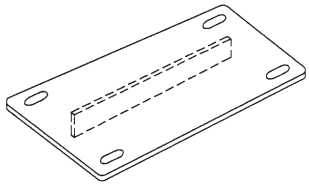 NT354	Plaque d'ancrage du module de coussin gonflable
KV99108200 Adaptateurs d'outil de déploiement pour prétensionneur de ceinture de sécurité	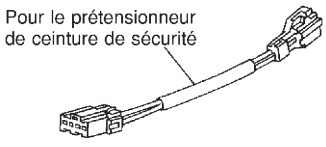 NT721	

Simpo PDF Merge and Split Unregistered Version - http://www.simpopdf.com

Outillage spécial (Suite)

Numéro de l'outil Nom de l'outil	Description
KV99108300 Adaptateurs de l'outil de déploiement pour coussin gonflable passager	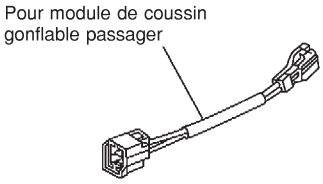 NT776
KV99109700 Adaptateur de l'outil de déploiement pour coussin gonflable côté conducteur	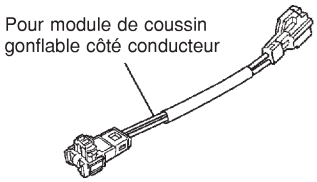 JRS995

Outil en vente dans le commerce

Nom de l'outil	Description	Caractéristiques
Tournevis à empreinte anti-effraction pour vis torx	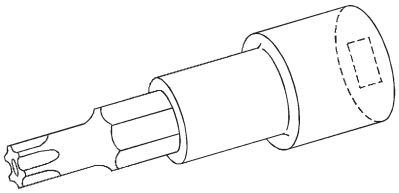 NT757	Taille : T30

Simpo PDF Merge and Split Unregistered Version - http://www.simpopdf.com

Dépose et repose — Boîtier de capteurs de diagnostic

PRECAUTION :

- **Avant de procéder à l'entretien du SRS, couper le contact, débrancher les câbles de masse de la batterie et attendre au moins 3 minutes.**
- **Ne pas réutiliser les boulons usés après la dépose : les remplacer par de nouveaux boulons.**
- **Vérifier que le boîtier de capteurs de diagnostic est reposé correctement.**
- **Vérifier que le boîtier de capteurs de diagnostic n'est pas déformé, bosselé, fissuré ou rouillé. S'il est visiblement endommagé, le remplacer par un neuf.**
- **Vérifier que les supports du boîtier de capteurs de diagnostic ne sont pas déformés ou rouillés.**
- **Après avoir remplacé le boîtier de capteurs de diagnostic, vérifier le fonctionnement du SRS et effectuer son autodiagnostic. Se reporter à ''Auto-diagnostic'' pour plus de détails (RS-3021).**
- **Ne pas essayer de démonter le boîtier de capteurs de diagnostic.**
- **Remplacer le boîtier de capteurs de diagnostic, s'il est tombé ou a subi un choc.**

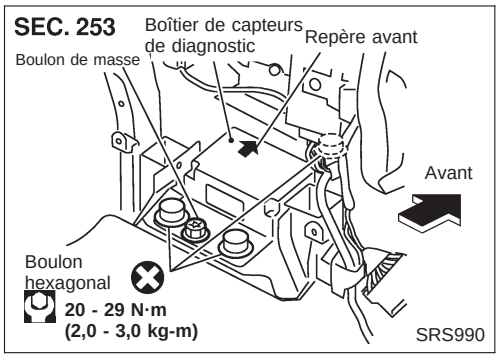

DEPOSE DU BOITIER DE CAPTEURS DE DIAGNOSTIC

1. Débrancher les connecteurs de module de coussin gonflable côté conducteur et côté passager. Débrancher également le connecteur de prétensionneur de ceinture de sécurité (modèles destinés au Moyen-Orient).
2. Déposer le tableau de bord. Se reporter au manuel de réparation (N° de pub. SM9F-D22BE0E), ''TABLEAU DE BORD'' dans la section BT.
3. Déposer la conduite d'air.
4. Débrancher le connecteur du boîtier de capteurs de diagnostic.
5. Déposer le boulon de masse et les boulons spéciaux du boîtier de capteurs de diagnostic à l'aide de l'EMBOUT TORX DE SECURITE (Taille T50).
   Puis déposer le boîtier de capteurs de diagnostic.

NOTE :

- **Pour la repose, procéder dans l'ordre inverse de la dépose.**
- **Après remplacement, effectuer l'auto-diagnostic du SRS. Se reporter à ''Autodiagnostic'' pour plus de détails (RS-3021).**

PRECAUTION :

- **Ne pas réutiliser les anciens boulons hexagonaux et les boulons de masse; les remplacer respectivement par de nouveaux boulons.**

Simpo PDF Merge and Split Unregistered Version - http://www.simpopdf.com

Dépose — Module de coussin gonflable du conducteur et câble spiralé

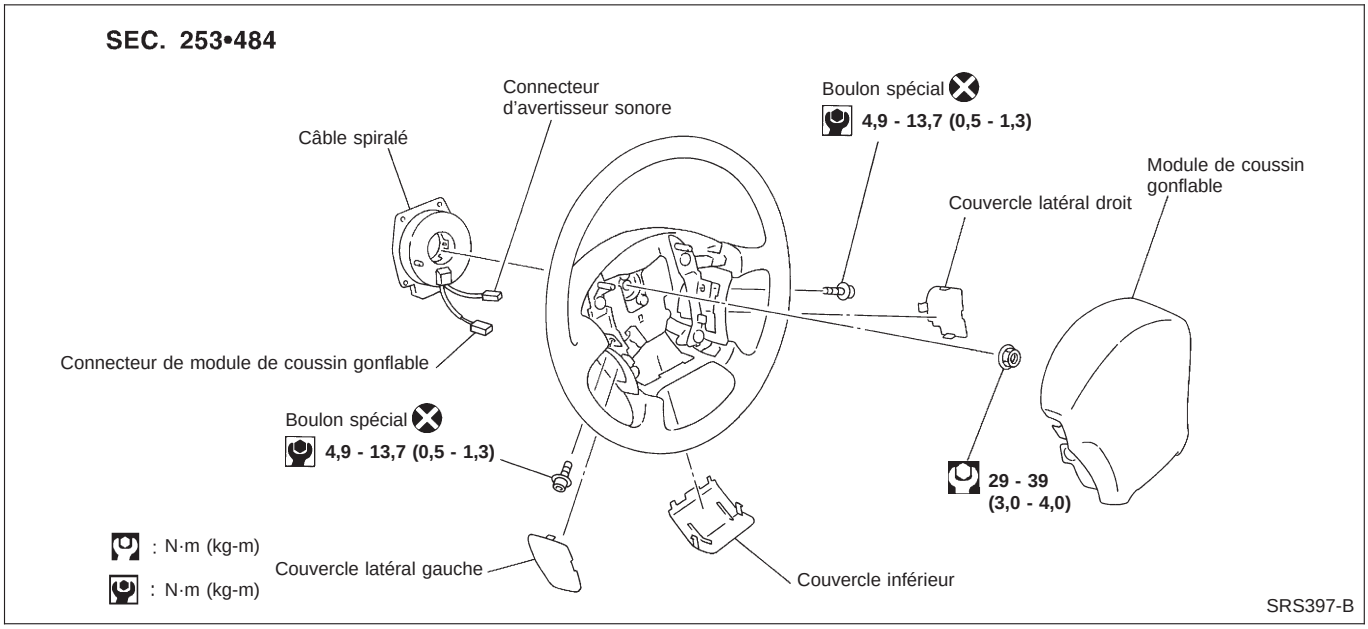

PRECAUTION :

- **Avant de procéder à l'entretien du SRS, couper le contact, débrancher les câbles de masse de la batterie et attendre au moins 3 minutes.**
- **Toujours se positionner sur le côté du module de coussin gonflable.**

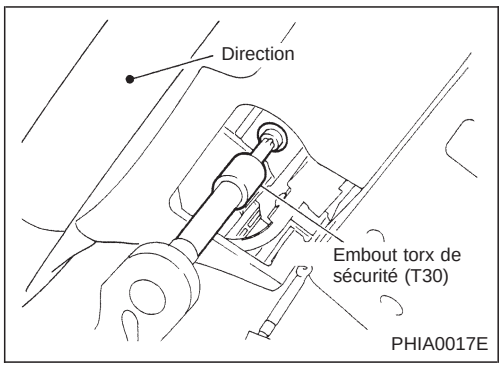

1. Déposer le couvercle latéral. A l'aide d'un TOURNEVIS A EMPREINTE ANTI-EFFRACTION POUR VIS TORX (Taille T50), déposer les boulons spéciaux gauche et droit. Le module de coussin gonflable peut alors être déposé.
2. Déposer le couvercle inférieur.

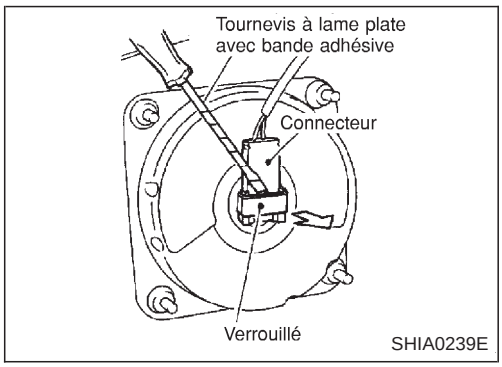

3. Débrancher le connecteur de faisceau de coussin gonflable. Déposer ensuite le module de coussin gonflable côté conducteur.

PRECAUTION :

Lors de la dépose du connecteur du module de coussin gonflable côté conducteur, insérer le dispositif de blocage à l'aide d'un tournevis à lame plate recouvert de bande adhésive isolante. Puis appuyer sur le dispositif de blocage.

Simpo PDF Merge and Split Unregistered Version - http://www.simpopdf.com

Dépose — Module de coussin gonflable du conducteur et câble spiralé (Suite)

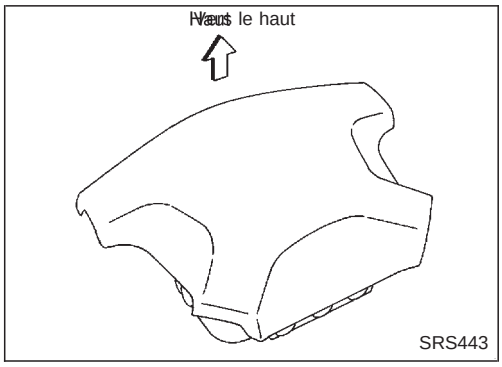

SRS443

PRECAUTION :

- **Toujours poser le module de coussin gonflable avec la garniture dirigée vers le haut.**
- **Ne pas tenter de démonter le module de coussin gonflable.**
- **Ne pas réutiliser les boulons une fois déposés ; les remplacer par des neufs.**
- **Ne pas introduire d'objets (tournevis, etc.) dans le connecteur du module de coussin gonflable.**

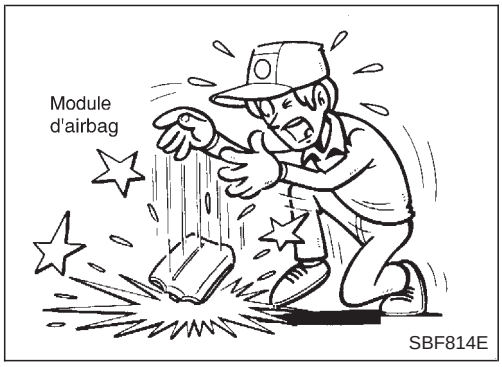

SBF814E

- **Remplacer le module de coussin gonflable s'il est tombé ou s'il a subi un choc.**
- **Ne pas exposer le module de coussin gonflable à des températures supérieures à 90°C.**
- **Ne pas laisser de l'huile, de la graisse ou de l'eau entrer en contact avec le module de coussin gonflable.**

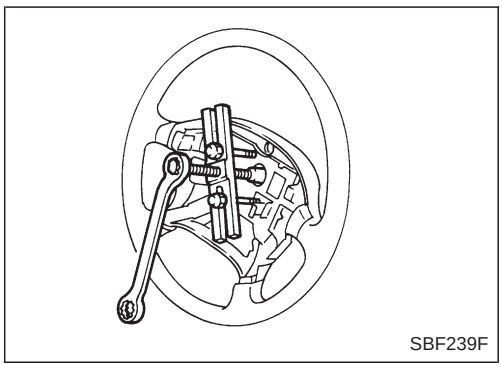
SBF239F

3. Régler le volant en position neutre.
4. Débrancher le connecteur d'avertisseur sonore et retirer les écrous.
5. A l'aide d'un extracteur de volant, déposer le volant. Veiller à ne pas trop serrer le boulon de l'extracteur sur le volant.

PRECAUTION :

- **Ne pas taper ou heurter le volant de direction.**

6. Déposer le couvercle de colonne de direction.

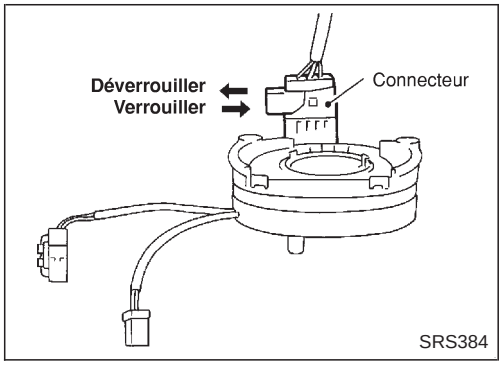

SRS384

7. Déposer les quatre vis. Puis déverrouiller le connecteur de câble spiralé et le déconnecter. Le câble spiralé peut alors être déposé.

PRECAUTION :

- **Ne pas essayer de déposer le câble spiralé.**
- **Ne pas lubrifier le câble spiralé.**

Repose — Module de coussin gonflable du conducteur et câble spiralé

1. Positionner les roues avant en ligne droite.
2. Brancher le connecteur du câble spiralé. Puis verrouiller le connecteur et resserrer les vis. Reposer le couvercle de colonne de direction.

Simpo PDF Merge and Split Unregistered Version - http://www.simpopdf.com

Repose — Module de coussin gonflable du conducteur et câble spiralé (Suite)

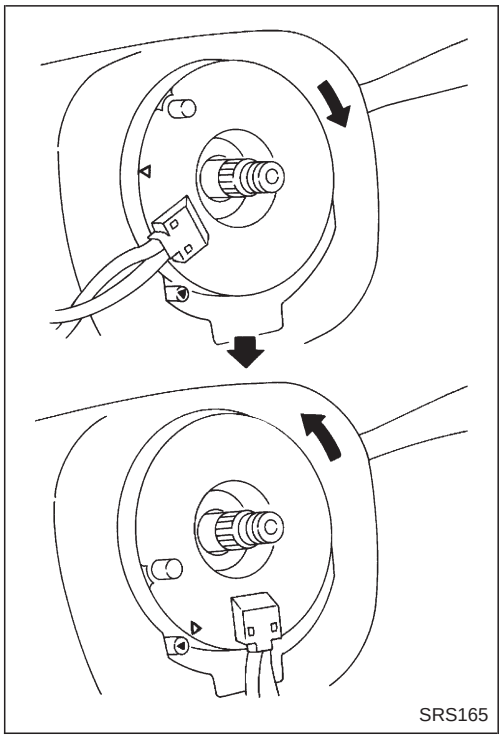
SRS165

3. S'assurer que le câble spiralé est sur la position neutre. Pour obtenir la position neutre, le tourner d'environ 2,5 tours vers la gauche à partir de la position de butée droite. Aligner les deux marques (⧖).

PRECAUTION :

- **Un câble spiralé mal monté risque de se rompre lorsque le volant est tourné.**
  Par ailleurs, la timonerie de direction étant déconnectée, le câble risque de se rompre si l'on tourne le volant au delà d'un nombre limité de tours.
  Le câble spiralé peut effectuer jusqu'à 2,5 tours vers la droite et la gauche depuis la position neutre.

4. Brancher le connecteur de câble spiralé et serrer les vis. Reposer le couvercle de colonne de direction.

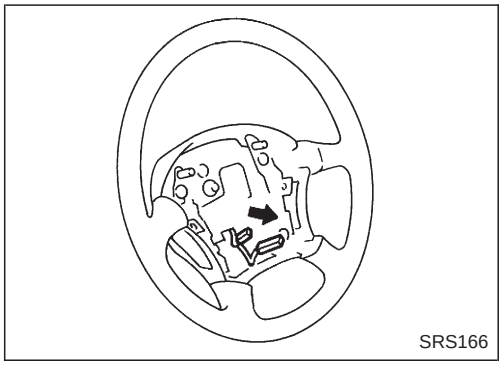
SRS166

5. Reposer le volant, les goupilles de guidage du câble spiralé de réglage du volant, puis tirer le câble spiralé à travers celles-ci.
6. Brancher le connecteur d'avertisseur sonore et engager le câble spiralé dans les cliquets du volant. Ecarter le connecteur du module de coussin gonflable de l'orifice du couvercle inférieur du volant.
7. Serrer l'écrou.
   ⧖: 29 - 39 (3,0 - 4,0 kg-m)

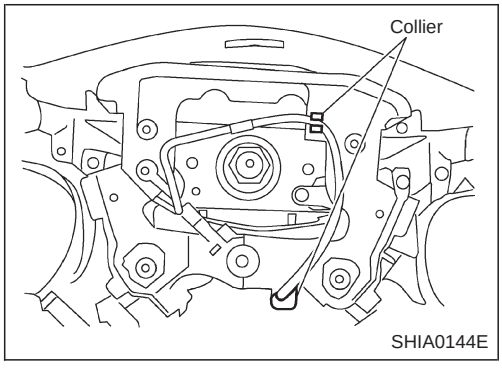

SHIA0144E

8. Fixer le faisceau de module de coussin gonflable et le connecteur de faisceau au collier.
9. Brancher le connecteur du module de coussin gonflable et de l'avertisseur sonore.

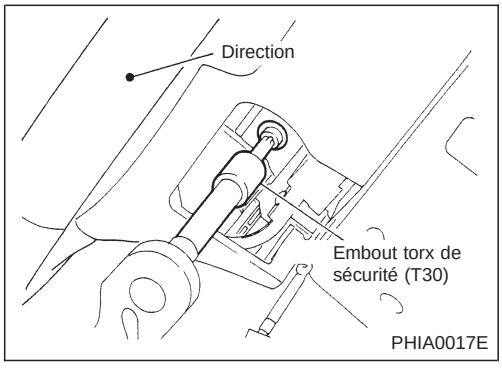

PHIA0017E

10. Mettre le module de coussin gonflable en position et le fixer avec des boulons spéciaux neufs.

- **Toujours effectuer l'entretien du module de coussin gonflable depuis le côté.**

11. Reposer tous les couvercles.
12. Exécuter l'autodiagnostic afin de s'assurer du fonctionnement normal du SRS. (Utiliser CONSULT ou contrôler le témoin d'avertissement). Se reporter à RS-3021.
    Avant d'effectuer l'autodiagnostic, brancher les deux câbles de batterie.
13. Braquer le volant à fond vers la gauche, puis vers la droite pour s'assurer que le câble spiralé est en position neutre.

Simpo PDF Merge and Split Unregistered Version - http://www.simpopdf.com

Repose — Module de coussin gonflable du conducteur et câble spiralé (Suite)

Si le témoin d'avertissement de coussin gonflable clignote ou reste allumé (en mode utilisateur), cela signifie que le câble spiralé peut se rompre en raison de sa position incorrecte. Effectuer l'autodiagnostic de nouveau (en utilisant CONSULT-II ou le témoin). Si un défaut est trouvé, remplacer le câble spiralé par un neuf.

14. Procéder à un nouvel autodiagnostic pour s'assurer qu'aucun défaut de fonctionnement n'est détecté.

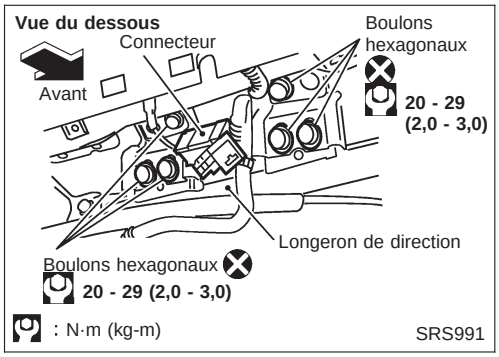

Dépose — module de coussin gonflable avant côté passager

PRECAUTION :

- **Avant de procéder à l'entretien du SRS, couper le contact, débrancher les câbles de masse de la batterie et attendre au moins 3 minutes.**
- **Toujours se positionner sur le côté du module de coussin gonflable ou en dessous de celui-ci.**

1. Déposer la boîte à gants. Se reporter à ''TABLEAU DE BORD'' dans la section BT du manuel de réparation (N° de publicationSM9F-D22BE0E) pour plus de détails.
2. Déconnecter le connecteur du module de coussin gonflable du passager.
3. Déposer les boulons et les boulons spéciaux hexagonaux du module de coussin gonflable du passager avant à l'aide d'un EMBOUT TORX DE SECURITE (taille T30).
4. Déposer l'ensemble de tableau de bord. Se reporter au manuel de réparation(N° de pub. SM9F-D22BE0E) ''TABLEAU DE BORD'' dans la section BT pour plus de détails.
5. Déposer le conduit d'air du tableau de bord.
6. Déposer les boulons des cotés droit et gauche du coussin gonflable du passager avant. Puis enlever le module de coussin gonflable de l'ensemble du tableau de bord.

- Le module de coussin gonflable est lourd et doit être saisi à deux mains lors de la dépose.

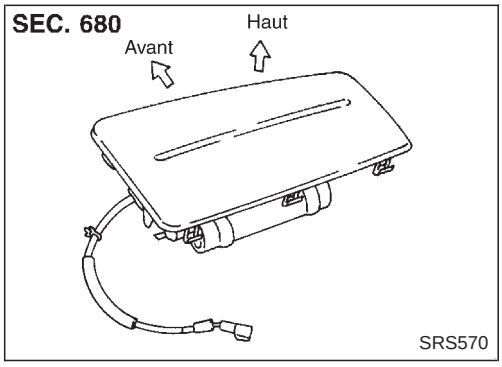

PRECAUTION :

- **Toujours poser le module de coussin gonflable avec la garniture dirigée vers le haut.**
- **Ne pas tenter de démonter le module de coussin gonflable.**
- **Ne pas réutiliser les boulons une fois déposés ; les remplacer par des neufs.**
- **Ne pas introduire d'objets (tournevis, etc.) dans le connecteur du module de coussin gonflable.**

Simpo PDF Merge and Split Unregistered Version - http://www.simpopdf.com

Dépose — module de coussin gonflable avant côté passager (Suite)

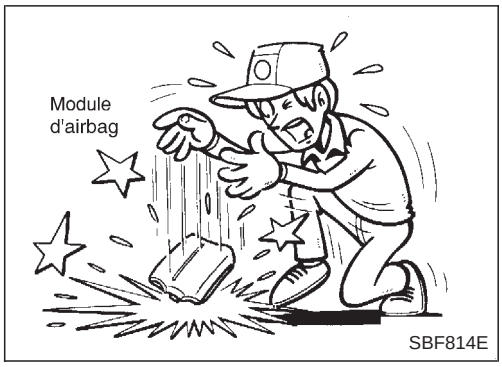

- **Remplacer le module de coussin gonflable s'il est tombé ou s'il a subi un choc.**
- **Ne pas exposer le module de coussin gonflable à des températures supérieures à 90°C.**
- **Ne pas laisser de l'huile, de la graisse ou de l'eau être en contact avec le module de coussin gonflable.**

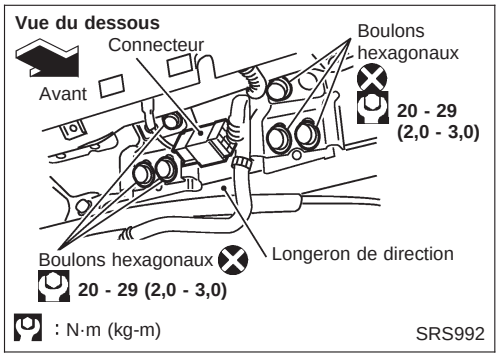

Repose — Module de coussin gonflable du passager avant

- **Toujours se positionner sur le côté du module de coussin gonflable ou en dessous de celui-ci.**

1. Reposer le module de coussin gonflable du passager avant dans le tableau de bord.
2. Reposer le conduit d'air sur le tableau de bord.
3. Reposer le tableau de bord.

- S'assurer que le faisceau n'est pas coincé entre la partie arrière du module de coussin gonflable et le longeron de direction.

4. Monter le module de coussin gonflable côté passager avant sur le longeron de direction.
5. Brancher le connecteur du module de coussin gonflable.
6. Reposer la boîte à gants.

Simpo PDF Merge and Split Unregistered Version - http://www.simpopdf.com

Mise au rebut du module de coussin gonflable et du prétensionneur de ceinture de sécurité

●Avant de mettre au rebut le module de coussin gonflable et le prétensionneur de ceinture de sécurité, ou des véhicules équipés de tels systèmes, déployer lesdits systèmes. Si ces systèmes ont déjà été déployés lors d'un accident, les mettre au rebut en se reportant au chapitre ''MISE AU REBUT DU MODULE DE COUSSIN GONFLABLE (AIR BAG) ET DU PRETENSIONNEUR DE CEINTURE DE SECURITE'' (RS-3014).

- Lors du déploiement du module de coussin gonflable et du prétensionneur, toujours utiliser l'outil spécial ; outil de déploiement KV99106400.
- Se tenir à une distance minimum de 5 m lors du déploiement du module de coussin gonflable et du prétensionneur.
- Le déploiement du module de coussin gonflable et du prétensionneur de ceinture de sécurité s'accompagne d'une détonation bruyante et d'un dégagement de fumée. La fumée n'est pas nocive, mais on veillera toutefois à ne pas l'inhaler en raison de ses propriétés irritantes pouvant être à l'origine de suffocations.
- Ne jamais déployer plus d'un module de coussin gonflable à la fois.
- En raison de la température élevée des composants du module de coussin gonflable, ne pas toucher le module pendant au moins 30 minutes après le déploiement. Une fois le prétensionneur de ceinture de sécurité déployé, attendre 10 minutes avant de le toucher.
- Veiller à porter des gants lors de la manipulation d'un module de coussin gonflable et d'un prétensionneur de ceinture de sécurité déployés.
- Ne jamais verser d'eau sur un module de coussin gonflable ou un prétensionneur de ceinture de sécurité déployé.
- Se nettoyer les mains correctement une fois le travail fini.
- Garer le véhicule à l'extérieur dans un espace libre d'au moins 6 mètres de rayon avant de déployer un module de coussin gonflable ou un prétensionneur de ceinture de sécurité monté sur le véhicule.
- Utiliser un voltmètre pour s'assurer que la batterie du véhicule est chargée à fond.
- Ne pas mettre au rebut le module de coussin gonflable et le prétensionneur de ceinture de sécurité non déployés.

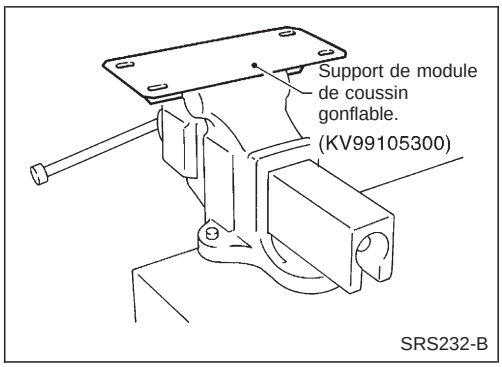

SRS232-B

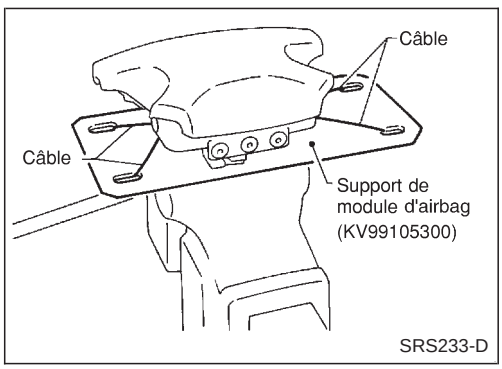

SRS233-D

PROCEDURE DE DEPLOIEMENT DU MODULE DE COUSSIN GONFLABLE (A L'EXTERIEUR DU VEHICULE)

A moins que le véhicule ne soit envoyé à la casse, il est déconseillé de déployer le coussin gonflable à l'intérieur du véhicule. Cette manœuvre peut endommager l'intérieur du véhicule.
Immobiliser le support de module de coussin gonflable (SST : KV99105300) dans un étau fixé sur une base solide pendant le déploiement.

Déploiement du module de coussin gonflable du conducteur (extérieur du véhicule)

1. A l'aide d'un câble, fixer le module de coussin gonflable au diamètre du support du module de coussin gonflable.
2. Fixer solidement dans un étau le support de module de coussin gonflable. (Outil spécial : KV99105300) assorti du module.

Simpo PDF Merge and Split Unregistered Version - http://www.simpopdf.com

Mise au rebut du module de coussin gonflable et du prétensionneur de ceinture de sécurité (Suite)

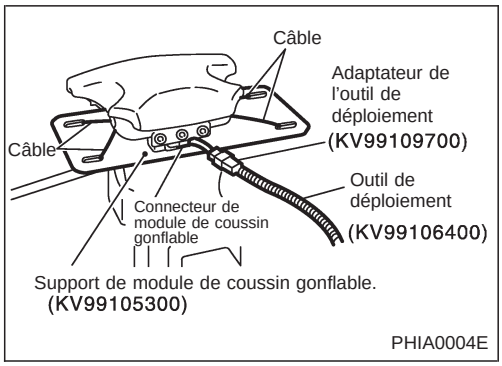

3. Brancher l'adaptateur de l'outil de déploiement (SST : KV99109700) à l'outil de déploiement (SST : KV99106400) et au connecteur du module de coussin gonflable.

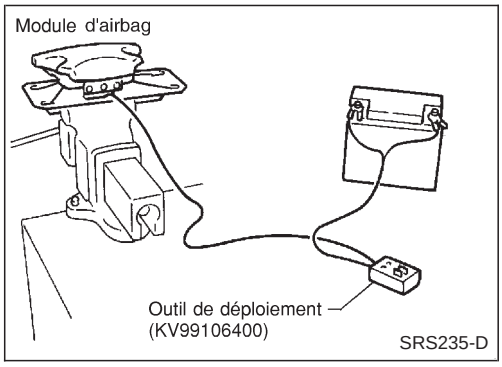

4. Brancher le clip rouge de l'outil de déploiement à la borne positive de batterie et le clip noir à la borne négative.
5. Le témoin à la droite de l'outil, sur lequel est indiqué ''outil de déploiement sous tension'', doit s'allumer en vert et non en rouge.
6. Appuyer sur l'interrupteur de l'outil de déploiement. Le témoin à la gauche de l'outil, sur lequel est indiqué ''tension du connecteur de coussin gonflable'' doit s'allumer et le module de coussin gonflable se déployer.

PRECAUTION :
Se tenir à une distance minimum de 5 m lors du déploiement du module de coussin gonflable du conducteur.

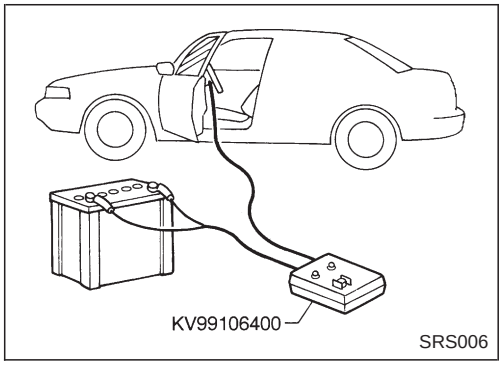

DEPLOIEMENT DU MODULE DE COUSSIN GONFLABLE (AIR BAG) ET DU PRETENSIONNEUR DE CEINTURE DE SECURITE INSTALLES SUR LE VEHICULE

Lors de la mise au rebut du véhicule, déployer les modules de coussins gonflables et les prétensionneurs installés sur le véhicule.

PRECAUTION :
Lors du déploiement du module de coussin gonflable ou du prétensionneur, s'assurer que le véhicule est vide.

1. Débrancher le câble de masse du véhicule et attendre 3 minutes.
2. Débrancher le connecteur des modules de coussin gonflable et des prétensionneurs de ceintures de sécurité.
3. Brancher l'outil de déploiement (SST : KV99106400) au module de coussin gonflable ou au prétensionneur de ceinture de sécurité.
   Sur le module de coussin gonflable du conducteur, brancher l'adaptateur de l'outil de déploiement (SST : KV99109700) au connecteur de l'outil.
   Sur le module de coussin gonflable côté passager, brancher l'adaptateur à l'outil de déploiement (SST : KV99108300) au

Simpo PDF Merge and Split Unregistered Version - http://www.simpopdf.com

Mise au rebut du module de coussin gonflable et du prétensionneur de ceinture de sécurité (Suite)

connecteur de l'outil. Pour le prétensionneur de ceinture de sécurité, brancher l'adaptateur de l'outil de déploiement (SST : KV99108200) au connecteur de l'outil.

4. Brancher le clip rouge de l'outil de déploiement à la borne positive de batterie et le clip noir à la borne négative.
5. Le témoin à la droite de l'outil, sur lequel est indiqué ''outil de déploiement sous tension'', doit s'allumer en vert et non en rouge.
6. Appuyer sur l'interrupteur de l'outil de déploiement. Le témoin de gauche de l'outil, sur lequel est indiqué '''tension du connecteur de coussin gonflable'' doit s'allumer et le module de coussin gonflable ou le prétensionneur de ceinture de sécurité se déployer.

PRECAUTION :

Ne jamais déployer plus d'un module de coussin gonflable ou prétensionneur de ceinture de sécurité à la fois.

Simpo PDF Merge and Split Unregistered Version - http://www.simpopdf.com

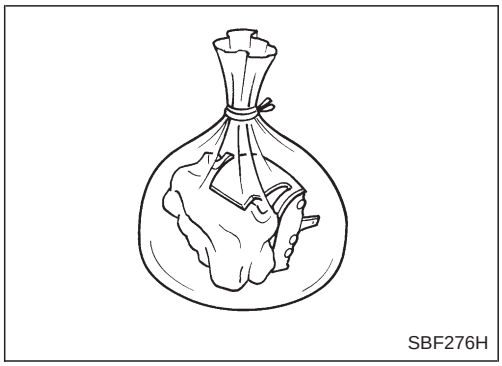
SBF276H

Mise au rebut du module de coussin gonflable et du prétensionneur de ceinture de sécurité (Suite)

MISE AU REBUT DU MODULE DE COUSSIN GONFLABLE (AIR BAG) ET DU PRETENSIONNEUR DE CEINTURE DE SECURITE

Les modules de coussins gonflables et les prétensionneurs de ceinture de sécurité déployés sont très chauds. Avant de les mettre au rebut, attendre au moins 30 minutes et 10 minutes respectivement. Les placer dans des sacs en plastique hermétiques avant de les mettre au rebut.

PRECAUTION :

- **Ne jamais asperger d'eau un module de coussin gonflable ou un prétensionneur de ceinture de sécurité déployés.**
- **Veiller à porter des gants lors de la manipulation d'un module de coussin gonflable et d'un prétensionneur de ceinture de sécurité déployés.**
- **Le déploiement du coussin gonflable ne dégage pas de gaz nocifs. Toutefois veiller à ne pas inhaler le gaz en raison de ses propriétés irritantes pouvant être à l'origine de suffocation.**
- **Ne pas essayer de démonter le module de coussin gonflable et le prétensionneur de ceinture de sécurité.**
- **Le module de coussin gonflable et le prétensionneur de ceinture de sécurité ne peuvent être réutilisés.**
- **Se nettoyer les mains correctement une fois le travail fini.**

Simpo PDF Merge and Split Unregistered Version - http://www.simpopdf.com

Introduction des diagnostics des défauts

PRECAUTION :

- **Ne pas utiliser d'équipement d'essai électrique sur les circuits connexes du SRS sauf sur indication de ce manuel de réparation. Le faisceau de câblage du SRS peut être identifié à l'aide d'un connecteur de faisceau jaune.**
- **Ne pas essayer de réparer, épisser ou modifier le faisceau de câblage du SRS. Si le faisceau est endommagé, le remplacer par un neuf.**
- **Maintenir le circuit de masse dans un état de propreté satisfaisant.**

FONCTION DE DIAGNOSTIC

Les résultats de l'autodiagnostic du SRS peuvent être lus à l'aide du témoin d'avertissement ''AIR BAG'' et/ou de CONSULT-II. La lecture de ces résultats peut être réalisée dans les deux modes suivants — ''Mode utilisateur'' et ''Mode de diagnostic''.
Le mode utilisateur est exclusivement conçu pour le client (conducteur). Ce mode indique au conducteur l'existence d'un défaut dans le système à l'aide du témoin d'avertissement de l''AIR BAG''.
Le mode de diagnostic permet au technicien de localiser et d'inspecter la pièce défectueuse.
Les modes d'applications du témoin d'avertissement ''AIR BAG'' et CONSULT-II sont les suivantes:

	Mode utilisateur	Mode de diagnostic	Type d'affichage
Témoin d'avertissement ''AIR BAG''	X	X	Fonctionnement MAR./ ARR.
CONSULT-II	—	X	Contrôle

NOTE :
Un défaut dans le prétensionneur de ceinture de sécurité est indiqué par le témoin d'avertissement ''AIR BAG''.

MODE DE DIAGNOSTIC POUR CONSULT-II

- ''AUTO-DIAG [COURANT]''
  Un résultat d'autodiagnostic courant (également indiqué par le clignotement du témoin en mode de diagnostic) s'affiche en temps réel sur l'écran de CONSULT-II. Cela signifie qu'une pièce défectueuse doit être réparée.
- ''AUTO-DIAG [PASSE]''
  Les résultats d'autodiagnostic précédemment enregistrés dans la mémoire sont affichés sur l'écran du CONSULT-II. Les résultats enregistrés sont gardés en mémoire tant que celle-ci n'a pas été effacée.
- ''ENREG DIAG DEFAUT''
  La fonction ''ENREG DIAG DEFAUT'' permet d'afficher sur l'écran CONSULT-II les résultats de diagnostic précédemment effacés lors de la remise à zéro du système.
- ''N° IDENT BOIT CONTR''
  Pour chaque modèle, le boîtier de capteurs de diagnostic est assorti d'un numéro de classification propre et individuel. Ce nombre s'affiche sur l'écran CONSULT-II, comme décrit ci-à gauche. Lors du remplacement du boîtier de capteurs de diagnostic, se reporter au numéro de pièce pour une bonne compatibilité. Après la repose, il est possible de vérifier si le boîtier de remplacement est approprié en confirmant ce numéro d'identification sur l'écran du CONSULT-II.

Pour le MODELE NISSAN D22, le numéro d'identification du boîtier de capteurs de diagnostic se présente de la manière suivante :

MODELE	N° IDENT BOIT CONT EL
Coussin gonflable simple	5A37
Coussin gonflable simple et prétensionneur de ceinture de sécurité	5A39
Coussin gonflable double	5A38
Coussins gonflables doubles et prétensionneur de ceinture de sécurité	5A3A

Simpo PDF Merge and Split Unregistered Version - http://www.simpopdf.com

Introduction des diagnostics des défauts (Suite)

COMMENT CHANGER LE MODE D'AUTODIAGNOSTIC

Avec CONSULT-II

Du mode utilisateur au mode de diagnostic.

Le système passe automatiquement du mode utilisateur en mode de diagnostic lorsque l'on sélectionne l'option ''AIR BAG'' sur l'écran ''SELECTION SYSTEME''.

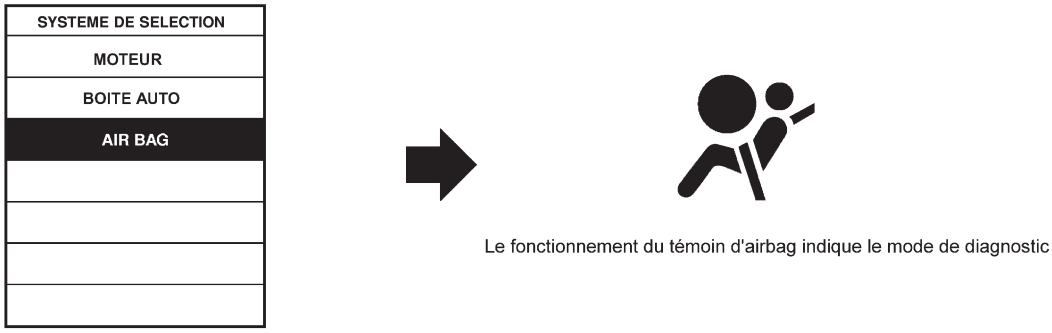

Du mode de diagnostic au mode utilisateur.

Appuyer sur la touche ''BACK'' (RETOUR) de CONSULT-II jusqu'à l'affichage de ''SELECTION SYSTEME'' afin de passer du mode utilisateur en mode de diagnostic ; le mode de diagnostic passe automatiquement au mode utilisateur.

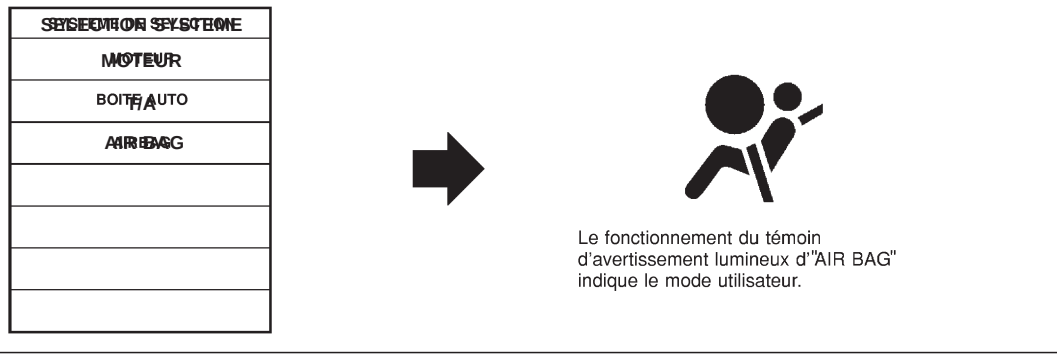

Sans CONSULT-II

Du mode utilisateur au mode de diagnostic.

Le mode diagnostique s'allume seulement quand on détecte un défaut, en mettant le contact d'allumage comme suit :

1) Mettre le contact d'allumage sur ''ON''.
2) Une fois que le témoin d'avertissement ''AIR BAG'' est allumé pendant 7 secondes, mettre le contact d'allumage sur ''OFF'' en moins d'un seconde.
3) Attendre plus de 3 secondes.
4) Répéter à deux reprises les étapes 1 à 3 (3 cycles au total).
5) Mettre le contact d'allumage sur ''ON''.

Le SRS ne passe pas en mode de diagnostic si aucun défaut n'est détecté.

Du mode de diagnostic au mode utilisateur.

Une fois le défaut réparé, couper le contact d'allumage pendant au moins 1 seconde avant de le rétablir . Le mode de diagnostic retourne au mode utilisateur.

S'il est nécessaire de passer du mode de diagnostic au mode utilisateur quand un défaut est détecté, tourner le contact d'allumage comme suit :

1) Mettre le contact d'allumage sur ''ON''.
2) Une fois que le témoin d'avertissement ''AIR BAG'' est allumé pendant 7 secondes, mettre le contact d'allumage sur ''OFF'' en moins d'un seconde.
3) Attendre plus de 3 secondes.
4) Répéter à deux reprises les étapes 1 à 3 (3 cycles au total).
5) Mettre le contact d'allumage sur ''ON''.

Simpo PDF Merge and Split Unregistered Version - http://www.simpopdf.com

Introduction des diagnostics des défauts (Suite)

COMMENT EFFACER LES RESULTATS DE L'AUTODIAGNOSTIC

Avec CONSULT-II

- ''AUTO-DIAG [COURANT]''
  Le résultat d'autodiagnostic courant s'affiche en temps réel sur l'écran de CONSULT-II. Une fois le défaut complètement éliminé, aucun défaut de fonctionnement n'est plus détecté sur l'écran ''AUTO-DIAG [COURANT]''.

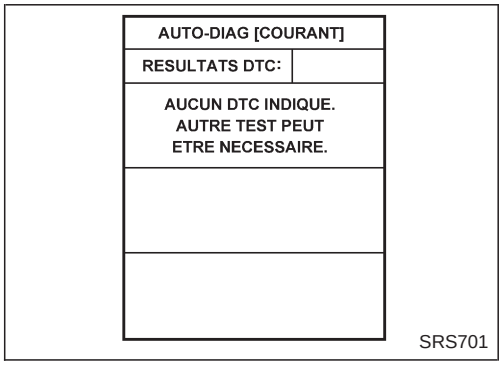

- ''AUTO-DIAG [PASSE]''
  Revenir sur l'écran CONSULT-II ''AUTO-DIAG [COURANT]'' en appuyant sur la touche ''BACK'' (RETOUR) de CONSULT-II et en sélectionnant ''AUTO-DIAG [COURANT]'' dans ''SELECTION MODE DIAG''. Appuyer sur ''EFFAC'' en mode ''AUTO-DIAG [COURANT]''

NOTE :
Si le défaut mémorisé en mode ''AUTO-DIAG [PASSE]'' n'est pas effacé, le mode utilisateur indique le défaut du système par le biais du témoin d'avertissement, même si le défaut a été complètement éliminé.

- ''ENREG DIAG DEFAUT''

  La mémoire du mode ''ENREG DIAG DEFAUT'' ne peut pas être effacée.

Sans CONSULT-II

Une fois le défaut éliminé, passer du mode de diagnostic au mode utilisateur en coupant le contact pendant au moins 1 seconde avant de le rétablir. Le résultat de l'autodiagnostic est alors effacé.

Comment effectuer les diagnostics de défaut pour effectuer une réparation rapide et précise

Une bonne compréhension des conditions de mauvais fonctionnement peut permettre de localiser la panne plus rapidement et avec plus de précision.
En général, chaque client appréhende différemment une panne. Il est indispensable de bien comprendre les symptômes ou les conditions de la plainte d'un client.

INFORMATIONS FOURNIES PAR LE CLIENT

QUOI	.....	Modèle de véhicule
QUAND	.....	Date, fréquences
OU	.....	Etat de la route
COMMENT	.....	Conditions de fonctionnement, symptômes

VERIFICATION PRELIMINAIRE

Vérifier que les pièces suivantes sont en bon état :
- Batterie [se reporter à la section EL (''BATTERIE'') du manuel de réparation].
- Fusible [se reporter à la section EL (''Fusible'', ''DISPOSITION DE L'ALIMENTATION ELECTRIQUE'') du manuel de réparation].
- Connexions des composants du système au faisceau

Simpo PDF Merge and Split Unregistered Version - http://www.simpopdf.com

Comment effectuer les diagnostics de défaut pour effectuer une réparation rapide et précise (Suite)

NOTE :
Un défaut dans le prétensionneur de ceinture de sécurité est indiqué par le témoin d'avertissement ''AIR BAG''.

MARCHE A SUIVRE

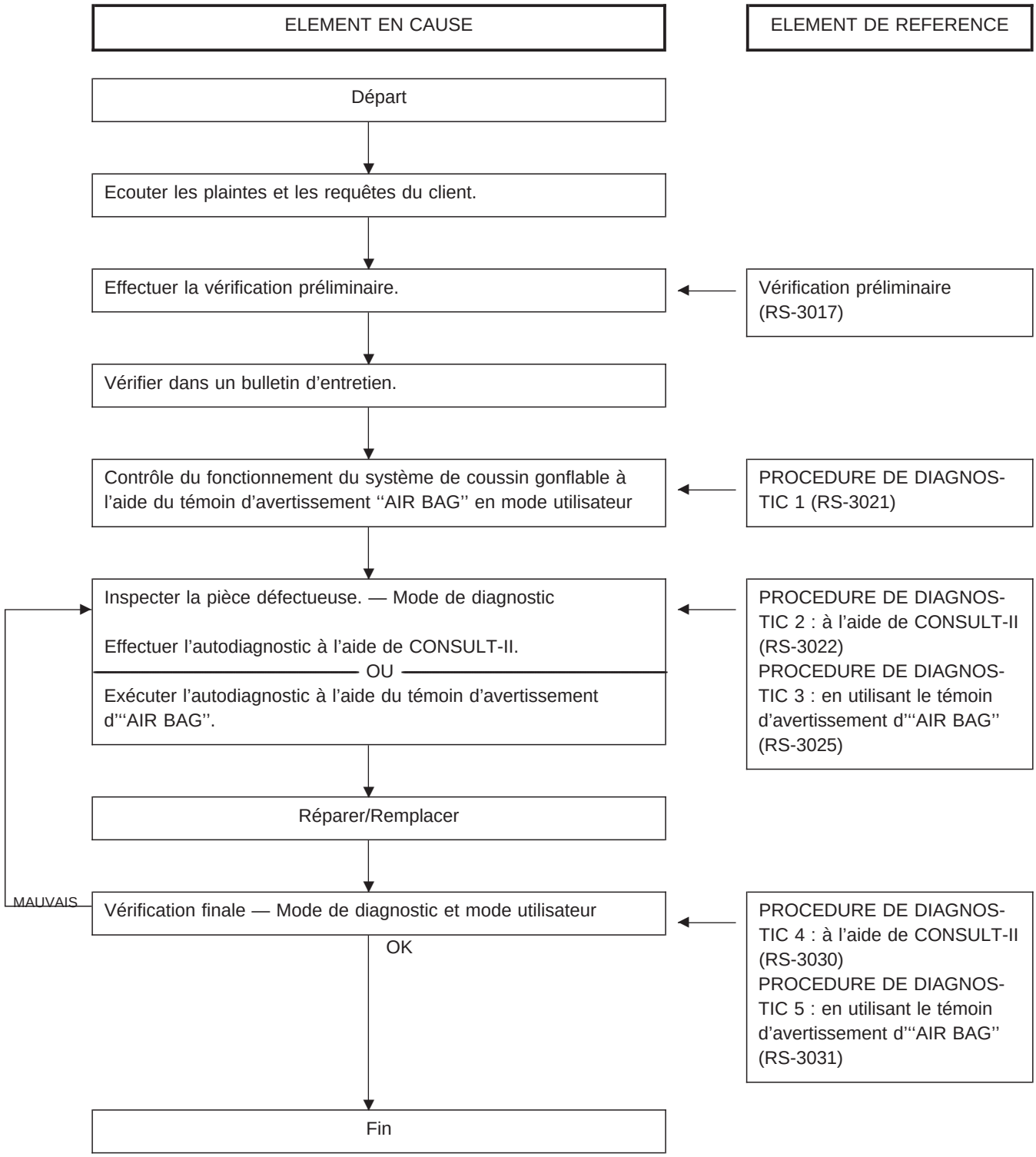

Simpo PDF Merge and Split Unregistered Version - http://www.simpopdf.com

Schéma de câblage — SRS —/Conduite à gauche

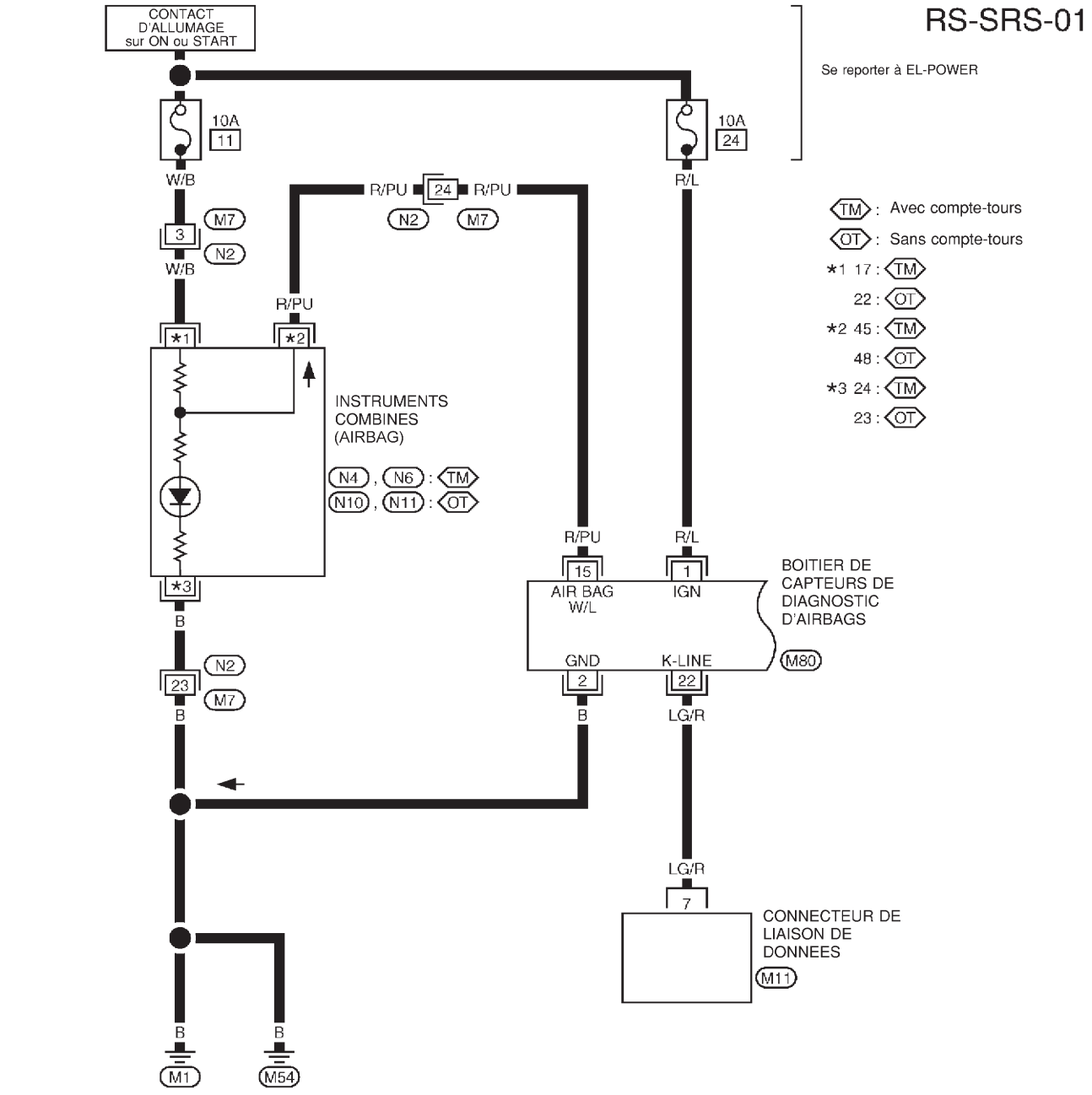

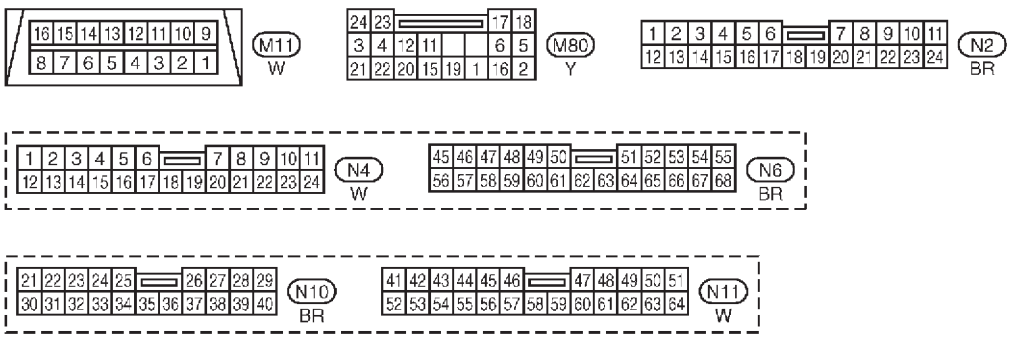

GRS006A

Simpo PDF Merge and Split Unregistered Version - http://www.simpopdf.com

Schéma de câblage — SRS —/Conduite à gauche (Suite)

DA : Avec coussin gonflable double
PT : Avec prétensionneur de ceinture de sécurité

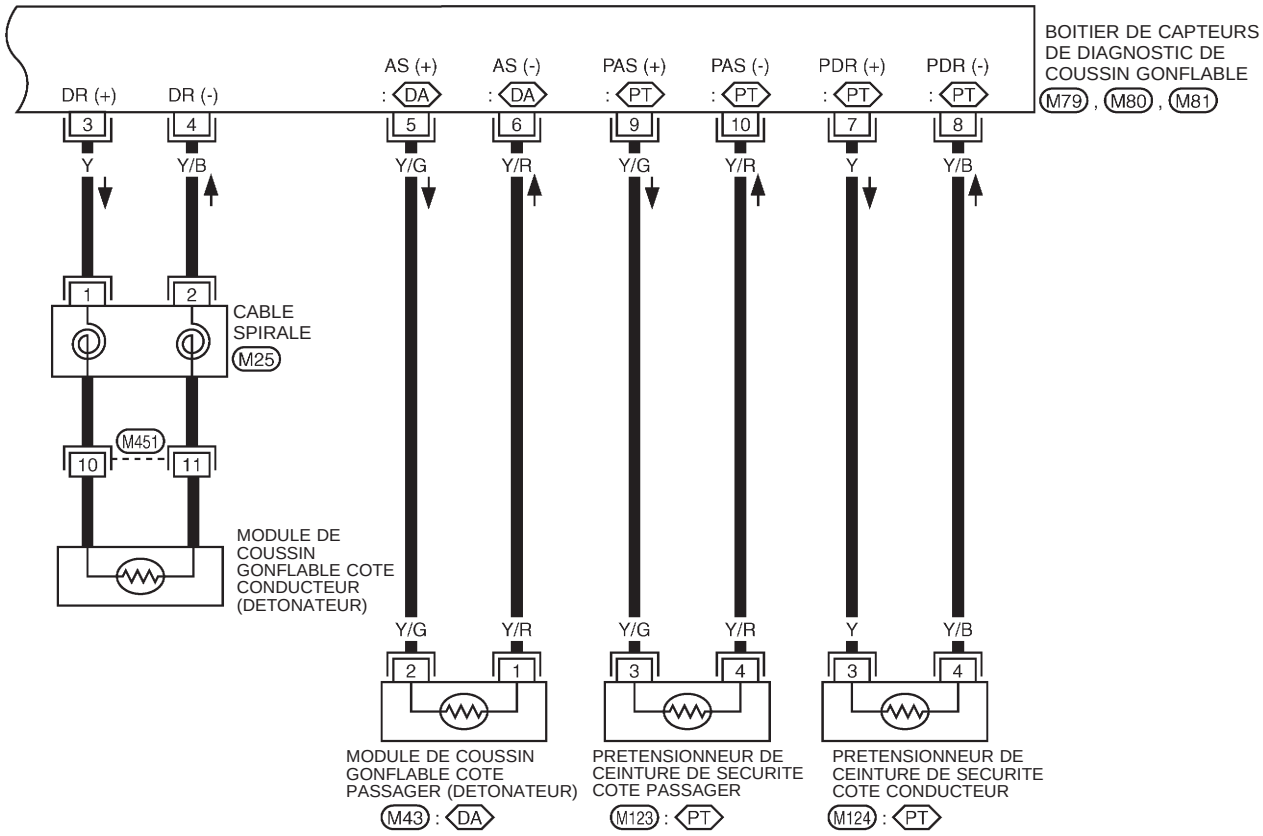

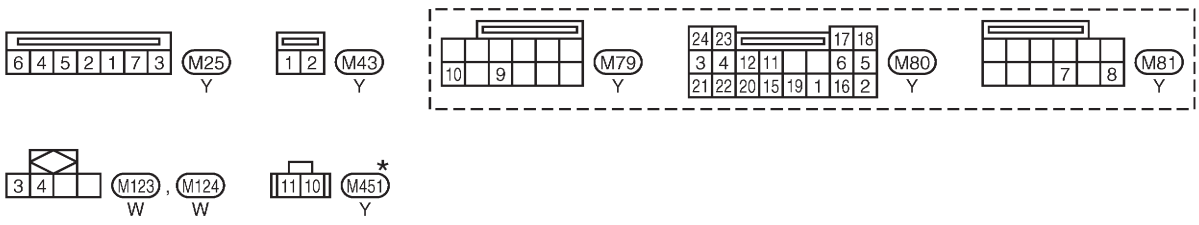

*: Ce connecteur n'est pas indiqué dans "DISPOSITION DES FAISCEAUX" dans la section EL.

GRS007A

Simpo PDF Merge and Split Unregistered Version - http://www.simpopdf.com

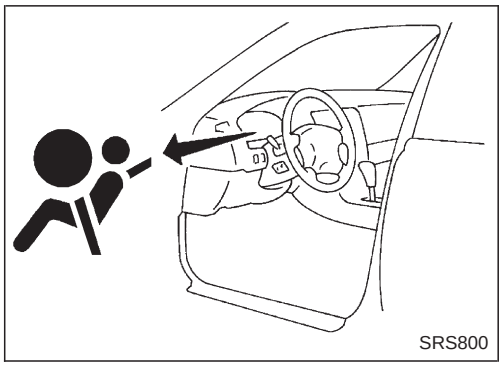

Autodiagnostic

PROCEDURE DE DIAGNOSTIC 1 (⊗ sans CONSULT-II)

Vérifier le fonctionnement du SRS à l'aide du témoin d'avertissement ''AIR BAG'' — Mode utilisateur

1. le témoin d'avertissement ''AIR BAG'' s'allume lorsque l'on tourne le contact d'allumage de la position ''OFF'' sur ''ON''.
2. Comparer le fonctionnement du témoin d'avertissement ''AIR BAG'' au tableau ci-dessous.

Fonctionnement du témoin d'avertissement ''AIR BAG'' — Mode utilisateur —	Conditions du SRS	Elément de référence
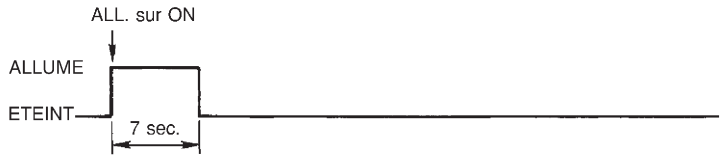 MRS095A	Aucun défaut n'est détecté. Aucune démarche supplémentaire n'est nécessaire.	—
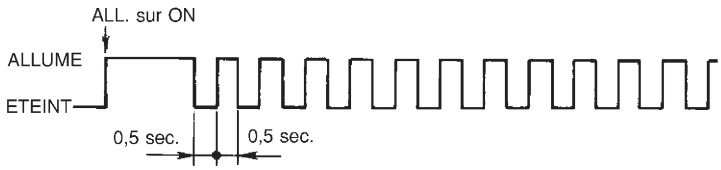 MRS096A	Le système est défectueux et a besoin d'être réparé comme indiqué.	Aller à la PROCEDURE DE DIAGNOSTIC 2 ou 3 (RS-3022 ou 3025).
 MRS097A	Le coussin gonflable est déployé. Le prétensionneur de ceinture de sécurité est déployé.	Aller à DIAGNOSTIC DE COLLISION (RS-3042).
	Le fusible de coussin gonflable, le boîtier de capteurs de diagnostic ou le faisceau est défectueux et doit être réparé.	Aller à la PROCEDURE DE DIAGNOSTIC 9 (RS-3040).
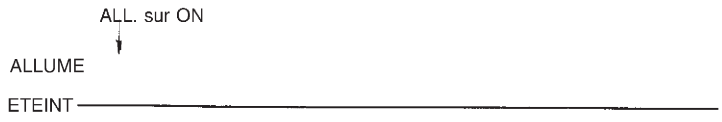 MRS098A	Un des défauts suivants s'est manifesté et doit être réparé. ●Le fusible de la jauge est grillé. ●le circuit du témoin d'avertissement ''AIR BAG'' est en court-circuit ou en circuit ouvert. ●Le boîtier de capteurs de diagnostic est défectueux.	Aller à PROCEDURE DE DIAGNOSTIC 10 (RS-3041)

Simpo PDF Merge and Split Unregistered Version - http://www.simpopdf.com

Autodiagnostic (Suite)

PROCEDURE DE DIAGNOSTIC 2 (avec CONSULT-II)

Inspection des pièces défectueuses du SRS à l'aide de CONSULT-II — Mode de diagnostic

1. Mettre le contact d'allumage sur ''OFF''.
2. Brancher CONSULT-II au connecteur de liaison de données.

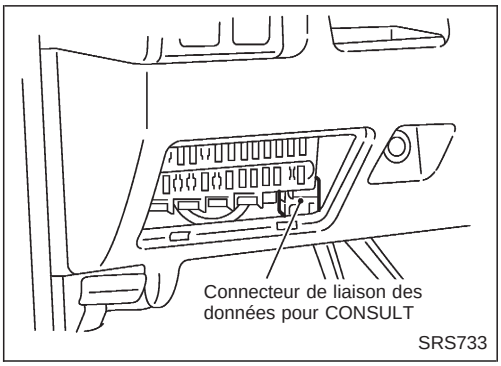

SRS733

3. Mettre le contact d'allumage sur ''ON''.
4. Appuyer sur ''DEPART''.

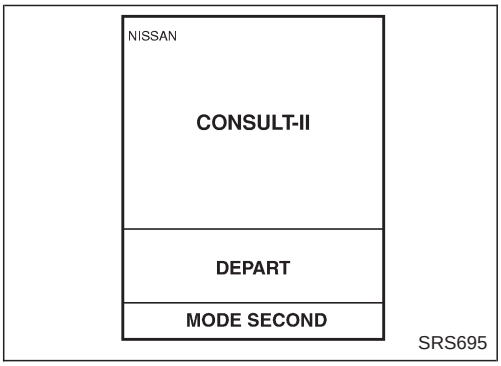

SRS695

5. Appuyer sur ''AIR BAG''.

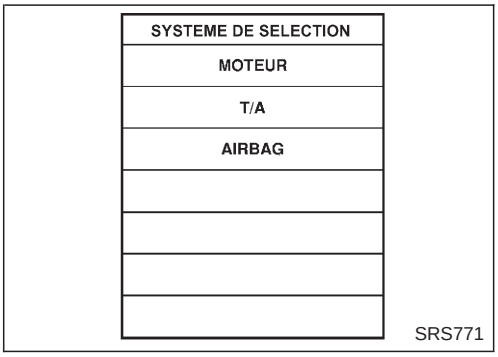

SRS771

6. Appuyer sur ''AUTO-DIAG [COURANT]''.

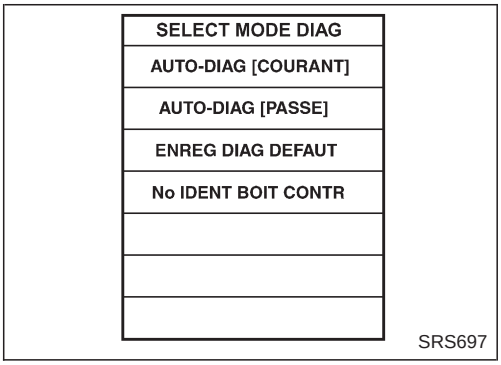

SRS697

7. Les codes de diagnostic sont affichés dans ''AUTO-DIAG [COURANT]''.

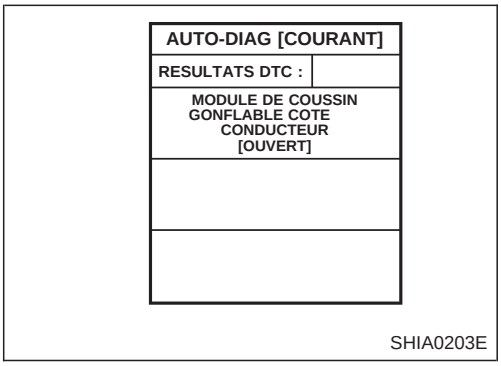

SHIA0203E

Simpo PDF Merge and Split Unregistered Version - http://www.simpopdf.com

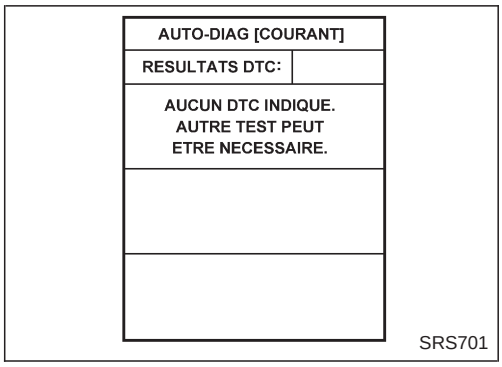

Autodiagnostic (Suite)

Si aucun défaut de fonctionnement n'est détecté en ''AUTO-DIAG [COURANT]'', même si un défaut de fonctionnement est détecté par le témoin d'avertissement ''AIR BAG'', vérifier la tension de la batterie.

Si la tension de la batterie est inférieure à 9 V, recharger la batterie. Puis aller à la PROCEDURE DE DIAGNOSTIC 4 pour effectuer un contrôle final, page RS-3030

Si la tension de la batterie est normale, aller à la PROCEDURE DE DIAGNOSTIC 6, page RS-3036 afin d'effectuer le diagnostic des cas suivants :

- Le résultat d'autodiagnostic (précédemment mémorisé) n'a pas été effacé après réparation.
- Défaut de fonctionnement intermittent du SRS.

8. Appuyer sur ''IMPRI''.
9. Comparer les codes de diagnostic au TABLEAU DES CODES DE DIAGNOSTIC CONSULT-II, page RS-3024.
10. Appuyer sur la touche ''RETOUR'' sur CONSULT-II jusqu'à l'affichage de ''SELECTION SYSTEME'' afin de revenir en mode utilisateur depuis le mode de diagnostic.
11. Mettre le contact d'allumage sur ''OFF'', et débrancher CONSULT-II et les deux câbles de la batterie.
12. Réparer le système comme décrit dans l''Ordre de réparation'' du TABLEAU DES CODES DE DIAGNOSTIC DE CONSULT-II, correspondant au résultat de l'autodiagnostic. Pour la procédure de remplacement des pièces des composants, se reporter à RS-3005 et ''Dépose et repose'' dans la section RS du manuel de réparation (N° de pub. SM9F-D22BE0E) pour plus de détails.
13. Après avoir réparé le système, aller à la PROCEDURE DE DIAGNOSTIC 4 pour effectuer un contrôle final, page RS-3030.

Simpo PDF Merge and Split Unregistered Version - http://www.simpopdf.com

Autodiagnostic (Suite)

TABLEAU DES CODES DE DIAGNOSTIC DE CONSULT-II (''AUTO-DIAG [COURANT]'')

Elément de diagnostic	Explication		Ordre de réparation **Vérifier le système SRS à chaque remplacement de pièce.**
AUCUN DTC N'EST DETECTE	Lorsque le défaut de fonctionnement est indiqué par le témoin d'avertissement ''AIR BAG'' en mode utilisateur	●Tension de la batterie basse (moins de 9 V)	●Aller à PROCEDURE DE DIAGNOSTIC 4 (RS-3030) après avoir chargé la batterie.
		●Le résultat d'autodiagnostic ''AUTO-DIAG [PASSE]'' (précédemment mémorisé) n'a pas été effacé après réparation. ●Un défaut intermittent a été détecté dans le passé.	●Aller à la PROCEDURE DE DIAGNOSTIC 6 (RS-3036).
	●Aucun défaut n'est détecté.		●Aller à la PROCEDURE DE DIAGNOSTIC 4 (RS-3030).
MODULE DE COUSSIN GONFLABLE COTE CONDUCTEUR [OUVERT]	●Le circuit du module de coussin gonflable côté conducteur est ouvert. (Câble spiralé inclus)		1. Inspecter visuellement le branchement du faisceau de câblage. 2. Remplacer le faisceau s'il est visiblement endommagé. 3. Remplacer le câble spiralé. 4. Remplacer le module de coussin gonflable côté conducteur. (Avant la mise au rebut, ce dernier doit être déployé.) 5. Remplacer le boîtier de capteurs de diagnostic. 6. Remplacer le faisceau correspondant.
MODULE DE COUSSIN GONFLABLE COTE CONDUCTEUR [COURT TENS BATT]	●Le circuit du module de coussin gonflable côté conducteur est en court-circuit avec un circuit d'alimentation électrique. (Câble spiralé inclus		
MODULE DE COUSSIN GONFLABLE COTE CONDUCTEUR [COURT-CIRC MASSE]	●Le circuit du module de coussin gonflable côté passager avant est court-circuité à la masse. (Câble spiralé inclus)		
MODULE DE COUSSIN GONFLABLE COTE CONDUCTEUR [COURT-CIRC]	●Les circuits du module de coussin gonflable côté conducteur sont court-circuités les uns avec les autres.		
MODULE A/B PASSAG [COURT TENS BATT]	●Le circuit du module de coussin gonflable côté passager avant est en court-circuit avec un circuit d'alimentation électrique.		1. Inspecter visuellement la connexion du faisceau de câblage. 2. Remplacer le faisceau s'il est visiblement endommagé. 3. Remplacer le module de coussin gonflable côté passager avant. (Avant la mise au rebut, ce dernier doit être déployé.) 4. Remplacer le boîtier de capteurs de diagnostic. 5. Remplacer le faisceau correspondant.
MODULE A/B PASSAG [OUVERT]	●Le circuit du module de coussin gonflable côté passager avant est ouvert.		
MODULE A/B PASSAG [COURT-CIRC MASSE]	●Le circuit du module de coussin gonflable côté passager avant est court-circuité à la masse.		
MODULE A/B PASSAG [COURT-CIRC]	●Les circuits du module de coussin gonflable avant côté passager sont court-circuités les uns avec les autres.		
PRE-TEN AVANT GAUCHE [OUVERT]	●Le circuit du prétensionneur de ceinture de sécurité gauche est ouvert.		1. Vérifier visuellement les connexions de faisceau de câblage. 2. Remplacer le faisceau s'il est visiblement endommagé. 3. Remplacer la ceinture de sécurité gauche. (La désactiver avant de la mettre au rebut). 4. Remplacer le boîtier de capteurs de diagnostic. 5. Remplacer le faisceau correspondant.
PRE-TEN AVANT GAUCHE [COURT TENS BATT]	●Le circuit du prétensionneur de ceinture de sécurité gauche est en court-circuit avec un circuit d'alimentation.		
PRE-TEN AVANT GAUCHE [COURT-CIRC MASSE]	●Le circuit du prétensionneur de ceinture de sécurité gauche est court-circuité à la masse.		

Simpo PDF Merge and Split Unregistered Version - http://www.simpopdf.com

Autodiagnostic (Suite)

Elément de diagnostic	Explication	Ordre de réparation **Vérifier le système SRS à chaque remplacement de pièce.**
PRE-TEN AVANT DROIT [OUV/COURT TENS BATT]	●Le circuit du prétensionneur de ceinture de sécurité droit est ouvert ou il y a court-circuit avec certains circuits d'alimentation.	1. Vérifier visuellement les connexions de faisceau de câblage. 2. Remplacer le faisceau s'il est visiblement endommagé. 3. Remplacer la ceinture de sécurité droite. (La désactiver avant de la mettre au rebut). 4. Remplacer le boîtier de capteurs de diagnostic. 5. Remplacer le faisceau correspondant.
PRE-TEN AVANT DROIT [COURT TENS BATT]	●Le circuit du prétensionneur de ceinture de sécurité droit est en court-circuit avec un circuit d'alimentation.	
PRE-TEN AVANT DROIT [COURT-CIRC MASSE]	●Le circuit du prétensionneur droit avant est court-circuité à la masse.	

*** Suivre les procédures dans l'ordre numérique lors de la réparation des pièces défectueuses. Vérifier que le défaut de fonctionnement est éliminé à l'aide du témoin de coussin gonflable ou de CONSULT-II après chaque réparation. Si le défaut subsiste, passer à l'étape suivante. Aucune réparation supplémentaire n'est requise si le défaut a disparu.**

PROCEDURE DE DIAGNOSTIC 3 ⊗ sans CONSULT-II)

Inspection des pièces défectueuses du SRS à l'aide du témoin d'avertissement ''AIR BAG'' — Mode de diagnostic

NOTE :

Le SRS ne passera pas en mode de diagnostic si aucun défaut n'est détecté en mode utilisateur.

1. Mettre le contact d'allumage sur ''ON''.
2. Une fois que le témoin d'avertissement ''AIR BAG'' est allumé pendant 7 secondes, mettre le contact d'allumage sur ''OFF'' en moins d'un seconde.
3. Attendre plus de 3 secondes.
4. Répéter à deux reprises les étapes 1 à 3 (3 cycles au total).
5. Mettre le contact d'allumage sur ''ON''.
   Le SRS est maintenant en mode de diagnostic.
6. Le témoin d'avertissement ''AIR BAG'' fonctionne en mode de diagnostic comme suit :

NOTE :

Si le SRS ne passe pas en mode de diagnostic même si un défaut a été detecté en mode utilisateur, vérifier la tension de la batterie

Si la tension de la batterie est inférieure à 9 V, recharger la batterie. Aller ensuite à la PROCEDURE DE DIAGNOSTIC 5, page RS-3031

Si la tension de la batterie est normale, remplacer le boîtier de capteurs de diagnostic.

Simpo PDF Merge and Split Unregistered Version - http://www.simpopdf.com

Autodiagnostic (Suite)

N°	Séquence de clignotement du témoin d'avertissement "AIR BAG" — Mode de diagnostic —		Conditions du SRS
1	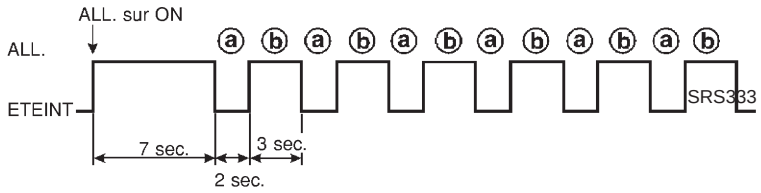	La séquence ⓐ ⓑ est répétée.	● Les résultats de diagnostic (précédemment mémorisés) n'ont pas été effacés, même après que le système a été réparé. ● Un défaut intermittent a été détecté dans le passé. Aller à la PROCEDURE DE DIAGNOSTIC 7 (RS-3036).
2	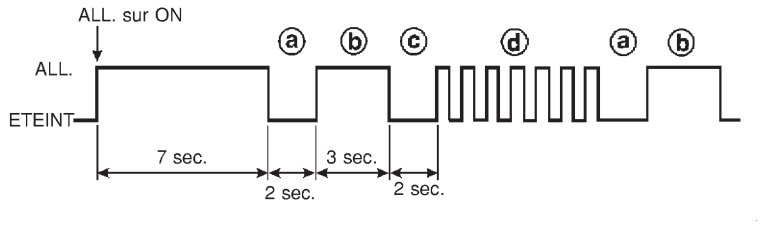	La séquence de ⓐ à ⓓ est répétée. ⓑ — Repère du coussin gonflable côté conducteur/passager et du prétensionneur de ceinture de sécurité (pour l'identification d'un défaut de fonctionnment du coussin gonflable côté conducteur/passager et/ou du prétensionneur de ceinture de sécurité) ⓓ — Indique le composant défectueux. Le nombre de clignotements varie selon le composant défectueux (0,5 sec. ALLUME et 0,5 sec. ETEINT est considéré comme un clignotement.)	Le système est défectueux et a besoin d'être réparé.
3	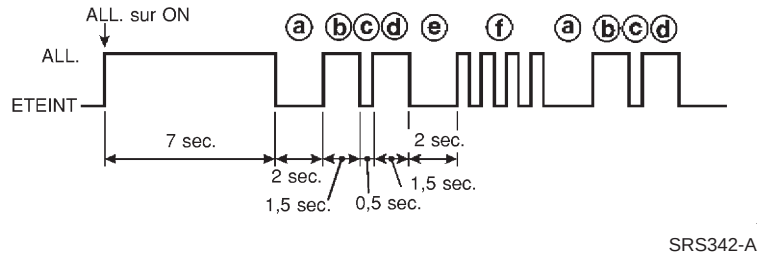	La séquence de ⓐ à ⓕ est répétée. ⓑ, ⓒ, ⓓ — Repères du coussin gonflable latéral (pour l'identification d'un défaut de fonctionnement du coussin gonflable latéral) ⓕ — Indique le composant défectueux. Le nombre de clignotements varie selon le composant défectueux (0,5 sec. ALLUME et 0,5 sec. ETEINT est considéré comme un clignotement.)	

7. Le composant défectueux est indiqué par le nombre de clignotements (pièce ⓓ ou ⓕ). Comparer le nombre de clignotements à celui indiqué dans le TABLEAU DE CODES DE CLIGNOTEMENT DU TEMOIN "AIR BAG", page RS-3027, et localiser le composant défectueux.
8. Couper le contact et débrancher les deux câbles de la batterie.

Simpo PDF Merge and Split Unregistered Version - http://www.simpopdf.com

Autodiagnostic (Suite)

9. Réparer le système selon l''Ordre de réparation'' indiqué dans le TABLEAU DE CODES DE CLIGNOTEMENT DU TEMOIN ''AIR BAG'' correspondant au code de clignotement. Pour la procédure de remplacement des pièces des composants, se reporter à RS-3005 et ''Dépose et repose'' dans la section RS du manuel de réparation (N° de pub. SM9F-D22BE0E) pour plus de détails.
10. Après avoir réparé le système, aller à la PROCEDURE DE DIAGNOSTIC 5, page RS-3031.

TABLEAU DE CODES DE CLIGNOTEMENT DU TEMOIN ''AIR BAG'' (MODE DE DIAGNOSTIC)

<table>
<tr><td rowspan="4">● Les résultats de diagnostic (précédemment mémorisés) n'ont pas été effacés, même après que le système a été réparé.
● Un défaut intermittent a été détecté dans le passé.</td><td>Séquence de clignotement</td></tr>
<tr><td>La séquence ⓐ à ⓑ est répétée.
 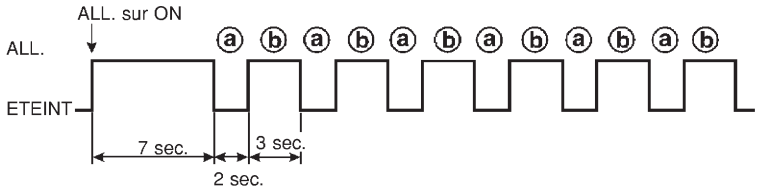

SRS333</td></tr>
<tr><td>Ordre de réparation</td></tr>
<tr><td>●Aller à la PROCEDURE DE DIAGNOSTIC 7 (RS-3036).</td></tr>
<tr><td rowspan="4">Le circuit du prétensionneur de ceinture de sécurité droit est défectueux.
ⓓ : 1 clignotement)</td><td>Séquence de clignotement</td></tr>
<tr><td>La séquence de ⓐ à ⓓ est répétée.
ⓓ — Un clignotement signale un défaut de fonctionnement du circuit droit du prétensionneur.
 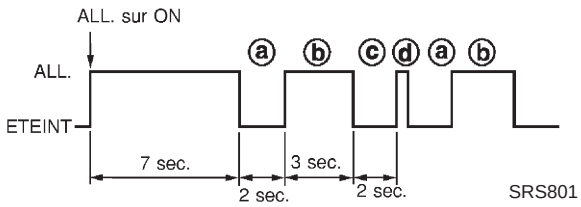

SRS801</td></tr>
<tr><td>Ordre de réparation (''contrôler à nouveau le SRS après chaque remplacement'').</td></tr>
<tr><td>1. Vérifier visuellement les connexions de faisceau de câblage.
2. Remplacer le faisceau s'il est visiblement endommagé.
3. Remplacer le prétensionneur droit de ceinture de sécurité. (Le désactiver avant de la mettre au rebut).
4. Remplacer le boîtier de capteurs de diagnostic.
5. Remplacer le faisceau correspondant.</td></tr>
</table>

Simpo PDF Merge and Split Unregistered Version - http://www.simpopdf.com

Autodiagnostic (Suite)

<table>
<tr><td rowspan="4">Défaut de fonctionnement du circuit du module de coussin gonflable côté conducteur.
ⓓ : 2 clignotements)</td><td>Séquence de clignotement</td></tr>
<tr><td> 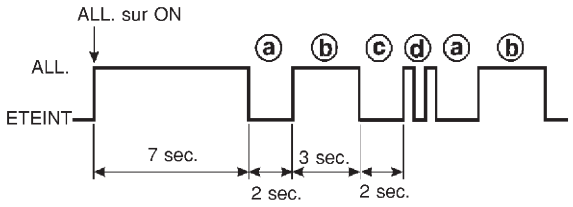

SRS334
La séquence de ⓐ à ⓓ est répétée.
ⓓ — Deux clignotements signalent un défaut de fonctionnement du circuit de module de coussin gonflable côté conducteur.</td></tr>
<tr><td>Ordre de réparation (“contrôler à nouveau le SRS après chaque remplacement”).</td></tr>
<tr><td>1. Inspecter visuellement le branchement du faisceau de câblage.
2. Remplacer le faisceau s’il est visiblement endommagé.
3. Remplacer le câble spiralé.
4. Remplacer le module de coussin gonflable côté conducteur.
(Avant la mise au rebut, ce dernier doit être déployé.)
5. Remplacer le boîtier de capteurs de diagnostic.
6. Remplacer le faisceau correspondant.</td></tr>
<tr><td rowspan="4">Le circuit du prétensionneur de ceinture de sécurité gauche est défectueux.
ⓓ : 3 clignotements)</td><td>Séquence de clignotement</td></tr>
<tr><td> 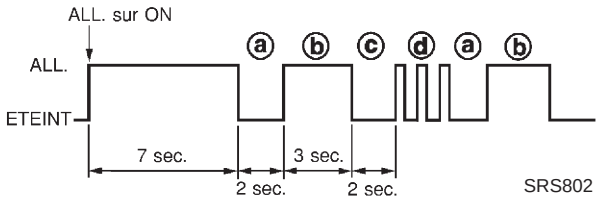

SRS802
La séquence de ⓐ à ⓓ est répétée.
ⓓ — Trois clignotements signalent un défaut de fonctionnement du circuit gauche du prétensionneur.</td></tr>
<tr><td>Ordre de réparation (“contrôler à nouveau le SRS après chaque remplacement”).</td></tr>
<tr><td>1. Vérifier visuellement les connexions de faisceau de câblage.
2. Remplacer le faisceau s’il est visiblement endommagé.
3. Remplacer le prétensionneur gauche de ceinture de sécurité.
(La désactiver avant de la mettre au rebut).
4. Remplacer le boîtier de capteurs de diagnostic.
5. Remplacer le faisceau correspondant.</td></tr>
<tr><td rowspan="4">Défaut de fonctionnement du boîtier de capteurs de diagnostic.
ⓓ: 7 clignotements)</td><td>Séquence de clignotement</td></tr>
<tr><td> 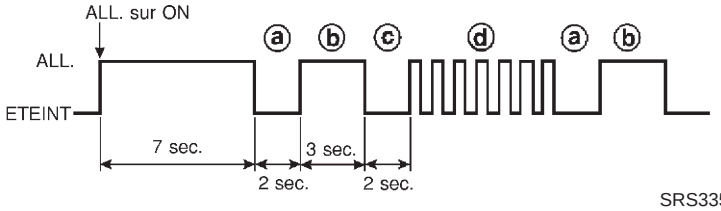

SRS335
La séquence de ⓐ à ⓓ est répétée.
ⓓ — Sept clignotements signalent un défaut de fonctionnement du boîtier de capteurs de diagnostic.</td></tr>
<tr><td>Ordre de réparation (“contrôler à nouveau le SRS après chaque remplacement”).</td></tr>
<tr><td>1. Vérifier visuellement les connexions de faisceau de câblage.
2. Remplacer le boîtier de capteurs de diagnostic.
3. Remplacer le faisceau correspondant.</td></tr>
</table>

Simpo PDF Merge and Split Unregistered Version - http://www.simpopdf.com

Autodiagnostic (Suite)

	Séquence de clignotement
Défaut de fonctionnement du circuit du module de coussin gonflable passager. ⓓ : 8 clignotements)	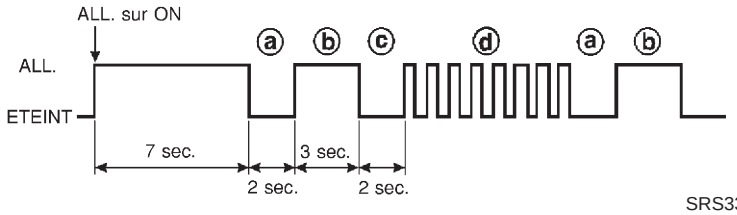 SRS336 la séquence de ⓐ à ⓓ est répétée. ⓓ — Huit clignotements signalent un défaut de fonctionnement du circuit du module de coussin gonflable passager.
	Ordre de réparation (‘‘contrôler à nouveau le SRS après chaque remplacement’’).
	1. Inspecter visuellement la connexion du faisceau de câblage. 2. Remplacer le faisceau s’il est visiblement endommagé. 3. Remplacer le module de coussin gonflable côté passager avant. (Avant la mise au rebut, ce dernier doit être déployé.) 4. Remplacer le boîtier de capteurs de diagnostic. 5. Remplacer le faisceau correspondant.

*** Suivre les procédures dans l’ordre numérique lors de la réparation des pièces défectueuses. Vérifier si le défaut est éliminé à l’aide du témoin de coussin gonflable (en mode utilisateur) ou de CONSULT-II après chaque réparation. Si le défaut subsiste, passer à l’étape suivante. Aucune réparation supplémentaire n’est requise si le défaut a disparu.**

Simpo PDF Merge and Split Unregistered Version - http://www.simpopdf.com

Autodiagnostic (Suite)

PROCEDURE DE DIAGNOSTIC 4 (avec CONSULT-II)

Vérification finale après réparation du SRS à l'aide de CONSULT-II — Mode de diagnostic

1. Après avoir réparé le SRS, brancher les deux câbles de la batterie.
2. Brancher CONSULT-II au connecteur de liaison de données.
3. Mettre le contact d'allumage de la position ''OFF'' à ''ON''.

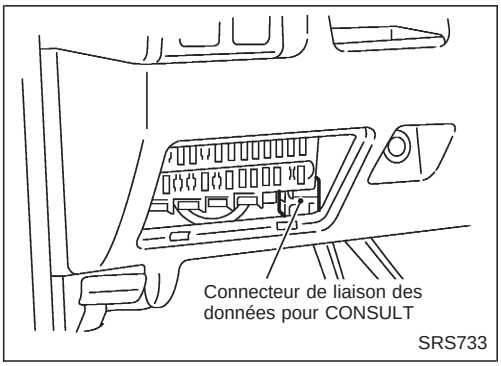

SRS733

4. Appuyer sur ''DEPART''.

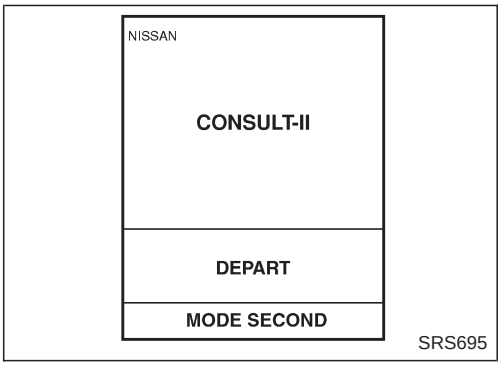

SRS695

5. Appuyer sur ''AIR BAG''.

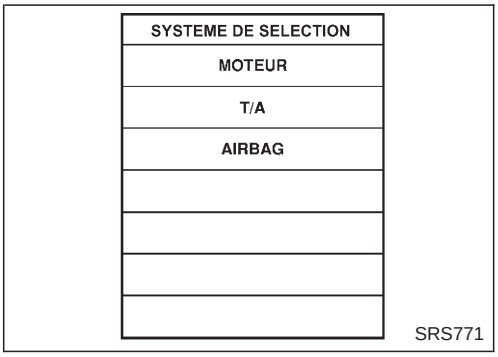

SRS771

6. Appuyer sur ''AUTO-DIAG [COURANT]''.

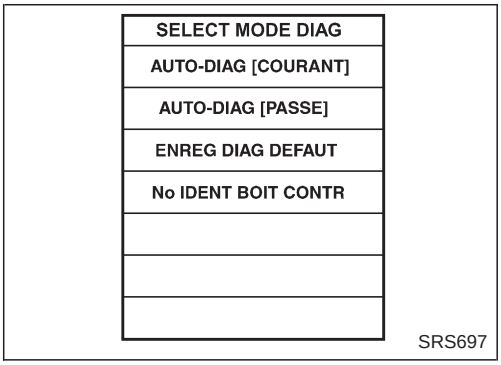

SRS697

7. Si aucun défaut n'est détecté dans ''AUTO-DIAG [COURANT]'', cela signifie que la réparation du SRS est achevée. Passer à l'étape 8.

   Si un défaut est détecté dans ''AUTO-DIAG [COURANT]'', le composant défectueux n'a pas été complètement réparé ou un autre composant défectueux a été détecté. Voir PROCEDURE DE DIAGNOSTIC 2, à la page RS-3022, et réparer complètement la pièce défectueuse.

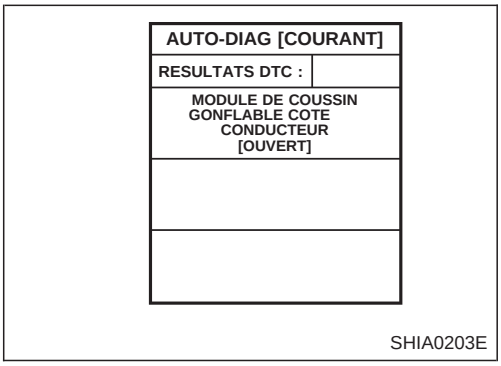

SHIA0203E

Simpo PDF Merge and Split Unregistered Version - http://www.simpopdf.com

Autodiagnostic (Suite)

8. Appuyer sur ‘‘EFFAC’’.

NOTE :

Appuyer sur ‘‘EFFAC’’ pour effacer le défaut de la mémoire (‘‘AUTO-DIAG [PASSE]’’).

Si le défaut mémorisé en mode ‘‘AUTO-DIAG [PASSE]’’ n’est pas effacé, le mode utilisateur indique le défaut du système par le biais du témoin d’avertissement, même si le défaut a été complètement éliminé.

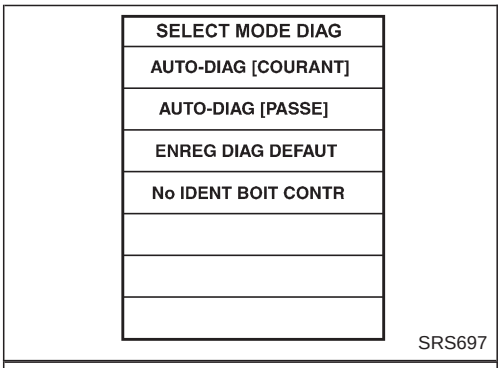

9. Appuyer sur la touche ‘‘RETOUR’’ de CONSULT-II pour sélectionner ’’AUTO-DIAG [PASSE]’’ sur l’écran ’’SELECT MODE DIAG’’. Appuyer sur ‘‘AUTO-DIAG [PASSE]’’.

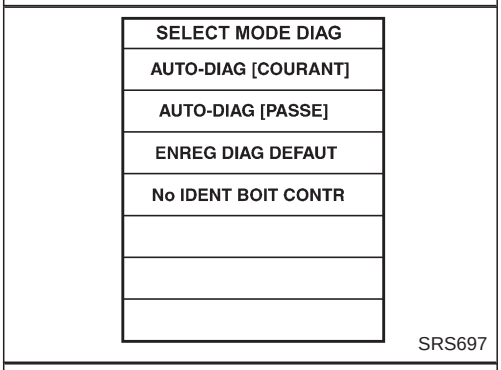

10. S’assurer qu’aucun défaut de fonctionnement n’est détecté en ‘‘AUTO-DIAG [PASSE]’’.

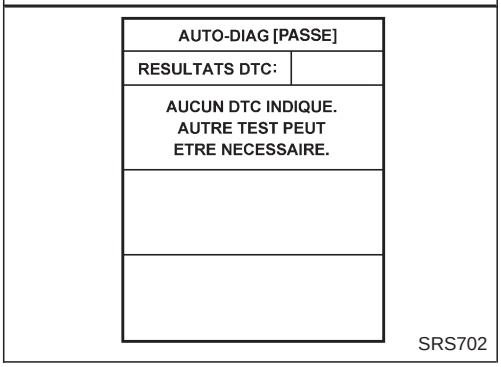

11. Appuyer sur la touche‘‘RETOUR’’ de CONSULT-II jusqu’à ce que l’écran ‘‘SELECTION SYSTEME’’ apparaisse.
12. Mettre le contact sur ‘‘OFF’’, puis éteindre et débrancher CONSULT-II.
13. Aller à PROCEDURE DE DIAGNOSTIC 1, page RS-3021 pour vérifier le fonctionnment du SRS à l’aide du témoin d’avertissement ‘‘AIR BAG’’ en mode utilisateur.

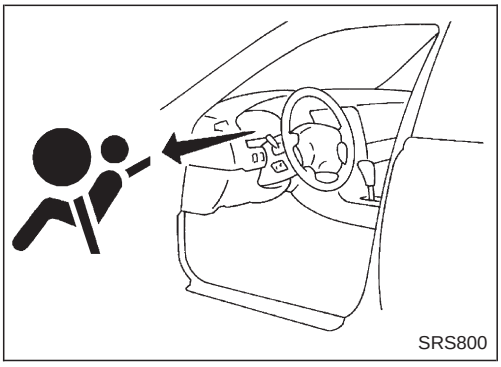

PROCEDURE DE DIAGNOSTIC 5 (⊗ sans CONSULT-II)

Vérification finale après réparation du SRS à l’aide du témoin d’avertissement ‘‘AIR BAG’’ — Mode de diagnostic et mode utilisateur

1. Après avoir réparé le SRS, brancher les deux câbles de la batterie.
2. Ouvrir la porte du conducteur.
3. Mettre le contact d’allumage de la position ‘‘OFF’’ à ‘‘ON’’.
4. Le témoin d’avertissement ‘‘AIR BAG’’ fonctionne en mode de diagnostic comme suit :

Simpo PDF Merge and Split Unregistered Version - http://www.simpopdf.com

Autodiagnostic (Suite)

N°	Séquence de clignotement du témoin d'avertissement ''AIR BAG'' — Mode de diagnostic —		Conditions du SRS
1	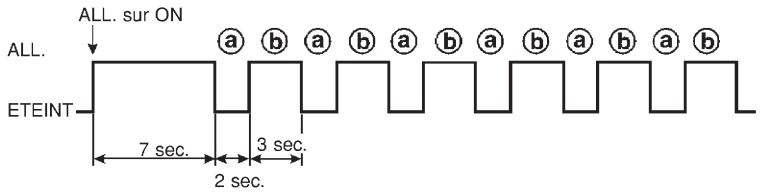 SRS333	La séquence de ⓐ à ⓑ est répétée.	Aucun défaut n'est détecté ou la réparation est achevée. Aucune démarche supplémentaire n'est nécessaire.
2	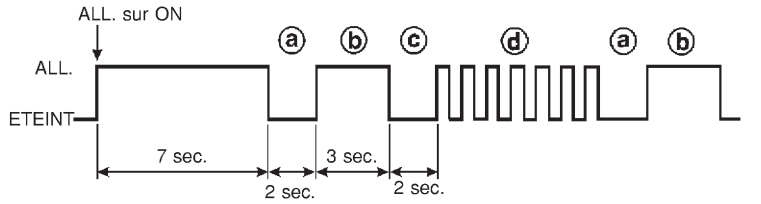 SRS341	La séquence de ⓐ à ⓓ est répétée. ⓑ — Repère du coussin gonflable côté conducteur/passager et du prétensionneur de ceinture de sécurité (pour l'identification d'un défaut de fonctionnement du coussin gonflable côté conducteur/passager et/ou du prétensionneur de ceinture de sécurité) ⓓ — Indique le composant défectueux. Le nombre de clignotements varie selon le composant défectueux (0,5 sec. ALLUME et 0,5 sec. ETEINT est considéré comme un clignotement.)	Le système est défectueux et a besoin d'être réparé.
3	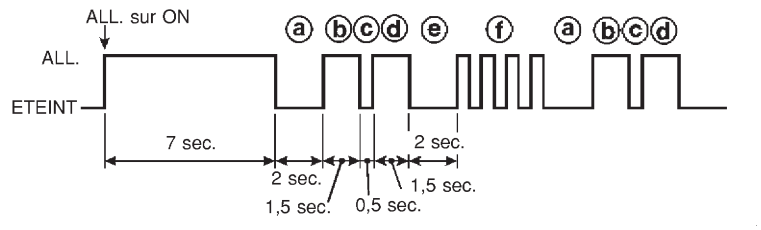 SRS342-A	La séquence de ⓐ à ⓕ est répétée. ⓑ, ⓒ, ⓓ — Signal de coussin gonflable latéral (permet d'identifier les défauts de fonctionnement du coussin gonflable latéral). ⓕ — Signale le composant défectueux. Le nombre de clignotements varie selon le composant défectueux (0,5 sec. ALLUME et 0,5 sec. ETEINT est considéré comme un clignotement.)	

NOTE :
Si le boîtier de capteurs de diagnostic est remplacé par un boîtier neuf, le témoin d'avertissement ''AIR BAG'' fonc-

Simpo PDF Merge and Split Unregistered Version - http://www.simpopdf.com

Autodiagnostic (Suite)

tionne en mode utilisateur. La vérification du fonctionnement du témoin d'avertissement ''AIR BAG'' en mode de diagnostic n'est pas nécessaire. Passer à l'étape 6.

5. Si le témoin d'avertissement ''AIR BAG'' fonctionne conformément à la séquence n°. 1 du tableau précédent, couper le contact d'allumage pour passer du mode de diagnostic en mode utilisateur et pour effacer le défaut de la mémoire. Puis passer à l'étape 6.

   Si le témoin d'avertissement ''AIR BAG'' fonctionne conformément à la séquence n°. 2 ou n°3 dans le tableau précédent, le composant défectueux n'a pas été complètement réparé ou un autre défaut de fonctionnement à été détecté. Voir PROCEDURE DE DIAGNOSTIC 3, à la page RS-3025, et réparer complètement la pièce défectueuse.

Simpo PDF Merge and Split Unregistered Version - http://www.simpopdf.com

Autodiagnostic (Suite)

6. Tourner le contact d'allumage sur ''ON''. Le témoin d'avertissement ''AIR BAG'' fonctionne en mode utilisateur. Comparer le fonctionnement du témoin d'avertissement ''AIR BAG'' au tableau ci-dessous.

NOTE :
S'il est nécessaire de passer du mode de diagnostic au mode utilisateur quand un défaut est détecté, tourner le contact d'allumage comme suit :
1) Mettre le contact d'allumage sur ''ON''.
2) Après que le témoin d'avertissement ''AIRBAG'' ait été allumé pendant 7 secondes, mettre le contact d'allumage sur ''OFF'' en moins d'un seconde.
3) Attendre plus de 3 secondes.
4) Répéter à deux reprises les étapes 1 à 3 (3 cycles au total).
5) Mettre le contact d'allumage sur ''ON''.
Le SRS est maintenant en mode utilisateur.

Fonctionnement du témoin d'avertissement ''AIR BAG'' — Mode utilisateur—	Conditions du SRS	Elément de référence
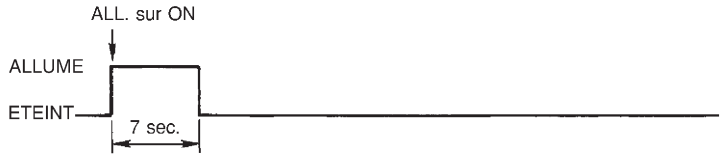 MRS095A	Aucun défaut n'est détecté. Aucune démarche supplémentaire n'est nécessaire.	—
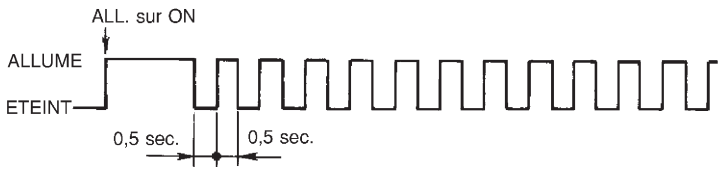 MRS096A	Le système est défectueux et a besoin d'être réparé comme indiqué.	Aller à la PROCEDURE DE DIAGNOSTIC 3 (RS-3025).
 MRS097A	Le coussin gonflable est déployé. Le prétensionneur de ceinture de sécurité est déployé.	Voir DIAGNOSTIC DE COLLISION (RS-3042).
	Le fusible de coussin gonflable, le boîtier de capteurs de diagnostic ou le faisceau est défectueux et doit être réparé.	Aller à la PROCEDURE DE DIAGNOSTIC 9 (RS-3040).

Simpo PDF Merge and Split Unregistered Version - http://www.simpopdf.com

Autodiagnostic (Suite)

Fonctionnement du témoin d'avertissement ''AIR BAG'' — Mode utilisateur—	Conditions du SRS	Elément de référence
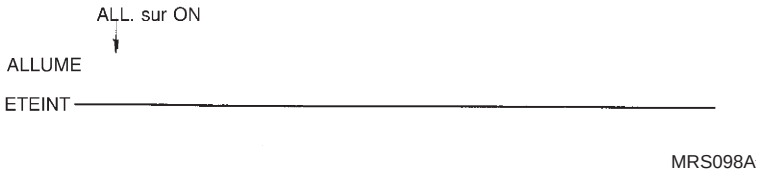	Un des défauts suivants s'est manifesté et doit être réparé. ●Le fusible des instruments combinés est grillé. ●Le circuit du témoin d'avertissement ''AIR BAG'' est ouvert ou en court-circuit. ●Le boîtier de capteurs de diagnostic est défectueux.	Aller à la PROCEDURE DE DIAGNOSTIC 10 (RS-3041).

Simpo PDF Merge and Split Unregistered Version - http://www.simpopdf.com

Autodiagnostic (Suite)

PROCEDURE DE DIAGNOSTIC 6 (suite de la PROCEDURE DE DIAGNOSTIC 2)

Inspection d'un défaut enregistré du SRS

Est-ce le premier entretien du SRS ? — Non → ''AUTO-DIAG [PASSE]'' (entré précédemment) est toujours présent dans la mémoire. Aller à la PROCEDURE DE DIAGNOSTIC 4 (RS-3030).

Oui → **Aller à la PROCEDURE DE DIAGNOSTIC 8 (RS-3036).**

PROCEDURE DE DIAGNOSTIC 7 (suite de la PROCEDURE DE DIAGNOSTIC 3) (sans CONSULT-II)

Inspection d'un défaut enregistré du SRS

Est-ce le premier entretien du SRS ? — Non → Les résultats de diagnostic (précédemment mémorisés) n'ont pas été effacés, même après que le système a été réparé. Aller à la PROCEDURE DE DIAGNOSTIC 5, étape 5 (RS-3031).

Oui → **Aller à la PROCEDURE DE DIAGNOSTIC 8 (RS-3036).** L'inspection ne peut être poursuivie sans CONSULT-II.

PROCEDURE DE DIAGNOSTIC 8 (avec CONSULT-II)

Inspection d'un défaut intermittent du SRS à l'aide de CONSULT-II — Mode de diagnostic

1. Mettre le contact d'allumage sur ''OFF''.
2. Brancher CONSULT-II au connecteur de liaison de données.

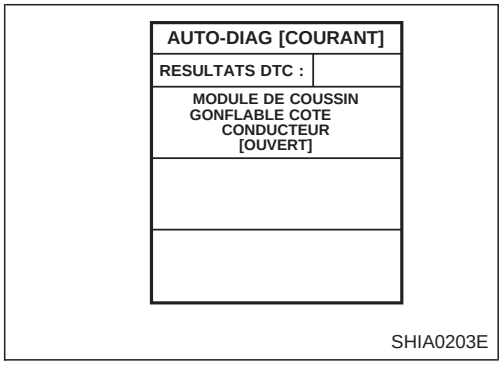

3. Mettre le contact d'allumage sur ''ON''.
4. Appuyer sur ''DEPART''.

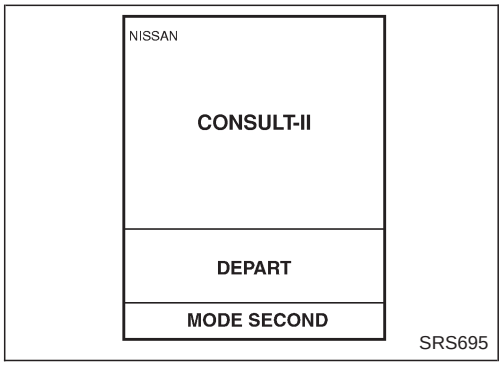

Simpo PDF Merge and Split Unregistered Version - http://www.simpopdf.com

Autodiagnostic (Suite)

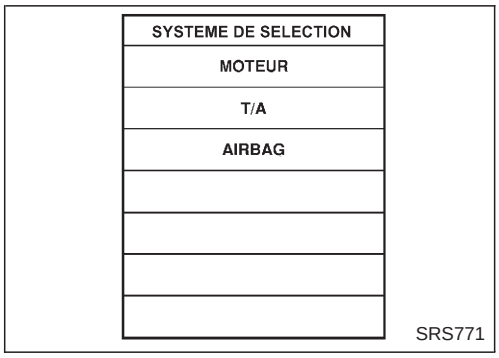

5. Appuyer sur ‘‘AIR BAG’’.

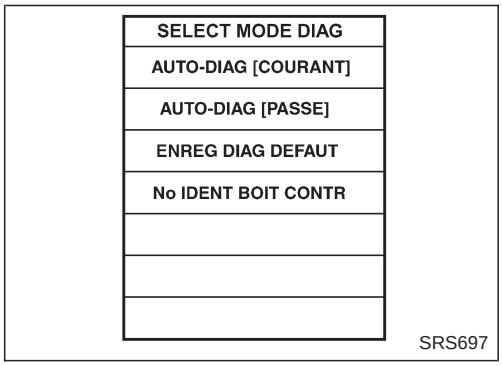

6. Appuyer sur ‘‘AUTO-DIAG [PASSE]’’.

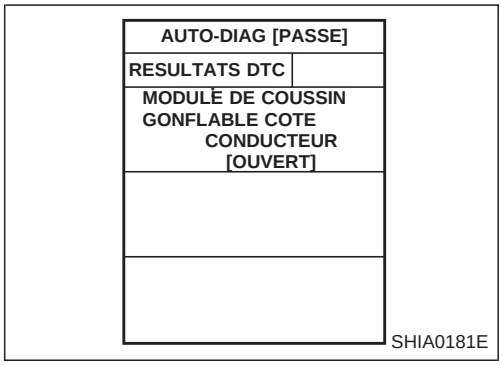

7. Si les codes de diagnostic s’affichent dans ‘‘AUTO-DIAG [PASSE]’’, passer à l’étape 10.

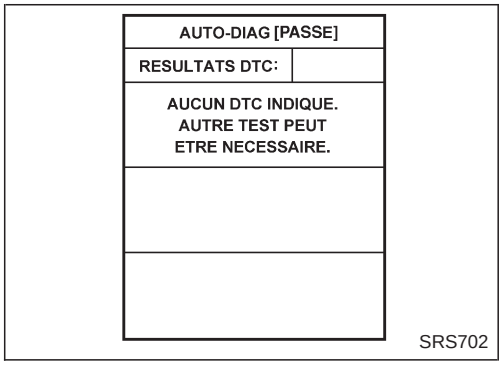

Si aucun défaut de fonctionnement n’est détecté en ‘‘AUTO-DIAG [PASSE]’’, appuyer sur ‘‘RETOUR’’ et revenir à ‘‘SELECT MODE DIAG’’.

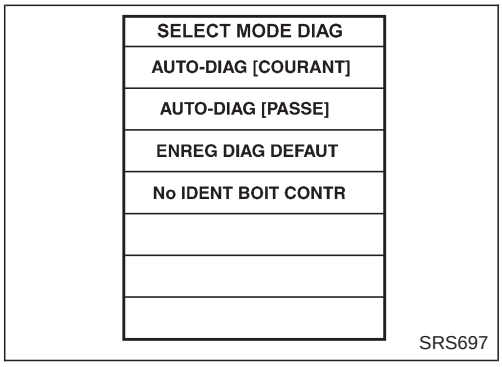

8. Appuyer sur ‘‘ENREG DIAG DEFAUT’’.

NOTE :
La fonction ‘‘ENREG DIAG DEFAUT’’ permet d’afficher sur l’écran CONSULT les résultats de diagnostic précédemment effacés lors de la remise à zéro du système.

SimpoPDF Merge and Split Unregistered Version - http://www.simpopdf.com

Autodiagnostic (Suite)

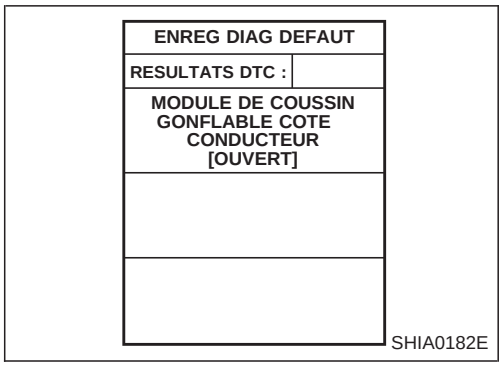

9. Le code de diagnostic est affiché dans ‘‘ENREG DIAG DEFAUT’’.
10. Appuyer sur ‘‘IMPRI’’.
11. Comparer les codes de diagnostic avec le TABLEAU DES CODES DE DIAGNOSTIC DE DEFAUT DE FONCTIONNEMENT INTERMITTENT, page RS-3038.
12. Appuyer sur la touche ‘‘RETOUR’’ du CONSULT jusqu’à ce que ‘‘SELECTION SYSTEME’’ apparaisse, puis éteindre CONSULT-II.
13. Mettre le contact d’allumage sur ‘‘OFF’’, et débrancher CONSULT-II et les deux câbles de la batterie.
14. Réparer le système comme indiqué dans ‘‘Ordre de réparation’’ du ‘‘TABLEAU DES CODES DE DIAGNOSTIC POUR PROBLEMES INTERMITTENTS’’, qui correspond au résultat d’autodiagnostic. Pour la procédure de remplacement de pièces des composants, se reporter à RS-3005 et ‘‘Dépose et repose’’ dans la section RS du manuel de réparation (N° de pub. SM9F-D22BE0E) pour plus de détails.
15. Aller à PROCEDURE DE DIAGNOSTIC 4, page RS-3030

TABLEAU DES CODES DE DIAGNOSTIQUE EN CAS D’INCIDENT INTERMITTENT (‘‘AUTO-DIAG [PASSE]’’ ou ‘‘ENREG DIAG DEFAUT’’)

Elément de diagnostic	Explication		Ordre de réparation
AUCUN DTC INDIQUE	Lorsque le défaut de fonctionnement est indiqué par le témoin d’avertissement ‘‘AIR BAG’’ en mode utilisateur	●Tension de la batterie basse (moins de 9 V).	●Voir PROCEDURE DE DIAGNOSTIC 4 (RS-3030) après avoir chargé la batterie.
	●Aucun défaut n’est détecté.		●Aller à la PROCEDURE DE DIAGNOSTIC 4 (RS-3030).
MODULE DE COUSSIN GONFLABLE COTE CONDUCTEUR [OUVERT]	●Le circuit du module de coussin gonflable côté conducteur est ouvert. (Câble spiralé inclus)		1. Inspecter visuellement la connexion du faisceau de câblage. 2. Remplacer le faisceau s’il est visiblement endommagé. 3. Si les résultats de la vérification du faisceau sont bons, remplacer le câble spiralé, le boîtier de capteurs de diagnostic et le module de coussin gonflable du conducteur. Le module de coussin gonflable doit être déployé avant d’être mis au rebut.
MODULE DE COUSSIN GONFLABLE COTE CONDUCTEUR [COURT TENS BATT]	●Le circuit du module de coussin gonflable côté conducteur est en court-circuit avec un circuit d’alimentation électrique. (Câble spiralé inclus)		
MODULE DE COUSSIN GONFLABLE COTE CONDUCTEUR [COURT-CIRC MASSE]	●Le circuit du module de coussin gonflable côté conducteur avant est court-circuité à la masse. (Câble spiralé inclus)		
MODULE AIR BAG [COURT-CIRC]	●Les circuits du module de coussin gonflable côté conducteur sont court-circuités les uns avec les autres.		

Simpo PDF Merge and Split Unregistered Version - http://www.simpopdf.com

Autodiagnostic (Suite)

Elément de diagnostic	Explication	Ordre de réparation
MODULE A/B PASSAG [COURT TENS BATT]	●Le circuit du module de coussin gonflable côté passager avant est en court-circuit avec un circuit d'alimentation électrique.	1. Inspecter visuellement la connexion du faisceau de câblage. 2. Remplacer le faisceau s'il est visiblement endommagé. 3. Si la vérification du faisceau est satisfaisante, remplacer le câble spiralé, le boîtier de capteurs de diagnostic et le module de coussin gonflable passager. Le module de coussin gonflable passager doit être déployé avant d'être mis au rebut.
MODULE A/B PASSAG [OUVERT]	●Le circuit du module de coussin gonflable côté passager avant est ouvert.	
MODULE A/B PASSAG [COURT-CIRC MASSE]	●Le circuit du module de coussin gonflable côté passager avant est court-circuité à la masse.	
MODULE A/B PASSAG [COURT-CIRC]	●Les circuits du module de coussin gonflable avant côté passager sont court-circuités les uns avec les autres.	
PRE-TEN AVANT GAUCHE [OUVERT]	●Le circuit du prétensionneur de ceinture de sécurité gauche est ouvert ou en court-circuit avec un circuit d'alimentation.	1. Vérifier visuellement les connexions de faisceau de câblage. 2. Remplacer le faisceau s'il est visiblement endommagé. 3. Si la vérification du faisceau est satisfaisante, remplacer le boîtier de capteurs de diagnostic et la ceinture de sécurité gauche. Le prétensionneur de ceinture de sécurité gauche doit être déployé avant d'être mis au rebut.
PRE-TEN AVANT GAUCHE [COURT TENS BATT]	●Le circuit du prétensionneur de ceinture de sécurité gauche est en court-circuit avec un circuit d'alimentation.	
PRE-TEN AVANT GAUCHE [COURT-CIRC MASSE]	●Le circuit du prétensionneur de ceinture de sécurité gauche est court-circuité à la masse.	
PRE-TEN AVANT DROIT [OUV/COURT TENS BATT]	● Le circuit du prétensionneur de ceinture de sécurité droit est ouvert ou en court-circuit avec un circuit d'alimentation.	1. Vérifier visuellement les connexions de faisceau de câblage. 2. Remplacer le faisceau s'il est visiblement endommagé. 3. Si la vérification du faisceau est satisfaisante, remplacer le boîtier de capteurs de diagnostic et la ceinture de sécurité droite. Le prétensionneur de ceinture de sécurité droit doit être déployé avant d'être mis au rebut.
PRE-TEN AVANT DROIT [COURT TENS BATT]	● Le circuit du prétensionneur de ceinture de sécurité droit est en court-circuit avec un circuit d'alimentation.	
PRE-TEN AVANT DROIT [COURT-CIRC MASSE]	● Le circuit du prétensionneur de ceinture de sécurité droit est court-circuité à la masse.	
BOITIER DE COMMANDE	●Le boîtier de capteurs de diagnostic est défectueux.	1. Inspecter visuellement la connexion du faisceau de câblage. 2. Remplacer le faisceau s'il est visiblement endommagé. 3. Si la vérification du faisceau est satisfaisante, remplacer le boîtier de capteurs de diagnostic.

* Suivre les procédures dans l'ordre numérique lors de la réparation des pièces défectueuses, puis procéder au contrôle final du système.

Simpo PDF Merge and Split Unregistered Version - http://www.simpopdf.com

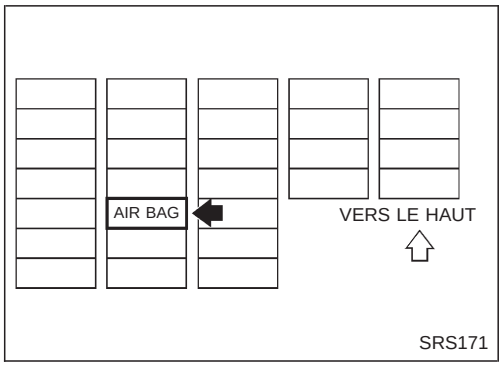

Diagnostics des défauts du témoin d'avertissement ''AIR BAG''

PROCEDURE DE DIAGNOSTIC 9

SYMPTOME : le témoin d'avertissement ''AIR BAG'' ne s'éteint pas.

Le module de coussin gonflable est-il déployé ?
- Oui → Se reporter à DIAGNOSTIC DE COLLISION, (RS-3042).
- Non ↓

Le fusible (''AIR BAG'') du SRS fonctionne-t-il correctement ?
- Non → Remplacer le fusible.
- Oui ↓

Brancher CONSULT-II et appuyer sur ''DEPART''.
- ● Est-ce que ''AIR BAG'' s'affiche sur l'écran CONSULT-II?

Non → Vérifier visuellement le branchement du faisceau de câblage du boîtier de capteurs de diagnostic. Si la vérification du branchement du faisceau est satisfaisante, remplacer le boîtier de capteurs de diagnostic.

Oui ↓

Est-ce que la connexion de faisceau entre le témoin et le boîtier de capteurs de diagnostic est bonne ?
- Non → Brancher le connecteur du témoin et du boîtier de capteurs de diagnostic correctement. Si le témoin ne s'éteint toujours pas, remplacer le faisceau.
- Oui ↓

Remplacer le boîtier de capteurs de diagnostic.

Simpo PDF Merge and Split Unregistered Version - http://www.simpopdf.com

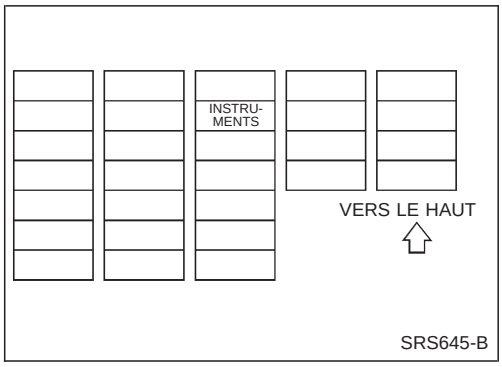

Diagnostics des défauts du témoin d'avertissement ''AIR BAG'' (Suite)

PROCEDURE DE DIAGNOSTIC 10

SYMPTOME : le témoin d'avertissement ''AIR BAG'' ne s'allume pas.

Le fusible du témoin fonctionne-t-il correctement ?

Non → Remplacer le fusible et mettre le contact d'allumage sur ON. Si le fusible des instruments combinés est grillé, réparer le faisceau correspondant.

Oui ↓

1. Débrancher le connecteur du boîtier de capteurs de diagnostic.
2. Mettre le contact d'allumage sur ''ON''.

●Le témoin s'allume-t-il ?

Non → Brancher le connecteur du témoin et du boîtier de capteurs de diagnostic correctement. Si le témoin ne s'allume toujours pas, remplacer le faisceau.

Oui ↓

Remplacer le boîtier de capteurs de diagnostic.

Simpo PDF Merge and Split Unregistered Version - http://www.simpopdf.com

POUR COLLISION FRONTALE

Procéder de la façon suivante pour réparer le SRS en cas de collision frontale.

Si le SRS (à l'exception du coussin gonflable latéral) est activé lors d'une collision :

① remplacer le boîtier de capteurs de diagnostic.
② Déposer les modules de coussins gonflables (à l'exception du module de coussin gonflable latéral)
③ Contrôler les composants du SRS à l'aide du tableau ci-dessous :
- Remplacer les composants du SRS qui montrent des signes visibles de dommages (bosses, fissures, déformation).

④ Reposer les nouveaux modules de coussin gonflable (à l'exception du module de coussin gonflable latéral).
⑤ Effectuer un autodiagnostic à l'aide de CONSULT et du témoin d'avertissement ''AIR BAG''. Se reporter à ''Autodiagnostic'' pour plus de détails (RS-3021). S'assurer que l'ensemble du SRS fonctionne correctement.

Lorsque le SRS n'est pas activé lors d'une collision :

① Contrôler les composants du SRS à l'aide du tableau ci-dessous :
- Remplacer les composants du SRS qui montrent des signes visibles de dommages (bosses, fissures, déformation).

② Effectuer un autodiagnostic à l'aide de CONSULT et du témoin d'avertissement ''AIR BAG''. Se reporter à ''Autodiagnostic'' pour plus de détails (RS-3021). S'assurer que l'ensemble du SRS fonctionne correctement.

Inspection du SRS

Pièce	Le SRS est activé (à l'exception du module de coussin gonflable latéral).	Le SRS n'est PAS activé.
Module de coussin gonflable (côté conducteur et passager)	REMPLACER Reposer le module de coussin gonflable en utilisant des boulons neufs.	1. Déposer le module de coussin gonflable. Vérifier que le cache du faisceau et les connecteurs ne sont pas endommagés, les bornes déformées et le faisceau coincé. 2-1. Reposer le module de coussin gonflable côté conducteur sur le volant et vérifier s'il est correctement monté et aligné sur le volant. 2-2. Reposer le module de coussin gonflable côté passager sur le tableau de bord et vérifier s'il est correctement monté sur le tableau de bord. 3. Si aucun dommage n'est trouvé, reposer l'ensemble avec des boulons neufs. 4. En cas de dommage — REMPLACER. Le coussin gonflable doit être déployé avant d'être mis au rebut.
Ensemble de prétensionneur de ceinture de sécurité	REMPLACER Reposer le prétensionneur de ceinture de sécurité en utilisant des boulons neufs.	1. Déposer les prétensionneurs de ceinture de sécurité. Vérifier que le cache du faisceau et les connecteurs ne sont pas endommagés, les bornes déformées et le faisceau coincé. 2. Vérifier que les ceintures ne sont pas endommagées et que les ancrages ne sont pas desserrés. 3.Vérifier le bon fonctionnement des enrouleurs. 4.Si l'on ne constate aucun dommage, reposer en utilisant des boulons neufs enduits de produit adhésif. 5.En cas de dommage — REMPLACER. Reposer le prétensionneur de ceinture de sécurité en utilisant des boulons neufs enduits de produit adhésif. Les prétensionneurs de ceintures de sécurité doivent être déployés avant d'être mis au rebut.
Boîtier de capteurs de diagnostic	REMPLACER Reposer le boîtier de capteurs de diagnostic en utilisant des boulons neufs.	1. Vérifier que le boîtier et son support ne sont pas bosselés, fissurés ou déformés. 2. Vérifier que les connecteurs ne sont pas endommagés et les bornes déformées. 3. Si aucun dommage n'est trouvé, reposer l'ensemble avec des boulons neufs. 4. En cas de dommage — REMPLACER. Reposer le boîtier de capteurs de diagnostic en utilisant des boulons neufs.

Simpo PDF Merge and Split Unregistered Version - http://www.simpopdf.com

Pièce	Le SRS est activé (à l'exception du module de coussin gonflable latéral).	Le SRS n'est PAS activé.
Volant	1. Vérifier visuellement si le volant de direction n'est pas déformé. 2. Vérifier que le faisceau (intégré au volant) et les connecteurs ne sont pas endommagés et les bornes déformées. 3. Monter le module de coussin gonflable pour en contrôler l'alignement avec le volant. 4. Vérifier que le volant ne présente pas un jeu excessif. 5. Si l'on ne constate aucun dommage, reposer le volant. 6. En cas de dommage — REMPLACER.	
Câble spiralé	1. Contrôler visuellement que le câble spiralé et la commande combinée ne sont pas endommagés. 2. Vérifier que les connecteurs, le câble plat et la bande de protection sont en bon état. 3. Vérifier que le volant est exempt de tout bruit, point de force et qu'il tourne librement. 4. Si l'on ne constate aucun dommage, reposer le câble spiralé. 5. En cas de dommage — REMPLACER.	
Faisceau et connecteurs	1. Vérifier si les connecteurs sont bien branchés, s'ils ne sont pas endommagés et si les bornes ne sont pas déformées. 2. Vérifier que le faisceau ne coince pas et qu'il n'est pas effiloché, coupé ou déformé. 3. Si l'on ne constate aucun dommage, reposer le faisceau et les connecteurs. 4. En cas de dommage — REMPLACER la partie du faisceau endommagée. Ne pas essayer de réparer, épisser ou modifier le faisceau du SRS.	
Tableau de bord	1. Vérifier que le tableau de bord n'est pas courbé, déformé ou fissuré. 2. Vérifier que les supports du module latéral côté passager ne sont pas bosselés, fissurés ou déformés. 3. Si aucun dommage n'est trouvé, reposer l'ensemble avec des boulons neufs. 4. En cas de dommage — REMPLACER.	

Simpo PDF Merge and Split Unregistered Version - http://www.simpopdf.com

<SUPPLEMENT-III>

BOITE DE TRANSFERT

SECTION TF

AVIS DE MODIFICATION :
Des éléments de la boîte de transfert ont été changés.

TABLE DES MATIERES

COMMANDE DE BOITE DE TRANSFERT 3002
REVISION GENERALE 3003
Composants du carter 3003
Composants de l'engrenage 3004
Composants de la commande de vitesse 3005
CARACTERISTIQUES ET VALEURS DE REGLAGE (SDS) 3006
Caractéristiques générales 3006
Inspection et Réglage 3006

Simpo PDF Merge and Split Unregistered Version - http://www.simpopdf.com

SEC. 333

: N·m (kg-m)

: N·m (kg-m)

1 : Remplir de graisse à usage multiple.

2 : Enduire de graisse à usage multiple.

*1 : Plier les cliquets pour la repose. Veiller à ne pas endommager le soufflet.

*2 : Ne pas toucher le soufflet avec un outil pointu ou dur car il est fragile.

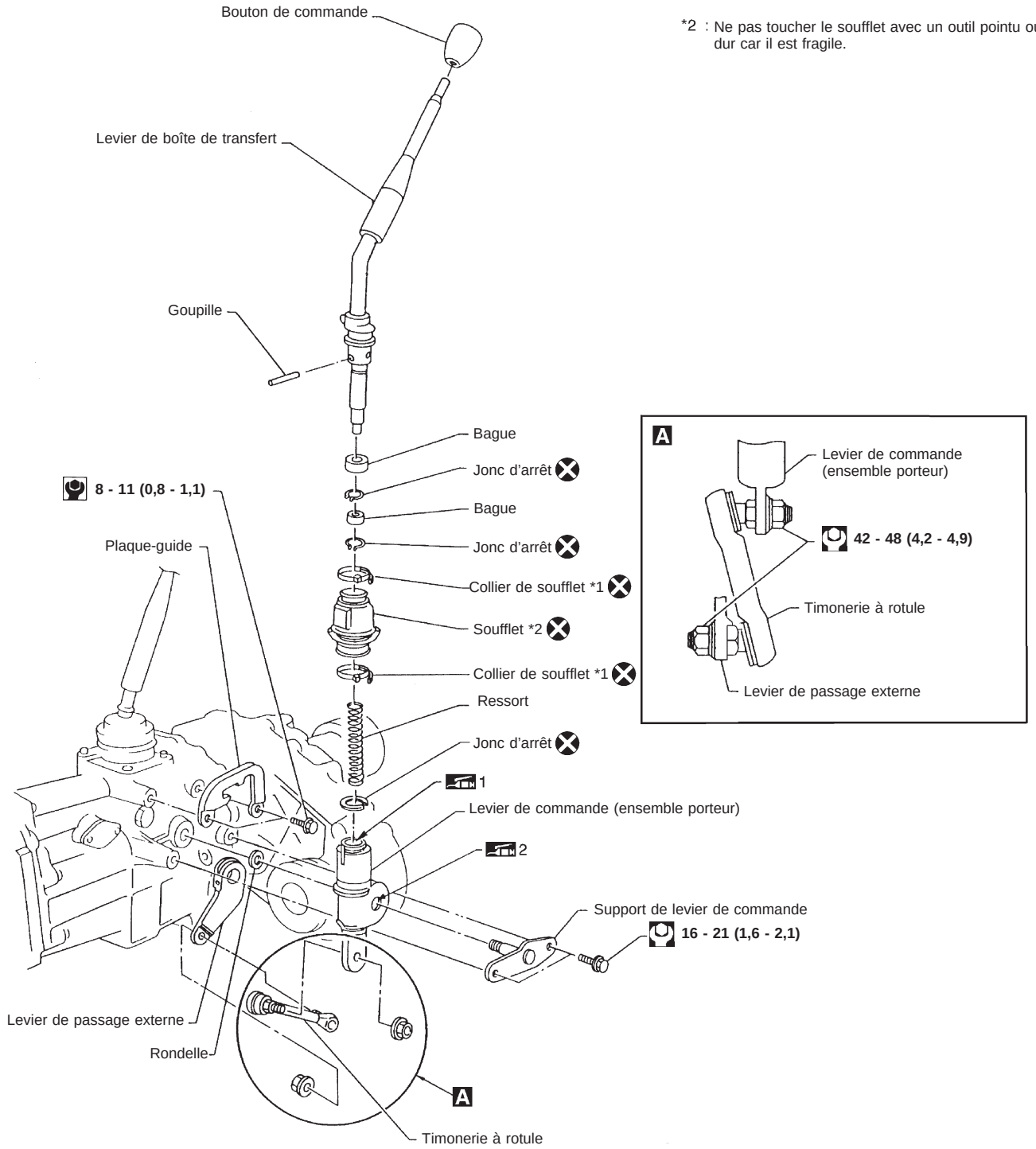

SMT864CD

Simpo PDF Merge and Split Unregistered Version - http://www.simpopdf.com

Composants du carter

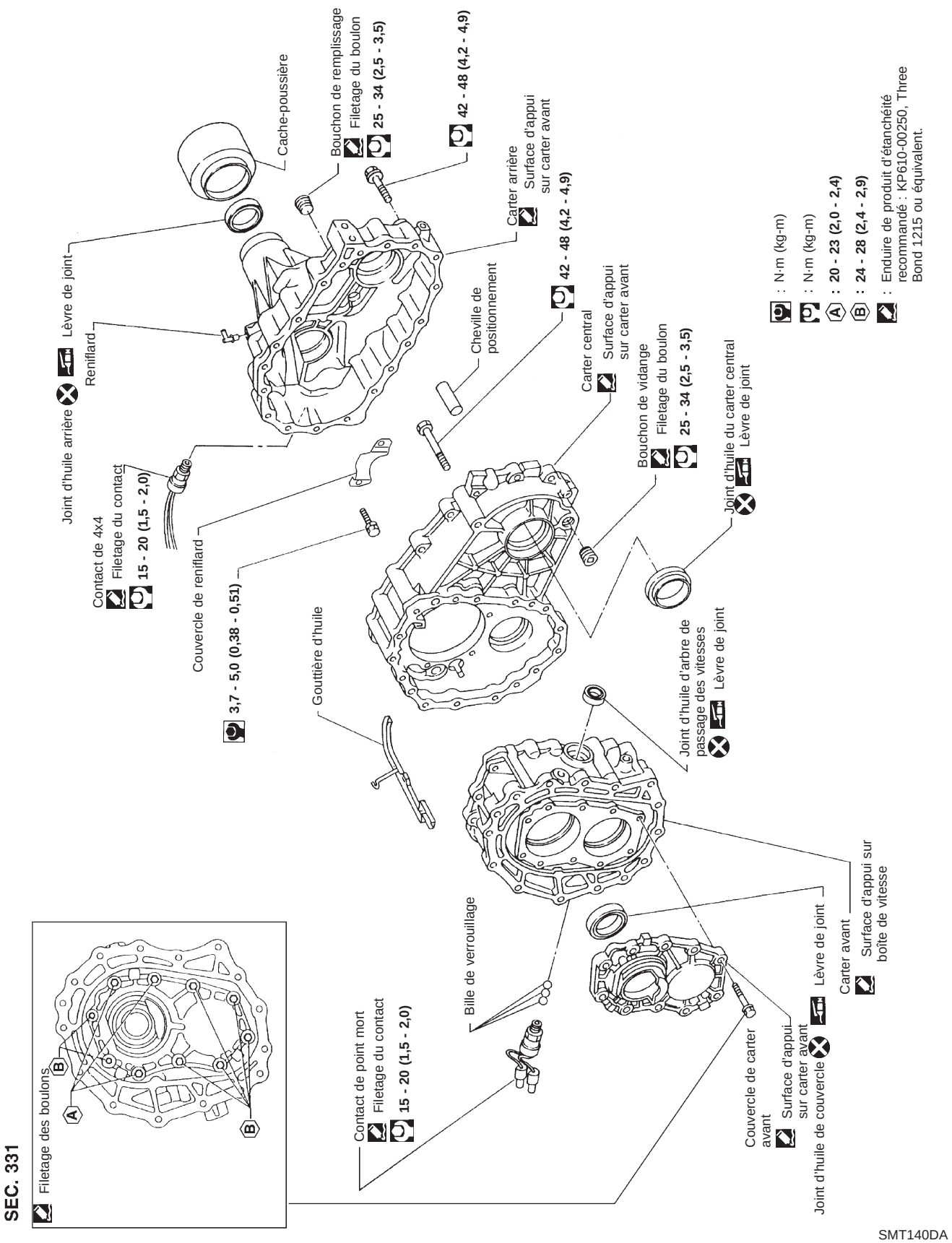

Simpo PDF Merge and Split Unregistered Version - http://www.simpopdf.com

Composants de l'engrenage

SEC. 322

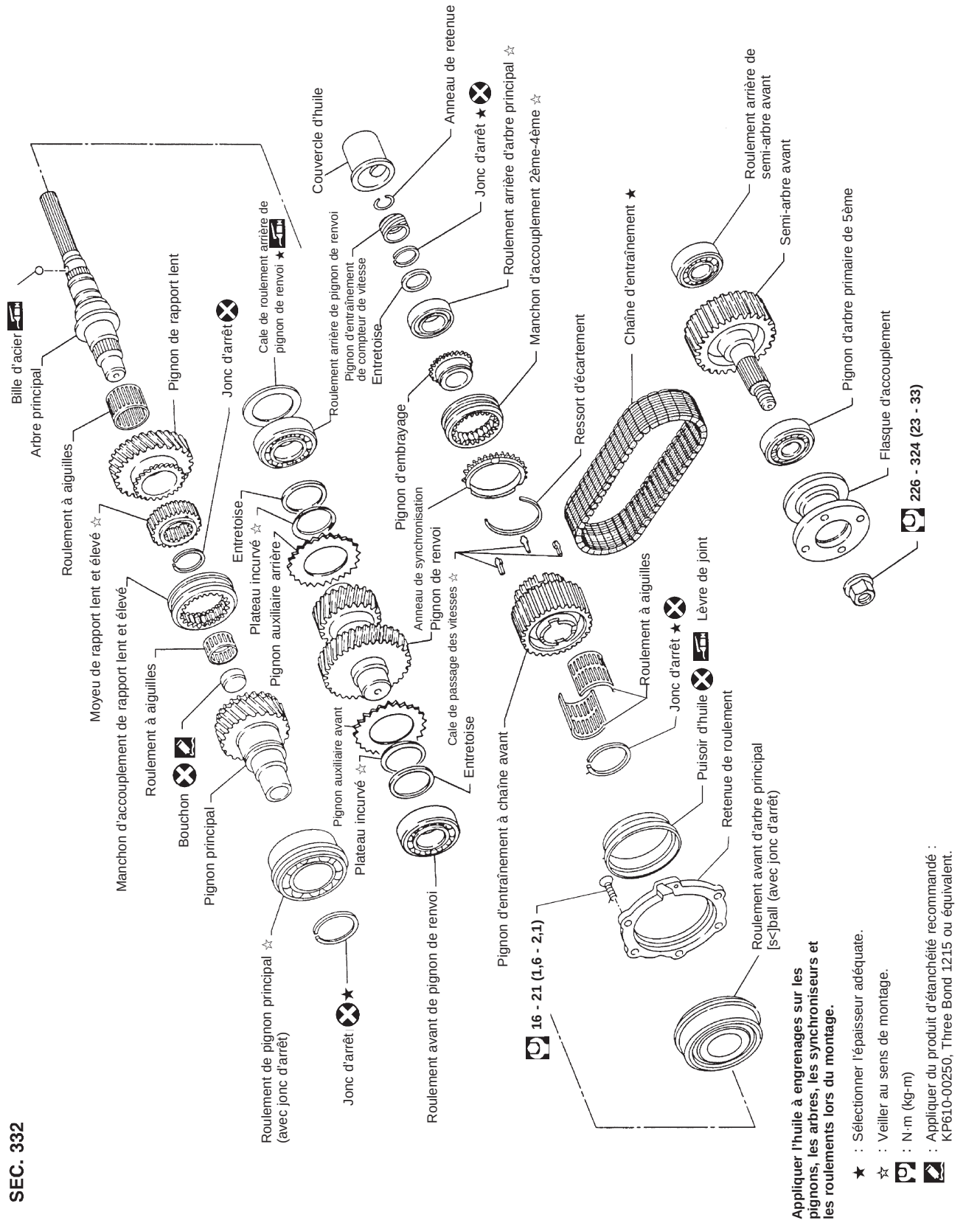

SEC. 332

Appliquer l'huile à engrenages sur les pignons, les arbres, les synchroniseurs et les roulements lors du montage.

★ : Sélectionner l'épaisseur adéquate.
☆ : Veiller au sens de montage.
: N·m (kg-m)
: Appliquer du produit d'étanchéité recommandé : KP610-00250, Three Bond 1215 ou équivalent.

SMT043E

Simpo PDF Merge and Split Unregistered Version - http://www.simpopdf.com

Composants de la commande de vitesse

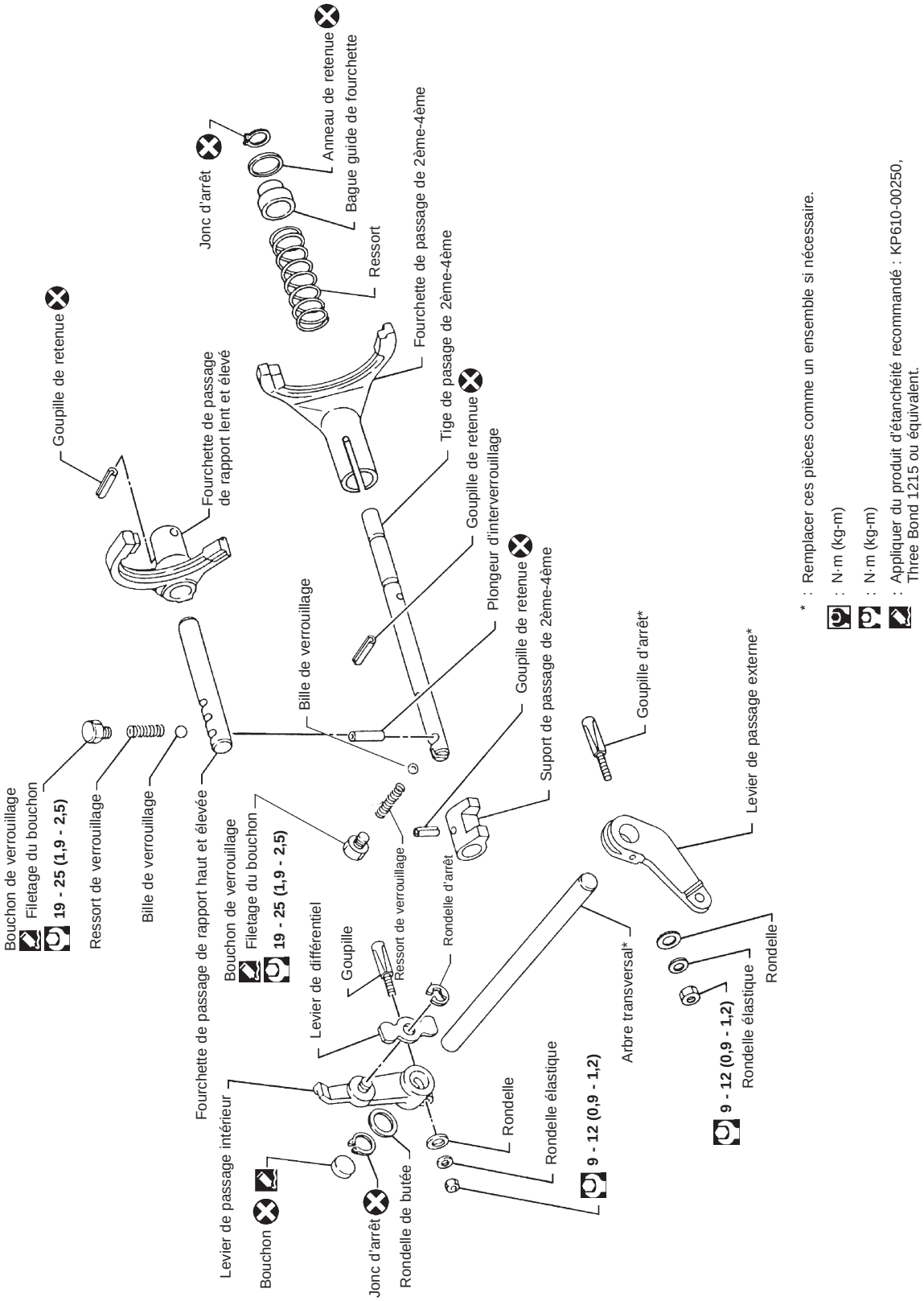

SMT044E

Simpo PDF Merge and Split Unregistered Version - http://www.simpopdf.com

Caractéristiques générales

Modèle de boîte de transfert			TX10A
Rapport de démultiplication	Elevé		1,000
	Lent		2,020
Nombre de dents	Pignon principal		29
	Pignon de rapport lent		37
	Pignon de renvoi	Elevé	38
		Lent	24
	Pignon d'entraînement à chaîne avant		41
	Semi-arbre avant		41
Contenance en huile ℓ			2,2

Inspection et Réglage

JEU ENTRE LE PIGNON D'ENTRAINEMENT A CHAINE AVANT ET LE MANCHON D'ACCOUPLEMENT 2EME-4EME

Jeu admissible "C"	0,2 - 0,54 mm

JEU AXIAL DES PIGNONS

Unité : mm

Pignon d'entraînement à chaîne avant	0,2 - 0,35
Pignon de rapport lent	0,2 - 0,35
Pignon de renvoi	0 - 0,2

JEU ENTRE L'ANNEAU DE SYNCRO ET LE PIGNON D'EMBRAYAGE

Unité : mm

Standard	Limite d'usure
1,0 - 1,5	0,5

JONC D'ARRET DISPONIBLE

Roulement avant d'arbre principal

Jeu acceptable	0 - 0,15 mm
Epaisseur mm	N° de la pièce*
3,10	33138-73P10
3,19	33138-73P11
3,28	33138-73P12

*: Toujours contrôler avec le Service des Pièces Détachées pour les dernières informations sur les pièces.

Roulement arrière d'arbre principal

Jeu acceptable	0 - 0,15 mm
Epaisseur mm	N° de la pièce*
1,80	33138-73P20
1,89	33138-73P21
1,98	33138-73P22
2,07	33138-73P23
2,16	33138-73P24

*: Toujours contrôler avec le Service des Pièces Détachées pour les dernières informations sur les pièces.

Roulement de pignon principal

Jeu acceptable	0 - 0,15 mm
Epaisseur mm	N° de la pièce*
2,60	33114-73P00
2,69	33114-73P01
2,78	33114-73P02

*: Toujours contrôler avec le Service des Pièces Détachées pour les dernières informations sur les pièces.

Simpo PDF Merge and Split Unregistered Version - http://www.simpopdf.com

CALE DISPONIBLE

Roulement arrière de pignon de renvoi

Distance "A" mm	Cale(s)	
	Epaisseur mm	N° de la pièce*
32,65 - 32,55	Pas nécessaire	
32,55 - 32,45	0,1	33112-C6900
32,45 - 32,35	0,2	33112-C6901
32,35 - 32,25	0,3	33112-C6902
32,25 - 32,15	0,4	33112-C6903
32,15 - 32,05	0,5	33112-33G00
32,05 - 31,95	0,6	33112-33G01

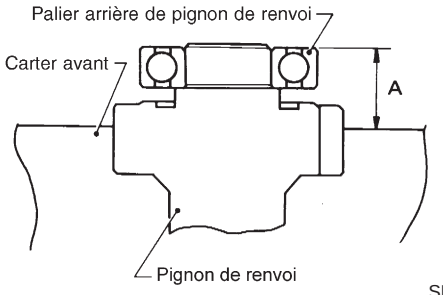

SMT335A

*: Toujours contrôler avec le Service des Pièces Détachées pour les dernières informations sur les pièces.

Simpo PDF Merge and Split Unregistered Version - http://www.simpopdf.com

<SUPPLEMENT-IV>

SYSTEME DE FREINAGE

SECTION BR

AVIS DE MODIFICATION :
Protéger car le doseur-compensateur asservi (marque RHYTHM 2 roues motrices uniquement) a été retiré.

TABLE DES MATIERES

SOUPAPE DE COMMANDE 4002
Doseur-compensateur asservi 4002

Simpo PDF Merge and Split Unregistered Version - http://www.simpopdf.com

Doseur-compensateur asservi

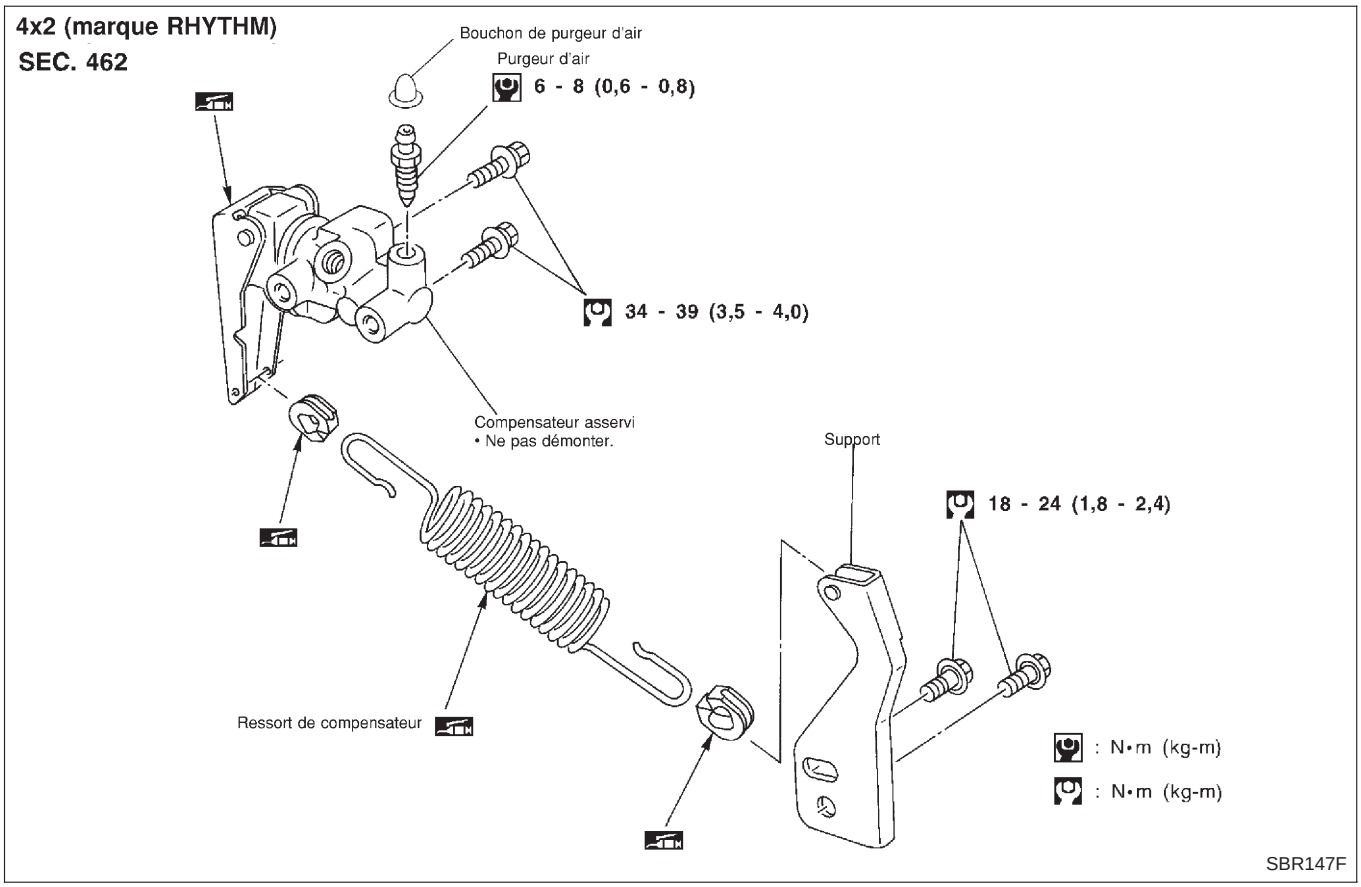

Simpo PDF Merge and Split Unregistered Version - http://www.simpopdf.com

<SUPPLEMENT-IV>

CARROSSERIE ET GARNITURE

SECTION BT

TABLE DES MATIERES

EXTREMITE DE LA CARROSSERIE 4002
Extrémité arrière de la carrosserie 4002
EXTERIEUR 4003
Longeron de toit 4003
Barre de protection 4004
Marchepied latéral 4005
GARNITURE INTERIEURE 4006
Garniture de porte 4006

Simpo PDF Merge and Split Unregistered Version - http://www.simpopdf.com

Extrémité arrière de la carrosserie

DEPOSE — Ensemble de pare-chocs arrière

① Déposer les boulons maintenant la pièce de maintien latéral de pare-chocs.
② Déposer l'ensemble du pare-chocs.

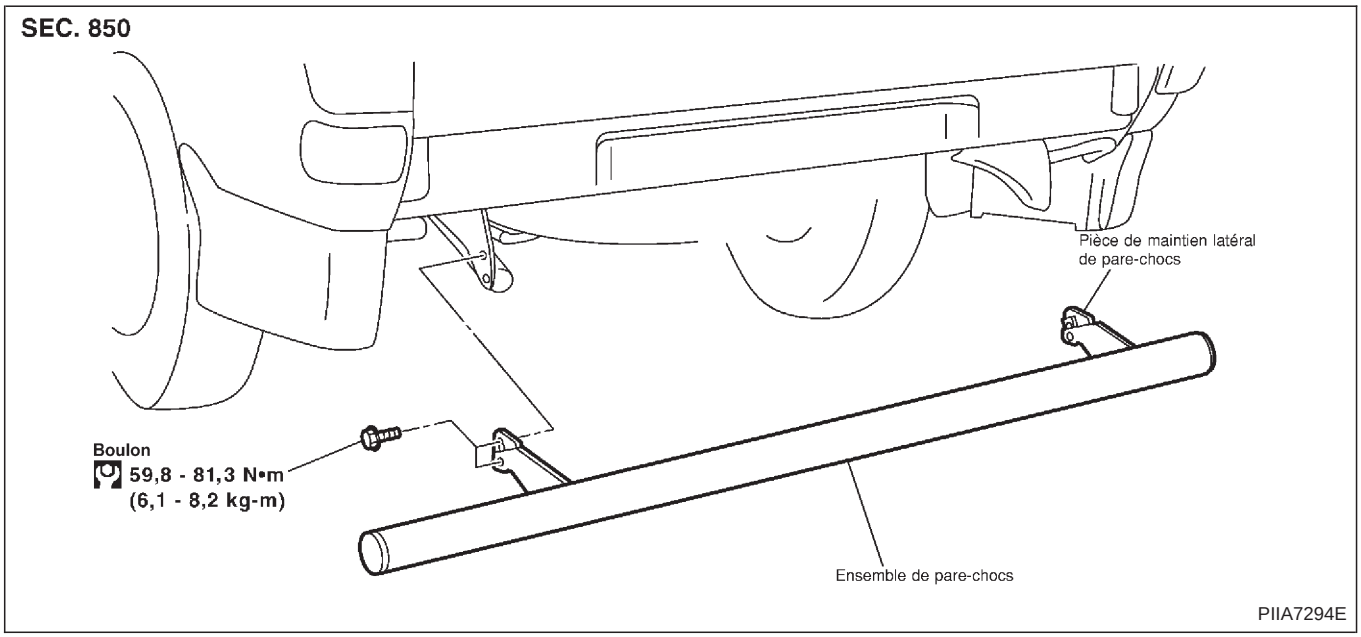

Simpo PDF Merge and Split Unregistered Version - http://www.simpopdf.com

Longeron de toit

DEPOSE — Ensemble de longeron de toit

① Déposer les écrous du longeron de toit (avant).
② Déposer les écrous du longeron de toit (arrière).
③ Déposer l'ensemble de longeron de toit.

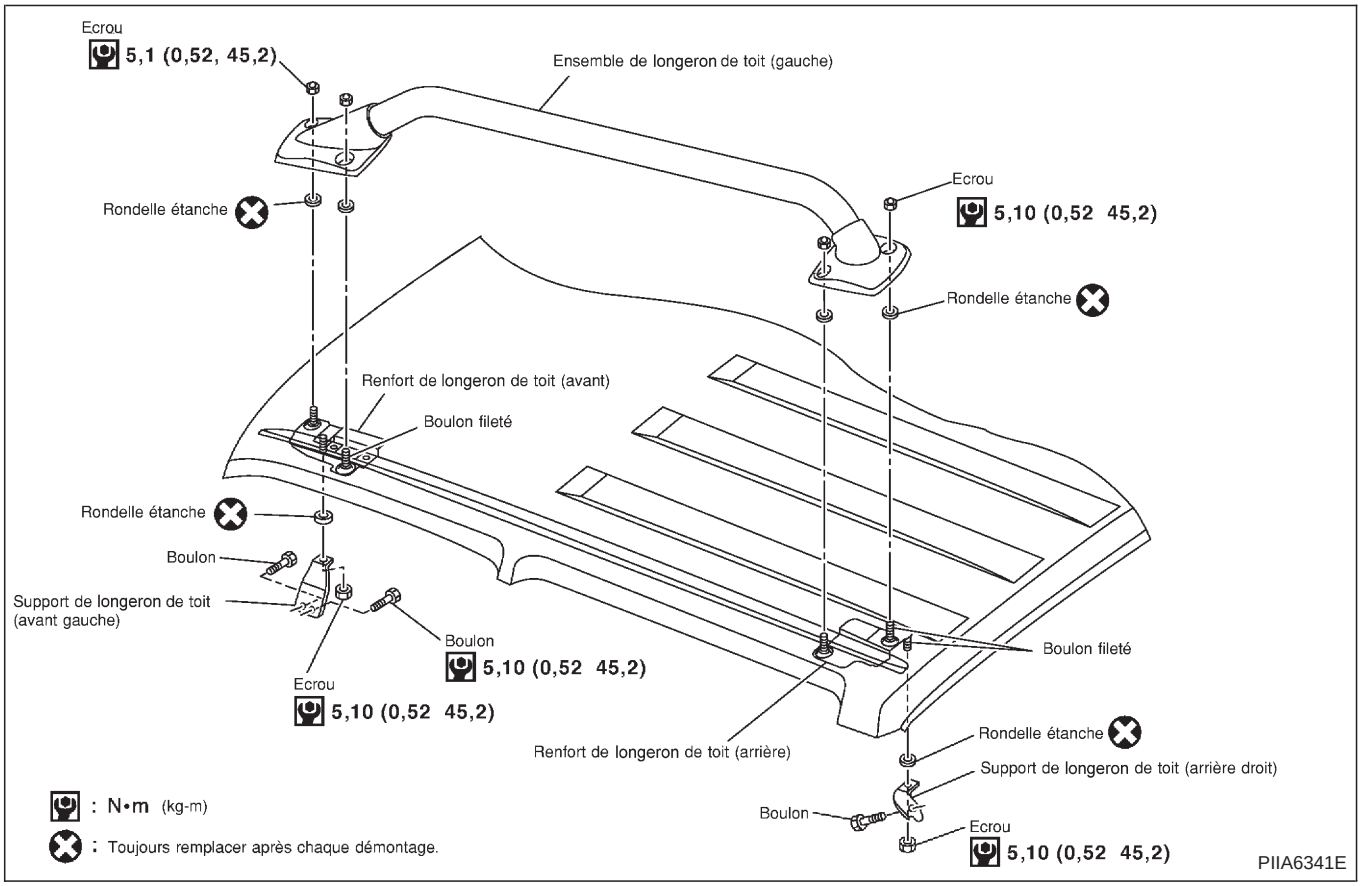

Simpo PDF Merge and Split Unregistered Version - http://www.simpopdf.com

Barre de protection

DEPOSE — Ensemble de barre de protection

① Déposer les écrous de la barre de protection (gauche).
② Déposer les écrous de la barre de protection (droite).
③ Déposer les boulons de la barre de protection (droite).
④ Déposer l'ensemble de barre de protection.

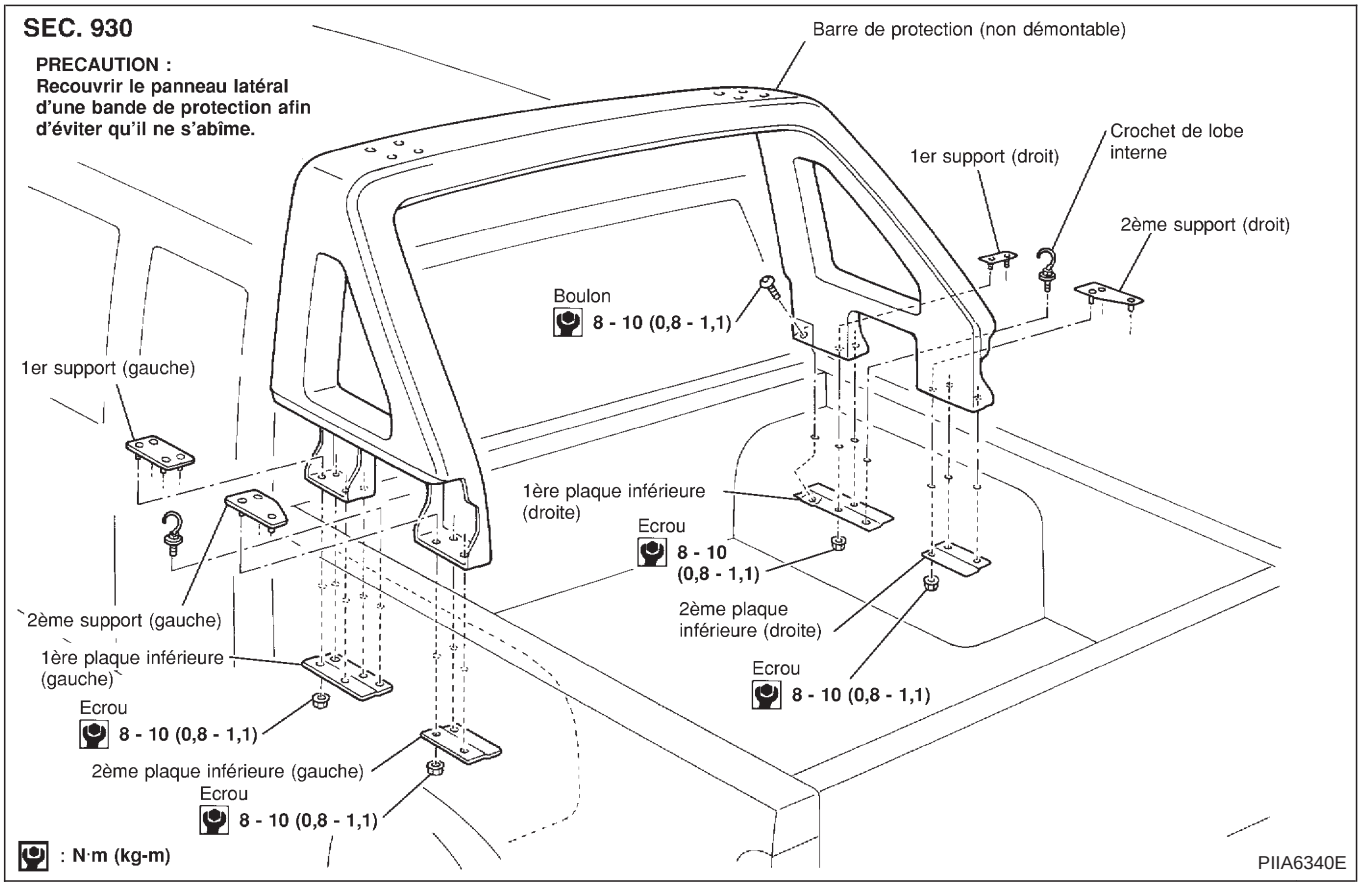

Simpo PDF Merge and Split Unregistered Version - http://www.simpopdf.com

Marchepied latéral

DEPOSE — Ensemble de marchepied latéral

① Déposer la plaque de protection avant (gauche/droite).
② Déposer la plaque de protection arrière (gauche/droite).
③ Déposer l'enjoliveur de tablier latéral (gauche/droit).
④ Déposer le siège avant (gauche/droit).
⑤ Débrancher le connecteur de faisceau de ceinture de sécurité avant (droit).
⑥ Déposer les boulons du marchepied latéral (avant).
⑦ Déposer les boulons du marchepied latéral (arrière).
⑧ Déposer les boulons du marchepied latéral (centre).
⑨ Déposer l'ensemble de marchepied latéral.

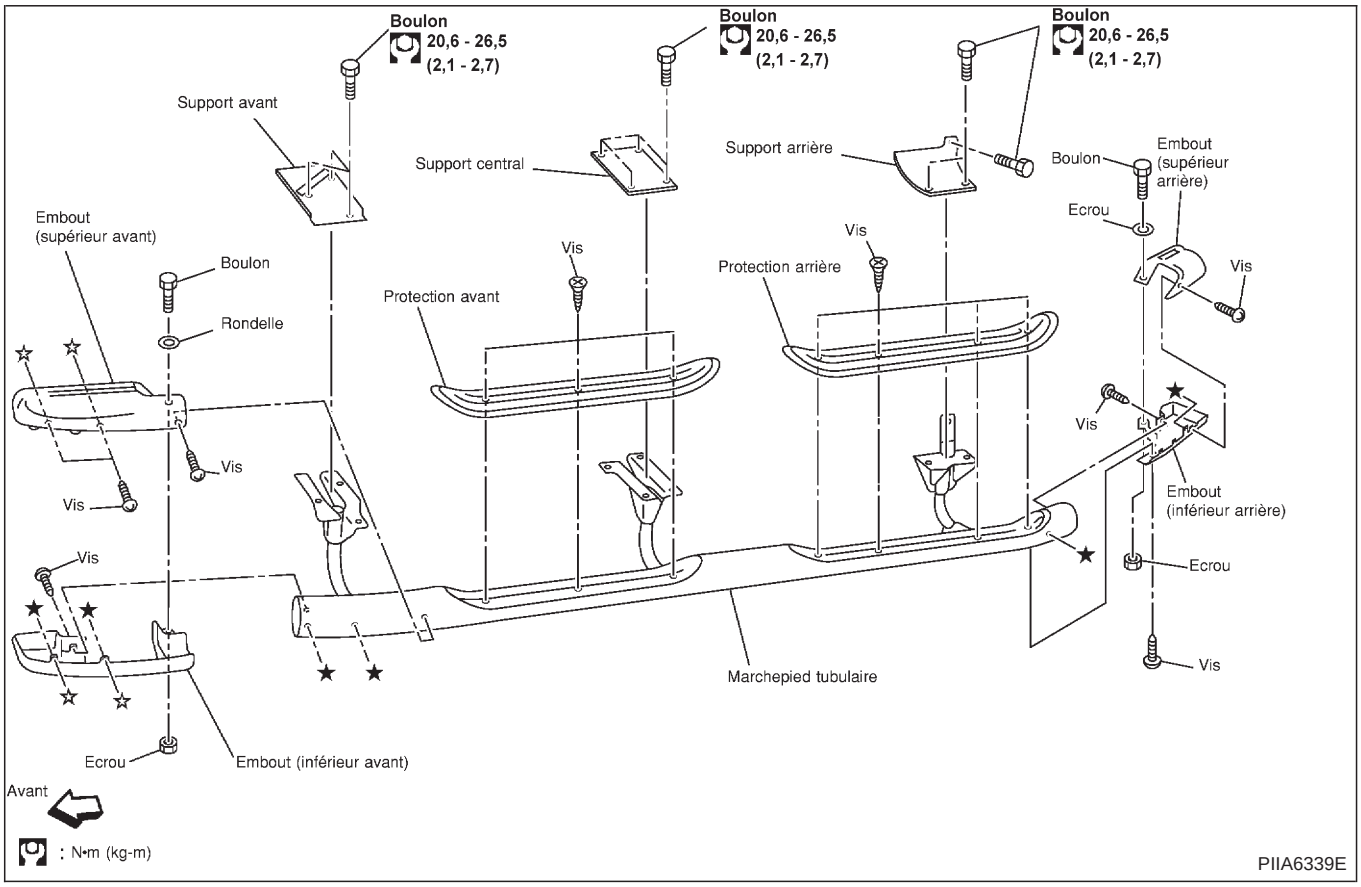

Simpo PDF Merge and Split Unregistered Version - http://www.simpopdf.com

Garniture de porte

DEPOSE — Garniture de porte

Garniture de porte avant

① Déposer l'écusson de poignée intérieure. A
② Déposer l'interrupteur de lève-vitre électrique, puis débrancher le connecteur. B
③ Déposer l'accoudoir de porte. C
④ Déposer la vis de fixation de la poignée de fermeture, puis déposer la poignée.
⑤ Déposer le boulon, la vis et le clip qui fixent l'enjoliveur de porte.
⑥ Soulever l'enjoliveur de porte.

Garniture de porte arrière

⑦ Déposer l'écusson de poignée intérieure. A
⑧ Déposer les vis maintenant la poignée de porte, et déposer la poignée de porte.
⑨ Déposer l'enjoliveur de porte, puis débrancher le connecteur d'interrupteur de lève-vitre électrique.

Simpo PDF Merge and Split Unregistered Version - http://www.simpopdf.com

Garniture de porte (Suite)

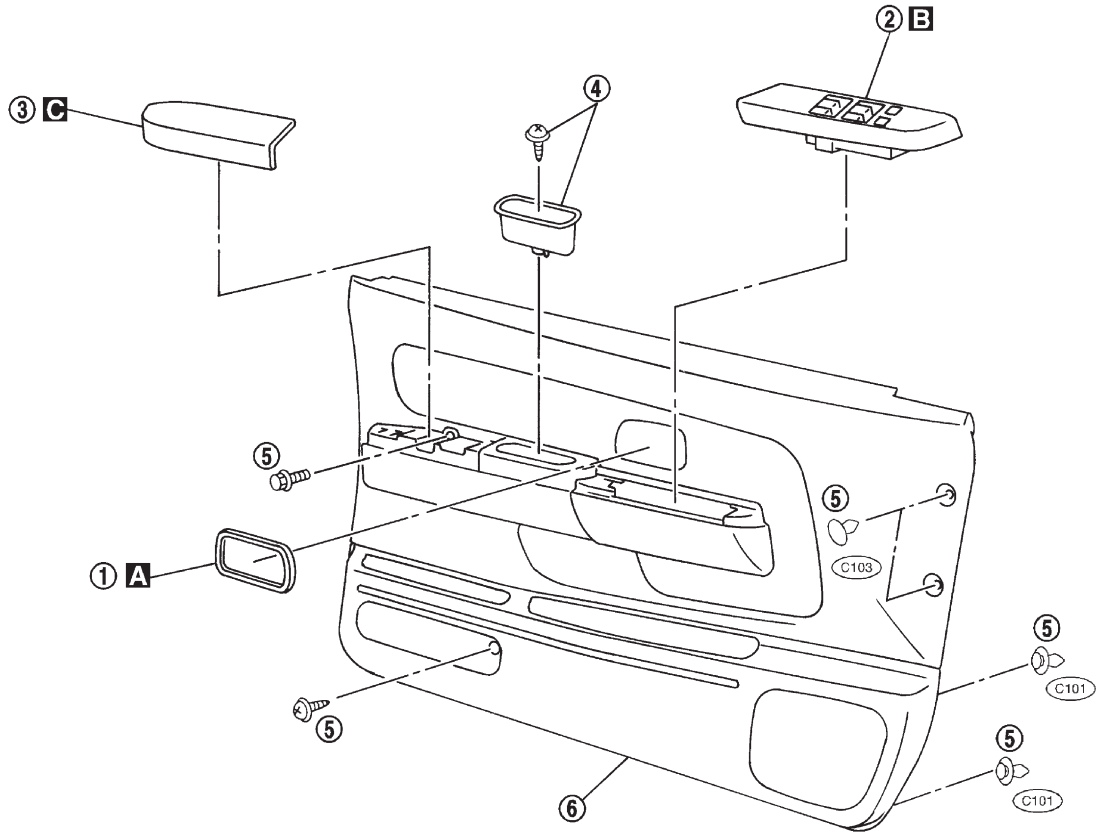

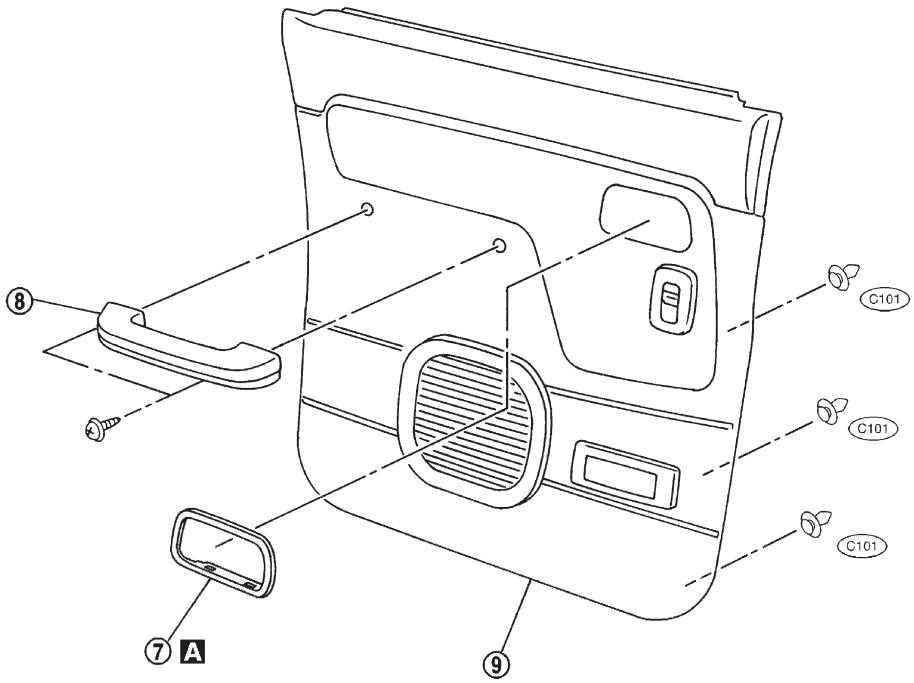

SBT437

Simpo PDF Merge and Split Unregistered Version - http://www.simpopdf.com

Garniture de porte (Suite)

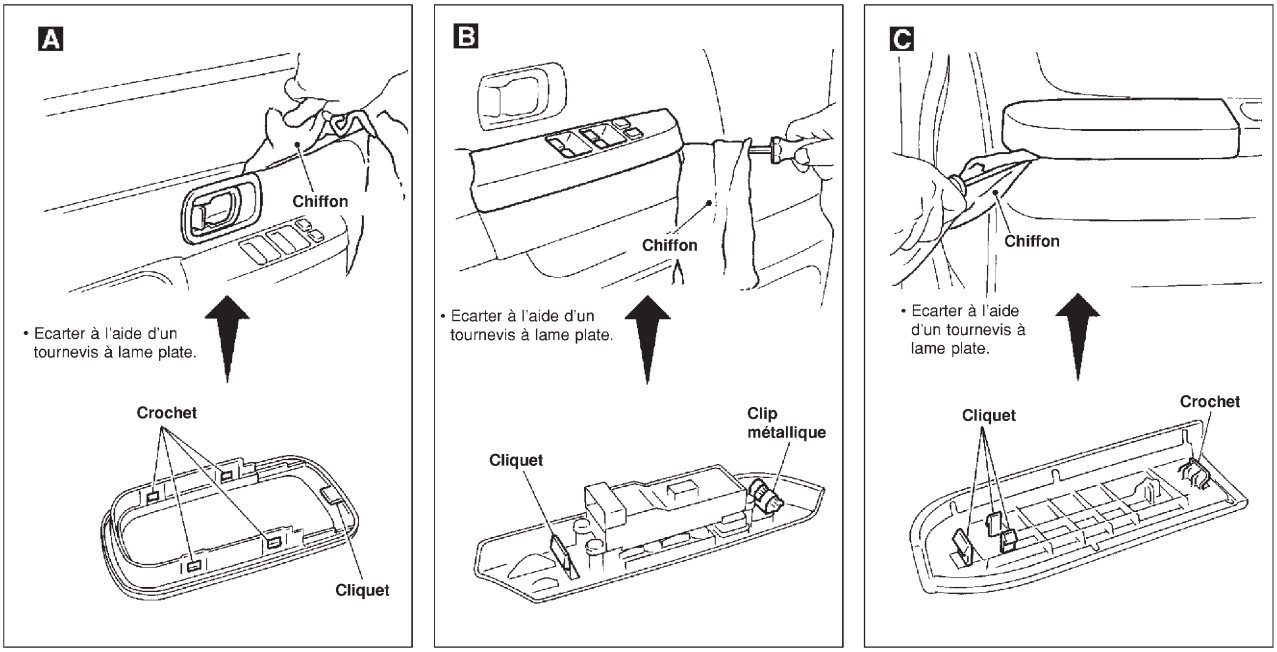

SBT438

Simpo PDF Merge and Split Unregistered Version - http://www.simpopdf.com

<SUPPLEMENT-IV>

SYSTEME DE GESTION MOTEUR

SECTION EC

TABLE DES MATIERES

KA24DE

PRECAUTIONS ET PREPARATION 4002
AIRBAG et PRETENSIONNEUR DE CEINTURE DE SECURITE du système de retenue supplémentaire (SRS) 4002

KA24DE

DIAGNOSTIC DES DEFAUTS POUR ELEMENTS NON DETECTABLES 4003
Signal de charge électrique 4003
Electrovanne IACV-FICD 4005

KA24DE (EURO OBD)

SYSTEME GENERAL DE COMMANDE DU MOTEUR ET DE CONTROLE 4006
Schéma du circuit 4006
ELECTROVANNE IACV-FICD 4007
Schéma de câblage 4007
Procédure de diagnostic 4009

YD25DDTi

SYSTEME GENERAL DE COMMANDE DU MOTEUR ET DE CONTROLE ANTIPOLLUTION 4013
Schéma du circuit 4013
DTC 0208 SURCHAUFFE 4014
Schéma de câblage 4014
SYSTEME DE COMMANDE DE PRECHAUFFAGE 4015
Schéma de câblage 4015
COMMANDE DE CLIMATISEUR 4016
Schéma de câblage 4016

Pour l'étude des schémas de câblage :
- **Lire la section GI, "COMMENT LIRE LES SCHEMAS DE CABLAGE''.**
- **Voir la section EL, "DISPOSITION DE L'ALIMENTATION ELECTRIQUE'' pour le circuit de distribution électrique.**

Lorsque l'on procède au diagnostic des défauts, lire la section GI, "COMMENT LIRE LES ORGANIGRAMMES DANS LES DIAGNOSTICS DES DEFAUTS'' et "COMMENT ACCOMPLIR UN DIAGNOSTIC EFFICACE EN CAS D'INCIDENT ELECTRIQUE''.

Simpo PDF Merge and Split Unregistered Version - http://www.simpopdf.com

AIRBAG et PRETENSIONNEUR DE CEINTURE DE SECURITE du système de retenue supplémentaire (SRS)

Les éléments du système de retenue supplémentaire comme l'AIRBAG et le PRETENSIONNEUR DE CEINTURE DE SECURITE, utilisés avec une ceinture de sécurité, aident à réduire les risques ou la gravité des blessures du conducteur et du passager avant lors de certains types de collision. Le système de retenue supplémentaire disponible sur les modèles NISSAN D22 se compose comme suit (la composition varie en fonction de la destination du véhicule et de ses équipements optionnels) :
module d'airbag conducteur (situé dans le moyeu du volant), module d'airbag passager avant (situé sur le tableau de bord côté passager), prétensionneurs de ceinture de sécurité, boîtier de capteurs de diagnostic, témoin, faisceau de câblage et câble spiralé.
Les informations nécessaires à l'entretien du système en toute sécurité se trouvent dans la **section RS** de ce manuel de réparation.

ATTENTION :

- **Pour ne pas affecter le fonctionnement du SRS, ce qui augmenterait les risques de blessures graves ou mortelles en cas de collision entraînant le déploiement de l'airbag, toutes les opérations d'entretien doivent être effectuées par un concessionnaire NISSAN agréé.**
- **Un entretien incorrect ainsi qu'une mauvaise dépose ou repose du système de retenue supplémentaire (SRS) peuvent entraîner des risques de blessures dues au déclenchement accidentel du système. Pour la dépose du câble spiralé et du module d'airbag, se reporter à la section RS.**
- **Ne pas utiliser d'équipement d'essai électrique sur les circuits liés au SRS sauf instruction contraire dans ce manuel de réparation. Le câble spiralé et les faisceaux de câblage (sauf PRETENSIONNEUR DE CEINTURE DE SECURITE) recouverts d'un isolant jaune, soit juste avant les connecteurs de faisceau, soit sur la totalité du faisceau, sont reliés au SRS.**

Simpo PDF Merge and Split Unregistered Version - http://www.simpopdf.com

Signal de charge électrique

EC-LOAD-01

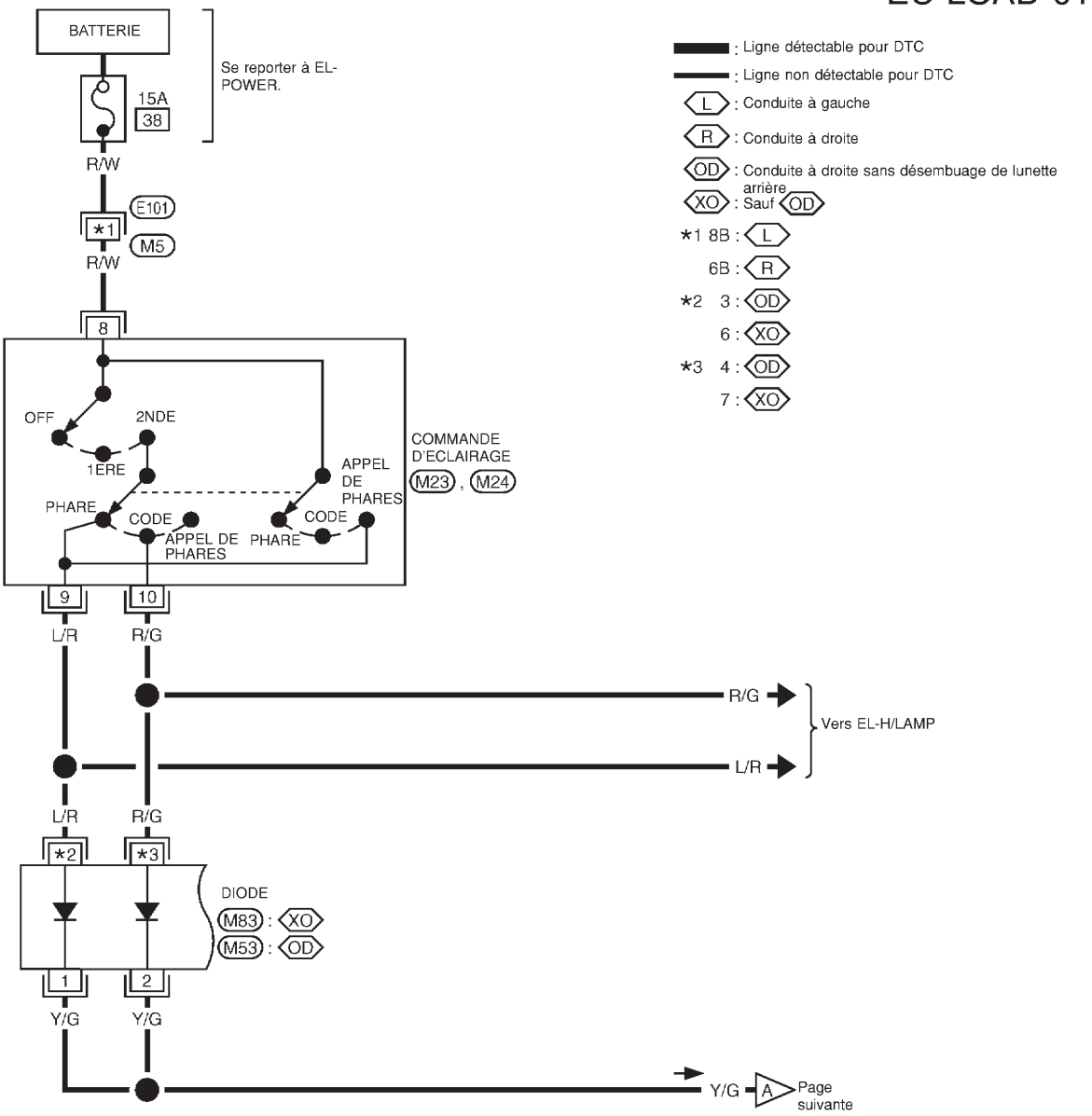

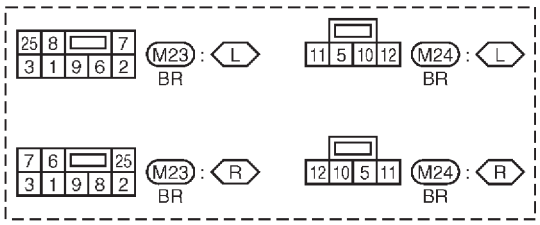

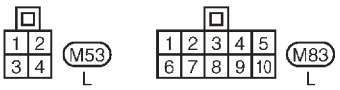

Consulter la dernière page dépliante.
M5 , E101

GEC348A

Simpo PDF Merge and Split Unregistered Version - http://www.simpopdf.com

Signal de charge électrique (Suite)

EC-LOAD-02

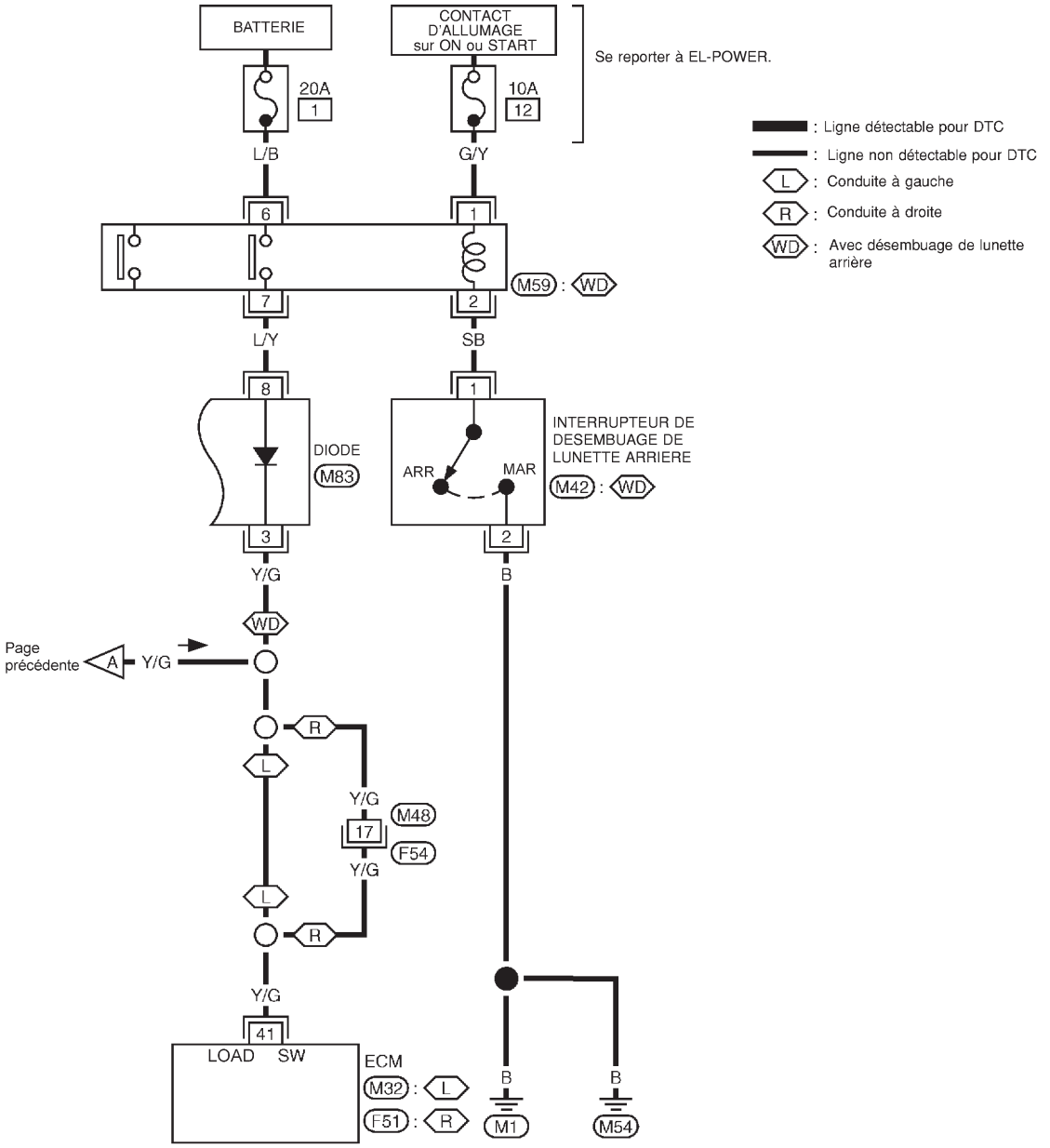

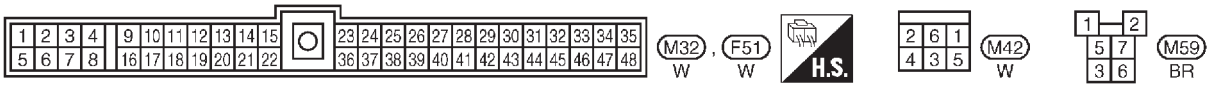

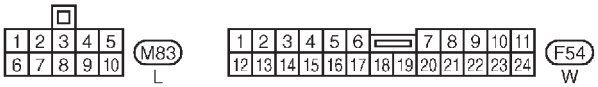

GEC202A

Simpo PDF Merge and Split Unregistered Version - http://www.simpopdf.com

Electrovanne IACV-FICD

POUR CONDUITE A GAUCHE

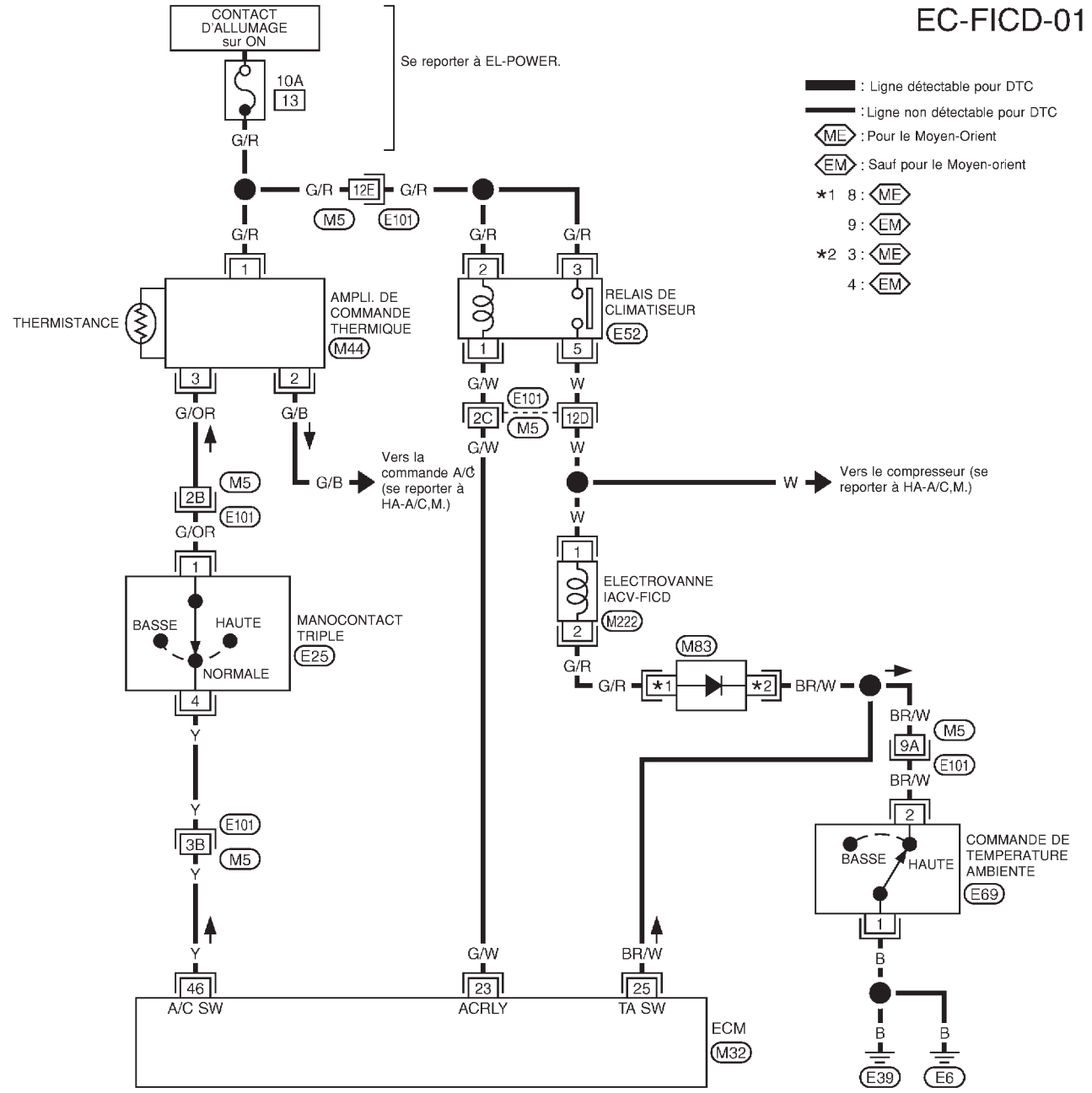

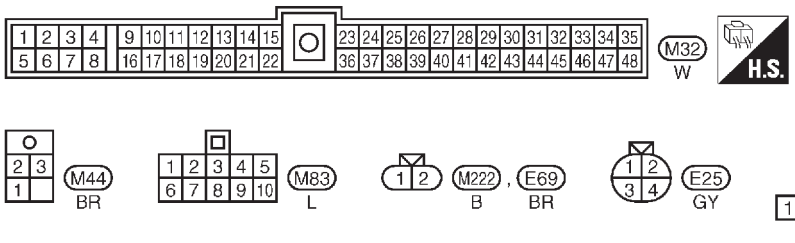

Consulter la dernière page dépliante.
M5 , E101

GEC301A

Simpo PDF Merge and Split Unregistered Version - http://www.simpopdf.com

Schéma du circuit

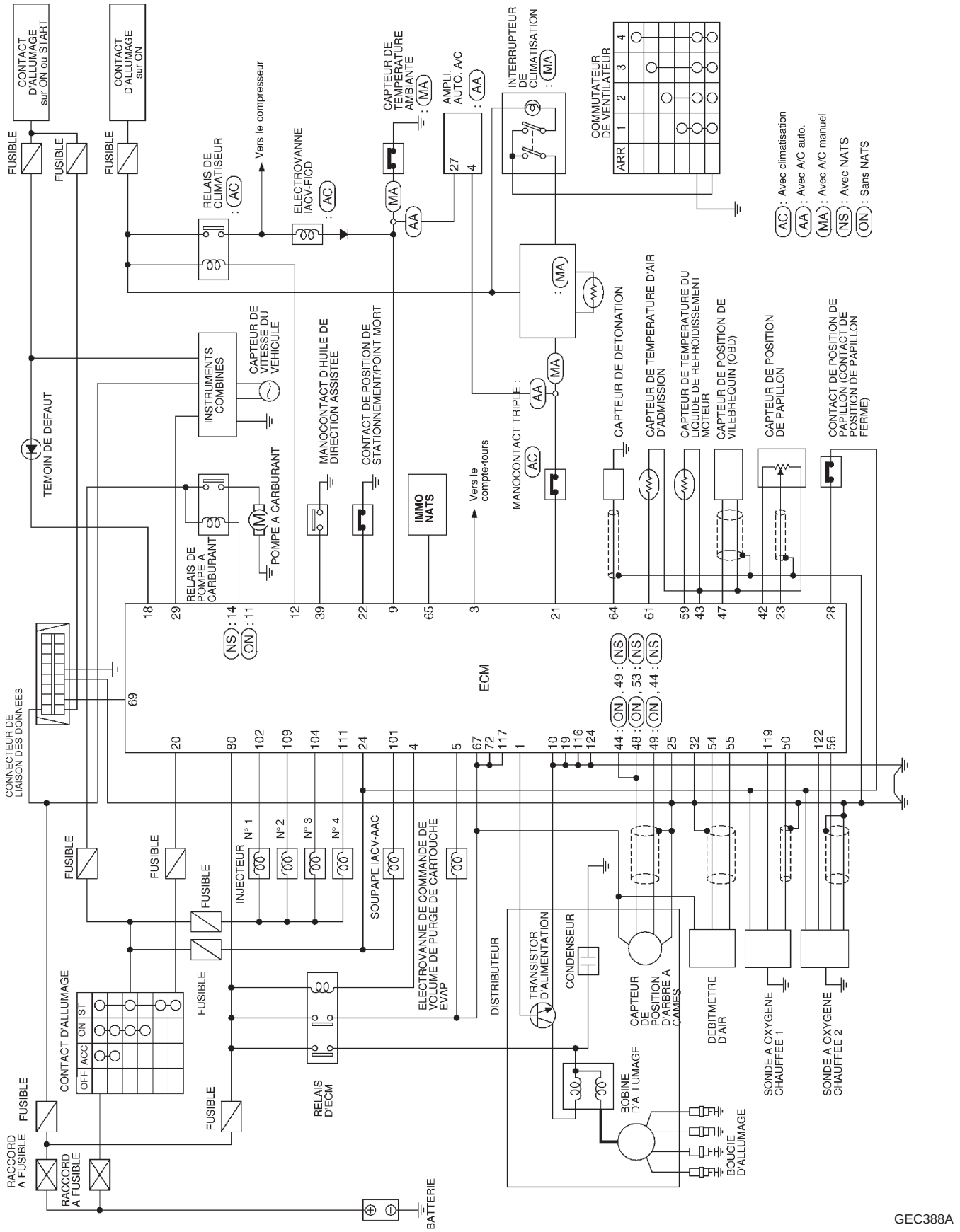

Simpo PDF Merge and Split Unregistered Version - http://www.simpopdf.com

Schéma de câblage

MODELES AVEC CLIMATISEUR MANUEL

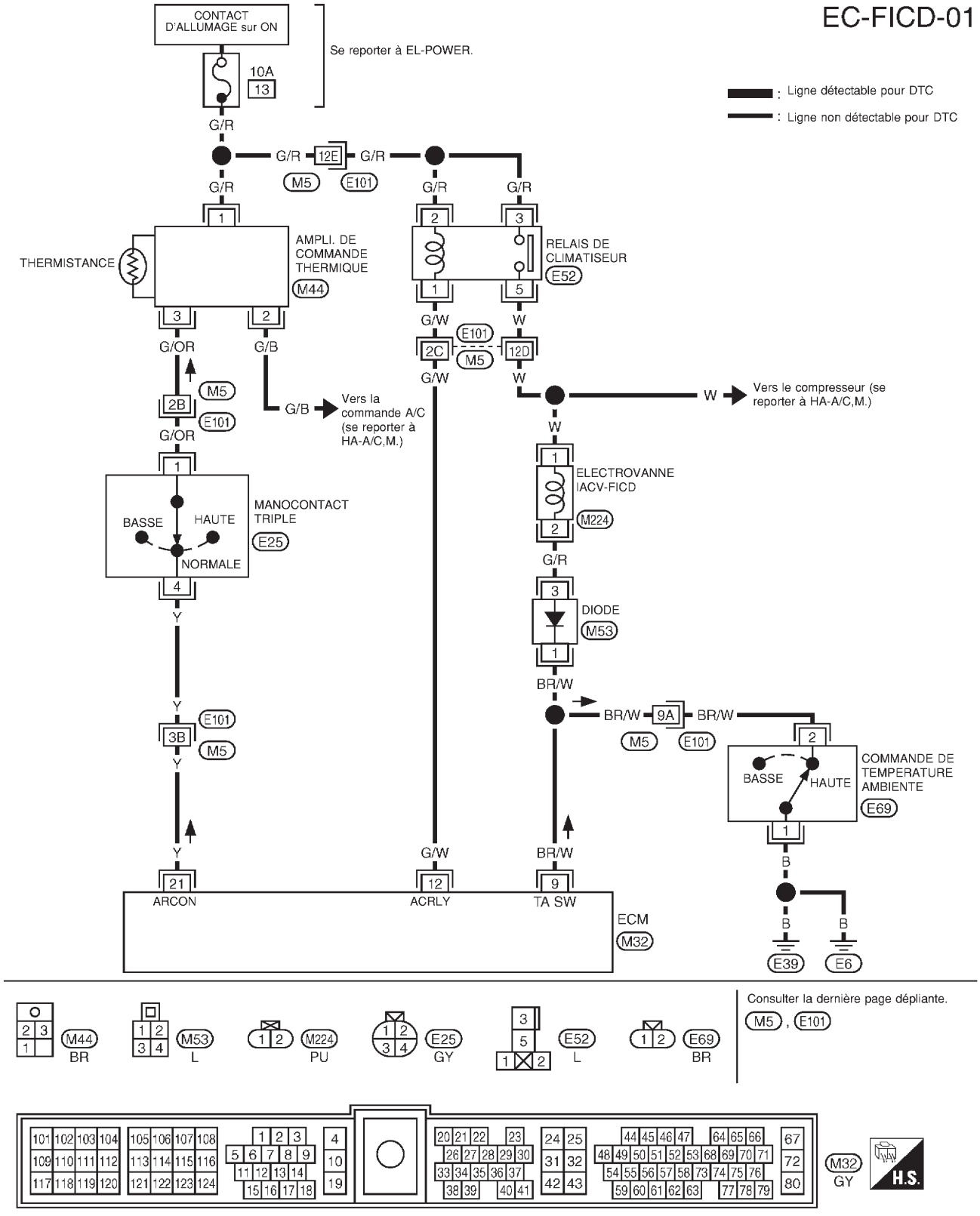

GEC389A

Simpo PDF Merge and Split Unregistered Version - http://www.simpopdf.com

Schéma de câblage (Suite)

EC-FICD-02

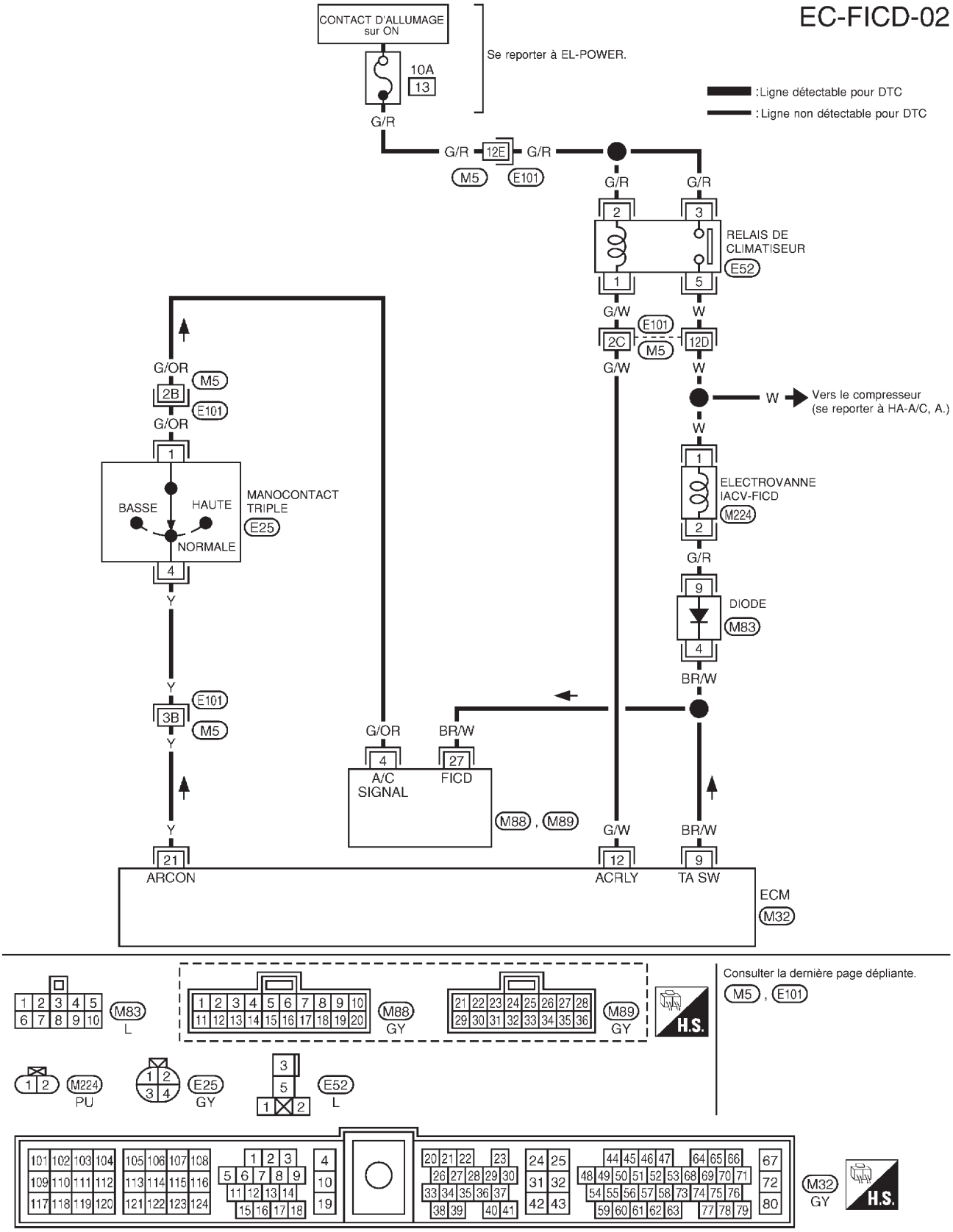

GEC390A

Simpo PDF Merge and Split Unregistered Version - http://www.simpopdf.com

Procédure de diagnostic

1	VERIFIER LE FONCTIONNEMENT GENERAL

1. Faire démarrer le moteur et l'amener à température normale de fonctionnement.
2. Contrôler le régime de ralenti.
   700±50 tr/min
   Si MAUVAIS, régler le régime de ralenti.
3. Mettre la commande de climatisation sur MARCHE, et mettre la commande de réglage de ventilation sur la vitesse 4.
4. Vérifier à nouveau le régime de ralenti.

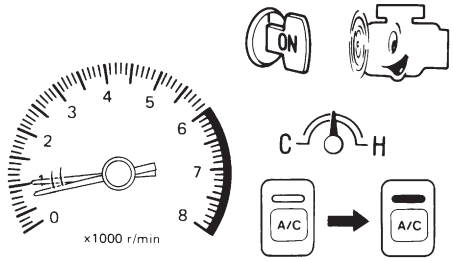

MEF634E

850 tr/min ou plus

BON ou MAUVAIS

BON ▶	**FIN DE L'INSPECTION**
MAUVAIS ▶	PASSER A L'ETAPE 2.

2	VERIFIER LE FONCTIONNEMENT DE LA CLIMATISATION

Vérifier que le compresseur de climatiseur fonctionne normalement.

BON ou MAUVAIS

BON ▶	PASSER A L'ETAPE 3.
MAUVAIS ▶	Se reporter à "Tableau des symptômes" dans DIAGNOSTIC DES DEFAUTS, section HA.

Simpo PDF Merge and Split Unregistered Version - http://www.simpopdf.com

Procédure de diagnostic (Suite)

3	VERIFIER L'ALIMENTATION ELECTRIQUE

1. Arrêter le moteur.
2. Débrancher le connecteur de faisceau de l'électrovanne IACV-FICD.

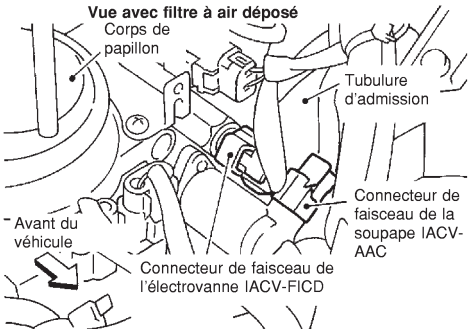

SEF342V

3. Faire démarrer le moteur, puis mettre la commande de A/C sur MARCHE et mettre la commande de réglage de ventilation sur la vitesse 4.
4. Vérifier la tension entre la borne 1 et la masse à l'aide de CONSULT-II ou du testeur.

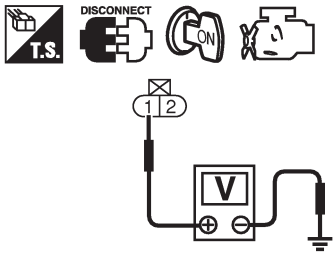

SEC281D

Tension : tension de la batterie

BON ou MAUVAIS

BON ▶	PASSER A L'ETAPE 5.
MAU-VAIS ▶	PASSER A L'ETAPE 4.

4	DETECTER LA PIECE DEFECTUEUSE

Contrôler les points suivants.
Connecteurs de faisceau E101, M5
Vérifier que le faisceau n'est ni ouvert, ni en court-circuit entre l'électrovanne IACV-FICD et le relais de climatisation

	Réparer les faisceaux et connecteurs en circuit ouvert ou en court-circuit avec la masse ou l'alimentation.

Simpo PDF Merge and Split Unregistered Version - http://www.simpopdf.com

Procédure de diagnostic (Suite)

5 CONTROLER LE CIRCUIT DE MISE A LA MASSE

1. Mettre le contact d'allumage sur OFF.
2. Vérifier la continuité du faisceau comme suit.

Type	Nom de la borne	Condition			
Modèle avec climatisation manuelle	Borne 5 de relais de climatiseur	+	Il ne doit pas y avoir continuité.	-	Il doit y avoir continuité.
	Borne 2 de contact de température ambiante	-		+	
	Borne 1 de diode et borne 9 d'ECM	Il doit y avoir continuité.			
	Borne 2 de contact de température ambiante et borne 9 d'ECM	Il doit y avoir continuité.			
	Borne 1 de contact de température ambiante et masse	Il ne doit pas y avoir continuité.			
Modèle avec climatisation auto	Borne 5 de relais de climatiseur	+	Il ne doit pas y avoir continuité.	-	Il doit y avoir continuité.
	Borne 9 d'ECM	-		+	
	Borne 4 de diode et borne 27 d'ampli. auto de A/C	Il doit y avoir continuité.			
	Borne 27 d'ampli. auto de A/C et borne 9 d'ECM	Il ne doit pas y avoir continuité.			

MTBL1755

Il doit y avoir continuité.

3. Vérifier également que le faisceau n'est pas en court-circuit avec la masse ou avec l'alimentation.

BON ou MAUVAIS

Bon ▶	PASSER A L'ETAPE 7.
MAU-VAIS ▶	PASSER A L'ETAPE 6.

6 DETECTER LA PIECE DEFECTUEUSE

CLIMATISEUR MANUEL

Effectuer les vérifications ci-dessous.

Electrovanne IACV-FICD
Commande de température ambiante
Diode M53
Connecteurs de faisceau M5, E101
Vérifier que le faisceau n'est ni ouvert, ni en court-circuit entre le relais de climatisation et la commande de température ambiante.
Vérifier que le faisceau n'est ni ouvert, ni en court-circuit entre la diode M53 et l'ECM
Vérifier que le faisceau n'est ni ouvert, ni en court-circuit entre le contact de température ambiante et l'ECM
Vérifier que le faisceau n'est ni ouvert, ni en court-circuit entre le contact de température ambiante et la masse

CLIMATISEUR AUTOMATIQUE

Effectuer les vérifications ci-dessous.

Connecteurs de faisceau E101, M5
Electrovanne IACV-FICD
Diode M83
Vérifier que le faisceau n'est ni ouvert, ni en court-circuit entre le relais de climatisation et l'ECM
Vérifier que le faisceau n'est ni ouvert, ni en court-circuit entre la diode M83 et l'amplificateur auto de A/C
Vérifier que le faisceau n'est ni ouvert, ni en court-circuit entre l'amplificateur auto de A/C et l'ECM

▶ Réparer les faisceaux ou connecteurs en circuit ouvert ou en court-circuit avec l'alimentation.

Simpo PDF Merge and Split Unregistered Version - http://www.simpopdf.com

Procédure de diagnostic (Suite)

7	VERIFIER L'ELECTROVANNE IACV-FICD

Débrancher le connecteur de faisceau de l'électrovanne IACV-FICD.

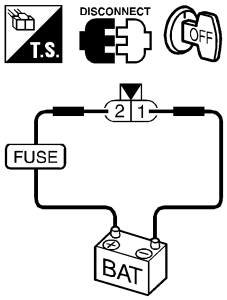

SEF610Y

Ecouter s'il y a un cliquetis lorsque l'on applique une tension direct de 12V aux bornes.
Vérifier que le plongeur n'est ni grippé, ni collant.
Vérifier que le ressort n'est pas cassé.

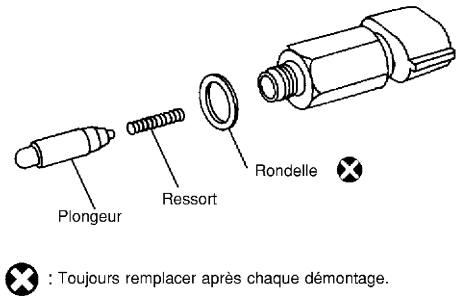

SEC953D

BON ou MAUVAIS

BON ▶	PASSER A L'ETAPE 8.
MAU-VAIS ▶	Remplacer l'électrovanne IACV-FICD.

8	VERIFIER LE CONTACT DE TEMPERATURE AMBIANTE

Se reporter à la section HA, 'DIAGNOSTIC DES DEFAUTS''.

BON ou MAUVAIS

BON ▶	PASSER A L'ETAPE 9.
MAU-VAIS ▶	Replacer le contact de température ambiante.

9	VERIFIER SI L'INCIDENT EST INTERMITTENT

Effectuer "DIAGNOSTIC DES DEFAUTS EN CAS D'INCIDENT INTERMITTENT", dans la section EC-192 du manuel de réparation (n° de publication SM1E-1D22FG1).

▶	**FIN DE L'INSPECTION**

Simpo PDF Merge and Split Unregistered Version - http://www.simpopdf.com

Schéma du circuit

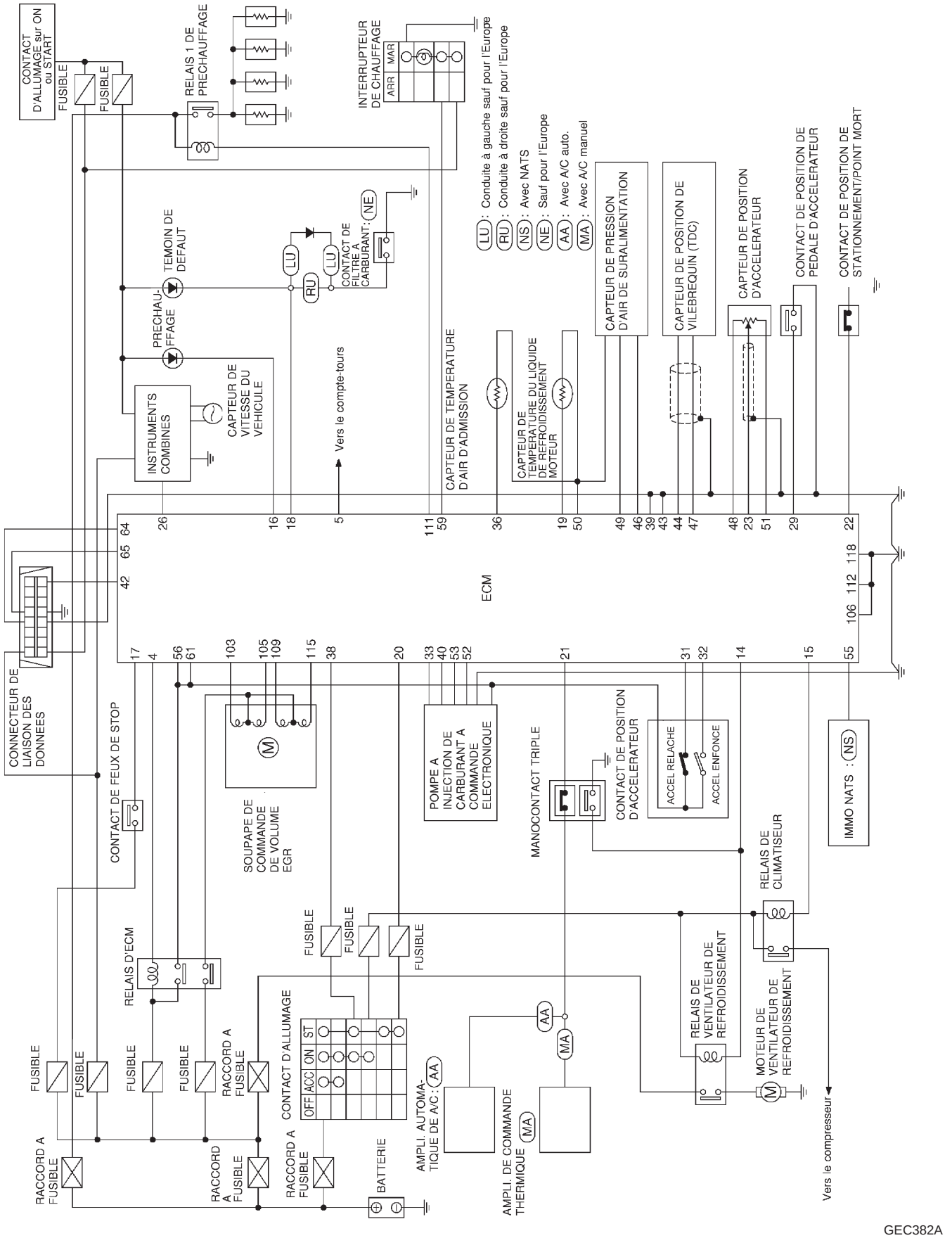

Simpo PDF Merge and Split Unregistered Version - http://www.simpopdf.com

Schéma de câblage

EC-COOL/F-01

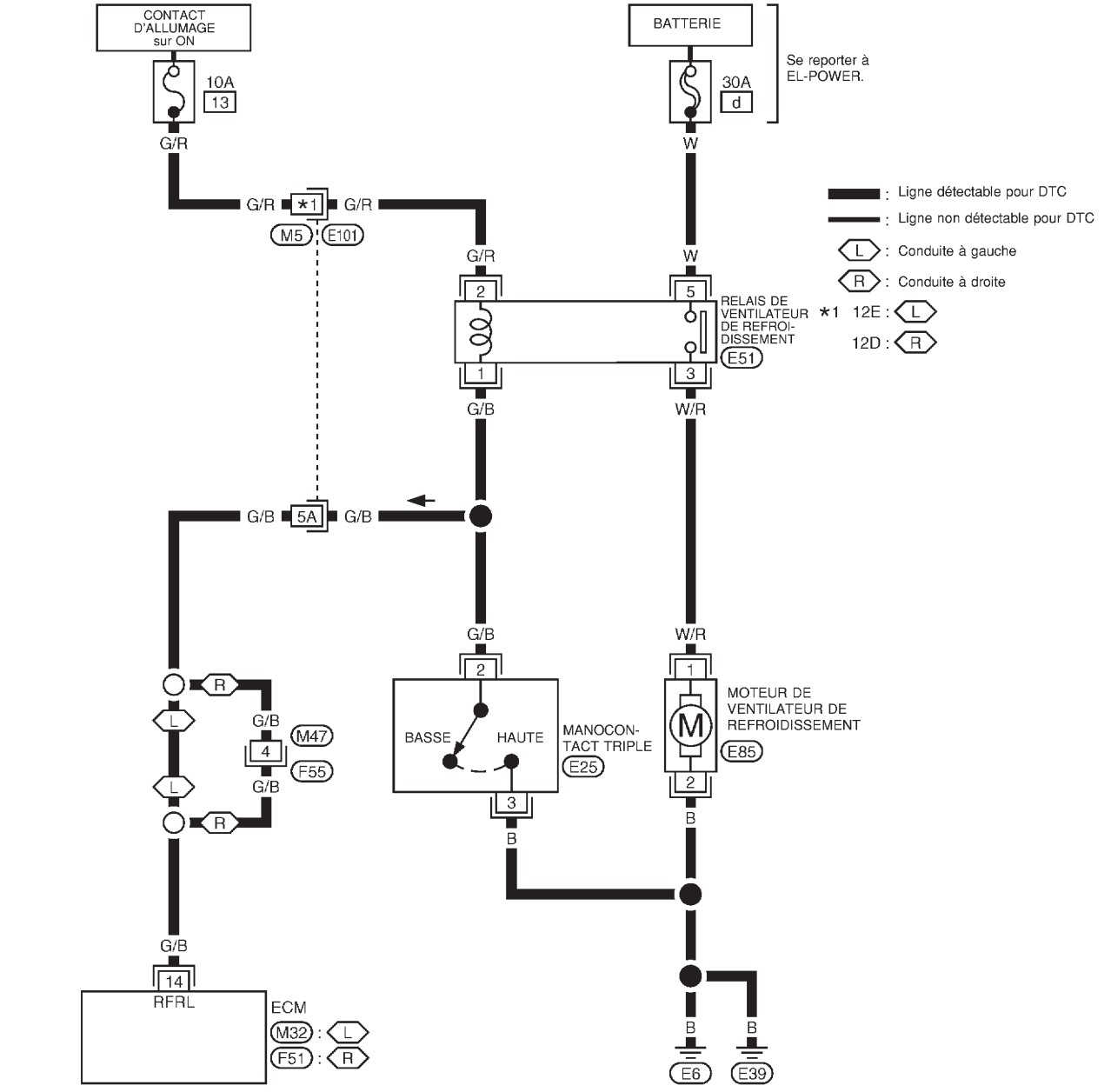



Consulter la dernière page dépliante.
M5 , E101

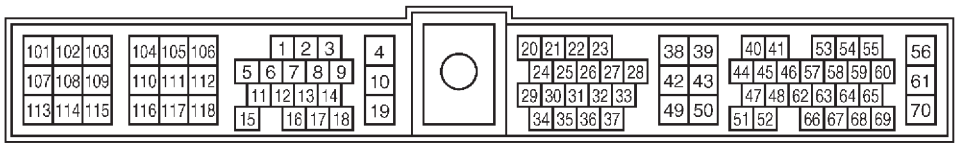

M32 , F51
W W

H.S.

GEC354A

Simpo PDF Merge and Split Unregistered Version - http://www.simpopdf.com

Schéma de câblage

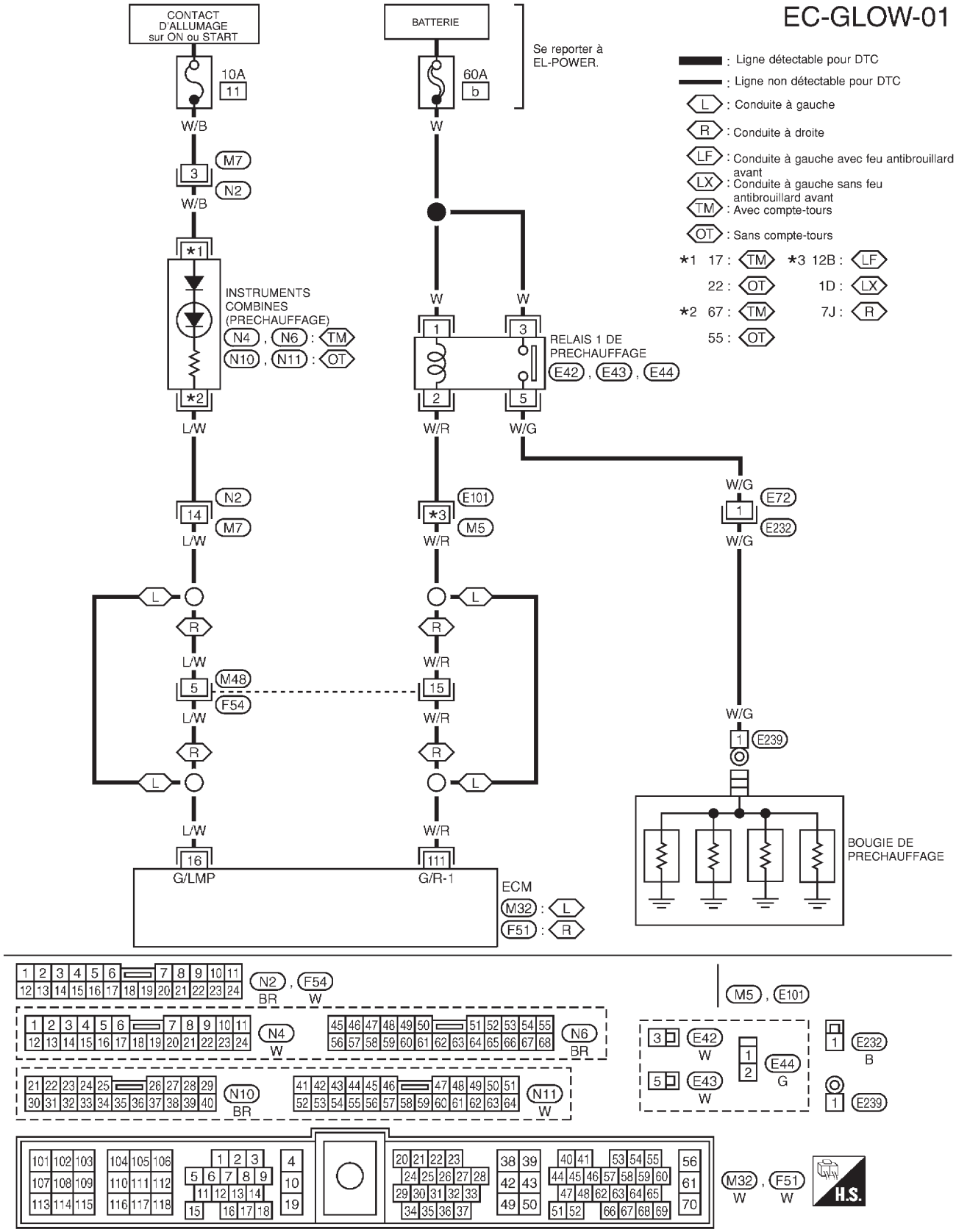

GEC385A

Simpo PDF Merge and Split Unregistered Version - http://www.simpopdf.com

Schéma de câblage

EC-A/CCUT-01

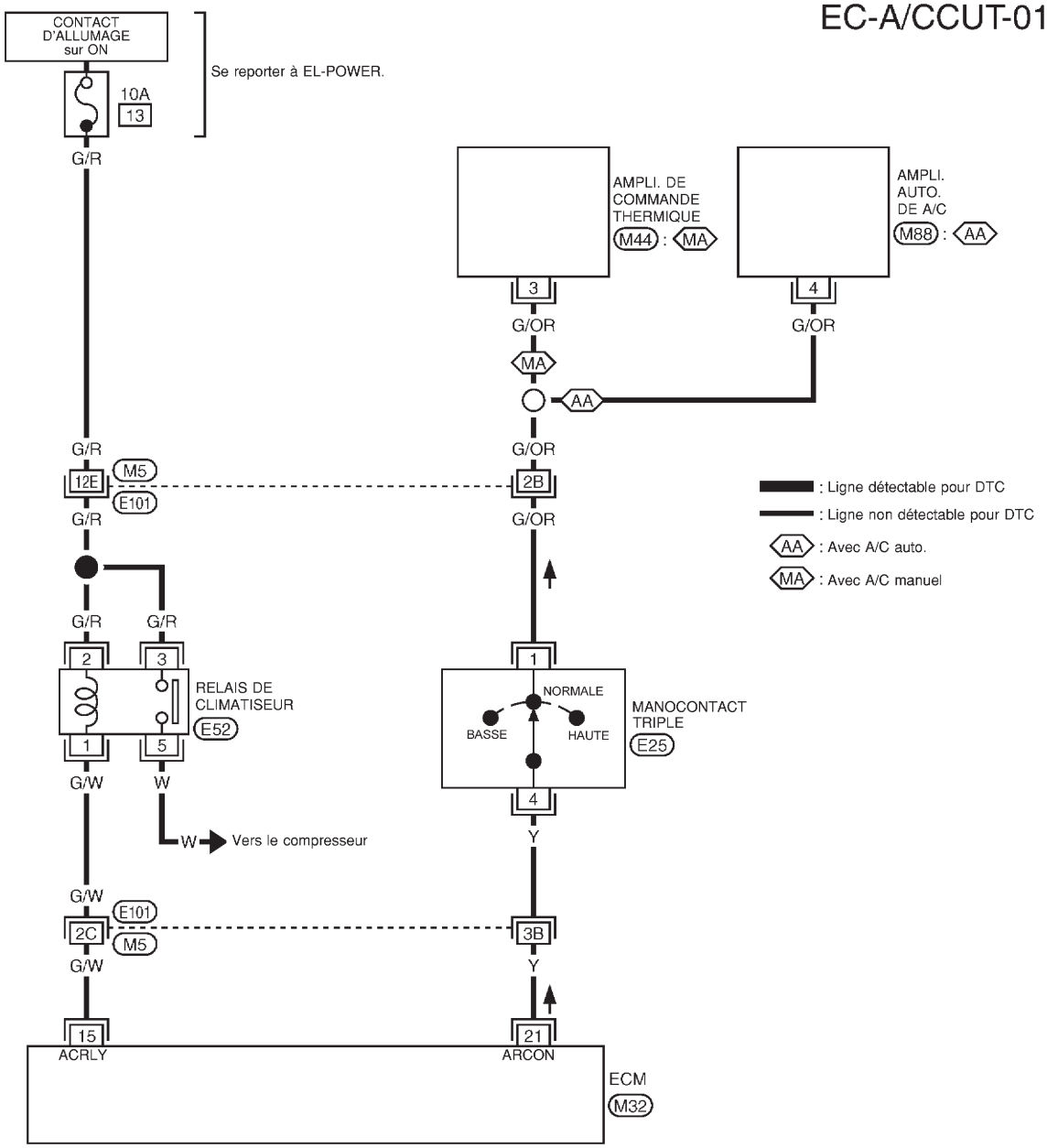

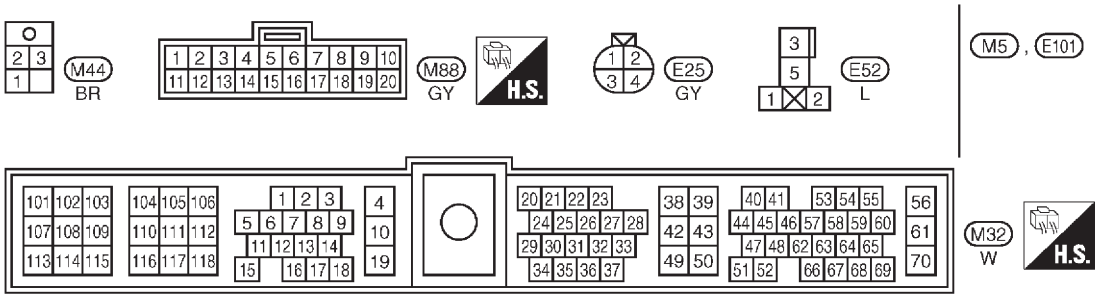

GEC383A

Simpo PDF Merge and Split Unregistered Version - http://www.simpopdf.com

Schéma de câblage (Suite)

EC-A/CCUT-02

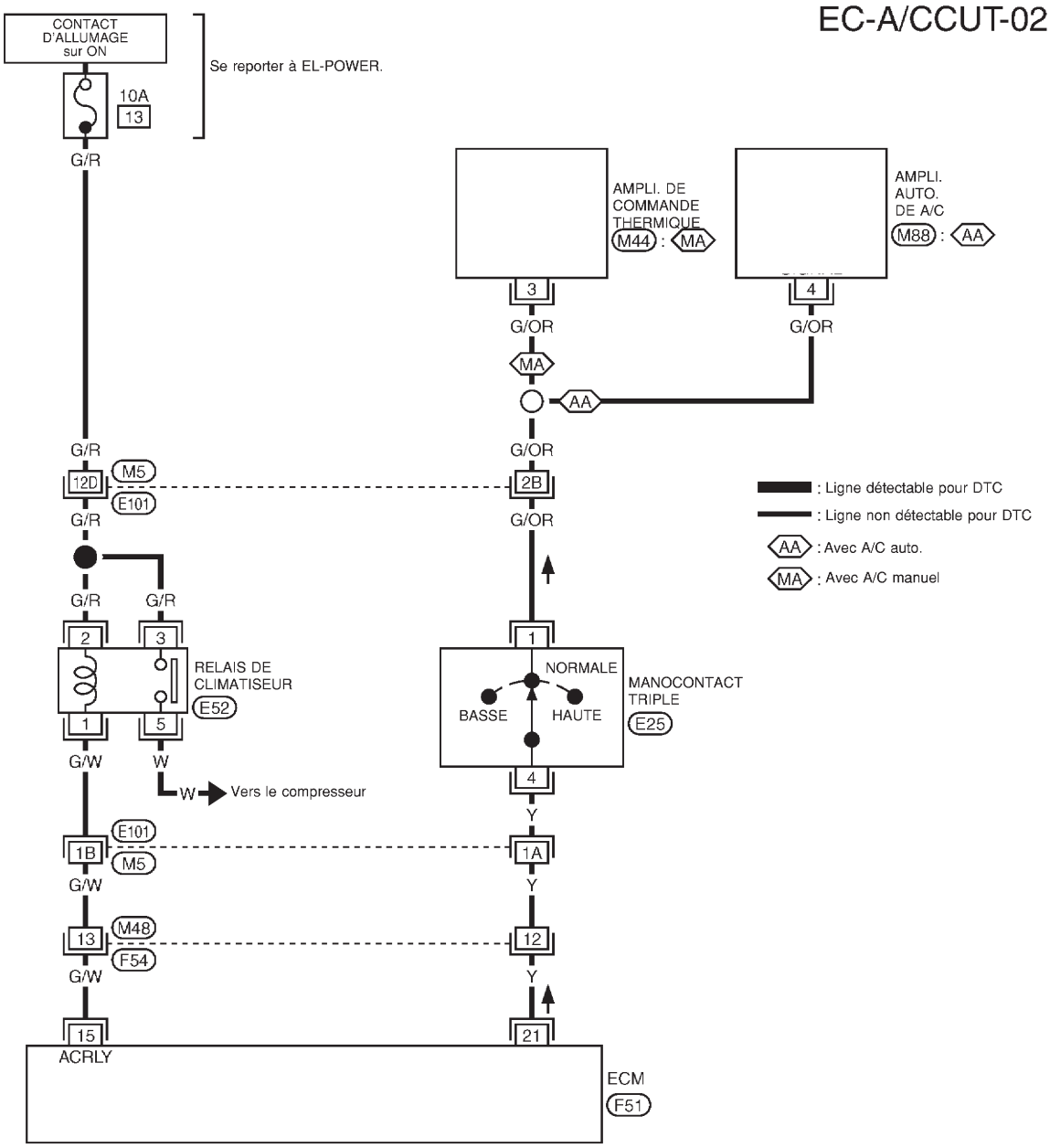

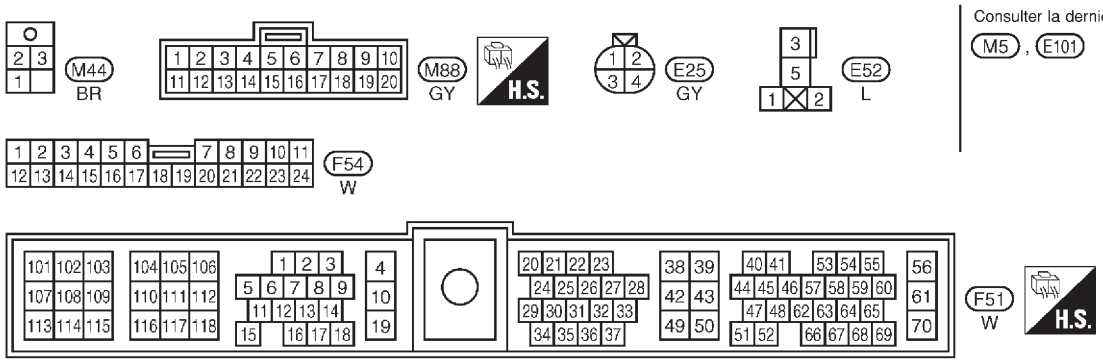

Consulter la dernière page dépliante.
M5 , E101

GEC384A

Simpo PDF Merge and Split Unregistered Version - http://www.simpopdf.com

<SUPPLEMENT-IV>

SYSTEME ELECTRIQUE

SECTION EL

AVIS DE MODIFICATION :

- Les schémas de câblage ont été modifiés.
- Les dispositions des faisceaux ont été modifiées.
- Le système de feux antibrouillard a été modifié.
- Le chargeur automatique de CD a été ajouté.

TABLE DES MATIERES

PRECAUTIONS 4003
Système de retenue supplémentaire (SRS) AIRBAG et PRETENSIONNEUR DE CEINTURE DE SECURITE 4003
DISPOSITION DE L'ALIMENTATION ELECTRIQUE 4004
Schéma 4004
Schéma de câblage - POWER - 4005
COMMANDE COMBINEE 4012
PHARES - Commande de réglage des faisceaux - 4013
Schéma de câblage - H/AIM - 4013
FEUX DE STATIONNEMENT, ECLAIRAGE DE PLAQUE D'IMMATRICULATION ET FEUX ARRIERE 4015
Schéma de câblage - TAIL/L -/Conduite à gauche 4015
FEU ANTIBROUILLARD AVANT 4017
Schéma de câblage - F/FOG -/Conduite à gauche 4017
Schéma de câblage - F/FOG -/Conduite à droite 4018
FEU ANTIBROUILLARD ARRIERE 4019
Schéma de câblage - R/FOG -/Conduite à gauche sans feux antibrouillards avant 4019
Schéma de câblage - R/FOG -/Conduite à droite sans feux antibrouillards avant 4020
Schéma de câblage - R/FOG -/Conduite à gauche avec feux antibrouillards avant 4021
Schéma de câblage - R/FOG -/Conduite à droite avec feux antibrouillards avant 4023
PLAFONNIER 4024
Schéma de câblage - ROOM/L - 4024
ECLAIRAGE 4025
Schéma de câblage - ILL -/Conduite à gauche 4025
Schéma de câblage - ILL -/Conduite à droite . 4027
JAUGES ET INSTRUMENTS 4029
Schéma de câblage - METER -/Moteur essence avec compte-tours 4029
TEMOINS D'AVERTISSEMENT 4031
Schéma/Avec compte-tours 4031
Schéma/Sans compte-tours 4032
Schéma de câblage - WARN - /Moteur à essence avec compte-tours 4033
Schéma de câblage - WARN -/Moteur essence sans compte-tours 4037
Schéma de câblage - WARN -/Moteur diesel avec compte-tours 4041
Schéma de câblage - WARN -/Moteur diesel sans compte-tours 4045
TEMOIN SONORE 4050
Schéma de câblage - CHIME -/Conduite à gauche 4050
SYSTEME AUDIO 4051
Schéma de câblage -AUDIO -/Conduite à gauche 4051
Schéma de câblage -AUDIO -/Conduite à droite 4053
NATS (système antivol NISSAN) 4055
Schéma de câblage - NATS -/Conduite à gauche 4055
Schéma de câblage - NATS -/Conduite à droite 4056
..... 4057
DISPOSITION DES FAISCEAUX 4058
Faisceau principal 4058

Simpo PDF Merge and Split Unregistered Version - http://www.simpopdf.com

Faisceau de compartiment moteur 4064
Faisceau de contrôle du moteur 4070
Faisceau de châssis et faisceau de feu arrière 4073
Faisceau de plafonnier/Conduite à gauche 4074
Faisceau de plafonnier/Conduite à droite 4075
CODES DE SCHEMA DE CABLAGE (CODES DE CELLULES) 4076

Simpo PDF Merge and Split Unregistered Version - http://www.simpopdf.com

Système de retenue supplémentaire (SRS) AIRBAG et PRETENSIONNEUR DE CEINTURE DE SECURITE

Utilisés avec une ceinture de sécurité, l'AIRBAG et le PRETENSIONNEUR DE CEINTURE DE SECURITE du système de retenue supplémentaire contribuent à réduire les risques et la gravité des blessures subies par le conducteur et le passager avant lors de collisions frontales. Le système SRS disponible sur le MODELE NISSAN D22 se compose des éléments suivants (la composition varie selon le pays de destination et l'équipement optionnel) :

Un module d'airbag côté conducteur (situé dans le moyeu du volant), un module d'airbag côté passager avant (situé sur le tableau de bord, côté passager), un prétensionneur de ceintures de sécurité, un boîtier de capteurs de diagnostic, un témoin avertisseur, un faisceau de câblage et un câble spiralé.

ATTENTION :

- **Pour ne pas affecter le fonctionnement du SRS, ce qui augmenterait les risques de blessures graves ou mortelles en cas de collision entraînant le déploiement de l'airbag, toutes les opérations d'entretien doivent être effectuées par un concessionnaire NISSAN agréé.**
- **Un entretien incorrect, y compris une dépose et une repose incorrectes du système de retenue supplémentaire (SRS), peut être à l'origine de blessures provoquées par une activation involontaire du système.**
- **Ne pas utiliser d'équipement d'essai électrique sur les circuits connexes du SRS sauf si indiqué dans ce Manuel de Réparation. Le faisceau de câblage du SRS peut être identifié à l'aide d'un connecteur de faisceau jaune.**

Simpo PDF Merge and Split Unregistered Version - http://www.simpopdf.com

DISPOSITION DE L'ALIMENTATION ELECTRIQUE

Schéma

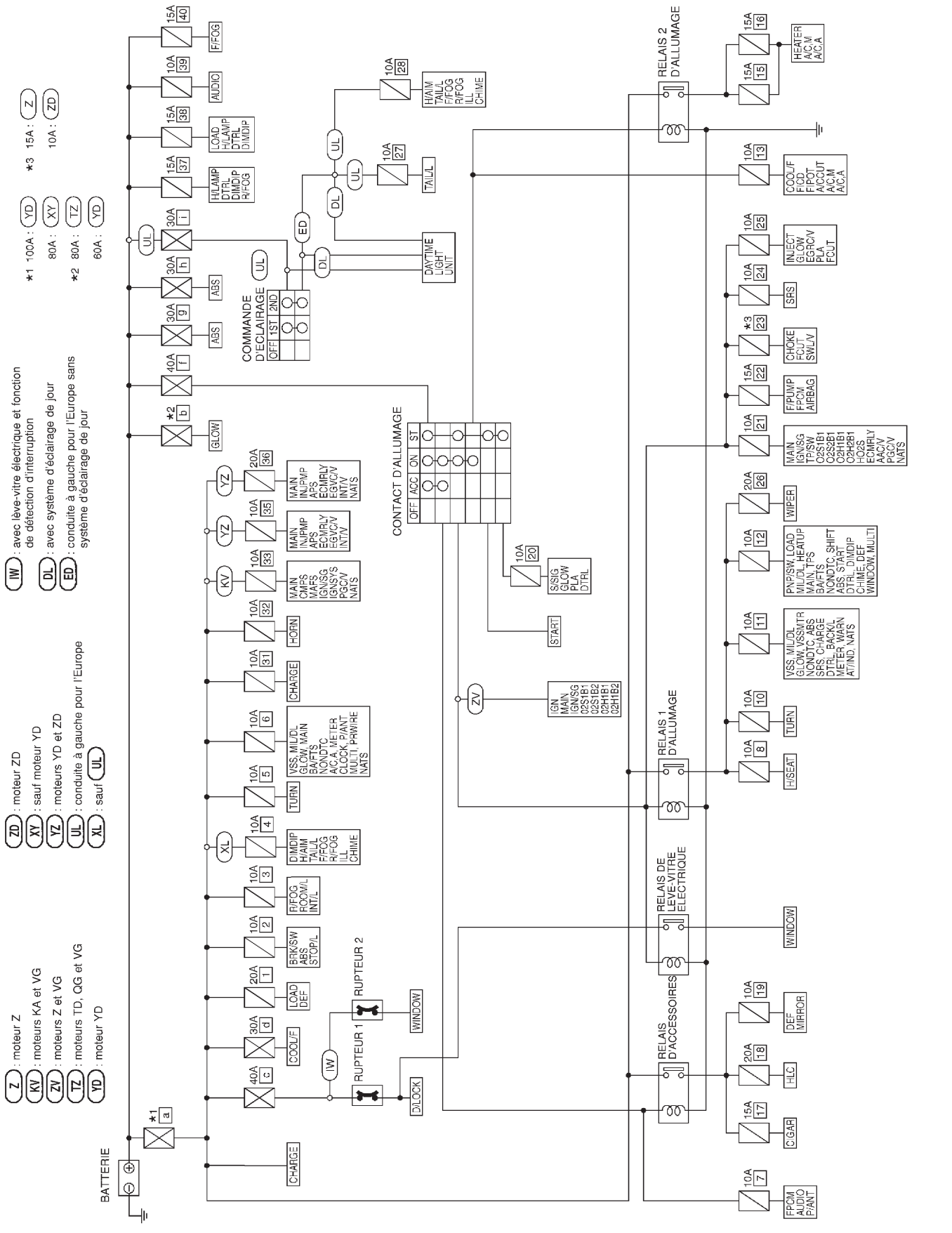

GEL661A

Simpo PDF Merge and Split Unregistered Version - http://www.simpopdf.com

Schéma de câblage — POWER —

ALIMENTATION ELECTRIQUE DE LA BATTERIE — CLE DE CONTACT DANS N'IMPORTE QUELLE POSITION

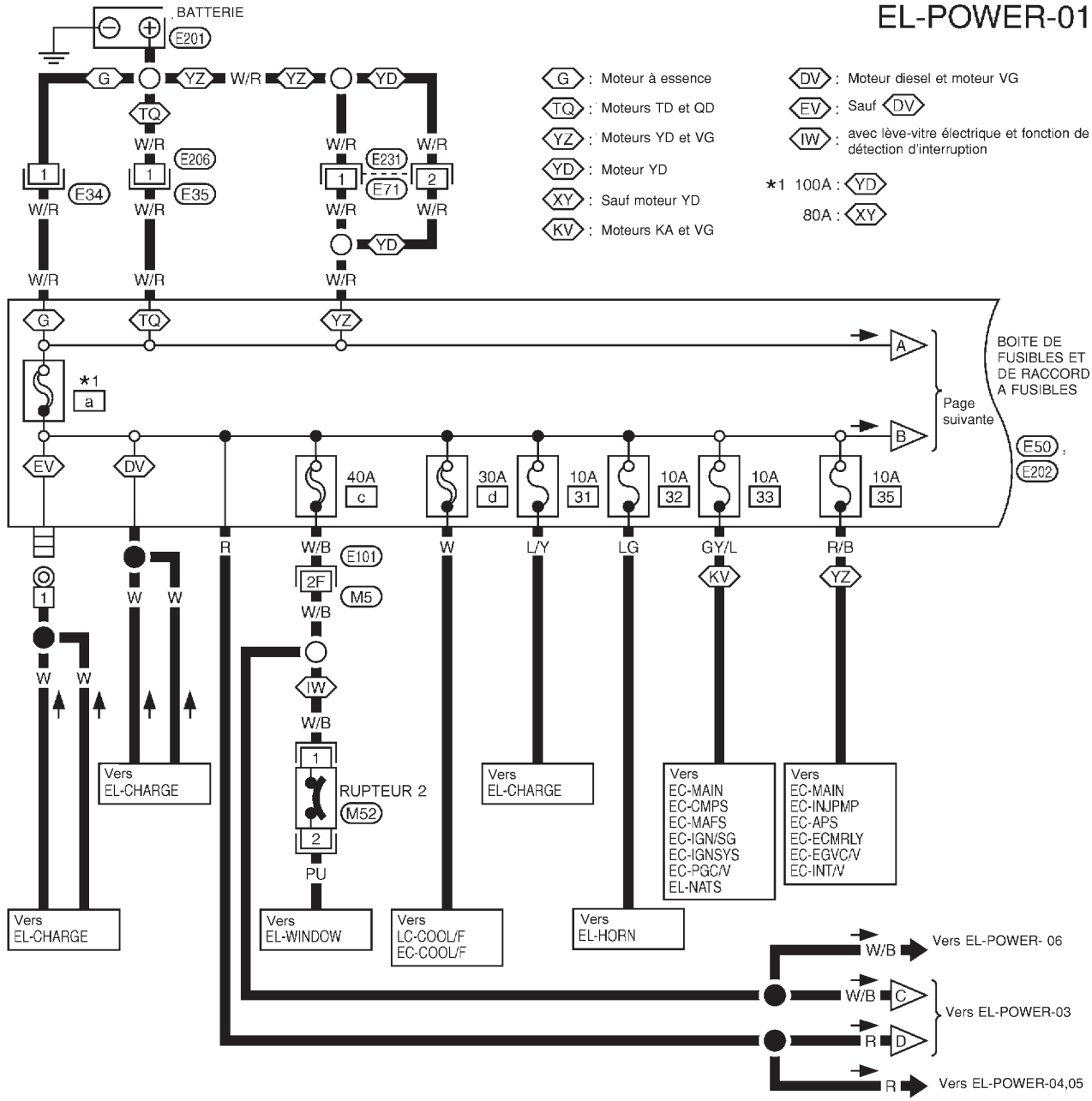

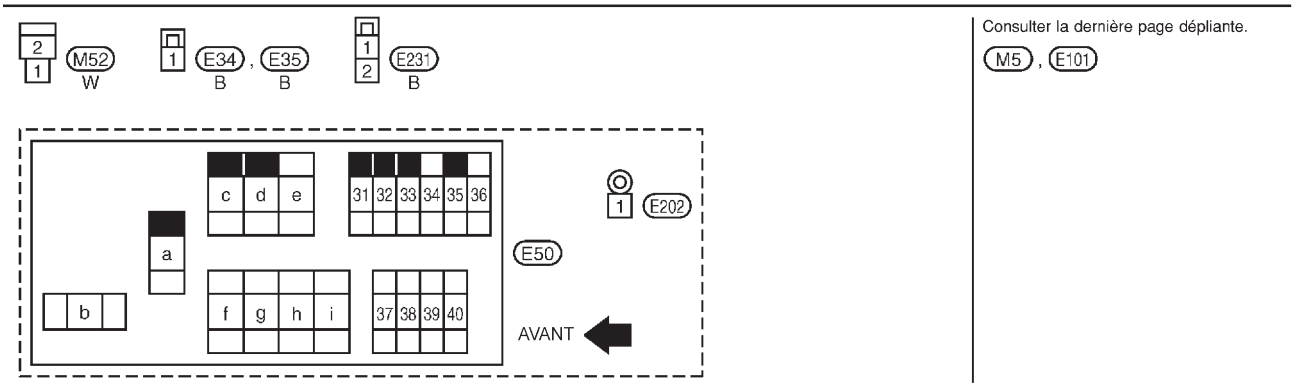

Consulter la dernière page dépliante.

M5 , E101

GEL359A

Simpo PDF Merge and Split Unregistered Version - http://www.simpopdf.com

Schéma de câblage — POWER — (Suite)

EL-POWER-02

YZ : moteurs YD et ZD
UL : Conduite à gauche pour l'Europe
YD : Moteur YP et moteurs TD
TZ : Moteurs TD, QD et ZD
*1 80A : TZ
60A : YD

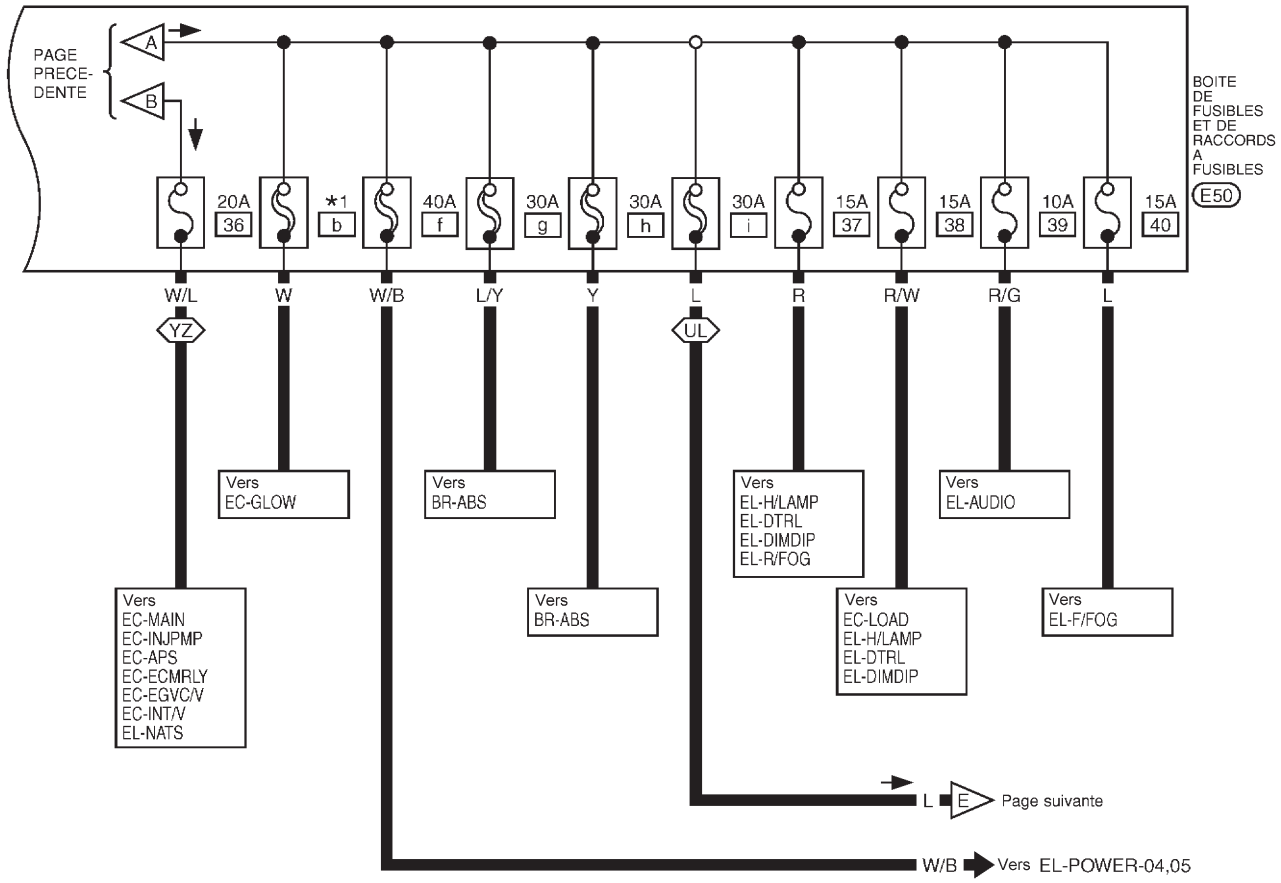

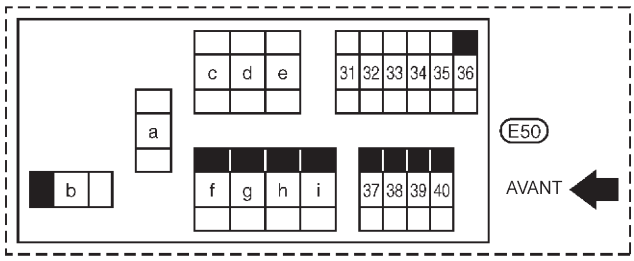

GEL662A

Simpo PDF Merge and Split Unregistered Version - http://www.simpopdf.com

Schéma de câblage — POWER — (Suite)

EL-POWER-03

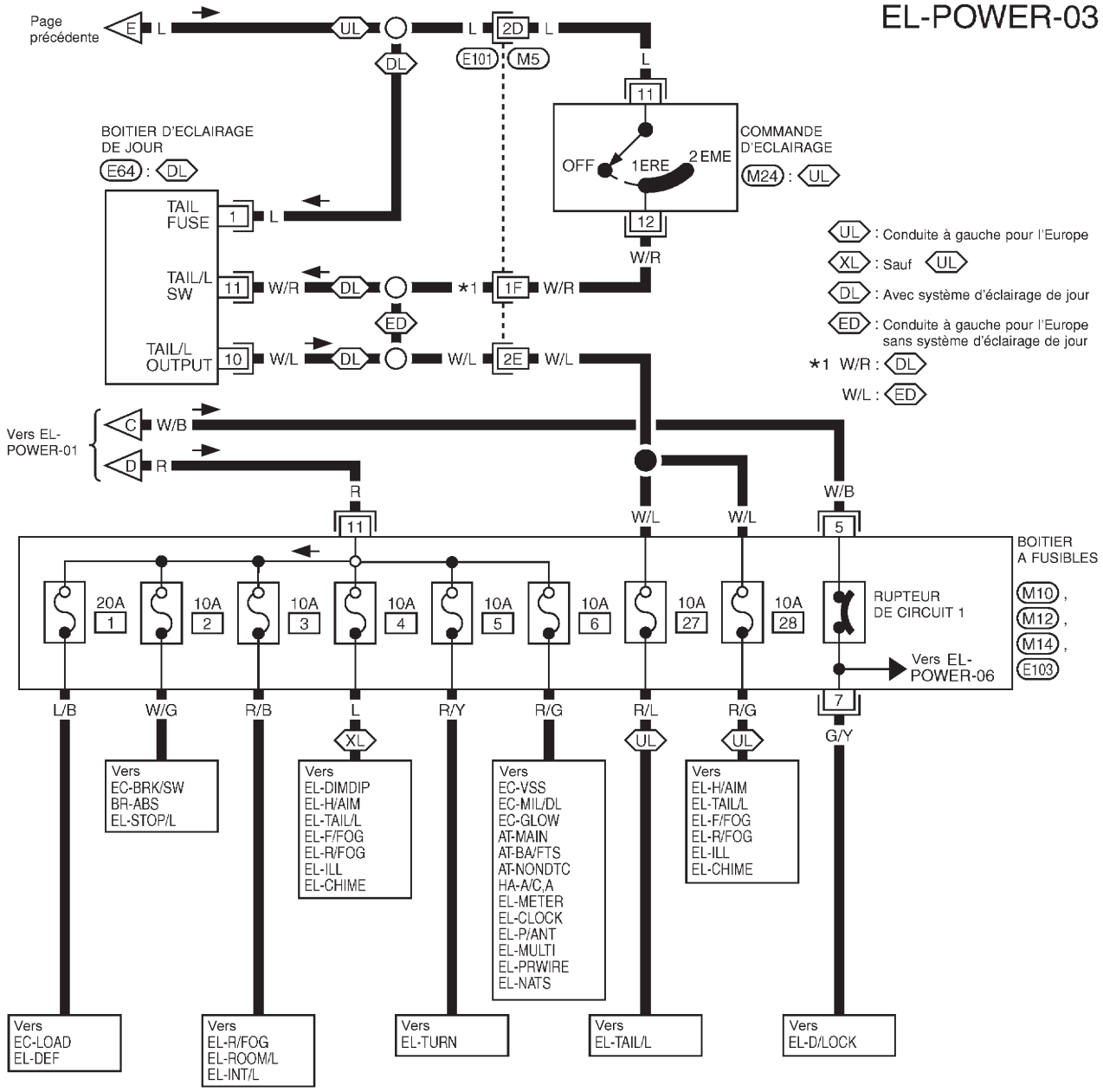

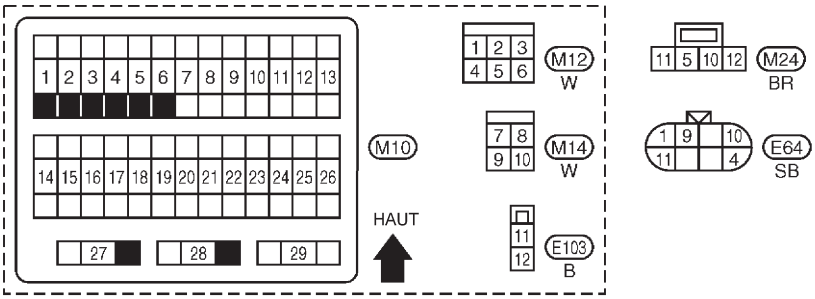

Consulter la dernière page dépliante.
M5 , E101

GEL663A

Simpo PDF Merge and Split Unregistered Version - http://www.simpopdf.com

Schéma de câblage — POWER — (Suite)

ALIMENTATION AUXILIAIRE — CONTACT D'ALLUMAGE SUR ACC OU ON

EL-POWER-04

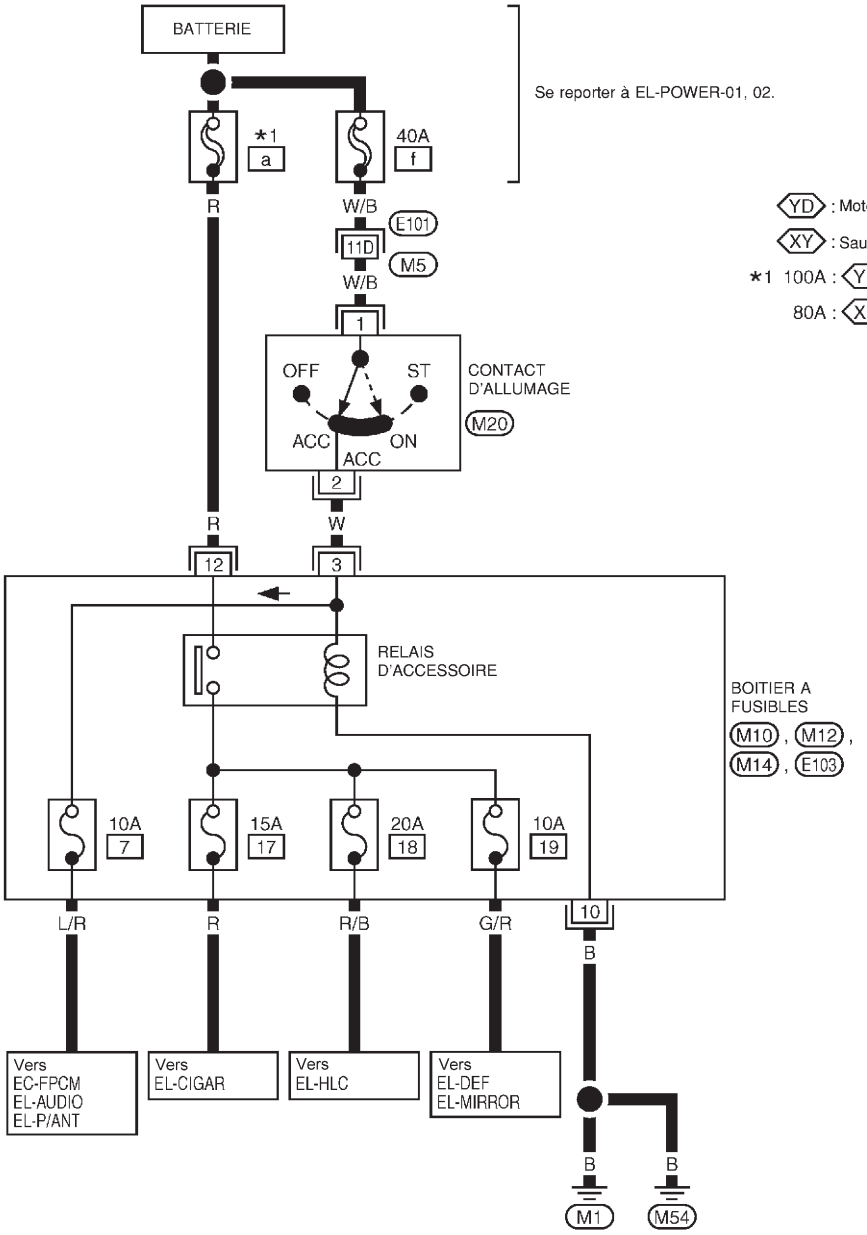

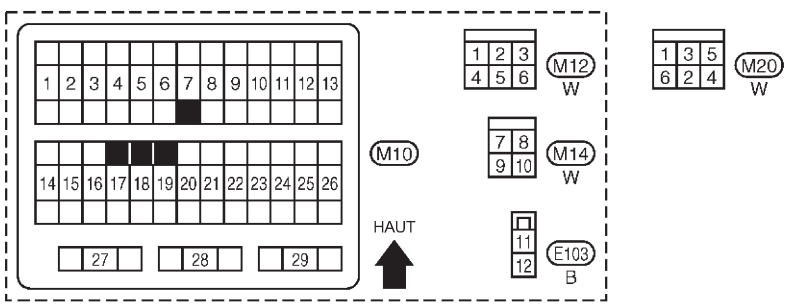

Consulter la dernière page dépliante.
M5 , E101

GEL362A

Simpo PDF Merge and Split Unregistered Version - http://www.simpopdf.com

Schéma de câblage — POWER — (Suite)

ALIMENTATION PAR BATTERIE — CONTACT D'ALLUMAGE SUR ON ET/OU START

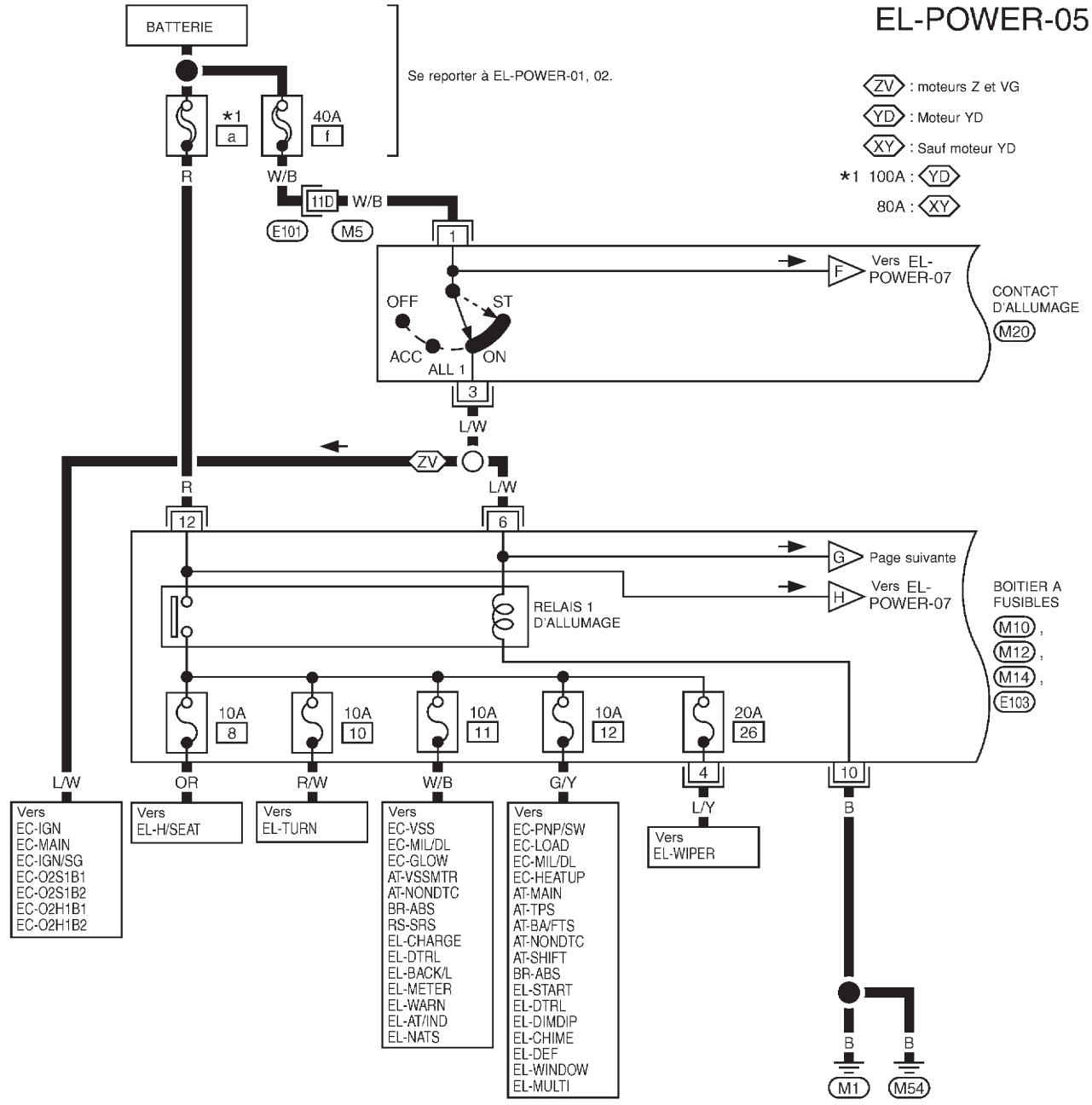

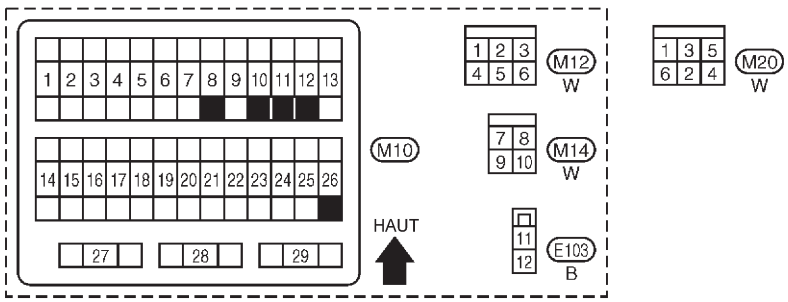

Consulter la dernière page dépliante.
M5 , E101

GEL600A

Simpo PDF Merge and Split Unregistered Version - http://www.simpopdf.com

Schéma de câblage — POWER — (Suite)

EL-POWER-06

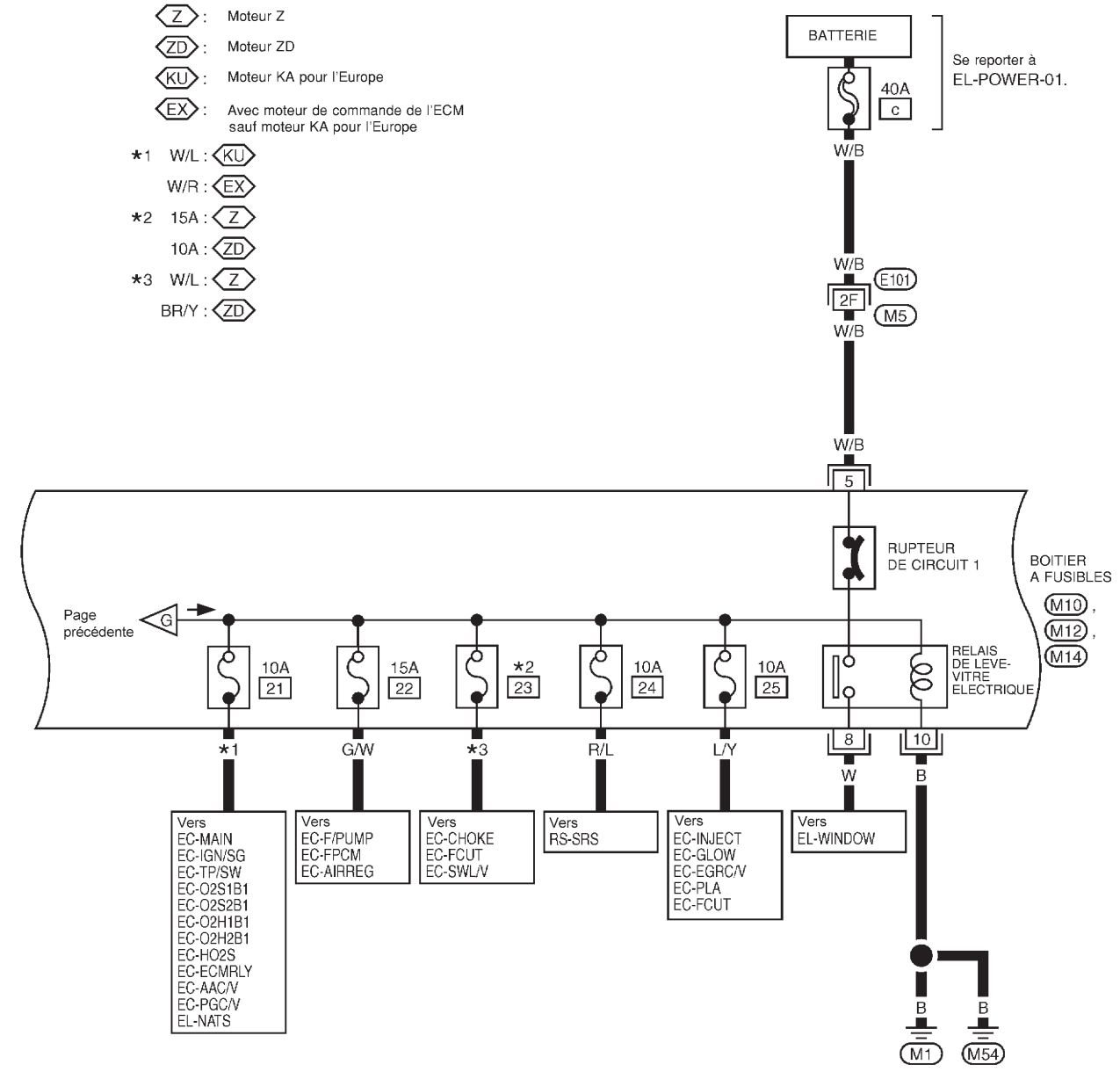

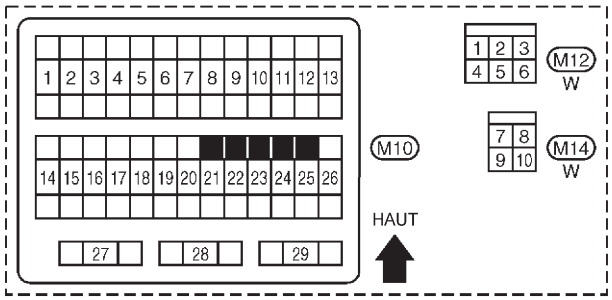

Consulter la dernière page dépliante.
M5, E101

GEL601A

Simpo PDF Merge and Split Unregistered Version - http://www.simpopdf.com

Schéma de câblage — POWER — (Suite)

EL-POWER-07

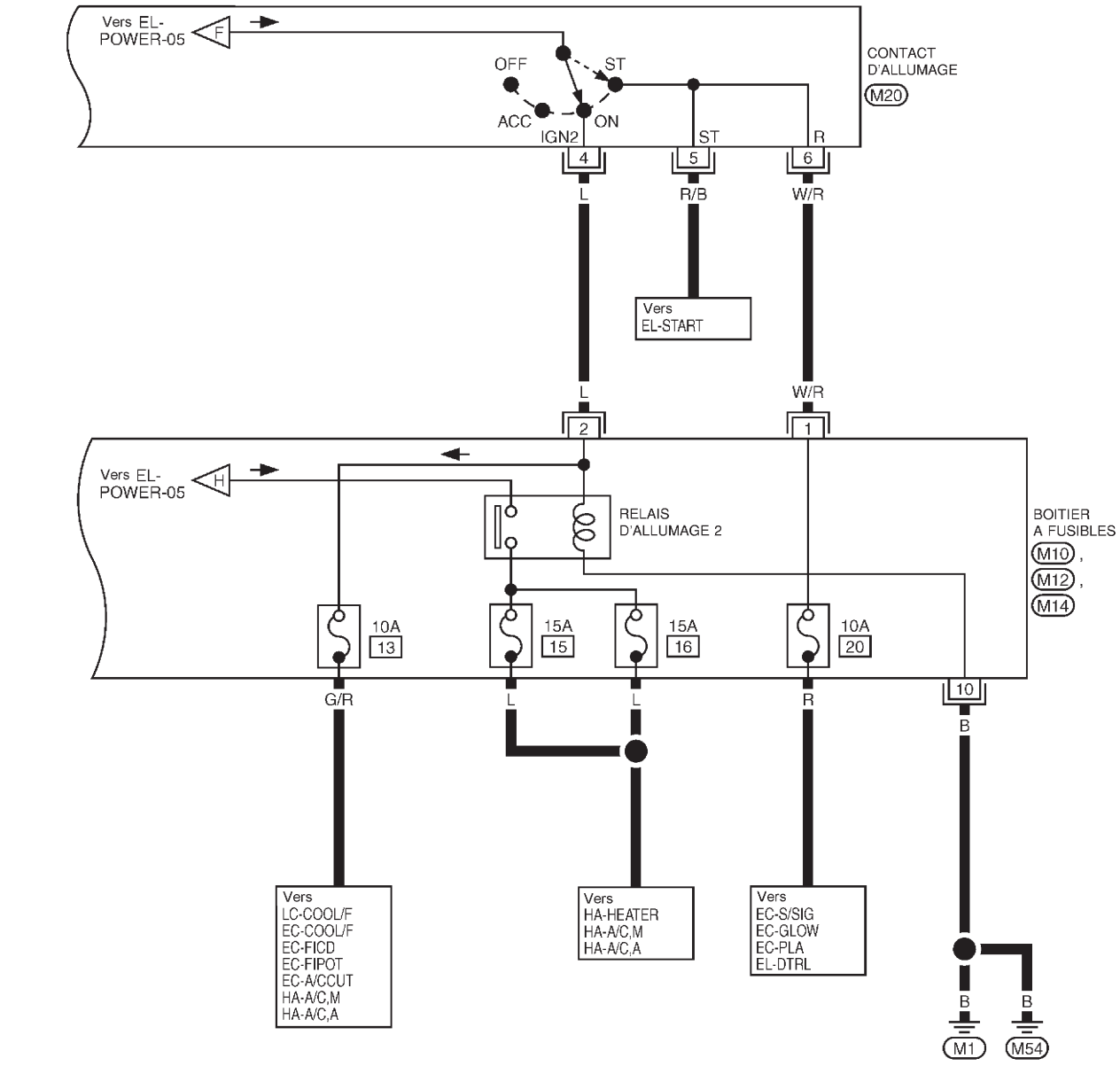

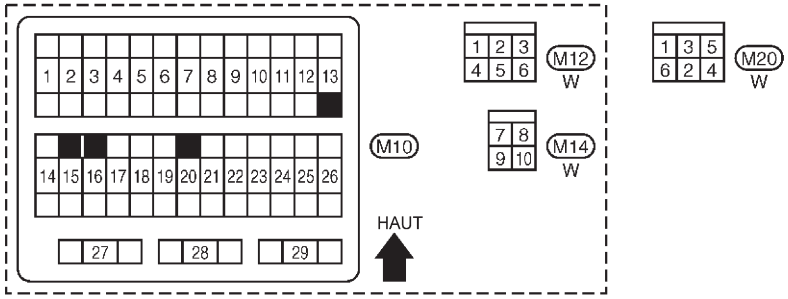

GEL365A

Simpo PDF Merge and Split Unregistered Version - http://www.simpopdf.com

CONDUITE A GAUCHE

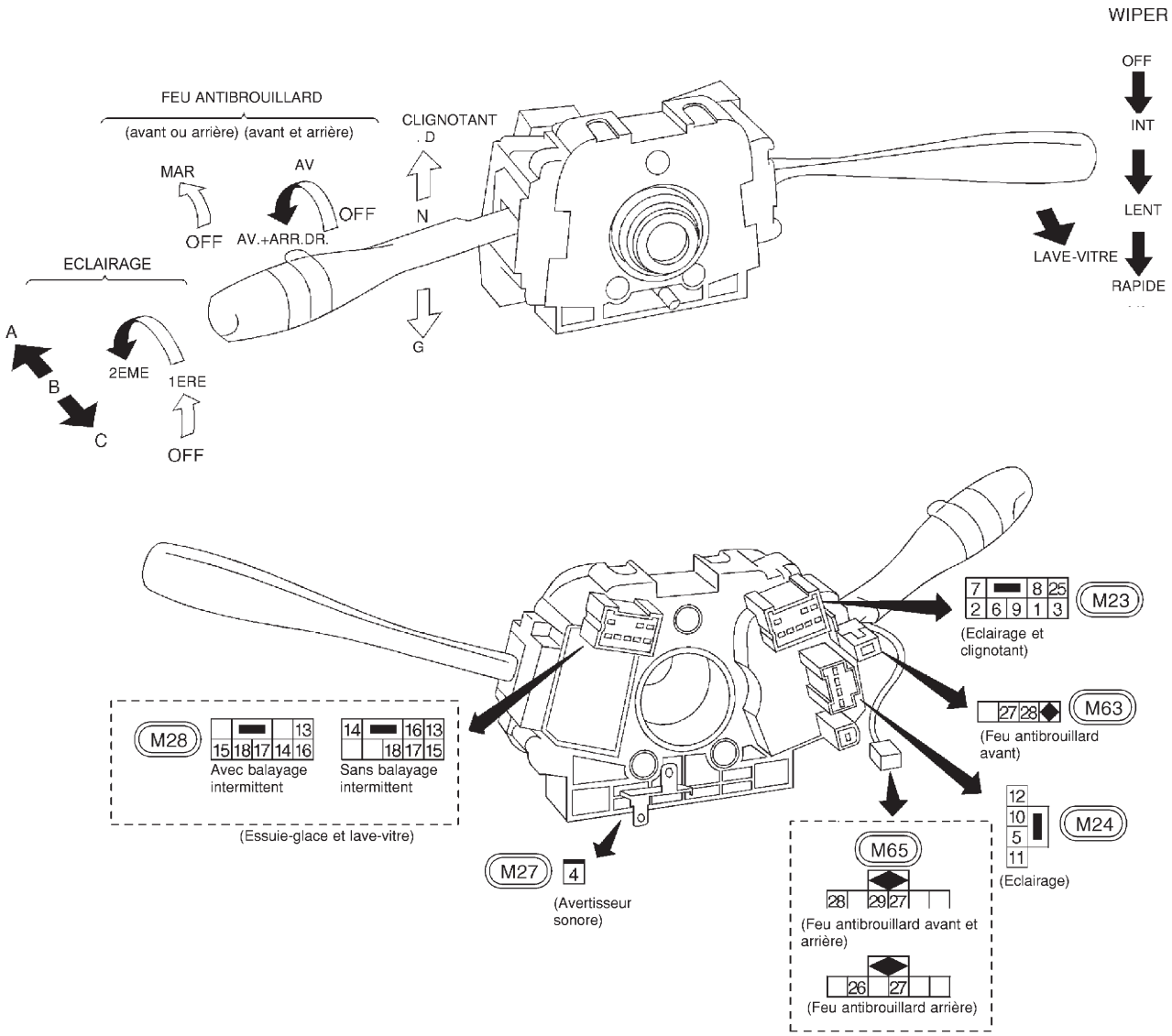

COMMANDE D'ECLAIRAGE

	OFF			1ERE			2EME		
	A	B	C	A	B	C	A	B	C
5			○			○	○	○	○
6			○			○	○		○
7								○	
8			○			○	○	○	○
9			○			○	○		○
10								○	
11				○	○	○	○	○	○
12				○	○	○	○	○	○
25							○	○	○

COMMANDE D'ESSUIE-GLACE ET DE LAVE-VITRE (avec balayage intermittent)

	OFF	INT	L	R	LAVE
13				○	
14	○	○	○		
		○			
15				○	
16				○	
17		○	○		
18		○			○

AMPLIFICATEUR D'ESSUIE-GLACE (Commande combinée)

COMMANDE D'ESSUIE-GLACE ET DE LAVE-VITRE (sans balayage intermittent)

	OFF	L	R	LAVE
13	○			
14	○	○		
15				
16			○	
17		○	○	○
18				○

COMMANDE DE CLIGNOTANT

	G	N	D
1	○		○
2			○
3	○		

FEU ANTIBROUILLARD AVANT COMMANDE D'ECLAIRAGE

	OFF	MAR
28		○
27		○

FEU ANTI-BROUILLARD ARRIERE COMMANDE D'ECLAIRAGE

	OFF	MAR
26		○
27		○

COMMANDE DE FEU ANTIBROUILLARD (avant et arrière)

	OFF	AV.	AV.+ARR.
28		○	○
29		○	○
27			○

COMMANDE D'AVERTISSEUR SONORE (sans airbag)

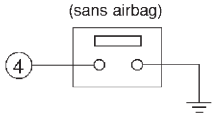

Simpo PDF Merge and Split Unregistered Version - http://www.simpopdf.com

Schéma de câblage — H/AIM —

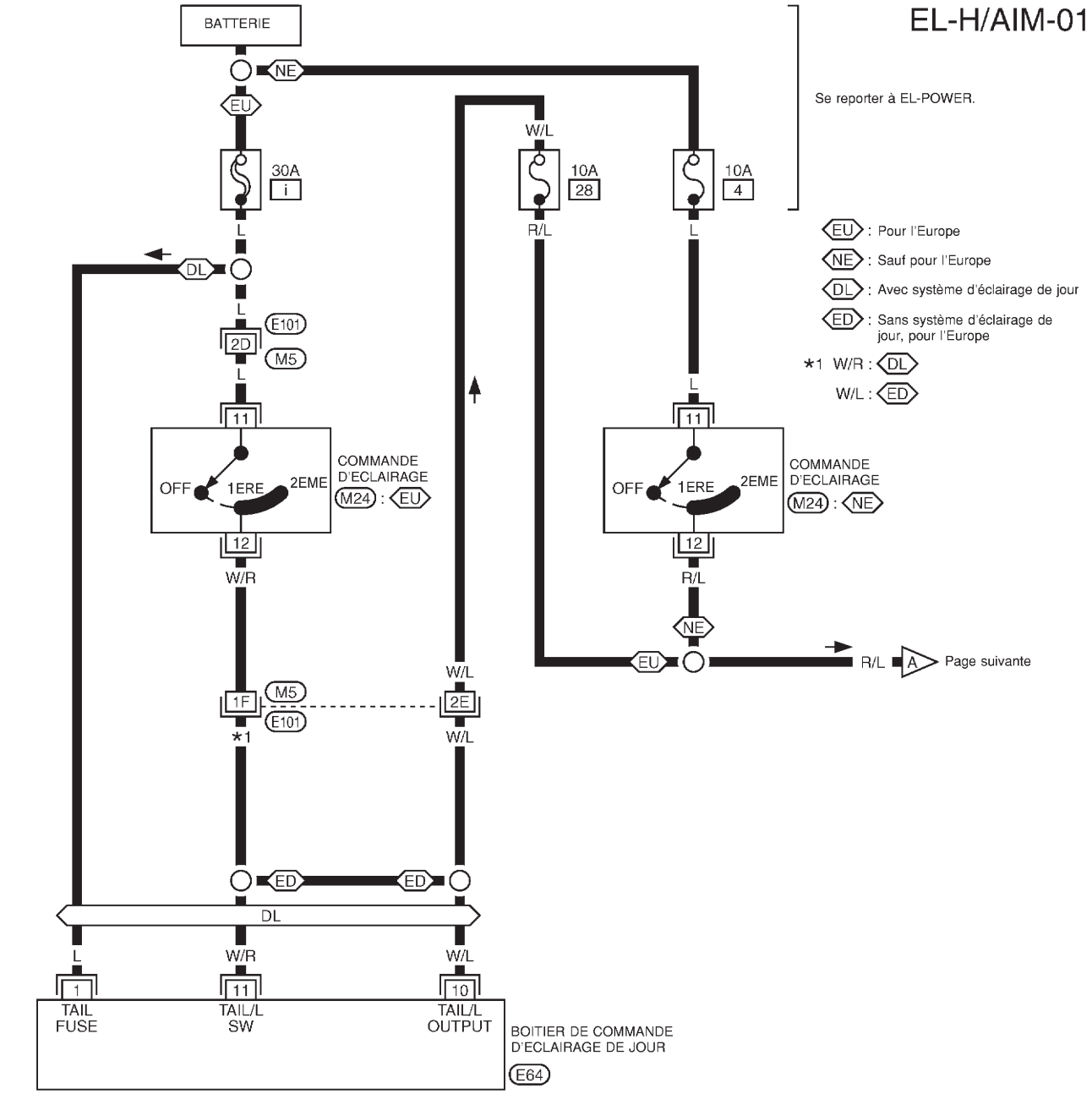

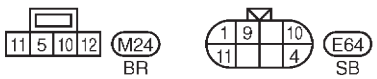

Consulter la dernière page dépliante.

M5 , E101

GEL664A

Simpo PDF Merge and Split Unregistered Version - http://www.simpopdf.com

Schéma de câblage — H/AIM — (Suite)

EL-H/AIM-02

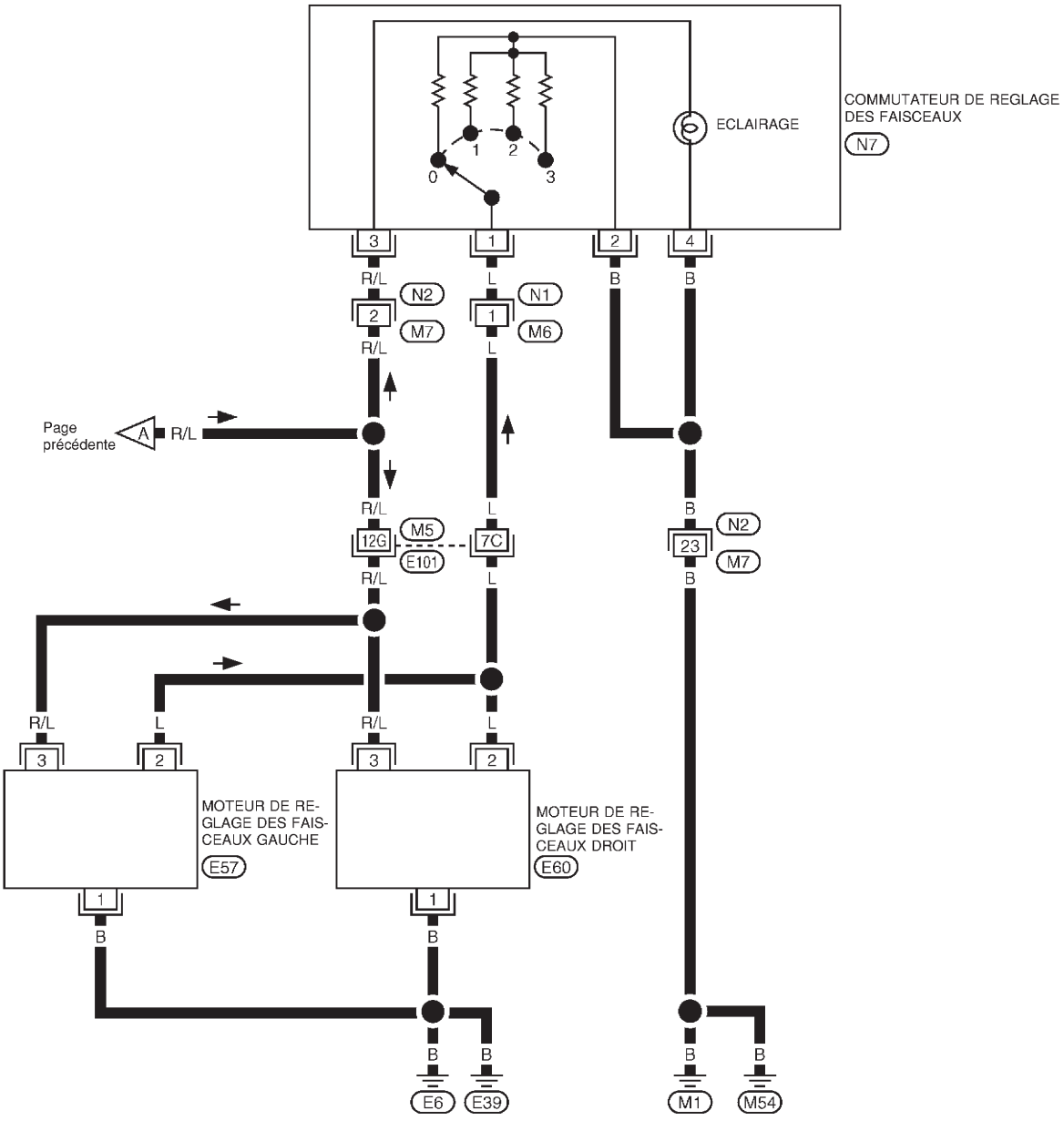

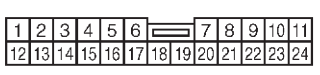

N1 (W), N2 (BR)



N7 (W)



E57, E60

Consulter la dernière page dépliante.
M5, E101

GEL378A

Simpo PDF Merge and Split Unregistered Version - http://www.simpopdf.com

Schéma de câblage — TAIL/L —/Conduite à gauche

EL-TAIL/L-01

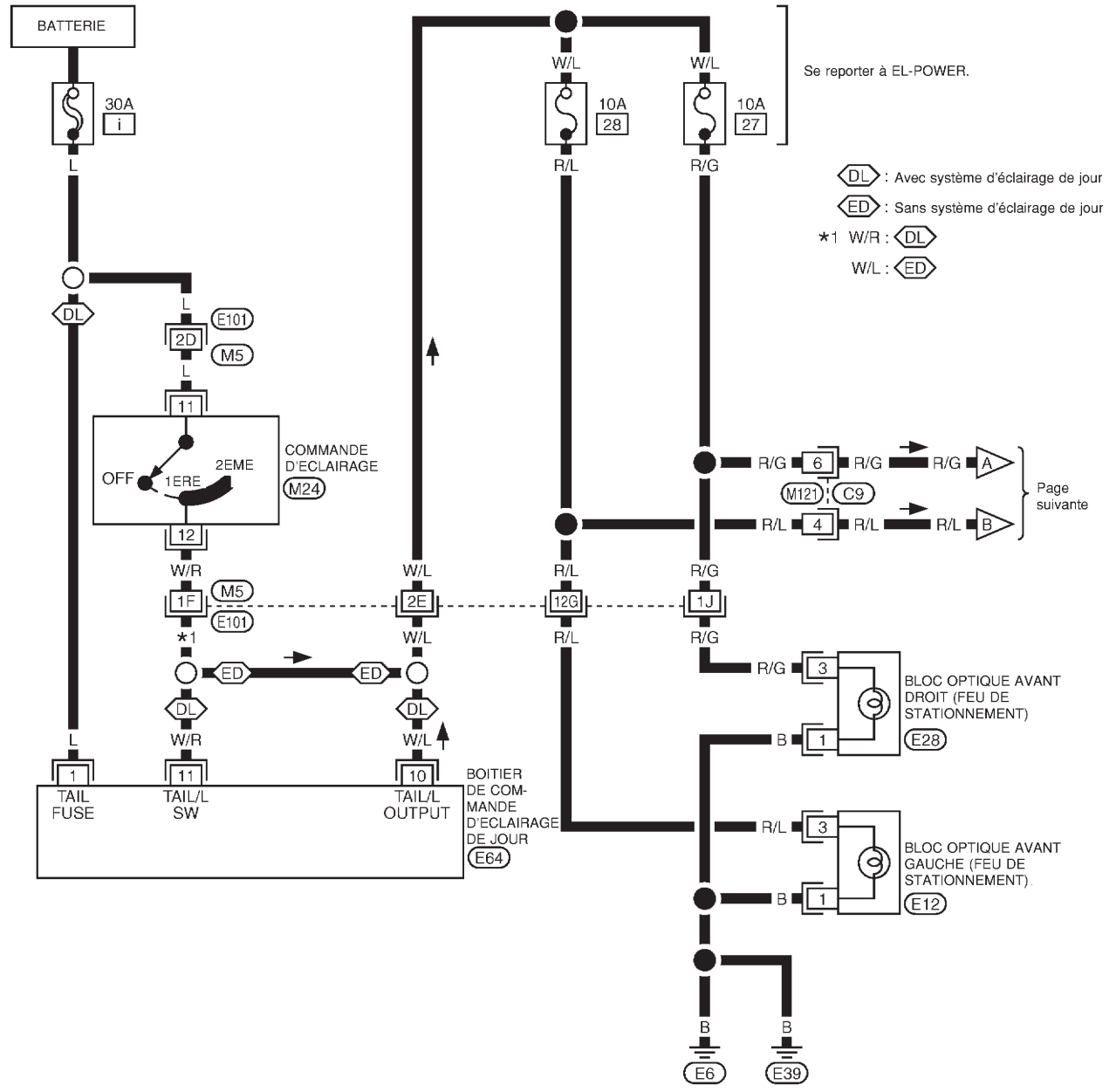

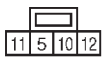

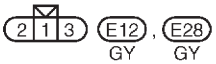

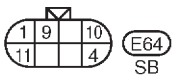

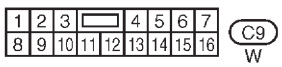

Consulter la dernière page dépliante.
M5 , E101

GEL665A

Simpo PDF Merge and Split Unregistered Version - http://www.simpopdf.com

Schéma de câblage — TAIL/L —/Conduite à gauche (Suite)

EL-TAIL/L-02

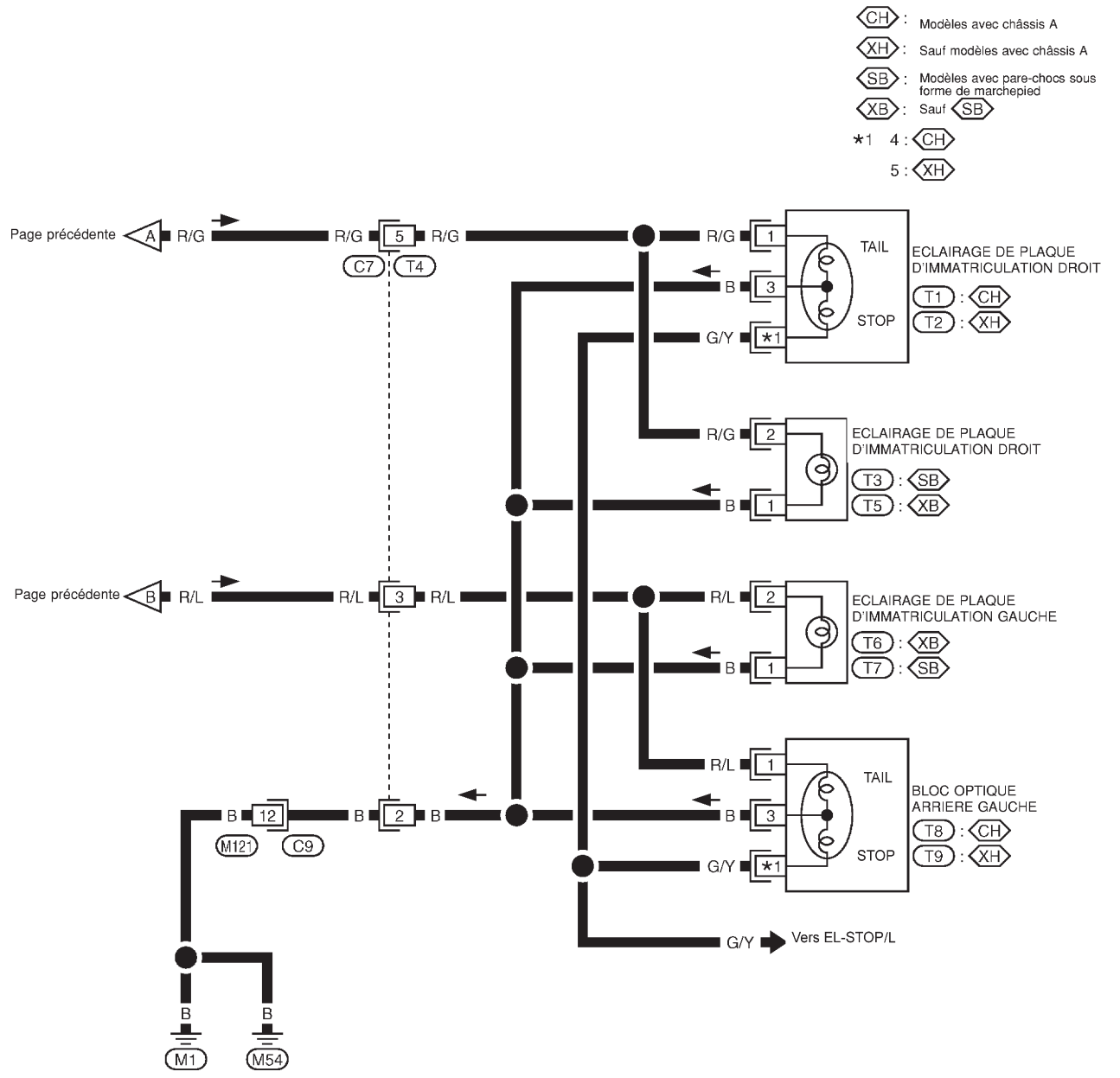

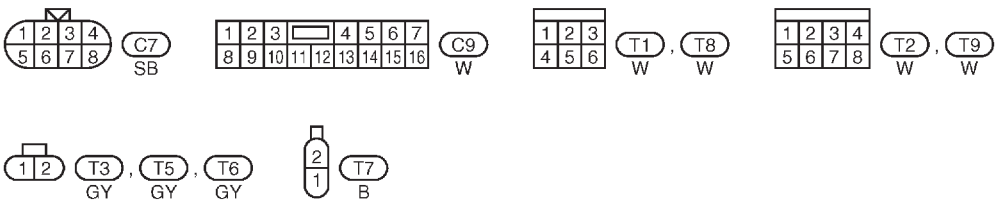

GEL666A

Simpo PDF Merge and Split Unregistered Version - http://www.simpopdf.com

Schéma de câblage — F/FOG —/Conduite à gauche

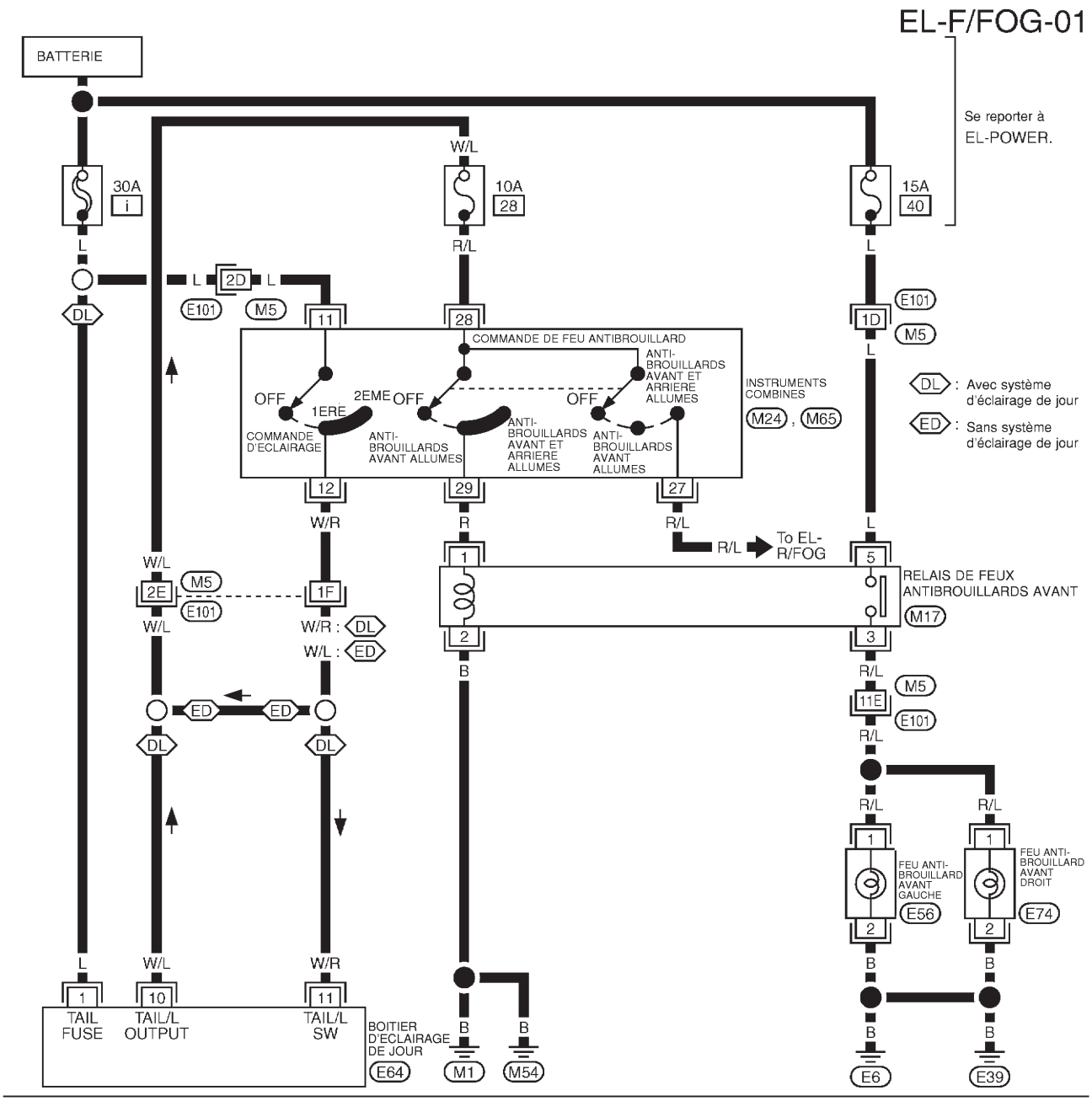

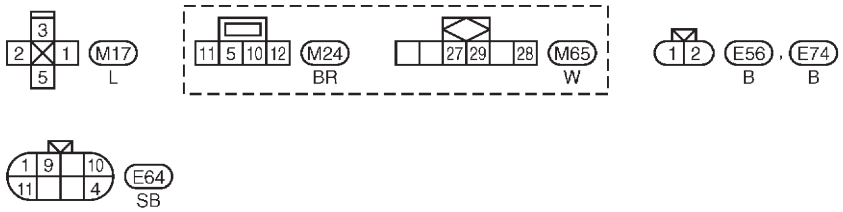

Consulter la dernière page dépliante.
M5 , E101

GEL667A

Simpo PDF Merge and Split Unregistered Version - http://www.simpopdf.com

Schéma de câblage — F/FOG —/Conduite à droite

EL-F/FOG-02

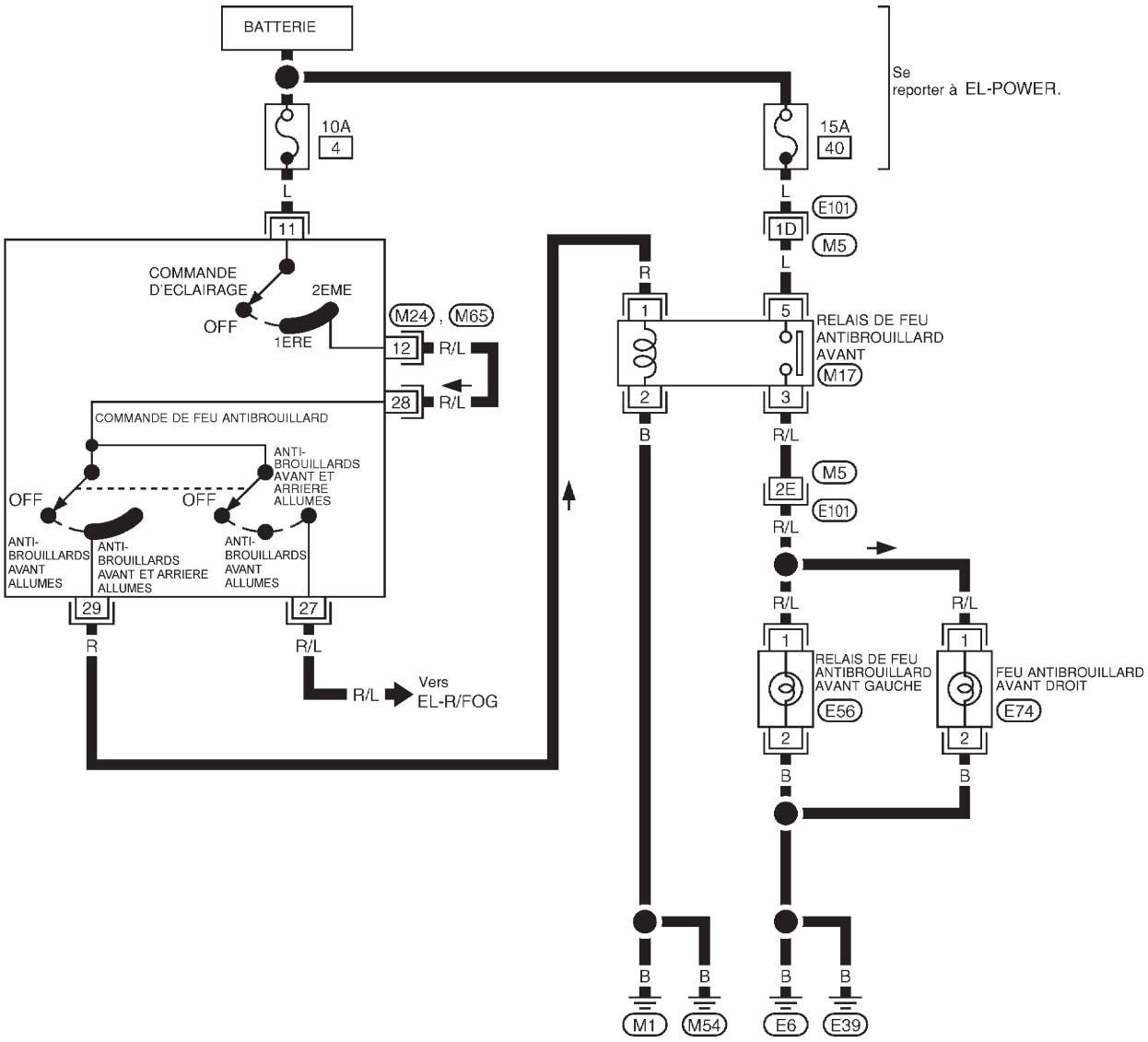

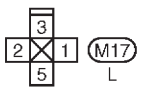

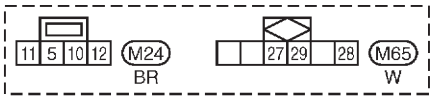



Consulter la dernière page dépliante.
M5 , E101

GEL668A

Simpo PDF Merge and Split Unregistered Version - http://www.simpopdf.com

Schéma de câblage — R/FOG —/Conduite à gauche sans feux antibrouillards avant

EL-R/FOG-01

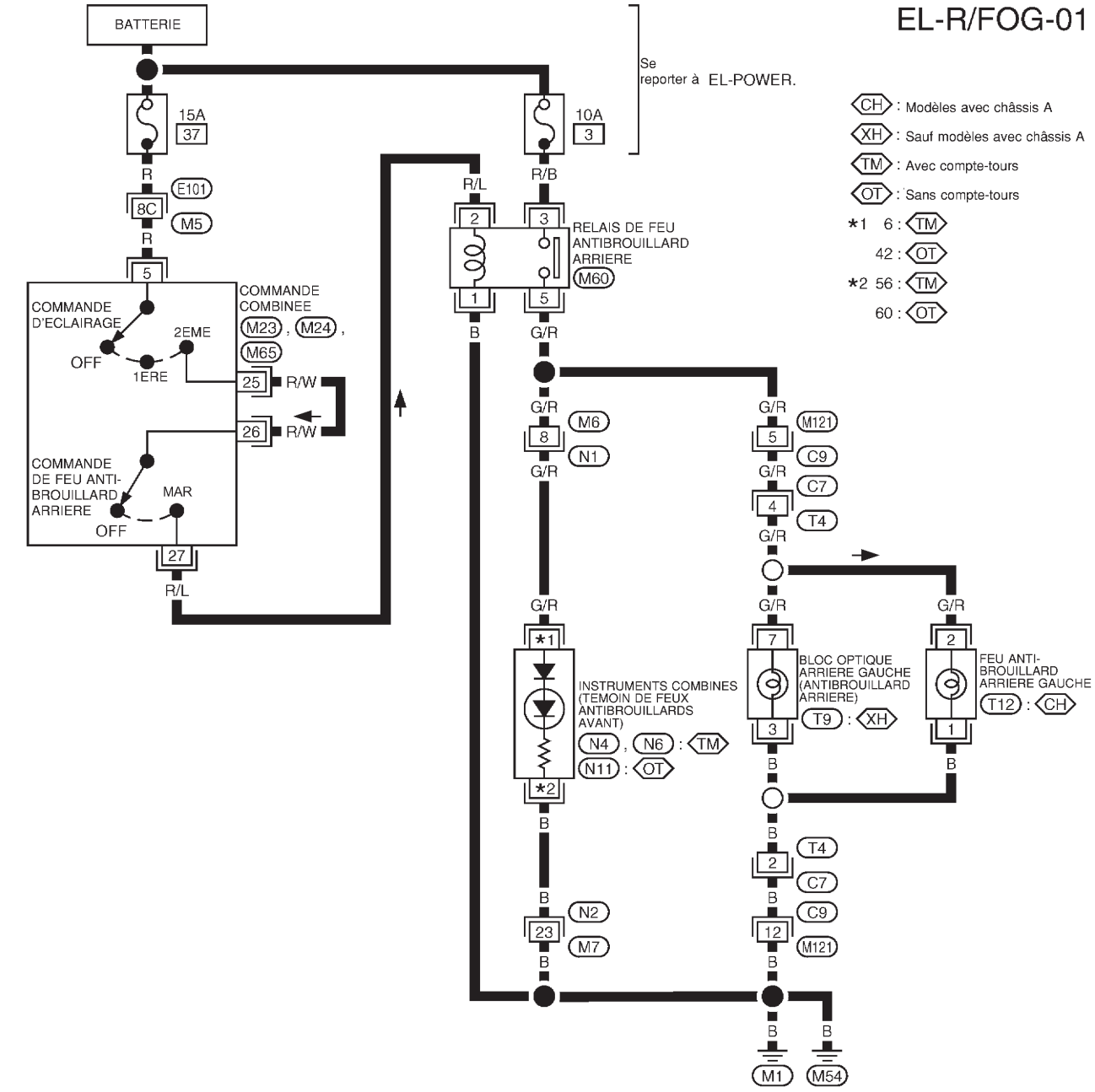

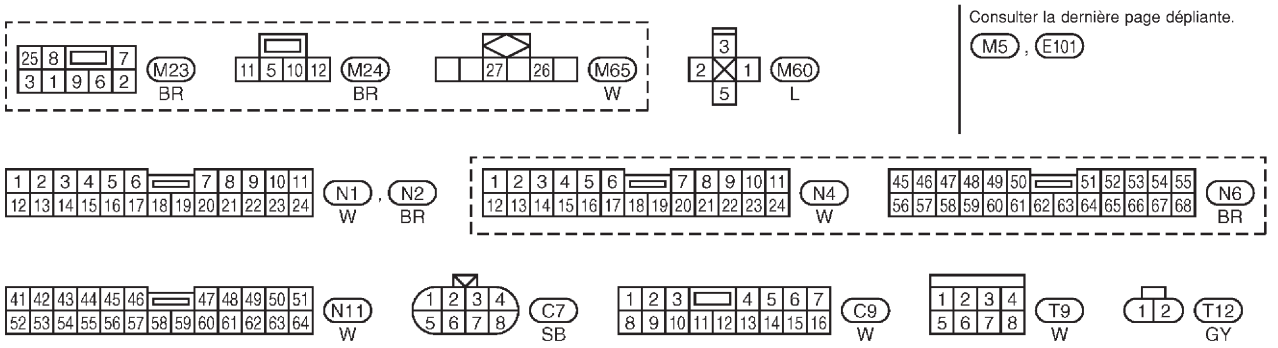

GEL670A

Simpo PDF Merge and Split Unregistered Version - http://www.simpopdf.com

Schéma de câblage — R/FOG —/Conduite à droite sans feux antibrouillards avant

EL-R/FOG-02

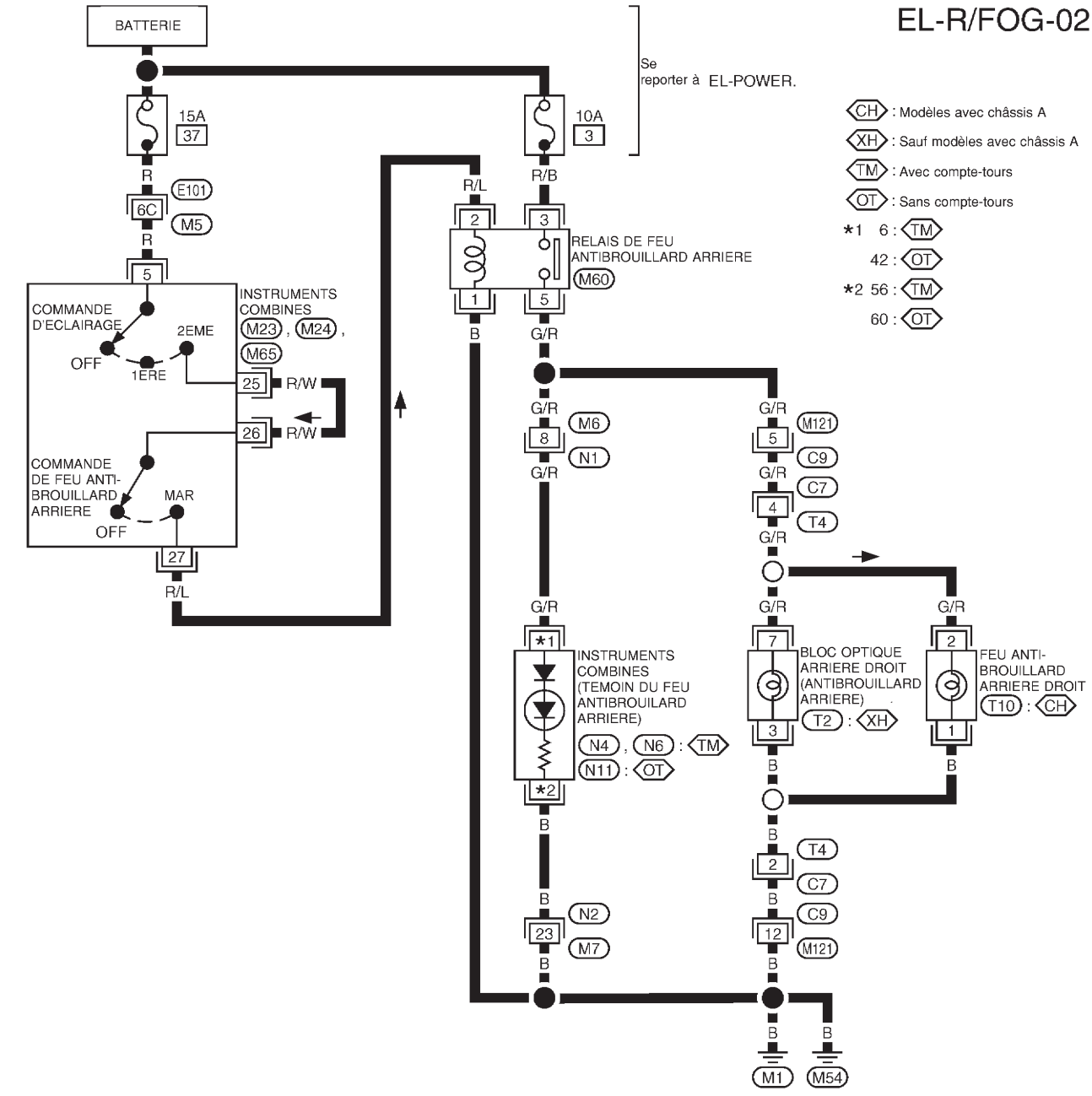

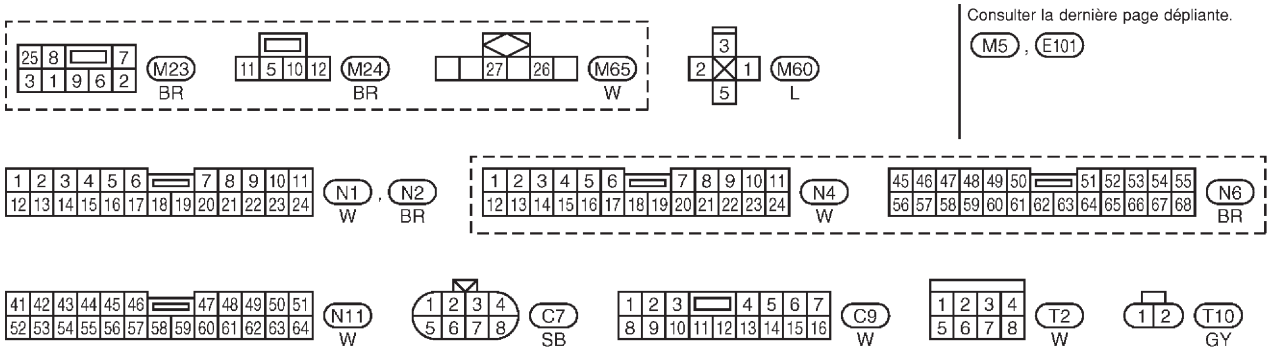

GEL671A

Simpo PDF Merge and Split Unregistered Version - http://www.simpopdf.com

Schéma de câblage — R/FOG —/Conduite à gauche avec feux antibrouillards avant

EL-R/FOG-03

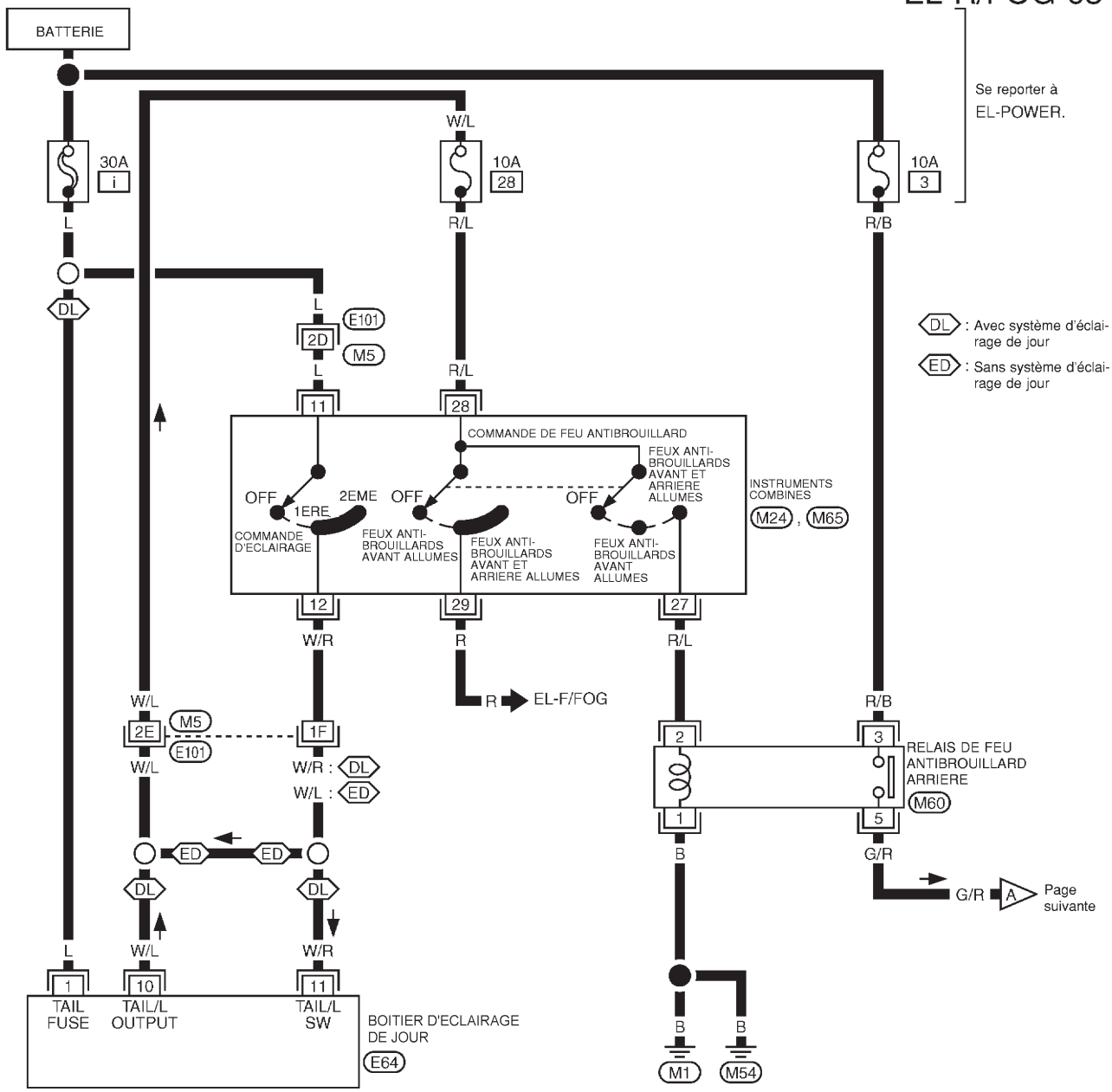

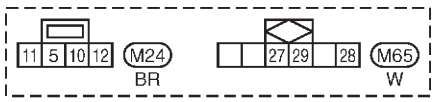

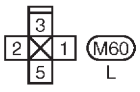

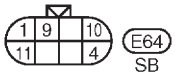

Consulter la dernière page dépliante.

M5 , E101

GEL672A

Simpo PDF Merge and Split Unregistered Version - http://www.simpopdf.com

Schéma de câblage — R/FOG —/Conduite à gauche avec feux antibrouillards avant (Suite)

EL-R/FOG-04

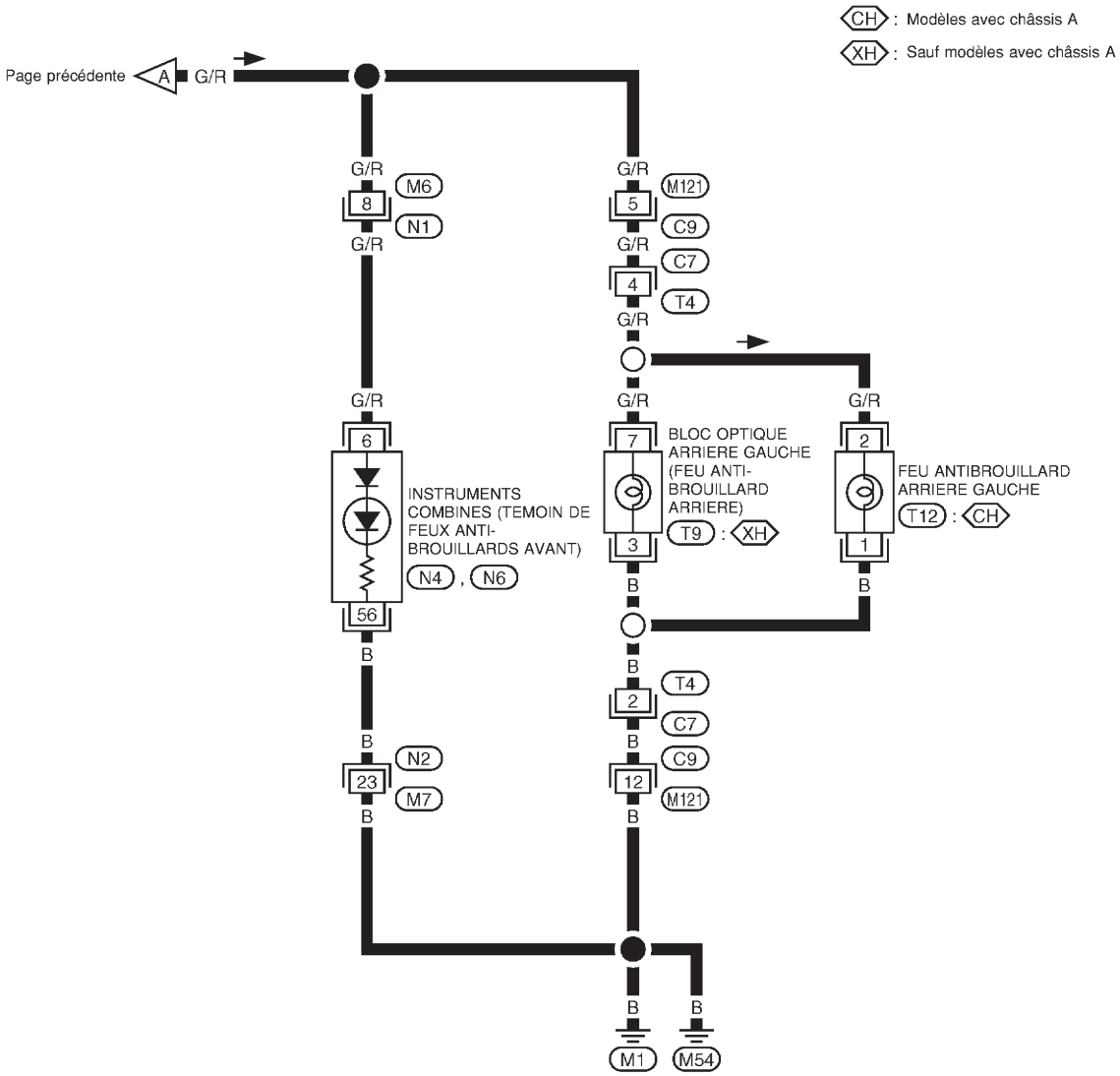

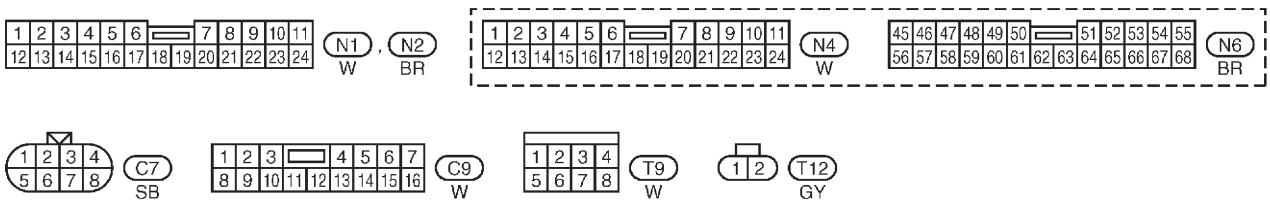

GEL673A

Simpo PDF Merge and Split Unregistered Version - http://www.simpopdf.com

Schéma de câblage — R/FOG —/Conduite à droite avec feux antibrouillards avant

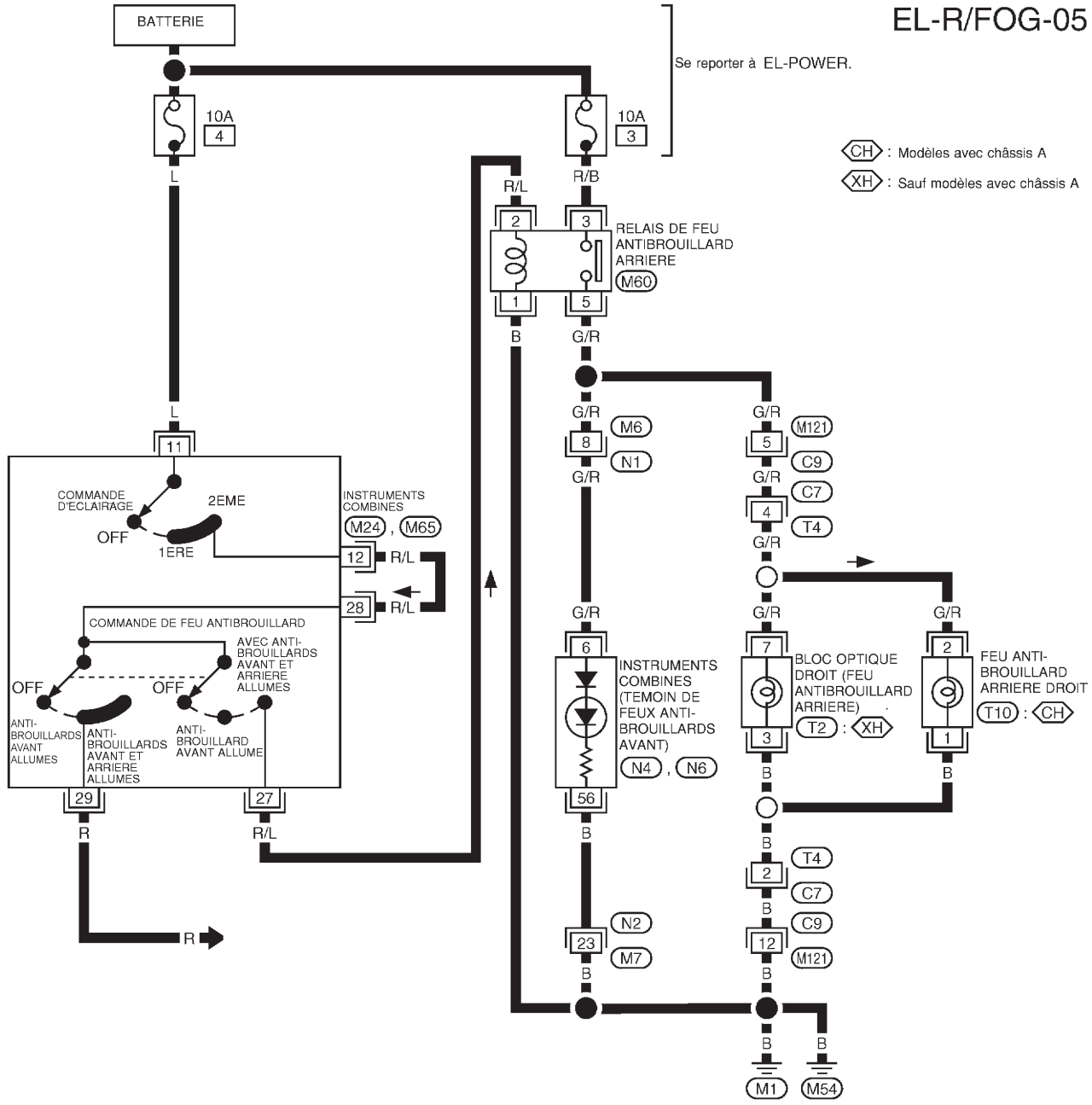

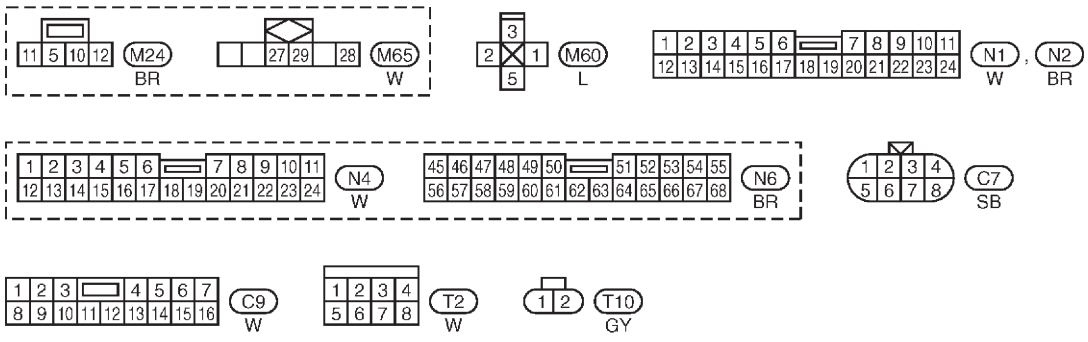

GEL674A

Simpo PDF Merge and Split Unregistered Version - http://www.simpopdf.com

Schéma de câblage — ROOM/L —

EL-ROOM/L-01

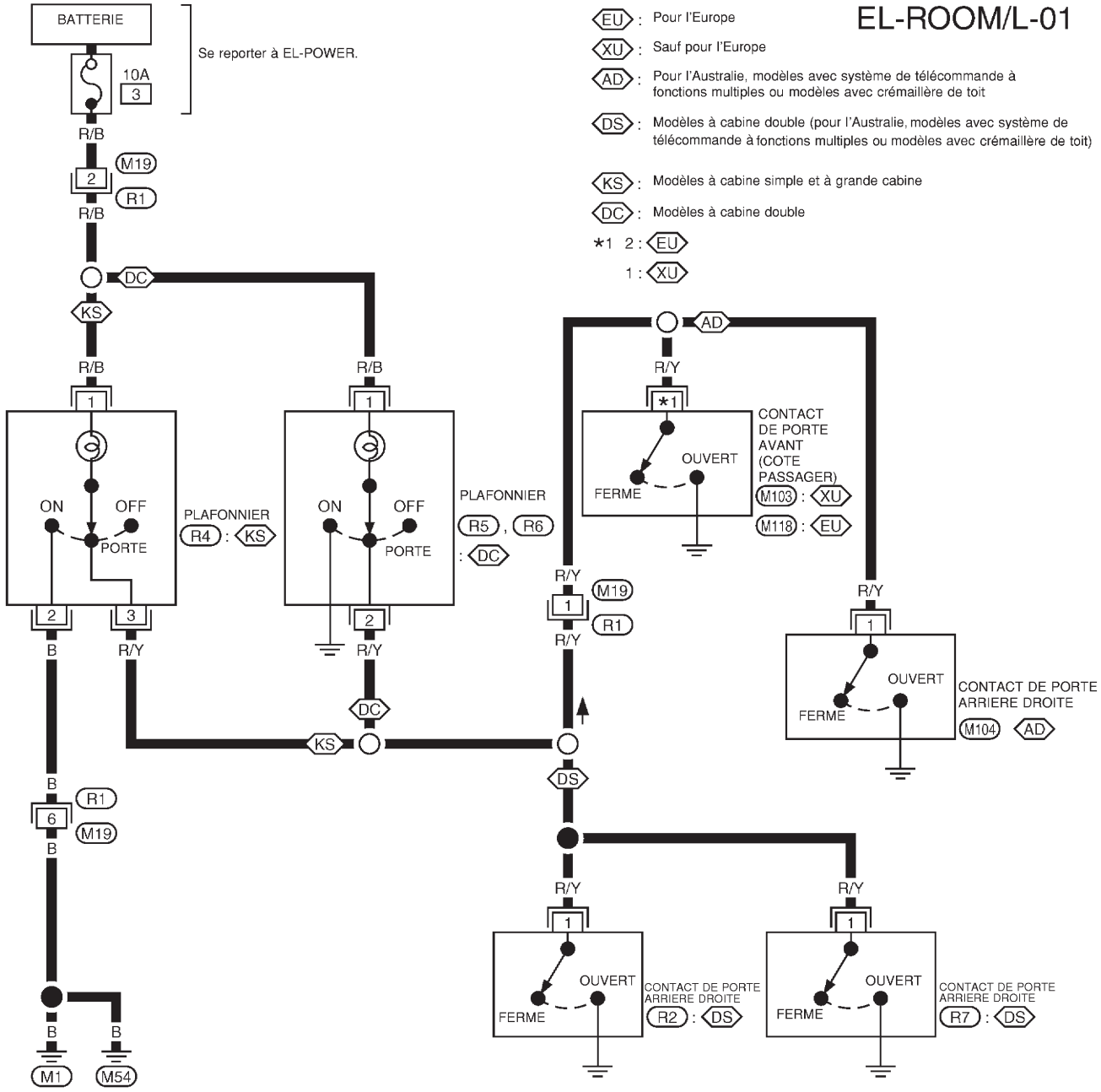

GEL602A

Simpo PDF Merge and Split Unregistered Version - http://www.simpopdf.com

Schéma de câblage — ILL —/Conduite à gauche

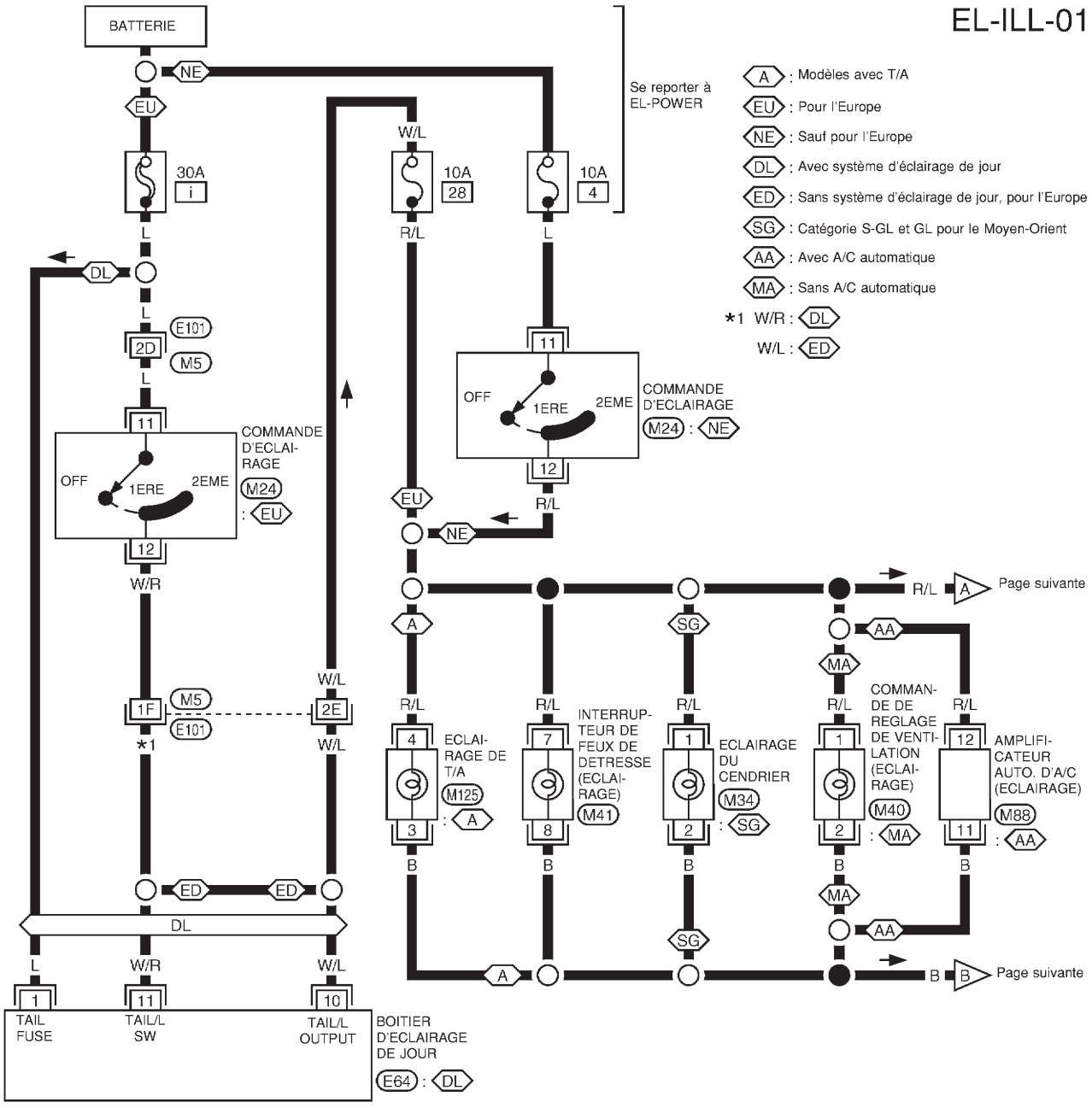

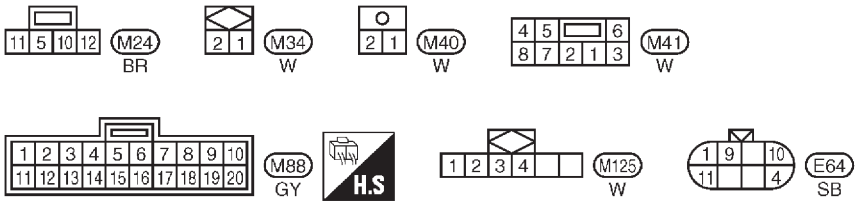

Consulter la dernière page dépliante.
M5 , E101

GEL675A

Simpo PDF Merge and Split Unregistered Version - http://www.simpopdf.com

Schéma de câblage — ILL —/Conduite à gauche (Suite)

EL-ILL-02

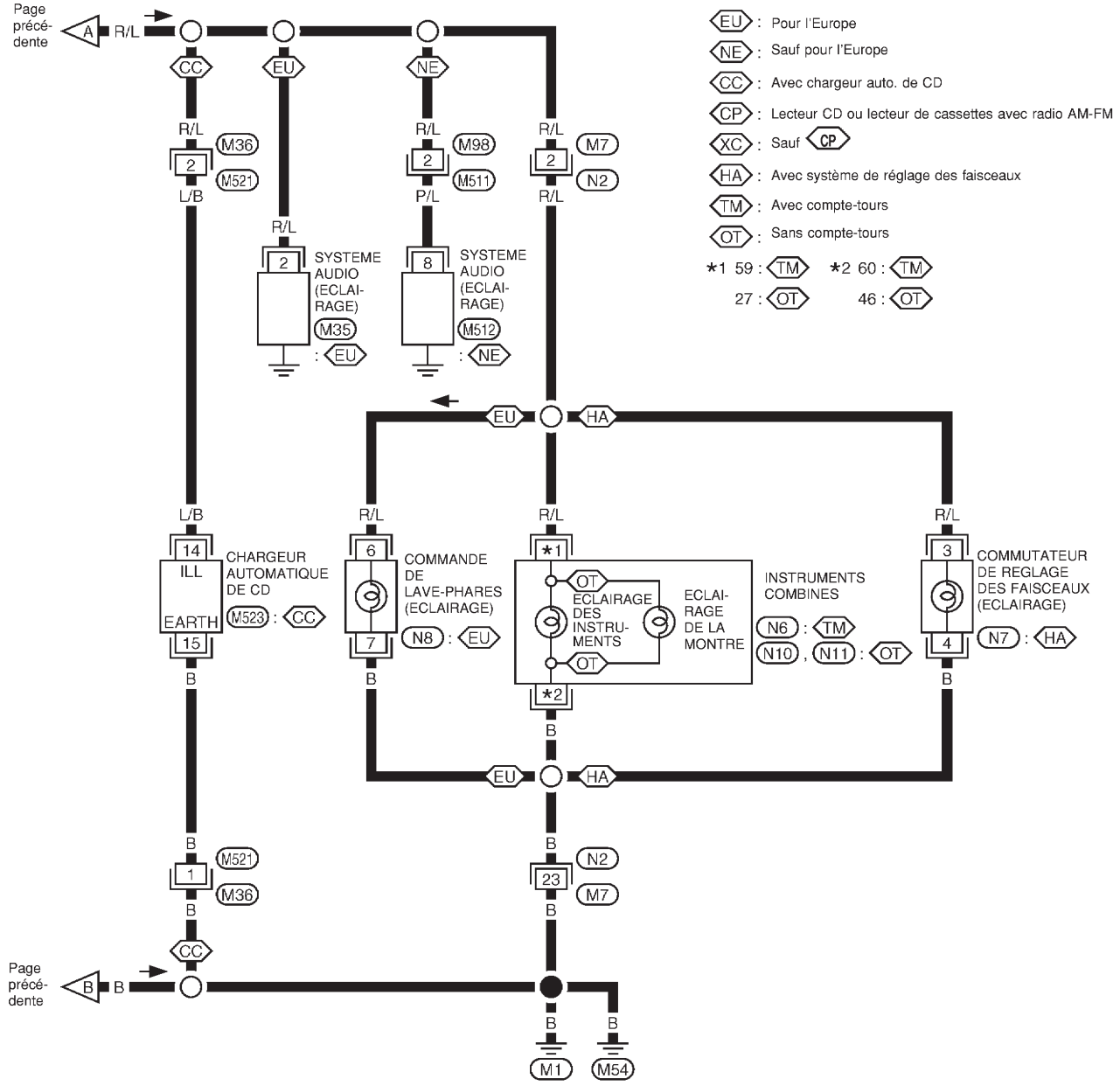

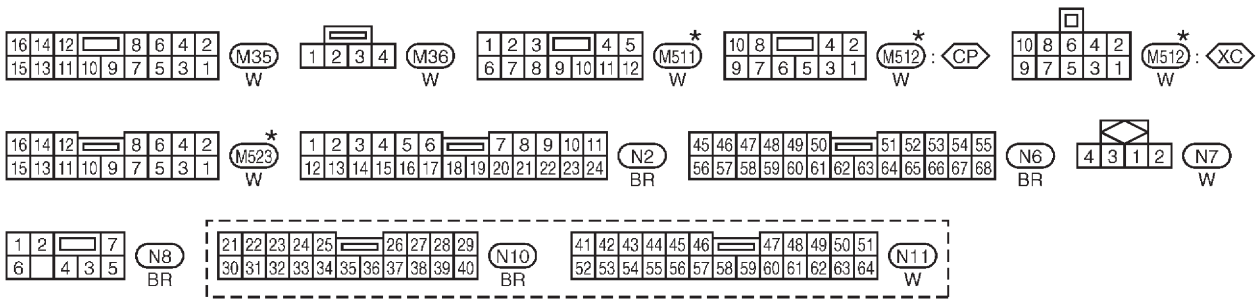

*: Ce connecteur n'est pas indiqué dans DISPOSITION DES FAISCEAUX.

GEL676A

Simpo PDF Merge and Split Unregistered Version - http://www.simpopdf.com

Schéma de câblage — ILL —/Conduite à droite

EL-ILL-03

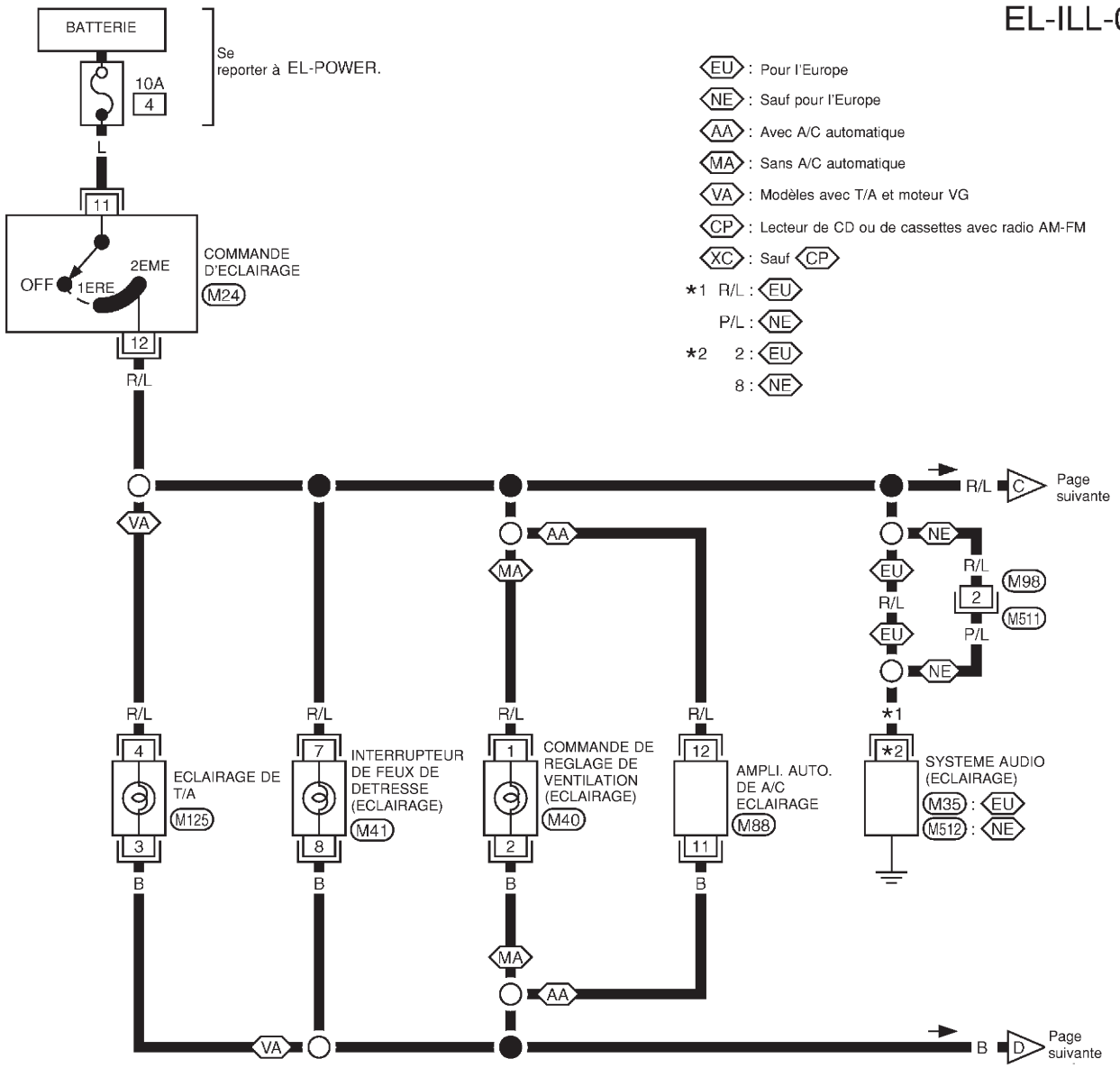

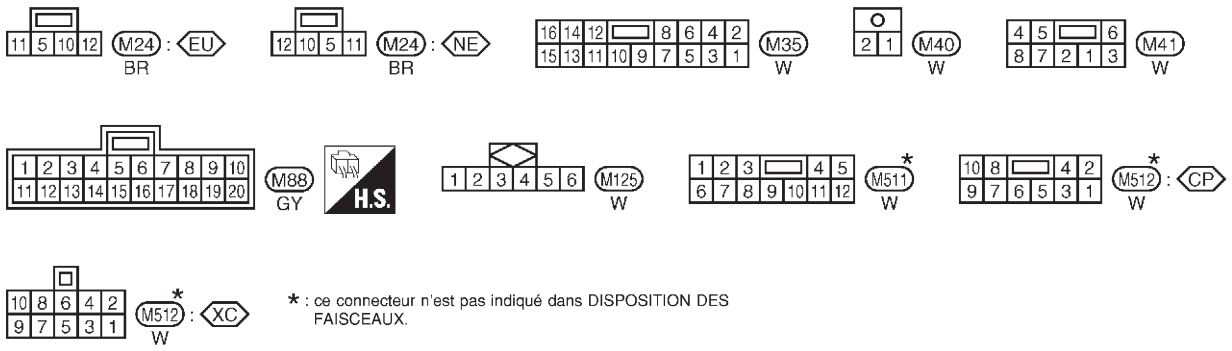

* : ce connecteur n'est pas indiqué dans DISPOSITION DES FAISCEAUX.

GEL387A

Simpo PDF Merge and Split Unregistered Version - http://www.simpopdf.com

Schéma de câblage — ILL —/Conduite à droite (Suite)

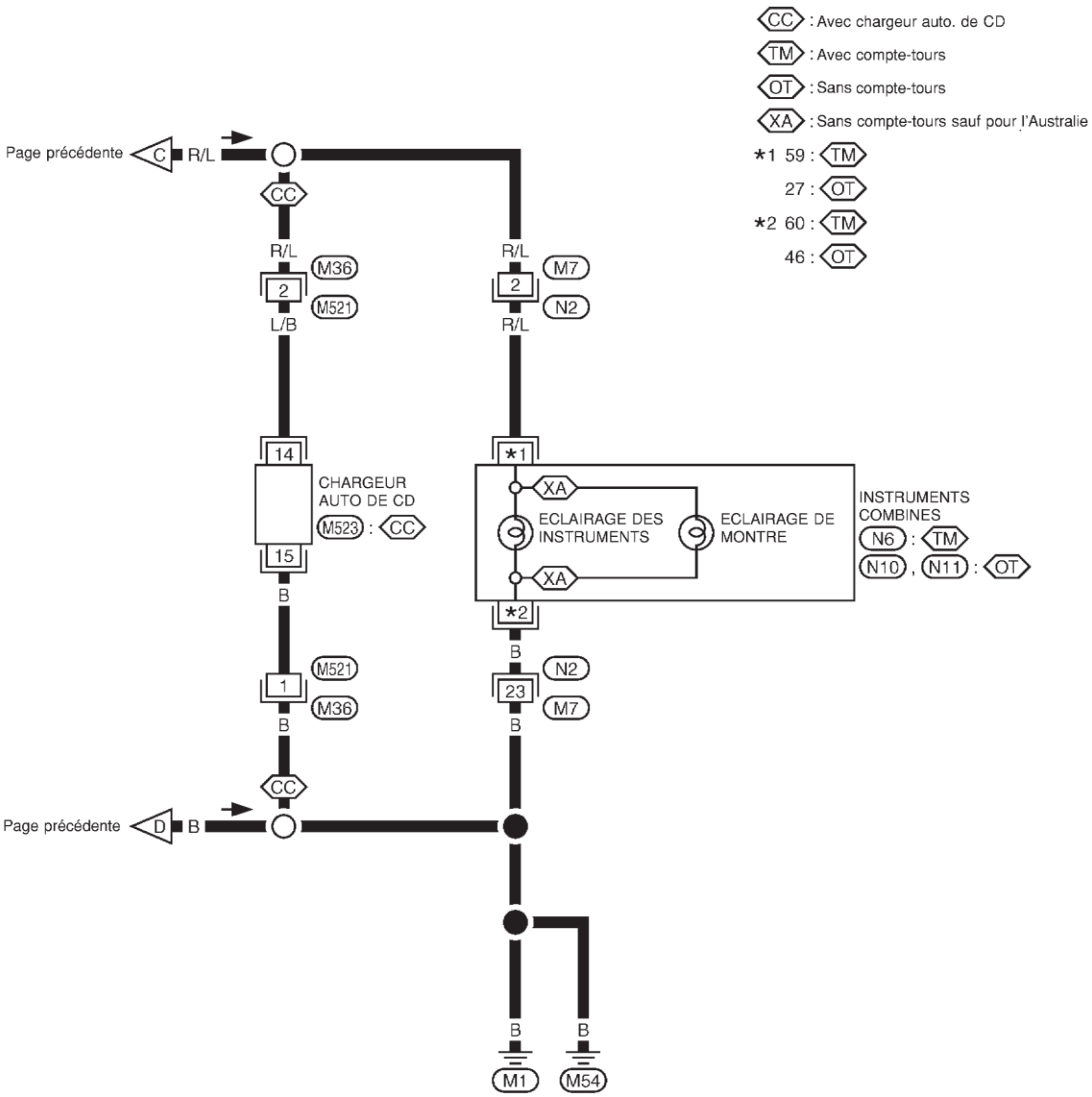

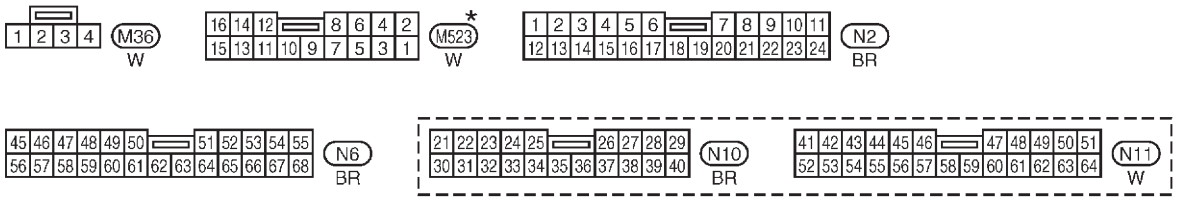

* : ce connecteur n'est pas indiqué dans DISPOSITION DES FAISCEAUX.

GEL677A

Simpo PDF Merge and Split Unregistered Version - http://www.simpopdf.com

Schéma de câblage — METER —/Moteur essence avec compte-tours

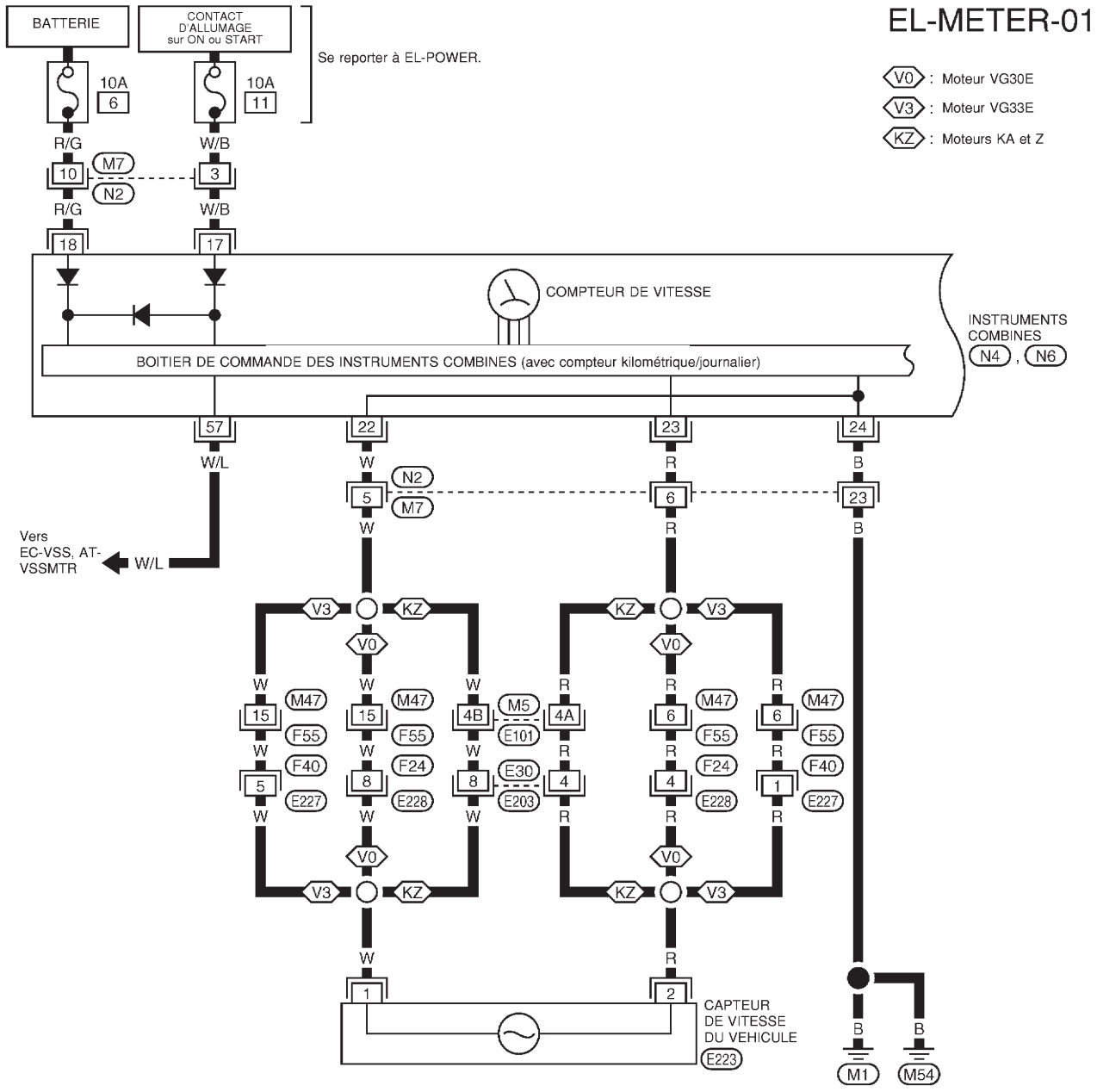

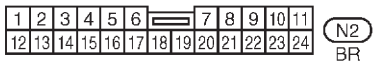

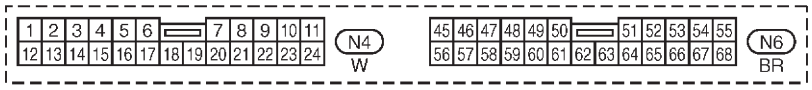

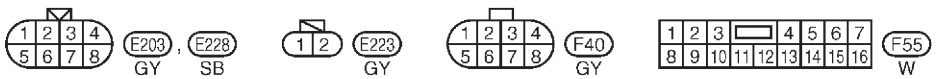

Consulter la dernière page dépliante.

M5 , E101

GEL540A

Simpo PDF Merge and Split Unregistered Version - http://www.simpopdf.com

Schéma de câblage — METER —/Moteur essence avec compte-tours (Suite)

EL-METER-02

L : Conduite à gauche
R : Conduite à droite
EU : Pour l'Europe
NE : Sauf pour l'Europe
CB : Moteur à carburateur
VG : Moteur VG
LK : Conduite à gauche avec moteur KA
RK : Conduite à droite avec moteur KA
RV : Conduite à droite avec moteur KA et VG
*1 3C : L 6A : R
*2 3 : EU 18 : NE
*3 18 : RK 7 : VG

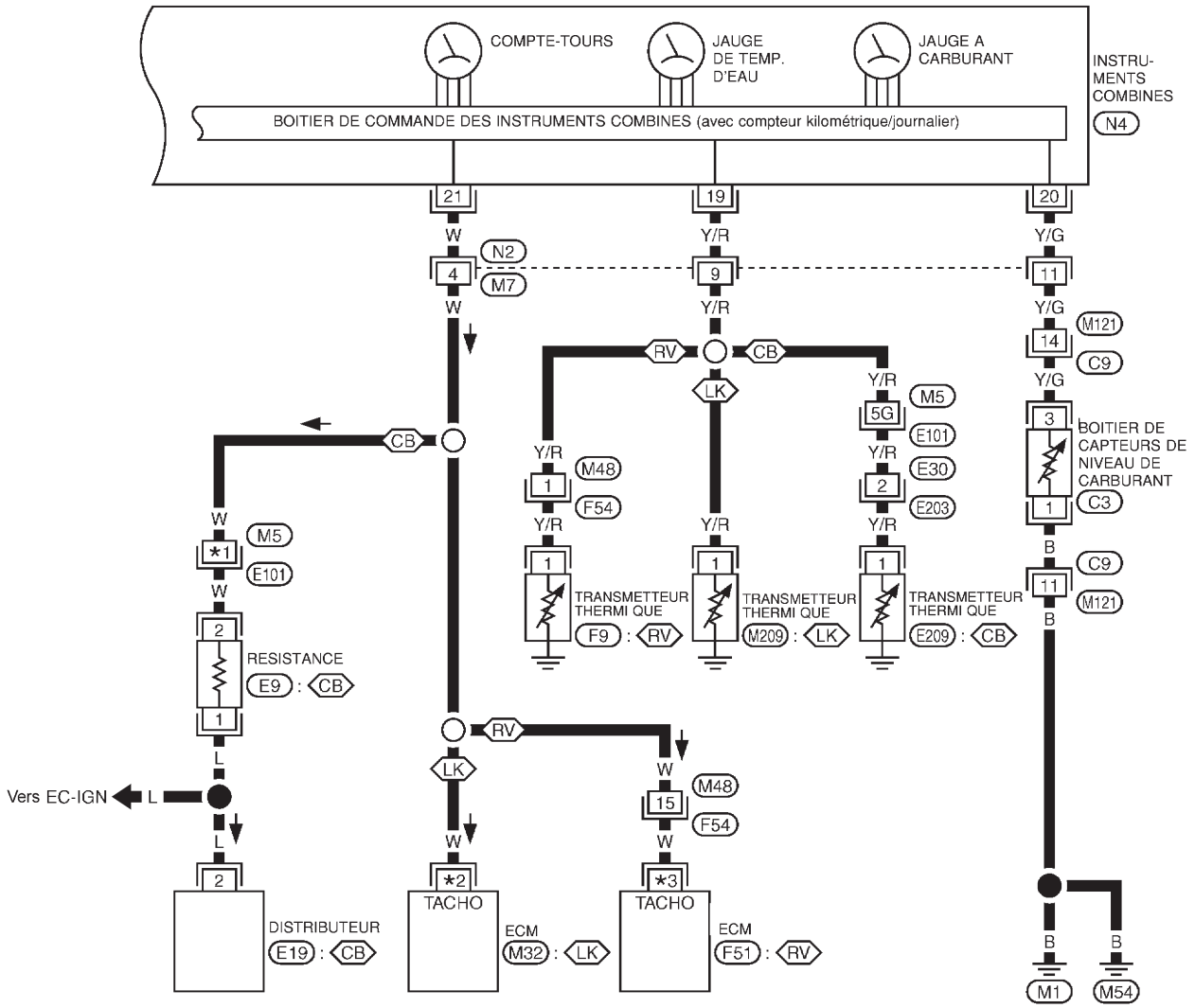

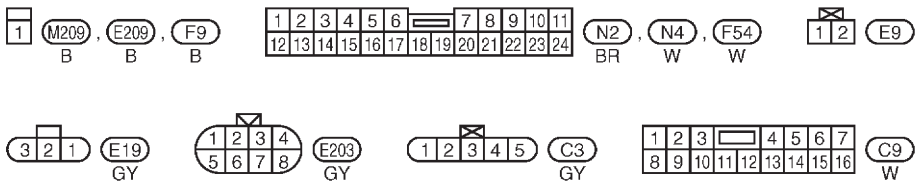

Consulter la dernière page dépliante.
M5 , E101
M32
F51

GEL541A

Simpo PDF Merge and Split Unregistered Version - http://www.simpopdf.com

Schéma/Avec compte-tours

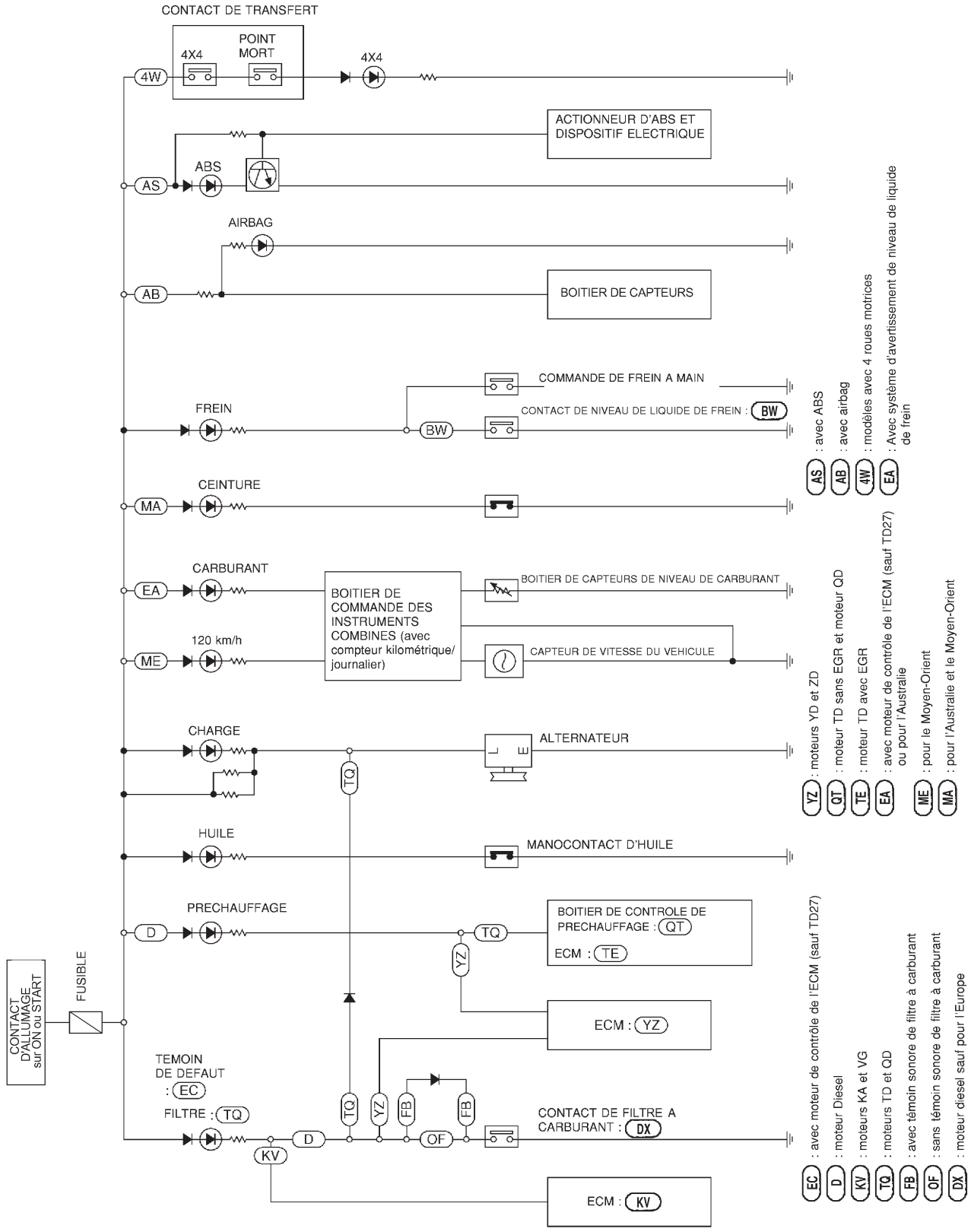

GEL776A

Simpo PDF Merge and Split Unregistered Version - http://www.simpopdf.com

Schéma/Sans compte-tours

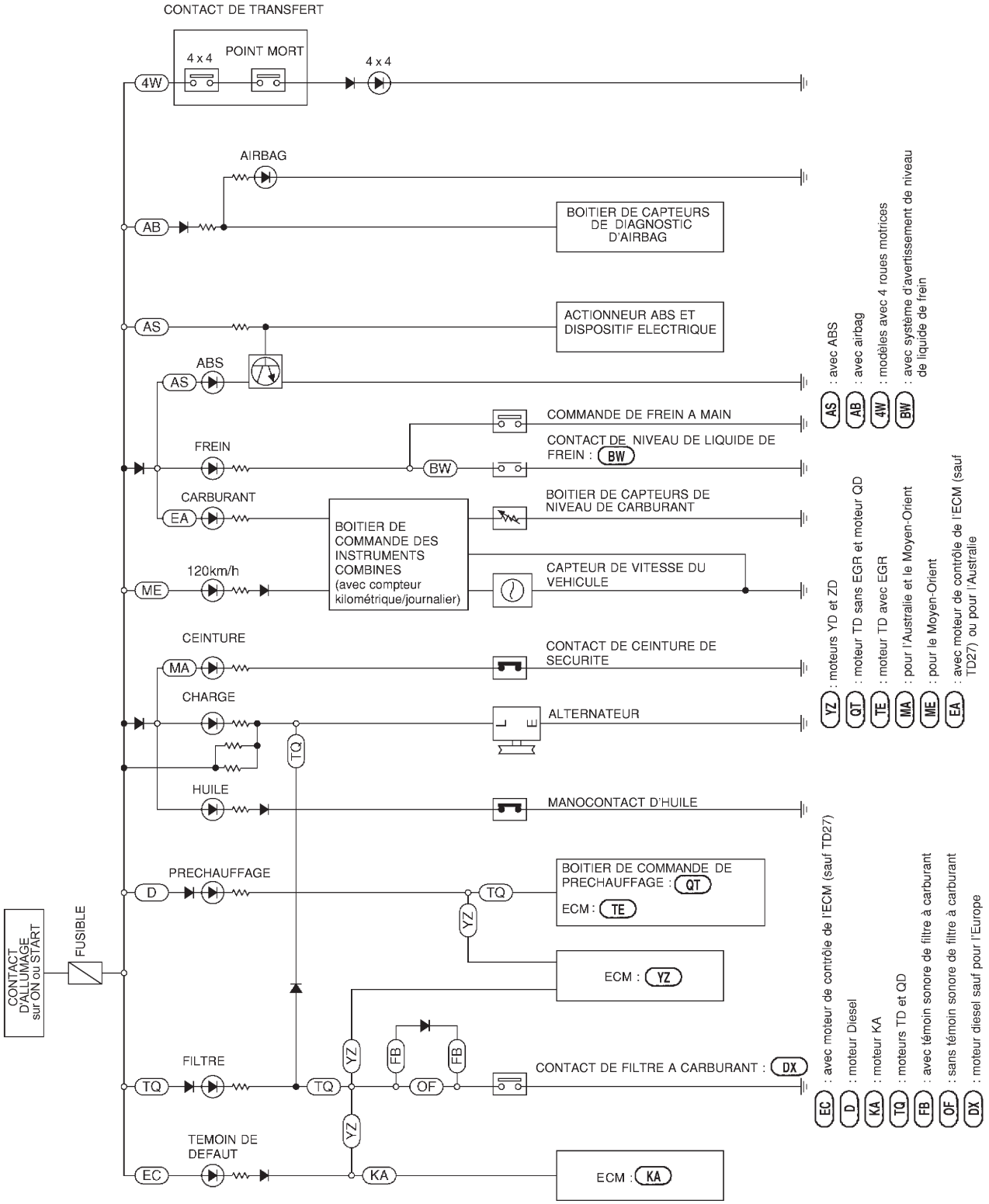

GEL777A

Simpo PDF Merge and Split Unregistered Version - http://www.simpopdf.com

Schéma de câblage — WARN — /Moteur à essence avec compte-tours

EL-WARN-01

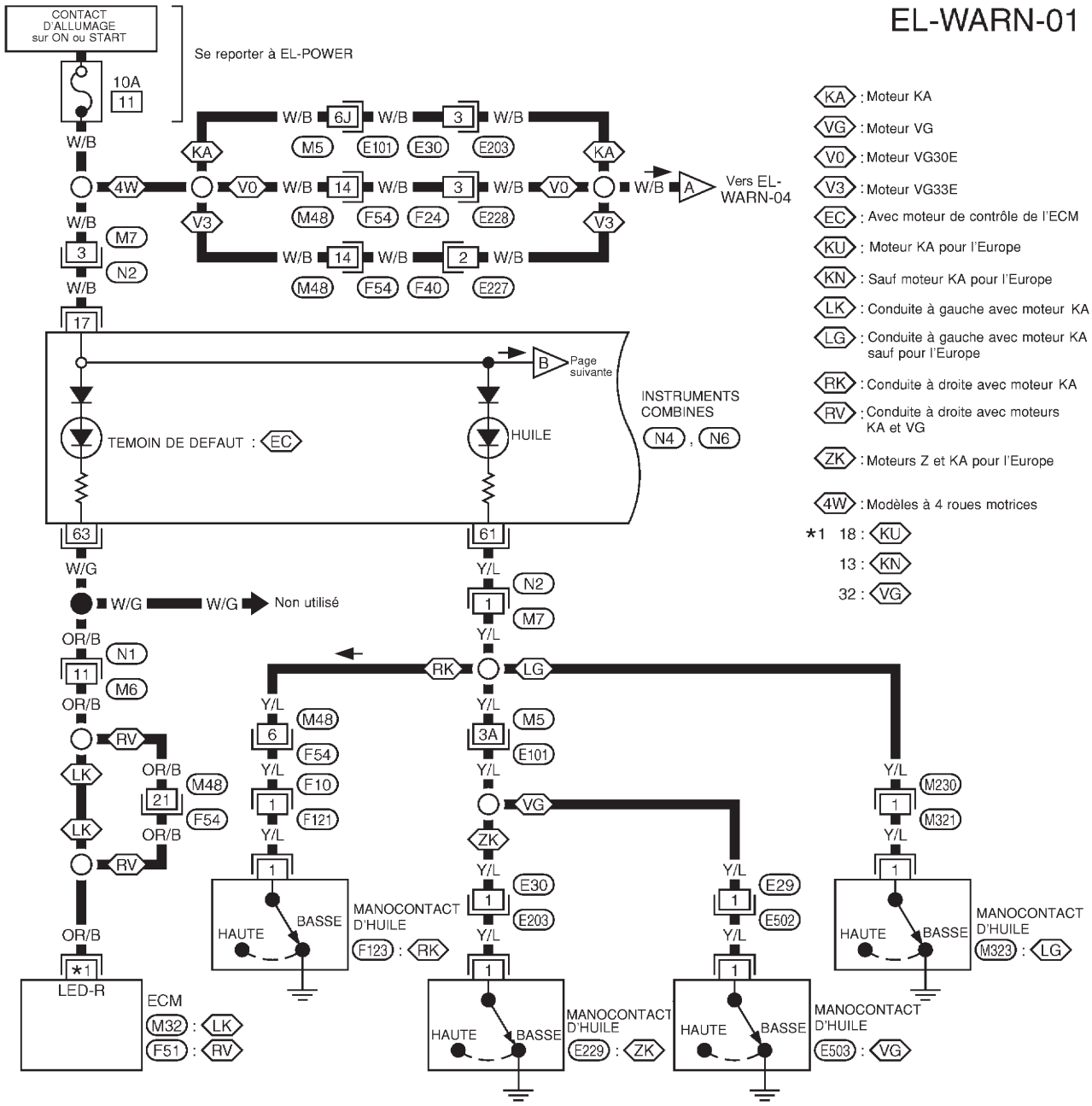

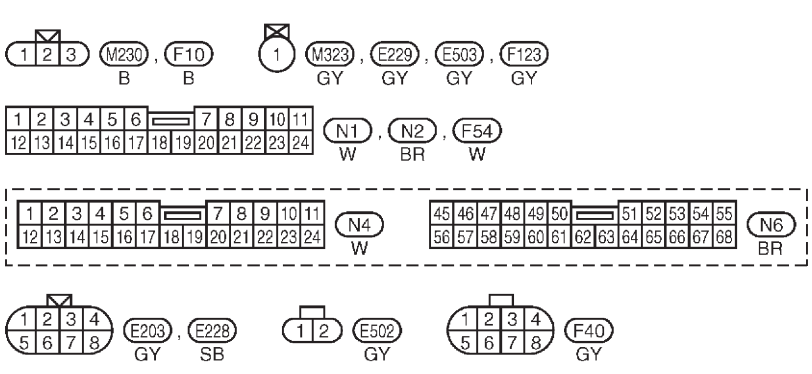

Consulter la derrière page dépliante

M5 , E101

M32

F51

GEL542A

Simpo PDF Merge and Split Unregistered Version - http://www.simpopdf.com

Schéma de câblage — WARN — /Moteur à essence avec compte-tours (Suite)

EL-WARN-02

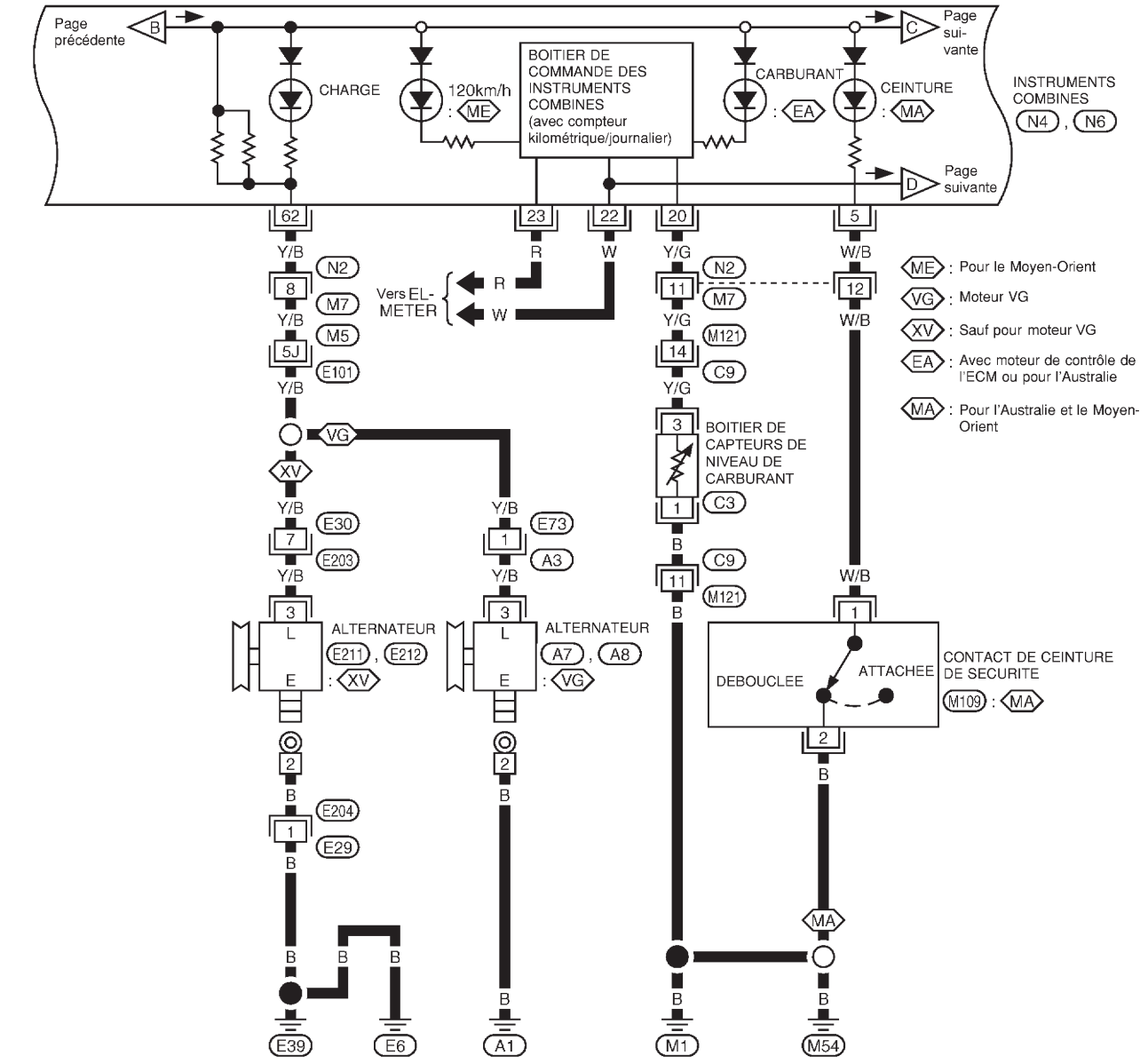

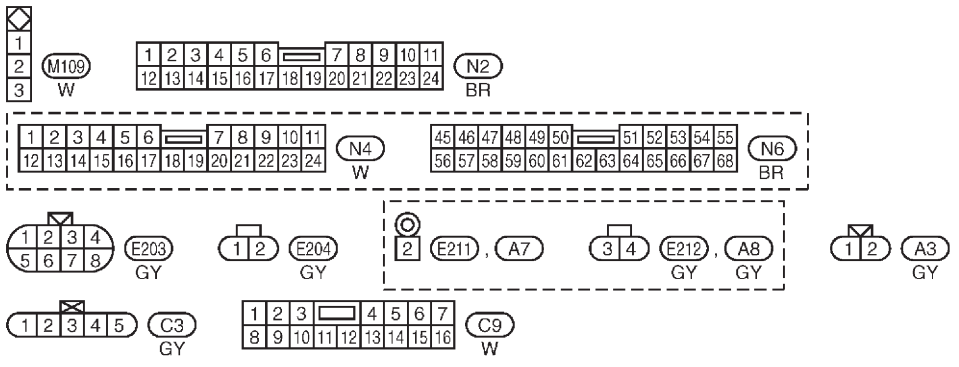

Consulter la dernière page dépliante.

M5 , E101

GEL778A

Simpo PDF Merge and Split Unregistered Version - http://www.simpopdf.com

Schéma de câblage — WARN — /Moteur à essence avec compte-tours (Suite)

EL-WARN-03

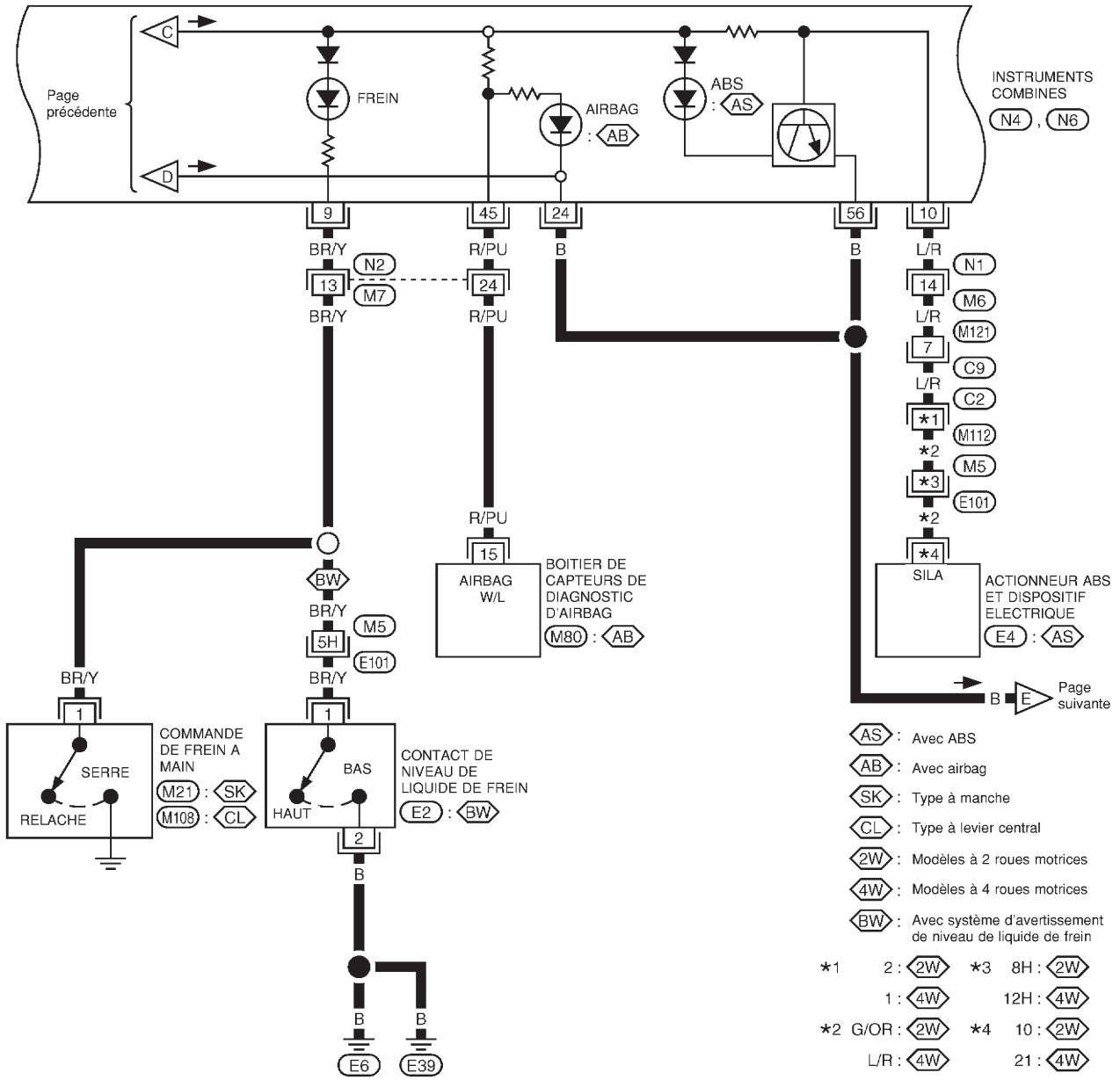

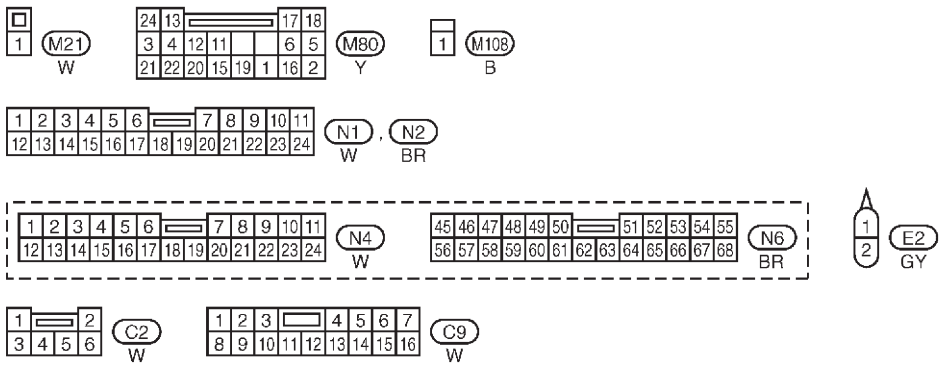

Consulter la dernière page dépliante.
M5, E101
E4

GEL823A

Simpo PDF Merge and Split Unregistered Version - http://www.simpopdf.com

Schéma de câblage — WARN — /Moteur à essence avec compte-tours (Suite)

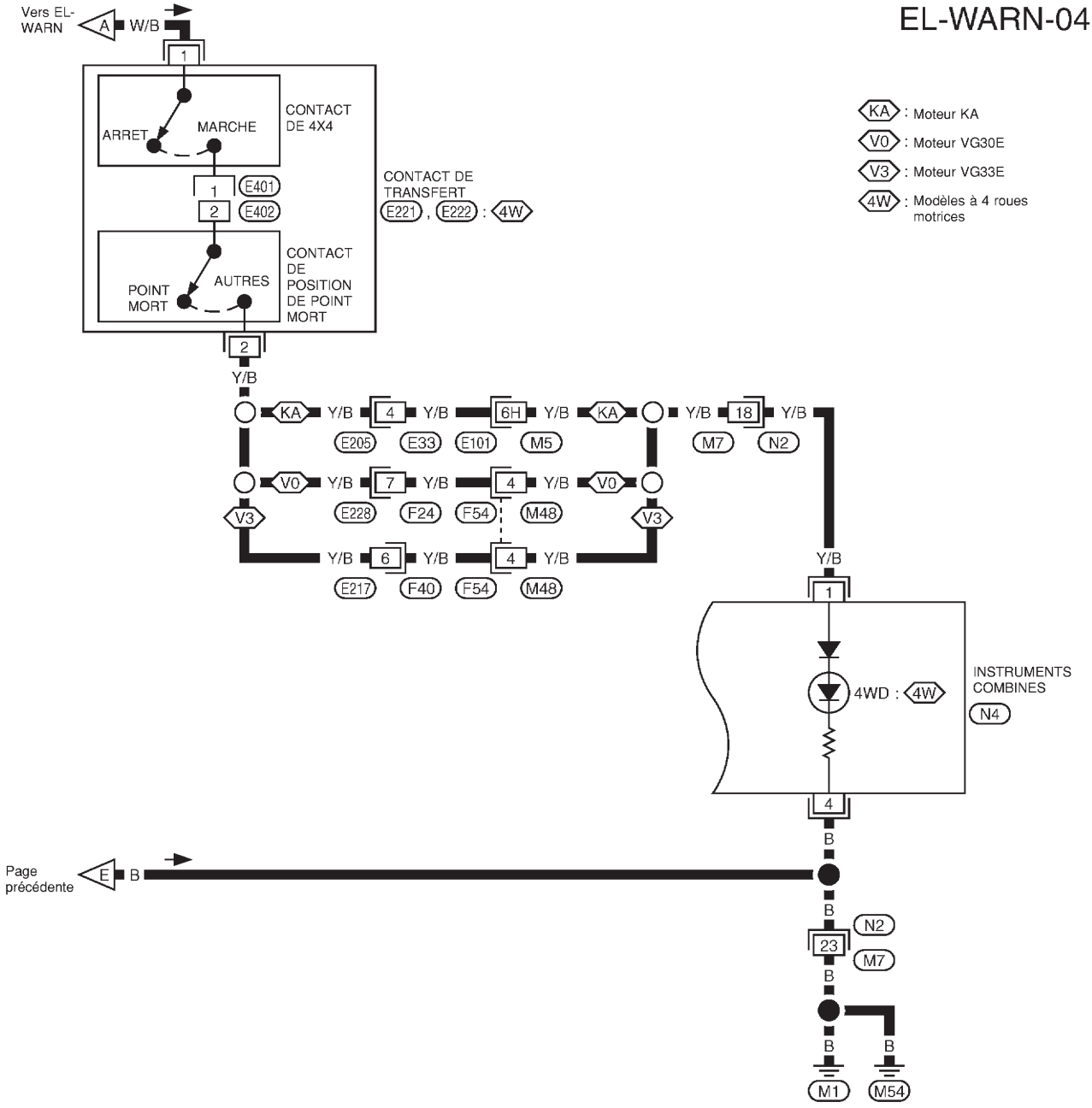

GEL797A

Simpo PDF Merge and Split Unregistered Version - http://www.simpopdf.com

Schéma de câblage — WARN —/Moteur essence sans compte-tours

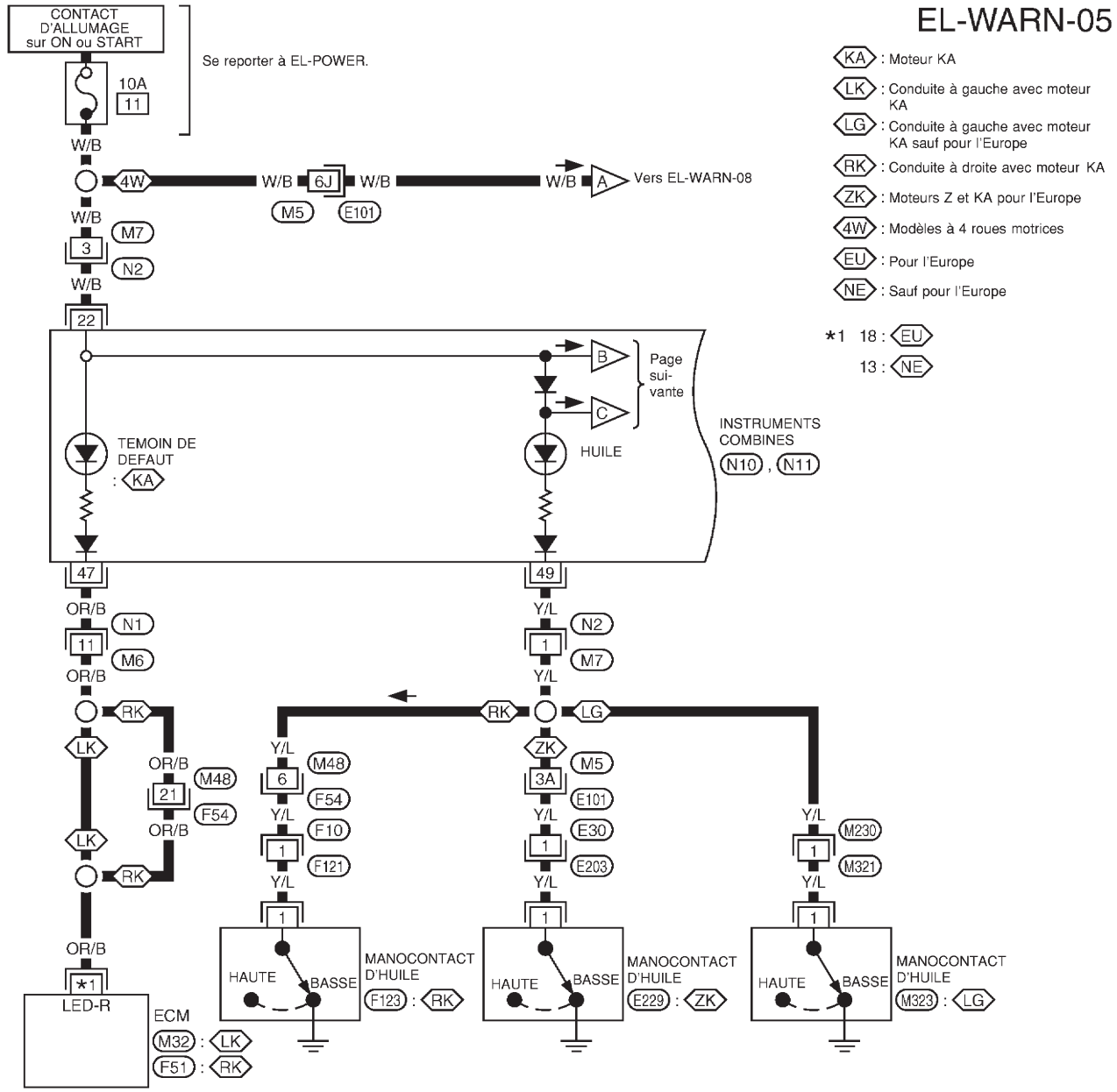

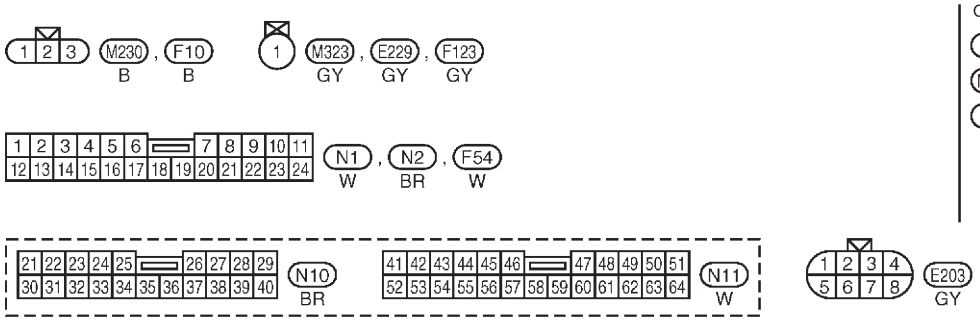

Consulter la dernière page dépliante.

M5 , E101

M32

F51

GEL790A

Simpo PDF Merge and Split Unregistered Version - http://www.simpopdf.com

Schéma de câblage — WARN —/Moteur essence sans compte-tours (Suite)

EL-WARN-06

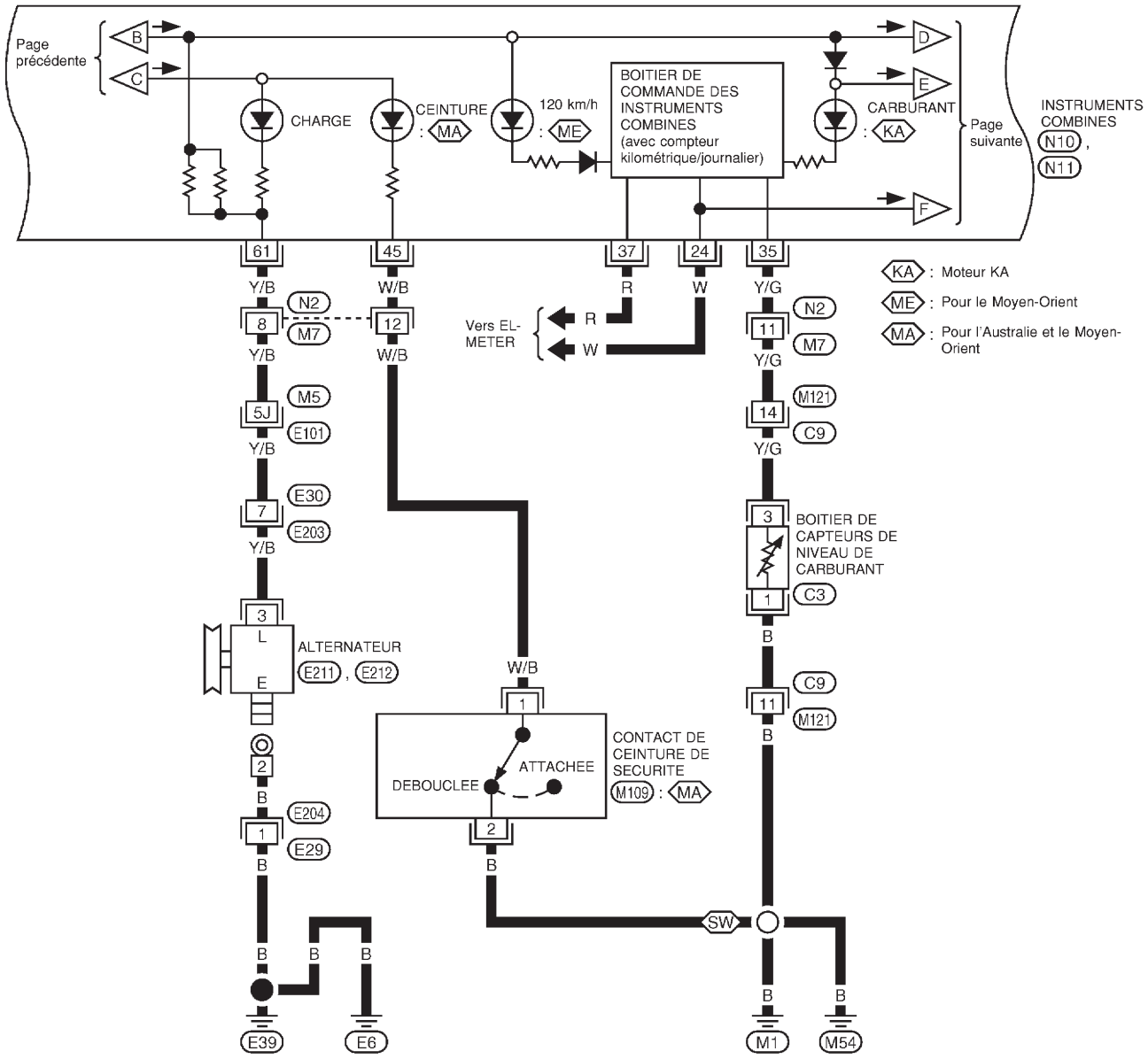

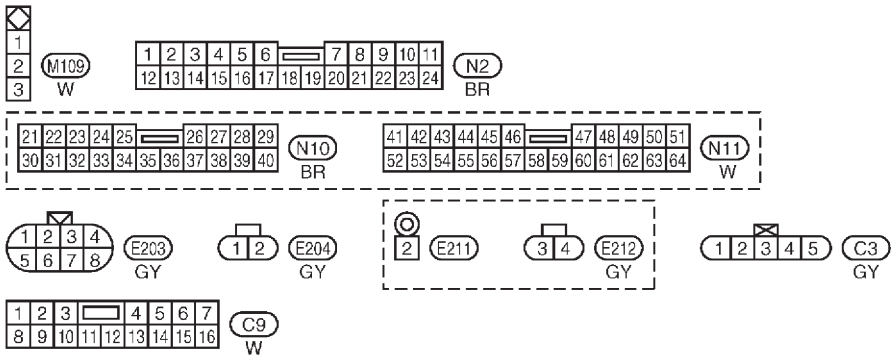

Consulter la dernière page dépliante.

M5, E101

GEL779A

Simpo PDF Merge and Split Unregistered Version - http://www.simpopdf.com

Schéma de câblage — WARN —/Moteur essence sans compte-tours (Suite)

EL-WARN-07

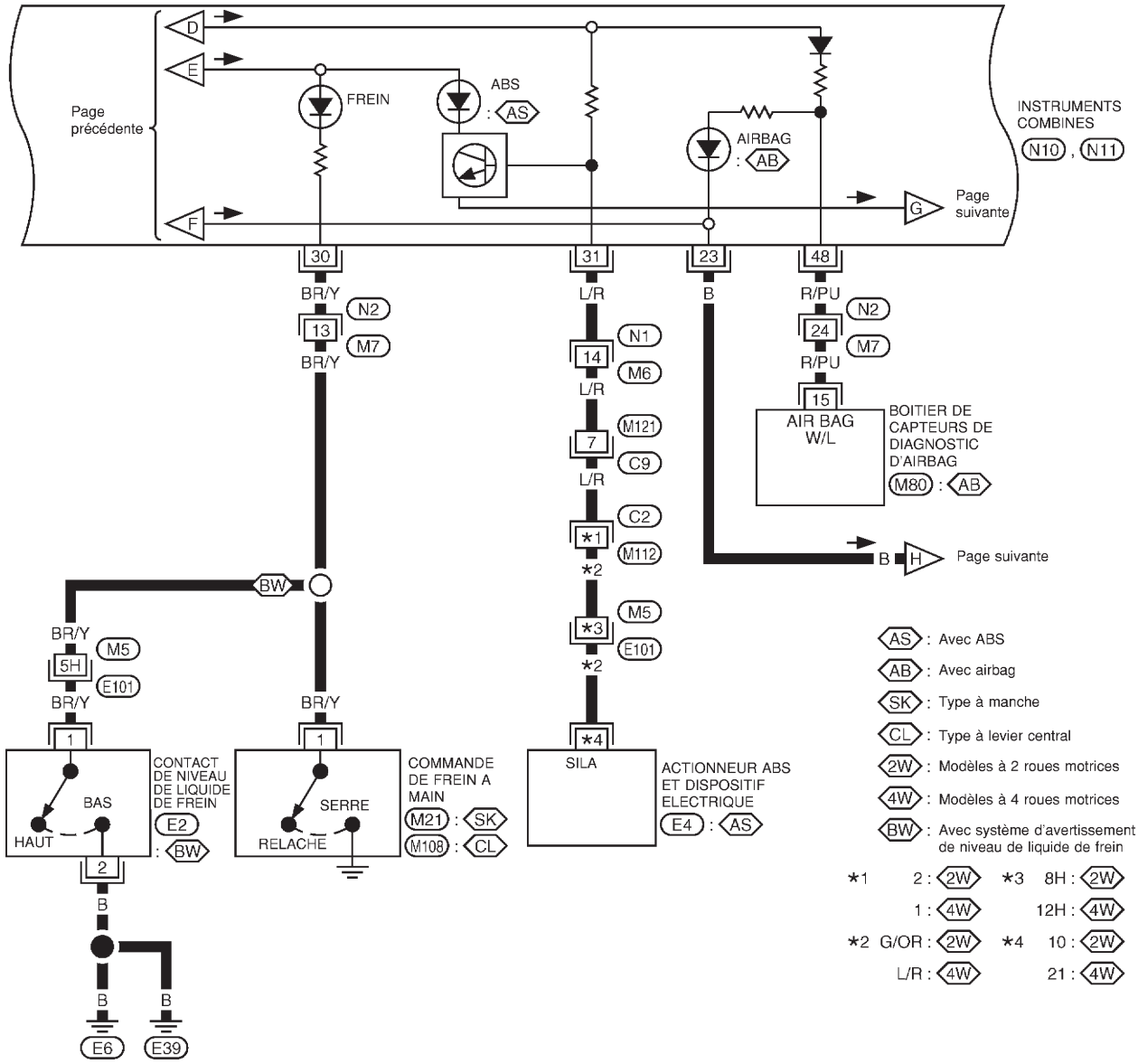

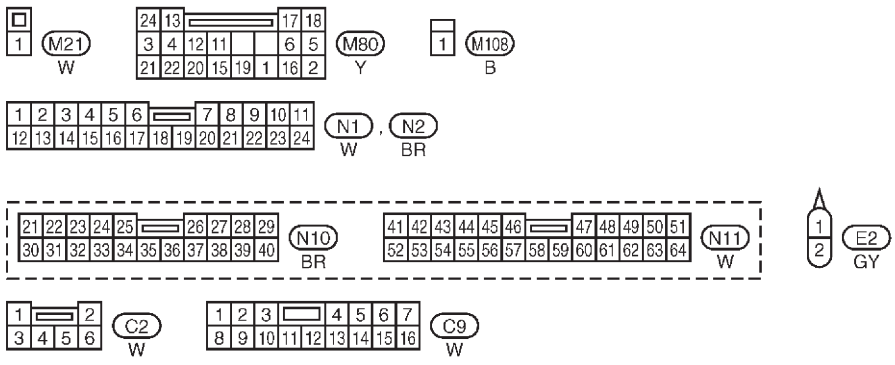

Consulter la dernière page dépliante.
M5 , E101
E4

GEL824A

Simpo PDF Merge and Split Unregistered Version - http://www.simpopdf.com

Schéma de câblage — WARN —/Moteur essence sans compte-tours (Suite)

EL-WARN-08

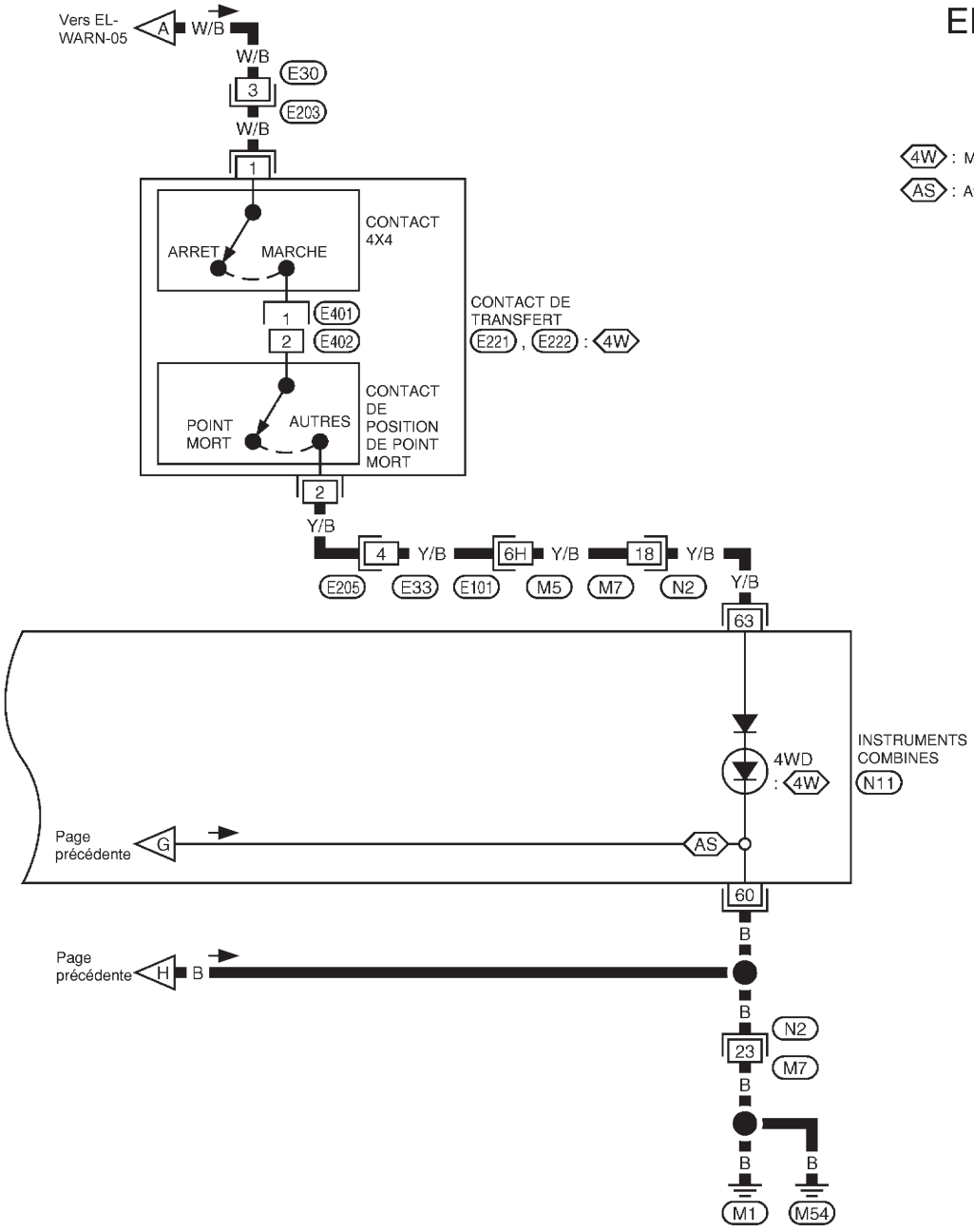

4W : Modèles à 4 roues motrices

AS : Avec ABS

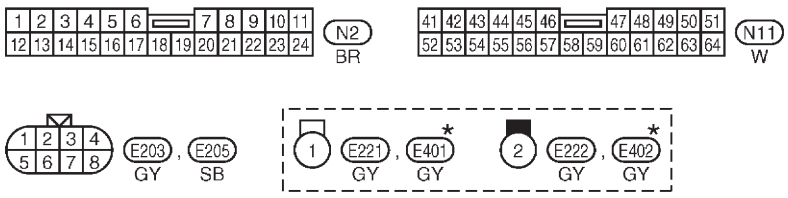

Consulter la dernière page dépliante.

M5 , E101

*: Ce connecteur n'est pas indiqué dans DISPOSITION DES FAISCEAUX.

GEL791A

Simpo PDF Merge and Split Unregistered Version - http://www.simpopdf.com

Schéma de câblage — WARN —/Moteur diesel avec compte-tours

EL-WARN-09

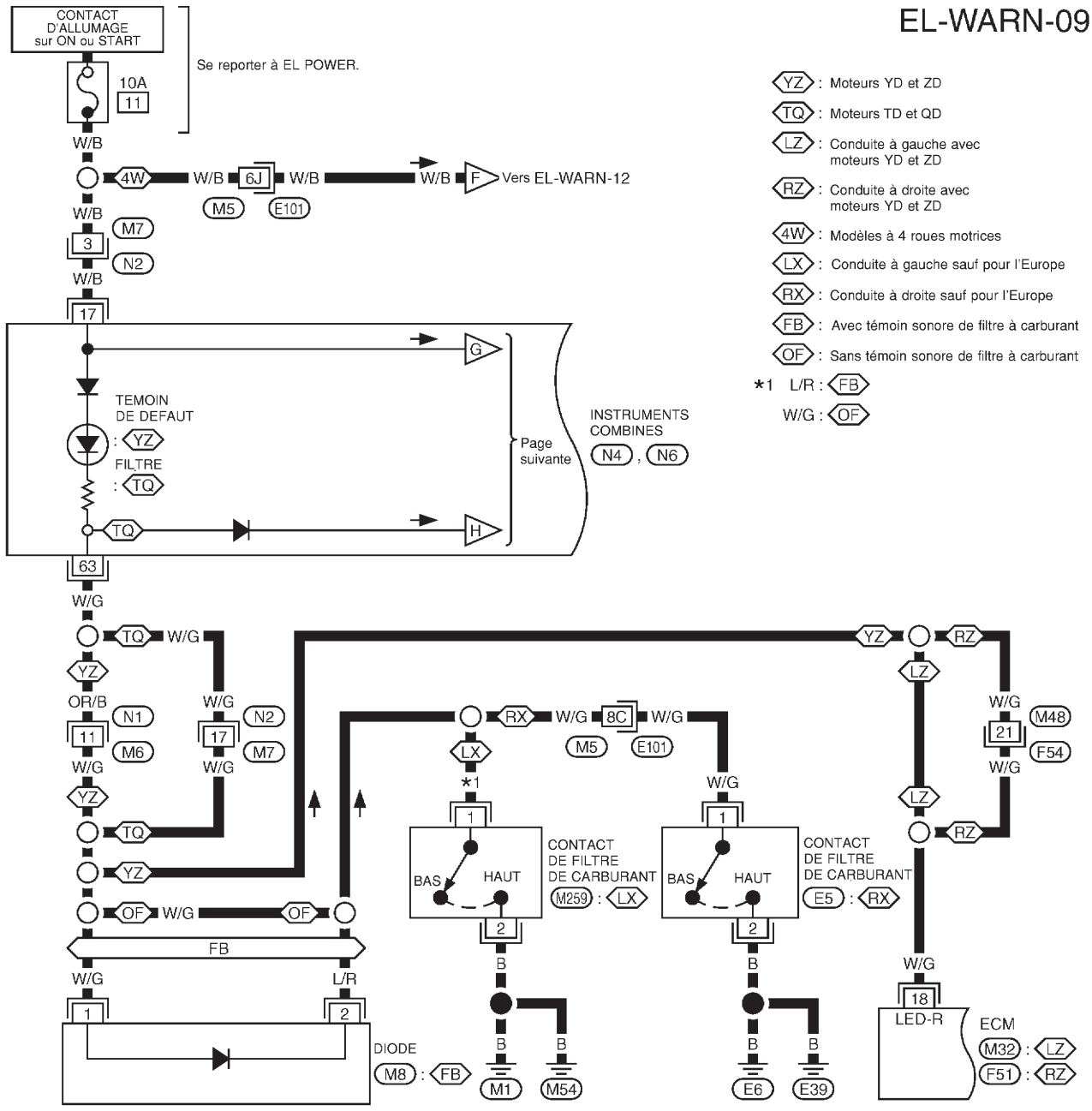

YZ : Moteurs YD et ZD
TQ : Moteurs TD et QD
LZ : Conduite à gauche avec moteurs YD et ZD
RZ : Conduite à droite avec moteurs YD et ZD
4W : Modèles à 4 roues motrices
LX : Conduite à gauche sauf pour l'Europe
RX : Conduite à droite sauf pour l'Europe
FB : Avec témoin sonore de filtre à carburant
OF : Sans témoin sonore de filtre à carburant
*1 L/R : FB
W/G : OF

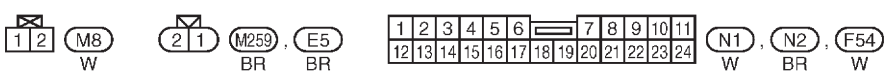

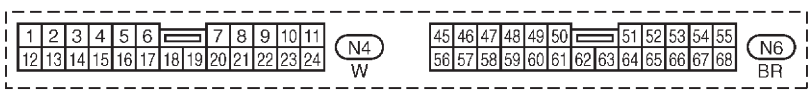

Consulter la dernière page dépliante.
M5 , E101
M32
F51

GEL792A

Simpo PDF Merge and Split Unregistered Version - http://www.simpopdf.com

Schéma de câblage — WARN —/Moteur diesel avec compte-tours (Suite)

EL-WARN-10

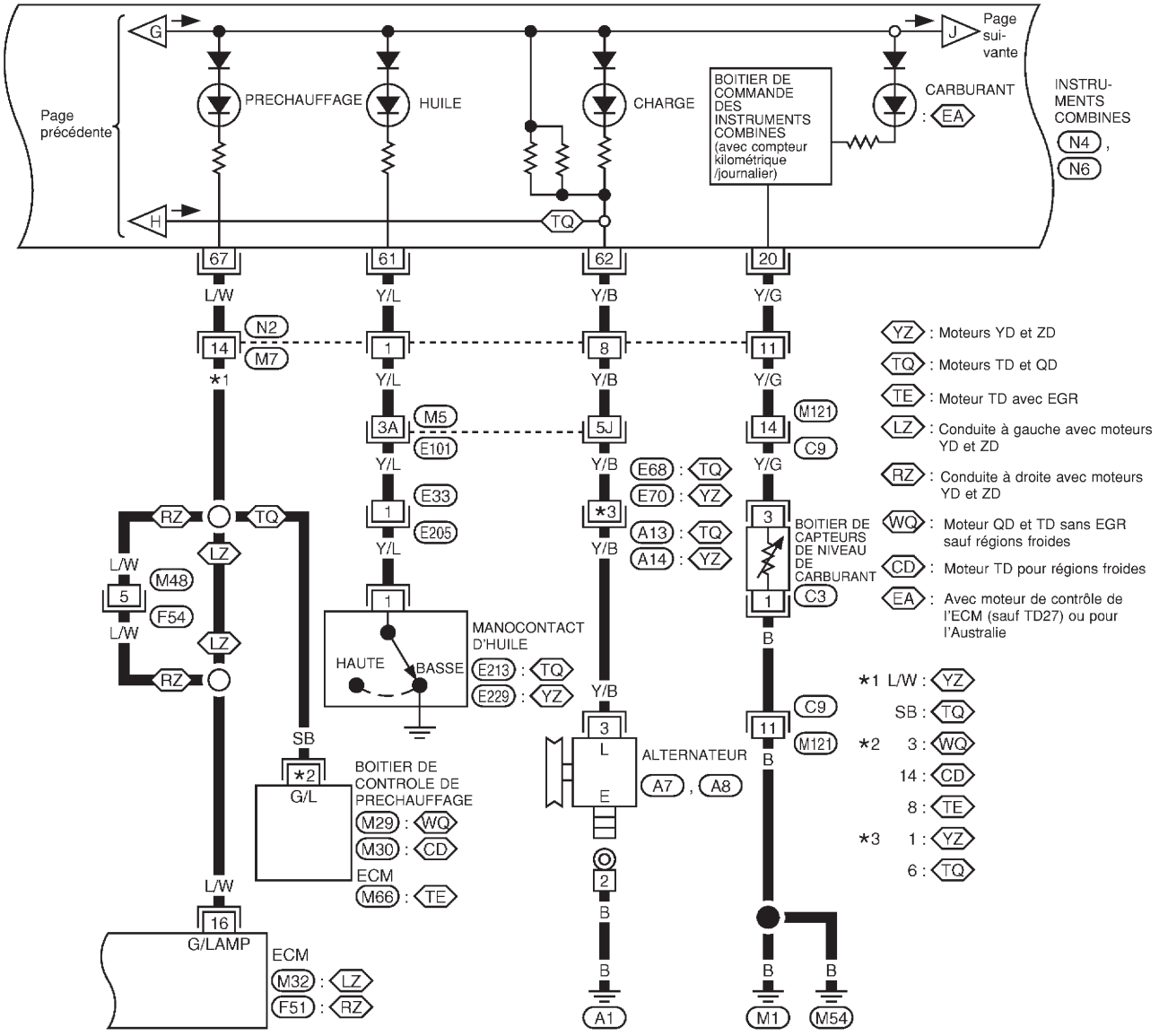

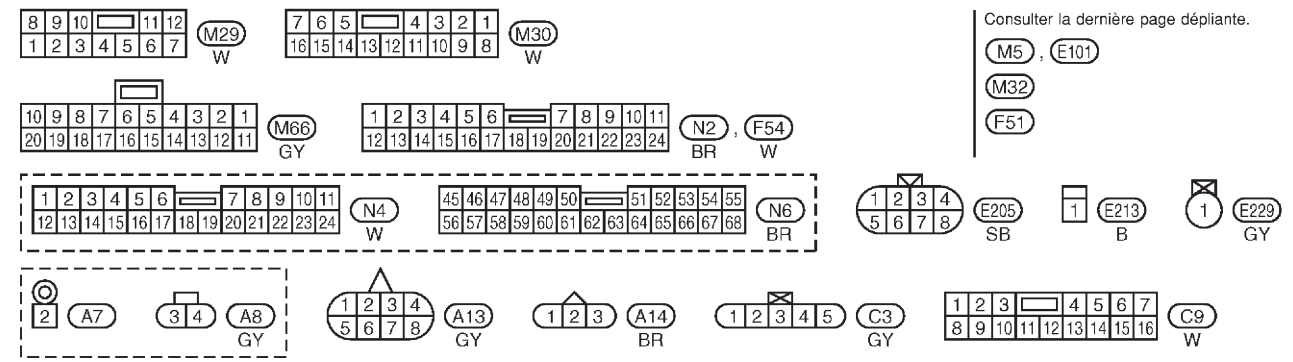

GEL793A

Simpo PDF Merge and Split Unregistered Version - http://www.simpopdf.com

Schéma de câblage — WARN —/Moteur diesel avec compte-tours (Suite)

EL-WARN-11

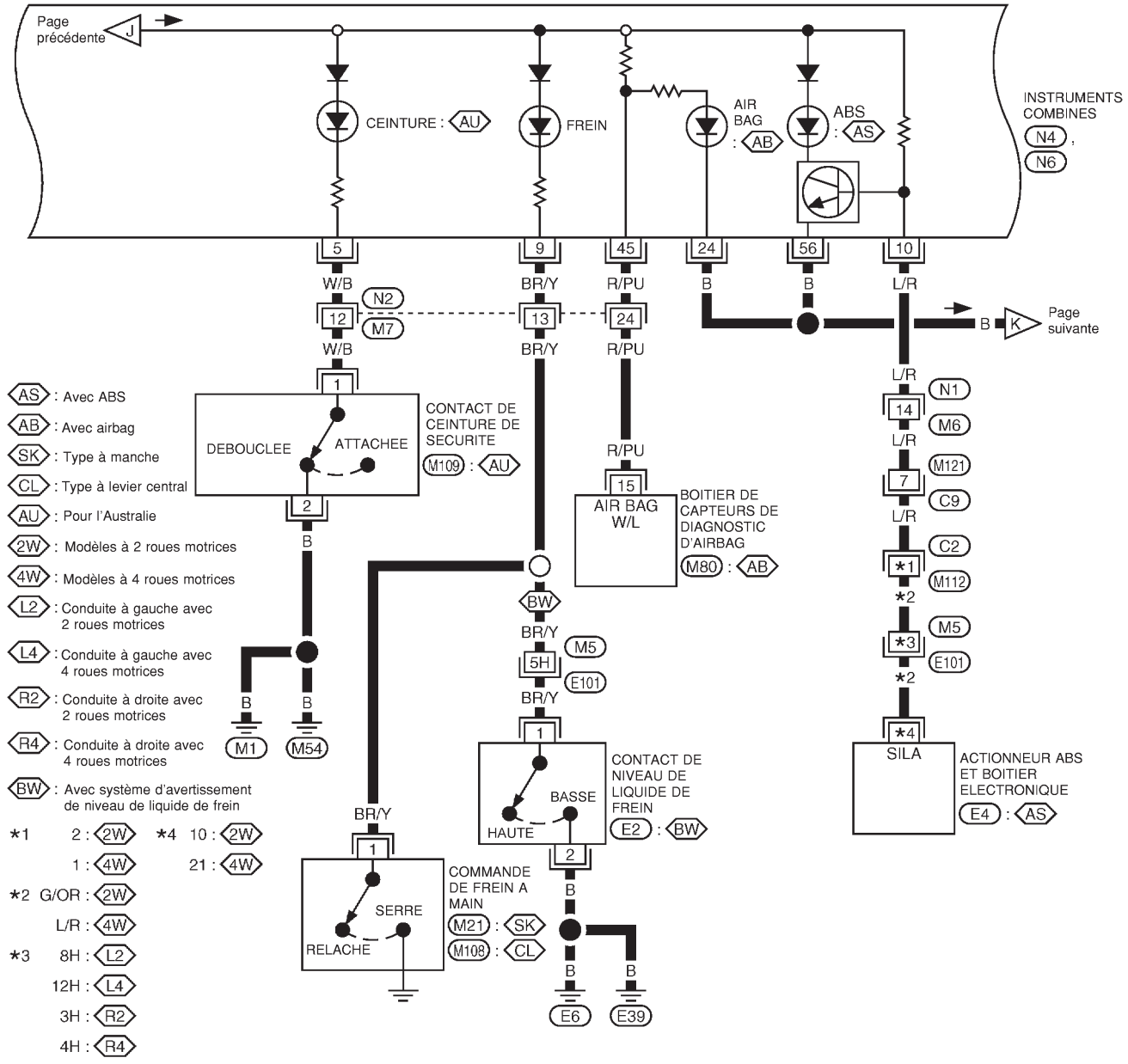

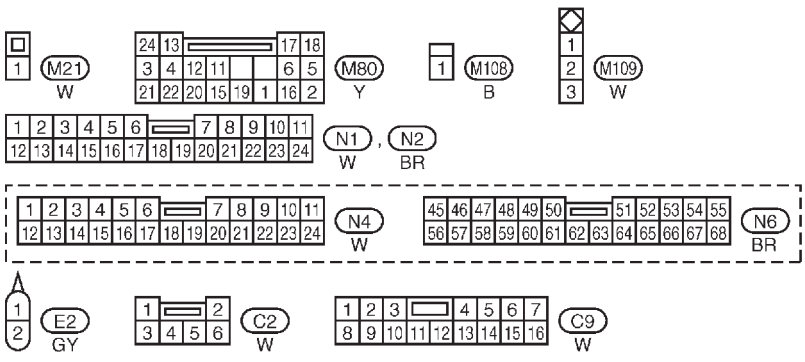

Consulter la dernière page dépliante.

M5 , E101

E4

GEL780A

Simpo PDF Merge and Split Unregistered Version - http://www.simpopdf.com

Schéma de câblage — WARN —/Moteur diesel avec compte-tours (Suite)

EL-WARN-12

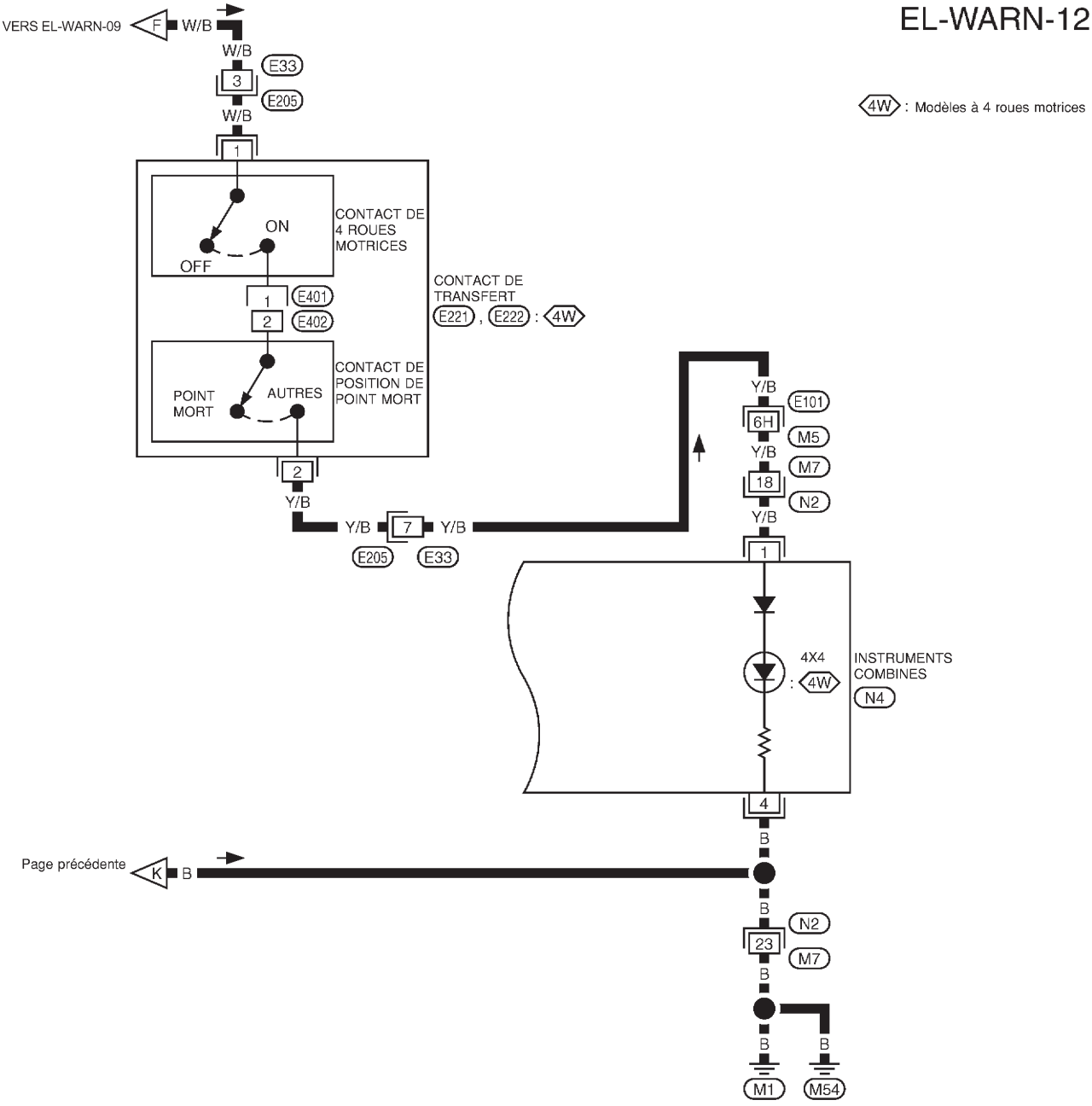

4W : Modèles à 4 roues motrices

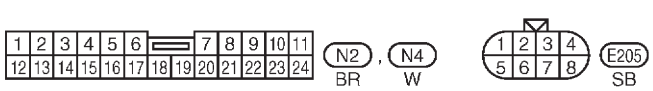

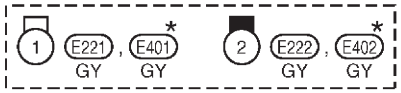

* : Ce connecteur n'est pas indiqué dans DISPOSITION DES FAISCEAUX.

Consulter la dernière page dépliante.
M5 , E101

GEL794A

Simpo PDF Merge and Split Unregistered Version - http://www.simpopdf.com

Schéma de câblage — WARN —/Moteur diesel sans compte-tours

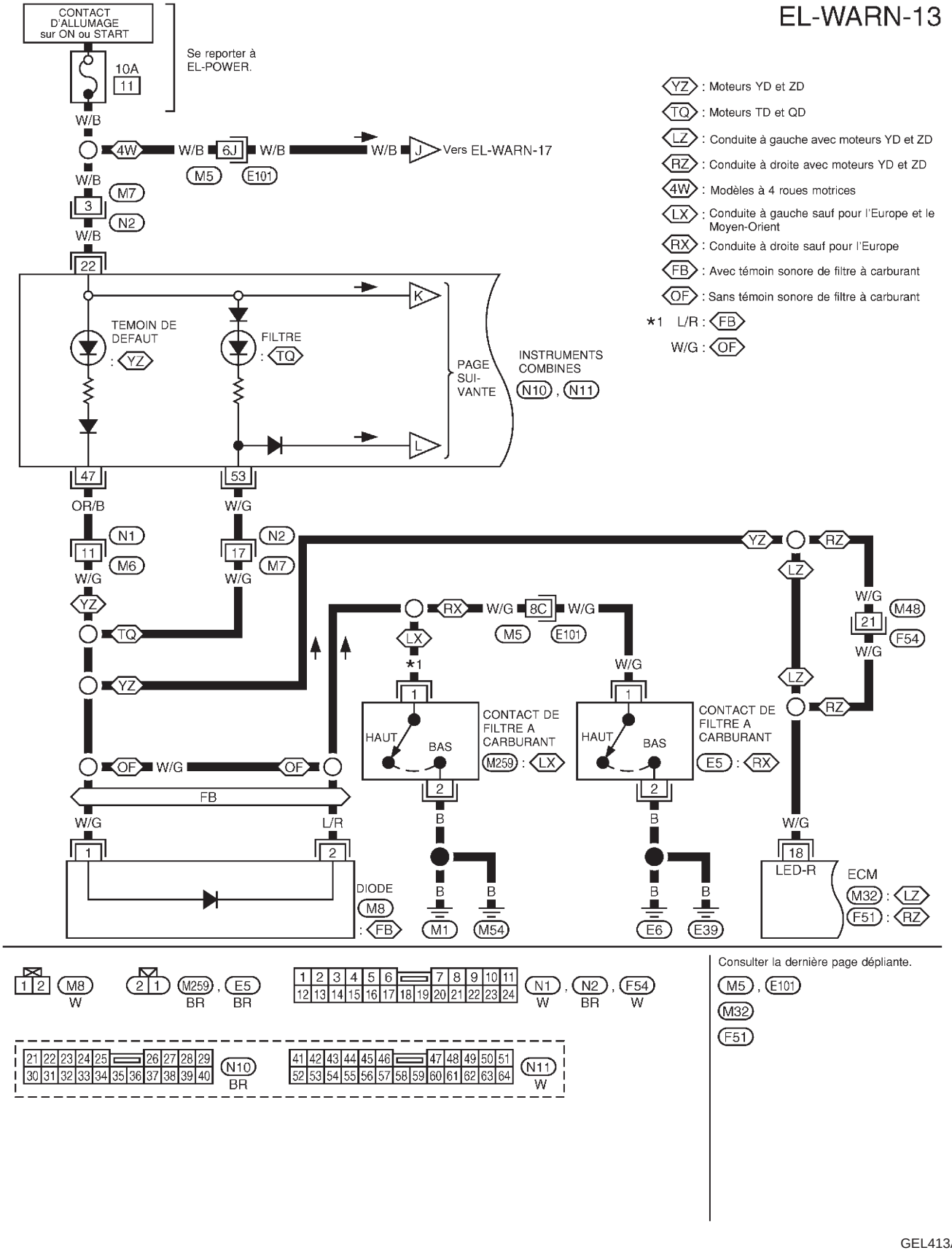

Consulter la dernière page dépliante.

M5 , E101

M32

F51

GEL413A

Simpo PDF Merge and Split Unregistered Version - http://www.simpopdf.com

Schéma de câblage — WARN —/Moteur diesel sans compte-tours (Suite)

EL-WARN-14

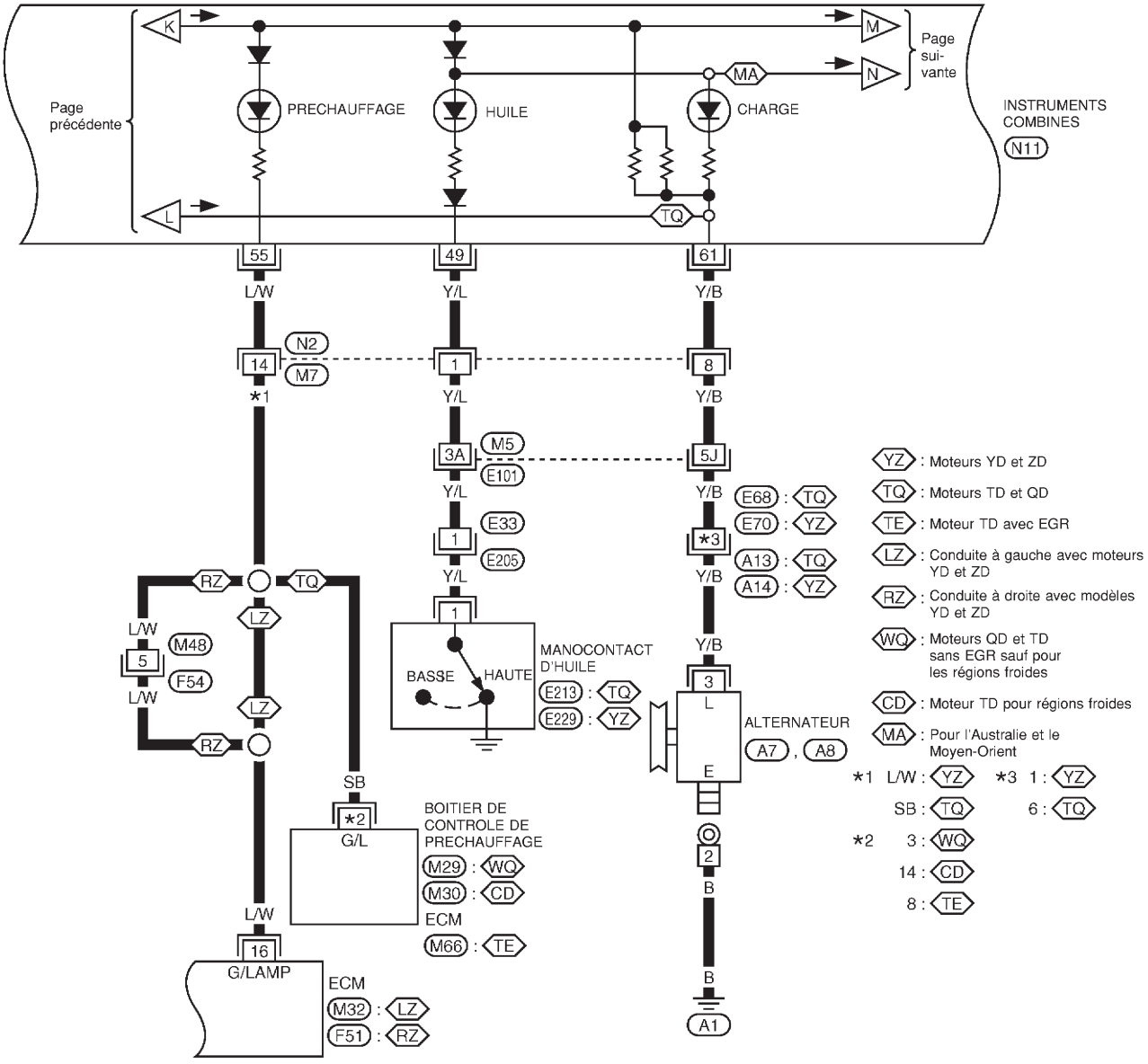

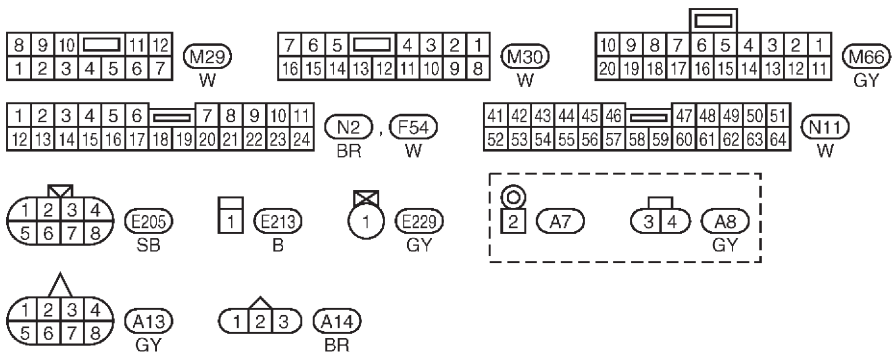

Consulter la dernière page dépliante.
M5 , E101
M32
F51

GEL795A

Simpo PDF Merge and Split Unregistered Version - http://www.simpopdf.com

Schéma de câblage — WARN —/Moteur diesel sans compte-tours (Suite)

EL-WARN-15

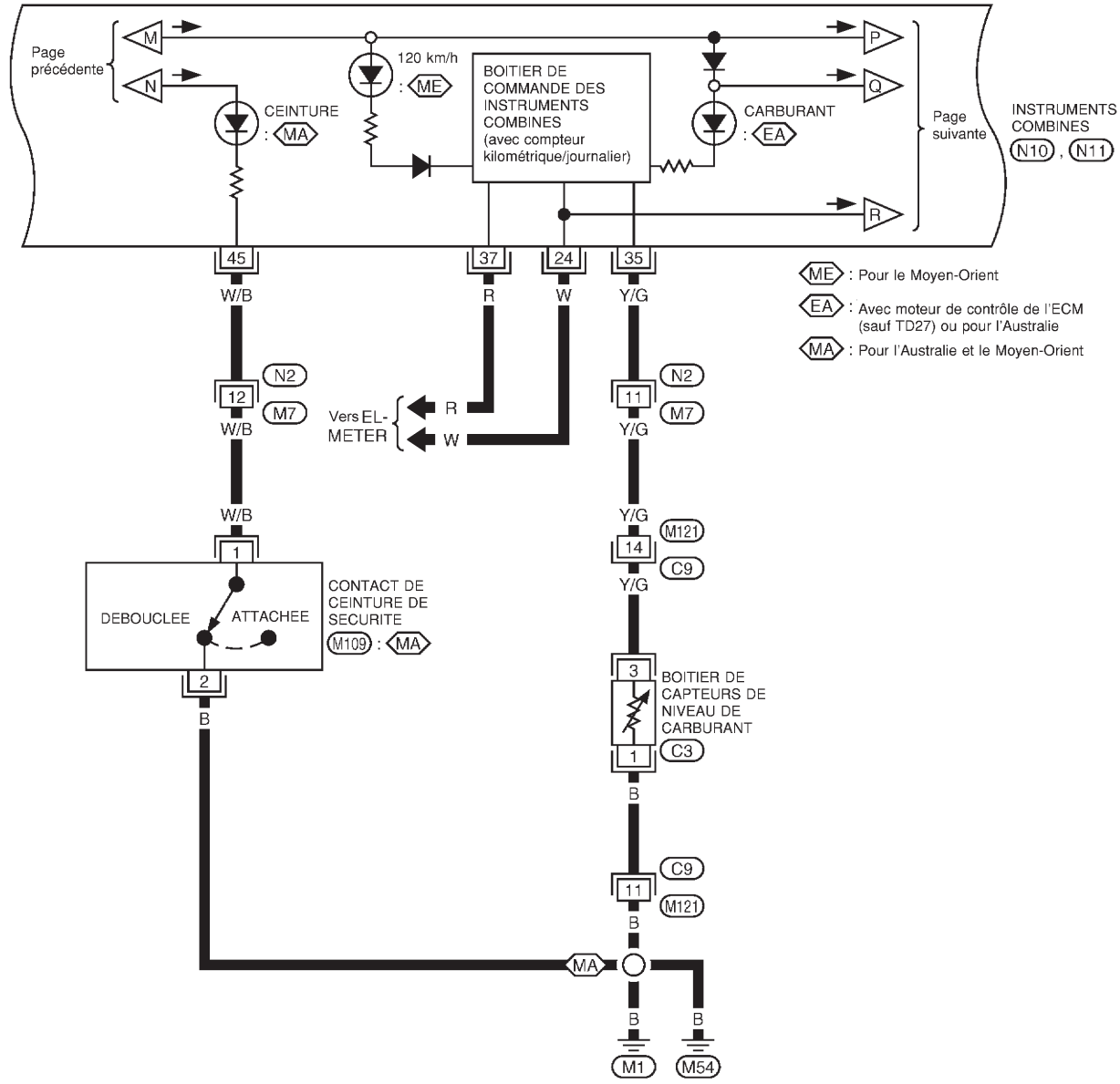

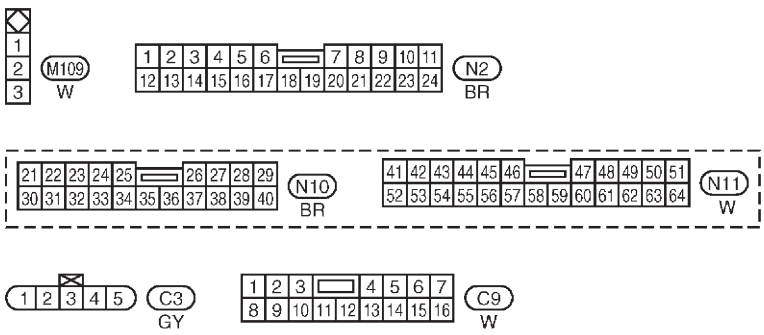

GEL781A

Simpo PDF Merge and Split Unregistered Version - http://www.simpopdf.com

Schéma de câblage — WARN —/Moteur diesel sans compte-tours (Suite)

EL-WARN-16

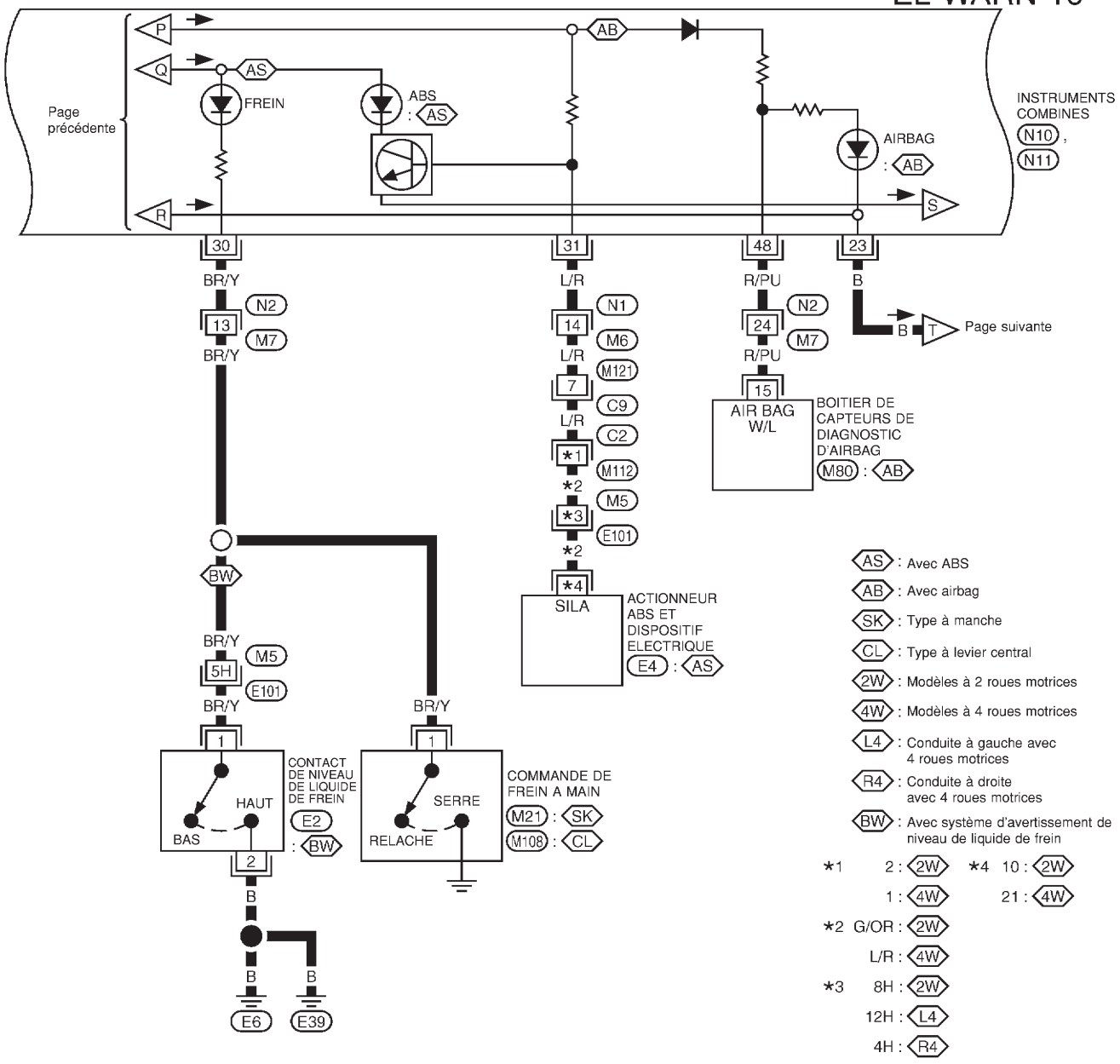

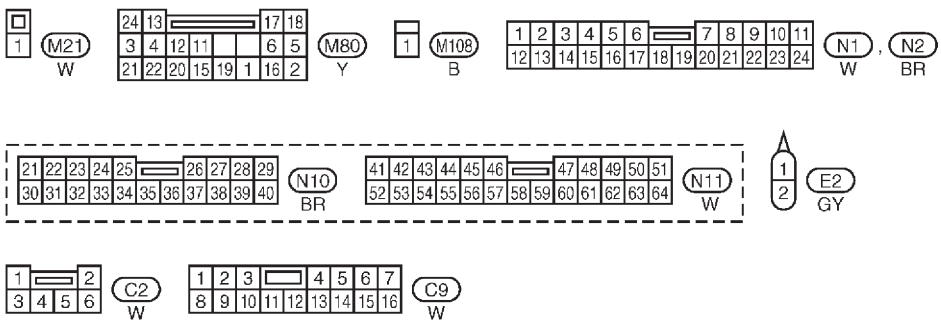

Consulter la dernière page dépliante.
M5, E101
E4

GEL825A

Simpo PDF Merge and Split Unregistered Version - http://www.simpopdf.com

Schéma de câblage — WARN —/Moteur diesel sans compte-tours (Suite)

EL-WARN-17

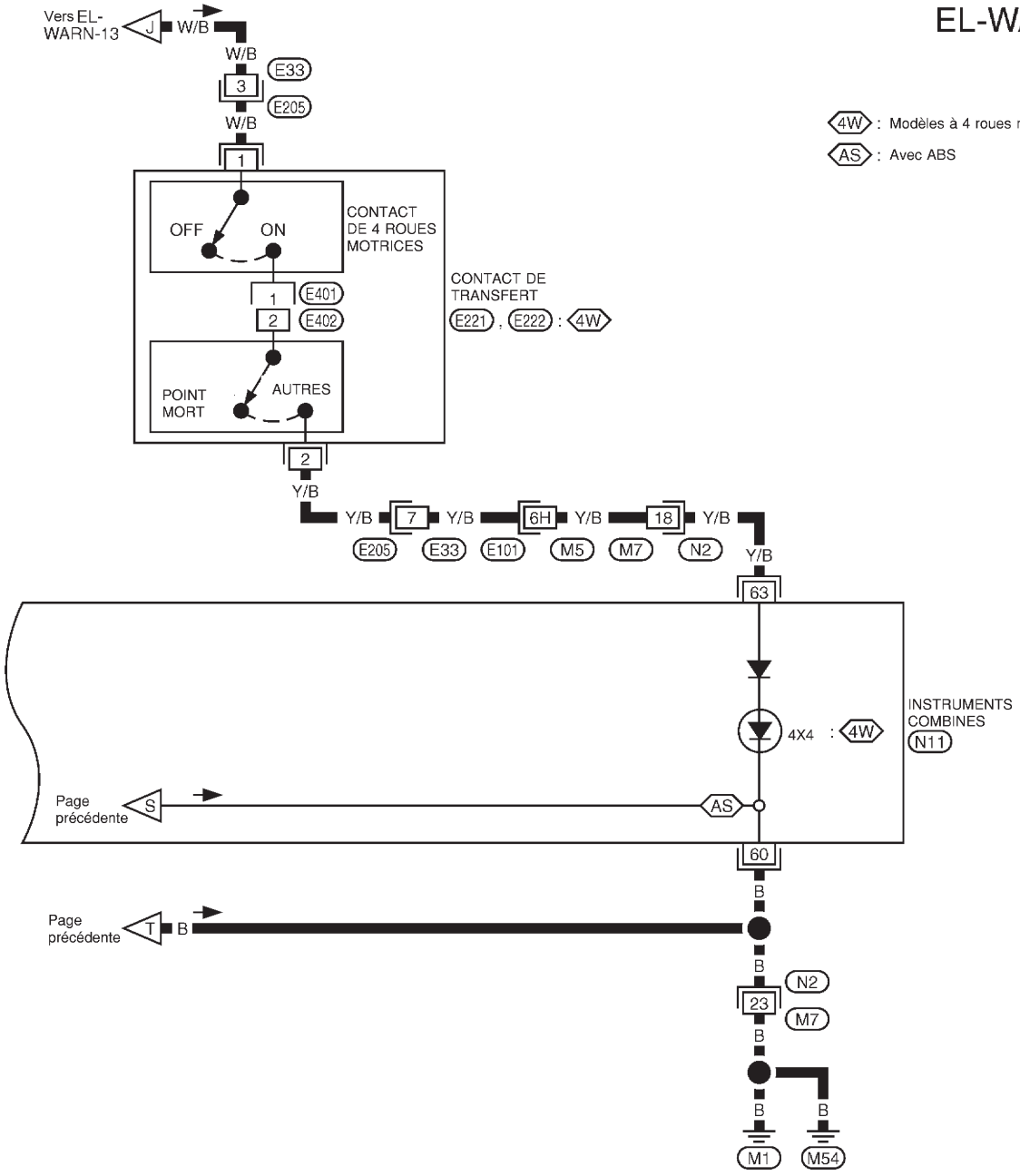

4W : Modèles à 4 roues motrices

AS : Avec ABS

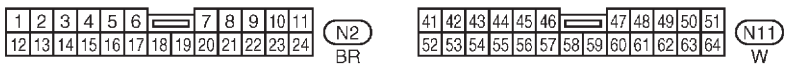



* : Ce connecteur n'est pas indiqué dans DISPOSITION DES FAISCEAUX.

Consulter la dernière page dépliante.

M5 , E101

GEL796A

Simpo PDF Merge and Split Unregistered Version - http://www.simpopdf.com

Schéma de câblage — CHIME —/Conduite à gauche

AVERTISSEUR D'ALARME D'ECLAIRAGE

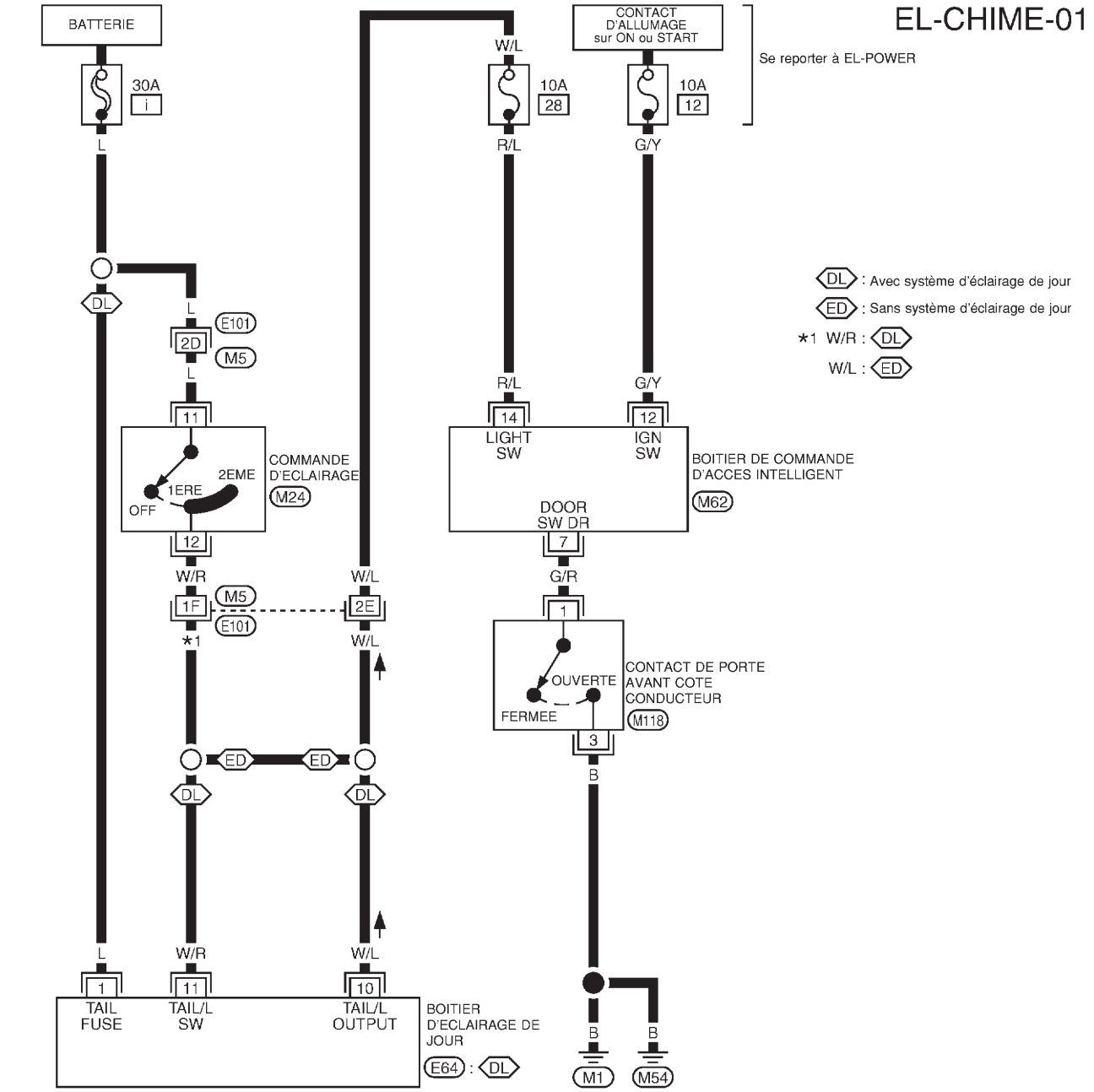

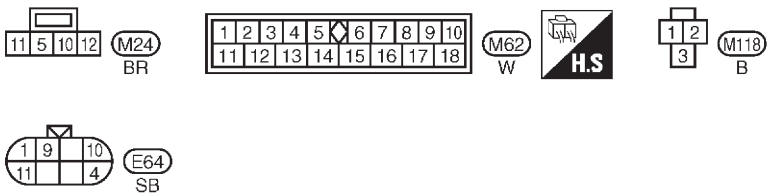

Consulter la dernière page dépliante.
M5 , E101

GEL678A

Simpo PDF Merge and Split Unregistered Version - http://www.simpopdf.com

Schéma de câblage —AUDIO —/Conduite à gauche

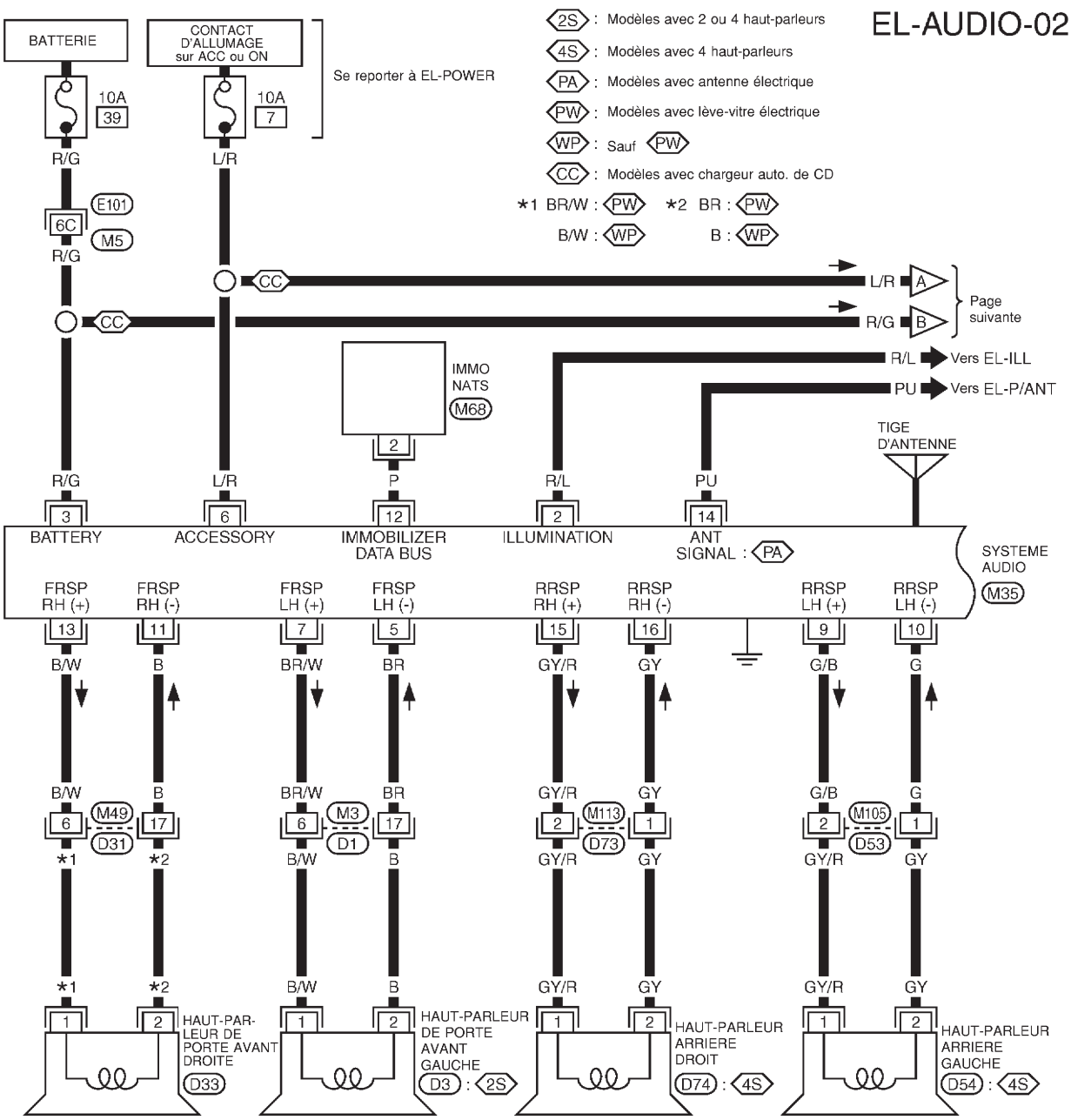

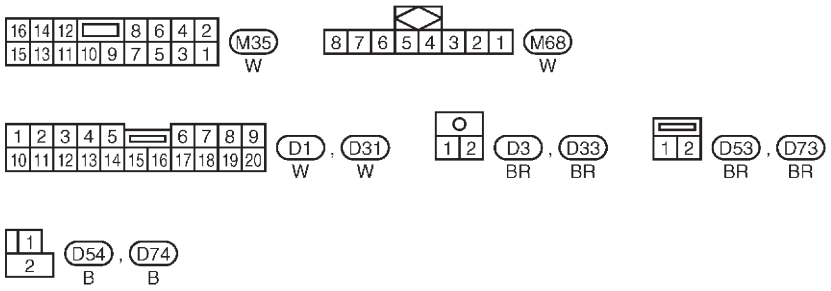

Consulter la dernière page dépliante.
M5 , E101

GEL680A

Simpo PDF Merge and Split Unregistered Version - http://www.simpopdf.com

Schéma de câblage —AUDIO —/Conduite à gauche (Suite)

EL-AUDIO-03

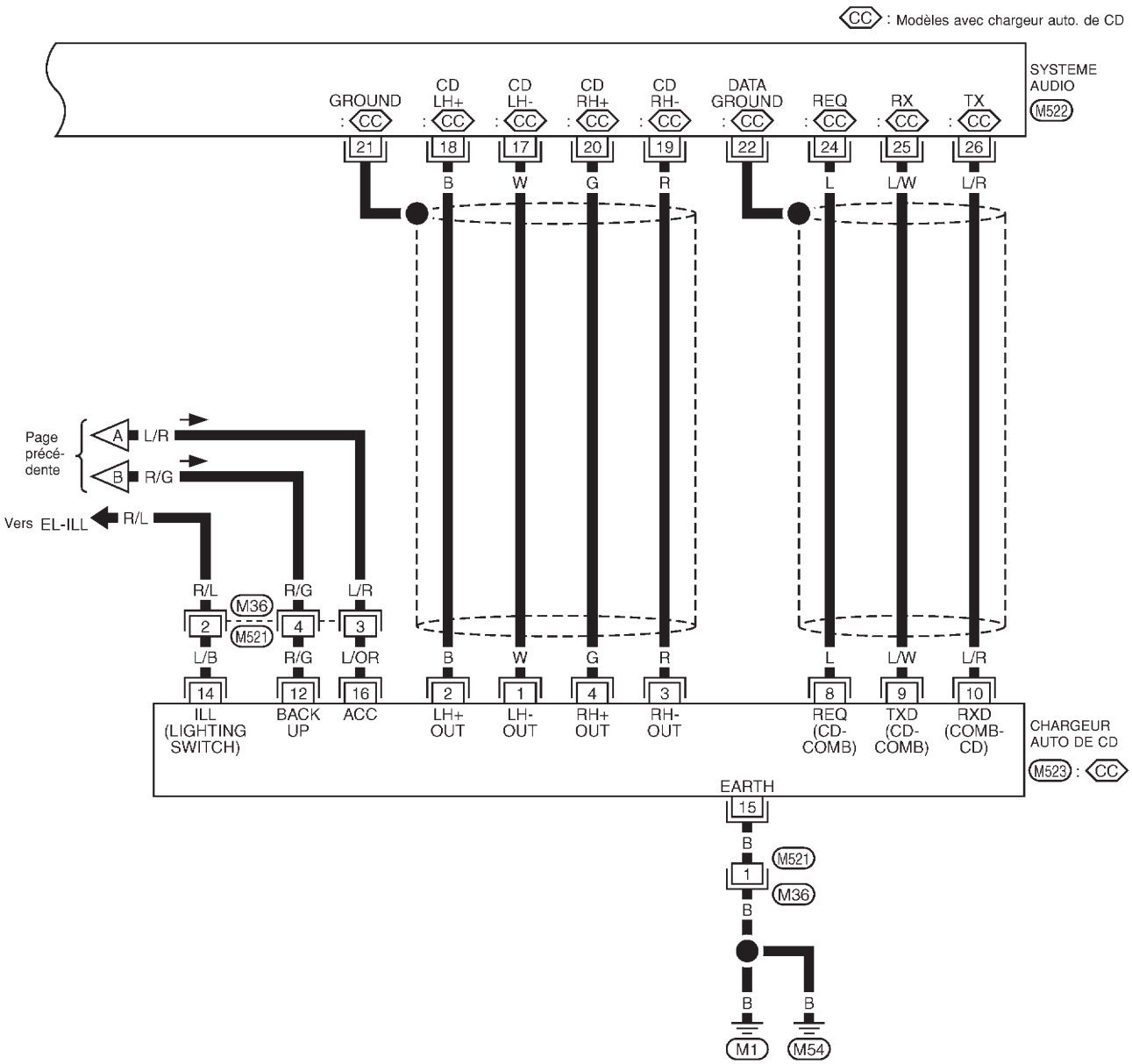



★ : Ce connecteur n'est pas indiqué dans DISPOSITION DES FAISCEAUX.

GEL681A

Simpo PDF Merge and Split Unregistered Version - http://www.simpopdf.com

Schéma de câblage —AUDIO —/Conduite à droite

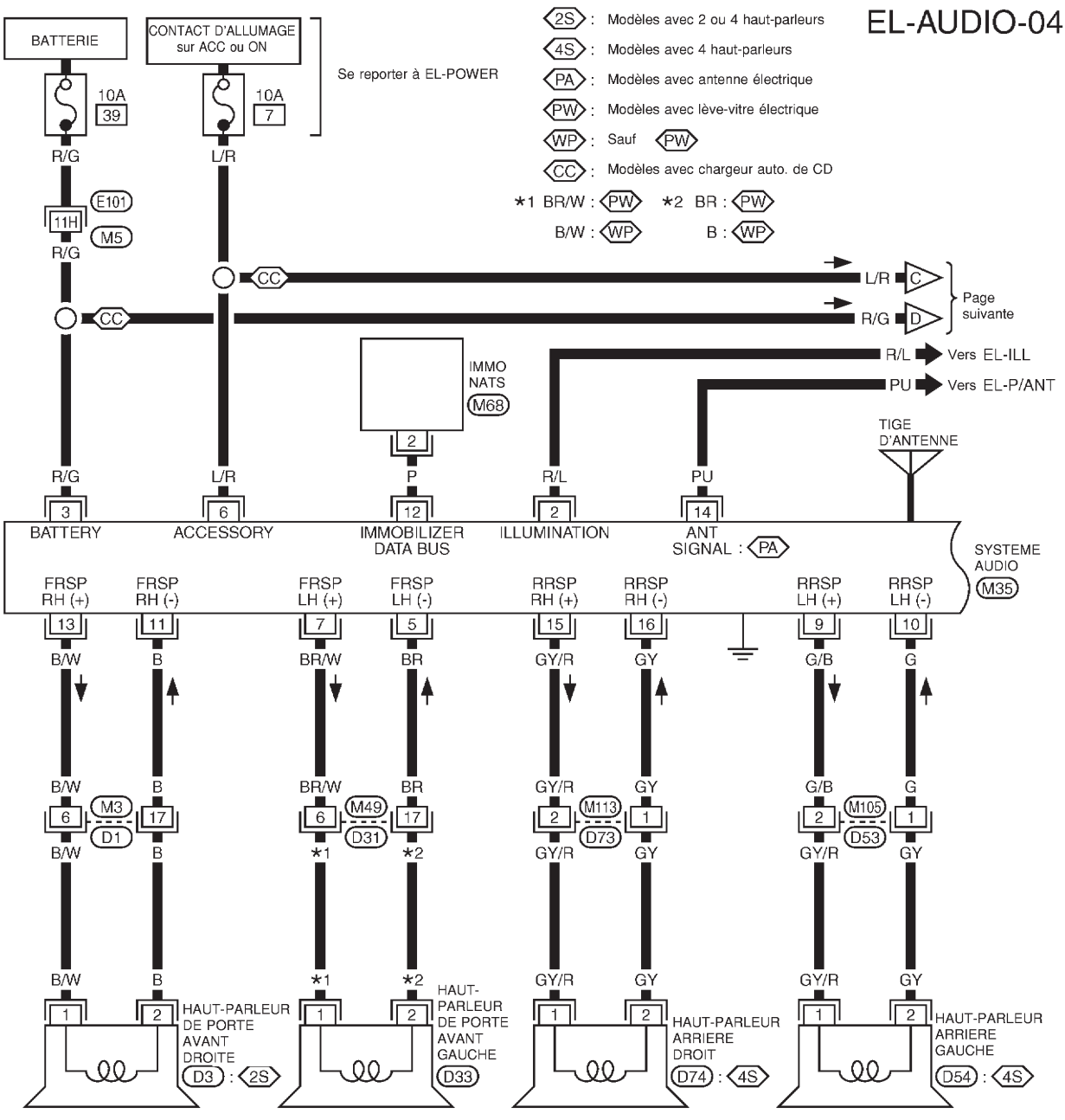

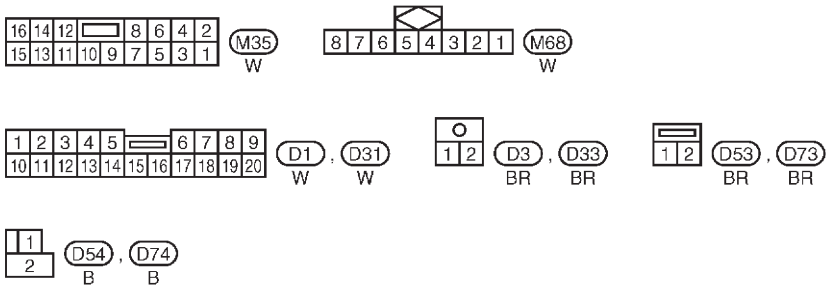

Consulter la dernière page dépliante.

M5 , E101

GEL682A

Simpo PDF Merge and Split Unregistered Version - http://www.simpopdf.com

Schéma de câblage —AUDIO —/Conduite à droite (Suite)

EL-AUDIO-05

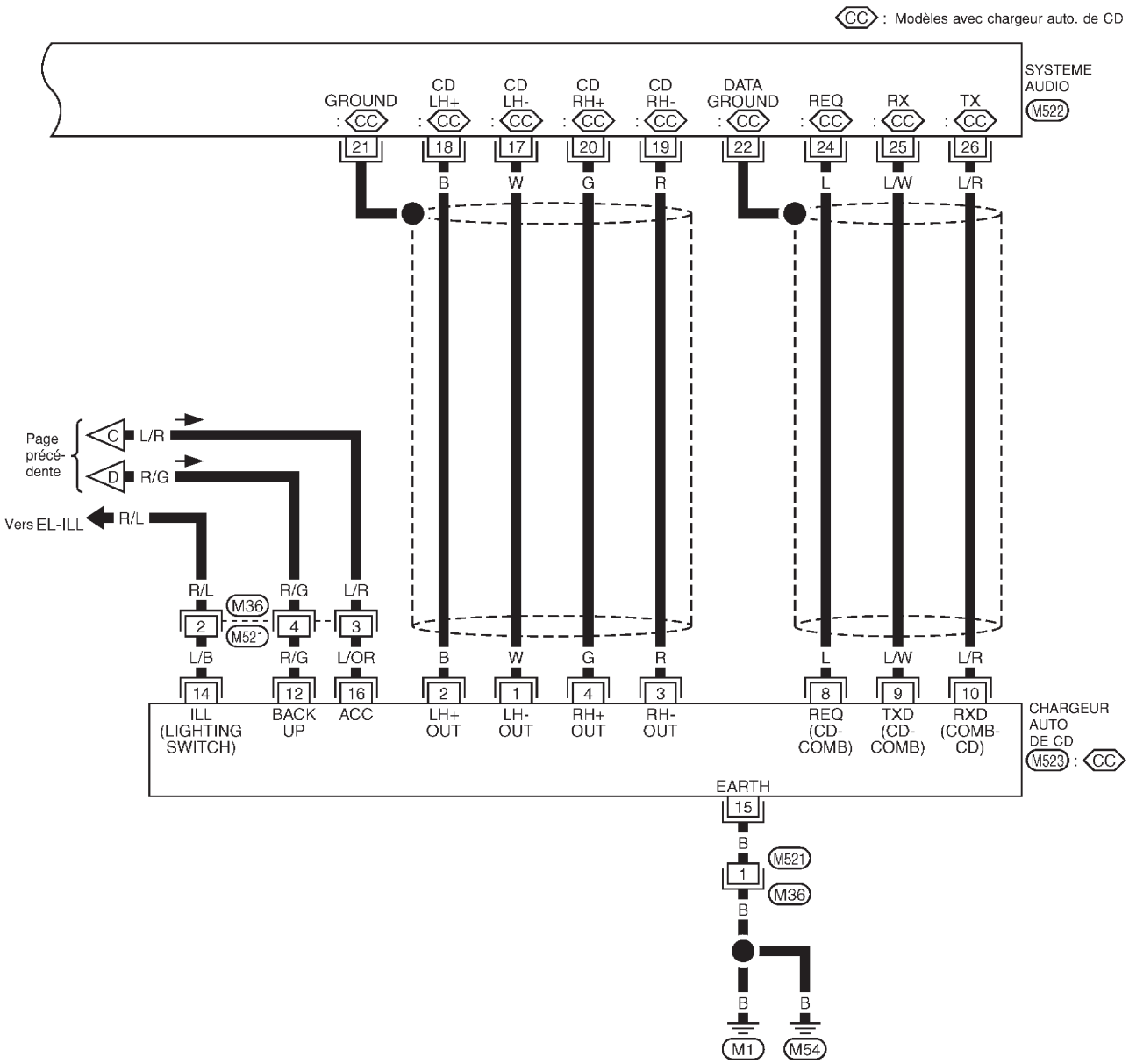

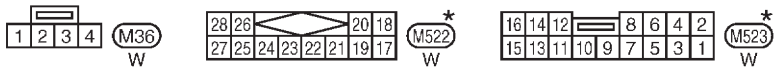

★ : Ce connecteur n'est pas indiqué dans DISPOSITION DES FAISCEAUX.

GEL683A

Simpo PDF Merge and Split Unregistered Version - http://www.simpopdf.com

Schéma de câblage — NATS —/Conduite à gauche

EL-NATS-01

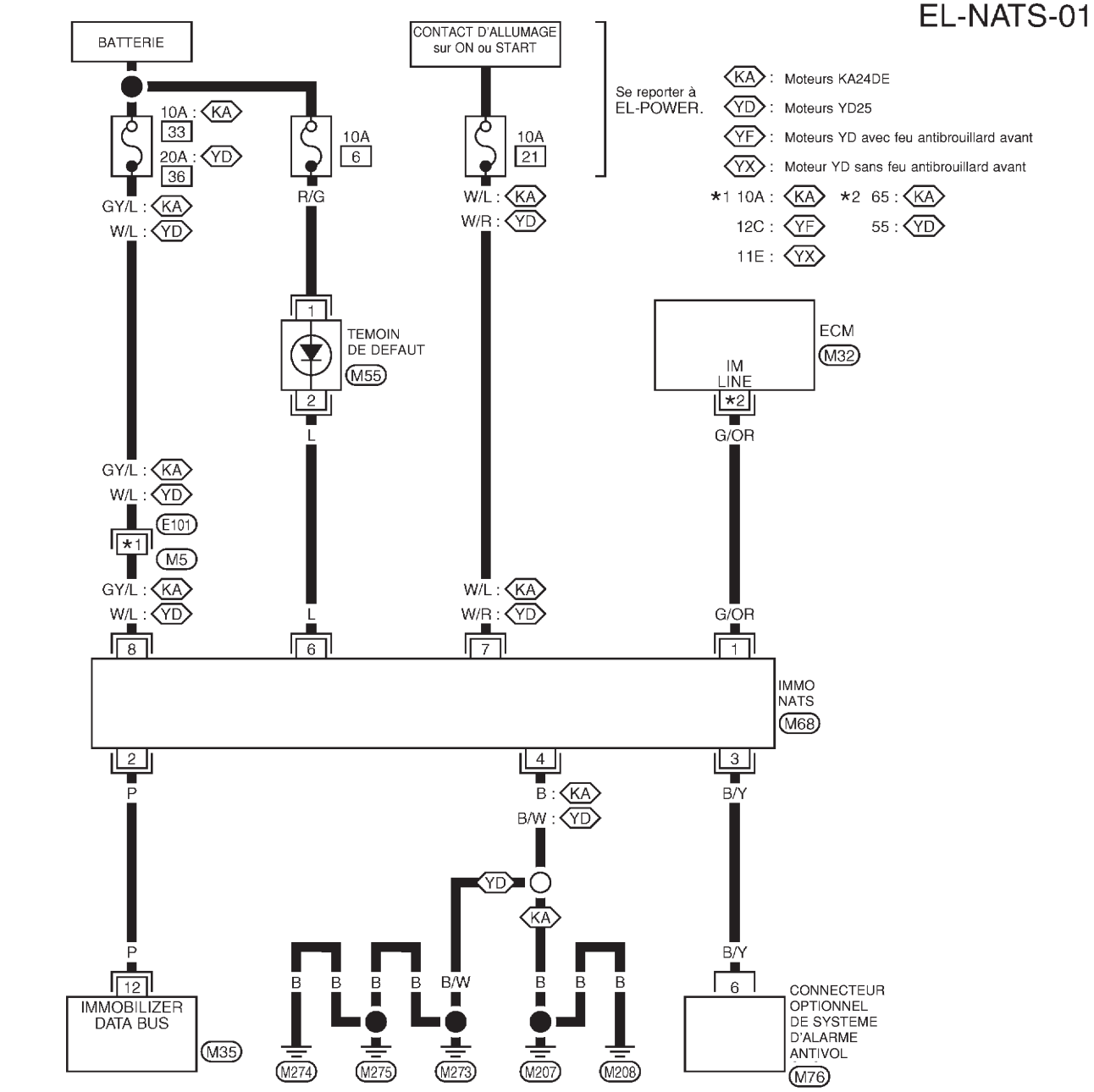

GEL684A

Simpo PDF Merge and Split Unregistered Version - http://www.simpopdf.com

Schéma de câblage — NATS —/Conduite à droite

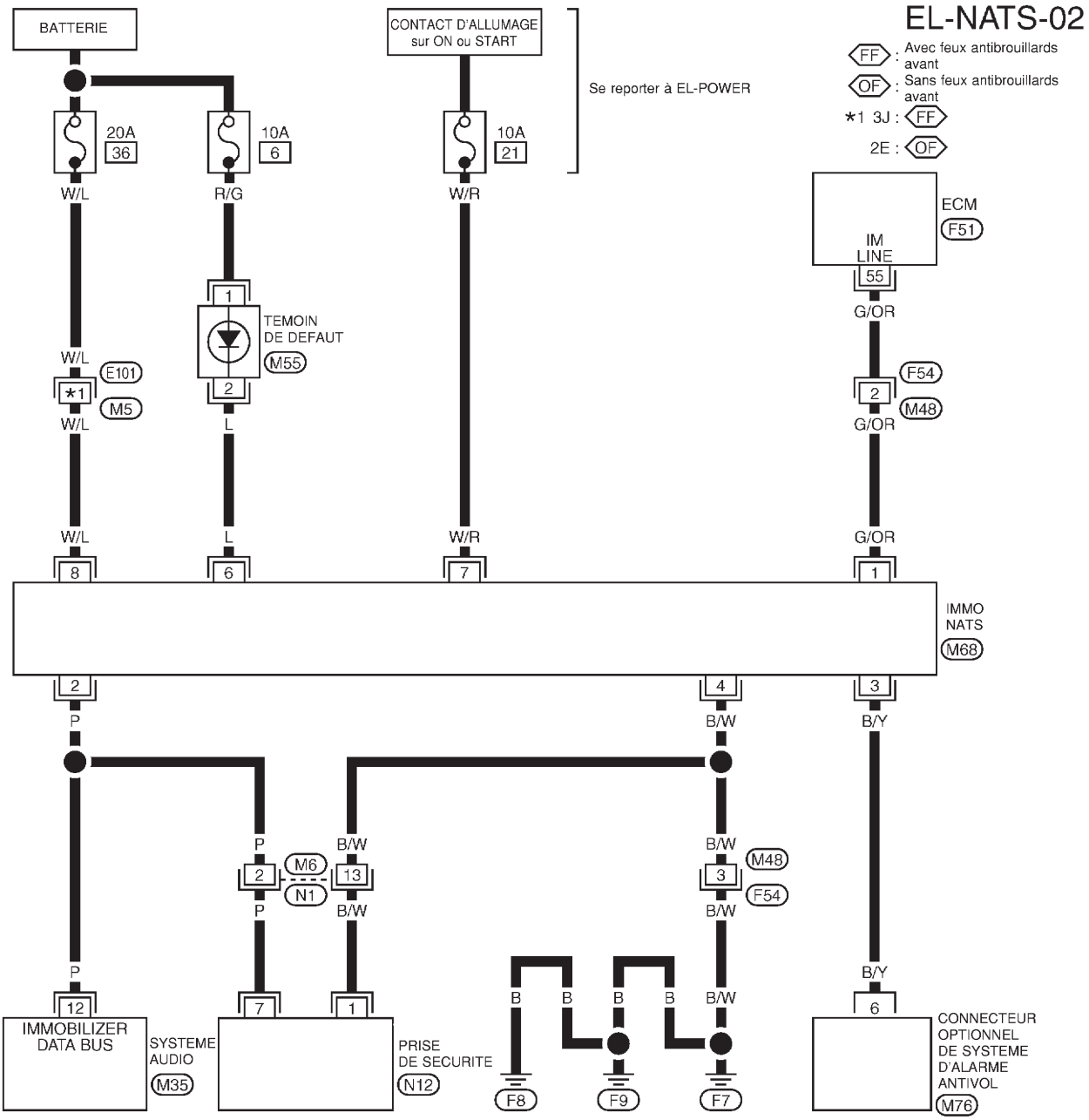

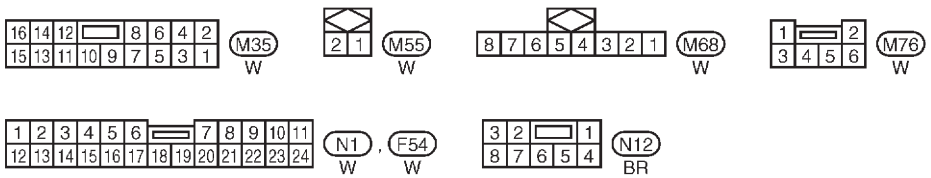

Consulter la dernière page dépliante.
M5 , E101
F51

GEL685A

Simpo PDF Merge and Split Unregistered Version - http://www.simpopdf.com

AGENDA

Simpo PDF Merge and Split Unregistered Version - http://www.simpopdf.com

Faisceau principal

TABLEAU DE BORD — CONDUITE A GAUCHE

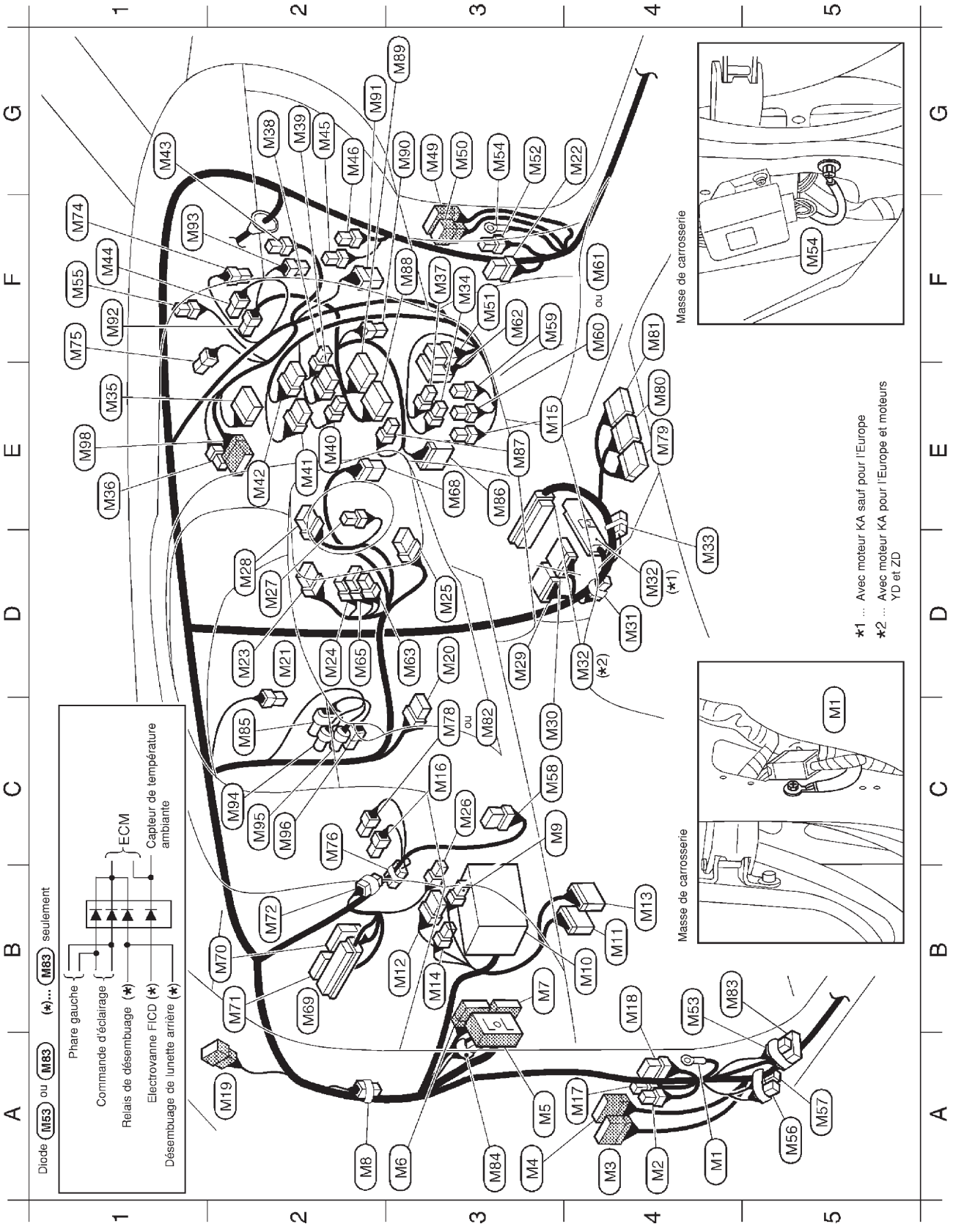

HEL012C

Simpo PDF Merge and Split Unregistered Version - http://www.simpopdf.com

Faisceau principal (Suite)

A4	M1	—	: Masse de carrosserie	E1	M36	W/4	: Vers le faisceau auxiliaire de chargeur de CD (pour l'Europe)	C2	M76	W/6	: Connecteur optionnel (pour l'Europe)
A4	M2	W/2	: Témoin sonore (moteur diesel sauf pour l'Europe et le Moyen-Orient)	F3	M37	B/2	: Allume-cigare	C3	M78	L/2	: Contact de frein de verrouillage de passage (avec T/A)
A4	M3	W/20	: Vers D1	G2	M38	W/3	: Commande de A/C (sans A/C auto.)	E4	M79	Y/12	: Boîtier de capteurs de diagnostic d'airbag (pour ceinture de sécurité à prétentionneur)
A3	M4	W/12	: Vers D2 (avec lève-vitre électrique)	G2	M39	W/6	: Commande de réglage de ventilation (sans A/C auto.)	E4	M80	Y/20	: Boîtier de capteurs de diagnostic d'airbag
A3	M5	SMJ	: Vers E101	E2	M40	W/2	: Eclairage de la commande de réglage de ventilation (sans A/C auto.)	F4	M81	Y/12	: Boîtier de capteurs de diagnostic d'airbag (pour ceinture de sécurité à prétentionneur)
A3	M6	W/24	: Vers N1								
B3	M7	BR/24	: Vers N2	E2	M41	W/8	: Interrupteur de feux de détresse	C3	M82	B/2	: Contact de position de pédale de frein (YD25)
A2	M8	-/2	: Diode (moteur diesel sauf pour l'Europe et le Moyen-Orient)	E2	M42	W/6	: Interrupteur de désembuage (sauf pour le Moyen-Orient et les cabines simples avec moteur TD)	B4	M83	L/10	: Diode (moteur KA sauf pour l'Europe)
								A3	M84	BR/2	: Résistance (avec T/A)
C3	M9	L/4	: Relais de pompe à carburant (moteur KA)	G1	M43	Y/2	: Module d'airbag passager avant	C2	M85	GY/6	: Boîtier d'accélérateur (YD25)
B4	M10	—	: Boîtier à fusibles	F1	M44	BR/4	: Amplificateur de commande thermique (sans A/C auto.)	E3	M86	BR/10	: Moteur de volet de mode (avec A/C auto.)
B4	M11	W/16	: Connecteur de liaison de données	G2	M45	BR/4	: Résistance de ventilateur (sans A/C auto.)	E3	M87	W/2	: Capteur de l'habitacle (avec A/C auto.)
B3	M12	W/6	: Boîtier à fusibles	G2	M46	W/2	: Moteur de soufflerie	F3	M88	GY/20	: Ampli. auto. de A/C (avec A/C auto.)
B4	M13	B/10	: Connecteur de contrôle (Z24S)	G3	M49	W/20	: Vers D31	G3	M89	GY/16	: Ampli. auto. de A/C (avec A/C auto.)
B3	M14	W/4	: Boîtier à fusibles	G3	M50	W/6	: Vers D32 (avec lève-vitre électrique)	G3	M90	L/2	: Moteur d'aspirateur (avec A/C auto.)
E3	M15	B/3	: Boîtier de clignotants combiné	F3	M51	W/8	: Minuterie de verrouillage de porte (avec lève-vitre électrique sauf pour l'Europe)	G2	M91	B/6	: Moteur de volet de mélange d'air (avec A/C auto.)
C3	M16	B/2	: Contact de feux de stop								
A4	M17	L/4	: Relais de feux antibrouillards avant (moteur YD pour l'Europe)	G3	M52	W/2	: Rupteur de circuit 2 (pour l'Europe avec moteur à essence pour le Moyen-Orient)	F1	M92	W/4	: Amplificateur de commande de ventilateur (avec A/C auto.)
B4	M18	W/6	: Relais de température du liquide de refroidissement moteur (moteur QD avec T/A)	B4	M53	L/4	: Diode (sauf moteur KA pour l'Europe)	F1	M93	W/4	: Moteur de volet d'admission (avec A/C automatique)
				G3	M54	—	: Masse de carrosserie				
A2	M19	W/6	: Vers R1	W/2	M55	W/2	: Témoin de sécurité (avec NATS)	C2	M94	BR/3	: Capteur de position d'accélérateur (ZD30)
D3	M20	W/6	: Contact d'allumage	A5	M56	-/2	: Diode (Z24S)	C2	M95	GY/3	: Contact de position d'accélérateur (ZD30)
D2	M21	W/1	: Commande de frein de stationnement (type à manche)	A5	M57	-/2	: Diode (Z24S)	C2	M96	W/3	: Contact d'accélérateur (C/C) (ZD30)
G4	M22	W/6	: Module de commande de pompe à carburant (Z24S)	C3	M58	BR/8	: Boîtier de contrôle de télécommande à fonctions multiples (pour l'Europe)	E1	M98	W/12	: Système audio (au travers du faisceau auxiliaire) (sauf pour l'Europe)
D2	M23	BR/8	: Commande d'éclairage, commande de clignotant	F3	M59	BR/6	: Relais de désembuage (sauf pour le Moyen-Orient)				
D2	M24	BR/4	: Commande d'éclairage	F4	M60	L/4	: Relais de feu antibrouillard arrière (pour l'Europe ou avec moteur KA sans airbag double sauf pour le Moyen-Orient)				
D3	M25	Y/7	: Câble spiralé (avec airbag)								
C3	M26	L/12	: Contact de vérification de T/A	F4	M61	L/4	: Relais de feux antibrouillards avant (moteur ZD)				
D2	M27	B/1	: Commande d'avertisseur sonore (sans airbag)	F3	M62	W/18	: Boîtier de commande d'accès intelligent (pour l'Europe)				
D2	M28	GY/8	: Commande d'essuie-glace et de lave-vitre	D3	M63	W/3	: Interrupteur de feux antibrouillards (moteurs KA ou ZD sauf pour l'Europe et le Moyen-Orient)				
D3	M29	W/12	: Boîtier de commande de préchauffage (moteur TD sauf régions froides et moteur QD)	D2	M65	W/6	: Interrupteur de feu antibrouillard (pour l'Europe)				
C3	M30	W/16	: Boîtier de commande de préchauffage (moteur TD pour régions froides)	E3	M68	W/8	: IMMO NATS (pour l'Europe)				
				B2	M69	W/48	: TCM (module de commande de transmission) (moteur QG avec T/A)				
D4	M31	GY/6	: Connecteur de raccord 1 (moteur KA)	B2	M70	W/24	: TCM (module de commande de transmission) (moteur KA avec T/A)				
D4	M32	SMJ	: ECM (moteurs KA, YD et ZD)								
D4	M33	—	: Connecteur de raccord 3 (moteur KA pour l'Europe)	B2	M71	GY/24	: TCM (module de commande de transmission) (moteur KA avec T/A)				
F3	M34	W/2	: Eclairage de cendrier (avec moteur à essence pour le Moyen-Orient)	B2	M72	-/6	: Connecteur de raccord 2 (avec T/A)				
E1	M35	W/10	: Système audio (pour l'Europe)	F1	M74	W/2	: Capteur de température d'air d'admission (avec A/C auto.)				
				F1	M75	B/2	: Sonde d'ensoleillement (avec A/C auto.)				

Diode M8

Témoin d'avertissement de filtre — Contact de filtre à carburant, Témoin sonore

Diode M56, M57

Module de commande de pompe à carburant — M56: Témoin d'avertissement de charge, Alternateur (L); M57: Témoin d'huile, Manocontact d'huile

HEL013C

Simpo PDF Merge and Split Unregistered Version - http://www.simpopdf.com

Faisceau principal (Suite)

TABLEAU DE BORD — CONDUITE A DROITE



HEL014C

Simpo PDF Merge and Split Unregistered Version - http://www.simpopdf.com

Faisceau principal (Suite)

G4 M1 — : Masse de carrosserie
G4 M3 W/20 : Vers D1
G4 M4 W/12 : Vers D2 (avec lève-vitre électrique)
G3 M5 SMJ : Vers E101
F4 M6 W/24 : Vers N1
G2 M7 BR/24 : Vers N2
E4 M9 L/4 : Relais de pompe à carburant (moteurs KA et VG)
F4 M10 — : Boîtier à fusibles
F4 M11 W/16 : Connecteur de liaison de données
F3 M12 W/6 : Boîtier à fusibles
F3 M14 W/4 : Boîtier à fusibles
C4 M15 B/3 : Boîtier de clignotants combiné
E3 M16 B/2 : Contact de feux de stop
A3 M17 L/4 : Relais de feux antibrouillards avant (pour l'Europe)
F1 M19 W/6 : Vers R1
E3 M20 W/6 : Contact d'allumage
D1 M21 W/1 : Commande de frein de stationnement (type à manche)
D2 M23 BR/8 : Commande d'éclairage, commande de clignotant
D2 M24 BR/4 : Commande d'éclairage
D3 M25 Y/7 : Câble spiralé (avec airbag)
D3 M27 B/1 : Commande d'avertisseur sonore (sans airbag)
D2 M28 GY/8 : Commande d'essuie-glace et de lave-vitre
D4 M29 W/12 : Boîtier de commande de préchauffage (moteur TD sans EGR et moteur QD)
C1 M35 W/16 : Système audio (pour l'Europe)
C1 M36 W/4 : Vers le faisceau auxiliaire de chargeur de CD (pour l'Europe)
C3 M37 B/2 : Allume-cigare
C3 M38 W/3 : Commande de A/C (sans A/C auto.)
C2 M39 W/6 : Commande de réglage de ventilation (sans A/C auto.)
C2 M40 W/2 : Eclairage de la commande de réglage de ventilation (sans A/C auto.)
C2 M41 W/8 : Interrupteur de feux de détresse
C2 M42 W/6 : Interrupteur de désembuage (sauf pour les modèles non-équipés d'essuie-glace intermittents)
A2 M43 Y/2 : Module d'airbag, côté passager
B1 M44 BR/4 : Amplificateur de commande thermique (sans A/C auto.)
A2 M45 BR/4 : Résistance de ventilateur (sans A/C auto.)
A2 M46 W/2 : Moteur de soufflerie
A2 M47 W/16 : Vers F55 (moteurs KA, VG, YD et ZD)
A2 M48 W/24 : Vers F54 (moteurs KA, VG, YD et ZD)
A3 M49 W/20 : Vers D31
A3 M50 W/6 : Vers D32 (avec lève-vitre électrique)
B3 M51 W/8 : Minuterie de verrouillage de porte (avec lève-vitre électrique sauf pour l'Europe)
G3 M52 W/2 : Rupteur 2 (pour l'Europe)
A3 M53 L/4 : Diode (moteur KA sans essuie-glace intermittent pour l'Australie)
A3 M54 — : Masse de carrosserie
B/1 M55 W/2 : Témoin de sécurité (pour l'Europe)
F2 M58 BR/8 : Boîtier de contrôle de télécommande à fonctions multiples (pour l'Europe)
C4 M59 BR/6 : Relais de désembuage (sauf pour les modèles non-équipés d'essuie-glace intermittents)
C3 M60 L/4 : Relais de feux antibrouillards arrière (pour l'Europe)
C4 M61 W/4 : Relais de feux antibrouillards avant (moteur ZD)
B4 M62 W/18 : Boîtier de commande d'accès intelligent (pour l'Europe)
D3 M64 L/4 : Interrupteur de feux antibrouillards avant (moteur ZD)
D3 M65 W/6 : Interrupteur de feux antibrouillard avant et arrière (pour l'Europe)
D4 M66 GY/20 : ECM (moteur diesel avec EGR)
D4 M67 GY/16 : ECM (moteur diesel avec EGR)
E3 M68 W/8 : IMMO NATS (pour l'Europe)
E2 M69 W/48 : TCM (module de commande de transmission) (moteur VG avec T/A)
E1 M70 W/24 : TCM (module de commande de transmission) (moteur KA avec T/A)
E1 M71 GY/24 : TCM (module de commande de transmission) (moteur KA avec T/A)
E1 M73 W/4 : Dispositif de T/A (T/A avec colonne de passage)
B1 M74 W/2 : Capteur de température d'air d'admission (avec A/C auto.)
B1 M75 B/2 : Sonde d'ensoleillement (avec A/C auto.)
F2 M76 W/6 : Connecteur optionnel de système d'alarme antivol (pour l'Europe)
E4 M78 L/2 : Contact de frein de verrouillage de passage (avec T/A)
C4 M79 Y/12 : Boîtier de capteurs de diagnostic d'airbag (modèles avec airbag pour l'Europe et l'Australie)
C4 M80 Y/20 : Boîtier de capteurs de diagnostic d'airbag (modèles avec airbag)
D4 M81 Y/12 : Boîtier de capteurs de diagnostic d'airbag (modèles avec airbag pour l'Europe et l'Australie)
B2 M82 B/2 : Contact de position de pédale de frein (moteur YD)
A4 M83 L/10 : Diode (moteur KA sans essuie-glace intermittent pour l'Australie)
A1 M84 BR/2 : Résistance (avec T/A)
G3 M85 GY/6 : Boîtier d'accélérateur (moteur YD)
D3 M86 BR/10 : Moteur de volet de mode (avec A/C auto.)
D3 M87 W/2 : Capteur de l'habitacle (avec A/C auto.)
B3 M88 GY/20 : Ampli. auto. de A/C (avec A/C auto.)
B3 M89 GY/16 : Ampli. auto. de A/C (avec A/C auto.)
B3 M90 L/2 : Moteur d'aspirateur (avec A/C auto.)
B3 M91 B/6 : Moteur de volet de mélange d'air (avec A/C auto.)
C1 M92 W/4 : Amplificateur de commande de ventilateur (avec A/C auto.)
B1 M93 W/4 : Moteur de volet d'admission (avec A/C automatique)
G3 M94 BR/3 : Capteur de position d'accélérateur (moteur ZD)
G3 M95 GY/3 : Contact de position d'accélérateur (moteur ZD)
G3 M96 W/3 : Contact d'accélérateur (C/C) (moteur ZD)
E4 M97 W/2 : Contact de kick-down (T/A avec moteur VG)
C1 M98 W/12 : Système audio (au travers du faisceau auxiliaire) (sauf pour l'Europe)

Compartiment moteur

M221 W/6 : Moteur d'essuie-glace (moteurs TD et QD)

Diode M53 ou M83 (*)... M83 , seulement

HEL015C

Simpo PDF Merge and Split Unregistered Version - http://www.simpopdf.com

Faisceau principal (Suite)

COTE CARROSSERIE — CONDUITE A GAUCHE

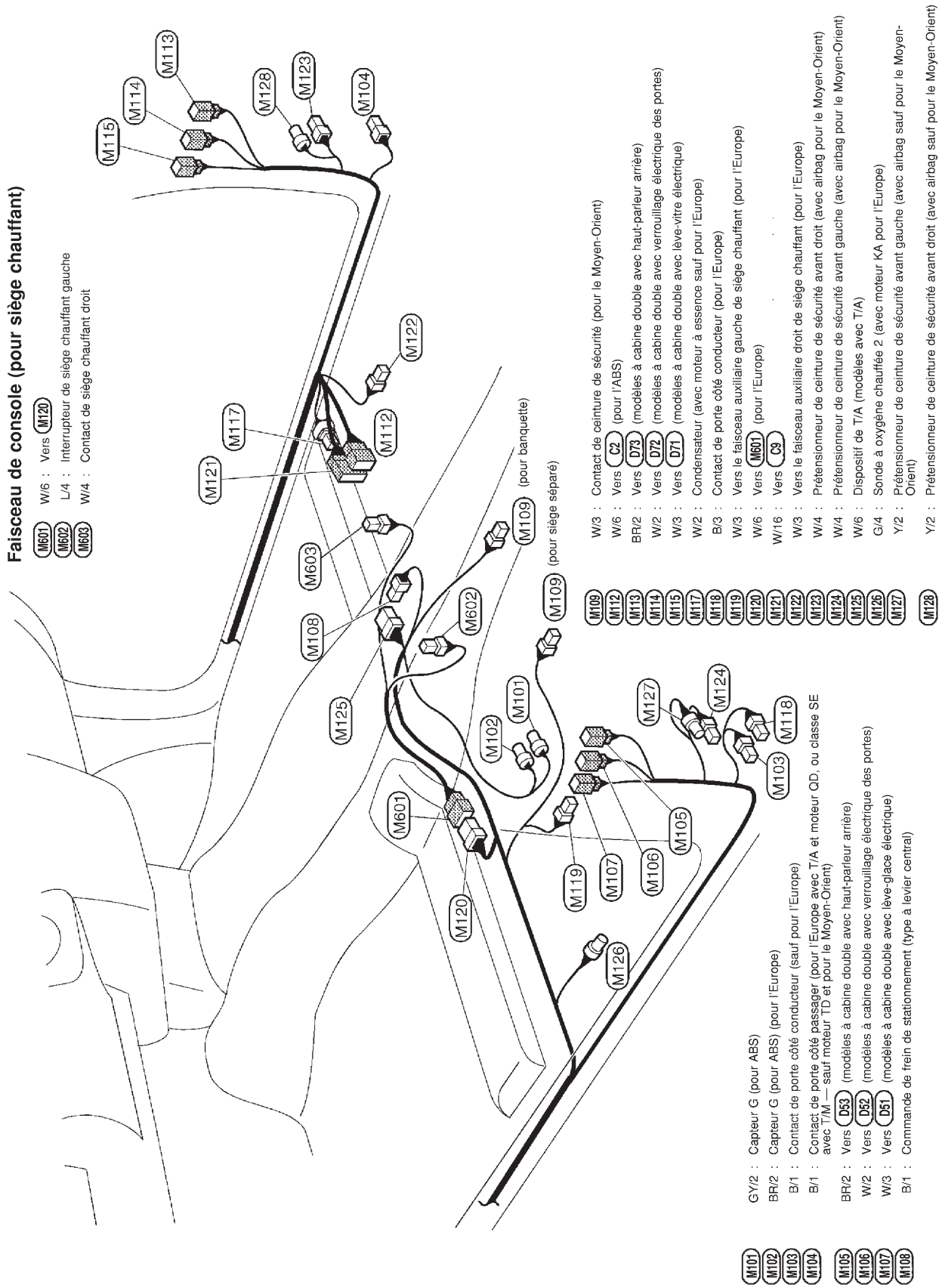

HEL016C

Simpo PDF Merge and Split Unregistered Version - http://www.simpopdf.com

Faisceau principal (Suite)

COTE CARROSSERIE — CONDUITE A DROITE

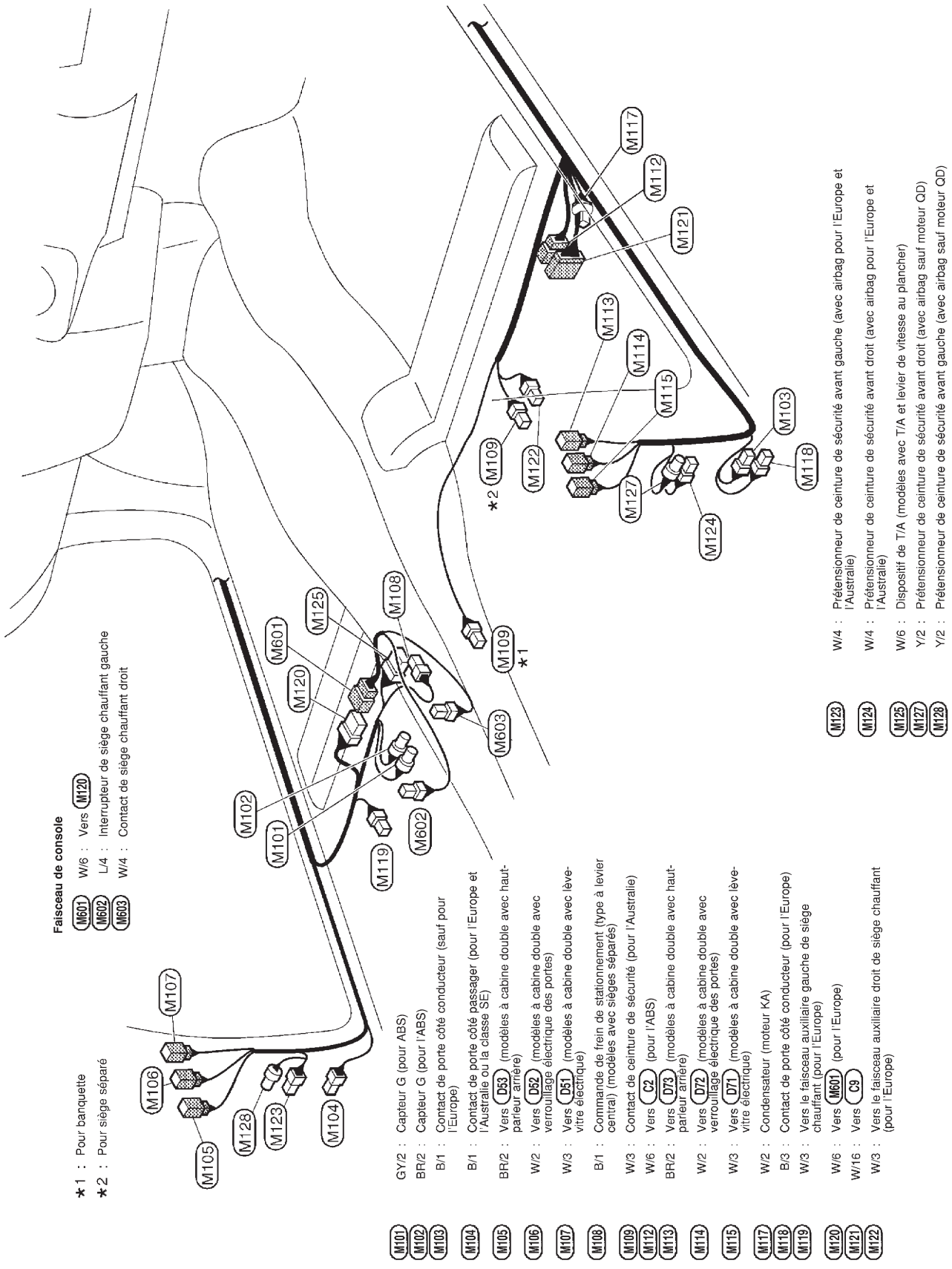

HEL017C

Simpo PDF Merge and Split Unregistered Version - http://www.simpopdf.com

Faisceau de compartiment moteur

CONDUITE A GAUCHE — MOTEUR A ESSENCE

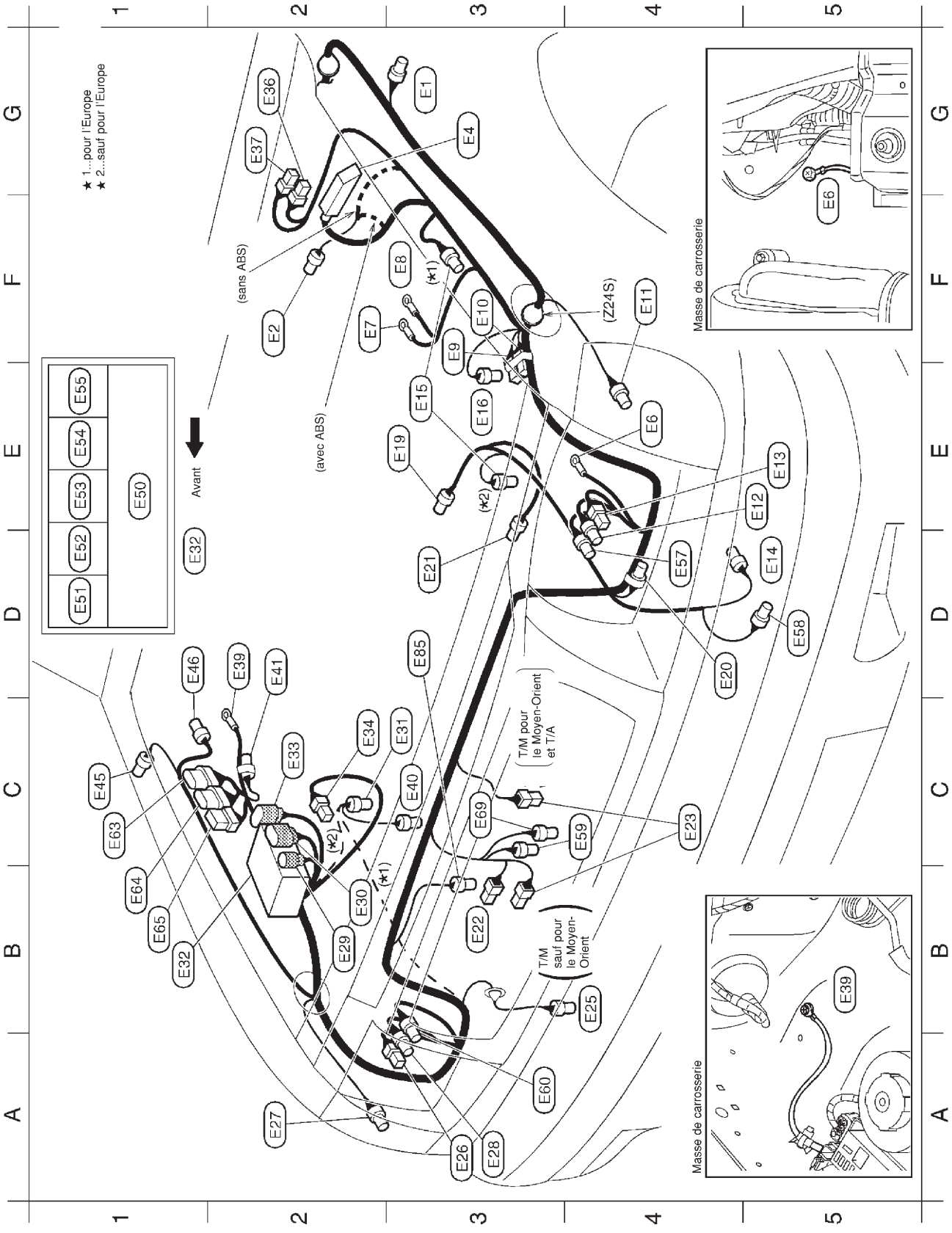

HEL018C

Simpo PDF Merge and Split Unregistered Version - http://www.simpopdf.com

Faisceau de compartiment moteur (Suite)

G3 E1 GY/2 : Clignotant latéral gauche (avec phare à faisceaux multiples)
F2 E2 GY/2 : Contact de niveau de liquide de frein
G3 E4 B/31 : Actionneur ABS et boîtier électrique (pour l'ABS)
E4 E6 — : Masse de carrosserie
F2 E7 — : Bobine d'allumage (moteur Z)
F3 E8 — : Bobine d'allumage (moteur Z)
F3 E9 -/2 : Résistance (moteur Z)
F3 E10 W/2 : Condensateur (moteur Z)
F4 E11 GY/3 : Bloc optique avant gauche (sans phare à faisceaux multiples)
E5 E12 GY/3 : Bloc optique avant droit (avec phare à faisceaux multiples)
E5 E13 B/3 : Phare gauche
D5 E14 GY/2 : Moteur de lave-vitre
E3 E15 BR/2 : Capteur de roue avant gauche (pour ABS)
E3 E16 GY/2 : Capteur de température d'air d'admission (moteur KA pour l'Europe)
E3 E19 GY/3 : Distributeur (moteur Z)
D4 E20 GY/2 : Connecteur optionnel (contact de capot) (pour l'Europe)
D3 E21 B/1 : Compresseur (moteur Z)
B3 E22 B/1 : Avertisseur sonore (grave)
C4 E23 B/1 : Avertisseur sonore (aigu)
B4 E25 GY/4 : Manocontact triple
A3 E26 B/3 : Phare droit
A2 E27 GY/3 : Bloc optique avant droit (sans phare à faisceaux multiples)
A3 E28 GY/3 : Feu combiné avant droit (avec phare à faisceaux multiples)
B2 E29 GY/2 : Vers E204
B2 E30 GY/8 : Vers E203
C3 E31 GY/2 : Capteur de roue avant droite (pour modèles avec ABS)
B1 E32 — : Boîte de relais (boîte de fusibles et de raccord à fusibles)
C2 E33 SB/8 : Vers E205
C2 E34 B/1 : Batterie
G2 E36 B/1 : Electrovanne de commande de pot ISC-FI (moteur Z)
G2 E37 B/1 : Electrovanne de commande ISC-FI (moteur Z)
D2 E39 — : Masse de carrosserie
C3 E40 B/2 : Manocontact d'huile de direction assistée (pour l'Europe)
D2 E41 B/1 : Connecteur optionnel (pour feu antibrouillard avant) (pour l'Europe)
C1 E45 GY/2 : Clignotant latéral droit (avec phare à faisceaux multiples)
D1 E46 GY/3 : Antenne électrique (pour le Moyen-Orient et l'Europe)
E1 E50 — : Boîte de fusibles et de raccord à fusibles
D1 E51 L/4 : Relais de ventilateur de refroidissement (moteur KA pour le Moyen-Orient et l'Europe)
D1 E52 L/4 : Relais de climatisation
E1 E53 W/3 : Relais d'avertisseur sonore
E1 E54 BR/6 : Relais de position de stationnement/point mort (avec T/A)
E1 E55 B/5 : Relais de starter automatique (moteur Z)
BR/6 : Relais de l'ECM (moteur KA)
D4 E57 -/3 : Moteur de réglage des faisceaux gauche (pour le Moyen-Orient et l'Europe)
D5 E58 GY/2 : Moteur de lave-phares (pour l'Europe)
C4 E59 B/2 : Capteur de température ambiante (pour l'Europe)
A3 E60 -/3 : Moteur de réglage des faisceaux droit (pour le Moyen-Orient et l'Europe)
C1 E63 SB/6 : Boîtier d'éclairage de jour (avec système d'éclairage de jour)
B1 E64 SB/8 : Boîtier d'éclairage de jour (avec système d'éclairage de jour)
B1 E65 W/6 : Amplificateur de lave-phares (pour l'Europe)
C3 E69 BR/2 : Commande de température ambiante (moteur KA)
D3 E85 GY/2 : Moteur de ventilateur de refroidissement (moteur KA pour le Moyen-Orient et l'Europe)

COMPARTIMENT PASSAGER

E101 SMJ : Vers M5
E103 B/2 : Boîtier à fusibles

Résistance E9

HEL019C

Simpo PDF Merge and Split Unregistered Version - http://www.simpopdf.com

Faisceau de compartiment moteur (Suite)

CONDUITE A GAUCHE — MOTEUR DIESEL

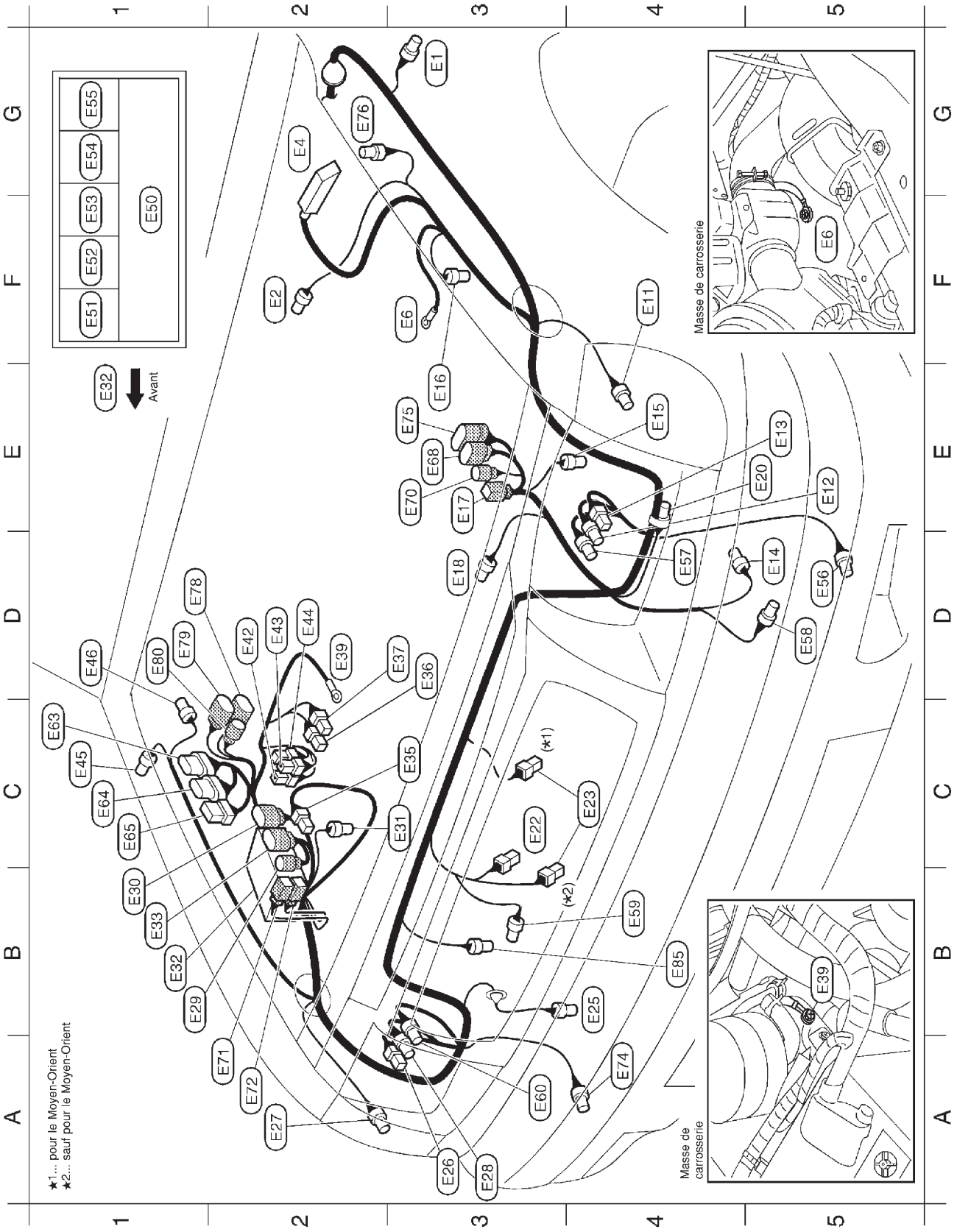

HEL020C

Simpo PDF Merge and Split Unregistered Version - http://www.simpopdf.com

Faisceau de compartiment moteur (Suite)

G3	E1	GY/	:	Clignotant latéral gauche (sauf pour le Moyen-Orient)
F2	E2	GY/2	:	Contact de niveau de liquide de frein (modèles avec T/M)
G2	E4	B/31	:	Actionneur ABS et boîtier électrique (pour l'ABS)
F3	E6	—	:	Masse de carrosserie
F4	E11	GY/3	:	Bloc optique avant gauche (pour le Moyen-Orient)
E5	E12	GY/3	:	Bloc optique avant gauche (sauf pour le Moyen-Orient)
E5	E13	B/3	:	Phare gauche
D5	E14	GY/2	:	Moteur de lave-vitre
E4	E15	BR/2	:	Capteur de roue avant gauche (pour ABS)
E3	E16	GY/2	:	Capteur de température d'air d'admission (moteurs YD et ZD)
E3	E17	B/2	:	Vers A2
D3	E18	GY/2	:	Thermocontact (moteur TD pour le Moyen-Orient et moteur QD)
E5	E20	GY/2	:	Connecteur optionnel (contact de capot) (pour l'Europe)
C3	E22	B/1	:	Avertisseur sonore (grave)
C4	E23	B/1	:	Avertisseur sonore (aigu)
B4	E25	GY/4	:	Manocontact triple
A3	E26	B/3	:	Phare droit
A2	E27	GY/3	:	Bloc optique avant droit (pour le Moyen-Orient)
A3	E28	GY/3	:	Bloc optique avant droit (sauf pour le Moyen-Orient)
B1	E29	GY/2	:	Vers E204
B1	E30	GY/8	:	Vers E203 (moteurs YD et ZD)
C3	E31	GY/2	:	Capteur de roue avant droite (pour modèles avec ABS)
B1	E32	—	:	Boîte de relais (boîte de fusibles et de raccord à fusibles)
B1	E33	SB/8	:	Vers E205
C3	E35	B/1	:	Vers E206 (moteurs TD et QD)
D3	E36	B/1	:	Electrovanne IACV-FICD (moteurs TD et QD)
D3	E37	B/1	:	Electrovanne IACV-FICD (moteurs TD et QD)
D2	E39	—	:	Masse de carrosserie
D2	E42	W/1	:	Relais de préchauffage 1 (moteurs YD et ZD)
D2	E43	W/1	:	Relais de préchauffage 1 (moteurs YD et ZD)
D2	E44	G/2	:	Relais de préchauffage 1 (moteurs YD et ZD)
C1	E45	GY/2	:	Clignotant latéral droit (sauf pour le Moyen-Orient)
D1	E46	GY/3	:	Antenne électrique (pour l'Europe)
F1	E50	—	:	Boîte de fusibles et de raccord à fusibles
F1	E51	L/4	:	Relais de ventilateur de refroidissement (moteur TD pour le Moyen-Orient et moteurs QD, YD et ZD)
F1	E52	L/4	:	Relais de climatisation
F1	E53	W/3	:	Relais d'avertisseur sonore
G1	E54	L/4	:	Relais de position de stationnement/point mort (PNP) (avec T/A)
G1	E55	BR/6	:	Relais de l'ECM (moteurs YD et ZD)
		B/5	:	Relais ATP (avec T/A)
D5	E56	B/2	:	Feu antibrouillard avant gauche (pour l'Europe ou avec moteur ZD
D4	E57	–/3	:	Moteur de réglage du faisceau de phare gauche (pour le Moyen-Orient et l'Europe)
D5	E58	GY/2	:	Moteur de lave-phares (pour l'Europe)
B4	E59	B/2	:	Capteur de température ambiante (pour climatisation auto.) (moteurs YD et ZD)
A3	E60	–/3	:	Moteur de réglage du faisceau de phare droit (pour le Moyen-Orient et l'Europe)
C1	E63	SB/6	:	Boîtier d'éclairage de jour (avec système d'éclairage de jour)
C1	E64	SB/8	:	Boîtier d'éclairage de jour (avec système d'éclairage de jour)
C1	E65	W/6	:	Amplificateur de lave-phares (pour l'Europe)
E3	E68	GY/8	:	Vers A13 (moteurs TD et WD avec T/M)
E3	E70	BR/3	:	Vers A14 (moteurs YD et ZD)
A2	E71	B/2	:	Vers E231 (moteurs YD et ZD)
A2	E72	B/1	:	Vers E232 (moteurs YD et ZD)
A4	E74	B/2	:	Feu antibrouillard avant droit (pour l'Europe ou avec moteur ZD)
E3	E75	GY/10	:	Vers A15 (avec T/A)
G2	E76	GY/2	:	Résistance de chute (avec T/A)
D1	E78	GY/8	:	Contact de position de stationnement/point mort (PNP) (avec T/A)
D1	E79	BR/8	:	Vers l'ensemble de câbles de bornes (avec T/A)
D1	E80	GY/3	:	Capteur de régime (avec T/A)
B4	E85	GY/2	:	Moteur de ventilateur de refroidissement (moteur TD)

COMPARTIMENT PASSAGER

E101 SMJ : Vers M5
E103 B/2 : Boîtier à fusibles

HEL021C

Simpo PDF Merge and Split Unregistered Version - http://www.simpopdf.com

Faisceau de compartiment moteur (Suite)

CONDUITE A DROITE — MOTEUR DIESEL

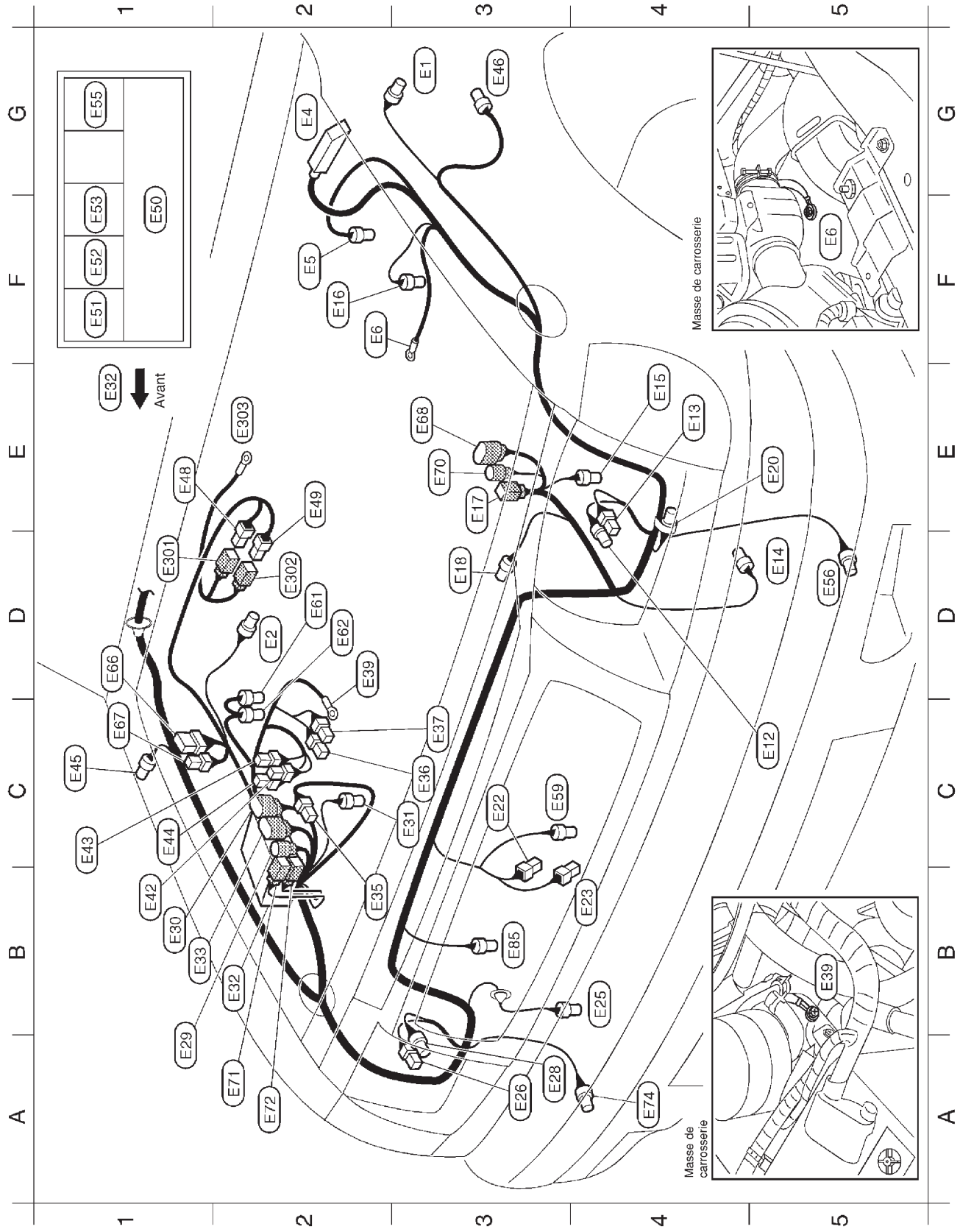

HEL968B

Simpo PDF Merge and Split Unregistered Version - http://www.simpopdf.com

G3 E1 GY/2 : Clignotant latéral gauche
D2 E2 GY/2 : Contact de niveau de liquide de frein
G2 E4 B/31 : Actionneur ABS et boîtier électrique (pour l'ABS)
F2 E5 BR/2 : Contact de filtre à carburant (sauf pour l'Europe)
F2 E6 — : Masse de carrosserie
C5 E12 GY/3 : Feu combiné avant gauche
E4 E13 B/3 : Phare gauche
D5 E14 GY/2 : Moteur de lave-vitre
E4 E15 BR/2 : Capteur de roue avant gauche (pour ABS)
F2 E16 GY/2 : Capteur de température d'air d'admission (moteurs YD et ZD)
E3 E17 B/2 : Vers A2
D3 E18 GY/2 : Thermocontact (moteur QD)
E5 E20 GY/2 : Connecteur optionnel (contact de capot) (pour l'Europe)
C3 E22 B/1 : Avertisseur sonore (grave)
B4 E23 B/1 : Avertisseur sonore (aigu) (moteur ZD sauf pour l'Australie et moteurs YD et QD)
B4 E25 GY/4 : Manocontact triple
A3 E26 B/3 : Phare droit
A3 E28 BR/3 : Feu combiné avant droit
A1 E29 GY/2 : Vers E204
B1 E30 GY/8 : Vers E203 (avec moteur de contrôle de l'ECM)
C3 E31 GY/2 : Capteur de roue avant droite (pour modèles avec ABS)
B2 E32 — : Boîte de relais (boîte de fusibles et de raccord à fusibles)
B1 E33 SB/8 : Vers E205
B2 E35 B/1 : Vers E206 (moteurs TD et QD)
C3 E36 B/1 : Electrovanne IACV-FICD (moteurs TD et QD)
C3 E37 B/1 : Electrovanne IACV-FICD (moteurs TD et QD)
D2 E39 — : Masse de carrosserie
B1 E42 W/1 : Relais 1 de préchauffage
C1 E43 W/1 : Relais 1 de préchauffage
C1 E44 G/2 : Relais 1 de préchauffage
C1 E45 GY/2 : Clignotant latéral droit
G3 E46 GY/3 : Antenne électrique (pour l'Europe)
E1 E48 B/1 : Vers E301 (moteur QD)
E1 E48 B/1 : Vers E301 (moteur QD)
E2 E49 L/2 : Vers E302 (moteur TD)
F1 E50 — : Boîte de fusibles et de raccord à fusibles
F1 E51 L/4 : Relais de ventilateur de refroidissement (moteur TD)
F1 E52 L/4 : Relais de climatisation
F1 E53 W/3 : Relais d'avertisseur sonore
G1 E55 BR/6 : Relais de l'ECM (moteurs YD et ZD)
D5 E56 B/2 : Feu antibrouillard avant droit (pour l'Europe)
C3 E59 B/2 : Capteur de température ambiante (moteurs YD et ZD)

D2 E61 B/2 : Electrovanne EGRC (chambre de papillon) (moteur TD avec EGR)
D2 E62 BR/2 : Electrovanne EGRC (soupape de papillon) (moteur TD avec EGR)
D1 E66 GY/6 : Boîtier de commande de mise en veilleuse (pour l'Europe)
C1 E67 GY/4 : Boîtier de commande de mise en veilleuse (pour l'Europe)
E3 E68 GY/8 : Vers A13 (moteurs TD et QD)
E3 E70 BR/3 : Vers A14 (moteurs YD et ZD)
A2 E71 B/2 : Vers E231 (moteurs YD et ZD)
A2 E72 B/1 : Vers E232 (moteurs YD et ZD)
A4 E74 B/2 : Feu antibrouillard avant droit (pour l'Europe)
B3 E85 GY/2 : Moteur de ventilateur de refroidissement (moteur TD)

COMPARTIMENT PASSAGER

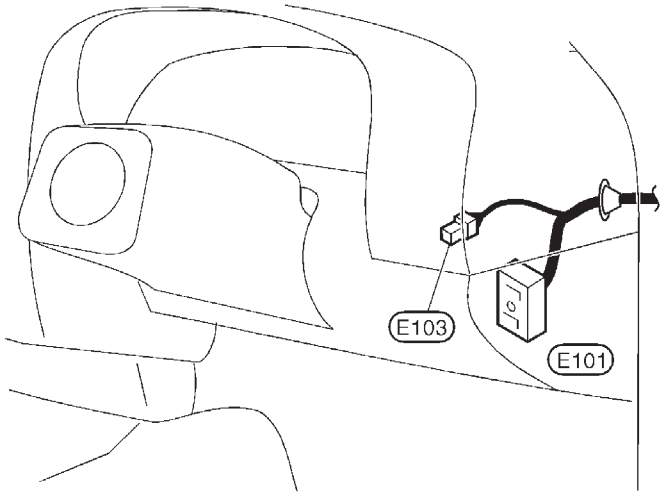

E101 SMJ : Vers M5
M103 B/2 : Boîtier à fusibles

Faisceau auxiliaire

D1 E301 B/1 : Vers E48 (moteur QD)
D2 E302 L/2 : Vers E49 (moteur TD)
E2 E303 — : Bougie de préchauffage (moteurs TD et QD)

Simpo PDF Merge and Split Unregistered Version - http://www.simpopdf.com

Faisceau de contrôle du moteur

MOTEUR VG

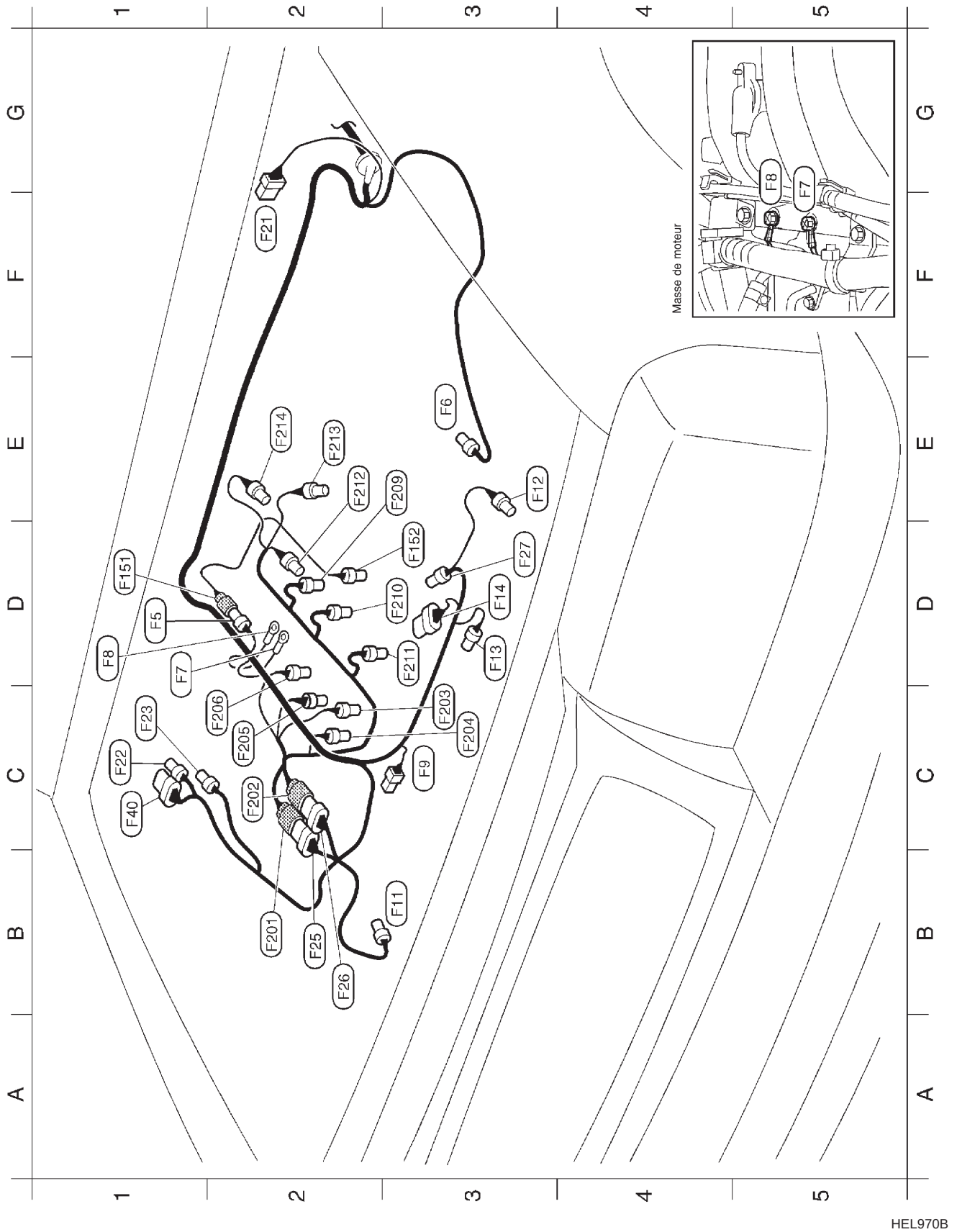

Simpo PDF Merge and Split Unregistered Version - http://www.simpopdf.com

Faisceau de contrôle du moteur (Suite)

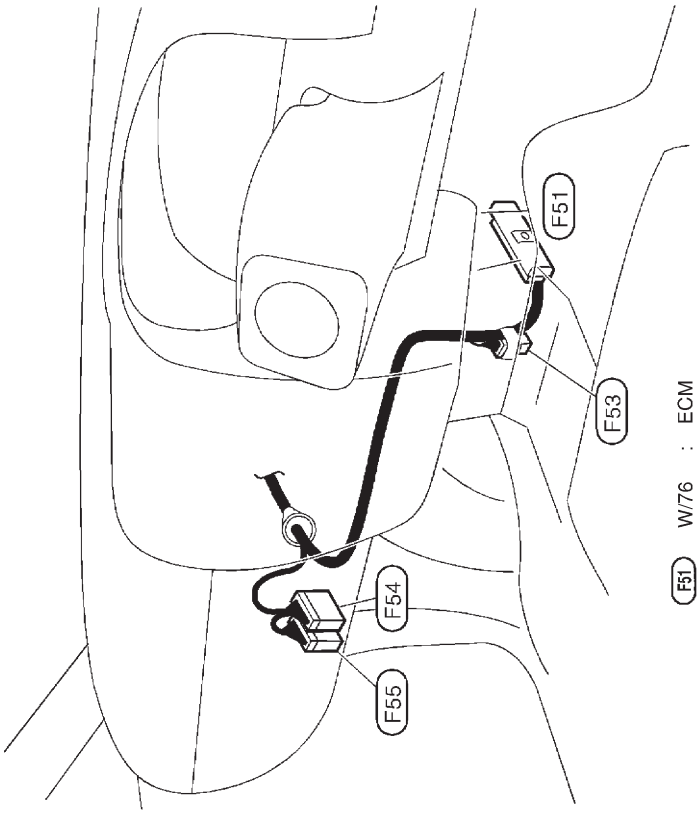

F51 W/76 : ECM
F53 GY/6 : Connecteur de raccord 1
F54 W/24 : Vers M48
F55 W/16 : Vers M47

D1	F5	GY/2	:	Vers F151
E3	F6	BR/4	:	Débitmètre d'air
D1	F7	—	:	Masse de moteur
D1	F8	—	:	Masse de moteur
C3	F9	B/1	:	Transmetteur thermique
B3	F11	B/2	:	Manocontact d'huile de direction assistée
E3	F12	B/1	:	Compresseur
D3	F13	GY/2	:	Distributeur
D3	F14	GY/6	:	Distributeur
F2	F21	W/6	:	Moteur d'essuie-glace
C1	F22	GY/3	:	Sonde à oxygène chauffée 1 (rangée 1)
C1	F23	GY/3	:	Sonde à oxygène chauffée 1 (rangée 2)
B2	F25	SB/8	:	Vers F201
B2	F26	GY/8	:	Vers F202
D3	F27	BR/3	:	Capteur de position de papillon
C1	F40	GY/8	:	Vers F227
B2	F201	SB/8	:	Vers F25
C2	F202	GY/8	:	Vers F26
C3	F203	GY/2	:	Capteur de température du liquide de refroidissement moteur
C3	F204	B/2	:	Injecteur n°1
C2	F205	B/2	:	Injecteur n°3
C2	F206	B/2	:	Injecteur n°5
E3	F209	B/2	:	Injecteur n°6
D3	F210	B/2	:	Injecteur n°4
D3	F211	B/2	:	Injecteur n°2
E2	F212	BR/2	:	Soupape IACV-AAV
E2	F213	GY/2	:	Electrovanne FICD
E2	F214	B/2	:	Electrovanne de commande de volume de purge de cartouche EVAP

Faisceau auxiliaire

D1	F151	GY/2	:	Vers F5
D3	F152	GY/2	:	Capteur de détonation

HEL971B

Simpo PDF Merge and Split Unregistered Version - http://www.simpopdf.com

Faisceau de contrôle du moteur (Suite)

COMPARTIMENT MOTEUR — MOTEUR YD (conduite à droite)

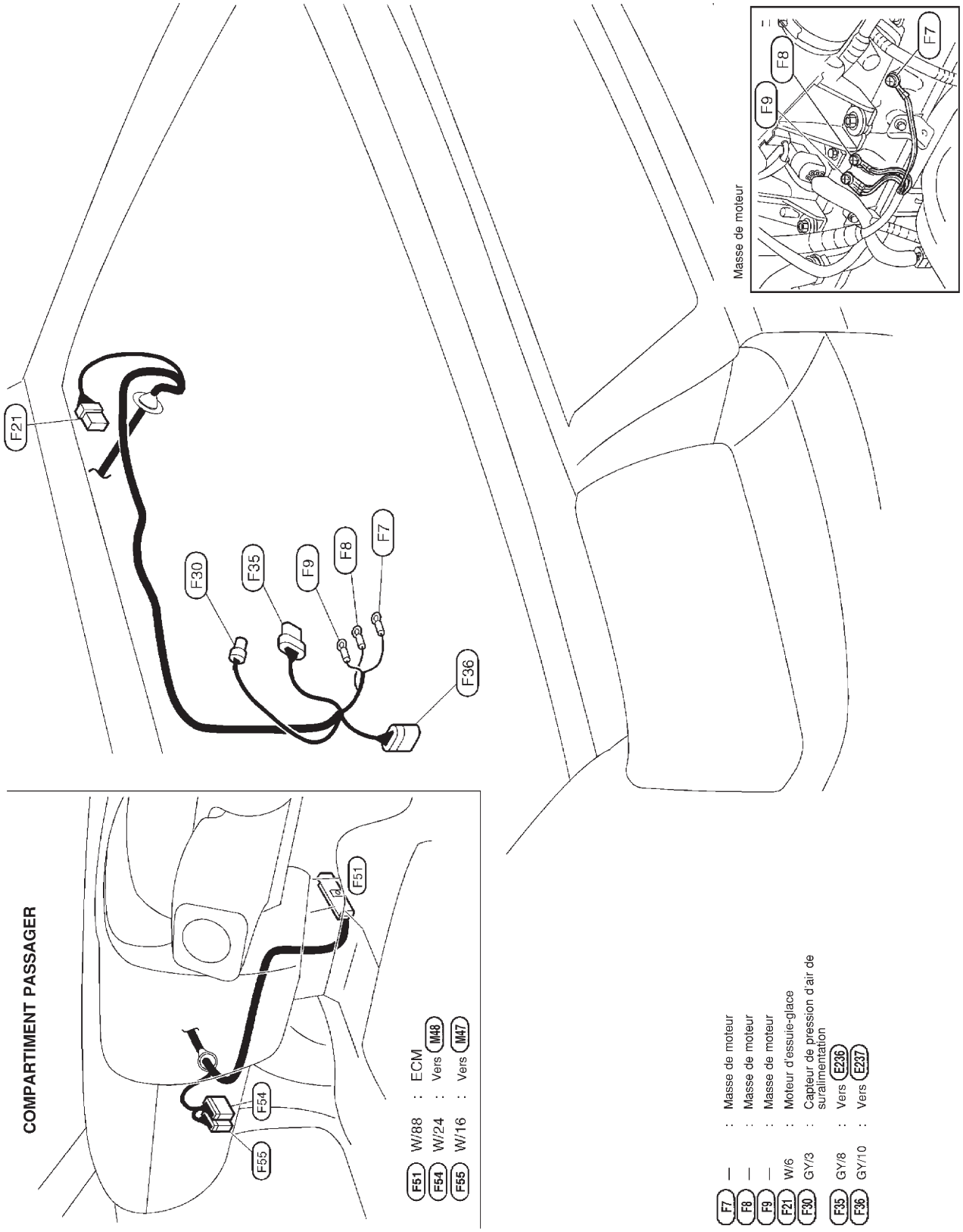

HEL972B

Simpo PDF Merge and Split Unregistered Version - http://www.simpopdf.com

Faisceau de châssis et faisceau de feu arrière

Faisceau de feu arrière

- (T1) W/6 : Bloc optique arrière droit (modèles avec châssis A ou partie arrière souple de la carrosserie sauf pour l'Europe, l'Australie et la Chine)
- (T2) W/8 : Bloc optique arrière droit (pour l'Europe, l'Australie et la Chine sauf modèles avec châssis A ou partie arrière de la carrosserie standard)
- (T3) GY/2 : Eclairage de plaque d'immatriculation droit (avec pare-chocs en forme de marchepied)
- (T4) SB/8 : Vers (C7)
- (T5) GY/2 : Eclairage de plaque d'immatriculation droit (sans pare-chocs en forme de marchepied)
- (T6) GY/2 : Eclairage de plaque d'immatriculation gauche (sans pare-chocs en forme de marchepied)
- (T7) B/2 : Eclairage de plaque d'immatriculation gauche (avec pare-chocs en forme de marchepied)
- (T8) W/6 : Bloc optique arrière gauche (modèles avec châssis A ou partie arrière souple de la carrosserie sauf pour l'Europe, l'Australie et la Chine)
- (T9) W/8 : Bloc optique arrière gauche (pour l'Europe, l'Australie et la Chine sauf modèles avec châssis A ou partie arrière souple de la carrosserie)
- (T10) GY/2 : Feu antibrouillard arrière (conduite à droite avec châssis A pour l'Europe)
- (T12) GY/2 : Feu antibrouillard arrière (conduite à gauche avec châssis A pour l'Europe)

Faisceau de châssis

- (C2) W/6 : Vers (M112) (avec ABS)
- (C3) GY/5 : Boîtier de capteurs de niveau de carburant et pompe à carburant
- (C5) SB/4 : Vers le faisceau auxiliaire de capteur de roue arrière (pour ABS) (modèles 4x4 et 4x2 avec frein arrière LT30)
- (C6) GY/2 : Capteur de roue arrière (pour ABS) (modèles 4x2 avec frein arrière LT26B)
- (C7) SB/8 : Vers (T4)
- (C9) W/16 : Vers (M121)
- (C10) BR/2 : Feu de stop surélevé (avec barre de protection)

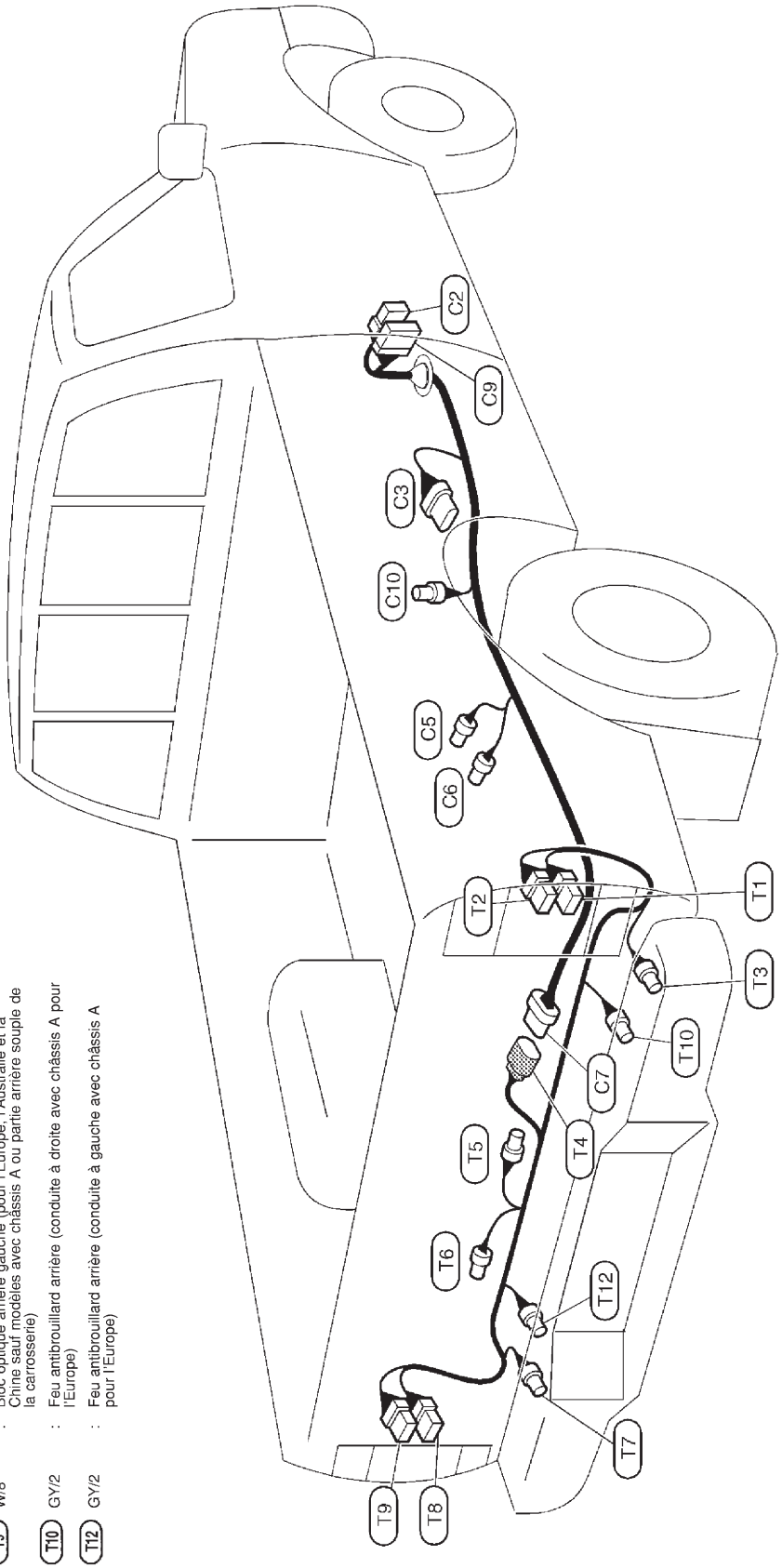

HEL974B

Simpo PDF Merge and Split Unregistered Version - http://www.simpopdf.com

Faisceau de plafonnier/Conduite à gauche

CABINE DOUBLE

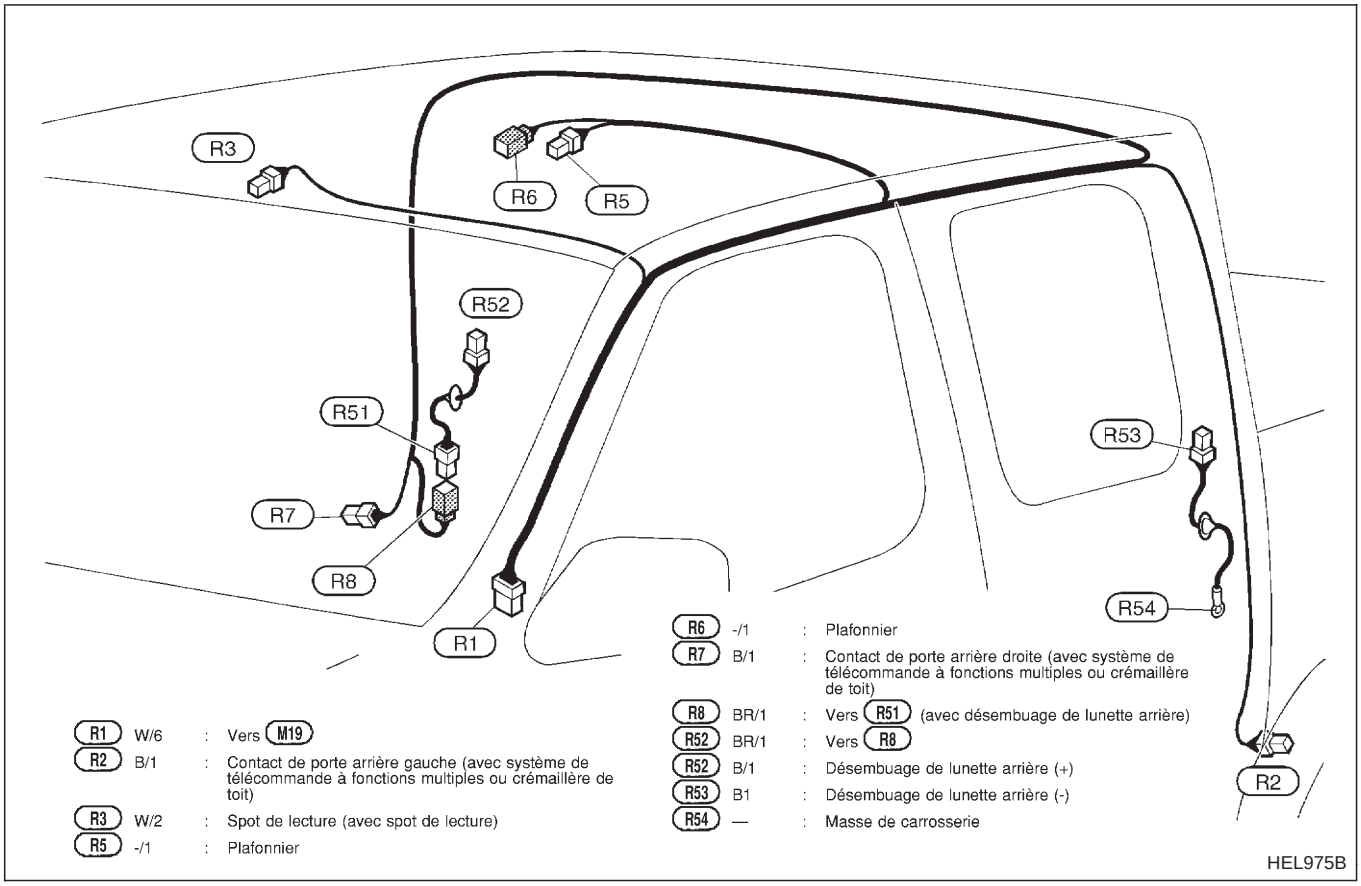

Simpo PDF Merge and Split Unregistered Version - http://www.simpopdf.com

Faisceau de plafonnier/Conduite à droite

CABINE DOUBLE

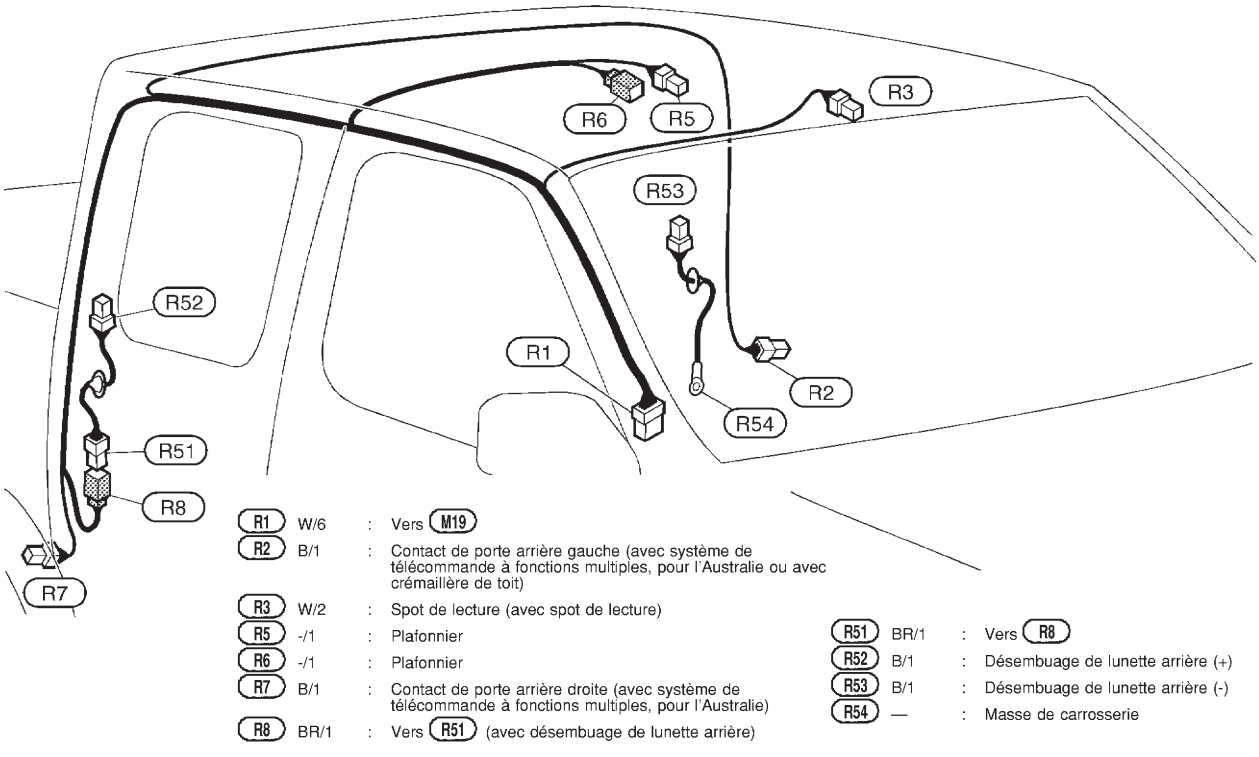

R1	W/6	:	Vers M19
R2	B/1	:	Contact de porte arrière gauche (avec système de télécommande à fonctions multiples, pour l'Australie ou avec crémaillère de toit)
R3	W/2	:	Spot de lecture (avec spot de lecture)
R5	-/1	:	Plafonnier
R6	-/1	:	Plafonnier
R7	B/1	:	Contact de porte arrière droite (avec système de télécommande à fonctions multiples, pour l'Australie)
R8	BR/1	:	Vers R51 (avec désembuage de lunette arrière)
R51	BR/1	:	Vers R8
R52	B/1	:	Désembuage de lunette arrière (+)
R53	B/1	:	Désembuage de lunette arrière (-)
R54	—	:	Masse de carrosserie

HEL976B

Simpo PDF Merge and Split Unregistered Version - http://www.simpopdf.com

Utiliser l'organigramme ci-dessous pour trouver chaque signification de code de schéma de câblage.
Consulter le code du schéma de câblage dans l'index alphabétique pour trouver l'emplacement (numéro de page) de chaque schéma de câblage.

Code	Section	Nom du schéma de câblage
AAC/V	EC	Soupape IACV-AAC
A/C, A	HA	Climatisation automatique
A/C, M	HA	Climatisation manuelle
A/CCUT	EC	Commande de climatisation
AIRREG	EC	IACV-Régulateur d'air
AUDIO	EL	Audio
BACK/L	EL	Feux de recul
CHIME	EL	Témoin sonore
CMPS	EC	Capteur d'angle d'arbre à cames
COOL/F	LC, EC	Commande du ventilateur de refroidissement
ECTS	EC	Capteur de température de liquide de refroidissement moteur
F/FOG	EL	Feu antibrouillard avant
FICD	EC	Electrovanne FICD
F/PUMP	EC	Pompe d'alimentation en carburant
GLOW	EC	Système de préchauffage rapide
H/AIM	EL	Commande de réglage des faisceaux
IGNSYS	EC	Signal d'allumage
ILL	EL	Eclairage
INJECT	EC	Injecteur
KS	EC	Capteur de détonation
LOAD	EC	Signal de charge électrique
MAFS	EC	Débitmètre d'air
MAIN	EC	Circuit d'alimentation électrique principal et de mise à la masse
METER	EL	Compteur de vitesse, compte-tours, jauges de température et de carburant

Code	Section	Nom du schéma de câblage
MIL/DL	EC	MIL et connecteurs de diagnostic
NATS	EL	Système antivol Nissan
O2H1B1	EC	Réchauffeur de sonde à oxygène chauffé 1 (avant)
O2H2B1	EC	Réchauffeur de sonde à oxygène chauffé 2 (arrière)
O2S1B1	EC	Sonde à oxygène chauffée 1
O2S2B1	EC	Sonde à oxygène chauffée 2
PGC/V	EC	Electrovanne de commande de purge de cartouche EVAP
PNP/SW	EC	Contact de position de stationnement/point mort
POWER	EL	Disposition de l'alimentation électrique
PST/SW	EC	Manocontact d'huile de direction assistée
R/FOG	EL	Feu antibrouillard arrière
ROOM/L	EL	Plafonnier
SRS	RS	Système de retenue supplémentaire
S/SIG	EC	Signal de démarrage
TAIL/L	EL	Feux de stationnement, éclairage de plaque d'immatriculation et feux arrière
TPS	EC, AT	Capteur de position de papillon
VSS	EC	Capteur de vitesse du véhicule
WARN	EL	Témoins d'avertissement

Simpo PDF Merge and Split Unregistered Version - http://www.simpopdf.com

<SUPPLEMENT-IV>

ESSIEU AVANT ET SUSPENSION AVANT

SECTION FA

AVIS DE MODIFICATION :
La quantité d'application de graisse sur le semi-arbre a été modifié.

TABLE DES MATIERES

CARACTERISTIQUES ET VALEURS DE REGLAGE (SDS).....4002
Inspection et Réglage.....4002

Simpo PDF Merge and Split Unregistered Version - http://www.simpopdf.com

Inspection et Réglage

SEMI-ARBRE (4x4)

Type de joint pour semi-arbre	
Côté transmission de l'essieu	TS82F
Côté roue	ZF100*
Limite du jeu axial du joint fixé mm	1
Diamètre mm	
Côté roue (D_1)	29,0
Graisse	
Qualité	Graisse d'origine Nissan ou équivalent
Capacité g	
Côté transmission de l'essieu	95 - 105 (3,35 - 3,70)
Côté roue*	115 - 125
Longueur de soufflet mm	
Côté transmission de l'essieu (L_1)	95 - 97
Côté roue (L_2)*	96 - 98

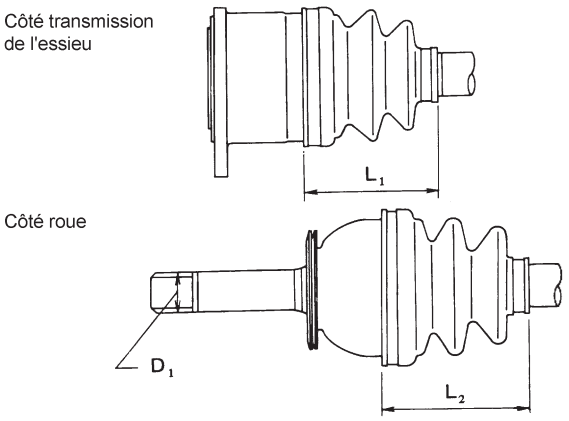

SFA877A

*: Le joint de type ZF100 (côté roue) est constitué de deux types de soufflet ; le premier est composé de caoutchouc et le second est composé de plastique. Ne pas démonter l'ensemble joint composé de soufflet plastique.Si le soufflet ou le joint est endommagé, remplacer l'ensemble de semi-arbre.

Simpo PDF Merge and Split Unregistered Version - http://www.simpopdf.com

Disposition des bornes

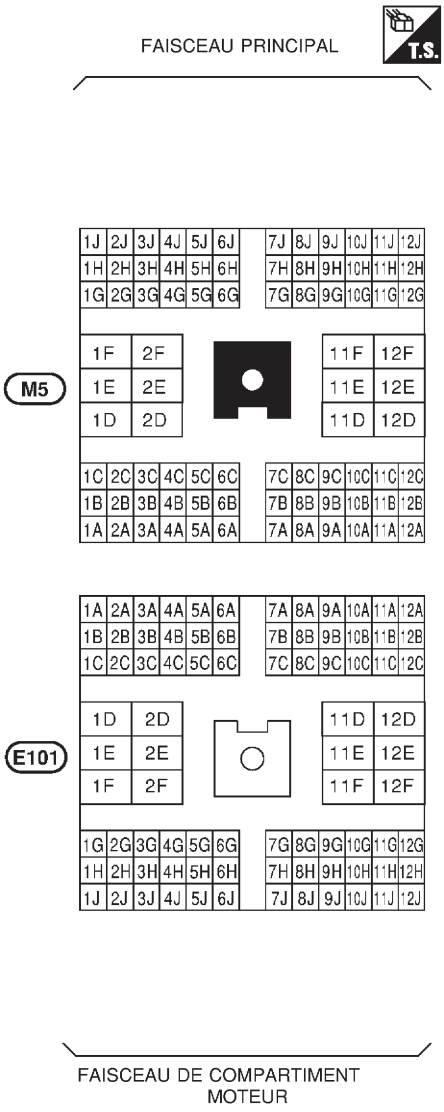

Simpo PDF Merge and Split Unregistered Version - http://www.simpopdf.com

NISSAN

PICKUP

SERIE DES MODELES D22

AVANT-PROPOS

Ce supplément contient des informations sur les opérations d'entretien nécessaires, ainsi que les caractéristiques qui se rapportent à la nouvelle version des séries D22.

Toutes les informations, illustrations et caractéristiques contenues dans ce supplément sont basées sur les derniers renseignements disponibles au moment de la publication. Si le véhicule NISSAN ne répond pas aux caractéristiques indiquées dans ce supplément, consulter son concessionnaire NISSAN.

Nous nous réservons tous droits d'effectuer des changements dans les caractéristiques et les méthodes, à tout moment et sans préavis.

Edition : Mars 2003
Imprimé : Avril 2003 (01)
Numéro de Publication : SM3F-D22DE0E
Numéro de Référence : 7711346917

NISSAN EUROPE S.A.S.

TABLE DE REFERENCE RAPIDE

GENERALITES	GI
ENTRETIEN	MA
ELEMENTS DU MOTEUR	EM
CIRCUIT DE LUBRIFICATION DU MOTEUR ET CIRCUIT DE REFROIDISSEMENT	LC
SYSTEME DE GESTION MOTEUR	EC
SYSTEMES DE COMMANDE D'ACCELERATEUR, D'ALIMENTATION ET D'ECHAPPEMENT	FE
EMBRAYAGE	CL
BOITE DE VITESSES MANUELLE	MT
BOITE DE TRANSFERT	TF
ARBRE DE TRANSMISSION ET PORTE-DIFFERENTIEL	PD
ESSIEU ET SUSPENSION AVANT	FA
ESSIEU ET SUSPENSION ARRIERE	RA
SYSTEME DE FREINAGE	BR
DIRECTION	ST
SYSTEME DE RETENUE	RS
CARROSSERIE ET GARNITURE	BT
CHAUFFAGE ET CLIMATISEUR	HA
EQUIPEMENT ELECTRIQUE	EL
TABLE ALPHABETIQUE	IDX

© 2003 NISSAN EUROPE S.A.S. Imprimé aux Pays-Bas
Cette publication ne peut être reproduite, que ce soit en tout ou en partie, sans la permission préalable écrite de Nissan Europe N.V., Amsterdam, Les Pays-Bas.

Simpo PDF Merge and Split Unregistered Version - http://www.simpopdf.com

AVANT-PROPOS

Ce manuel contient les travaux d'entretien et de réparation concernant les véhicules NISSAN PICKUP, série des modèles D22.

A des fins de sécurité et pour que le rendement des véhicules concernés soit optimal, prière de lire ce manuel complètement. Avant de commencer à entreprendre des travaux, il est particulièrement important d'avoir parfaitement assimilé les PRECAUTIONS signalées dans la section GI.

Toutes les informations contenues dans ce manuel sont basées sur les données de production les plus récentes au moment de la réalisation du manuel. Nous nous réservons le droit de modifier les caractéristiques et les méthodes de travail à n'importe quel moment et sans avis préalable.

NOTE IMPORTANTE DE SECURITE

Un entretien correctement effectué est essentiel, aussi bien pour la sécurité des mécaniciens que pour le fonctionnement adéquat du moteur. Les méthodes d'entretien reprises dans ce manuel de réparation sont décrites de telle manière que le travail puisse être effectué en sécurité et avec précision. Les entretiens varient selon les procédures, les connaissances du technicien et l'outillage, ainsi que les pièces disponibles. Dès lors, toute personne utilisant les procédures d'entretien, un outillage ou des pièces qui ne sont pas spécifiquement recommandées par NISSAN doit auparavant être absolument certain que ceci n'entraîne de danger ni pour sa propre sécurité, ni pour celle du moteur.

NISSAN EUROPE S.A.S.

Service Engineering Section

Paris, France

Simpo PDF Merge and Split Unregistered Version - http://www.simpopdf.com

<SUPPLEMENT-IV>

SECTION GI

AVIS DE MODIFICATION :

- Le système antipollution du moteur KA24DE a subi des modifications.
- Le climatiseur automatique pour l'Europe a subi des modifications.

TABLE DES MATIERES

SYSTEME DE VERIFICATION CONSULT-II 4002
Application de la fonction du système 4002
Remplacement de la pile à hydrure composé de nickel 4002
Equipement de vérification 4003
Circuit du connecteur de liaison de données (DLC) de CONSULT-II 4003
INFORMATIONS D'IDENTIFICATION 4004
Variantes de modèles 4004
Numéro d'identification 4006
Dimensions 4006

Cette modification a été prise en compte dans la production en commençant par les numéros d'identification du véhicule (numéro de châssis) :

Pour l'Europe

- JN1APGD22U0055001
- JN1APUD22U0035001
- JN1BPGD22U0032001
- JN1BPUD22U0083001
- JN1CPGD22U0045001
- JN1CPUD22U0078001
- JN1ADGD22U0021001
- JN1BDGD22U0031001
- JN1BDUD22U0031001
- JN1CDUD22U0031001

Simpo PDF Merge and Split Unregistered Version - http://www.simpopdf.com

Application de la fonction du système

Mode de test de diagnostic	Fonctionnement	MOTEUR	T/A	ABS	AIRBAG
Support de travail	Ce mode permet au technicien de régler certains dispositifs de façon plus rapide et plus exacte en suivant les indications fournies par CONSULT-II.	x	x	—	—
Résultats de l'auto-diagnostic	Les résultats de l'auto-diagnostic peuvent être rapidement lus et effacés.	x	x	x	x
Enregistrement du diagnostic des défauts	Les résultats actuels de l'auto-diagnostic et tous les diagnostics des défauts précédemment enregistrés peuvent être lus.	—	—	—	x
N° ECU incriminé	La lecture du numéro de classification d'un ECU de rechange permet d'éviter la repose éventuelle d'un mauvais ECU.	—	—	—	x
Contrôle de données	Les données à l'entrée et à la sortie de l'ECU (ECM) sont lisibles.	x	x	x	—
Support travail DTC	Ce mode permet au technicien de régler les conditions de fonctionnement permettant de confirmer les états/résultats d'autodiagnostic.	—	x	—	—
Test actif	Mode d'essai de diagnostic dans lequel CONSULT-II sépare certains actionneurs et décale certains paramètres dans une gamme spécifiée.	x	—	x	—
Numéro de pièce de l'ECU (ECM)	Le numéro de pièce de l'ECU (ECM) est lisible.	x	x	x	—
Contrôle du fonctionnement	Mené par CONSULT-II au lieu d'un technicien pour déterminer si chaque système est BON ou MAUVAIS.	x	x	x	x

X : s'applique

Remplacement de la pile à hydrure composé de nickel

CONSULT-II contient une pile à hydrure composé de nickel. Lors du remplacement de la pile, respecter les points suivants :

ATTENTION :

Remplacer la pile à hydrure composé de nickel uniquement avec une véritable pile pour boîtier CONSULT-II. L'utilisation d'une autre pile peut entraîner un risque d'incendie ou d'explosion. Un mauvais traitement de la pile peut entraîner un risque de feu ou de brûlure chimique. Ne pas recharger, démonter ou jeter au feu.

Veiller à placer la pile hors de portée des enfants et mettre les piles usées au rebut conformément aux réglementations locales.

Simpo PDF Merge and Split Unregistered Version - http://www.simpopdf.com

Equipement de vérification

Pour commander les accessoires ci-dessous, contacter un distributeur NISSAN.

Nom de l'outil	Description
NISSAN CONSULT-II ① Boîtier CONSULT-II (logiciel interne du testeur : version résidente 3.3.0) et accessoires ② Carte programme AED01C pour diagnostique, AEN00A/00B pour NATS. Afin de confirmer la meilleure combinaison de ces logiciels, se reporter au manuel d'utilisation de CONSULT-II.	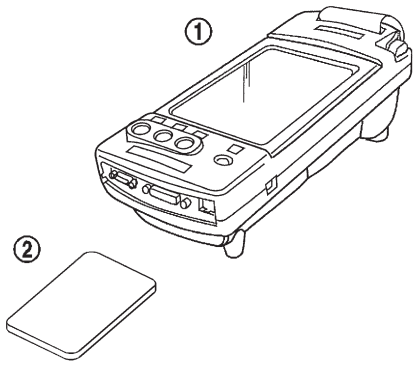 SGI083A

NOTE :

- **CONSULT-II doit être utilisé conjointement avec une carte programme. CONSULT-II ne nécessite pas de procédure de charge (initialisation).**
- **S'assurer que CONSULT-II est éteint avant de reposer ou de déposer la carte programme.**

Circuit du connecteur de liaison de données (DLC) de CONSULT-II

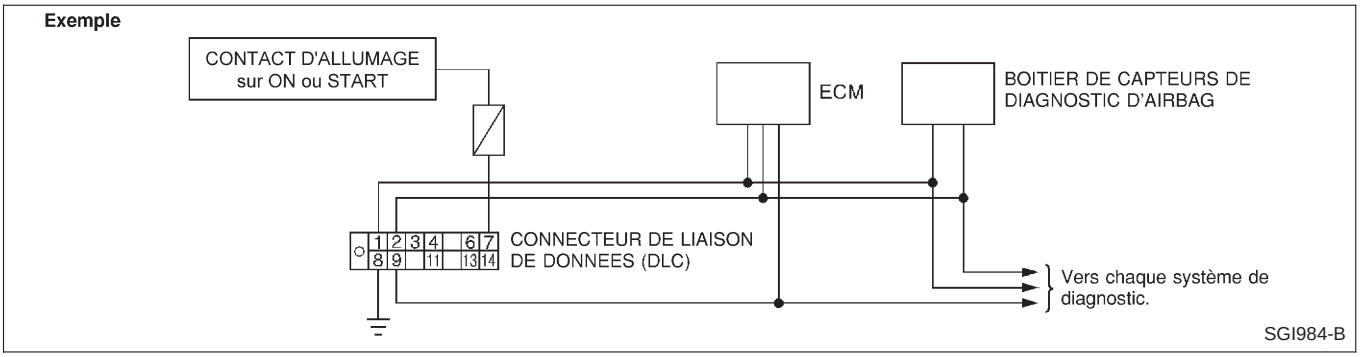

PROCEDURE D'INSPECTION

Si CONSULT-II ne peut pas effectuer un diagnostic correct du système, vérifier les points suivants :

Symptôme	Elément à contrôler
CONSULT-II ne peut accéder à aucun système.	● Circuit d'alimentation électrique (borne 7) du connecteur de diagnostic pour CONSULT-II (borne 7) et circuit de mise à la masse (borne 8) (Pour le détail du circuit, se reporter au ''Schéma de câblage des connecteurs de liaison de données et MIL'' dans la section EC.) ● Câble DDL CONSULT-II
CONSULT-II ne peut accéder à aucun système individuel. (Mais peut accéder à d'autres systèmes.)	● Carte de programme de CONSULT-II (Vérifier la carte de programme CONSULT-II correspondant au système. Se reporter à ''Equipement de vérification'' ci-dessus). ● Alimentation électrique et circuit de mise à la masse du boîtier de commande du système (Pour le circuit détaillé, se reporter au schéma de câblage de chaque système.) ● Circuit ouvert ou court-circuit entre le système et le connecteur de liaison de données de CONSULT-II (Pour le circuit détaillé, se reporter au schéma de câblage de chaque système.)

Simpo PDF Merge and Split Unregistered Version - http://www.simpopdf.com

PICKUP (2 roues motrices)

Destination	Catégorie			Modèle		Moteur	Boîte de vitesses	Support de différentiel
	Cabine	Empattement	Classe	Conduite à gauche	Conduite à droite			
Europe	Cabine simple	Long	STD	ABGGLCFD22EQL	—	KA24DE	FS5W71C	C200*
				AVLGLCFD22UQL		YD25DDTi	FS5R30A	
			DX	ABGGLDFD22EQL	—	KA24DE	FS5W71C	
				AVLGLDFD22UQL	AVLGRDFD22UQL	YD25DDTi	FS5R30A	
	Cabine King		DX	BBGGLDFD22EQN	—	KA24DE	FS5W71C	
				BVLGLDFD22UQN	BVLGRDFD22UQN	YD25DDTi	FS5R30A	
		Apparence 4x4	DX	BVLGLDFD22UQG	—	YD25DDTi	FS5R30A	
			ST	BVLGLEFD22UQG	—			
	Cabine double		DX	CVLGLDFD22UQN	CVLGRDFD22UQN			
		Apparence 4x4	DX	CVLGLDFD22UQG	—			
			ST	CVLGLEFD22UQG	—			

PICKUP (4 roues motrices)

Destination	Catégorie			Modèle		Moteur	Boîte de vitesses	Support de différentiel		Boîte de transfert
	Cabine	Empattement	Classe	Conduite à gauche	Conduite à droite			Avant	Arrière	
Europe	Cabine simple	Long	STD	AVLULCFD22UQL	AVLURCFD22UQL	YD25DDTi	FS5R30A	R180	C200*	TX10
			DX	AVLULDFD22UQL	AVLURDFD22UQL					
	Cabine King		DX	BBGULDFD22EQN	—	KA24DE	FS5W71C			
				BVLULDFD22UQN	BVLURDFD22UQN	YD25DDTi	FS5R30A			
			ST	BBGULEFD22EQN	—	KA24DE	FS5W71C			
				BVLULEFD22UQN	BVLUREFD22UQN	YD25DDTi	FS5R30A			
			SE	BVLULFFD22UQN	BVLURFFD22UQN					
	Cabine double		DX	CBGULDFD22EQN	—	KA24DE	FS5W71C			
				CVLULDFD22UQN	CVLURDFD22UQN	YD25DDTi	FS5R30A			
			ST	CBGULEFD22EQN	—	KA24DE	FS5W71C			
				CVLULEFD22UQN	CVLUREFD22UQN	YD25DDTi	FS5R30A			
			SE	CVLULFFD22UQN	CVLURFFD22UQN					

Simpo PDF Merge and Split Unregistered Version - http://www.simpopdf.com

Variantes de modèles (Suite)

Significations des préfixes et des suffixes (Pick-up)

A BG G L C F D22 E W L

L : partie arrière de la carrosserie normale
N : partie souple de la carrosserie arrière
G : modèles apparence 4x4 (4x2)

W : sauf pour l'Australie, le Moyen-Orient et l'Europe
M : Australie
K : Moyen Orient
Q : Europe

S : moteur à carburateur
E : moteur à injection de carburant multipoint
N : moteur diesel
T : moteur à turbocompresseur
U : moteur à turbocompresseur avec refroidisseur intermédiaire

F : boîte de vitesses manuelle à 5 vitesses avec commande au plancher
B : transmission automatique à 4 vitesses avec levier à colonne
A : transmission automatique à 4 vitesses avec levier au plancher

C : modèles STD D : modèles DX E : modèles GL, ST F : modèles SGL, SE

L : conduite à gauche R : conduite à droite

A : empattement standard (4x2) G : empattement long (4x2)
U : empattement long (4x4)

BE : moteur Z24S BG : moteur KA24DE LB : moteur VG30E LP : moteur VG33E
VL : moteur YD25DDTi VP : moteur TD27 WS : moteur ZD30DDT VR : moteur QD32

A : cabine simple B : cabine King C : cabine double

Simpo PDF Merge and Split Unregistered Version - http://www.simpopdf.com

Numéro d'identification

NUMERO D'IDENTIFICATION DU VEHICULE

Significations des préfixes et des suffixes
JN1 : véhicule produit au Japon

Pour l'Europe

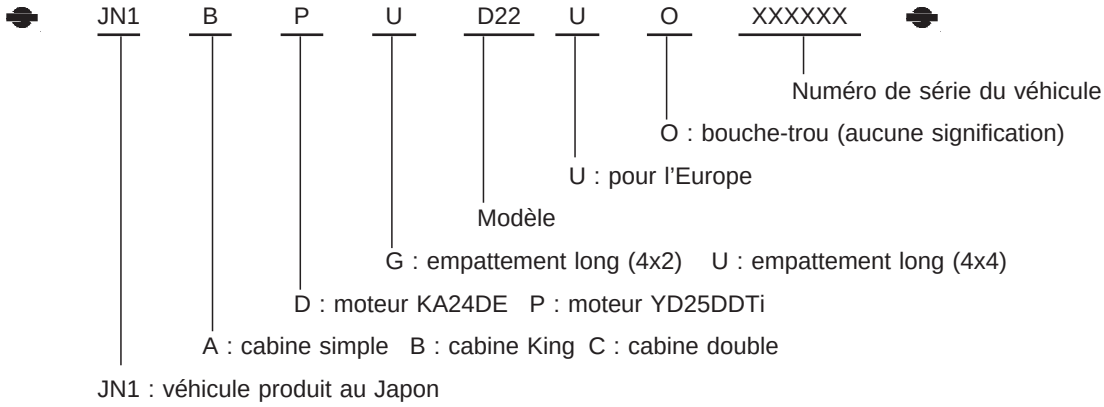

Dimensions

Destination		Europe					
Type de véhicule		Modèles à 2 roues motrices			Modèles à 4 roues motrices		
Empattement		Long			Long		
Type à cabine complète ou plateau		Cabine simple	Cabine King	Cabine double	Cabine simple	Cabine King	Cabine double
Longueur hors tout *	mm	5,020 5,180 *1	5,045 5,180 *1	4,955 5,090 *1	5,020 5,180 *1	5,045 5,180 *1	4,955 5,090 *1
Largeur hors tout	mm	1,690	1,690 1,825 *2	1,690 1,825 *2	1,825	1,825	1,825
Hauteur hors tout	mm	1,610 1,620 *4	1,610 1,620 *4 1,700 *2	1,620 1,630 *4 1,710 *2 1,810 *2, *6	1,700	1,700 1,705 *3 1,695 *5	1,715 1,815 *6 1,720 *3 1,820 *6, *3 1,710 *5 1,810 *6, *5
Empattement	mm	2,950	2,950	2,950	2,950	2,950	2,950
Chape	Avant mm	1,395	1,395 1,525 *2	1,395 1,525 *2	1,525	1,525	1,525
	Arrière mm	1,390	1,390 1,505 *2	1,390 1,505 *2	1,505	1,505	1,505
Garde au sol minimum	mm	180 190 *4	180 190 *4 240 *2	180 190 *4 240 *2	230	230 240 *3 225 *5	230 240 *3 225 *5

*1 : modèles équipés de pare-chocs à marchepied
*2 : modèles apparence 4x4
*3 : avec pneus 255/70R16 en option
*4 : avec pneus 195R15C en option
*5 : avec pneus 255/60R17 en option
*6: modèles équipés de rail de toit

Simpo PDF Merge and Split Unregistered Version - http://www.simpopdf.com

CHAUFFAGE & CLIMATISATION

SECTION HA

AVIS DE MODIFICATION :

- Le compresseur a été remplacé (moteur KA).
- Le réfrigérant a été changé.
- Le bouchon de fusible fixé au réservoir de liquide a été éliminé.
- La soupape de décharge de pression a été ajouté au compresseur.
- Les schémas de câblage ont été modifiés.
- L'ampli. de commande thermique du climatiseur auto. a été supprimé et le diagnostic de défauts de l'embrayage magnétique a été modifié.
- La soupape de décharge de pression a été ajouté au compresseur (moteurs KA24DE et YD25DDT).
- La quantité de réfrigérant a été modifiée (moteur YD25DDT). Se reporter à SDS.

TABLE DES MATIERES

MANUEL

PRECAUTIONS ET PREPARATION 4002
Système de retenue supplémentaire (SRS) AIRBAG et PRETENSIONNEUR DE CEINTURE DE SECURITE 4002
Précautions concernant les raccords de réfrigérant 4003
DESCRIPTION 4004
Cycle de refroidissement 4004
DIAGNOSTICS DES DEFAUTS 4005
Schéma du circuit - A/C, M - 4005
Schéma de câblage - A/C, M -/conduite à gauche avec moteurs KA, YD et ZD 4006
Schéma de câblage - A/C, M -/conduite à droite avec moteur KA 4009
Schéma de câblage - A/C, M -/conduite à droite avec moteurs VG, YD et ZD 4012
CARACTERISTIQUES ET VALEURS DE REGLAGE (SDS) 4015
Caractéristiques générales 4015
Inspection et réglage 4015

AUTO

PRECAUTIONS ET PREPARATION 4016
Système de retenue supplémentaire (SRS) AIRBAG et PRETENSIONNEUR DE CEINTURE DE SECURITE 4016
DIAGNOSTICS DES DEFAUTS 4017
Schéma du circuit - A/C, A - 4017
Schéma de câblage - A/C, A - 4018
Embrayage magnétique 4023
CARACTERISTIQUES ET VALEURS DE REGLAGE (SDS) 4026
Caractéristiques générales 4026
Inspection et réglage 4026

Simpo PDF Merge and Split Unregistered Version - http://www.simpopdf.com

Système de retenue supplémentaire (SRS) AIRBAG et PRETENSIONNEUR DE CEINTURE DE SECURITE

Utilisés conjointement avec une ceinture de sécurité, les éléments du système de retenue supplémentaire tels que l'AIRBAG et le PRETENSIONNEUR DE CEINTURE DE SECURITE permettent de réduire les risques de blessures graves subies par le conducteur et le passager avant dans certains types de collision frontales. La composition du système SRS disponible pour le MODELE NISSAN D22 est la suivante (la composition varie selon les pays et les équipements optionnels) :
Un module d'airbag conducteur (situé dans le moyeu du volant), un module d'airbag passager (situé sur le tableau de bord côté passager), des prétensionneurs de ceintures de sécurité, un boîtier de capteurs de diagnostic, un témoin d'avertissement, un faisceau de câblage et un câble spiralé.

ATTENTION :

- **Pour ne pas affecter le fonctionnement du SRS, ce qui augmenterait les risques de blessures graves, voire mortelles, en cas de collision entraînant le déploiement de l'airbag toutes les opérations d'entretien doivent être effectuées par un concessionnaire NISSAN agréé.**
- **Un entretien incorrect, y compris une dépose et une repose incorrectes du système de retenue supplémentaire (SRS), peut être à l'origine de blessures provoquées par le déploiement involontaire du système.**
- **Ne pas utiliser d'équipement d'essai électrique sur les circuits connexes du SRS, sauf si indiqué dans ce manuel de réparation. Les faisceaux de câblage SRS peuvent être identifiés par la couleur jaune des connecteurs de faisceaux**

Simpo PDF Merge and Split Unregistered Version - http://www.simpopdf.com

Précautions concernant les raccords de réfrigérant

Un nouveau type de raccord de réfrigérant a été introduit pour chaque conduit de réfrigération sauf pour les parties suivantes.

- Soupape d'expansion à unité de refroidissement

CARACTERISTIQUES DU NOUVEAU TYPE DE RACCORD DE REFRIGERANT

- Le joint torique a été déplacé. Il est désormais fourni avec une rainure pour une repose adéquate. Ceci élimine les risques de voir le joint torique être coincé ou endommagé dans la partie de raccordement. Le sens d'étanchéité du joint torique est maintenant vertical, en relation avec la surface de contact de la partie de raccordement, de façon à améliorer les caractéristiques de l'étanchéité.
- La force de réaction du joint torique n'apparaîtra pas dans le sens qui entraîne l'extraction du joint, facilitant ainsi les raccords de tuyauterie.

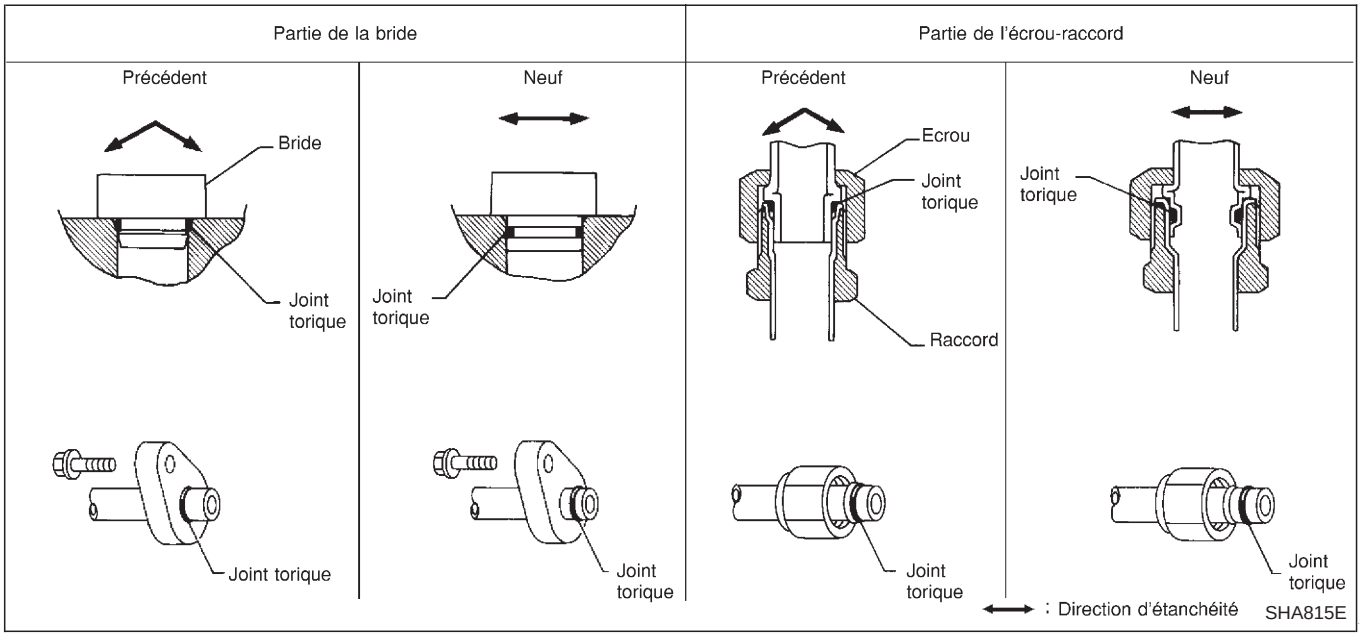

PRECAUTION :

Les nouveaux et les anciens raccords de liquide de refroidissement utilisent des configurations de joint torique différentes. Ne pas mélanger les joints toriques car ils ne sont pas interchangeables. Si un joint torique inadéquat est reposé, le liquide de refroidissement fuira au niveau ou autour du raccord.

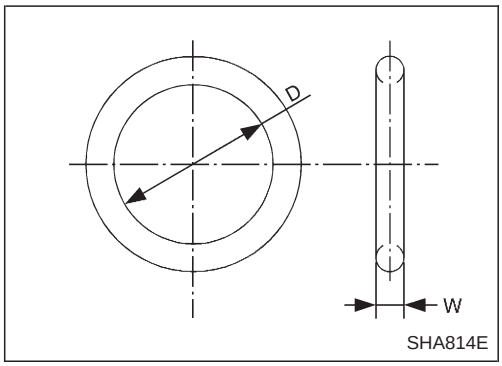

Numéros et caractéristiques des pièces de joint torique

Type de raccord	Taille de joint torique	Numéro de pièce	D mm	W mm
Neuf	8	92471 N8210	6,8	1,87
Ancien		92470 N8200	6,07	1,78
Neuf	12	92472 N8210	10,9	2,43
Ancien		92475 71L00	11,0	2,4
Neuf	16	92473 N8210	13,6	2,43
Ancien		92475 72L00	14,3	2,3
Neuf	19	92474 N8210	16,5	2,43
Ancien		92477 N8200	17,12	1,78

Simpo PDF Merge and Split Unregistered Version - http://www.simpopdf.com

Cycle de refroidissement

PROTECTION DU SYSTEME DE REFRIGERANT

Le système de réfrigérant est aussi protégé par une soupape de décharge de pression située sur le compresseur (sauf pour moteur VG) ou un flexible haute pression (moteur VG). Lorsque la pression du réfrigérant dans le système augmente de manière inhabituelle [plus de 3 727 kPa (37,3 bar, 38 kg/cm^2)], l'orifice de sortie sur la soupape de décharge de pression s'ouvre automatiquement et libère le réfrigérant dans l'atmosphère.

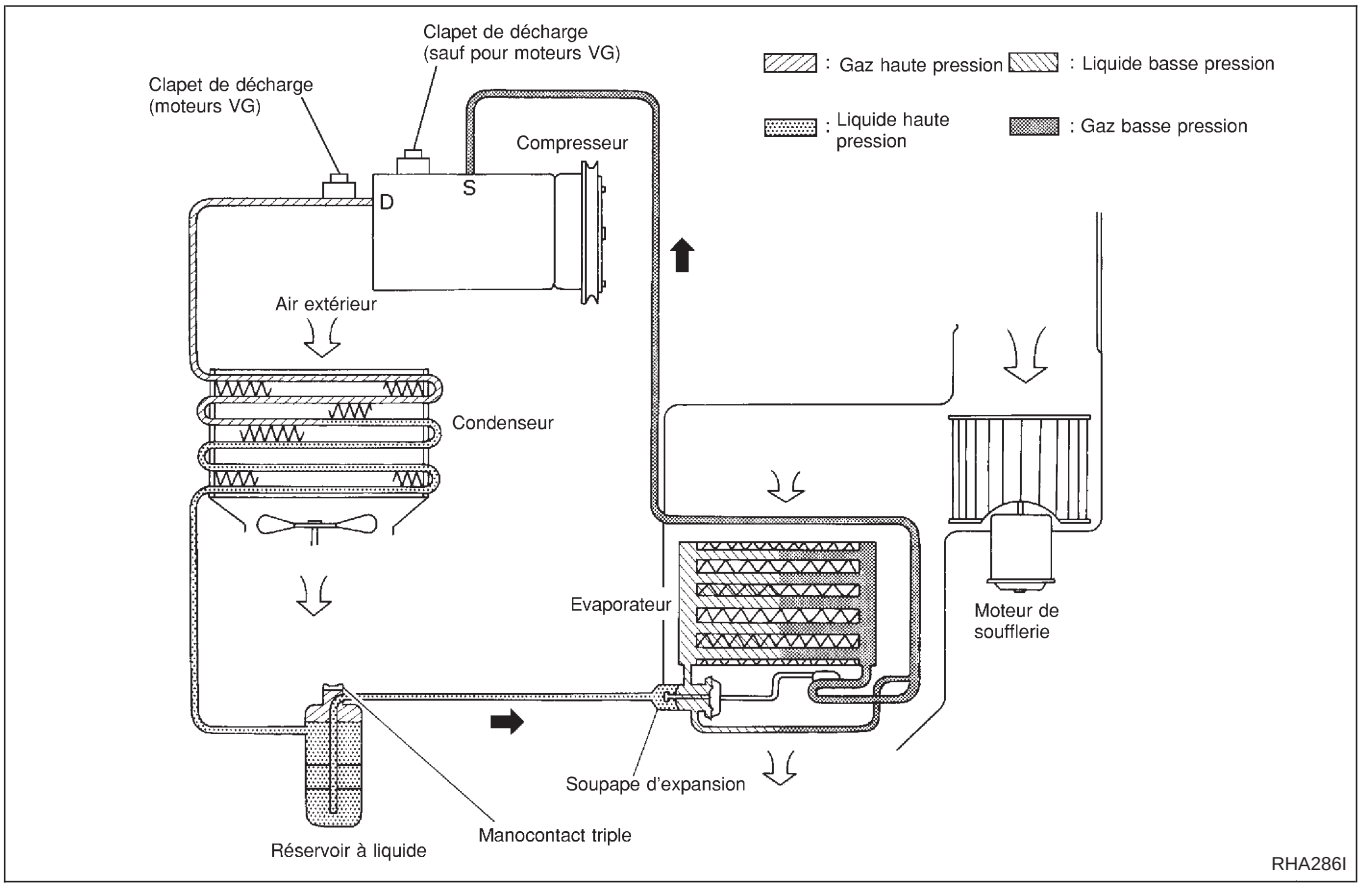

Simpo PDF Merge and Split Unregistered Version - http://www.simpopdf.com

Schéma du circuit — A/C, M —

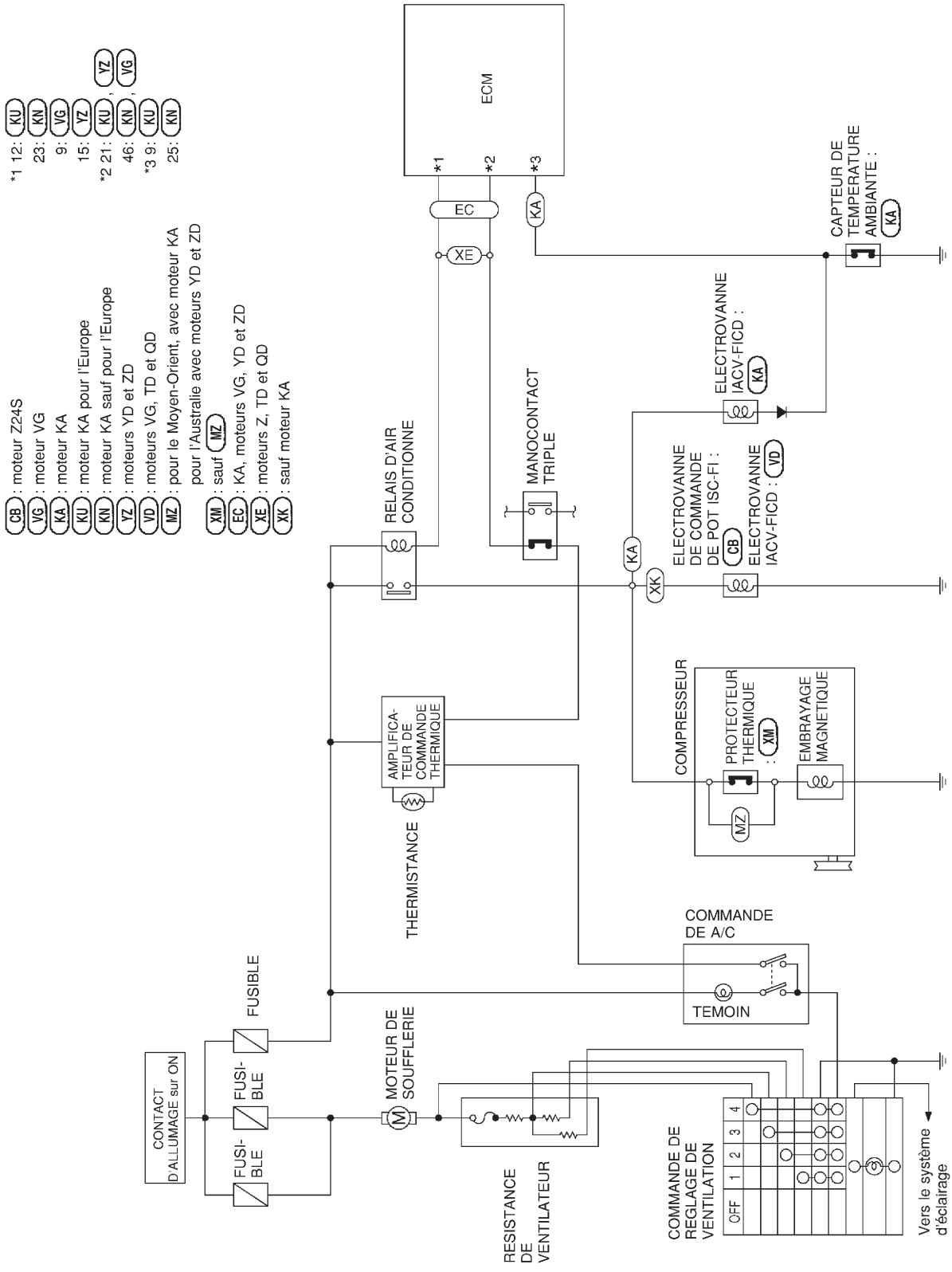

GHA076A

Simpo PDF Merge and Split Unregistered Version - http://www.simpopdf.com

Schéma de câblage — A/C, M —/conduite à gauche avec moteurs KA, YD et ZD

HA-A/C,M-01

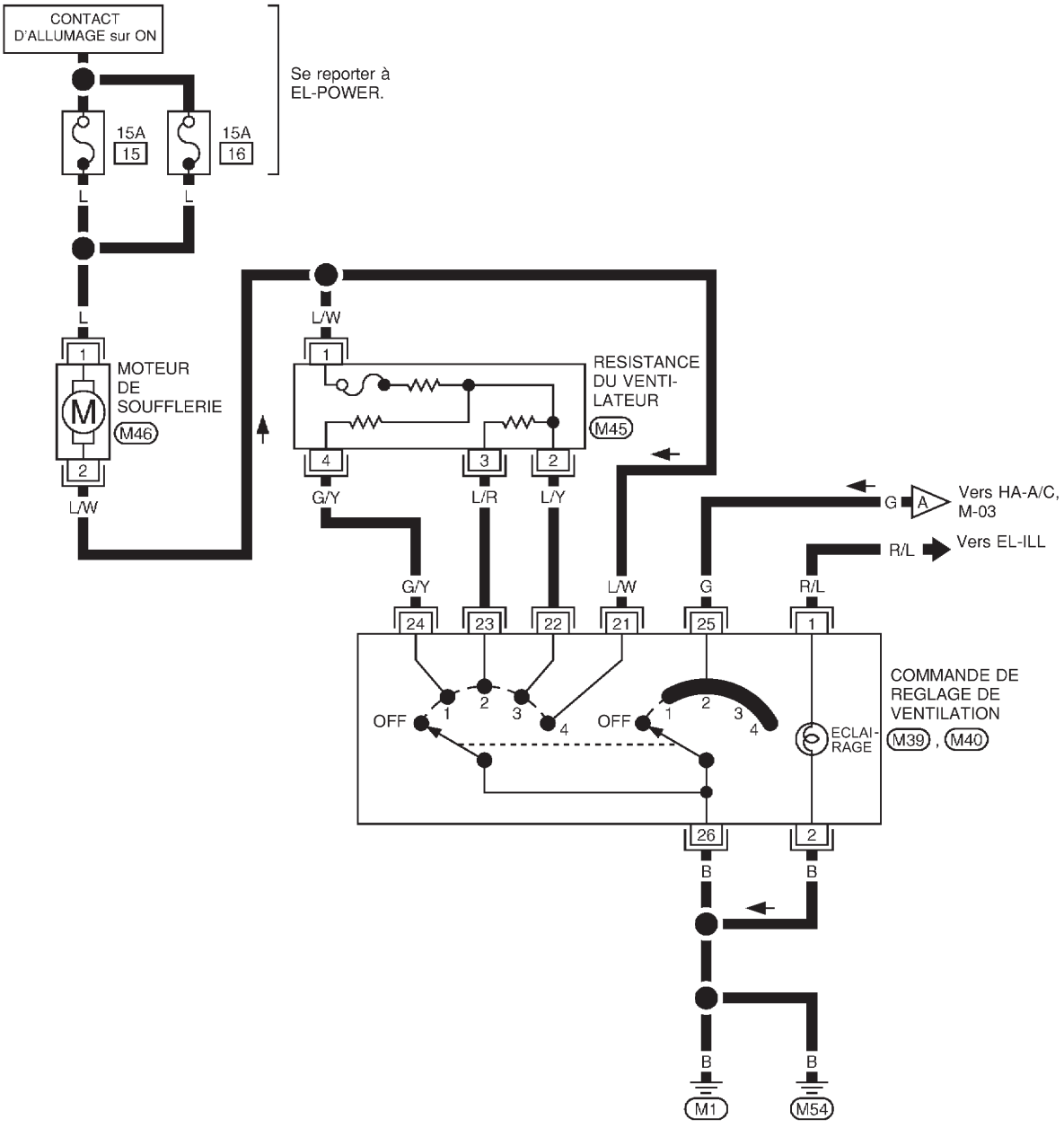

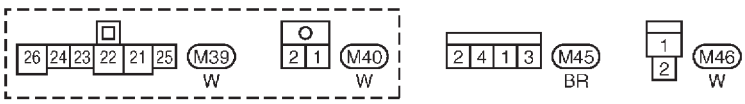

GHA056A

Simpo PDF Merge and Split Unregistered Version - http://www.simpopdf.com

Schéma de câblage — A/C, M —/conduite à gauche avec moteurs KA, YD et ZD (Suite)

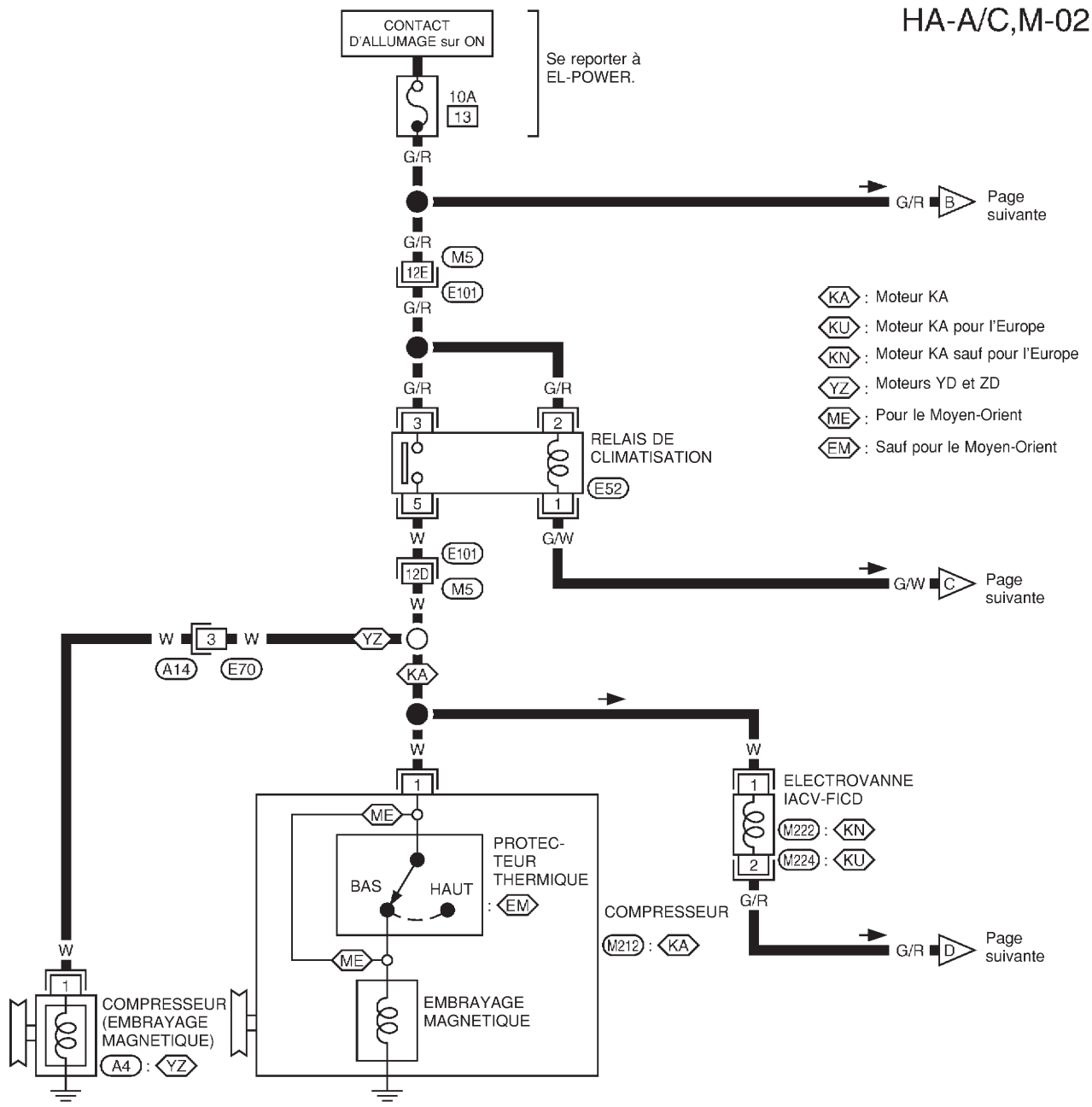

M212 , A4 — B B
M222 — B
M224 — PU
E52 — L
A14 — BR

Consulter la dernière page dépliante.
M5 , E101

GHA057A

Simpo PDF Merge and Split Unregistered Version - http://www.simpopdf.com

Schéma de câblage — A/C, M —/conduite à gauche avec moteurs KA, YD et ZD (Suite)

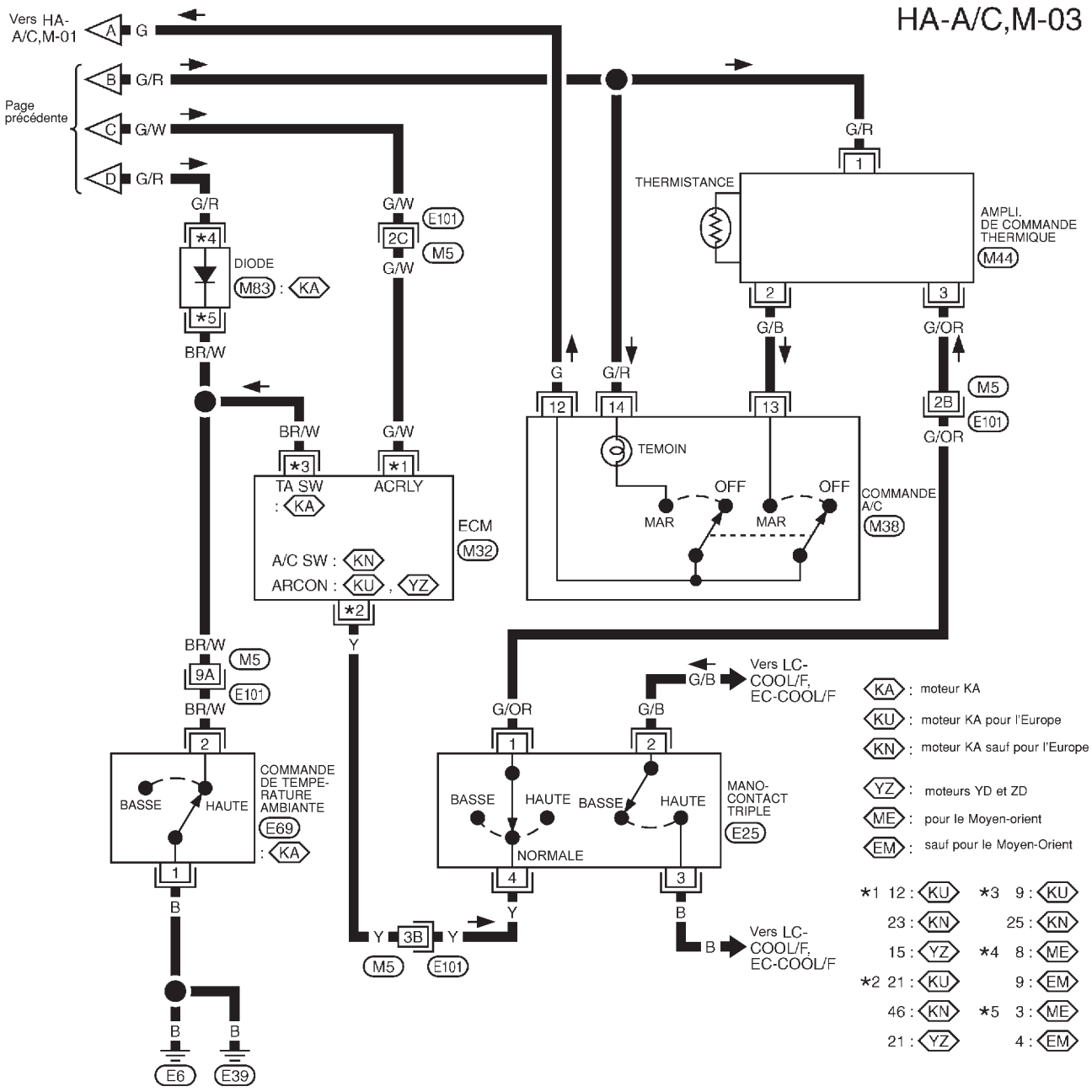

M38 W | M44 BR | M83 L | E25 GY | E69 BR

Consulter la dernière page dépliante.
M5, E101
M32

GHA058A

Simpo PDF Merge and Split Unregistered Version - http://www.simpopdf.com

Schéma de câblage — A/C, M —/conduite à droite avec moteur KA

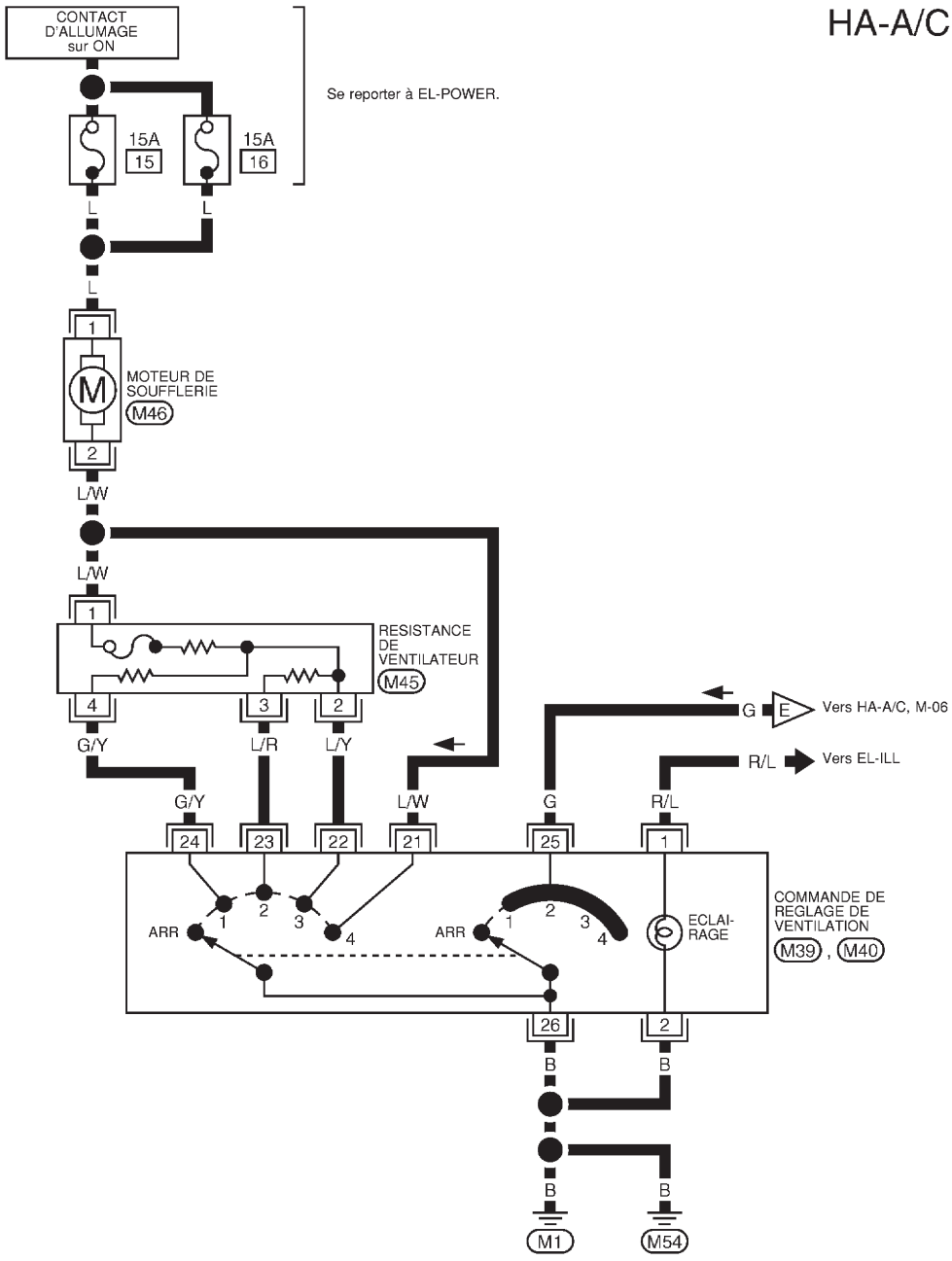

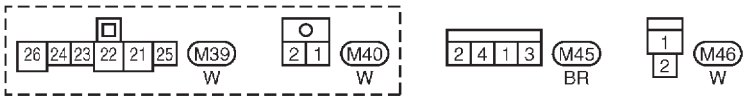

GHA077A

Simpo PDF Merge and Split Unregistered Version - http://www.simpopdf.com

Schéma de câblage — A/C, M —/conduite à droite avec moteur KA (Suite)

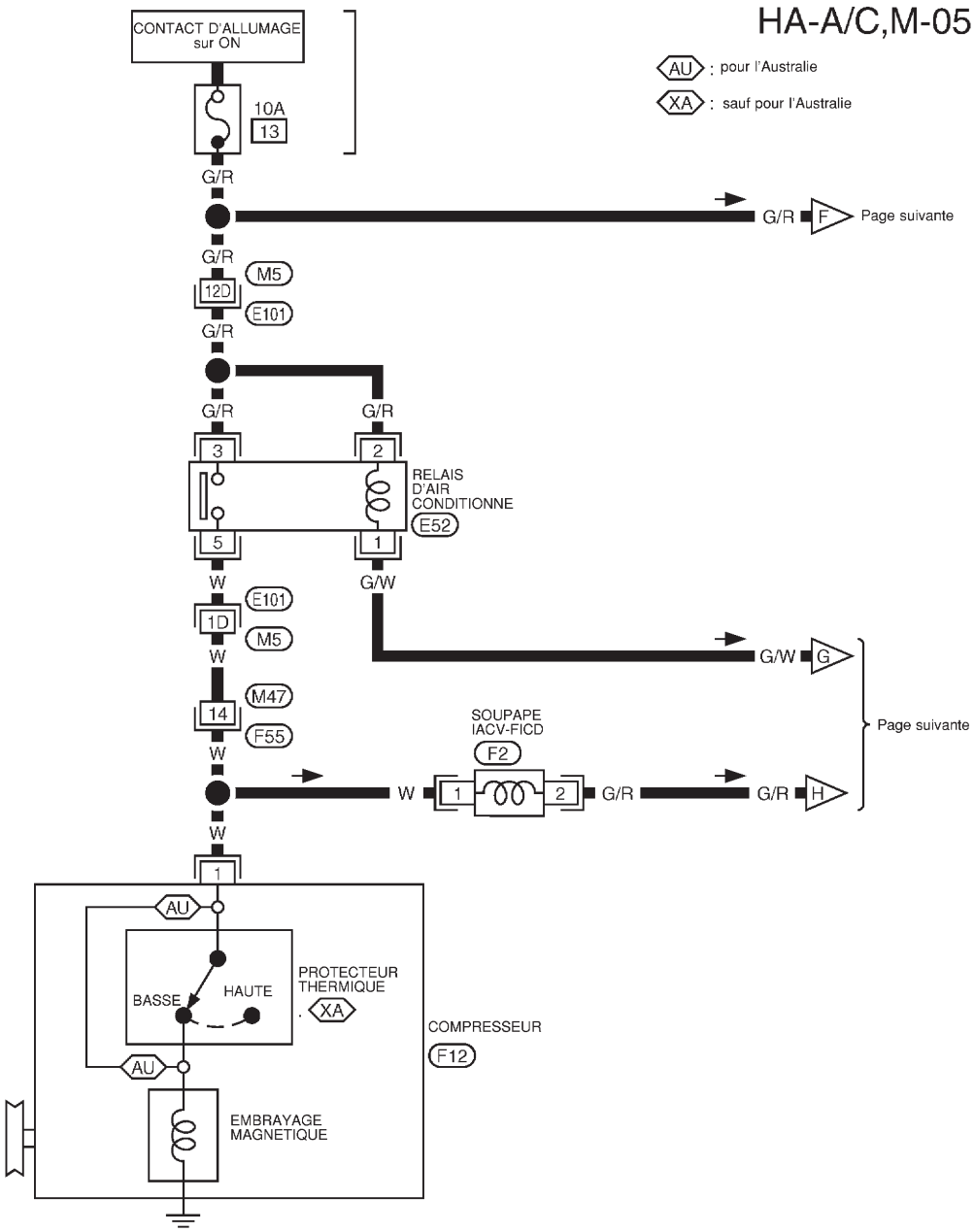

E52 L — F2 B — F12 B — F55 W

Consulter la dernière page dépliante.
M5, E101

GHA078A

Simpo PDF Merge and Split Unregistered Version - http://www.simpopdf.com

Schéma de câblage — A/C, M —/conduite à droite avec moteur KA (Suite)

HA-A/C,M-06

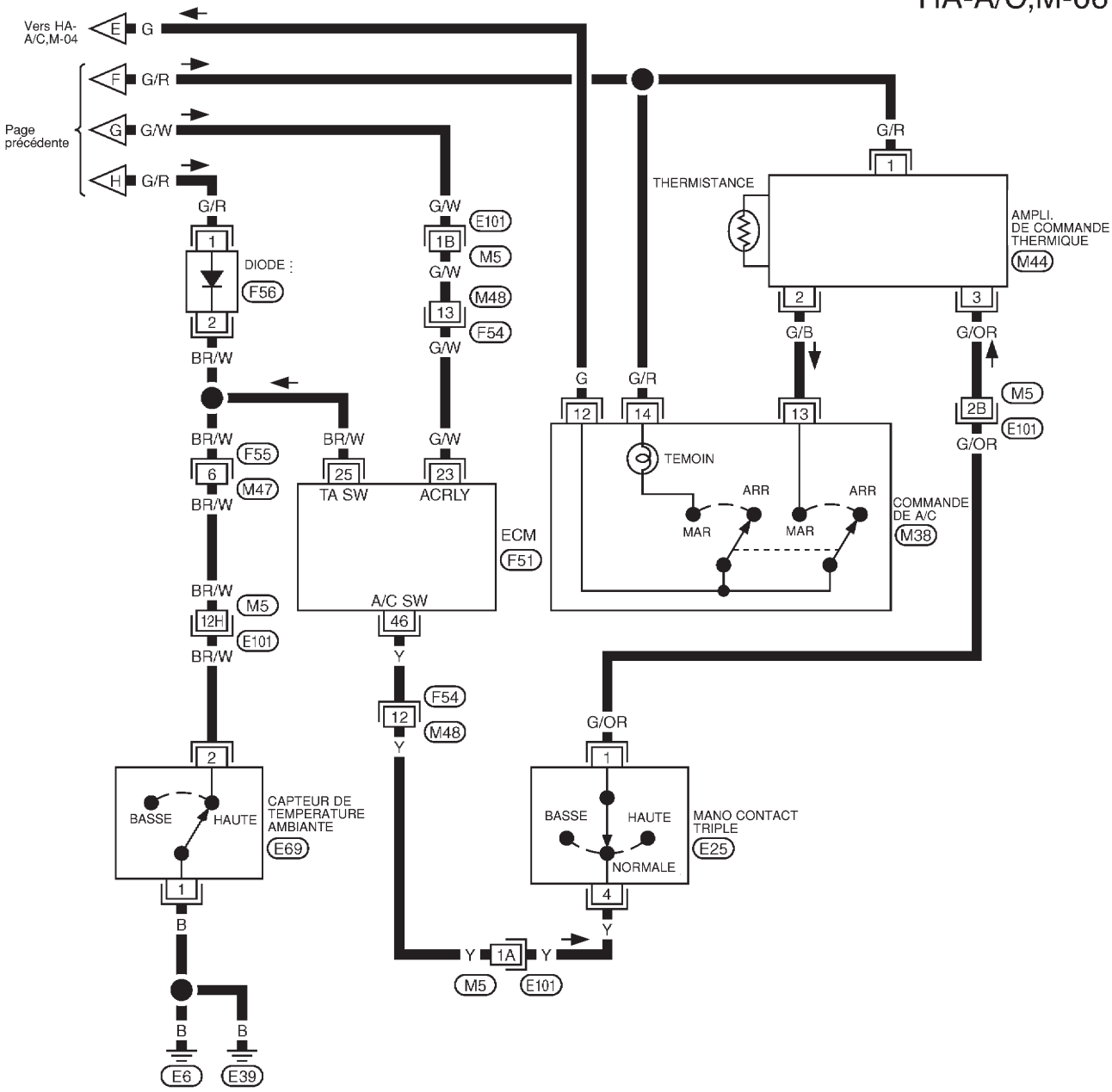

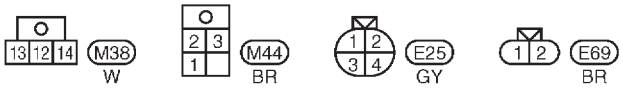

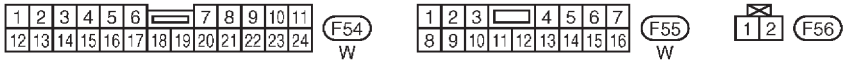

Consulter la dernière page dépliante.

M5 , E101

F51

GHA079A

Simpo PDF Merge and Split Unregistered Version - http://www.simpopdf.com

Schéma de câblage — A/C, M —/conduite à droite avec moteurs VG, YD et ZD

HA-A/C,M-07

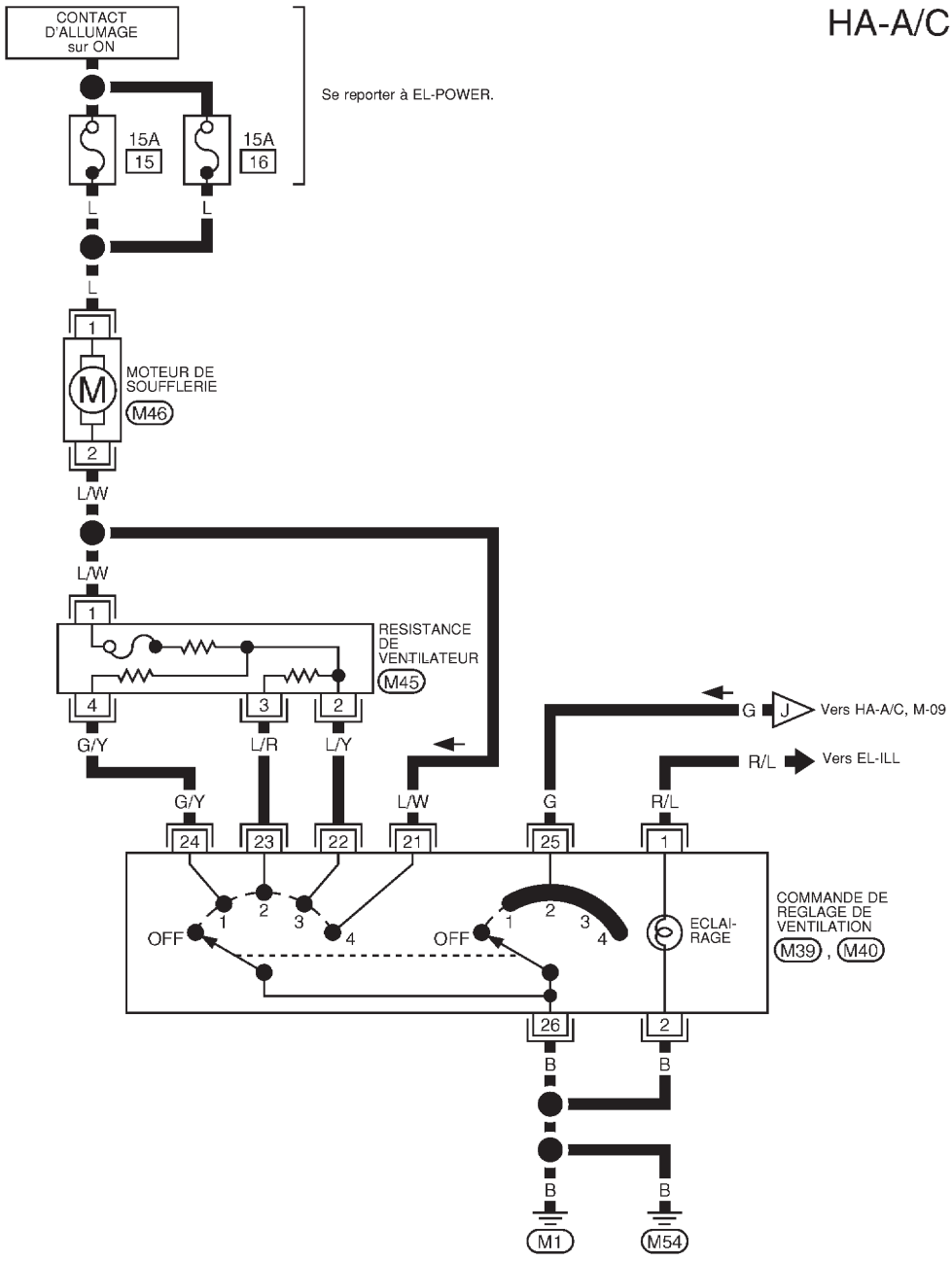

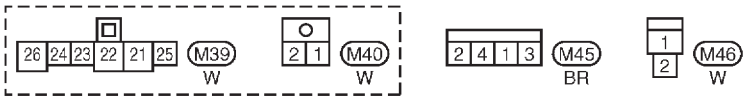

GHA080A

Simpo PDF Merge and Split Unregistered Version - http://www.simpopdf.com

Schéma de câblage — A/C, M —/conduite à droite avec moteurs VG, YD et ZD (Suite)

HA-A/C,M-08

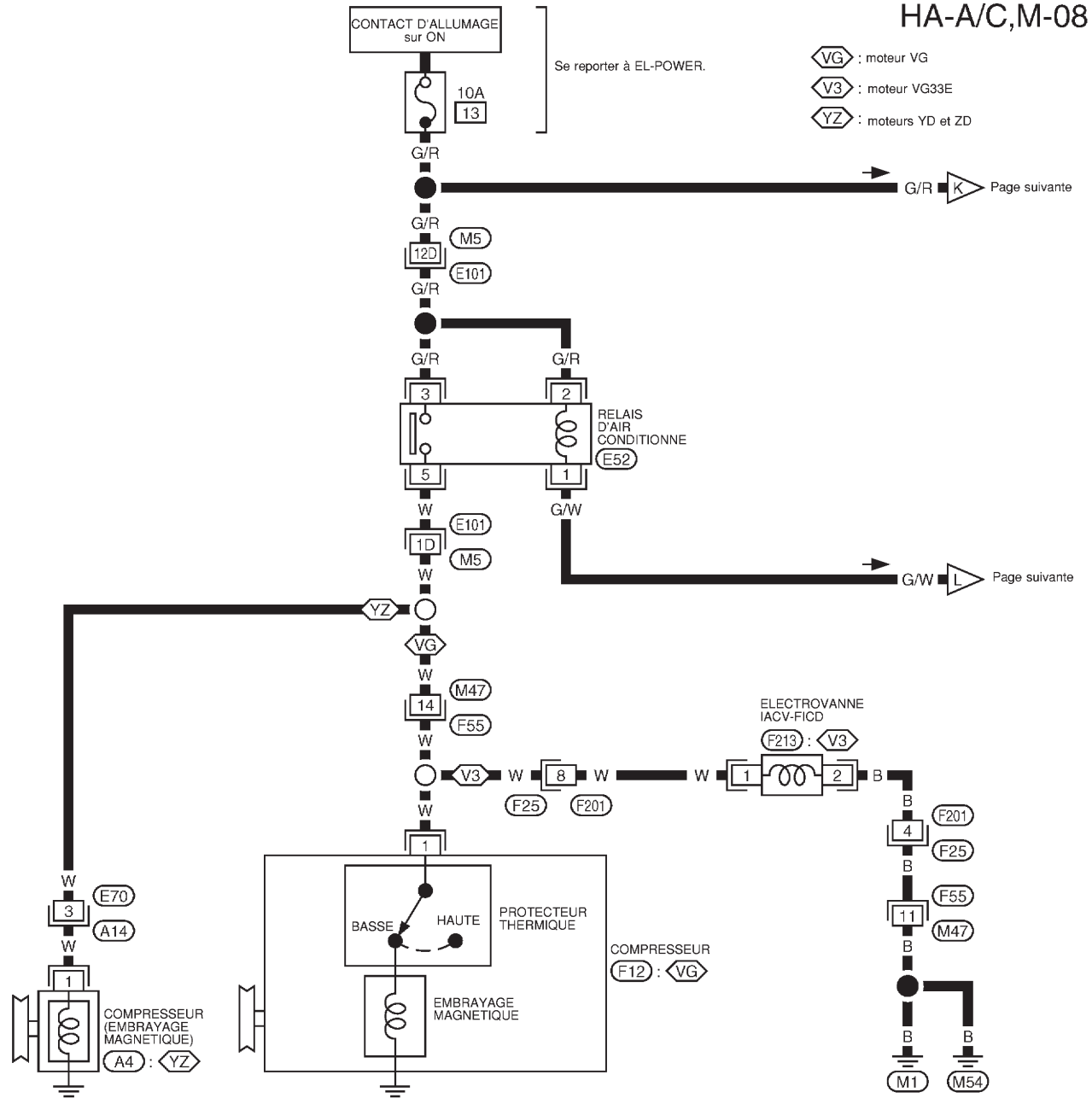



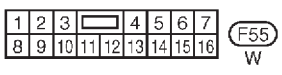

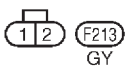

Consulter la dernière page dépliante.
M5 , E101

GHA081A

Simpo PDF Merge and Split Unregistered Version - http://www.simpopdf.com

Schéma de câblage — A/C, M —/conduite à droite avec moteurs VG, YD et ZD (Suite)

HA-A/C,M-09

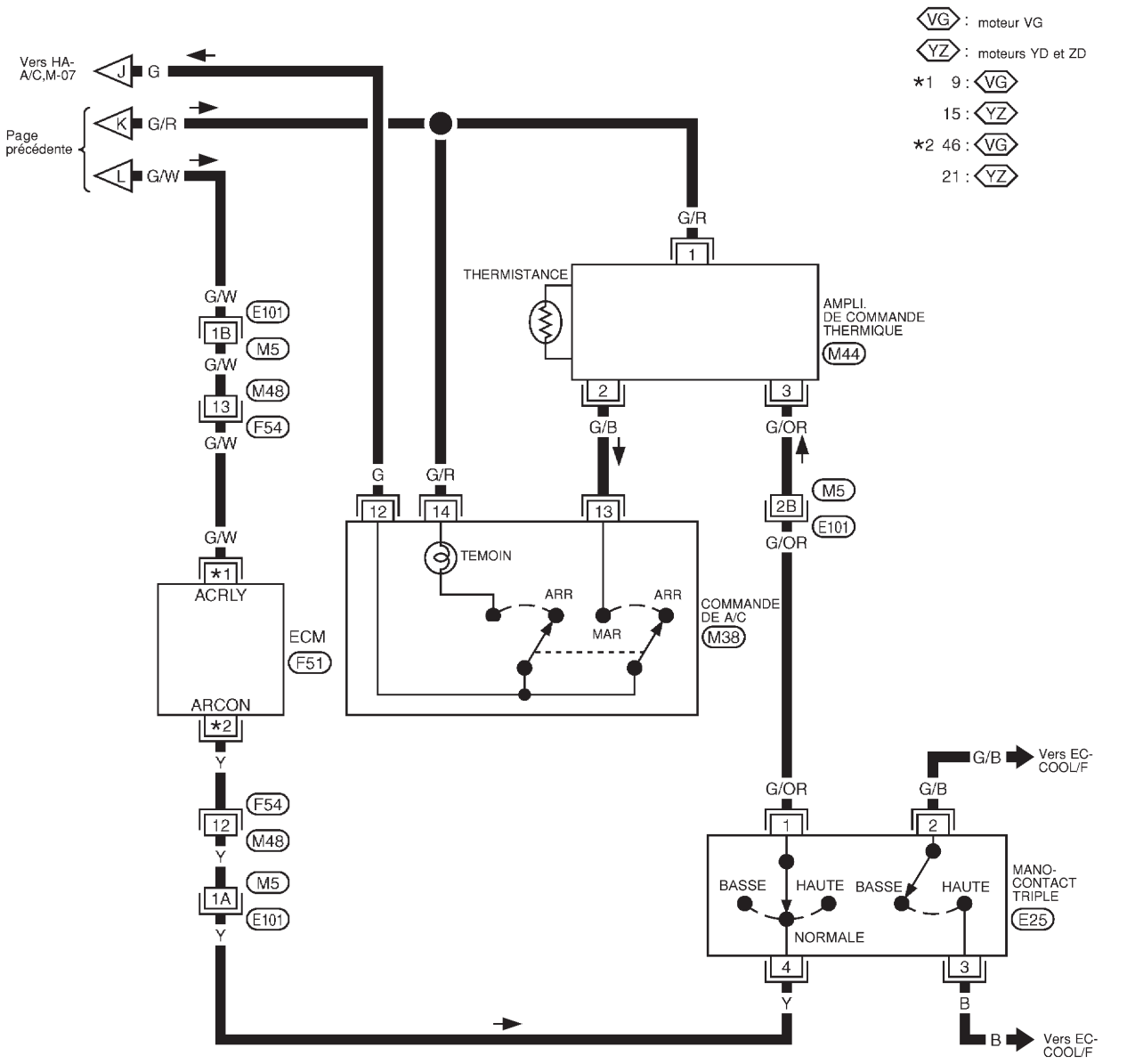



Consulter la dernière page dépliante.

M5 , E101

F51

GHA082A

Simpo PDF Merge and Split Unregistered Version - http://www.simpopdf.com

Caractéristiques générales

COMPRESSEUR

Modèle	REGULATION DE LA CLIMATISATION DKS-17CH de marque VALEO ZEXEL
Type	Plateau oscillant
Cylindrée cm^3	168
Alésage du cylindre x course mm	38,0 x 24,7
Sens de rotation	Dans le sens des aiguilles d'une montre (Vue depuis la courroie d'entraînement)
Courroie d'entraînement	Type A

LUBRIFIANT

Modèle		REGULATION DE LA CLIMATISATION DKS-17CH de marque VALEO ZEXEL
Type		KLH00-PAGS0
Capacité mℓ	Total dans le circuit	200
	Quantité de la charge du compresseur (Pièces détachées)	200

Inspection et réglage

REFRIGERANT

	Moteur YD	Sauf moteur YD
Type	HFC-134a (R-134a)	
Capacité kg	0,55	0,65

REGIME DE RALENTI DU MOTEUR (lorsque A/C est sur MARCHE).

- **Se reporter à la section EC**

TENSION DE LA COURROIE

- **Se reporter à la section MA, ''Vérification des courroies d'entraînement''.**

Simpo PDF Merge and Split Unregistered Version - http://www.simpopdf.com

Système de retenue supplémentaire (SRS) AIRBAG et PRETENSIONNEUR DE CEINTURE DE SECURITE

Utilisés conjointement avec une ceinture de sécurité, les éléments du système de retenue supplémentaire tels que l'AIRBAG et le PRETENSIONNEUR DE CEINTURE DE SECURITE permettent de réduire les risques de blessures graves subies par le conducteur et le passager avant dans certains types de collision frontales. La composition du système SRS disponible pour le MODELE NISSAN D22 est la suivante (la composition varie selon les pays et les équipements optionnels) :
Un module d'airbag conducteur (situé dans le moyeu du volant), un module d'airbag passager (situé sur le tableau de bord côté passager), des prétensionneurs de ceintures de sécurité, un boîtier de capteurs de diagnostic, un témoin d'avertissement, un faisceau de câblage et un câble spiralé.

ATTENTION :

- **Pour ne pas affecter le fonctionnement du SRS, ce qui augmenterait les risques de blessures graves, voire mortelles, en cas de collision entraînant le déploiement de l'airbag toutes les opérations d'entretien doivent être effectuées par un concessionnaire NISSAN agréé.**
- **Un entretien incorrect, y compris une dépose et une repose incorrectes du système de retenue supplémentaire (SRS), peut être à l'origine de blessures provoquées par le déploiement involontaire du système.**
- **Ne pas utiliser d'équipement d'essai électrique sur les circuits connexes du SRS, sauf si indiqué dans ce manuel de réparation. Les faisceaux de câblage SRS peuvent être identifiés par la couleur jaune des connecteurs de faisceaux**

Simpo PDF Merge and Split Unregistered Version - http://www.simpopdf.com

Schéma du circuit — A/C, A —

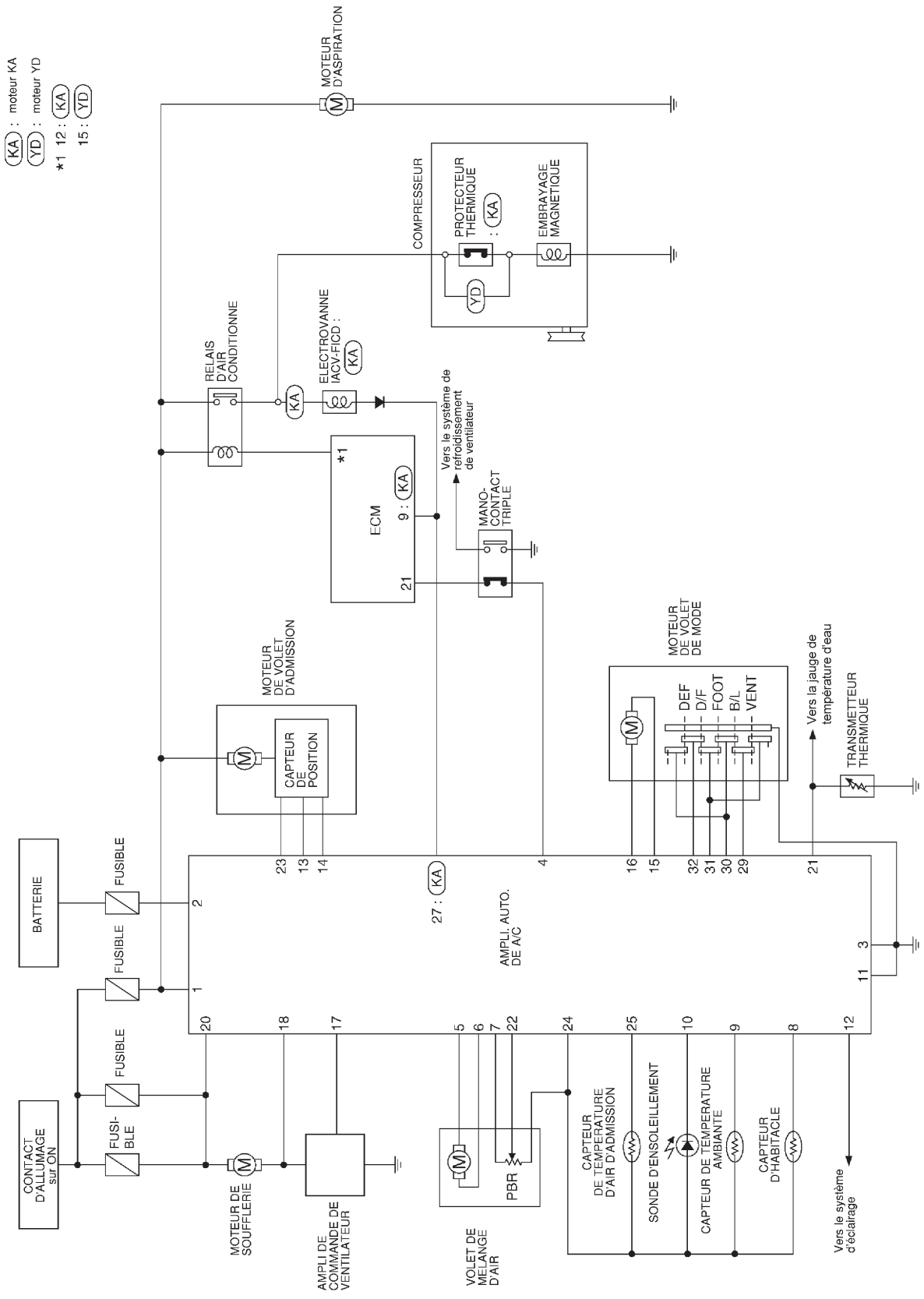

GHA096A

Simpo PDF Merge and Split Unregistered Version - http://www.simpopdf.com

Schéma de câblage — A/C, A —

HA-A/C,A-01

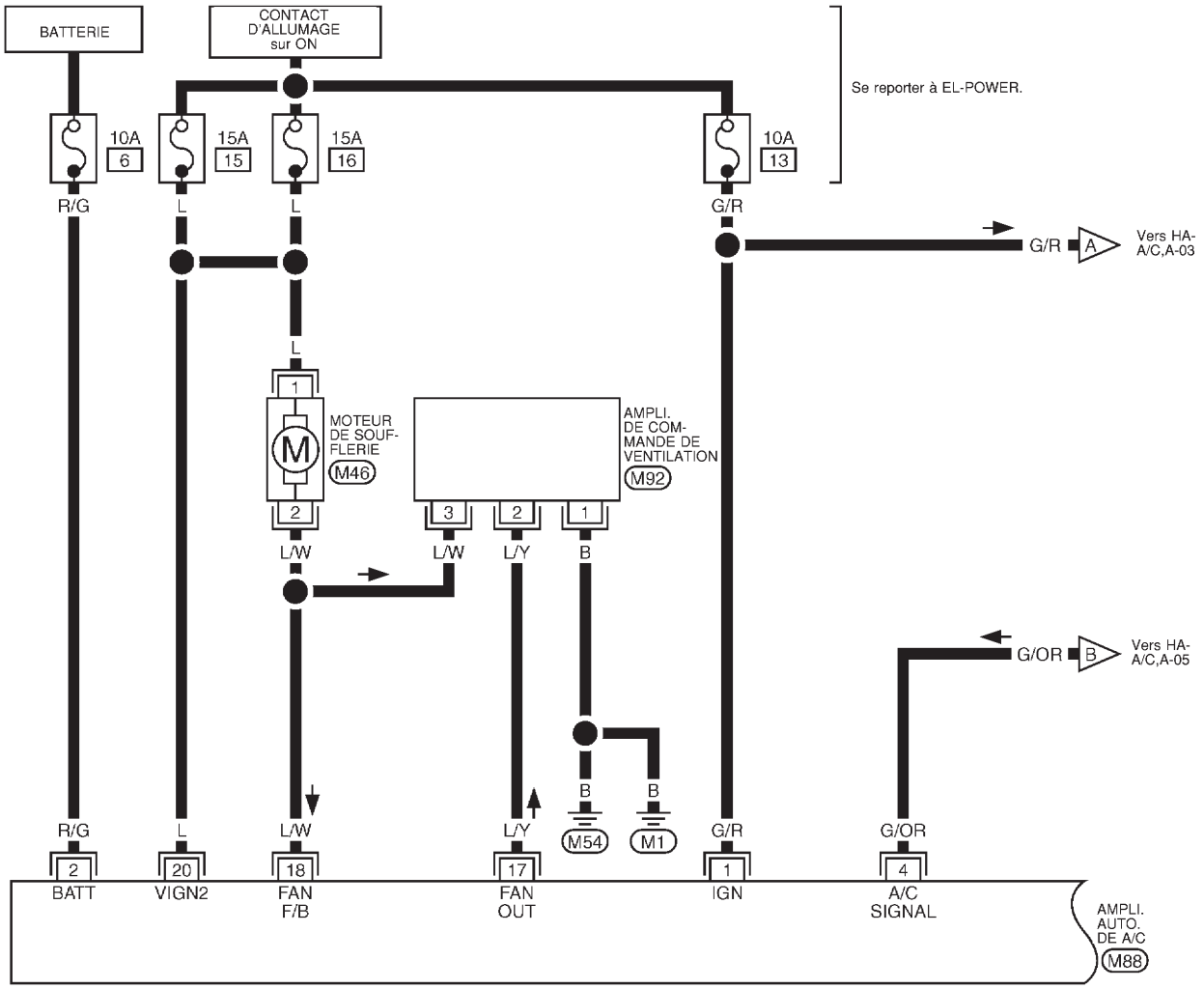

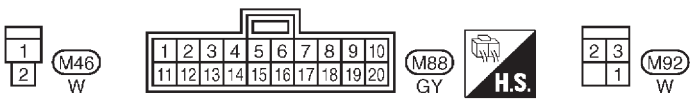

GHA097A

Simpo PDF Merge and Split Unregistered Version - http://www.simpopdf.com

Schéma de câblage — A/C, A — (Suite)

HA-A/C,A-02

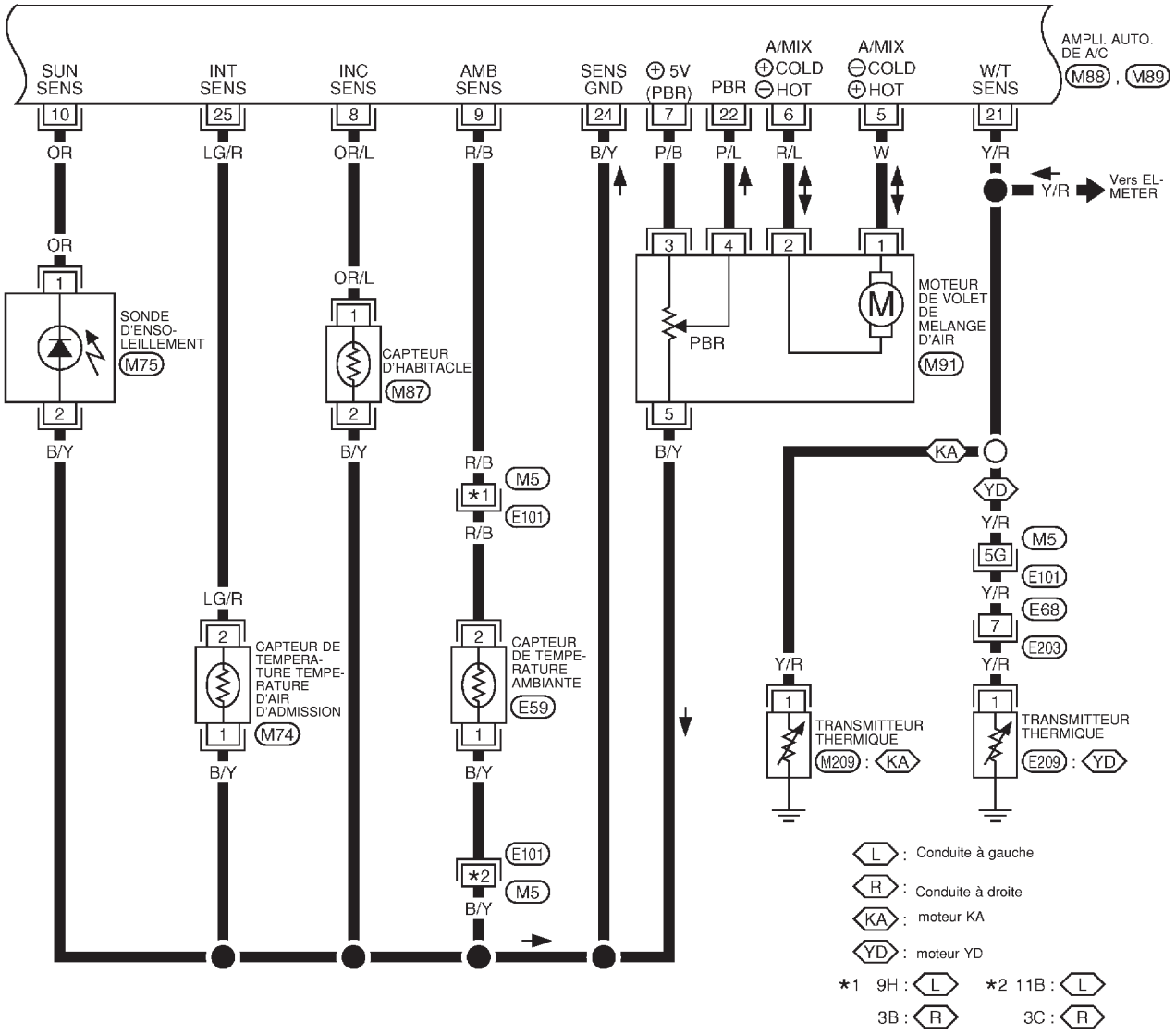

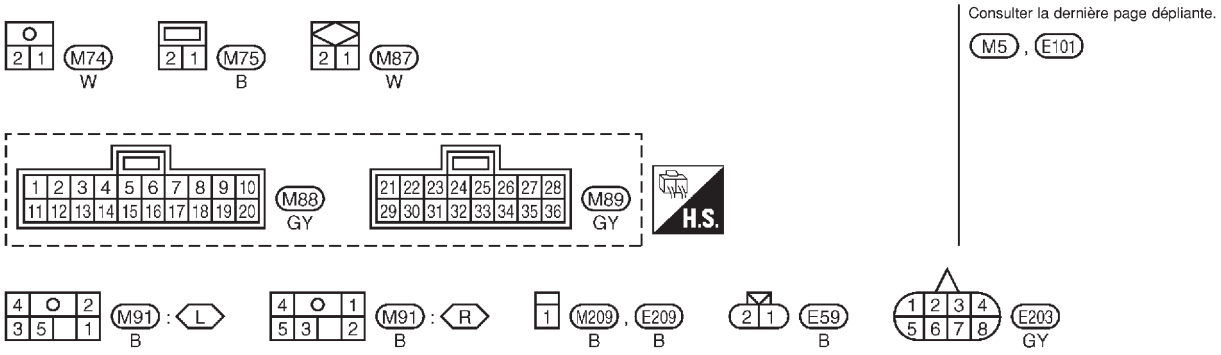

Consulter la dernière page dépliante.
M5 , E101

GHA047A

Simpo PDF Merge and Split Unregistered Version - http://www.simpopdf.com

Schéma de câblage — A/C, A — (Suite)

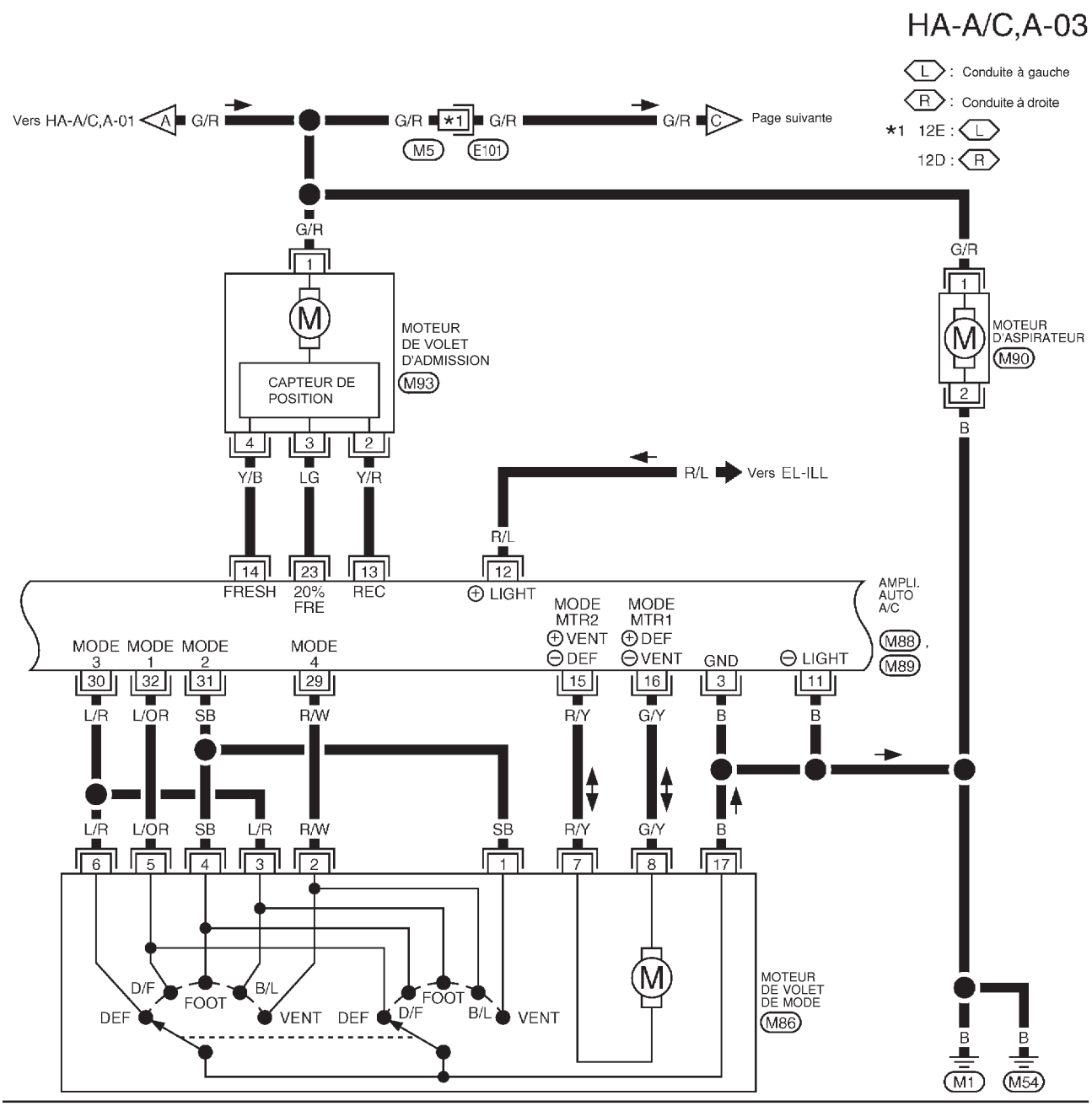



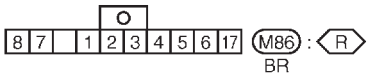

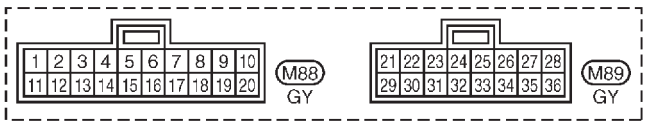

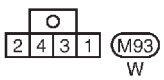

Consulter la dernière page dépliante.
M5, E101

GHA048A

Simpo PDF Merge and Split Unregistered Version - http://www.simpopdf.com

Schéma de câblage — A/C, A — (Suite)

HA-A/C,A-04

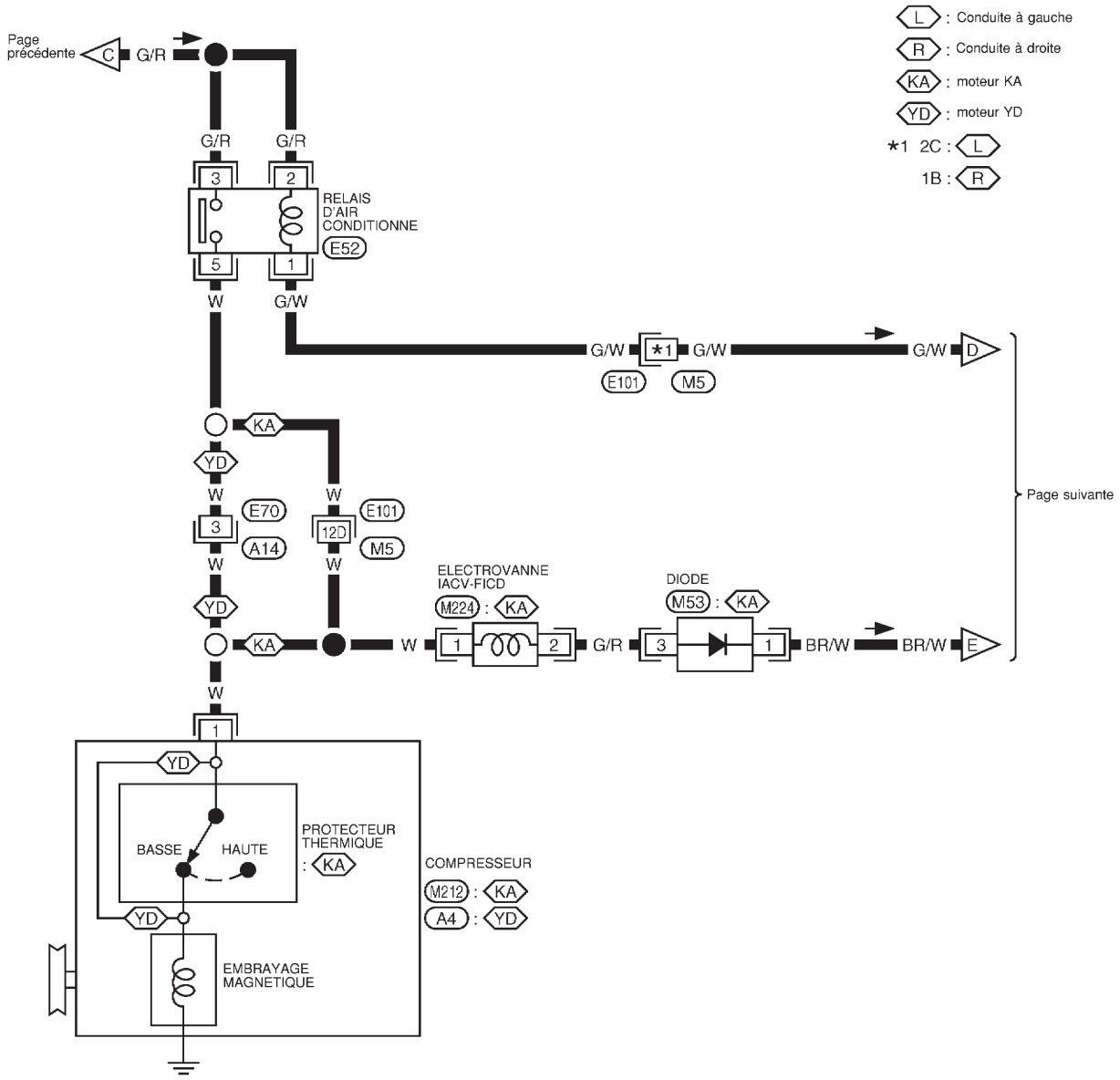

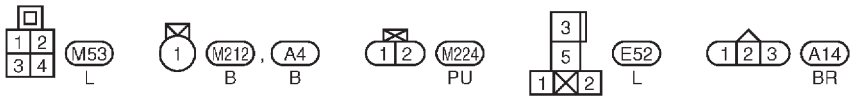

Consulter la dernière page dépliante.

M5 , E101

GHA100A

Simpo PDF Merge and Split Unregistered Version - http://www.simpopdf.com

Schéma de câblage — A/C, A — (Suite)

HA-A/C,A-05

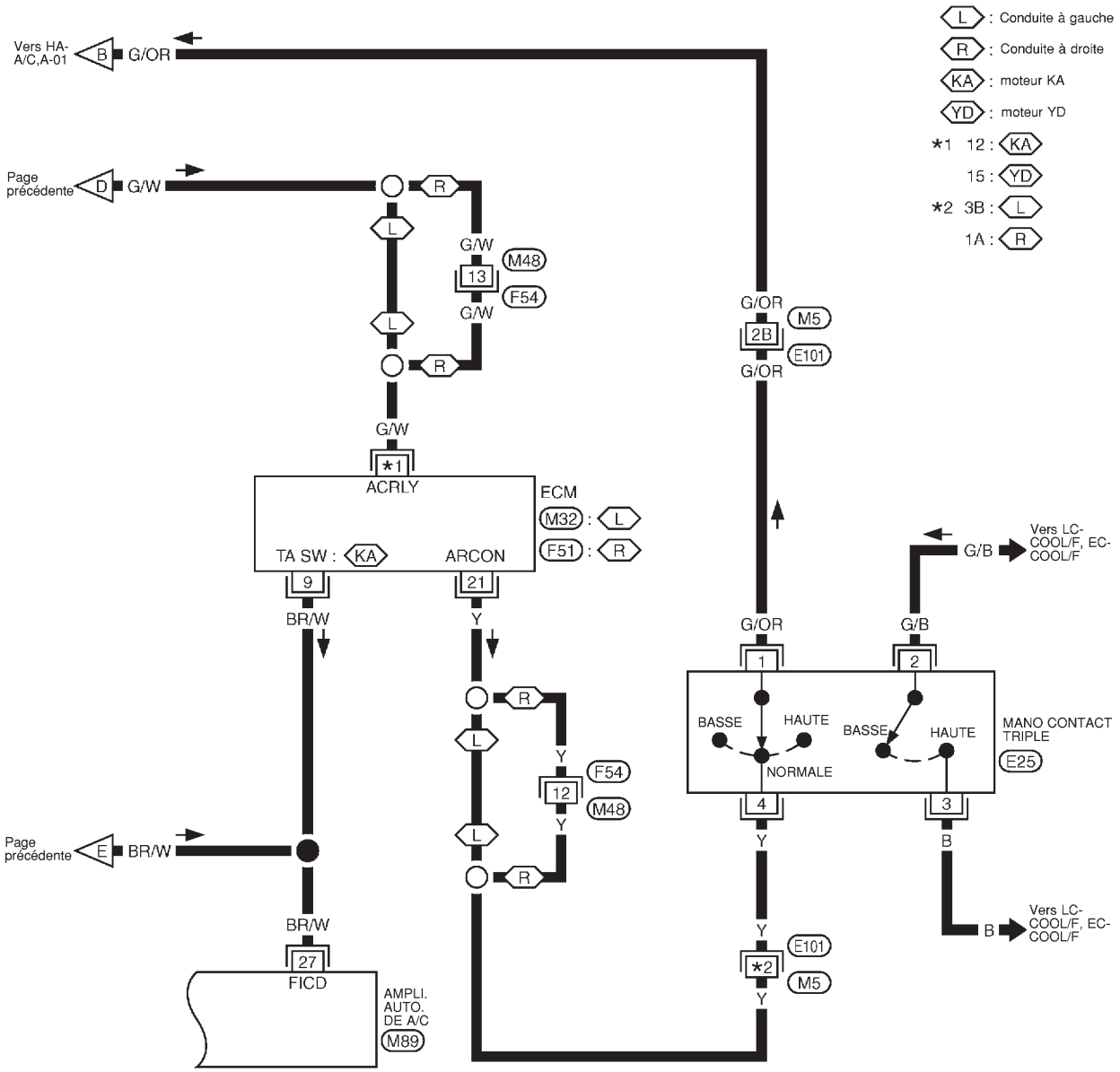



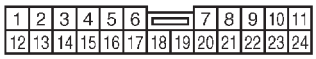

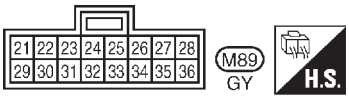

Consulter la dernière page dépliante.

M5 , E101

M32

F51

GHA050A

Simpo PDF Merge and Split Unregistered Version - http://www.simpopdf.com

Embrayage magnétique

PROCEDURE DE DIAGNOSTIC DE DEFAUT DE L'EMBRAYAGE MAGNETIQUE

SYMPTOME :

- **L'embrayage magnétique ne s'enclenche pas.**

Ordre de l'inspection

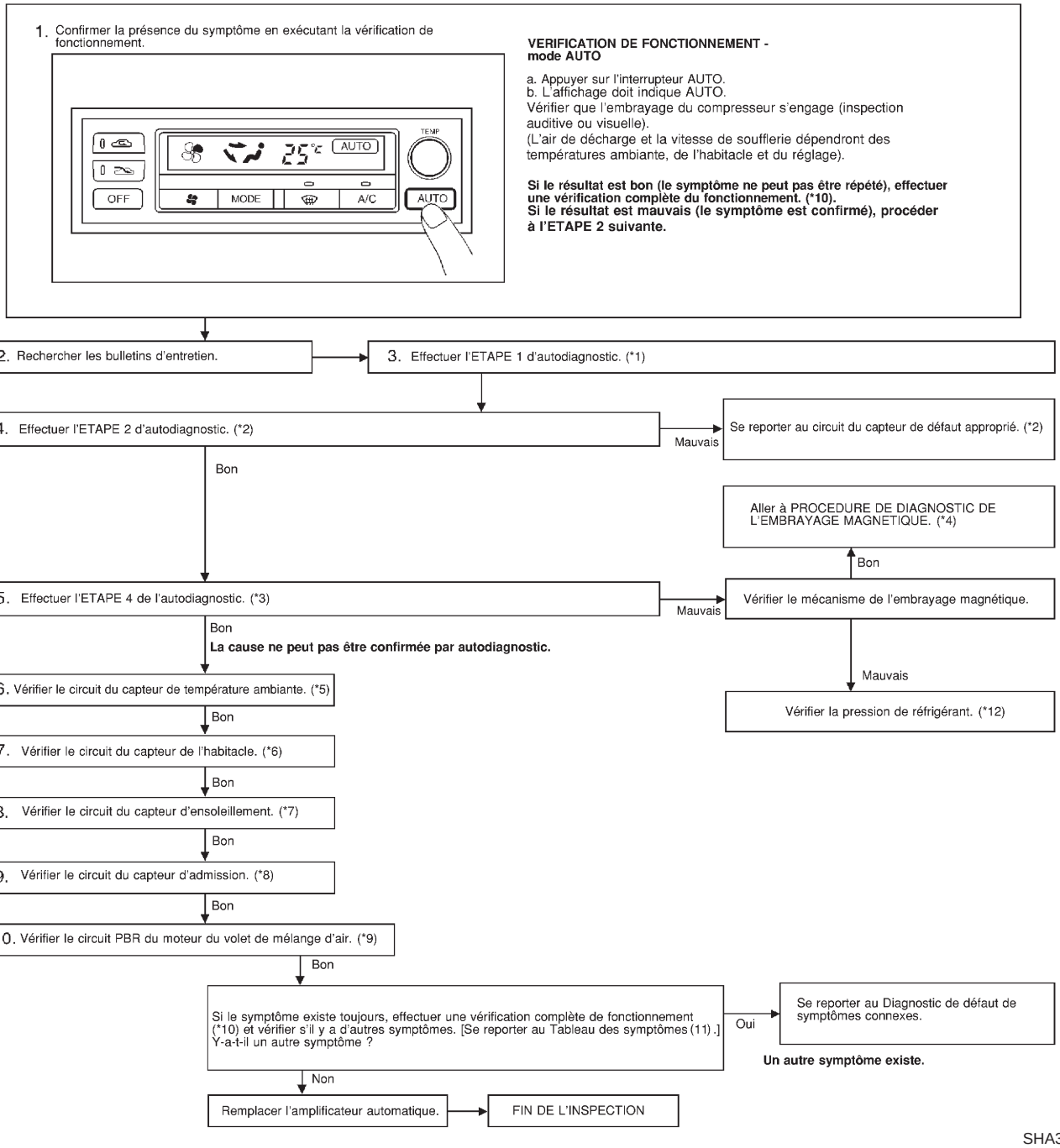

SHA341FB

*1 : HA-2035
*2 : HA-2036
*3 : HA-2038
*4: HA-4024
*5 : HA-2080
*6 : HA-2082
*7 : HA-2084
*8 : HA-2087
*9 : HA-2052
*10 : HA-2041
*11: HA-2040
*12: HA-27

Simpo PDF Merge and Split Unregistered Version - http://www.simpopdf.com

Embrayage magnétique (Suite)

PROCEDURE DE DIAGNOSTIC

SYMPTOME : L'embrayage magnétique ne s'enclenche pas lorsque l'interrupteur de climatiseur et le commutateur de ventilateur sont enclenchés.

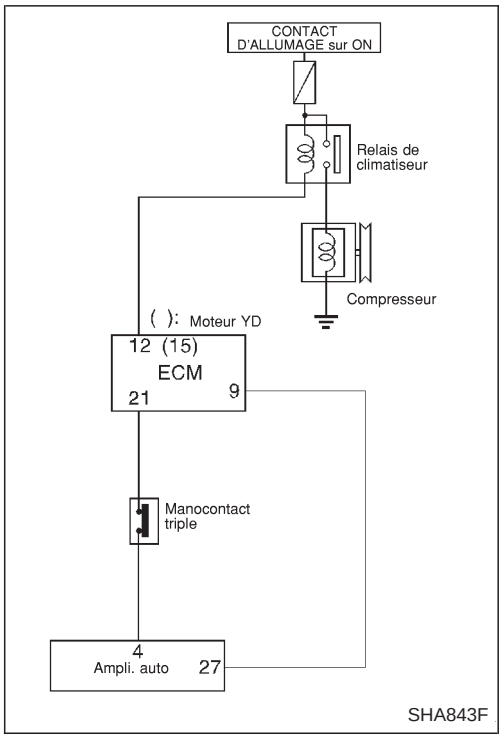

SHA843F

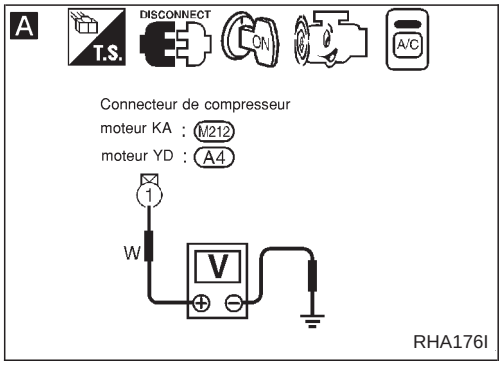

RHA176I

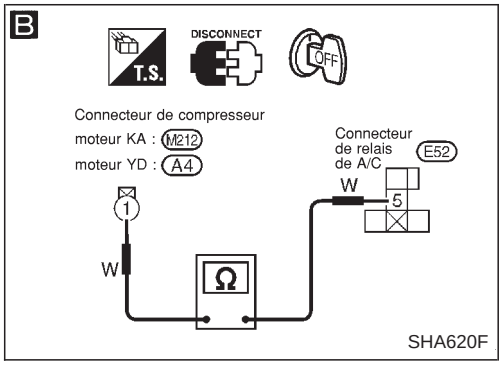

SHA620F

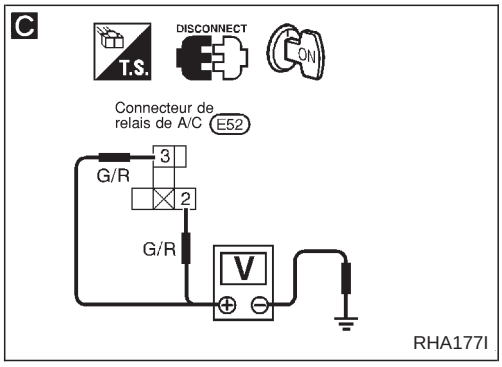

RHA177I

A

VERIFIER L'ALIMENTATION ELECTRIQUE DU COMPRESSEUR.
Débrancher le connecteur de faisceau du compresseur.
Existe-t'il une tension d'environ 12 volts entre la borne n°① du faisceau du compresseur et la masse de carrosserie ?

Oui → Vérifier la bobine de l'embrayage magnétique.
Mauvais → Remplacer l'embrayage magnétique. Se reporter à HA-64.

Non → Débrancher le relais de climatiseur.

B Remarque

VERIFIER LA CONTINUITE DU CIRCUIT ENTRE LA BORNE N°⑤ DU FAISCEAU DE RELAIS DE A/C ET LA BORNE N°① DE FAISCEAU DE COMPRESSEUR.
Il doit y avoir continuité.
Si le résultat est BON, vérifier si le faisceau n'est pas court-circuité.

BON →

C

VERIFIER L'ALIMENTATION ELECTRIQUE DU RELAIS DE CLIMATISEUR.
Débrancher le relais de climatiseur.
Existe-t'il une tension d'environ 12 volts entre les bornes n° ②, ③ et la masse de carrosserie?

Non → VERIFIER LE CIRCUIT DE L'ALIMENTATION ELECTRIQUE ET LE FUSIBLE DE 10A (N° 13) DANS LE BOITIER A FUSIBLES.
Se reporter à la section EL (''Schéma de câblage'', ''DISPOSITION DE L'ALIMENTATION ELECTRIQUE'').

Oui →

VERIFIER LE RELAIS DE CLIMATISEUR APRES L'AVOIR DEBRANCHE.
Se reporter à HA-4025.

Mauvais → Remplacer le relais de climatiseur.

BON →

Ⓐ
(Passer à la page suivante).

Remarque :
Si le résultat affiche mauvais ou ''Non'' après la vérification de la continuité du circuit, réparer le faisceau ou le connecteur.

Simpo PDF Merge and Split Unregistered Version - http://www.simpopdf.com

Embrayage magnétique (Suite)

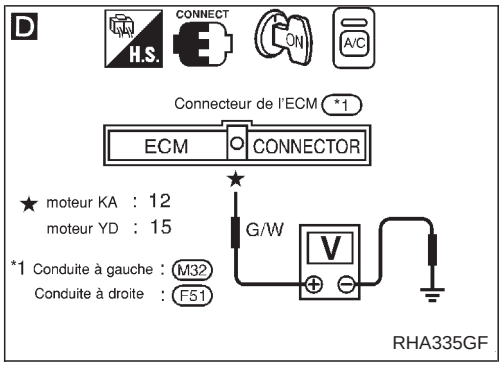

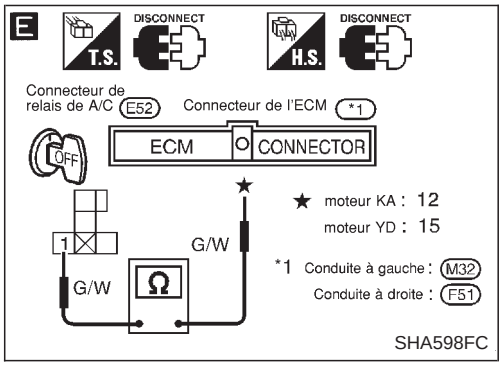

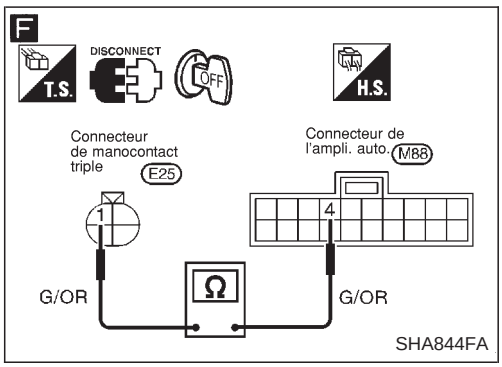

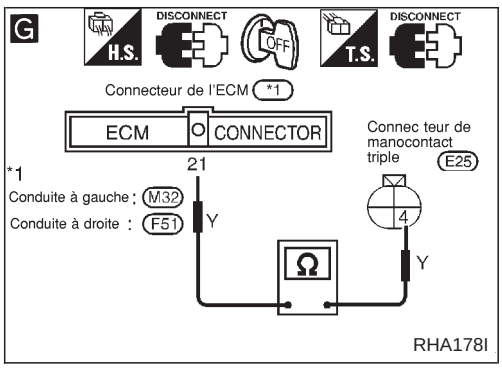

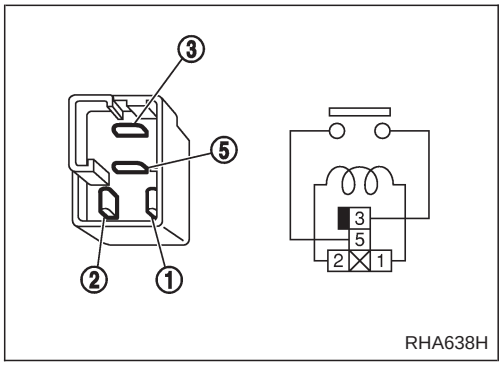

A

D Remarque

VERIFIER LE CIRCUIT COTE BOBINE DU RELAIS DE CLIMATISEUR.
Existe-t-il une tension d'environ 12 volts entre la borne n°⑫ ou ⑮ du faisceau ECM et la masse de carrosserie ?

Non → **E** Remarque

Vérifier la continuité du circuit entre la borne n°① du faisceau de relais de A/C et les bornes n°⑫ et ⑮ du faisceau d'ECM.
Il doit y avoir continuité.
Si le résultat est BON, vérifier si le faisceau n'est pas court-circuité.

Oui

F Remarque

Vérifier la continuité du circuit entre la borne n°④ du faisceau de l'ampli. auto. et la borne n°① du faisceau de manocontact triple.
Il doit y avoir continuité.
Si le résultat est BON, vérifier si le faisceau n'est pas court-circuité.

BON

VERIFIER LE MANOCONTACT TRIPLE.
Se reporter à HA-2022.

Mauvais → Remplacer le manocontact triple.

BON

G Remarque

Vérifier la continuité du circuit entre la borne n°④ du faisceau de manocontact triple et la borne n°㉑ du faisceau d'ECM.
Il doit y avoir continuité.
Si le résultat est BON, vérifier si le faisceau n'est pas court-circuité.

BON

Vérifier l'ECM.

Remarque :
Si le résultat affiche mauvais ou ''Non'' après la vérification de la continuité du circuit, réparer le faisceau ou le connecteur.

INSPECTION DES COMPOSANTS ELECTRIQUES

Relais de climatiseur

Vérifier la continuité entre les bornes 3 et 5.

Conditions	Il y a continuité
Alimentation en courant continu de 12 volts entre les bornes 1 et 2.	Oui
Aucune alimentation électrique	Non

Si le résultat n'est pas satisfaisant, remplacer le relais.

Simpo PDF Merge and Split Unregistered Version - http://www.simpopdf.com

Caractéristiques générales

COMPRESSEUR

Modèle	REGULATION DE LA CLIMATISATION DKS-17CH de marque VALEO ZEXEL
Type	Plateau oscillant
Cylindrée cm^3	168
Alésage du cylindre x course mm	38,0 x 24,7
Sens de rotation	Dans le sens des aiguilles d'une montre (Vue de la courroie d'entraînement)
Courroie d'entraînement	Type A

LUBRIFIANT

Modèle		REGULATION DE LA CLIMATISATION DKS-17CH de marque VALEO ZEXEL
Type		KLH00-PAGS0
Capacité mℓ	Total dans le système	200
	Quantité de la charge du compresseur (pièces détachées)	200

Inspection et réglage

REFRIGERANT

	Moteur YD	Sauf moteur YD
Type	HFC-134a (R-134a)	
Capacité kg	0,55	0,65

VITESSE DE RALENTI (lorsque A/C est sur MARCHE).

- **Se reporter à la section EC**

TENSION DE LA COURROIE

- **Se reporter à la section MA, ''Vérification des courroies d'entraînement''.**

Simpo PDF Merge and Split Unregistered Version - http://www.simpopdf.com

TABLE ALPHABETIQUE

SECTION IDX

TABLE ALPHABETIQUE

Simpo PDF Merge and Split Unregistered Version - http://www.simpopdf.com

C

Caractéristiques et valeurs de réglage du C/A HA-4026
Carillon d'alarme EL-4050
Commande de réglage des faisceaux EL-4013
Commande du ventilateur de refroidissement EC-4014
Cycle de réfrigération HA-4004

D

Diagnostics des défauts du C/A (C/A auto.) HA-4017
Diagnostics des défauts du C/A (C/A manuel) HA-4005
Disposition de l'alimentation électrique EL-4004
Disposition des faisceaux EL-4058

E

Eclairage de plaque minéralogique EL-4015
Eclairage EL-4025
Extérieur BT-4003

F

Feu antibrouillard arrière EL-4019
Feu antibrouillard avant EL-4017
Feu antibrouillard, arrière EL-4019
Feu antibrouillard, avant EL-4017
Feu arrière EL-4015
Feu de stationnement EL-4015

G

Garniture de porte BT-4006

I

Instruments combinés EL-4029

J

Jauges EL-4029

L

LSV (compensateur asservi) BR-4002
Liste (code de cellule) des schémas de câblage EL-4075

N

NATS (système antivol Nissan) EL-4055
Numéro d'identification du véhicule GI-4006

P

Pare-chocs arrière BT-4002
Plafonnier EL-4024
Précautions d'emploi pour les raccords de réfrigérant HA-4003

R

Relais de climatiseur HA-4025

S

SMJ (super raccord multiple) EL-4076
Schéma de câblage - A/C, A - HA-4018
Schéma de câblage - A/C, M - HA-4006, 4009, 4012
Schéma de câblage - CHIME - EL-4050
Schéma de câblage - F/FOG - EL-4017
Schéma de câblage - FICD - EC-4005
Schéma de câblage - H/AIM - EL-4013
Schéma de câblage - ILL - EL-4025
Schéma de câblage - LOAD - EC-4003
Schéma de câblage - METER - EL-4029
Schéma de câblage - NATS - EL-4055
Schéma de câblage - POWER - EL-4005
Schéma de câblage - R/FOG - ... EL-4019, 4021
Schéma de câblage - ROOM/L - EL-4024
Schéma de câblage - SRS - RS-4001
Schéma de câblage - Système de retenue supplémentaire - RS-4001
Schéma de câblage - TAIL/L - EL-4015
Schéma de câblage - WARN - EL-4033
Système de commande du ventilateur de refroidissement LC-4002

T

Témoins EL-4031

V

Variantes de modèles GI-4004
Ventilateur de refroidissement LC-4003
Volant et colonne de direction ST-4002

Simpo PDF Merge and Split Unregistered Version - http://www.simpopdf.com

<SUPPLEMENT-IV>

CIRCUIT DE LUBRIFICATION DU MOTEUR ET CIRCUIT DE REFROIDISSEMENT

SECTION **LC**

AVIS DE MODIFICATION :

- Les schémas de câblage ont été modifiés pour les modèles KA24DE.

TABLE DES MATIERES

KA24DE

Schéma de câblage 4002

MOTEUR DE VENTILATEUR COMPARTIMENT MOTEUR 4003

Ventilateur de refroidissement (moteur en marche) 4003

Simpo PDF Merge and Split Unregistered Version - http://www.simpopdf.com

Schéma de câblage

LC-COOL/F-01

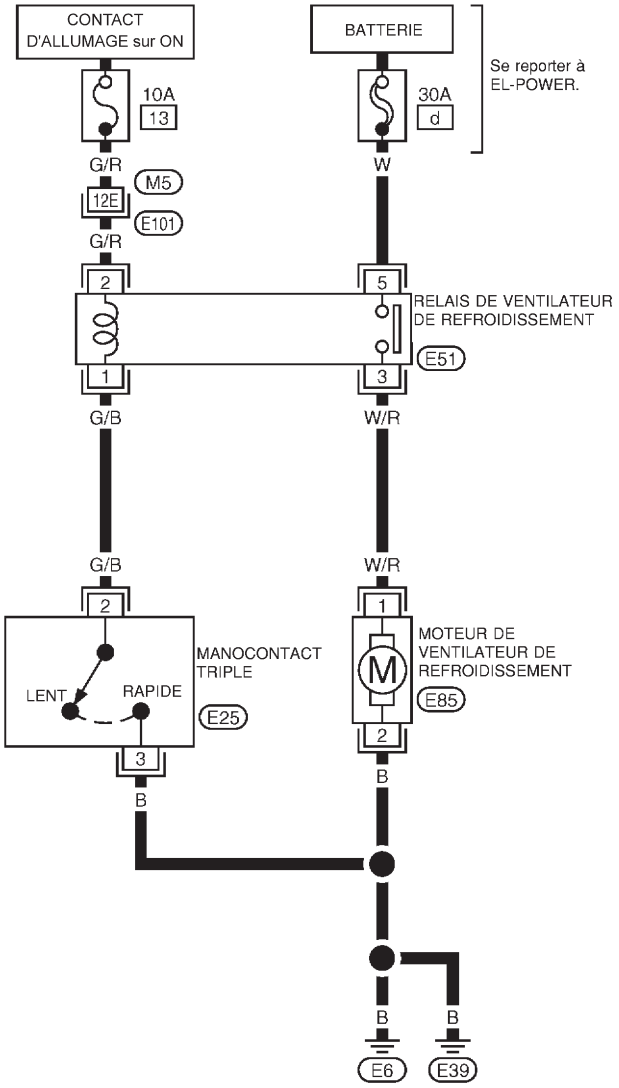

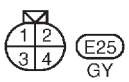

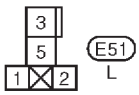



Se reporter à la dernière page (page dépliante).
M5 , E101

GLC012A

Simpo PDF Merge and Split Unregistered Version - http://www.simpopdf.com

Ventilateur de refroidissement (moteur en marche)

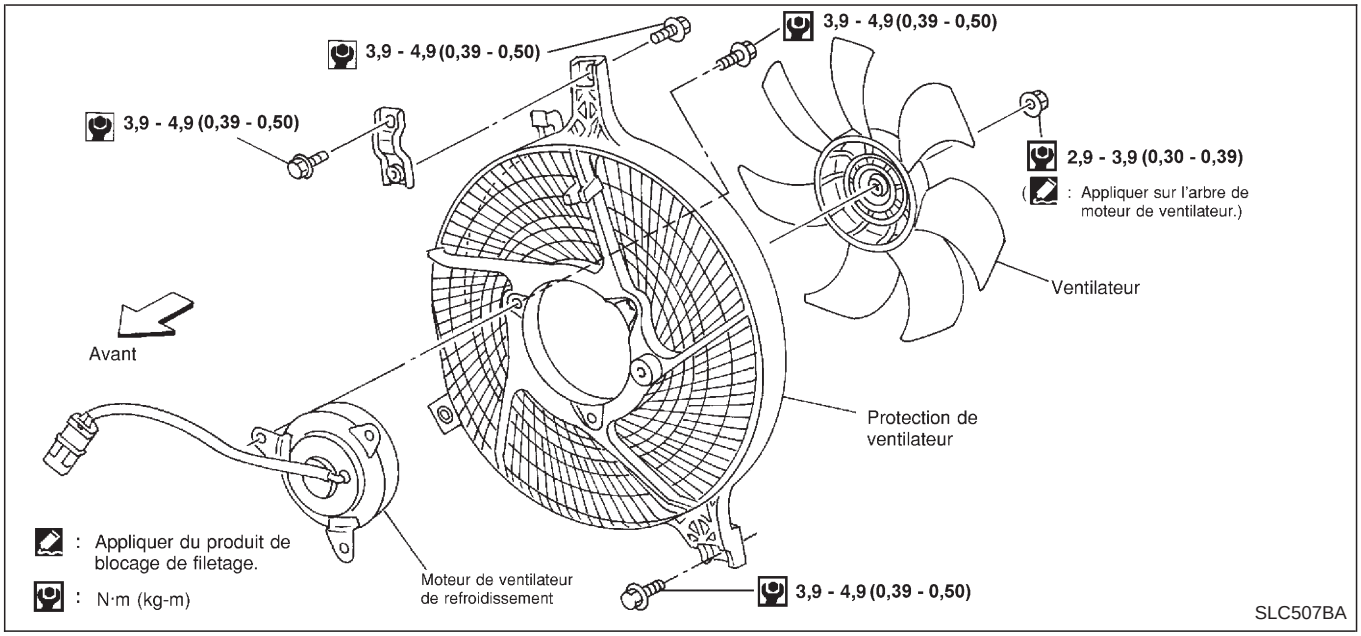

Simpo PDF Merge and Split Unregistered Version - http://www.simpopdf.com

<SUPPLEMENT-IV>

BOITE DE VITESSES MANUELLE

SECTION MT

AVIS DE MODIFICATION :

- **Les valeurs de réglage concernant les modèles de transmission FS5W71C et FS5R30A ont été modifiées.**

TABLE DES MATIERES

CARACTERISTIQUES ET VALEURS DE REGLAGE (SDS) 4002
Caractéristiques générales 4002
Jeu entre l'anneau de synchronisation et le pignon 4003
Anneau de synchronisation de 2ème et de 3ème 4003

Simpo PDF Merge and Split Unregistered Version - http://www.simopdf.com

Caractéristiques générales

Modèle concerné			2 roues motrices		4x4	
			KA24DE	YD25DDTi	KA24DE	YD25DDTi
Modèle de transmission			FS5W71C	FS5R30A	FS5W71C	FS5R30A
Numéro de code du modèle de transmission			VJ301	VK505	VJ361	VK511
Nombre de vitesses			5			
Mode de passage de vitesse						
Type de synchronisation			Warner			
Rapport de démultiplication						
		1ère	3,592	3,580	3,592	3,580
		2ème	2,246	2,077	2,246	2,077
		3ème	1,415	1,360	1,415	1,360
		4ème	1,000	1,000	1,000	1,000
		Surmultipliée	0,821	0,760	0,821	0,760
		Marche arrière	3,657	3,636	3,657	3,636
Nombre de dents						
	Arbre secondaire	Entraînement	21	22	21	22
		1ère	33	32	33	32
		2ème	28	30	28	30
		3ème	26	29	26	29
		Surmultipliée	21	23	21	23
		Marche arrière	36	30	36	30
	Arbre de renvoi	Entraînement	32	32	32	32
		1ère	14	13	14	13
		2ème	19	21	19	21
		3ème	28	31	28	31
		Surmultipliée	39	44	39	44
		Marche arrière	15	12	15	12
	Pignon intermédiaire de marche arrière		21	22	21	22
Contenance en huile			2,0 ℓ	2,8	4,9	5,1
Remarques	Pignon secondaire	Pignon de commande de renvoi	Reposé	Non reposé	Reposé	
		Pignon intermédiaire de marche arrière	Reposé	Non reposé	Reposé	
	Synchroniseur de type d'anneau de synchronisation double		Pignons de 2ème et de 3ème			
	Synchroniseur de marche arrière		Reposé			

Simpo PDF Merge and Split Unregistered Version - http://www.simpopdf.com

Jeu entre l'anneau de synchronisation et le pignon

Unité : mm

Modèle de transmission	FS5W71C		FS5R30A	
Standard	1ère et 2ème	1,20 - 1,60	1ère	1,05 - 1,3
	3ème et entraînement principal		Entraînement principal	
	Surmultipliée		Surmultipliée	
	Marche arrière	1,10 - 1,55	Marche arrière	de −0,1 à 0,35
Limite d'usure	1ère et 2ème	0,80	1ère	0,7
	3ème et entraînement principal		Entraînement principal	
	Surmultipliée		Surmultipliée	
	Marche arrière	0,70	Marche arrière	

Anneau de synchronisation de 2ème et de 3ème

Unité : mm

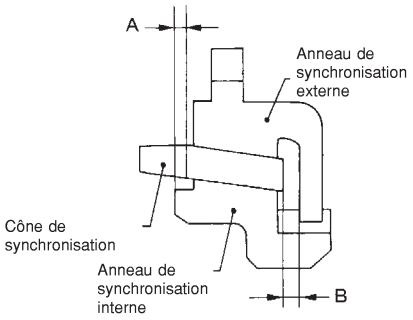

SMT733C

Modèle de transmission	Dimension	Standard	Limite d'usure
FS5W71C* & FS5R30A	A	0,7 - 0,9	0,2
	B	0,6 - 1,1	

* : FS5W71C ; pour l'Europe

Simpo PDF Merge and Split Unregistered Version - http://www.simpopdf.com

<SUPPLEMENT-IV>

ARBRE DE TRANSMISSION ET SUPPORT DE DIFFERENTIEL

SECTION PD

AVIS DE MODIFICATION :

- Les caractéristiques et valeurs de réglage (SDS) ont été modifiées.

TABLE DES MATIERES

CARACTERISTIQUES ET VALEURS DE REGLAGE (SDS) 4002
Arbre de transmission 4002
Transmission de l'essieu 4003

Simpo PDF Merge and Split Unregistered Version - http://www.simpopdf.com

Arbre de transmission

Modèles avec 2 roues motrices (pour l'Europe)

Modèles concernés		KA24DE		YD25DDTi		
		Cabine simple, cabine King		Sans ABS	Avec ABS	Apparence 4x4
		Sans ABS	Avec ABS			
Modèle d'arbre de transmission		3S71H		3S80B		
Nombre de joints		3				
Type d'accouplement avec la transmission		Type à manchon				
Type de palier à collets		Type solidaire (type démontable)				
Longueur d'arbre (entre croisillons)						
mm	1ère	641		642		667
	2ème	1,004	978	1 005	979	984 *1 964 *2
Diamètre extérieur de l'arbre						
mm	1ère	75		65		
	2ème	65		65		

Modèles à quatre roues motrices

Emplacement		Avant		Arrière	
Modèle concerné		KA24DE	YD25DDTi	KA24DE	YD25DDTi
Modèle d'arbre de transmission		2F63H	2F71H	3S71H	3S80B
Nombre de joints		2		3	
Type d'accouplement avec la transmission		Type à flasque		Type à manchon	
Type de palier à collets		Type solidaire (type démontable)		Type solidaire (type démontable)	
Longueur d'arbre (entre croisillons)					
mm	1ère	546	565	392	372 *1 377 *2
	2ème	—	—	870	872 *1 847 *2
Diamètre extérieur de l'arbre					
mm	1ère	50,8		75	65
	2ème	—		65	65

*1 : avec transmission de l'essieu C200
*2 : avec transmission de l'essieu H233B

Simpo PDF Merge and Split Unregistered Version - http://www.simpopdf.com

Transmission de l'essieu

CARACTERISTIQUES GENERALES

Modèles avec 2 roues motrices (pour l'Europe)

Modèle concerné	YD25DDTi						KA24DE	
	Sauf pour cabine double avec apparence 4x4		Cabine double avec apparence 4x4				T/M	
Modèle de transmission de l'essieu	Standard	Option	Standard	Option			Standard	Option
	C200				H233B		C200	
	4 pignons	LSD	4 pignons	LSD	4 pignons	LSD	4 pignons	LSD
Contenance en huile (env.) ℓ	1,3							
Rapport de démultiplication	3,900		4,625				4,111	
Nombre de dents (couronne dentée/pignon d'entraînement)	39/10		37/8				37/9	

Modèles 4x4 (pour l'Europe)

Modèle concerné	YD25DDTi		KA24DE	
Transmission de l'essieu avant	R180A			
Rapport de démultiplication	4,625			
Contenance en huile (env.) ℓ	1,3			
Modèle de transmission de l'essieu	Standard	Option	Standard	Option
	C200			
	4 pignons	LSD	4 pignons	LSD
Contenance en huile (env.) ℓ	1,3			
Rapport de démultiplication	4,625			
Nombre de dents (couronne dentée/pignon d'entraînement)	37/8			

Simpo PDF Merge and Split Unregistered Version - http://www.simpopdf.com

<SUPPLEMENT-IV>

SYSTEME DE RETENUE

SECTION RS

AVIS DE MODIFICATION :
Le schéma de câblage du système d'airbag a été modifié.

TABLE DES MATIERES

DIAGNOSTICS DES DEFAUTS - Système de retenue supplémentaire (SRS).....4002

Schéma de câblage - SRS -.....4002

Simpo PDF Merge and Split Unregistered Version - http://www.simpopdf.com

Schéma de câblage — SRS —

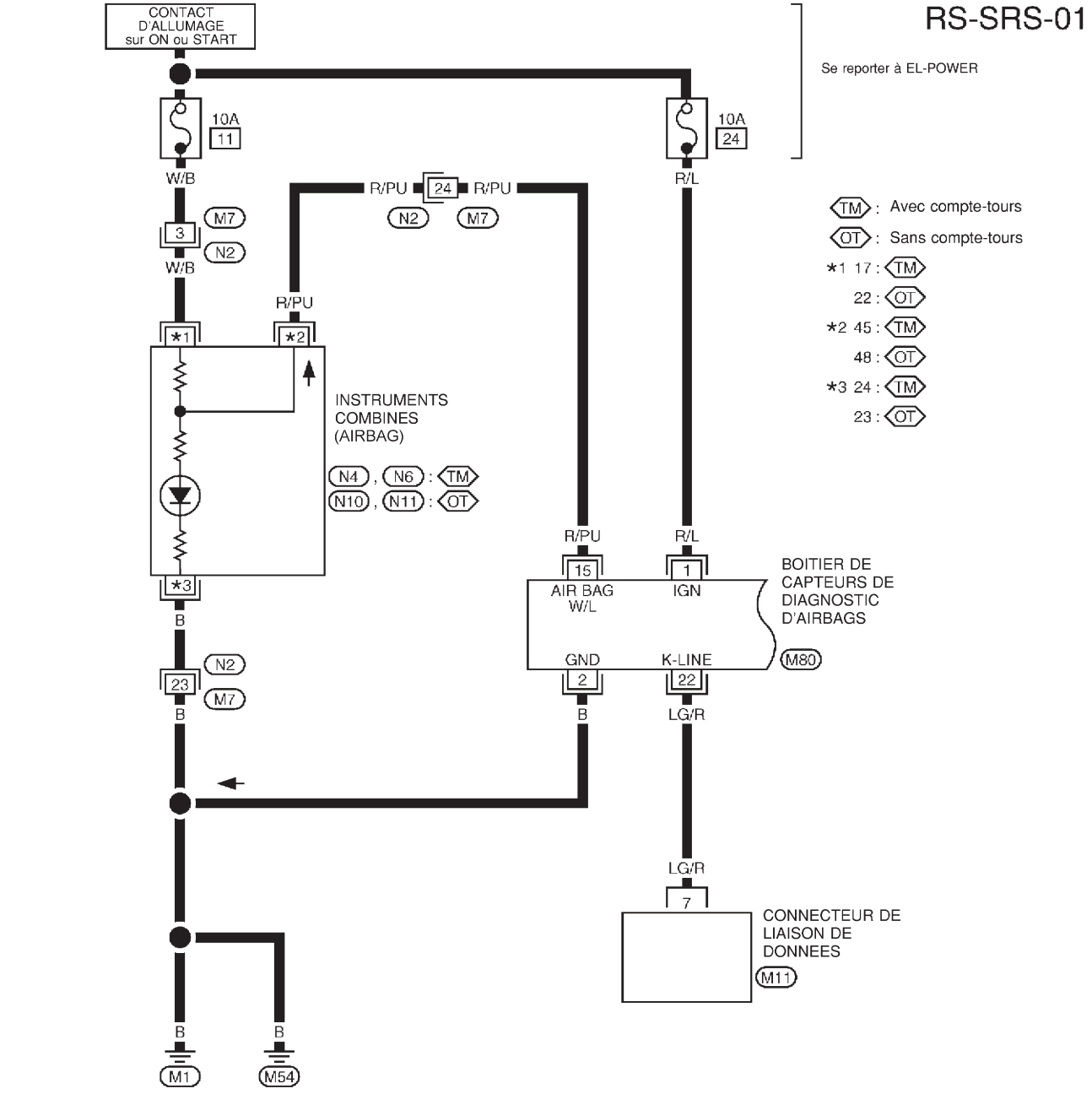

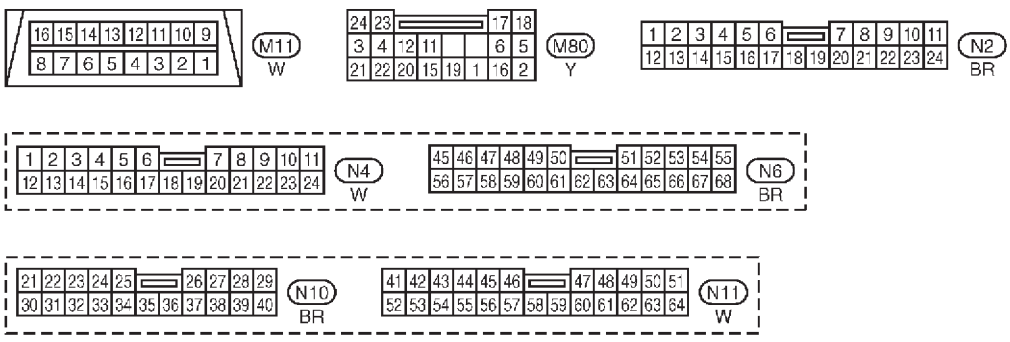

GRS006A

Simpo PDF Merge and Split Unregistered Version - http://www.simpopdf.com

Schéma de câblage — SRS — (Suite)

RS-SRS-02

DA : Avec airbag double
PT : Avec prétensionneur de ceinture de sécurité
AP : Avec prétensionneur de ceinture de sécurité (côté conducteur et passager)
PM : Avec prétensionneur de ceinture de sécurité pour le Moyen-Orient
XP : Avec prétensionneur de ceinture de sécurité sauf pour le Moyen-Orient
AM : Avec prétensionneur de ceinture de sécurité (côté conducteur et passager) pour le Moyen-Orient
XA : Avec prétensionneur de ceinture de sécurité (côté conducteur et passager) sauf pour le Moyen-Orient

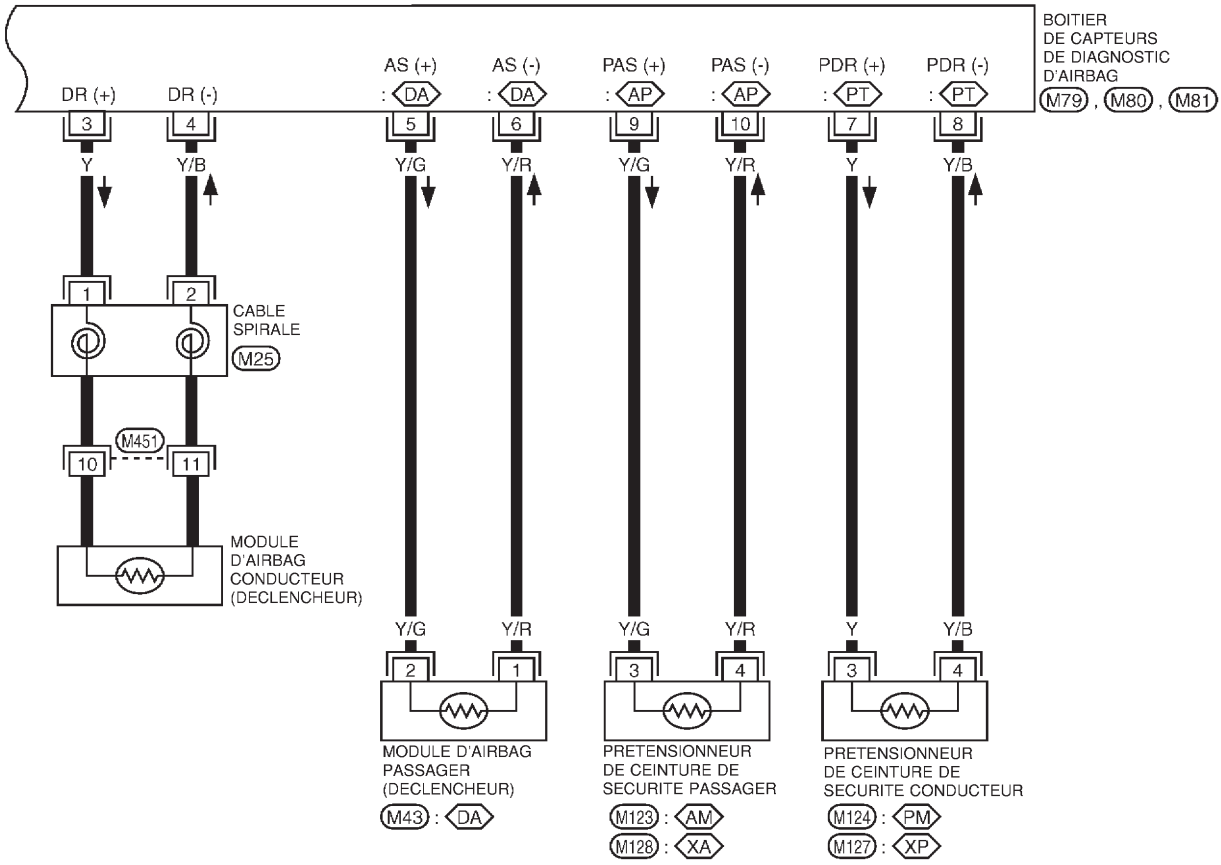

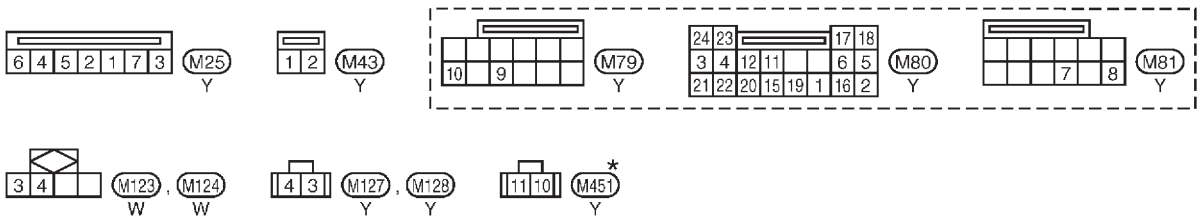

* : Ce connecteur n'est pas indique dans la DISPOSITION DES FAISCEAUX, section EL.

GRS014A

Simpo PDF Merge and Split Unregistered Version - http://www.simpopdf.com

<SUPPLEMENT-IV>

DIRECTION

SECTION ST

AVIS DE MODIFICATION :
Changement du couple de serrage du module d'airbag.

TABLE DES MATIERES

VOLANT ET COLONNE DE DIRECTION.....4002

Simpo PDF Merge and Split Unregistered Version - http://www.simpopdf.com

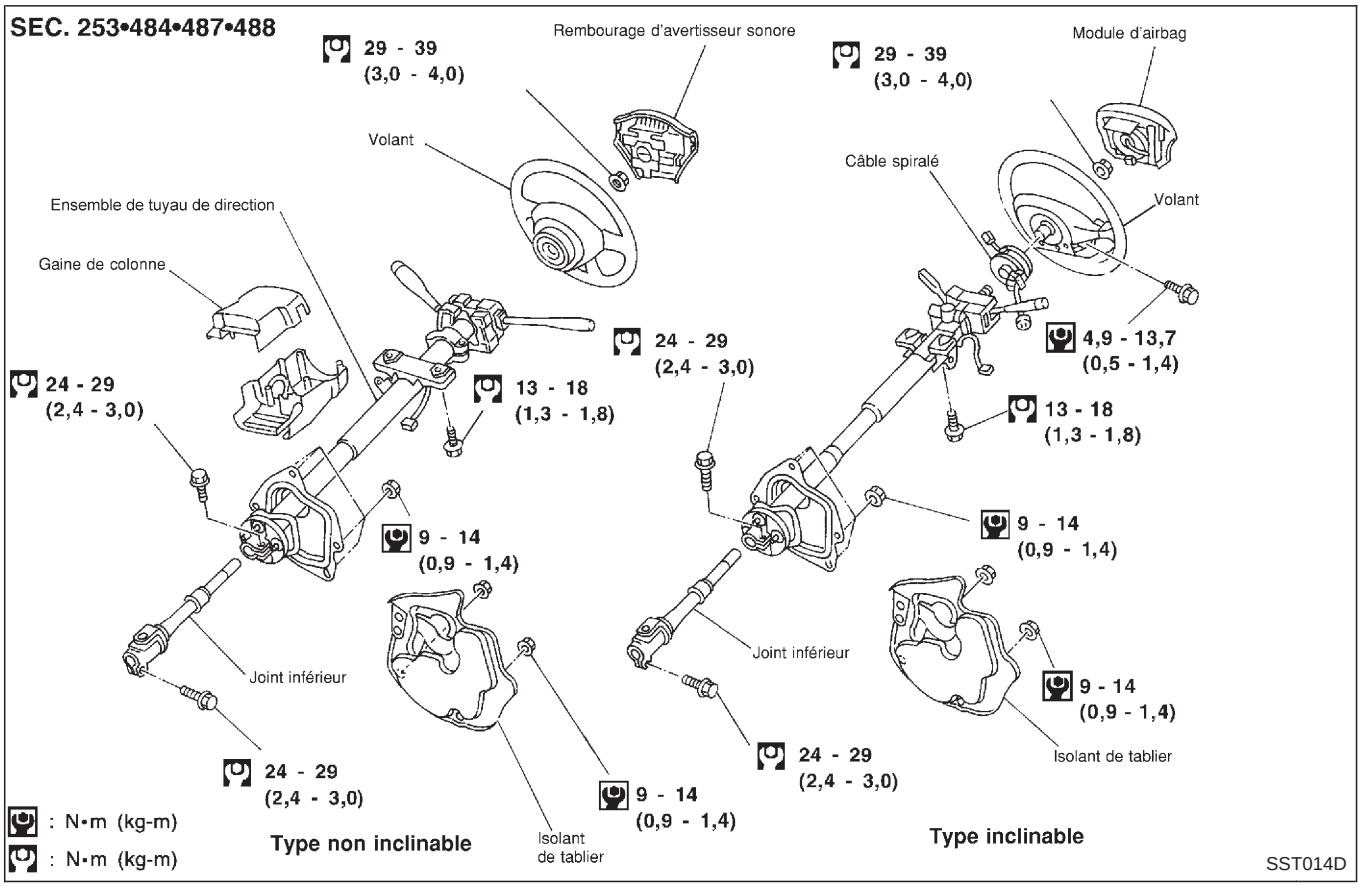

Simpo PDF Merge and Split Unregistered Version - http://www.simpopdf.com

<SUPPLEMENT-V>

SYSTEME DE FREINAGE

SECTION BR

AVIS DE NOTIFICATION :

Les schémas de câblage ont été modifiés.
Les caractéristiques et valeurs de réglage (SDS) ont été modifiées.

TABLE DES MATIERES

DIAGNOSTIC DES DEFAUTS 5002
Schéma/Modèles avec 4 capteurs de roue 5002
Schéma de câblage - ABS -/Modèles à 4 capteurs de roue, conduite à gauche 5003
Schéma de câblage - ABS -/Modèles à 4 capteurs de roue, conduite à droite 5006
CARACTERISTIQUES ET VALEURS DE REGLAGE (SDS) 5009
Caractéristiques générales 5009

Simpo PDF Merge and Split Unregistered Version - http://www.simpopdf.com

Schéma/Modèles avec 4 capteurs de roue

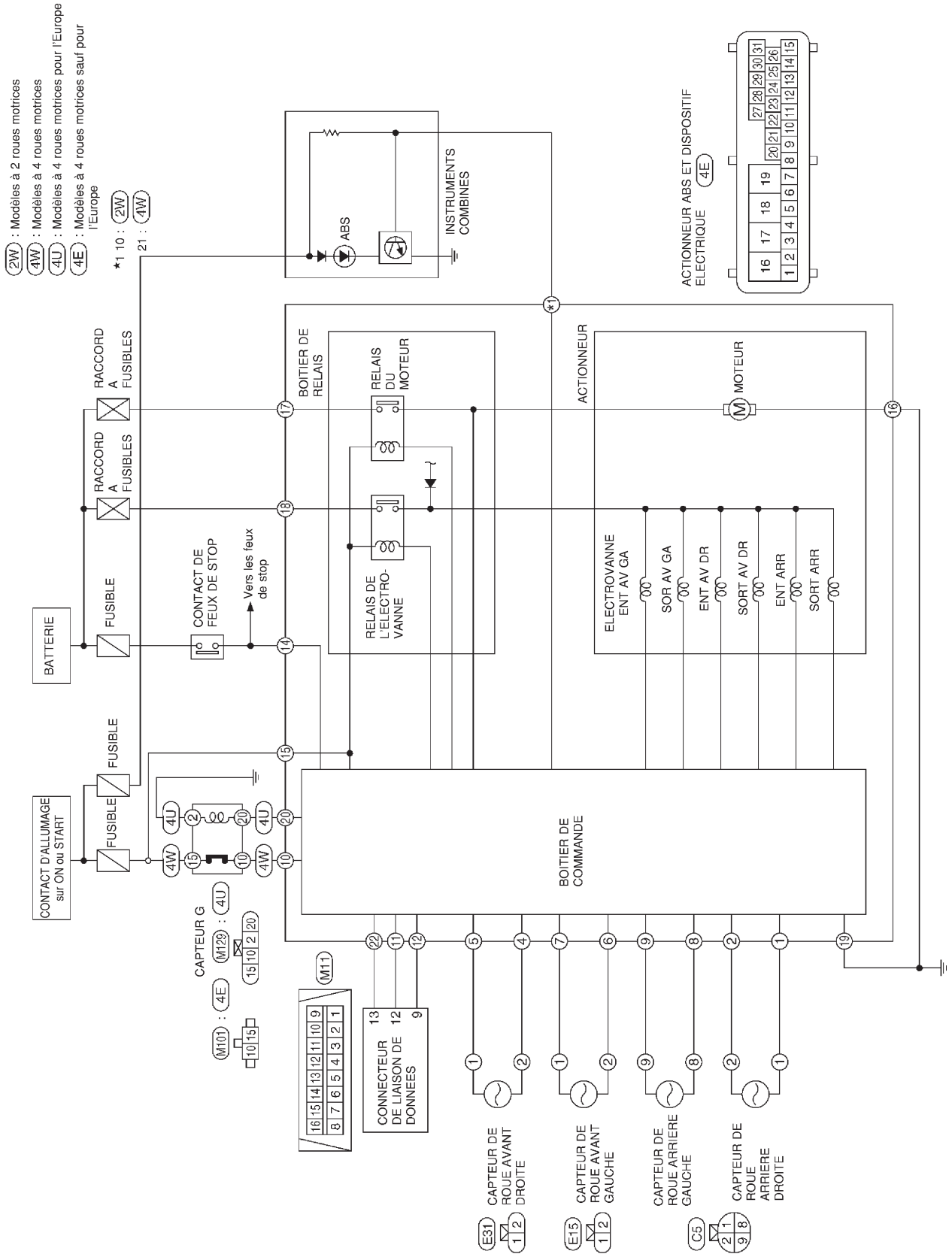

GBR060A

Simpo PDF Merge and Split Unregistered Version - http://www.simpopdf.com

Schéma de câblage — ABS —/Modèles à 4 capteurs de roue, conduite à gauche

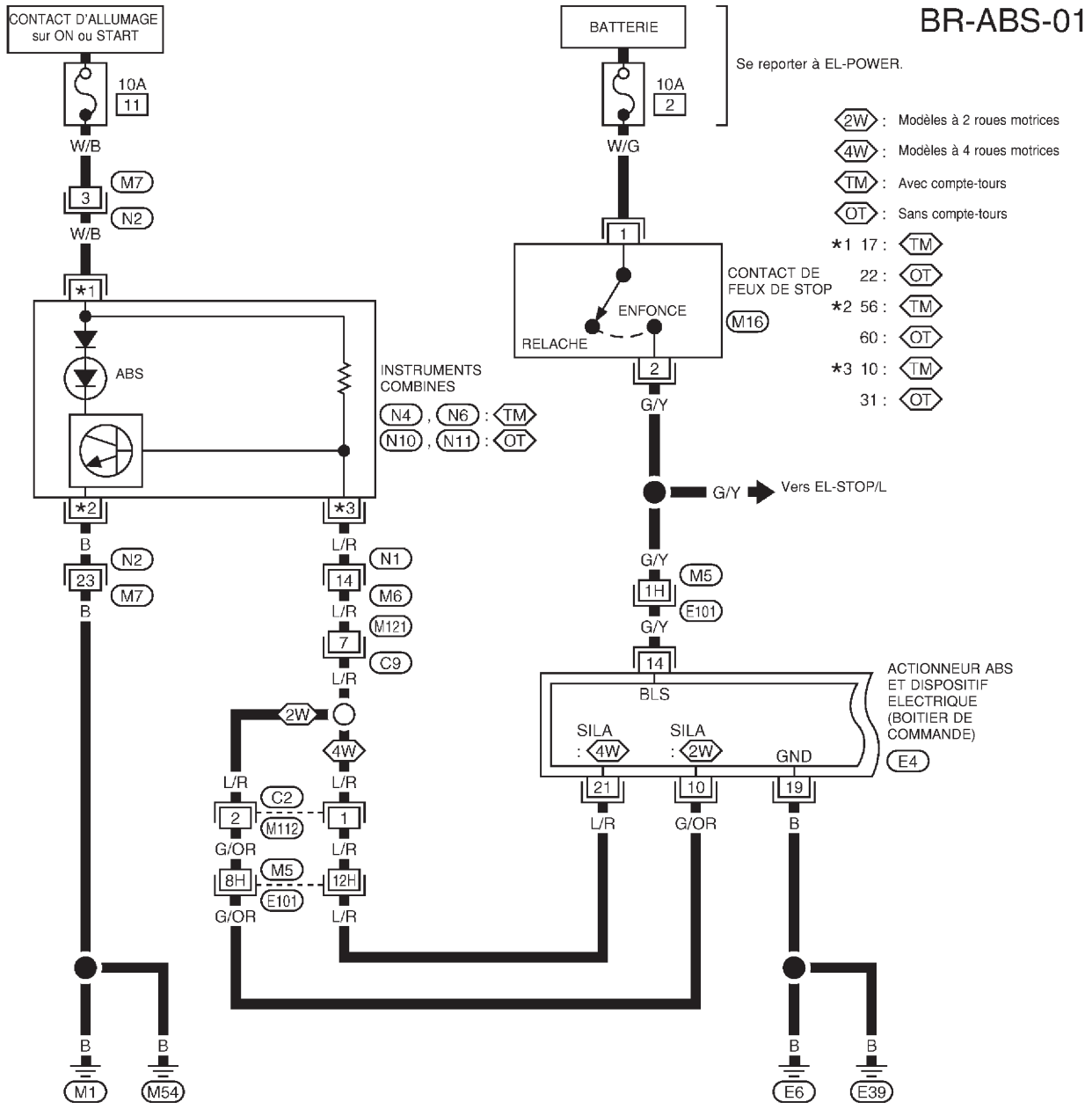

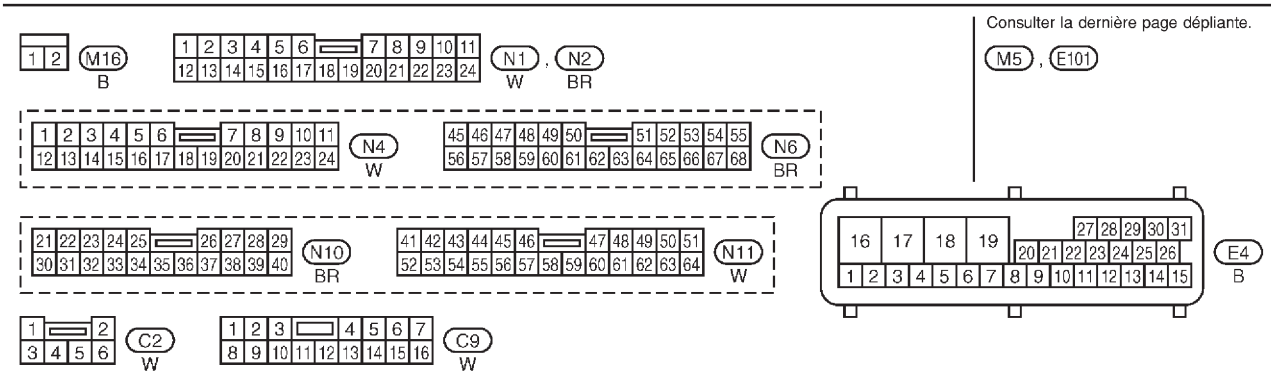

GBR061A

Simpo PDF Merge and Split Unregistered Version - http://www.simpopdf.com

Schéma de câblage — ABS —/Modèles à 4 capteurs de roue, conduite à gauche (Suite)

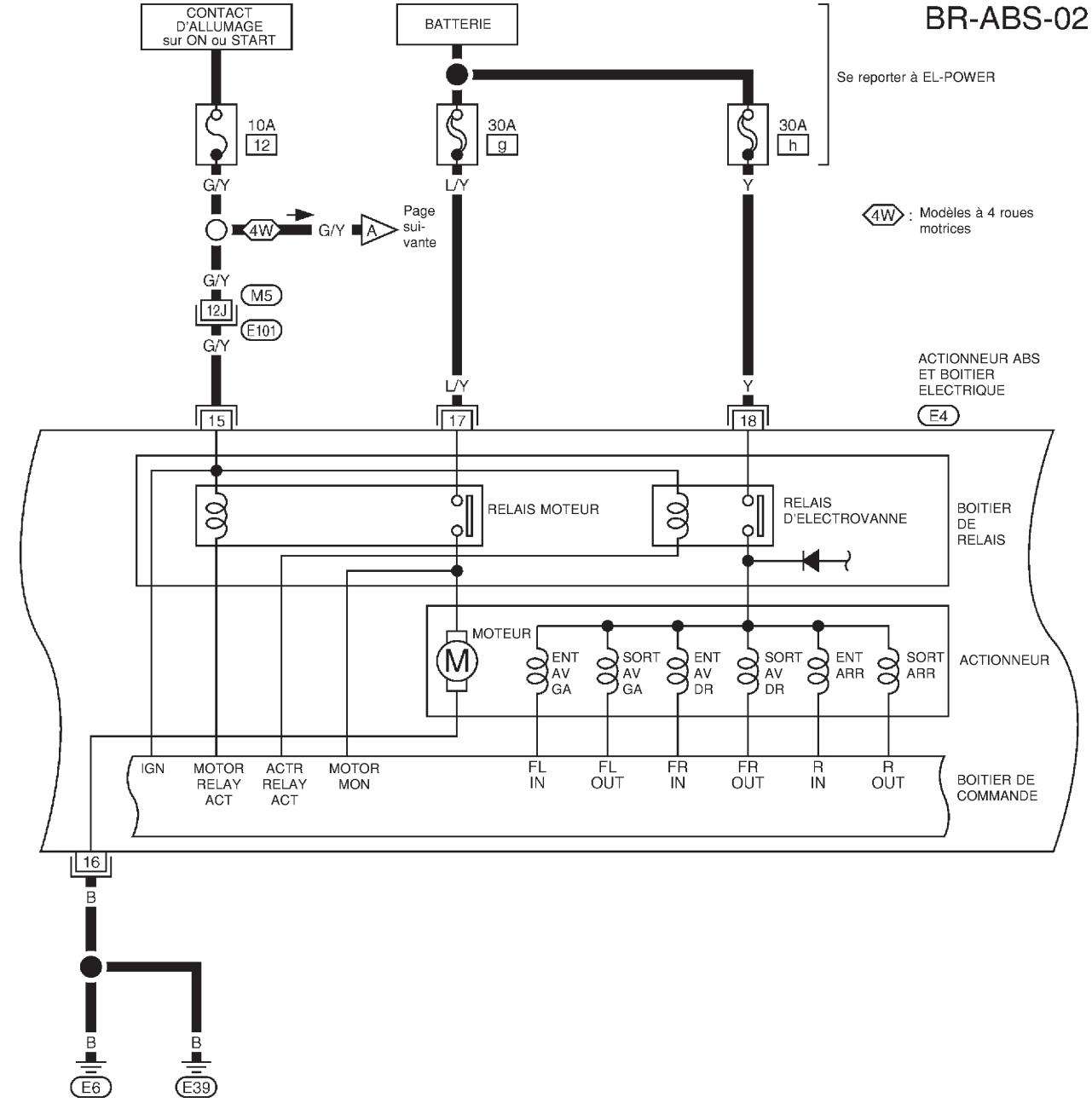

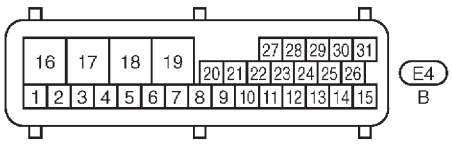

Consulter la dernière page dépliante.
M5 , E101

GBR062A

Simpo PDF Merge and Split Unregistered Version - http://www.simpopdf.com

Schéma de câblage — ABS —/Modèles à 4 capteurs de roue, conduite à gauche (Suite)

BR-ABS-03

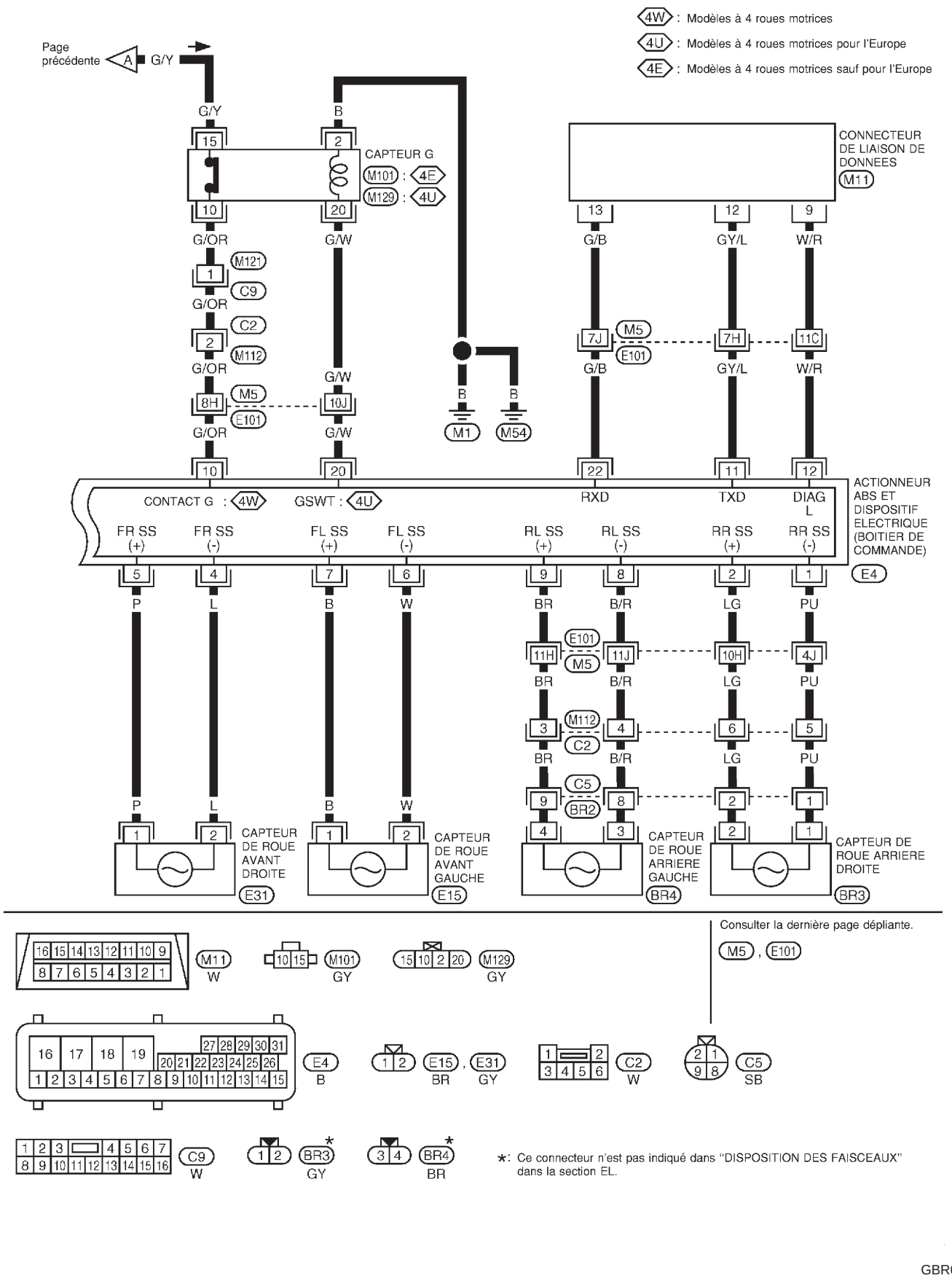

GBR063A

Simpo PDF Merge and Split Unregistered Version - http://www.simpopdf.com

Schéma de câblage — ABS —/Modèles à 4 capteurs de roue, conduite à droite

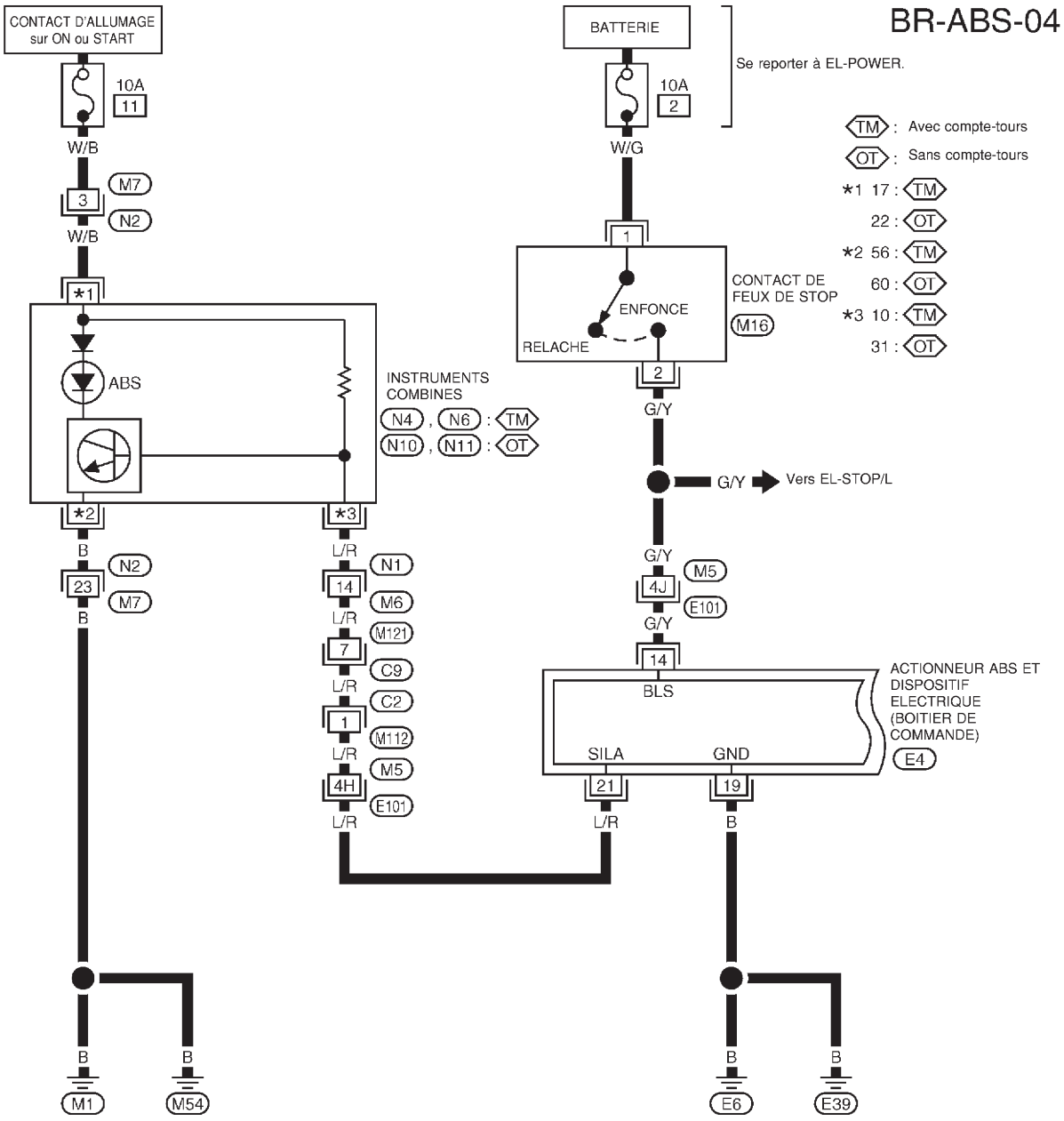

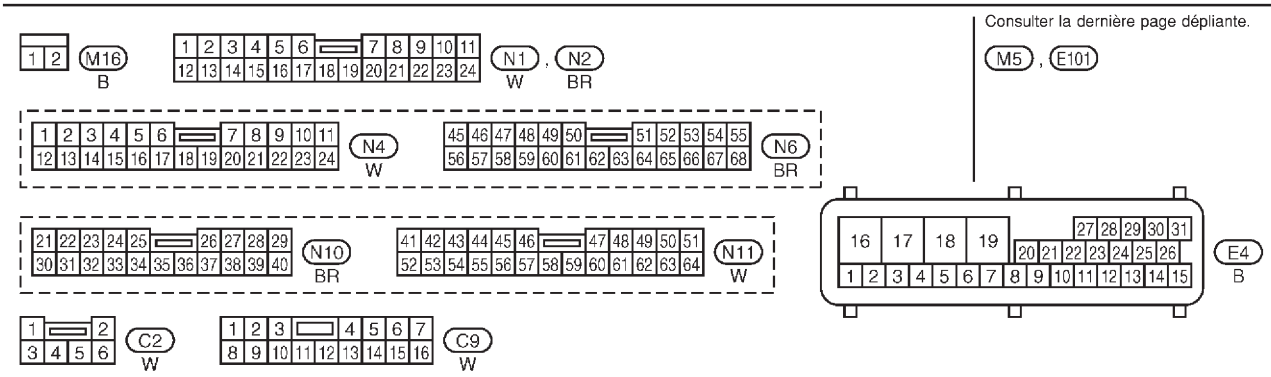

GBR064A

Simpo PDF Merge and Split Unregistered Version - http://www.simpopdf.com

Schéma de câblage — ABS —/Modèles à 4 capteurs de roue, conduite à droite (Suite)

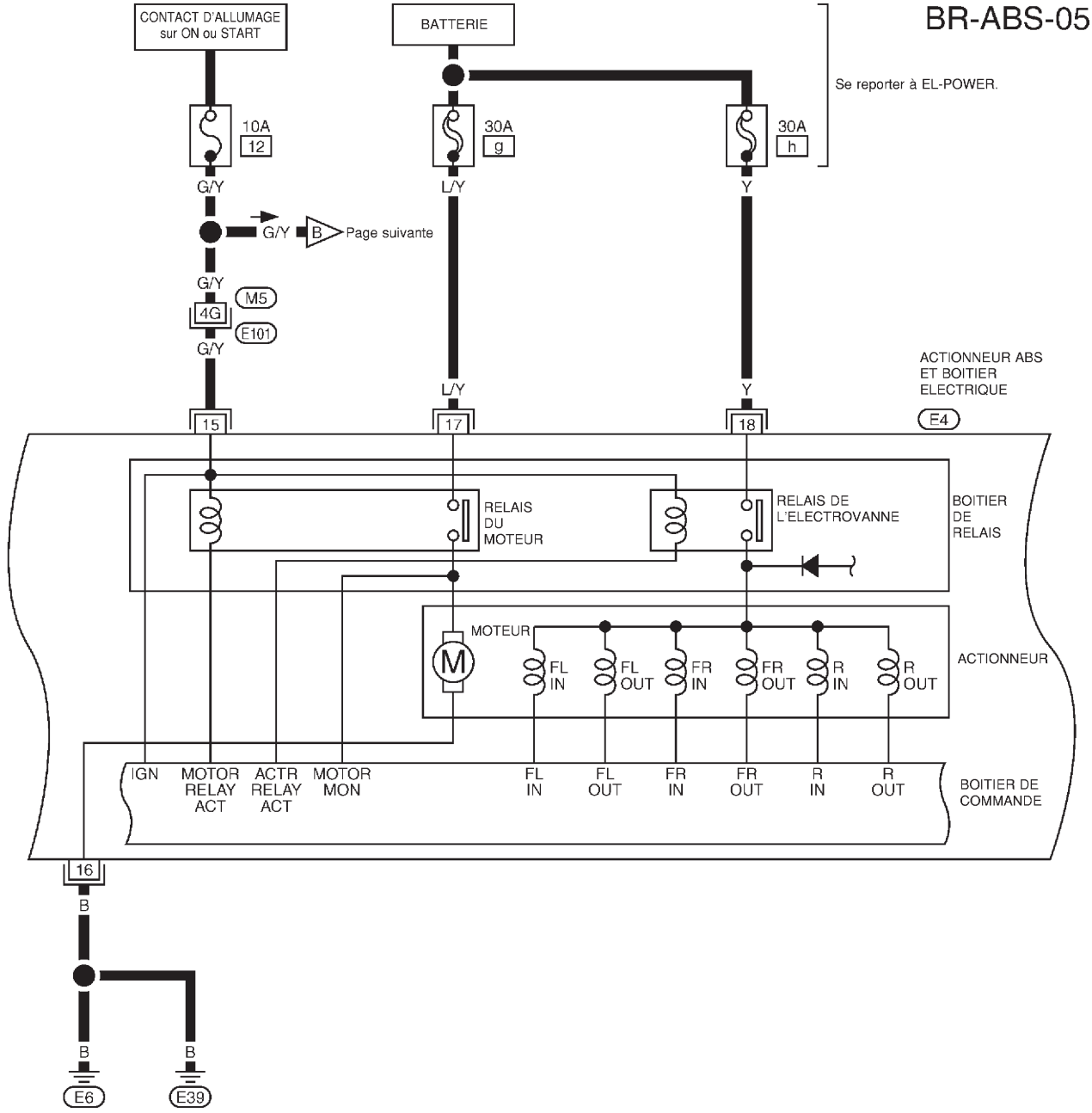

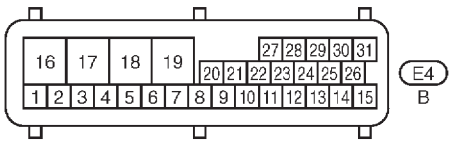

Consulter la dernière page dépliante.
M5 , E101

GBR065A

Simpo PDF Merge and Split Unregistered Version - http://www.simpopdf.com

Schéma de câblage — ABS —/Modèles à 4 capteurs de roue, conduite à droite (Suite)

BR-ABS-06

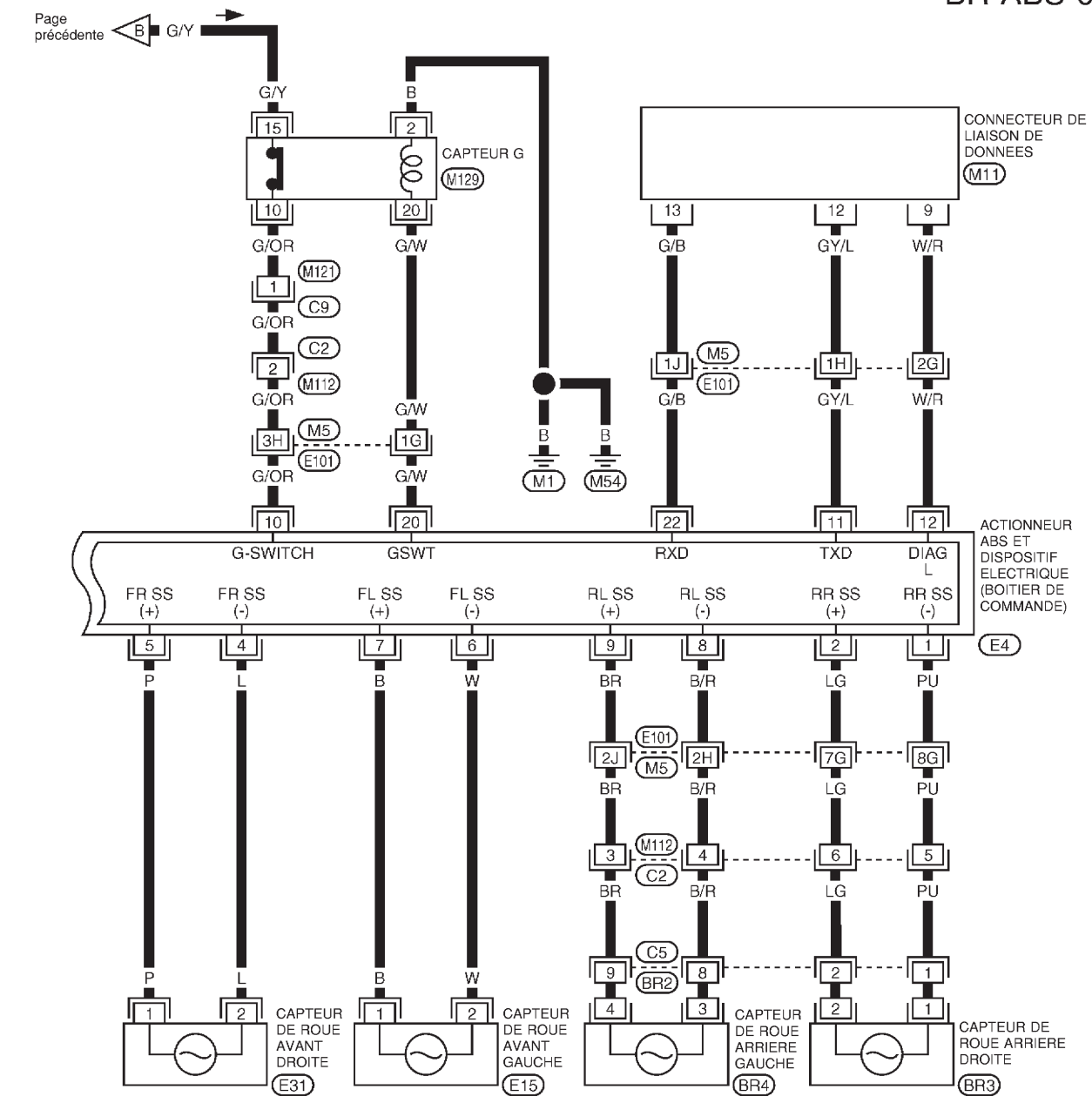

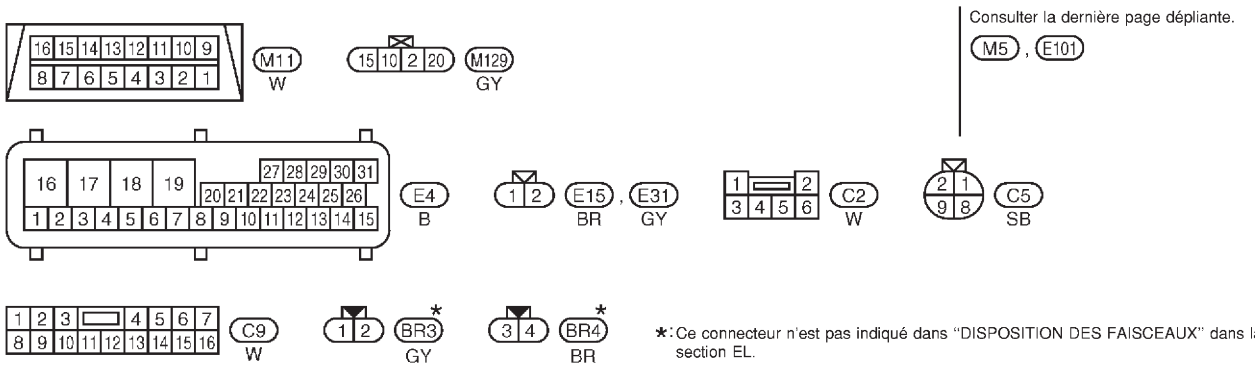

GBR066A

Simpo PDF Merge and Split Unregistered Version - http://www.simpopdf.com

Caractéristiques générales

4X2

Destination	Europe			
Modèle concerné	KA24DE	YD25	KA24DE	YD25
Frein avant				
Type	CL28VD		CL33VD	
Diamètre de l'alésage de cylindre mm	42,8 x 2		46,4 x 2	
Dimension de la plaquette mm Longueur x largeur x épaisseur	146,6 x 48,5 x 10		132,0 x 52,5 x 11	
Diamètre externe de rotor x épaisseur mm	260 x 26		283 x 28	
Frein arrière				
Type	LT26B		LT30A	
Diamètre d'alésage de cylindre de roue mm	22,22			
Dimension de la garniture mm Longueur x largeur x épaisseur	249,6 x 40 x 5,5		296 x 50 x 6,1	
Diamètre interne de tambour mm	260,0		295,0	
Diamètre d'alésage de maître-cylindre mm	Avec ABS : 23,81 Sans ABS : 25,4		25,4	
Soupape de commande				
Type	LSV			
Pointe en croix x rapport de réduction kPa (bar, kg/cm^2)	(Variable) x 0,15			
Amplificateur de freinage				
Modèle	M195T		M215T	
Diamètre de diaphragme mm	Primaire : 205 Secondaire : 180		Primaire : 230 Secondaire : 205	
Liquide de frein recommandé	DOT 3 ou DOT 4			

Simpo PDF Merge and Split Unregistered Version - http://www.simpopdf.com

Caractéristiques générales (Suite)

4X4

Destination	Europe	
Modèle concerné	KA24DE	YD25
Frein avant		
Type	CL33VD	
Diamètre d'alésage de cylindre mm	46,4 x 2	
Dimension de la plaquette mm Longueur x largeur x épaisseur	132,0 x 52,5 x 11	
Diamètre externe de rotor x épaisseur mm	283 x 28	
Frein arrière		
Type	LT30A	
Diamètre d'alésage de cylindre de roue mm	22,22	
Dimension de la garniture mm Longueur x largeur x épaisseur	296,0 x 50,0 x 6,1	
Diamètre interne de tambour mm	295	
Diamètre d'alésage de maître-cylindre mm	25,4	
Soupape de commande		
Type	LSV	
Pointe en croix x rapport de réduction kPa (bar, kg/cm^2)	(Variable) x 0,15	
Amplificateur de freinage		
Modèle	M215T	
Diamètre de diaphragme mm	Primaire : 230 Secondaire : 205	
Liquide de frein recommandé	DOT 3 ou DOT 4	

Simpo PDF Merge and Split Unregistered Version - http://www.simpopdf.com

<SUPPLEMENT-V>

CARROSSERIE ET GARNITURE

SECTION BT

AVIS DE MODIFICATION :
Une barre de protection a été ajoutée.

TABLE DES MATIERES

EXTERIEUR 5002
Barre de protection 5002
SIEGE 5003
Siège avant 5003
Siège arrière 5004

Simpo PDF Merge and Split Unregistered Version - http://www.simpopdf.com

Barre de protection

DEPOSE — Ensemble de barre de protection

① Déposer les écrous de la barre de protection (gauche).
② Déposer les écrous de la barre de protection (droite).
③ Déposer les boulons de la barre de protection (droite).
④ Déposer l'ensemble de barre de protection.

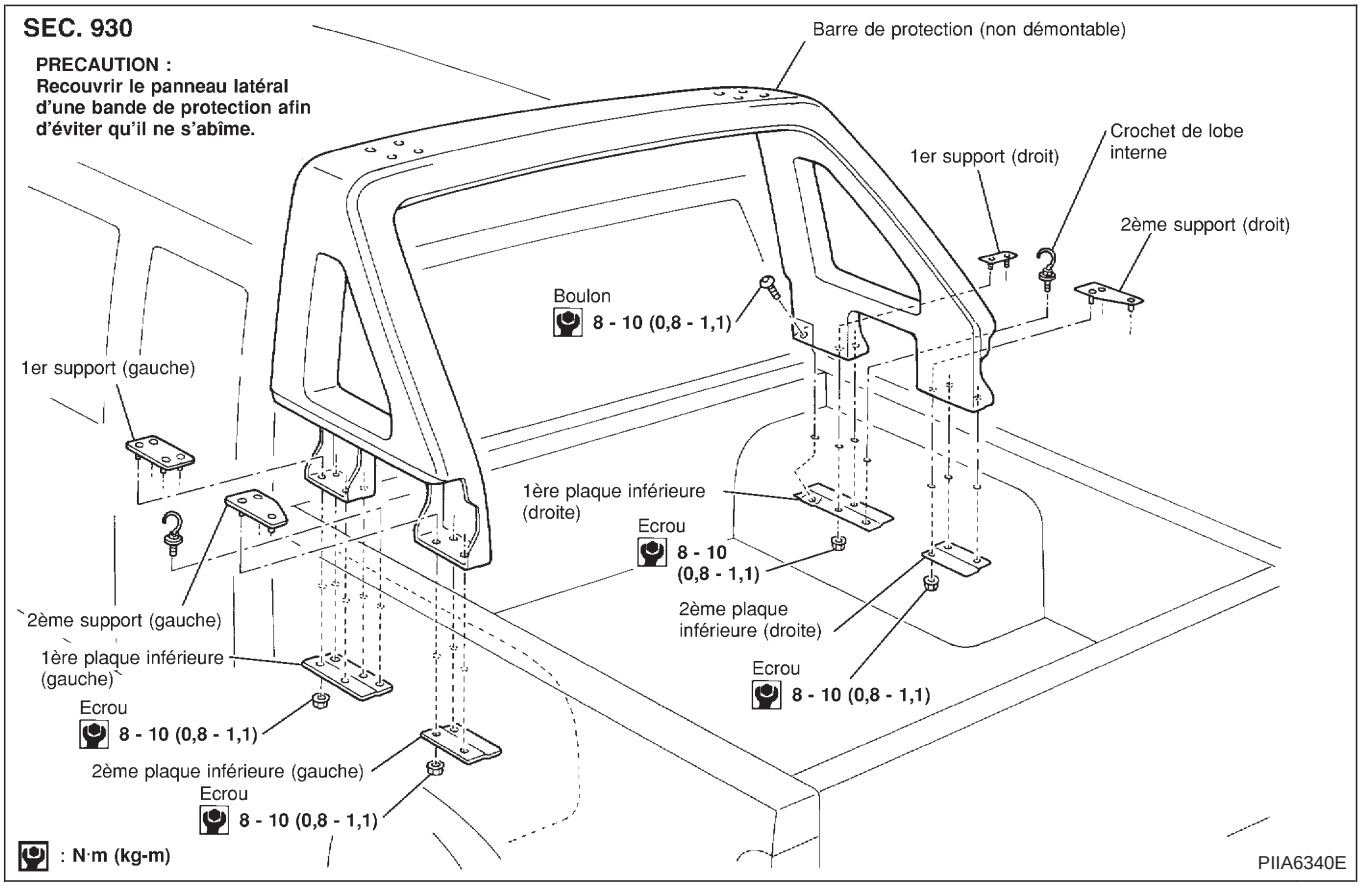

Simpo PDF Merge and Split Unregistered Version - http://www.simpopdf.com

- Lors de la dépose ou de la repose de la garniture de siège, manipuler cette dernière en prenant soin de ne pas la laisser entrer en contact avec la poussière et d'éviter tout dommage.

Siège avant

SEC. 870

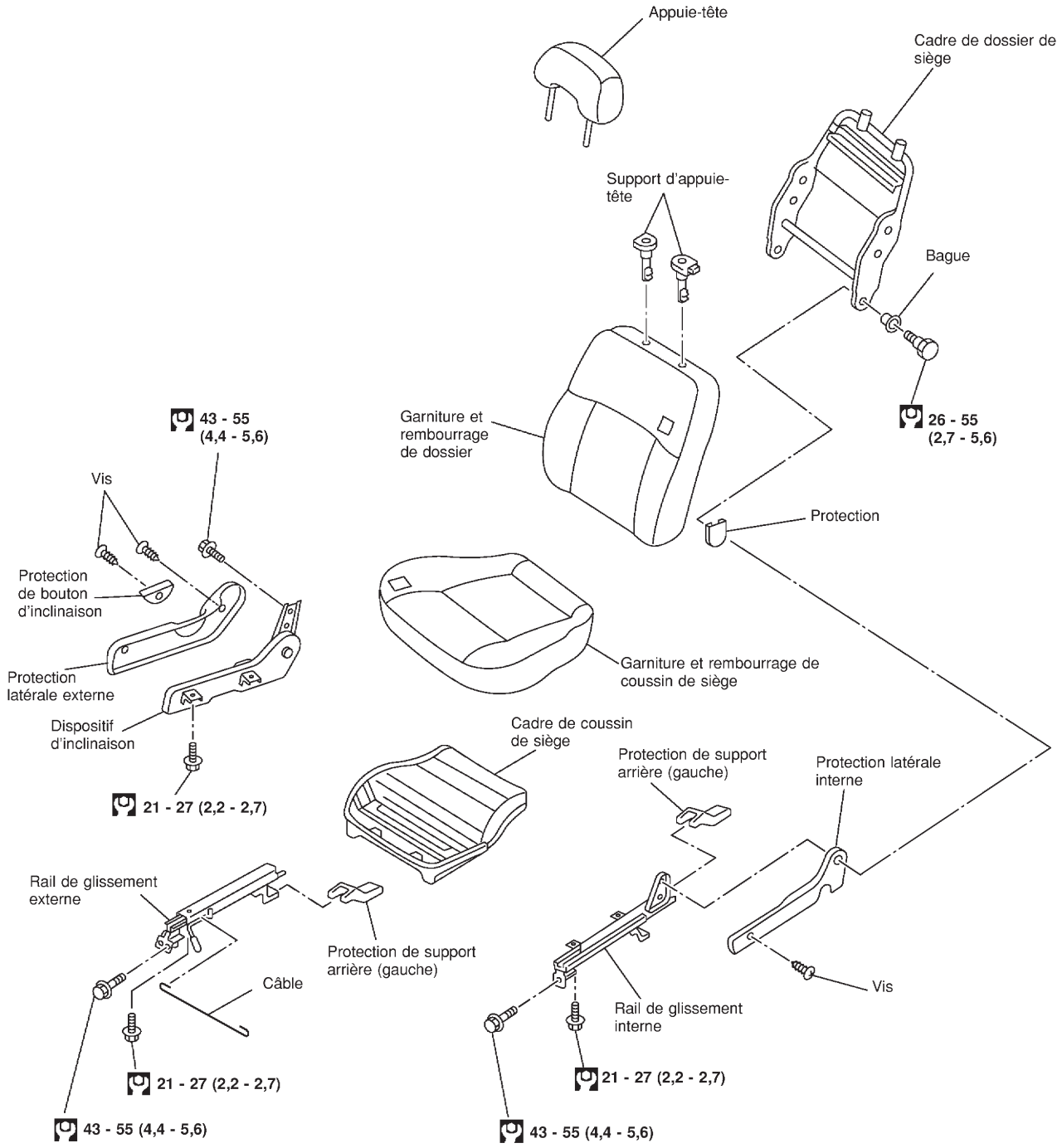

: N·m (kg-m)

PIIB0901E

Simpo PDF Merge and Split Unregistered Version - http://www.simpopdf.com

Siège arrière

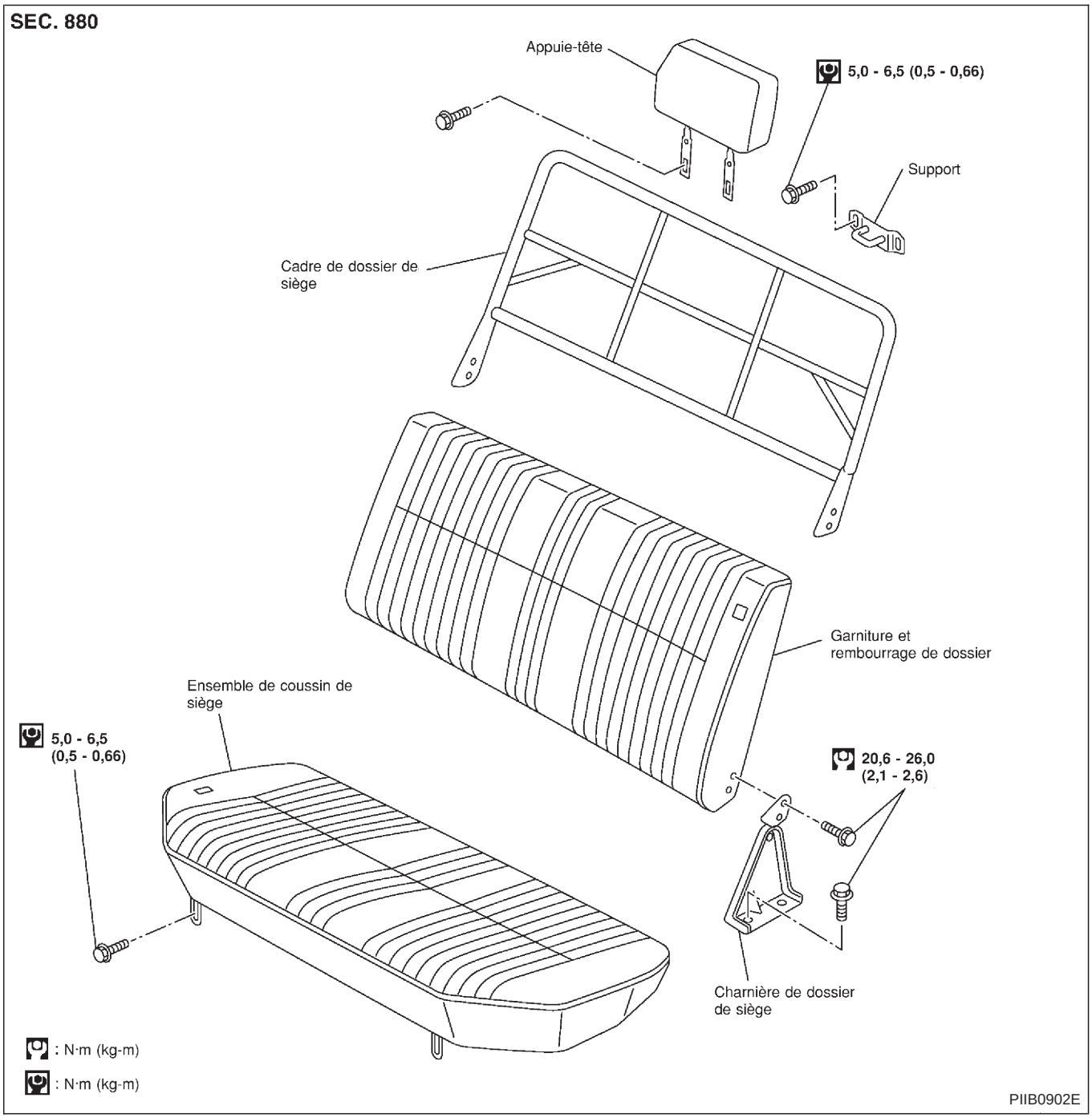

Simpo PDF Merge and Split Unregistered Version - http://www.simpopdf.com

<SUPPLEMENT-V>

DISPOSITIF ELECTRIQUE

SECTION EL

AVIS DE MODIFICATION :

- Les schémas de câblage ont été modifiés.
- La disposition des faisceaux a été modifiée.

TABLE DES MATIERES

PLAFONNIER 5002
Schéma de câblage - ROOM/L - 5002
ECLAIRAGE 5003
Schéma de câblage - ILL -/conduite à gauche 5003
LEVE-VITRE ELECTRIQUE 5006
Schéma/avec fonction de détection d'interruption 5006
Schéma de câblage - WINDOW -/avec fonction de détection d'interruption 5008
SYSTEME D'ALARME ANTIVOL 5012
Schéma de câblage - PRWIRE - 5012
DISPOSITION DES FAISCEAUX 5014
Faisceau principal 5014
Faisceau de compartiment moteur 5020
Faisceau d'éclairage intérieur/conduite à gauche 5028
CODES DE SCHEMAS DE CABLAGE (CODES DE CELLULES) 5029

Simpo PDF Merge and Split Unregistered Version - http://www.simpopdf.com

Schéma de câblage — ROOM/L —

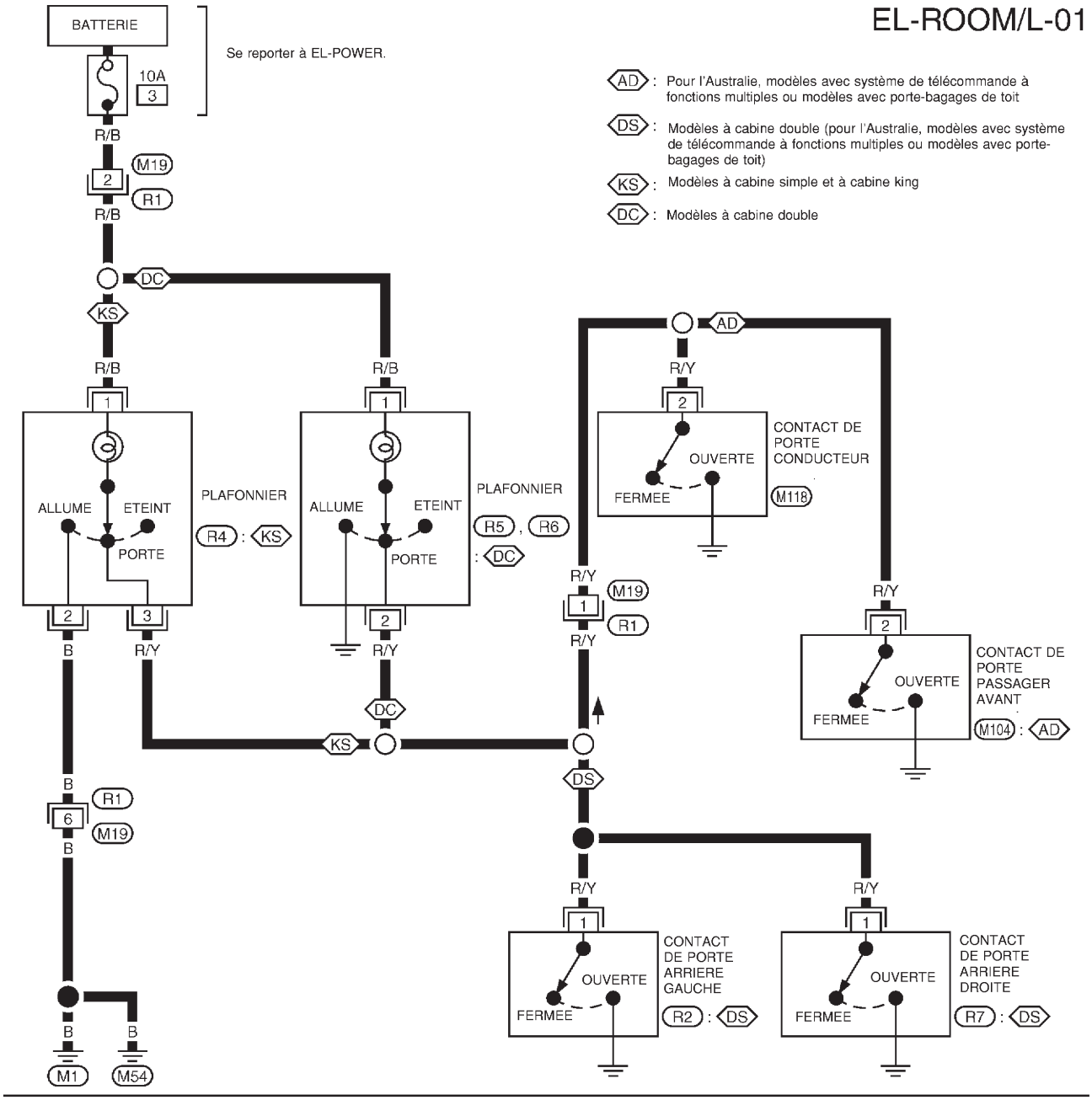

GEL924A

Simpo PDF Merge and Split Unregistered Version - http://www.simpopdf.com

Schéma de câblage — ILL —/conduite à gauche

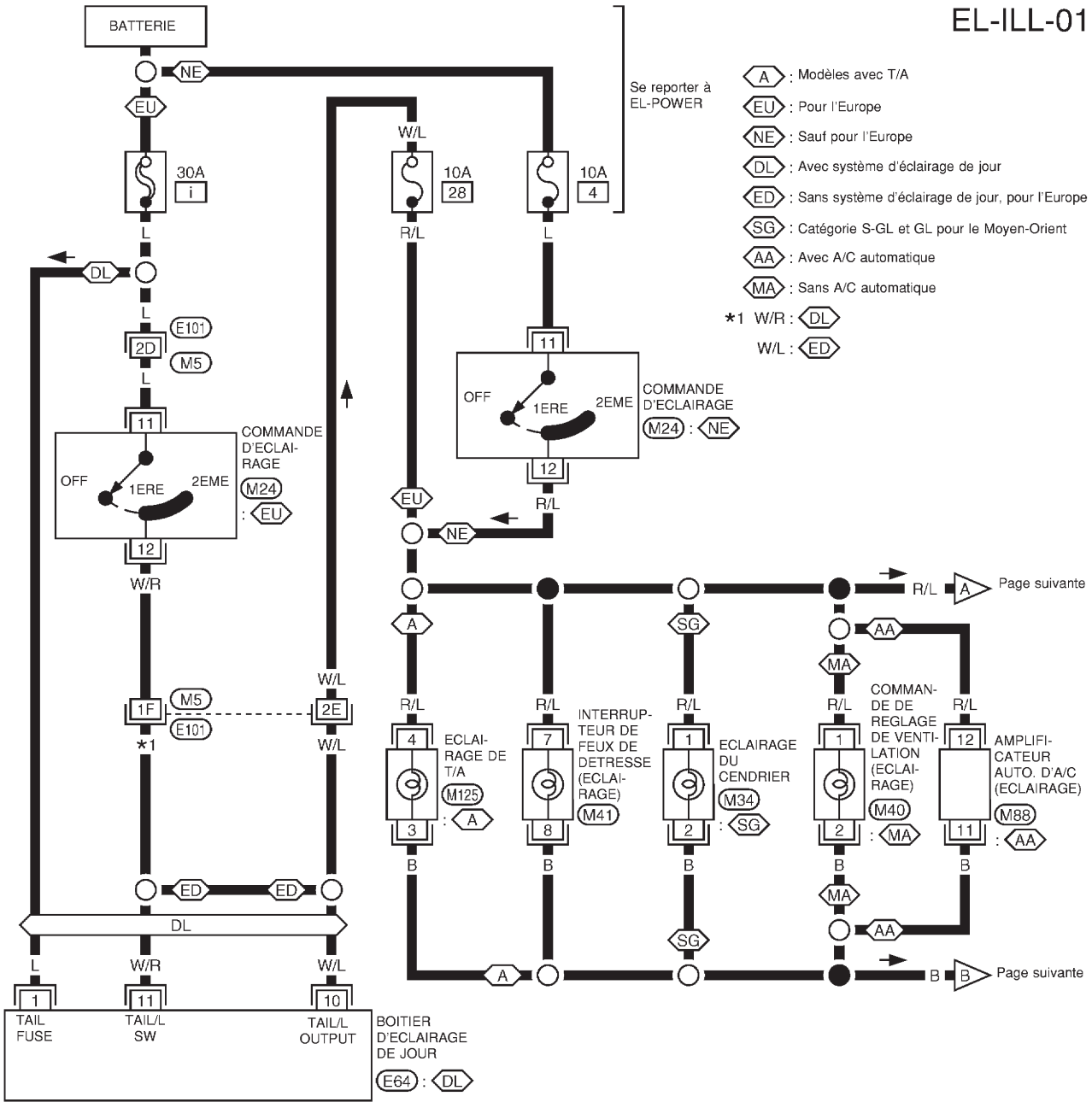

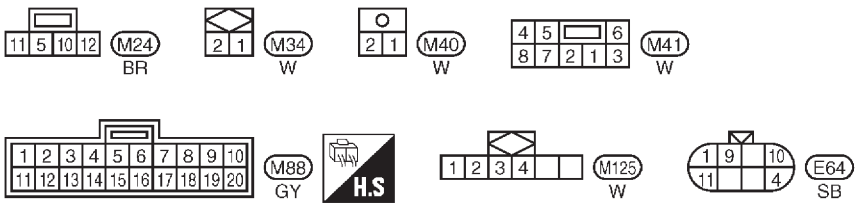

Consulter la dernière page dépliante.
M5, E101

GEL675A

Simpo PDF Merge and Split Unregistered Version - http://www.simpopdf.com

Schéma de câblage — ILL —/conduite à gauche (Suite)

EL-ILL-02

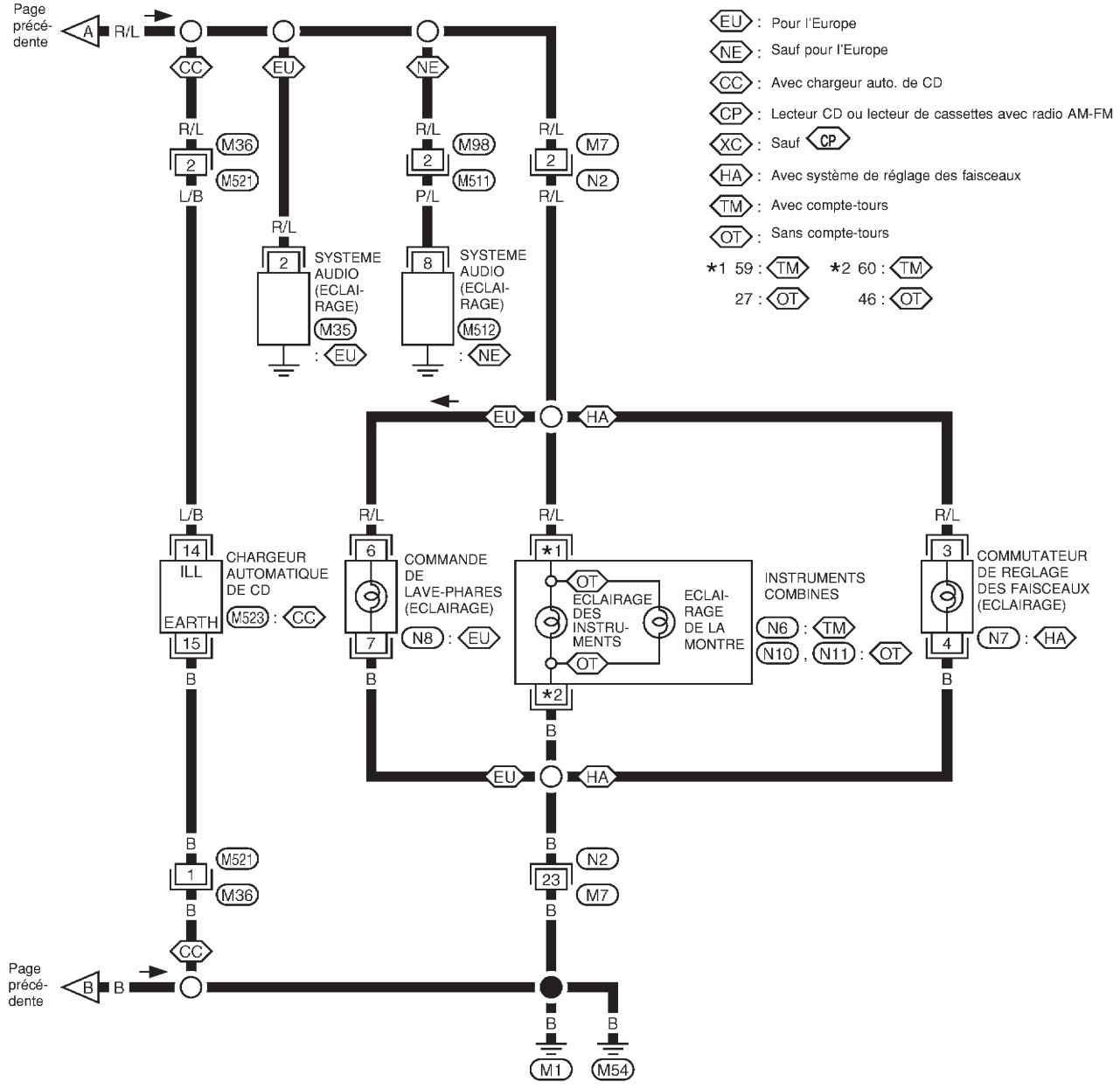

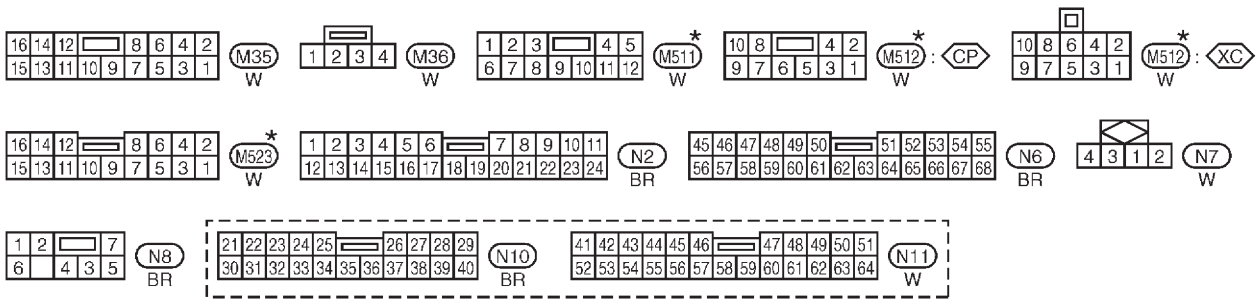

*: Ce connecteur n'est pas indiqué dans DISPOSITION DES FAISCEAUX.

GEL676A

Simpo PDF Merge and Split Unregistered Version - http://www.simpopdf.com

Schéma/avec fonction de détection d'interruption

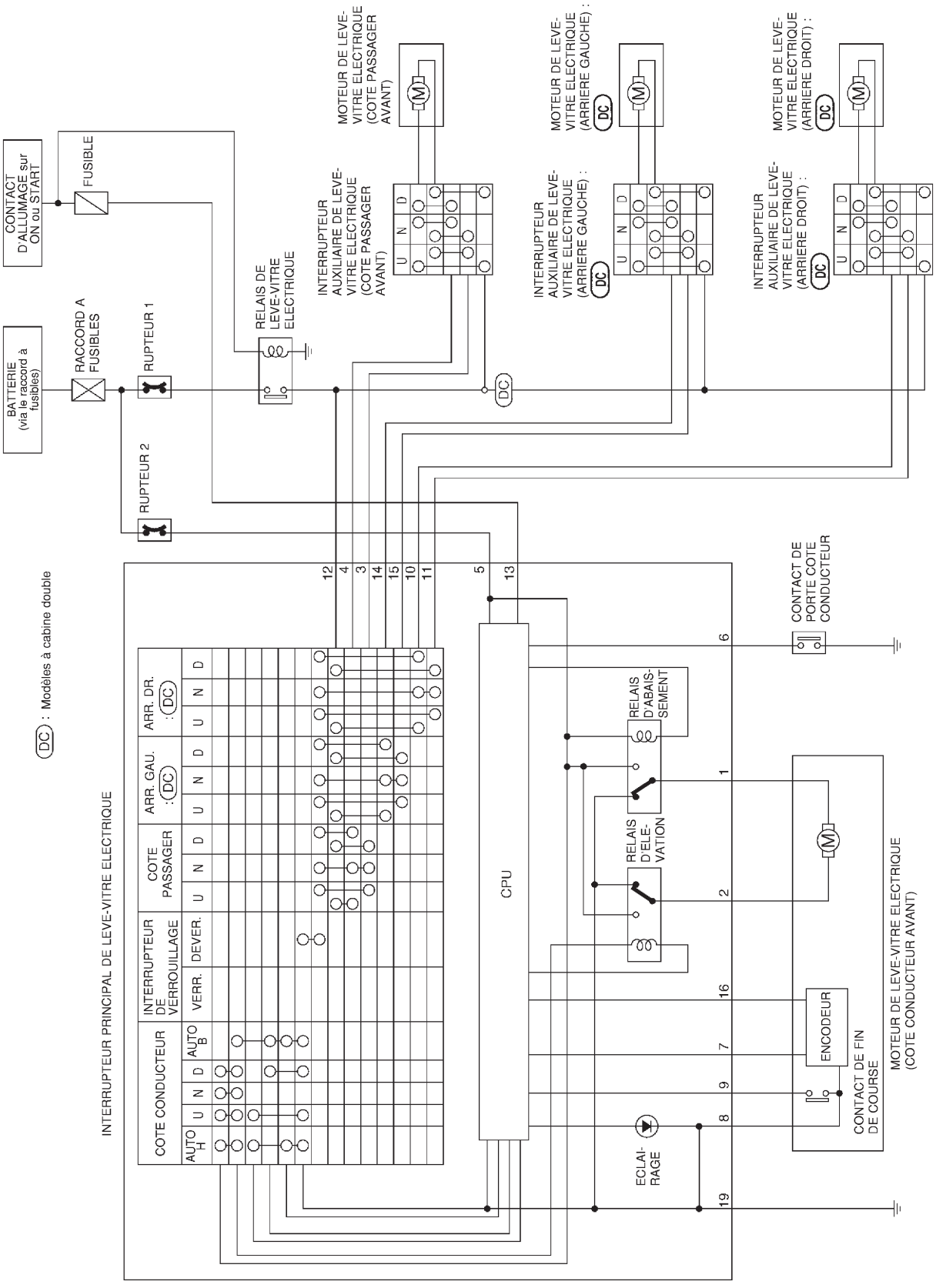

GEL925A

Simpo PDF Merge and Split Unregistered Version - http://www.simpopdf.com

Schéma de câblage — WINDOW —/avec fonction de détection d'interruption

EL-WINDOW-01

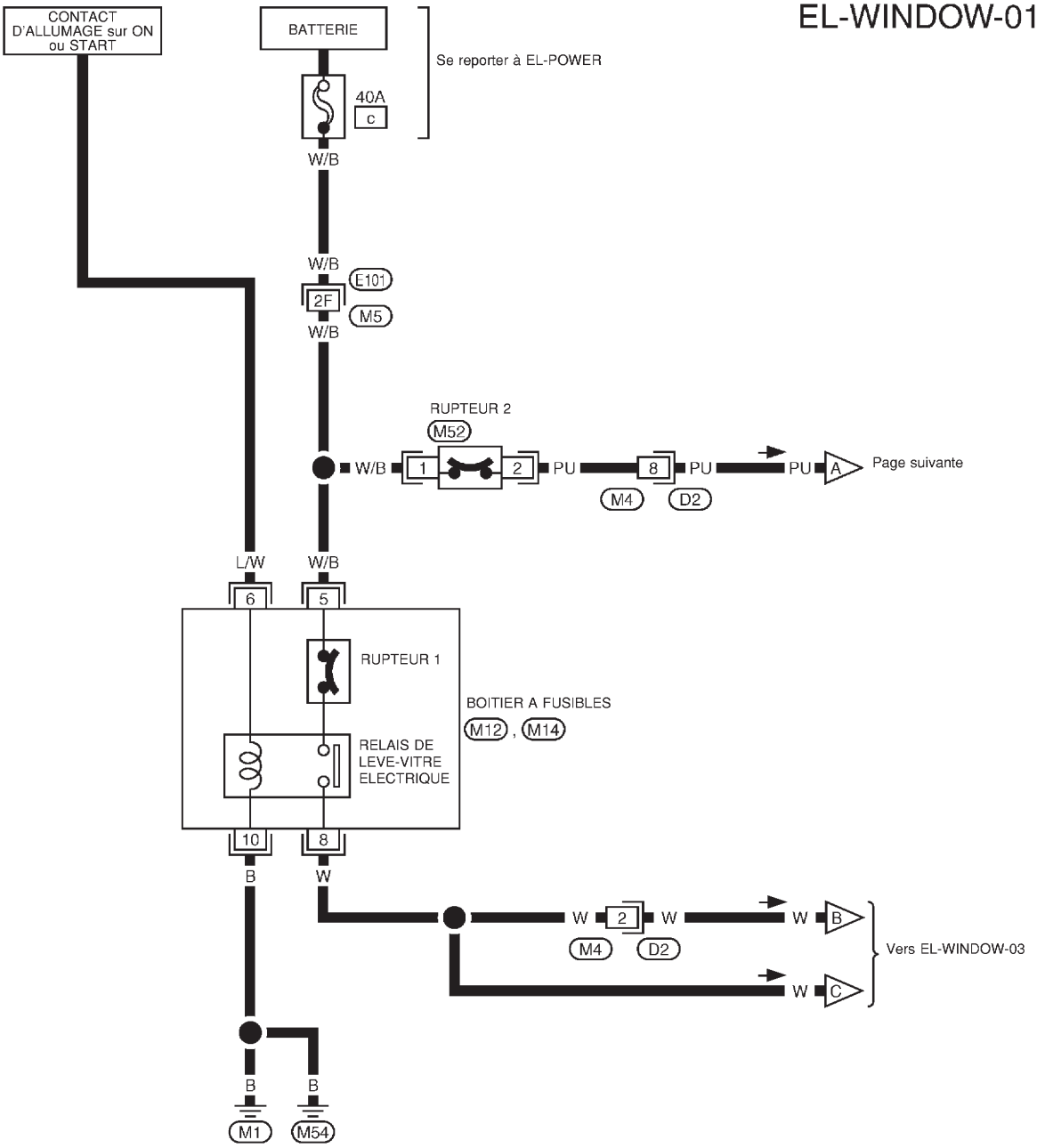

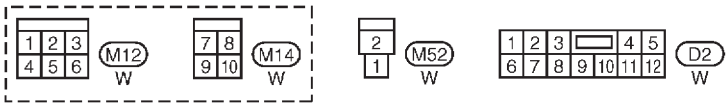

Consulter la dernière page dépliante.
M5 , E101

GEL926A

Simpo PDF Merge and Split Unregistered Version - http://www.simpopdf.com

Schéma de câblage — WINDOW —/avec fonction de détection d'interruption (Suite)

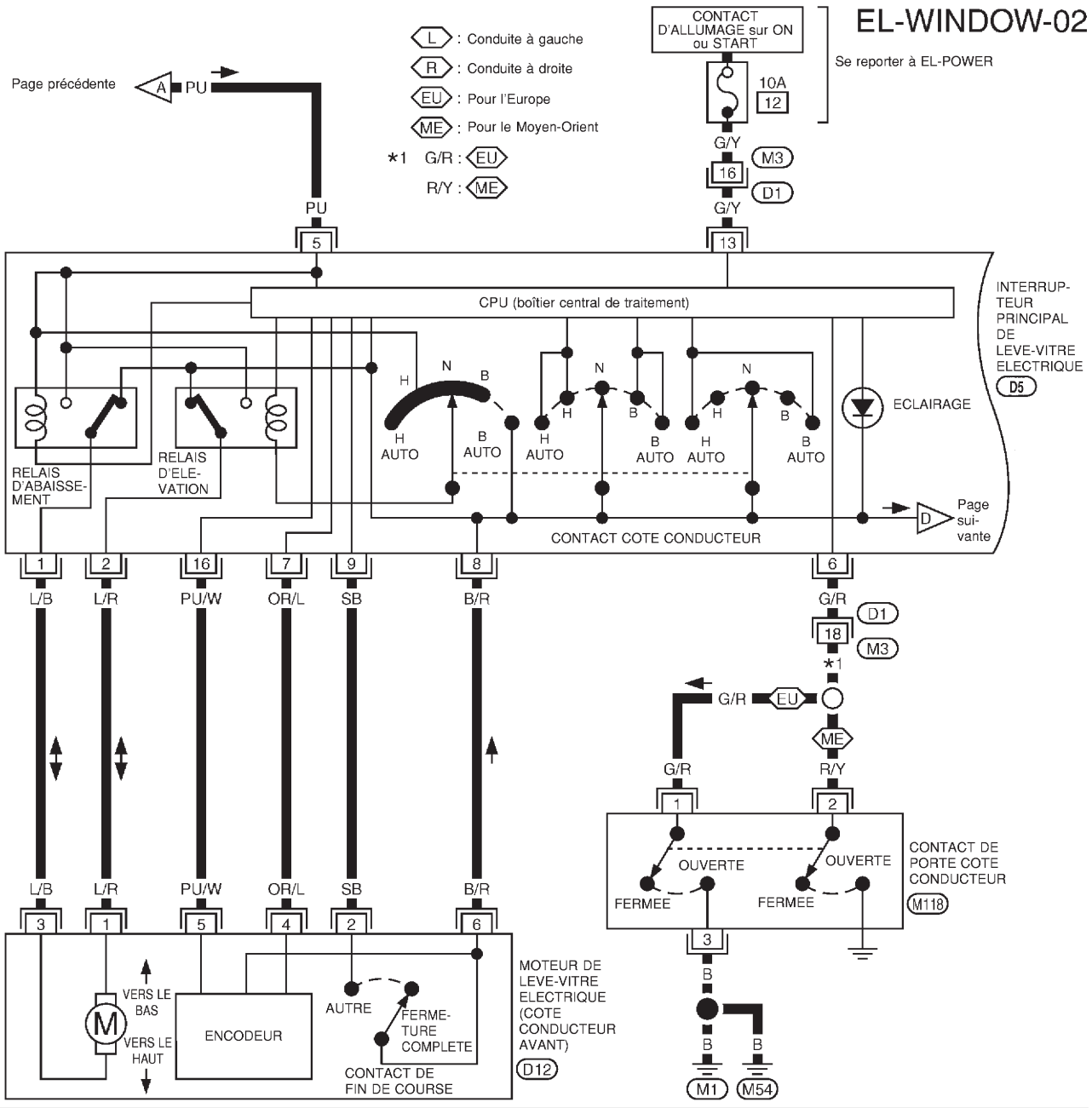

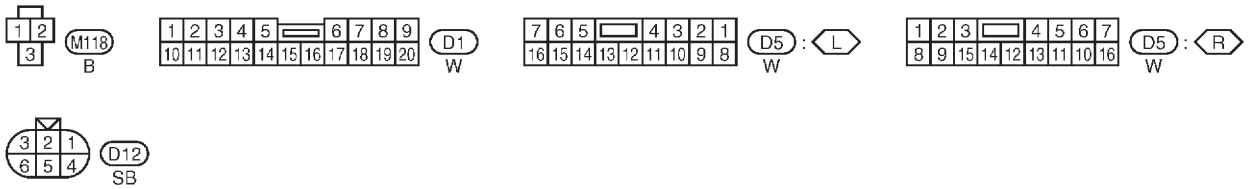

GEL927A

Simpo PDF Merge and Split Unregistered Version - http://www.simpopdf.com

Schéma de câblage — WINDOW —/avec fonction de détection d'interruption (Suite)

EL-WINDOW-03

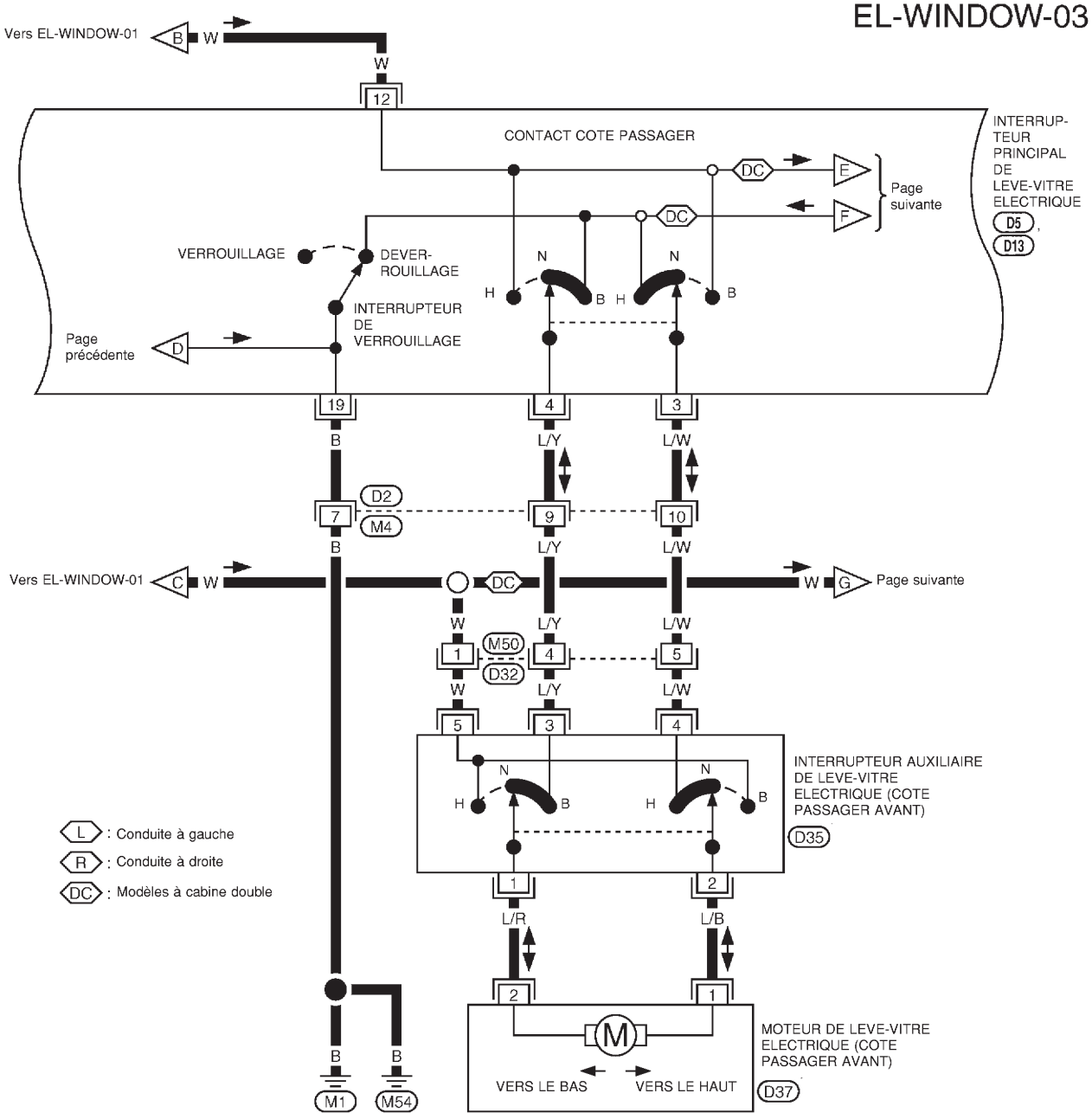

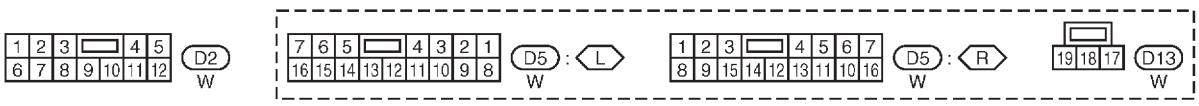

GEL928A

Simpo PDF Merge and Split Unregistered Version - http://www.simpopdf.com

Schéma de câblage — WINDOW —/avec fonction de détection d'interruption (Suite)

EL-WINDOW-04

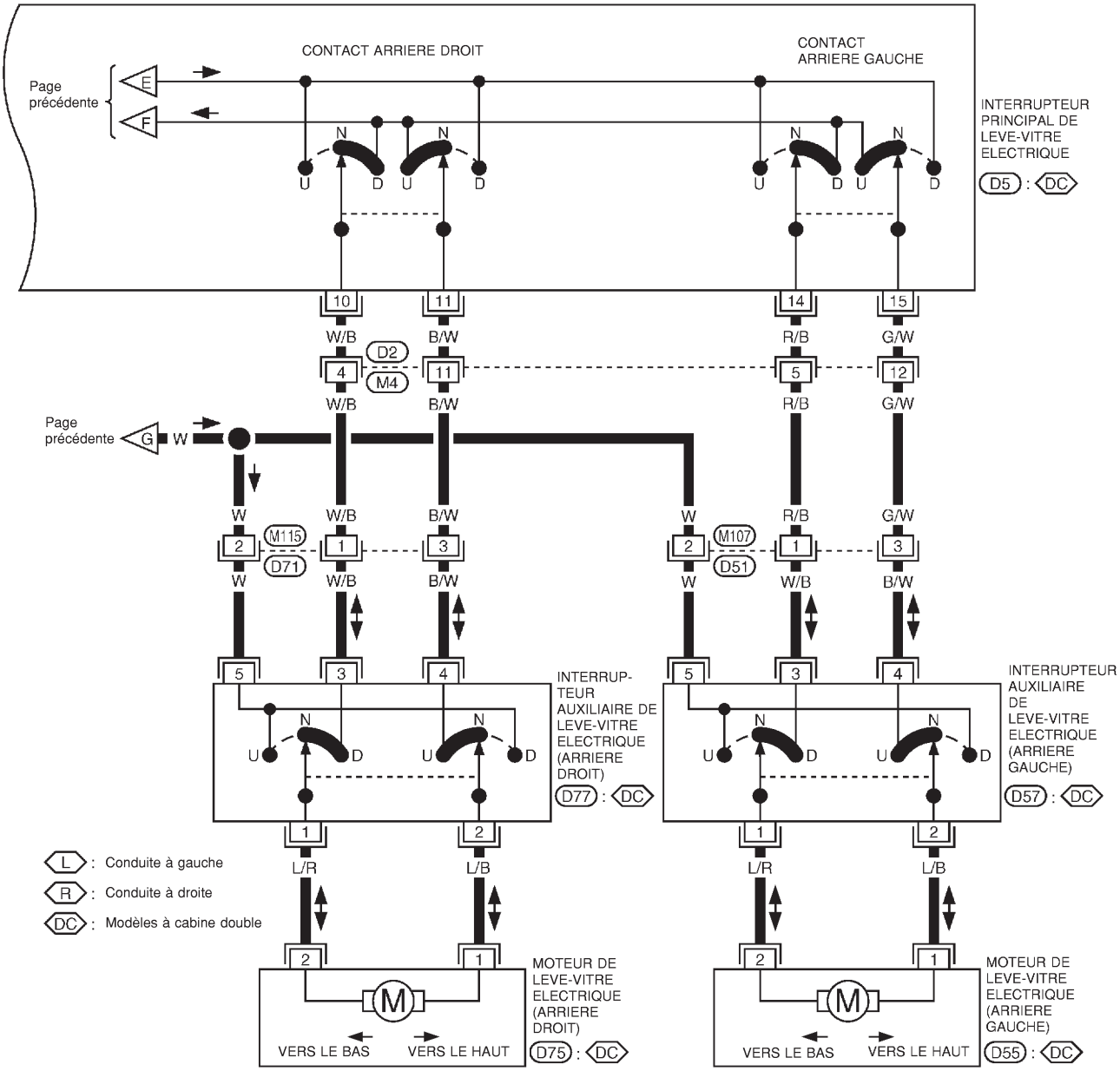

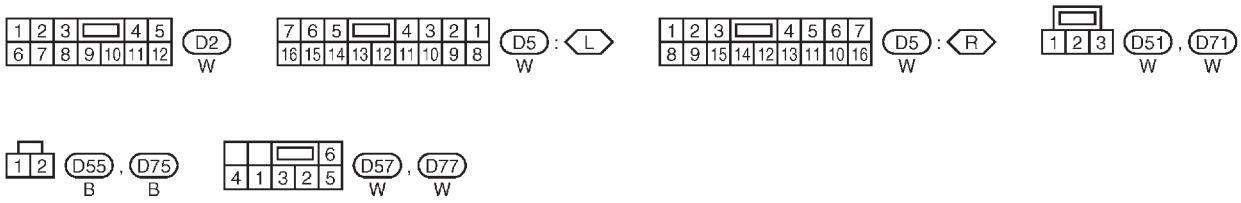

GEL929A

Simpo PDF Merge and Split Unregistered Version - http://www.simpopdf.com

Schéma de câblage — PRWIRE —

EL-PRWIRE-01

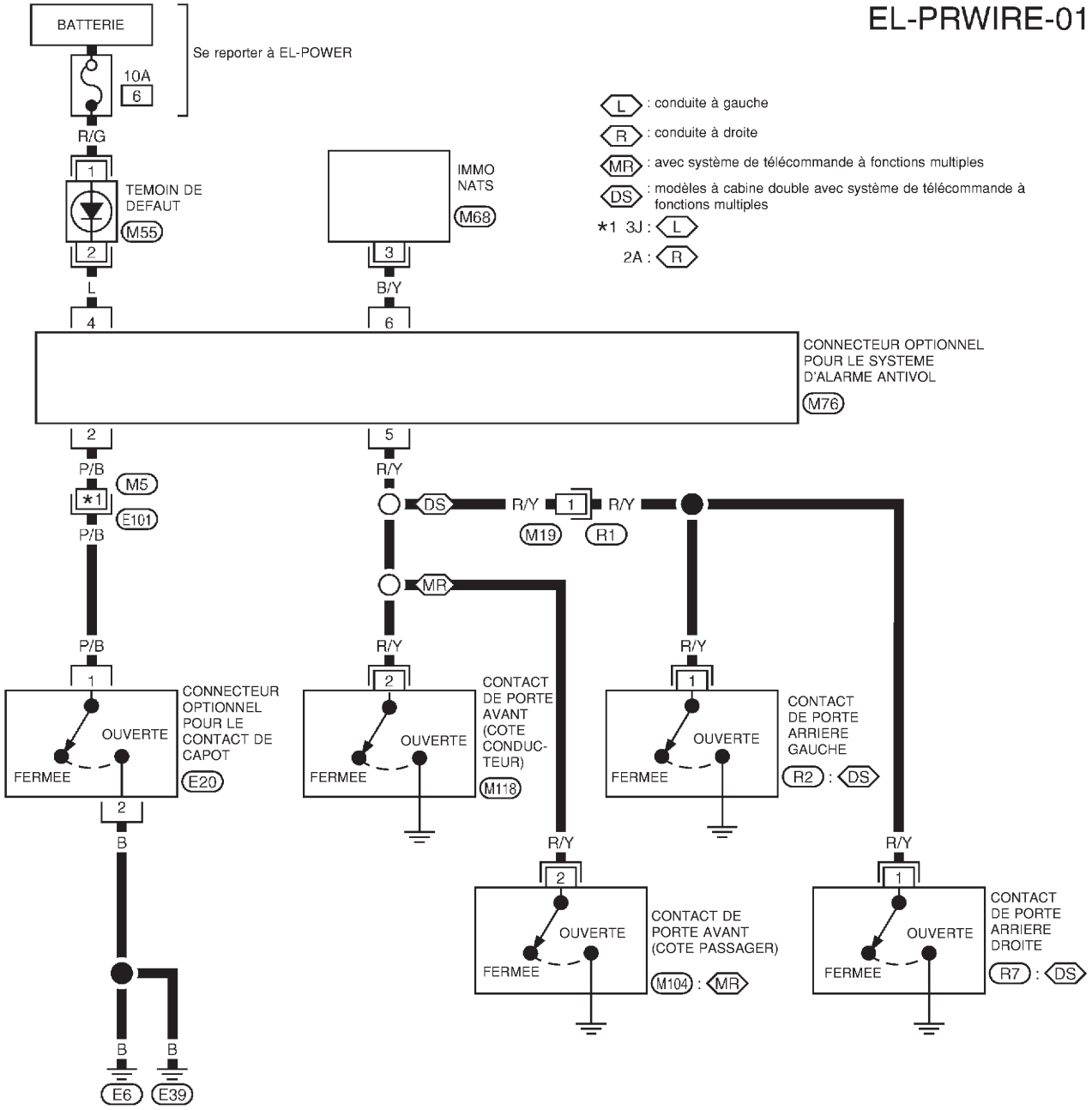

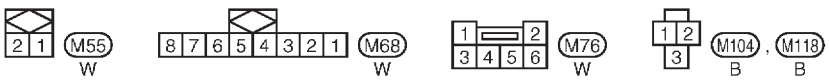

Consulter la dernière page dépliante.
M5 , E101

GEL930A

Simpo PDF Merge and Split Unregistered Version - http://www.simpopdf.com

NOTE

Simpo PDF Merge and Split Unregistered Version - http://www.simpopdf.com

Faisceau principal

TABLEAU DE BORD — CONDUITE A GAUCHE

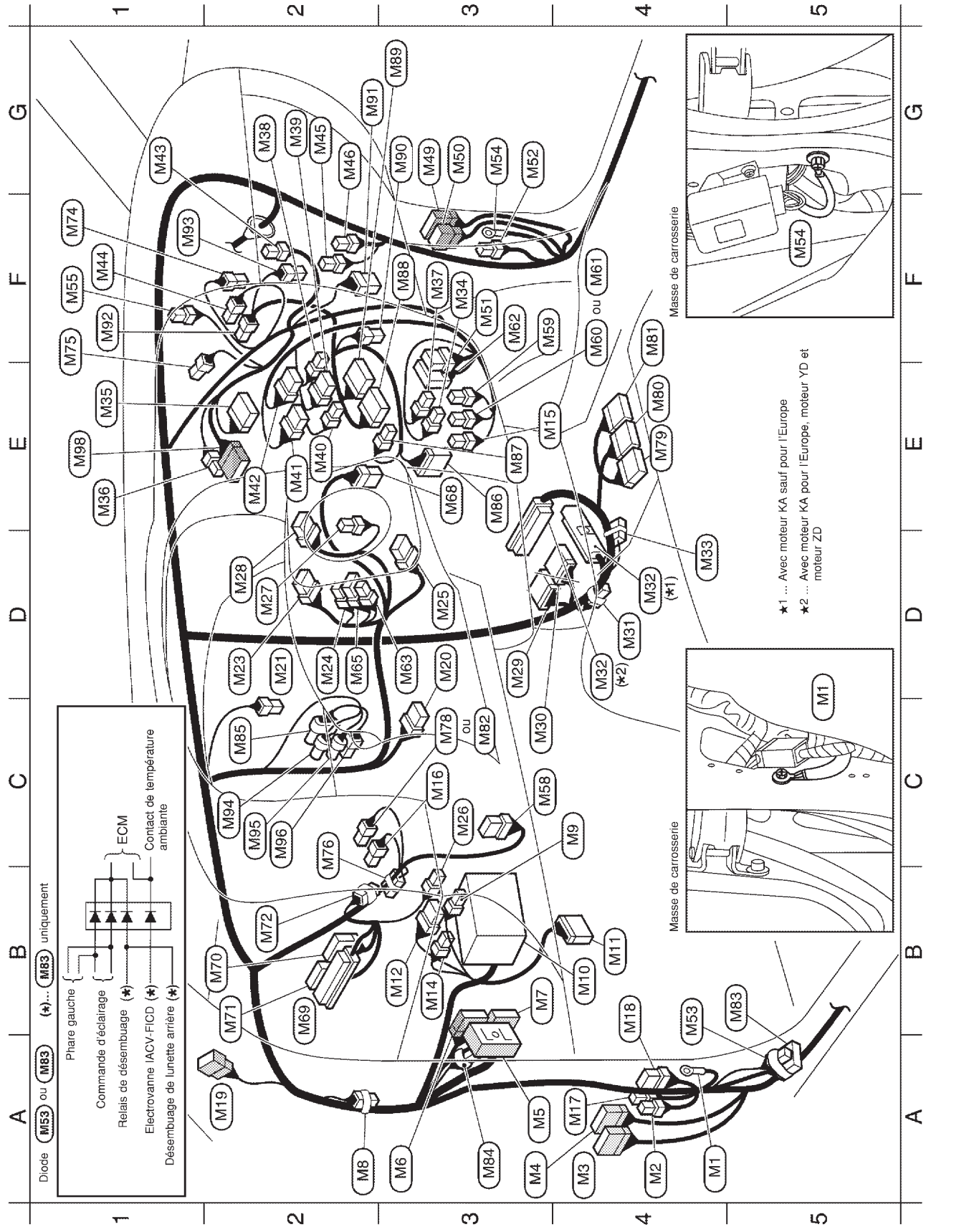

HEL082C

Simpo PDF Merge and Split Unregistered Version - http://www.simpopdf.com

Faisceau principal (Suite)

A4 (M1) — : Masse de carrosserie
A4 (M2) W/12 : Avertisseur sonore (moteur diesel sauf pour l'Europe et le Moyen-Orient)
A4 (M3) W/20 : Vers (D1)
A3 (M4) W/12 : Vers (D2) (avec lève-vitre électrique)
A3 (M5) SMJ : Vers (E101)
A3 (M6) W/24 : Vers (N1)
B3 (M7) BR/24 : Vers (N2)
A2 (M8) -/2 : Diode (moteur diesel sauf pour l'Europe et le Moyen-Orient)
C4 (M9) L/4 : Relais de pompe à carburant (moteur KA)
B4 (M10) — : Boîtier à fusibles
B4 (M11) W/16 : Connecteur de liaison de données
B3 (M12) W/6 : Boîtier à fusibles
B3 (M14) W/4 : Boîtier à fusibles
E3 (M15) B/3 : Boîtier de clignotants combiné
C3 (M16) B/2 : Contact de feux de stop
A4 (M17) L/4 : Relais de feu antibrouillard avant (moteur YD pour l'Europe)
B4 (M18) W/6 : Non utilisé (moteur QD avec T/A)
A2 (M19) W/6 : Vers (R1)
D3 (M20) W/6 : Contact d'allumage
D2 (M21) W/1 : Commande de frein de stationnement (type à manche)
D2 (M23) BR/8 : Commande d'éclairage
• Commande de clignotant
D2 (M24) BR/4 : Commande d'éclairage
D3 (M25) Y/7 : Câble spiralé (avec airbag)
C3 (M26) L/2 : Contact de vérification de T/A
D2 (M27) B/1 : Commande d'avertisseur sonore (sans airbag)
D2 (M28) GY/8 : Commande d'essuie-glace et de lave-vitres
D3 (M29) W/12 : Boîtier de commande de préchauffage (moteur TD sauf régions froides et moteur QD)
C3 (M30) W/16 : Boîtier de commande de préchauffage (moteur TD pour régions froides)
D4 (M31) GY/6 : Connecteur de raccord 1 (moteur KA)
D4 (M32) SMJ : ECM (moteurs KA, YD et ZD)
D4 (M33) — : Connecteur de raccord 3 (moteur KA pour l'Europe)
F3 (M34) W/2 : Eclairage de cendrier (avec moteur à essence pour le Moyen-Orient)
E1 (M35) W/10 : Système audio (pour l'Europe)
E1 (M36) W/4 : Pour le faisceau auxiliaire du chargeur de CD (pour l'Europe sauf pour modèles à double cabine sans lève-vitre électrique)
F3 (M37) B/2 : Allume-cigare
G2 (M38) W/3 : Commande d'A/C (sans A/C auto.)
G2 (M39) W/6 : Commande de réglage de ventilation (sans A/C auto.)
E2 (M40) W/2 : Eclairage de la commande de réglage de ventilation (sans A/C auto.)
E2 (M41) W/8 : Interrupteur de feux de détresse
E2 (M42) W/6 : Interrupteur de désembuage (pour l'Europe ou double cabine sauf pour le Moyen-Orient)
G1 (M43) Y/2 : Module d'airbag passager avant
F1 (M44) BR/4 : Amplificateur de commande thermique (sans A/C auto.)
G2 (M45) BR/4 : Résistance de ventilateur (sans A/C auto.)
G2 (M46) W/2 : Moteur de soufflerie
G3 (M49) W/20 : Vers (D31)
G3 (M50) W/6 : Vers (D32) (avec lève-vitre électrique)
F3 (M51) W/8 : Minuterie de verrouillage de porte (avec lève-vitre électrique sauf pour l'Europe)
G3 (M52) W/2 : Rupteur 2 (pour l'Europe et moteur KA pour le Moyen-Orient — sauf pour modèles à double cabine sans lève-vitre électrique)
B4 (M53) L/4 : Diode (moteur KA pour l'Europe)
G3 (M54) — : Masse de carrosserie
F1 (M55) W/2 : Témoin de défaut (avec NATS)
C3 (M58) BR/8 : Boîtier de contrôle de télécommande à fonctions multiples (pour l'Europe)
F3 (M59) BR/6 : Relais de désembuage (pour l'Europe ou cabine double sauf pour le Moyen-Orient)
F4 (M60) L/4 : Relais de feu antibrouillard arrière (pour l'Europe)
F4 (M60) L/4 : Relais de feux antibrouillards avant (moteur ZD)
F3 (M62) W/18 : Boîtier de commande d'accès intelligent (pour l'Europe)
D3 (M63) W/3 : Interrupteur de feux antibrouillards avant (moteur ZD)
D2 (M65) W/6 : Interrupteur de feux antibrouillards (pour l'Europe)
E3 (M68) W/8 : IMMO NATS (pour l'Europe)
B2 (M69) W/48 : TCM (boîtier de commande de transmission) (moteur QD avec T/A)
B2 (M70) W/24 : TCM (boîtier de commande de transmission) (moteur KA avec T/A)
B2 (M71) GY/24 : TCM (boîtier de commande de transmission) (moteur KA avec T/A)
B2 (M72) -/6 : Connecteur de raccord 2 (avec T/A)
F1 (M74) W/2 : Capteur de température d'air d'admission (avec A/C auto.)
F1 (M75) B/2 : Sonde d'ensoleillement (avec A/C auto.)
C2 (M76) W/6 : Connecteur optionnel (pour l'Europe) (pour le système d'alarme antivol)
C3 (M78) L/2 : Contact de frein de verrouillage de passage (modèles avec T/A)
E4 (M79) Y/12 : Boîtier de capteurs de diagnostic d'airbag (pour ceinture de sécurité à prétensionneur)
E4 (M80) Y/20 : Boîtier de capteurs de diagnostic d'airbag
F4 (M81) Y/12 : Boîtier de capteurs de diagnostic d'airbag (pour ceinture de sécurité à prétensionneur)
C3 (M82) B/2 : Contact de position de pédale de frein (YD25)
B5 (M83) L/10 : Diode (moteur KA sauf pour l'Europe)
A3 (M84) BR/2 : Résistance (avec A/T)
C2 (M85) GY/6 : Boîtier d'accélérateur (YD25)
E3 (M86) BR/10 : Moteur de volet de mode (avec A/C auto.)
E3 (M87) W/2 : Capteur de l'habitacle (avec A/C auto)
F3 (M88) GY/20 : Amplificateur auto. d'A/C (avec A/C auto.)
G3 (M89) GY/16 : Amplificateur auto d'A/C (avec A/C auto.)
G3 (M90) L/2 : Moteur d'aspirateur (avec A/C auto.)
G2 (M91) B/6 : Moteur de volet de mélange d'air (avec A/C auto.)
F1 (M92) W/4 : Amplificateur de commande de ventilateur (avec A/C auto.)
F1 (M93) W/4 : Moteur de volet d'admission (avec A/C auto.)
C2 (M94) BR/3 : Capteur de position d'accélérateur (ZD30)
C2 (M95) GY/3 : Contact de position d'accélérateur (ZD30)
C2 (M96) W/3 : Contact d'accélérateur (C/C) (ZD30)
E1 (M98) W/12 : Système audio (au travers du faisceau auxiliaire) (sauf pour l'Europe)

Diode (M8)

Témoin d'avertissement de filtre — Contact de filtre à carburant — Témoin sonore

HEL083C

Simpo PDF Merge and Split Unregistered Version - http://www.simpopdf.com

Faisceau principal (Suite)

TABLEAU DE BORD — CONDUITE A DROITE



HEL084C

Simpo PDF Merge and Split Unregistered Version - http://www.simpopdf.com

Faisceau principal (Suite)

G4 (M1) — : Masse de carrosserie
G4 (M3) W/20 : Vers (D1)
G4 (M4) W/12 : Vers (D2) (avec lève-vitre électrique)
G3 (M5) SMJ : Vers (E101)
F4 (M6) W/24 : Vers (N1)
G2 (M7) BR/24 : Vers (N2)
E4 (M9) L/4 : Relais de pompe à carburant (moteurs KA et VG)
F4 (M10) — : Boîtier à fusibles
F4 (M11) W/16 : Connecteur de liaison de données
F3 (M12) W/6 : Boîtier à fusibles
F3 (M14) W/4 : Boîtier à fusibles
C4 (M15) B/3 : Centrale de clignotants combinée
E3 (M16) B/2 : Contact de feux de stop
A3 (M17) L/4 : Relais de feux antibrouillards avant (pour l'Europe)
F1 (M19) W/6 : Vers (R1)
E3 (M20) W/6 : Contact d'allumage
D1 (M21) W/1 : Commande de frein de stationnement (type à manche)
D2 (M23) BR/8 : Commande d'éclairage
• Commande de clignotants
D2 (M24) BR/4 : Commande d'éclairage
D3 (M25) Y/7 : Câble spiralé (avec airbag)
D3 (M27) B/1 : Commande d'avertisseur sonore (sans airbag)
D2 (M28) GY/8 : Commande d'essuie-glace et de lave-vitres
D4 (M29) W/12 : Boîtier de commande de préchauffage (moteur TD sans EGR et moteur QD)
C1 (M35) W/16 : Système audio (pour l'Europe)
C1 (M36) W/4 : Vers le faisceau auxiliaire du chargeur de CD (pour l'Europe sauf pour modèles à double cabine sans lève-vitre électrique)
C3 (M37) B/2 : Allume-cigare
C3 (M38) W/3 : Commande de climatisation (sans A/C auto.)
C2 (M39) W/6 : Commande de réglage de ventilation (sans A/C auto.)
C2 (M40) W/2 : Eclairage du commutateur de ventilateur (sans A/C auto.)
C2 (M41) W/8 : Interrupteur de feux de détresse
C2 (M42) W/6 : Interrupteur de désembuage (pour l'Europe ou modèles à cabine king ou cabine double)
A2 (M43) Y/2 : Module d'airbag, côté passager
B1 (M44) BR/4 : Amplificateur de thermorégulation (sans A/C auto.)
A2 (M45) BR/4 : Résistance de ventilateur (sans A/C auto.)
A2 (M46) W/2 : Moteur de soufflerie
A2 (M47) W/16 : Vers (F55) (moteurs KA, VG, YD et ZD)
A2 (M48) W/24 : Vers (F54) (moteurs KA, VG, YD et ZD)

A3 (M49) W/20 : Vers (D31)
A3 (M50) W/6 : Vers (D32) (avec lève-vitre électrique)
B3 (M51) W/8 : Minuterie de verrouillage de porte (avec verrouillage électrique des portes sauf pour l'Europe)
G3 (M52) W/2 : Rupteur 2 (pour l'Europe sauf pour modèles à double cabine sans lève-vitre électrique)
A3 (M53) L/4 : Diode (cabine simple avec moteur KA)
A3 (M54) — : Masse de carrosserie
B1 (M55) W/2 : Témoin de défaut (pour l'Europe)
F2 (M58) BR/8 : Boîtier de contrôle de télécommande à fonctions multiples (pour l'Europe)
C4 (M59) BR/6 : Relais de désembuage (pour l'Europe ou modèles à cabine king ou cabine double)
C3 (M60) L/4 : Relais de feu antibrouillard arrière (pour l'Europe)
C4 (M61) W/4 : Relais de feux antibrouillards avant (moteur ZD)
B4 (M62) W/18 : Boîtier de commande d'accès intelligent (pour l'Europe)
D3 (M64) L/6 : Commande de feux antibrouillards (moteur ZD)
D3 (M65) W/6 : Interrupteur de feux antibrouillard avant et arrière (pour l'Europe)
D4 (M66) GY/20 : ECM (moteur diesel avec EGR)
D4 (M67) GY/16 : ECM (moteur diesel avec EGR)
E3 (M68) W/8 : IMMO NATS (pour l'Europe)
E1 (M70) W/24 : TCM (boîtier de commande de transmission) (modèles avec T/A)
E1 (M71) GY/24 : TCM (boîtier de commande de transmission) (avec T/A)
E1 (M73) W/4 : Dispositif de T/A (T/A avec colonne de passage)
B1 (M74) W/2 : Capteur de température d'air d'admission (avec A/C auto.)
B1 (M75) B/2 : Sonde d'ensoleillement (avec A/C auto.)
F2 (M76) W/6 : Connecteur optionnel pour le système d'alarme antivol (pour l'Europe)
E4 (M78) L/2 : Contact de frein de verrouillage de passage (modèles avec T/A)
C4 (M79) Y/12 : Boîtier de capteurs de diagnostic d'airbag (avec airbag pour l'Europe et l'Australie)
C4 (M80) Y/20 : Boîtier de capteurs de diagnostic d'airbag (avec airbag)
D4 (M81) Y/12 : Boîtier de capteurs de diagnostic d'airbag (avec airbag pour l'Europe et l'Australie)

E4 (M82) B/2 : Contact de position de pédale de frein (moteur YD)
A4 (M83) L/10 : Diode (modèles à cabine double et moteur KA)
A1 (M84) BR/2 : Résistance (modèlesavec T/A)
G3 (M85) GY/6 : Boîtier d'accélérateur (moteur YD)
D3 (M86) BR/10 : Moteur de volet de mode (avec A/C auto.)
D3 (M87) W/2 : Capteur de l'habitacle (avec A/C auto.)
B3 (M88) GY/20 : Amplificateur auto. d'A/C (avec A/C auto.)
B3 (M89) GY/16 : Amplificateur auto. d'A/C (avec A/C auto.)
B3 (M90) L/2 : Moteur d'aspirateur (avec A/C auto.)
B3 (M91) B/6 : Moteur de volet de mélange d'air (avec A/C auto.)
C1 (M92) W/4 : Amplificateur de commande de ventilateur (avec A/C auto.)
B1 (M93) W/4 : Moteur de volet d'admission (avec A/C auto.)
G3 (M94) BR/3 : Capteur de position d'accélérateur (moteur ZD)
G3 (M95) GY/3 : Contact de position d'accélérateur (moteur ZD)
G3 (M96) W/3 : Contact d'accélérateur (C/C) (moteur ZD)
C1 (M98) W/12 : Système audio (au travers du faisceau auxiliaire) (sauf pour l'Europe)

HEL085C

Simpo PDF Merge and Split Unregistered Version - http://www.simpopdf.com

Faisceau principal (Suite)

COTE CARROSSERIE — CONDUITE A GAUCHE

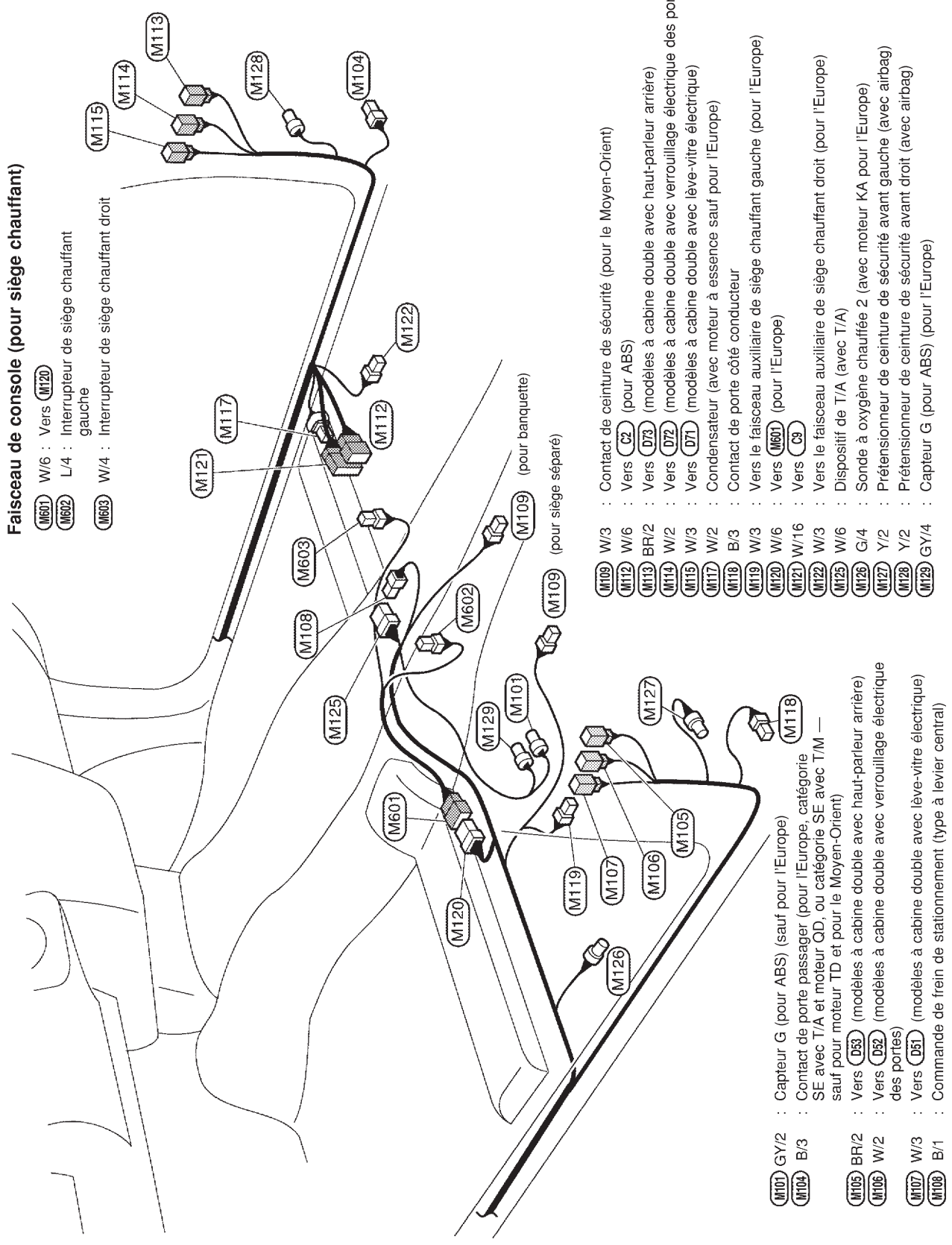

HEL086C

Simpo PDF Merge and Split Unregistered Version - http://www.simpopdf.com

Faisceau principal (Suite)

COTE CARROSSERIE — CONDUITE A DROITE

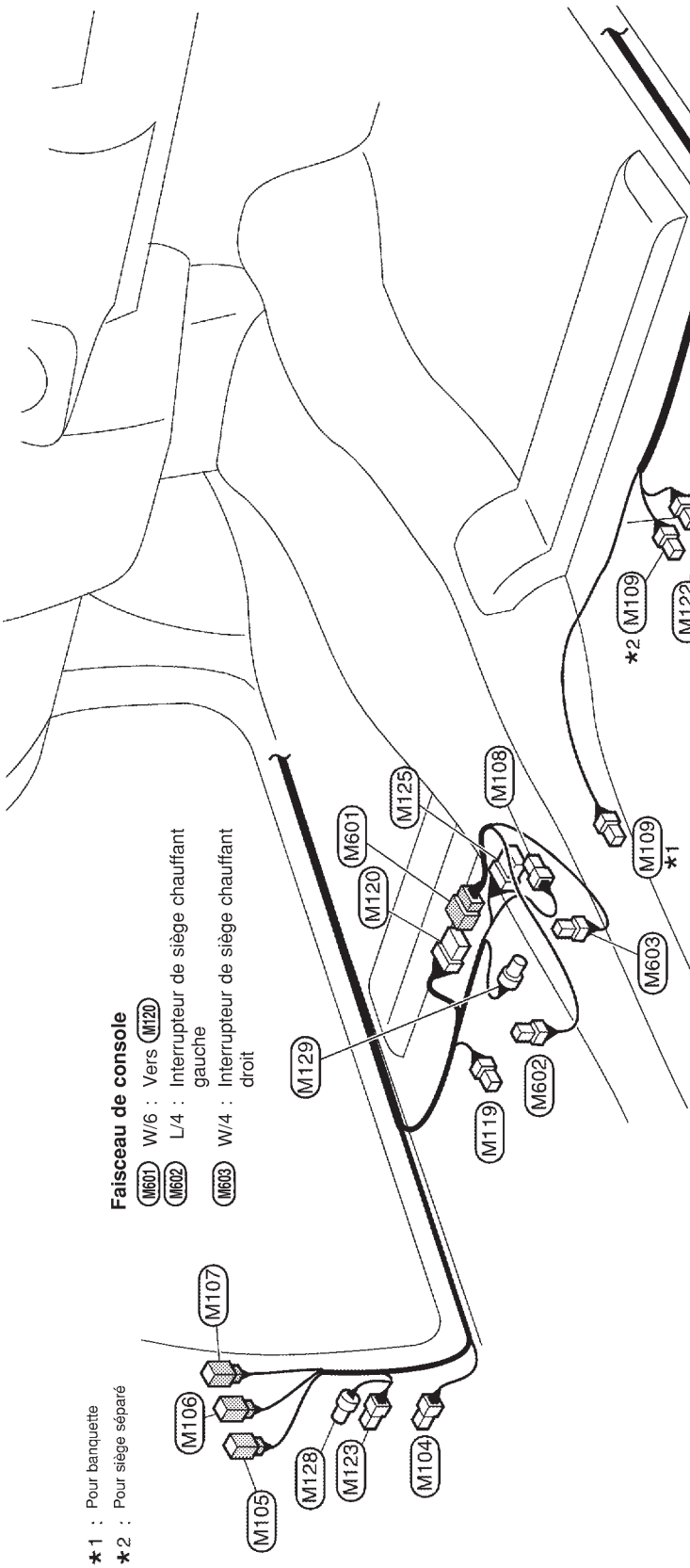

M104 B/1 : Contact de porte (côté passager) (pour l'Europe et l'Australie ou catégorie SE)
M105 BR/2 : Vers D53 (modèles à cabine double avec haut-parleur arrière)
M106 W/2 : Vers D52 (modèles à cabine double avec verrouillage électrique des portes)
M107 W/3 : Vers D51 (modèles à cabine double avec lève-vitre électrique)
M108 B/1 : Commande de frein de stationnement (type à levier central) (modèles avec sièges séparés)
M109 W/3 : Contact de ceinture de sécurité (pour l'Australie)
M112 W/6 : Vers C2 (pour ABS)
M113 BR/2 : Vers D73 (modèles à cabine double avec haut-parleur arrière)
M114 W/2 : Vers D72 (modèles à cabine double avec verrouillage électrique des portes)
M115 W/3 : Vers D71 (modèles à cabine double avec lève-vitre électrique)
M117 W/2 : Condensateur (moteur KA)
M118 B/3 : Contact de porte côté conducteur
M119 W/3 : Vers le faisceau auxiliaire gauche (pour l'Europe)
M120 W/6 : Vers M601 (pour l'Europe)
M121 W/16 : Vers C9
M122 W/3 : Vers le faisceau auxiliaire du siège chauffant droit (pour l'Europe)
M123 W/4 : Prétensionneur de ceinture de sécurité avant gauche (avec airbag pour l'Europe et l'Australie)
M124 W/4 : Prétensionneur de ceinture de sécurité avant droit (airbag pour l'Europe et l'Australie)
M125 W/6 : Dispositif de T/A (modèles avec T/A et levier de vitesse au plancher)
M127 Y/2 : Prétensionneur de ceinture de sécurité avant droit (avec airbag sauf moteur QD)
M128 Y/2 : Prétensionneur de ceinture de sécurité avant gauche (avec airbag sauf moteur QD)
M129 GY/4 : Capteur G (avec ABS)

HEL087C

Simpo PDF Merge and Split Unregistered Version - http://www.simpopdf.com

Faisceau de compartiment moteur

CONDUITE A GAUCHE — MOTEUR A ESSENCE

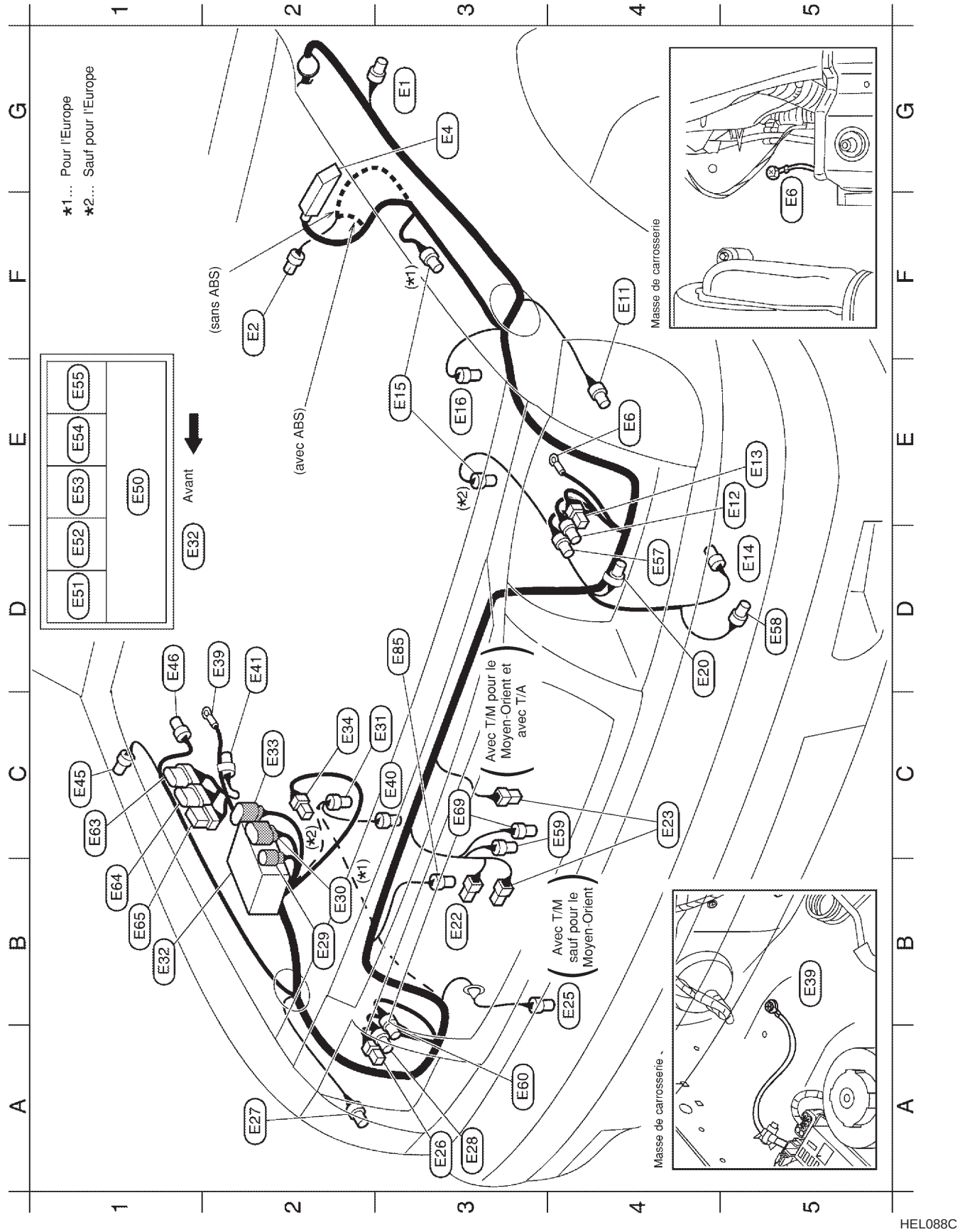

HEL088C

Simpo PDF Merge and Split Unregistered Version - http://www.simpopdf.com

Faisceau de compartiment moteur (Suite)

G3 E1 GY/2 : Clignotant latéral gauche (avec phare à faisceaux multiples)
F2 E2 GY/2 : Contact de niveau de liquide de frein
G3 E4 B/31 : Actionneur ABS et boîtier électrique (pour ABS)
E4 E6 — : Masse de carrosserie
F4 E11 GY/3 : Bloc optique avant gauche (sans phare à faisceaux multiples)
E5 E12 GY/3 : Bloc optique avant gauche (avec phare à faisceaux multiples)
E5 E13 B/3 : Phare gauche
D5 E14 GY/2 : Moteur de lave-vitres
E3 E15 BR/2 : Capteur de roue avant gauche (pour ABS)
E3 E16 GY/2 : Capteur de température d'air d'admission (moteur KA pour l'Europe)
D4 E20 GY/2 : Connecteur optionnel (pour contact de capot) (pour l'Europe)
B3 E22 B/1 : Avertisseur sonore (grave)
C4 E23 B/1 : Avertisseur sonore (aigu)
B4 E25 GY/4 : Manocontact triple
A3 E26 B/3 : Phare droit
A2 E27 GY/3 : Bloc optique avant droit (sans phare à faisceaux multiples)
A3 E28 GY/3 : Bloc optique avant droit (avec phare à faisceaux multiples)
B2 E29 GY/2 : Vers E204
B2 E30 GY/8 : Vers E203
C3 E31 GY/2 : Capteur de roue avant droite (pour ABS)
B1 E32 — : Boîte de relais (boîte de fusibles et de raccord à fusibles)
C2 E33 SB/8 : Vers E205
C2 E34 B/1 : Batterie
D2 E39 — : Masse de carrosserie
C3 E40 B/2 : Manocontact d'huile de direction assistée (pour l'Europe)
D2 E41 B/1 : Connecteur optionnel (pour feux antibrouillards avant) (pour l'Europe)
C1 E45 GY/2 : Clignotant latéral droit (avec phare à faisceaux multiples)
D1 E46 GY/3 : Antenne électrique (pour le Moyen-Orient et l'Europe)
E1 E50 — : Boîte de fusibles et de raccord à fusibles
D1 E51 L/4 : Relais de ventilateur de refroidissement (moteur KA pour le Moyen-Orient et l'Europe)

D1 E52 L/4 : Relais de climatisation
E1 E53 W/3 : Relais d'avertisseur sonore
E1 E54 BR/6 : Relais de position de stationnement/point mort (avec T/A)
E1 E55 BR/6 : Relais de l'ECM (moteur KA)
D4 E57 -/3 : Moteur de réglage des faisceaux gauche (pour le Moyen-Orient et l'Europe)
D5 E58 GY/2 : Moteur de lave-phares (pour l'Europe)
C4 E59 B/2 : Non utilisé (pour l'Europe)
A3 E60 -/3 : Moteur de réglage du faisceau de phare droit (pour le Moyen-Orient et l'Europe)
C1 E63 SB/6 : Boîtier d'éclairage de jour (avec système d'éclairage de jour)
B1 E64 SB/8 : Boîtier d'éclairage de jour (avec système d'éclairage de jour)
B1 E65 W/6 : Amplificateur de lave-phares (pour l'Europe)
C3 E69 BR/2 : Contact de température ambiante (moteur KA)
D3 E85 GY/2 : Moteur de ventilateur de refroidissement (moteur KA pour le Moyen-Orient et l'Europe)

COMPARTIMENT PASSAGER

E101 SMJ : Vers M5
E103 B/2 : Boîtier à fusibles

HEL089C

Simpo PDF Merge and Split Unregistered Version - http://www.simpopdf.com

Faisceau de compartiment moteur (Suite)

CONDUITE A GAUCHE — MOTEUR DIESEL

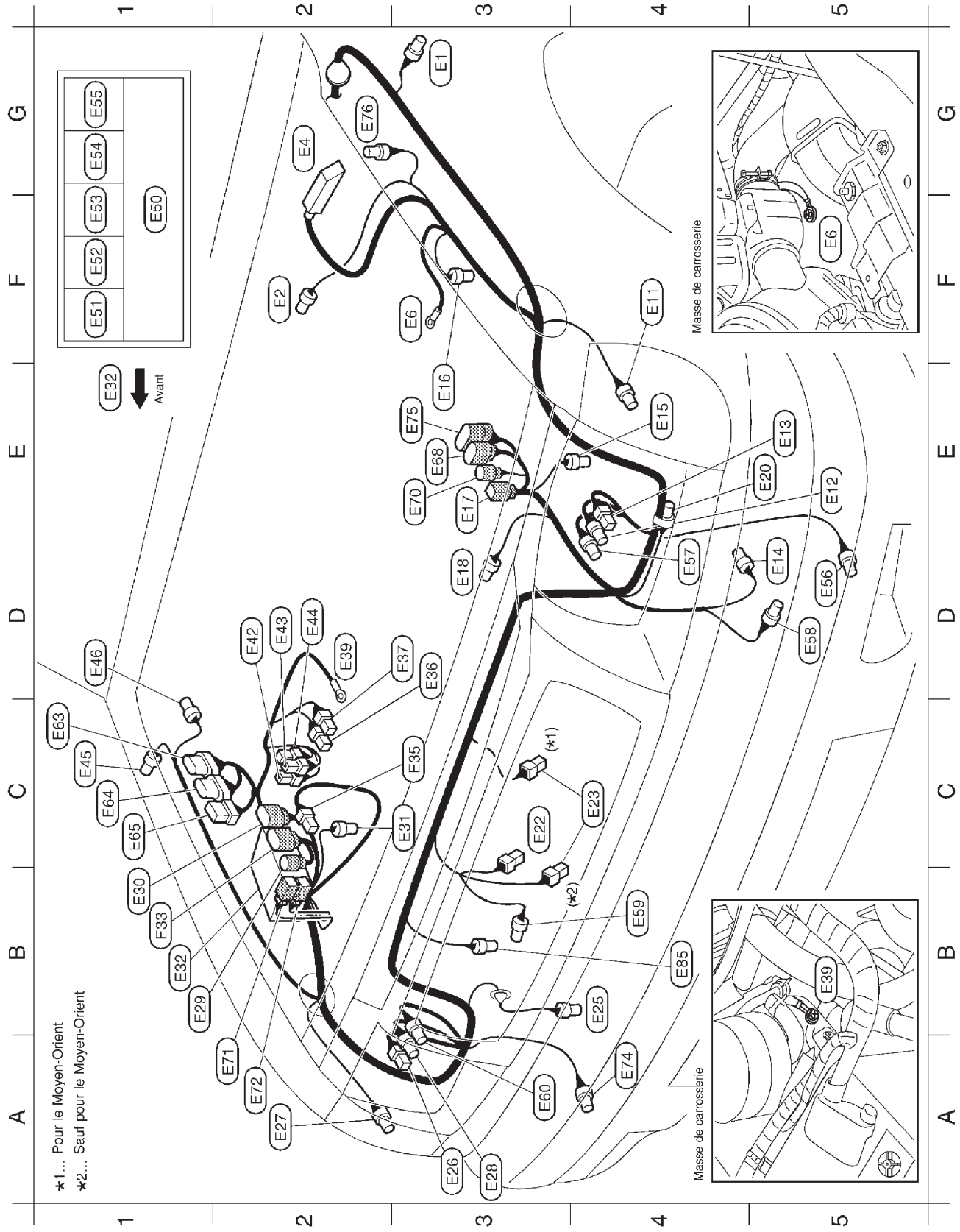

HEL045C

Simpo PDF Merge and Split Unregistered Version - http://www.simpopdf.com

Faisceau de compartiment moteur (Suite)

G3 E1 GY/2 : Clignotant latéral gauche (sauf pour le Moyen-Orient)
F2 E2 GY/2 : Contact de niveau de liquide de frein (modèles avec T/M)
G2 E4 B/31 : Actionneur ABS et boîtier électrique (pour ABS)
F3 E6 — : Masse de carrosserie
F4 E11 GY/3 : Bloc optique avant gauche (pour le Moyen-Orient)
E5 E12 GY/3 : Bloc optique avant gauche (sauf pour le Moyen-Orient)
E5 E13 B/3 : Phare gauche
D5 E14 GY/2 : Moteur de lave-vitres
E4 E15 BR/2 : Capteur de roue avant gauche (pour ABS)
E3 E16 GY/2 : Capteur de température d'air d'admission (moteurs YD et ZD)
E3 E17 B/2 : Vers A2
D3 E18 GY/2 : Thermocontact (moteur TD pour le Moyen-Orient et moteur QD)
E5 E20 GY/2 : Connecteur optionnel (contact de capot) (pour l'Europe)
C3 E22 B/1 : Avertisseur sonore (grave)
C4 E23 B/1 : Avertisseur sonore (aigu)
B4 E25 GY/4 : Manocontact triple
A3 E26 B/3 : Phare droit
A2 E27 GY/3 : Bloc optique avant droit (pour le Moyen-Orient)
A3 E28 GY/3 : Bloc optique avant droit (sauf pour le Moyen-Orient)
B1 E29 GY/2 : Vers E204
B1 E30 GY/8 : Vers E203 (moteurs YD et ZD)
C3 E31 GY/2 : Capteur de roue avant droite (pour ABS)
B1 E32 — : Boîtie de relais (raccord à fusible et boîtier à fusibles)
B1 E33 SB/8 : Vers E205
C3 E35 B/1 : Vers E206 (moteurs TD et QD)
D3 E36 B/1 : Electrovanne IACV-FICD (moteurs TD et QD)
D3 E37 B/1 : Electrovanne IACV-FICD (moteurs TD et QD)
D2 E39 — : Masse de carrosserie
D2 E42 W/1 : Relais 1 de préchauffage (moteurs YD et ZD)
D2 E43 W/1 : Relais 1 de préchauffage (moteurs YD et ZD)
D2 E44 G/2 : Relais 1 de préchauffage (moteurs YD et ZD)
C1 E45 GY/2 : Clignotant latéral droit (sauf pour le Moyen-Orient)
D1 E46 GY/3 : Antenne électrique (pour l'Europe)
F1 E50 — : Boîte de fusibles et de raccord à fusibles
F1 E51 L/4 : Relais de ventilateur de refroidissement (moteur TD pour le Moyen-Orient, moteurs QD, YD et ZD)
F1 E52 L/4 : Relais de climatisation
F1 E53 W/3 : Relais d'avertisseur sonore
G1 E54 L/4 : Relais de position de stationnement/point mort (PNP) (modèles avec T/A)
G1 E55 BR/6 : Relais de l'ECM (moteurs YD et ZD)
B/5 : Relais ATP (modèles avec T/A)
D5 E56 B/2 : Feu antibrouillard avant gauche (pour l'Europe ou avec moteur ZD)
D4 E57 —/3 : Moteur de réglage des faisceaux gauche (pour le Moyen-Orient et l'Europe)
D5 E58 GY/2 : Moteur de lave-phares (pour l'Europe)
B4 E59 B/2 : Capteur de température ambiante (pour A/C auto.) (moteurs YD et ZD)
A3 E60 —/3 : Moteur de réglage du faisceau de phare droit (pour le Moyen-Orient et l'Europe)
C1 E63 SB/6 : Boîtier d'éclairage de jour (avec système d'éclairage de jour)
C1 E64 SB/8 : Boîtier d'éclairage de jour (avec système d'éclairage de jour)
C1 E65 W/6 : Amplificateur de lave-phares (pour l'Europe)
E3 E68 GY/8 : Vers A13 (moteurs TD et QD avec T/M)
E3 E70 BR/3 : Vers A14 (moteurs YD et ZD)
A2 E71 B/2 : Vers E231 (moteurs YD et ZD)
A2 E72 B/1 : Vers E232 (moteurs YD et ZD)
A4 E74 B/2 : Feu antibrouillard avant droit (pour l'Europe ou avec moteur ZD)
E3 E75 GY/10 : Vers A15 (modèles avec T/A)
G2 E76 GY/2 : Résistance de chute (modèles avec T/A)
B4 E85 GY/2 : Moteur de ventilateur de refroidissement (moteur TD pour le Moyen-Orient, moteurs QD, YD et ZD)

COMPARTIMENT PASSAGER

E101 SMJ : Vers M5
E103 B/2 : Boîtier à fusibles

HEL090C

Simpo PDF Merge and Split Unregistered Version - http://www.simpopdf.com

Faisceau de compartiment moteur (Suite)

CONDUITE A DROITE — MOTEUR A ESSENCE

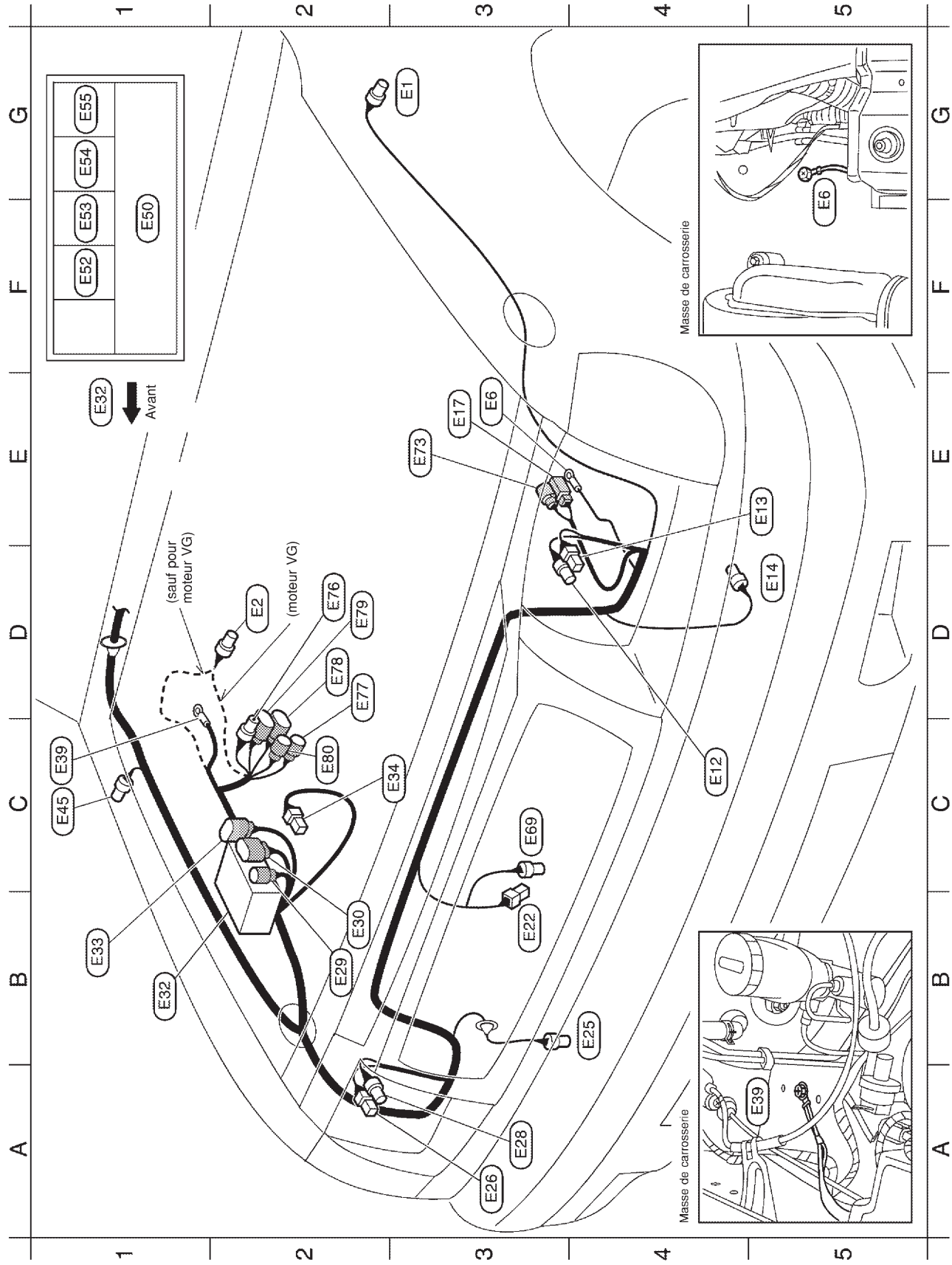

HEL091C

Simpo PDF Merge and Split Unregistered Version - http://www.simpopdf.com

Faisceau de compartiment moteur (Suite)

G3 (E1) GY/2 : Clignotant latéral gauche
D2 (E2) GY/2 : Contact de niveau de liquide de frein
E3 (E6) — : Masse de carrosserie
C4 (E12) GY/3 : Bloc optique avant gauche
E5 (E13) B/3 : Phare gauche
D5 (E14) GY/2 : Moteur de lave-vitres
E3 (E17) B/2 : Vers (A2) (moteur VG)
B3 (E22) B/1 : Avertisseur sonore (grave)
B4 (E25) GY/4 : Manocontact triple
A3 (E26) B/3 : Phare droit
A3 (E28) GY/3 : Bloc optique avant droit (pour l'Australie)
B2 (E29) GY/2 : Vers (E204) (sauf moteur VG)
Vers (E502) (moteur VG)
B2 (E30) GY/8 : Vers (E203) (sauf moteur VG)
B1 (E32) — : Boîte de relais (boîte de fusibles et de raccord à fusibles)
B1 (E33) SB/8 : Vers (E205) (sauf moteur VG)
C3 (E34) B/1 : Batterie
C1 (E39) — : Masse de carrosserie
C1 (E45) GY/2 : Clignotant latéral droit
F1 (E50) — : Boîte de fusibles et de raccord à fusibles
F1 (E52) L/4 : Relais de climatisation
F1 (E53) W/3 : Relais d'avertisseur sonore
G1 (E54) BR/6 : Relais de position de stationnement/point mort (modèles avec T/A)
G1 (E55) BR/6 : Relais de l'ECM (moteur KA)
L/4 : Relais de l'ECM (moteur VG)
C3 (E69) BR/2 : Contact de température ambiante (moteur KA)

E3 (E73) GY/2 : Vers (A3) (moteur VG)
D2 (E76) GY/2 : Résistance de chute (modèles avec T/A)
D2 (E77) GY/2 : Contact de position de stationnement/point mort (modèles avec T/A)
D2 (E78) GY/8 : Contact de position de stationnement/point mort (modèles avec T/A)
D2 (E79) BR/8 : Vers ensemble de câbles de bornes (modèles avec T/A)
C2 (E80) GY/3 : Capteur de régime (modèles avec T/A)

COMPARTIMENT PASSAGER

(E101) SMJ : Vers (M5)
(E103) B/2 : Boîtier à fusibles

HEL092C

Simpo PDF Merge and Split Unregistered Version - http://www.simpopdf.com

Faisceau de compartiment moteur (Suite)

CONDUITE A DROITE — MOTEUR DIESEL

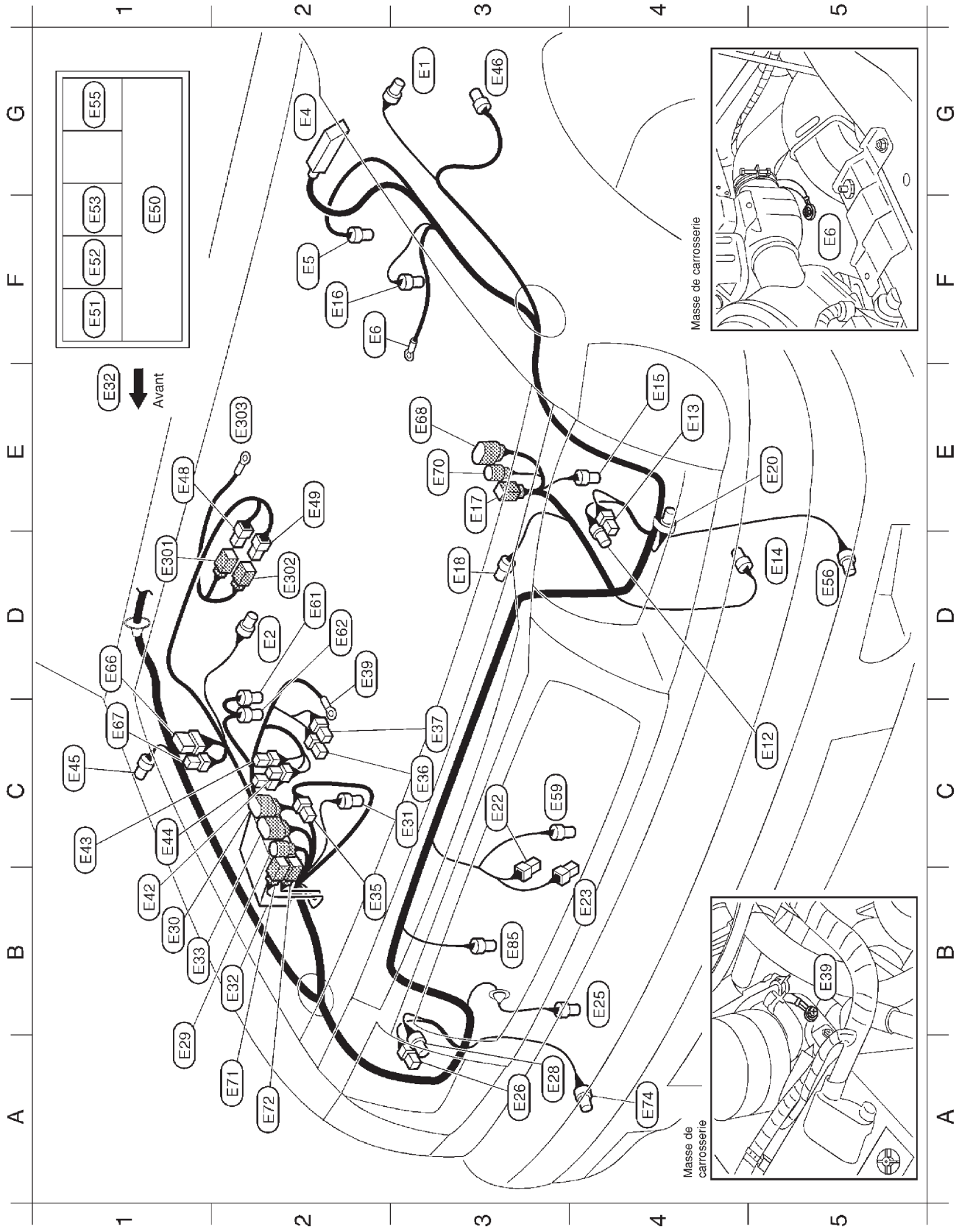

HEL968B

Simpo PDF Merge and Split Unregistered Version - http://www.simpopdf.com

G3	E1	GY/2	:	Clignotant latéral gauche
D2	E2	GY/2	:	Contact de niveau de liquide de frein
G2	E4	B/31	:	Actionneur ABS et dispositif électrique (pour ABS)
F2	E5	BR/2	:	Contact de filtre à carburant
F2	E6	—	:	Masse de carrosserie
C5	E12	GY/3	:	Bloc optique avant gauche
E4	E13	B/3	:	Phare gauche
D5	E14	GY/2	:	Moteur de lave-vitres
E4	E15	BR/2	:	Capteur de roue avant gauche (pour ABS)
F2	E16	GY/2	:	Capteur de température d'air d'admission (moteurs YD et ZD)
E3	E17	B/2	:	Vers A2
D3	E18	GY/2	:	Thermocontact (moteur QD)
E5	E20	GY/2	:	Connecteur optionnel (pour contact de capot) (pour l'Europe)
C3	E22	B/1	:	Avertisseur sonore (grave)
B4	E23	B/1	:	Avertisseur sonore (aigu) (moteur ZD sauf pour l'Australie, moteurs YD et QD)
B4	E25	GY/4	:	Manocontact triple
A3	E26	B/3	:	Phare droit
A3	E28	BR/3	:	Bloc optique avant droit
A1	E29	GY/2	:	Vers E204
B1	E30	GY/8	:	Vers E203 (avec moteur de contrôle de l'ECM)
C3	E31	GY/2	:	Capteur de roue avant droite (pour ABS)
B2	E32	—	:	Boîte de relais (boîte de fusibles et de raccord à fusibles)
B1	E33	SB/8	:	Vers E205
B2	E35	B/1	:	Vers E206 (moteurs TD et QD)
C3	E36	B/1	:	Electrovanne IACV-FICD (moteurs TD et QD)
C3	E37	B/1	:	Electrovanne IACV-FICD (moteurs TD et QD)
D2	E39	—	:	Masse de carrosserie
B1	E42	W/1	:	Relais 1 de préchauffage
C1	E43	W/1	:	Relais 1 de préchauffage
C1	E44	G/2	:	Relais 1 de préchauffage
C1	E45	GY/2	:	Clignotant latéral droit
G3	E46	GY/3	:	Antenne électrique (pour l'Europe)
E1	E48	B/1	:	Vers E301 (moteur QD)
E2	E49	L/2	:	Vers E302 (moteur TD)
F1	E50	—	:	Boîte de fusibles et de raccord à fusibles
F1	E51	L/4	:	Relais de ventilateur de refroidissement (sauf moteur TA)
F1	E52	L/4	:	Relais de climatisation
F1	E53	W/3	:	Relais d'avertisseur sonore
G1	E55	BR/6	:	Relais de l'ECM (moteurs YD et ZD)
D5	E56	B/2	:	Feu antibrouillard avant gauche (pour l'Europe)
C3	E59	B/2	:	Capteur de température ambiante (moteurs YD et ZD)
D2	E61	B/2	:	Electrovanne EGRC (chambre de papillon) (moteur TD avec EGR)
D2	E62	BR/2	:	Electrovanne EGRC (soupape de papillon) (moteur TD avec EGR)
D1	E66	GY/6	:	Centrale de commande de mise en veilleuse (pour l'Europe)
C1	E67	GY/4	:	Centrale de commande de mise en veilleuse (pour l'Europe)
E3	E68	GY/8	:	Vers A13 (moteurs TD et QD)
E3	E70	BR/3	:	Vers A14 (moteurs YD et ZD)
A2	E71	B/2	:	Vers E231 (moteurs YD et ZD)
A2	E72	B/1	:	Vers E232 (moteurs YD et ZD)
A4	E74	B/2	:	Feu antibrouillard avant droit (pour l'Europe)
B3	E85	GY/2	:	Moteur de ventilateur de refroidissement (sauf pour moteur TD)

COMPARTIMENT PASSAGER

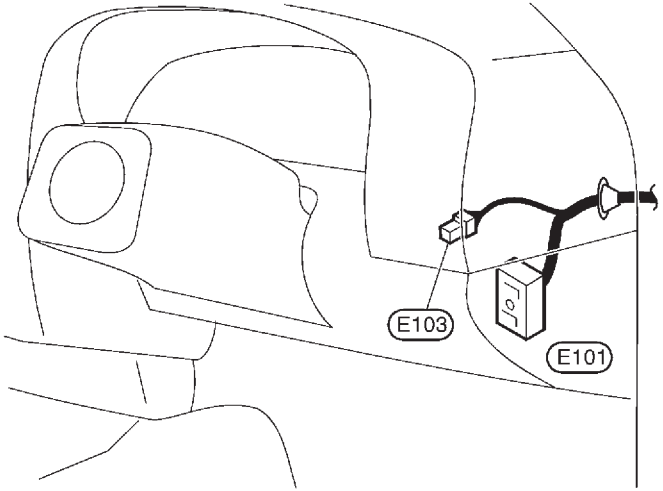

E101	SMJ	:	Vers M5
M103	B/2	:	Boîtier à fusibles

Faisceau auxiliaire

D1	E301	B/1	:	Vers E48 (moteur QD)
D2	E302	L/2	:	Vers E49 (moteur TD)
E2	E303	—	:	Bougie de préchauffage (moteurs TD et QD)

Simpo PDF Merge and Split Unregistered Version - http://www.simpopdf.com

Faisceau d'éclairage intérieur/conduite à gauche

CABINE DOUBLE

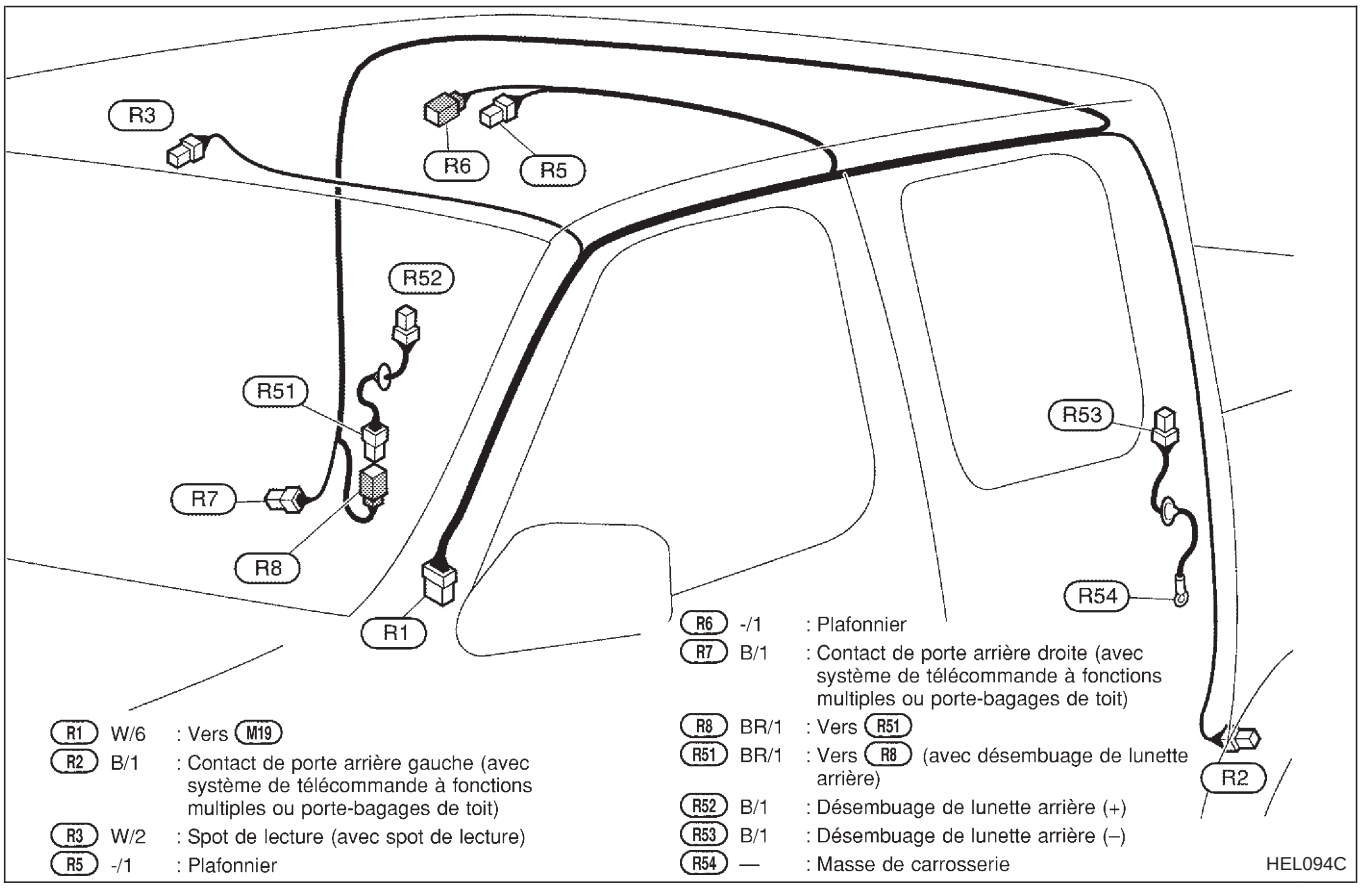

(R1) W/6 : Vers (M19)
(R2) B/1 : Contact de porte arrière gauche (avec système de télécommande à fonctions multiples ou porte-bagages de toit)
(R3) W/2 : Spot de lecture (avec spot de lecture)
(R5) -/1 : Plafonnier
(R6) -/1 : Plafonnier
(R7) B/1 : Contact de porte arrière droite (avec système de télécommande à fonctions multiples ou porte-bagages de toit)
(R8) BR/1 : Vers (R51)
(R51) BR/1 : Vers (R8) (avec désembuage de lunette arrière)
(R52) B/1 : Désembuage de lunette arrière (+)
(R53) B/1 : Désembuage de lunette arrière (–)
(R54) — : Masse de carrosserie

HEL094C

Simpo PDF Merge and Split Unregistered Version - http://www.simpopdf.com

Utiliser l'organigramme ci-dessous pour la signification des codes de schémas de câblage.
Consulter le code du schéma de câblage dans l'index alphabétique pour trouver l'emplacement (numéro de page) de chaque schéma de câblage.

Code	Section	Nom du schéma de câblage
ABS	BR	Système anti-enrayeur des freins
A/C, M	HA	Climatiseur manuel
FICD	EC	Electrovanne IACV-FICD
PRE-CHAUF-FAGE	EC	Circuit de préchauffage rapide
ILL	EL	Eclairage
PRWIRE	EL	Système d'alarme antivol (pré-câblage)
ROOM/L	EL	Plafonnier
SRS	RS	Système de retenue supplémentaire
WINDOW	EL	Lève-vitre électrique

Simpo PDF Merge and Split Unregistered Version - http://www.simpopdf.com

<SUPPLEMENT-V>

ELEMENTS DU MOTEUR

SECTION EM

AVIS DE MODIFICATION :

- Des informations concernant le moteur YD25DDTi ont été ajoutées.
  Pour les informations ne figurant pas dans ce supplément, se reporter aux informations données concernant le moteur YD25DDTi dans la 1ère révision du manuel de réparation D22 supplément VI (SM1E-1D22FG1).

TABLE DES MATIERES

YD

CULASSE 5002
Vérification 5002
BLOC-CYLINDRES 5003
Vérification 5003

CARACTERISTIQUES ET VALEURS DE REGLAGE (SDS) 5005
Culasse 5005
Bloc-cylindres 5005
Piston, segment de piston et axe de piston 5006

Simpo PDF Merge and Split Unregistered Version - http://www.simpopdf.com

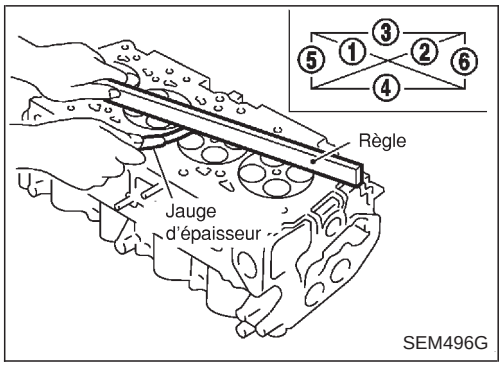

Vérification

DEFORMATION DE LA CULASSE

Nettoyer la surface de la culasse. Utiliser une règle et une jauge d'épaisseur fiables pour contrôler l'égalité de la surface de la culasse. Vérifier les 6 points indiqués sur l'illustration.

Planéité de la surface de la culasse :
Limite de 0,1 mm

Si la valeur est hors limite, corriger ou remplacer.

La limite de la rectification de la culasse est déterminée par la rectification du bloc-cylindres.

Limite de rectification :
L'étendue de rectification de la culasse est ''A''.
L'étendue de rectification du bloc-cylindres est ''B''.
La limite maximum est : A + B = 0,07 mm

Après avoir rectifié la culasse, vérifier à la main que l'arbre à cames tourne sans à-coup. En cas de résistance, la culasse doit être remplacée.

Hauteur nominale de culasse :
153,9 - 154,1 mm

Simpo PDF Merge and Split Unregistered Version - http://www.simpopdf.com

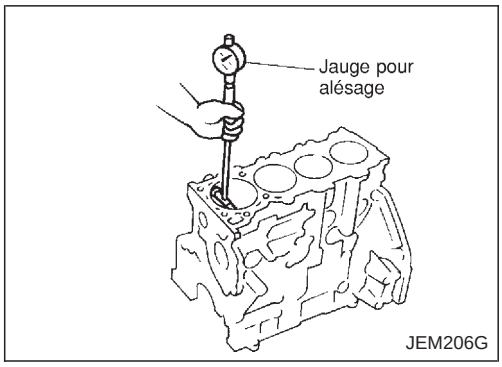

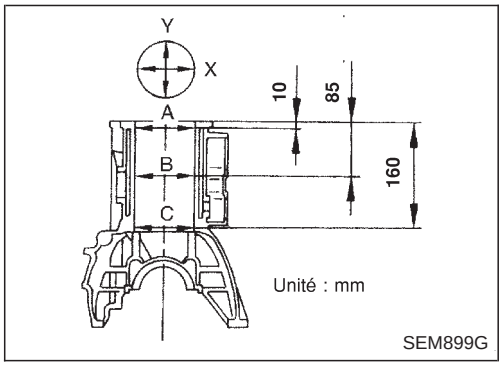

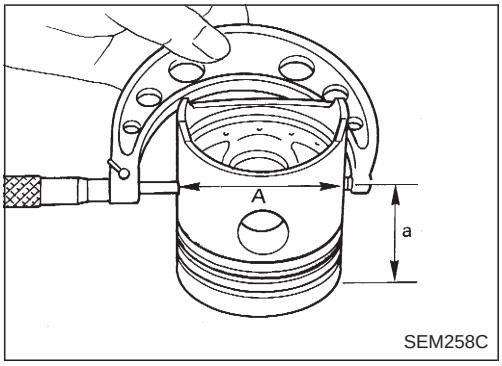

Vérification

JEU DU PISTON A ALESER

1. A l'aide d'un comparateur à cadran, mesurer l'alésage du cylindre dans les directions X et Y aux points A, B et C pour rechercher usure, faux-rond ou conicité.
   Diamètre interne de l'alésage de cylindre :
   Standard
   89,000 - 89,030 mm
   Limite d'usure
   0,07 mm
   Si la valeur est hors limite, réaléser tous les cylindres. Remplacer le bloc-cylindres si nécessaire.
   Ovalisation (différence entre X et Y) :
   Limite de 0,015 mm
   Conicité (différence entre A et C) :
   Limite de 0,010 mm
2. Rechercher toutes traces de rayures et de grippage. En cas de grippage, rectifier.
3. Mesurer le diamètre de la jupe de piston.
   Diamètre du piston "A" :
   Standard
   88,925 - 88,955 mm
   Point de mesure "a" (distance depuis la partie supérieure) :
   59,0 mm
4. Vérifier que le jeu entre le piston et l'alésage est conforme aux spécifications.

- Calculer le jeu en utilisant le diamètre externe au niveau de la jupe de piston et le diamètre interne du cylindre (direction X, point B) :
  Jeu du piston à aléser = alésage de cylindre - diamètre du piston "A"
  Standard (à une température ambiante de 20°C) :
  0,065 - 0,085 mm
- Si la valeur est hors de la gamme spécifiée, remplacer le piston et l'axe de piston.

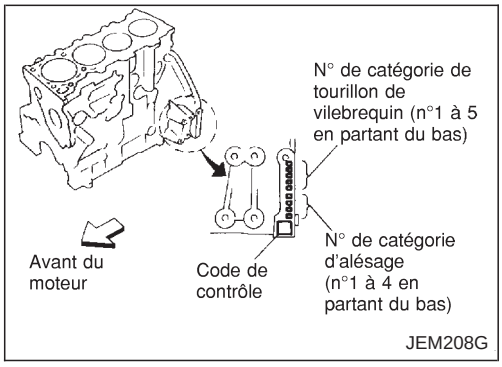

- Si le bloc-cylindres ou les pistons sont remplacés par des pièces neuves, sélectionner le piston comme suit :

Lors de l'utilisation d'un bloc-cylindres neuf :

- Identifier la catégorie de l'alésage du cylindre (n°1, 2, ou 3) sur la surface gauche à l'arrière du bloc-cylindres et sélectionner un piston de catégorie identique.
- Le numéro de pièce est commun au piston et à l'axe de piston comme un ensemble.

Simpo PDF Merge and Split Unregistered Version - http://www.simpopdf.com

Vérification (Suite)

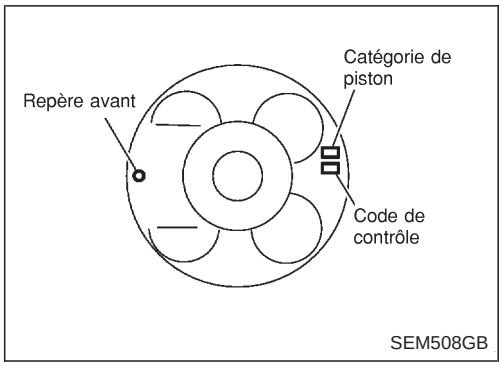

Lors de la réutilisation d'un bloc-cylindres déposé :

- Mesurer le diamètre interne de l'alésage du bloc-cylindres.
- Déterminer l'alésage en comparant les mesures avec les valeurs sous ''Type d'alésage de cylindre'' dans le tableau ci-dessous. Sélectionner un piston de la même taille.

Raccord approprié pour pistons :

Unité : mm

Catégorie (perforée)	1	2	3
Type d'alésage de cylindre	89,000 - 89,010	89,010 - 89,020	89,020 - 89,030
Diamètre externe du piston	88,925 - 88,935	88,935 - 88,945	88,945 - 88,955

5. Déterminer la surdimension du piston en fonction de l'étendue de l'usure du cylindre.

- **Les pistons surdimensionnés de 0,25 et 0,5 (surdimension de 0,25 mm, 0,5 mm) sont disponibles en tant que pièces détachées. Se reporter aux SDS, EM-5006. Lors de l'utilisation d'un piston surdimensionné, roder le cylindre pour que le jeu entre le piston et le cylindre soit à la valeur spécifiée. S'assurer d'utiliser le segment de piston surdimensionné approprié au piston surdimensionné.**

6. La dimension de l'alésage de cylindre est déterminée en ajoutant le jeu du piston à aléser au diamètre du piston ''A''.

Calcul de la dimension du réalésage : D = A + B - C
où
D : diamètre d'alésage
A : diamètre du piston mesuré
B : jeu du piston à aléser
C : tolérance de finition 0,02 mm

7. Aléser les cylindres.

- **Tous les cylindres doivent être alésés en même temps.**
- **Ne pas aléser trop profondément un cylindre en une fois. Ne pas rectifier de plus de 0,05 mm de diamètre environ à chaque fois.**

8. Roder les cylindres pour obtenir le jeu spécifié du piston à l'alésage.
9. Mesurer l'alésage final du cylindre en vérifiant qu'il n'y a pas d'ovalisation ou de conicité.

- **La mesure doit être prise une fois que l'alésage du cylindre a refroidi.**

Simpo PDF Merge and Split Unregistered Version - http://www.simpopdf.com

Culasse

Unité : mm

	Standard	Limite
Déformation de la surface de culasse	Inférieure à 0,03	0,1

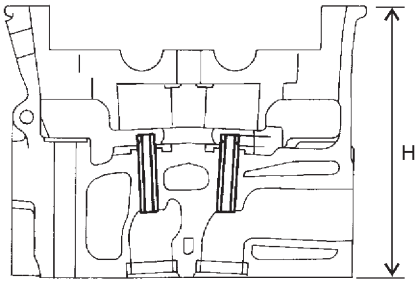

Hauteur nominale de culasse :
H = 153,9 - 154,1 mm

JEM204G

Bloc-cylindres

Unité : mm

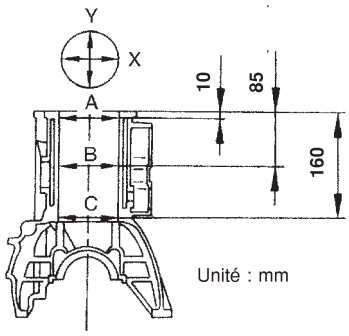

SEM899G

Planéité de la surface	Standard			Inférieure à 0,03
	Limite			0,1
Alésage de cylindre	Diamètre interne	Standard	Catégorie n°1	89 000 - 89 010
			Catégorie n°2	89,010 - 89,020
			Catégorie n°3	89,020 - 89,030
		Limite d'usure		0,07
Ovalisation (différence entre X et Y)				Inférieure à 0,015
Conicité (différence entre A et C)				Inférieure à 0,010

Simpo PDF Merge and Split Unregistered Version - http://www.simpopdf.com

Piston, segment de piston et axe de piston

PISTON DISPONIBLE

Unité : mm

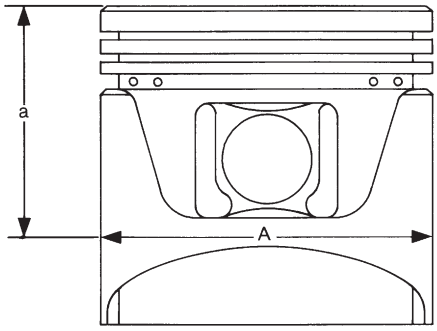

SEM882E

Diamètre de la jupe de piston "A"	Standard	Catégorie n°1	88,925 - 88,935
		Catégorie n°2	88,935 - 88,945
		Catégorie n°3	88,945 - 88,955
		Surdimension de 0,25 (révision)	89,175 - 89,205
		Surdimension de 0,50 (révision)	89,425 - 89,455
Dimension "a"			59,0
Jeu entre piston et bloc-cylindres			0,065 - 0,085

Simpo PDF Merge and Split Unregistered Version - http://www.simpopdf.com

Disposition des bornes

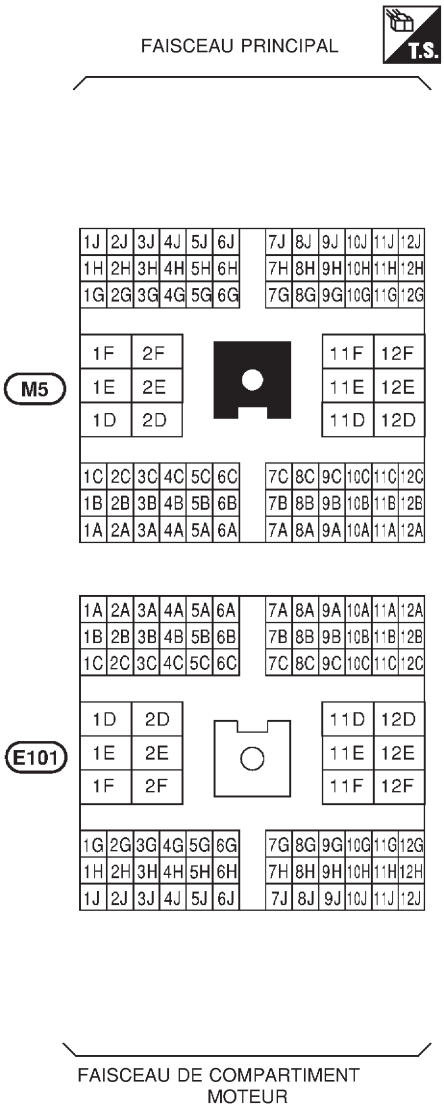

Simpo PDF Merge and Split Unregistered Version - http://www.simpopdf.com

Disposition des bornes

ECM M32 (conduite à gauche avec moteur KA pour l'Europe)

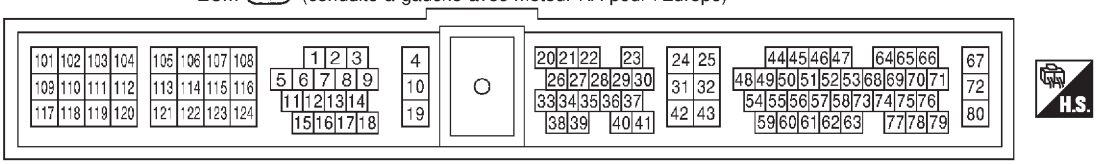

ECM F51 (moteur VG)

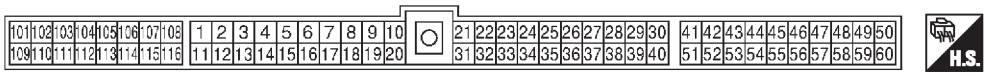

ECM M32 (conduite à gauche avec moteurs YD et ZD),
F51 (conduite à droite avec moteurs YD et ZD)

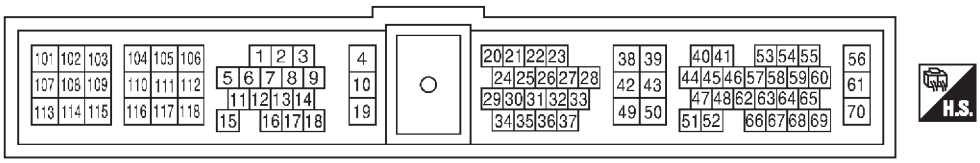

ECM M32 (conduite à gauche avec moteur KA sauf pour l'Europe), F51 (conduite à droite avec moteur KA)
TCM (boîtier de commande de transmission) M69 (modèles avec T/A avec moteur VG et moteur QD)

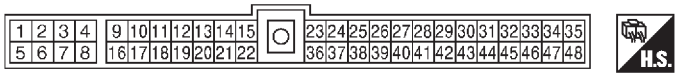

TCM (boîtier de commande de transmission) (modèles avec T/A avec moteur KA)

M70

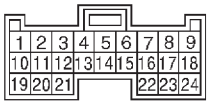

(Blanc)

M71

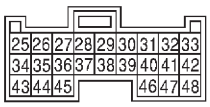

(Gris)

H.S.

Ensemble d'actionneur ABS E4

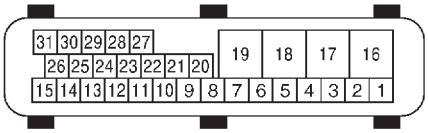

T.S.

BOITIER DE COMMANDE D'A/C AUTO.

M88

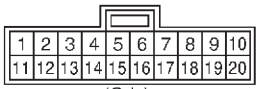

(Gris)

M89

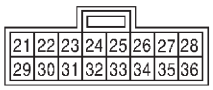

(Gris)

H.S.

BOITIER DE COMMANDE INTELLIGENTE M62

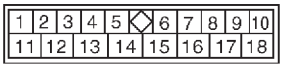

(Blanc)

H.S.

GEL852A

Simpo PDF Merge and Split Unregistered Version - http://www.simpopdf.com

NISSAN

PICKUP

SERIE DES MODELES D22

AVANT-PROPOS

Ce supplément contient des informations sur les opérations d'entretien nécessaires, ainsi que les caractéristiques qui se rapportent à la nouvelle version des séries D22.

Toutes les informations, illustrations et caractéristiques contenues dans ce supplément sont basées sur les derniers renseignements disponibles au moment de la publication. Si le véhicule NISSAN ne répond pas aux caractéristiques indiquées dans ce supplément, consulter son concessionnaire NISSAN.

Nous nous réservons tous droits d'effectuer des changements dans les caractéristiques et les méthodes, à tout moment et sans préavis.

TABLE DE REFERENCE RAPIDE

GENERALITES	GI
ENTRETIEN	MA
ELEMENTS DU MOTEUR	EM
CIRCUIT DE LUBRIFICATION DU MOTEUR ET CIRCUIT DE REFROIDISSEMENT	LC
SYSTEME DE GESTION MOTEUR	EC
SYSTEMES DE COMMANDE D'ACCELERATEUR, D'ALIMENTATION ET D'ECHAPPEMENT	FE
EMBRAYAGE	CL
BOITE DE VITESSES MANUELLE	MT
BOITE DE TRANSFERT	TF
ARBRE DE TRANSMISSION ET PORTE-DIFFERENTIEL	PD
ESSIEU ET SUSPENSION AVANT	FA
ESSIEU ET SUSPENSION ARRIERE	RA
SYSTEME DE FREINAGE	BR
DIRECTION	ST
SYSTEME DE RETENUE	RS
CARROSSERIE ET GARNITURE	BT
CHAUFFAGE ET CLIMATISEUR	HA
EQUIPEMENT ELECTRIQUE	EL
TABLE ALPHABETIQUE	IDX

Edition : Mars 2003
Imprimé : Avril 2003 (01)
Numéro de Publication : SM3F00-1D22E0E
Numéro de Référence : 7711347052

NISSAN EUROPE S.A.S.

© 2003 NISSAN EUROPE S.A.S. Imprimé aux Pays-Bas
Cette publication ne peut être reproduite, que ce soit en tout ou en partie, sans la permission préalable écrite de Nissan Europe N.V., Amsterdam, Les Pays-Bas.

Simpo PDF Merge and Split Unregistered Version - http://www.simpopdf.com

AVANT-PROPOS

Ce manuel contient les travaux d'entretien et de réparation concernant les véhicules NISSAN PICKUP, série des modèles D22.

A des fins de sécurité et pour que le rendement des véhicules concernés soit optimal, prière de lire ce manuel complètement. Avant de commencer à entreprendre des travaux, il est particulièrement important d'avoir parfaitement assimilé les PRECAUTIONS signalées dans la section GI.

Toutes les informations contenues dans ce manuel sont basées sur les données de production les plus récentes au moment de la réalisation du manuel. Nous nous réservons le droit de modifier les caractéristiques et les méthodes de travail à n'importe quel moment et sans avis préalable.

NOTE IMPORTANTE DE SECURITE

Un entretien correctement effectué est essentiel, aussi bien pour la sécurité des mécaniciens que pour le fonctionnement adéquat du moteur. Les méthodes d'entretien reprises dans ce manuel de réparation sont décrites de telle manière que le travail puisse être effectué en sécurité et avec précision. Les entretiens varient selon les procédures, les connaissances du technicien et l'outillage, ainsi que les pièces disponibles. Dès lors, toute personne utilisant les procédures d'entretien, un outillage ou des pièces qui ne sont pas spécifiquement recommandées par NISSAN doit auparavant être absolument certain que ceci n'entraîne de danger ni pour sa propre sécurité, ni pour celle du moteur.

NISSAN EUROPE S.A.S.

Service Engineering Section

Paris, France

Simpo PDF Merge and Split Unregistered Version - http://www.simpopdf.com

<SUPPLEMENT-V>

SECTION GI

TABLE DES MATIERES

SYSTEME DE VERIFICATION DE CONSULT-II 5002
Fonction et application 5002
Remplacement de la batterie à hydrure composé de nickel 5002
Equipement de vérification 5003
Circuit de connecteur de liaison de données (DLC) de CONSULT-II 5003
INFORMATIONS RELATIVES A L'IDENTIFICATION 5004
Variantes du modèle 5004
Numéro d'identification 5006

Cette modification a été prise en compte dans la production en commençant par les numéros d'identification du véhicule (numéro de châssis) suivants:

Pour Israël

- JN1CPGD224X560201
- JN1CPUD224X570401

Pour l'Europe

- JN1APGD22U0056701
- JN1APUD22U0037101
- JN1BPGD22U0033201
- JN1BPUD22U0090001
- JN1CPGD22U0048001
- JN1CPUD22U0088401
- JN1ADGD22U0021601
- JN1BDGD22U0031601
- JN1BDUD22U0031801
- JN1CDUD22U0031701

Simpo PDF Merge and Split Unregistered Version - http://www.simpopdf.com

Fonction et application

Mode de test de diagnostic	Fonction	MOTEUR	T/A	ABS	AIRBAG
Support de travail	Ce mode permet au technicien de régler certains dispositifs de façon plus rapide et plus exacte en suivant les indications fournies par CONSULT-II.	x	x	—	—
Résultats de l'auto-diagnostic	Les résultats de l'auto-diagnostic peuvent être rapidement lus et effacés.	x	x	x	x
Enregistrement du diagnostic de défaut	Les résultats actuels de l'auto-diagnostic et tous les diagnostics des défauts précédemment enregistrés peuvent être lus.	—	—	—	x
N° de l'ECU (boîtier de commande du moteur) incriminé	La lecture du numéro de classification d'un ECU de rechange permet d'éviter la repose éventuelle d'un mauvais ECU.	—	—	—	x
Contrôle de données	Les données à l'entrée et à la sortie de l'ECU (ECM) sont lisibles.	x	x	x	—
Support de travail de DTC	Ce mode permet au technicien de régler les conditions de fonctionnement permettant de confirmer les états/résultats d'autodiagnostic.	—	x	—	—
Test actif	Mode d'essai de diagnostic dans lequel CONSULT-II sépare certains actionneurs et décale certains paramètres dans une gamme spécifiée.	x	—	x	—
N° de pièce de boîtier de commande du moteur (ECM)	Le numéro de pièce de l'ECU (ECM) est lisible.	x	x	x	—
Test de fonctionnement	Conduit par CONSULT-II au lieu d'un technicien afin de déterminer si le fonctionnement du système est ''BON'' ou ''MAUVAIS''.	x	x	x	x

x : S'applique

Remplacement de la batterie à hydrure composé de nickel

CONSULT-II est équipé d'une batterie à hydrure composé de nickel. Lors du remplacement de la batterie, respecter les points suivants :

ATTENTION :

Remplacer la batterie à hydrure composé de nickel uniquement avec une batterie d'origine pour CONSULT-II. L'utilisation d'une batterie autre peut entraîner un risque d'incendie ou d'explosion. Un mauvais traitement de la batterie peut entraîner un risque d'incendie ou de brûlure chimique. Ne pas recharger, démonter ou jeter au feu.

Veiller à placer la batterie hors de portée des enfants et mettre les batteries usées au rebut conformément aux réglementations locales.

Simpo PDF Merge and Split Unregistered Version - http://www.simpopdf.com

Equipement de vérification

Lors de la commande des équipements suivants, contacter votre concessionnaire NISSAN.

Nom de l'outil	Description
CONSULT-II NISSAN ① Boîtier CONSULT-II (logiciel interne du testeur : version résidente 3.3.0) et accessoires ② Carte programme AED01C pour diagnostique, AEN00A/00B pour NATS. Afin de confirmer la meilleure combinaison de ces logiciels, se reporter au manuel d'utilisation de CONSULT-II.	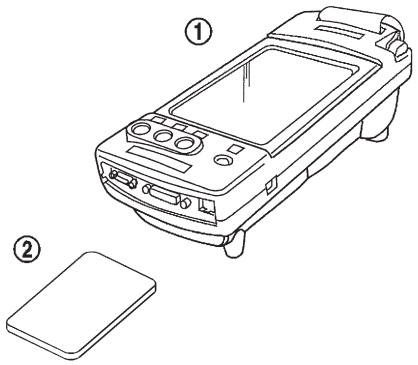 SGI083A

NOTE :

- **CONSULT-II doit être utilisé conjointement avec une carte programme. CONSULT-II ne nécessite pas de procédure de charge (initialisation).**
- **S'assurer que CONSULT-II est éteint avant de reposer ou de déposer la carte programme.**

Circuit de connecteur de liaison de données (DLC) de CONSULT-II

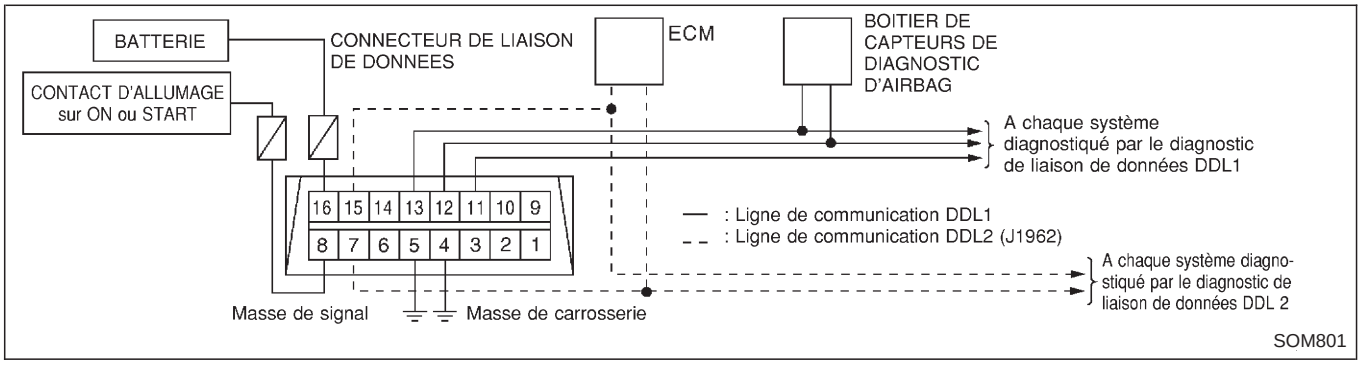

PROCEDURE D'INSPECTION

Si CONSULT-II ne peut établir de diagnostic correctement, vérifier les éléments suivants.

Symptôme	Elément à contrôler
CONSULT-II ne peut accéder à aucun système.	● Circuit d'alimentation électrique (borne 8) et circuit de mise à la masse (borne 4) du connecteur de liaison de données de CONSULT-II (Pour le circuit détaillé, se reporter à la section EC ''Témoin de défaut et connecteur de liaison de données''.) ● Câble de diagnostic de liaison de données de CONSULT-II
CONSULT-II ne peut accéder à l'un des système (mais peut accéder à d'autres systèmes).	● Carte de programme CONSULT-II (Vérifier que la carte de programme CONSULT-II correspond au système. Se reporter ''Equipement de vérification'' ci-dessus.) ● Alimentation électrique et circuit de mise à la masse du boîtier de commande du système (Pour le circuit détaillé, se reporter au schéma de câblage de chaque système.) ● Circuit ouvert ou court-circuit entre le système et le connecteur de liaison de données de CONSULT-II (Pour le circuit détaillé, se reporter au schéma de câblage de chaque système.)

Simpo PDF Merge and Split Unregistered Version - http://www.simpopdf.com

PICK-UP (4x2)

Destination	Catégorie			Modèle		Moteur	Boîte de vitesses	Support de différentiel
	Cabine	Empattement	Classe	Conduite à gauche	Conduite à droite			
Europe	Cabine simple	Long	STD	ABGGLCFD22EQL	—	KA24DE	FS5W71C	C200
				AVLGLCFD22UQL		YD25DDTi	FS5R30A	
			DX	ABGGLDFD22EQL	—	KA24DE	FS5W71C	
				AVLGLDFD22UQL	AVLGRDFD22UQL	YD25DDTi	FS5R30A	
	Cabine King		DX	BBGGLDFD22EQN	—	KA24DE	FS5W71C	
			DX	BVLGLDFD22UQN	BVLGRDFD22UQN	YD25DDTi	FS5R30A	
	Apparence 4x4		DX	BVLGLDFD22UQG	—	YD25DDTi	FS5R30A	
			ST	BVLGLEFD22UQG	—			
	Cabine double		DX	CVLGLDFD22UQN	CVLGRDFD22UQN			
	Apparence 4x4		DX	CVLGLDFD22UQG	—			
			ST	CVLGLEFD22UQG	—			

PICK-UP (4x4)

Destination	Catégorie			Modèle		Moteur	Boîte de vitesses	Support de différentiel		Boîte de transfert
	Cabine	Empattement	Classe	Conduite à gauche	Conduite à droite			Avant	Arrière	
Europe	Cabine simple	Long	STD	AVLULCFD22UQL	AVLURCFD22UQL	YD25DDTi	FS5R30A	R180	C200	TX10
			DX	AVLULDFD22UQL	AVLURDFD22UQL					
	Cabine King		DX	BBGULDFD22EQN	—	KA24DE	FS5W71C			
				BVLULDFD22UQN	BVLURDFD22UQN	YD25DDTi	FS5R30A			
			ST	BVLULEFD22UQN	BVLUREFD22UQN					
			SE	BVLULFFD22UQN	BVLURFFD22UQN					
	Cabine double		DX	CBGULDFD22EQN	—	KA24DE	FS5W71C			
				CVLULDFD22UQN	CVLURDFD22UQN	YD25DDTi	FS5R30A			
			ST	CVLULEFD22UQN	CVLUREFD22UQN					
			SE	CVLULFFD22UQN	CVLURFFD22UQN					
			SS	CVLULGFD22UQN	CVLURGFD22UQN					

Simpo PDF Merge and Split Unregistered Version - http://www.simpopdf.com

Variantes du modèle (Suite)

Désignations des préfixes et suffixes (Pick-up)

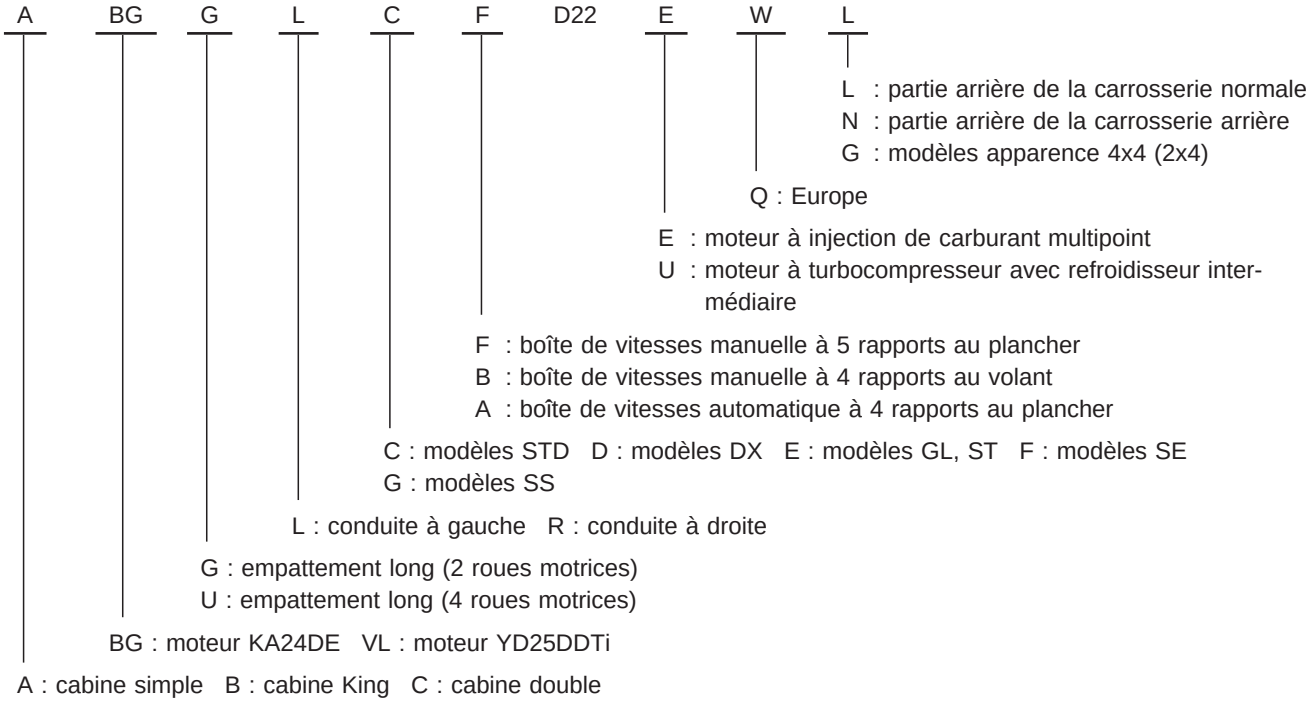

Simpo PDF Merge and Split Unregistered Version - http://www.simpopdf.com

Numéro d'identification

NUMERO D'IDENTIFICATION DU VEHICULE (VIN)

Désignations des préfixes et suffixes

Pour Israël

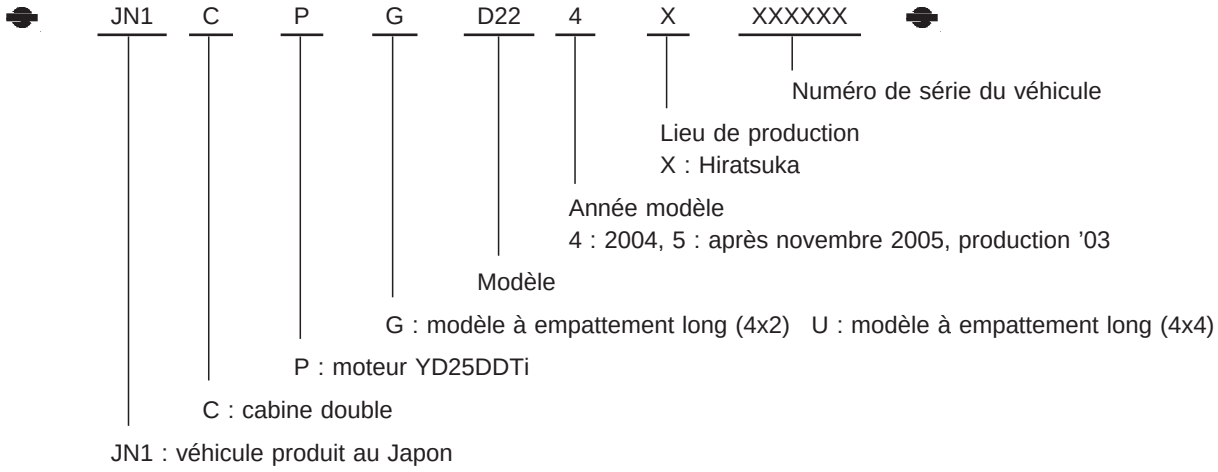

Pour l'Europe

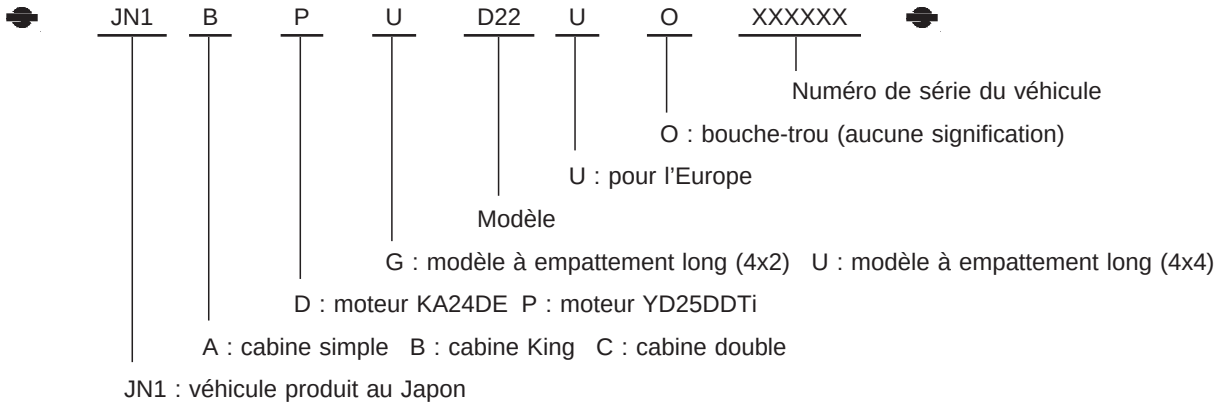

Simpo PDF Merge and Split Unregistered Version - http://www.simpopdf.com

<SUPPLEMENT-V>

CHAUFFAGE ET CLIMATISATION

SECTION HA

AVIS DE MODIFICATION :

- Les schémas de câblage ont été modifiés pour les modèles avec conduite à gauche équipés des moteurs KA, YD et ZD (climatisation manuelle).

TABLE DES MATIERES

MANUEL

DIAGNOSTIC DES DEFAUTS 5002
Schéma du circuit - A/C, M - 5002
Schéma de câblage - A/C, M -/conduite à gauche avec moteurs KA, YD et ZD 5003

Simpo PDF Merge and Split Unregistered Version - http://www.simpopdf.com

Schéma du circuit — A/C, M —

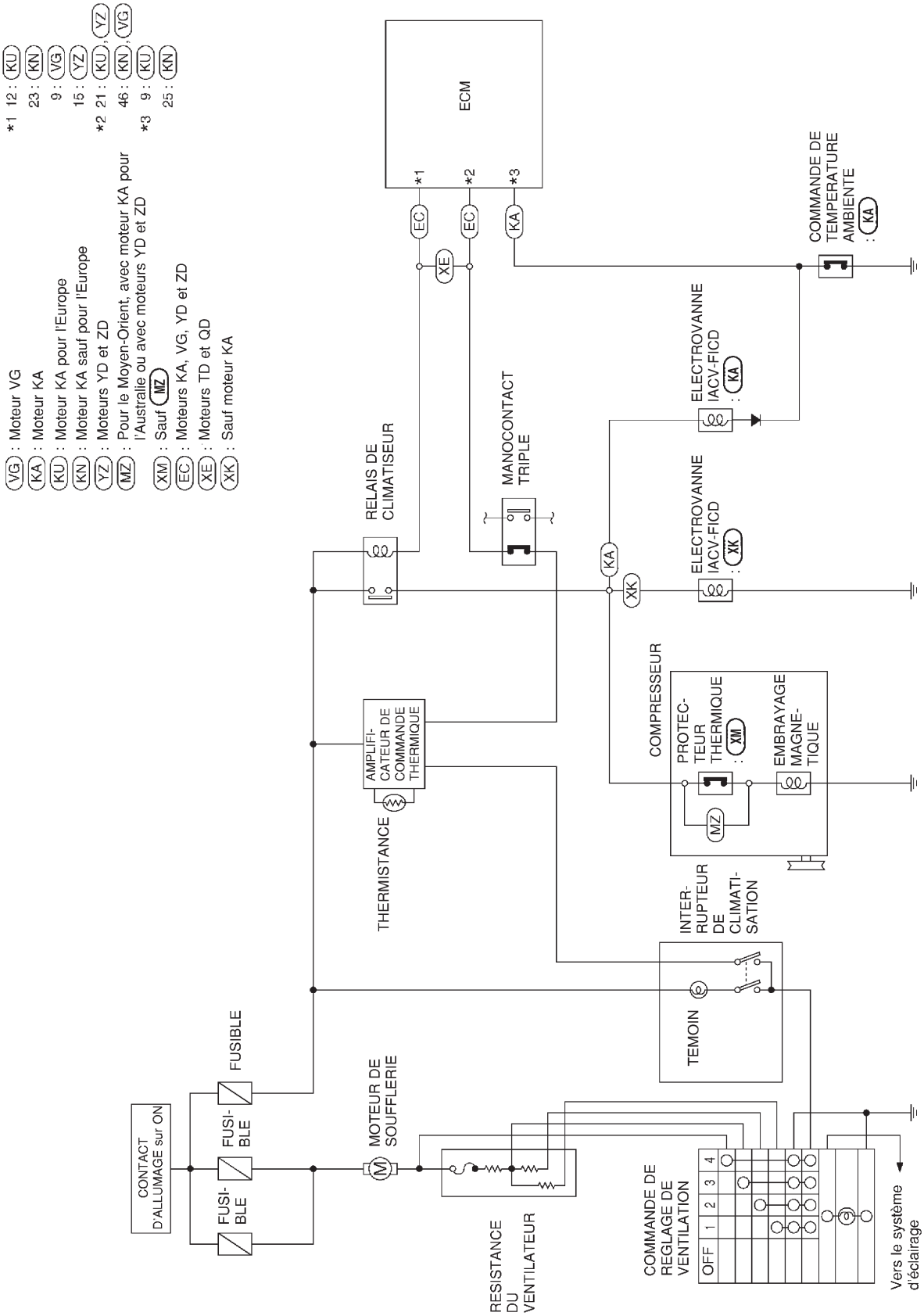

GHA132A

Simpo PDF Merge and Split Unregistered Version - http://www.simpopdf.com

Schéma de câblage — A/C, M —/conduite à gauche avec moteurs KA, YD et ZD

HA-A/C,M-01

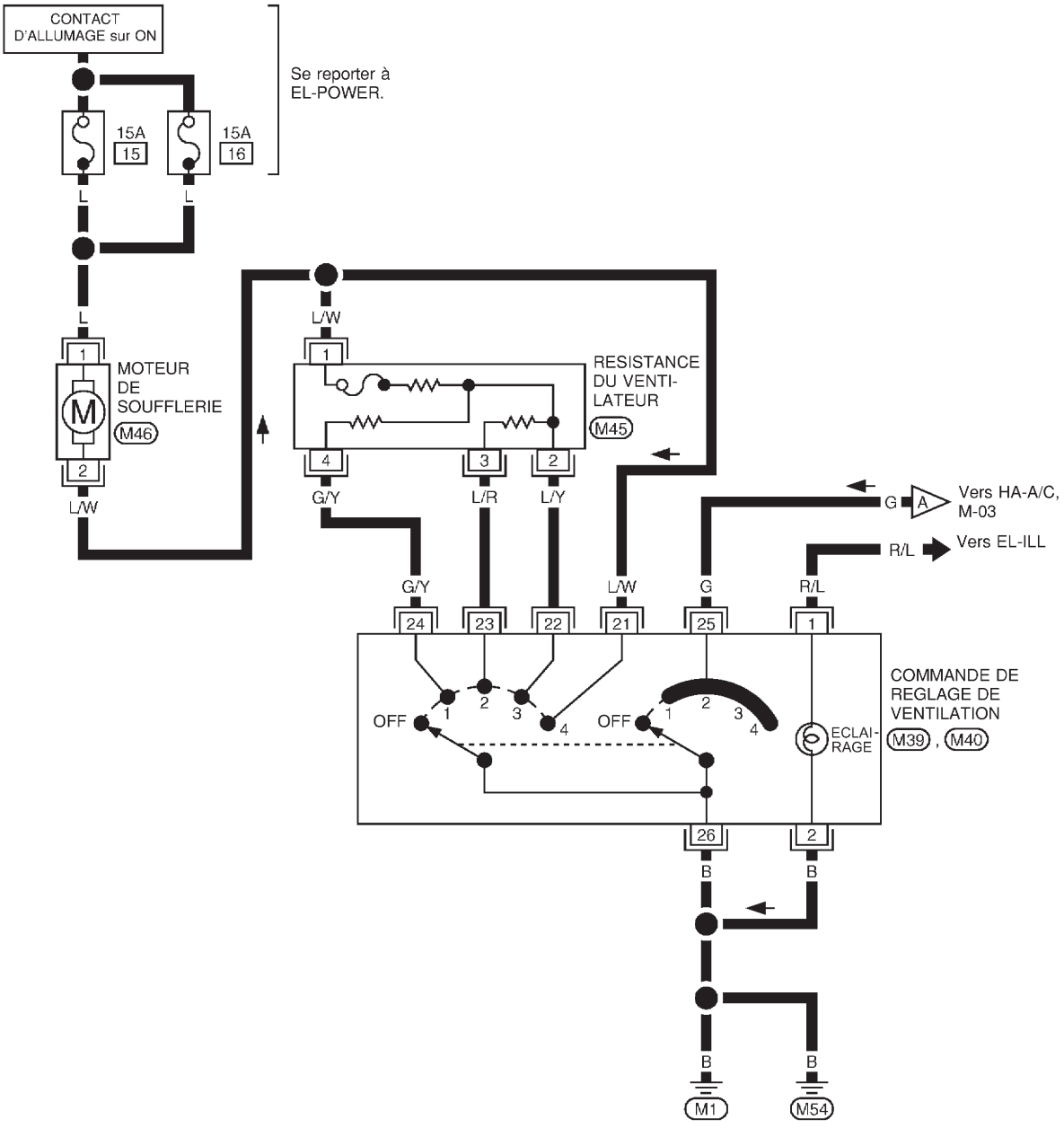

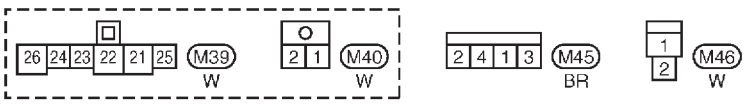

GHA056A

Simpo PDF Merge and Split Unregistered Version - http://www.simpopdf.com

Schéma de câblage — A/C, M —/conduite à gauche avec moteurs KA, YD et ZD (Suite)

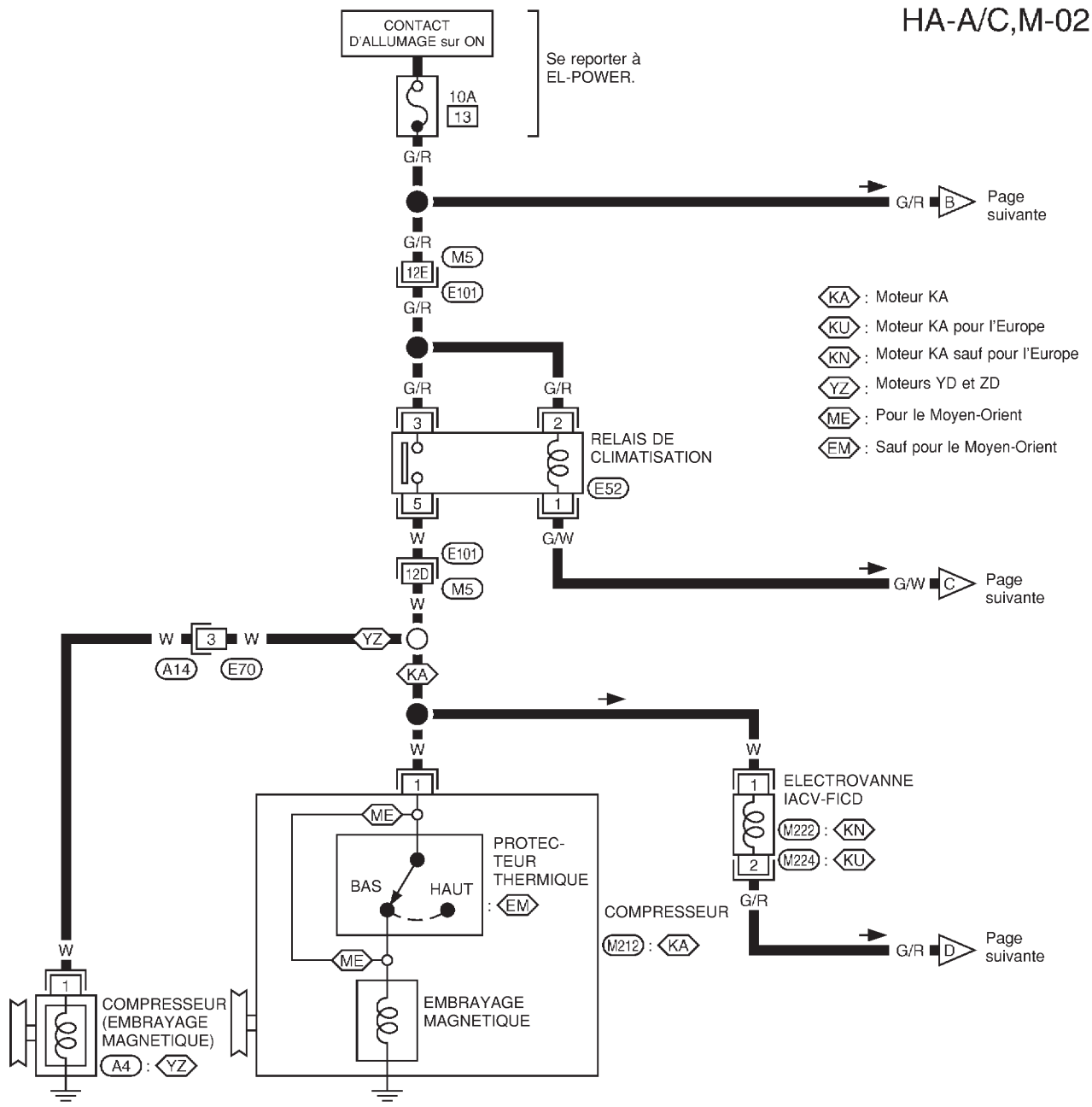



Consulter la dernière page dépliante.

M5 , E101

GHA057A

Simpo PDF Merge and Split Unregistered Version - http://www.simpopdf.com

Schéma de câblage — A/C, M —/conduite à gauche avec moteurs KA, YD et ZD (Suite)

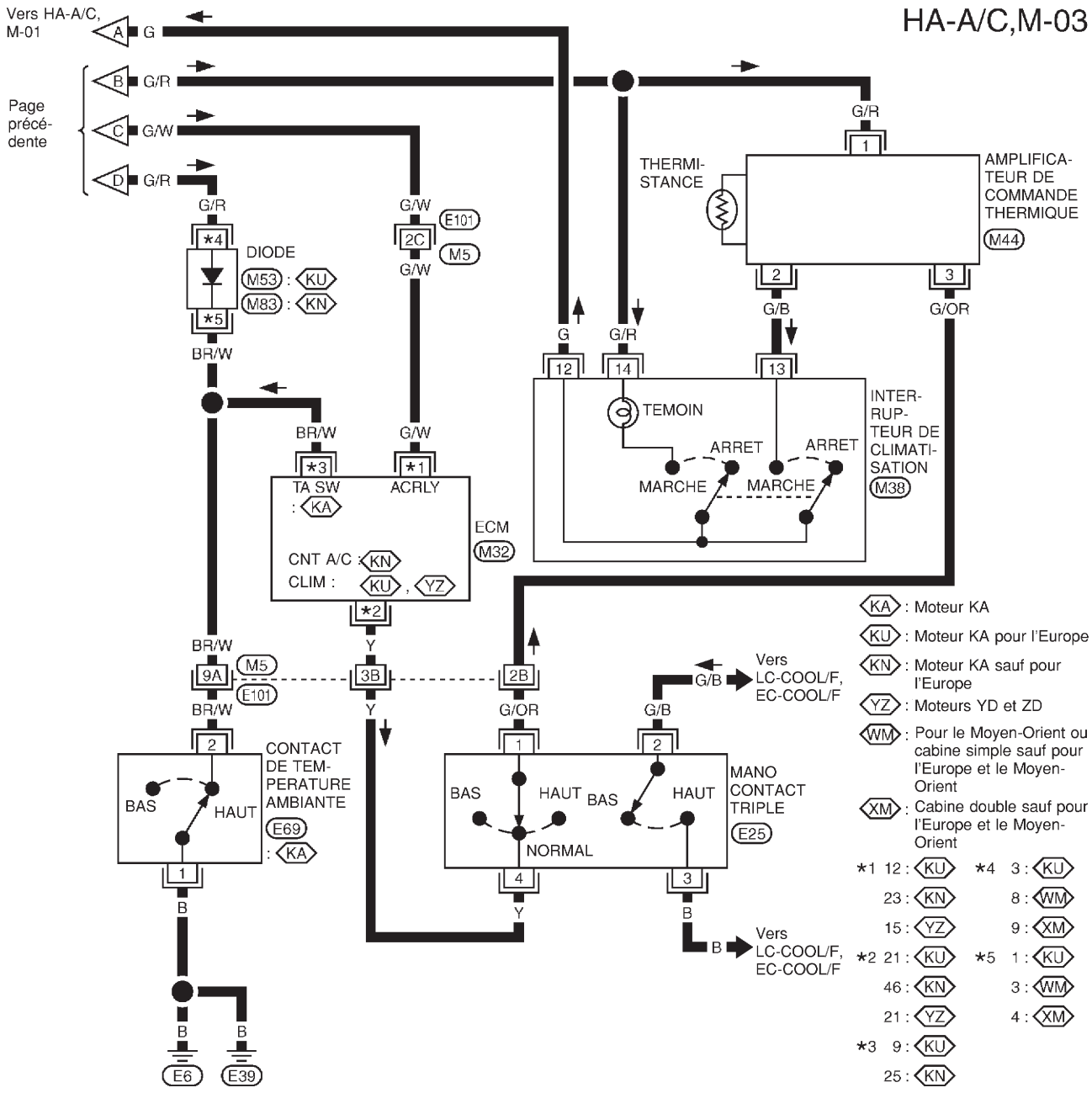

M38 W
M44 BR
M53 L
M83 L
E25 GY
E69 BR

Consulter la dernière page dépliante.
M5, E101, M32

GHA133A

Simpo PDF Merge and Split Unregistered Version - http://www.simpopdf.com

<SUPPLEMENT-V>

TABLE ALPHABETIQUE

SECTION IDX

Simpo PDF Merge and Split Unregistered Version - http://www.simpopdf.com

B

Bloc-cylindres EM-5003

C

Culasse EM-5002

D

Diagnostics des défauts du C/A (C/A manuel) HA-5002
Disposition des faisceaux EL-5012

E

Eclairage EL-5003
Extérieur BT-5002

J

Jeu entre le piston et l'alésage EM-5003

L

Liste (code de cellule) des schémas de câblage EL-5027
Lève-glace électrique EL-5005

N

Numéro d'identification du véhicule GI-5006

P

Plafonnier EL-5002

S

Schéma de câblage - A/C, M - HA-5003
Schéma de câblage - ABS - BR-5003
Schéma de câblage - ILL - EL-5003
Schéma de câblage - ROOM/L - EL-5002
Schéma de câblage - SRS - RS-5002
Schéma de câblage - Système anti-blocage ABS des roues - BR-5002
Schéma de câblage - Système de retenue supplémentaire - RS-5002
Schéma de câblage - THEFT - EL-5010
Siège arrière BT-5004
Siège avant BT-5003
Siège, arrière BT-5004
Siège, avant BT-5003
Système antivol EL-5010

V

Variantes de modèles GI-5004

Simpo PDF Merge and Split Unregistered Version - http://www.simpopdf.com

<SUPPLEMENT-V>

SYSTEME DE RETENUE

SECTION RS

AVIS DE MODIFICATION :
Le schéma de câblage du système d'airbag a été modifié.

TABLE DES MATIERES

DIAGNOSTIC DES DEFAUTS - Système de retenue supplémentaire (SRS).....5002

Schéma de câblage - SRS -.....5002

Simpo PDF Merge and Split Unregistered Version - http://www.simpopdf.com

Schéma de câblage — SRS —

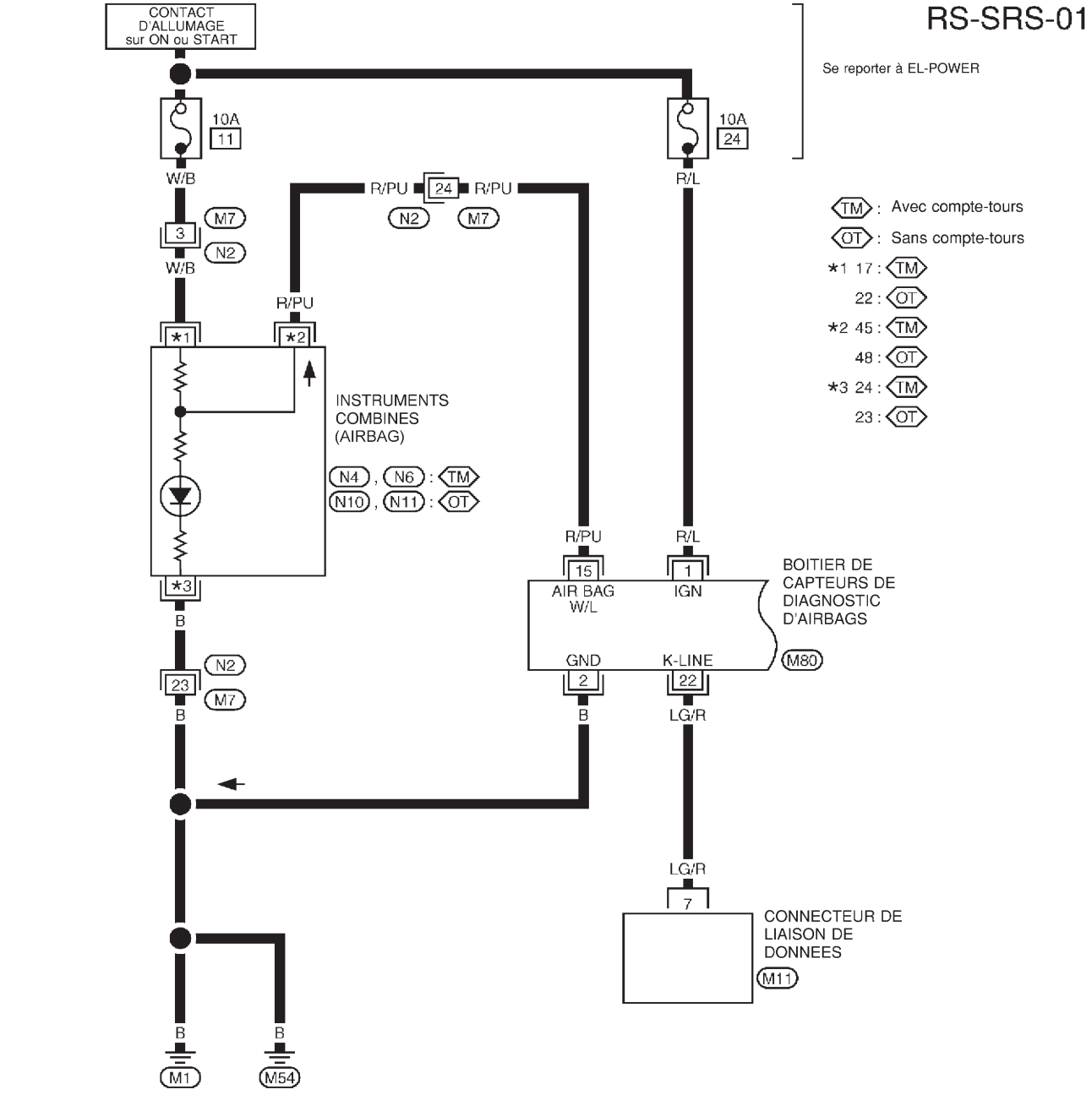

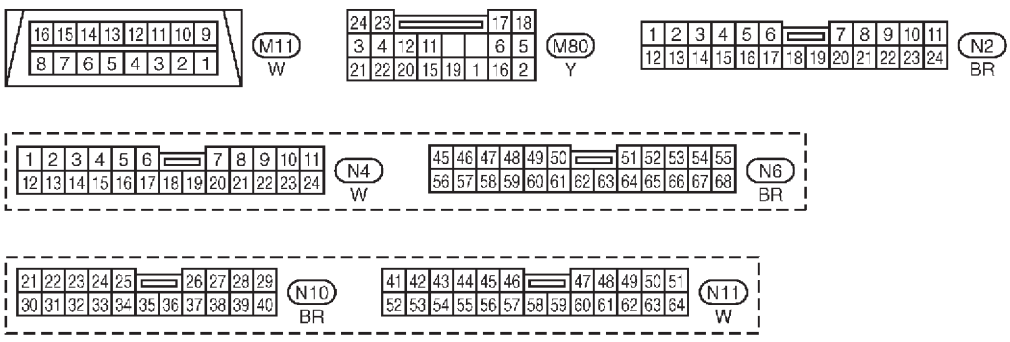

GRS006A

Simpo PDF Merge and Split Unregistered Version - http://www.simpopdf.com

Schéma de câblage — SRS — (Suite)

RS-SRS-02

DA : Avec airbag double
PT : Avec prétensionneur de ceinture de sécurité
AP : Avec prétensionneur de ceinture de sécurité (conducteur et passager)

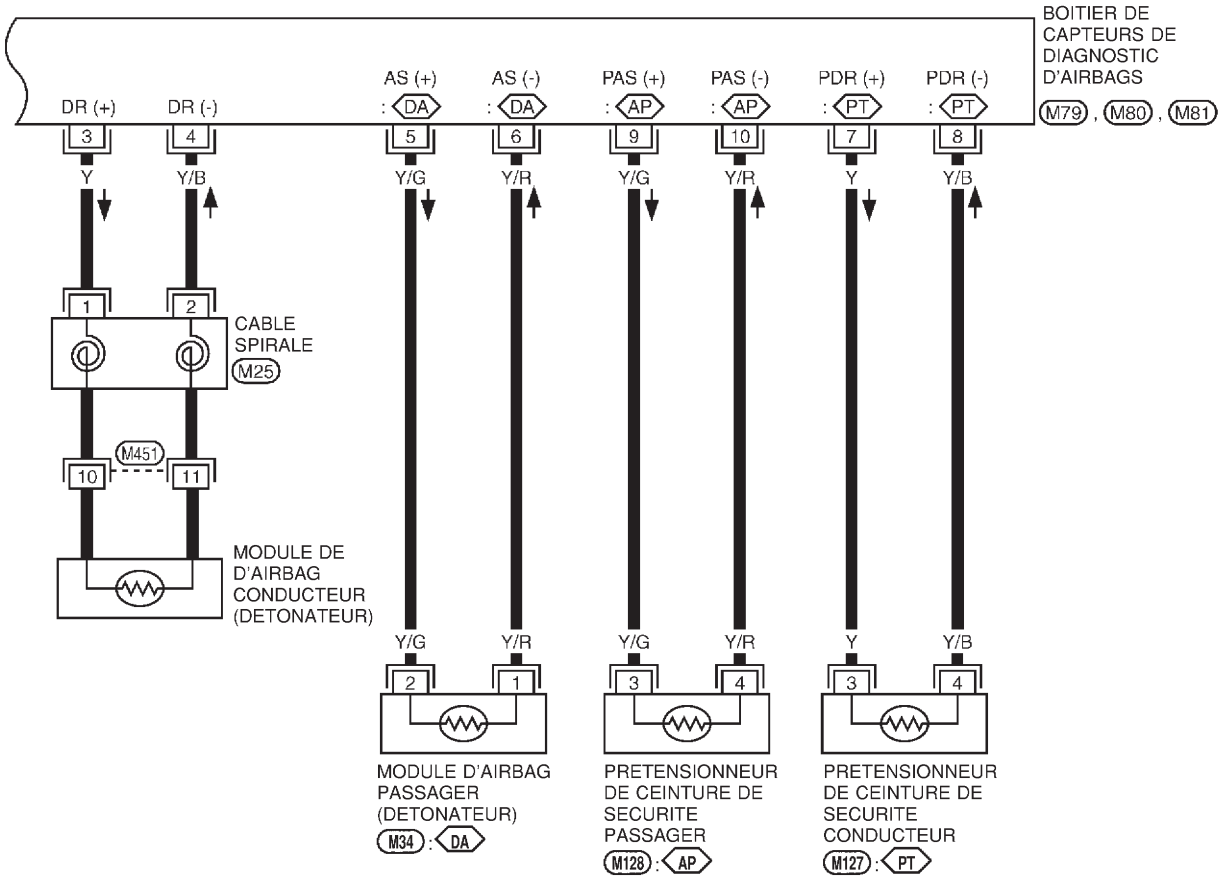

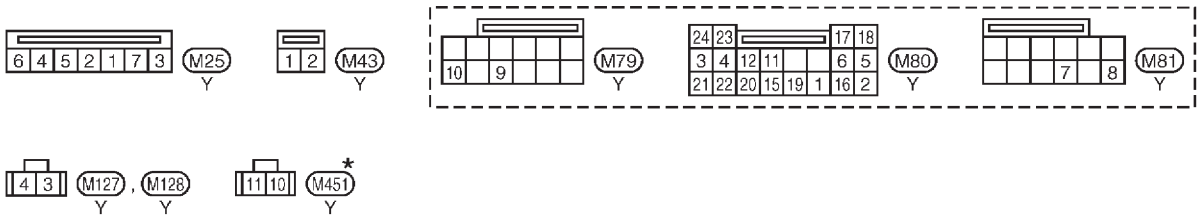

* : Ce connecteur n'est pas indiqué dans DISPOSITION DES FAISCEAUX, section EL.

GRS026A