U1W
U1X
Navi10 REV 0.91

U1Y
Navi10 REV 0.91

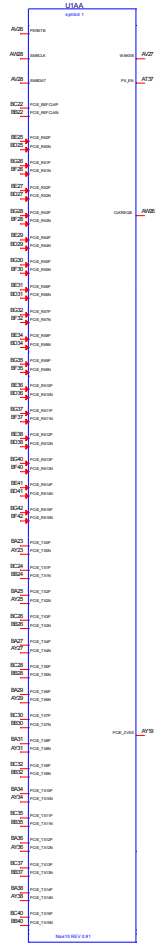
U1AA
symbol 1
Navi10 REV 0.91

TABLE OF CONTENTS

SHEET NO.	SHEET NAME	SHEET NO.	SHEET NAME
1	TOC	26	SMALL RAIL REGULATORS
2	NAVI10 PCIe Interface	27	NAVI10 DECAPS
3	NAVI10 GPIOs	28	NAVI10 POWER
4	NAVI10 XTAL	29	NAVI10 GND
5	NAVI10 MEM CHAB	30	POWER MANAGEMENT
6	NAVI10 MEM CHCD	31	SVI2 & BAMACO
7	NAVI10 MEM CHEF	32	MECHANICAL & THERMAL
8	NAVI10 MEM CHGH	33	DEBUG
9	GDDR6 MEM CHAB	34	BLOCK DIAGRAM
10	GDDR6 MEM CHCD	35	REVISION HISTORY
11	GDDR6 MEM CHEF		
12	GDDR6 MEM CHGH		
13	NAVI10 TMDPA - DP		
14	NAVI10 TMDPC - HDMI		
15	NAVI10 TMDPEF - DP DP		
16	GFX & SOC CONTROLLER		
17	VDDCR_GFX PHASES 2 and 5		
18	VDDCR_GFX PHASES 1 and 4		
19	VDDCR_GFX PHASES 3 and 7		
20	VDDCR_GFX PHASES 6 and VDDCR_SOC		
21	MVDD_VDDCI CONTROLLER		
22	REG MVDD		
23	REG VDDCI		
24	REG 0.75V		
25	REG 1.8V		

AMD - PLATFORM HARDWARE ENG
No.669, HUANKE ROAD
SHANGHAI, CHINA 201203

SHEET: TOC

DATE: Fri Jun 21 05:25:22 2019 REV: 1.00

SHEET NUMBER: 1 OF 35

DOCUMENT NUMBER: 105_D199xx_00B

NOTES: NOTE

CONFIDENTIAL AND PROPRIETARY TO ADVANCED MICRO DEVICES INC.

© 2018 Advanced Micro Devices

This AMD Board schematic and design is the exclusive property of AMD, and is provided only to entities under a non-disclosure agreement with AMD for evaluation purposes. Further distribution or disclosure is strictly prohibited. Use of this schematic and design for any purpose other than evaluation requires a Board Technology License Agreement with AMD. AMD makes no representations or warranties of any kind regarding this schematic and design, including, not limited to, any implied warranty of merchantability or fitness for a particular purpose, and disclaims responsibility for any consequences resulting from use of the information included herein.

TITLE:

NAVI10 G6X16mode DP DP HDMI DP

(1) NAVI10 PCIe Edge Connector

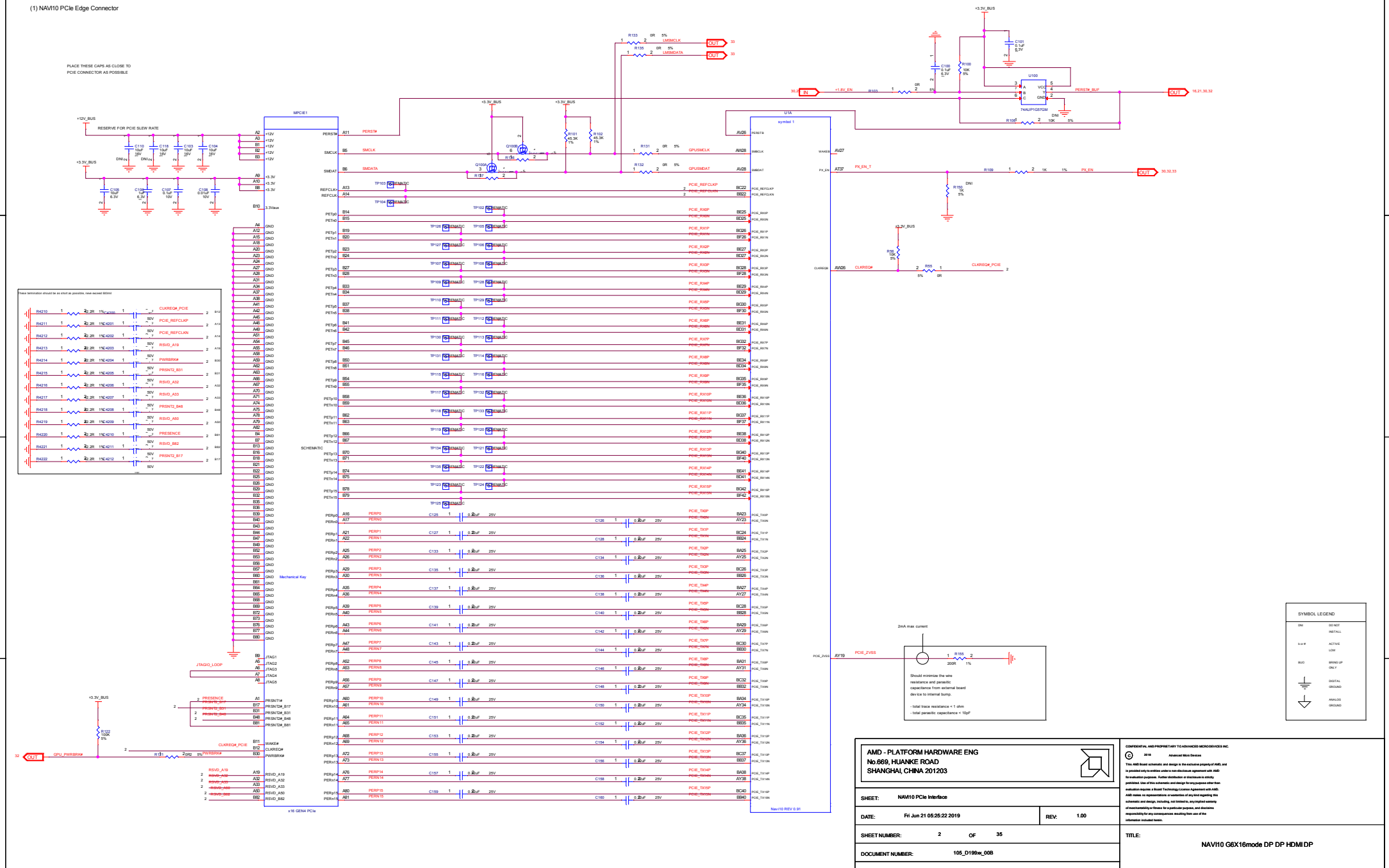

AMD - PLATFORM HARDWARE ENG
No.669, HUANKE ROAD
SHANGHAI, CHINA 201203

SHEET:	NAVI10 PCIe Interface		
DATE:	Fri Jun 21 05:25:22 2019	REV:	1.00
SHEET NUMBER:	2 OF 35		
DOCUMENT NUMBER:	105_D199xx_00B		
NOTES:	NOTE		

CONFIDENTIAL AND PROPRIETARY TO ADVANCED MICRO DEVICES INC.
© 2018 Advanced Micro Devices
This AMD Board schematic and design is the exclusive property of AMD, and is provided only to entities under a non-disclosure agreement with AMD for evaluation purposes. Further distribution or disclosure is strictly prohibited. Use of this schematic and design for any purpose other than evaluation requires a Board Technology License Agreement with AMD. AMD makes no representations or warranties of any kind regarding this schematic and design, including, not limited to, any implied warranty of merchantability or fitness for a particular purpose, and disclaims responsibility for any consequences resulting from use of the information included herein.

TITLE: NAVI10 G6X16mode DP DP HDMI DP

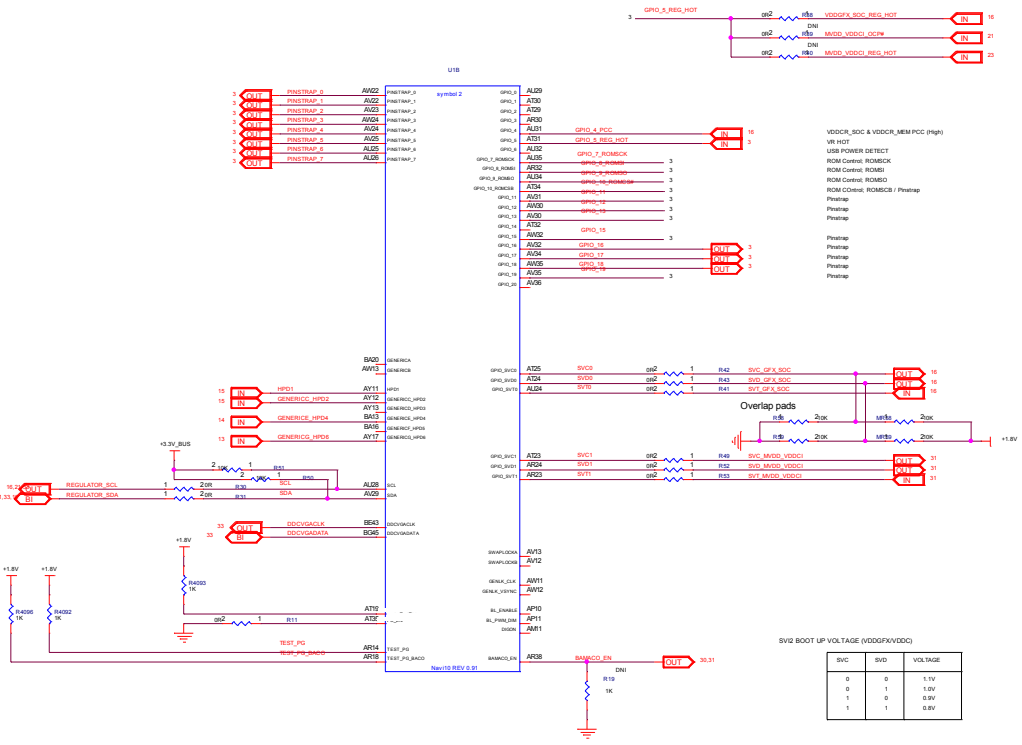

SVI2 BOOT UP VOLTAGE (VDDGFX/VDDC)

SVC	SVD	VOLTAGE
0	0	1.1V
0	1	1.0V
1	0	0.9V
1	1	0.8V

Note: Internal PU/PD at GPIO pad is ~40k strength in 14nm design spec

User		Internal Default Value	Definition
BIF		0	STRAP_BIF_GEN4_DIS_A 0: PCIe GEN 4 supported 1: PCIe GEN 4 not supported
		0	PINSTRAP_BIF_CLK_PM_EN 0: CLKREQ# power management capability is disabled 1: CLKREQ# power management capability is enabled
		0	PINSTRAP_BIF_LC_TX_SWING
		0	PINSTRAP_BIF_VGA_DIS 0: VGA controller capacity enabled 1: The device won't be recognised as the system's VGA controller
DCE		0 0 0	PINSTRAP_AUD_PORT_CONN[2:0] Number of audio-capable display outputs 0: All endpoints connected 1: 6 endpoints connected 2: 5 endpoints connected 3: 4 endpoints connected 4: 3 endpoints connected 5: 2 endpoints connected 6: 1 endpoint connected 7: 0 endpoints connected
		0 0	PINSTRAP_AUD[1:0] 1: Audio for DisplayPort only 2: Audio for DisplayPort and HDMI if dongle is detected 3: Audio for DisplayPort and native HDMI
Platform		0 0 0	
SMU		1 0 1	
			PINSTRAP_SMBUS_ADDR 0: 0x41h 1: 0x40h
		1	PINSTRAP_BIOS_ROM_EN 0: Disable the external BIOS ROM device 1: Enable the external BIOS ROM device

AMD - PLATFORM HARDWARE ENG
No.669, HUANKE ROAD
SHANGHAI, CHINA 201203

SHEET:	NAVI10 GPIOs		
DATE:	Fri Jun 21 05:25:23 2019	REV:	1.00
SHEET NUMBER:	3 OF 35		
DOCUMENT NUMBER:	105_D199xx_00B		
NOTES:	NOTE		

CONFIDENTIAL AND PROPRIETARY TO ADVANCED MICRO DEVICES INC.
© 2018 Advanced Micro Devices
Title: AMD Board schematic and design is the exclusive property of AMD, and is provided only to entities under a non-disclosure agreement with AMD for evaluation purposes. Further distribution or disclosure is strictly prohibited. Use of this schematic and design for any purpose other than evaluation requires a Board Technology License Agreement with AMD. AMD makes no representations or warranties of any kind regarding this schematic and design, including, not limited to, any implied warranty of merchantability or fitness for a particular purpose, and disclaims responsibility for any consequences resulting from use of the information included herein.

TITLE:
NAVI10 G6X16mode DP DP HDMI DP

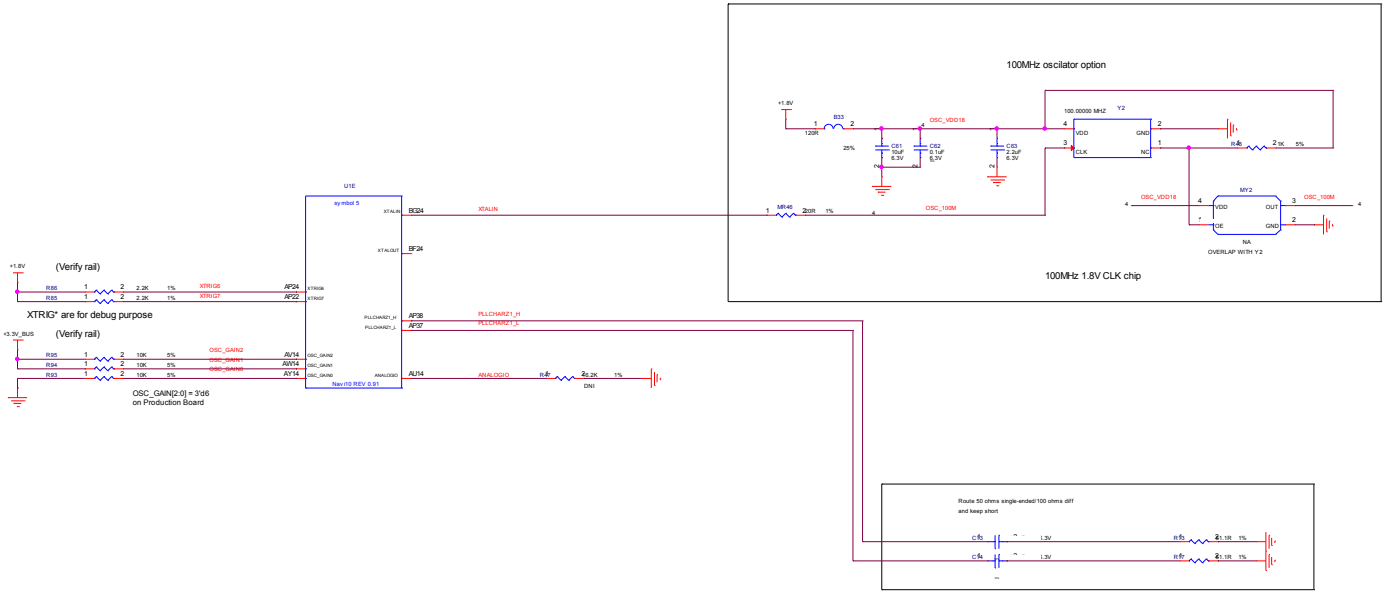

AMD - PLATFORM HARDWARE ENG No.669, HUANKE ROAD SHANGHAI, CHINA 201203	
SHEET: NAVI10 XTAL	
DATE: Fri Jun 21 05:25:23 2019	REV: 1.00
SHEET NUMBER: 4 OF 35	
DOCUMENT NUMBER: 105_D199xx_00B	
NOTES: NOTE	

CONFIDENTIAL AND PROPRIETARY TO ADVANCED MICRO DEVICES INC.

© 2018 Advanced Micro Devices

This AMD Board schematic and design is the exclusive property of AMD, and is provided only to entities under a non-disclosure agreement with AMD for evaluation purposes. Further distribution or disclosure is strictly prohibited. Use of this schematic and design for any purpose other than evaluation requires a Board Technology License Agreement with AMD. AMD makes no representations or warranties of any kind regarding this schematic and design, including, not limited to, any implied warranty of merchantability or fitness for a particular purpose, and disclaims responsibility for any consequences resulting from use of the information included herein.

TITLE:

NAVI10 G6X16mode DP DP HDMI DP

NAVI 10 MEM INTERFACE CH A/B

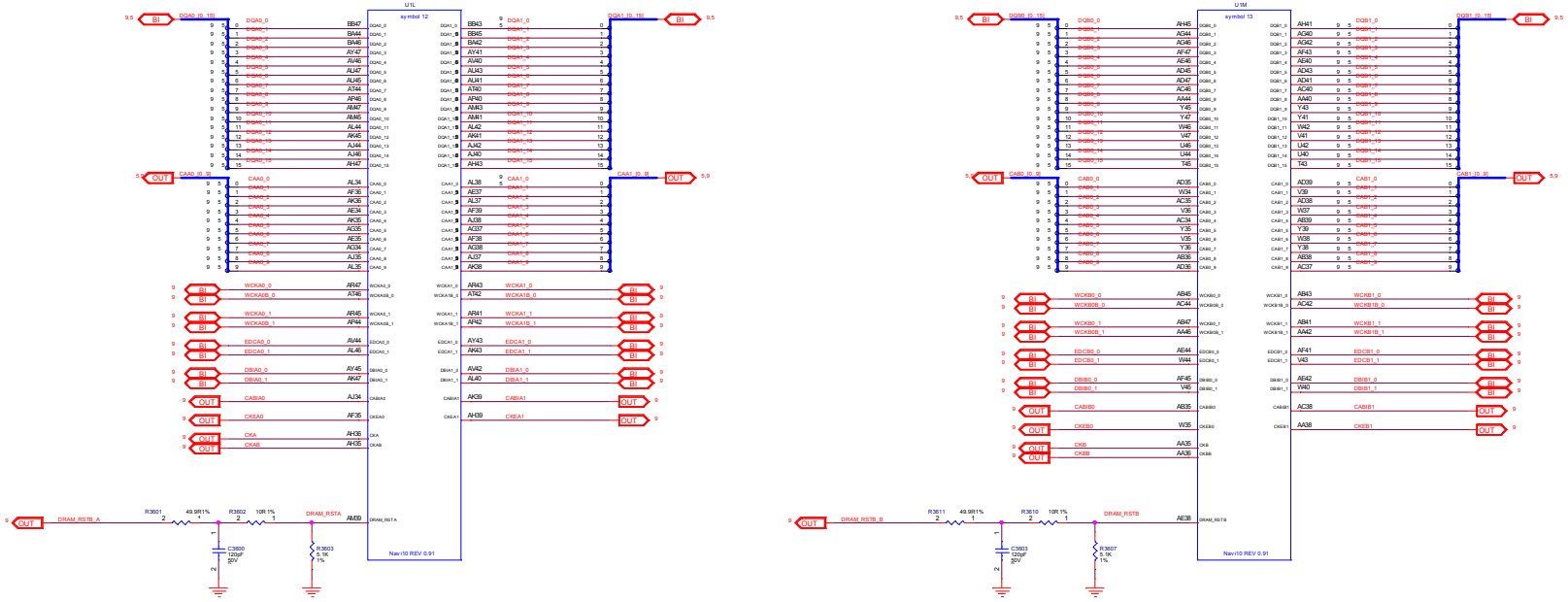

AMD - PLATFORM HARDWARE ENG No.669, HUANKE ROAD SHANGHAI, CHINA 201203	CONFIDENTIAL AND PROPRIETARY TO ADVANCED MICRO DEVICES INC. © 2018 Advanced Micro Devices This AMD Board schematic and design is the exclusive property of AMD, and is provided only to entities under a non-disclosure agreement with AMD for evaluation purposes. Further distribution or disclosure is strictly prohibited. Use of this schematic and design for any purpose other than evaluation requires a Board Technology License Agreement with AMD. AMD makes no representations or warranties of any kind regarding this schematic and design, including, not limited to, any implied warranty of merchantability or fitness for a particular purpose, and disclaims responsibility for any consequences resulting from use of the information included herein.
SHEET: NAVI10 MEM CHAB	
DATE: Fri Jun 21 05:25:24 2019 / REV: 1.00	
SHEET NUMBER: 5 OF 35	TITLE: NAVI10 G6X16mode DP DP HDMI DP
DOCUMENT NUMBER: 105_D199xx_00B	
NOTES: NOTE	

NAVI 10 MEM INTERFACE CH C/D

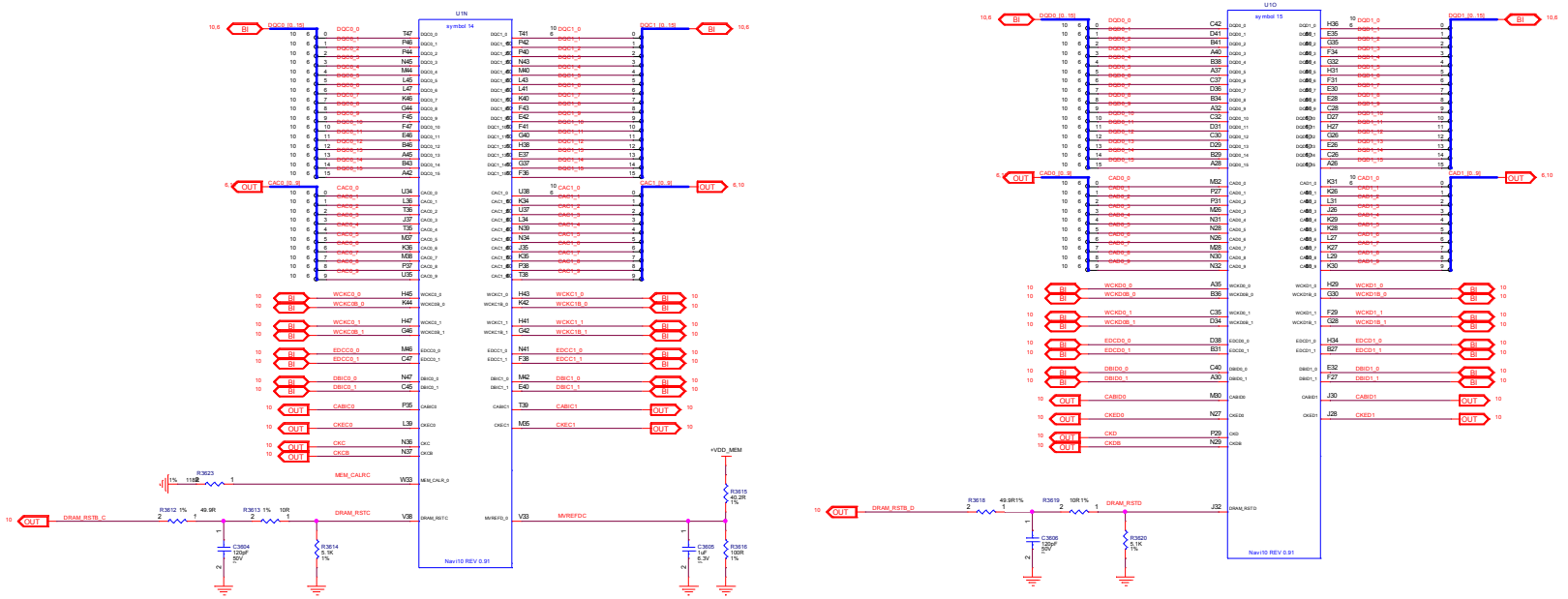

AMD - PLATFORM HARDWARE ENG
No.669, HUANKE ROAD
SHANGHAI, CHINA 201203

SHEET:	NAVI10 MEM CH C/D
DATE:	Fri Jun 21 05:25:24 2019
REV:	1.00
SHEET NUMBER:	6 OF 35
DOCUMENT NUMBER:	105_D199xx_00B
NOTES:	NOTE

CONFIDENTIAL AND PROPRIETARY TO ADVANCED MICRO DEVICES INC.

© 2018 Advanced Micro Devices

This AMD Board schematic and design is the exclusive property of AMD, and is provided only to entities under a non-disclosure agreement with AMD for evaluation purposes. Further distribution or disclosure is strictly prohibited. Use of this schematic and design for any purpose other than evaluation requires a Board Technology License Agreement with AMD. AMD makes no representations or warranties of any kind regarding this schematic and design, including, not limited to, any implied warranty of merchantability or fitness for a particular purpose, and disclaims responsibility for any consequences resulting from use of the information included herein.

TITLE:

NAVI10 G6X16mode DP DP HDMI DP

NAVI 10 MEM INTERFACE CH E/F

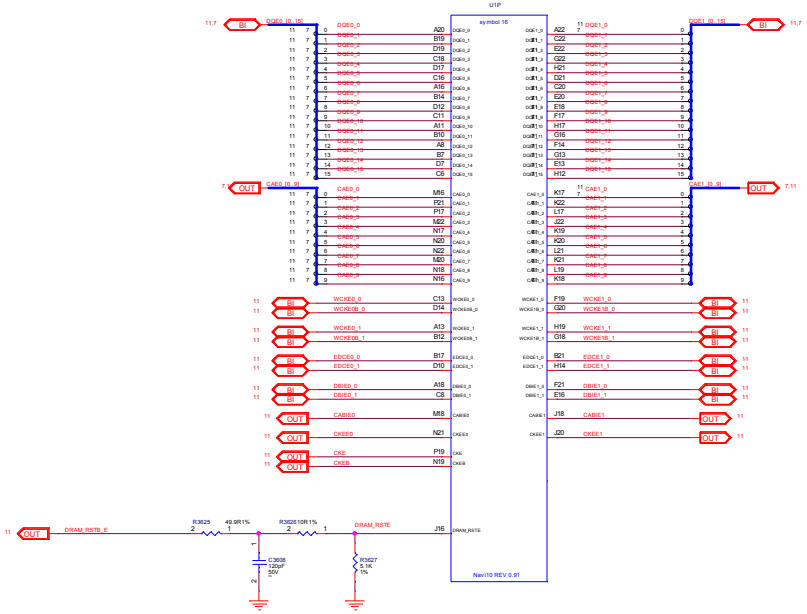

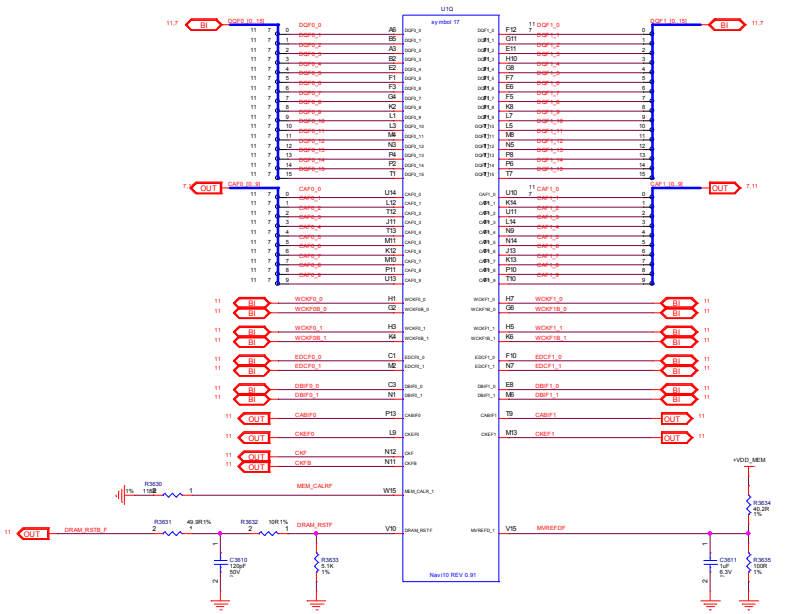

AMD - PLATFORM HARDWARE ENG No.669, HUANKE ROAD SHANGHAI, CHINA 201203	CONFIDENTIAL AND PROPRIETARY TO ADVANCED MICRO DEVICES INC. © 2018 Advanced Micro Devices This AMD Board schematic and design is the exclusive property of AMD, and is provided only to entities under a non-disclosure agreement with AMD for evaluation purposes. Further distribution or disclosure is strictly prohibited. Use of this schematic and design for any purpose other than evaluation requires a Board Technology License Agreement with AMD. AMD makes no representations or warranties of any kind regarding this schematic and design, including, not limited to, any implied warranty of merchantability or fitness for a particular purpose, and disclaims responsibility for any consequences resulting from use of the information included herein.
SHEET: NAVI10 MEM CHEF	
DATE: Fri Jun 21 05:25:25 2019 / REV: 1.00	
SHEET NUMBER: 7 OF 35	TITLE: NAVI10 G6X16mode DP DP HDMI DP
DOCUMENT NUMBER: 105_D199xx_00B	
NOTES: NOTE	

NAVI 10 MEM INTERFACE CH G/H

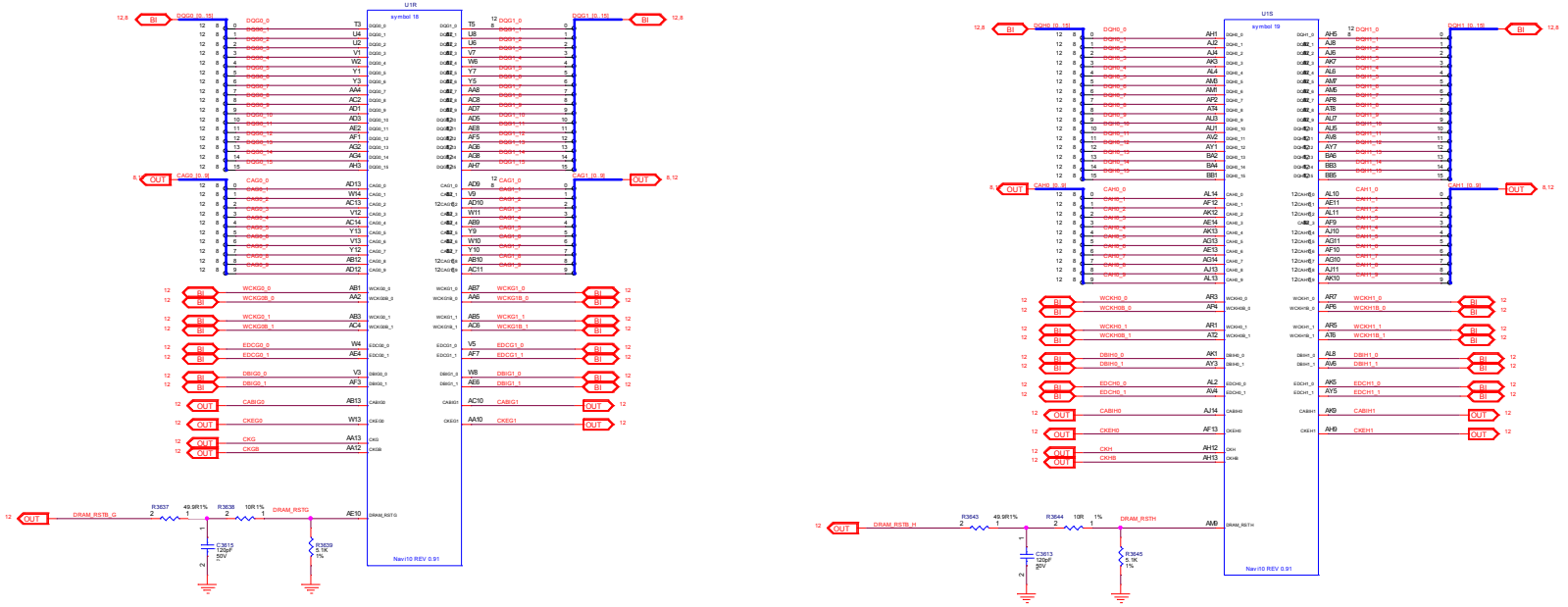

AMD - PLATFORM HARDWARE ENG
No.669, HUANKE ROAD
SHANGHAI, CHINA 201203

SHEET:	NAVI10 MEM CHGH
DATE:	Fri Jun 21 05:25:26 2019
REV:	1.00
SHEET NUMBER:	8 OF 35
DOCUMENT NUMBER:	105_D199xx_00B
NOTES:	NOTE

CONFIDENTIAL AND PROPRIETARY TO ADVANCED MICRO DEVICES INC.
© 2018 Advanced Micro Devices
This AMD Board schematic and design is the exclusive property of AMD, and is provided only to entities under a non-disclosure agreement with AMD for evaluation purposes. Further distribution or disclosure is strictly prohibited. Use of this schematic and design for any purpose other than evaluation requires a Board Technology License Agreement with AMD. AMD makes no representations or warranties of any kind regarding this schematic and design, including, not limited to, any implied warranty of merchantability or fitness for a particular purpose, and disclaims responsibility for any consequences resulting from use of the information included herein.

TITLE:
NAVI10 G6X16mode DP DP HDMI DP

GDDR6x16 CHAB Memory

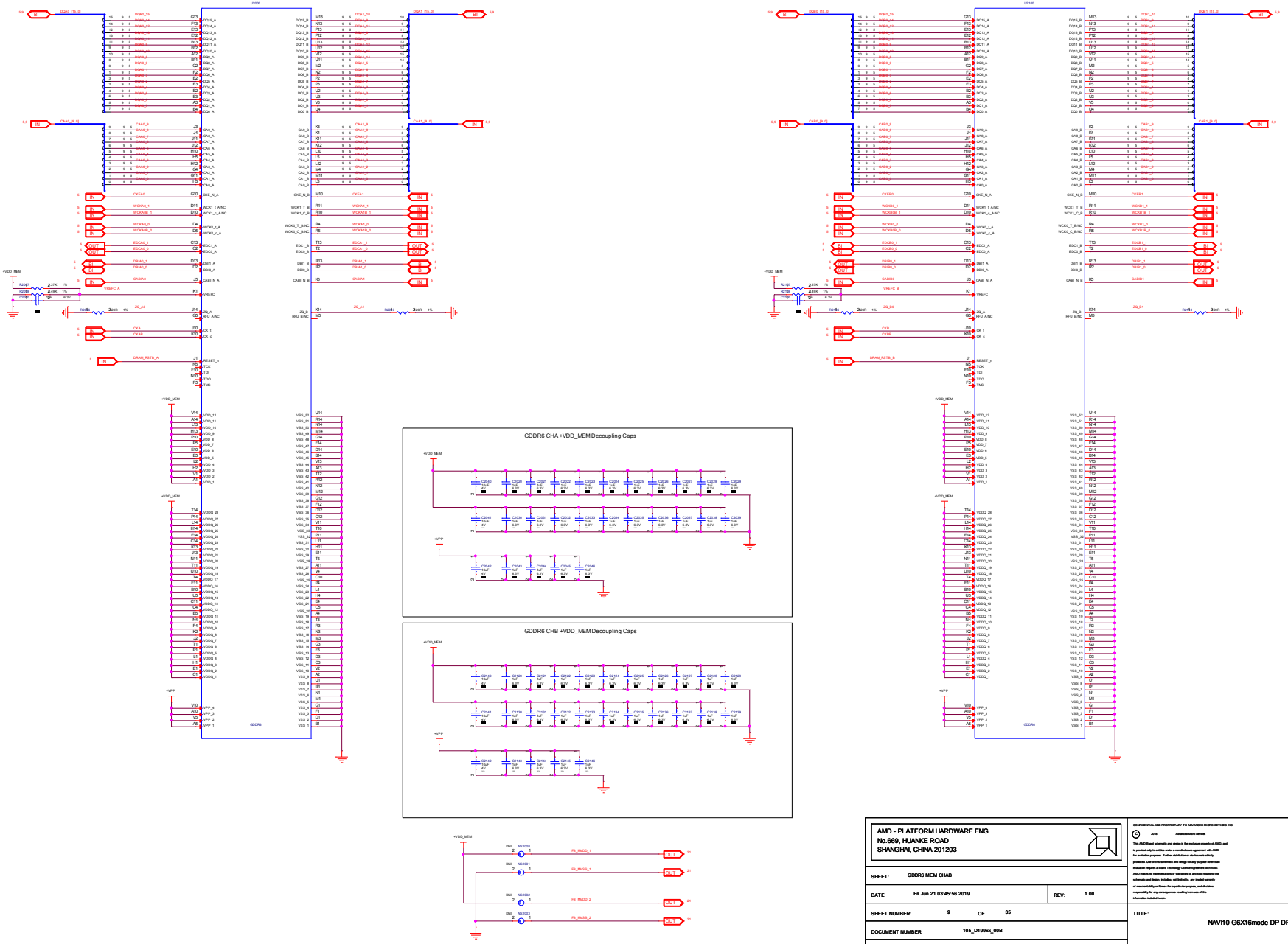

AMD - PLATFORM HARDWARE ENG No.669, HUANKE ROAD SHANGHAI, CHINA 201203	
SHEET: GDDR6 MEM CHAB	
DATE: Fri Jun 21 03:45:56 2019	REV: 1.00
SHEET NUMBER: 9 OF 35	
DOCUMENT NUMBER: 105_D199xx_00B	
NOTES: NOTE	

CONFIDENTIAL AND PROPRIETARY TO ADVANCED MICRO DEVICES INC.

© 2016 Advanced Micro Devices

This AMD Board schematic and design is the exclusive property of AMD, and is provided only to entities under a non-disclosure agreement with AMD for evaluation purposes. Further distribution or disclosure is strictly prohibited. Use of this schematic and design for any purpose other than evaluation requires a Board Technology License Agreement with AMD. AMD makes no representations or warranties of any kind regarding this schematic and design, including, not limited to, any implied warranty of merchantability, or fitness for a particular purpose, and disclaims responsibility for any consequences resulting from use of the information included herein.

TITLE: NAVI10 G6X16mode DP DP HDMI DP

GDDR6x16 CHCD Memory

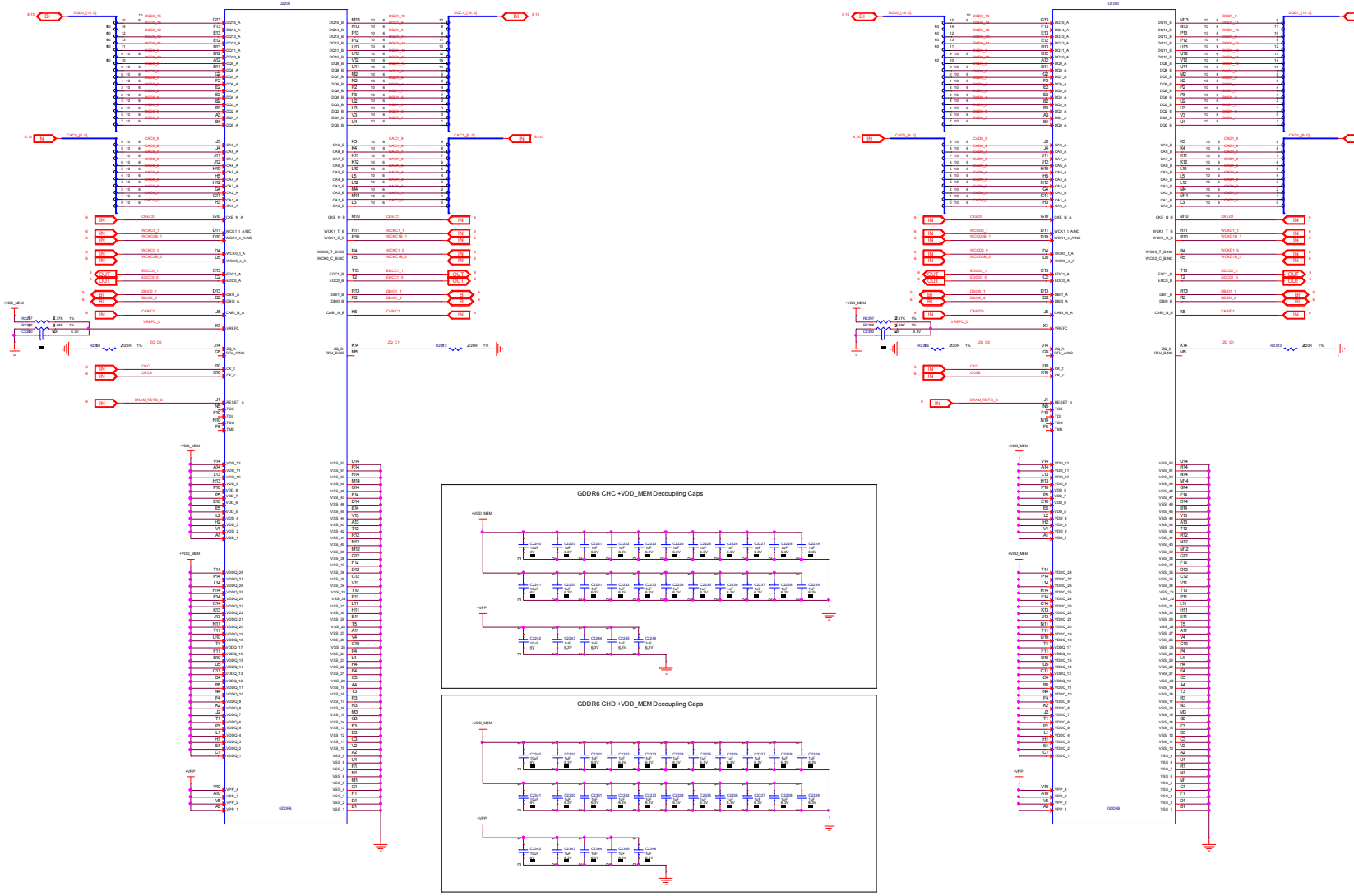

AMD - PLATFORM HARDWARE ENG No.669, HUANKE ROAD SHANGHAI, CHINA 201203	
SHEET: GDDR6 MEM CHCD	
DATE: Fri Jun 21 03:45:56 2019	REV: 1.00
SHEET NUMBER: 10 OF 35	
DOCUMENT NUMBER: 105_D199xx_00B	
NOTES: NOTE	

CONFIDENTIAL AND PROPRIETARY TO ADVANCED MICRO DEVICES INC.

© 2016 Advanced Micro Devices

This AMD Board schematic and design is the exclusive property of AMD, and is provided only to entities under a non-disclosure agreement with AMD for evaluation purposes. Further distribution or disclosure is strictly prohibited. Use of this schematic and design for any purpose other than evaluation requires a Board Technology License Agreement with AMD. AMD makes no representations or warranties of any kind regarding this schematic and design, including, not limited to, any implied warranty of merchantability, or fitness for a particular purpose, and disclaims responsibility for any consequences resulting from use of the information included herein.

TITLE: NAVI10 G6X16mode DP DP HDMI DP

GDDR6x16 CHEF Memory

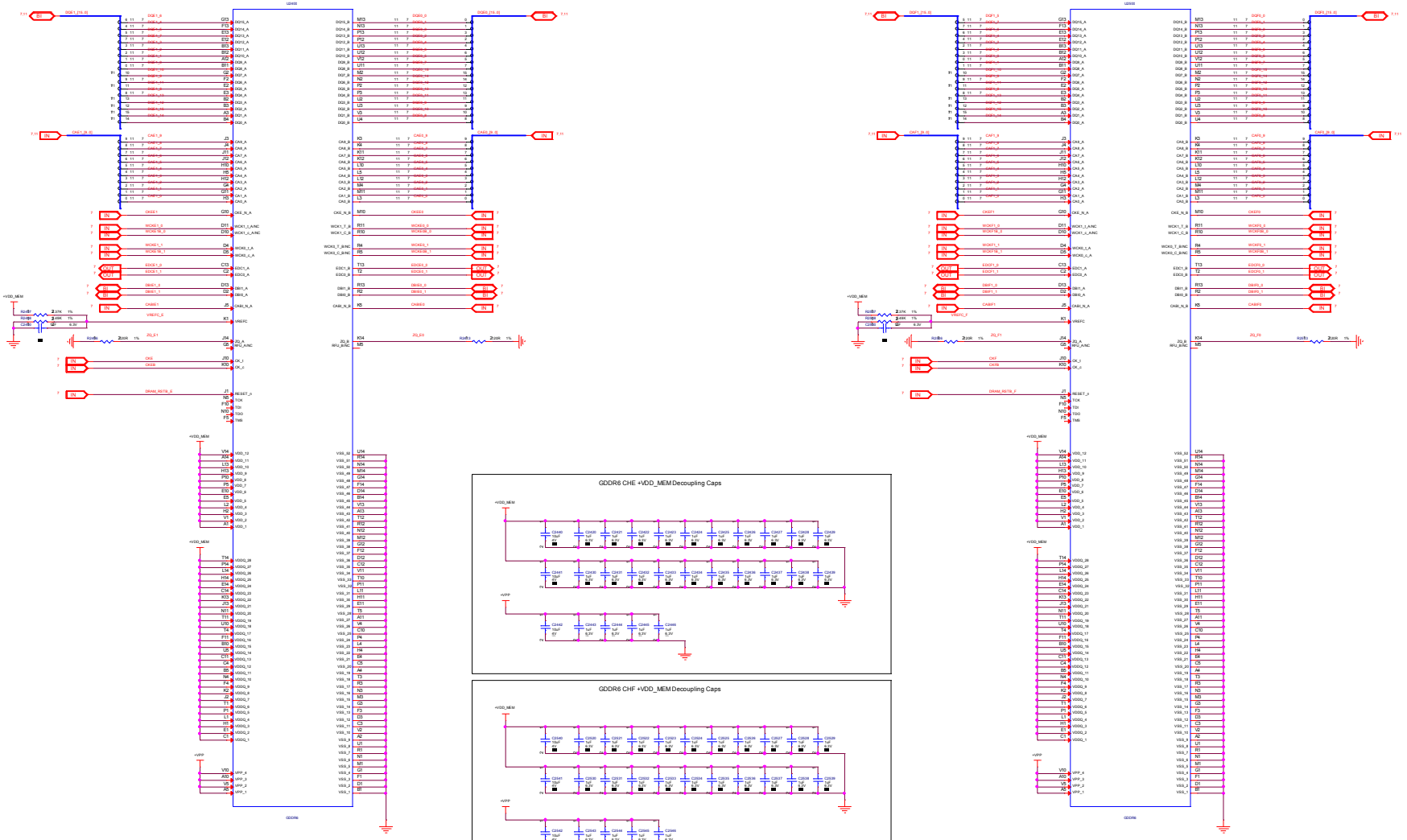

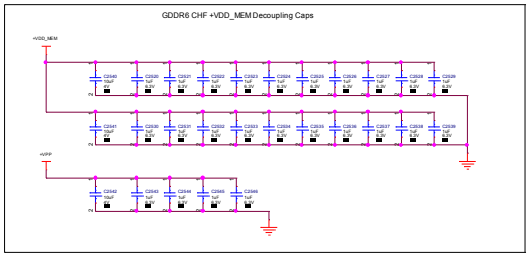

AMD - PLATFORM HARDWARE ENG
No.669, HUANKE ROAD
SHANGHAI, CHINA 201203

SHEET:	GDDR6 MEM CHEF
DATE:	Fri Jun 21 03:45:57 2019
REV:	1.00
SHEET NUMBER:	11 OF 35
DOCUMENT NUMBER:	105_D199xx_00B
NOTES:	NOTE

CONFIDENTIAL AND PROPRIETARY TO ADVANCED MICRO DEVICES INC.

© 2016 Advanced Micro Devices

This AMD Board schematic and design is the exclusive property of AMD, and is provided only to entities under a non-disclosure agreement with AMD for evaluation purposes. Further distribution or disclosure is strictly prohibited. Use of this schematic and design for any purpose other than evaluation requires a Board Technology License Agreement with AMD. AMD makes no representations or warranties of any kind regarding this schematic and design, including, not limited to, any implied warranty of merchantability, or fitness for a particular purpose, and disclaims responsibility for any consequences resulting from use of the information included herein.

TITLE: NAVI10 G6X16mode DP DP HDMI DP

GDDR6x16 CHGH Memory

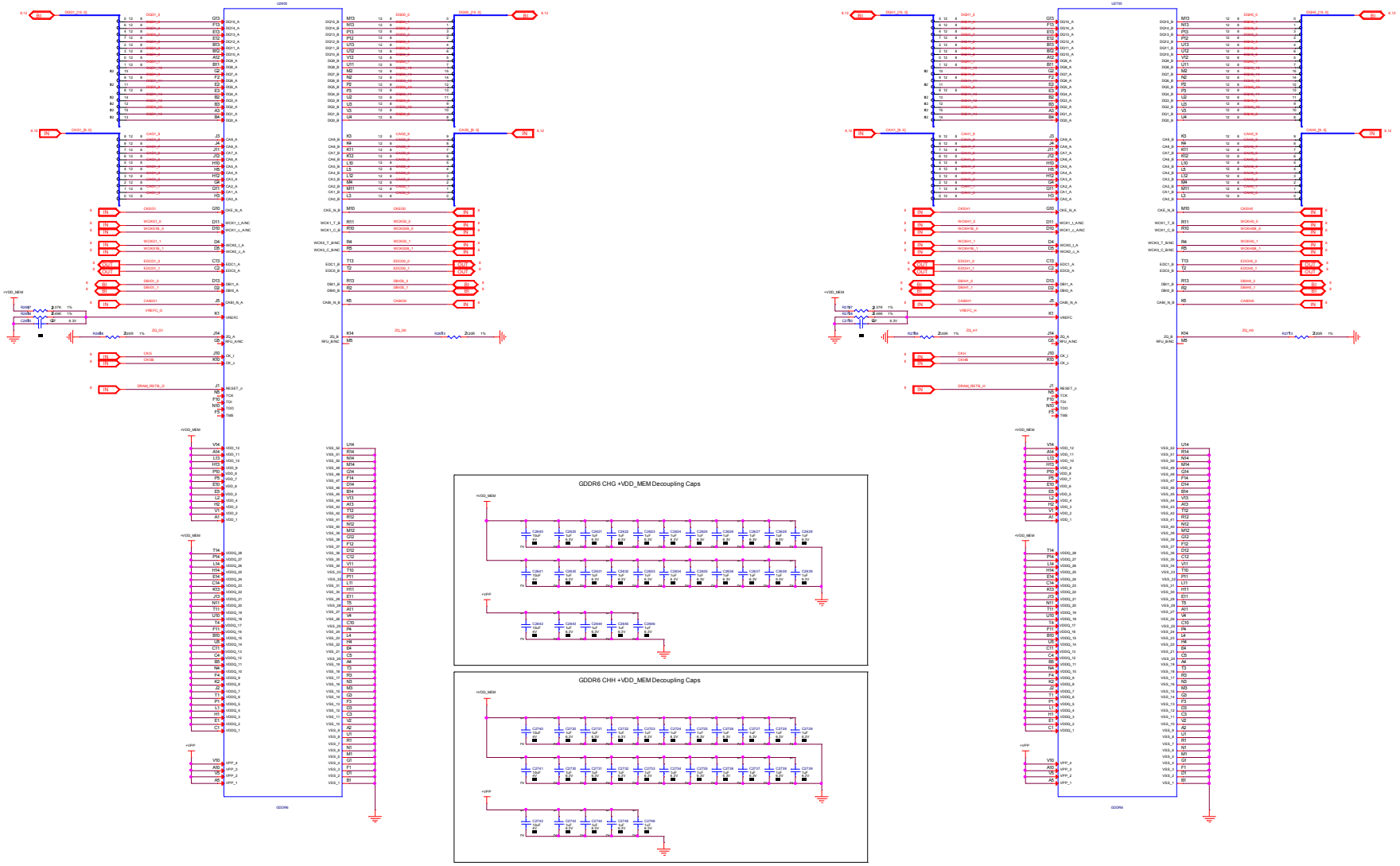

AMD - PLATFORM HARDWARE ENG No.669, HUANKE ROAD SHANGHAI, CHINA 201203	
SHEET: GDDR6 MEM CHGH	
DATE: Fri Jun 21 03:45:58 2019	REV: 1.00
SHEET NUMBER: 12 OF 35	
DOCUMENT NUMBER: 105_D199xx_00B	
NOTES: NOTE	

CONFIDENTIAL AND PROPRIETARY TO ADVANCED MICRO DEVICES INC.

© 2019 Advanced Micro Devices

This AMD Board schematic and design is the exclusive property of AMD, and is provided only to entities under a non-disclosure agreement with AMD for evaluation purposes. Further distribution or disclosure is strictly prohibited. Use of this schematic and design for any purpose other than evaluation requires a Board Technology License Agreement with AMD. AMD makes no representations or warranties of any kind regarding this schematic and design, including, not limited to, any implied warranty of merchantability, or fitness for a particular purpose, and disclaims responsibility for any consequences resulting from use of the information included herein.

TITLE: NAVI10 G6X16mode DP DP HDMI DP

NAVI10 TMDP A/B

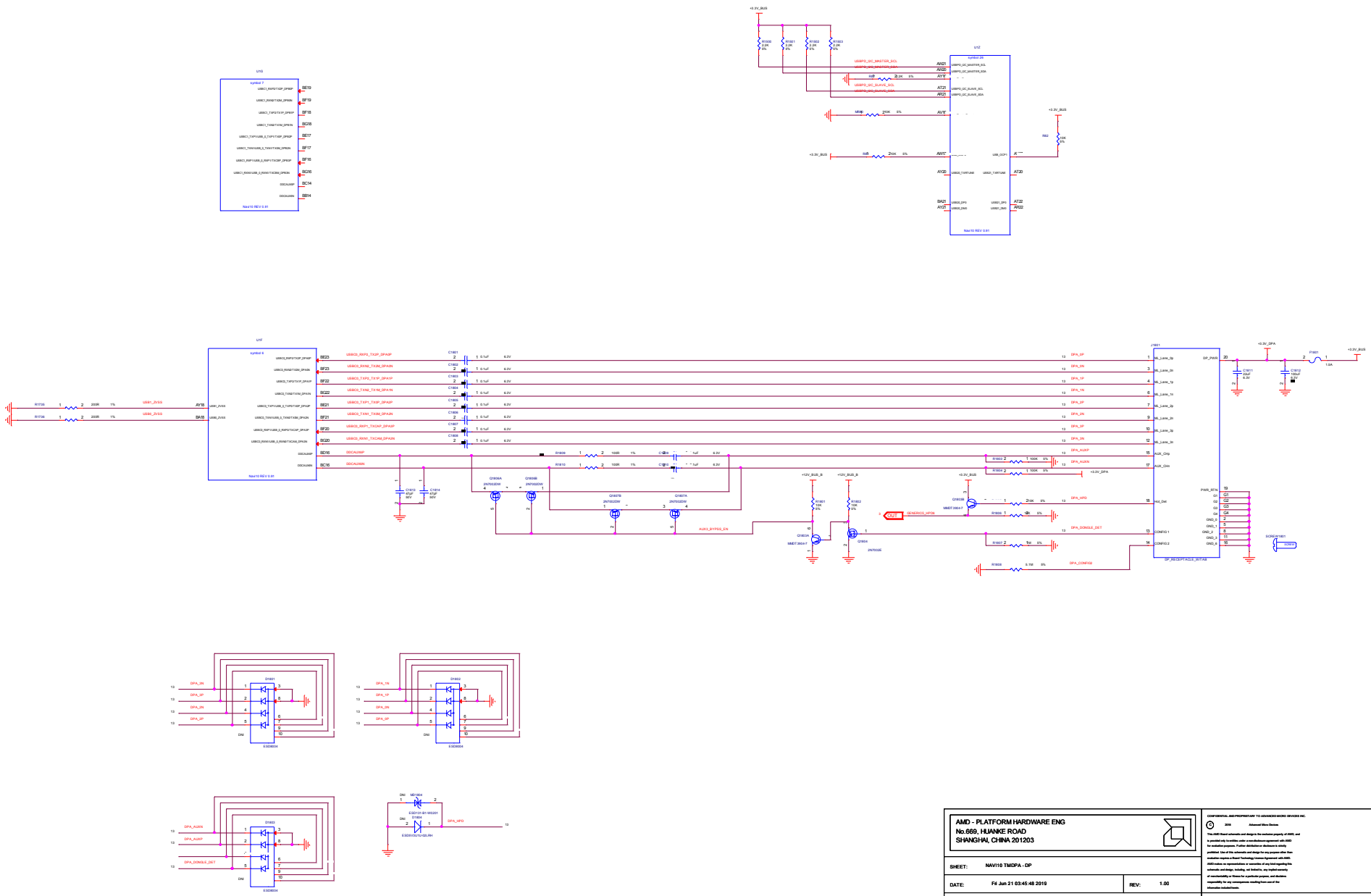

AMD - PLATFORM HARDWARE ENG
No.669, HUANKE ROAD
SHANGHAI, CHINA 201203

SHEET:	NAVI10 TMDPA - DP		
DATE:	Fri Jun 21 03:45:48 2019	REV:	1.00
SHEET NUMBER:	13 OF 35		
DOCUMENT NUMBER:	105_D199xx_00B		
NOTES:	NOTE		

CONFIDENTIAL AND PROPRIETARY TO ADVANCED MICRO DEVICES INC.

© 2019 Advanced Micro Devices

This AMD Board schematic and design is the exclusive property of AMD, and is provided only to entities under a non-disclosure agreement with AMD for evaluation purposes. Further distribution or disclosure is strictly prohibited. Use of this schematic and design for any purpose other than evaluation requires a Board Technology License Agreement with AMD. AMD makes no representations or warranties of any kind regarding this schematic and design, including, not limited to, any implied warranty of merchantability or fitness for a particular purpose, and disclaims responsibility for any consequences resulting from use of the information included herein.

TITLE: NAVI10 G6X16mode DP DP HDMI DP

NAVI10 TMDP C/D

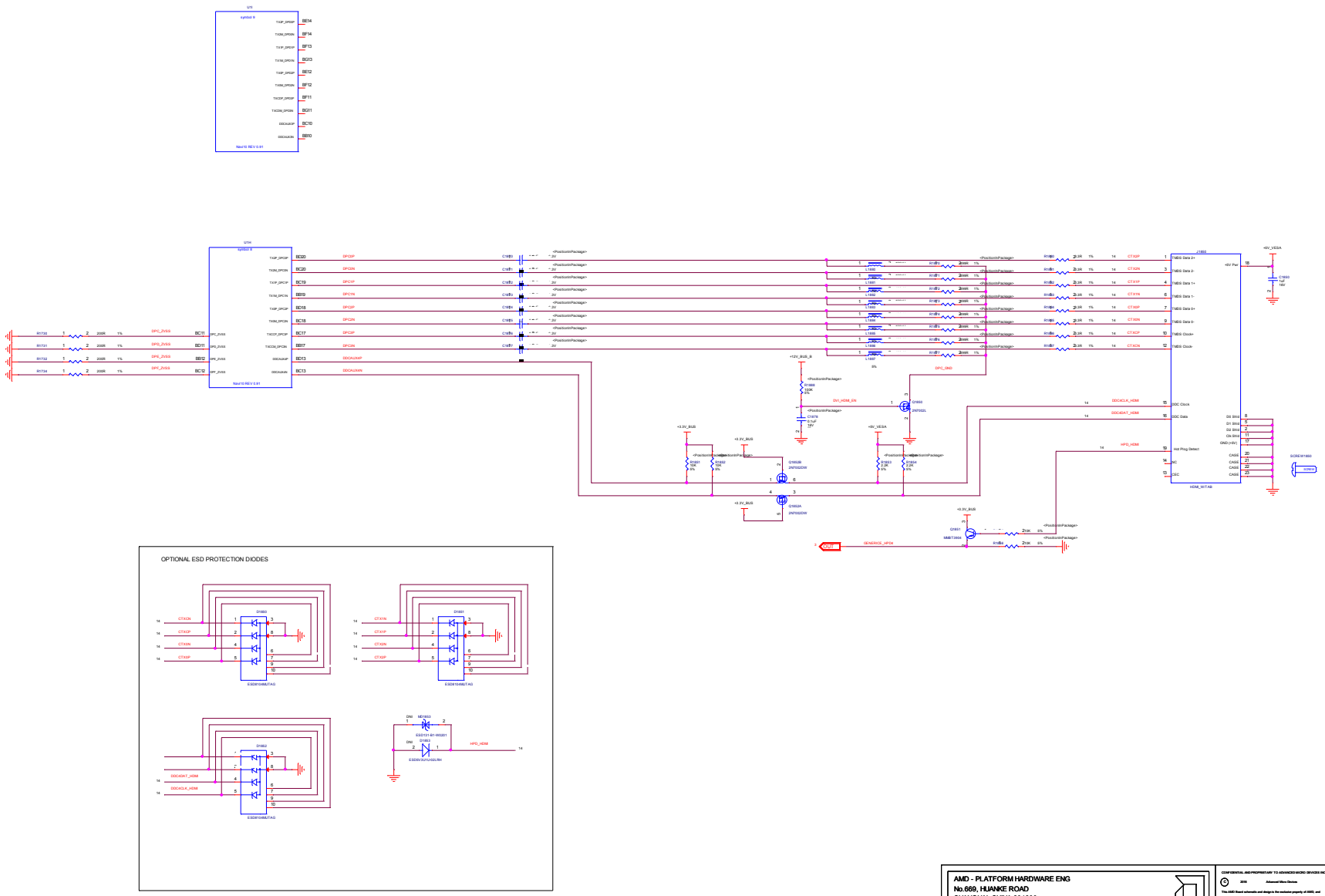

AMD - PLATFORM HARDWARE ENG
No.669, HUANKE ROAD
SHANGHAI, CHINA 201203

SHEET:	NAVI10 TMDPC - HDMI
DATE:	Fri Jun 21 03:45:48 2019
REV:	1.00
SHEET NUMBER:	14 OF 35
DOCUMENT NUMBER:	105_D199xx_00B
NOTES:	NOTE

CONFIDENTIAL AND PROPRIETARY TO ADVANCED MICRO DEVICES INC.

© 2019 Advanced Micro Devices

This AMD Board schematic and design is the exclusive property of AMD, and is provided only to entities under a non-disclosure agreement with AMD for evaluation purposes. Further distribution or disclosure is strictly prohibited. Use of this schematic and design for any purpose other than evaluation requires a Board Technology License Agreement with AMD. AMD makes no representations or warranties of any kind regarding this schematic and design, including, not limited to, any implied warranty of merchantability or fitness for a particular purpose, and disclaims responsibility for any consequences resulting from use of the information included herein.

TITLE: NAVI10 G6X16mode DP DP HDMI DP

(9) NAVI10 TMDP E/F

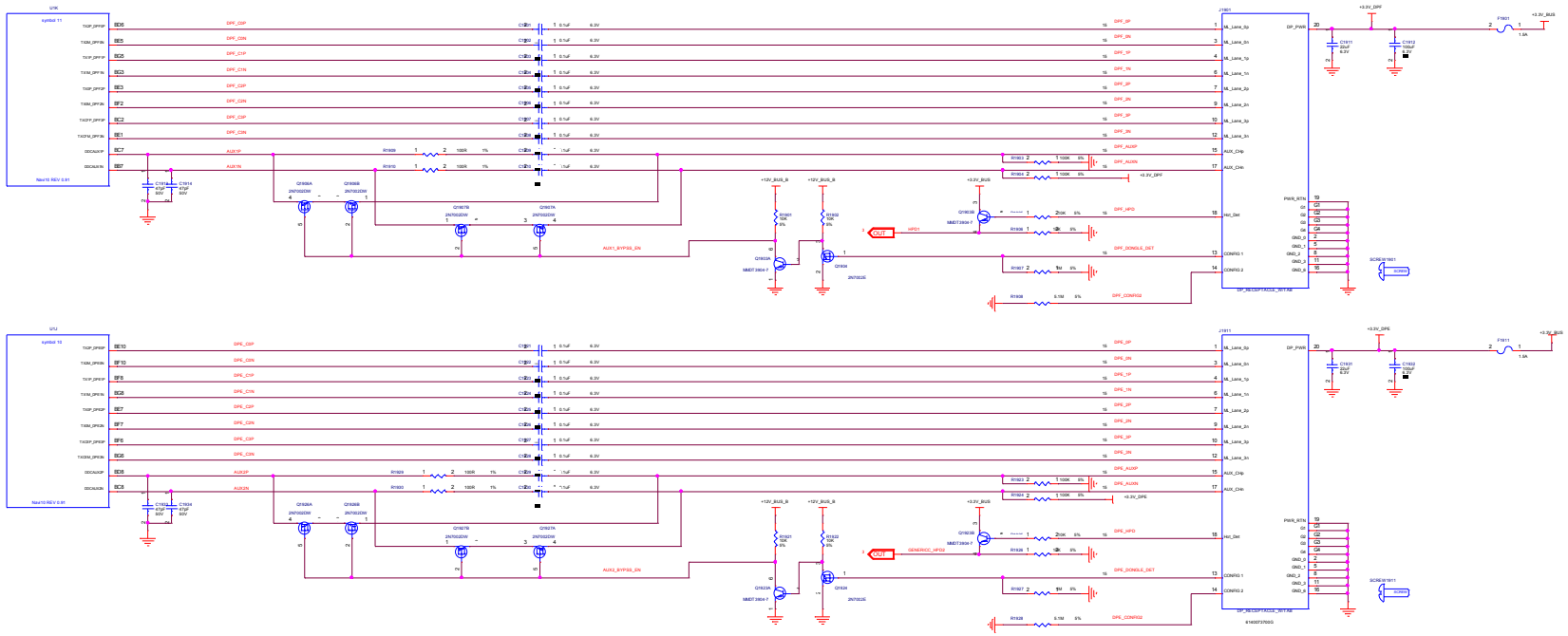

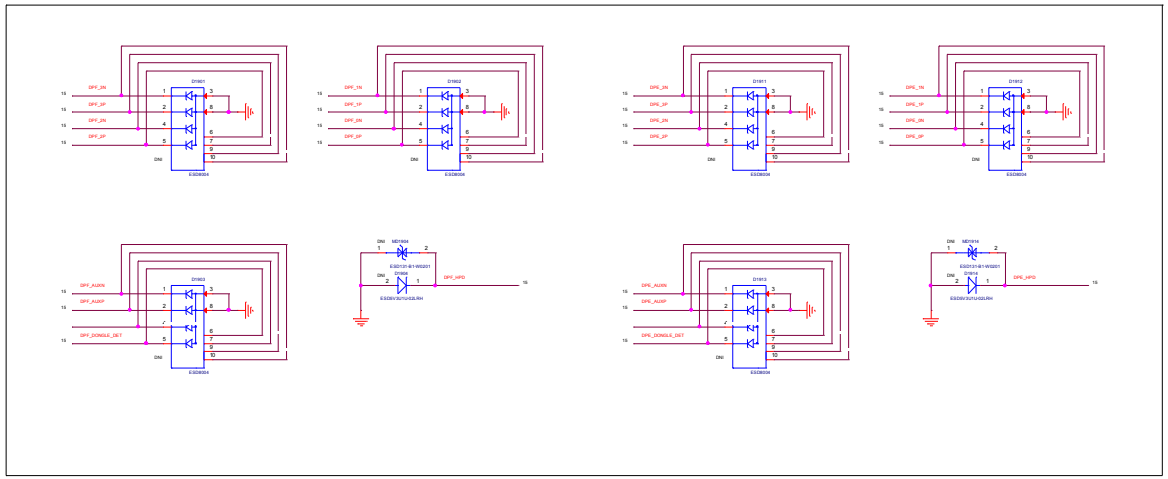

AMD - PLATFORM HARDWARE ENG No.669, HUANKE ROAD SHANGHAI, CHINA 201203	
SHEET: NAVI10 TMDPEF - DP DP	
DATE: Fri Jun 21 03:45:49 2019	REV: 1.00
SHEET NUMBER: 15 OF 35	
DOCUMENT NUMBER: 105_D199xx_00B	
NOTES: NOTE	

CONFIDENTIAL AND PROPRIETARY TO ADVANCED MICRO DEVICES INC.

© 2019 Advanced Micro Devices

This AMD Board schematic and design is the exclusive property of AMD, and is provided only to entities under a non-disclosure agreement with AMD for evaluation purposes. Further distribution or disclosure is strictly prohibited. Use of this schematic and design for any purpose other than evaluation requires a Board Technology License Agreement with AMD. AMD makes no representations or warranties of any kind regarding this schematic and design, including, not limited to, any implied warranty of merchantability, or fitness for a particular purpose, and disclaims responsibility for any consequences resulting from use of the information included herein.

TITLE:

NAVI10 G6X16mode DP DP HDMI DP

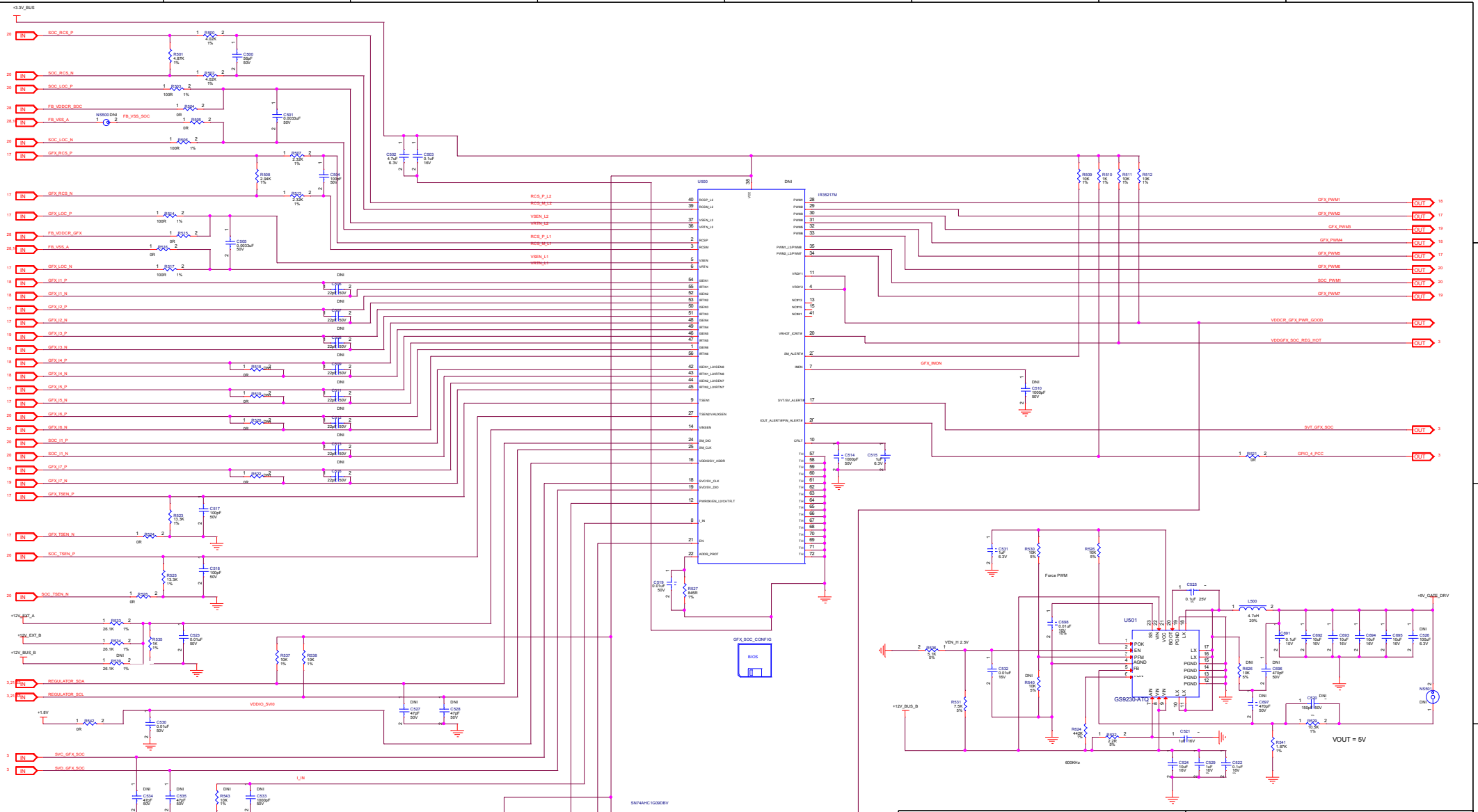

AMD - PLATFORM HARDWARE ENG
No.669, HUANKE ROAD
SHANGHAI, CHINA 201203

SHEET:	GFX & SOC CONTROLLER
DATE:	Fri Jun 21 05:25:26 2019
REV:	1.00
SHEET NUMBER:	16 OF 35
DOCUMENT NUMBER:	105_D199xx_00B
NOTES:	NOTE

CONFIDENTIAL AND PROPRIETARY TO ADVANCED MICRO DEVICES INC.

© 2018 Advanced Micro Devices

This AMD Board schematic and design is the exclusive property of AMD, and is provided only to entities under a non-disclosure agreement with AMD for evaluation purposes. Further distribution or disclosure is strictly prohibited. Use of this schematic and design for any purpose other than evaluation requires a Board Technology License Agreement with AMD. AMD makes no representations or warranties of any kind regarding this schematic and design, including, not limited to, any implied warranty of merchantability or fitness for a particular purpose, and disclaims responsibility for any consequences resulting from use of the information included herein.

TITLE:

NAVI10 G6X16mode DP DP HDMI DP

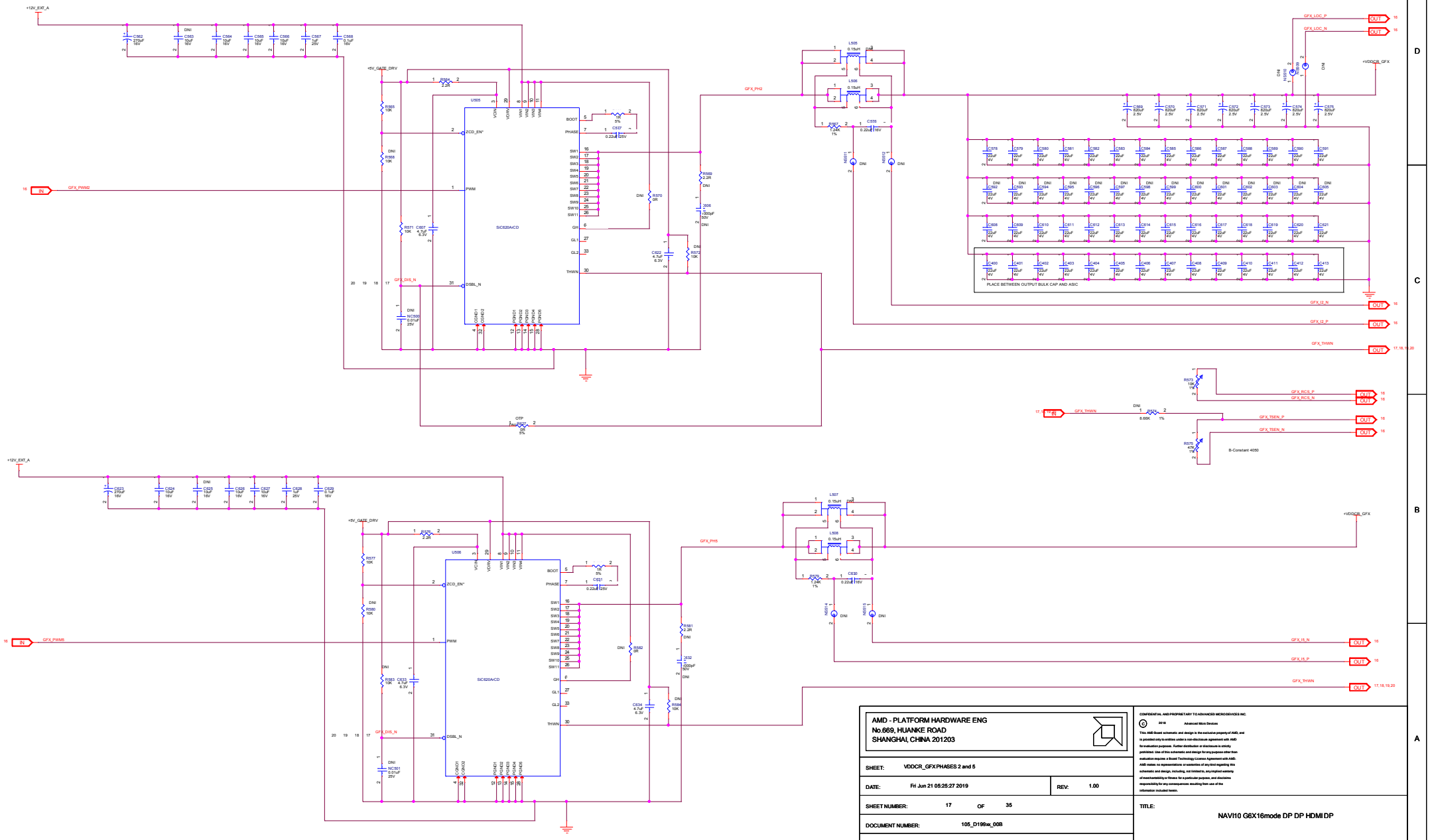

AMD - PLATFORM HARDWARE ENG
No.669, HUANKE ROAD
SHANGHAI, CHINA 201203

SHEET:	VDDCR_GFX PHASES 2 and 5
DATE:	Fri Jun 21 05:25:27 2019
REV:	1.00
SHEET NUMBER:	17 OF 35
DOCUMENT NUMBER:	105_D199xx_00B
NOTES:	NOTE

CONFIDENTIAL AND PROPRIETARY TO ADVANCED MICRO DEVICES INC.

© 2018 Advanced Micro Devices

This AMD Board schematic and design is the exclusive property of AMD, and is provided only to entities under a non-disclosure agreement with AMD for evaluation purposes. Further distribution or disclosure is strictly prohibited. Use of this schematic and design for any purpose other than evaluation requires a Board Technology License Agreement with AMD. AMD makes no representations or warranties of any kind regarding this schematic and design, including, not limited to, any implied warranty of merchantability or fitness for a particular purpose, and disclaims responsibility for any consequences resulting from use of the information included herein.

TITLE:

NAVI10 G6X16mode DP DP HDMI DP

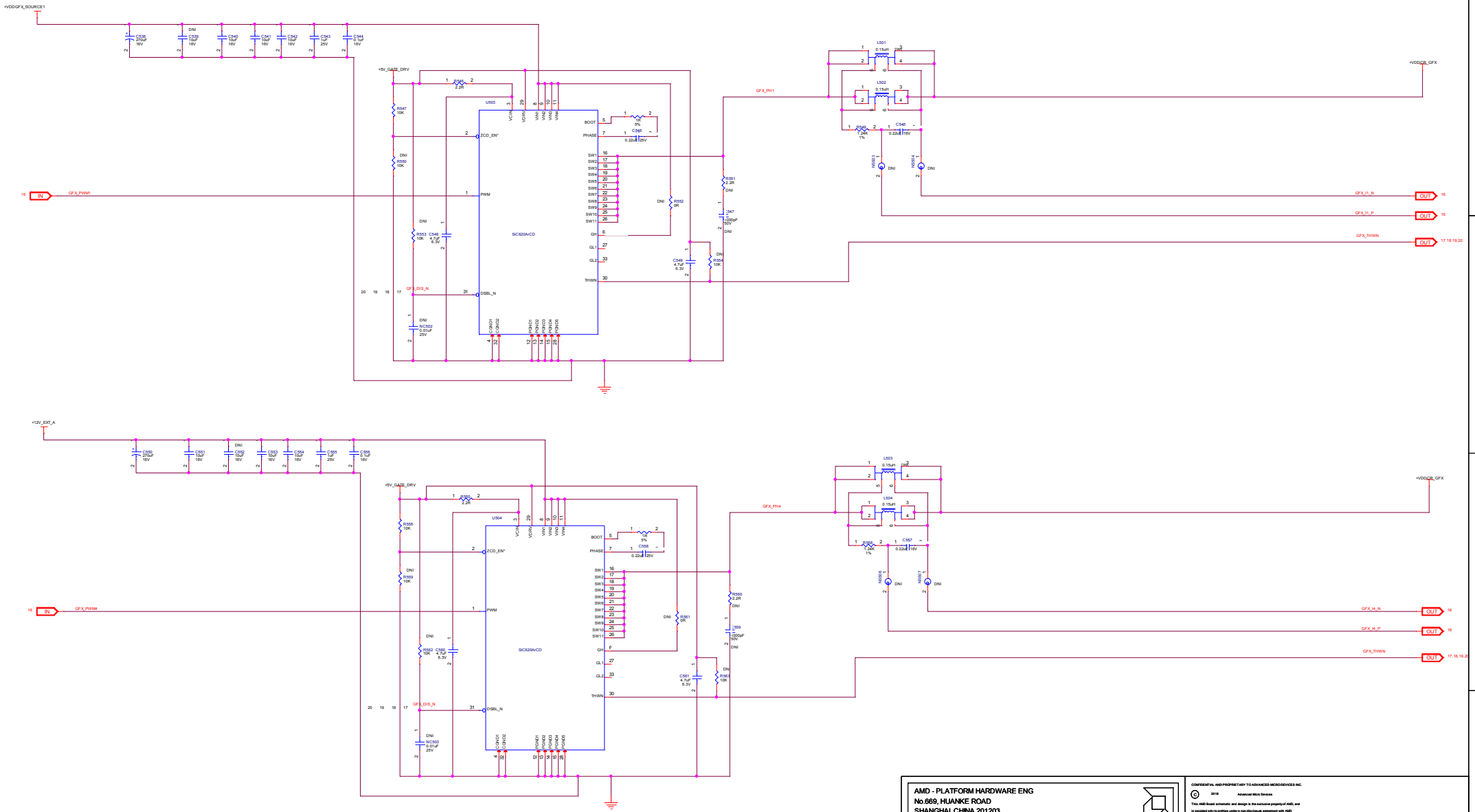

AMD - PLATFORM HARDWARE ENG
No.669, HUANKE ROAD
SHANGHAI, CHINA 201203

SHEET:	VDDCR_GFX PHASES 1 and 4
DATE:	Fri Jun 21 05:25:28 2019
REV:	1.00
SHEET NUMBER:	18 OF 35
DOCUMENT NUMBER:	105_D199xx_00B
NOTES:	NOTE

CONFIDENTIAL AND PROPRIETARY TO ADVANCED MICRO DEVICES INC.

© 2018 Advanced Micro Devices

This AMD Board schematic and design is the exclusive property of AMD, and is provided only to entities under a non-disclosure agreement with AMD for evaluation purposes. Further distribution or disclosure is strictly prohibited. Use of this schematic and design for any purpose other than evaluation requires a Board Technology License Agreement with AMD. AMD makes no representations or warranties of any kind regarding this schematic and design, including, not limited to, any implied warranty of merchantability or fitness for a particular purpose, and disclaims responsibility for any consequences resulting from use of the information included herein.

TITLE:

NAVI10 G6X16mode DP DP HDMI DP

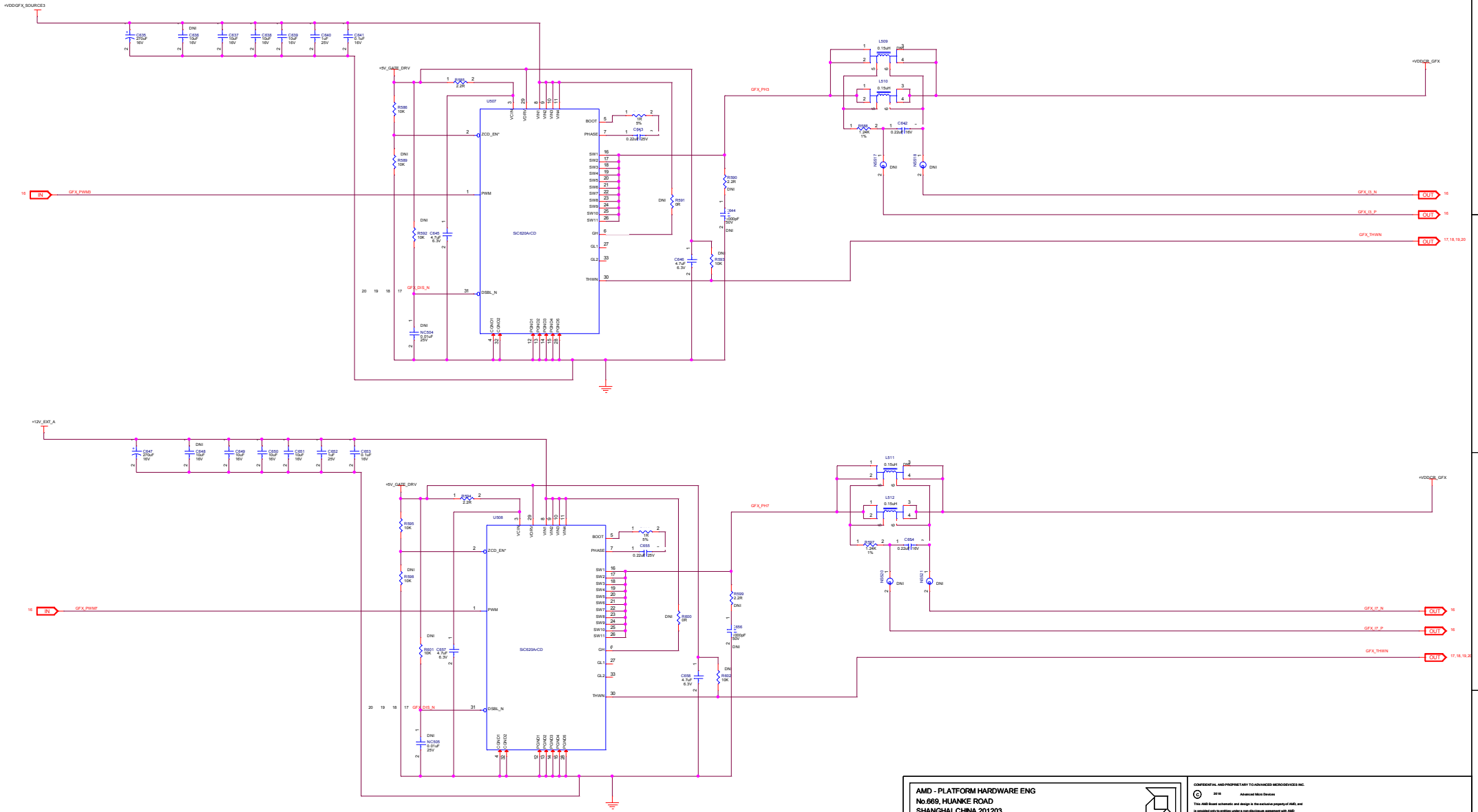

AMD - PLATFORM HARDWARE ENG
No.669, HUANKE ROAD
SHANGHAI, CHINA 201203

SHEET:	VDDCR_GFX PHASES 3 and 7
DATE:	Fri Jun 21 05:25:28 2019
REV:	1.00
SHEET NUMBER:	19 OF 35
DOCUMENT NUMBER:	105_D199xx_00B
NOTES:	NOTE

CONFIDENTIAL AND PROPRIETARY TO ADVANCED MICRO DEVICES INC.

© 2018 Advanced Micro Devices

This AMD Board schematic and design is the exclusive property of AMD, and is provided only to entities under a non-disclosure agreement with AMD for evaluation purposes. Further distribution or disclosure is strictly prohibited. Use of this schematic and design for any purpose other than evaluation requires a Board Technology License Agreement with AMD. AMD makes no representations or warranties of any kind regarding this schematic and design, including, not limited to, any implied warranty of merchantability or fitness for a particular purpose, and disclaims responsibility for any consequences resulting from use of the information included herein.

TITLE:

NAVI10 G6X16mode DP DP HDMI DP

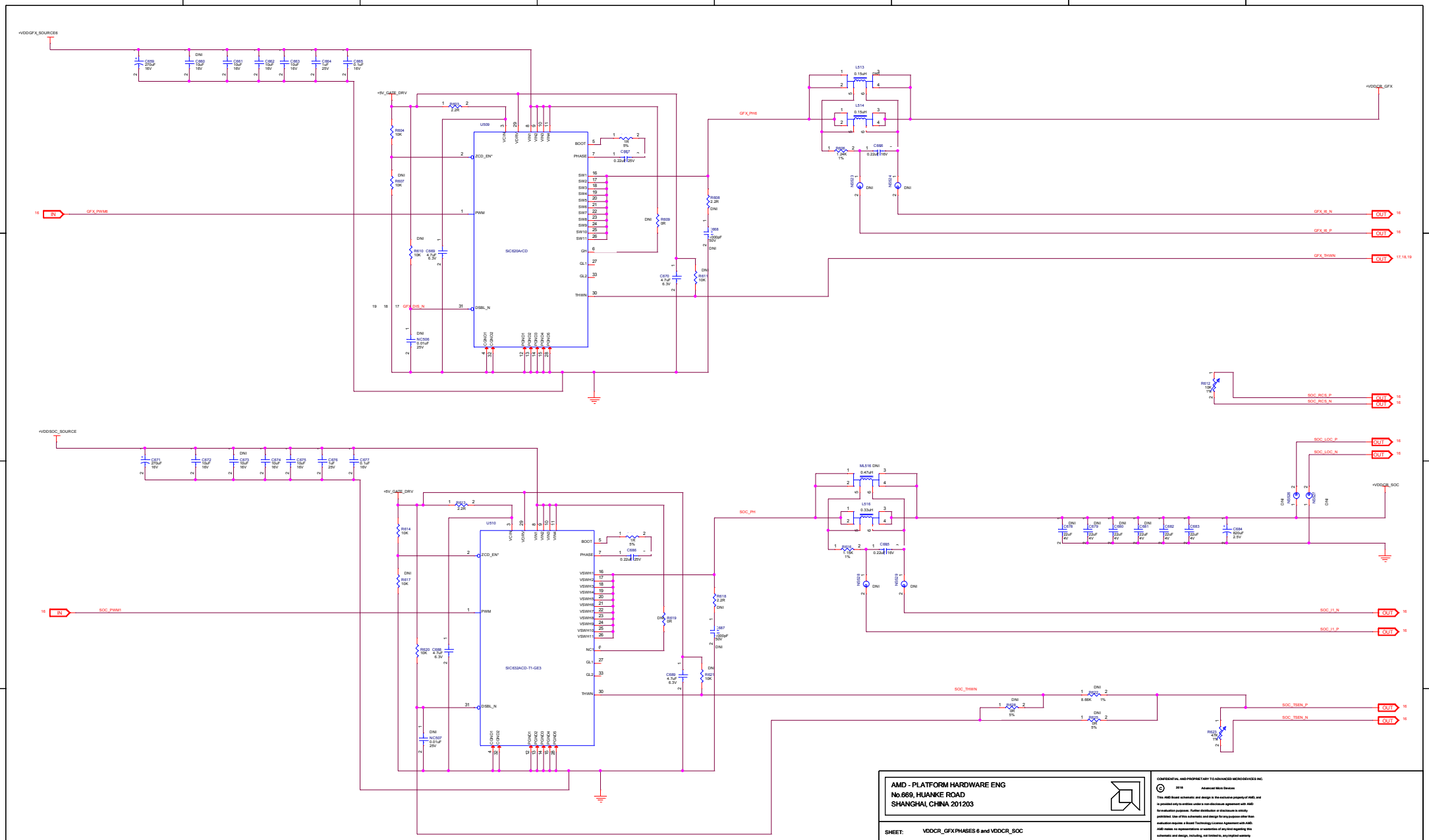

AMD - PLATFORM HARDWARE ENG
No.669, HUANKE ROAD
SHANGHAI, CHINA 201203

SHEET:	VDDCR_GFX PHASES 6 and VDDCR_SOC
DATE:	Fri Jun 21 05:25:29 2019
REV:	1.00
SHEET NUMBER:	20 OF 35
DOCUMENT NUMBER:	105_D199xx_00B
NOTES:	NOTE

CONFIDENTIAL AND PROPRIETARY TO ADVANCED MICRO DEVICES INC.

© 2018 Advanced Micro Devices

This AMD Board schematic and design is the exclusive property of AMD, and is provided only to entities under a non-disclosure agreement with AMD for evaluation purposes. Further distribution or disclosure is strictly prohibited. Use of this schematic and design for any purpose other than evaluation requires a Board Technology License Agreement with AMD. AMD makes no representations or warranties of any kind regarding this schematic and design, including, not limited to, any implied warranty of merchantability or fitness for a particular purpose, and disclaims responsibility for any consequences resulting from use of the information included herein.

TITLE:

NAVI10 G6X16mode DP DP HDMI DP

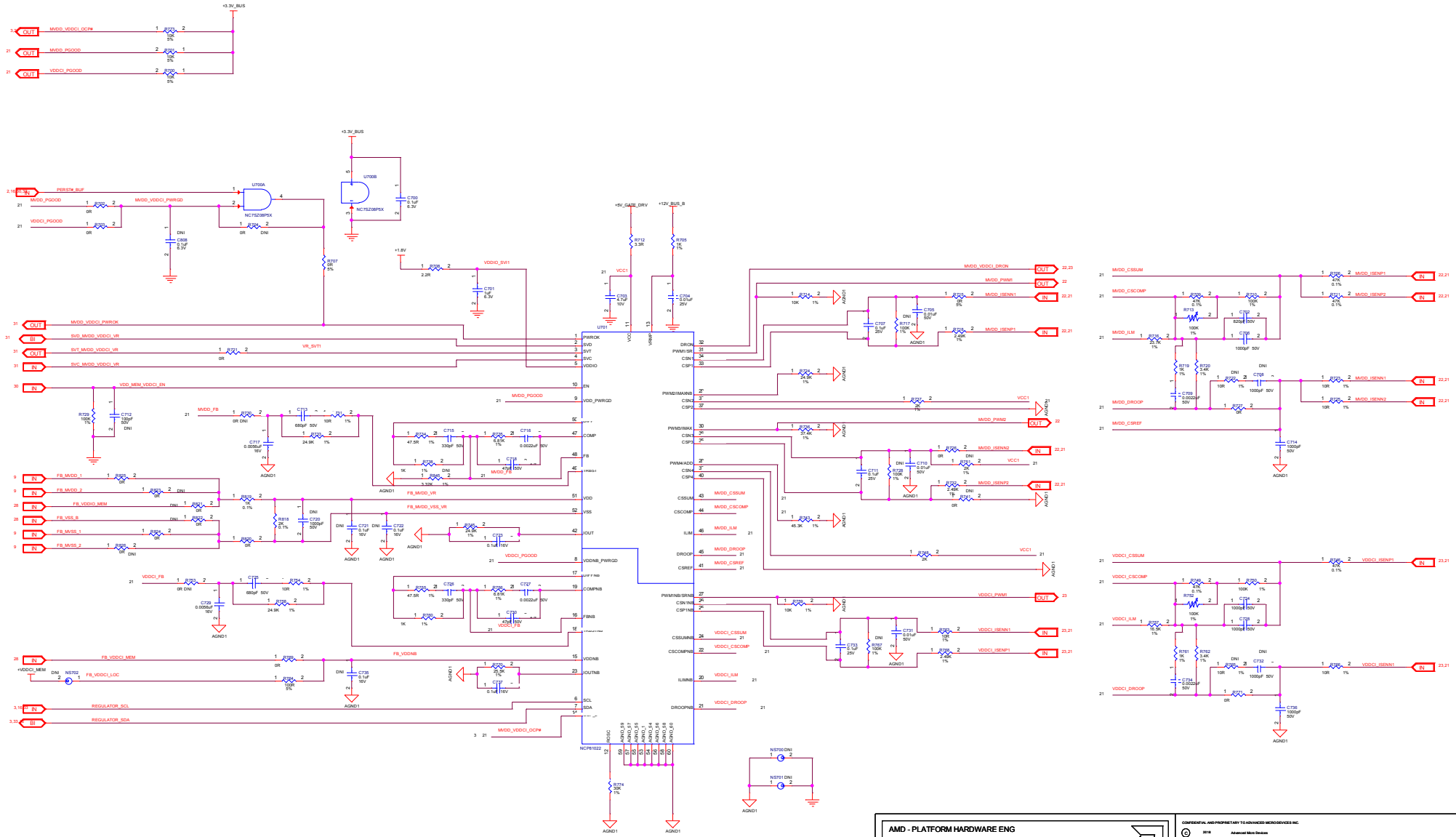

AMD - PLATFORM HARDWARE ENG
No.669, HUANKE ROAD
SHANGHAI, CHINA 201203

SHEET:	MVDD_VDDCI CONTROLLER
DATE:	Fri Jun 21 05:25:29 2019
REV:	1.00
SHEET NUMBER:	21 OF 35
DOCUMENT NUMBER:	105_D199xx_00B
NOTES:	NOTE

CONFIDENTIAL AND PROPRIETARY TO ADVANCED MICRO DEVICES INC.

© 2018 Advanced Micro Devices

This AMD Board schematic and design is the exclusive property of AMD, and is provided only to entities under a non-disclosure agreement with AMD for evaluation purposes. Further distribution or disclosure is strictly prohibited. Use of this schematic and design for any purpose other than evaluation requires a Board Technology License Agreement with AMD. AMD makes no representations or warranties of any kind regarding this schematic and design, including, not limited to, any implied warranty of merchantability or fitness for a particular purpose, and disclaims responsibility for any consequences resulting from use of the information included herein.

TITLE:

NAVI10 G6X16mode DP DP HDMI DP

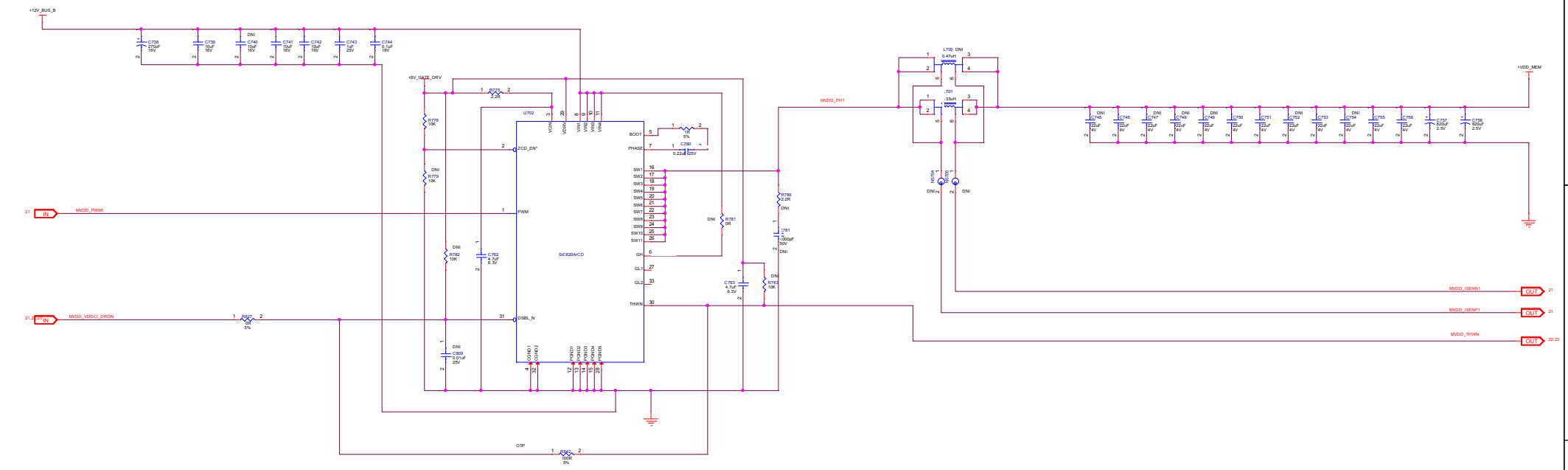

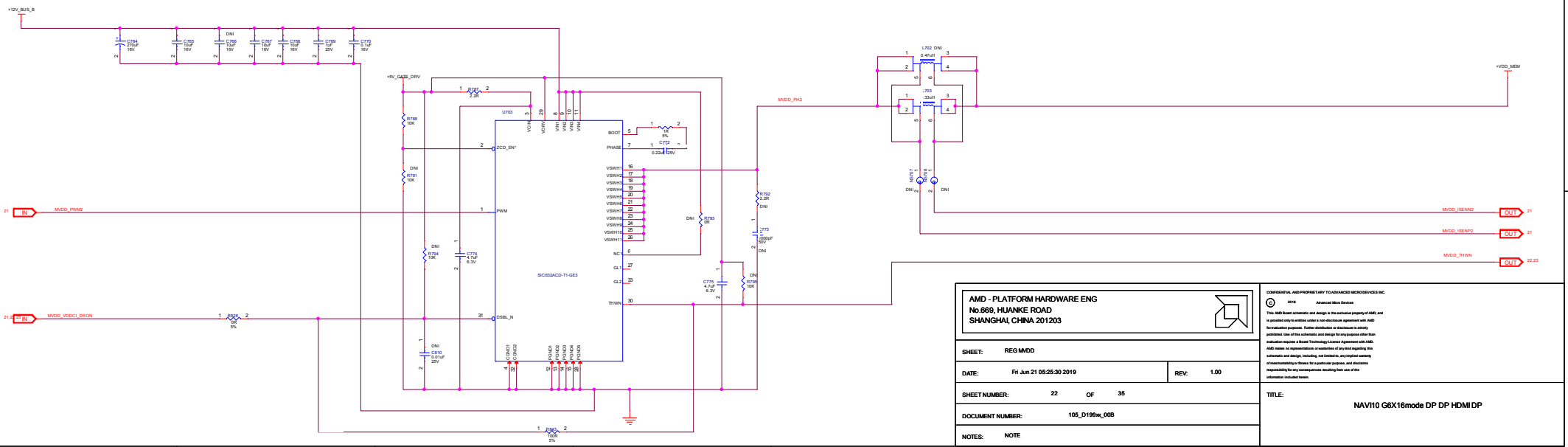

AMD - PLATFORM HARDWARE ENG
No.669, HUANKE ROAD
SHANGHAI, CHINA 201203

SHEET:	REG MVDD		
DATE:	Fri Jun 21 05:25:30 2019	REV:	1.00
SHEET NUMBER:	22 OF 35		
DOCUMENT NUMBER:	105_D199xx_00B		
NOTES:	NOTE		

CONFIDENTIAL AND PROPRIETARY TO ADVANCED MICRO DEVICES INC.
© 2018 Advanced Micro Devices
This AMD Board schematic and design is the exclusive property of AMD, and is provided only to entities under a non-disclosure agreement with AMD for evaluation purposes. Further distribution or disclosure is strictly prohibited. Use of this schematic and design for any purpose other than evaluation requires a Board Technology License Agreement with AMD. AMD makes no representations or warranties of any kind regarding this schematic and design, including, not limited to, any implied warranty of merchantability or fitness for a particular purpose, and disclaims responsibility for any consequences resulting from use of the information included herein.

TITLE:
NAVI10 G6X16mode DP DP HDMI DP

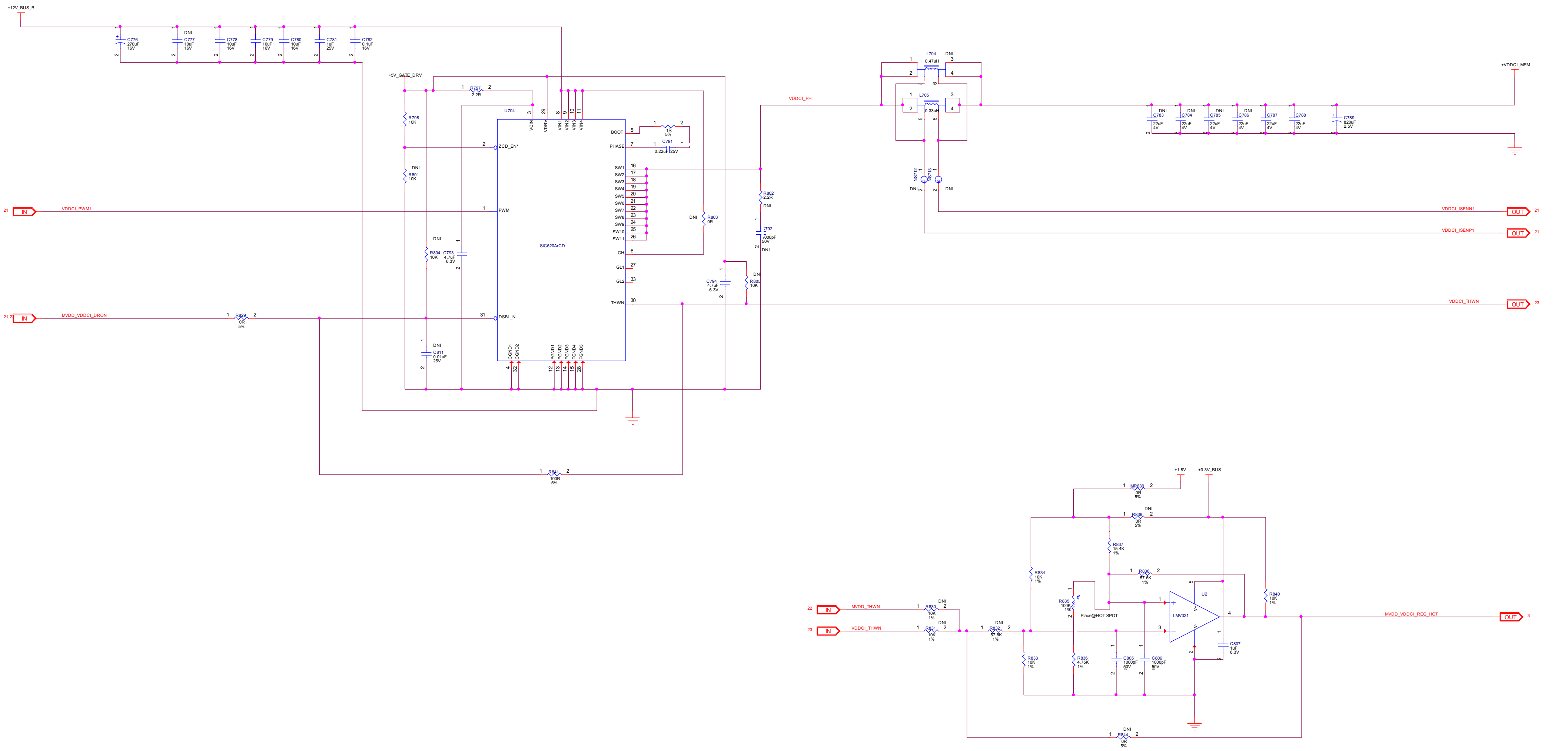

AMD - PLATFORM HARDWARE ENG
No.669, HUANKE ROAD
SHANGHAI, CHINA 201203

SHEET:	REG VDDCI
DATE:	Fri Jun 21 05:25:30 2019
REV:	1.00
SHEET NUMBER:	23 OF 35
DOCUMENT NUMBER:	105_D199xx_00B
NOTES:	NOTE
TITLE:	NAVI10 G6X16mode DP DP HDMI DP

CONFIDENTIAL AND PROPRIETARY TO ADVANCED MICRO DEVICES INC.
(c) 2018 Advanced Micro Devices
This AMD Board schematic and design is the exclusive property of AMD, and is provided only to entities under a non-disclosure agreement with AMD for evaluation purposes. Further distribution or disclosure is strictly prohibited. Use of this schematic and design for any purpose other than evaluation requires a Board Technology License Agreement with AMD. AMD makes no representations or warranties of any kind regarding this schematic and design, including, not limited to, any implied warranty of merchantability or fitness for a particular purpose, and disclaims responsibility for any consequences resulting from use of the information included herein.

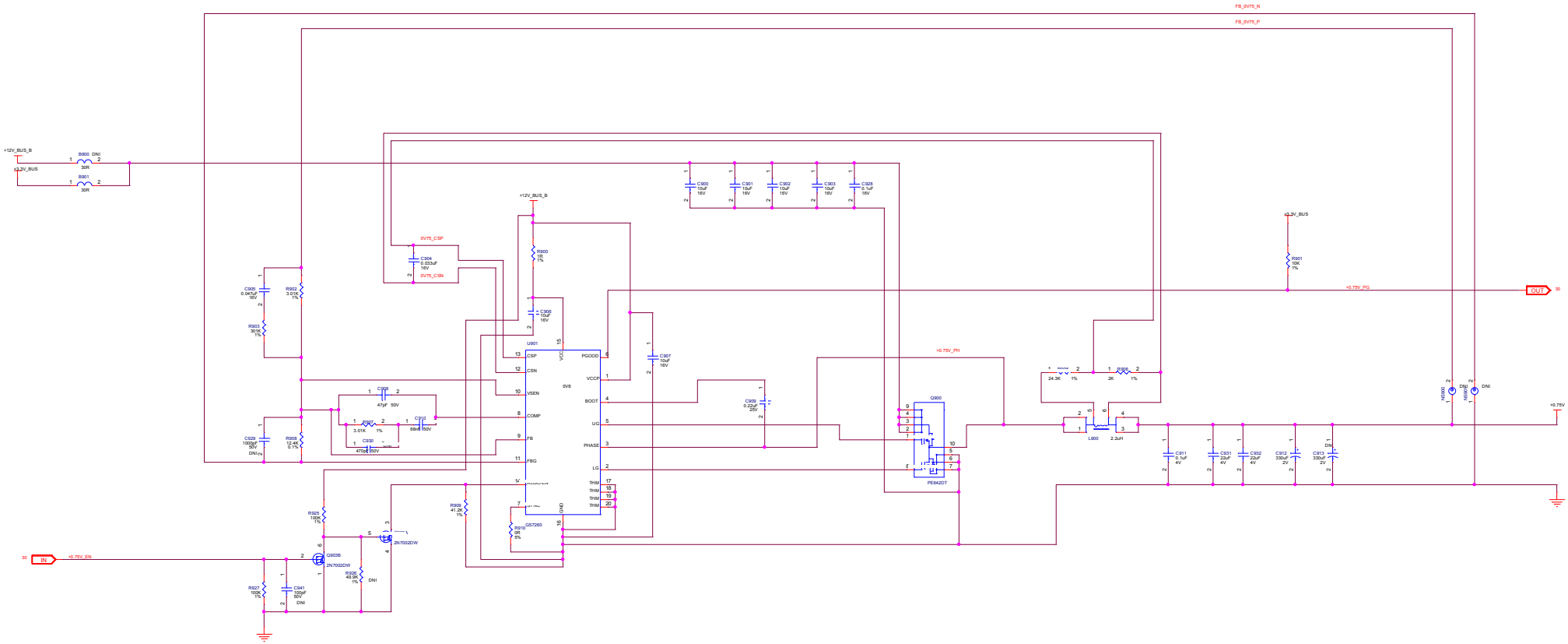

AMD - PLATFORM HARDWARE ENG
No.669, HUANKE ROAD
SHANGHAI, CHINA 201203

SHEET:	REG 0.75V
DATE:	Fri Jun 21 05:25:31 2019
REV:	1.00
SHEET NUMBER:	24 OF 35
DOCUMENT NUMBER:	105_D199xx_00B
NOTES:	NOTE

CONFIDENTIAL AND PROPRIETARY TO ADVANCED MICRO DEVICES INC.

© 2018 Advanced Micro Devices

This AMD Board schematic and design is the exclusive property of AMD, and is provided only to entities under a non-disclosure agreement with AMD for evaluation purposes. Further distribution or disclosure is strictly prohibited. Use of this schematic and design for any purpose other than evaluation requires a Board Technology License Agreement with AMD. AMD makes no representations or warranties of any kind regarding this schematic and design, including, not limited to, any implied warranty of merchantability or fitness for a particular purpose, and disclaims responsibility for any consequences resulting from use of the information included herein.

TITLE:

NAVI10 G6X16mode DP DP HDMI DP

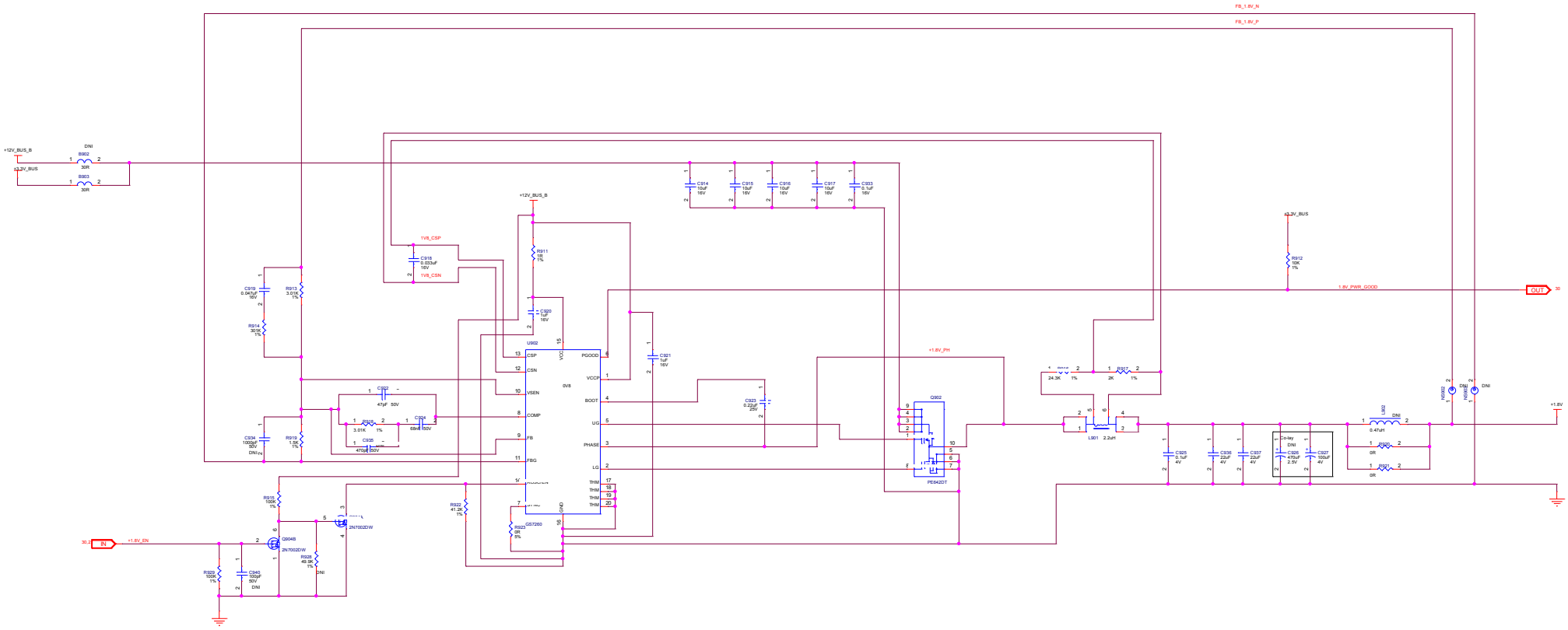

AMD - PLATFORM HARDWARE ENG No.669, HUANKE ROAD SHANGHAI, CHINA 201203	CONFIDENTIAL AND PROPRIETARY TO ADVANCED MICRO DEVICES INC. © 2018 Advanced Micro Devices This AMD Board schematic and design is the exclusive property of AMD, and is provided only to entities under a non-disclosure agreement with AMD for evaluation purposes. Further distribution or disclosure is strictly prohibited. Use of this schematic and design for any purpose other than evaluation requires a Board Technology License Agreement with AMD. AMD makes no representations or warranties of any kind regarding this schematic and design, including, not limited to, any implied warranty of merchantability or fitness for a particular purpose, and disclaims responsibility for any consequences resulting from use of the information included herein.
SHEET: REG 1.8V	
DATE: Fri Jun 21 05:25:31 2019 — REV: 1.00	
SHEET NUMBER: 25 OF 35	TITLE: NAVI10 G6X16mode DP DP HDMI DP
DOCUMENT NUMBER: 105_D199xx_00B	
NOTES: NOTE	

REGULATOR FOR +5V RAILS

IOUT = 50mA

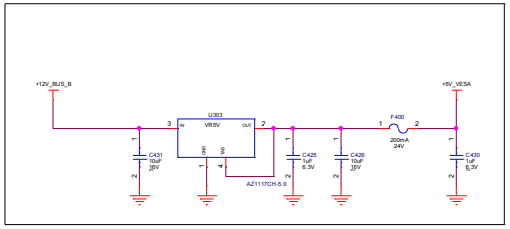

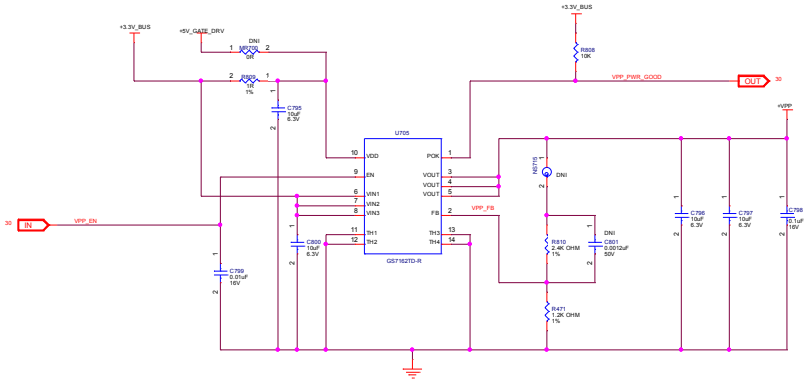

AMD - PLATFORM HARDWARE ENG
No.669, HUANKE ROAD
SHANGHAI, CHINA 201203

SHEET:	SMALL RAIL REGULATORS
DATE:	Fri Jun 21 05:25:32 2019
REV:	1.00
SHEET NUMBER:	26 OF 35
DOCUMENT NUMBER:	105_D199xx_00B
NOTES:	NOTE

CONFIDENTIAL AND PROPRIETARY TO ADVANCED MICRO DEVICES INC.

© 2018 Advanced Micro Devices

This AMD Board schematic and design is the exclusive property of AMD, and is provided only to entities under a non-disclosure agreement with AMD for evaluation purposes. Further distribution or disclosure is strictly prohibited. Use of this schematic and design for any purpose other than evaluation requires a Board Technology License Agreement with AMD. AMD makes no representations or warranties of any kind regarding this schematic and design, including, not limited to, any implied warranty of merchantability or fitness for a particular purpose, and disclaims responsibility for any consequences resulting from use of the information included herein.

TITLE:

NAVI10 G6X16mode DP DP HDMI DP

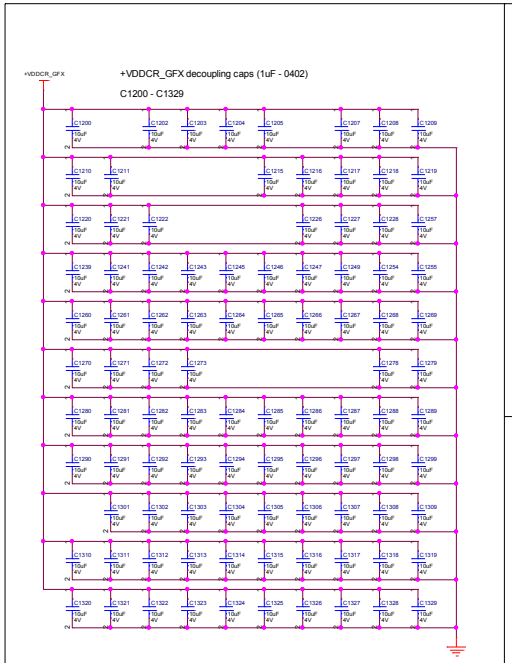

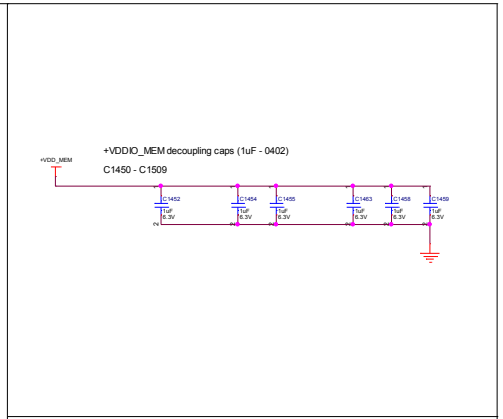

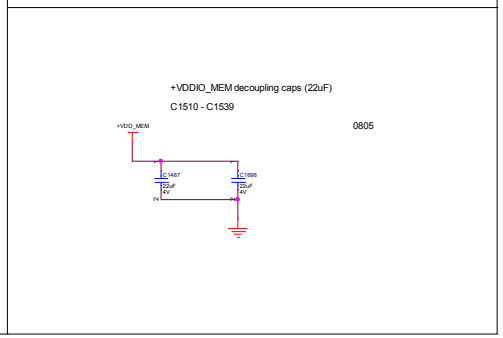

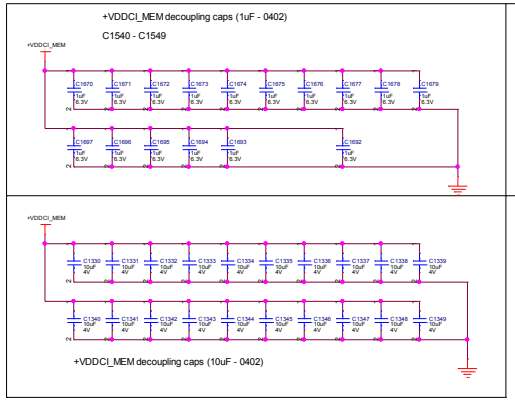

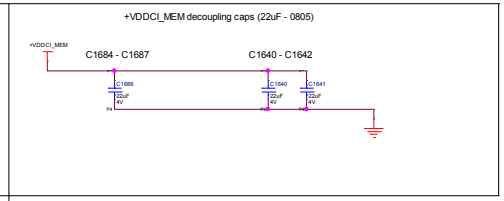

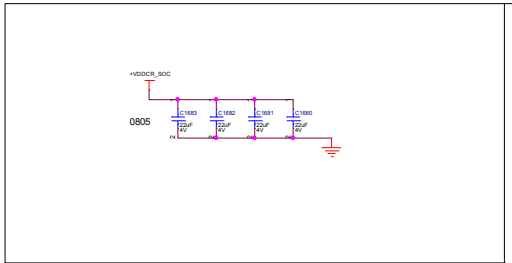

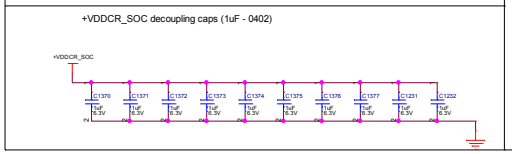

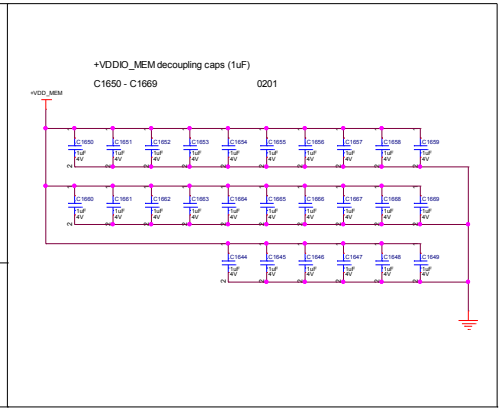

AMD - PLATFORM HARDWARE ENG
No.669, HUANKE ROAD
SHANGHAI, CHINA 201203

SHEET:	NAVI10 DECAPS		
DATE:	Fri Jun 21 05:25:32 2019	REV:	1.00
SHEET NUMBER:	27 OF 35		
DOCUMENT NUMBER:	105_D199xx_00B		
NOTES:	NOTE		

CONFIDENTIAL AND PROPRIETARY TO ADVANCED MICRO DEVICES INC.
© 2018 Advanced Micro Devices
This AMD Board schematic and design is the exclusive property of AMD, and is provided only to entities under a non-disclosure agreement with AMD for evaluation purposes. Further distribution or disclosure is strictly prohibited. Use of this schematic and design for any purpose other than evaluation requires a Board Technology License Agreement with AMD. AMD makes no representations or warranties of any kind regarding this schematic and design, including, not limited to, any implied warranty of merchantability or fitness for a particular purpose, and disclaims responsibility for any consequences resulting from use of the information included herein.

TITLE:
NAVI10 G6X16mode DP DP HDMI DP

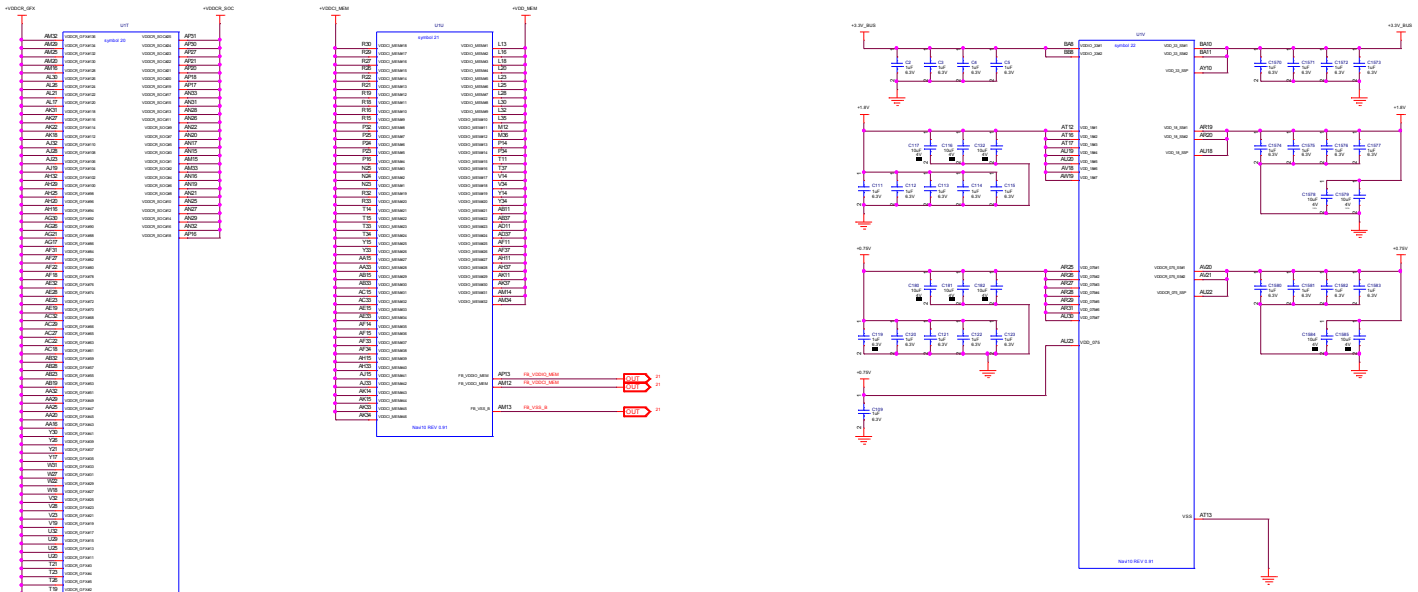

AMD - PLATFORM HARDWARE ENG
No.669, HUANKE ROAD
SHANGHAI, CHINA 201203

SHEET:	NAVI10 POWER		
DATE:	Fri Jun 21 05:25:33 2019	REV:	1.00
SHEET NUMBER:	28	OF	35
DOCUMENT NUMBER:	105_D199xx_00B		
NOTES:	NOTE		

CONFIDENTIAL AND PROPRIETARY TO ADVANCED MICRO DEVICES INC.

© 2019 Advanced Micro Devices

This AMD Board schematic and design is the exclusive property of AMD, and is provided only to entities under a non-disclosure agreement with AMD for evaluation purposes. Further distribution or disclosure is strictly prohibited. Use of this schematic and design for any purpose other than evaluation requires a Board Technology License Agreement with AMD. AMD makes no representations or warranties of any kind regarding this schematic and design, including, not limited to, any implied warranty of merchantability, or fitness for a particular purpose, and disclaims responsibility for any consequences resulting from use of the information included herein.

TITLE:

NAVI10 G6X16mode DP DP HDMI DP

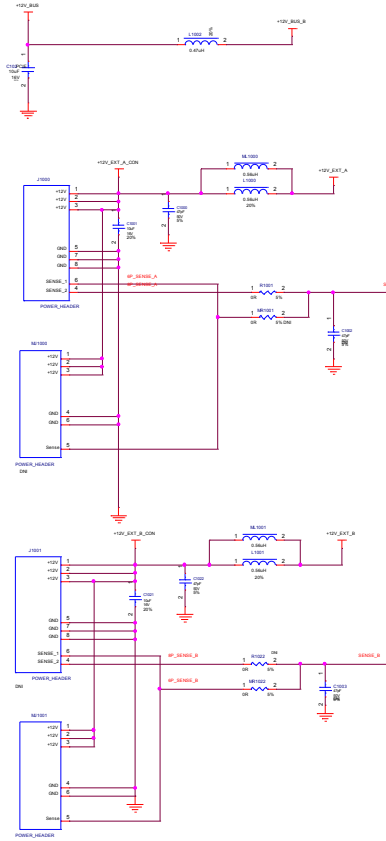

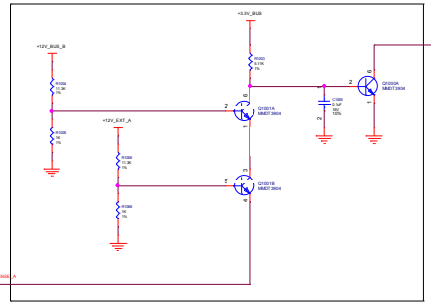

12V_BUS and 12V_EXT_A power-up sequence

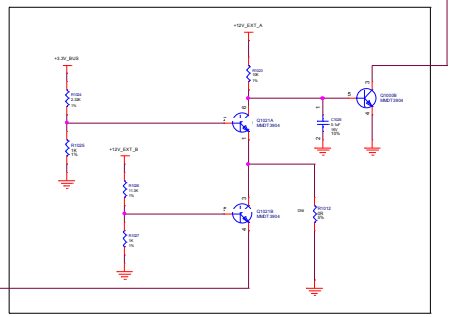

3.3V_BUS and 12V_EXT_B (6PIN/8PIN) power-up sequence

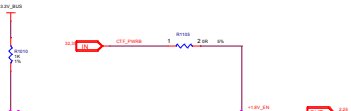

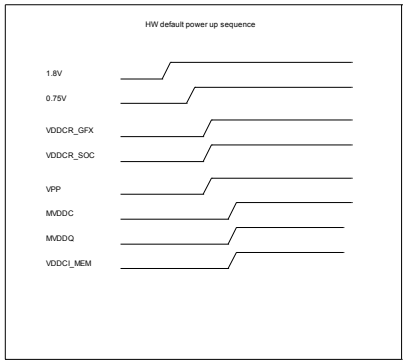

POWER UP SEQUENCE

BUS RAILS (3.3V/12V UP) -> +1.8V -> 0.75V -> VDDGFX/VDDSOC
-> VPP -> VDDCI/MVDD

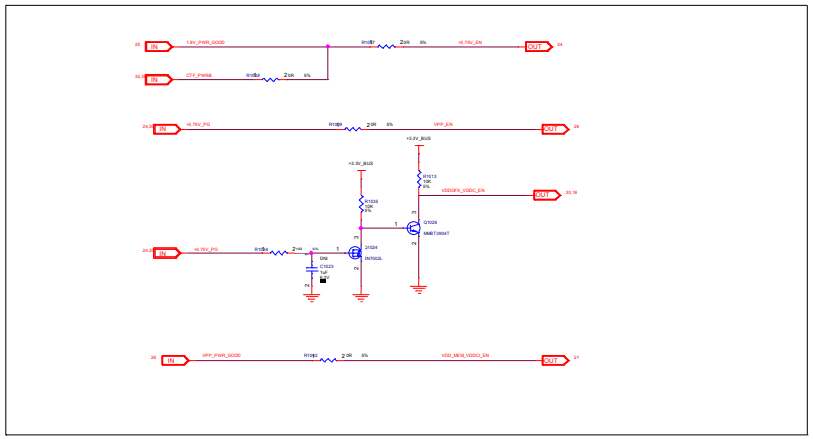

IN BACO MODE

TURN OFF VDDCR_GFX, VDDCR_SOC, VDDCI, VPP and MVDD

IN BAMACO MODE

TURN OFF VDDCR_GFX, VDDCR_SOC, VDDCI(turn off by SVI2)

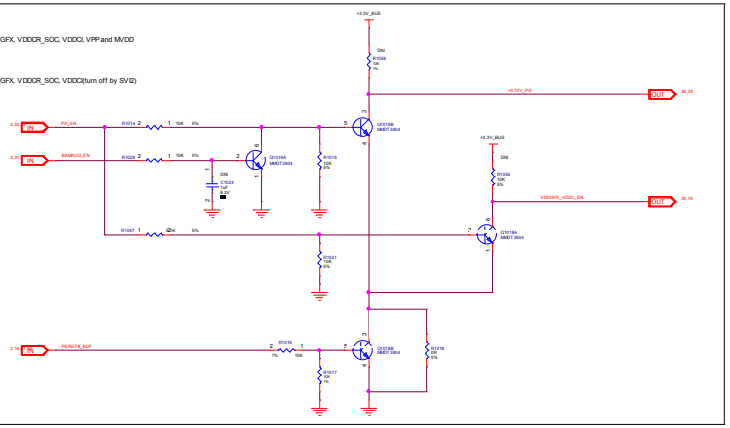

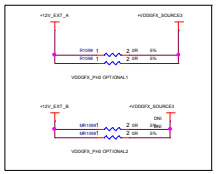

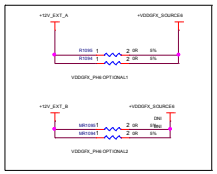

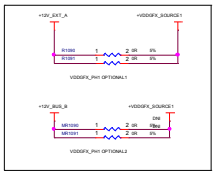

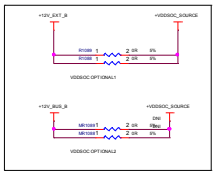

AMD - PLATFORM HARDWARE ENG No.669, HUANKE ROAD SHANGHAI, CHINA 201203	
SHEET: POWER MANAGEMENT	
DATE: Fri Jun 21 05:25:34 2019	REV: 1.00
SHEET NUMBER: 30 OF 35	
DOCUMENT NUMBER: 105_D199xx_00B	
NOTES: NOTE	

CONFIDENTIAL AND PROPRIETARY TO ADVANCED MICRO DEVICES INC.

© 2016 Advanced Micro Devices

This AMD Board schematic and design is the exclusive property of AMD, and is provided only to entities under a non-disclosure agreement with AMD for evaluation purposes. Further distribution or disclosure is strictly prohibited. Use of this schematic and design for any purpose other than evaluation requires a Board Technology License Agreement with AMD. AMD makes no representations or warranties of any kind regarding this schematic and design, including, not limited to, any implied warranty of merchantability, or fitness for a particular purpose, and disclaims responsibility for any consequences resulting from use of the information included herein.

TITLE:

NAVI10 G6X16mode DP DP HDMI DP

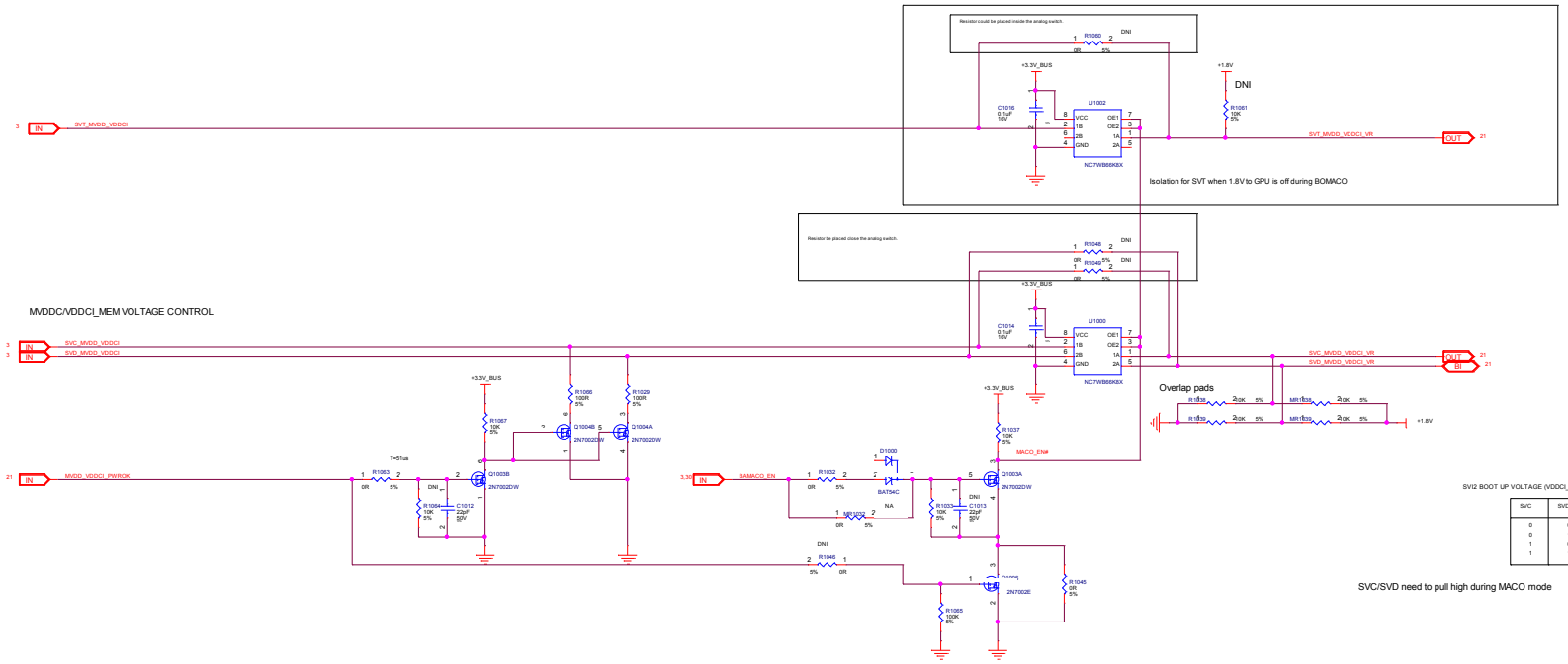

SVI2 BOOT UP VOLTAGE (VDDCI_MEM/MVDD)

SVC	SVD	VOLTAGE
0	0	1.1V
0	1	1.0V
1	0	0.9V
1	1	0.8V

SVC/SVD need to pull high during MACO mode

AMD - PLATFORM HARDWARE ENG
No.669, HUANKE ROAD
SHANGHAI, CHINA 201203

SHEET:	SVI2 & BAMACO
DATE:	Fri Jun 21 05:25:34 2019
REV:	1.00
SHEET NUMBER:	31 OF 35
DOCUMENT NUMBER:	105_D199xx_00B
NOTES:	NOTE

CONFIDENTIAL AND PROPRIETARY TO ADVANCED MICRO DEVICES INC.

© 2018 Advanced Micro Devices

This AMD Board schematic and design is the exclusive property of AMD, and is provided only to entities under a non-disclosure agreement with AMD for evaluation purposes. Further distribution or disclosure is strictly prohibited. Use of this schematic and design for any purpose other than evaluation requires a Board Technology License Agreement with AMD. AMD makes no representations or warranties of any kind regarding this schematic and design, including, not limited to, any implied warranty of merchantability or fitness for a particular purpose, and disclaims responsibility for any consequences resulting from use of the information included herein.

TITLE:

NAVI10 G6X16mode DP DP HDMI DP

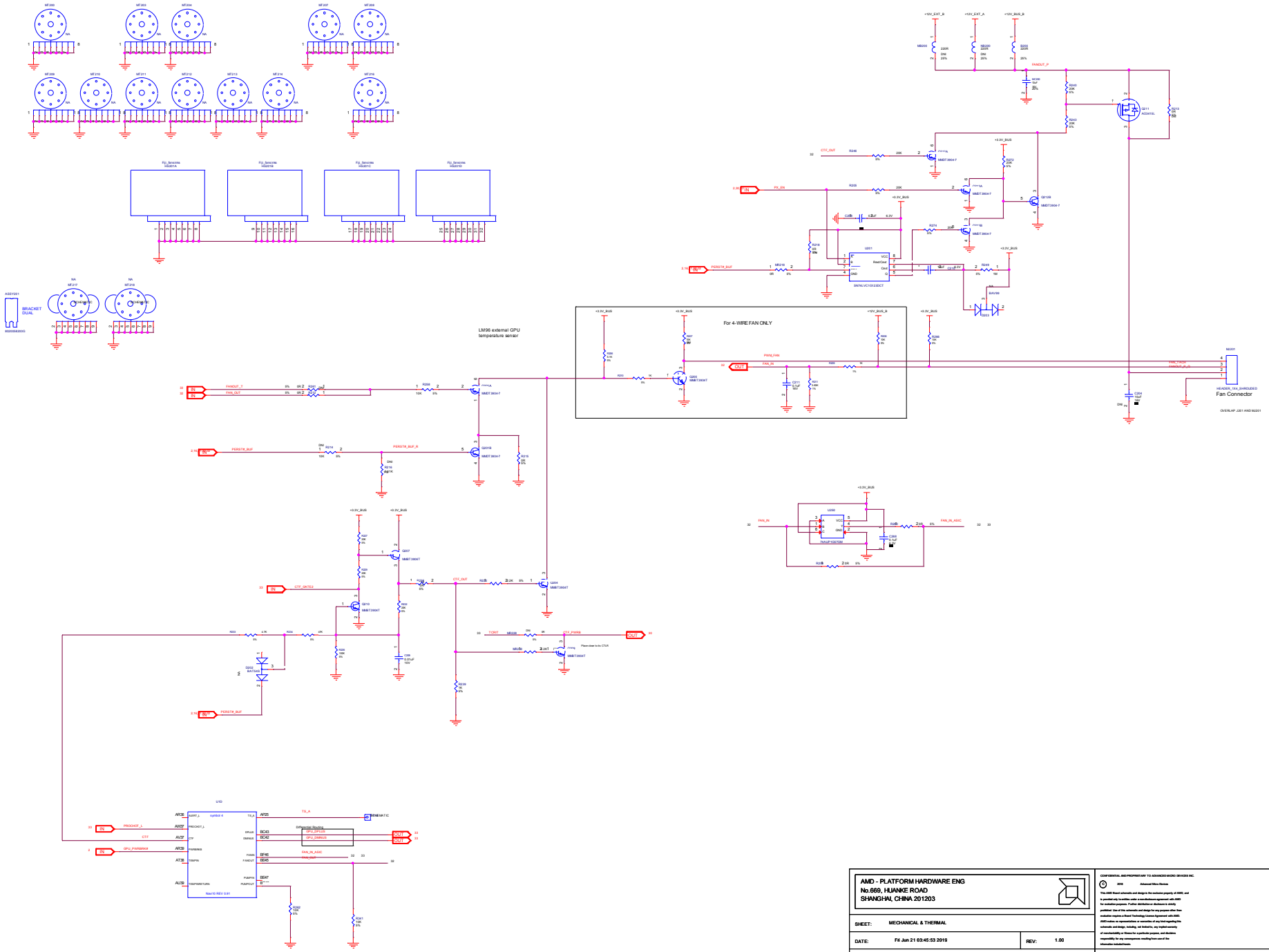

AMD - PLATFORM HARDWARE ENG No.669, HUANKE ROAD SHANGHAI, CHINA 201203	
SHEET: MECHANICAL & THERMAL	
DATE: Fri Jun 21 03:45:53 2019	REV: 1.00
SHEET NUMBER: 32 OF 35	
DOCUMENT NUMBER: 105_D199xx_00B	
NOTES: NOTE	

CONFIDENTIAL AND PROPRIETARY TO ADVANCED MICRO DEVICES INC.

© 2019 Advanced Micro Devices

This AMD Board schematic and design is the exclusive property of AMD, and is provided only to entities under a non-disclosure agreement with AMD for evaluation purposes. Further distribution or disclosure is strictly prohibited. Use of this schematic and design for any purpose other than evaluation requires a Board Technology License Agreement with AMD. AMD makes no representations or warranties of any kind regarding this schematic and design, including, not limited to, any implied warranty of merchantability, or fitness for a particular purpose, and disclaims responsibility for any consequences resulting from use of the information included herein.

TITLE: NAVI10 G6X16mode DP DP HDMI DP

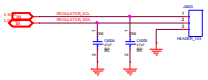

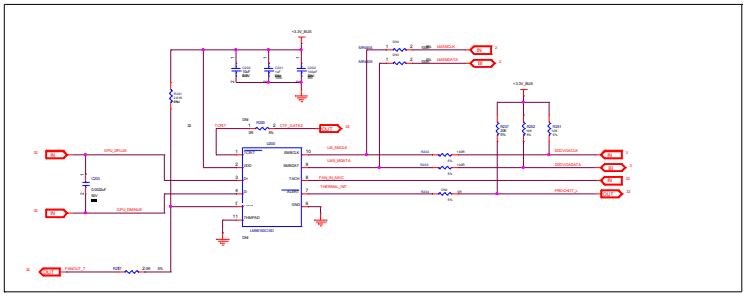

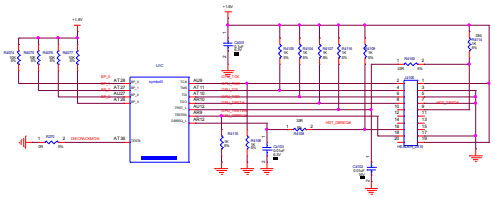

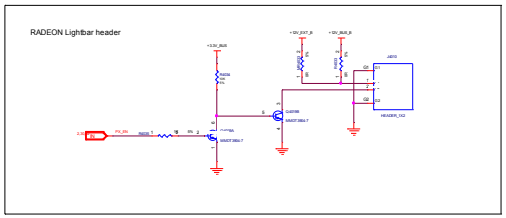

AMD - PLATFORM HARDWARE ENG
No.669, HUANKE ROAD
SHANGHAI, CHINA 201203

SHEET:	DEBUG
DATE:	Fri Jun 21 03:45:54 2019
REV:	1.00
SHEET NUMBER:	33
DOCUMENT NUMBER:	105_D1890a_008

TITLE: NAV110 G6X16mode DP DP HDMI DP

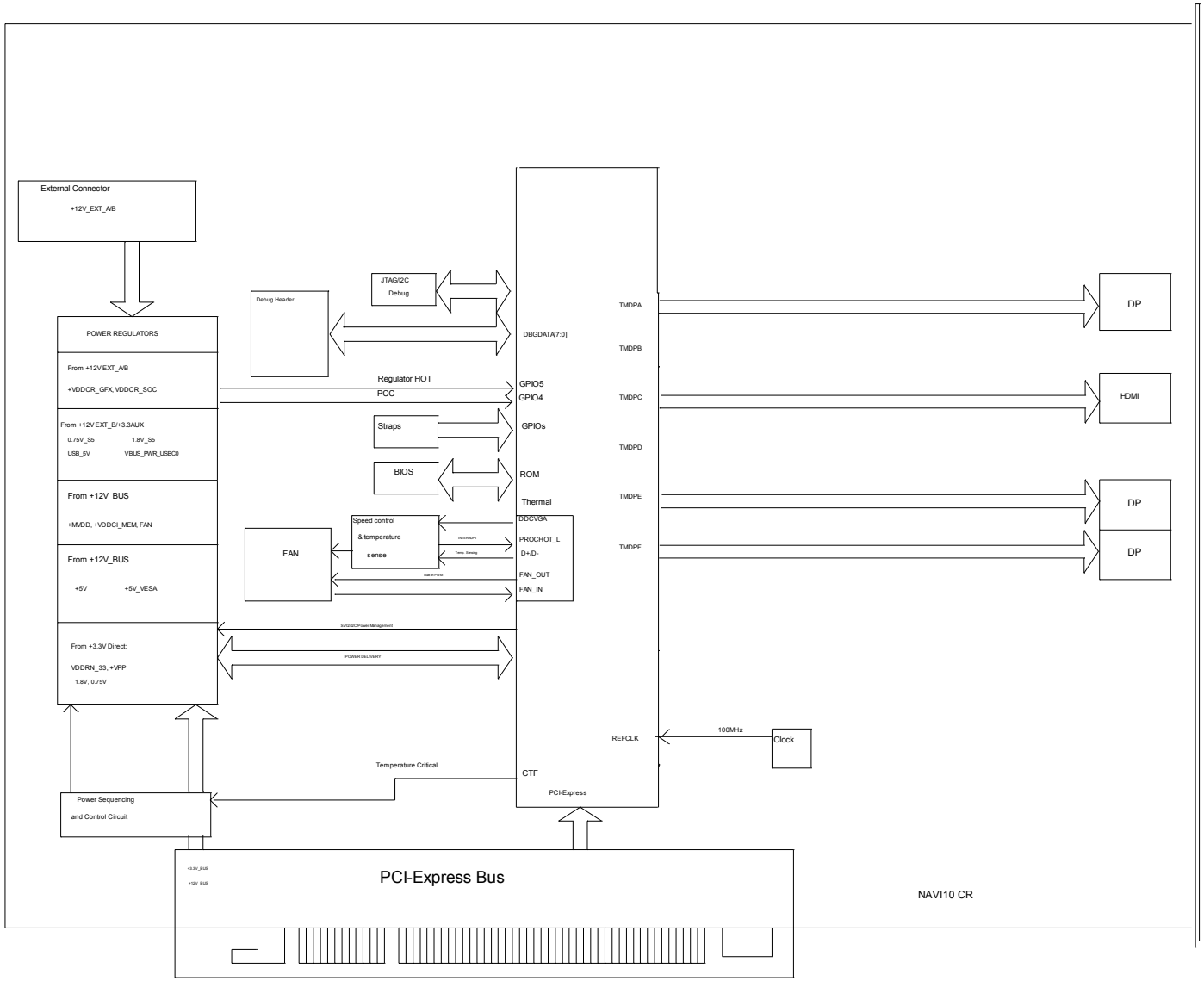

AMD - PLATFORM HARDWARE ENG
No.669, HUANKE ROAD
SHANGHAI, CHINA 201203

SHEET:	BLOCK DIAGRAM
DATE:	Mon Mar 11 03:18:02 2019
REV:	1.00
SHEET NUMBER:	34 OF 35
DOCUMENT NUMBER:	105_D199xx_00B
NOTES:	NOTE

CONFIDENTIAL AND PROPRIETARY TO ADVANCED MICRO DEVICES INC.
© 2019 Advanced Micro Devices
This AMD Board schematic and design is the exclusive property of AMD, and is provided only to entities under a non-disclosure agreement with AMD for evaluation purposes. Further distribution or disclosure is strictly prohibited. Use of this schematic and design for any purpose other than evaluation requires a Board Technology License Agreement with AMD. AMD makes no representations or warranties of any kind regarding this schematic and design, including, not limited to, any implied warranty of merchantability, or fitness for a particular purpose, and disclaims responsibility for any consequences resulting from use of the information included herein.

TITLE:
NAVI10 G6X16mode DP DP HDMI DP

AMD	TITLE: NAVI10 G6X16mode DP DP HDMI DP	DOCUMENT NUMBER: 105_D199xx_00B	DATE: Fri Jun 21 03:44:58 2019	SHEET NUMBER: 35 OF 35	REV: 1.00

REVISION HISTORY

ENGINEER: Peak, Dong

NOTES: NOTE

CONFIDENTIAL AND PROPRIETARY TO ADVANCED MICRO DEVICES INC.
This AMD Board schematic and design is the exclusive property of AMD, and is provided only to entities under a non-disclosure agreement with AMD for evaluation purposes. Further distribution or disclosure is strictly prohibited. Use of this schematic and design for any purpose other than evaluation requires a Board Technology License Agreement with AMD. AMD makes no representations or warranties of any kind regarding this schematic and design, including, not limited to, any implied warranty of merchantability or fitness for a particular purpose, and disclaims responsibility for any consequences resulting from use of the information included herein.

C 2018 Advanced Micro Devices

AMD - PLATFORM HARDWARE ENG
No.669, HUANKE ROAD
SHANGHAI, CHINA 201203

SCH Rev	PCB Rev	Date	REVISION DESCRIPTON
1	-00A	FEB 11 2019	-00A schematics
2	-00B	JUN 21 2019	ADD PULL HIGH ON THE PWRBRKB