PCI-EXPRESS EDGE CONNECTOR

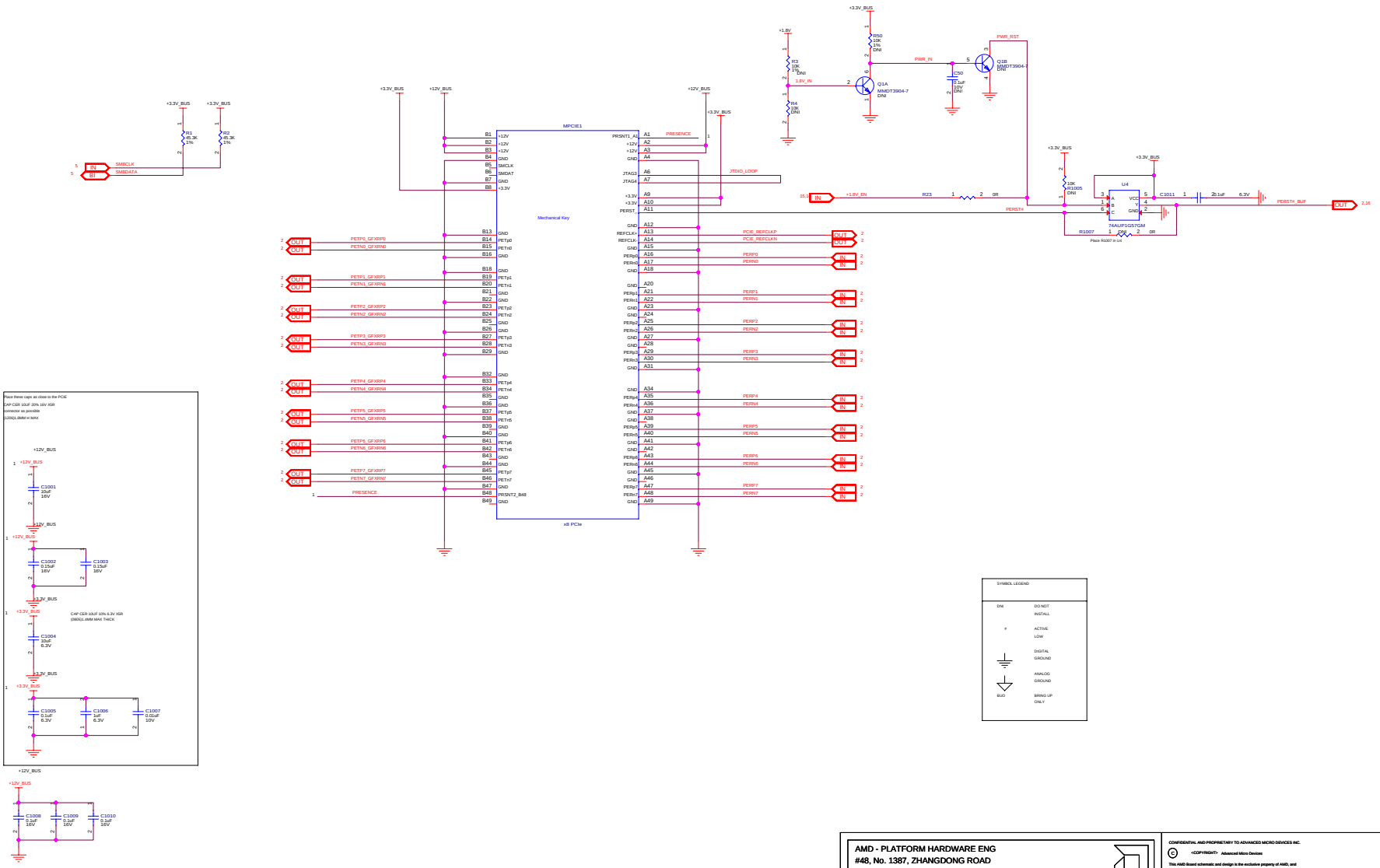

SYMBOL LEGEND

DNI	DO NOT INSTALL
#	ACTIVE LOW
	DIGITAL GROUND
	ANALOG GROUND
BUO	BRING UP ONLY

AMD - PLATFORM HARDWARE ENG
#48, No. 1387, ZHANGDONG ROAD
SHANGHAI, CHINA 201203

SHEET:	PCI-E Edge Connector
DATE:	Tue Sep 22 06:34:19 2015
REV:	2.0
SHEET NUMBER:	1 OF 20
DOCUMENT NUMBER:	105-C869xx-00B
TITLE:	Oland G5 2GB VGA/sDVI-I+HDMI/DP

CONFIDENTIAL AND PROPRIETARY TO ADVANCED MICRO DEVICES INC.
© <COPYRIGHT> Advanced Micro Devices
This AMD Board schematic and design is the exclusive property of AMD, and is provided only to entities under a non-disclosure agreement with AMD for evaluation purposes. Further distribution or disclosure is strictly prohibited. Use of this schematic and design for any purpose other than evaluation requires a Board Technology License Agreement with AMD. AMD makes no representations or warranties of any kind regarding this schematic and design, including, not limited to, any implied warranty of merchantability or fitness for a particular purpose, and disclaims responsibility for any consequences resulting from use of the information included herein.

Oland PCIe Interface

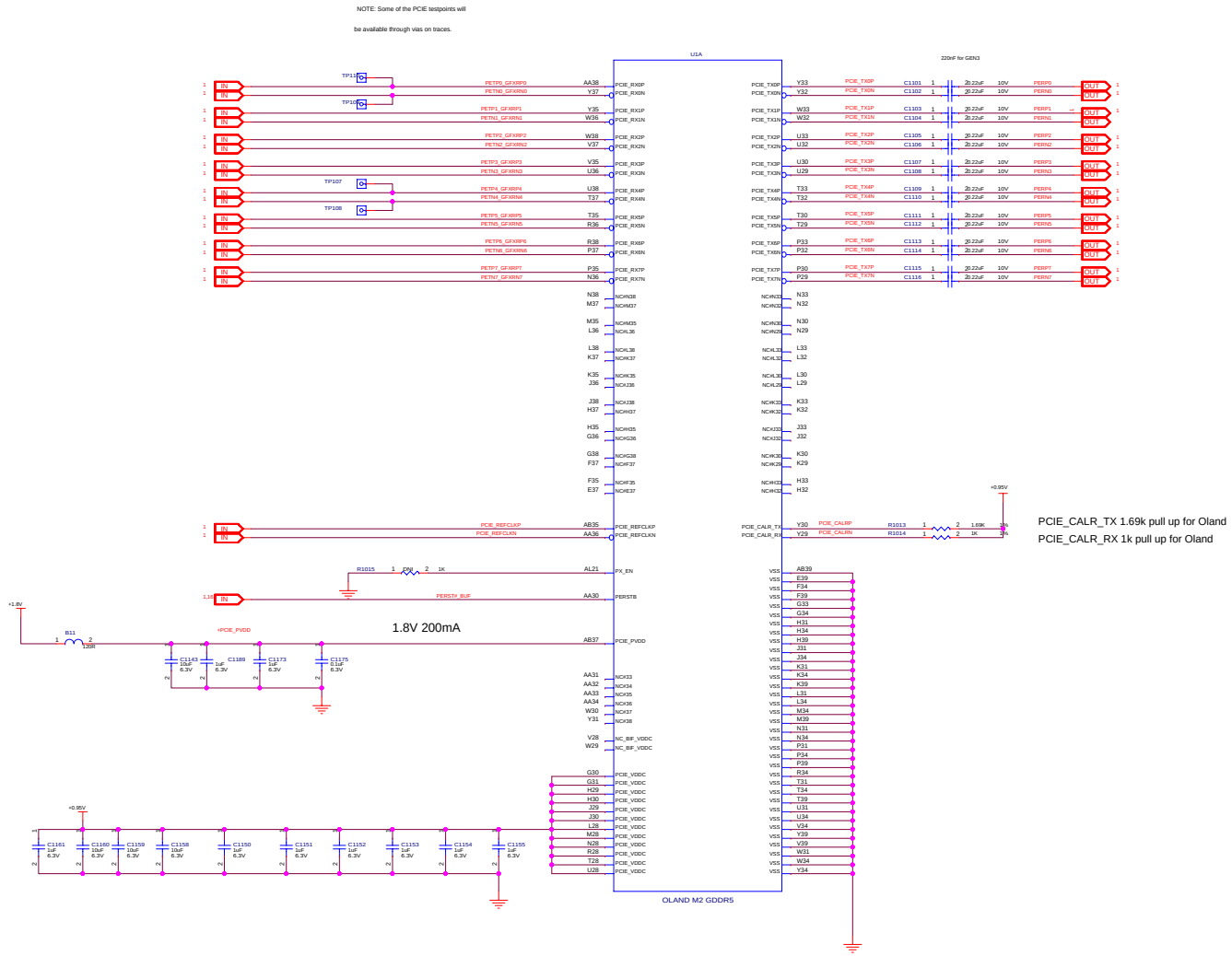

AMD - PLATFORM HARDWARE ENG #48, No. 1387, ZHANGDONG ROAD SHANGHAI, CHINA 201203	CONFIDENTIAL AND PROPRIETARY TO ADVANCED MICRO DEVICES INC. © <COPYRIGHT> Advanced Micro Devices This AMD Board schematic and design is the exclusive property of AMD, and is provided only to entities under a non-disclosure agreement with AMD for evaluation purposes. Further distribution or disclosure is strictly prohibited. Use of this schematic and design for any purpose other than evaluation requires a Board Technology License Agreement with AMD. AMD makes no representations or warranties of any kind regarding this schematic and design, including, not limited to, any implied warranty of merchantability or fitness for a particular purpose, and disclaims responsibility for any consequences resulting from use of the information included herein.
SHEET: Oland PCIE Interface	
DATE: Mon Sep 21 10:05:43 2015 — REV: 2.0	
SHEET NUMBER: 2 OF 20	TITLE: Oland G5 2GB VGA/sDVI-I+HDMI/DP
DOCUMENT NUMBER: 105-C869xx-00B	

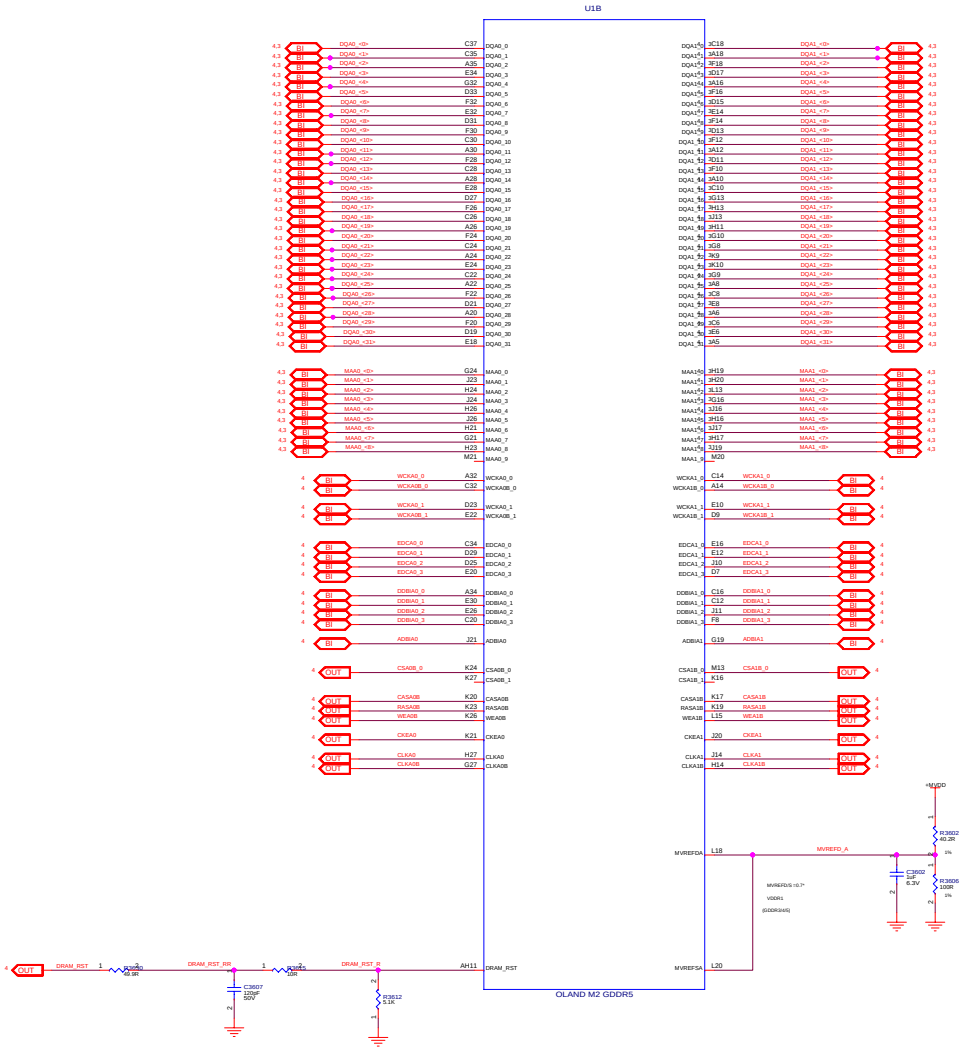

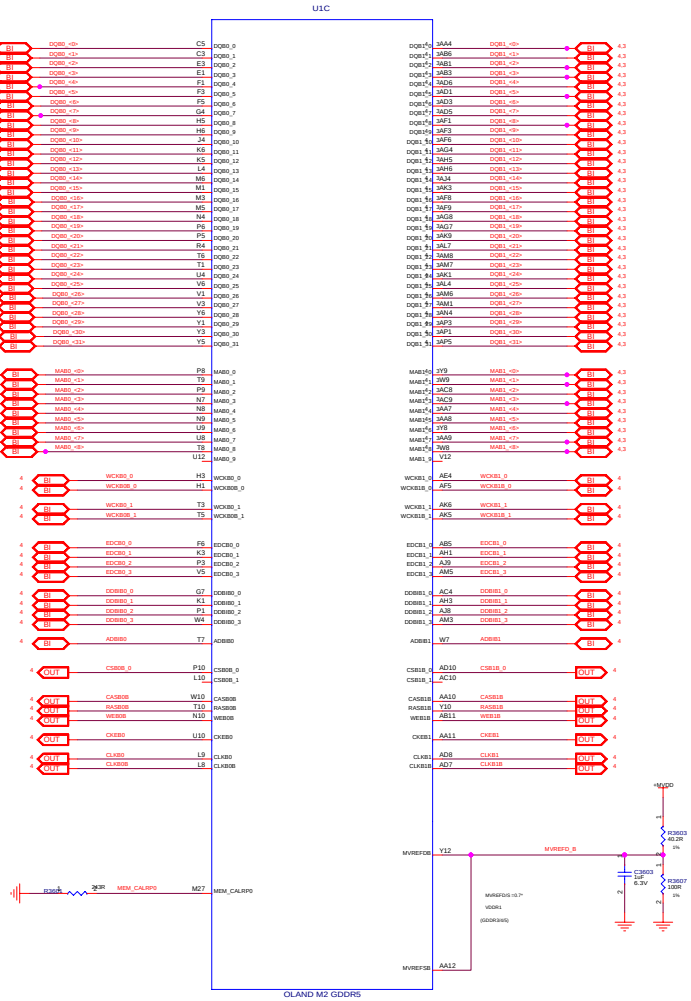

AMD - PLATFORM HARDWARE ENG #48, No. 1387, ZHANGDONG ROAD SHANGHAI, CHINA 201203	
SHEET: VDDCI	
DATE: Tue Sep 22 06:32:59 2015	REV: 2.0
SHEET NUMBER: 03 OF 20	
DOCUMENT NUMBER: 105-C869xx-00B	
NOTES: NOTE	

CONFIDENTIAL AND PROPRIETARY TO ADVANCED MICRO DEVICES INC.
© <COPYRIGHT> Advanced Micro Devices
This AMD Board schematic and design is the exclusive property of AMD, and is provided only to entities under a non-disclosure agreement with AMD for evaluation purposes. Further distribution or disclosure is strictly prohibited. Use of this schematic and design for any purpose other than evaluation requires a Board Technology License Agreement with AMD. AMD makes no representations or warranties of any kind regarding this schematic and design, including, not limited to, any implied warranty of merchantability or fitness for a particular purpose, and disclaims responsibility for any consequences resulting from use of the information included herein.

TITLE: Oland G5 2GB VGA/sDVI-I+HDMI/DP

(4) GDDR5 Memory Channel A&B

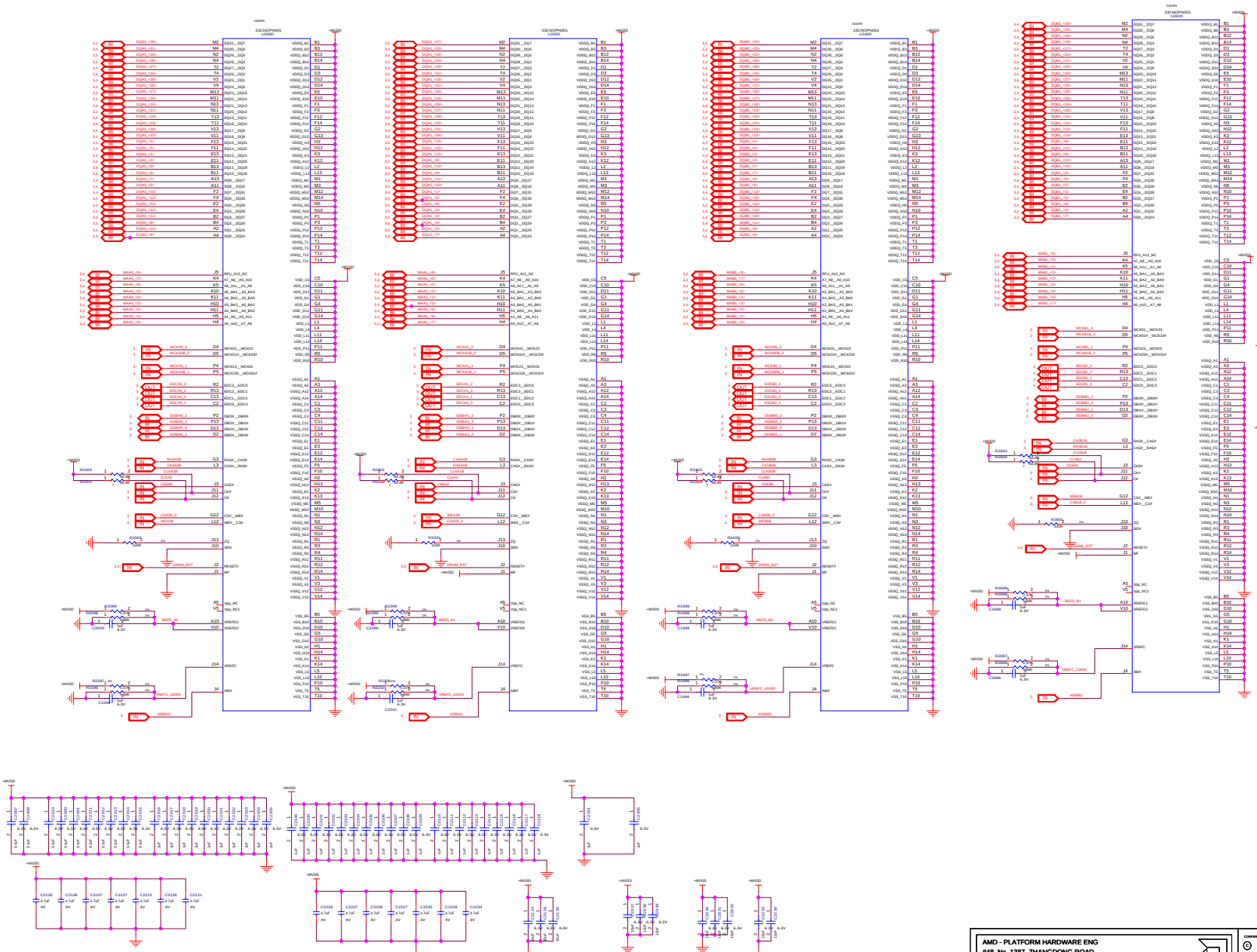

AMD - PLATFORM HARDWARE ENG #48, No. 1387, ZHANGDONG ROAD SHANGHAI, CHINA 201203	
SHEET: VDDCI	
DATE: Tue Sep 22 06:32:59 2015	REV: 2.0
SHEET NUMBER: 04 OF 20	
DOCUMENT NUMBER: 105-C869xx-00B	
NOTES: NOTE	

CONFIDENTIAL AND PROPRIETARY TO ADVANCED MICRO DEVICES INC.

© <COPYRIGHT> Advanced Micro Devices

This AMD Board schematic and design is the exclusive property of AMD, and is provided only to entities under a non-disclosure agreement with AMD for evaluation purposes. Further distribution or disclosure is strictly prohibited. Use of this schematic and design for any purpose other than evaluation requires a Board Technology License Agreement with AMD. AMD makes no representations or warranties of any kind regarding this schematic and design, including, not limited to, any implied warranty of merchantability or fitness for a particular purpose, and disclaims responsibility for any consequences resulting from use of the information included herein.

TITLE: Oland G5 2GB VGA/sDVI-I+HDMI/DP

OLAND GPIOs Strap CF XTAL OSC

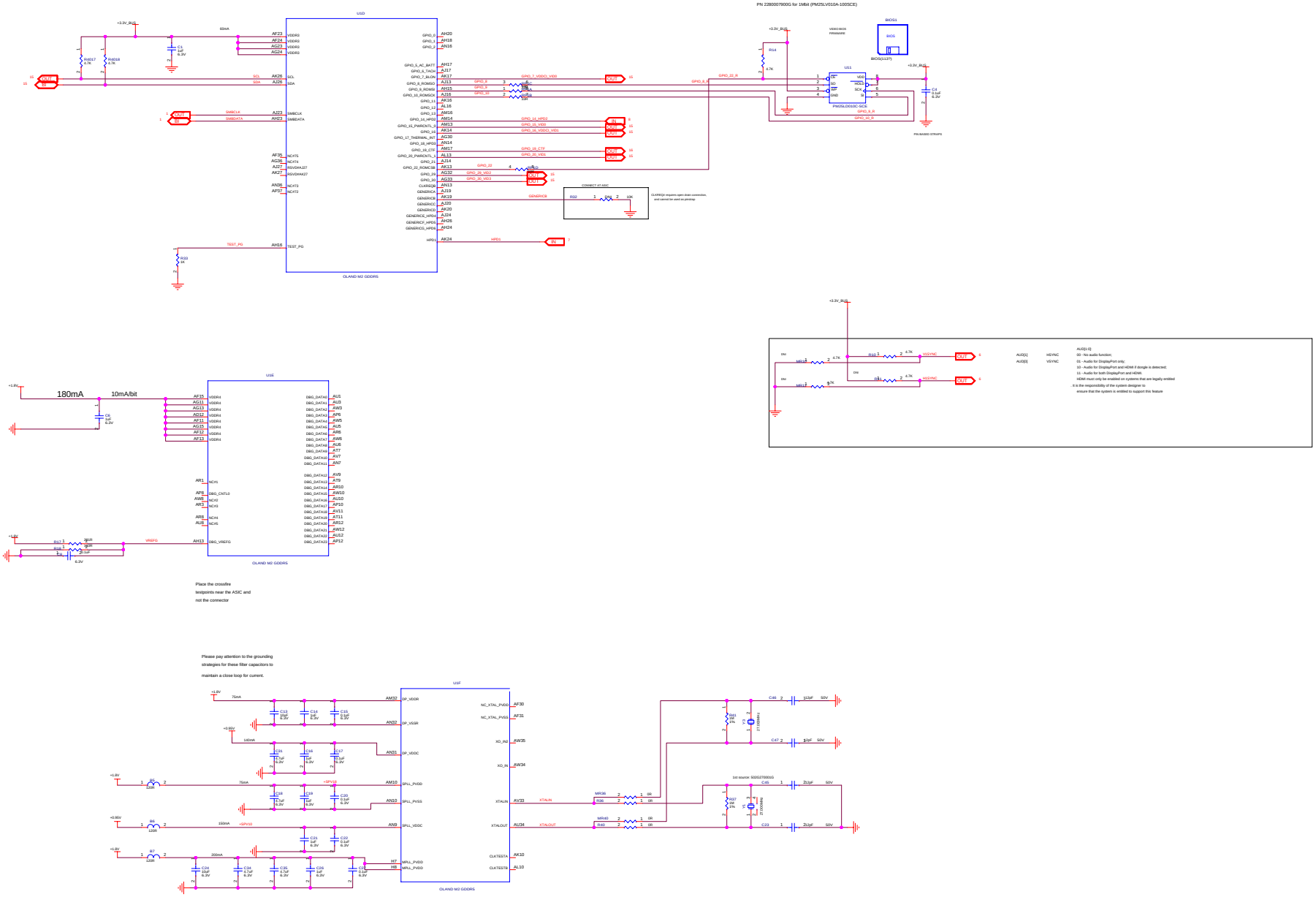

AMD - PLATFORM HARDWARE ENG #48, No. 1387, ZHANGDONG ROAD SHANGHAI, CHINA 201203	CONFIDENTIAL AND PROPRIETARY TO ADVANCED MICRO DEVICES INC. © <COPYRIGHT> Advanced Micro Devices The AMD Board schematic and design is the exclusive property of AMD, and is provided only to entities under a non-disclosure agreement with AMD for evaluation purposes. Further distribution or disclosure is strictly prohibited. Use of this schematic and design for any purpose other than evaluation requires a Board Technology License Agreement with AMD. AMD makes no representations or warranties of any kind regarding this schematic and design, including, not limited to, any implied warranty of merchantability or fitness for a particular purpose, and disclaims responsibility for any consequences resulting from use of the information included herein.
SHEET: Oland GPIO STRAP PLL	
DATE: Mon Sep 21 10:05:39 2015 REV: 2.0	
SHEET NUMBER: 5 OF 20	TITLE: Oland G5 2GB VGA/sDVI-I+HDMI/DP
DOCUMENT NUMBER: 105-C869xx-00B	
NOTES: NOTE:	

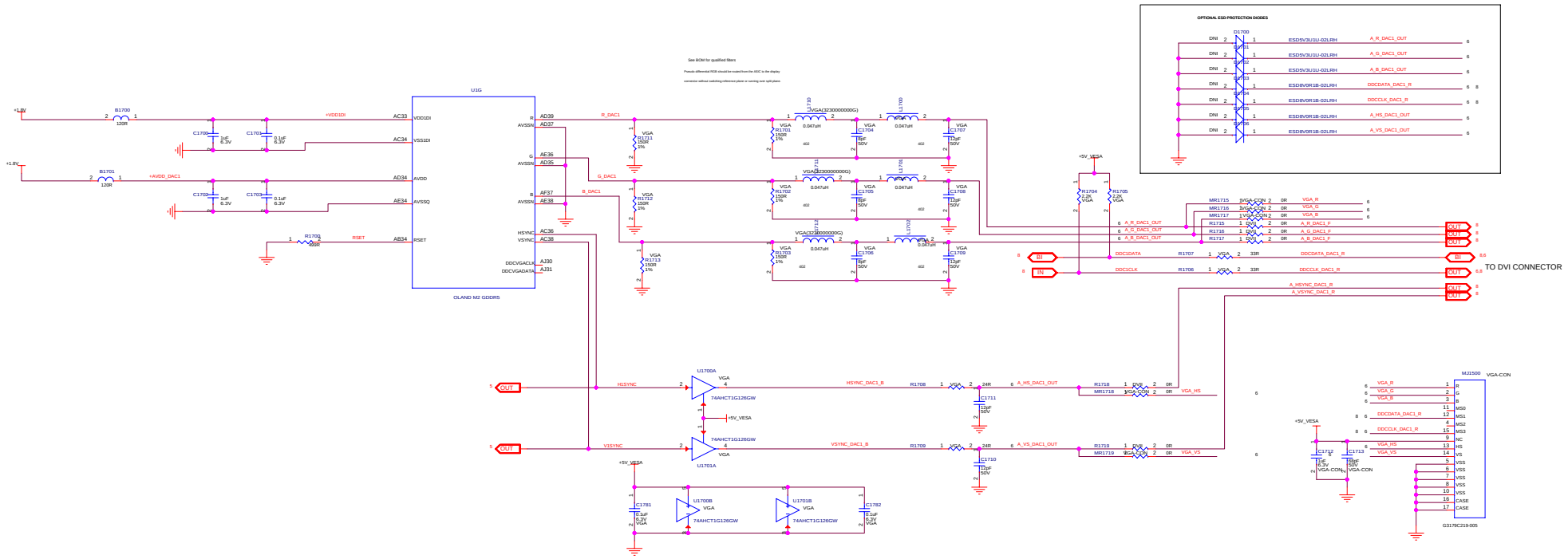

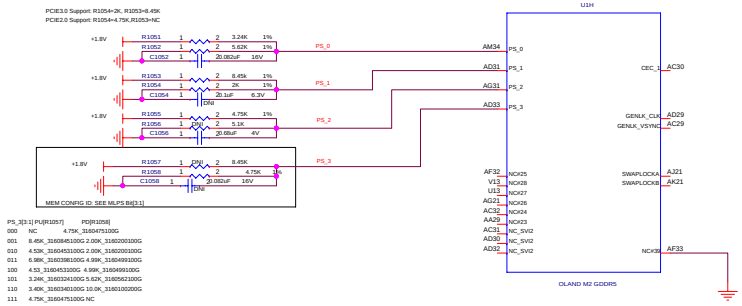

PS_3[3:1] PU[R1057] PD[R1058]

000	NC	4.75K	3160475100G
001	8.45K	3160845100G	2.00K 3160200100G
010	4.53K	3160453100G	2.00K 3160200100G
011	6.98K	3160698100G	4.99K 3160499100G
100	4.53	3160453100G	4.99K 3160499100G
101	3.24K	3160324100G	5.62K 3160562100G
110	3.40K	3160340100G	10.0K 3160100200G
111	4.75K	3160475100G	NC

AMD - PLATFORM HARDWARE ENG #48, No. 1387, ZHANGDONG ROAD SHANGHAI, CHINA 201203	
SHEET: Oland DAC and MLPS	
DATE: Tue Sep 22 06:32:58 2015	REV: 2.0
SHEET NUMBER: 6 OF 20	
DOCUMENT NUMBER: 105-C869xx-00B	
NOTES: NOTE	

CONFIDENTIAL, AMD PROPRIETARY TO ADVANCED MICRO DEVICES INC.

© <COPYRIGHT> Advanced Micro Devices

This AMD Board schematic and design is the exclusive property of AMD, and is provided only to entities under a non-disclosure agreement with AMD for evaluation purposes. Further distribution or disclosure is strictly prohibited. Use of this schematic and design for any purpose other than evaluation requires a Board Technology License Agreement with AMD. AMD makes no representations or warranties of any kind regarding this schematic and design, including, not limited to, any implied warranty of merchantability or fitness for a particular purpose, and disclaims responsibility for any consequences resulting from use of the information included herein.

TITLE: Oland G5 2GB VGA/sDVI-I+HDMI/DP

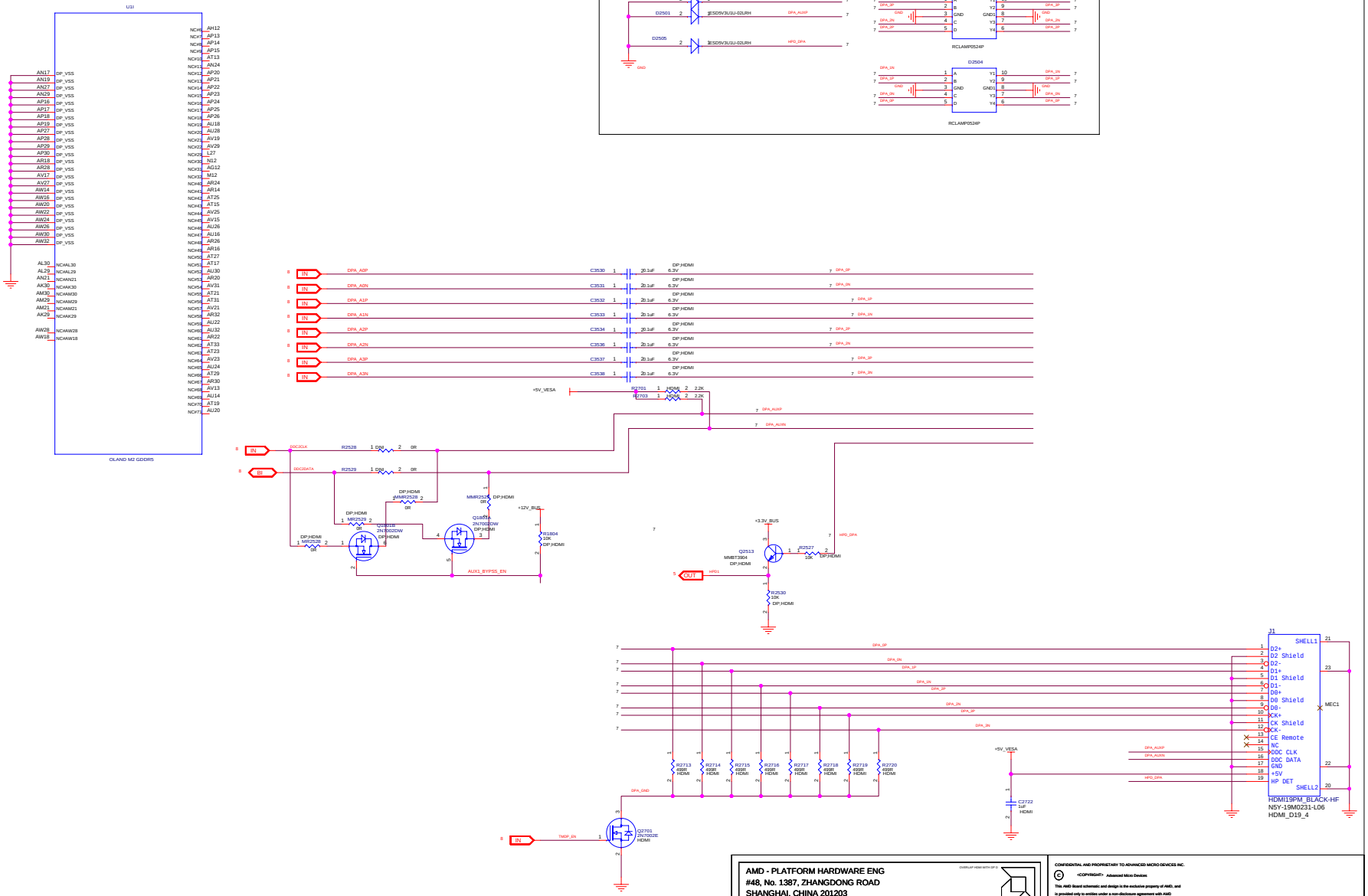

AMD - PLATFORM HARDWARE ENG
#48, No. 1387, ZHANGDONG ROAD
SHANGHAI, CHINA 201203

SHEET:	HDMI		
DATE:	Tue Sep 22 06:32:59 2015	REV:	2.0
SHEET NUMBER:	7 OF 20		
DOCUMENT NUMBER:	105-C869xx-00B		
NOTES:	NOTE		

CONFIDENTIAL AND PROPRIETARY TO ADVANCED MICRO DEVICES INC.
<COPYRIGHT> Advanced Micro Devices
This AMD Board schematic and design is the exclusive property of AMD, and is provided only to entities under a non-disclosure agreement with AMD for evaluation purposes. Further distribution or disclosure is strictly prohibited. Use of this schematic and design for any purpose other than evaluation requires a Board Technology License Agreement with AMD. AMD makes no representations or warranties of any kind regarding this schematic and design, including, not limited to, any implied warranty of merchantability or fitness for a particular purpose, and disclaims responsibility for any consequences resulting from use of the information included herein.

TITLE:
Oland G5 2GB VGA/sDVI-I+HDMI/DP

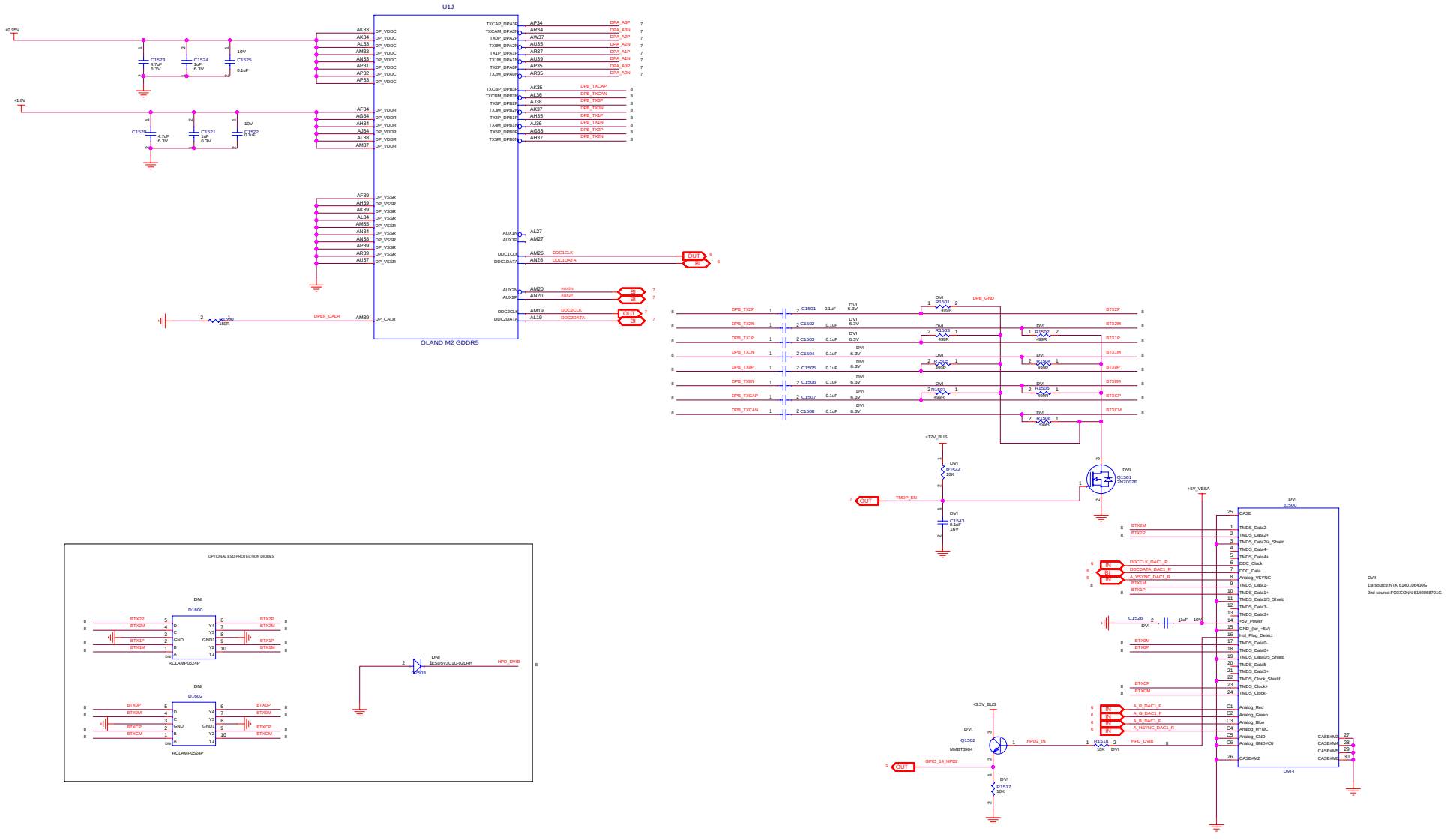

AMD - PLATFORM HARDWARE ENG
#48, No. 1387, ZHANGDONG ROAD
SHANGHAI, CHINA 201203

SHEET:	Oland TMDP sDVI		
DATE:	Mon Sep 21 10:05:46 2015	REV:	2.0
SHEET NUMBER:	8 OF 20		
DOCUMENT NUMBER:	105-C869xx-00B		

CONFIDENTIAL AND PROPRIETARY TO ADVANCED MICRO DEVICES INC.

© <COPYRIGHT> Advanced Micro Devices

This AMD Board schematic and design is the exclusive property of AMD, and is provided only to entities under a non-disclosure agreement with AMD for evaluation purposes. Further distribution or disclosure is strictly prohibited. Use of this schematic and design for any purpose other than evaluation requires a Board Technology License Agreement with AMD. AMD makes no representations or warranties of any kind regarding this schematic and design, including, not limited to, any implied warranty of merchantability or fitness for a particular purpose, and disclaims responsibility for any consequences resulting from use of the information included herein.

TITLE: Oland G5 2GB VGA/sDVI-I+HDMI/DP

OLAND Power & GND

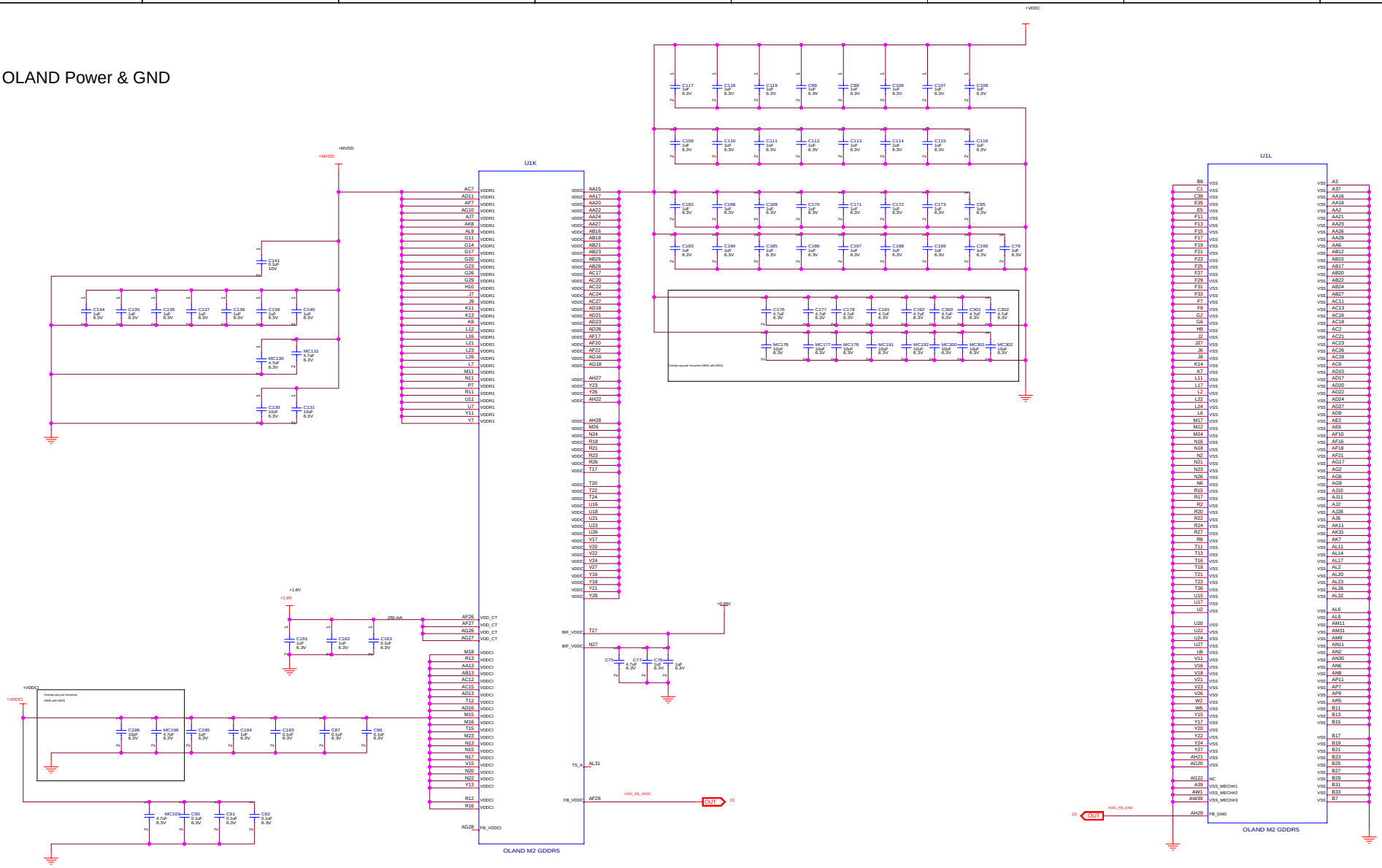

AMD - PLATFORM HARDWARE ENG #48, No. 1387, ZHANGDONG ROAD SHANGHAI, CHINA 201203	
SHEET: Oland Power&GND	
DATE: Mon Sep 21 10:05:46 2015	REV: 2.0
SHEET NUMBER: 9 OF 20	
DOCUMENT NUMBER: 105-C869xx-00B	

CONFIDENTIAL AND PROPRIETARY TO ADVANCED MICRO DEVICES INC.

© <COPYRIGHT> Advanced Micro Devices

This AMD Board schematic and design is the exclusive property of AMD, and is provided only to entities under a non-disclosure agreement with AMD for evaluation purposes. Further distribution or disclosure is strictly prohibited. Use of this schematic and design for any purpose other than evaluation requires a Board Technology License Agreement with AMD. AMD makes no representations or warranties of any kind regarding this schematic and design, including, not limited to, any implied warranty of merchantability or fitness for a particular purpose, and disclaims responsibility for any consequences resulting from use of the information included herein.

TITLE: Oland G5 2GB VGA/sDVI-I+HDMI/DP

Linear Regulators

LDO #1: Vin = +1.5V +/-2% Vout = +0.95V +/- 2%; Iout = 1.44A (TBV) RMS MAX

PCB: 50 to 70mm sq. copper area for cooling

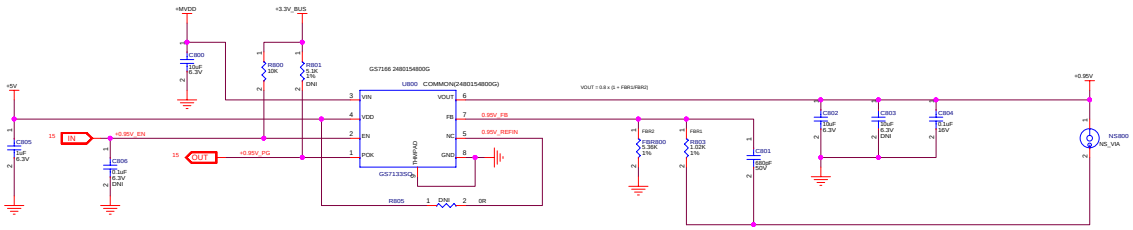

AMD - PLATFORM HARDWARE ENG #48, No. 1387, ZHANGDONG ROAD SHANGHAI, CHINA 201203	CONFIDENTIAL AND PROPRIETARY TO ADVANCED MICRO DEVICES INC. © <COPYRIGHT> Advanced Micro Devices This AMD Board schematic and design is the exclusive property of AMD, and is provided only to entities under a non-disclosure agreement with AMD for evaluation purposes. Further distribution or disclosure is strictly prohibited. Use of this schematic and design for any purpose other than evaluation requires a Board Technology License Agreement with AMD. AMD makes no representations or warranties of any kind regarding this schematic and design, including, not limited to, any implied warranty of merchantability or fitness for a particular purpose, and disclaims responsibility for any consequences resulting from use of the information included herein.
SHEET: 0.95V	
DATE: Mon Sep 21 10:05:44 2015 REV: 2.0	
SHEET NUMBER: 10 OF 20	TITLE: Oland G5 2GB VGA/sDVI-I+HDMI/DP
DOCUMENT NUMBER: 105-C869xx-00B	

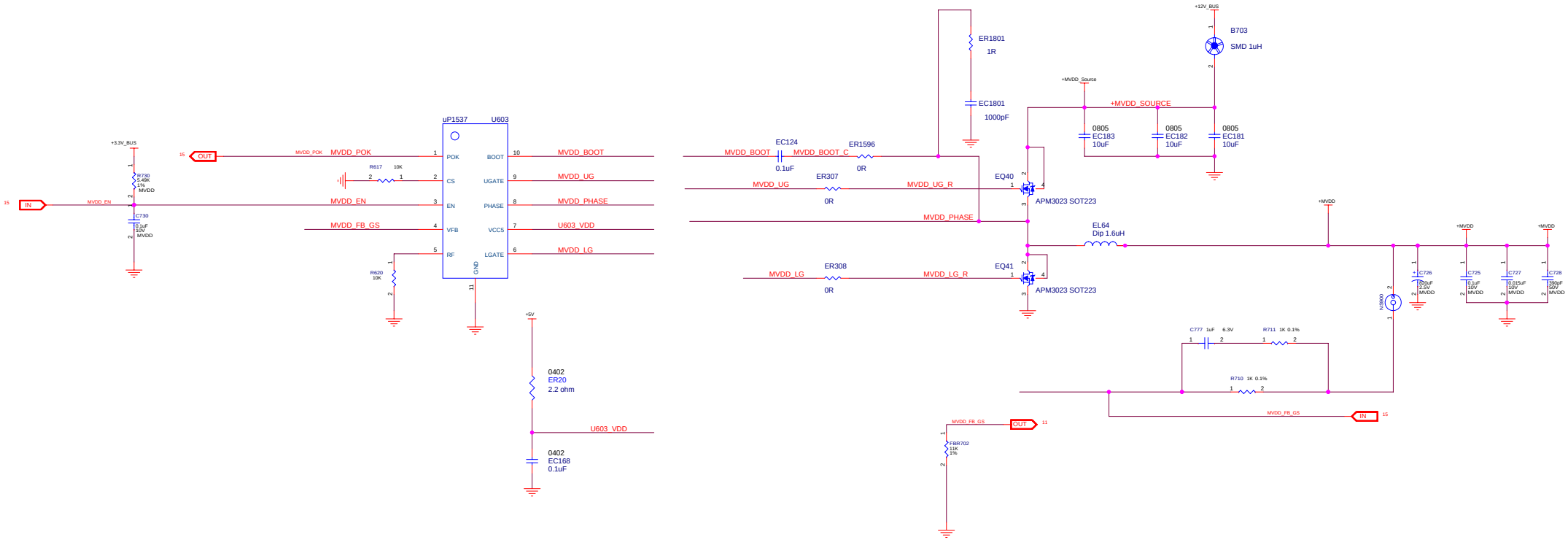

AMD - PLATFORM HARDWARE ENG #48, No. 1387, ZHANGDONG ROAD SHANGHAI, CHINA 201203	CONFIDENTIAL AND PROPRIETARY TO ADVANCED MICRO DEVICES INC. © <COPYRIGHT> Advanced Micro Devices This AMD Board schematic and design is the exclusive property of AMD, and is provided only to entities under a non-disclosure agreement with AMD for evaluation purposes. Further distribution or disclosure is strictly prohibited. Use of this schematic and design for any purpose other than evaluation requires a Board Technology License Agreement with AMD. AMD makes no representations or warranties of any kind regarding this schematic and design, including, not limited to, any implied warranty of merchantability or fitness for a particular purpose, and disclaims responsibility for any consequences resulting from use of the information included herein.
SHEET: MVDD	
DATE: Tue Sep 22 06:32:59 2015 REV: 2.0	
SHEET NUMBER: 11 OF 20	TITLE: Oland G5 2GB VGA/sDVI-I+HDMI/DP
DOCUMENT NUMBER: 105-C869xx-00B	
NOTES: NOTE	

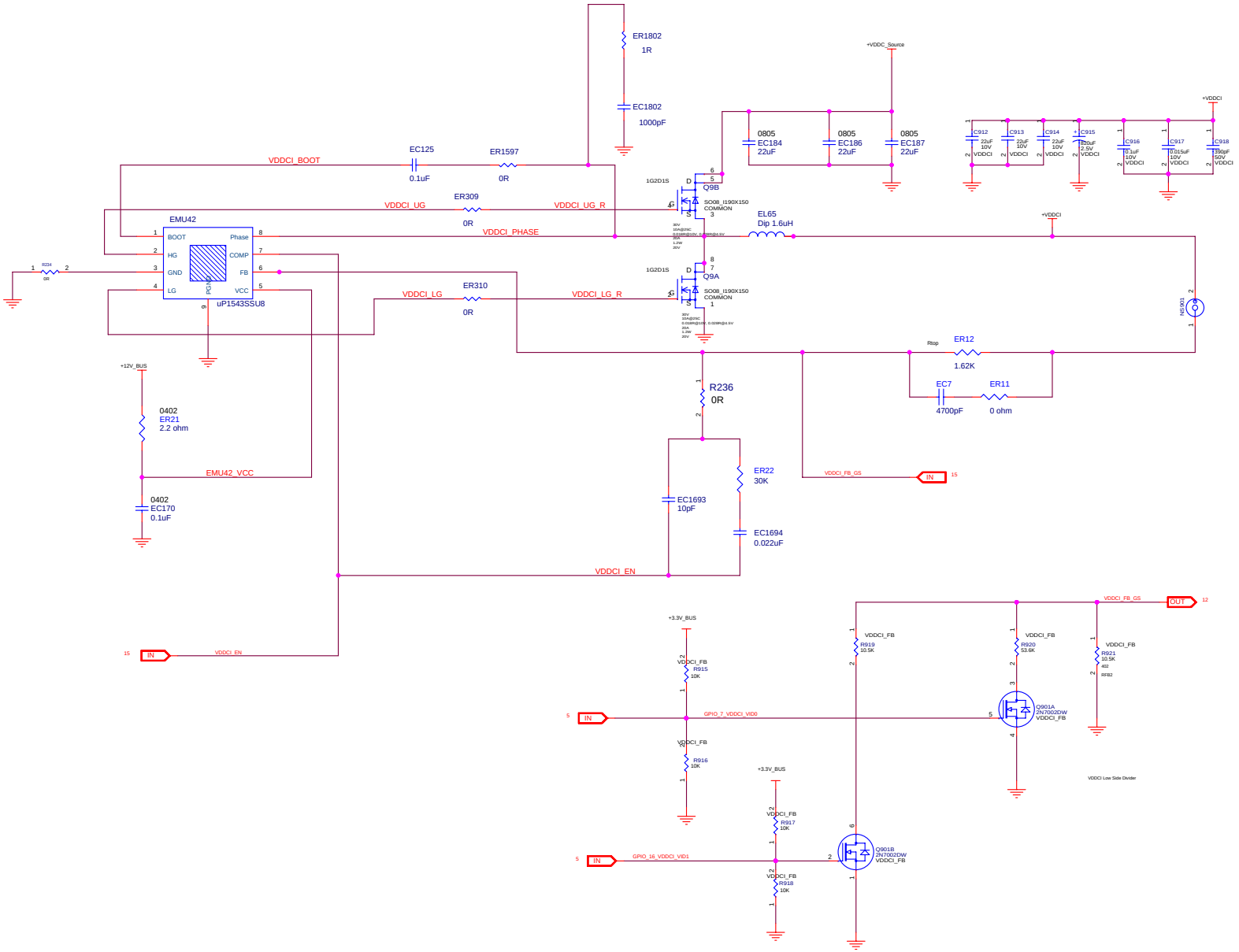

AMD - PLATFORM HARDWARE ENG
#48, No. 1387, ZHANGDONG ROAD
SHANGHAI, CHINA 201203

SHEET:	VDDCI
DATE:	Tue Sep 22 06:32:59 2015
REV:	2.0
SHEET NUMBER:	12 OF 20
DOCUMENT NUMBER:	105-C869ox-00B
NOTES:	NOTE

CONFIDENTIAL AND PROPRIETARY TO ADVANCED MICRO DEVICES INC.

© <COPYRIGHT> Advanced Micro Devices

This AMD Board schematic and design is the exclusive property of AMD, and is provided only to entities under a non-disclosure agreement with AMD for evaluation purposes. Further distribution or disclosure is strictly prohibited. Use of this schematic and design for any purpose other than evaluation requires a Board Technology License Agreement with AMD. AMD makes no representations or warranties of any kind regarding this schematic and design, including, not limited to, any implied warranty of merchantability or fitness for a particular purpose, and disclaims responsibility for any consequences resulting from use of the information included herein.

TITLE:

Oland G5 2GB VGA/sDVI-I+HDMI/DP

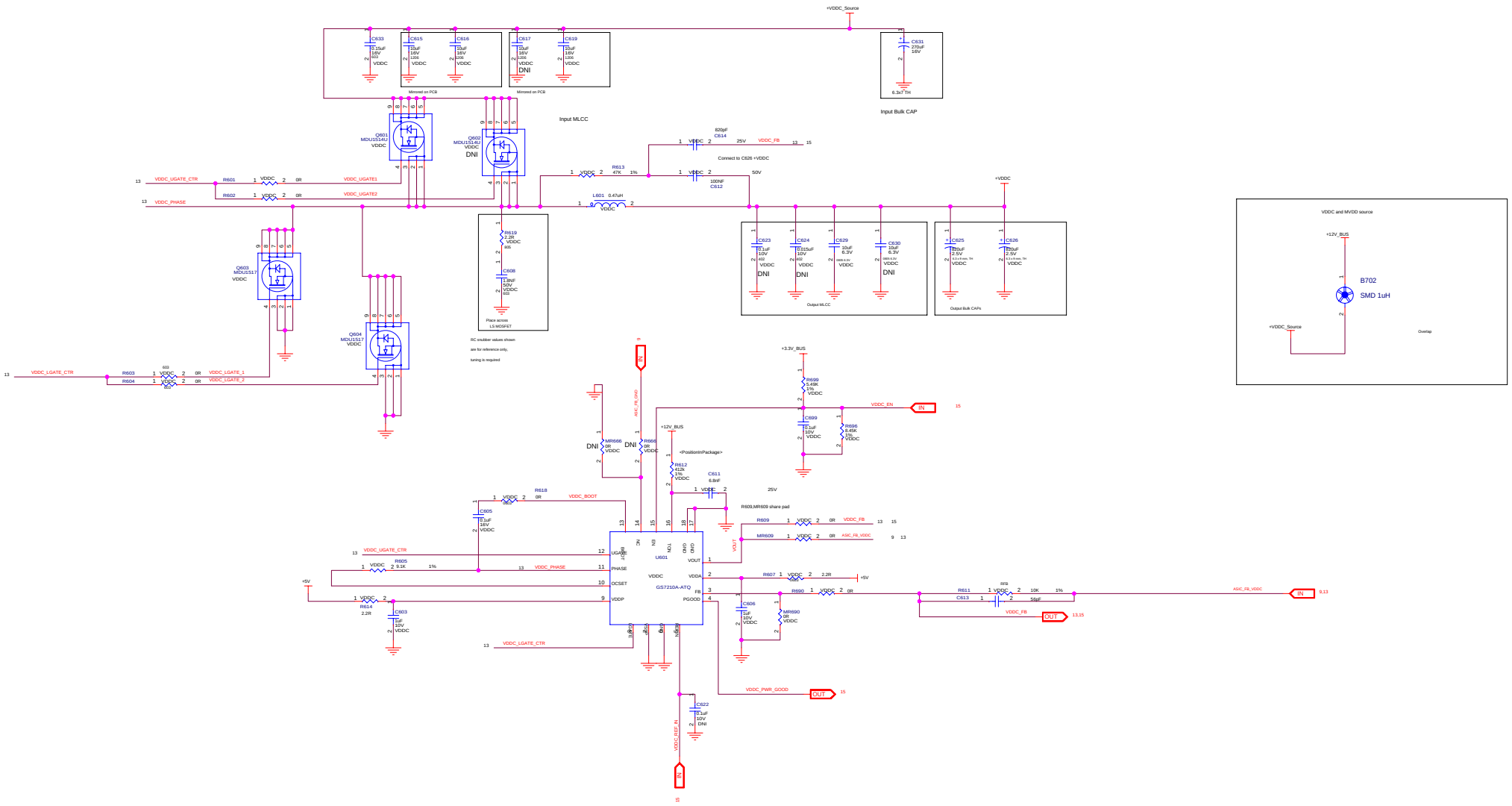

AMD - PLATFORM HARDWARE ENG **#48, No. 1387, ZHANGDONG ROAD** **SHANGHAI, CHINA 201203**	CONFIDENTIAL AND PROPRIETARY TO ADVANCED MICRO DEVICES INC. © <COPYRIGHT> Advanced Micro Devices This AMD Board schematic and design is the exclusive property of AMD, and is provided only to entities under a non-disclosure agreement with AMD for evaluation purposes. Further distribution or disclosure is strictly prohibited. Use of this schematic and design for any purpose other than evaluation requires a Board Technology License Agreement with AMD. AMD makes no representations or warranties of any kind regarding this schematic and design, including, not limited to, any implied warranty of merchantability or fitness for a particular purpose, and disclaims responsibility for any consequences resulting from use of the information included herein.
SHEET: VDDC	
DATE: Tue Sep 22 06:32:59 2015 — **REV:** 2.0	
SHEET NUMBER: 13 OF 20	**TITLE:** Oland G5 2GB VGA/sDVI-I+HDMI/DP
DOCUMENT NUMBER: 105-C869xx-00B	
NOTES: NOTE	

Linear Regulators

LDO #2:	Vin = 3.00V to 3.60V (3.3V +/- 9%)	Vout = +1.8V +/- 2%;	Iout = 1.6A (TBV) RMS MAX
	PCB: 50 to 70mm sq. copper area for cooling		

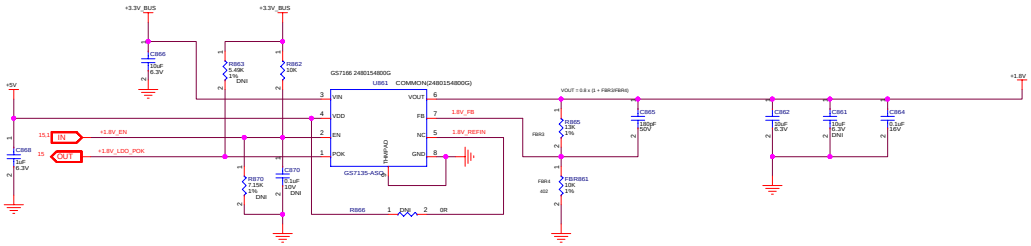

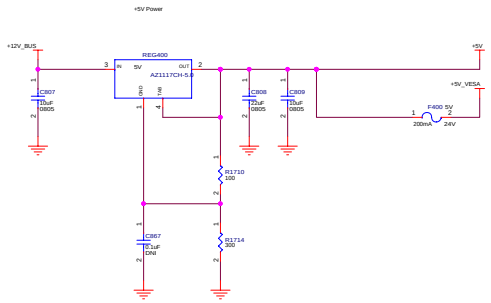

AMD - PLATFORM HARDWARE ENG #48, No. 1387, ZHANGDONG ROAD SHANGHAI, CHINA 201203	
SHEET: VDDCI	
DATE: Tue Sep 22 06:32:59 2015	REV: 2.0
SHEET NUMBER: 14 OF 20	
DOCUMENT NUMBER: 105-C869xx-00B	
NOTES: NOTE	

CONFIDENTIAL AND PROPRIETARY TO ADVANCED MICRO DEVICES INC.

© <COPYRIGHT> Advanced Micro Devices

This AMD Board schematic and design is the exclusive property of AMD, and is provided only to entities under a non-disclosure agreement with AMD for evaluation purposes. Further distribution or disclosure is strictly prohibited. Use of this schematic and design for any purpose other than evaluation requires a Board Technology License Agreement with AMD. AMD makes no representations or warranties of any kind regarding this schematic and design, including, not limited to, any implied warranty of merchantability or fitness for a particular purpose, and disclaims responsibility for any consequences resulting from use of the information included herein.

TITLE:

Oland G5 2GB VGA/sDVI-I+HDMI/DP

Power Management - Power Gating and Dynamic Voltage Control

POWER SEQUENCE
+1.8V-2.8ms->MVDD-3.4ms->0.95V-4.3ms->VDDC

0.95V must ramp up before VDDC

Don't support BACO
Support CTF(Internal)

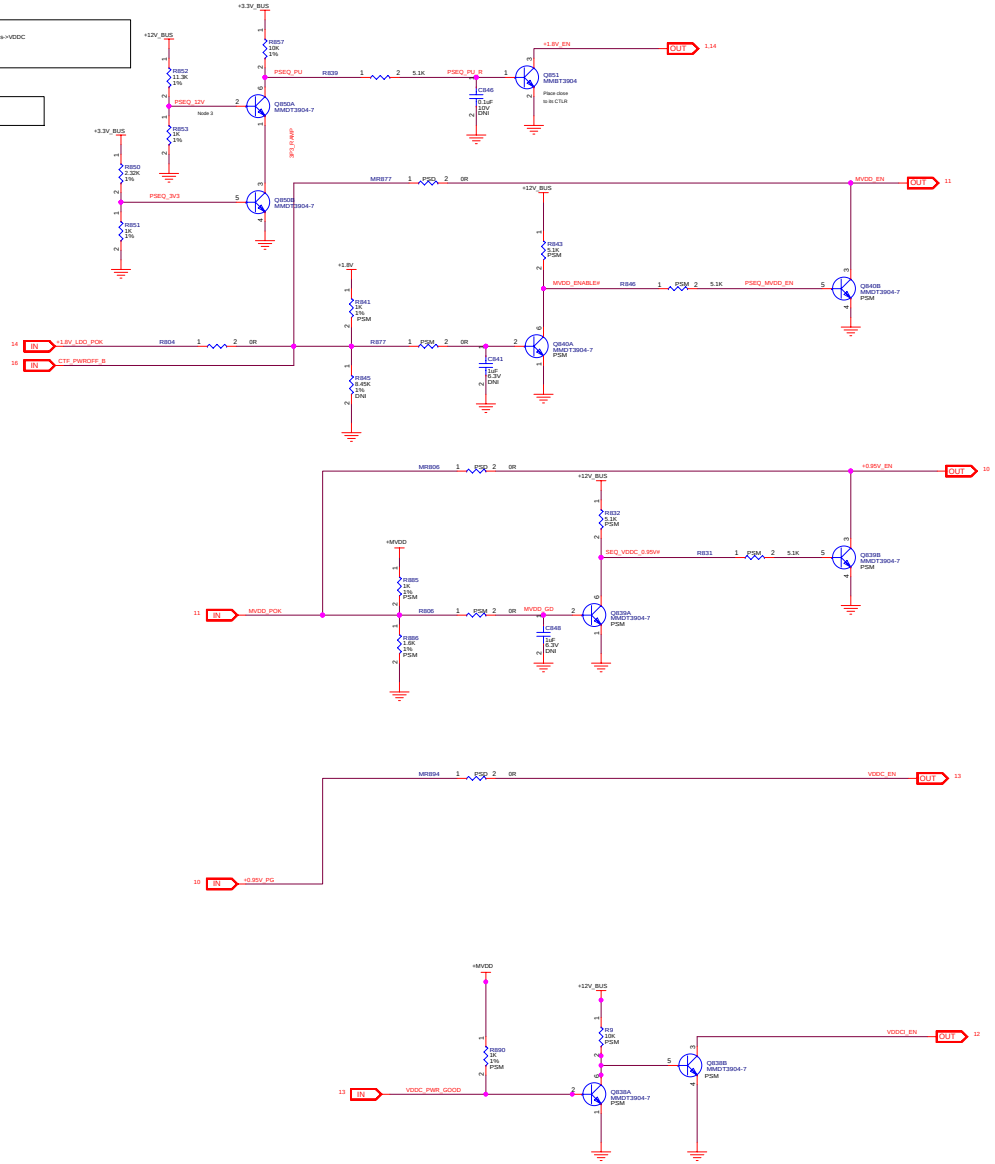

VDDC Low Side Divider

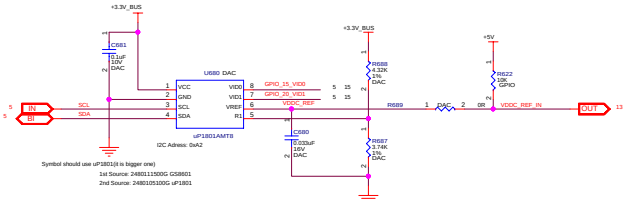

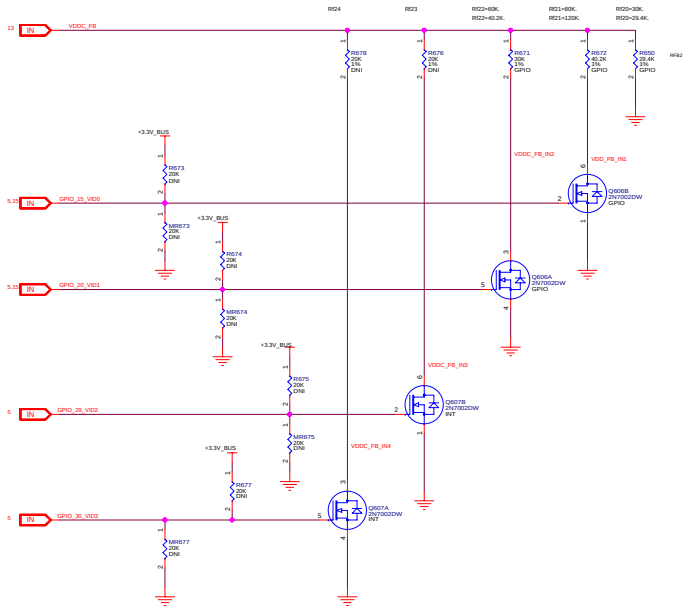

AMD - PLATFORM HARDWARE ENG #48, No. 1387, ZHANGDONG ROAD SHANGHAI, CHINA 201203	
SHEET: VDDC	
DATE: Tue Sep 22 06:32:59 2015	REV: 2.0
SHEET NUMBER: 15 OF 20	
DOCUMENT NUMBER: 105-C869xx-00B	
NOTES: NOTE	

CONFIDENTIAL AND PROPRIETARY TO ADVANCED MICRO DEVICES INC.

© <COPYRIGHT> Advanced Micro Devices

This AMD Board schematic and design is the exclusive property of AMD, and is provided only to entities under a non-disclosure agreement with AMD for evaluation purposes. Further distribution or disclosure is strictly prohibited. Use of this schematic and design for any purpose other than evaluation requires a Board Technology License Agreement with AMD. AMD makes no representations or warranties of any kind regarding this schematic and design, including, not limited to, any implied warranty of merchantability or fitness for a particular purpose, and disclaims responsibility for any consequences resulting from use of the information included herein.

TITLE: Oland G5 2GB VGA/sDVI-I+HDMI/DP

Mechanical and Thermal Management

Install R4520	GPIO6 is 0: Fan stop GPIO6 is PWM: Fan running
Install R4516 Q4511,R4519	GPIO6 is 1: Fan stop GPIO6 is PWM: Fan running

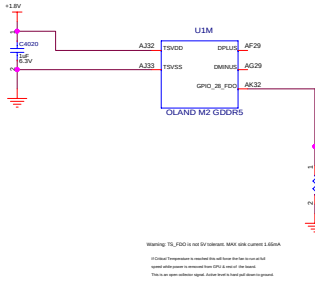

Critial Temperature Fault

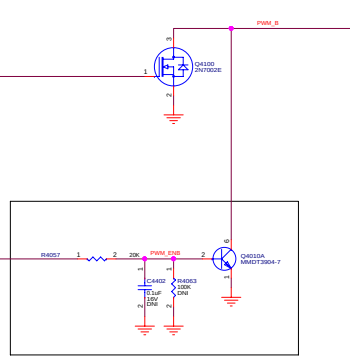

Critial Temperature Fault

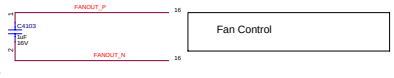

Fan Control

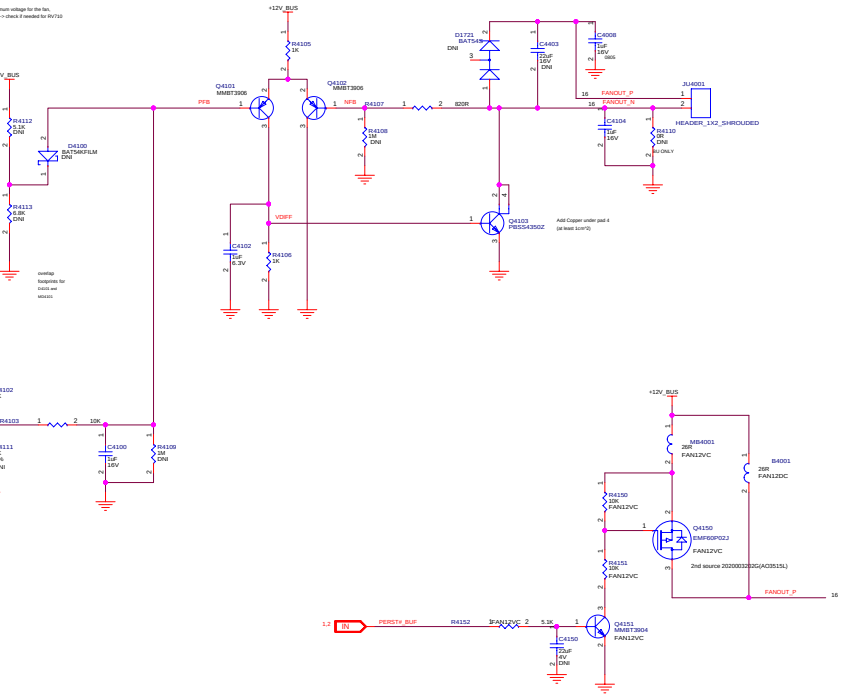

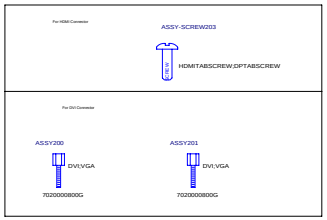

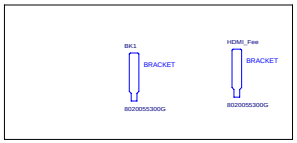

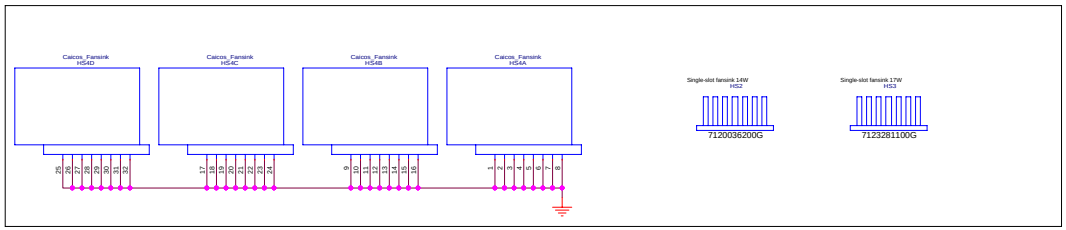

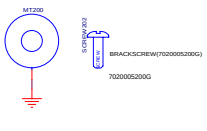

Bracket, VGA, HDMI, DVI	8020055200G
Bracket, VGA, DP(tab), DVI	80200552A0G
Bracket, LP, DP(tab), DVI	8020055300G
Bracket, LP, HDMI, DVI	80200553A0G

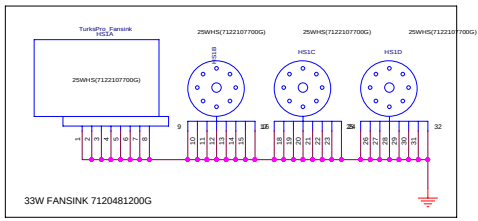

AMD - PLATFORM HARDWARE ENG
#48, No. 1387, ZHANGDONG ROAD
SHANGHAI, CHINA 201203

SHEET:	Mech/Thermal Management		
DATE:	Mon Sep 21 10:05:42 2015	REV:	2.0
SHEET NUMBER:	16 OF 20		
DOCUMENT NUMBER:	105-C869xx-00B		

CONFIDENTIAL AND PROPRIETARY TO ADVANCED MICRO DEVICES INC.
© <COPYRIGHT> Advanced Micro Devices
This AMD Board schematic and design is the exclusive property of AMD, and is provided only to entities under a non-disclosure agreement with AMD for evaluation purposes. Further distribution or disclosure is strictly prohibited. Use of this schematic and design for any purpose other than evaluation requires a Board Technology License Agreement with AMD. AMD makes no representations or warranties of any kind regarding this schematic and design, including, not limited to, any implied warranty of merchantability or fitness for a particular purpose, and disclaims responsibility for any consequences resulting from use of the information included herein.

TITLE: Oland G5 2GB VGA/sDVI-I+HDMI/DP

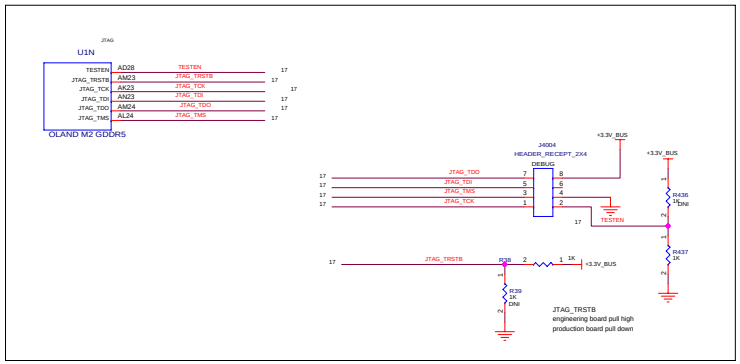

TOP
Single end
RGB
50 ohm +/- 10%
4.02 mils

Bottom
Single end
Address trunk
37 ohm +/- 5 ohm
7.05mils

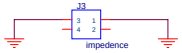

TOP
Different
TMDS
85 ohm +/- 10 %
4.33 mils / 5.511 mils

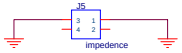

Bottom
Different
PEX_PCIE
85 ohm +/- 10 %
4.33 mils / 5.51 mils

L3_INNER
Single end
Memory data
45 ohm +/- 5 ohm
6.89 mils

L4_INNER
Single end
Memory data
45 ohm +/- 5 ohm
6.89 mils

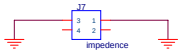

L3_INNER
Different
TMDS
85 ohm +/- 10 %
4.33 mils / 5.511 mils

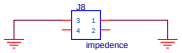

L4_INNER
Different
Mem Clock
80 ohm +/- 10 %
5.12 mils / 7.48 mils

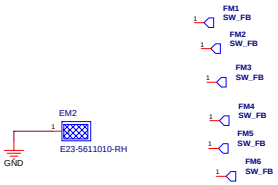

AMD - PLATFORM HARDWARE ENG
#48, No. 1387, ZHANGDONG ROAD
SHANGHAI, CHINA 201203

SHEET:	VDDCI
DATE:	Tue Sep 22 06:32:59 2015
REV:	2.0
SHEET NUMBER:	17 OF 20
DOCUMENT NUMBER:	105-C869xx-00B
NOTES:	NOTE

CONFIDENTIAL AND PROPRIETARY TO ADVANCED MICRO DEVICES INC.
© <COPYRIGHT> Advanced Micro Devices
This AMD Board schematic and design is the exclusive property of AMD, and is provided only to entities under a non-disclosure agreement with AMD for evaluation purposes. Further distribution or disclosure is strictly prohibited. Use of this schematic and design for any purpose other than evaluation requires a Board Technology License Agreement with AMD. AMD makes no representations or warranties of any kind regarding this schematic and design, including, not limited to, any implied warranty of merchantability or fitness for a particular purpose, and disclaims responsibility for any consequences resulting from use of the information included herein.

TITLE:
Oland G5 2GB VGA/sDVI-I+HDMI/DP

DVI-I	HPD4	DDC/AUX4
HDMI	HPD1	DDC/AUX1
DP	HPD3	DDC/AUX5

GPIO15	VDDC_VID0	
GPIO20	VDDC_VID1	
GPIO7	VDDCI_VID	DEFAULT 1
GPIO5	VR_HOT	

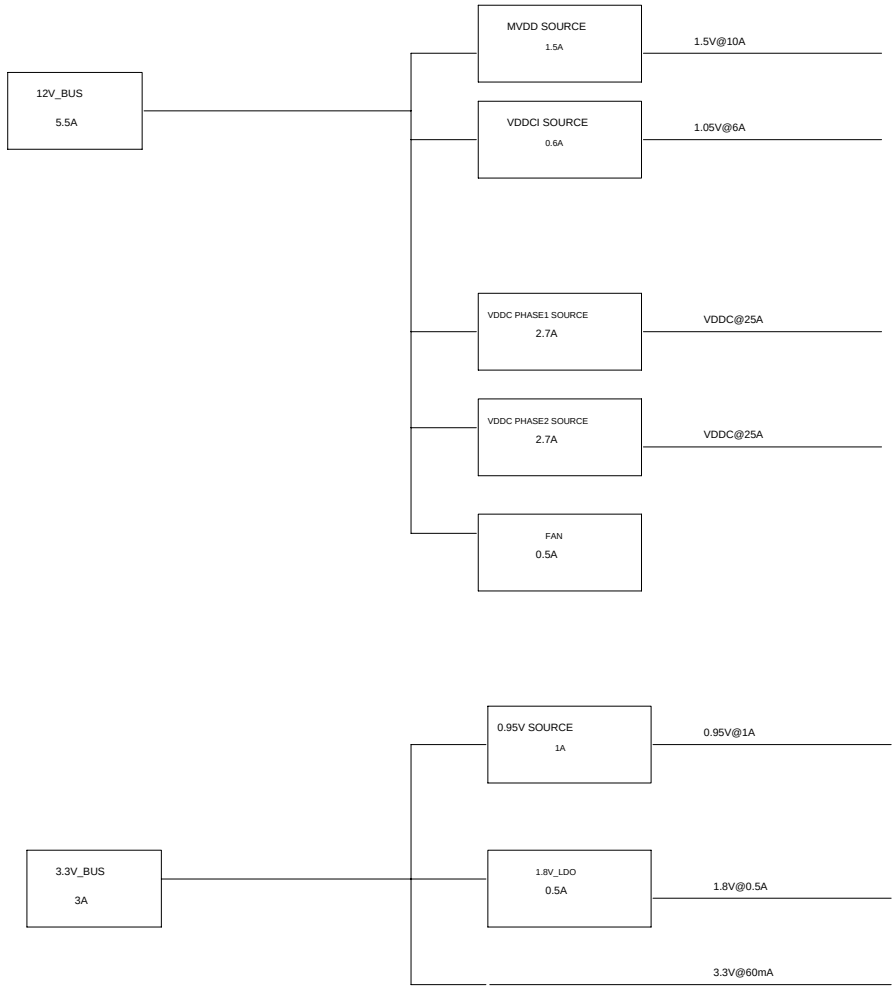

AMD - PLATFORM HARDWARE ENG
#48, No. 1387, ZHANGDONG ROAD
SHANGHAI, CHINA 201203

SHEET: GPIO DDC HPD map

DATE: Tue Sep 22 06:32:59 2015 REV: 2.0

SHEET NUMBER: 18 OF 20

DOCUMENT NUMBER: 105-C869xx-00B

NOTES: NOTE

CONFIDENTIAL AND PROPRIETARY TO ADVANCED MICRO DEVICES INC.

© <COPYRIGHT> Advanced Micro Devices

This AMD Board schematic and design is the exclusive property of AMD, and is provided only to entities under a non-disclosure agreement with AMD for evaluation purposes. Further distribution or disclosure is strictly prohibited. Use of this schematic and design for any purpose other than evaluation requires a Board Technology License Agreement with AMD. AMD makes no representations or warranties of any kind regarding this schematic and design, including, not limited to, any implied warranty of merchantability or fitness for a particular purpose, and disclaims responsibility for any consequences resulting from use of the information included herein.

TITLE:

Oland G5 2GB VGA/sDVI-I+HDMI/DP

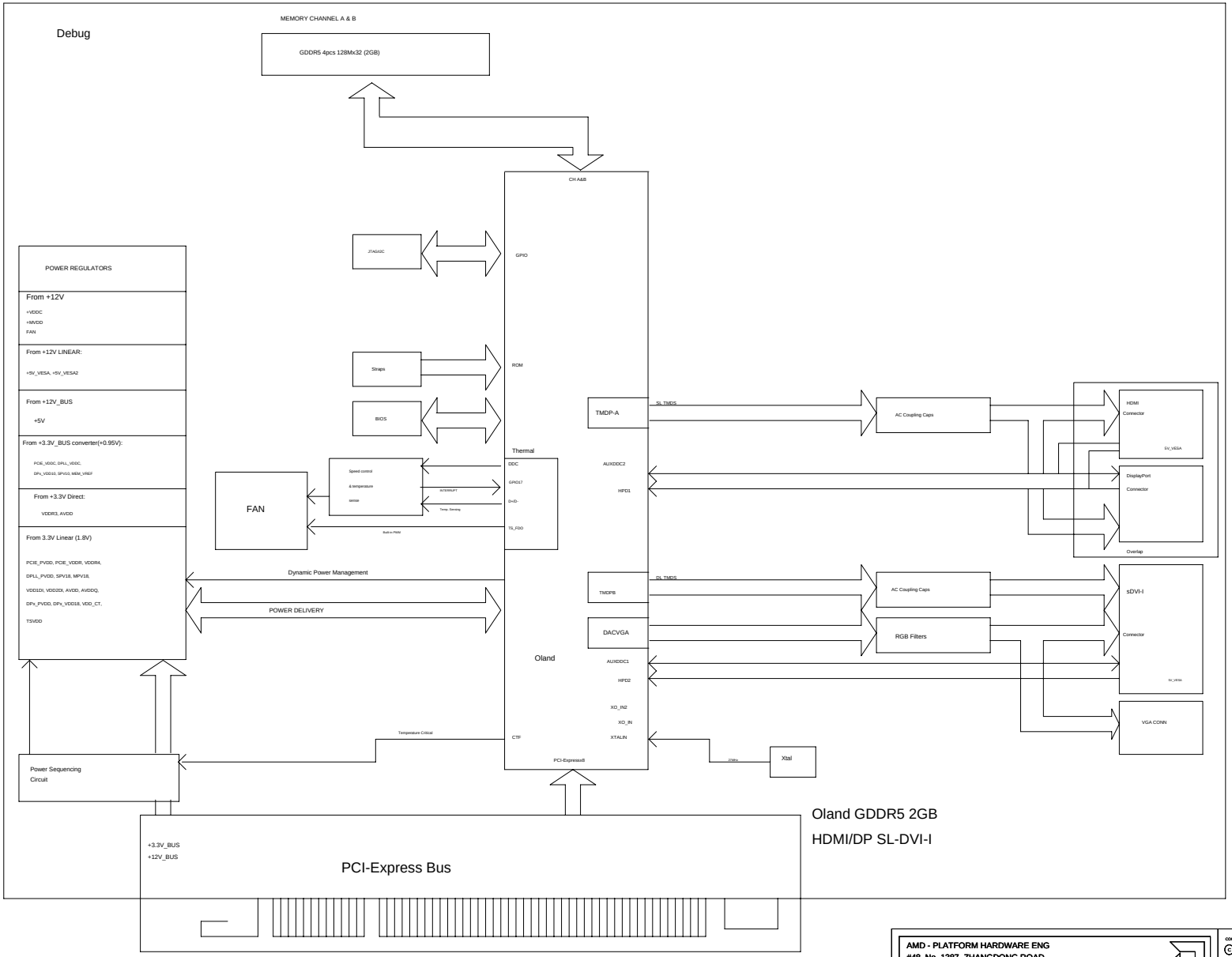

AMD - PLATFORM HARDWARE ENG
#48, No. 1387, ZHANGDONG ROAD
SHANGHAI, CHINA 201203

SHEET:	BLOCK DIAGRAM
DATE:	Fri Sep 18 08:34:41 2015
REV:	2.0
SHEET NUMBER:	19 OF 20
DOCUMENT NUMBER:	105-C869xx-00B

CONFIDENTIAL AND PROPRIETARY TO ADVANCED MICRO DEVICES INC.
© <COPYRIGHT> Advanced Micro Devices
This AMD Board schematic and design is the exclusive property of AMD, and is provided only to entities under a non-disclosure agreement with AMD for evaluation purposes. Further distribution or disclosure is strictly prohibited. Use of this schematic and design for any purpose other than evaluation requires a Board Technology License Agreement with AMD. AMD makes no representations or warranties of any kind regarding this schematic and design, including, not limited to, any implied warranty of merchantability or fitness for a particular purpose, and disclaims responsibility for any consequences resulting from use of the information included herein.

TITLE:
Oland G5 2GB VGA/sDVI-I+HDMI/DP

AMD	TITLE: Oland G5 2GB VGA/sDVI-I+HDMI/DP	DOCUMENT NUMBER: 105-C869xx-00B	DATE: Tue Sep 22 02:20:17 2015	SHEET NUMBER: 20 OF 20	REV: 2.0

REVISION HISTORY

ENGINEER: Tony Yang

NOTES: NOTE

CONFIDENTIAL AND PROPRIETARY TO ADVANCED MICRO DEVICES INC.
This AMD Board schematic and design is the exclusive property of AMD, and is provided only to entities under a non-disclosure agreement with AMD for evaluation purposes. Further distribution or disclosure is strictly prohibited. Use of this schematic and design for any purpose other than evaluation requires a Board Technology Licence Agreement with AMD. AMD makes no representations or warranties of any kind regarding this schematic and design, including, not limited to, any implied warranty of merchantability or fitness for a particular purpose, and disclaims responsibility for any consequences resulting from use of the information included herein.

C <COPYRIGHT>Advanced Micro Devices

AMD - PLATFORM HARDWARE ENG
#48, No. 1387, ZHANGDONG ROAD
SHANGHAI, CHINA 201203

SCH Rev	PCB Rev	Date	REVISION DESCRIPTON
1.00	00A	04/15/14	1. Initial release
2.00	00B	09/22/15	2. Add VGA, etc