PCI-EXPRESS EDGE CONNECTOR

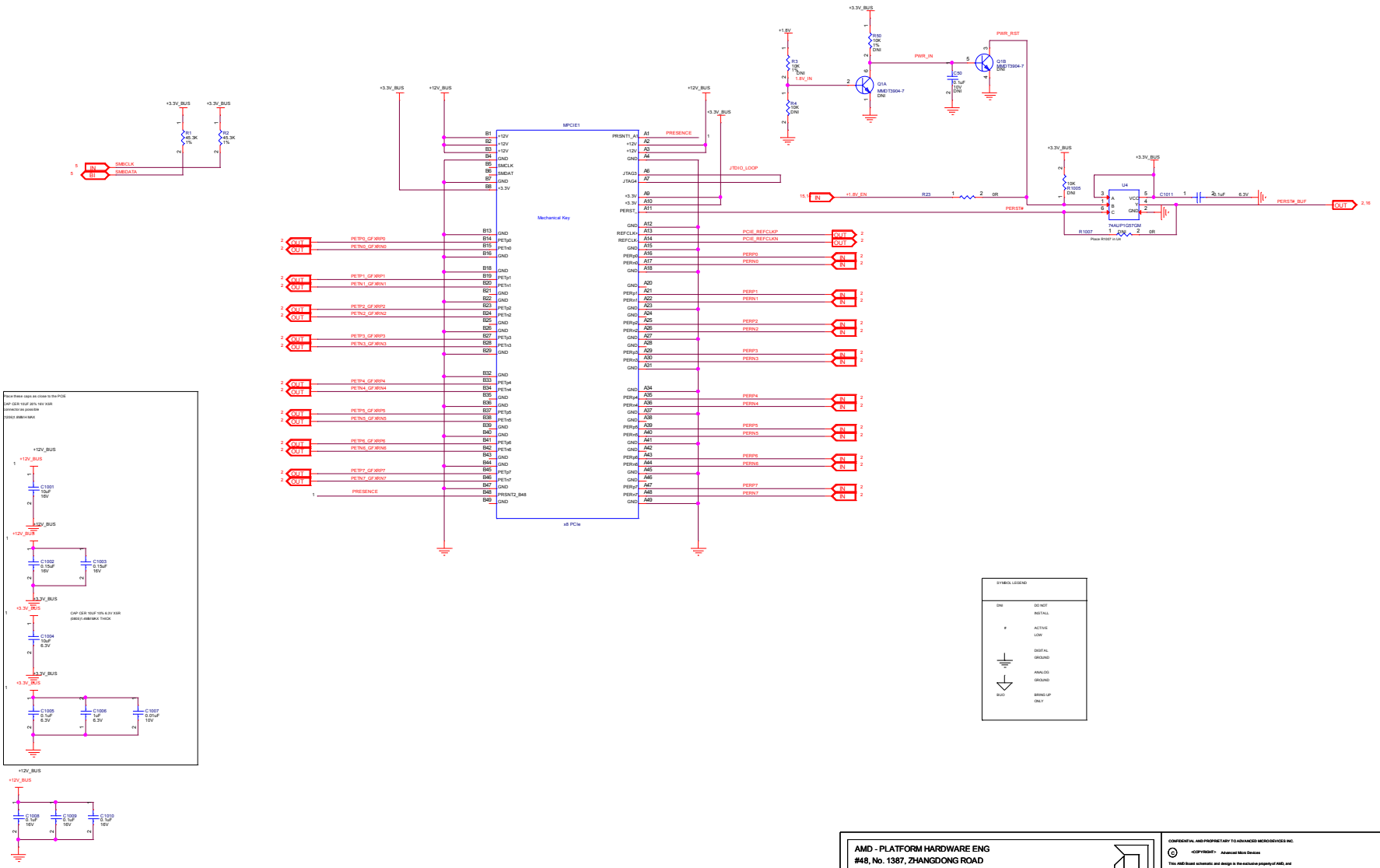

SYMBOL LEGEND

DNI	DO NOT INSTALL
#	ACTIVE LOW
	DIGITAL GROUND
	ANALOG GROUND
BUO	BRING UP ONLY

AMD - PLATFORM HARDWARE ENG
#48, No. 1387, ZHANGDONG ROAD
SHANGHAI, CHINA 201203

SHEET:	PCI-E Edge Connector
DATE:	Tue Sep 22 06:34:19 2015
REV:	2.0
SHEET NUMBER:	1 OF 20
DOCUMENT NUMBER:	105-C869xx-00B

CONFIDENTIAL AND PROPRIETARY TO ADVANCED MICRO DEVICES INC.

© <COPYRIGHT> Advanced Micro Devices

This AMD Board schematic and design is the exclusive property of AMD, and is provided only to entities under a non-disclosure agreement with AMD for evaluation purposes. Further distribution or disclosure is strictly prohibited. Use of this schematic and design for any purpose other than evaluation requires a Board Technology License Agreement with AMD. AMD makes no representations or warranties of any kind regarding this schematic and design, including, not limited to, any implied warranty of merchantability or fitness for a particular purpose, and disclaims responsibility for any consequences resulting from use of the information included herein.

TITLE: Oland G5 2GB VGA/sDVI-I-HDMI/DP

Oland PCIe Interface

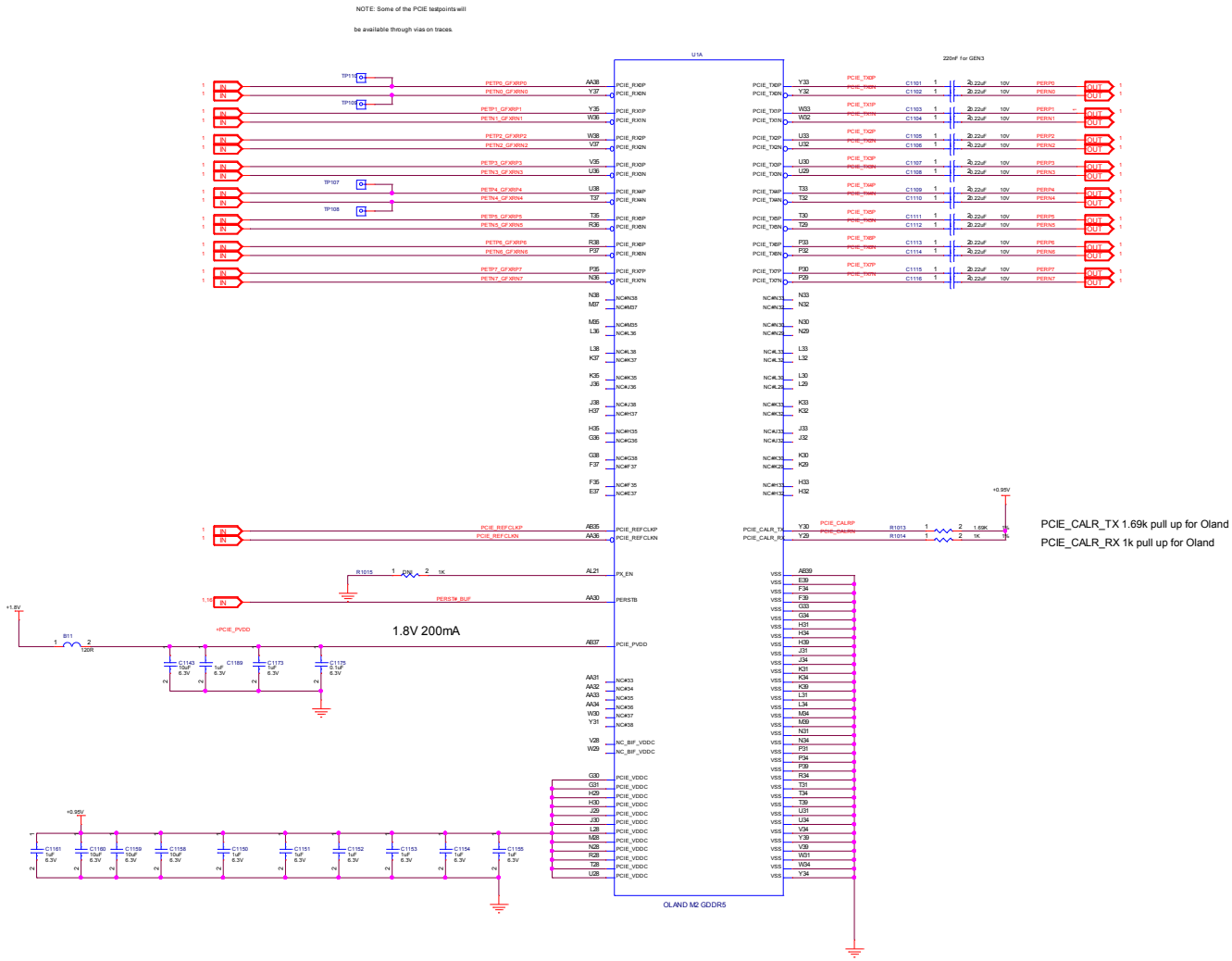

AMD - PLATFORM HARDWARE ENG
#48, No. 1387, ZHANGDONG ROAD
SHANGHAI, CHINA 201203

SHEET: Oland PCIE Interface

DATE: Mon Sep 21 10:05:43 2015 REV: 2.0

SHEET NUMBER: 2 OF 20

DOCUMENT NUMBER: 105-C869xx-00B

CONFIDENTIAL AND PROPRIETARY TO ADVANCED MICRO DEVICES INC.

© <COPYRIGHT> Advanced Micro Devices

This AMD Board schematic and design is the exclusive property of AMD, and is provided only to entities under a non-disclosure agreement with AMD for evaluation purposes. Further distribution or disclosure is strictly prohibited. Use of this schematic and design for any purpose other than evaluation requires a Board Technology License Agreement with AMD. AMD makes no representations or warranties of any kind regarding this schematic and design, including, not limited to, any implied warranty of merchantability or fitness for a particular purpose, and disclaims responsibility for any consequences resulting from use of the information included herein.

TITLE: Oland G5 2GB VGA/sDVI-I-HDMI/DP

(3) Oland MEM Interface Ch A&B

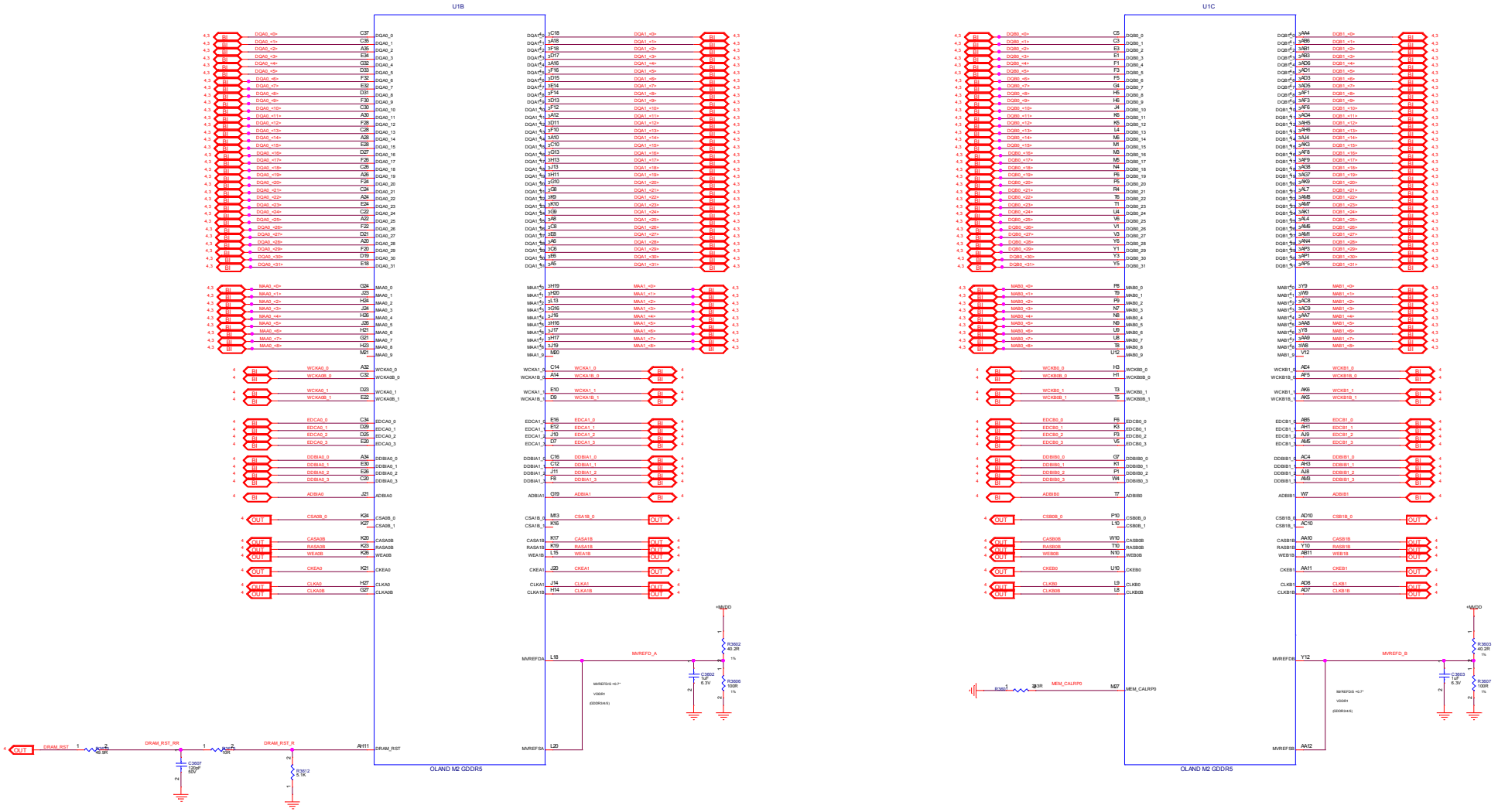

AMD - PLATFORM HARDWARE ENG #48, No. 1387, ZHANGDONG ROAD SHANGHAI, CHINA 201203	
SHEET: Oland MEMORY INTERFACE	
DATE: Mon Sep 21 10:05:45 2015	REV: 2.0
SHEET NUMBER: 3 OF 20	
DOCUMENT NUMBER: 105-C869xx-00B	TITLE: Oland G5 2GB VGA/sDVI-I-HDMI/DP

CONFIDENTIAL AND PROPRIETARY TO ADVANCED MICRO DEVICES INC.

© <COPYRIGHT> Advanced Micro Devices

This AMD Board schematic and design is the exclusive property of AMD, and is provided only to entities under a non-disclosure agreement with AMD for evaluation purposes. Further distribution or disclosure is strictly prohibited. Use of this schematic and design for any purpose other than evaluation requires a Board Technology License Agreement with AMD. AMD makes no representations or warranties of any kind regarding this schematic and design, including, not limited to, any implied warranty of merchantability or fitness for a particular purpose, and disclaims responsibility for any consequences resulting from use of the information included herein.

(6) GDDR5 Memory Channel A&B

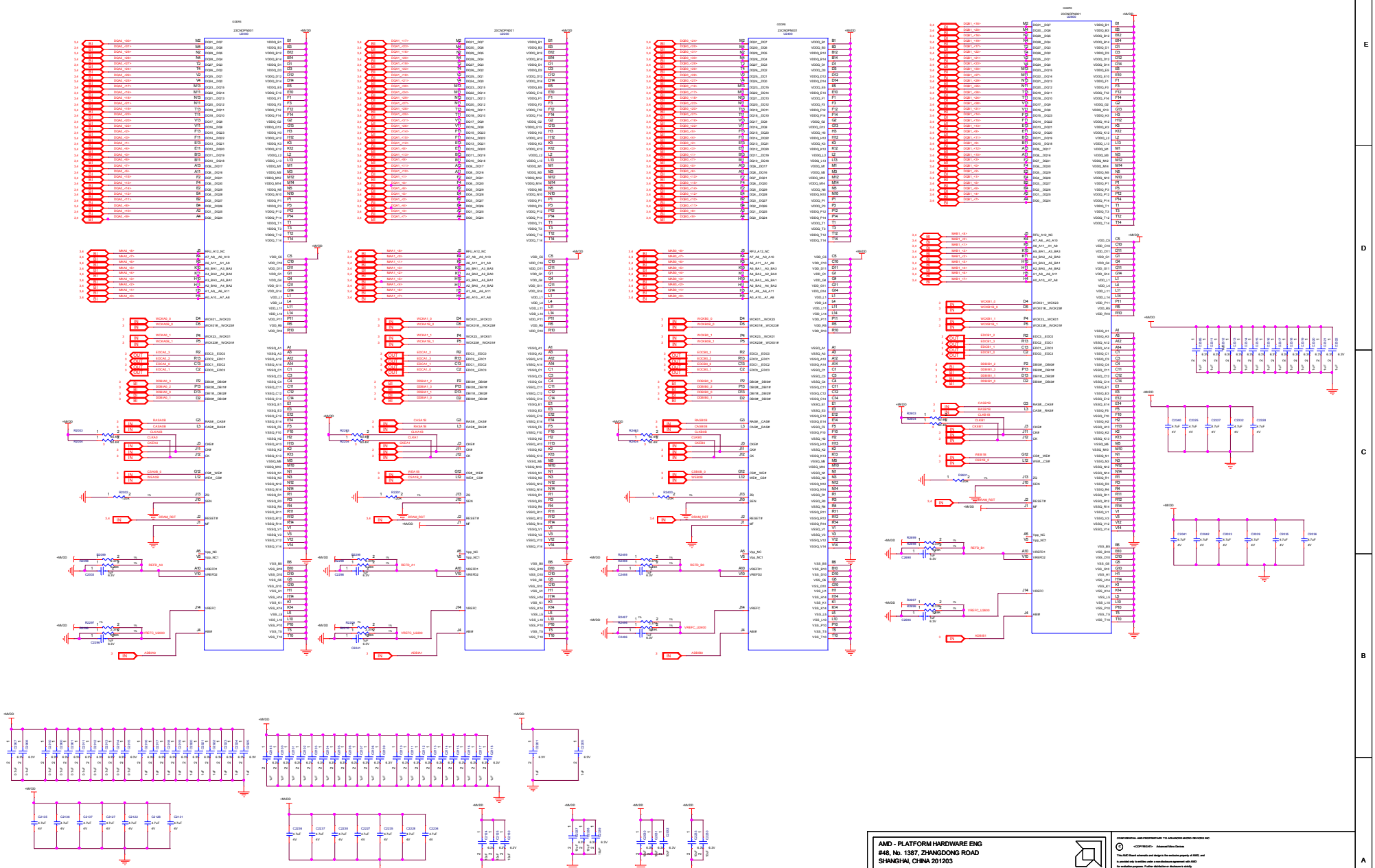

AMD - PLATFORM HARDWARE ENG #48, No. 1387, ZHANGDONG ROAD SHANGHAI, CHINA 201203	
SHEET: GDDR6 CHA&B	
DATE: Tue Sep 22 06:32:57 2015	REV: 2.0
SHEET NUMBER: 4 OF 20	
DOCUMENT NUMBER: 105-C869xx-00B	
NOTES: NOTE	

CONFIDENTIAL AND PROPRIETARY TO ADVANCED MICRO DEVICES INC.

© <COPYRIGHT> - Advanced Micro Devices

This AMD Board schematic and design is the exclusive property of AMD, and is provided only to entities under a non-disclosure agreement with AMD for evaluation purposes. Further distribution or disclosure is strictly prohibited. Use of this schematic and design for any purpose other than evaluation requires a Board Technology License Agreement with AMD. AMD makes no representations or warranties of any kind regarding this schematic and design, including, not limited to, any implied warranty of merchantability, or fitness for a particular purpose, and disclaims responsibility for any consequences resulting from use of the information included herein.

TITLE: Oland G5 2GB VGA/sDVI-I+HDMI/DP

OLAND GPIOs Strap CF XTAL OSC

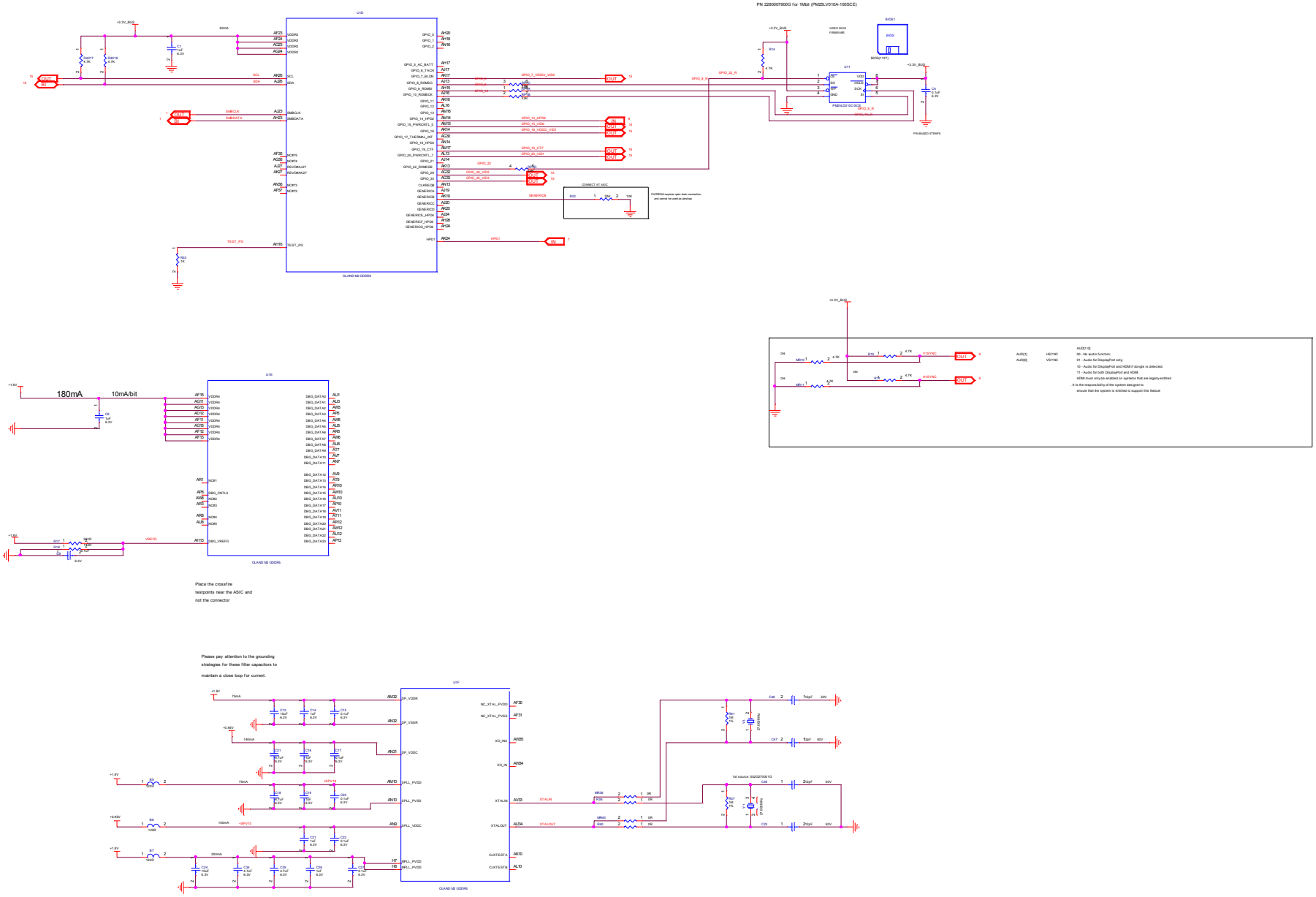

AMD - PLATFORM HARDWARE ENG #48, No. 1387, ZHANGDONG ROAD SHANGHAI, CHINA 201203	
SHEET: Oland GPIO STRAP PLL	
DATE: Mon Sep 21 10:05:39 2015	REV: 2.0
SHEET NUMBER: 5 OF 20	
DOCUMENT NUMBER: 105-C869xx-00B	
NOTES: NONE	

CONFIDENTIAL AND PROPRIETARY TO ADVANCED MICRO DEVICES INC.

© <COPYRIGHT> Advanced Micro Devices

This AMD Board schematic and design is the exclusive property of AMD, and is provided only to entities under a non-disclosure agreement with AMD for evaluation purposes. Further distribution or disclosure is strictly prohibited. Use of this schematic and design for any purpose other than evaluation requires a Board Technology License Agreement with AMD. AMD makes no representations or warranties of any kind regarding this schematic and design, including, not limited to, any implied warranty of merchantability, or fitness for a particular purpose, and disclaims responsibility for any consequences resulting from use of the information included herein.

TITLE: Oland G5 2GB VGA/sDVI-I+HDMI/DP

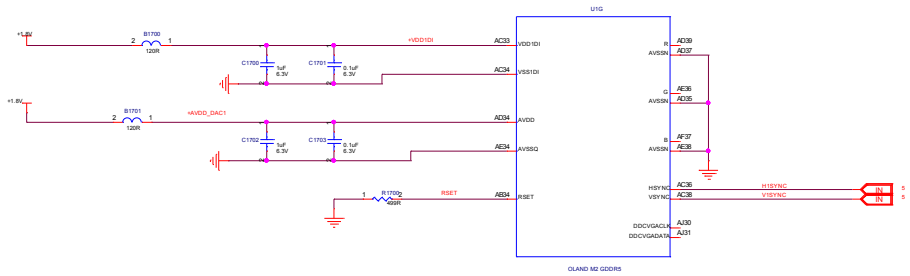

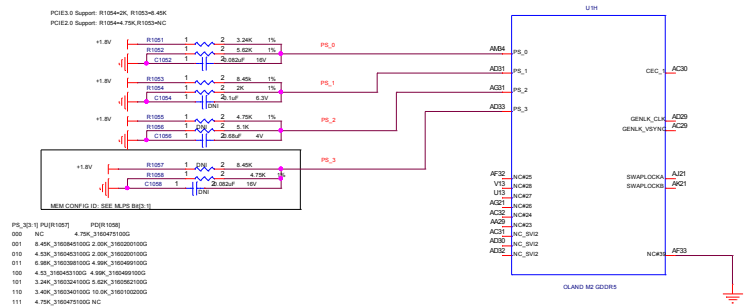

PS_3[3:1] PU[R1057] PD[R1058]

000	NC	4.75K_316047510G
001	8.45K_316084510G	2.00K_316020010G
010	4.53K_316045310G	2.00K_316020010G
011	6.98K_316058910G	4.99K_316049910G
100	4.53_316045310G	4.99K_316049910G
101	3.24K_316032410G	5.62K_316056210G
110	3.40K_316034010G	10.0K_316010020G
111	4.75K_316047510G	NC

AMD - PLATFORM HARDWARE ENG
#48, No. 1387, ZHANGDONG ROAD
SHANGHAI, CHINA 201203

SHEET:	Oland DAC and MLPS		
DATE:	Tue Sep 22 06:32:58 2015	REV:	2.0
SHEET NUMBER:	6 OF 20		
DOCUMENT NUMBER:	105-C869xx-00B		
NOTES:	NOTE		

CONFIDENTIAL AND PROPRIETARY TO ADVANCED MICRO DEVICES INC.

© <COPYRIGHT> Advanced Micro Devices

This AMD Board schematic and design is the exclusive property of AMD, and is provided only to entities under a non-disclosure agreement with AMD for evaluation purposes. Further distribution or disclosure is strictly prohibited. Use of this schematic and design for any purpose other than evaluation requires a Board Technology License Agreement with AMD. AMD makes no representations or warranties of any kind regarding this schematic and design, including, not limited to, any implied warranty of merchantability or fitness for a particular purpose, and disclaims responsibility for any consequences resulting from use of the information included herein.

TITLE:

Oland G5 2GB VGA/sDVI-I-HDMI/DP

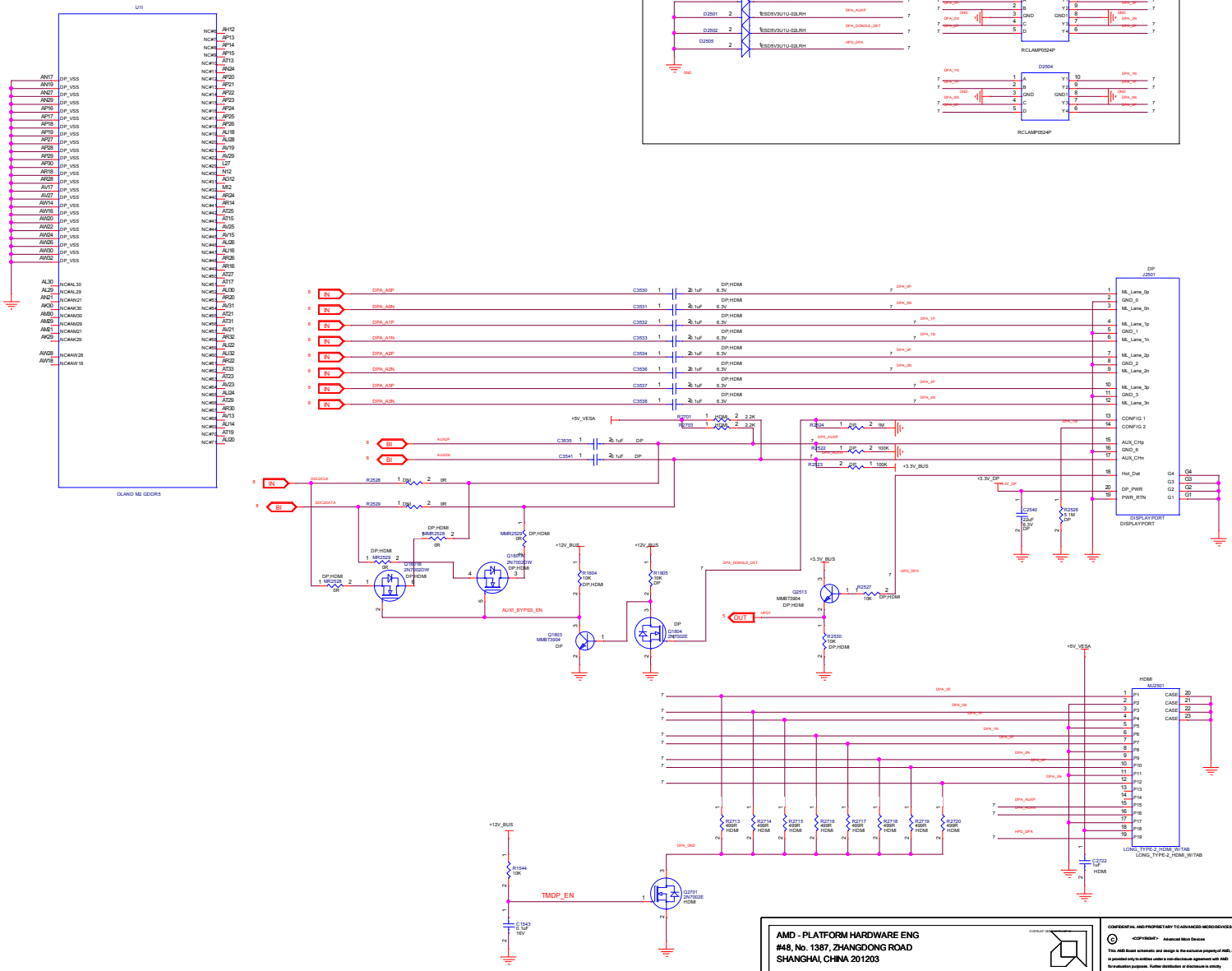

AMD - PLATFORM HARDWARE ENG
#48, No. 1387, ZHANGDONG ROAD
SHANGHAI, CHINA 201203

SHEET:	Oland Connector HDMI/DP
DATE:	Mon Sep 21 10:05:38 2015
REV:	2.0
SHEET NUMBER:	8 OF 20
DOCUMENT NUMBER:	105-C869xx-00B

CONFIDENTIAL AND PROPRIETARY TO ADVANCED MICRO DEVICES INC.

© <COPYRIGHT> Advanced Micro Devices

This AMD Board schematic and design is the exclusive property of AMD, and is provided only to entities under a non-disclosure agreement with AMD for evaluation purposes. Further distribution or disclosure is strictly prohibited. Use of this schematic and design for any purpose other than evaluation requires a Board Technology License Agreement with AMD. AMD makes no representations or warranties of any kind regarding this schematic and design, including, not limited to, any implied warranty of merchantability or fitness for a particular purpose, and disclaims responsibility for any consequences resulting from use of the information included herein.

TITLE: Oland G5 2GB VGA/sDVI-I-HDMI/DP

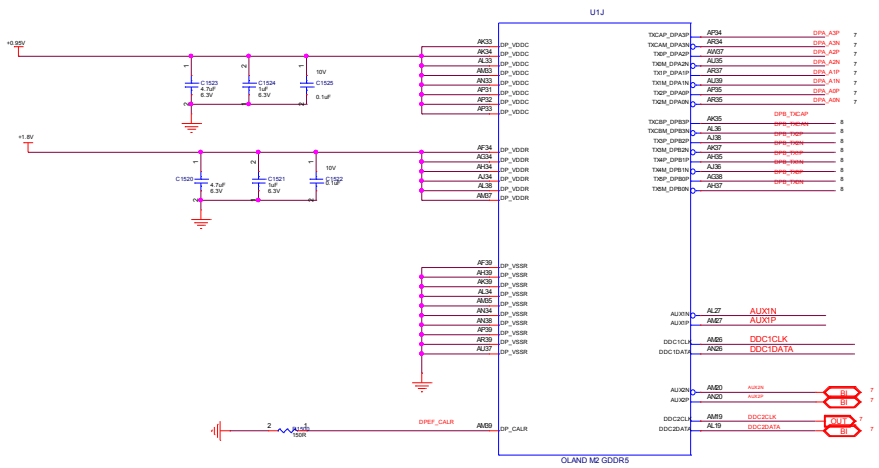

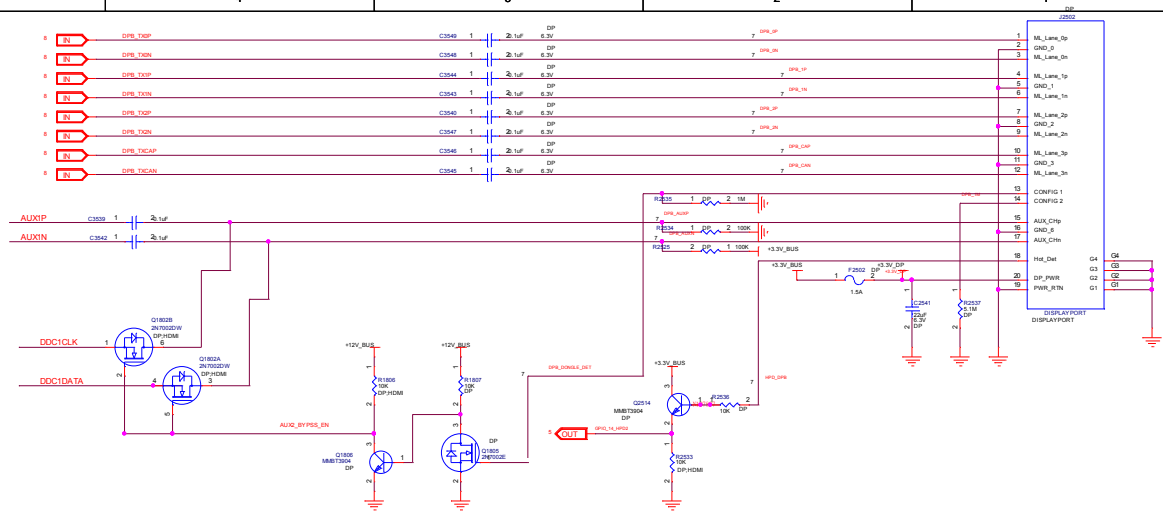

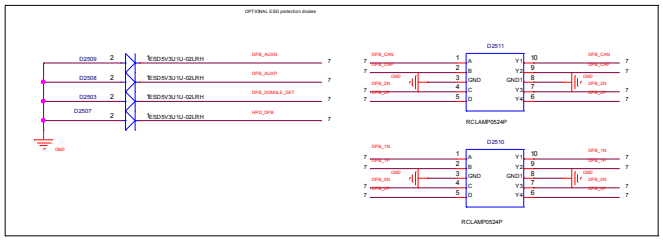

AMD - PLATFORM HARDWARE ENG
#48, No. 1387, ZHANGDONG ROAD
SHANGHAI, CHINA 201203

SHEET:	Oland TMDP sDVI
DATE:	Mon Sep 21 10:05:46 2015
REV:	2.0
SHEET NUMBER:	8 OF 20
DOCUMENT NUMBER:	105-C869xx-00B
TITLE:	Oland G5 2GB VGA/sDVI-I-HDMI/DP

CONFIDENTIAL AND PROPRIETARY TO ADVANCED MICRO DEVICES INC.

© <COPYRIGHT> Advanced Micro Devices

This AMD Board schematic and design is the exclusive property of AMD, and is provided only to entities under a non-disclosure agreement with AMD for evaluation purposes. Further distribution or disclosure is strictly prohibited. Use of this schematic and design for any purpose other than evaluation requires a Board Technology License Agreement with AMD. AMD makes no representations or warranties of any kind regarding this schematic and design, including, not limited to, any implied warranty of merchantability or fitness for a particular purpose, and disclaims responsibility for any consequences resulting from use of the information included herein.

OLAND Power & GND

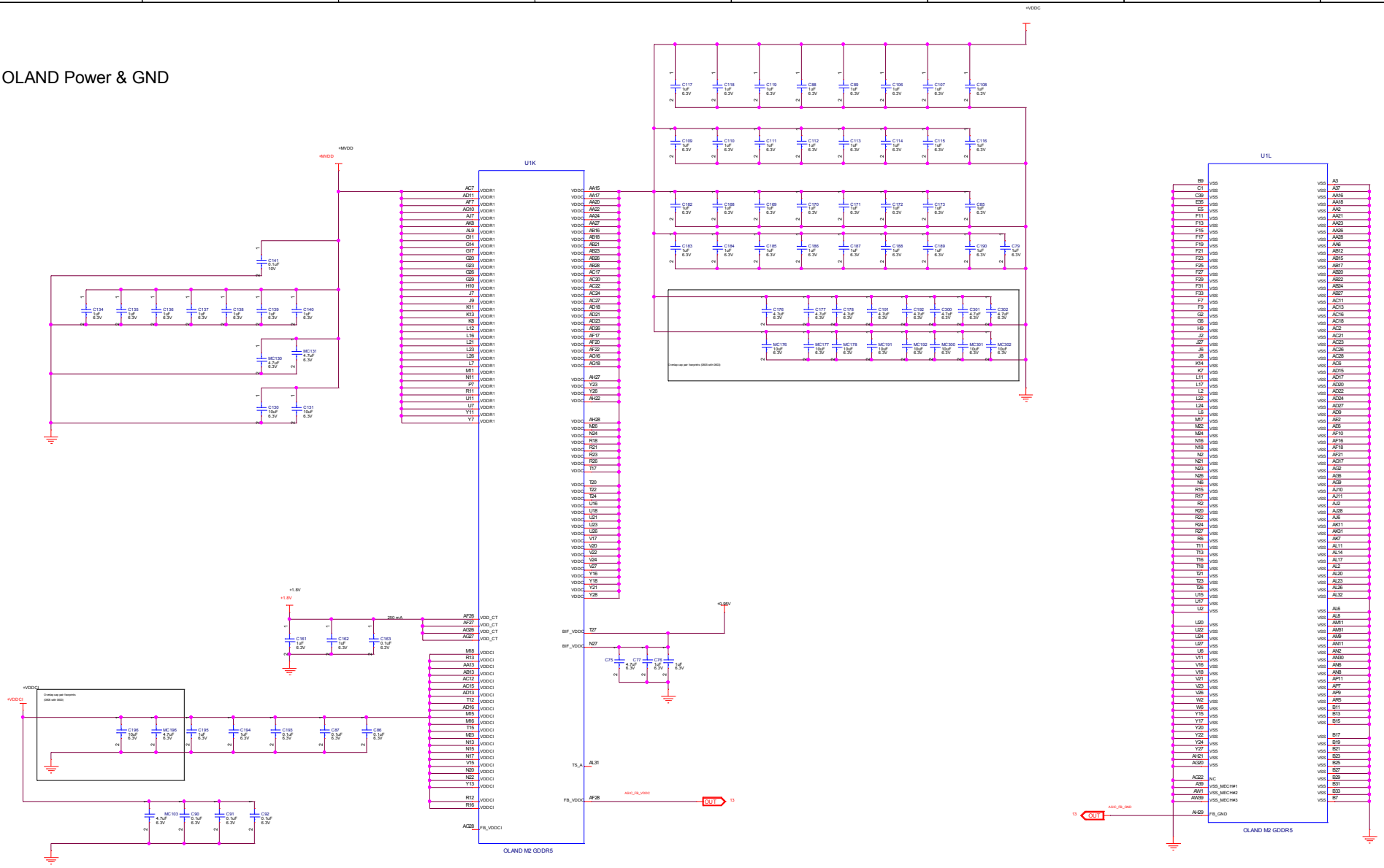

AMD - PLATFORM HARDWARE ENG
#48, No. 1387, ZHANGDONG ROAD
SHANGHAI, CHINA 201203

SHEET:	Oland Power&GND
DATE:	Mon Sep 21 10:05:46 2015
REV:	2.0
SHEET NUMBER:	9 OF 20
DOCUMENT NUMBER:	105-C869xx-00B

CONFIDENTIAL AND PROPRIETARY TO ADVANCED MICRO DEVICES INC.

© <COPYRIGHT> Advanced Micro Devices

This AMD Board schematic and design is the exclusive property of AMD, and is provided only to entities under a non-disclosure agreement with AMD for evaluation purposes. Further distribution or disclosure is strictly prohibited. Use of this schematic and design for any purpose other than evaluation requires a Board Technology License Agreement with AMD. AMD makes no representations or warranties of any kind regarding this schematic and design, including, not limited to, any implied warranty of merchantability or fitness for a particular purpose, and disclaims responsibility for any consequences resulting from use of the information included herein.

TITLE: Oland G5 2GB VGA/sDVI-I-HDMI/DP

Linear Regulators

LDO #1: Vin = +1.5V +/-2% Vout = +0.95V +/- 2%; Iout = 1.44A (TBV) RMS MAX

PCB: 50 to 70mm sq. copper area for cooling

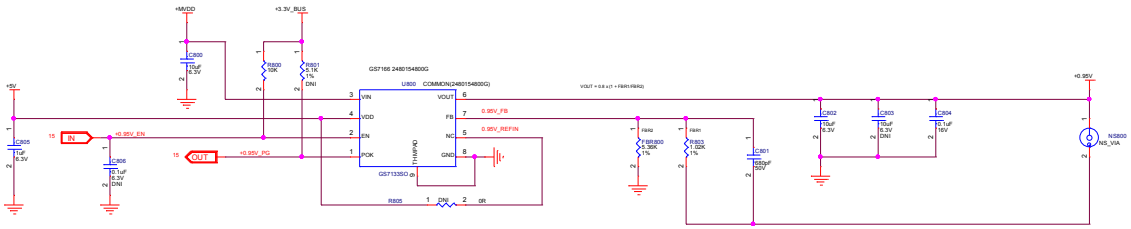

AMD - PLATFORM HARDWARE ENG
#48, No. 1387, ZHANGDONG ROAD
SHANGHAI, CHINA 201203

SHEET: 0.95V

DATE: Mon Sep 21 10:05:44 2015 REV: 2.0

SHEET NUMBER: 10 OF 20

DOCUMENT NUMBER: 105-C869xx-00B

CONFIDENTIAL AND PROPRIETARY TO ADVANCED MICRO DEVICES INC.

© <COPYRIGHT> Advanced Micro Devices

This AMD Board schematic and design is the exclusive property of AMD, and is provided only to entities under a non-disclosure agreement with AMD for evaluation purposes. Further distribution or disclosure is strictly prohibited. Use of this schematic and design for any purpose other than evaluation requires a Board Technology License Agreement with AMD. AMD makes no representations or warranties of any kind regarding this schematic and design, including, not limited to, any implied warranty of merchantability or fitness for a particular purpose, and disclaims responsibility for any consequences resulting from use of the information included herein.

TITLE: Oland G5 2GB VGA/sDVI-I-HDMI/DP

Regulator for MVDD

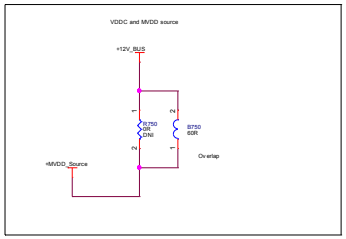

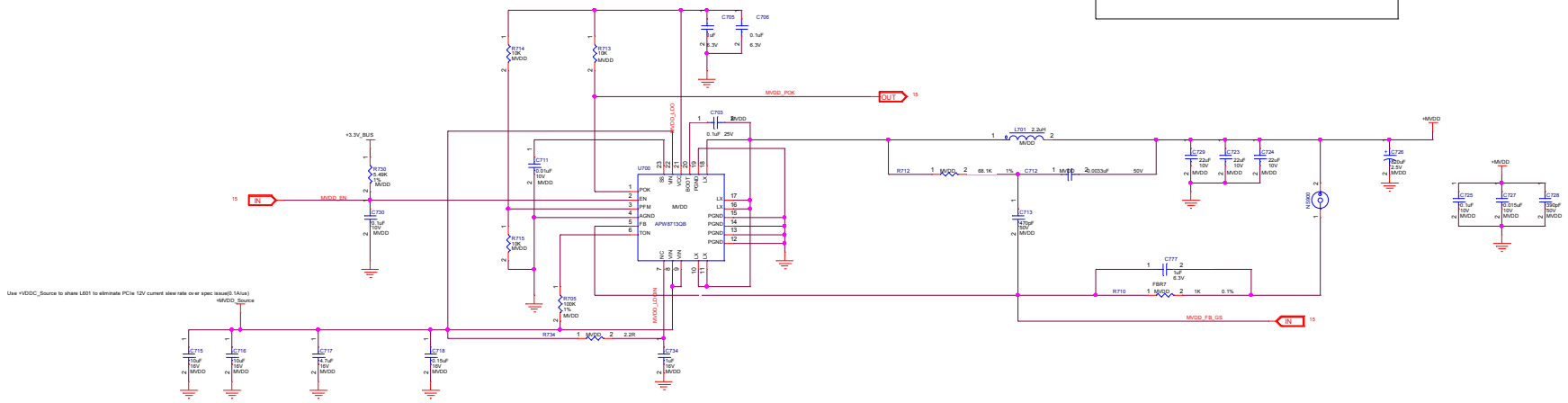

AMD - PLATFORM HARDWARE ENG
#48, No. 1387, ZHANGDONG ROAD
SHANGHAI, CHINA 201203

SHEET:	MVDD
DATE:	Tue Sep 22 06:32:59 2015
REV:	2.0
SHEET NUMBER:	11 OF 20
DOCUMENT NUMBER:	105-C869xx-00B

CONFIDENTIAL AND PROPRIETARY TO ADVANCED MICRO DEVICES INC.

<COPYRIGHT> Advanced Micro Devices

This AMD Board schematic and design is the exclusive property of AMD, and is provided only to entities under a non-disclosure agreement with AMD for evaluation purposes. Further distribution or disclosure is strictly prohibited. Use of this schematic and design for any purpose other than evaluation requires a Board Technology License Agreement with AMD. AMD makes no representations or warranties of any kind regarding this schematic and design, including, not limited to, any implied warranty of merchantability or fitness for a particular purpose, and disclaims responsibility for any consequences resulting from use of the information included herein.

TITLE:
Oland G5 2GB VGA/sDVI-I-HDMI/DP

Regulator for MVDD

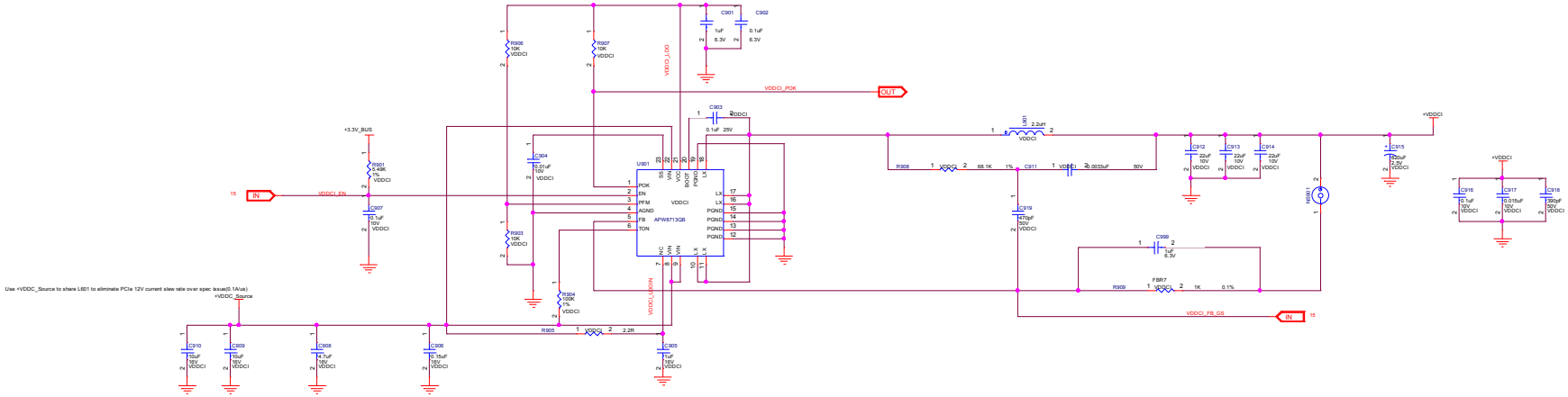

AMD - PLATFORM HARDWARE ENG #48, No. 1387, ZHANGDONG ROAD SHANGHAI, CHINA 201203	
SHEET: VDDCI	
DATE: Tue Sep 22 06:32:59 2015	REV: 2.0
SHEET NUMBER: 12 OF 20	
DOCUMENT NUMBER: 105-C869xx-00B	
NOTES: NOTE	

CONFIDENTIAL AND PROPRIETARY TO ADVANCED MICRO DEVICES INC.

© <COPYRIGHT> Advanced Micro Devices

This AMD Board schematic and design is the exclusive property of AMD, and is provided only to entities under a non-disclosure agreement with AMD for evaluation purposes. Further distribution or disclosure is strictly prohibited. Use of this schematic and design for any purpose other than evaluation requires a Board Technology License Agreement with AMD. AMD makes no representations or warranties of any kind regarding this schematic and design, including, not limited to, any implied warranty of merchantability or fitness for a particular purpose, and disclaims responsibility for any consequences resulting from use of the information included herein.

TITLE:

Oland G5 2GB VGA/sDVI-I-HDMI/DP

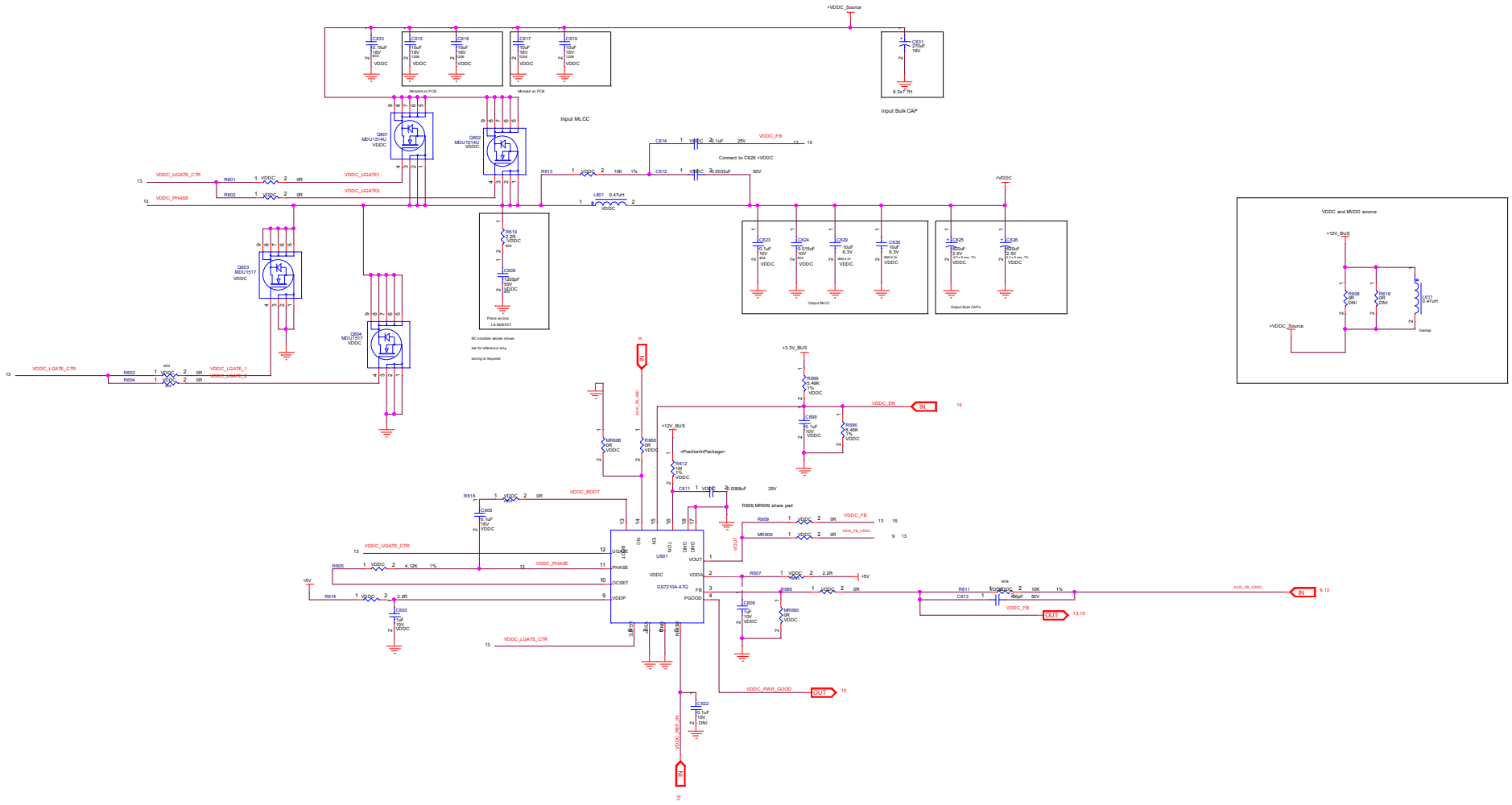

AMD - PLATFORM HARDWARE ENG #48, No. 1387, ZHANGDONG ROAD SHANGHAI, CHINA 201203	CONFIDENTIAL AND PROPRIETARY TO ADVANCED MICRO DEVICES INC. © <COPYRIGHT> Advanced Micro Devices This AMD Board schematic and design is the exclusive property of AMD, and is provided only to entities under a non-disclosure agreement with AMD for evaluation purposes. Further distribution or disclosure is strictly prohibited. Use of this schematic and design for any purpose other than evaluation requires a Board Technology License Agreement with AMD. AMD makes no representations or warranties of any kind regarding this schematic and design, including, not limited to, any implied warranty of merchantability or fitness for a particular purpose, and disclaims responsibility for any consequences resulting from use of the information included herein.
SHEET: VDDC	
DATE: Mon Sep 21 10:05:41 2015 — REV: 2.0	
SHEET NUMBER: 13 OF 20	TITLE: Oland G5 2GB VGA/sDVI-I-HDMI/DP
DOCUMENT NUMBER: 105-C869xx-00B	

Linear Regulators

LDO #2: Vin = 3.00V to 3.60V (3.3V +/-.9%) Vout = +1.8V +/-.2%; Iout = 1.6A (TBV) RMS MAX

PCB: 50 to 70mm sq. copper area for cooling

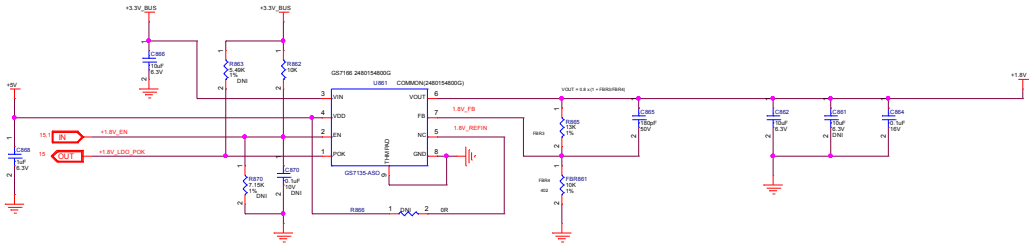

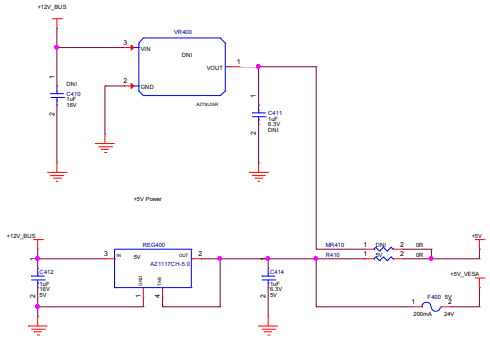

AMD - PLATFORM HARDWARE ENG #48, No. 1387, ZHANGDONG ROAD SHANGHAI, CHINA 201203	CONFIDENTIAL AND PROPRIETARY TO ADVANCED MICRO DEVICES INC. © <COPYRIGHT> Advanced Micro Devices This AMD Board schematic and design is the exclusive property of AMD, and is provided only to entities under a non-disclosure agreement with AMD for evaluation purposes. Further distribution or disclosure is strictly prohibited. Use of this schematic and design for any purpose other than evaluation requires a Board Technology License Agreement with AMD. AMD makes no representations or warranties of any kind regarding this schematic and design, including, not limited to, any implied warranty of merchantability or fitness for a particular purpose, and disclaims responsibility for any consequences resulting from use of the information included herein.
SHEET: Linear Regulators	
DATE: Mon Sep 21 10:05:44 2015 REV: 2.0	
SHEET NUMBER: 14 OF 20	TITLE: Oland G5 2GB VGA/sDVI-I-HDMI/DP
DOCUMENT NUMBER: 105-C869xx-00B	

Power Management - Power Gating and Dynamic Voltage Control

POWER SEQUENCE
+1.8V-2.8ms-+MVDD-3.4ms-+0.95V-4.3ms-+VDDC

0.95V must ramp up before VDDC

Don't support BACO
Support CTF(Internal)

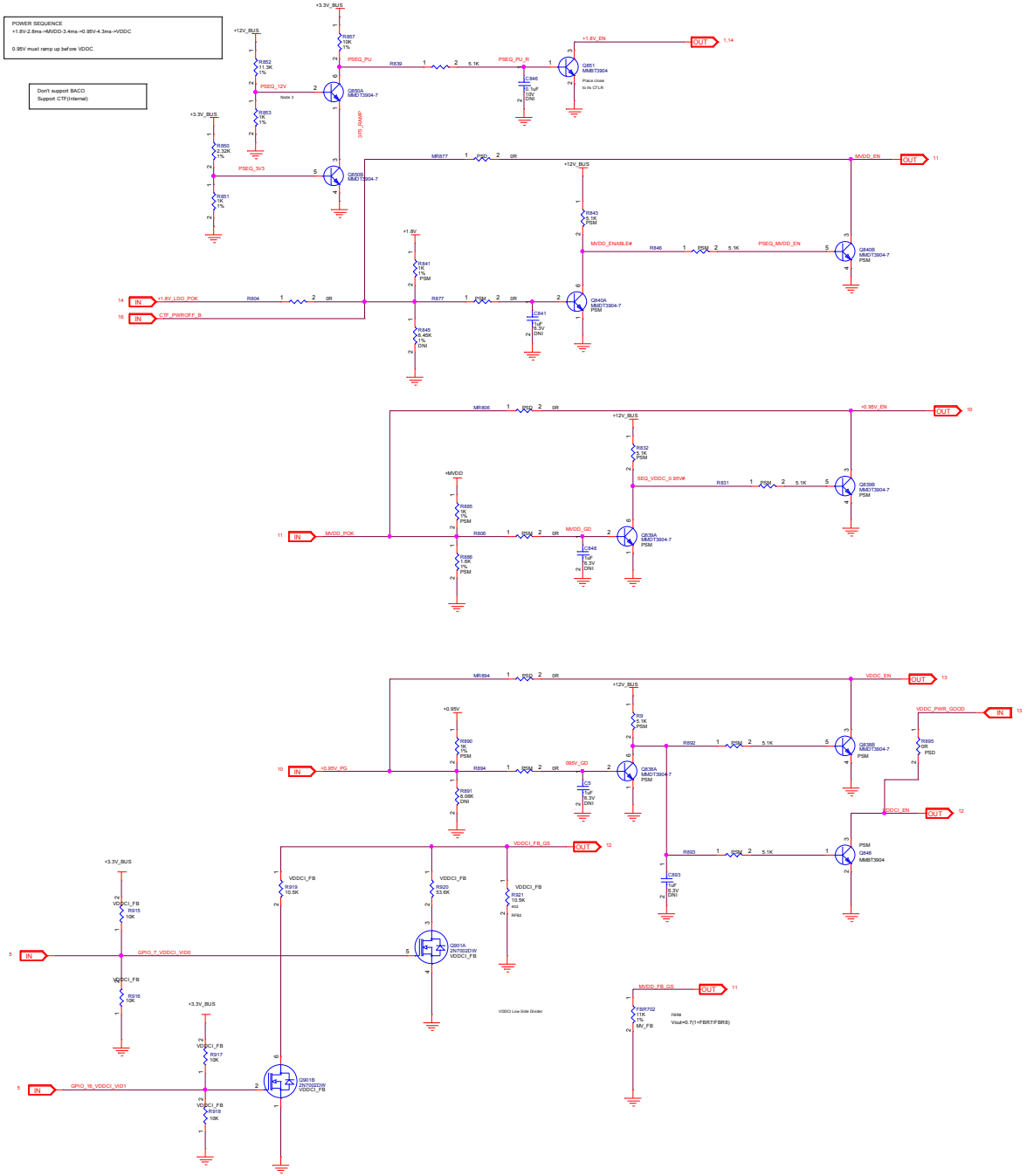

VDDC Low Side Divider

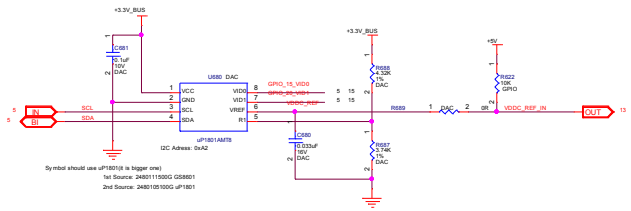

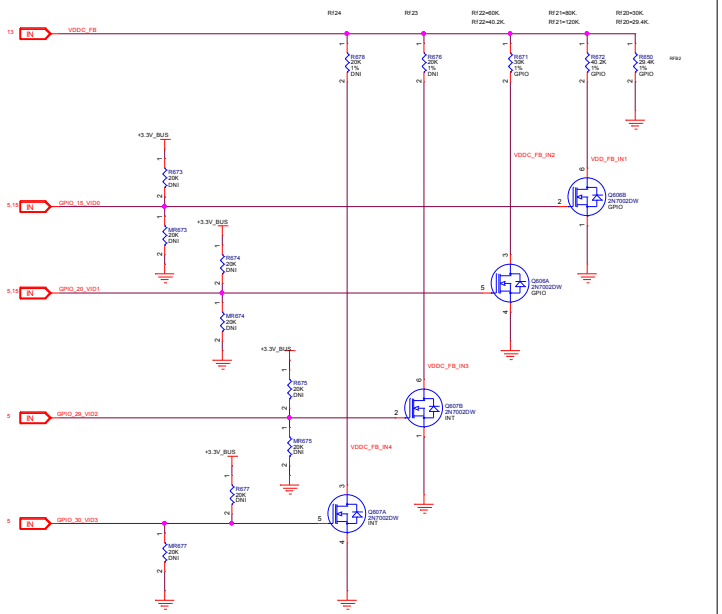

AMD - PLATFORM HARDWARE ENG #48, No. 1387, ZHANGDONG ROAD SHANGHAI, CHINA 201203	CONFIDENTIAL AND PROPRIETARY TO ADVANCED MICRO DEVICES INC. © <COPYRIGHT> Advanced Micro Devices This AMD Board schematic and design is the exclusive property of AMD, and is provided only to entities under a non-disclosure agreement with AMD for evaluation purposes. Further distribution or disclosure is strictly prohibited. Use of this schematic and design for any purpose other than evaluation requires a Board Technology License Agreement with AMD. AMD makes no representations or warranties of any kind regarding this schematic and design, including, not limited to, any implied warranty of merchantability or fitness for a particular purpose, and disclaims responsibility for any consequences resulting from use of the information included herein.
SHEET: PWR MGMT & SEQ	
DATE: Tue Sep 22 02:06:31 2015 REV: 2.0	
SHEET NUMBER: 15 OF 20	TITLE: Oland G5 2GB VGA/sDVI-I-HDMI/DP
DOCUMENT NUMBER: 105-C869xx-00B	

Mechanical and Thermal Management

Install R4520	GPIO6 is 0: Fan stop GPIO6 is PWM: Fan running
Install R4516 Q4511,R4519	GPIO6 is 1: Fan stop GPIO6 is PWM: Fan running

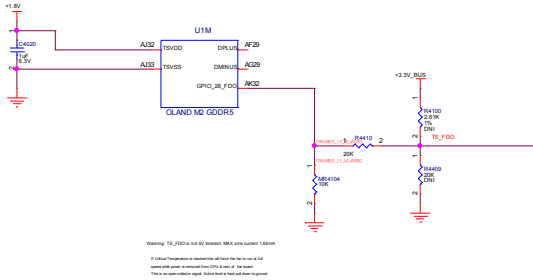

Critial Temperature Fault

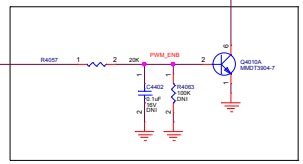

Critial Temperature Fault

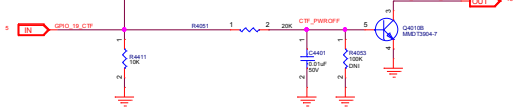

Fan Control

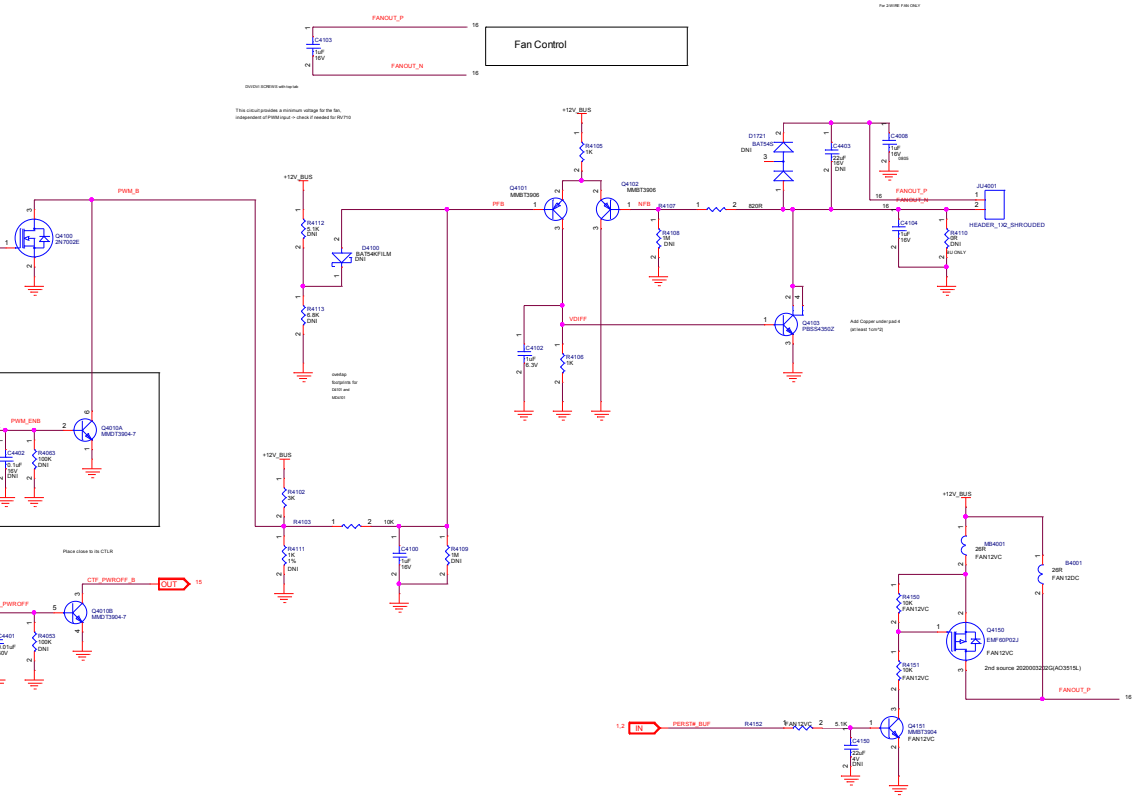

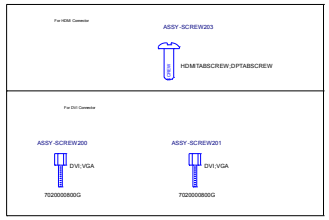

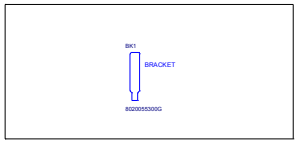

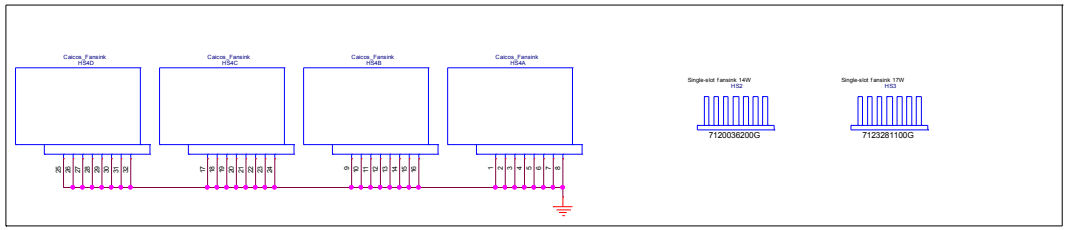

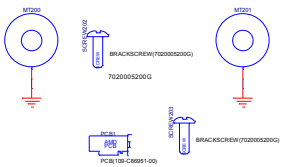

Bracket, VGA, HDMI, DVI	80200055200G
Bracket, VGA, DP(tab), DVI	802005520A0G
Bracket, LP, DP(tab), DVI	8020055300G
Bracket, LP, HDMI, DVI	80200553A0G

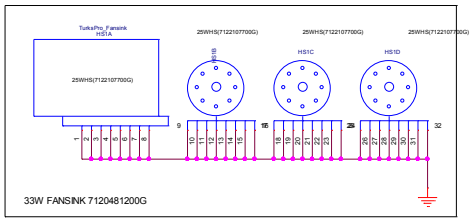

AMD - PLATFORM HARDWARE ENG
#48, No. 1387, ZHANGDONG ROAD
SHANGHAI, CHINA 201203

SHEET:	Mech/Thermal Management	
DATE:	Mon Sep 21 10:05:42 2015	REV: 2.0
SHEET NUMBER:	16 OF 20	
DOCUMENT NUMBER:	105-C869xx-00B	

CONFIDENTIAL AND PROPRIETARY TO ADVANCED MICRO DEVICES INC.

© <COPYRIGHT> Advanced Micro Devices

This AMD Board schematic and design is the exclusive property of AMD, and is provided only to entities under a non-disclosure agreement with AMD for evaluation purposes. Further distribution or disclosure is strictly prohibited. Use of this schematic and design for any purpose other than evaluation requires a Board Technology License Agreement with AMD. AMD makes no representations or warranties of any kind regarding this schematic and design, including, not limited to, any implied warranty of merchantability or fitness for a particular purpose, and disclaims responsibility for any consequences resulting from use of the information included herein.

TITLE: Oland G5 2GB VGA/sDVI-I+HDMI/DP

(19) Debug Circuits

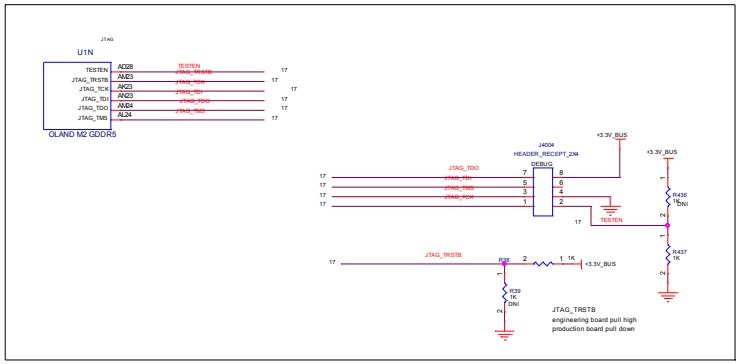

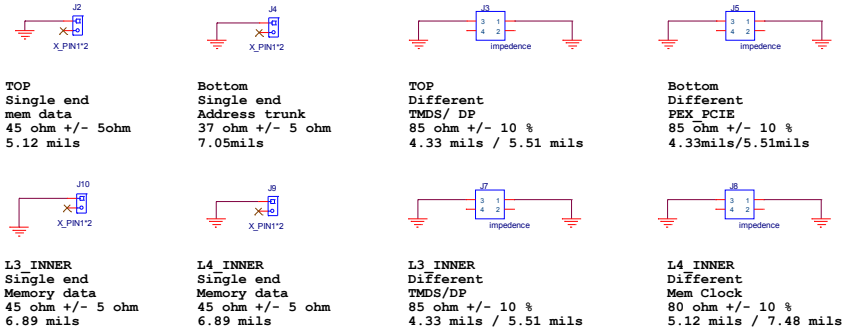

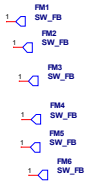

AMD - PLATFORM HARDWARE ENG
#48, No. 1387, ZHANGDONG ROAD
SHANGHAI, CHINA 201203

SHEET:	Debug Circuit
DATE:	Mon Sep 21 10:05:47 2015
REV:	2.0
SHEET NUMBER:	17 OF 20
DOCUMENT NUMBER:	105-C869xx-00B

CONFIDENTIAL AND PROPRIETARY TO ADVANCED MICRO DEVICES INC.

© <COPYRIGHT> Advanced Micro Devices

This AMD Board schematic and design is the exclusive property of AMD, and is provided only to entities under a non-disclosure agreement with AMD for evaluation purposes. Further distribution or disclosure is strictly prohibited. Use of this schematic and design for any purpose other than evaluation requires a Board Technology License Agreement with AMD. AMD makes no representations or warranties of any kind regarding this schematic and design, including, not limited to, any implied warranty of merchantability or fitness for a particular purpose, and disclaims responsibility for any consequences resulting from use of the information included herein.

TITLE:

Oland G5 2GB VGA/sDVI-I-HDMI/DP

DVI-I	HPD4	DDC/AUX4
HDMI	HPD1	DDC/AUX1
DP	HPD3	DDC/AUX5

GPIO15	VDDC_VID0	
GPIO20	VDDC_VID1	
GPIO7	VDDCI_VID	DEFAULT 1
GPIO5	VR_HOT	

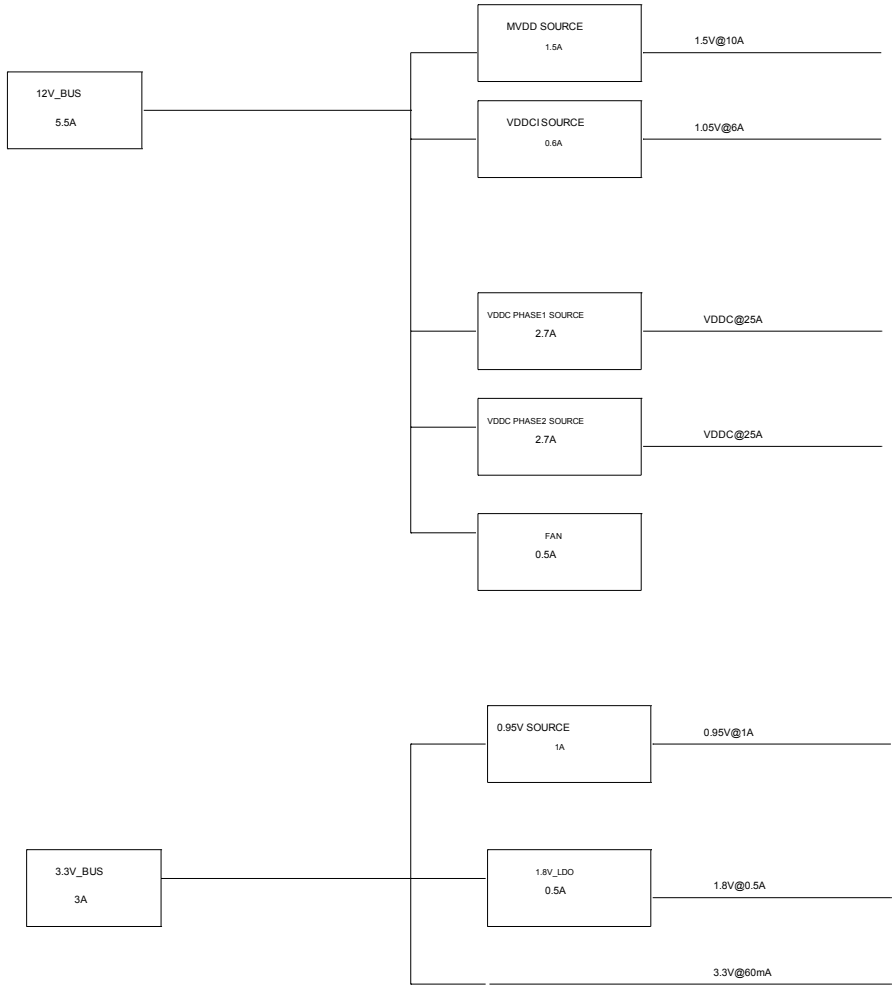

AMD - PLATFORM HARDWARE ENG
#48, No. 1387, ZHANGDONG ROAD
SHANGHAI, CHINA 201203

SHEET: GPIO DDC HPD map

DATE: Tue Sep 22 06:32:59 2015 REV: 2.0

SHEET NUMBER: 18 OF 20

DOCUMENT NUMBER: 105-C869xx-00B

NOTES: NOTE

CONFIDENTIAL AND PROPRIETARY TO ADVANCED MICRO DEVICES INC.

© <COPYRIGHT> Advanced Micro Devices

This AMD Board schematic and design is the exclusive property of AMD, and is provided only to entities under a non-disclosure agreement with AMD for evaluation purposes. Further distribution or disclosure is strictly prohibited. Use of this schematic and design for any purpose other than evaluation requires a Board Technology License Agreement with AMD. AMD makes no representations or warranties of any kind regarding this schematic and design, including, not limited to, any implied warranty of merchantability or fitness for a particular purpose, and disclaims responsibility for any consequences resulting from use of the information included herein.

TITLE:

Oland G5 2GB VGA/sDVI-I+HDMI/DP

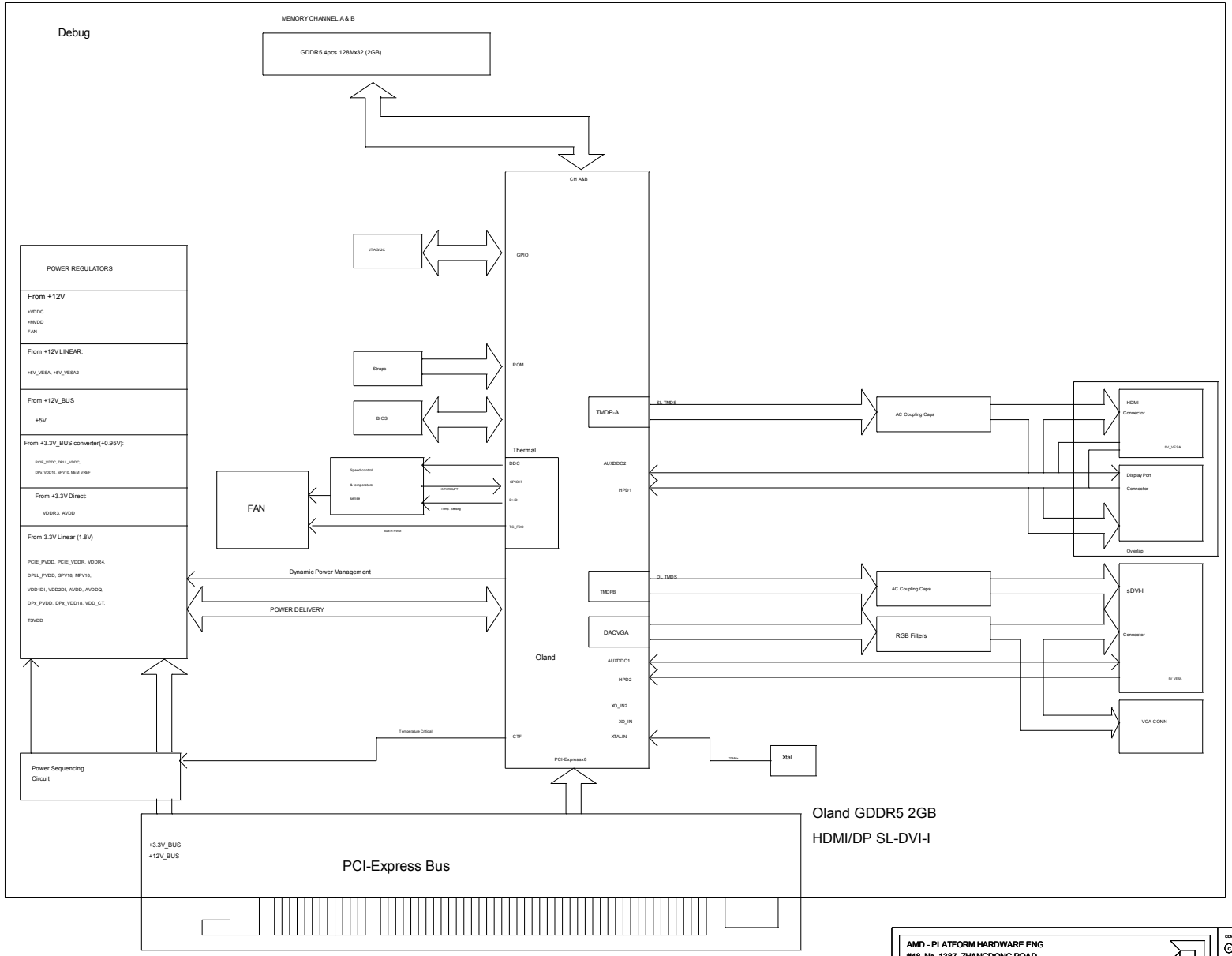

AMD - PLATFORM HARDWARE ENG
#48, No. 1387, ZHANGDONG ROAD
SHANGHAI, CHINA 201203

SHEET:	BLOCK DIAGRAM
DATE:	Fri Sep 18 08:34:41 2015
REV:	2.0
SHEET NUMBER:	19 OF 20
DOCUMENT NUMBER:	105-C869xx-00B

CONFIDENTIAL AND PROPRIETARY TO ADVANCED MICRO DEVICES INC.

© <COPYRIGHT> Advanced Micro Devices

This AMD Board schematic and design is the exclusive property of AMD, and is provided only to entities under a non-disclosure agreement with AMD for evaluation purposes. Further distribution or disclosure is strictly prohibited. Use of this schematic and design for any purpose other than evaluation requires a Board Technology License Agreement with AMD. AMD makes no representations or warranties of any kind regarding this schematic and design, including, not limited to, any implied warranty of merchantability or fitness for a particular purpose, and disclaims responsibility for any consequences resulting from use of the information included herein.

TITLE:
Oland G5 2GB VGA/sDVI-I-HDMI/DP

AMD	TITLE: Oland G5 2GB VGA/sDVI-I-HDMI/DP	DOCUMENT NUMBER: 105-C869xx-00B	DATE: Tue Sep 22 02:20:17 2015	SHEET NUMBER: 20 OF 20	REV: 2.0

REVISION HISTORY

ENGINEER: Tony Yang

NOTES: NOTE

CONFIDENTIAL AND PROPRIETARY TO ADVANCED MICRO DEVICES INC.
This AMD Board schematic and design is the exclusive property of AMD, and is provided only to entities under a non-disclosure agreement with AMD for evaluation purposes. Further distribution or disclosure is strictly prohibited. Use of this schematic and design for any purpose other than evaluation requires a Board Technology License Agreement with AMD. AMD makes no representations or warranties of any kind regarding this schematic and design, including, not limited to, any implied warranty of merchantability or fitness for a particular purpose, and disclaims responsibility for any consequences resulting from use of the information included herein.

C <COPYRIGHT> Advanced Micro Devices

AMD - PLATFORM HARDWARE ENG
#48, No. 1387, ZHANGDONG ROAD
SHANGHAI, CHINA 201203

SCH Rev	PCB Rev	Date	REVISION DESCRIPTON
1.00	00A	04/15/14	1. Initial release
2.00	00B	09/22/15	2. Add VGA, etc