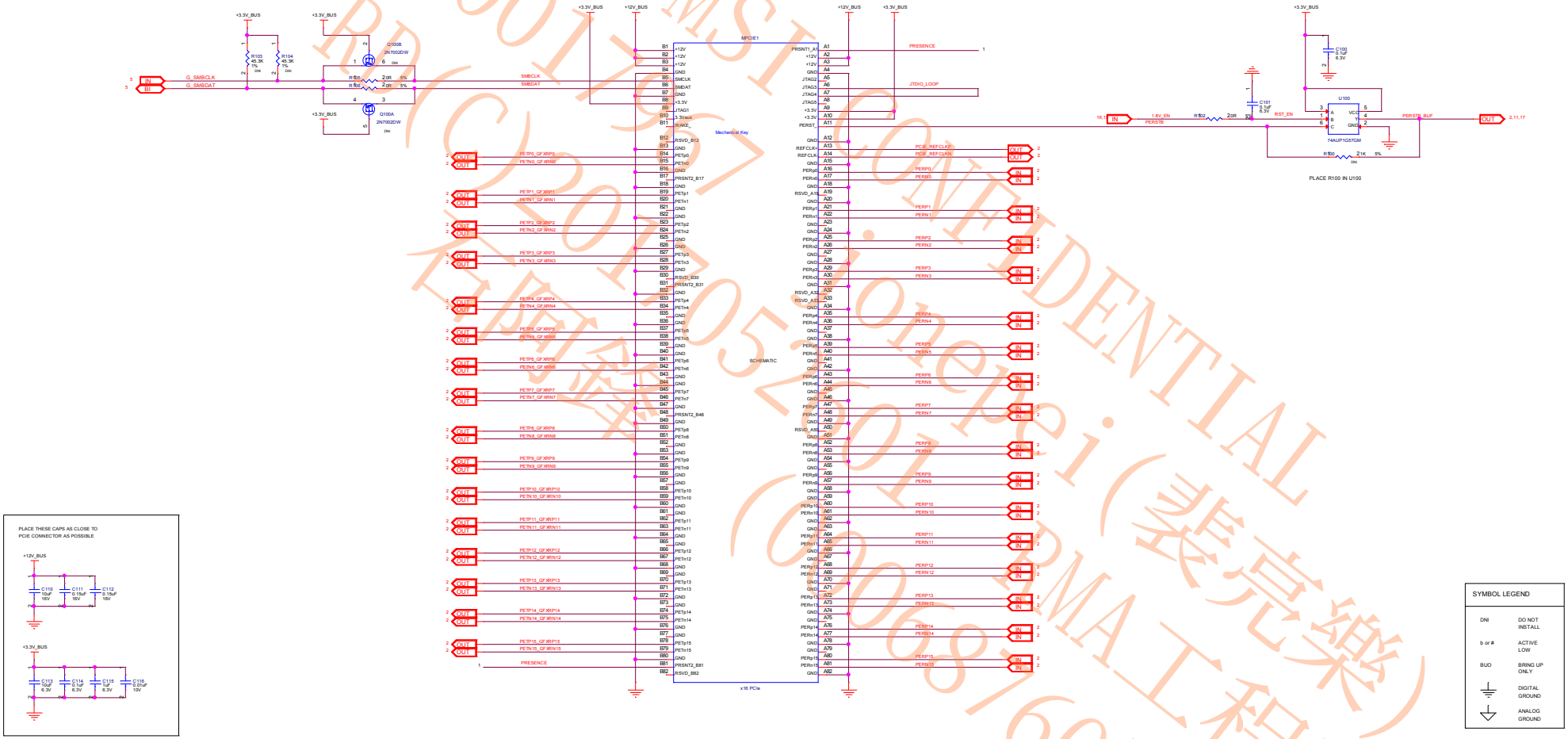

17ci203

AMD - PLATFORM HARDWARE ENG
#48, No.1387, ZHANGDONG ROAD
SHANGHAI, CHINA 201203

CONFIDENTIAL AND PROPRIETARY TO ADVANCED MICRO DEVICES INC.
© 2014 Advanced Micro Devices
This AMD Board schematic and design is the exclusive property of AMD, and is provided only to entities under a non-disclosure agreement with AMD for evaluation purposes. Further distribution or disclosure is strictly prohibited. Use of this schematic and design for any purpose other than evaluation requires a Board Technology License Agreement with AMD. AMD makes no representations or warranties of any kind regarding this schematic and design, including, not limited to, any implied warranty of merchantability or fitness for a particular purpose, and disclaims responsibility for any consequences resulting from use of the information included herein.

SHEET:	PCI-E EDGE CONNECTOR
DATE:	Mon Mar 30 03:01:31 2015
REV:	1.0
SHEET NUMBER:	1 OF 20
DOCUMENT NUMBER:	105_C936xx_00A
NOTES:	NOTE
TITLE:	TOBAGO G5 4X32bit

MSI CONFIDENTIAL
RD(C)DOM0520(00068760)
台灣鴻海(裝亮樂)
MSI-1000167

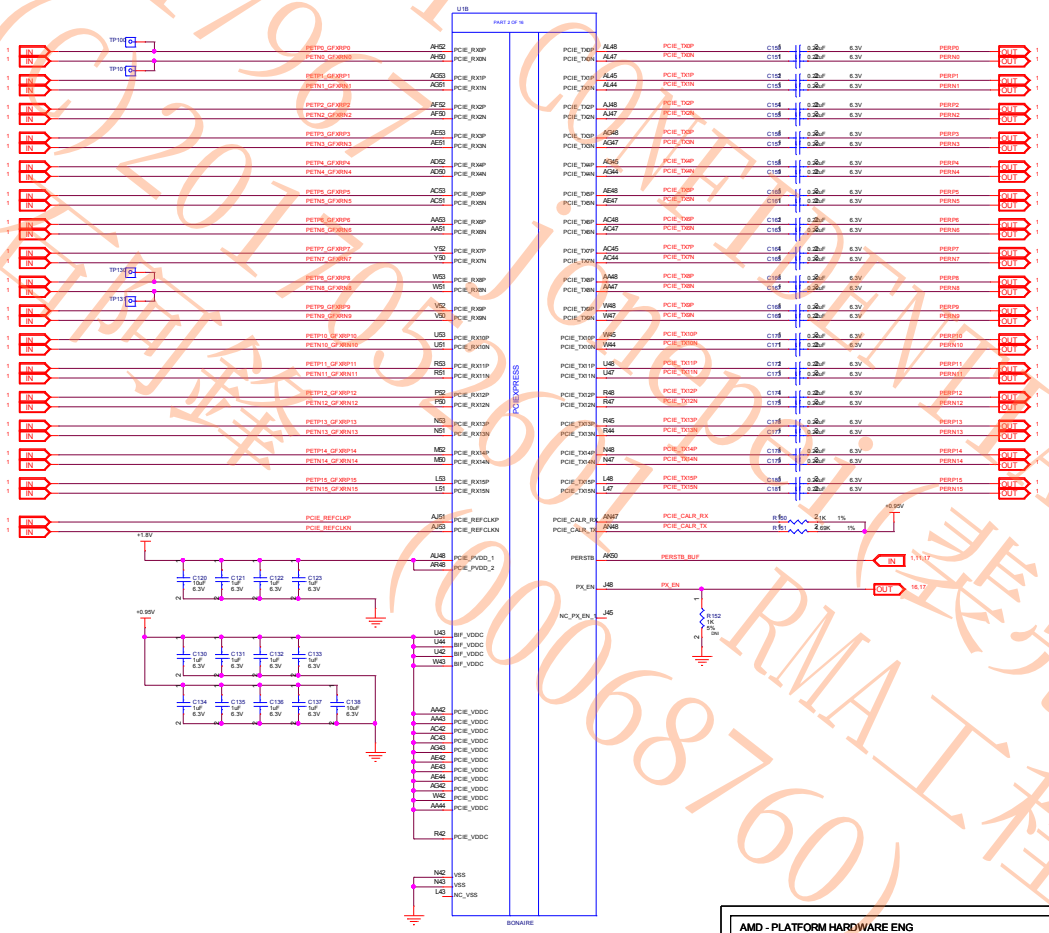

AMD - PLATFORM HARDWARE ENG
#48, No.1387, ZHANGDONG ROAD
SHANGHAI, CHINA 201203

SHEET:	TOBAGO PCIE INTERFACE		
DATE:	Mon Mar 30 02:42:02 2015	REV:	1.0
SHEET NUMBER:	2 OF 20		
DOCUMENT NUMBER:	105_C936xx_00A		
NOTES:	NOTE		

CONFIDENTIAL AND PROPRIETARY TO ADVANCED MICRO DEVICES INC.
© 2014 Advanced Micro Devices
This AMD Board schematic and design is the exclusive property of AMD, and is provided only to entities under a non-disclosure agreement with AMD for evaluation purposes. Further distribution or disclosure is strictly prohibited. Use of this schematic and design for any purpose other than evaluation requires a Board Technology License Agreement with AMD. AMD makes no representations or warranties of any kind regarding this schematic and design, including, not limited to, any implied warranty of merchantability or fitness for a particular purpose, and disclaims responsibility for any consequences resulting from use of the information included herein.

17ci203

TITLE: TOBAGO G5 4X32bit

MSI CONFIDENTIAL
0001792 (2015/05/18)
RD(6)2015/05/18
不得翻錄 (000068760) RMA工程部(裴亮樂)

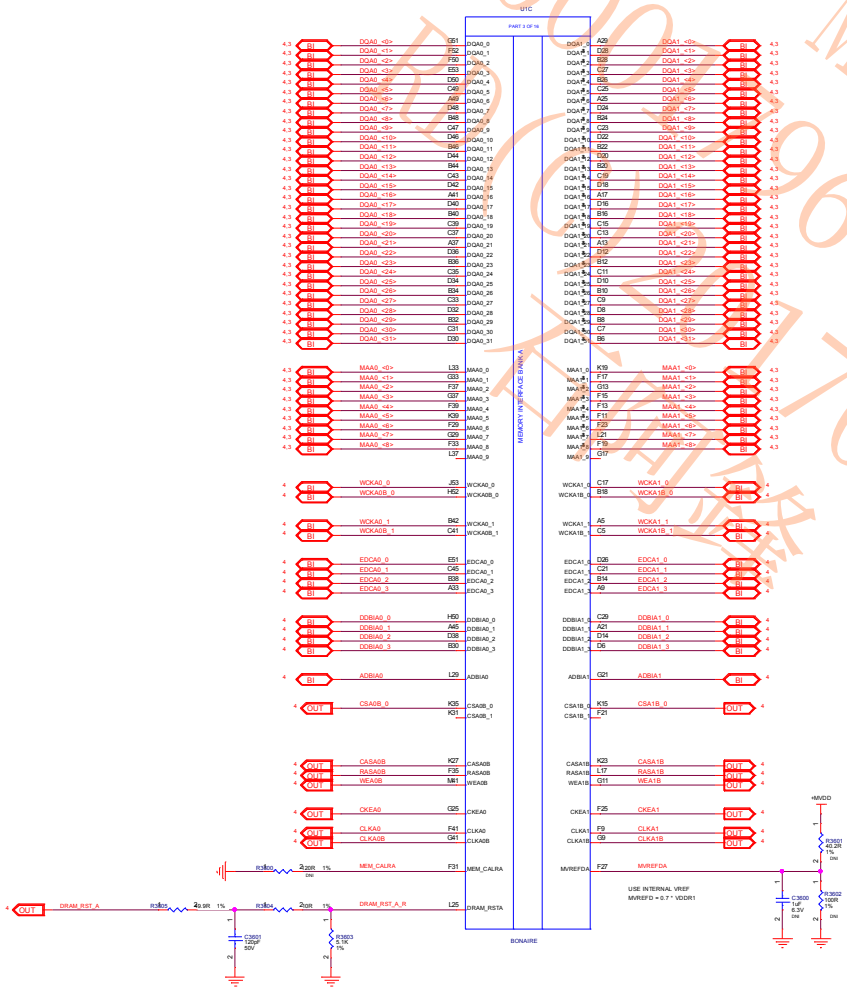

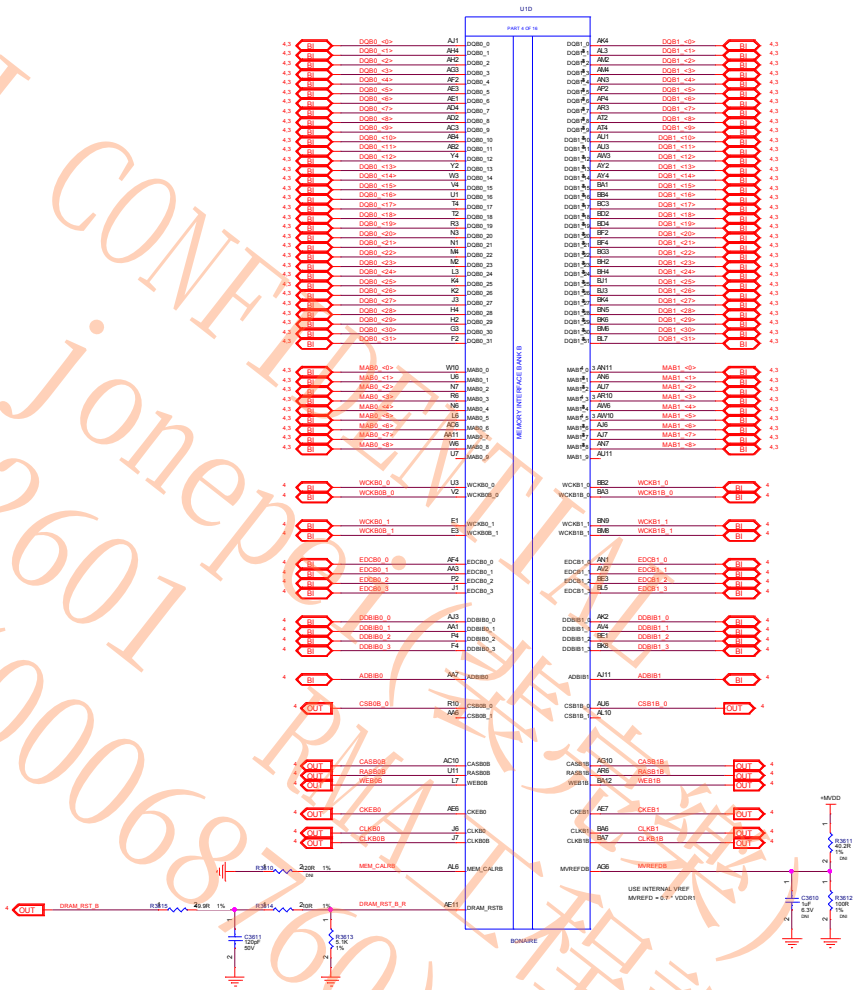

MSI CONFIDENTIAL
000967 jonepc@msi.com
7052601
BIOS 研發 (000068160) 程韻

AMD - PLATFORM HARDWARE ENG
#48, No.1387, ZHANGDONG ROAD
SHANGHAI, CHINA 201203

SHEET:	TOBAGO MEMORY
DATE:	Mon Mar 30 02:42:02 2015
REV:	1.0
SHEET NUMBER:	3 OF 20
DOCUMENT NUMBER:	105_C936xx_00A
NOTES:	NOTE

CONFIDENTIAL AND PROPRIETARY TO ADVANCED MICRO DEVICES INC.
© 2014 Advanced Micro Devices
This AMD Board schematic and design is the exclusive property of AMD, and is provided only to entities under a non-disclosure agreement with AMD for evaluation purposes. Further distribution or disclosure is strictly prohibited. Use of this schematic and design for any purpose other than evaluation requires a Board Technology License Agreement with AMD. AMD makes no representations or warranties of any kind regarding this schematic and design, including, not limited to, any implied warranty of merchantability or fitness for a particular purpose, and disclaims responsibility for any consequences resulting from use of the information included herein.

17ci203

TITLE: TOBAGO G5 4X32bit

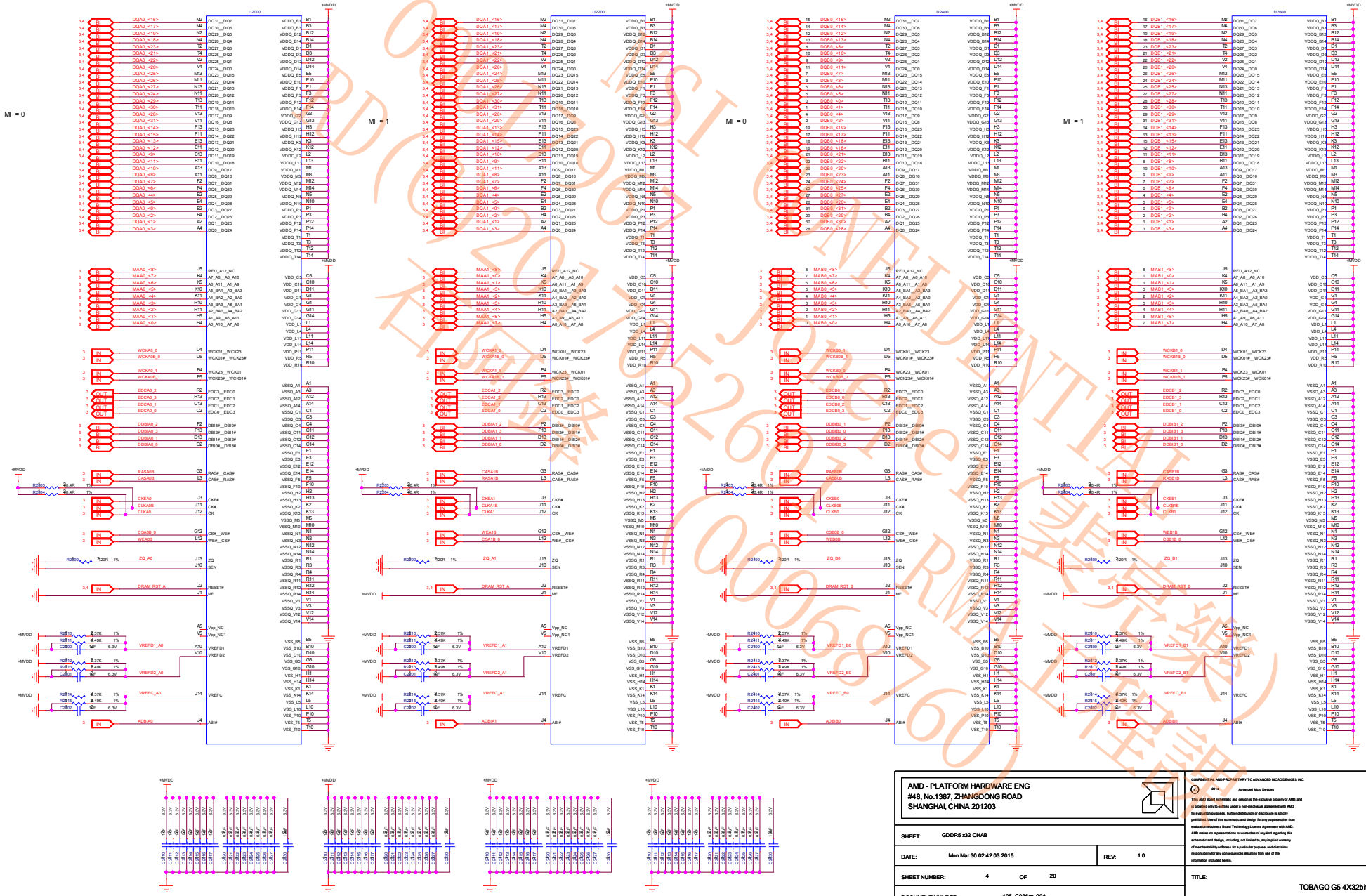

AMD - PLATFORM HARDWARE ENG #48, No.1387, ZHANGDONG ROAD SHANGHAI, CHINA 201203	
SHEET: GDDR5 x32 CHAB	
DATE: Mon Mar 30 02:42:03 2015	REV: 1.0
SHEET NUMBER: 4 OF 20	
DOCUMENT NUMBER: 105_C936xx_00A	
NOTES: NOTE	

CONFIDENTIAL AND PROPRIETARY TO ADVANCED MICRO DEVICES INC.
© 2014 Advanced Micro Devices
This AMD Board schematic and design is the exclusive property of AMD, and is provided only to entities under a non-disclosure agreement with AMD for evaluation purposes. Further distribution or disclosure is strictly prohibited. Use of this schematic and design for any purpose other than evaluation requires a Board Technology License Agreement with AMD. AMD makes no representations or warranties of any kind regarding this schematic and design, including, not limited to, any implied warranty of merchantability or fitness for a particular purpose, and disclaims responsibility for any consequences resulting from use of the information included herein.

TITLE: TOBAGO G5 4X32bit

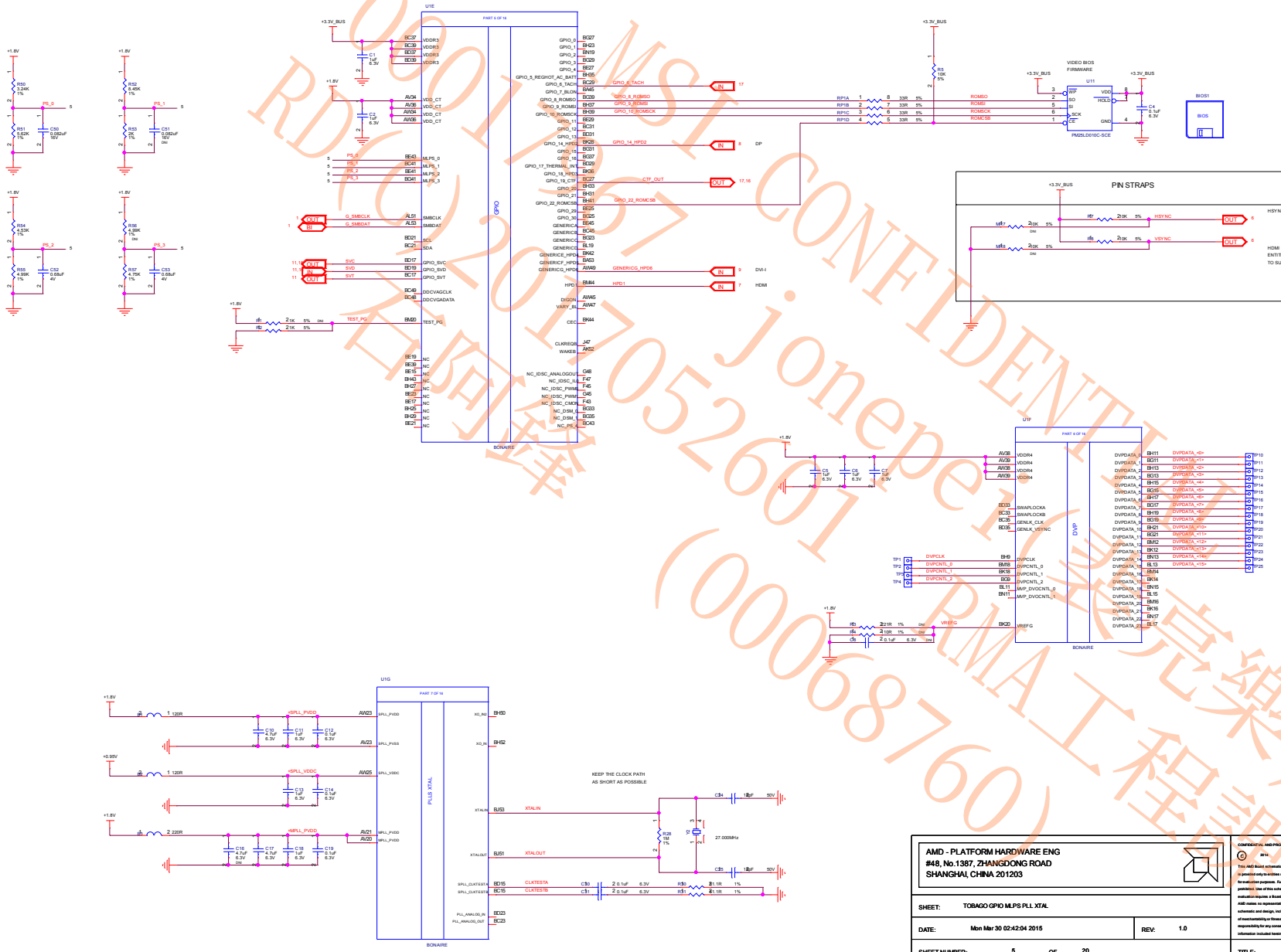

0901367 CONFIDENTIAL
RD(C)2017052601 jonepeng
石阿鋒 (00068760) RMA工程部(完樂)

AMD - PLATFORM HARDWARE ENG
#48, No.1387, ZHANGDONG ROAD
SHANGHAI, CHINA 201203

SHEET:	TOBAGO GPIO MLPS PLL XTAL
DATE: Mon Mar 30 02:42:04 2015	REV: 1.0
SHEET NUMBER: 5 OF 20	
DOCUMENT NUMBER:	105_C936xx_00A
NOTES: NOTE	

CONFIDENTIAL AND PROPRIETARY TO ADVANCED MICRO DEVICES INC.
© 2014 Advanced Micro Devices
This AMD Board schematic and design is the exclusive property of AMD, and is provided only to entities under a non-disclosure agreement with AMD for evaluation purposes. Further distribution or disclosure is strictly prohibited. Use of this schematic and design for any purpose other than evaluation requires a Board Technology License Agreement with AMD. AMD makes no representations or warranties of any kind regarding this schematic and design, including, not limited to, any implied warranty of merchantability or fitness for a particular purpose, and disclaims responsibility for any consequences resulting from use of the information included herein.

TITLE: TOBAGO G5 4X32bit

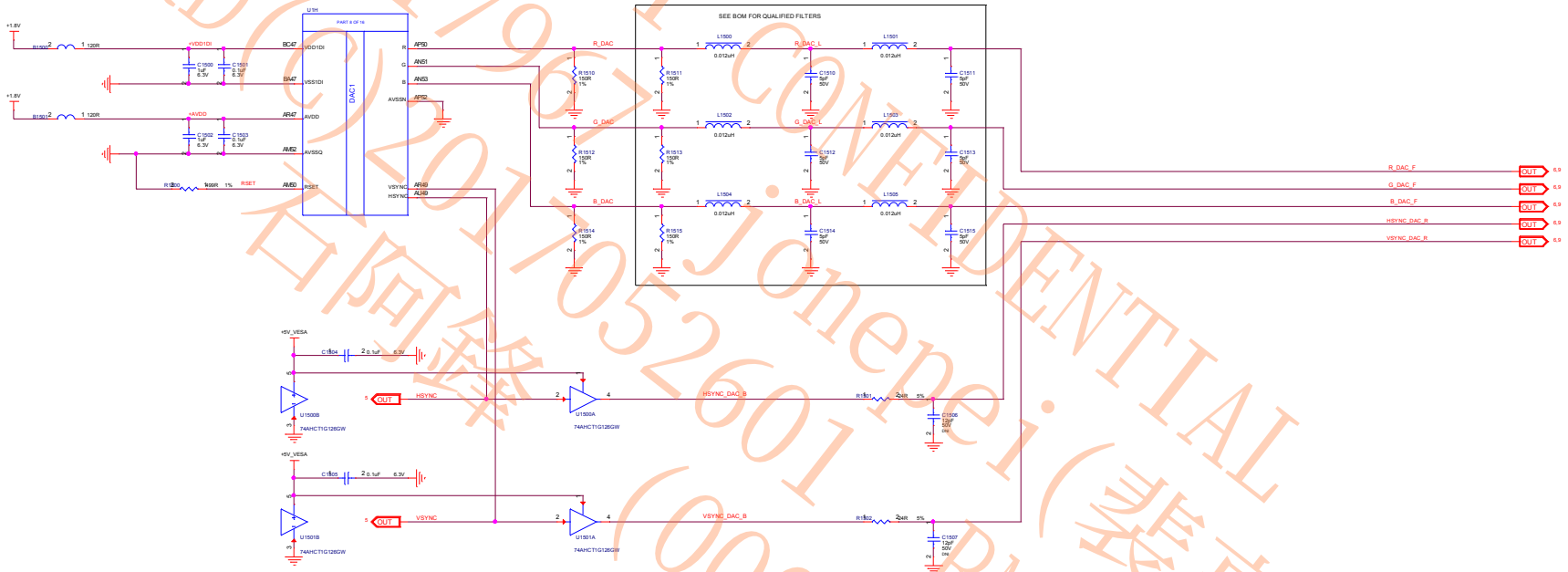

OPTIONAL ESD PROTECTION DIODES

AMD - PLATFORM HARDWARE ENG
#48, No.1387, ZHANGDONG ROAD
SHANGHAI, CHINA 201203

SHEET:	TOBAGO DAC		
DATE:	Mon Mar 30 02:42:05 2015	REV:	1.0
SHEET NUMBER:	6 OF 20		
DOCUMENT NUMBER:	105_C936xx_00A		
NOTES:	NOTE		

CONFIDENTIAL AND PROPRIETARY TO ADVANCED MICRO DEVICES INC.
© 2014 Advanced Micro Devices
This AMD Board schematic and design is the exclusive property of AMD, and is provided only to entities under a non-disclosure agreement with AMD for evaluation purposes. Further distribution or disclosure is strictly prohibited. Use of this schematic and design for any purpose other than evaluation requires a Board Technology License Agreement with AMD. AMD makes no representations or warranties of any kind regarding this schematic and design, including, not limited to, any implied warranty of merchantability or fitness for a particular purpose, and disclaims responsibility for any consequences resulting from use of the information included herein.

TITLE: TOBAGO G5 4X32bit

MSI CONFIDENTIAL
0001796 Jonepei(裴亮樂)
RD(C)2017/05/26 01 RMA工程部
石阿鋒 (00068760)

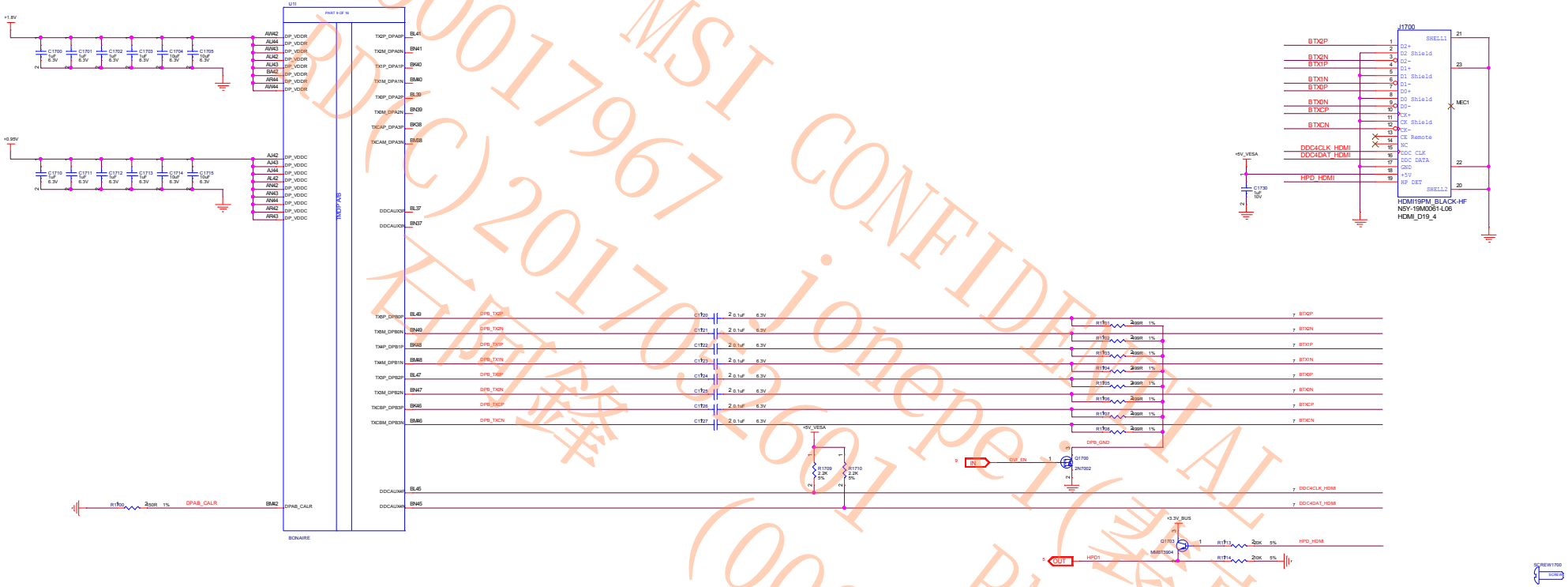

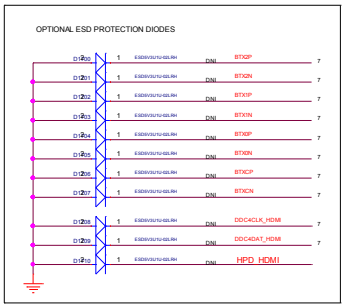

AMD - PLATFORM HARDWARE ENG #48, No.1387, ZHANGDONG ROAD SHANGHAI, CHINA 201203			CONFIDENTIAL AND PROPRIETARY TO ADVANCED MICRO DEVICES INC. © 2014 Advanced Micro Devices This AMD Board schematic and design is the exclusive property of AMD, and is provided only to entities under a non-disclosure agreement with AMD for evaluation purposes. Further distribution or disclosure is strictly prohibited. Use of this schematic and design for any purpose other than evaluation requires a Board Technology License Agreement with AMD. AMD makes no representations or warranties of any kind regarding this schematic and design, including, not limited to, any implied warranty of merchantability or fitness for a particular purpose, and disclaims responsibility for any consequences resulting from use of the information included herein.
SHEET:	TOBAGO TMDPAB HDMI		
DATE:	Mon Mar 30 02:42:05 2015	REV: 1.0	
SHEET NUMBER:	7 OF 20		TITLE: TOBAGO G5 4X32bit
DOCUMENT NUMBER:	105_C936xx_00A		
NOTES:	NOTE		

MSI CONFIDENTIAL
00017967
RDC(C)2017Q1-1601
jonepei(裴亮樂)
石開鋒
(00068760)
RMA工程部

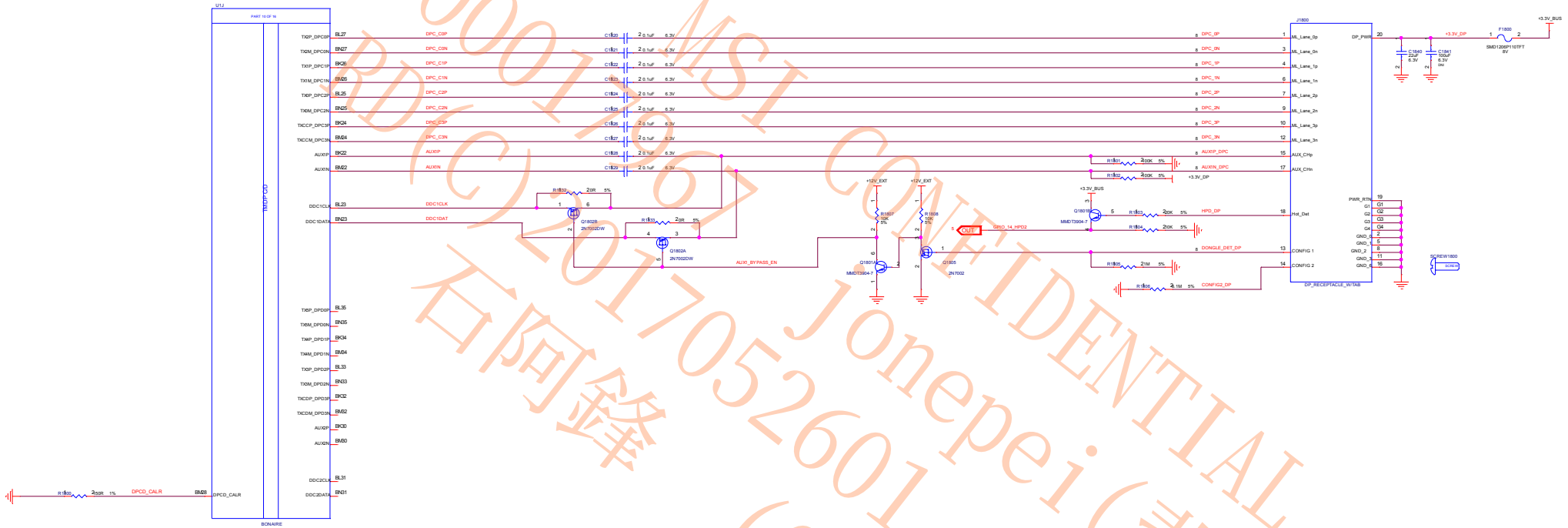

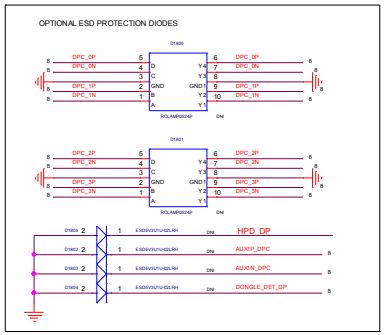

0001168 7
MSI CONFIDENTIAL
RD(C)2017052601
Jonepei(裴亮樂)
石阿鋒
RMA工程部
(00068760)

AMD - PLATFORM HARDWARE ENG
#48, No.1387, ZHANGDONG ROAD
SHANGHAI, CHINA 201203

SHEET:	TOBAGO TMDPCD DP
DATE:	Mon Mar 30 02:42:05 2015
REV:	1.0
SHEET NUMBER:	8 OF 20
DOCUMENT NUMBER:	105_C936xx_00A
NOTES:	NOTE

CONFIDENTIAL AND PROPRIETARY TO ADVANCED MICRO DEVICES INC.
© 2014 Advanced Micro Devices
This AMD Board schematic and design is the exclusive property of AMD, and is provided only to entities under a non-disclosure agreement with AMD for evaluation purposes. Further distribution or disclosure is strictly prohibited. Use of this schematic and design for any purpose other than evaluation requires a Board Technology License Agreement with AMD. AMD makes no representations or warranties of any kind regarding this schematic and design, including, not limited to, any implied warranty of merchantability or fitness for a particular purpose, and disclaims responsibility for any consequences resulting from use of the information included herein.

TITLE: TOBAGO G5 4X32bit

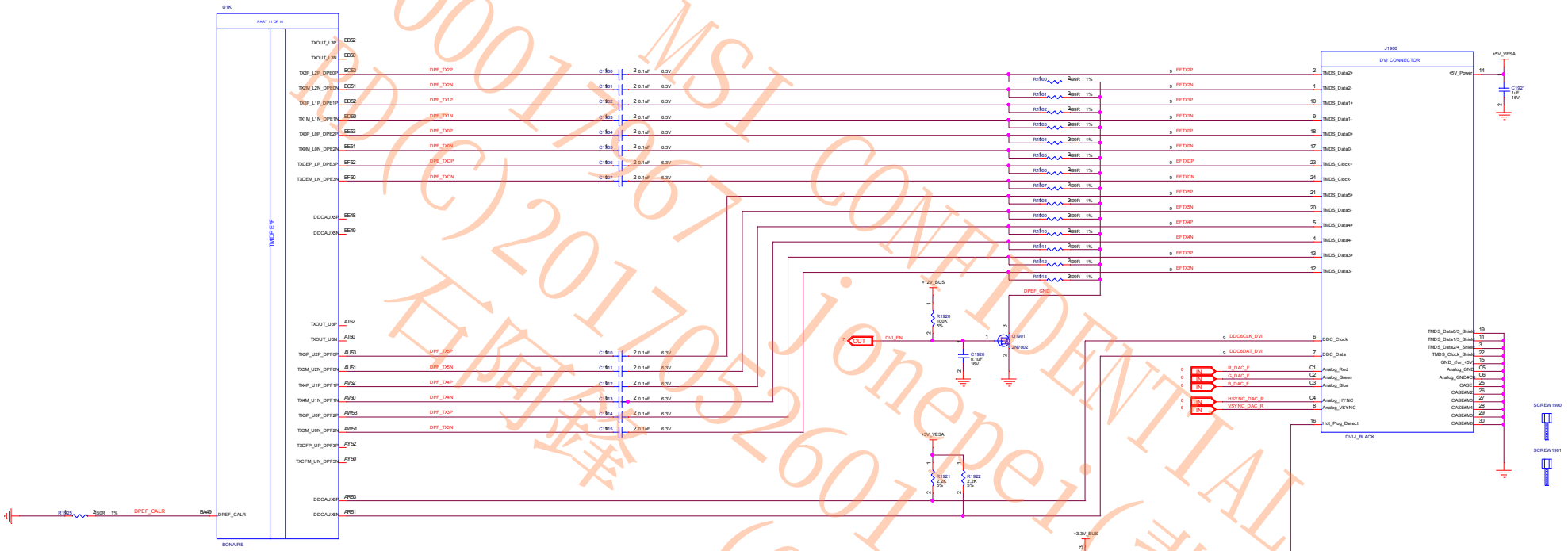

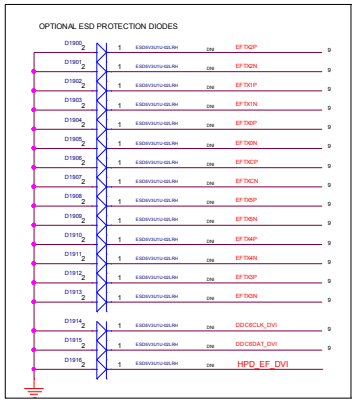

MSI CONFIDENTIAL
0001 1367
Jonepei(黃亮樂)
RMA工程師
(0006 8760)
DD(C)2017052601
石阿鋒

AMD - PLATFORM HARDWARE ENG
#48, No.1387, ZHANGDONG ROAD
SHANGHAI, CHINA 201203

SHEET:	TOBAGO TMDPEF
DATE:	Mon Mar 30 02:42:06 2015
REV:	1.0
SHEET NUMBER:	9 OF 20
DOCUMENT NUMBER:	105_C936xx_00A
NOTES:	NOTE

CONFIDENTIAL AND PROPRIETARY TO ADVANCED MICRO DEVICES INC.
© 2014 Advanced Micro Devices
This AMD Board schematic and design is the exclusive property of AMD, and is powered only to entities under a non-disclosure agreement with AMD for evaluation purposes. Further distribution or disclosure is strictly prohibited. Use of this schematic and design for any purpose other than evaluation requires a Board Technology License Agreement with AMD. AMD makes no representations or warranties of any kind regarding this schematic and design, including, not limited to, any implied warranty of merchantability or fitness for a particular purpose, and disclaims responsibility for any consequences resulting from use of the information included herein.

TITLE:
TOBAGO G5 4X32bit

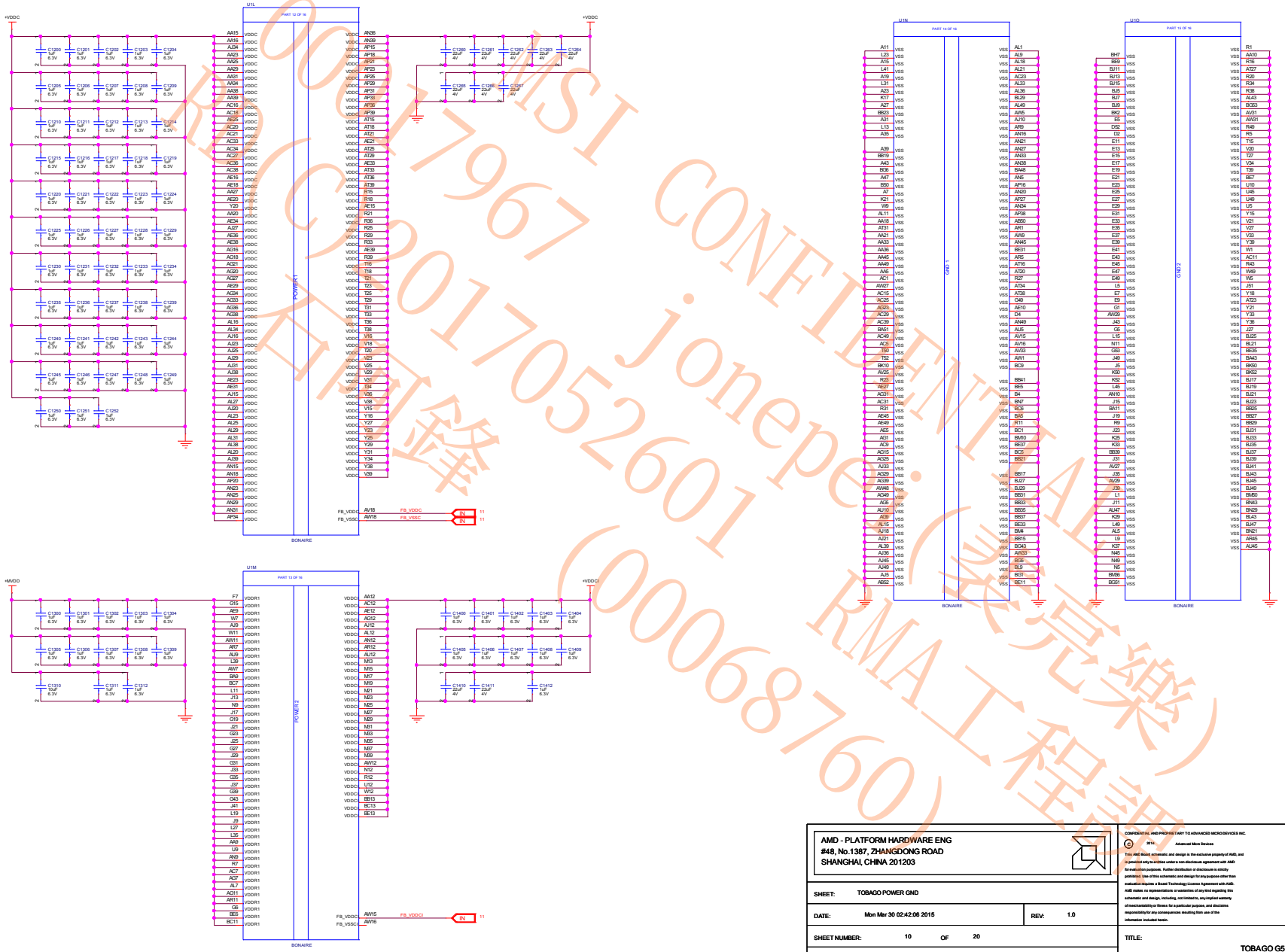

MSI CONFIDENTIAL
RMA工程部
(000068760)
(2017052601 jonepei)
(完樂)
00117967
石可鋒

AMD - PLATFORM HARDWARE ENG
#48, No.1387, ZHANGDONG ROAD
SHANGHAI, CHINA 201203

SHEET:	TOBAGO POWER GND
DATE:	Mon Mar 30 02:42:06 2015
REV:	1.0
SHEET NUMBER:	10 OF 20
DOCUMENT NUMBER:	105_C936xx_00A
NOTES:	NOTE

CONFIDENTIAL AND PROPRIETARY TO ADVANCED MICRO DEVICES INC.
© 2014 Advanced Micro Devices
This AMD Board schematic and design is the exclusive property of AMD, and is provided only to entities under a non-disclosure agreement with AMD for evaluation purposes. Further distribution or disclosure is strictly prohibited. Use of this schematic and design for any purpose other than evaluation requires a Board Technology License Agreement with AMD. AMD makes no representations or warranties of any kind regarding this schematic and design, including, not limited to, any implied warranty of merchantability or fitness for a particular purpose, and disclaims responsibility for any consequences resulting from use of the information included herein.

TITLE: TOBAGO G5 4X32bit

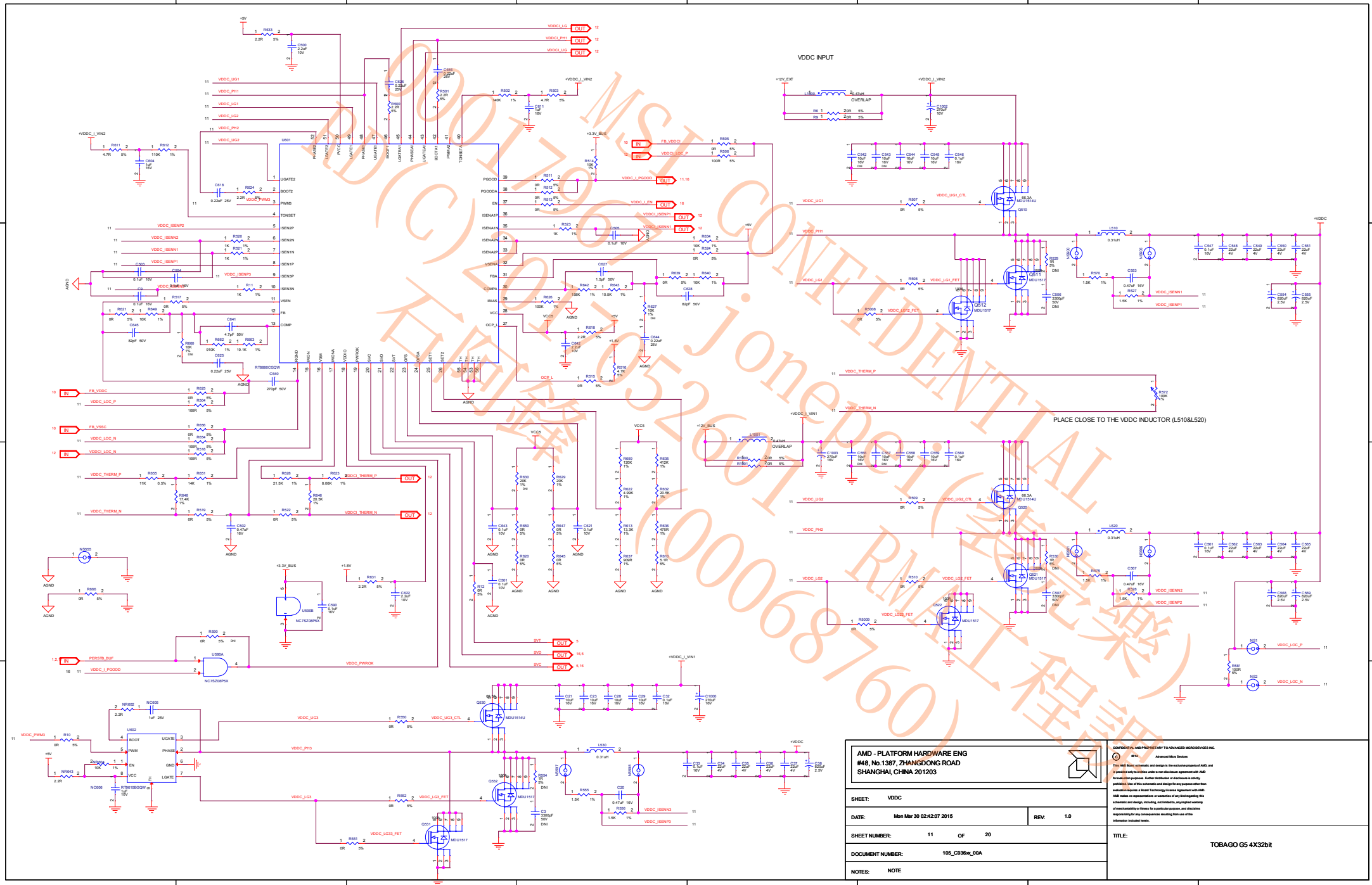

AMD - PLATFORM HARDWARE ENG
#48, No.1387, ZHANGDONG ROAD
SHANGHAI, CHINA 201203

SHEET:	VDDC		
DATE:	Mon Mar 30 02:42:07 2015	REV:	1.0
SHEET NUMBER:	11 OF 20		
DOCUMENT NUMBER:	105_C936xx_00A		
NOTES:	NOTE		

CONFIDENTIAL AND PROPRIETARY TO ADVANCED MICRO DEVICES INC.
© 2014 Advanced Micro Devices
This AMD Board schematic and design is the exclusive property of AMD, and is provided only to entities under a non-disclosure agreement with AMD for evaluation purposes. Further distribution or disclosure is strictly prohibited. Use of this schematic and design for any purpose other than evaluation requires a Board Technology License Agreement with AMD. AMD makes no representations or warranties of any kind regarding this schematic and design, including, not limited to, any implied warranty of merchantability or fitness for a particular purpose, and disclaims responsibility for any consequences resulting from use of the information included herein.

TITLE: TOBAGO G5 4X32bit

MSI CONFIDENTIAL
RMA工程部
jonepeng(彭俊樂)
00068760
001706
(C)2014

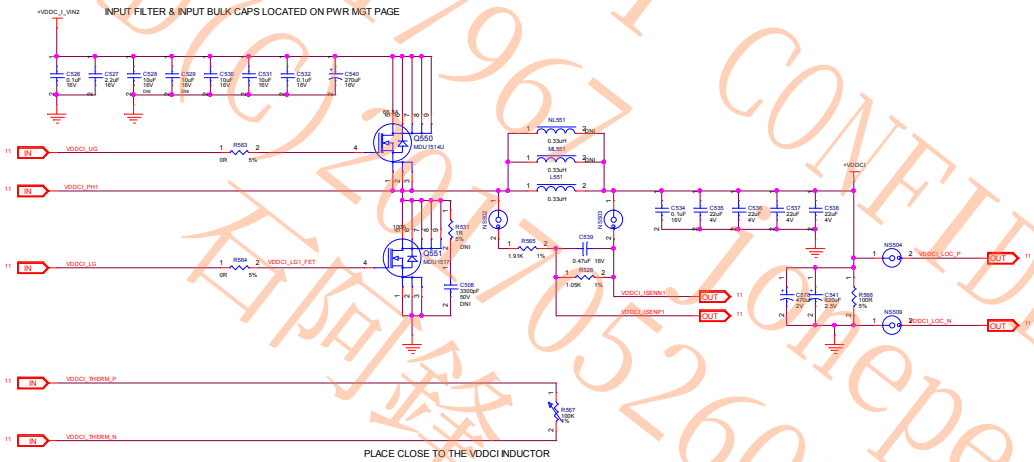

MSI CONFIDENTIAL
0001796 7
RD(C)2017052601
石阿鋒
Lanepei(裴亮樂)
RMA工程部
(00068760)

AMD - PLATFORM HARDWARE ENG
#48, No.1387, ZHANGDONG ROAD
SHANGHAI, CHINA 201203

SHEET:	VDDCI
DATE:	Mon Mar 30 02:42:08 2015
REV:	1.0
SHEET NUMBER:	12 OF 20
DOCUMENT NUMBER:	105_C936xx_00A
NOTES:	NOTE

CONFIDENTIAL AND PROPRIETARY TO ADVANCED MICRO DEVICES INC.
© 2014 Advanced Micro Devices
This AMD Board schematic and design is the exclusive property of AMD, and is provided only to entities under a non-disclosure agreement with AMD for evaluation purposes. Further distribution or disclosure is strictly prohibited. Use of this schematic and design for any purpose other than evaluation requires a Board Technology License Agreement with AMD. AMD makes no representations or warranties of any kind regarding this schematic and design, including, not limited to, any implied warranty of merchantability or fitness for a particular purpose, and disclaims responsibility for any consequences resulting from use of the information included herein.

TITLE:

TOBAGO G5 4X32bit

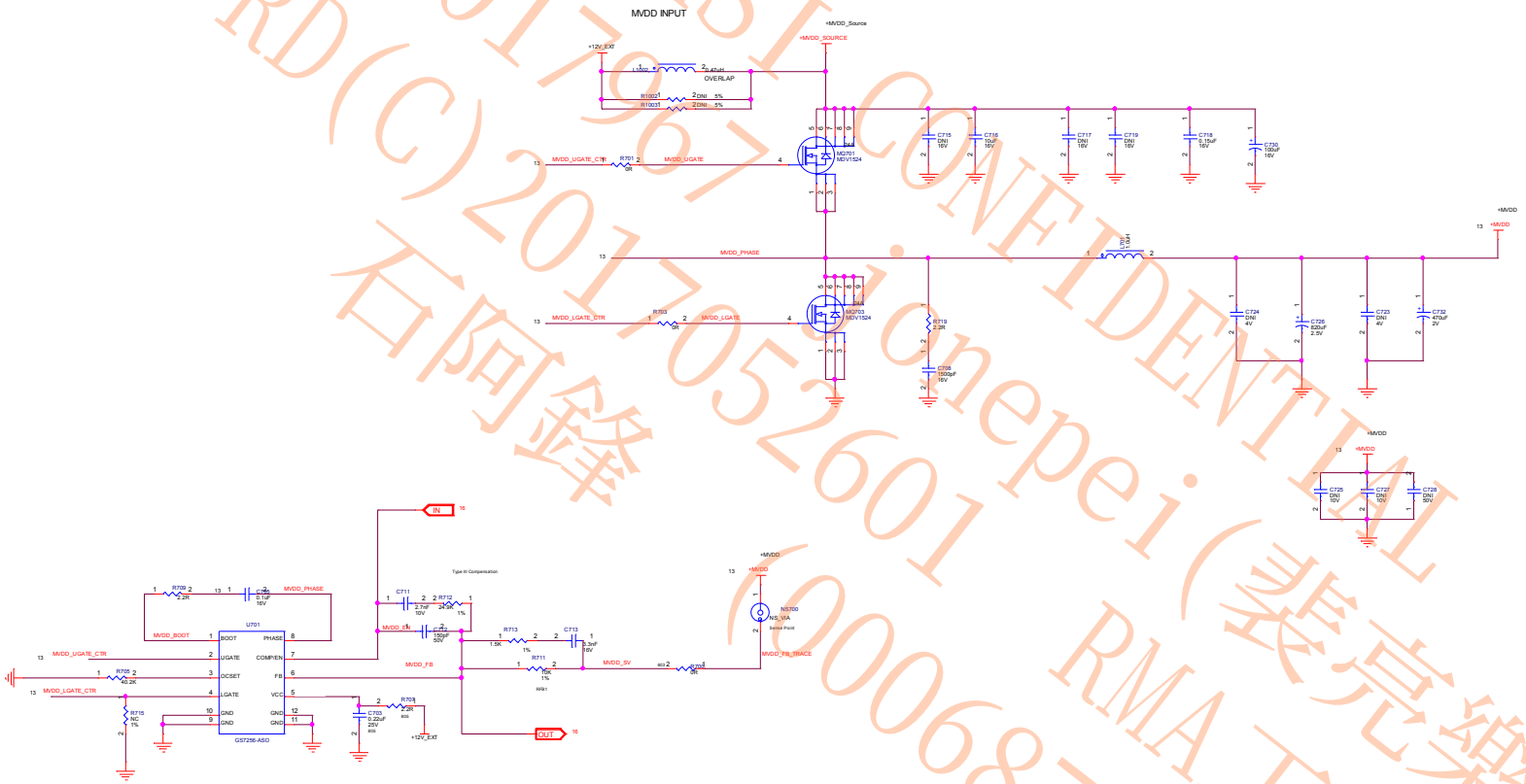

MSI CONFIDENTIAL
0001796 7 Jonepei(裴亮樂)
RD(C)2017052601
RMA工程部
(0000068760)

AMD - PLATFORM HARDWARE ENG
#48, No.1387, ZHANGDONG ROAD
SHANGHAI, CHINA 201203

SHEET:	MVDD		
DATE:	Mon Mar 30 02:42:08 2015	REV:	1.0
SHEET NUMBER:	13 OF 20		
DOCUMENT NUMBER:	105_C936xx_00A		
NOTES:	NOTE		

CONFIDENTIAL AND PROPRIETARY TO ADVANCED MICRO DEVICES INC.
© 2014 Advanced Micro Devices
This AMD Board schematic and design is the exclusive property of AMD, and is provided only to entities under a non-disclosure agreement with AMD for evaluation purposes. Further distribution or disclosure is strictly prohibited. Use of this schematic and design for any purpose other than evaluation requires a Board Technology License Agreement with AMD. AMD makes no representations or warranties of any kind regarding this schematic and design, including, not limited to, any implied warranty of merchantability or fitness for a particular purpose, and disclaims responsibility for any consequences resulting from use of the information included herein.

TITLE: TOBAGO G5 4X32bit

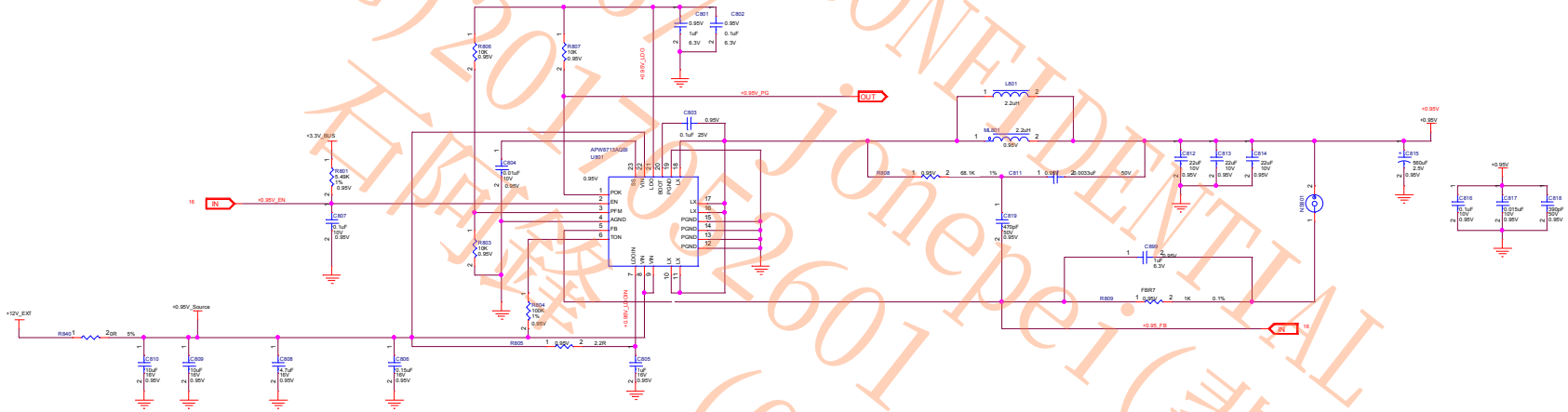

MSI CONFIDENTIAL
00017967
RD(C)2017-02-01
Jonepei(裴亮樂)
石閩鑫
RMA工程師
(00068760)

AMD - PLATFORM HARDWARE ENG #48, No.1387, ZHANGDONG ROAD SHANGHAI, CHINA 201203	
SHEET: 0.95V REG	
DATE: Mon Mar 30 02:42:08 2015	REV: 1.0
SHEET NUMBER: 14 OF 20	
DOCUMENT NUMBER: 105_C936xx_00A	
NOTES: NOTE	

CONFIDENTIAL AND PROPRIETARY TO ADVANCED MICRO DEVICES INC.
© 2014 Advanced Micro Devices
This AMD Board schematic and design is the exclusive property of AMD, and is provided only to entities under a non-disclosure agreement with AMD for evaluation purposes. Further distribution or disclosure is strictly prohibited. Use of this schematic and design for any purpose other than evaluation requires a Board Technology License Agreement with AMD. AMD makes no representations or warranties of any kind regarding this schematic and design, including, not limited to, any implied warranty of merchantability or fitness for a particular purpose, and disclaims responsibility for any consequences resulting from use of the information included herein.

TITLE: TOBAGO G5 4X32bit

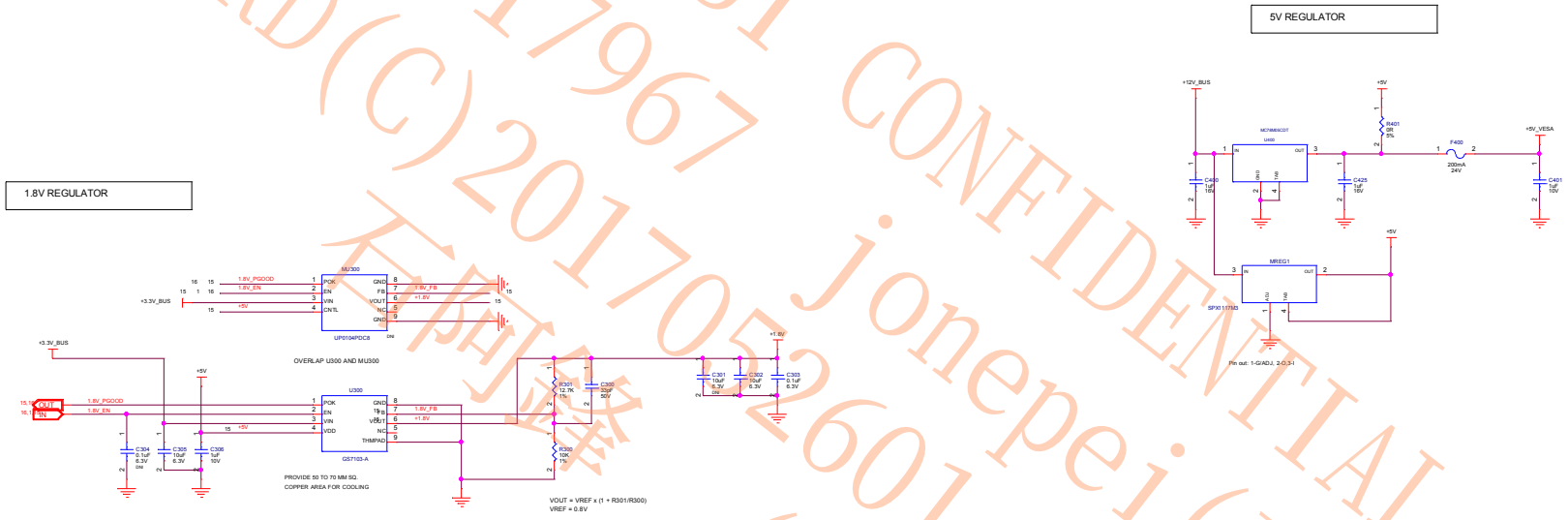

MSI CONFIDENTIAL
00017967 jonepei(裴亮樂)
RD(C)20170522601 RMA工程部
石阿峰 (00068760)

AMD - PLATFORM HARDWARE ENG
#48, No.1387, ZHANGDONG ROAD
SHANGHAI, CHINA 201203

SHEET:	SMALL RAIL REGULATORS
DATE:	Mon Mar 30 02:42:09 2015
REV:	1.0
SHEET NUMBER:	15 OF 20
DOCUMENT NUMBER:	105_C936xx_00A
NOTES:	NOTE

CONFIDENTIAL AND PROPRIETARY TO ADVANCED MICRO DEVICES INC.
© 2014 Advanced Micro Devices
This AMD Board schematic and design is the exclusive property of AMD, and is provided only to entities under a non-disclosure agreement with AMD for evaluation purposes. Further distribution or disclosure is strictly prohibited. Use of this schematic and design for any purpose other than evaluation requires a Board Technology License Agreement with AMD. AMD makes no representations or warranties of any kind regarding this schematic and design, including, not limited to, any implied warranty of merchantability or fitness for a particular purpose, and disclaims responsibility for any consequences resulting from use of the information included herein.

TITLE: TOBAGO G5 4X32bit

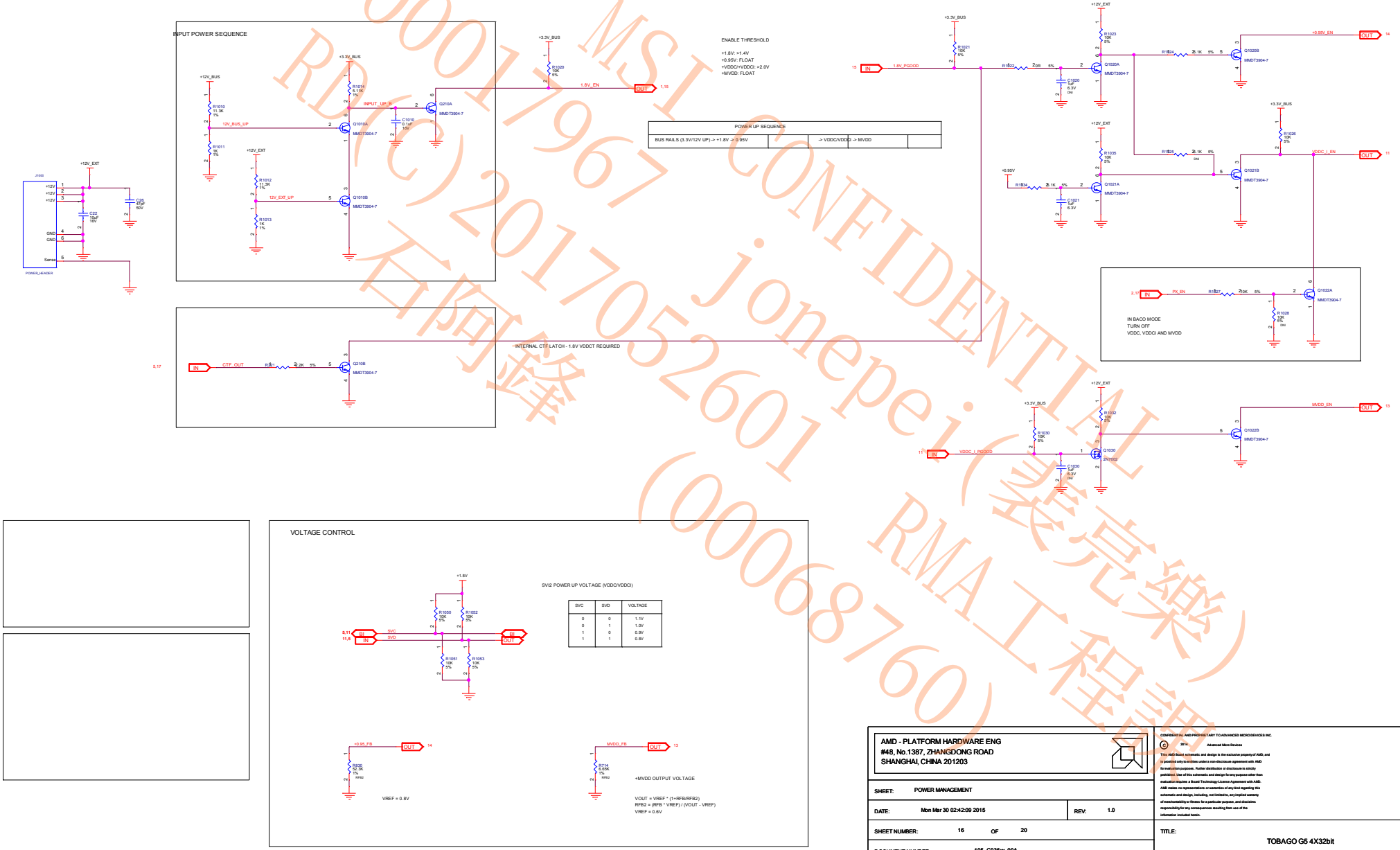

SVC	SVD	VOLTAGE
0	0	1.1V
0	1	1.0V
1	0	0.9V
1	1	0.8V

MSI CONFIDENTIAL
00017967 jonepei(裴亮樂)
RD(C)20170526 01
石阿鋒 (00068760)
RMA工程部

AMD - PLATFORM HARDWARE ENG
#48, No.1387, ZHANGDONG ROAD
SHANGHAI, CHINA 201203

SHEET:	POWER MANAGEMENT
DATE:	Mon Mar 30 02:42:09 2015
REV:	1.0
SHEET NUMBER:	16 OF 20
DOCUMENT NUMBER:	105_C936xx_00A
NOTES:	NOTE

CONFIDENTIAL AND PROPRIETARY TO ADVANCED MICRO DEVICES INC.
© 2014 Advanced Micro Devices
This AMD Board schematic and design is the exclusive property of AMD, and is provided only to entities under a non-disclosure agreement with AMD for evaluation purposes. Further distribution or disclosure is strictly prohibited. Use of this schematic and design for any purpose other than evaluation requires a Board Technology License Agreement with AMD. AMD makes no representations or warranties of any kind regarding this schematic and design, including, not limited to, any implied warranty of merchantability or fitness for a particular purpose, and disclaims responsibility for any consequences resulting from use of the information included herein.

TITLE: TOBAGO G5 4X32bit

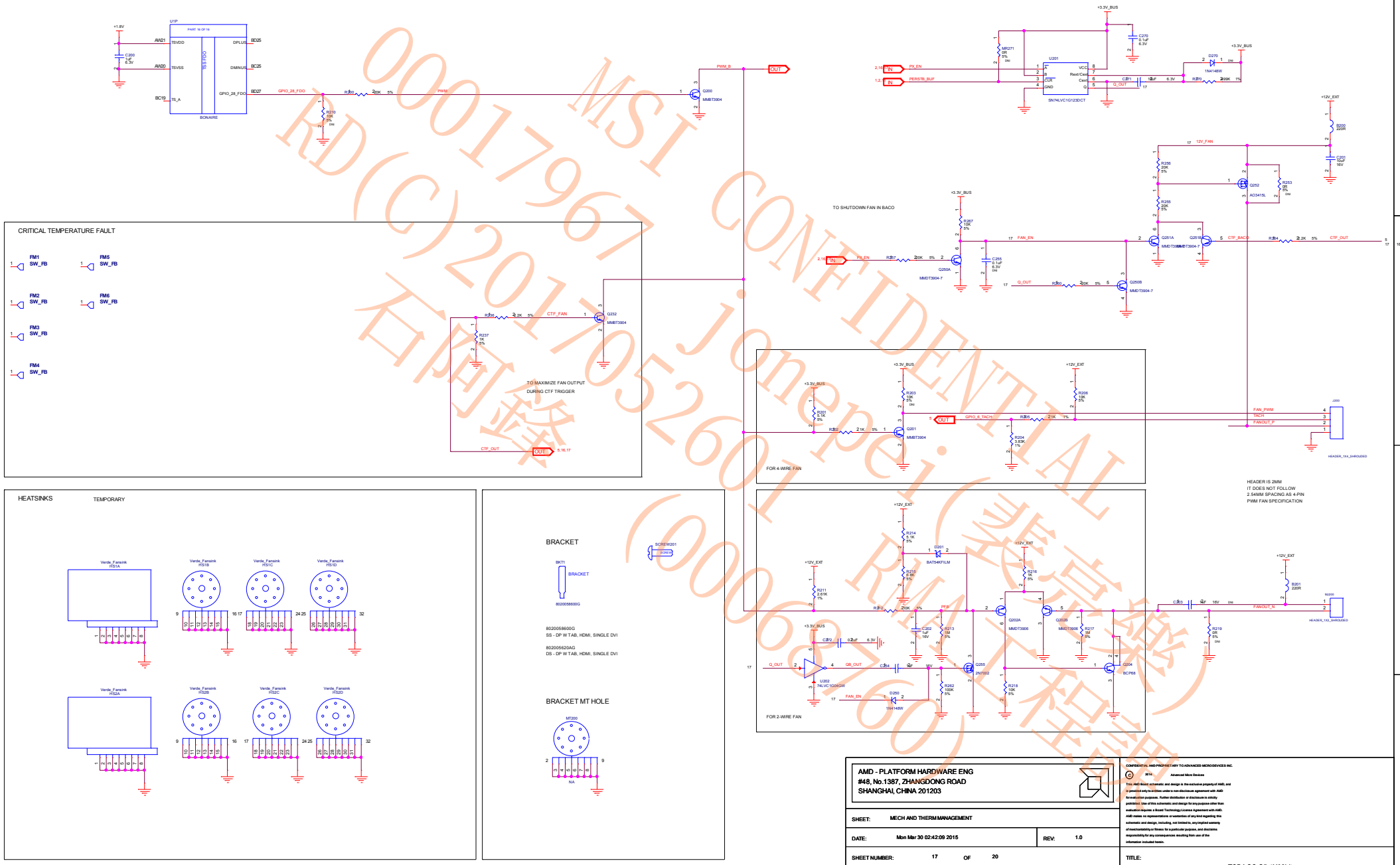

AMD - PLATFORM HARDWARE ENG
#48, No.1387, ZHANGDONG ROAD
SHANGHAI, CHINA 201203

SHEET:	MECH AND THERM MANAGEMENT
DATE:	Mon Mar 30 02:42:09 2015
REV:	1.0
SHEET NUMBER:	17 OF 20
DOCUMENT NUMBER:	105_C936xx_00A
NOTES:	NOTE

CONFIDENTIAL AND PROPRIETARY TO ADVANCED MICRO DEVICES INC.
© 2014 Advanced Micro Devices
This AMD Board schematic and design is the exclusive property of AMD, and is granted only to entities under a non-disclosure agreement with AMD for evaluation purposes. Further distribution or disclosure is strictly prohibited. Use of this schematic and design for any purpose other than evaluation requires a Board Technology License Agreement with AMD. AMD makes no representations or warranties of any kind regarding this schematic and design, including, not limited to, any implied warranty of merchantability or fitness for a particular purpose, and disclaims responsibility for any consequences resulting from use of the information included herein.

TITLE: TOBAGO G5 4X32bit

MSI CONFIDENTIAL
00017967 Jonepei(裴宣樂)
RD(C)20170526001 RM(工程部)
石岡鋒 (00068760)

JTAG

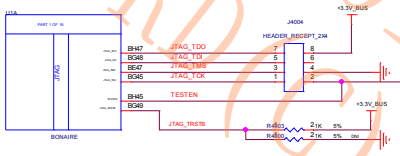

TOP
Single end
RGB
50 ohm +/- 10%
0.102mm
4.02 mils

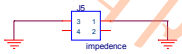

TOP
Different
TMDS
80 ohm +/- 10 %
0.11 mm / 0.16 mm
4.33 mils / 6.3 mils

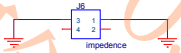

L3
Different
Memory clock
80 ohm +/- 10 %
0.11 mm / 0.16 mm
4.33 mils / 6.3 mils

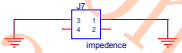

Bottom
Different
PCIE
85 ohm +/- 10 %
0.112 mm / 0.188 mm
4.41 mils / 7.04 mils

L3
Single end
Memory
48 ohm +/- 5 ohm
0.11mm
4.33 mils

Bottom
Single end
Memory
48 ohm +/- 5 ohm
0.11mm
4.33 mils

MSI CONFIDENTIAL
RD(G)20170520001
00017967
jonepei(裴亮樂)
石岡發 (00068760)
RMA工程部

AMD - PLATFORM HARDWARE ENG
#48, No.1387, ZHANGDONG ROAD
SHANGHAI, CHINA 201203

CONFIDENTIAL AND PROPRIETARY TO ADVANCED MICRO DEVICES INC.
© 2014 Advanced Micro Devices
This AMD Board schematic and design is the exclusive property of AMD, and is provided only to entities under a non-disclosure agreement with AMD for evaluation purposes. Further distribution or disclosure is strictly prohibited. Use of this schematic and design for any purpose other than evaluation requires a Board Technology License Agreement with AMD. AMD makes no representations or warranties of any kind regarding this schematic and design, including, not limited to, any implied warranty of merchantability or fitness for a particular purpose, and disclaims responsibility for any consequences resulting from use of the information included herein.

SHEET:	DEBUG CIRCUITS		
DATE:	Mon Mar 30 02:42:10 2015	REV:	1.0
SHEET NUMBER:	18 OF 20		
DOCUMENT NUMBER:	105_C936xx_00A		
NOTES:	NOTE		

TITLE:
TOBAGO G5 4X32bit

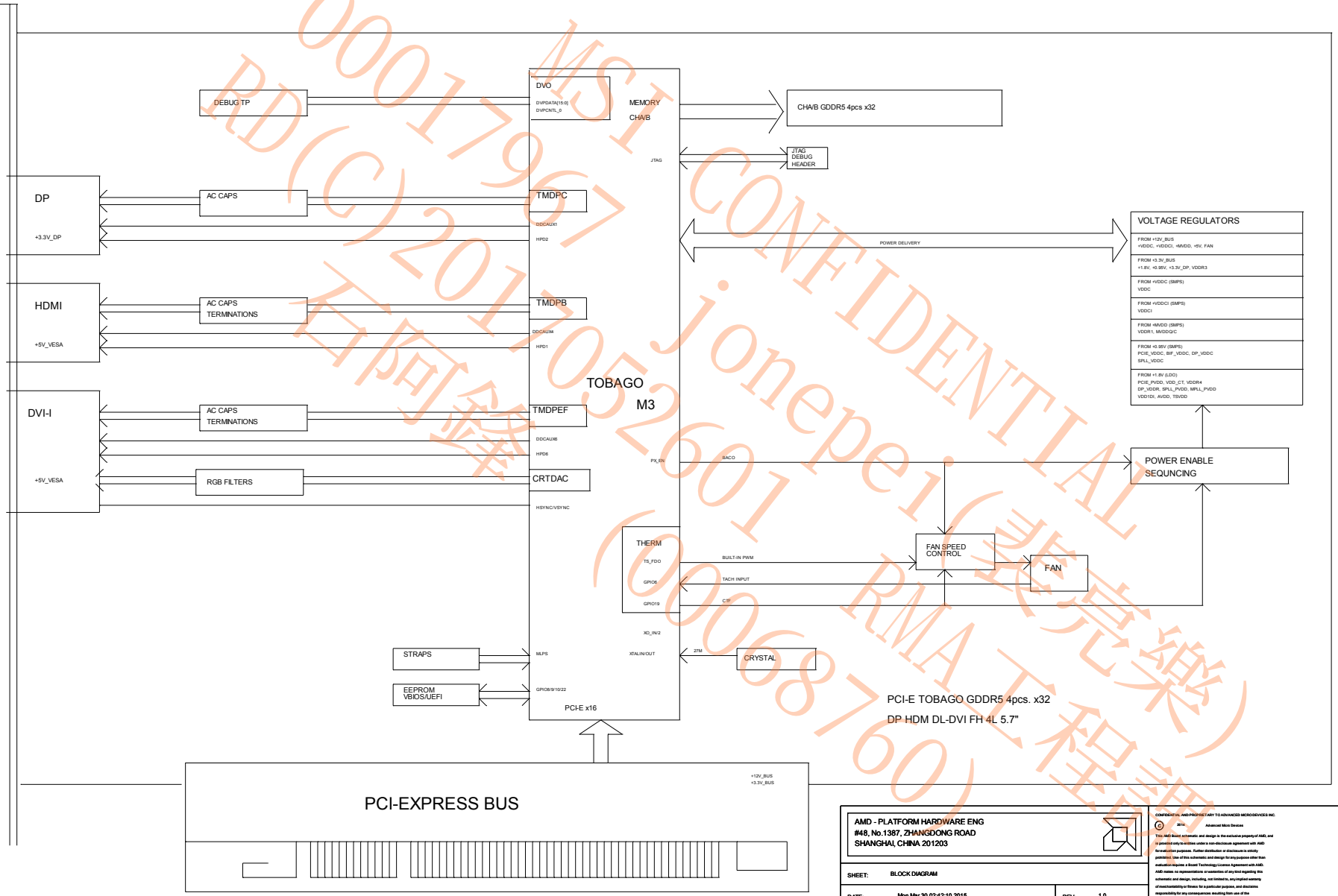

MSI CONFIDENTIAL
00017967
RD(C)2017052601
jonepei(黃亮樂)
石阿鋒
(00068760)
RMA工程部

AMD - PLATFORM HARDWARE ENG
#48, No.1387, ZHANGDONG ROAD
SHANGHAI, CHINA 201203

SHEET:	BLOCK DIAGRAM
DATE:	Mon Mar 30 02:42:10 2015
REV:	1.0
SHEET NUMBER:	19 OF 20
DOCUMENT NUMBER:	105_C936xx_00A
NOTES:	NOTE

CONFIDENTIAL AND PROPRIETARY TO ADVANCED MICRO DEVICES INC.
© 2014 Advanced Micro Devices
This AMD Board schematic and design is the exclusive property of AMD, and is provided only to entities under a non-disclosure agreement with AMD for evaluation purposes. Further distribution or disclosure is strictly prohibited. Use of this schematic and design for any purpose other than evaluation requires a Board Technology License Agreement with AMD. AMD makes no representations or warranties of any kind regarding this schematic and design, including, not limited to, any implied warranty of merchantability or fitness for a particular purpose, and disclaims responsibility for any consequences resulting from use of the information included herein.

TITLE: TOBAGO G5 4X32bit

AMD	TITLE: TOBAGO G5 4X32bit	DOCUMENT NUMBER: 105_C936xx_00A	DATE: Wed Feb 11 05:56:21 2015	SHEET NUMBER: 20 OF 20	REV: 1.0

REVISION HISTORY

ENGINEER: PEAK, DONG

NOTES: NOTE

CONFIDENTIAL AND PROPRIETARY TO ADVANCED MICRO DEVICES INC.
This AMD Board schematic and design is the exclusive property of AMD, and is provided only to entities under a non-disclosure agreement with AMD for evaluation purposes. Further distribution or disclosure is strictly prohibited. Use of this schematic and design for any purpose other than evaluation requires a Board Technology License Agreement with AMD. AMD makes no representations or warranties of any kind regarding this schematic and design, including, not limited to, any implied warranty of merchantability or fitness for a particular purpose, and disclaims responsibility for any consequences resulting from use of the information included herein.
C 2014 Advanced Micro Devices

AMD - PLATFORM HARDWARE ENG
#48, No.1387, ZHANGDONG ROAD
SHANGHAI, CHINA 201203

SCH Rev	PCB Rev	Date	REVISION DESCRIPTON
0	00A	02/10/2015	INITIAL DESIGN

MSI CONFIDENTIAL
00017967 jonepei(裴亮樂)
RD(C)2017052601 RMA工程課
石阿鋒 (00068760)