(1) PCI-EXPRESS EDGE CONNECTOR

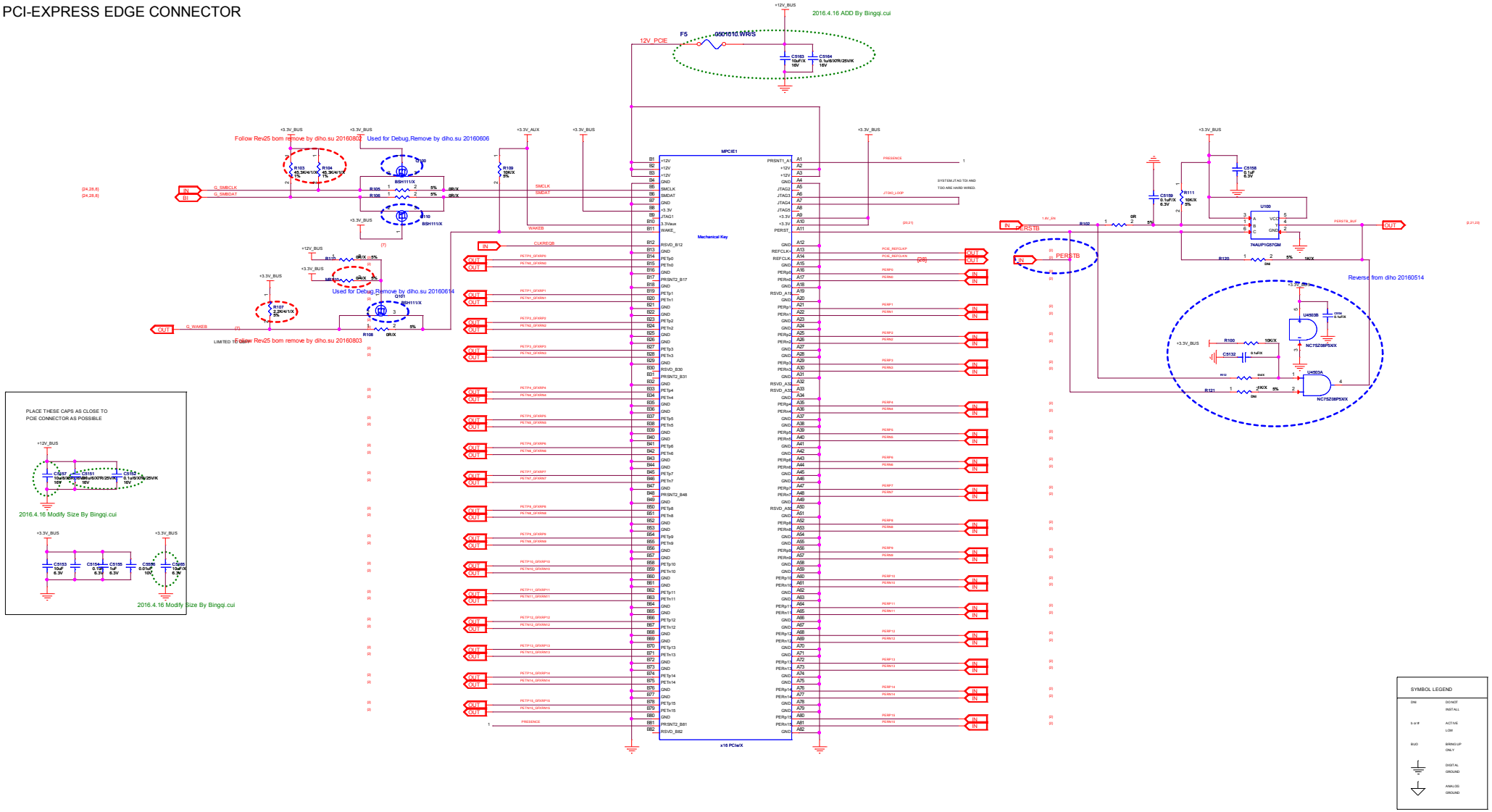

GIGABYTE		
Title: PCI Express		
Size: Custom	Document Number: GV-RX580GAMING-8GD	Rev: 1.0
Date: Monday, February 27, 2017	Sheet 1 of 29	

(2) ELLESMERE PCIE INTERFACE

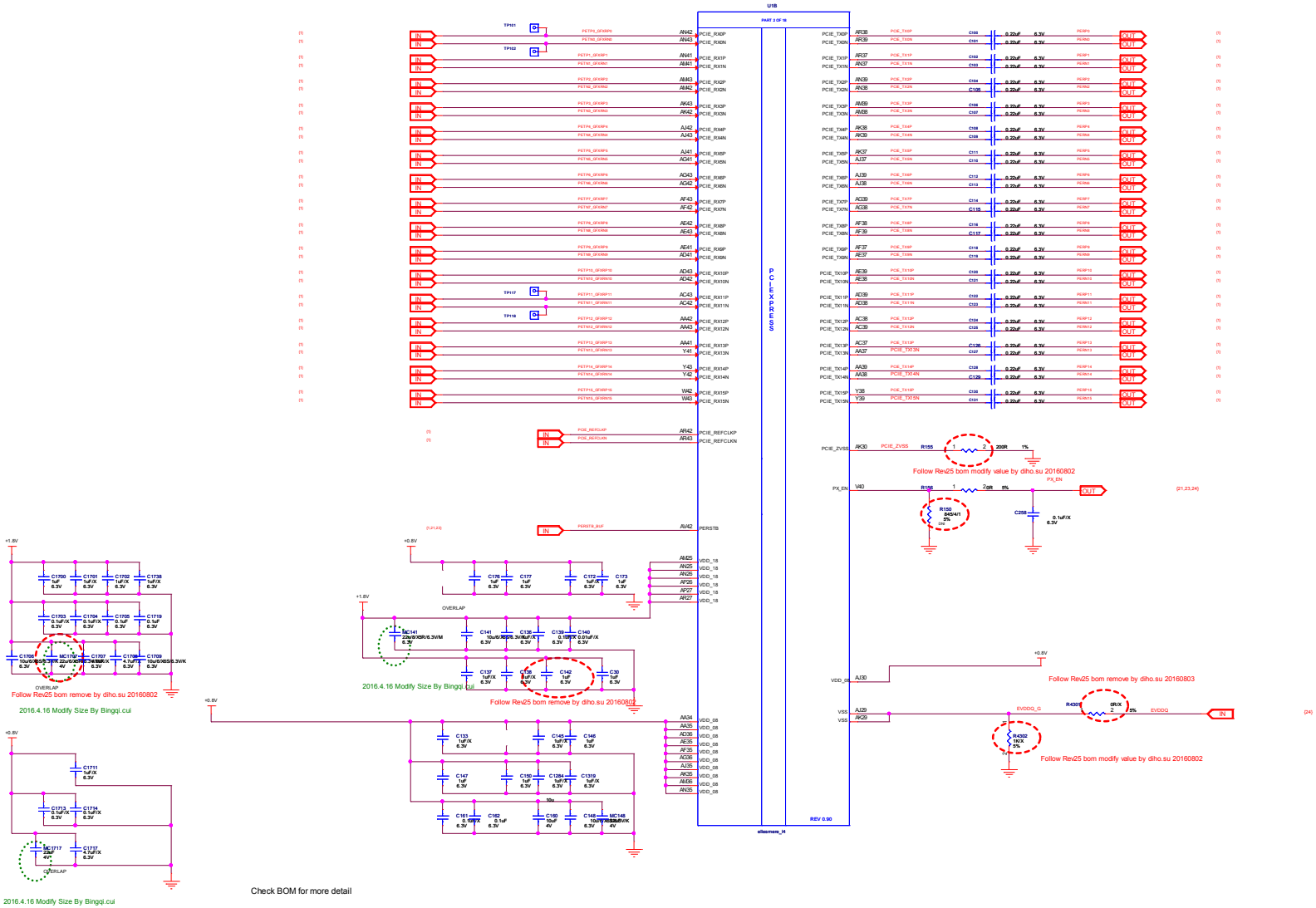

GIGABYTE		
Title: ELLESMERE PCIE INTERFACE		
Size: Custom	Document Number: GV-RX580GAMING-8GD	Rev: 1.0
Date: Monday, February 27, 2017	Sheet 2 of 29	

(3) ELLESMERE MEM INTERFACE CH A/B

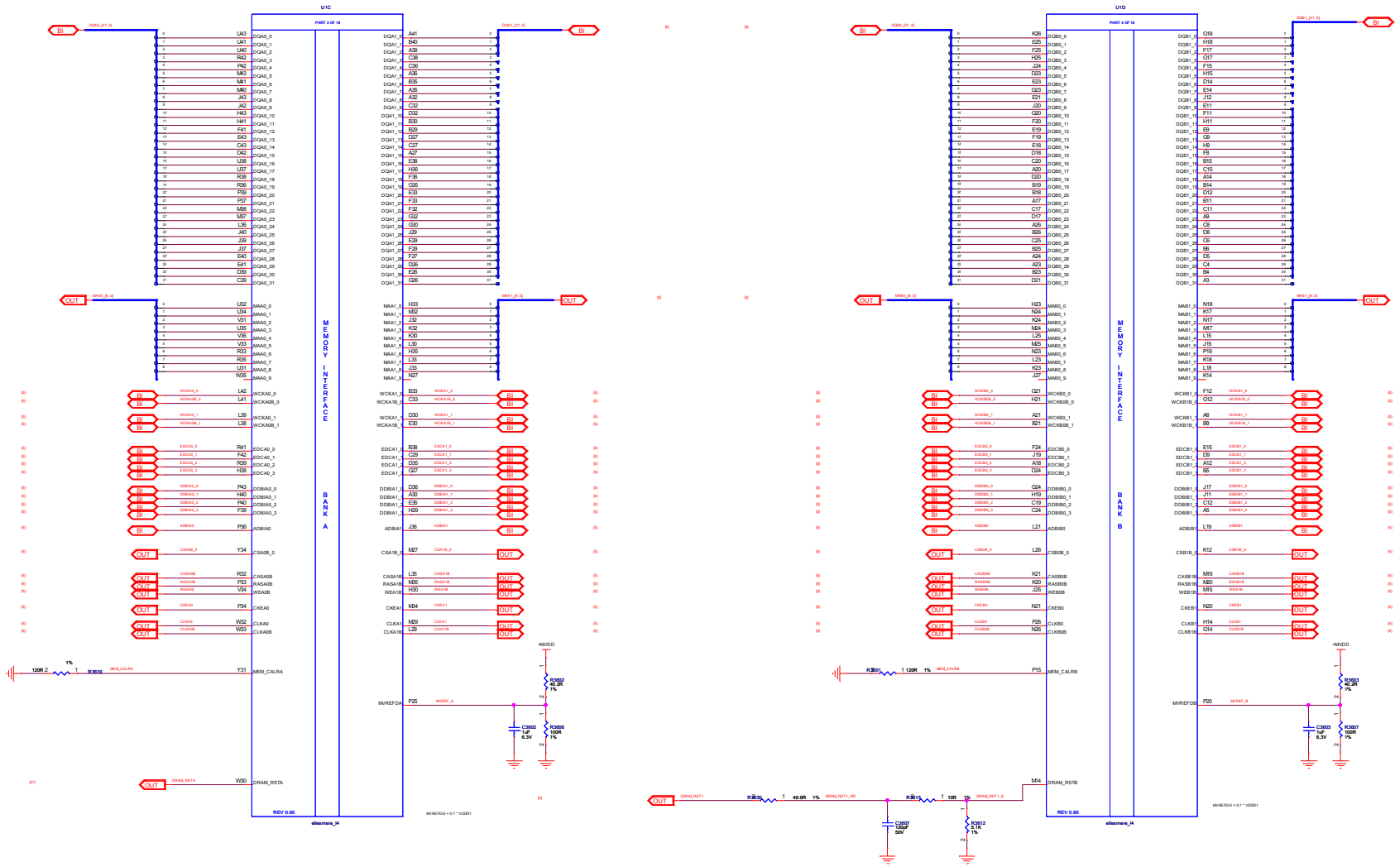

GIGABYTE		
Title	ELLESMERE MEM INTERFACE CH A/B	
Size: Custom	Document Number: GV-RX580GAMING-8GD	Rev: 1.0
Date: Monday, February 27, 2017	Sheet 3 of 29	

(4) ELLESMERE MEM INTERFACE CH C/D

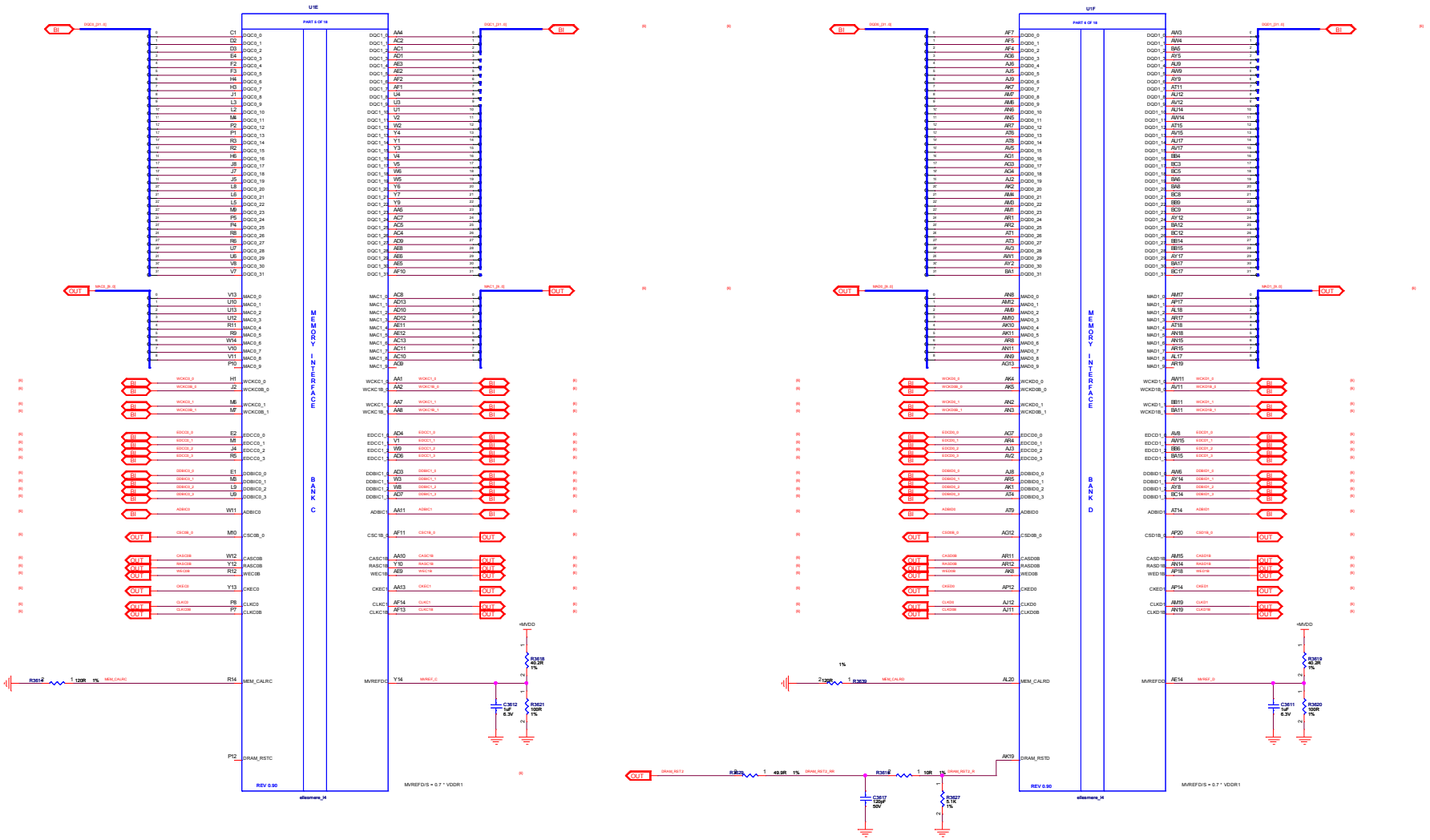

GIGABYTE		
Title	ELLESMERE MEM INTERFACE CH C/D	
Size Custom	Document Number GV-RX580GAMING-8GD	Rev 1.0
Date: Monday, February 27, 2017	Sheet 4 of 29	

(5) GDDR5 MEMORY CH A/B

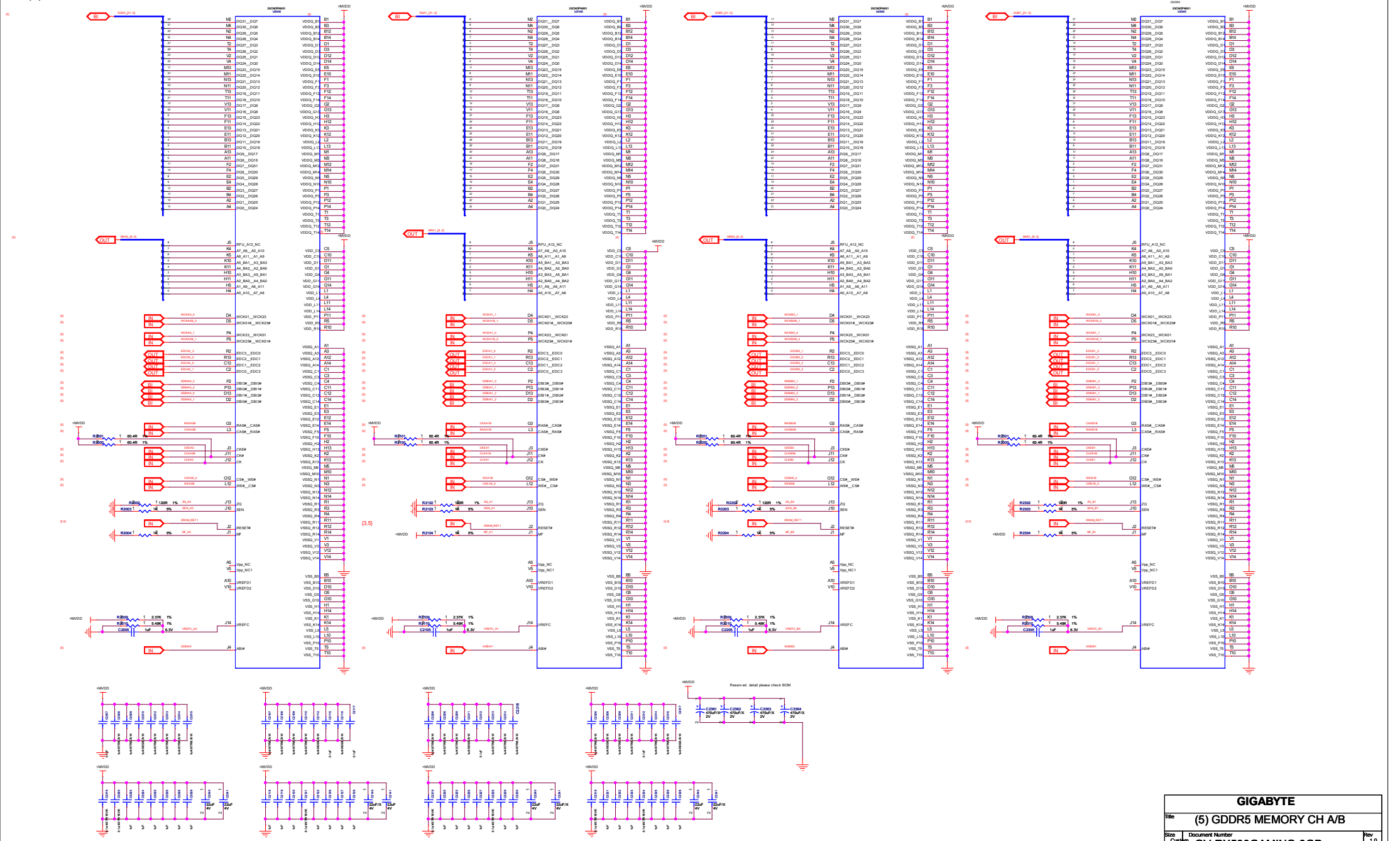

GIGABYTE	
Title	(5) GDDR5 MEMORY CH A/B
Size: Custom	Document Number: GV-RX580GAMING-8GD
Rev	1.0
Date: Monday, February 27, 2017	Sheet 5 of 29

(6) GDDR5 MEMORY CH C/D

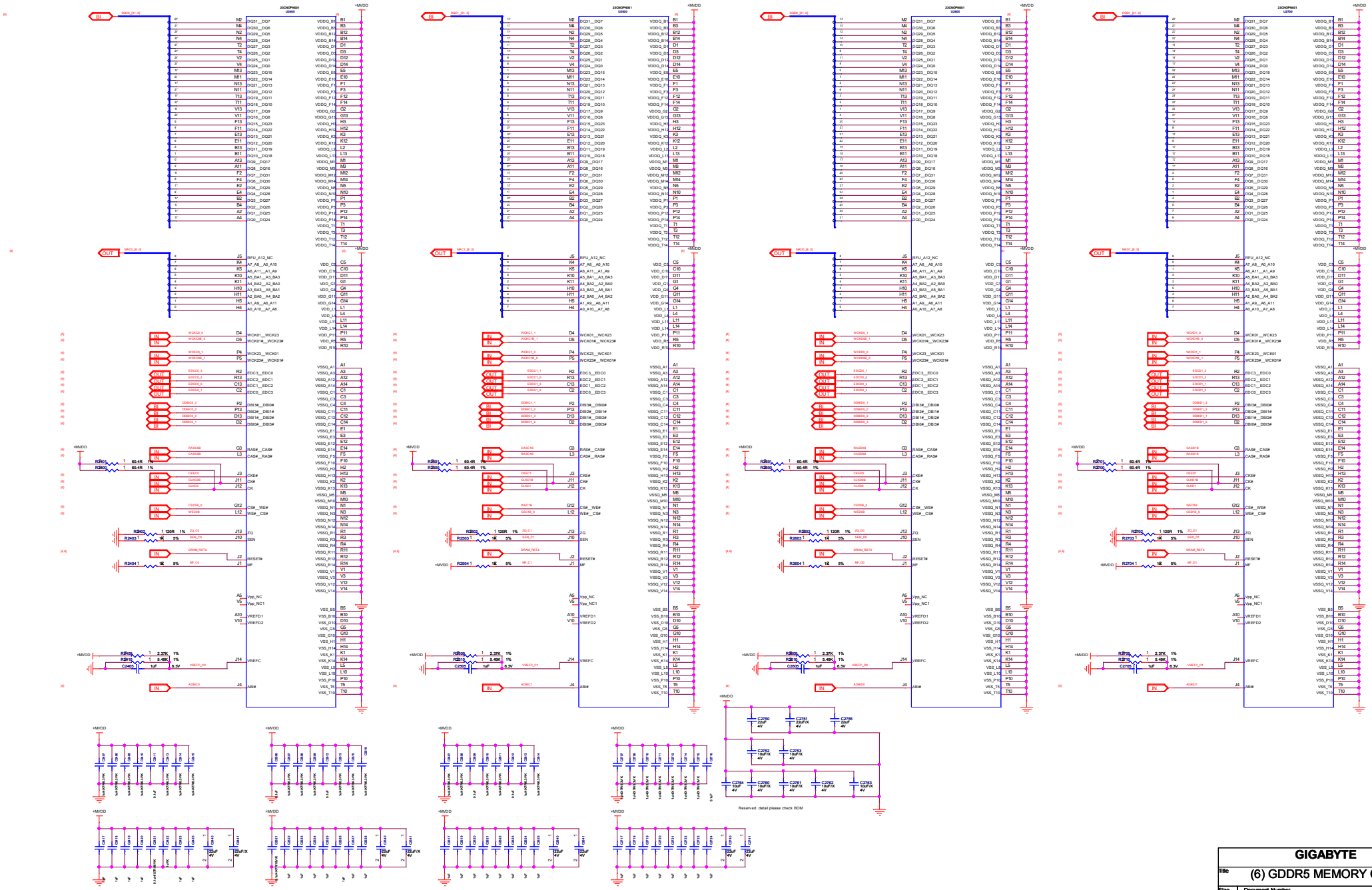

Reserved. detail please check BOM

Title	(6) GDDR5 MEMORY CH C/D
Size: Custom	Document Number: GV-RX580GAMING-8GD
Rev	1.0
Date: Monday, February 27, 2017	Sheet 6 of 29

GIGABYTE

(7) ELLESMERE GPIO STRAP CF XTAL

SCL/SDA BUS:

I2C ADDRESS	FUNCTION	DEVICE

DDCVGA BUS:

I2C ADDRESS	FUNCTION	DEVICE
0x98	EXT TEMP SENSOR	LM96063

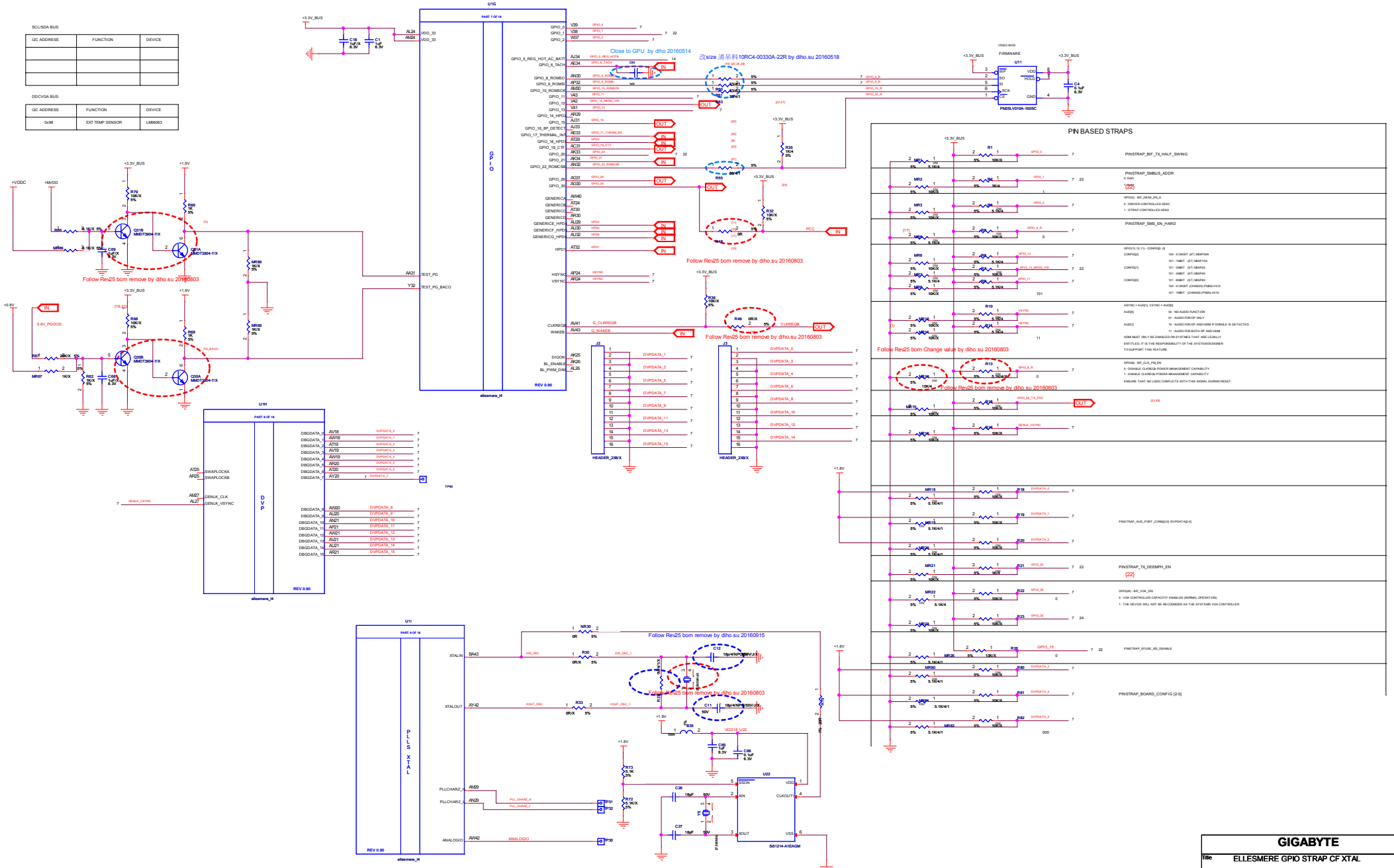

Size	Document Number	Rev
Custom	GV-RX580GAMING-8GD	1.0

GIGABYTE

Title: ELLESMERE GPIO STRAP CF XTAL

Date: Monday, February 27, 2017 Sheet 7 of 29

(8) ELLESMERE DAC1 LOCK

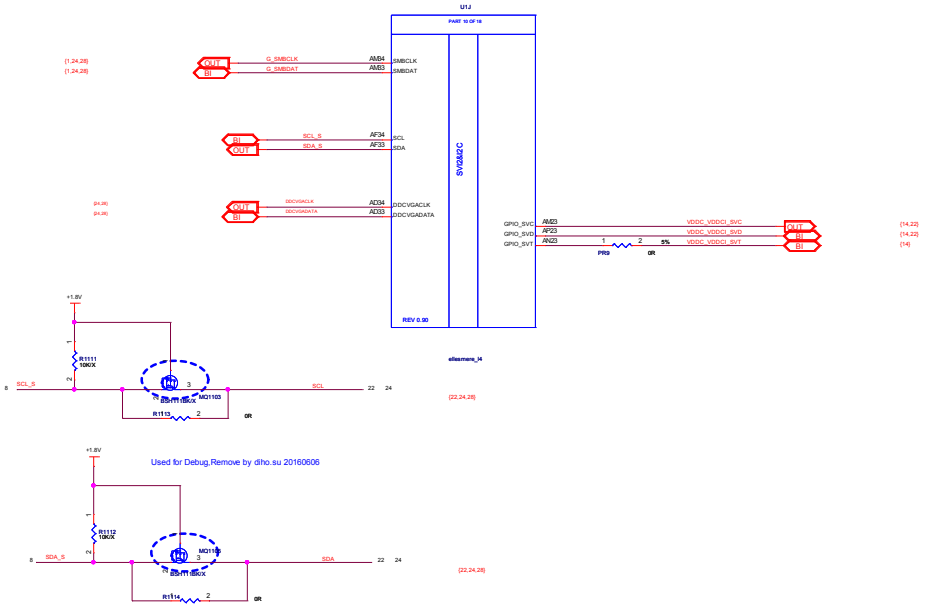

GIGABYTE			
Title	ELLESMERE DAC1 LOCK		
Size: Custom	Document Number: GV-RX580GAMING-8GD		Rev: 1.0
Date: Monday, February 27, 2017	Sheet 8 of 29		

(9) ELLESMERE TMDP A/B

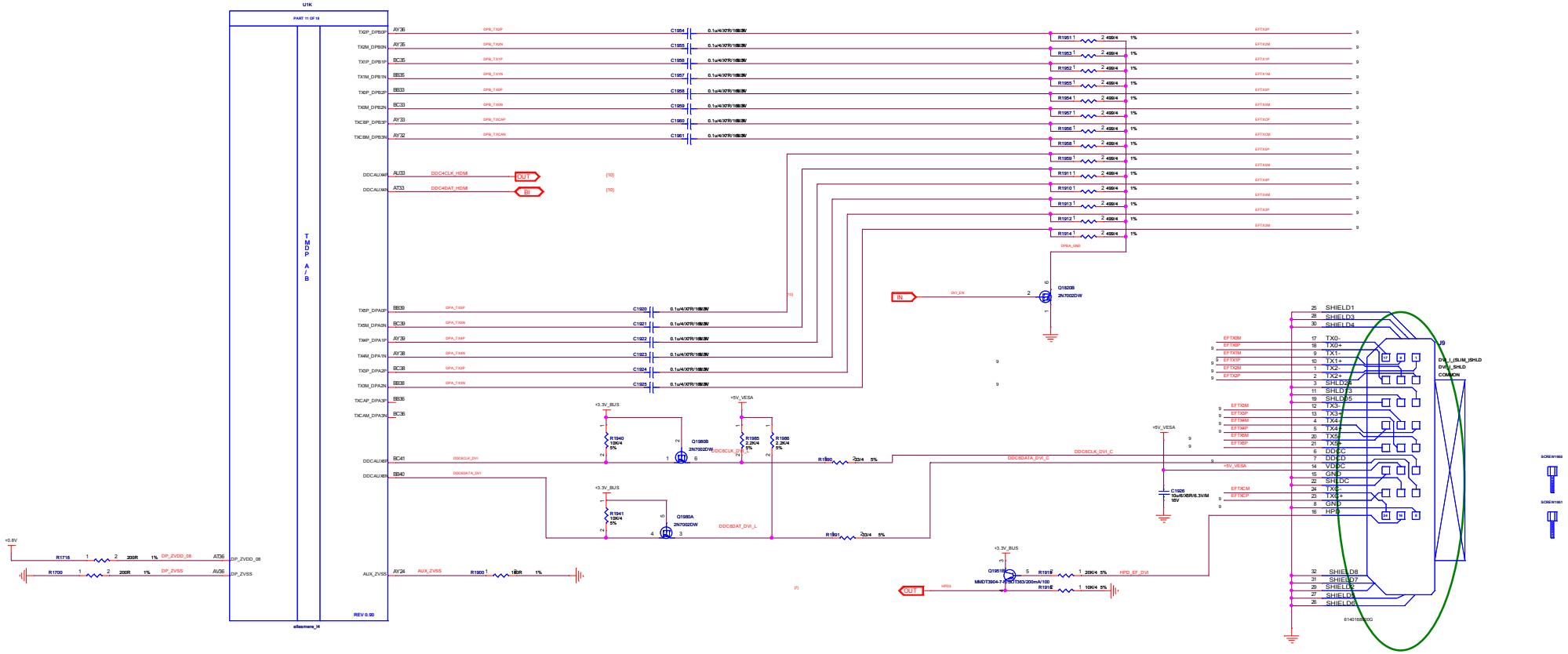

OPTIONAL ESD PROTECTION DIODES

GIGABYTE		
Title	ELLESMERE TMDP A/B	
Size: Custom	Document Number: GV-RX580GAMING-8GD	Rev: 1.0
Date: Monday, February 27, 2017	Sheet 9 of 29	

(10) ELLESMERE TMDP C/D

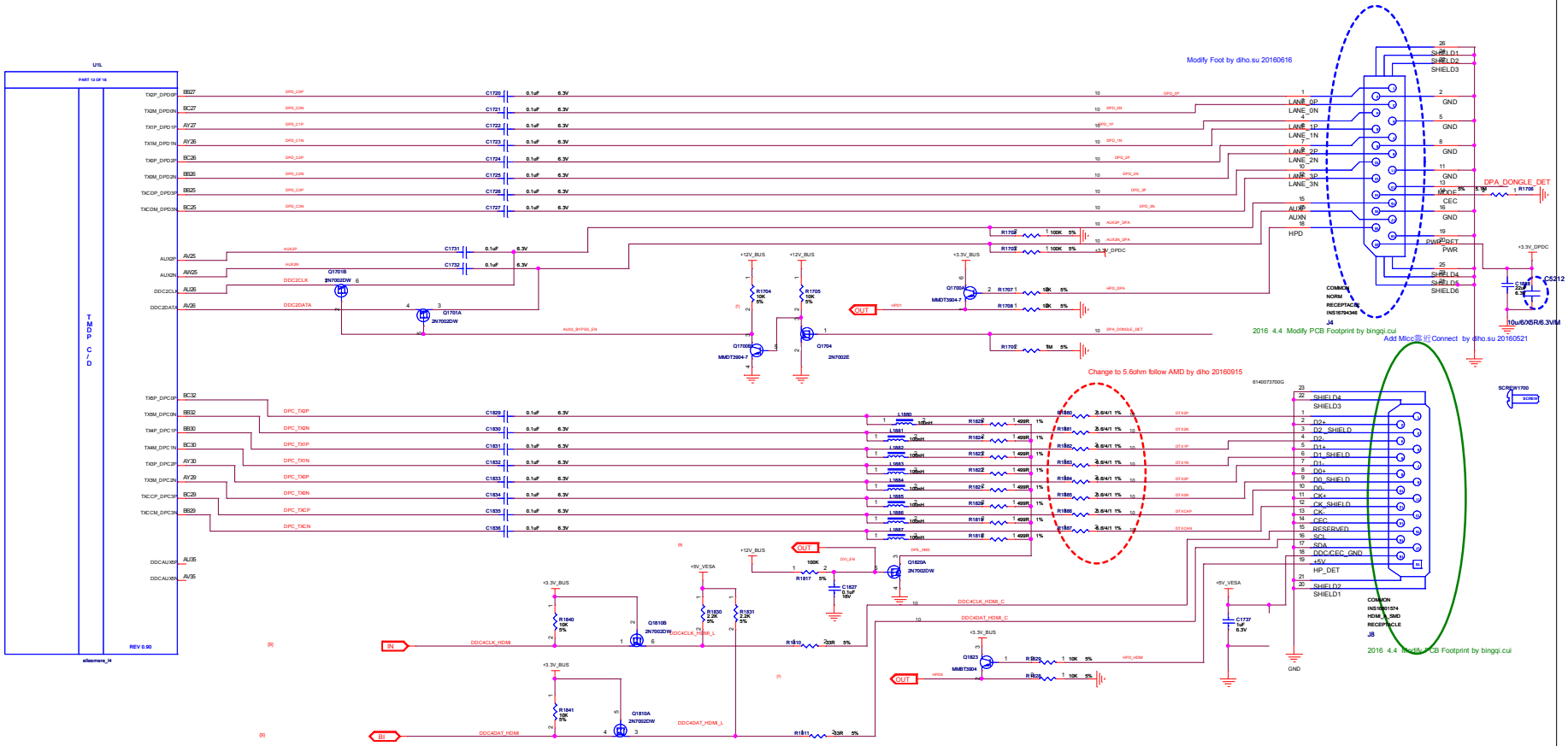

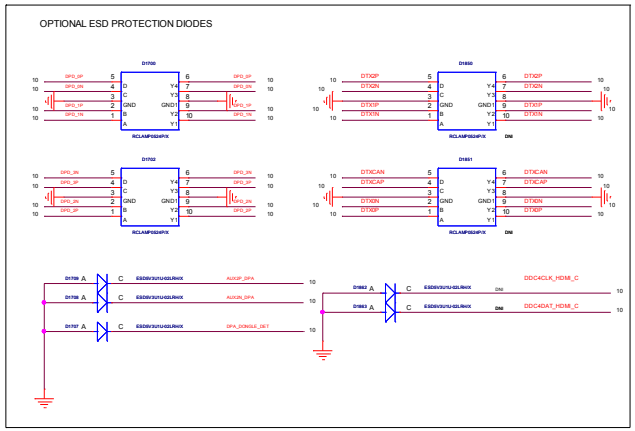

GIGABYTE		
Title: ELLESMERE TMDP C/D		
Size: Custom	Document Number: GV-RX580GAMING-8GD	Rev: 1.0
Date: Monday, February 27, 2017	Sheet 10 of 29	

(11) ELLESMERE LVTMDP E/F

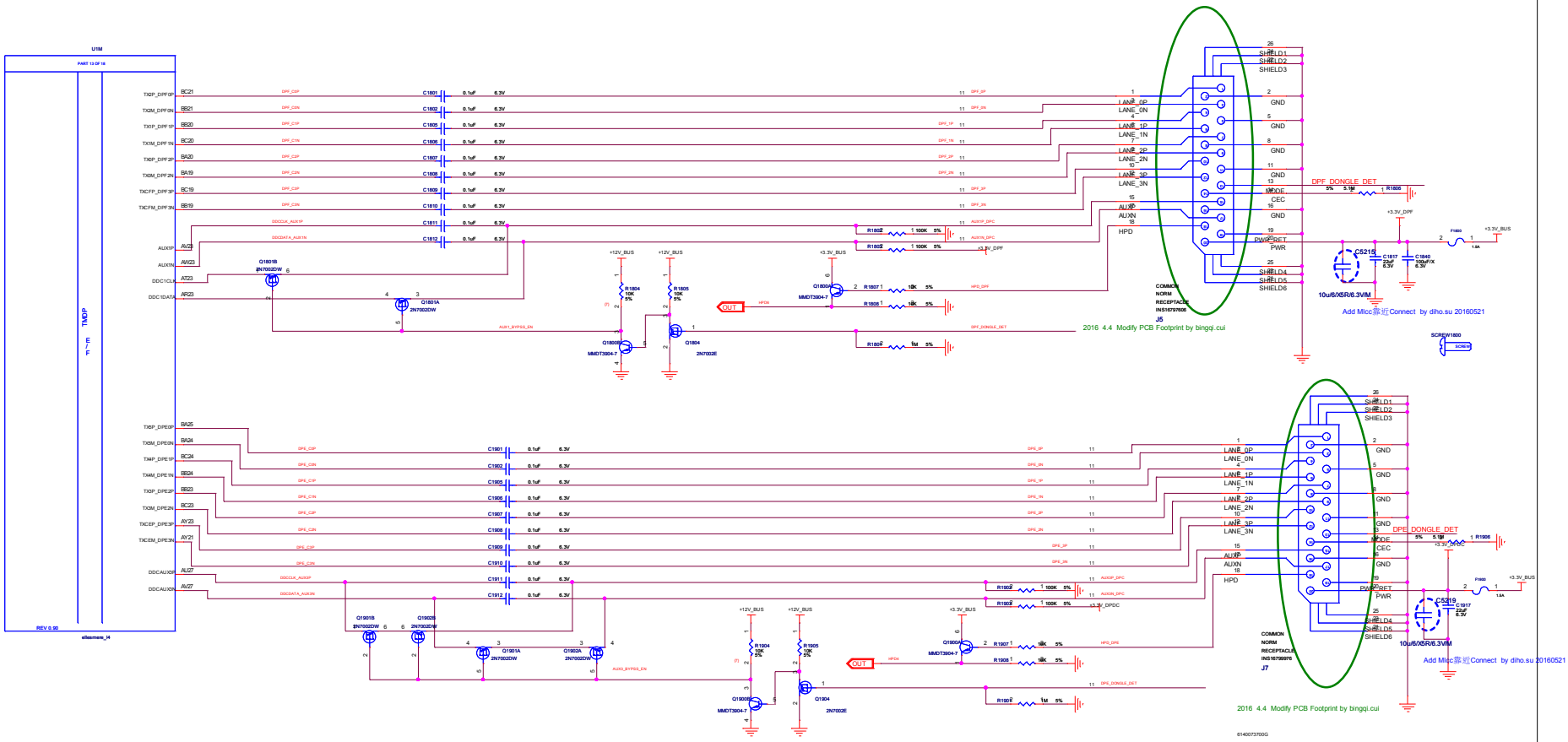

OPTIONAL ESD PROTECTION DIODES

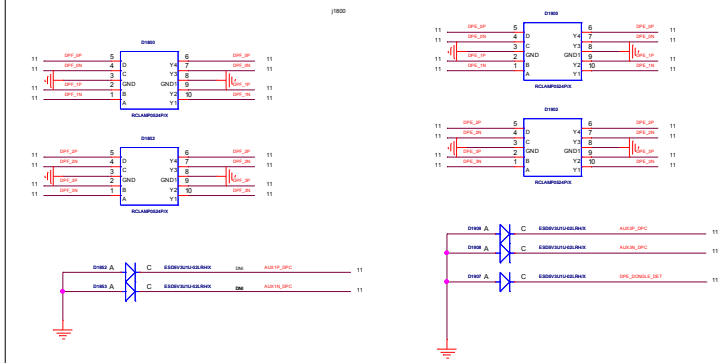

GIGABYTE		
Title: ELLESMERE LVTMDP E/F		
Size: Custom	Document Number: GV-RX580GAMING-8GD	Rev: 1.0
Date: Monday, February 27, 2017	Sheet 11 of 29	

(12) ELLESMERE POWER

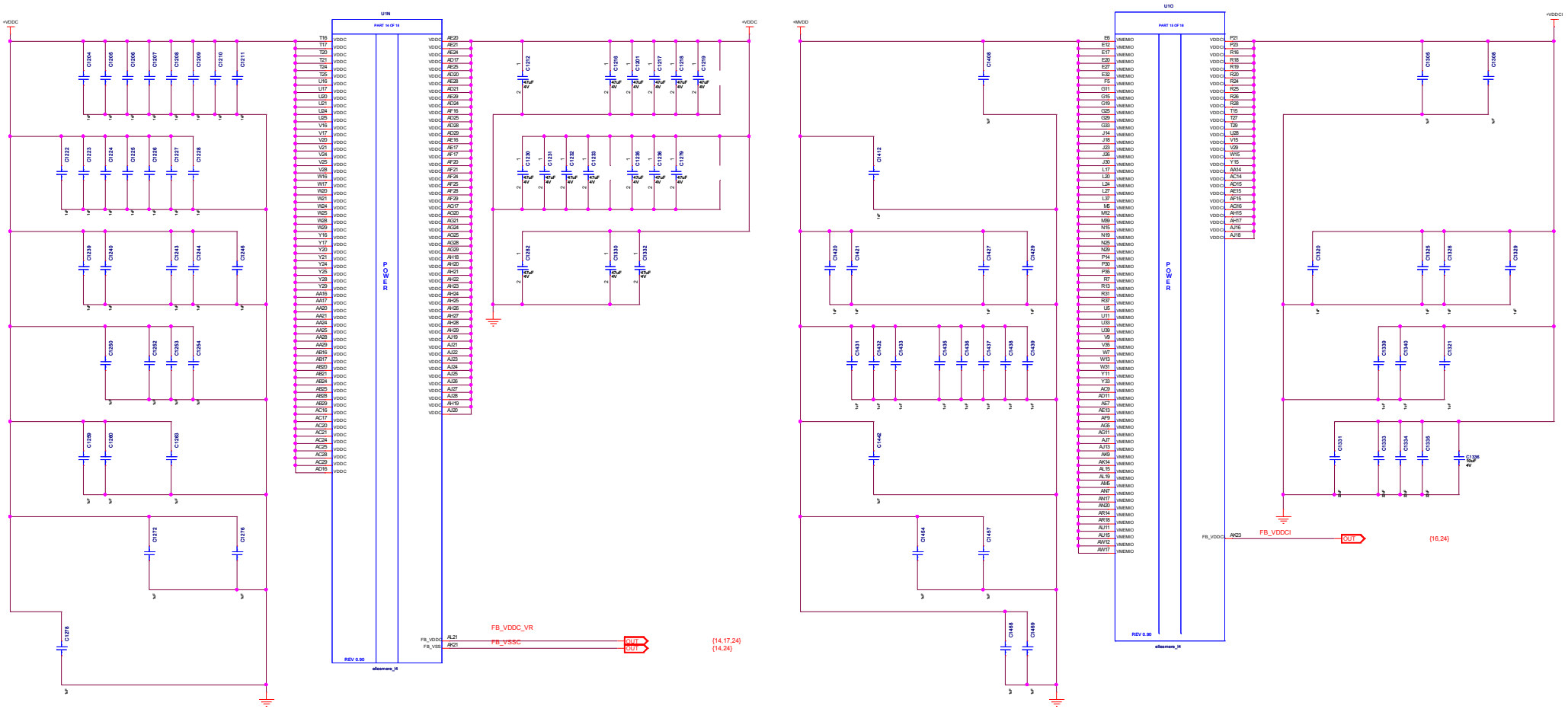

GIGABYTE			
Title	PCI Express		
Size Custom	Document Number GV-RX580GAMING-8GD		Rev 1.0
Date: Monday, February 27, 2017	Sheet 12 of 29		

(13) ELLESMERE GROUND

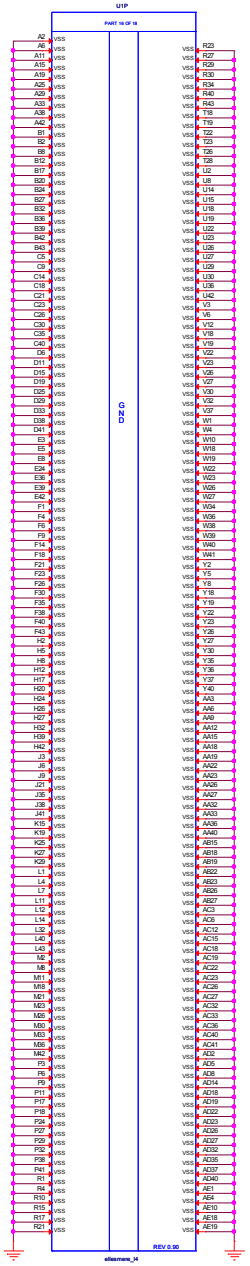

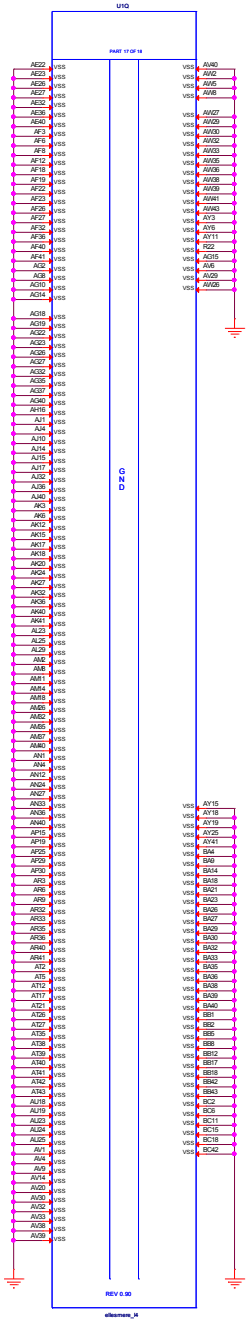

GIGABYTE		
Title: ELLESMERE GND		
Size: Custom	Document Number: GV-RX580GAMING-8GD	Rev: 1.0
Date: Monday, February 27, 2017	Sheet 13 of 29	

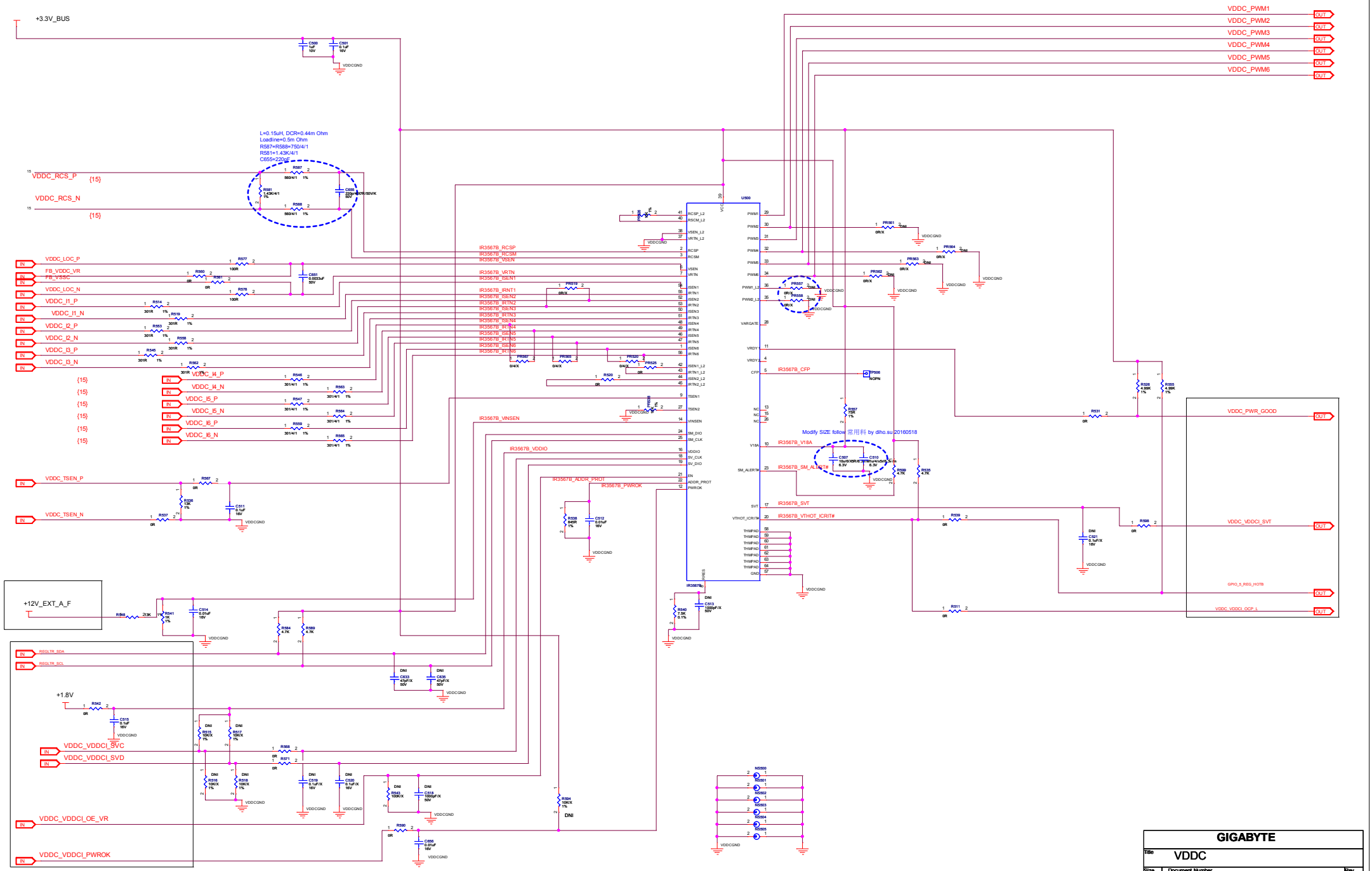
+3.3V_BUS
VDDC_PWM1
VDDC_PWM2
VDDC_PWM3
VDDC_PWM4
VDDC_PWM5
VDDC_PWM6
L=0.15uH, DCR=0.44m Ohm
Loadline=0.5m Ohm
R587=R588=750/4/1
R581=1.43K/4/1
C655=220pF
VDDC_RCS_P
VDDC_RCS_N
VDDC_LOC_P
FB_VDDC_VR
FB_VSSC
VDDC_LOC_N
VDDC_I1_P
VDDC_I1_N
VDDC_I2_P
VDDC_I2_N
VDDC_I3_P
VDDC_I3_N
VDDC_I4_P
VDDC_I4_N
VDDC_I5_P
VDDC_I5_N
VDDC_I6_P
VDDC_I6_N
VDDC_TSEN_P
VDDC_TSEN_N
IR3567B_RCSP
IR3567B_RCSM
IR3567B_VSEN
IR3567B_VRTN
IR3567B_ISEN1
IR3567B_IRNT1
IR3567B_ISEN2
IR3567B_IRTN2
IR3567B_ISEN3
IR3567B_IRTN3
IR3567B_ISEN4
IR3567B_IRTN4
IR3567B_ISEN5
IR3567B_IRTN5
IR3567B_ISEN6
IR3567B_IRTN6
IR3567B_VINSEN
IR3567B_VDDIO
IR3567B_ADDR_PROT
IR3567B_PWROK
IR3567B_CFP
IR3567B_V18A
IR3567B_SM_ALERT#
IR3567B_SVT
IR3567B_VTHOT_ICRIT#
Modify SIZE follow 常用料 by diho.su 20160518
VDDC_PWR_GOOD
VDDC_VDDCI_SVT
GPIO_5_REG_HOTB
VDDC_VDDCI_OCP_L
+12V_EXT_A_F
REGLTR_SDA
REGLTR_SCL
+1.8V
VDDC_VDDCI_SVC
VDDC_VDDCI_SVD
VDDC_VDDCI_OE_VR
VDDC_VDDCI_PWROK
VDDCGND
U500
GIGABYTE
Title
VDDC
Size
Custom
Document Number
GV-RX580GAMING-8GD
Rev
1.0
Date:
Monday, February 27, 2017
Sheet
14
of
29

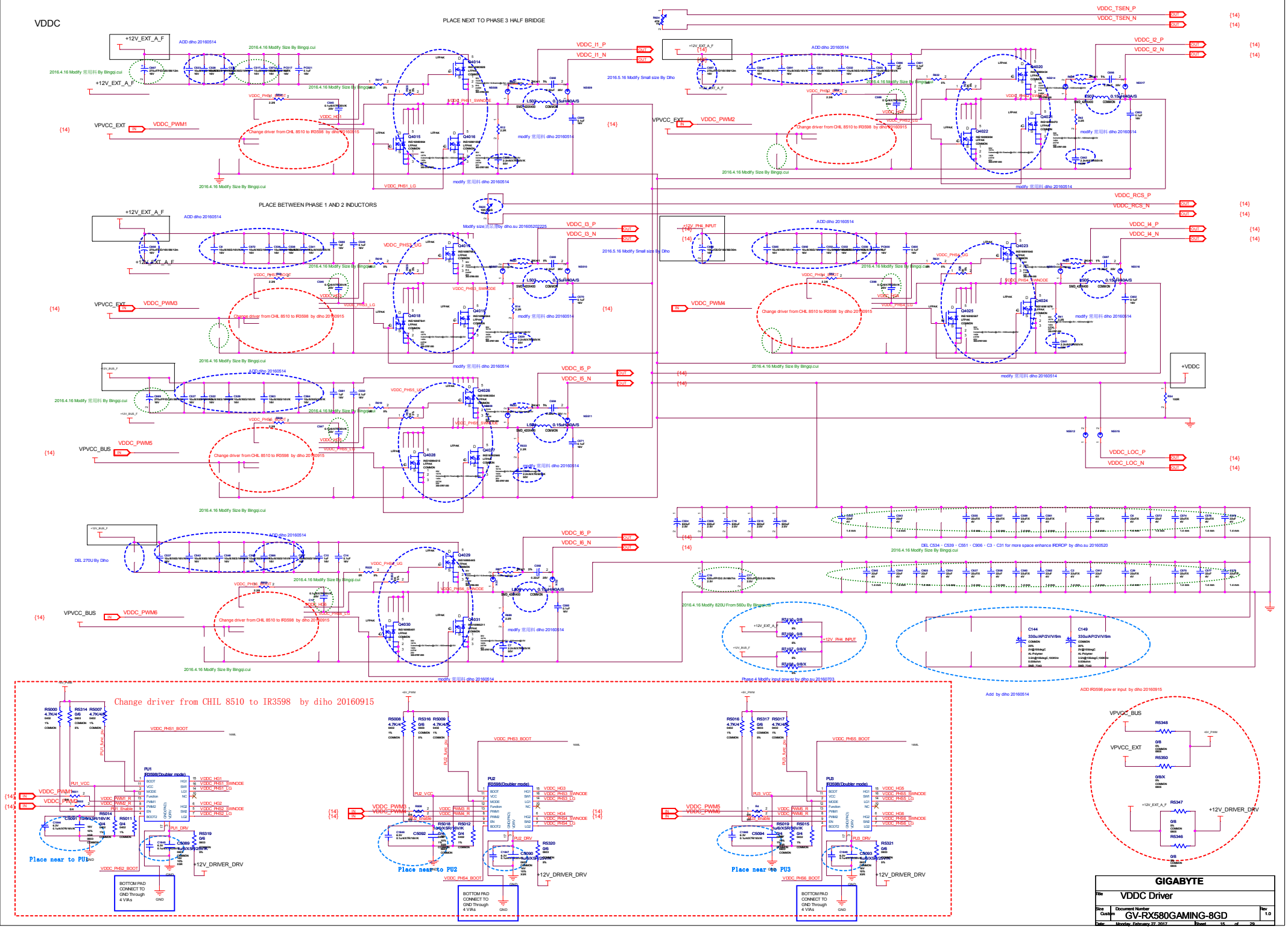
VDDC
PLACE NEXT TO PHASE 3 HALF BRIDGE
PLACE BETWEEN PHASE 1 AND 2 INDUCTORS
VDDC_TSEN_P
VDDC_TSEN_N
VDDC_I1_P
VDDC_I1_N
VDDC_I2_P
VDDC_I2_N
VDDC_I3_P
VDDC_I3_N
VDDC_I4_P
VDDC_I4_N
VDDC_I5_P
VDDC_I5_N
VDDC_I6_P
VDDC_I6_N
VDDC_RCS_P
VDDC_RCS_N
VDDC_LOC_P
VDDC_LOC_N
VPVCC_EXT
VPVCC_BUS
VDDC_PWM1
VDDC_PWM2
VDDC_PWM3
VDDC_PWM4
VDDC_PWM5
VDDC_PWM6
+12V_EXT_A_F
+12V_PH4_INPUT
+VDDC
Change driver from CHIL 8510 to IR3598 by diho 20160915
ADD diho 20160514
2016.4.16 Modify Size By Bingqi.cui
2016.5.16 Modify Small size By Diho
modify 常用料 diho 20160514
DEL 270U By Diho
DEL C534、C539、C551、C906、C3、C31 for more space enhance IRDROP by diho.su 20160520
2016.4.16 Modify 820U From 560u By Bingqi.cui
Phase 4 Modify input power by diho su 20160701
Add by diho 20160514
ADD IR3598 pow er input by diho 20160915
Place near to PU1
Place near to PU2
Place near to PU3
BOTTOM PAD CONNECT TO GND Through 4 VIAs
GIGABYTE
VDDC Driver
GV-RX580GAMING-8GD
Size Custom
Document Number
Rev 1.0
Date: Monday, February 27, 2017
Sheet 15 of 29

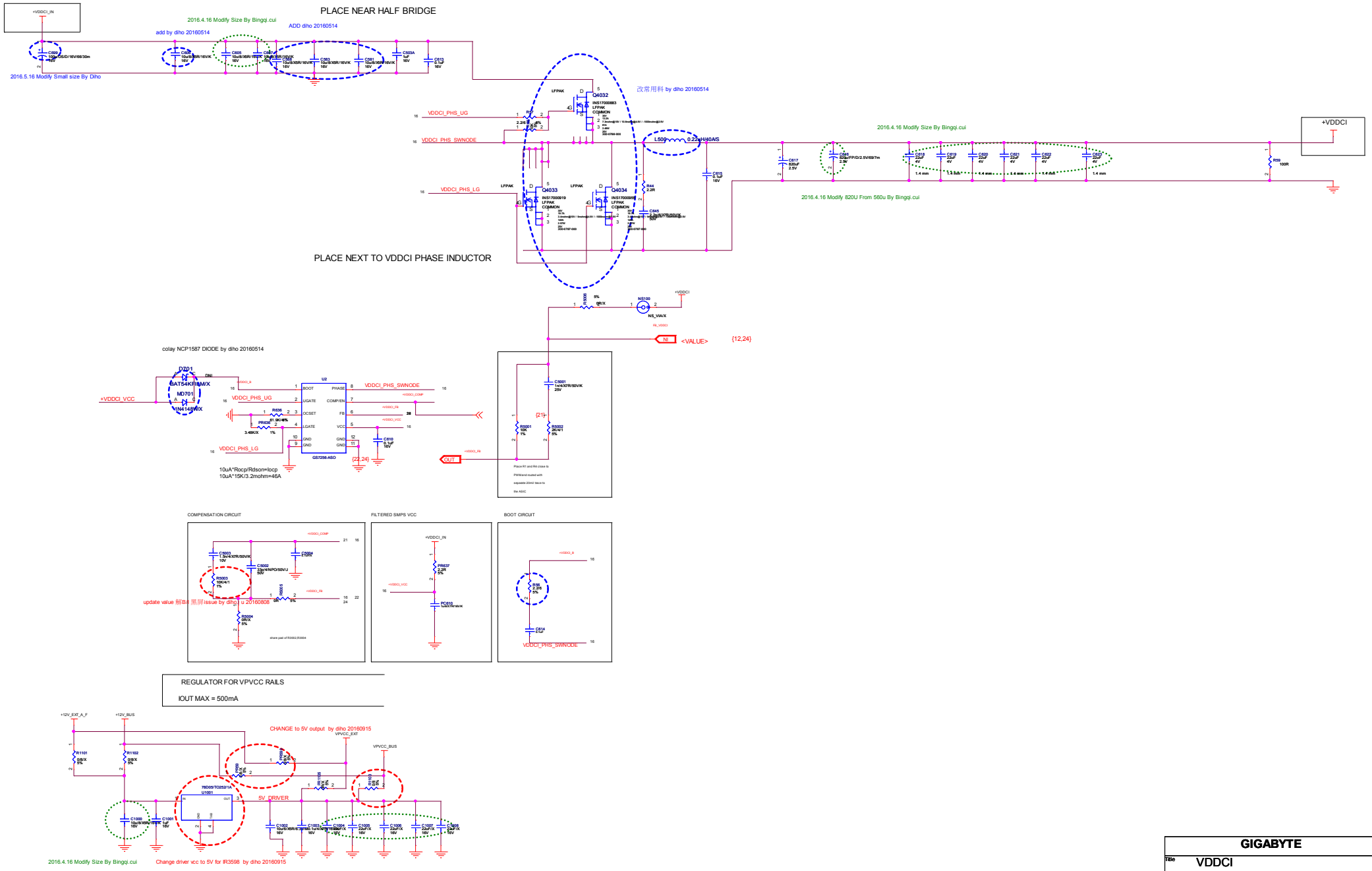

GIGABYTE		
Title	VDDCI	
Size Custom	Document Number GV-RX580GAMING-8GD	Rev 1.0
Date: Monday, February 27, 2017	Sheet 16 of 29	

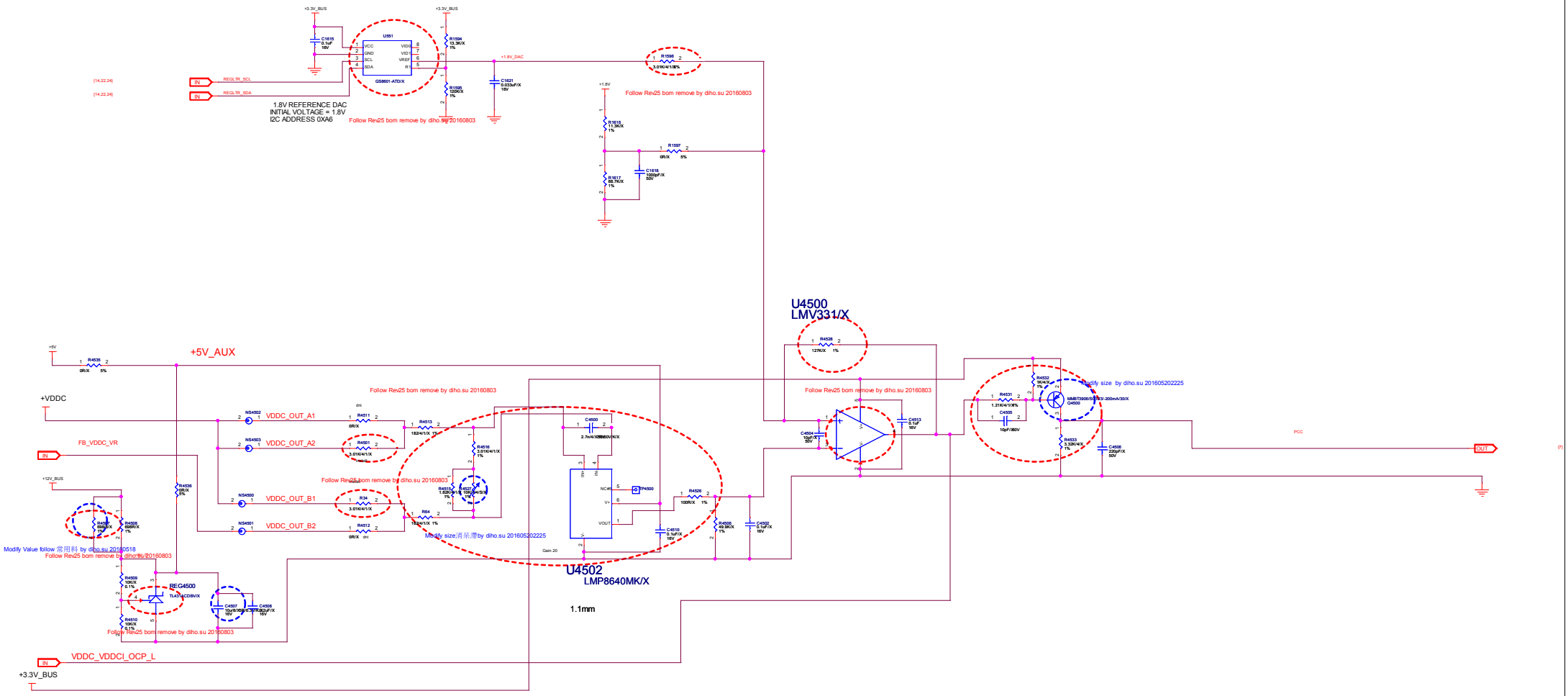

GIGABYTE		
Title	PCC VDDC	
Size Custom	Document Number GV-RX580GAMING-8GD	Rev 1.0
Date: Monday, February 27, 2017	Sheet 17 of 29	

(16) MVDD

CHANGE POWER PHASE TO PAGE26 by diho 20160514

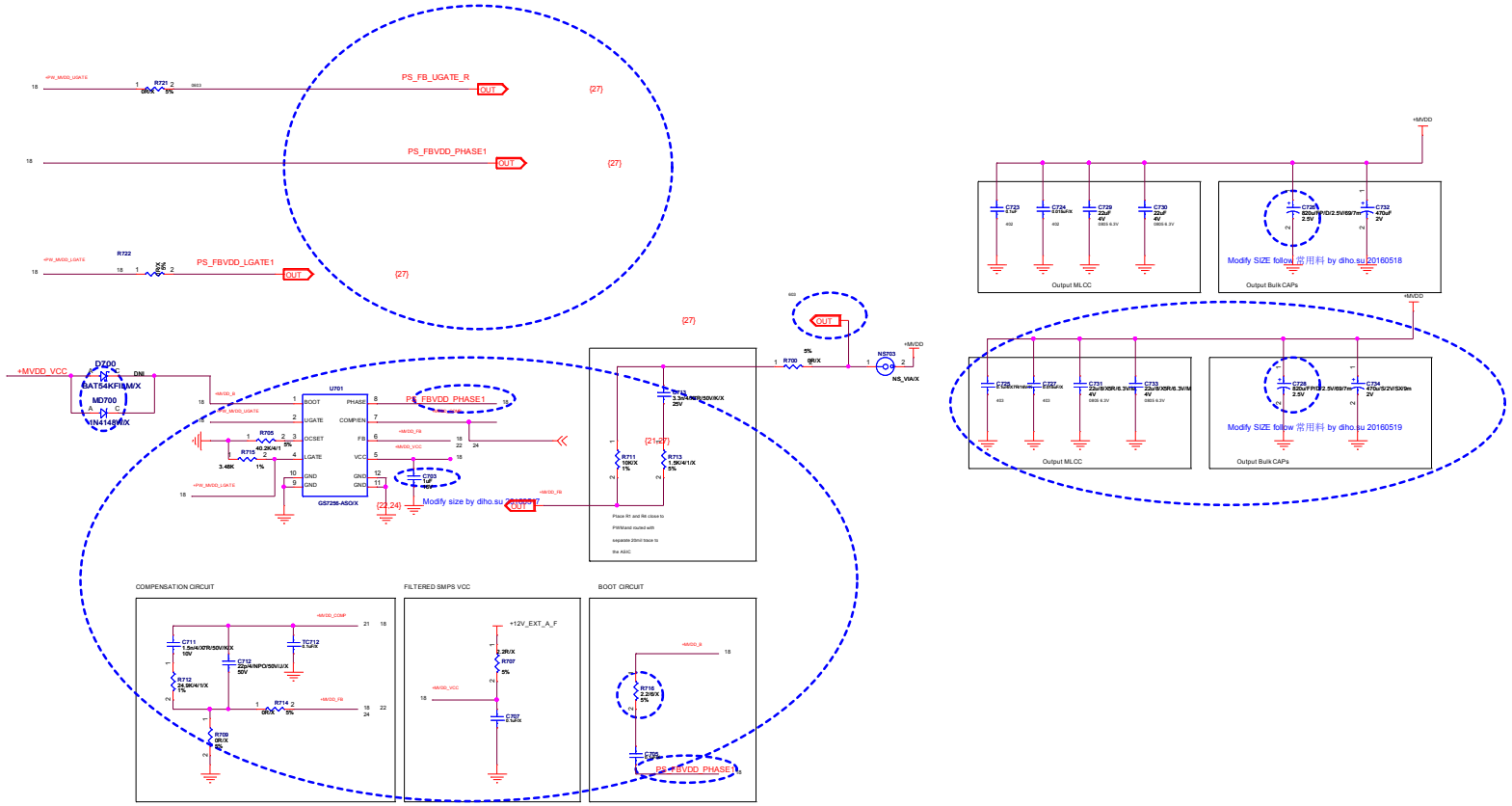

/X Single phase power by diho.su 20160517

GIGABYTE		
Title: MVDD		
Size: Custom	Document Number: GV-RX580GAMING-8GD	Rev: 1.0
Date: Monday, February 27, 2017	Sheet 18 of 29	

(17) 0.95V

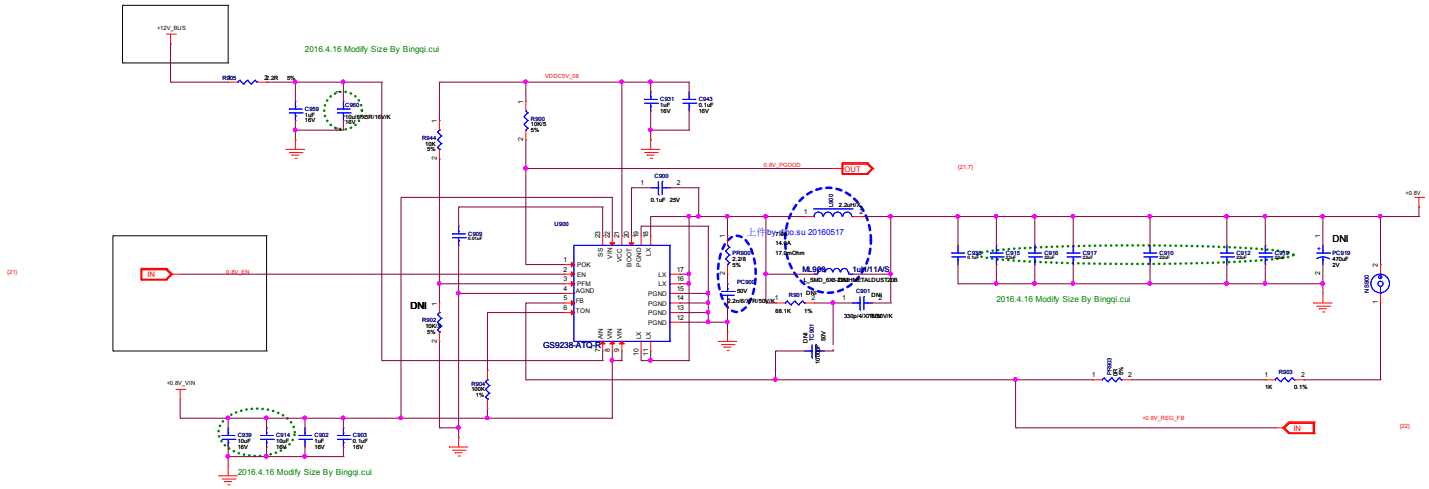

GIGABYTE		
Title	0.95V	
Size Custom	Document Number GV-RX580GAMING-8GD	Rev 1.0
Date: Monday, February 27, 2017	Sheet 19 of 29	

(18) SMALL RAIL REGULATORS

LDO #1: VIN = 3.0V TO 3.6V MAX VOUT = +1.8V +/- 2% IOUT = 1.3A RMS MAX

PCB: 50 TO 70mm SQ. COPPER AREA FOR COOLING

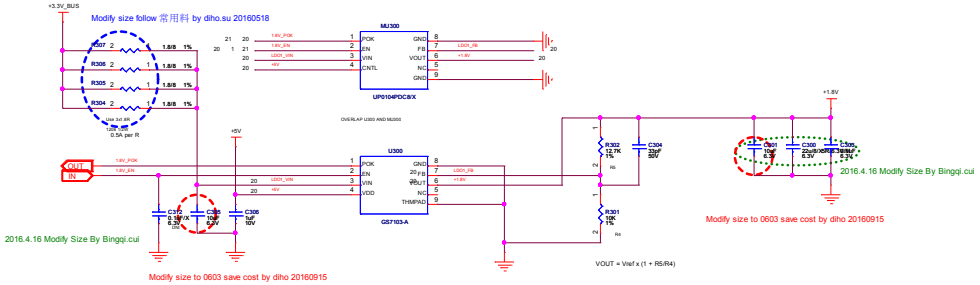

REGULATOR FOR +5V RAILS

IOUT MAX = 150mA

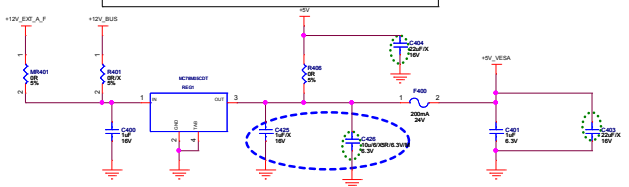

GIGABYTE		
Title: SMALL RAIL REGULATORS		
Size: Custom	Document Number: GV-RX580GAMING-8GD	Rev: 1.0
Date: Monday, February 27, 2017	Sheet 20 of 29	

(19) POWER MANAGEMENT

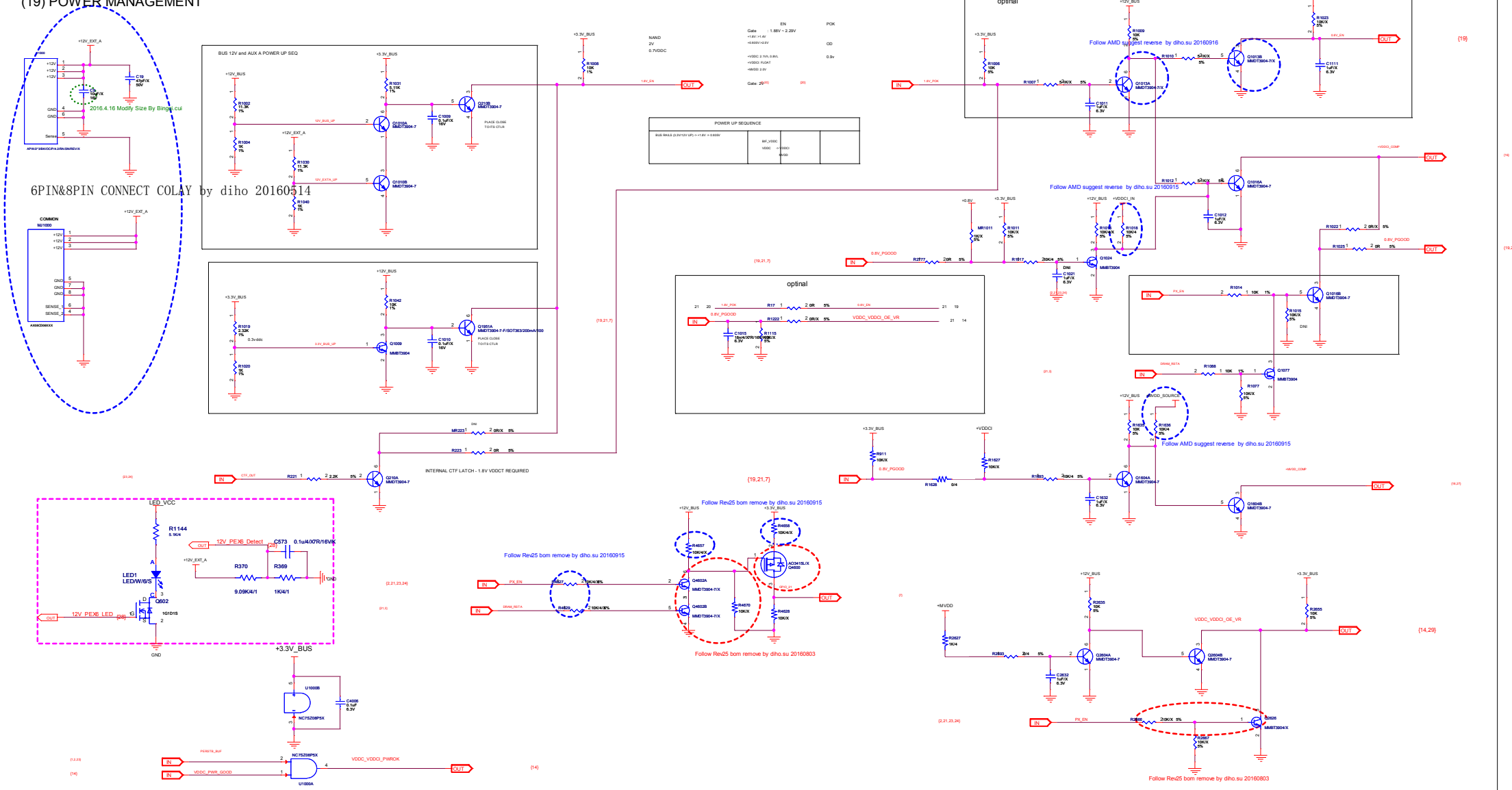

GIGABYTE		
Title: POWER MANAGEMENT1		
Size: Custom	Document Number: GV-RX580GAMING-8GD	Rev: 1.0
Date: Monday, February 27, 2017	Sheet 21 of 29	

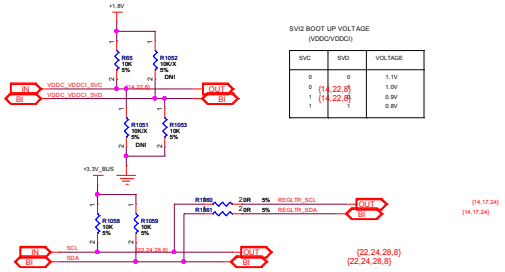

SVI2 BOOT UP VOLTAGE
(VDDC/VDDCI)

SVC	SVD	VOLTAGE
0	0	1.1V
0	1	1.0V
1	0	0.9V
1	1	0.8V

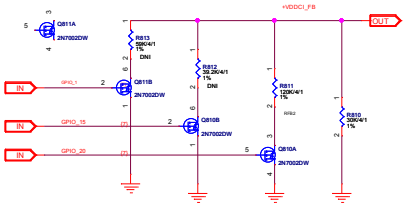

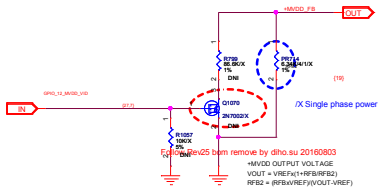

/X Single phase power by diho.su 20160517

Follow Rev25 bom remove by diho.su 20160803

+MVDD OUTPUT VOLTAGE
VOUT = VREF(1+RFB/RFB2)
RFB2 = (RFB/VREF)(VOUT-VREF)

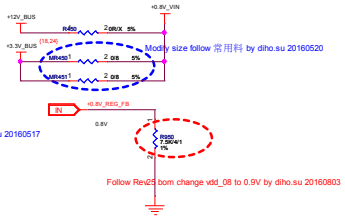

Modify size follow 常用料 by diho.su 20160520

Follow Rev25 bom change vdd_08 to 0.9V by diho.su 20160803

+12V_BUS INPUT

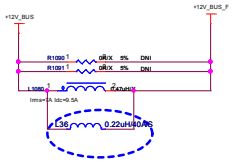

+12V_EXT_A INPUT

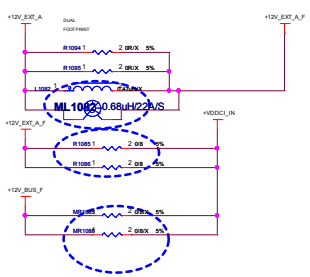

Modify size follow 常用料 by diho.su 20160519

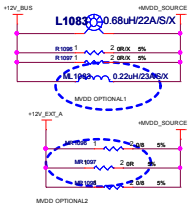

Modify size follow 常用料 by diho.su 20160518

GIGABYTE		
Title: POWER MANAGEMENT2		
Size: Custom	Document Number: GV-RX580GAMING-8GD	Rev: 1.0
Date: Monday, February 27, 2017	Sheet 22 of 29	

(20) MECHANICAL AND THERMAL MANAGEMENT

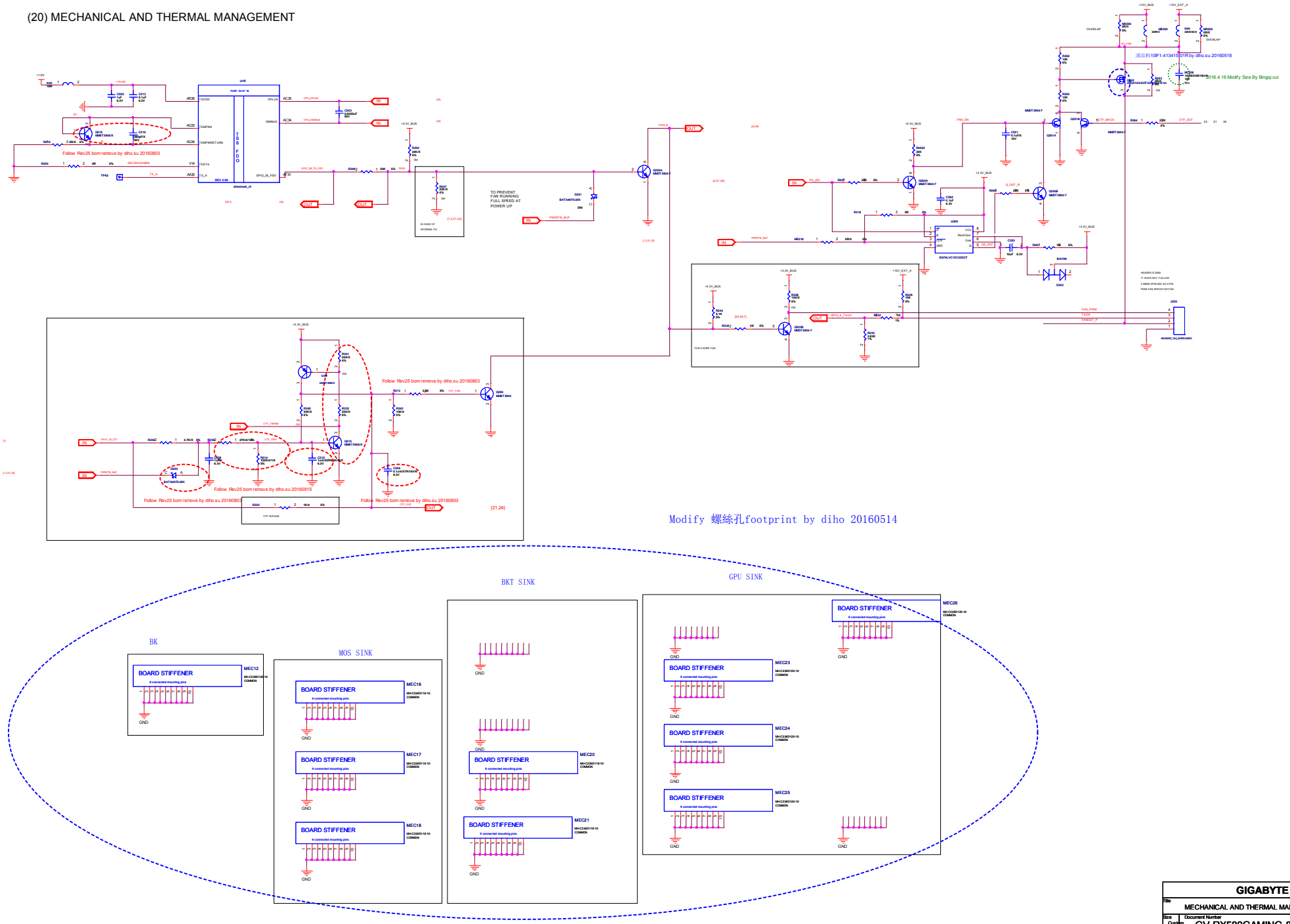

GIGABYTE		
Title	MECHANICAL AND THERMAL MANAGEMENT	
Size: Custom	Document Number: GV-RX580GAMING-8GD	Rev: 1.0
Date: Monday, February 27, 2017	Sheet 23 of 29	

(21) DEBUG CIRCUITS

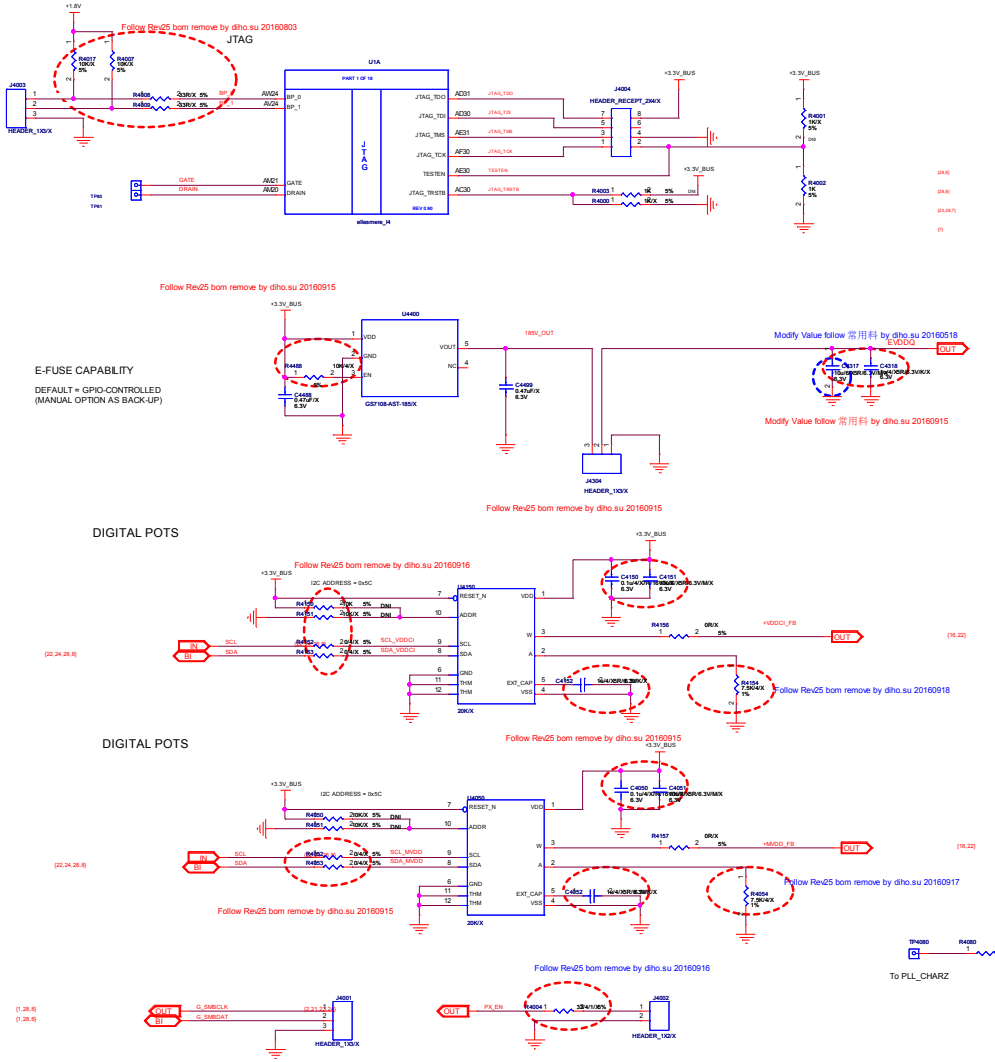

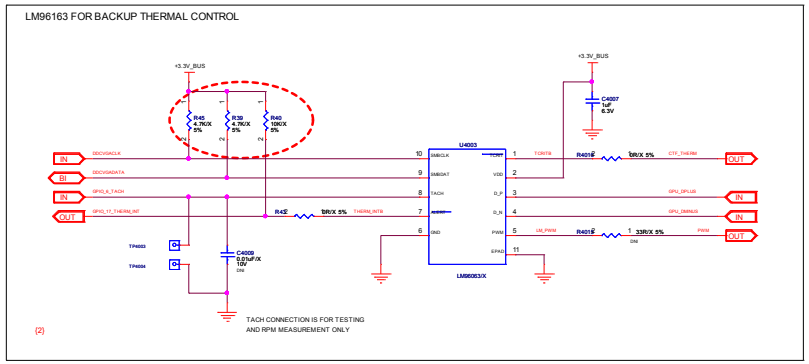

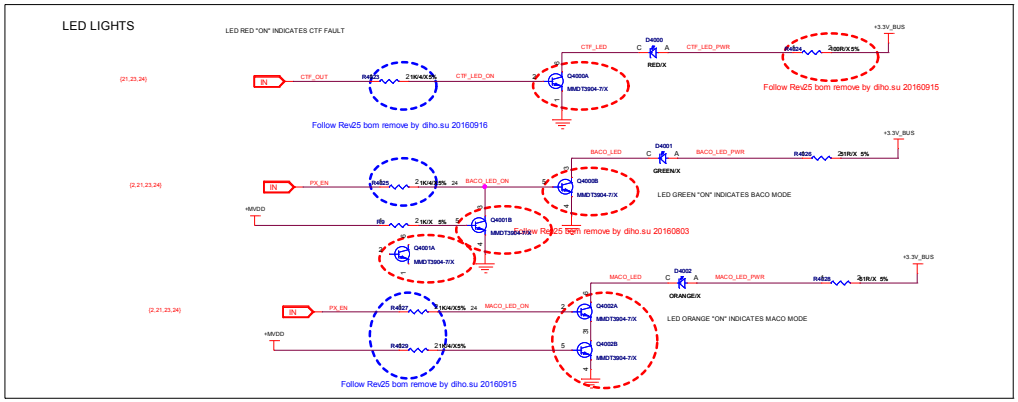

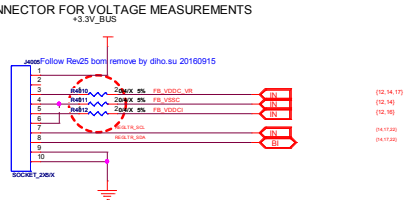

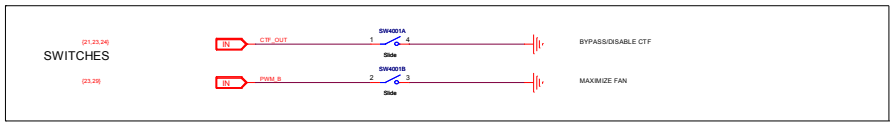

GIGABYTE		
Title: DEBUG CIRCUITS		
Size: Custom	Document Number: GV-RX580GAMING-8GD	Rev: 1.0
Date: Monday, February 27, 2017	Sheet 24 of 29	

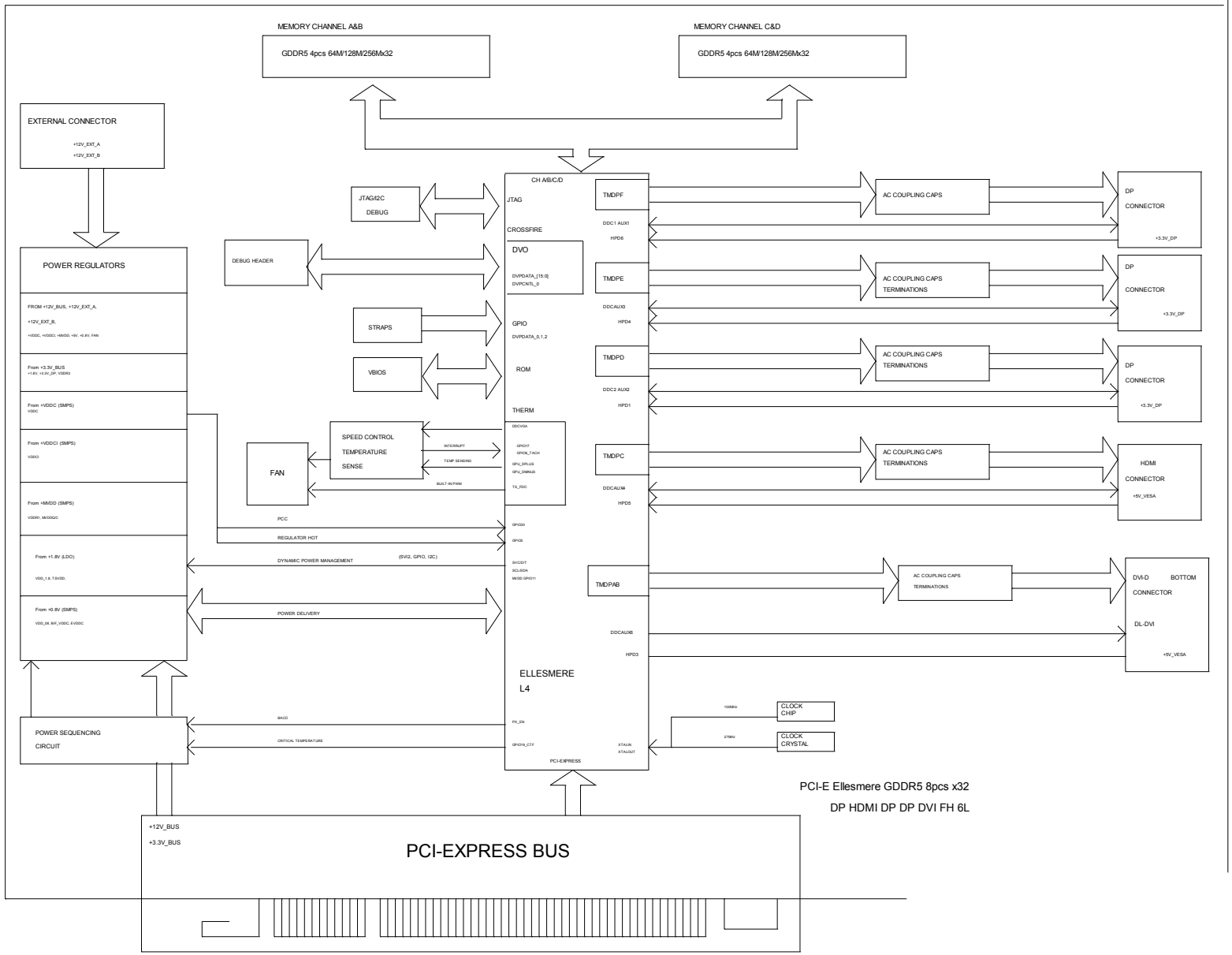

GIGABYTE		
Title: BLOCK DIAGRAM		
Size: Custom	Document Number: GV-RX580GAMING-8GD	Rev: 1.0
Date: Monday, February 27, 2017	Sheet 25 of 29	

0	00A	06/06/2016	
1	00B	10/19/2016	1. Add GPIO1 for dynamic VDDCI 2. update VDDC ofset sequence
2	00C	03/20/2016	HDMI: - add series resistor R1880 ~R1887 - add pull down inductor L1880 ~L1887 remove C405, C403, VR400,C410,C414,R405
3	00D	04/18/2016	Modify GBT Design

GIGABYTE

Title: BLOCK DIAGRAM

Size: Custom | Document Number: GV-RX580GAMING-8GD | Rev: 1.0

Date: Monday, February 27, 2017 | Sheet 28 of 29

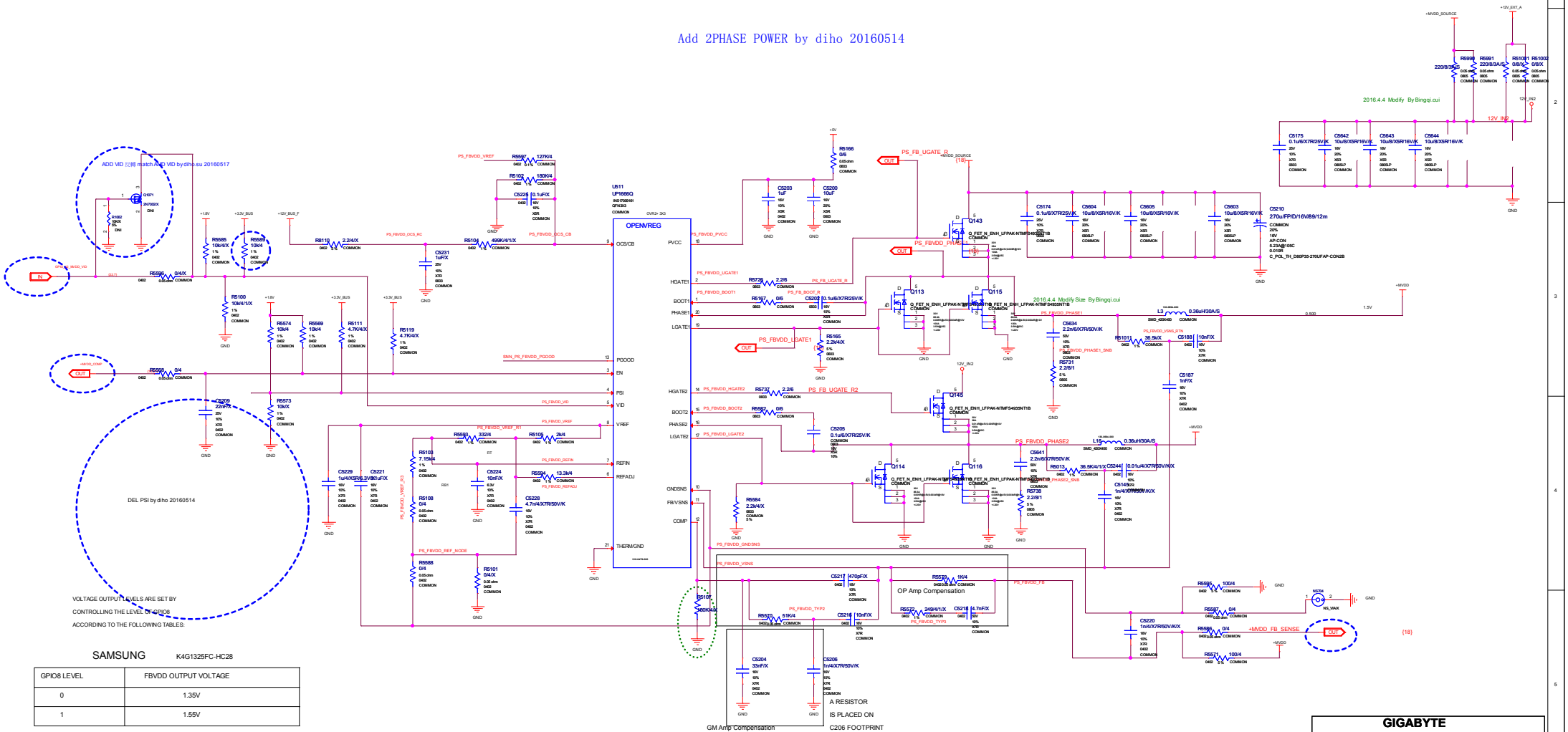

SAMSUNG K4G1325FC-HC28

GPIO8 LEVEL	FBVDD OUTPUT VOLTAGE
0	1.35V
1	1.55V

ALL NVIDIA DESIGN SPECIFICATIONS, REFERENCE SPECIFICATIONS, REFERENCE BOARDS, FILES, DRAWINGS, DIAGNOSTICS, LISTS AND OTHER DOCUMENTS OR INFORMATION (TOGETHER AND SEPARATELY, "MATERIALS") ARE BEING PROVIDED "AS IS". THE MATERIALS MAY CONTAIN KNOWN AND UNKNOWN VIOLATIONS OR DEVIATIONS OF INDUSTRY STANDARDS AND SPECIFICATIONS. NVIDIA MAKES NO WARRANTIES, EXPRESSED, IMPLIED, STATUTORY, OR OTHERWISE WITH RESPECT TO THE MATERIALS OR OTHERWISE, AND EXPRESSLY DISCLAIMS ALL IMPLIED WARRANTIES INCLUDING, WITHOUT LIMITATION, THE WARRANTIES OF DESIGN, OF NONINFRINGEMENT, MERCHANTABILITY OR FITNESS FOR A PARTICULAR PURPOSE, OR ARISING FROM A COURSE OF DEALING, TRADE USAGE, TRADE PRACTICE, OR INDUSTRY STANDARDS.

ASSEMBLY <ASSEMBLY_DESCRIPTION>
PAGE DETAIL PS: FBVDD

GIGABYTE

Title: FBVDD

Size: Custom | Document Number: GV-RX580GAMING-8GD | Rev: 1.0

Date: Monday, February 27, 2017 | Sheet 27 of 29

Page38: LED Control MCU circuit

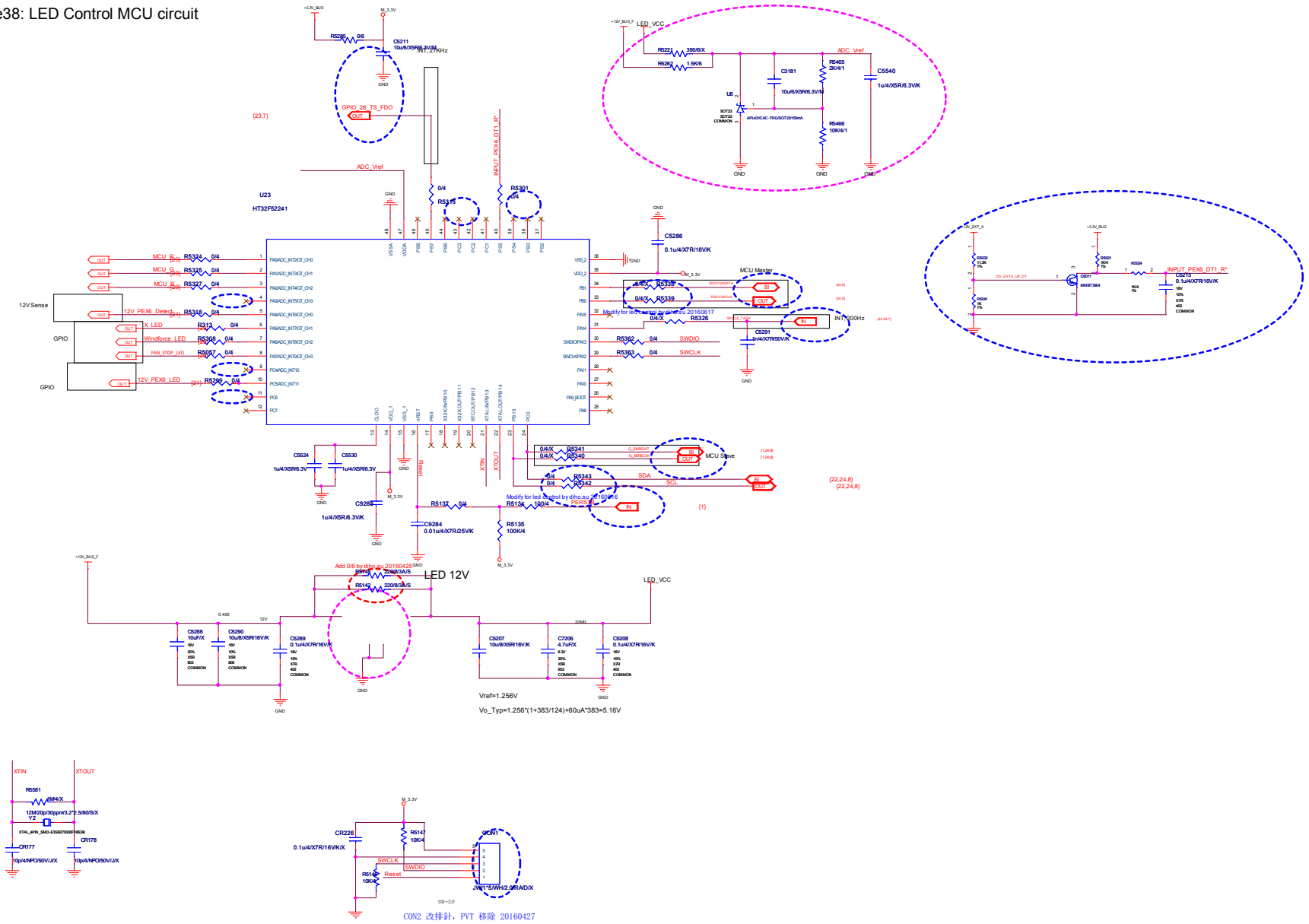

ALL NVIDIA DESIGN SPECIFICATIONS, REFERENCE SPECIFICATIONS, REFERENCE BOARDS, FILES, DRAWINGS, DIAGNOSTICS, LISTS AND OTHER DOCUMENTS OR INFORMATION (TOGETHER AND SEPARATELY, "MATERIALS") ARE BEING PROVIDED "AS IS". THE MATERIALS MAY CONTAIN KNOWN AND UNKNOWN VIOLATIONS OR DEVIATIONS OF INDUSTRY STANDARDS AND SPECIFICATIONS. NVIDIA MAKES NO WARRANTIES, EXPRESSED, IMPLIED, STATUTORY OR OTHERWISE WITH RESPECT TO THE MATERIALS OR OTHERWISE, AND EXPRESSLY DISCLAIMS ALL IMPLIED WARRANTIES INCLUDING, WITHOUT LIMITATION, THE WARRANTIES OF DESIGN, OF NONINFRINGEMENT, MERCHANTABILITY OR FITNESS FOR A PARTICULAR PURPOSE, OR ARISING FROM A COURSE OF DEALING, TRADE USAGE, TRADE PRACTICE, OR INDUSTRY STANDARDS.

ASSEMBLY	<ASSEMBLY_DESCRIPTION>
PAGE DETAIL	MECH: Bracket/Thermal

Title			
Size: Custom	Document Number: LED GV-RX580GAMING-8GD		Rev: 1.0
Date: Monday, February 27, 2017	Sheet 28 of 29		

Page40: LED

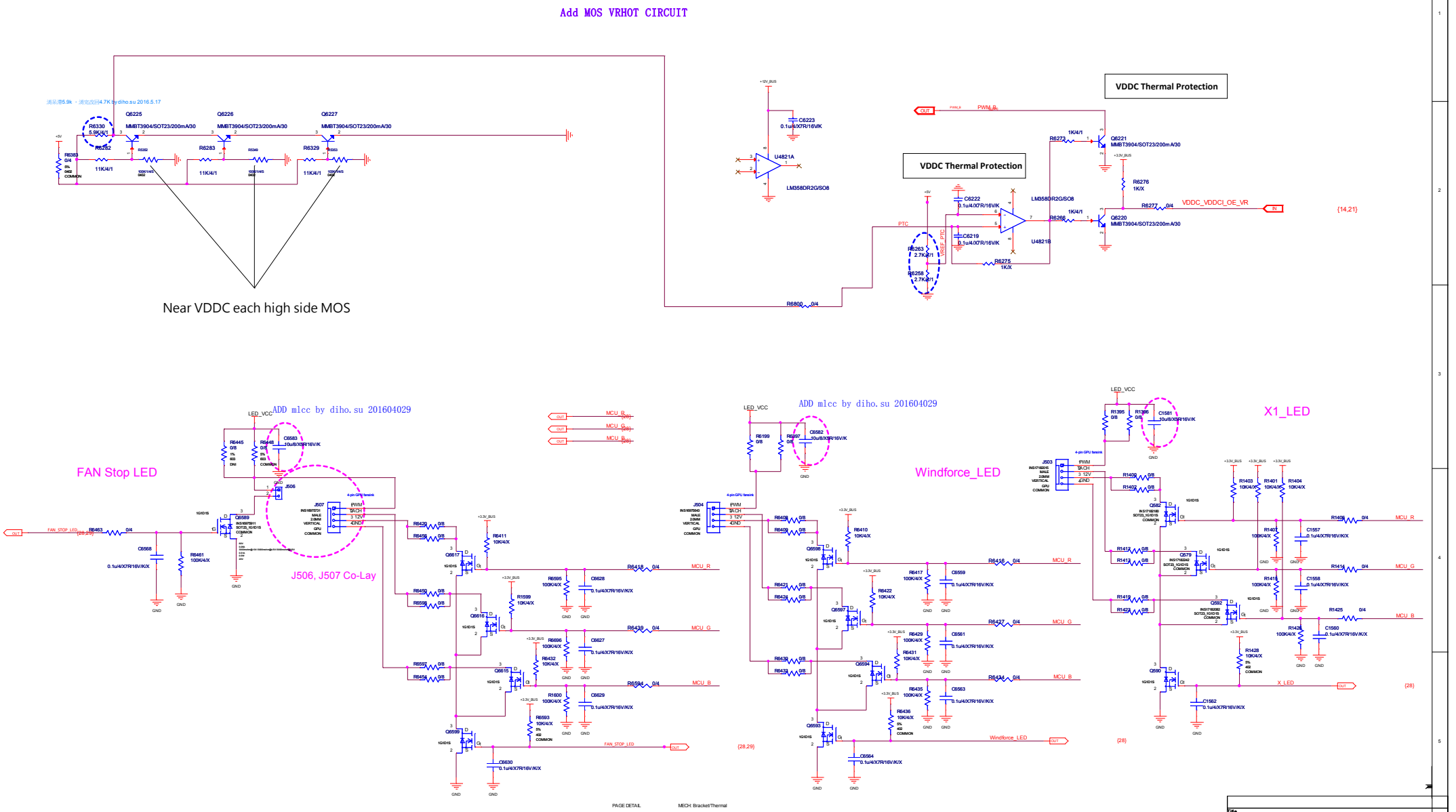

ALL NVIDIA DESIGN SPECIFICATIONS, REFERENCE SPECIFICATIONS, REFERENCE BOARDS, FILES, DRAWINGS, DIAGNOSTICS, LISTS AND OTHER DOCUMENTS OR INFORMATION (TOGETHER AND SEPARATELY, "MATERIALS") ARE BEING PROVIDED "AS IS". THE MATERIALS MAY CONTAIN KNOWN AND UNKNOWN VIOLATIONS OR DEVIATIONS OF INDUSTRY STANDARDS AND SPECIFICATIONS. NVIDIA MAKES NO WARRANTIES, EXPRESSED, IMPLIED, STATUTORY, OR OTHERWISE WITH RESPECT TO THE MATERIALS OR OTHERWISE, AND EXPRESSLY DISCLAIMS ALL IMPLIED WARRANTIES INCLUDING, WITHOUT LIMITATION, THE WARRANTIES OF DESIGN, OF NONINFRINGEMENT, MERCHANTABILITY OR FITNESS FOR A PARTICULAR PURPOSE, OR ARISING FROM A COURSE OF DEALING, TRADE USAGE, TRADE PRACTICE, OR INDUSTRY STANDARDS.

PAGE DETAIL MECH: Bracket/Thermal

Title		
Size: CustomFAN	Document Number: GV-RX580GAMING-8GD	Rev: 1.0
Date: Monday, February 27, 2017	Sheet 29 of 29	