(1) PCI-EXPRESS EDGE CONNECTOR

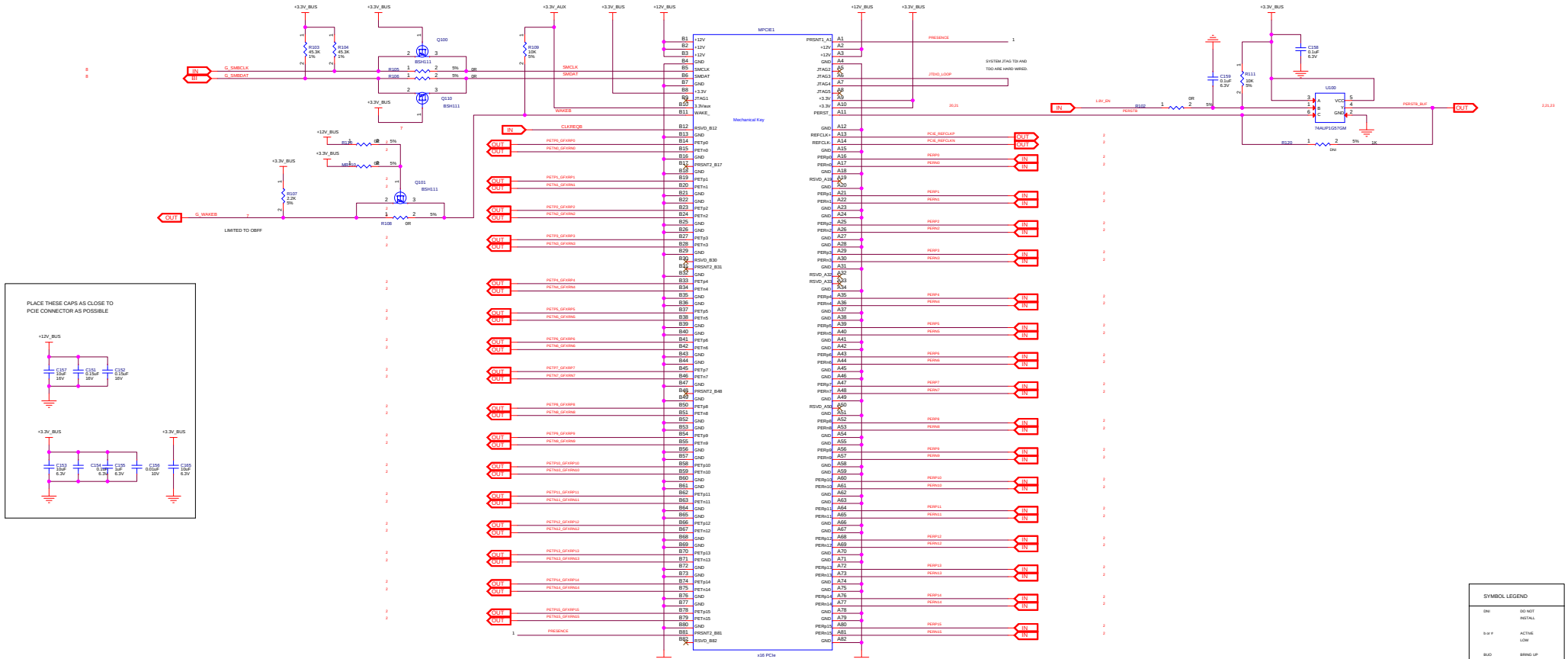

MICRO-STAR INT'L CO.,LTD

MS-V341

Size	Document Description	Rev
Custom	TABLE OF CONTENTS	1.0

Date: Tuesday, August 09, 2016 Sheet 1 of 26

(2) ELLESMERE PCIE INTERFACE

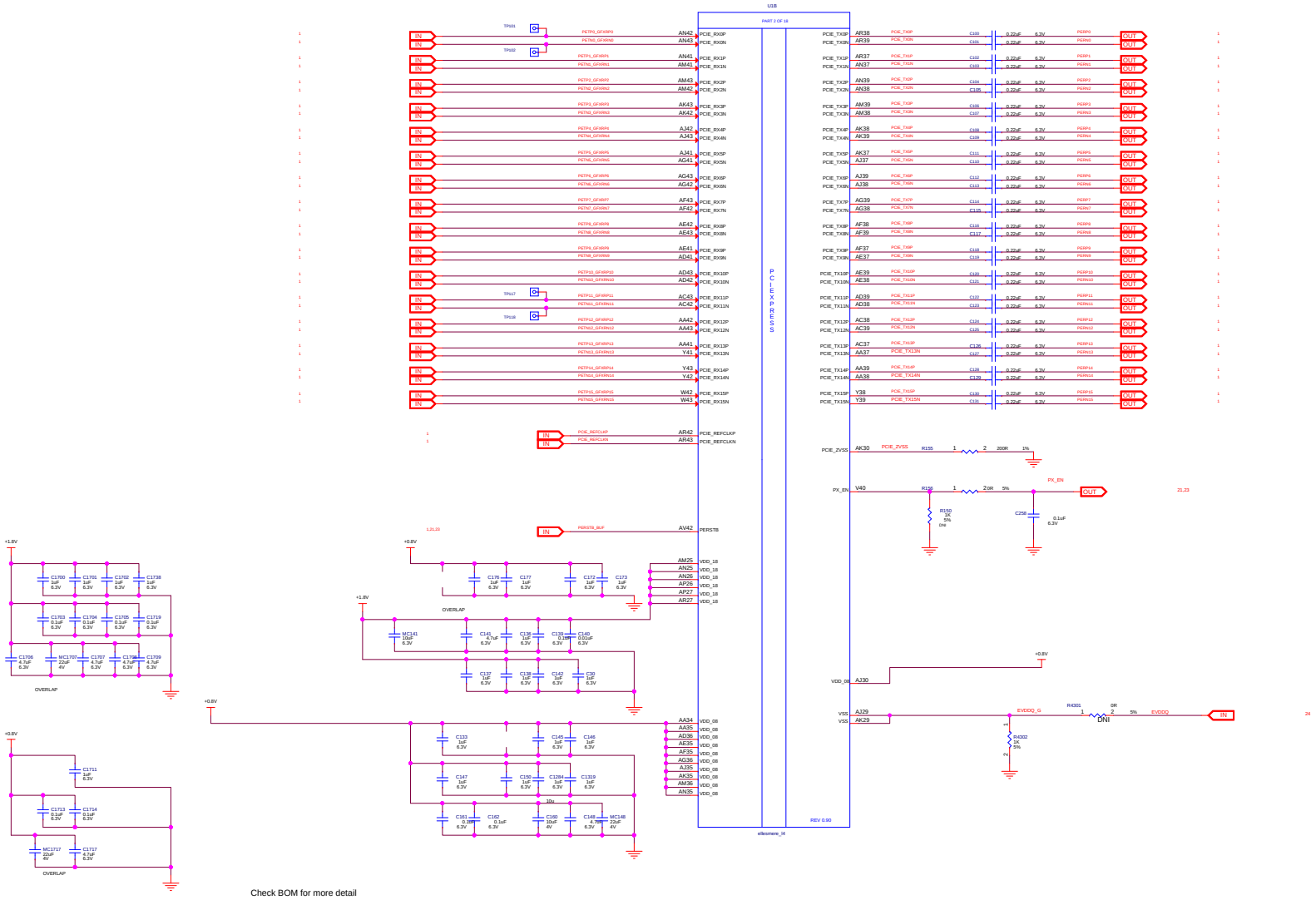

MICRO-STAR INT'L CO.,LTD		
MS-V341		
Size: Custom	Document Description: TABLE OF CONTENTS	Rev: 1.0
Date: Tuesday, August 09, 2016	Sheet 2 of 26	

(3) ELLESMERE MEM INTERFACE CH A/B

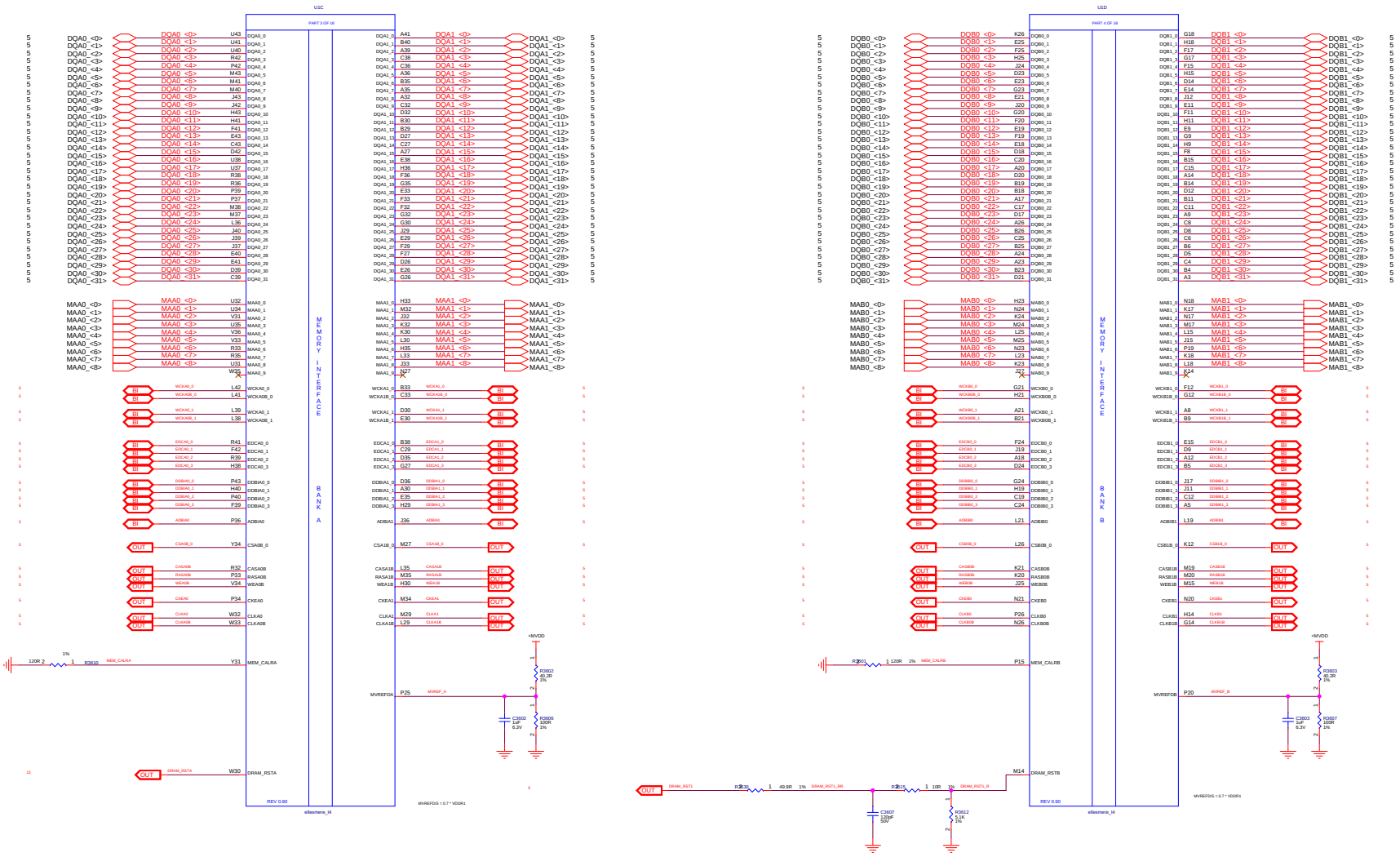

MICRO-STAR INT'L CO.,LTD
MS-V341
Size Custom | Document Description TABLE OF CONTENTS | Rev 1.0
Date: Tuesday, August 09, 2016 | Sheet 3 of 26

(4) ELLESMERE MEM INTERFACE CH C/D

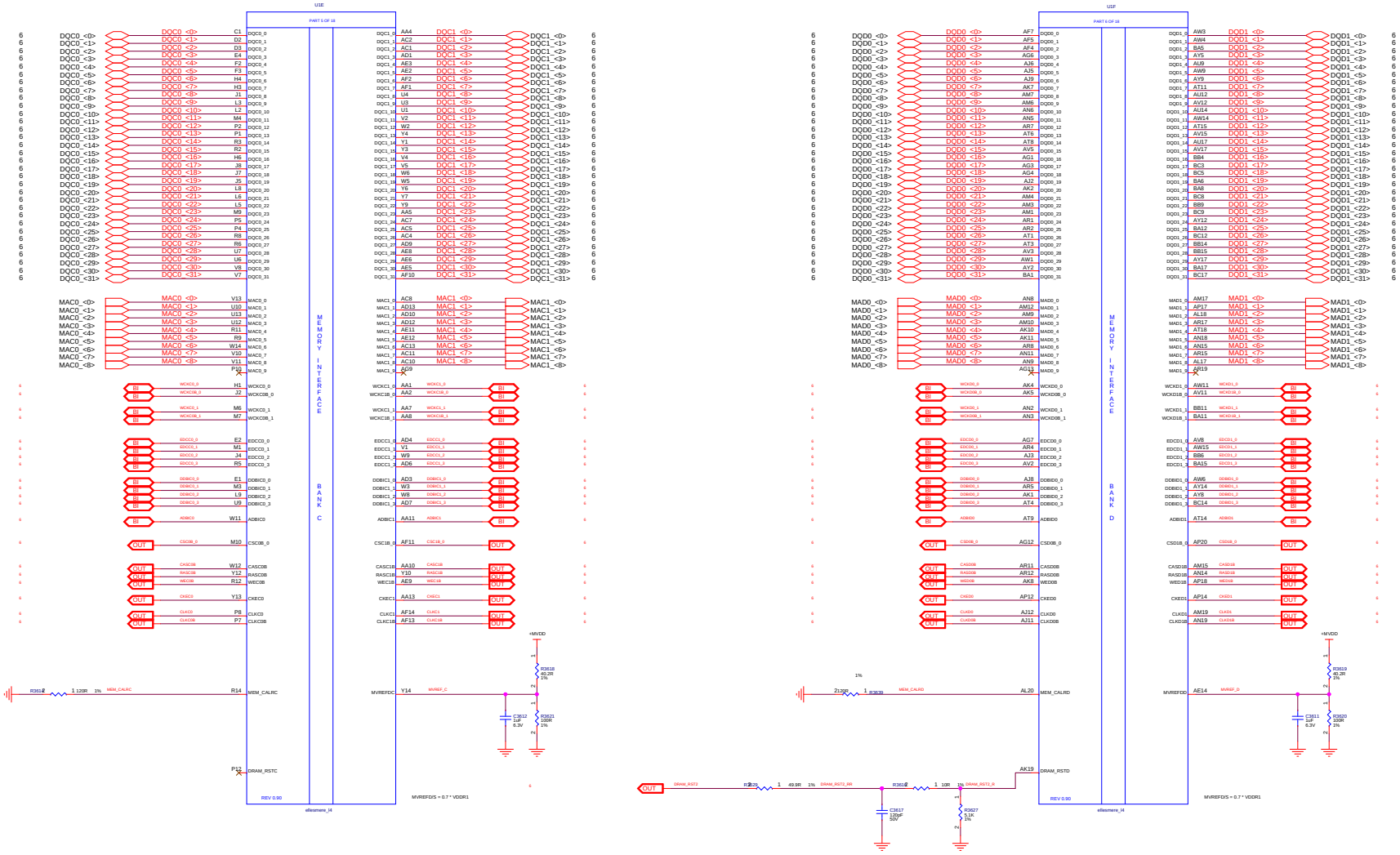

MICRO-STAR INT'L CO.,LTD	
MS-V341	
Size: Custom	Document Description: TABLE OF CONTENTS
Rev: 1.0	
Date: Tuesday, August 09, 2016	Sheet 4 of 26

(5) GDDR5 MEMORY CH A/B

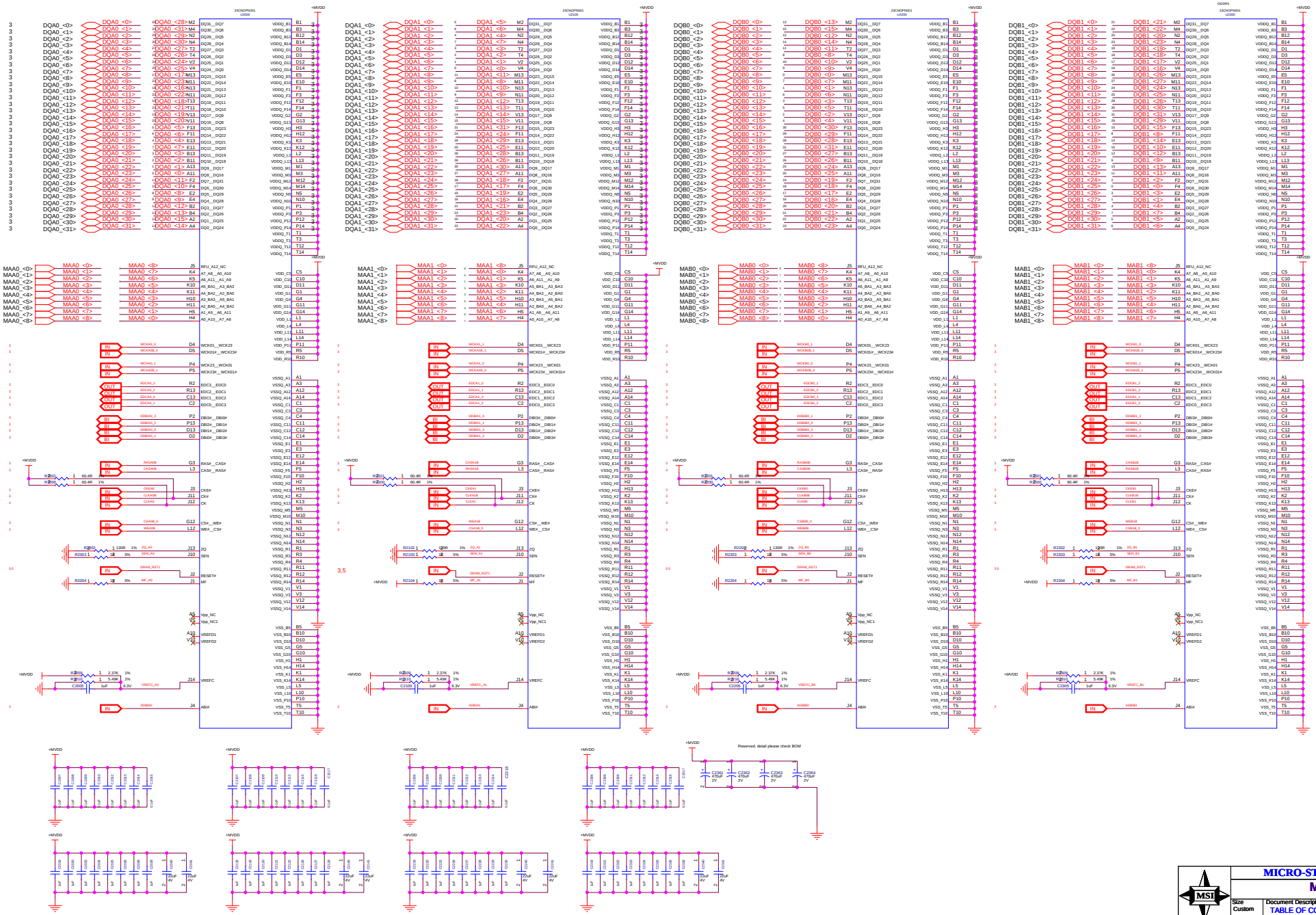

MICRO-STAR INT'L CO.,LTD	
MS-V341	
Size: Custom	Document Description: TABLE OF CONTENTS
Rev: 1.0	
Date: Tuesday, August 09, 2016	Sheet 5 of 26

(6) GDDR5 MEMORY CH C/D

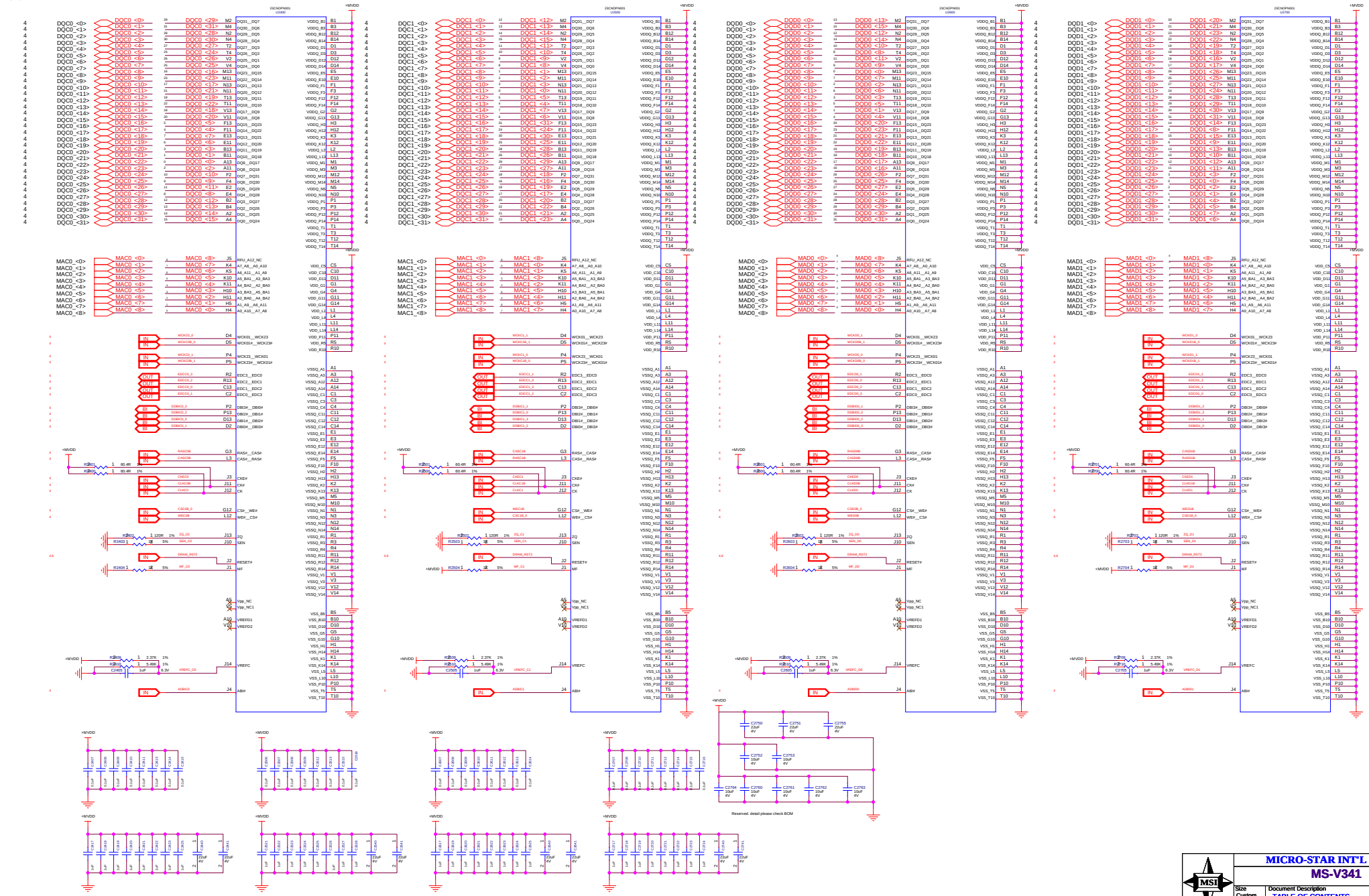

MICRO-STAR INT'L CO.,LTD		
MS-V341		
Size: Custom	Document Description: TABLE OF CONTENTS	Rev: 1.0
Date: Tuesday, August 09, 2016	Sheet 6 of 26	

(7) ELLESMERE GPIO STRAP CF XTAL

SCL/SDA BUS:

I2C ADDRESS	FUNCTION	DEVICE

DDC/VGA BUS:

I2C ADDRESS	FUNCTION	DEVICE
0x98	EXT TEMP SENSOR	LM96063

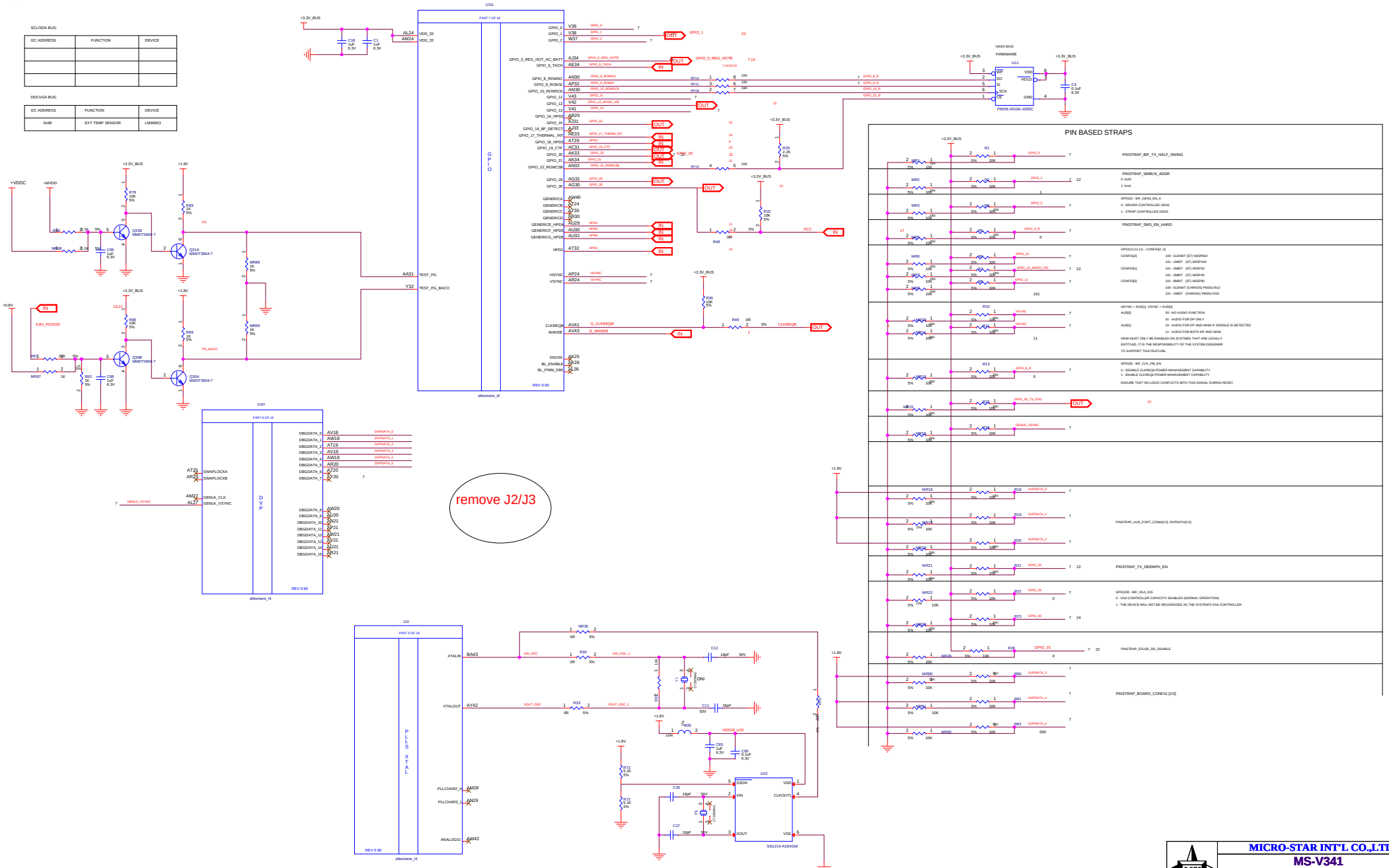

(8) ELLESMERE DAC1 LOCK

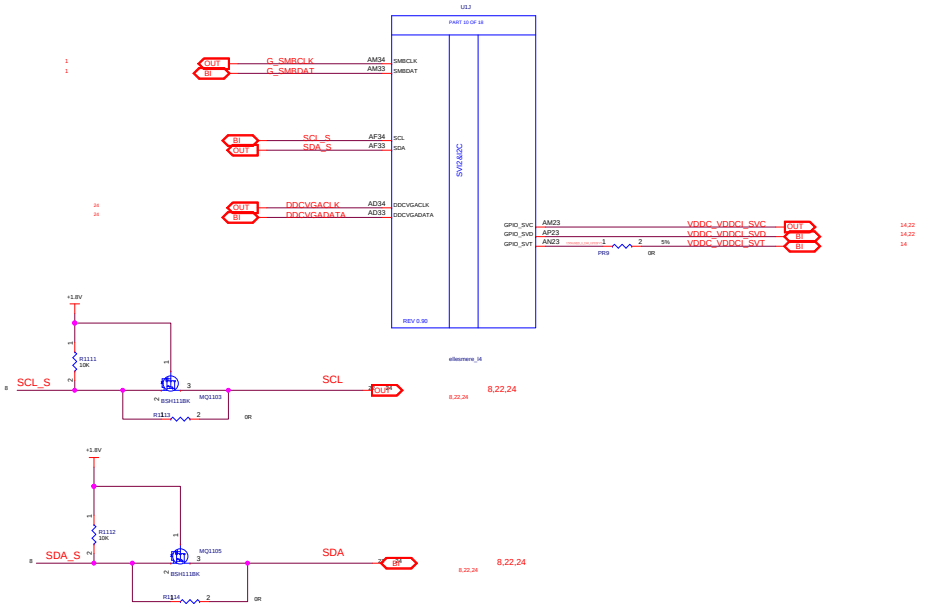

MICRO-STAR INT'L CO.,LTD		
MS-V341		
Size: Custom	Document Description: TABLE OF CONTENTS	Rev: 1.0
Date: Tuesday, August 09, 2016	Sheet 8 of 26	

(9) ELLESMERE TMDP A/B

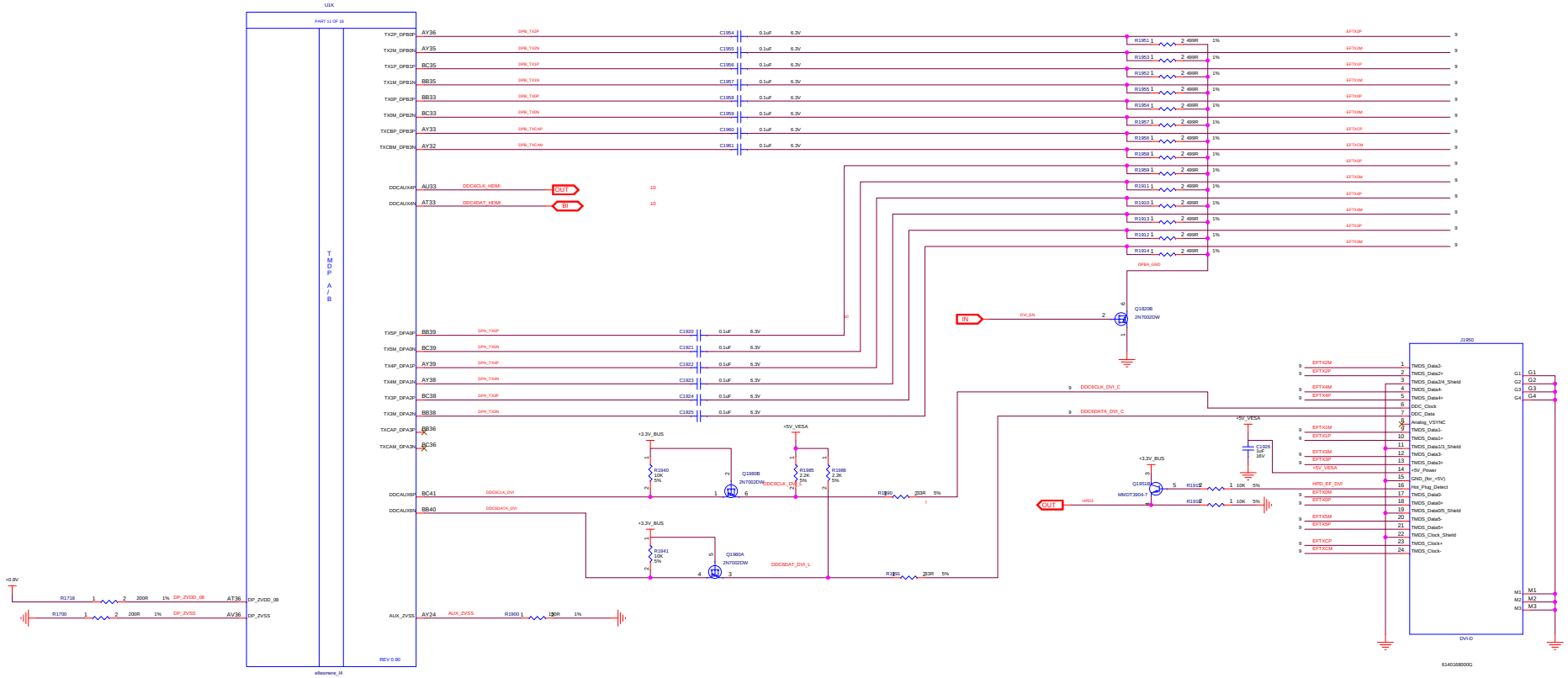

MICRO-STAR INT'L CO.,LTD		
MS-V341		
Size: Custom	Document Description: TABLE OF CONTENTS	Rev: 1.0
Date: Tuesday, August 09, 2016	Sheet 9 of 26	

(10) ELLESMERE TMDP C/D

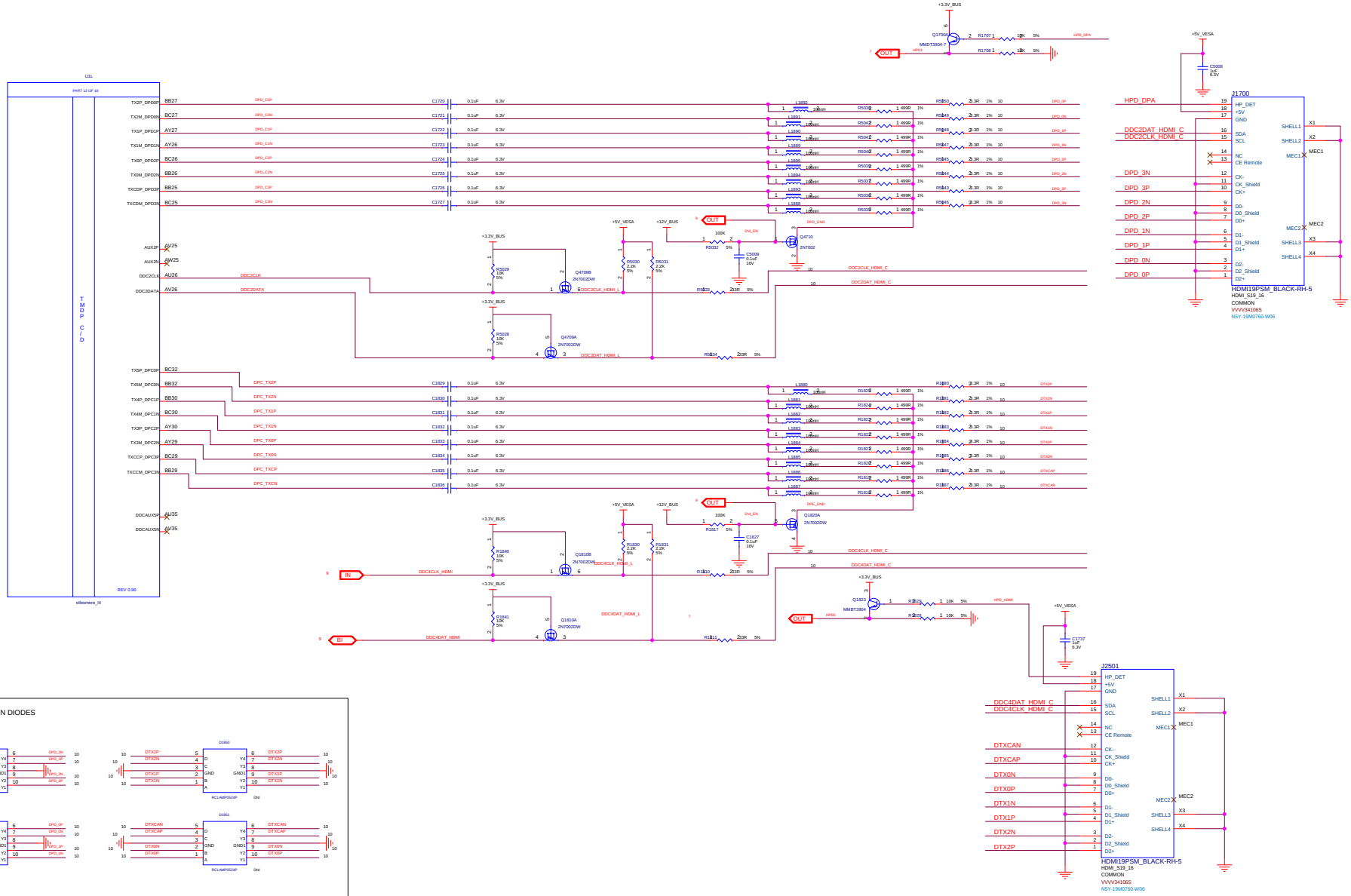

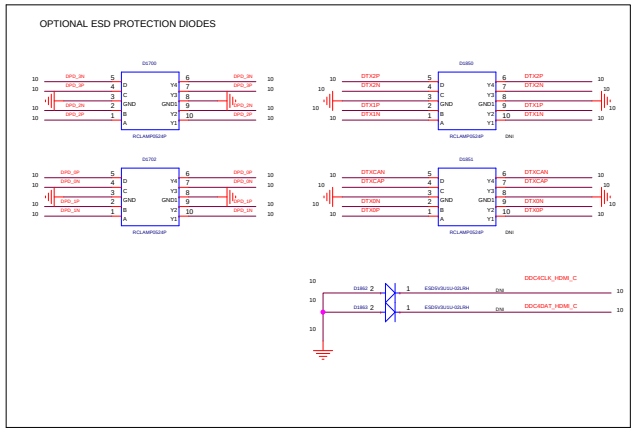

MICRO-STAR INT'L CO.,LTD

MS-V341

Size	Document Description	Rev
Custom	TABLE OF CONTENTS	1.0

Date: Tuesday, August 09, 2016 Sheet 10 of 26

(11) ELLESMERE LVTMDP E/F

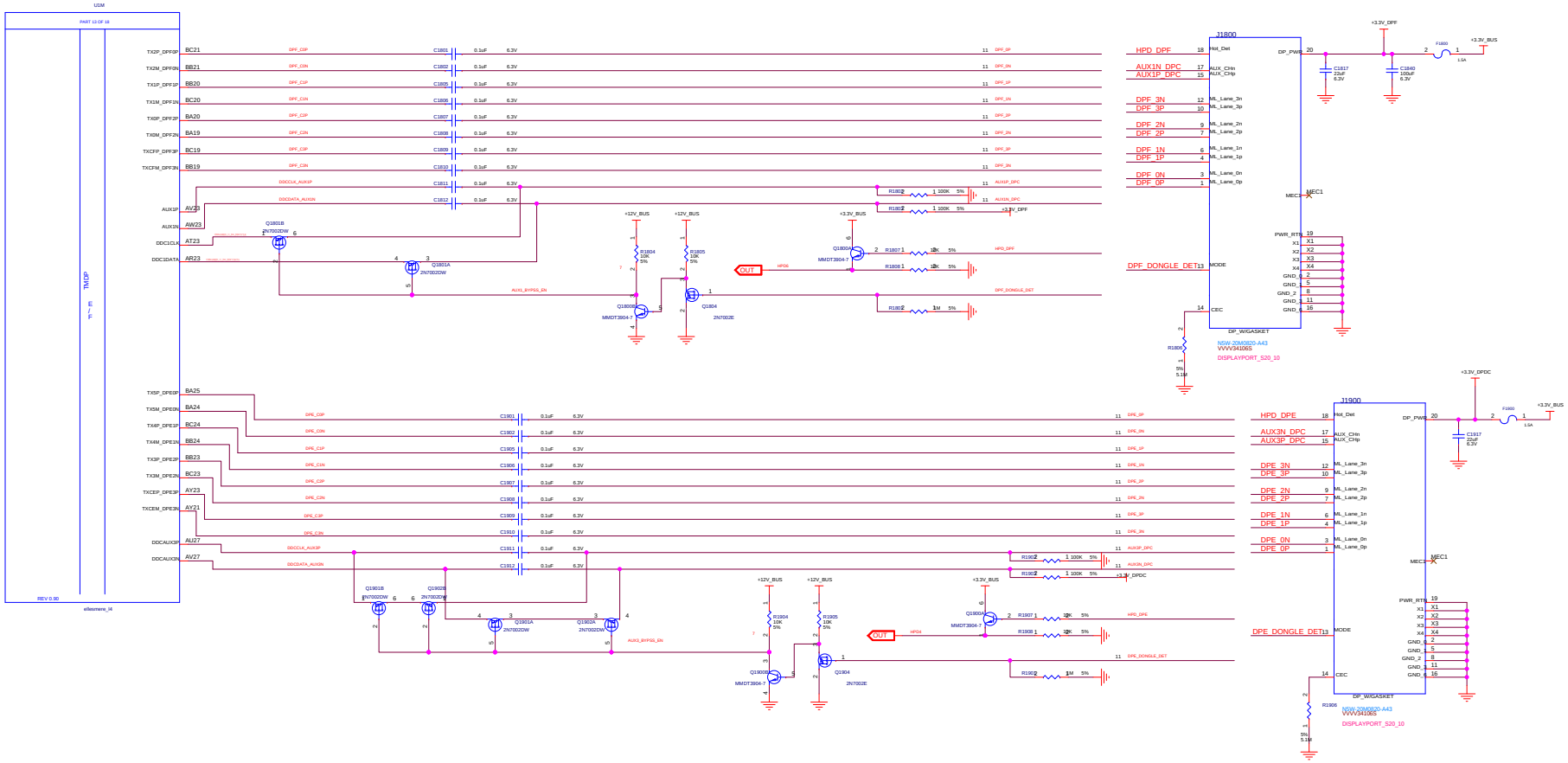

OPTIONAL ESD PROTECTION DIODES

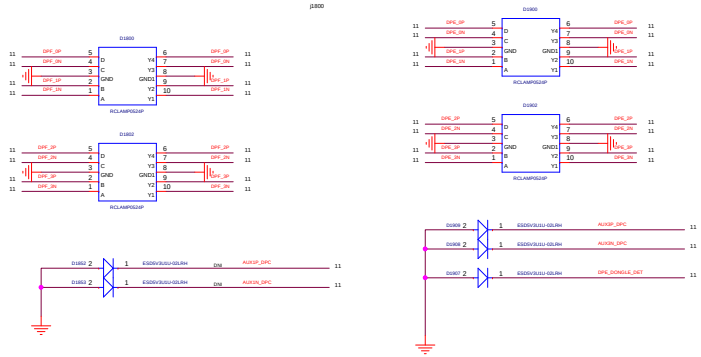

MICRO-STAR INT'L CO.,LTD		
MS-V341		
Size: Custom	Document Description: TABLE OF CONTENTS	Rev: 1.0
Date: Tuesday, August 09, 2016	Sheet 11 of 26	

(12) ELLESMERE POWER

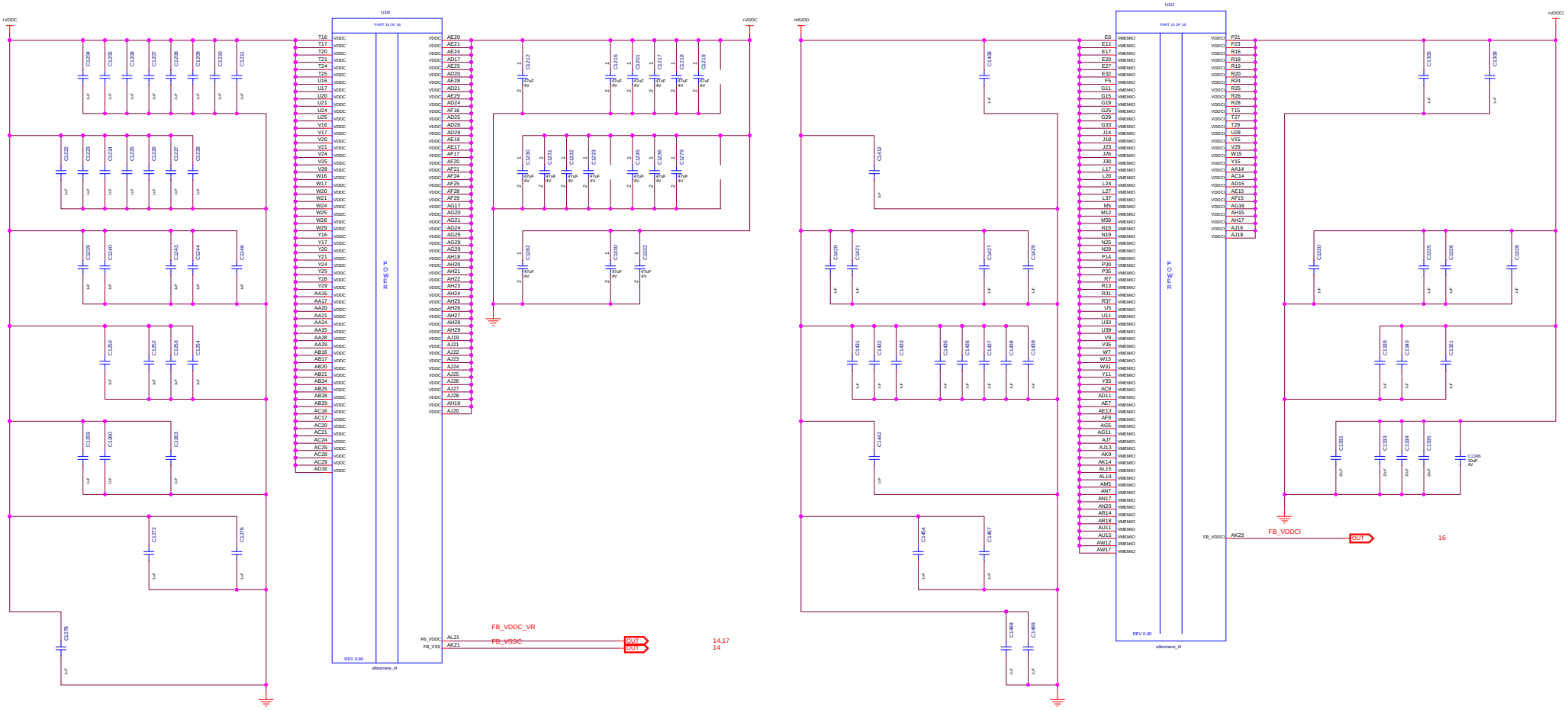

MICRO-STAR INT'L CO.,LTD		
MS-V341		
Size: Custom	Document Description: TABLE OF CONTENTS	Rev: 1.0
Date: Tuesday, August 09, 2016	Sheet 12 of 26	

(13) ELLESMERE GROUND

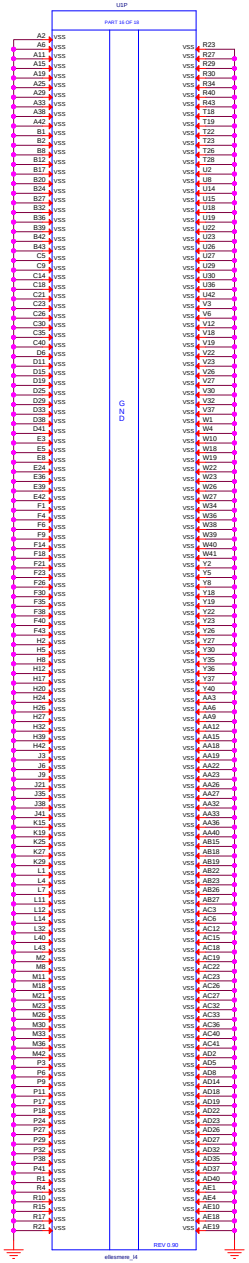

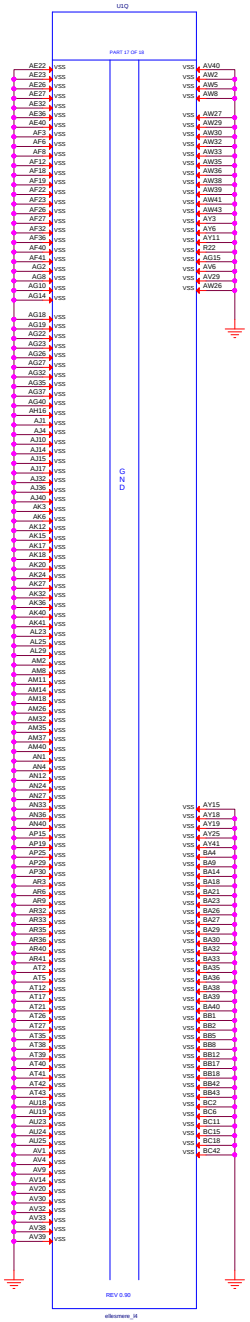

MSI	MICRO-STAR INT'L CO.,LTD	
	MS-V341	
Size: Custom	Document Description: TABLE OF CONTENTS	Rev: 1.0
Date: Tuesday, August 09, 2016	Sheet 13 of 26	

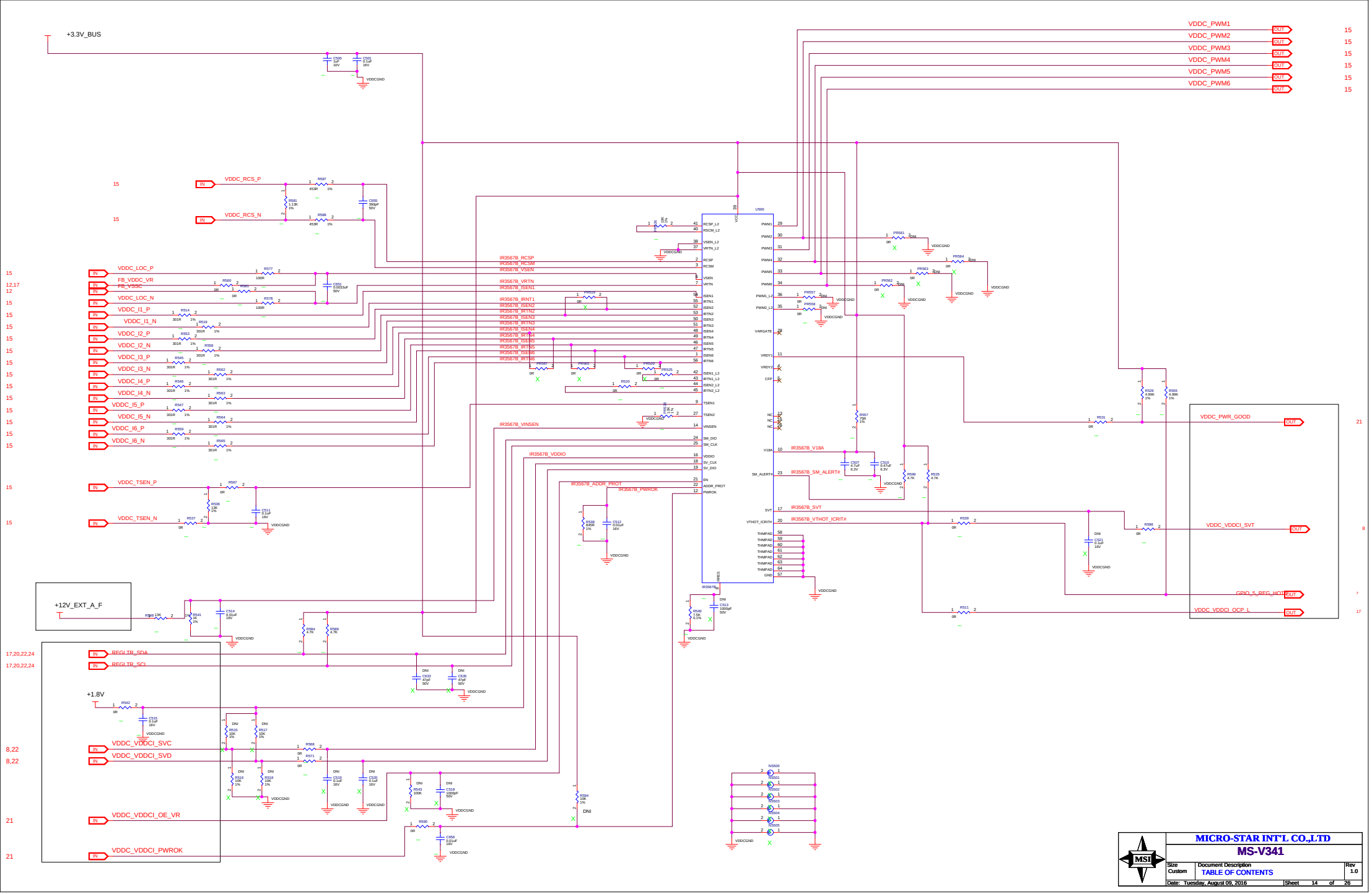
+3.3V_BUS
VDDC_PWM1
VDDC_PWM2
VDDC_PWM3
VDDC_PWM4
VDDC_PWM5
VDDC_PWM6
VDDC_RCS_P
VDDC_RCS_N
VDDC_LOC_P
FB_VDDC_VR
FB_VSSC
VDDC_LOC_N
VDDC_I1_P
VDDC_I1_N
VDDC_I2_P
VDDC_I2_N
VDDC_I3_P
VDDC_I3_N
VDDC_I4_P
VDDC_I4_N
VDDC_I5_P
VDDC_I5_N
VDDC_I6_P
VDDC_I6_N
VDDC_TSEN_P
VDDC_TSEN_N
VDDC_PWR_GOOD
VDDC_VDDCI_SVT
GPIO_5_REG_HOT
VDDC_VDDCI_OCP_L
+12V_EXT_A_F
REGI_TR_SDA
REGI_TR_SCL
+1.8V
VDDC_VDDCI_SVC
VDDC_VDDCI_SVD
VDDC_VDDCI_OE_VR
VDDC_VDDCI_PWROK
IR3567B_RCSP
IR3567B_RCSM
IR3567B_VSEN
IR3567B_VRTN
IR3567B_ISEN1
IR3567B_IRNT1
IR3567B_ISEN2
IR3567B_IRTN2
IR3567B_ISEN3
IR3567B_IRTN3
IR3567B_ISEN4
IR3567B_IRTN4
IR3567B_ISEN5
IR3567B_IRTN5
IR3567B_ISEN6
IR3567B_IRTN6
IR3567B_VINSEN
IR3567B_VDDIO
IR3567B_ADDR_PROT
IR3567B_PWROK
IR3567B_V18A
IR3567B_SM_ALERT#
IR3567B_SVT
IR3567B_VTHOT_ICRIT#
U500
MICRO-STAR INT'L CO.,LTD
MS-V341
Size Custom
Document Description
TABLE OF CONTENTS
Rev 1.0
Date: Tuesday, August 09, 2016
Sheet 14 of 26

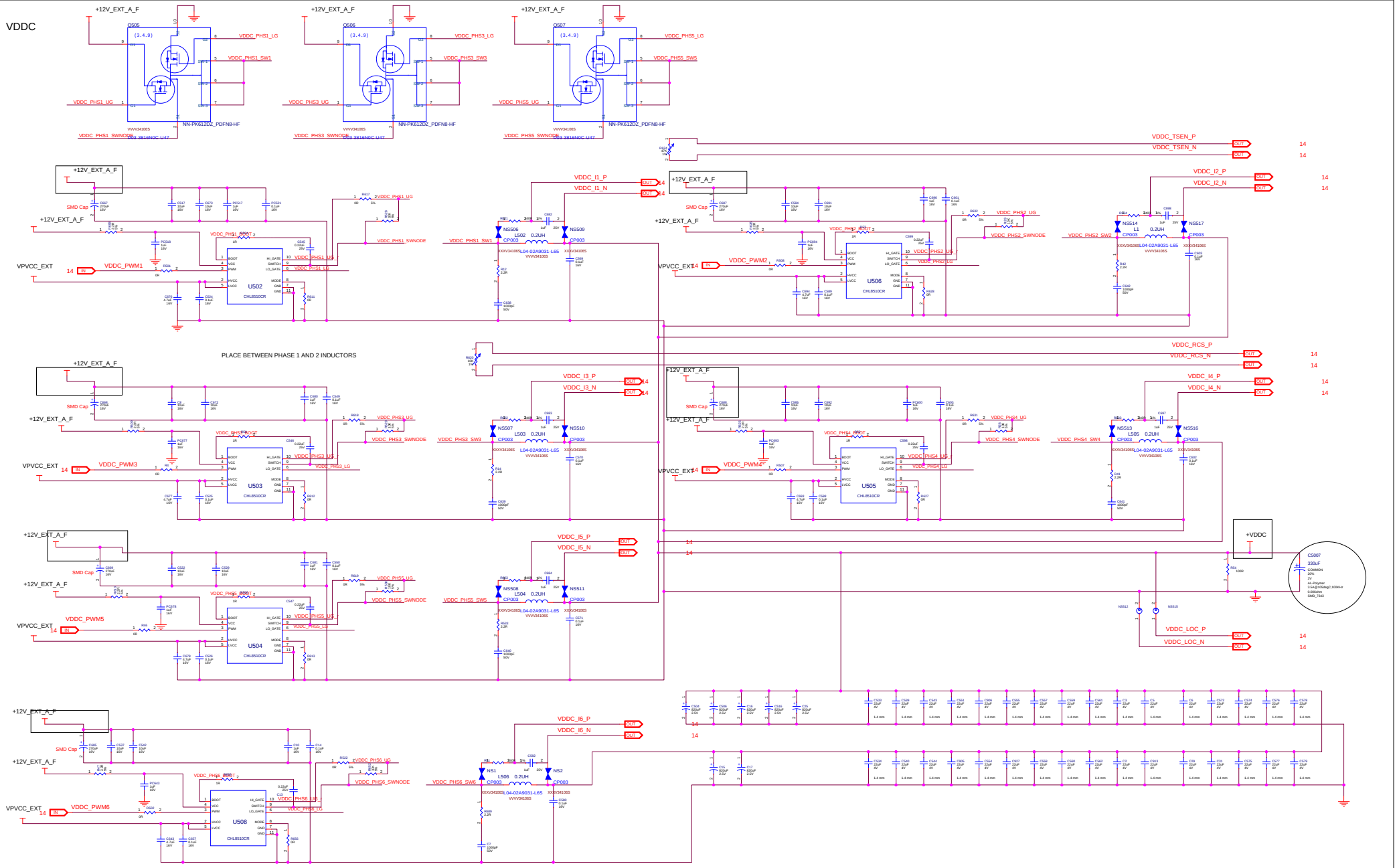
VDDC
+12V_EXT_A_F
Q505
Q506
Q507
VDDC_PHS1_LG
VDDC_PHS1_SW1
VDDC_PHS1_UG
VDDC_PHS1_SWNODE
VDDC_PHS3_LG
VDDC_PHS3_SW3
VDDC_PHS3_UG
VDDC_PHS3_SWNODE
VDDC_PHS5_LG
VDDC_PHS5_SW5
VDDC_PHS5_UG
VDDC_PHS5_SWNODE
NN-PK612DZ_PDFN8-HF
DS3-3816NDC-U47
VDDC_TSEN_P
VDDC_TSEN_N
VDDC_I1_P
VDDC_I1_N
VDDC_I2_P
VDDC_I2_N
VDDC_I3_P
VDDC_I3_N
VDDC_I4_P
VDDC_I4_N
VDDC_I5_P
VDDC_I5_N
VDDC_I6_P
VDDC_I6_N
VDDC_RCS_P
VDDC_RCS_N
VDDC_LOC_P
VDDC_LOC_N
PLACE BETWEEN PHASE 1 AND 2 INDUCTORS
SMD Cap
VPVCC_EXT
VDDC_PWM1
VDDC_PWM2
VDDC_PWM3
VDDC_PWM4
VDDC_PWM5
VDDC_PWM6
U502
U503
U504
U505
U506
U508
CHL8510CR
L502
L503
L504
L505
L506
L04-02A9031-L65
NS506
NS509
NS507
NS510
NS508
NS511
NS514
NS517
NS513
NS516
NS1
NS2
VDDC_PHS2_LG
VDDC_PHS2_SW2
VDDC_PHS2_UG
VDDC_PHS2_SWNODE
VDDC_PHS4_LG
VDDC_PHS4_SW4
VDDC_PHS4_UG
VDDC_PHS4_SWNODE
VDDC_PHS6_LG
VDDC_PHS6_SW6
VDDC_PHS6_UG
VDDC_PHS6_SWNODE
+VDDC
C5007
330uF
MS-V341
TABLE OF CONTENTS
Date: Tuesday, August 09, 2016
Sheet 15 of 26

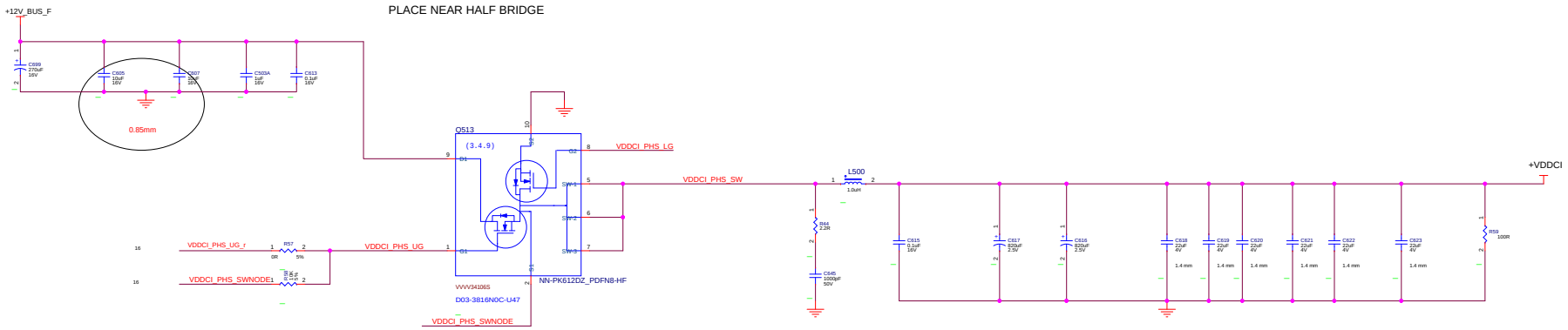

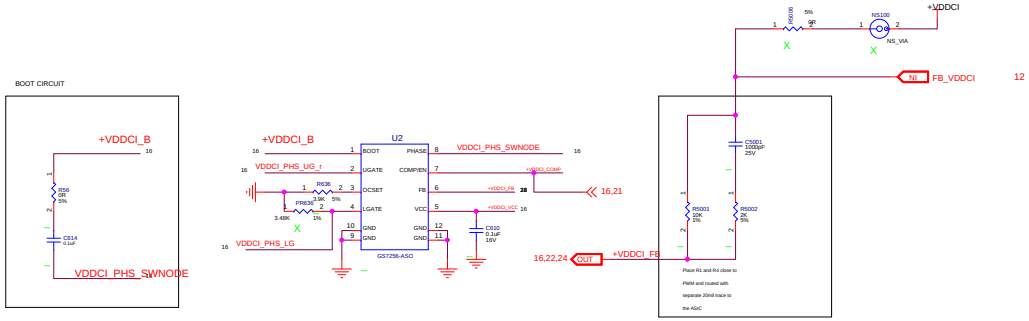

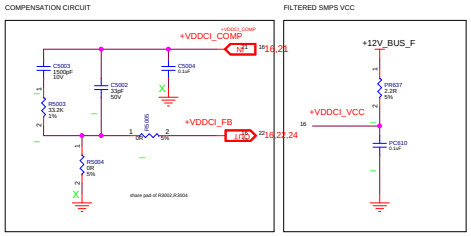

REGULATOR FOR VPVCC RAILS

IOUT MAX = 500mA

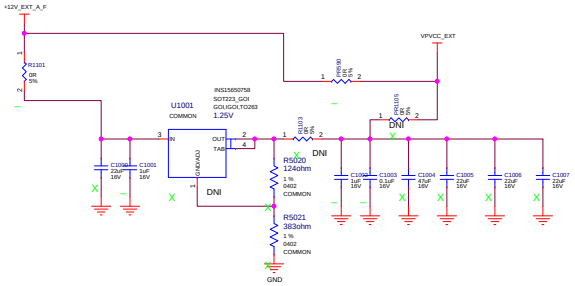

MICRO-STAR INT'L CO.,LTD		
MS-V341		
Size: Custom	Document Description: TABLE OF CONTENTS	Rev: 1.0
Date: Tuesday, August 09, 2016	Sheet 16 of 26	

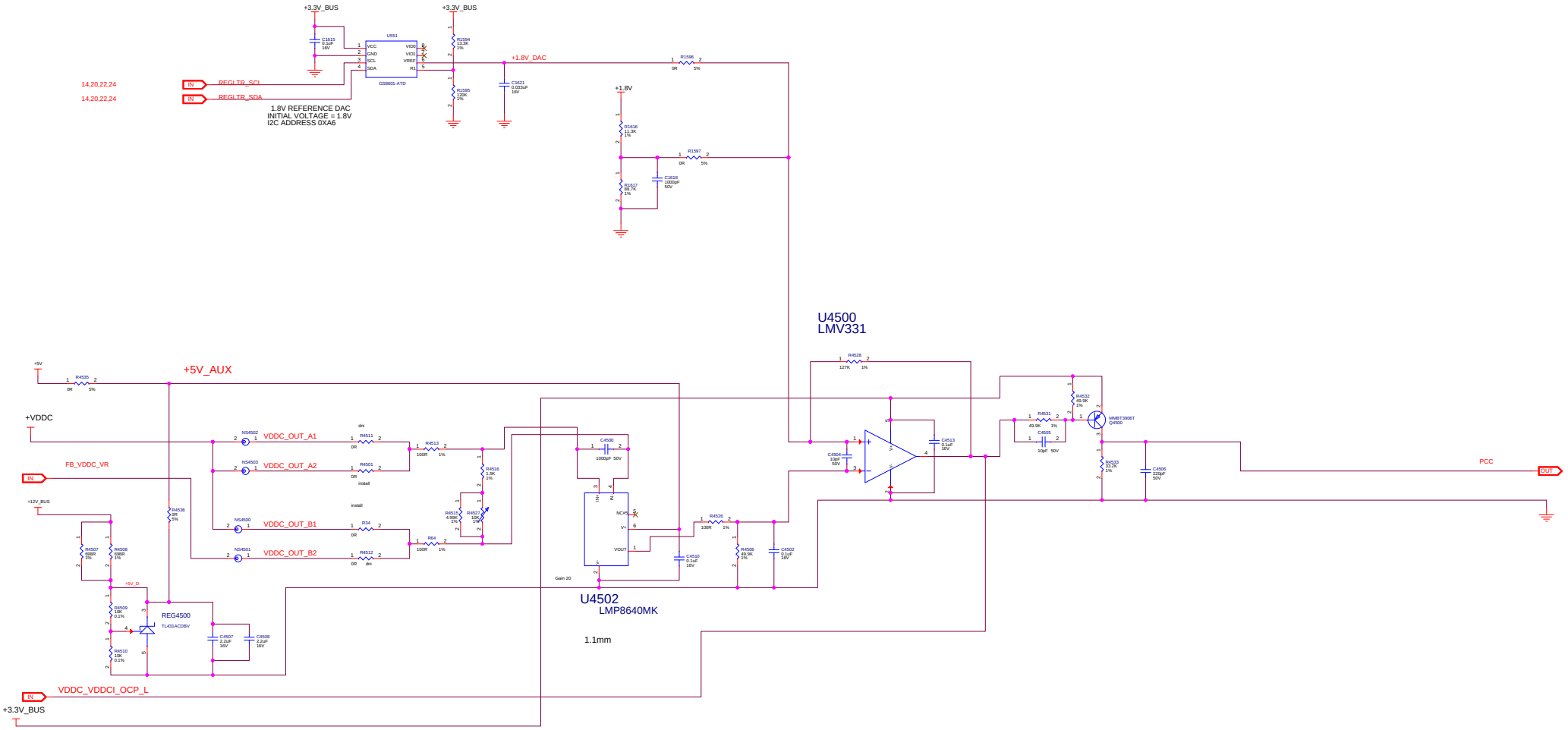

MSI	MICRO-STAR INT'L CO.,LTD	
	MS-V341	
Size: Custom	Document Description: TABLE OF CONTENTS	Rev: 1.0
Date: Tuesday, August 09, 2016	Sheet 17 of 26	

(16) MVDD

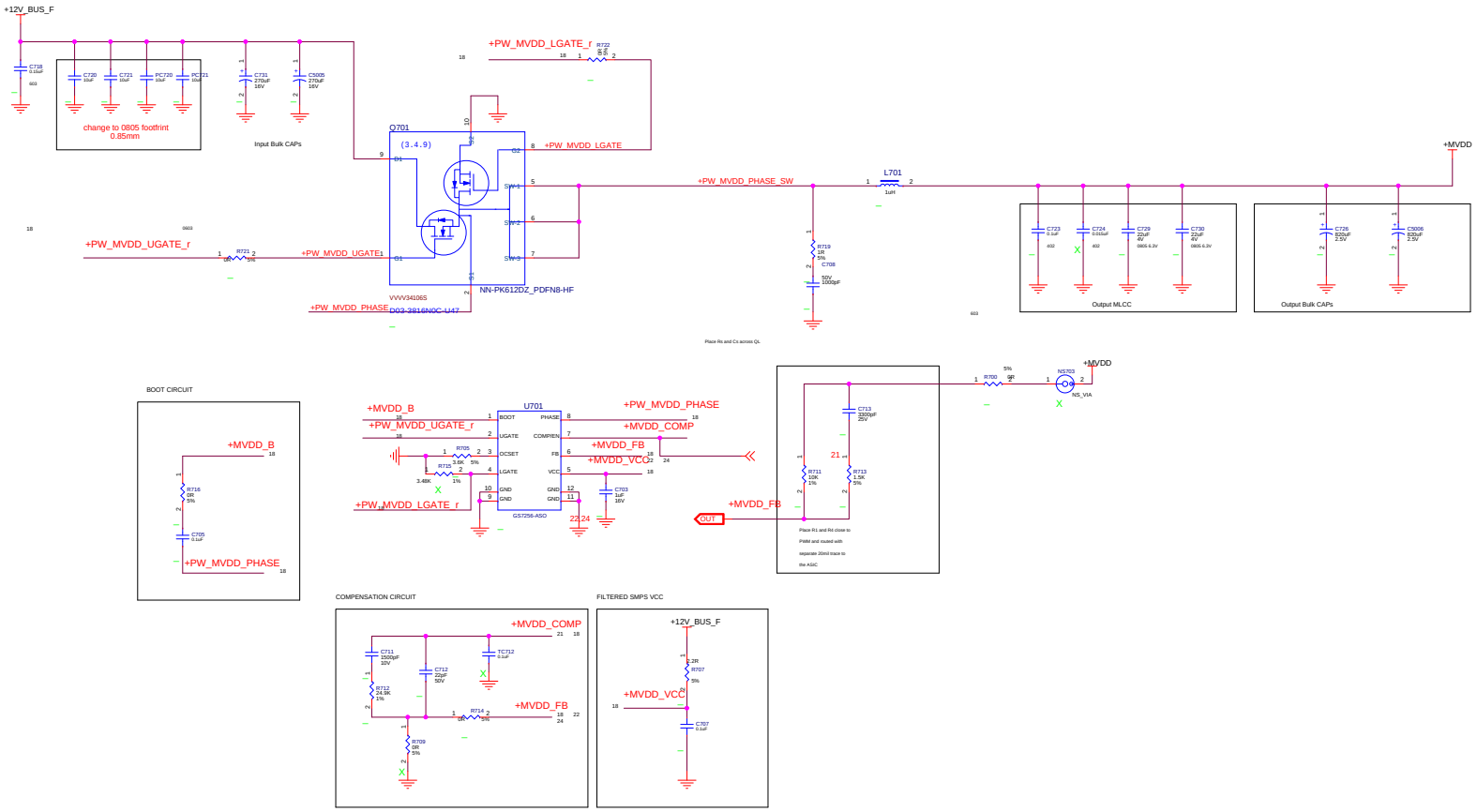

MICRO-STAR INT'L CO.,LTD		
MS-V341		
Size: Custom	Document Description: TABLE OF CONTENTS	Rev: 1.0
Date: Tuesday, August 09, 2016	Sheet 18 of 26	

(17) 0.95V

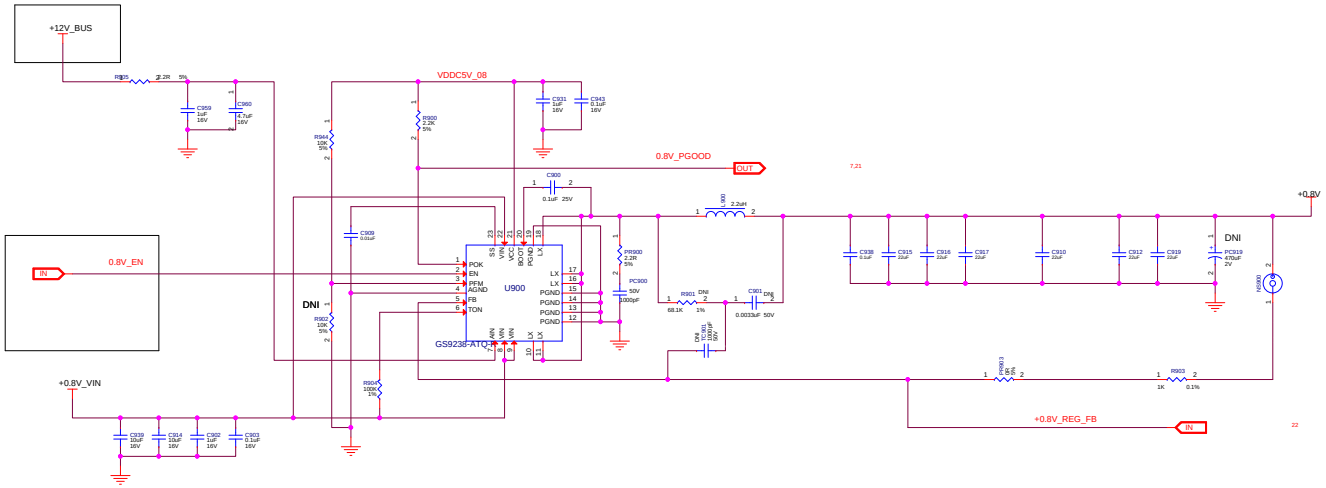

MICRO-STAR INT'L CO.,LTD		
MS-V341		
Size: Custom	Document Description: TABLE OF CONTENTS	Rev: 1.0
Date: Tuesday, August 09, 2016	Sheet 19 of 26	

(18) SMALL RAIL REGULATORS , LED_CONTROLLER_ENE3574

LDO #1: VIN = 3.0V TO 3.6V MAX VOUT = +1.8V +/- 2% IOUT = 1.3A RMS MAX

PCB: 50 TO 70mm SQ. COPPER AREA FOR COOLING

REGULATOR FOR +5V RAILS

IOUT MAX = 150mA

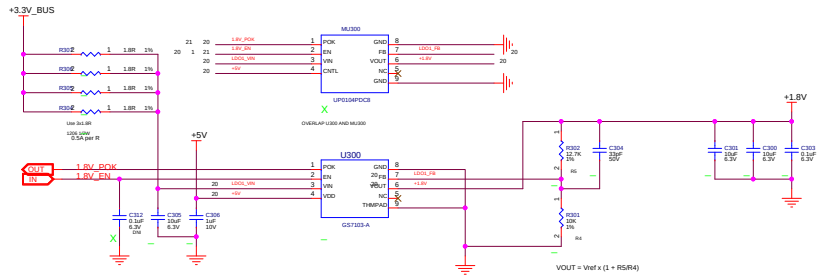

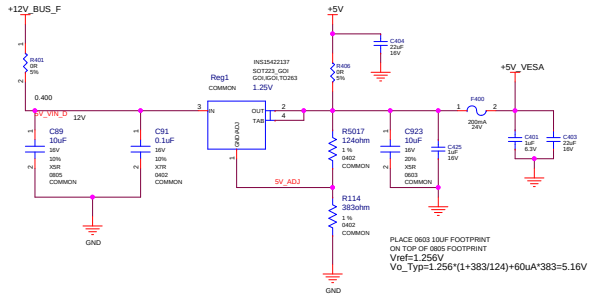

Regulators for +5V_LED

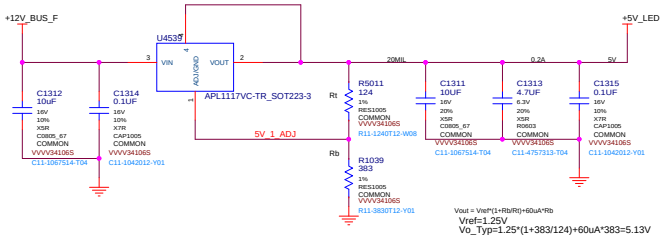

LED Connector

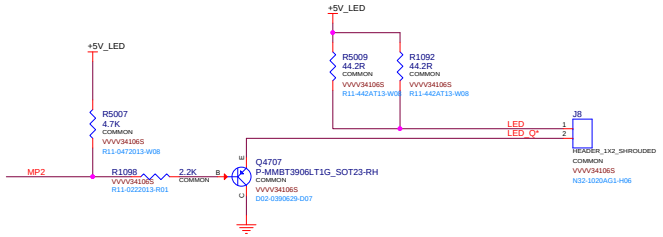

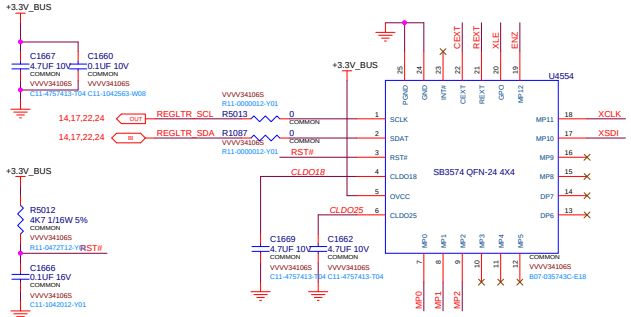

Reserved

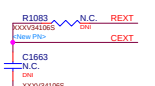

Firmware Programming

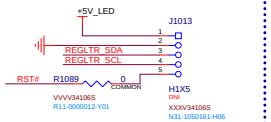

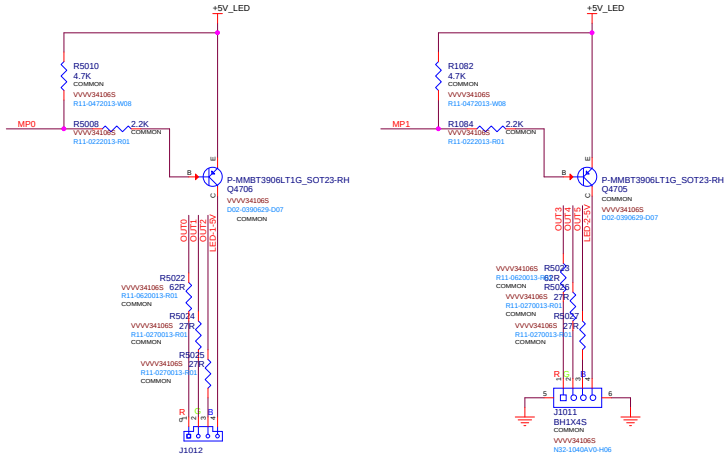

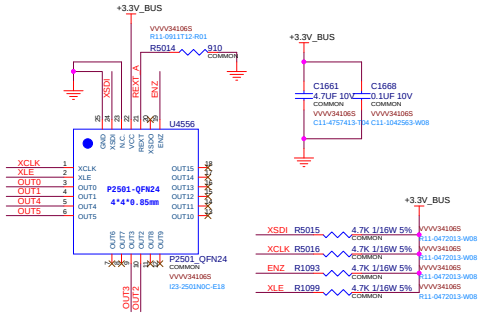

MICRO-STAR INT'L CO.,LTD	
MS-V341	
Size: Custom	Document Description: TABLE OF CONTENTS
Rev: 1.0	
Date: Tuesday, August 09, 2016	Sheet 20 of 26

(19) POWER MANAGEMENT

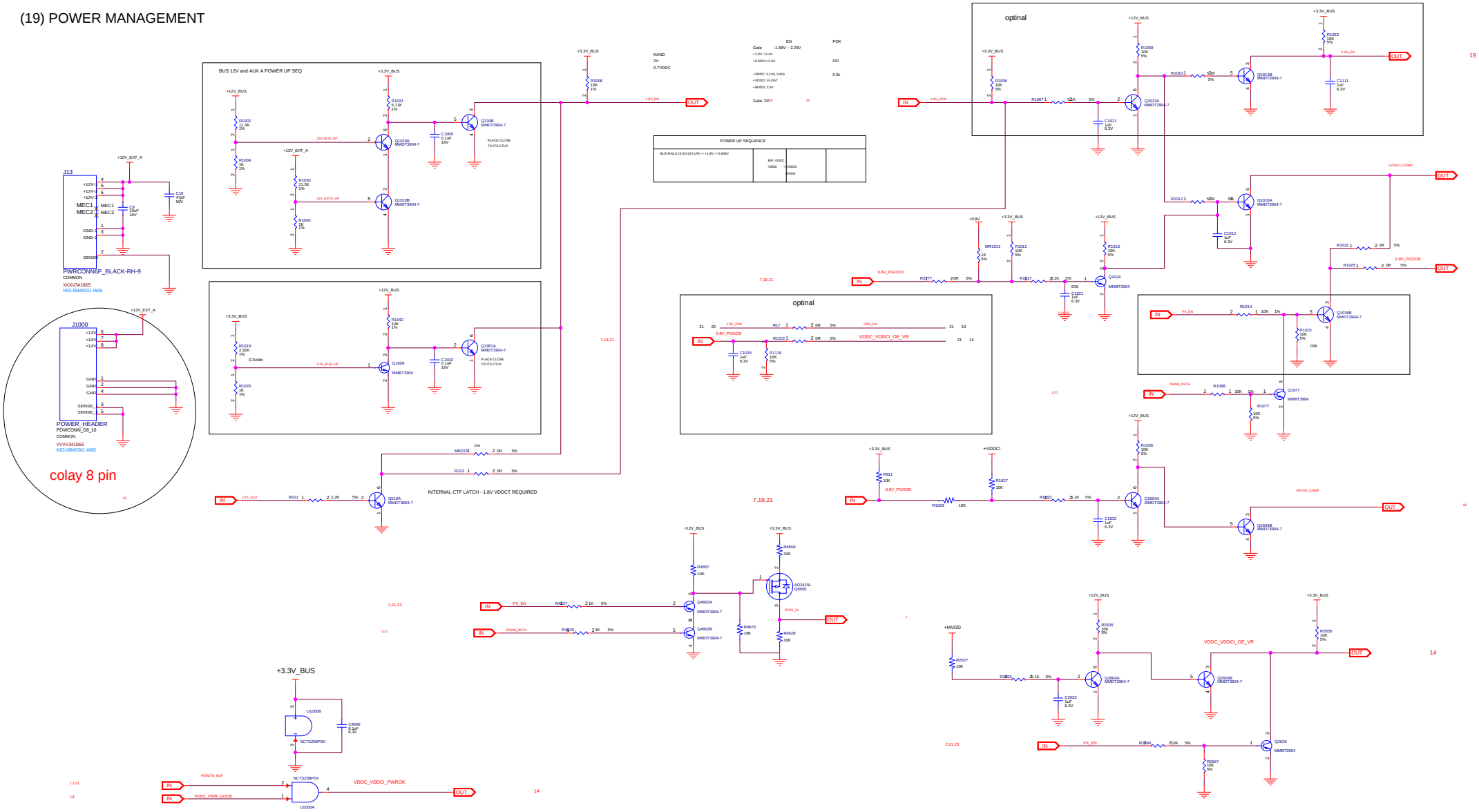

MICRO-STAR INT'L CO.,LTD		
MS-V341		
Size: Custom	Document Description: TABLE OF CONTENTS	Rev: 1.0
Date: Tuesday, August 09, 2016	Sheet 21 of 26	

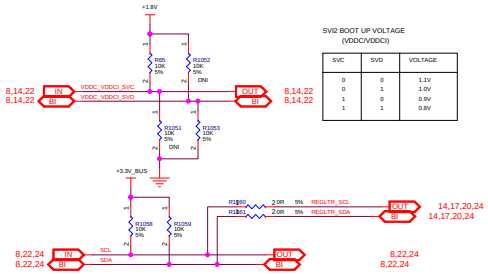

SVI2 BOOT UP VOLTAGE
(VDDC/VDDCI)

SVC	SVD	VOLTAGE
0	0	1.1V
0	1	1.0V
1	0	0.9V
1	1	0.8V

+12V_BUS INPUT

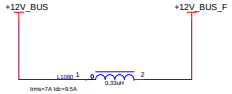

+12V_EXT_A INPUT

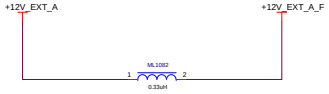

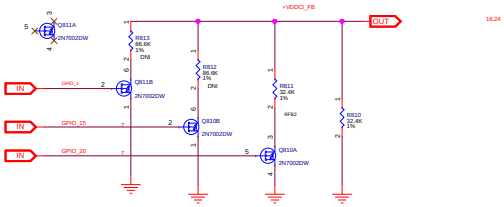

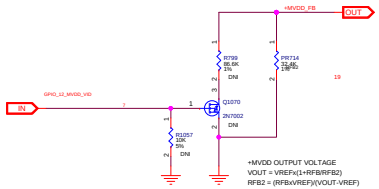

+MVDD OUTPUT VOLTAGE
VOUT = VREFx(1+RFB/RFB2)
RFB2 = (RFBxVREF)/(VOUT-VREF)

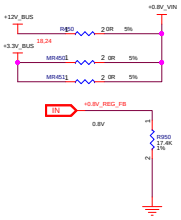

MICRO-STAR INT'L CO.,LTD		
MS-V341		
Size: Custom	Document Description: TABLE OF CONTENTS	Rev: 1.0
Date: Tuesday, August 09, 2016	Sheet 22 of 26	

(20) MECHANICAL AND THERMAL MANAGEMENT

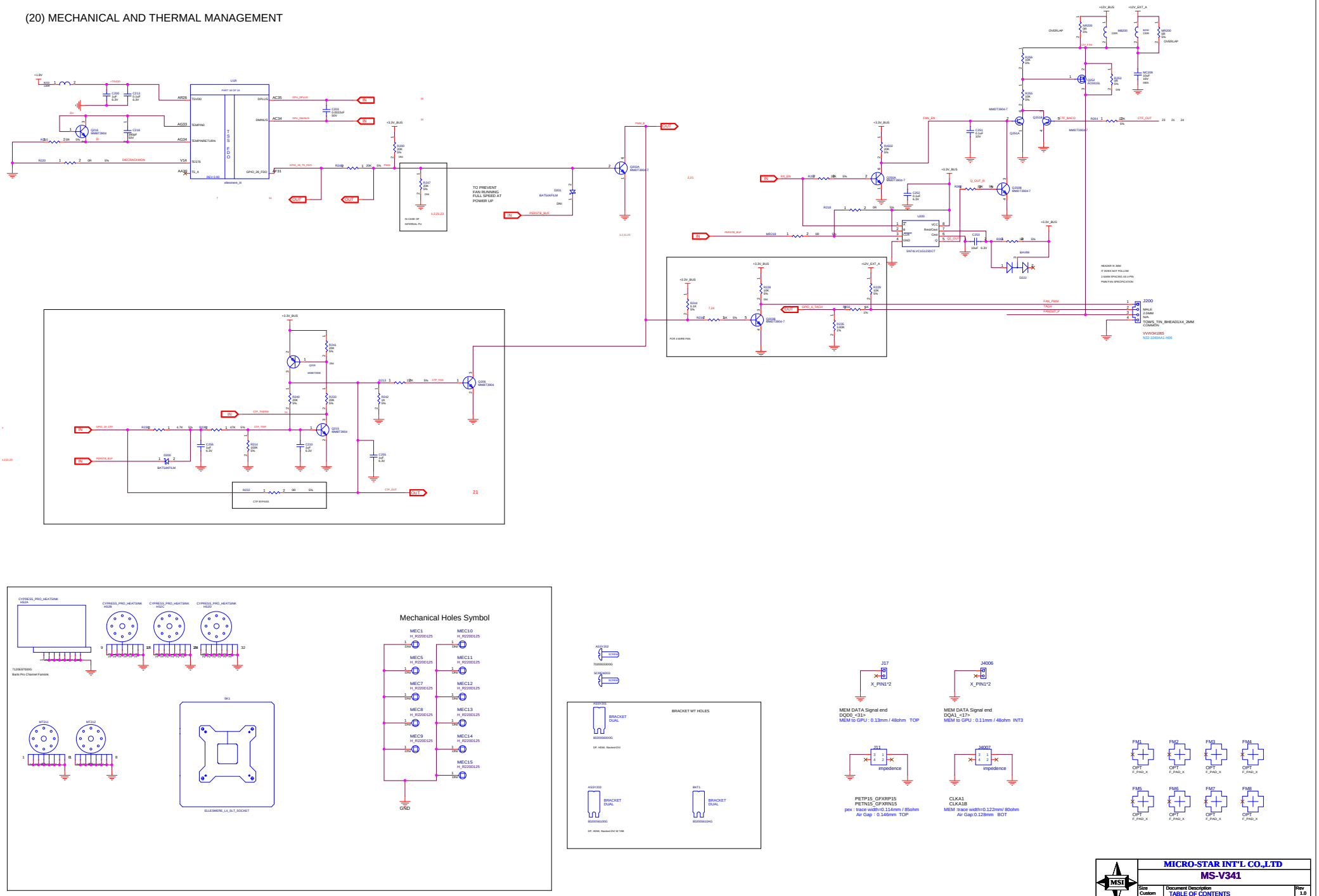

(21) DEBUG CIRCUITS

JTAG

LM96163 FOR BACKUP THERMAL CONTROL

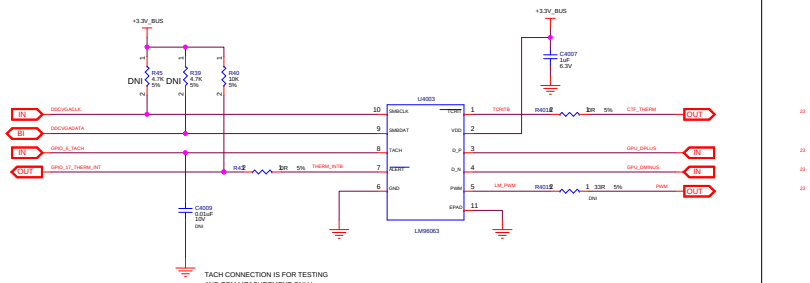

E-FUSE CAPABILITY

DEFAULT = GPIO-CONTROLLED
(MANUAL OPTION AS BACK-UP)

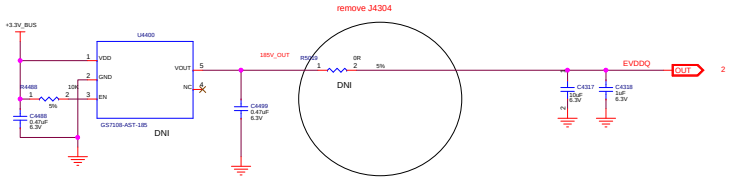

DIGITAL POTS

DIGITAL POTS

remove U4150 / U4050

LED LIGHTS

LED RED "ON" INDICATES CTF FAULT

remove LED

LED GREEN "ON" INDICATES BACO MODE

LED ORANGE "ON" INDICATES MACO MODE

VTMM - TEST CONNECTOR FOR VOLTAGE MEASUREMENTS

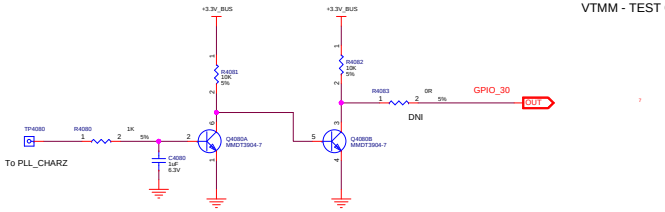

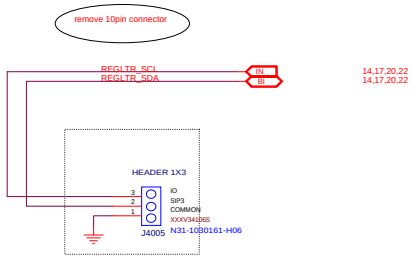

remove J4001/J4002

SWITCHES

remove SW

BYPASS/DISABLE CTF

MAXIMIZE FAN

MICRO-STAR INT'L CO.,LTD		
MS-V341		
Size: Custom	Document Description: TABLE OF CONTENTS	Rev: 1.0
Date: Tuesday, August 09, 2016	Sheet 24 of 26	

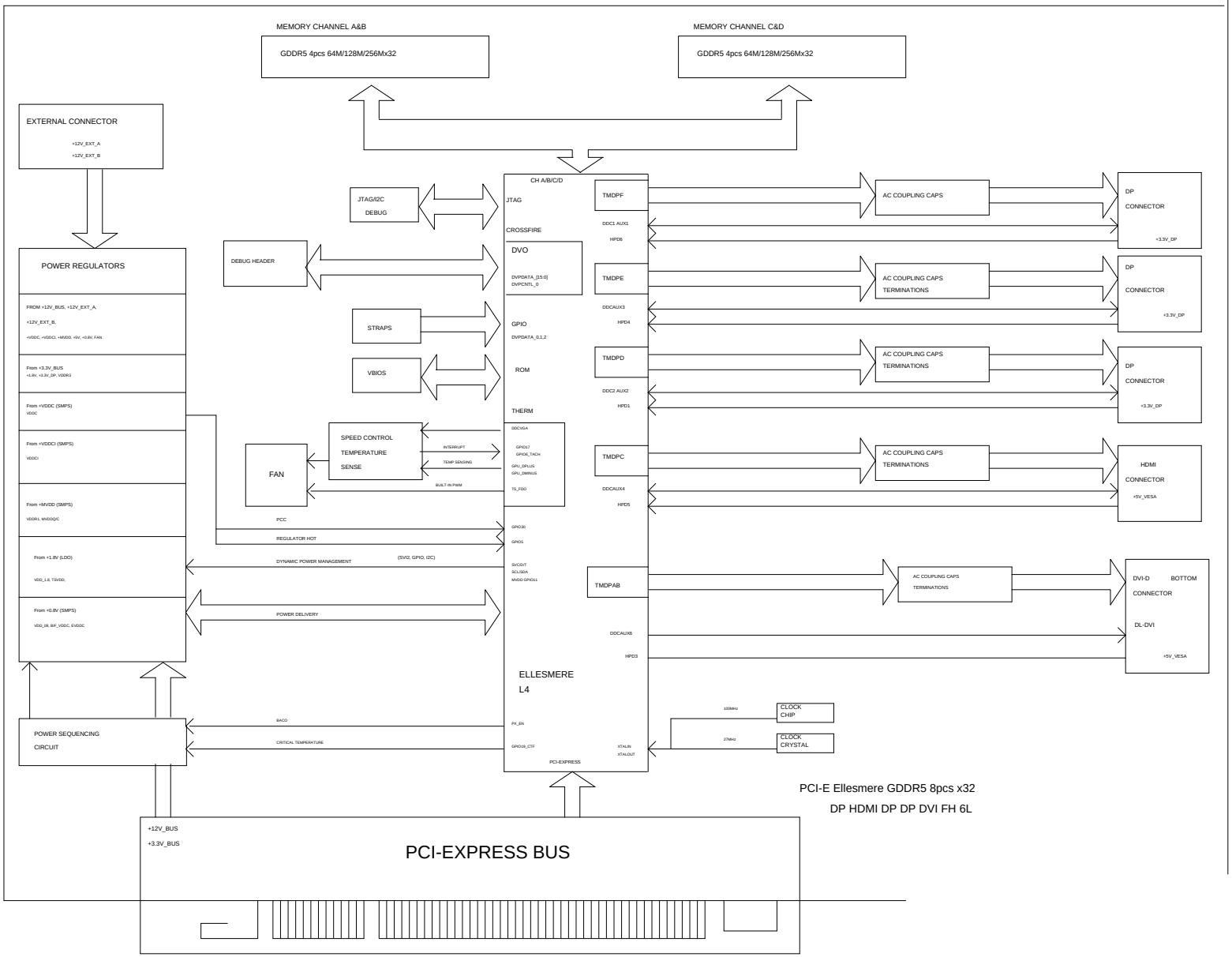

MICRO-STAR INT'L CO.,LTD		
MS-V341		
Size: Custom	Document Description: TABLE OF CONTENTS	Rev: 1.0
Date: Tuesday, August 09, 2016	Sheet 25 of 26	

0	00A	06/28/2016	
1	00B	10/19/2016	1. Add GPIO5 for dynamic VDDCI 2. update VDDC driver sequence
2	00C	03/23/2018	HDMI: - add series resistor R1880 ~R1887 - add pull down inductor L1880 ~L1887 remove C405, C403, VR400,C410,C414,R405

Page7: remove J2,J3

Page9: enable DVI

Page10: DP change to HDMI

Page15: change dual-N MOS

Page16: change dual-N MOS

Page18: change dual-N MOS

Page20: Add LED circuit

Page21: colay 8pin power connecter

Page24: remove debug circuit