(1) PCI-EXPRESS EDGE CONNECTOR

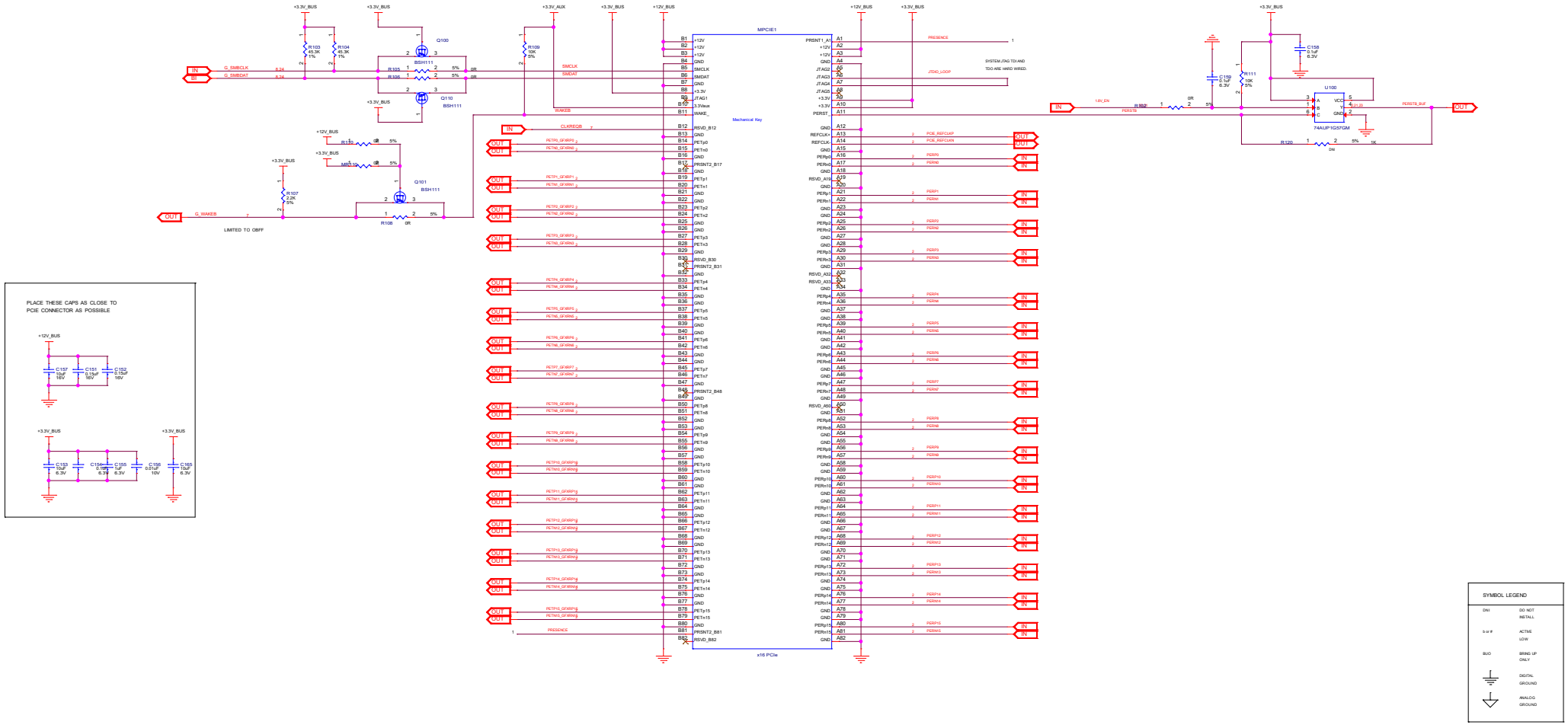

MSI	MICRO-STAR INT'L CO.,LTD	
	MS-V341	
Size Custom	Document Description 0001 PCIE EDGE CONNECTOR	Rev 2.1
Date: Wednesday, August 03, 2016	Sheet 1 of 26	

(2) ELLESMERE PCIE INTERFACE

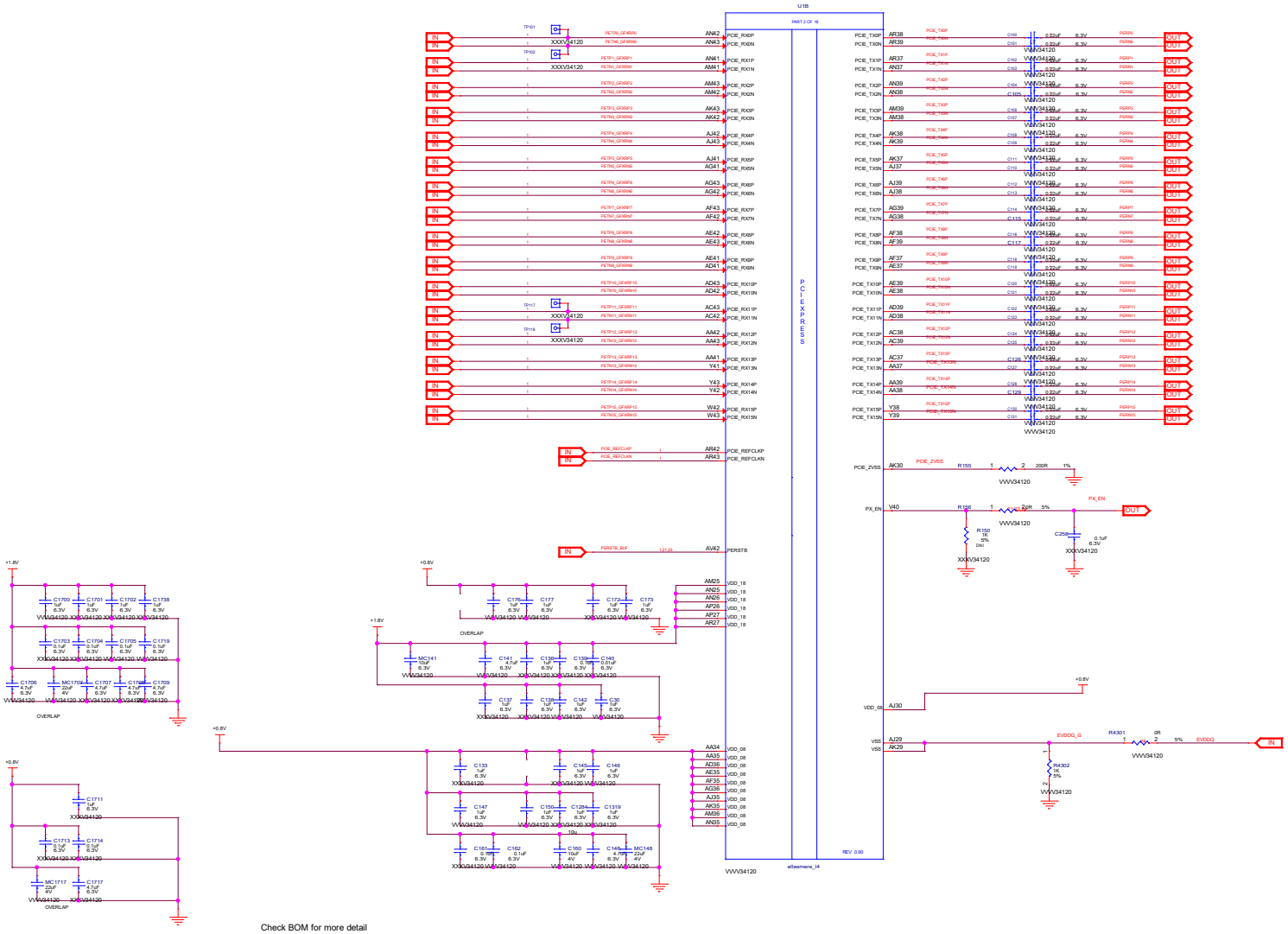

MICRO-STAR INT'L CO.,LTD		
MS-V341		
Size: Custom	Document Description: 0002 ELLESMERE PCIE INTERFACE	Rev: 2.1
Date: Wednesday, August 03, 2016	Sheet 2 of 26	

(3) ELLESMERE MEM INTERFACE CH A/B

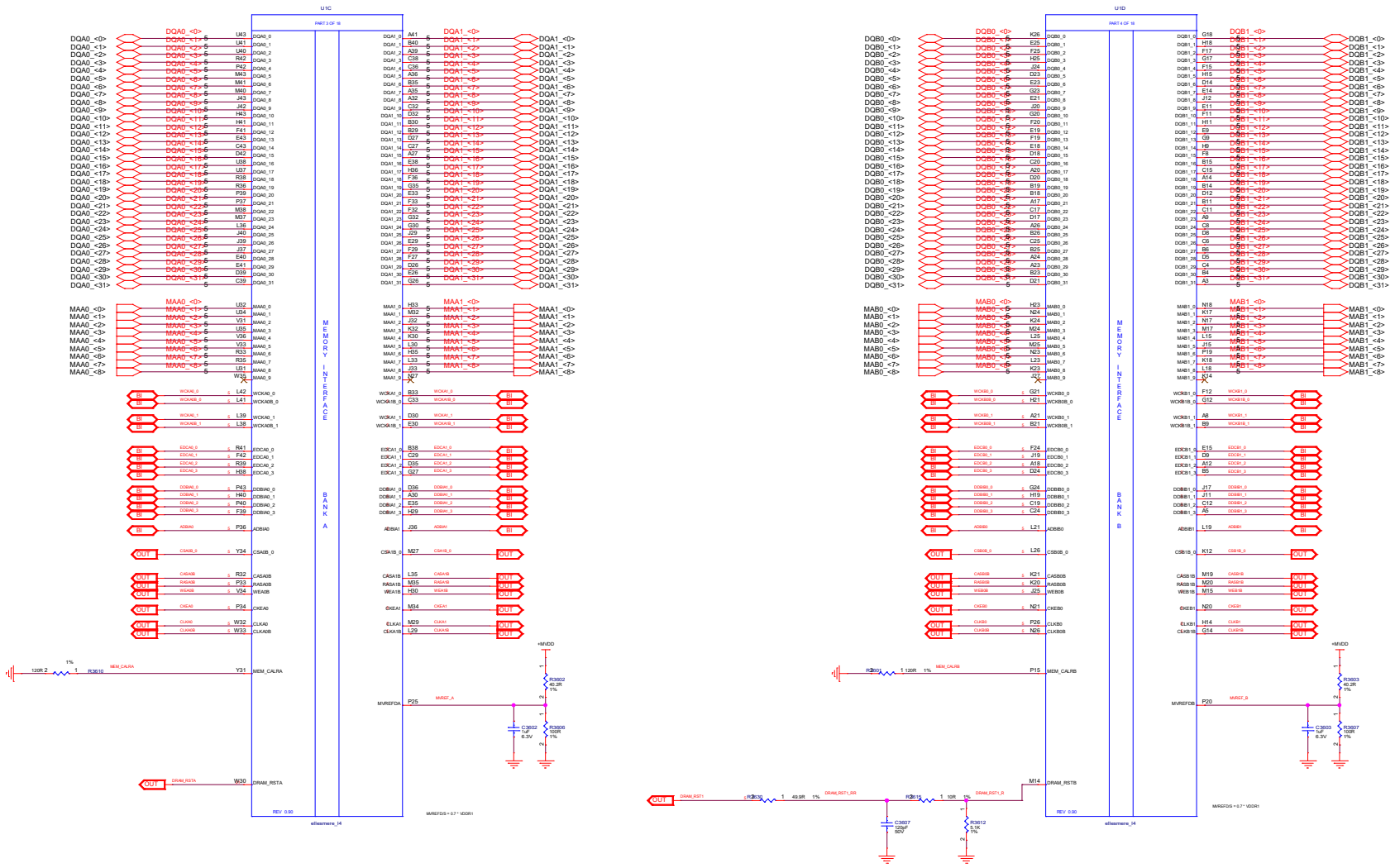

MICRO-STAR INT'L CO.,LTD		
MS-V341		
Size Custom	Document Description 0003 ELLESMERE MEM CH AB	Rev 2.1
Date: Wednesday, August 03, 2016	Sheet 3 of 26	

(4) ELLESMERE MEM INTERFACE CH C/D

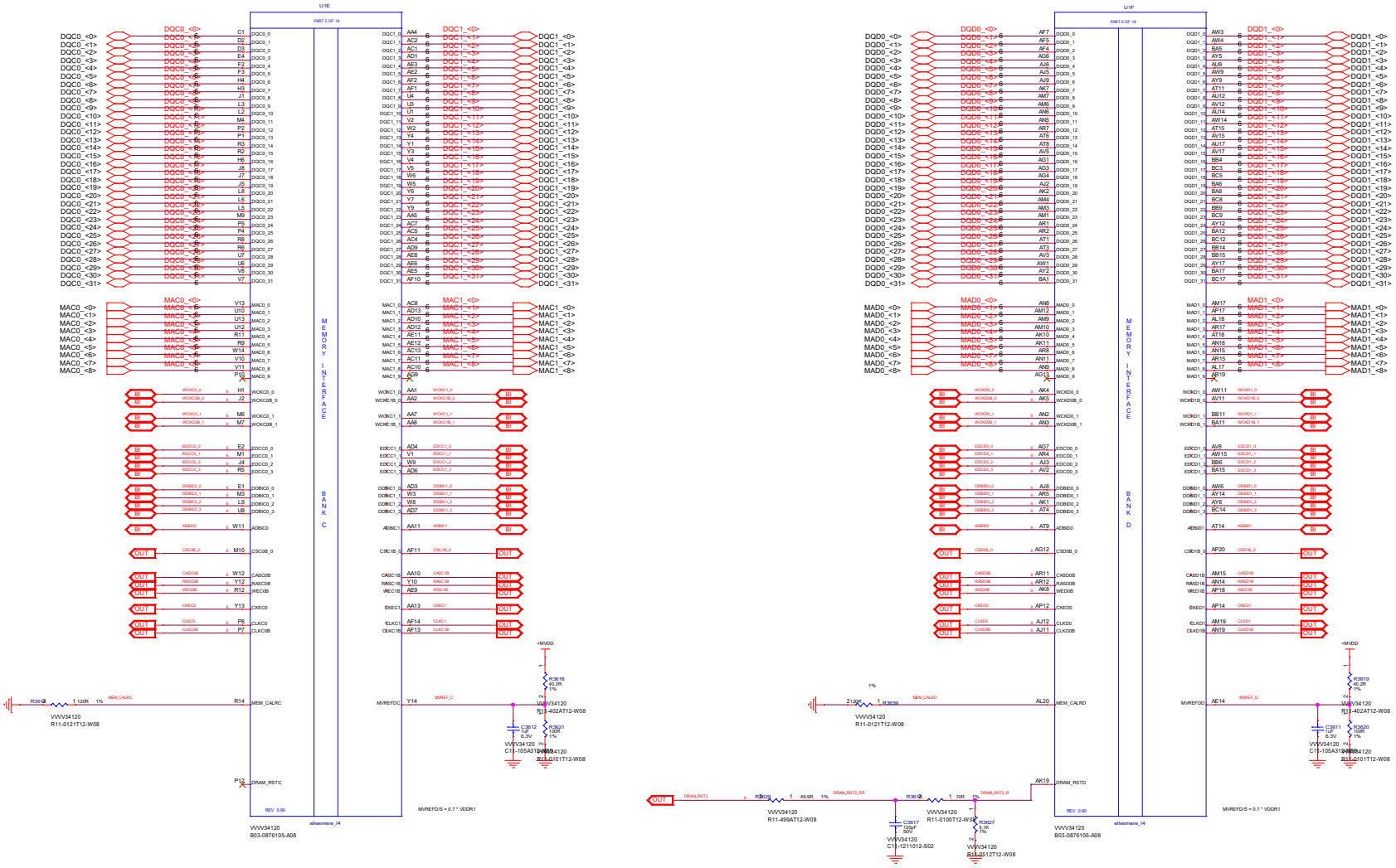

MICRO-STAR INT'L CO.,LTD		
MS-V341		
Size Custom	Document Description 0004 ELLESMERE MEM CH CD	Rev 2.1
Date: Wednesday, August 03, 2016	Sheet 4 of 26	

(5) GDDR5 MEMORY CH A/B

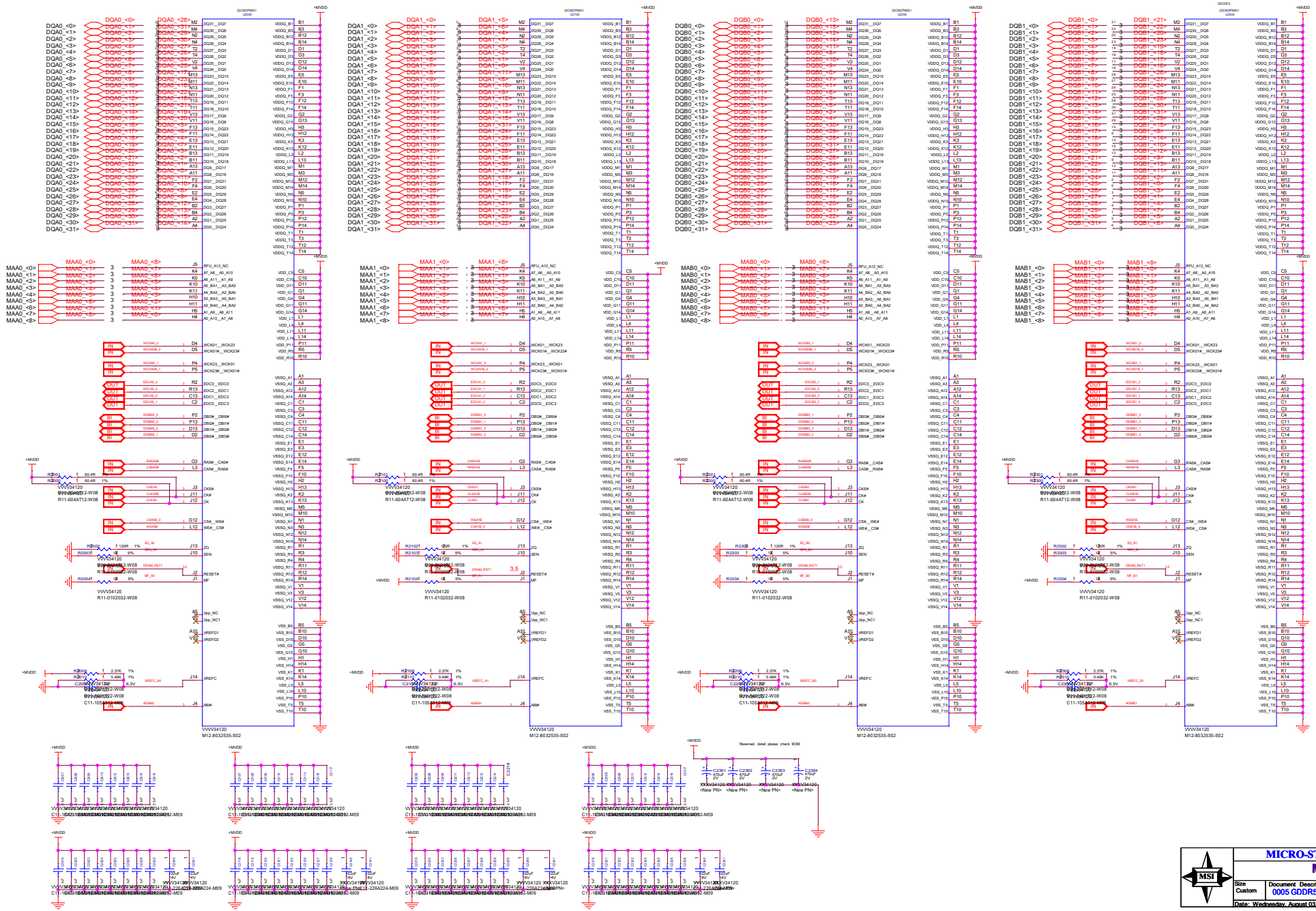

MICRO-STAR INT'L CO.,LTD	
MS-V341	
Size: Custom	Document Description: 0005 GDDR5 MEM CH AB
Rev: 2.1	
Date: Wednesday, August 03, 2016	Sheet 5 of 26

(6) GDDR5 MEMORY CH C/D

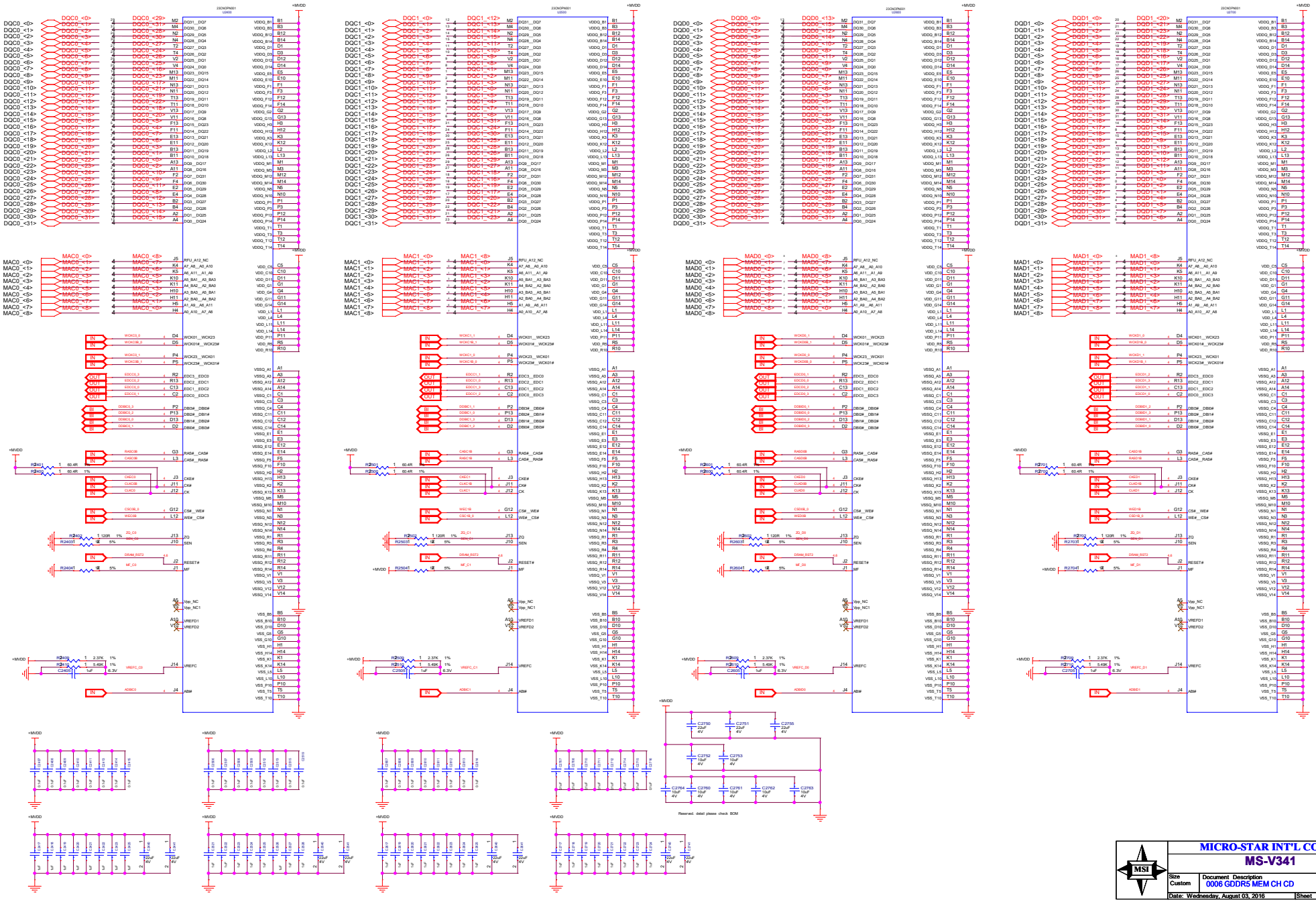

MICRO-STAR INT'L CO.,LTD		
MS-V341		
Size Custom	Document Description 0006 GDDR5 MEM CH CD	Rev 2.1
Date: Wednesday, August 03, 2016	Sheet 6 of 26	

(7) ELLESMERE GPIO STRAP CF XTAL

SCL/SDA BUS:

I2C ADDRESS	FUNCTION	DEVICE

DDC/VGA BUS:

I2C ADDRESS	FUNCTION	DEVICE
0x98	EXT TEMP SENSOR	LM96063

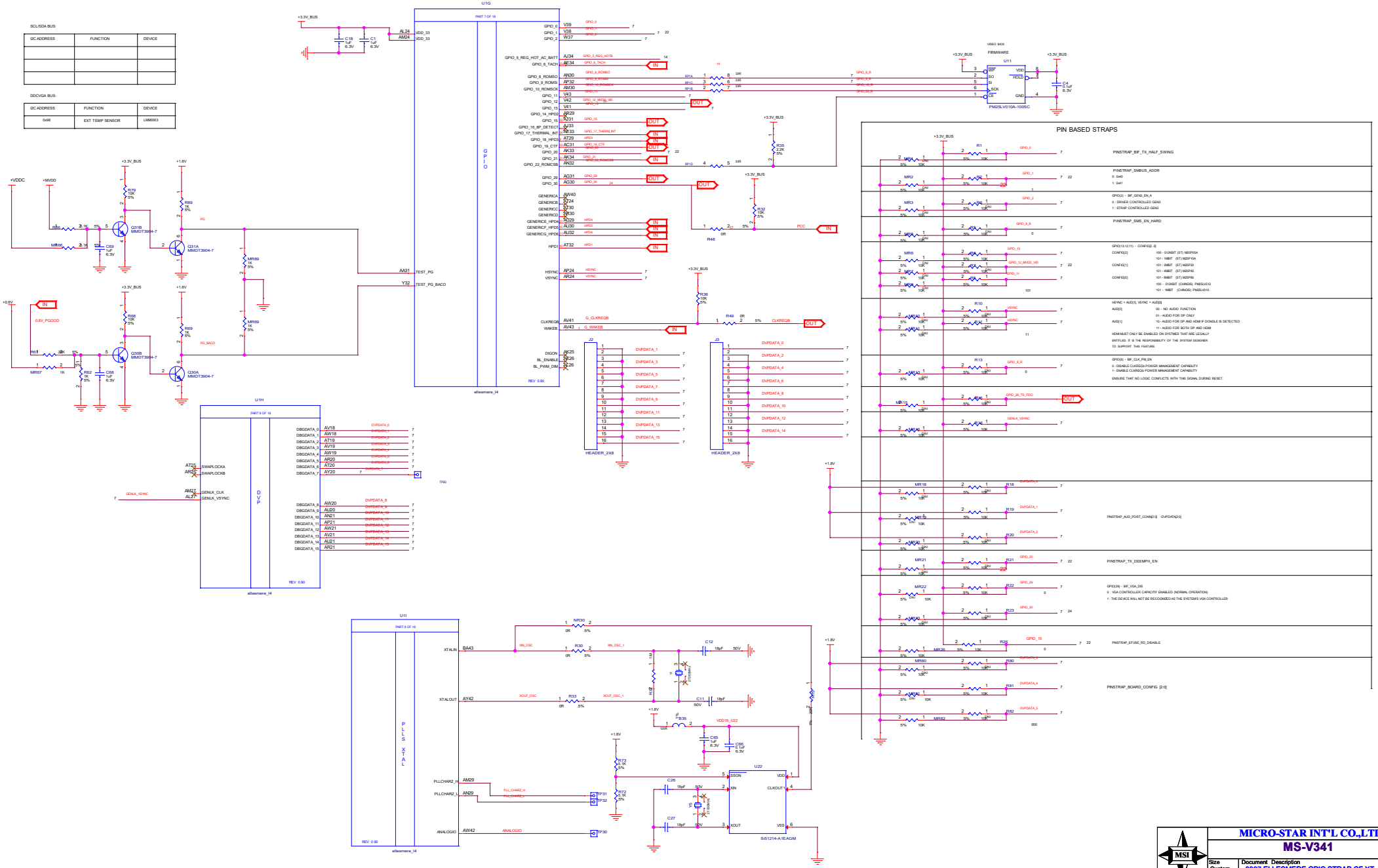

(8) ELLESMERE DAC1 LOCK

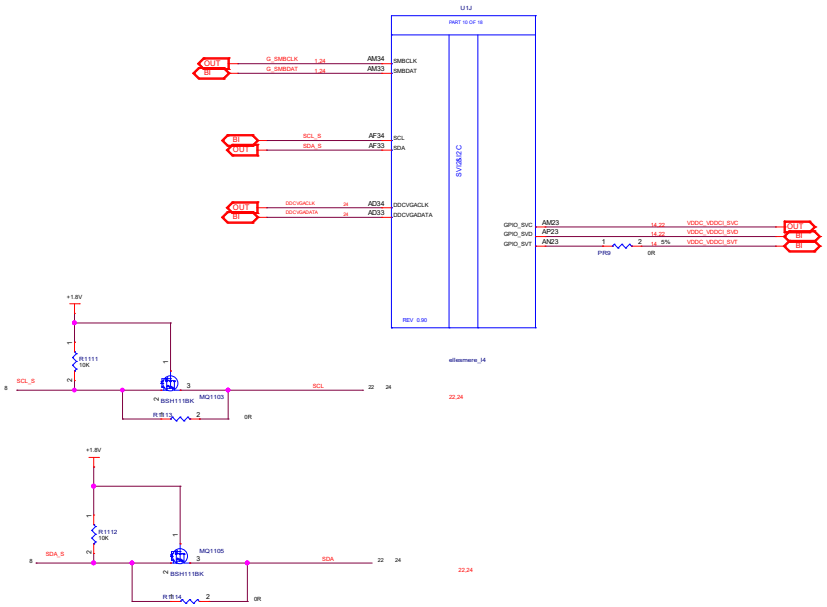

MICRO-STAR INT'L CO.,LTD		
MS-V341		
Size Custom	Document Description 0008 ELLESMERE SVI2&I2C	Rev 2.1
Date: Wednesday, August 03, 2016	Sheet 8 of 26	

(9) ELLESMERE TMDP A/B

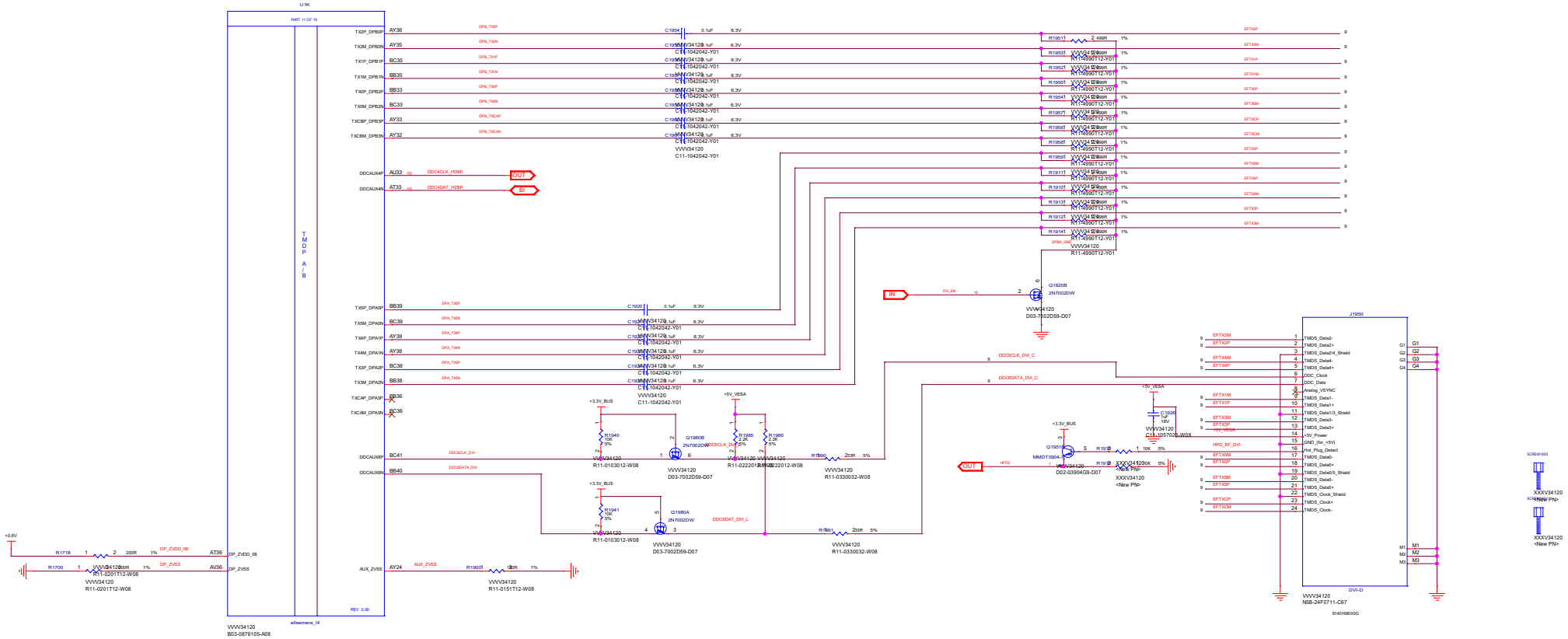

OPTIONAL ESD PROTECTION DIODES

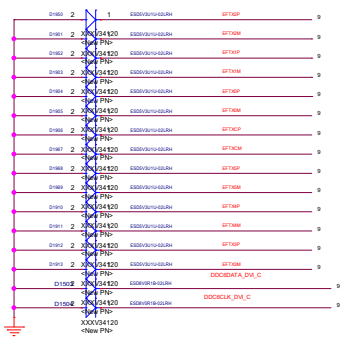

MICRO-STAR INT'L CO.,LTD		
MS-V341		
Size: Custom	Document Description: 0009 ELLESMERE TMDPAB dDVI	Rev: 2.1
Date: Wednesday, August 03, 2016	Sheet 9 of 26	

(10) ELLESMERE TMDP C/D

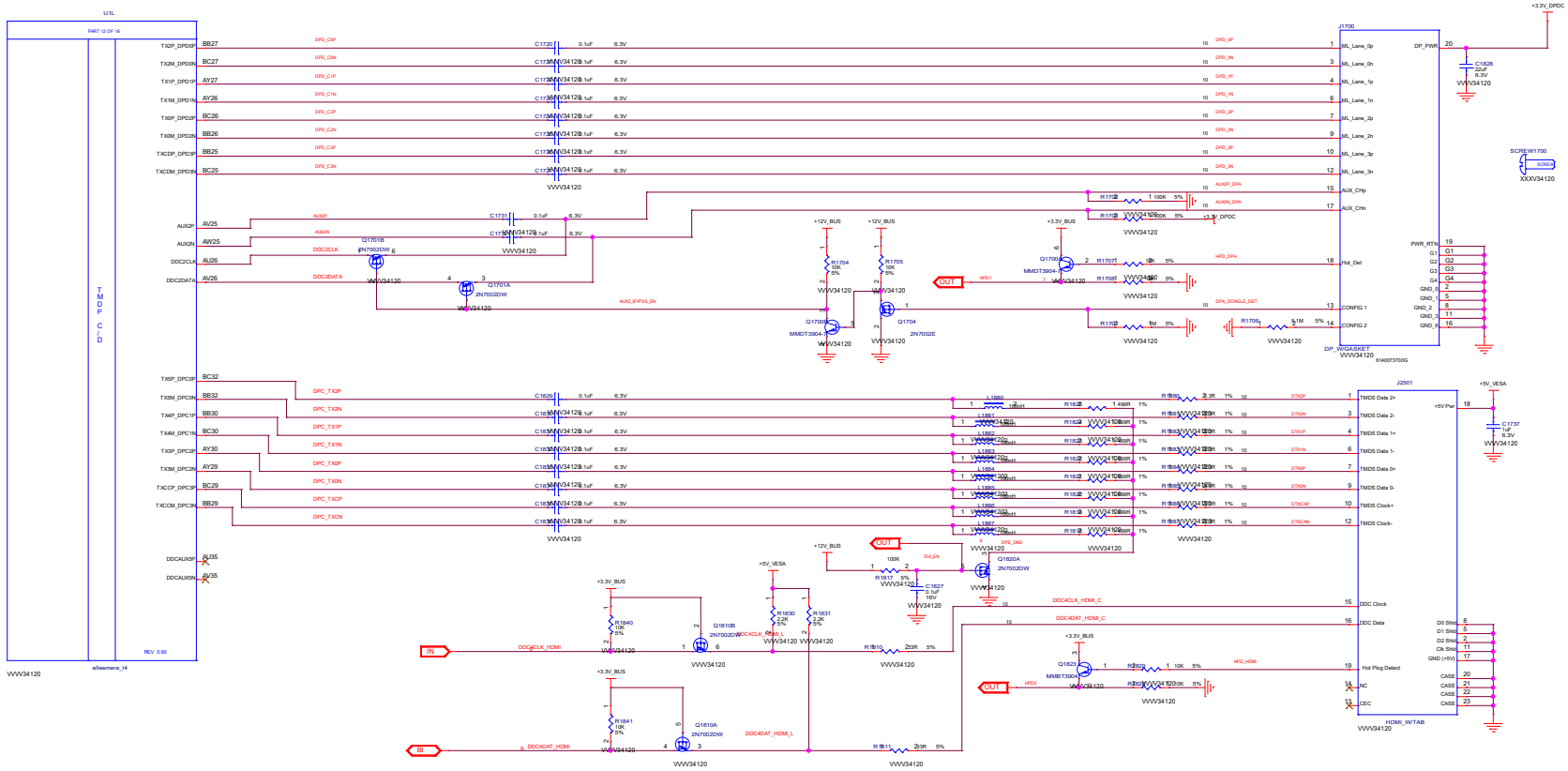

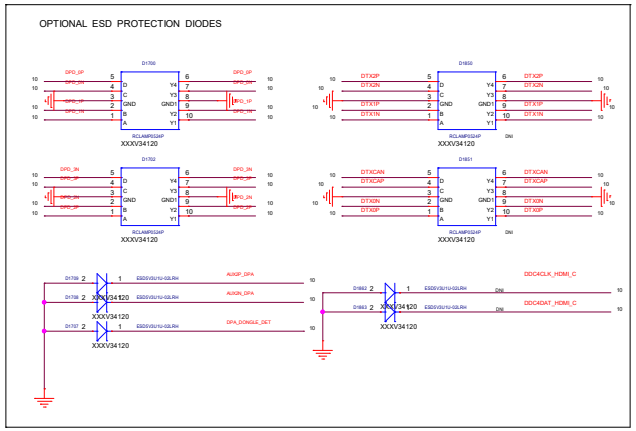

16ci203

MSI	MICRO-STAR INT'L CO.,LTD	
	MS-V341	
Size Custom	Document Description 0010 ELLESMERE TMDPCD DP HDMI	Rev 2.1
	Date: Wednesday, August 03, 2016	Sheet 10 of 26

(11) ELLESMERE LVTMDP E/F

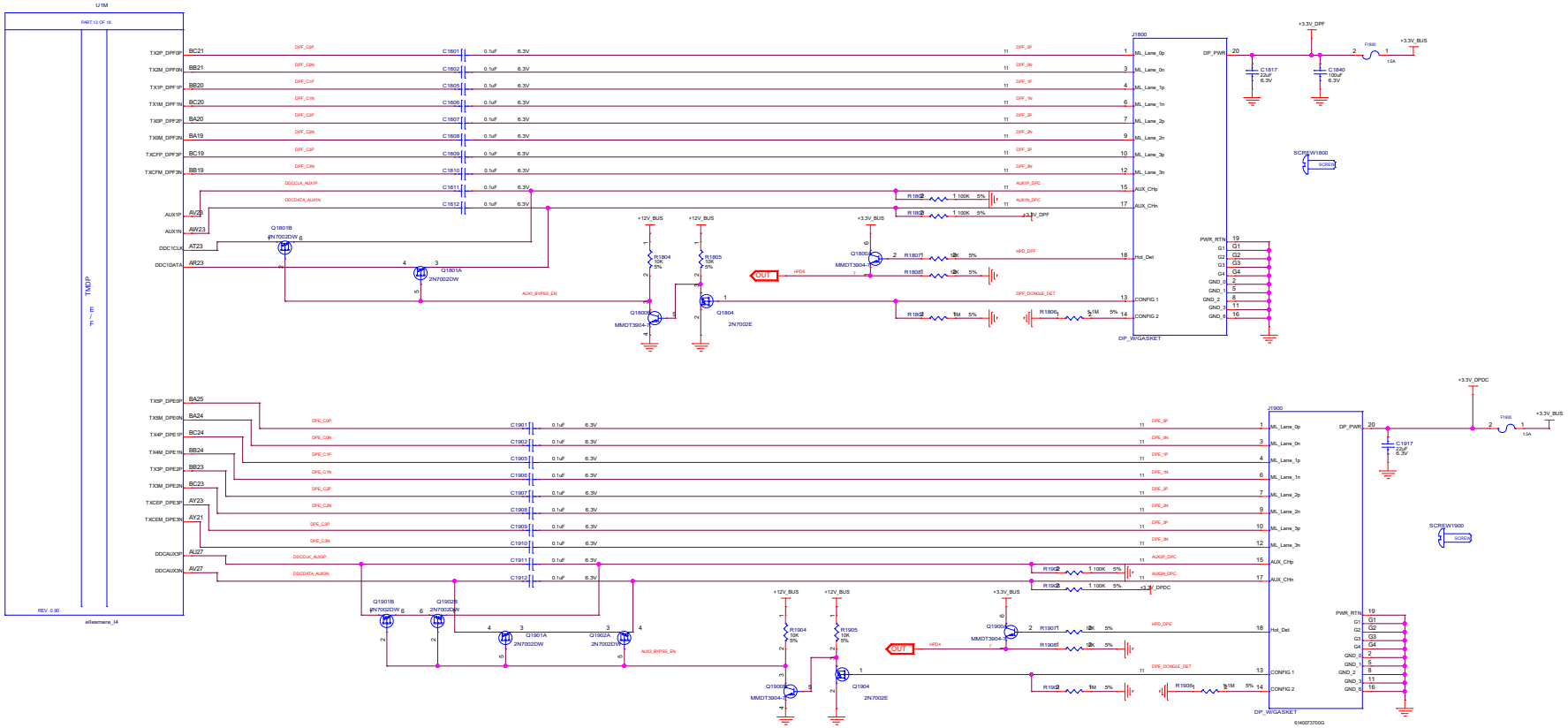

OPTIONAL ESD PROTECTION DIODES

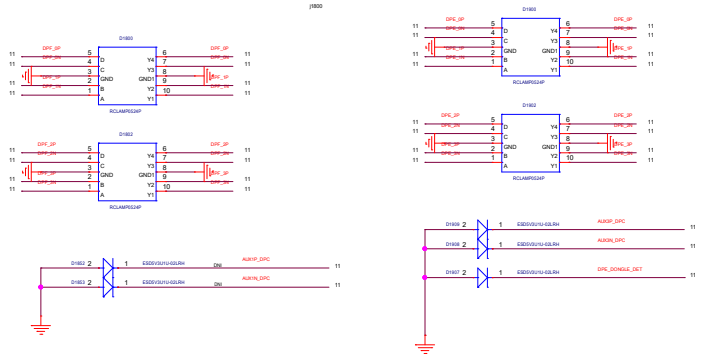

16ci203

MICRO-STAR INT'L CO.,LTD		
MS-V341		
Size Custom	Document Description 0011 ELLESMERE TMDPEF DP DP	Rev 2.1
Date: Wednesday, August 03, 2016	Sheet 11 of 26	

(12) ELLESMERE POWER

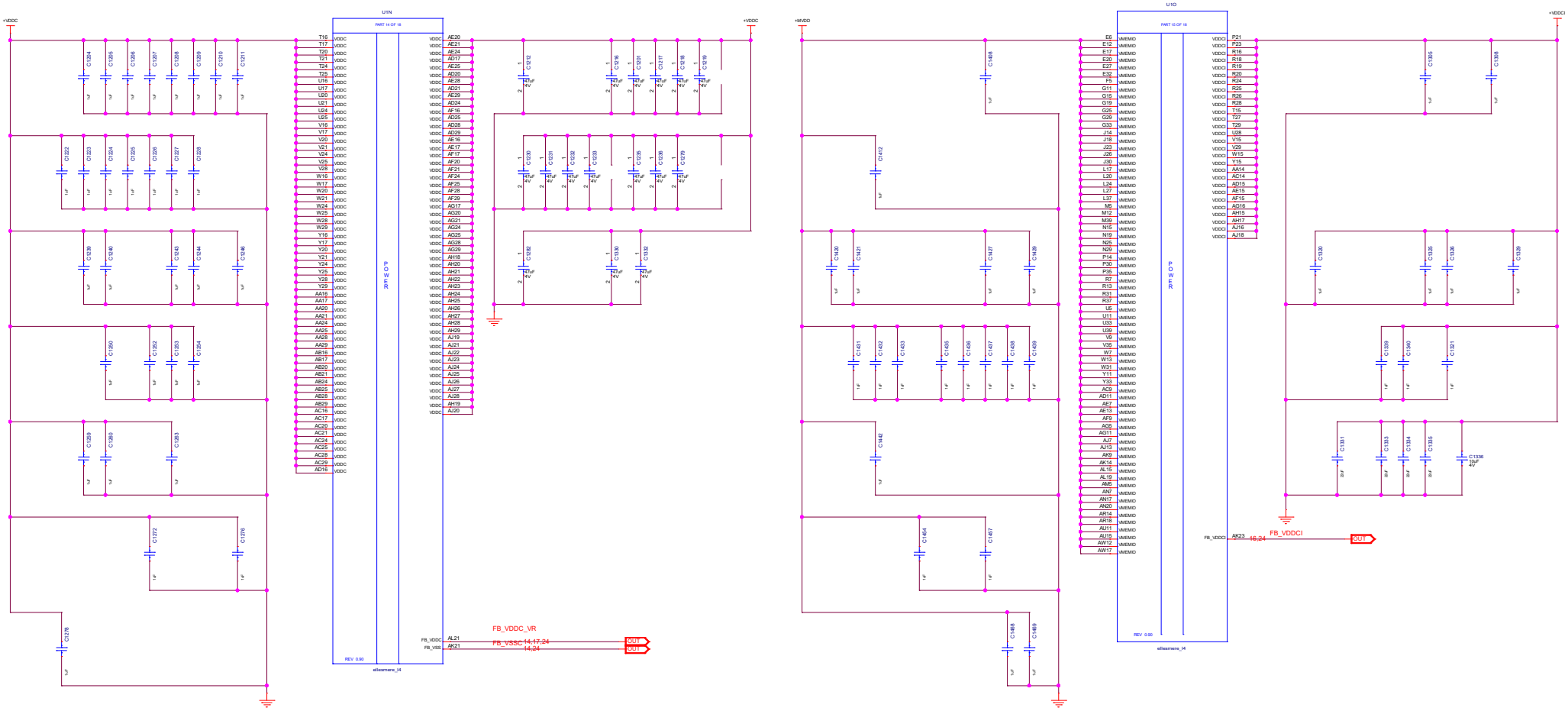

MSI	MICRO-STAR INT'L CO.,LTD	
	MS-V341	
Size Custom	Document Description 0012 ELLESMERE POWER	Rev 2.1
Date: Wednesday, August 03, 2016	Sheet 12 of 26	

(13) ELLESMERE GROUND

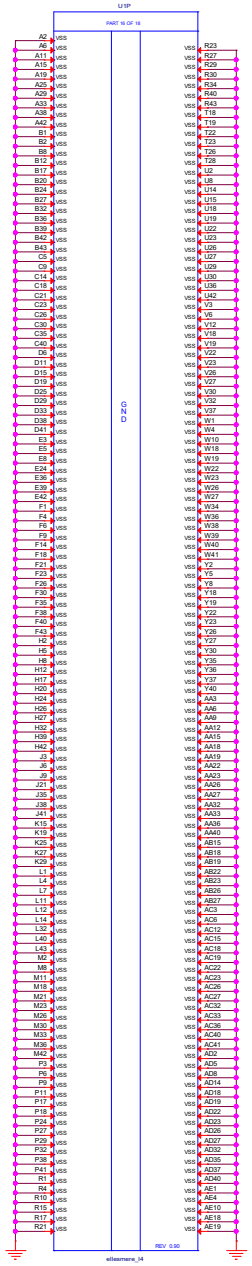

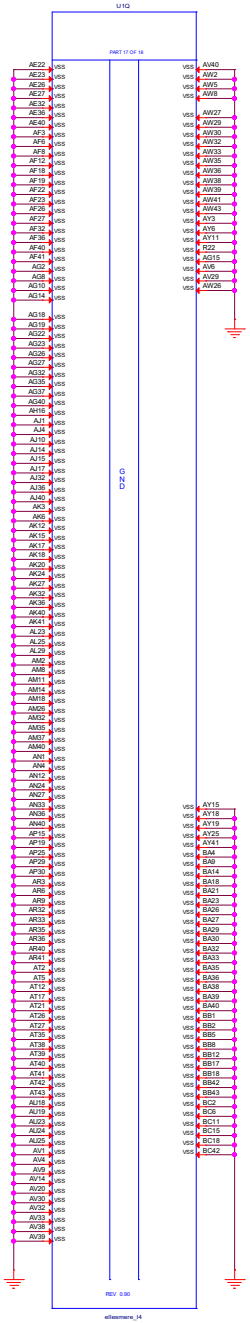

MSI	MICRO-STAR INT'L CO.,LTD	
	MS-V341	
Size Custom	Document Description 0013 ELLESMERE GND	Rev 2.1
Date: Wednesday, August 03, 2016	Sheet 13 of 26	

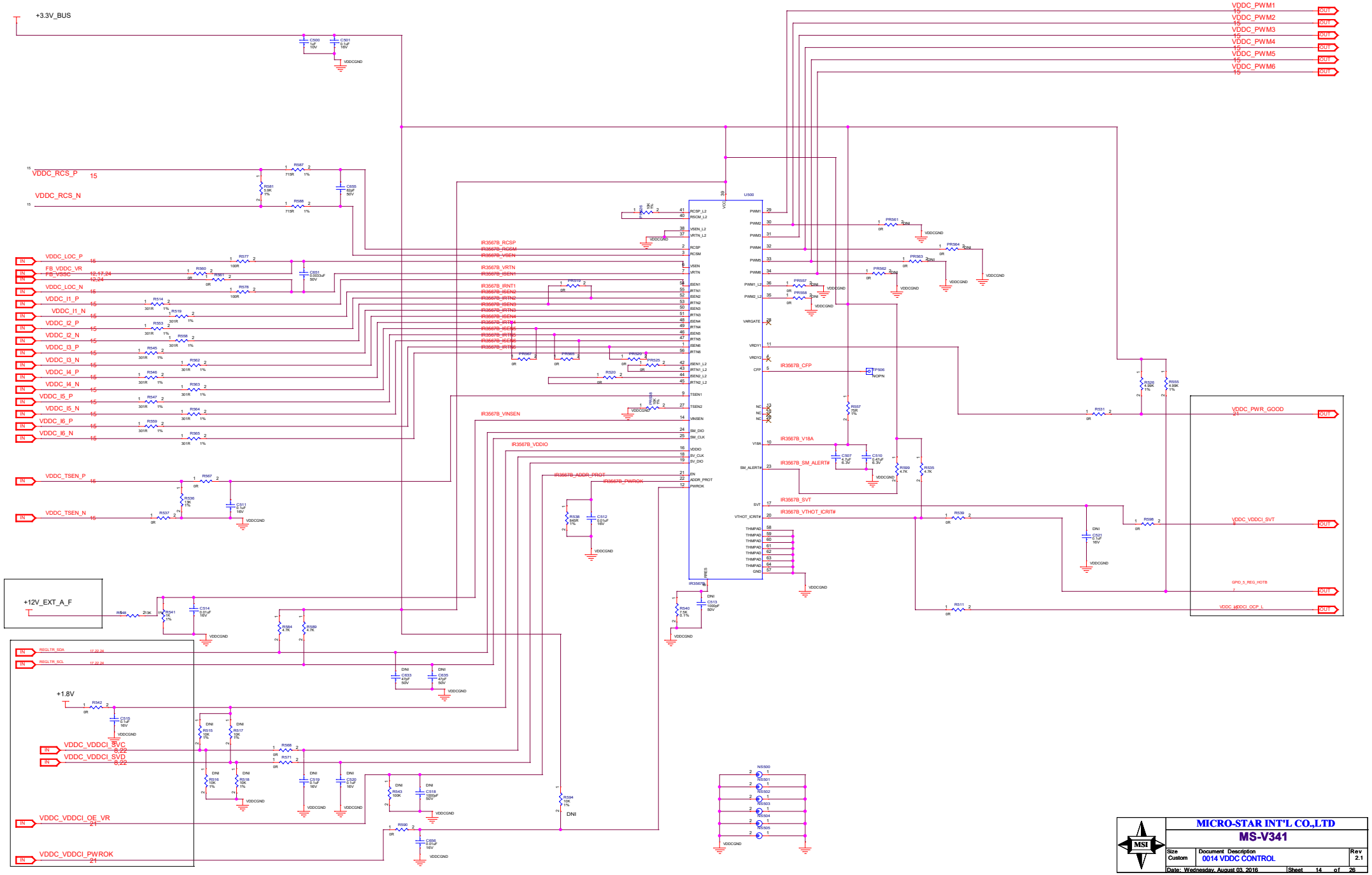
+3.3V_BUS
VDDC_PWM1
VDDC_PWM2
VDDC_PWM3
VDDC_PWM4
VDDC_PWM5
VDDC_PWM6
VDDC_RCS_P
VDDC_RCS_N
VDDC_LOC_P
FB_VDDC_VR
FB_VSSC
VDDC_LOC_N
VDDC_I1_P
VDDC_I1_N
VDDC_I2_P
VDDC_I2_N
VDDC_I3_P
VDDC_I3_N
VDDC_I4_P
VDDC_I4_N
VDDC_I5_P
VDDC_I5_N
VDDC_I6_P
VDDC_I6_N
VDDC_TSEN_P
VDDC_TSEN_N
+12V_EXT_A_F
REGLTR_SDA
REGLTR_SCL
+1.8V
VDDC_VDDCI_SVC
VDDC_VDDCI_SVD
VDDC_VDDCI_OE_VR
VDDC_VDDCI_PWROK
VDDC_PWR_GOOD
VDDC_VDDCI_SVT
GPIO_5_REG_HOTB
VDDC_VDDCI_OCP_L
U500
IR3567B_RCSP
IR3567B_RCSM
IR3567B_VSEN
IR3567B_VRTN
IR3567B_IRNT1
IR3567B_ISEN1
IR3567B_ISEN2
IR3567B_IRTN2
IR3567B_ISEN3
IR3567B_IRTN3
IR3567B_ISEN4
IR3567B_IRTN4
IR3567B_ISEN5
IR3567B_IRTN5
IR3567B_ISEN6
IR3567B_IRTN6
IR3567B_VINSEN
IR3567B_VDDIO
IR3567B_ADDR_PROT
IR3567B_PWROK
IR3567B_CFP
IR3567B_V18A
IR3567B_SM_ALERT#
IR3567B_SVT
IR3567B_VTHOT_ICRIT#
VDDCGND
MICRO-STAR INT'L CO.,LTD
MS-V341
Size Custom
Document Description 0014 VDDC CONTROL
Rev 2.1
Date: Wednesday, August 03, 2016
Sheet 14 of 26

VDDC

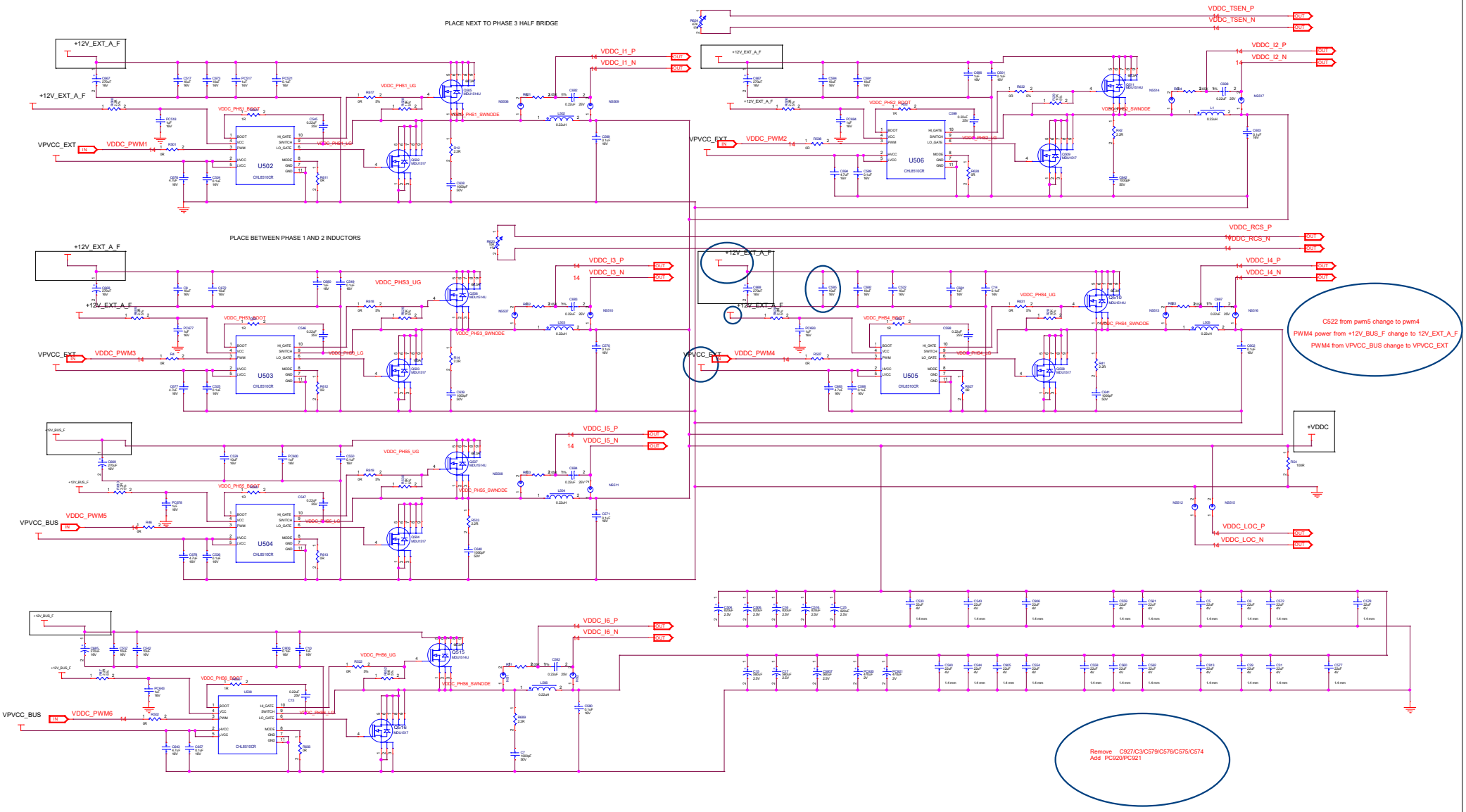

MICRO-STAR INT'L CO.,LTD		
MS-V341		
Size: Custom	Document Description: 0015 VDDC	Rev: 2.1
Date: Wednesday, August 03, 2016	Sheet 15 of 26	

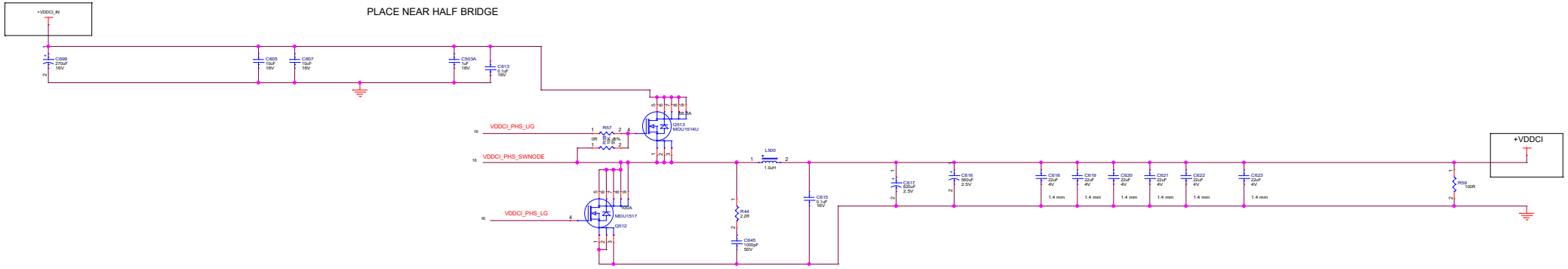

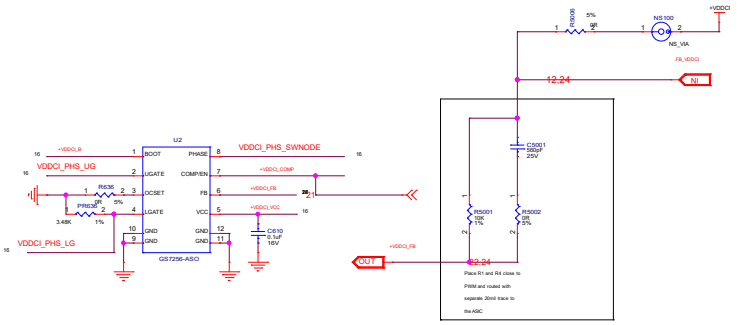

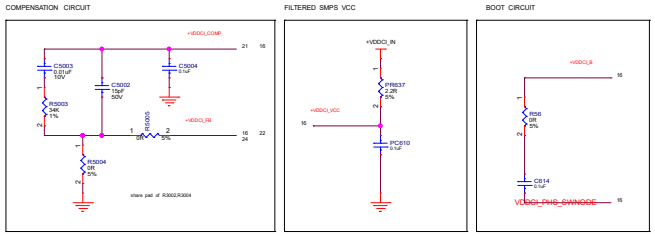

REGULATOR FOR VPVCC RAILS

IOUT MAX = 500mA

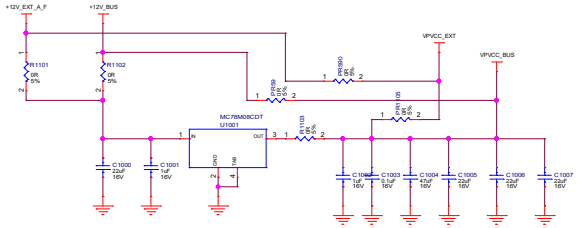

MICRO-STAR INT'L CO.,LTD		
MS-V341		
Size: Custom	Document Description: 0016 VDDCI	Rev: 2.1
Date: Wednesday, August 03, 2016	Sheet 16 of 26	

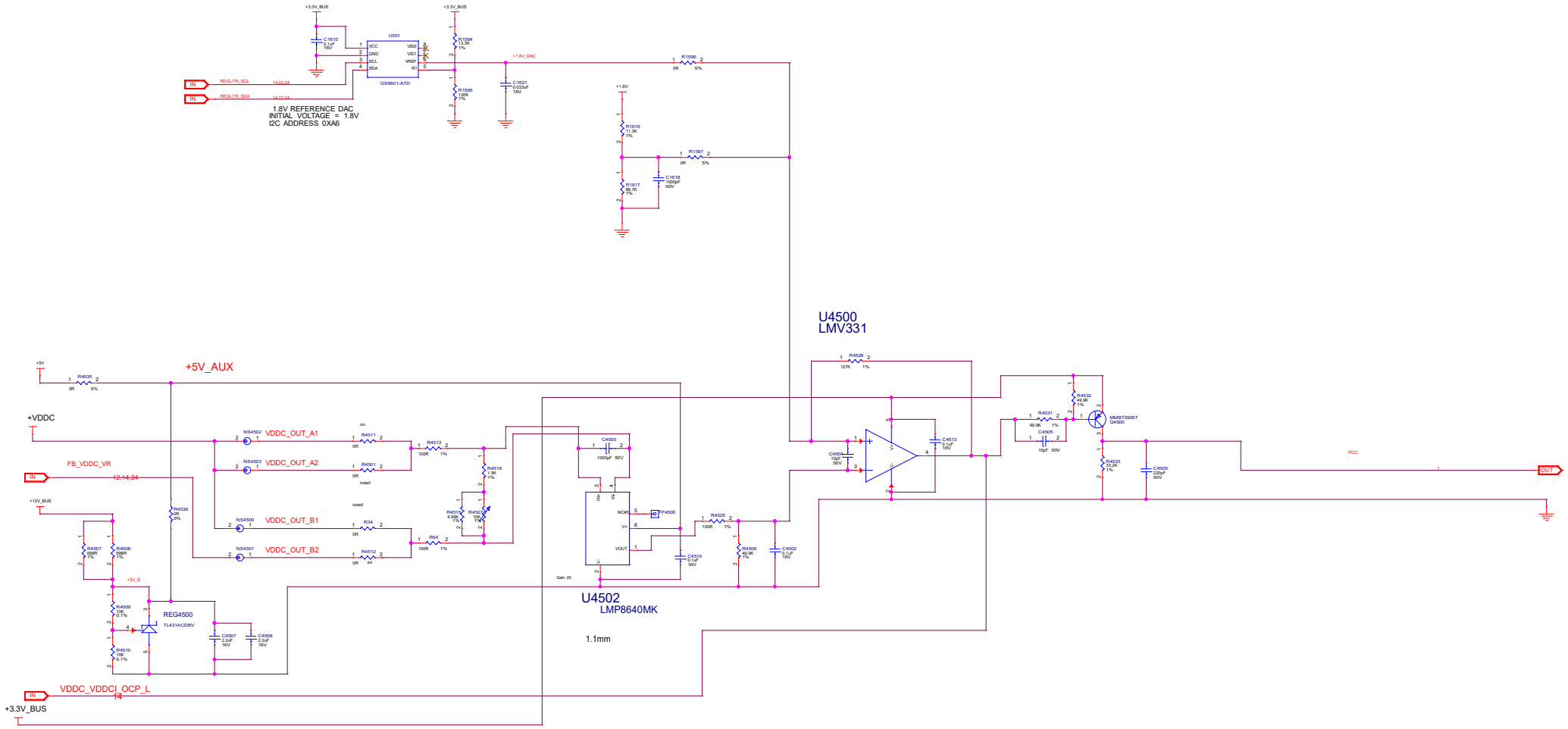

16ci203

MSI	MICRO-STAR INT'L CO.,LTD	
	MS-V341	
Size: Custom	Document Description: 0017 PCC VDDC	Rev: 2.1
Date: Wednesday, August 03, 2016	Sheet 17 of 26	

(16) MVDD

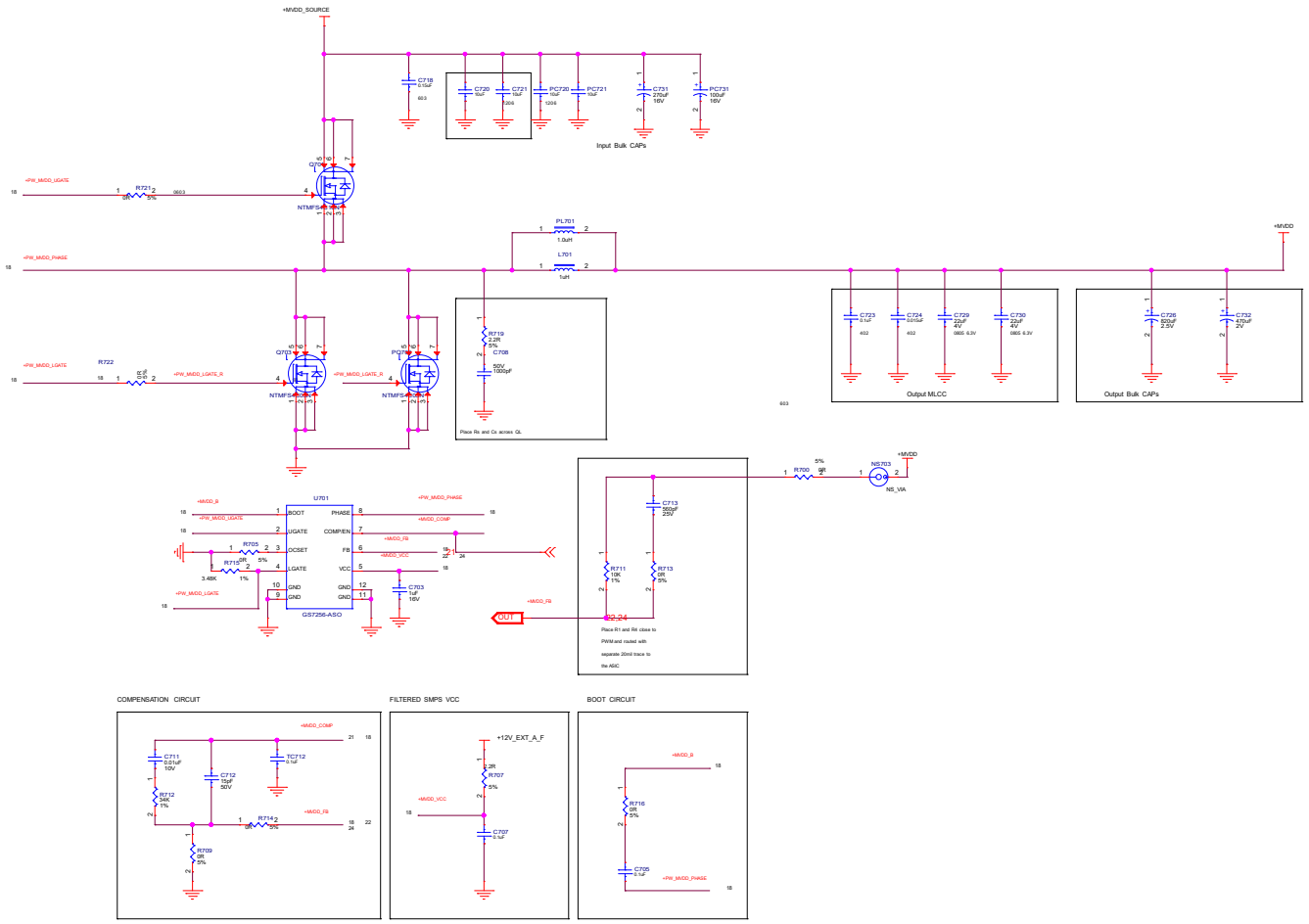

MICRO-STAR INT'L CO.,LTD		
MS-V341		
Size: Custom	Document Description: 0018 MVDD	Rev: 2.1
Date: Wednesday, August 03, 2016	Sheet 18 of 26	

(17) 0.95V

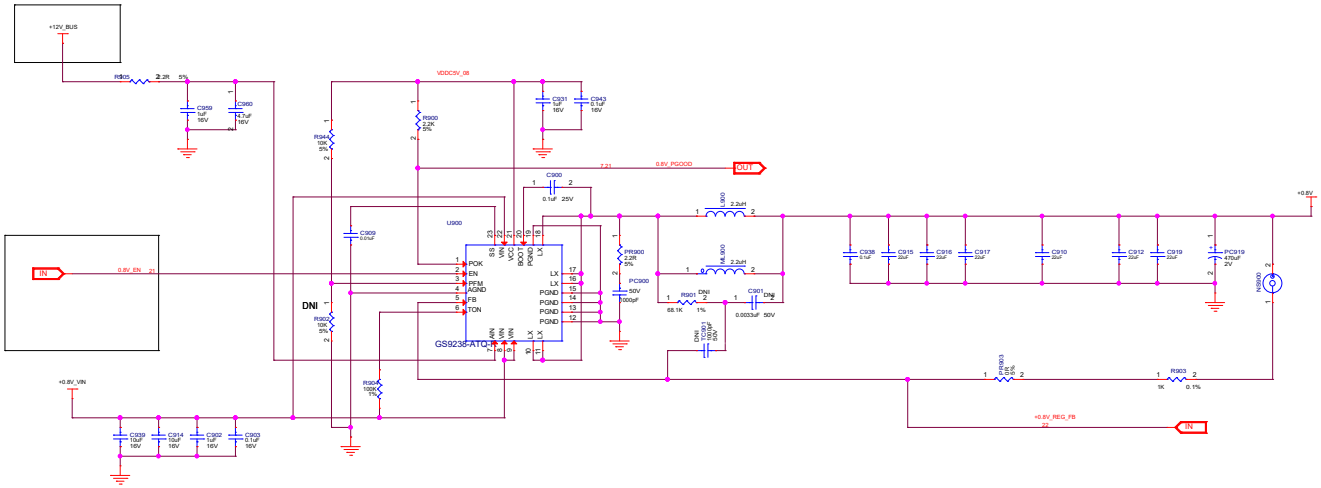

MICRO-STAR INT'L CO.,LTD		
MS-V341		
Size: Custom	Document Description: 0019 0.8V REG	Rev: 2.1
Date: Wednesday, August 03, 2016	Sheet 19 of 26	

(18) SMALL RAIL REGULATORS

LDO #1: VIN = 3.0V TO 3.6V MAX VOUT = +1.8V +/- 2% IOUT = 1.3A RMS MAX

PCB: 50 TO 70mm SQ. COPPER AREA FOR COOLING

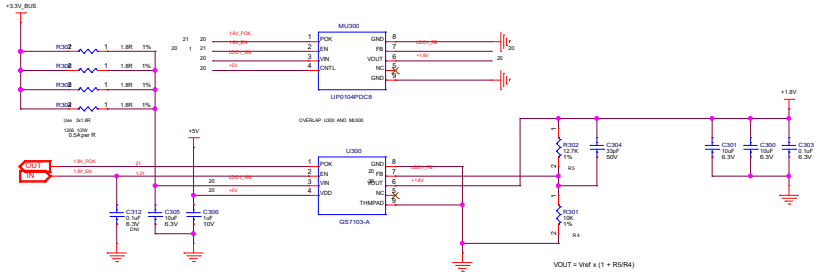

REGULATOR FOR +5V RAILS

IOUT MAX = 150mA

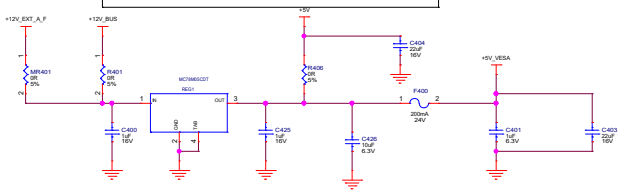

MICRO-STAR INT'L CO.,LTD

MS-V341

Size	Document Description	Rev
Custom	0020 SMALL RAIL REGULATORS	2.1

Date: Wednesday, August 03, 2016 Sheet 20 of 26

(19) POWER MANAGEMENT

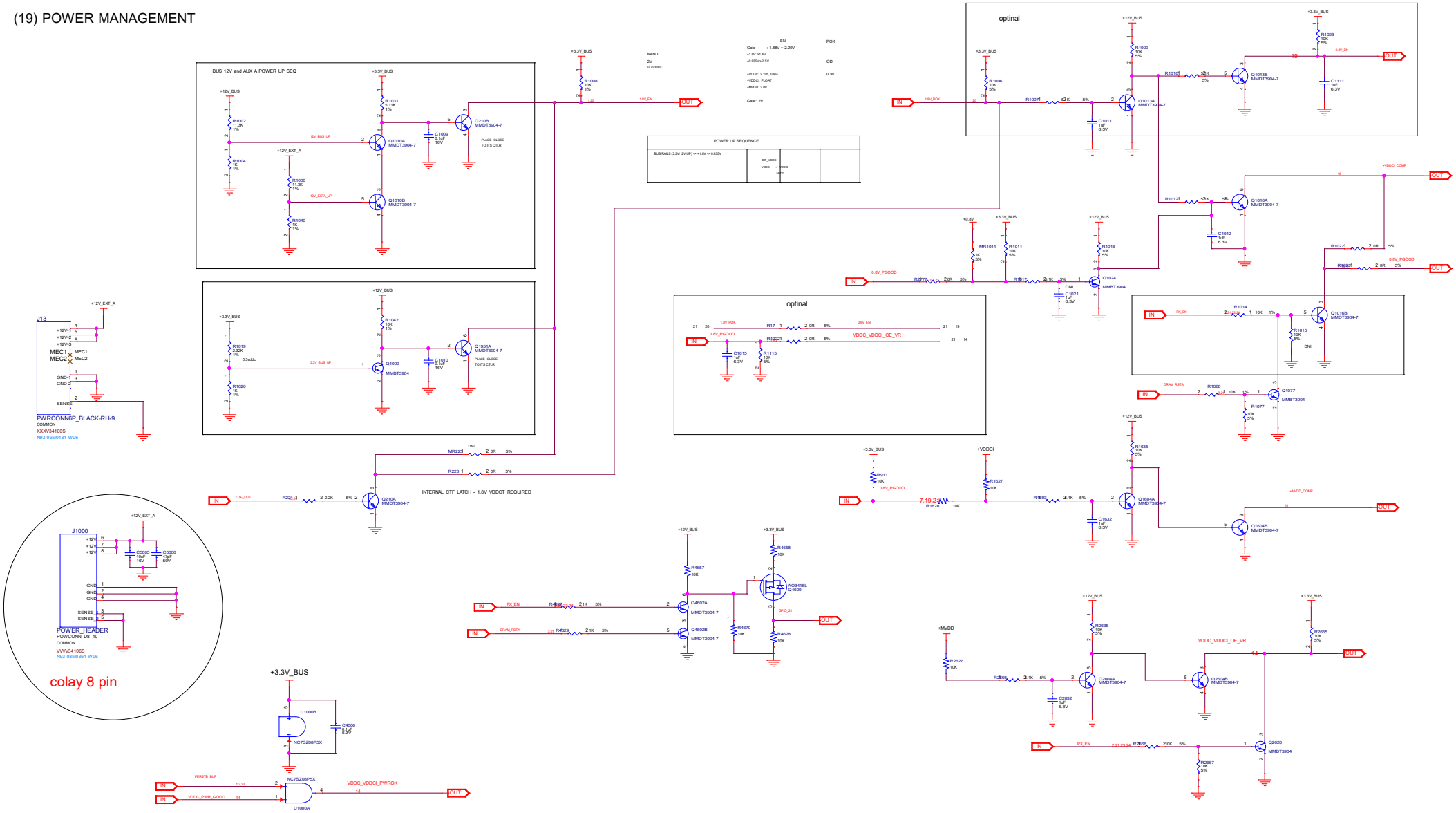

MICRO-STAR INT'L CO.,LTD

MS-V341

Size	Document Description	Rev
Custom	0021 POWER MANAGEMENT1	2.1

Date: Wednesday, August 03, 2016 Sheet 21 of 26

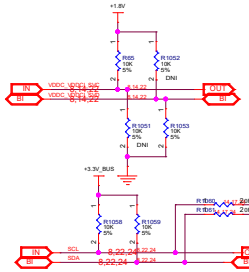

SVI2 BOOT UP VOLTAGE
(VDDC/VDDCI)

SVC	SVD	VOLTAGE
0	0	1.1V
0	1	1.0V
1	0	0.9V
1	1	0.8V

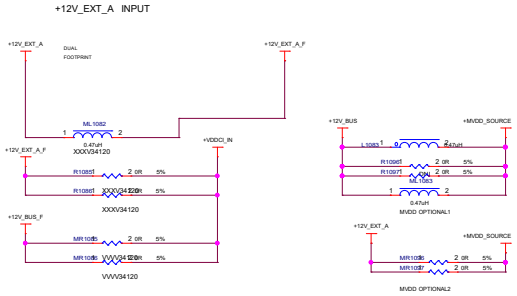

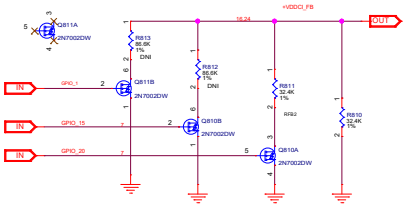

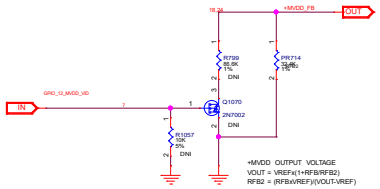

+MVDD OUTPUT VOLTAGE
VOUT = VREF(1+RFB/RFB2)
RFB2 = (RFBxVREF)/(VOUT-VREF)

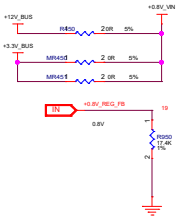

MSI	MICRO-STAR INT'L CO.,LTD	
	MS-V341	
Size: Custom	Document Description: 0022 POWER MANAGEMENT2	Rev: 2.1
Date: Wednesday, August 03, 2016	Sheet 22 of 26	

(20) MECHANICAL AND THERMAL MANAGEMENT

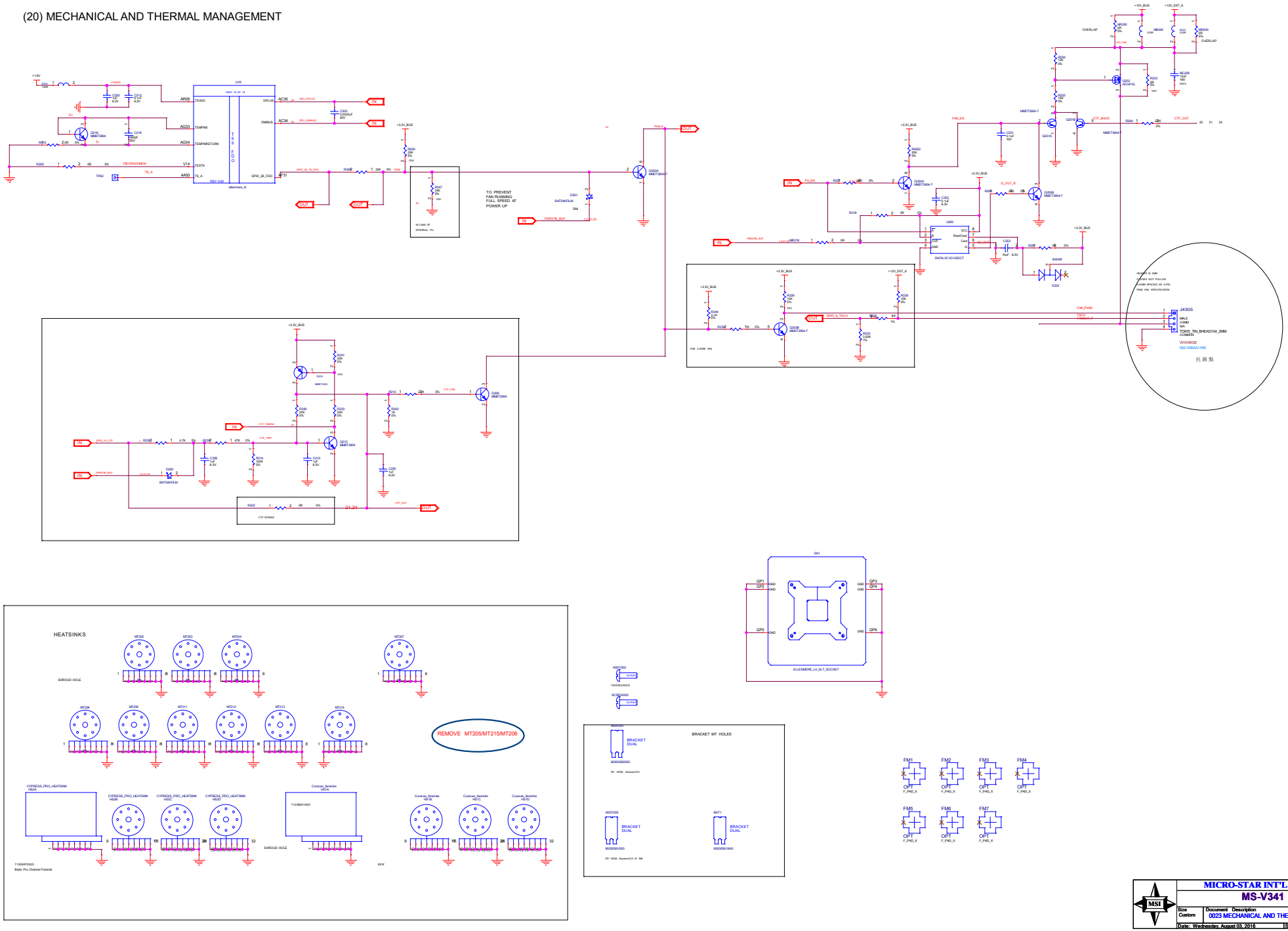

(21) DEBUG CIRCUITS

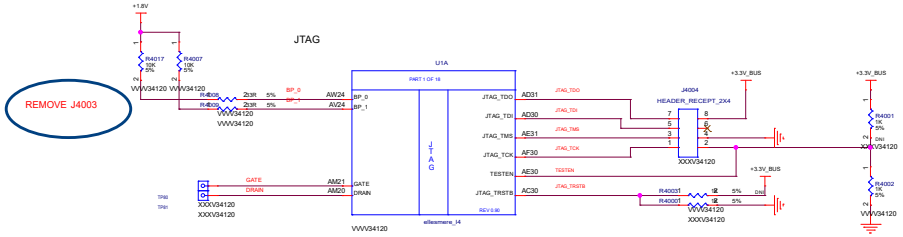

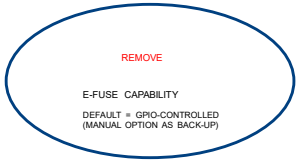

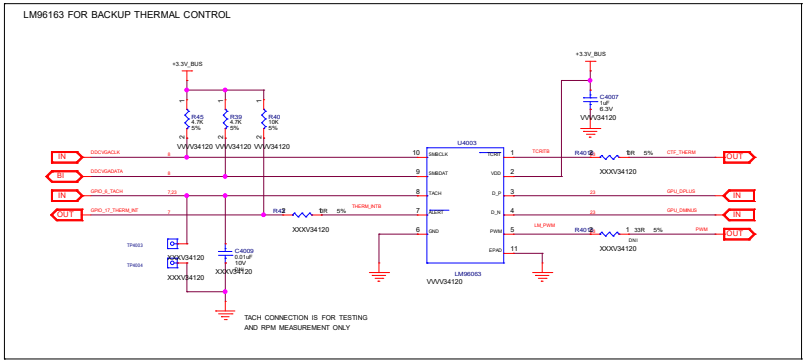

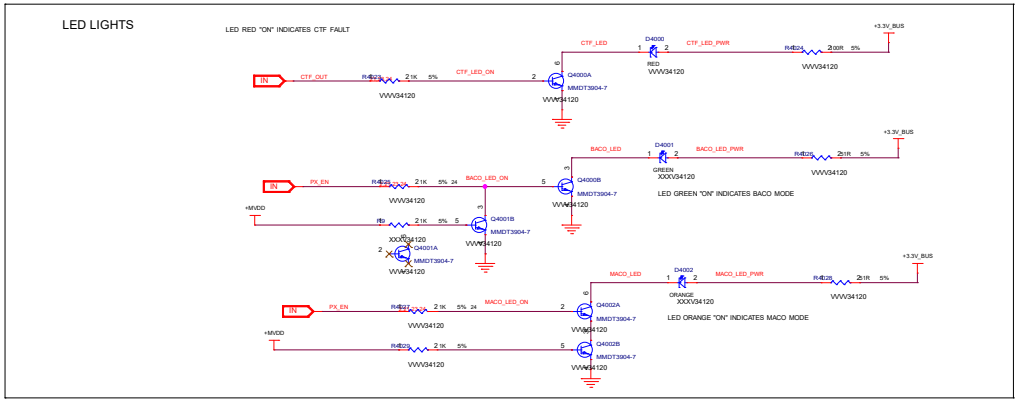

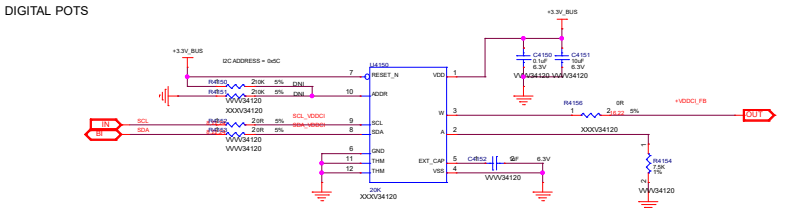

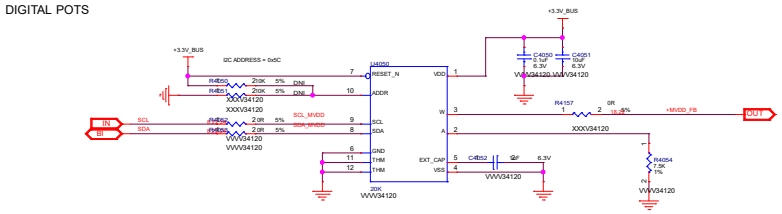

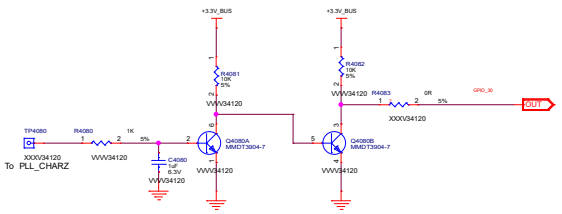

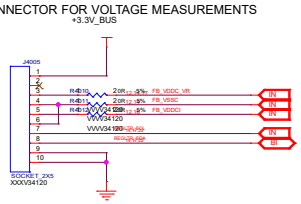

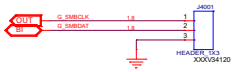

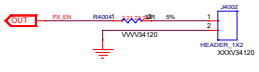

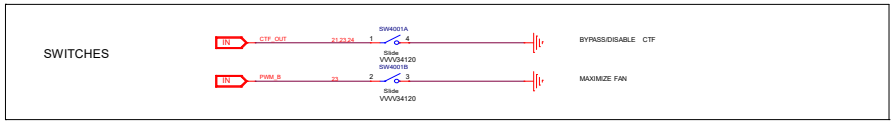

MSI	MICRO-STAR INT'L CO.,LTD	
	MS-V341	
Size Custom	Document Description 0024DEBUG CIRCUITS/ E-FUSE	Rev 2.1
	Date: Wednesday, August 03, 2016	Sheet 24 of 26

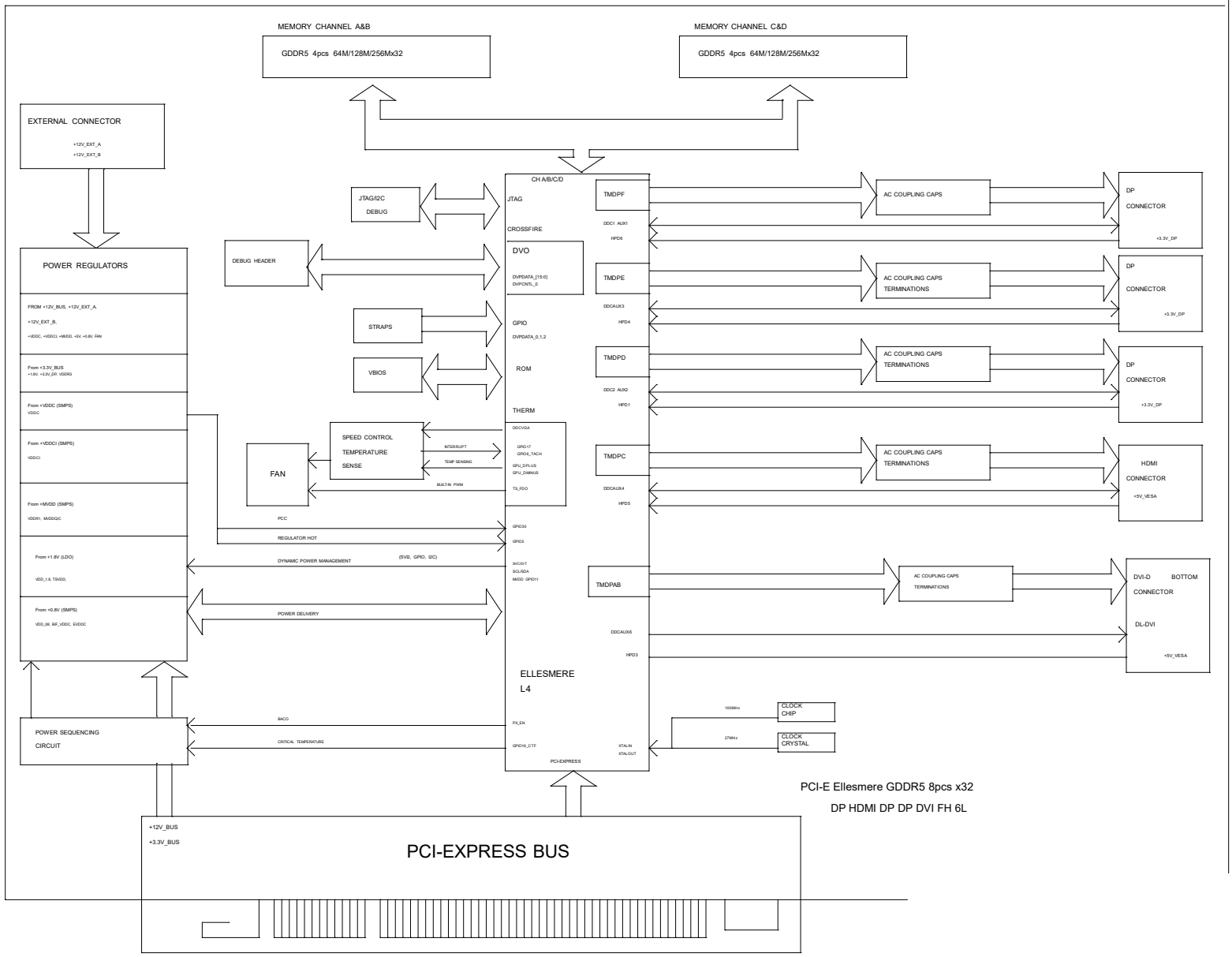

MSI	MICRO-STAR INT'L CO.,LTD	
	MS-V341	
Size Custom	Document Description 0025BLOCK DIAGRAM	Rev 2.1
	Date: Wednesday, August 03, 2016	Sheet 25 of 26

23: EXT 6 PIN change to 反 向 8 pin
REMOVE MT205/MT215/MT206

26: 1*4 拖錫點

15: C522 from pwm5 change to pwm4
PWM4 power from +12V_BUS_F change to 12V_EXT_A_F
PWM4 from VPVCC_BUS change to VPVCC_EXT
Remove C927/C3/C579/C576/C575/C574
Add PC920/PC921

24: REMOVE J4003
REMOVE E-FUSE CAPABILITY

MSI	MICRO-STAR INT'L CO.,LTD	
	MS-V341	
Size: Custom	Document Description: 0026 REVISION HISTORY	Rev: 2.1
Date: Wednesday, August 03, 2016	Sheet 26 of 26	