PCI-EXPRESS EDGE CONNECTOR

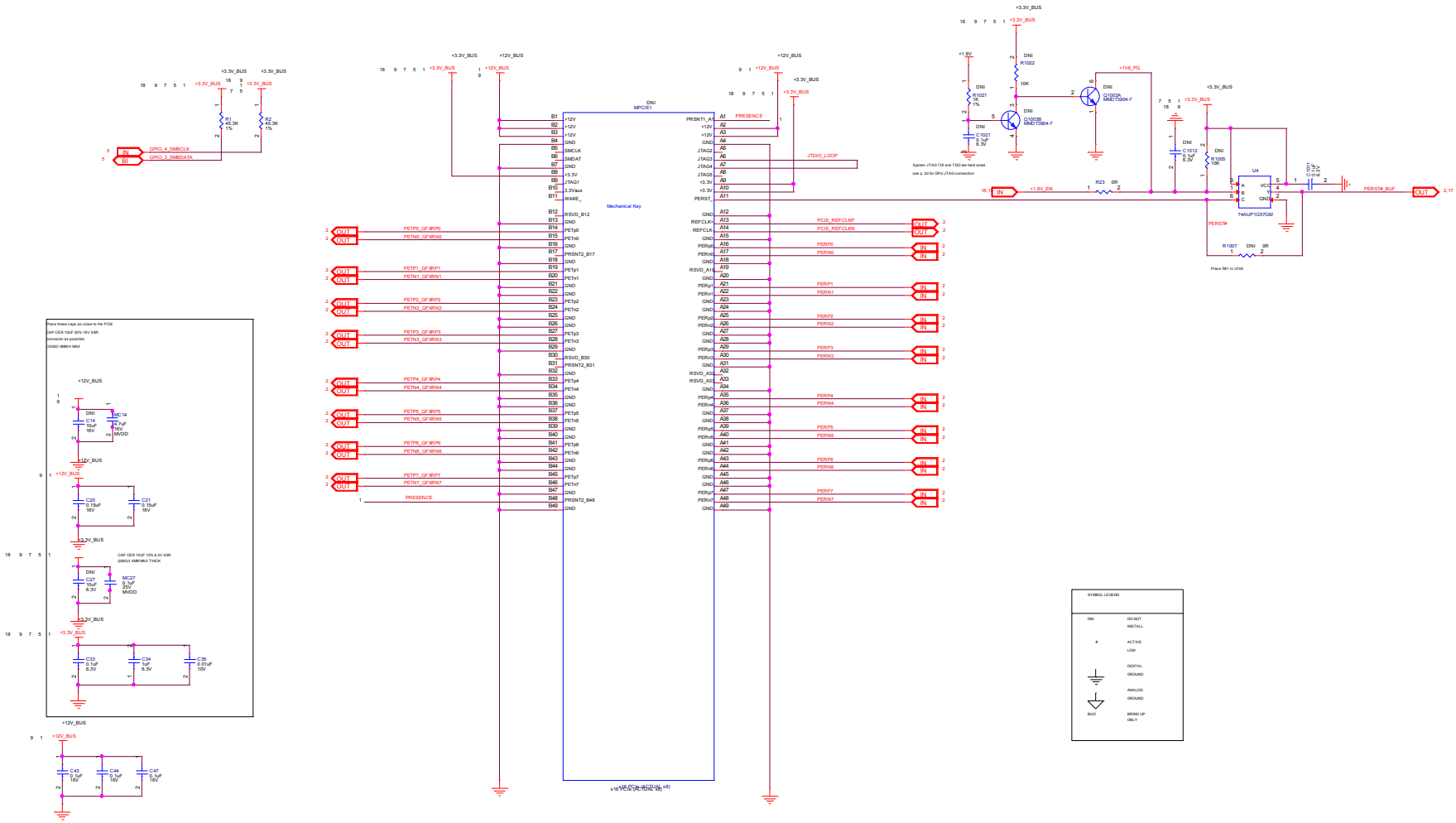

AMD - PLATFORM HARDWARE ENG
#46, No.1387, ZHANGDONG ROAD
SHANGHAI, CHINA 201203

SHEET:	PCI-E Edge Connector
DATE:	Wed Aug 29 03:27:33 2018
REV:	P00
SHEET NUMBER:	1 OF 20
DOCUMENT NUMBER:	105_d12900_00A

CONFIDENTIAL AND PROPRIETARY TO ADVANCED MICRO DEVICES INC.

© 2018 Advanced Micro Devices

Title: AMD Board schematic and design is the exclusive property of AMD, and is provided only to entities under a non-disclosure agreement with AMD for evaluation purposes. Further distribution or disclosure is strictly prohibited. Use of this schematic and design for any purpose other than evaluation requires a Board Technology License Agreement with AMD. AMD makes no representations or warranties of any kind regarding this schematic and design, including, not limited to, any implied warranty of merchantability or fitness for a particular purpose, and disclaims responsibility for any consequences resulting from use of the information included herein.

TITLE: XXX

OLAND PCIe Interface

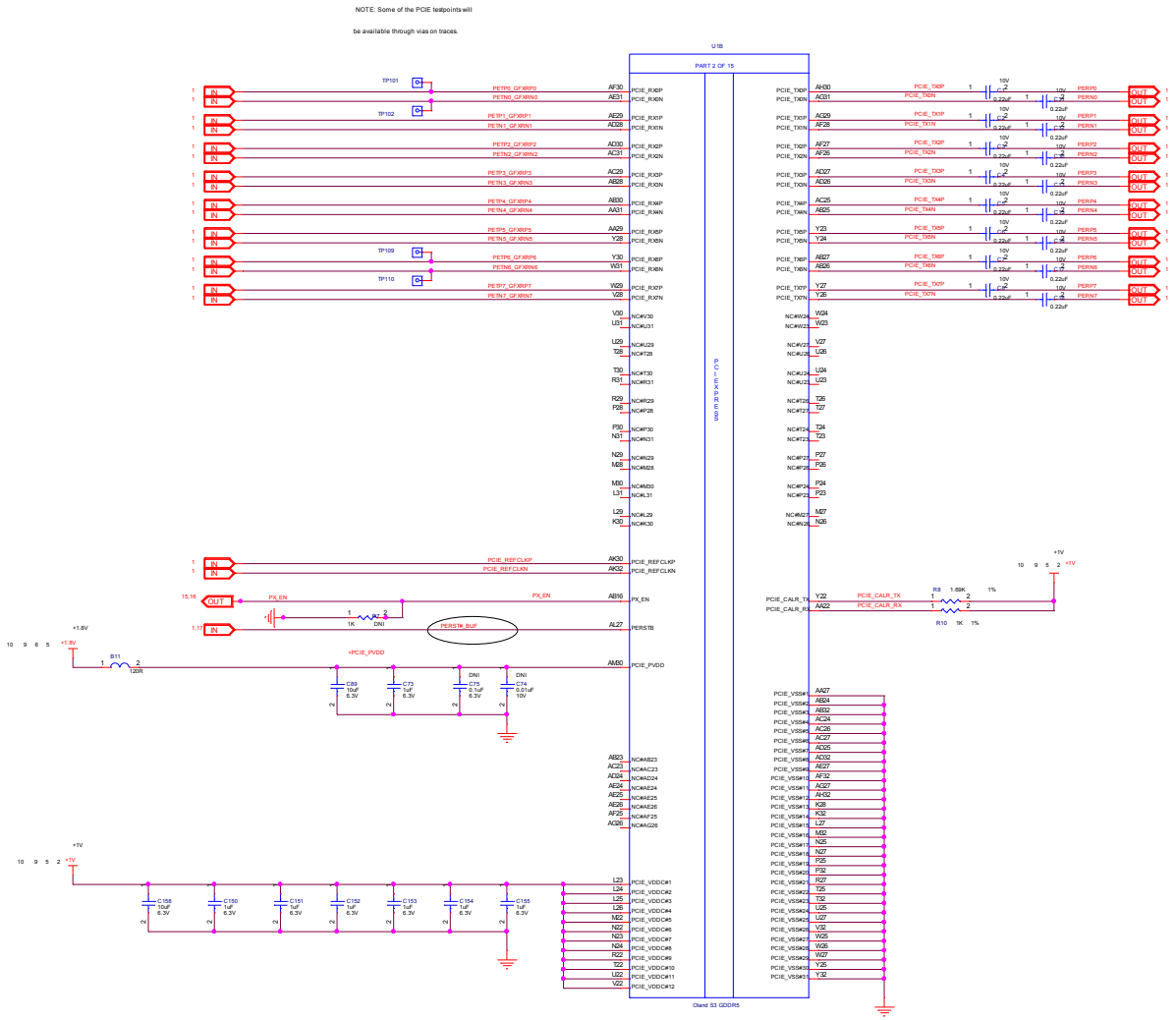

AMD - PLATFORM HARDWARE ENG
#46, No.1387, ZHANGDONG ROAD
SHANGHAI, CHINA 201203

SHEET:	Oland PCIEx8 Interface
DATE:	Thu Jan 05 05:41:57 2017
REV:	P00
SHEET NUMBER:	2 OF 20
DOCUMENT NUMBER:	105_d12900_00A
TITLE:	XXX

CONFIDENTIAL AND PROPRIETARY TO ADVANCED MICRO DEVICES INC.
© 2016 Advanced Micro Devices
This AMD Board schematic and design is the exclusive property of AMD, and is provided only to entities under a non-disclosure agreement with AMD for evaluation purposes. Further distribution or disclosure is strictly prohibited. Use of this schematic and design for any purpose other than evaluation requires a Board Technology License Agreement with AMD. AMD makes no representations or warranties of any kind regarding this schematic and design, including, not limited to, any implied warranty of merchantability or fitness for a particular purpose, and disclaims responsibility for any consequences resulting from use of the information included herein.

Oland S3 MEM Interface Ch A

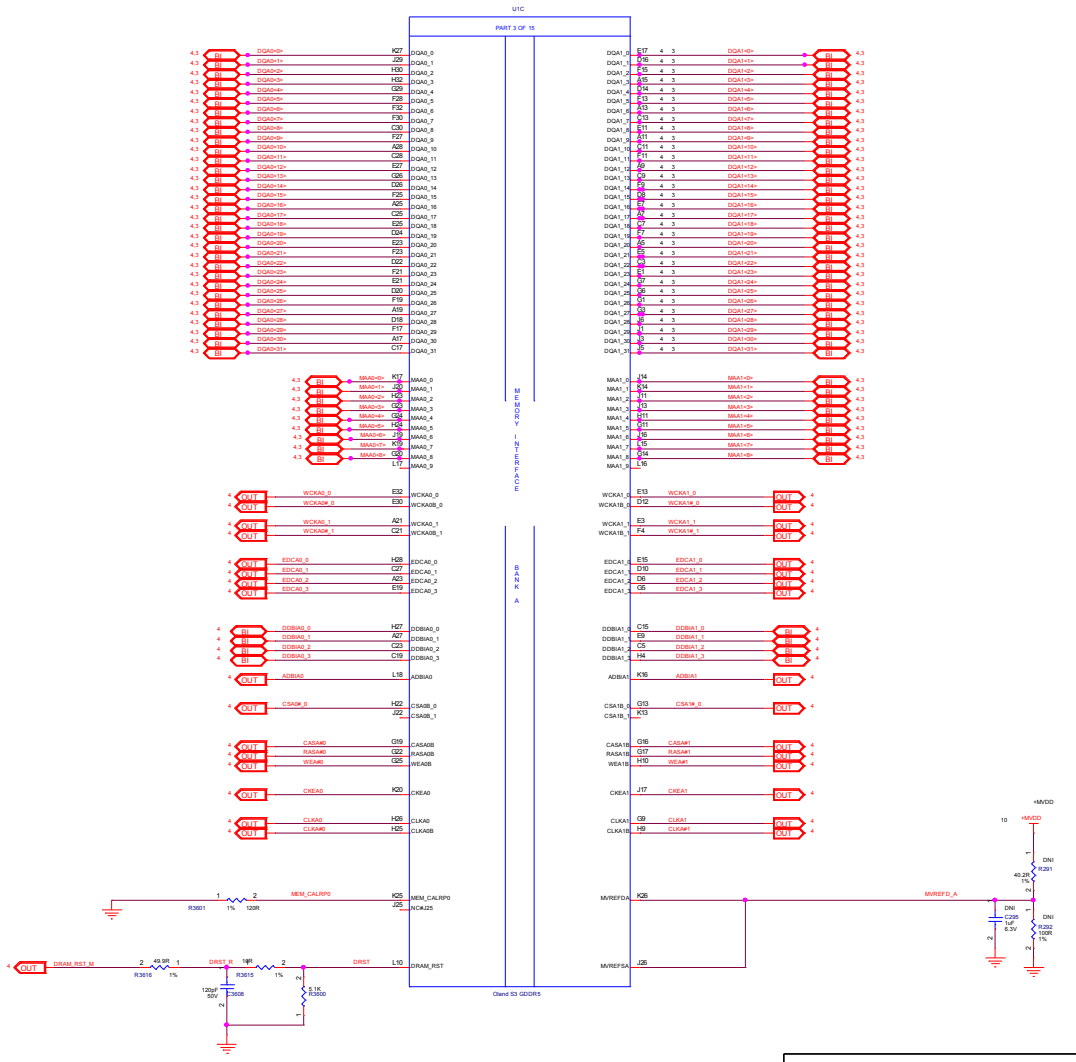

AMD - PLATFORM HARDWARE ENG #46, No.1387, ZHANGDONG ROAD SHANGHAI, CHINA 201203	CONFIDENTIAL AND PROPRIETARY TO ADVANCED MICRO DEVICES INC. © 2018 Advanced Micro Devices This AMD Board schematic and design is the exclusive property of AMD, and is provided only to entities under a non-disclosure agreement with AMD for evaluation purposes. Further distribution or disclosure is strictly prohibited. Use of this schematic and design for any purpose other than evaluation requires a Board Technology License Agreement with AMD. AMD makes no representations or warranties of any kind regarding this schematic and design, including, not limited to, any implied warranty of merchantability or fitness for a particular purpose, and disclaims responsibility for any consequences resulting from use of the information included herein.
SHEET: VDDCI	
DATE: Wed Aug 29 03:24:49 2018 / REV: P00	
SHEET NUMBER: 3 OF 20	TITLE: XXX
DOCUMENT NUMBER: 105_d12900_00A	
NOTES: NOTE	

CHANNEL A: 1GB/512MB GDDR5

(5) GDDR5 Memory Channel A&B

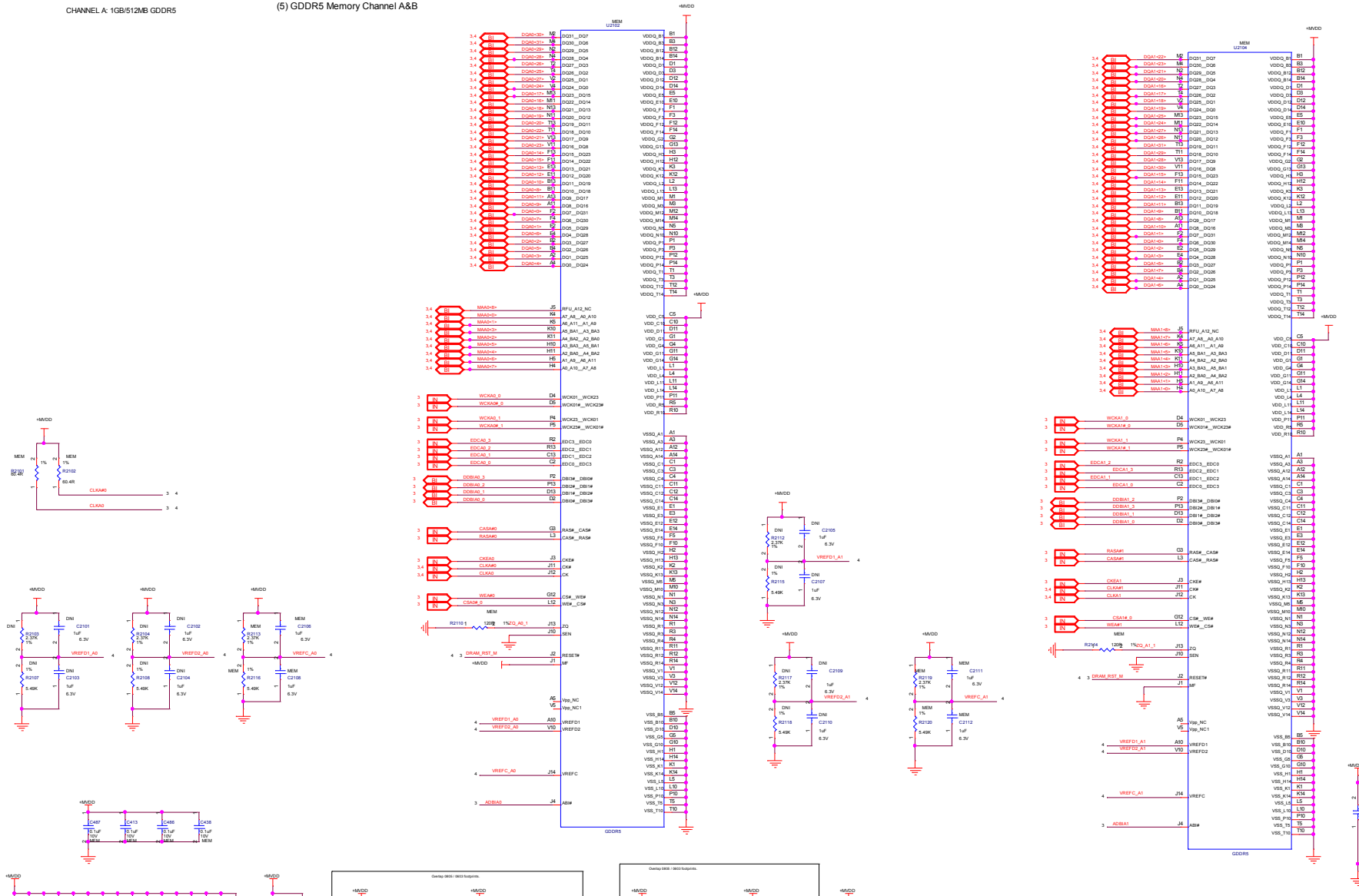

AMD - PLATFORM HARDWARE ENG
#46, No.1387, ZHANGDONG ROAD
SHANGHAI, CHINA 201203

SHEET:	VDDCI		
DATE:	Wed Aug 29 03:24:49 2018	REV:	P00
SHEET NUMBER:	4 OF 20		
DOCUMENT NUMBER:	105_d12900_00A		
NOTES:	NOTE		

CONFIDENTIAL AND PROPRIETARY TO ADVANCED MICRO DEVICES INC.

© 2018 Advanced Micro Devices

This AMD Board schematic and design is the exclusive property of AMD, and is provided only to entities under a non-disclosure agreement with AMD for evaluation purposes. Further distribution or disclosure is strictly prohibited. Use of this schematic and design for any purpose other than evaluation requires a Board Technology License Agreement with AMD. AMD makes no representations or warranties of any kind regarding this schematic and design, including, not limited to, any implied warranty of merchantability or fitness for a particular purpose, and disclaims responsibility for any consequences resulting from use of the information included herein.

TITLE:

XXX

18ci203

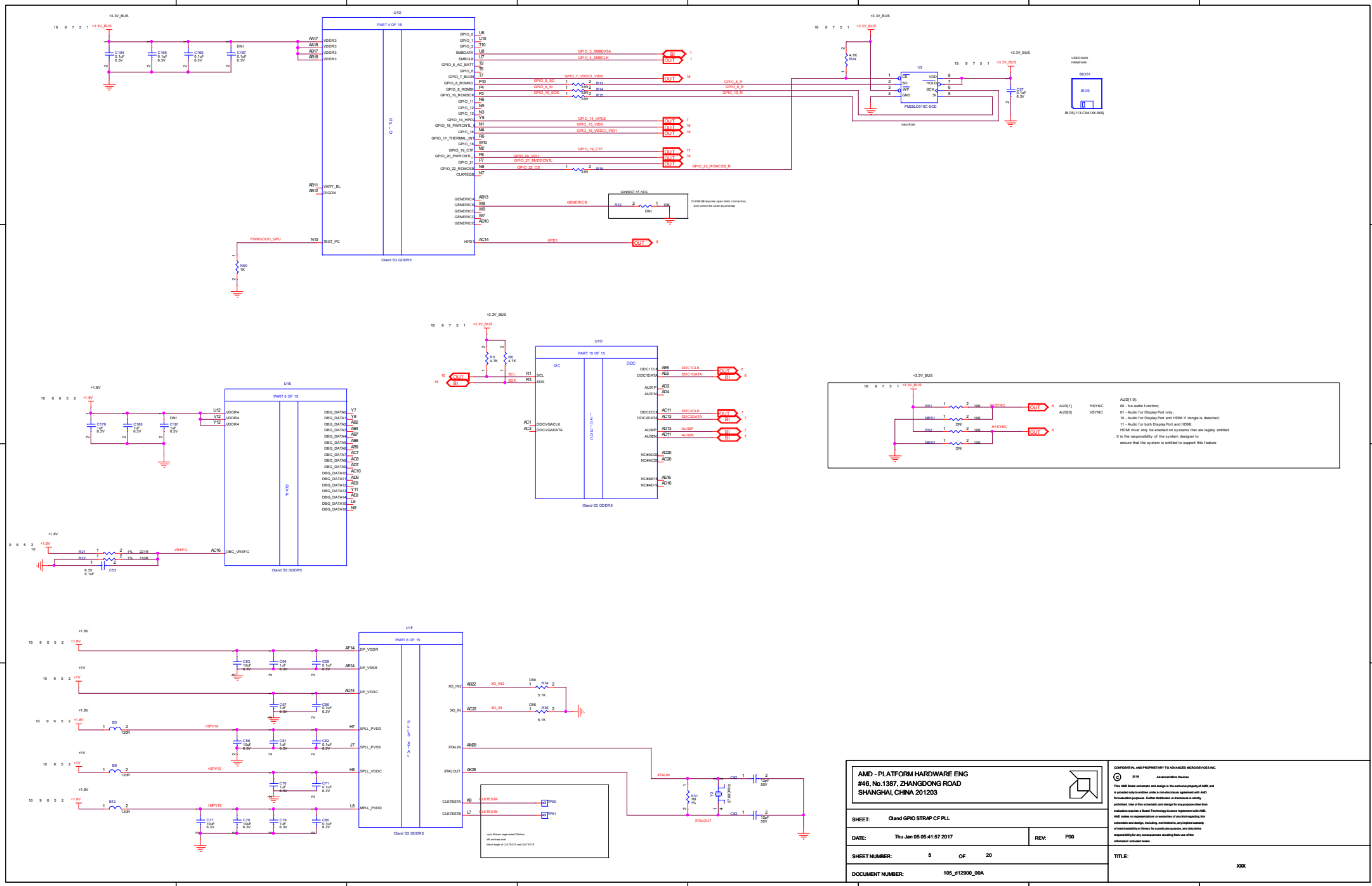
U1D
PART 4 OF 15
GPIO
Oland S3 GDDR5
U2
PM25LD010C-SCE
VIDEO BIOS FIRMWARE
BIOS1
BIOS
BIOS(113-C54100-000)
U1O
PART 15 OF 15
I2C
DDC
INTERRUPTS
CONNECT AT ASIC
U1E
PART 5 OF 15
CVP
U1F
PART 6 OF 15
PLLS XTAL
+3.3V_BUS
+1.8V
+1V
+SPV18
+SPV10
+MPV18
XTALIN
XTALOUT
27.00 MHz
AUD[1:0]:
00 - No audio function;
01 - Audio for Display Port only ;
10 - Audio for Display Port and HDMI if dongle is detected;
11 - Audio for both Display Port and HDMI.
HDMI must only be enabled on systems that are legally entitled
It is the responsibility of the system designer to
ensure that the system is entitled to support this feature
AMD - PLATFORM HARDWARE ENG
#46, No.1387, ZHANGDONG ROAD
SHANGHAI, CHINA 201203
SHEET: Oland GPIO STRAP CF PLL
DATE: Thu Jan 05 05:41:57 2017
REV: P00
SHEET NUMBER: 5 OF 20
DOCUMENT NUMBER: 105_d12900_00A
TITLE: XXX
CONFIDENTIAL AND PROPRIETARY TO ADVANCED MICRO DEVICES INC.
© 2010 Advanced Micro Devices
This AMD Board schematic and design is the exclusive property of AMD, and is provided only to entities under a non-disclosure agreement with AMD for evaluation purposes. Further distribution or disclosure is strictly prohibited. Use of this schematic and design for any purpose other than evaluation requires a Board Technology License Agreement with AMD. AMD makes no representations or warranties of any kind regarding this schematic and design, including, not limited to, any implied warranty of merchantability or fitness for a particular purpose, and disclaims responsibility for any consequences resulting from use of the information included herein.

Oland DAC1

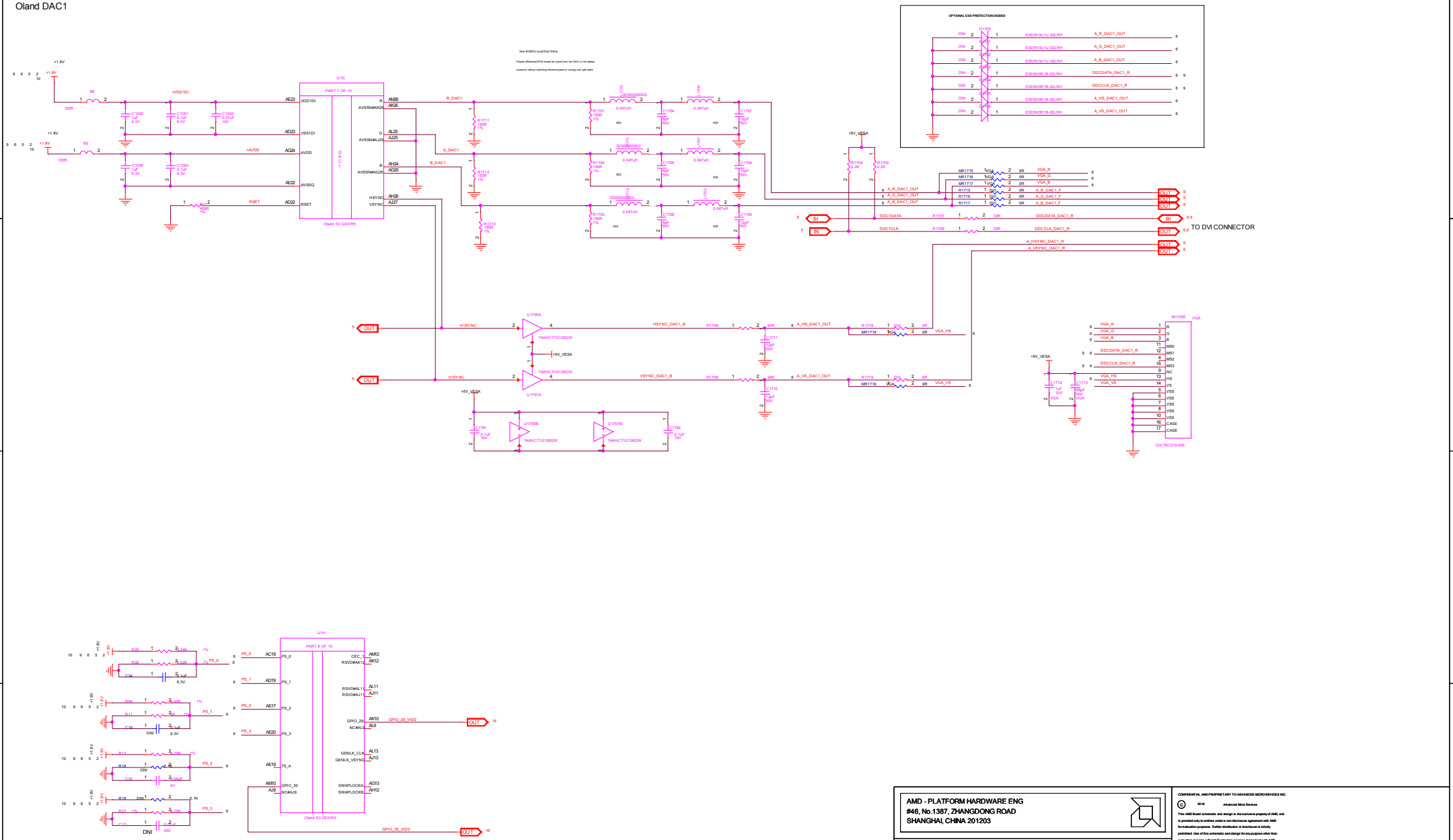

AMD - PLATFORM HARDWARE ENG
#46, No.1387, ZHANGDONG ROAD
SHANGHAI, CHINA 201203

SHEET:	Oland DAC
DATE:	Thu Jan 05 05:41:56 2017
REV:	P00
SHEET NUMBER:	6 OF 20
DOCUMENT NUMBER:	105_d12900_00A
TITLE:	XXX

CONFIDENTIAL AND PROPRIETARY TO ADVANCED MICRO DEVICES INC.
© 2016 Advanced Micro Devices
This AMD Board schematic and design is the exclusive property of AMD, and is provided only to entities under a non-disclosure agreement with AMD for evaluation purposes. Further distribution or disclosure is strictly prohibited. Use of this schematic and design for any purpose other than evaluation requires a Board Technology License Agreement with AMD. AMD makes no representations or warranties of any kind regarding this schematic and design, including, not limited to, any implied warranty of merchantability or fitness for a particular purpose, and disclaims responsibility for any consequences resulting from use of the information included herein.

OLAND S3 Power & GND

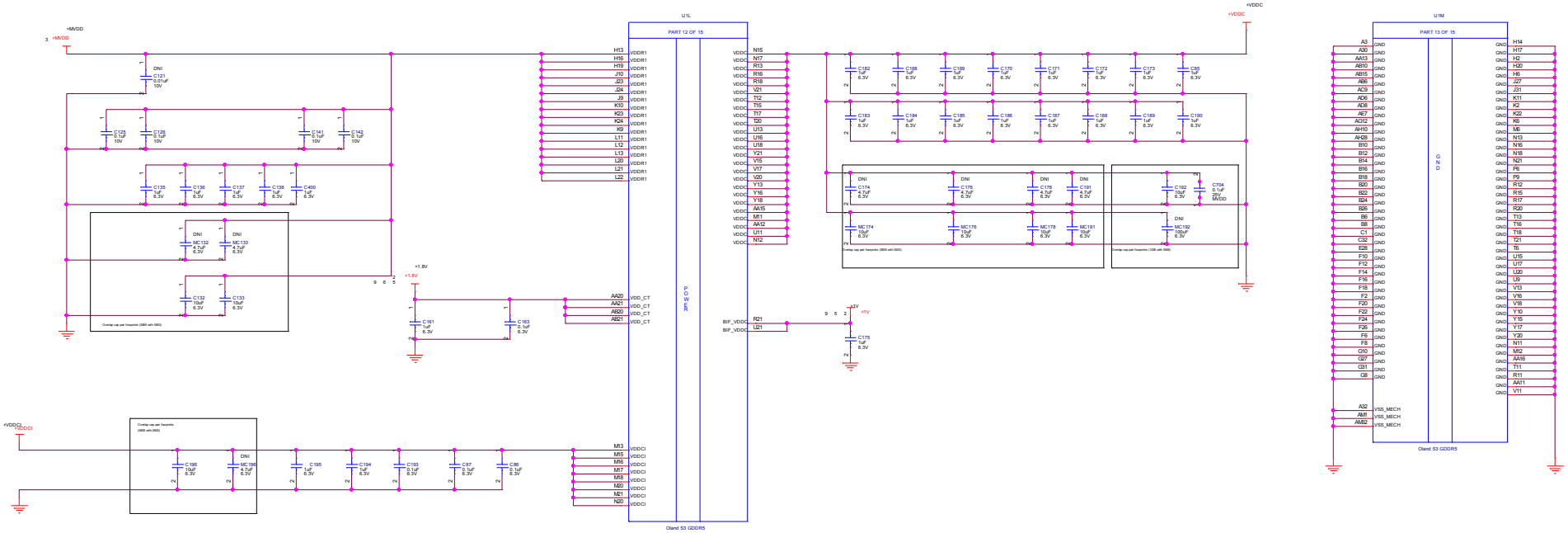

AMD - PLATFORM HARDWARE ENG
#46, No.1387, ZHANGDONG ROAD
SHANGHAI, CHINA 201203

SHEET:	VDDCI
DATE:	Wed Aug 29 03:24:49 2018
REV:	P00
SHEET NUMBER:	10 OF 20
DOCUMENT NUMBER:	105_d12900_00A
NOTES:	NOTE

CONFIDENTIAL AND PROPRIETARY TO ADVANCED MICRO DEVICES INC.

© 2018 Advanced Micro Devices

This AMD Board schematic and design is the exclusive property of AMD, and is provided only to entities under a non-disclosure agreement with AMD for evaluation purposes. Further distribution or disclosure is strictly prohibited. Use of this schematic and design for any purpose other than evaluation requires a Board Technology License Agreement with AMD. AMD makes no representations or warranties of any kind regarding this schematic and design, including, not limited to, any implied warranty of merchantability or fitness for a particular purpose, and disclaims responsibility for any consequences resulting from use of the information included herein.

TITLE: XXX

18ci203

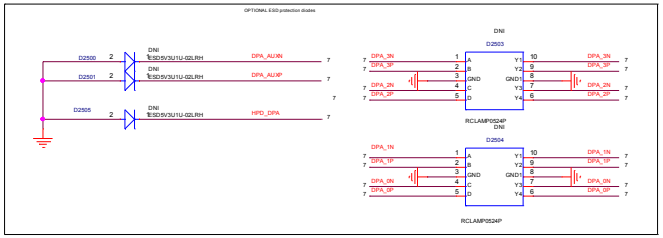

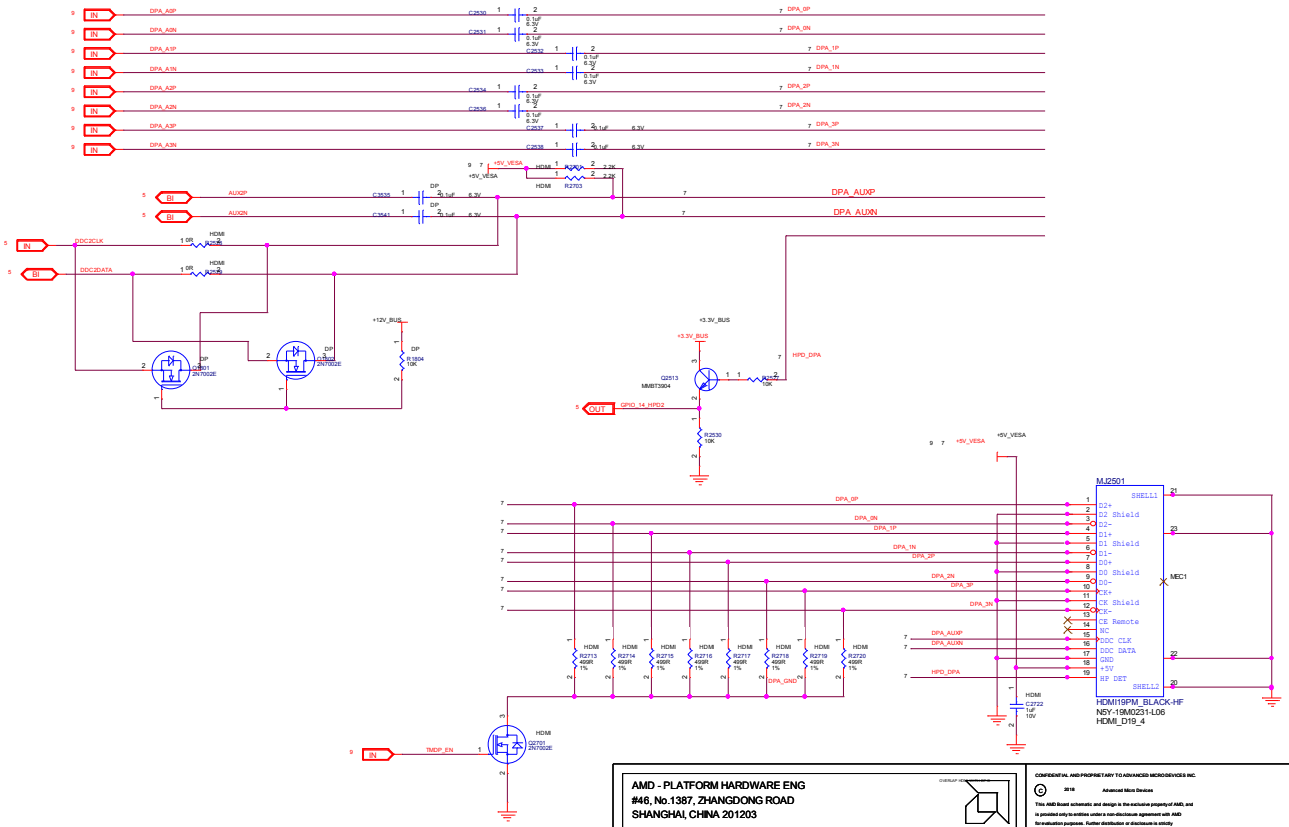

AMD - PLATFORM HARDWARE ENG
#46, No.1387, ZHANGDONG ROAD
SHANGHAI, CHINA 201203

SHEET:	Oland HDMI/DP
DATE:	Thu Jan 05 05:41:56 2017
REV:	P00
SHEET NUMBER:	7 OF 20
DOCUMENT NUMBER:	105_d12900_00A

CONFIDENTIAL AND PROPRIETARY TO ADVANCED MICRO DEVICES INC.

© 2016 Advanced Micro Devices

This AMD Board schematic and design is the exclusive property of AMD, and is provided only to entities under a non-disclosure agreement with AMD for evaluation purposes. Further distribution or disclosure is strictly prohibited. Use of this schematic and design for any purpose other than evaluation requires a Board Technology License Agreement with AMD. AMD makes no representations or warranties of any kind regarding this schematic and design, including, not limited to, any implied warranty of merchantability or fitness for a particular purpose, and disclaims responsibility for any consequences resulting from use of the information included herein.

TITLE: XXX

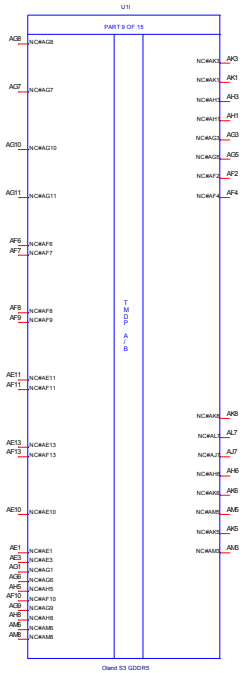

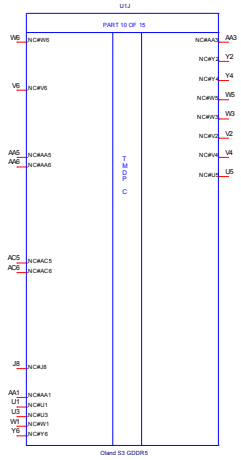

AMD - PLATFORM HARDWARE ENG
#46, No.1387, ZHANGDONG ROAD
SHANGHAI, CHINA 201203

SHEET:	Oland Unused Modules
DATE:	Wed Aug 29 03:24:48 2018
REV:	P00
SHEET NUMBER:	8 OF 20
DOCUMENT NUMBER:	105_d12900_00A
NOTES:	NOTE

CONFIDENTIAL AND PROPRIETARY TO ADVANCED MICRO DEVICES INC.
© 2018 Advanced Micro Devices
This AMD Board schematic and design is the exclusive property of AMD, and is provided only to entities under a non-disclosure agreement with AMD for evaluation purposes. Further distribution or disclosure is strictly prohibited. Use of this schematic and design for any purpose other than evaluation requires a Board Technology License Agreement with AMD. AMD makes no representations or warranties of any kind regarding this schematic and design, including, not limited to, any implied warranty of merchantability or fitness for a particular purpose, and disclaims responsibility for any consequences resulting from use of the information included herein.

TITLE:
XXX

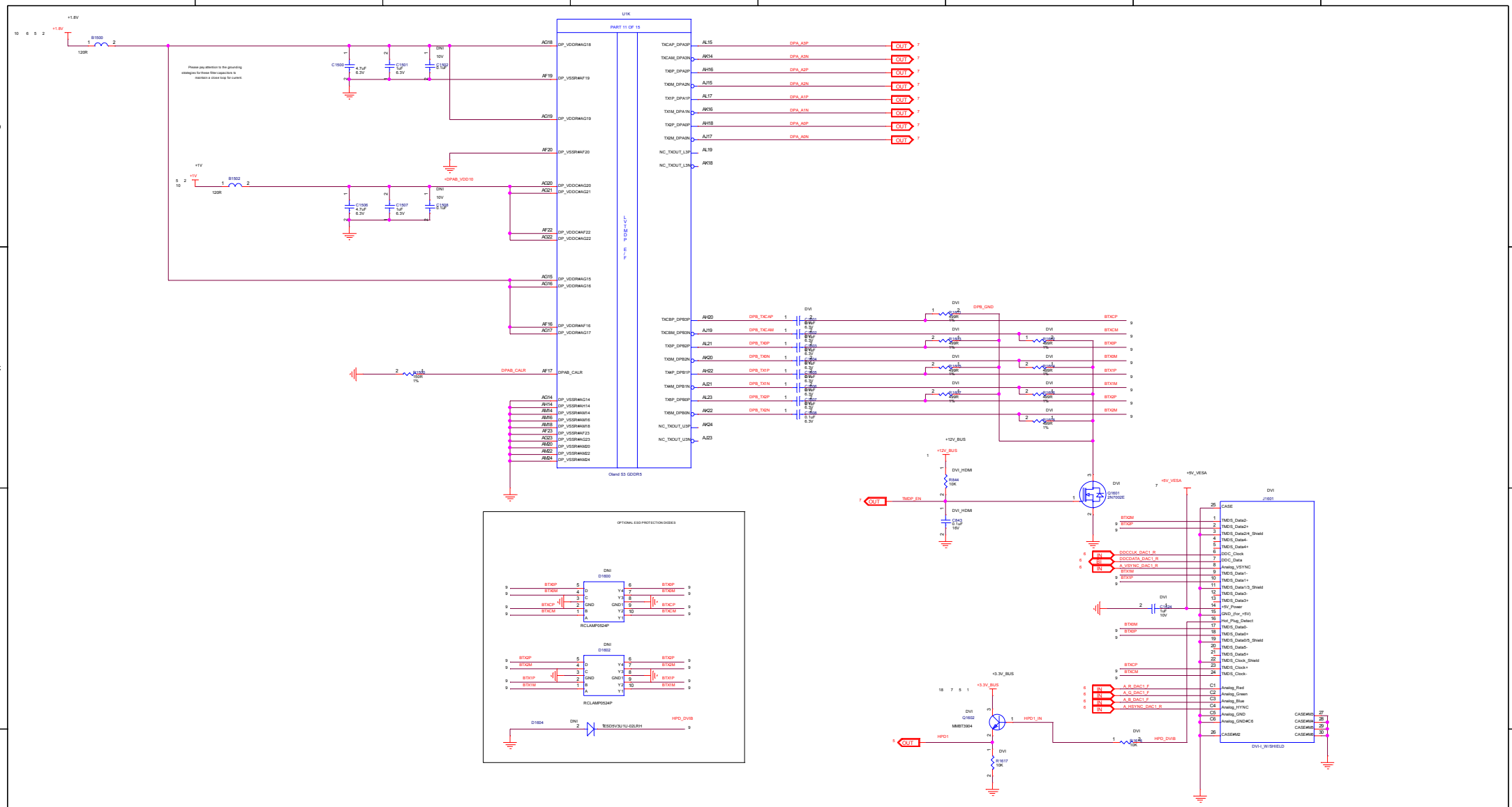

AMD - PLATFORM HARDWARE ENG
#46, No.1387, ZHANGDONG ROAD
SHANGHAI, CHINA 201203

SHEET:	Oland sDVI-I CONN
DATE:	Wed Aug 29 03:24:48 2018
REV:	P00
SHEET NUMBER:	9 OF 20
DOCUMENT NUMBER:	105_d12900_00A
NOTES:	NOTE

CONFIDENTIAL AND PROPRIETARY TO ADVANCED MICRO DEVICES INC.
© 2018 Advanced Micro Devices
This AMD Board schematic and design is the exclusive property of AMD, and is provided only to entities under a non-disclosure agreement with AMD for evaluation purposes. Further distribution or disclosure is strictly prohibited. Use of this schematic and design for any purpose other than evaluation requires a Board Technology License Agreement with AMD. AMD makes no representations or warranties of any kind regarding this schematic and design, including, not limited to, any implied warranty of merchantability or fitness for a particular purpose, and disclaims responsibility for any consequences resulting from use of the information included herein.

TITLE: XXX

LDO #1: Vin = +1.5V +/-2% Vout = +0.95V +/- 2%; Iout = 1.44A (TBV) RMS MAX

PCB: 50 to 70mm sq. copper area for cooling

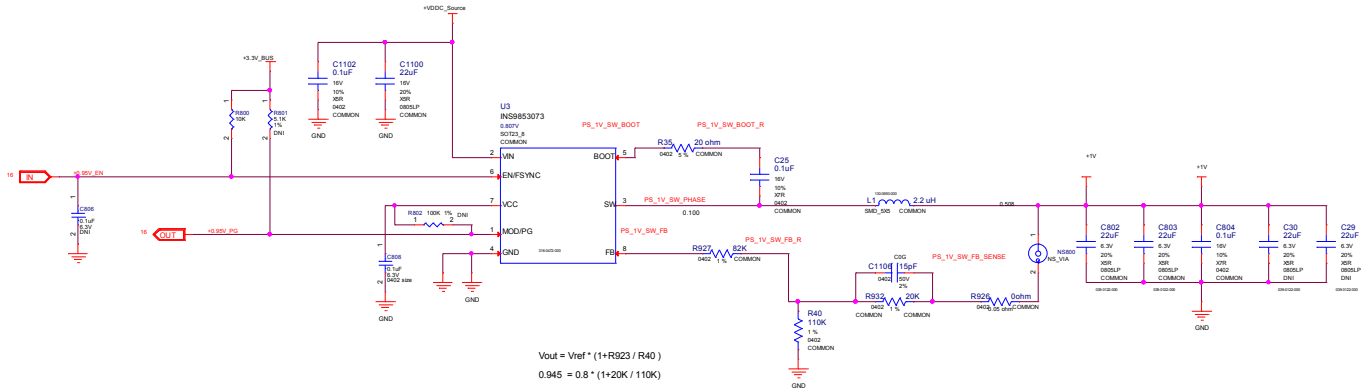

AMD - PLATFORM HARDWARE ENG #46, No.1387, ZHANGDONG ROAD SHANGHAI, CHINA 201203	
SHEET: VDDCI	
DATE: Wed Aug 29 03:24:49 2018	REV: P00
SHEET NUMBER: 11 OF 20	
DOCUMENT NUMBER: 105_d12900_00A	
NOTES: NOTE	

CONFIDENTIAL AND PROPRIETARY TO ADVANCED MICRO DEVICES INC.

© 2018 Advanced Micro Devices

This AMD Board schematic and design is the exclusive property of AMD, and is provided only to entities under a non-disclosure agreement with AMD for evaluation purposes. Further distribution or disclosure is strictly prohibited. Use of this schematic and design for any purpose other than evaluation requires a Board Technology License Agreement with AMD. AMD makes no representations or warranties of any kind regarding this schematic and design, including, not limited to, any implied warranty of merchantability or fitness for a particular purpose, and disclaims responsibility for any consequences resulting from use of the information included herein.

TITLE: XXX

Regulator for MVDD

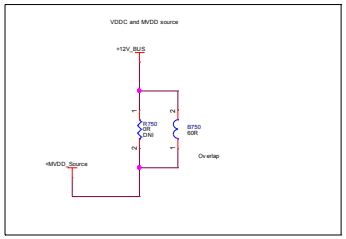

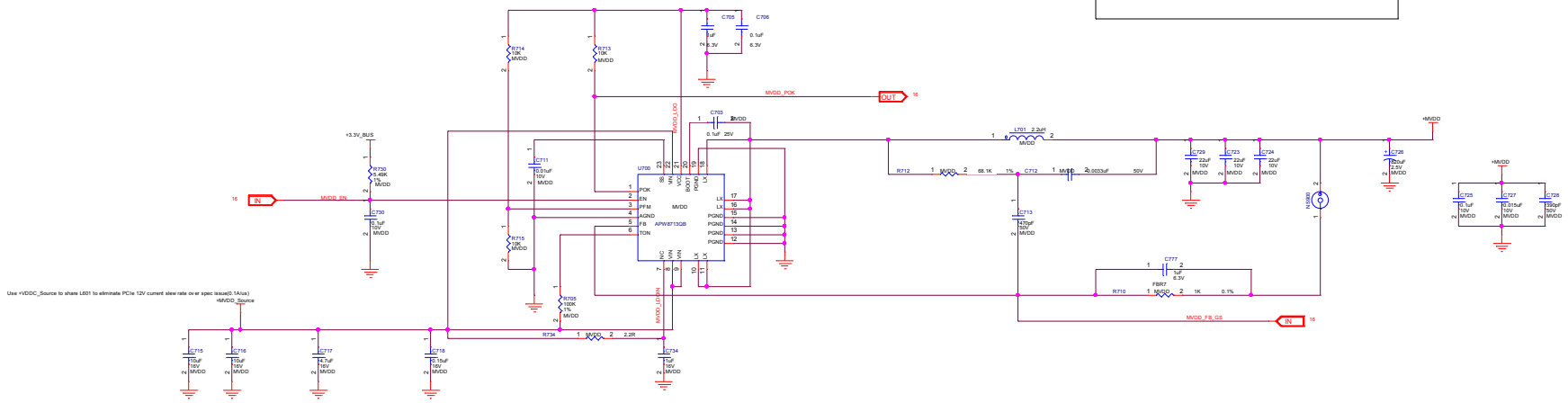

AMD - PLATFORM HARDWARE ENG #46, No.1387, ZHANGDONG ROAD SHANGHAI, CHINA 201203	CONFIDENTIAL AND PROPRIETARY TO ADVANCED MICRO DEVICES INC. © 2018 Advanced Micro Devices This AMD Board schematic and design is the exclusive property of AMD, and is provided only to entities under a non-disclosure agreement with AMD for evaluation purposes. Further distribution or disclosure is strictly prohibited. Use of this schematic and design for any purpose other than evaluation requires a Board Technology License Agreement with AMD. AMD makes no representations or warranties of any kind regarding this schematic and design, including, not limited to, any implied warranty of merchantability or fitness for a particular purpose, and disclaims responsibility for any consequences resulting from use of the information included herein.
SHEET: MVDD	
DATE: Wed Aug 29 03:24:48 2018 / REV: P00	
SHEET NUMBER: 12 OF 20	TITLE: XXX
DOCUMENT NUMBER: 105_d12900_00A	

Regulator for MVDD

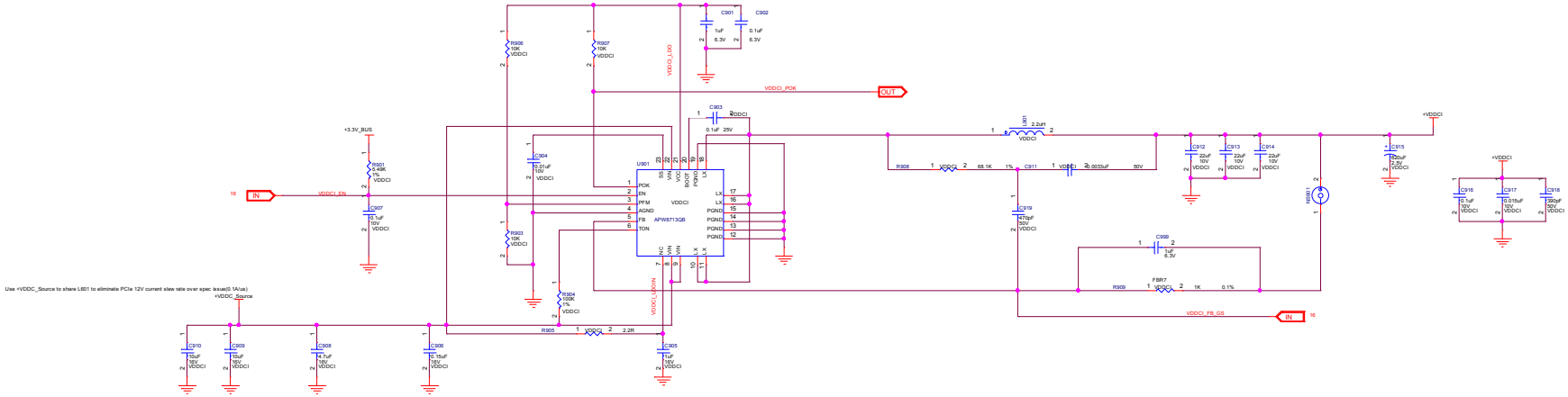

AMD - PLATFORM HARDWARE ENG #46, No.1387, ZHANGDONG ROAD SHANGHAI, CHINA 201203	CONFIDENTIAL AND PROPRIETARY TO ADVANCED MICRO DEVICES INC. © 2018 Advanced Micro Devices This AMD Board schematic and design is the exclusive property of AMD, and is provided only to entities under a non-disclosure agreement with AMD for evaluation purposes. Further distribution or disclosure is strictly prohibited. Use of this schematic and design for any purpose other than evaluation requires a Board Technology License Agreement with AMD. AMD makes no representations or warranties of any kind regarding this schematic and design, including, not limited to, any implied warranty of merchantability or fitness for a particular purpose, and disclaims responsibility for any consequences resulting from use of the information included herein.
SHEET: VDDCI	
DATE: Wed Aug 29 03:24:49 2018 / REV: P00	
SHEET NUMBER: 13 OF 20	TITLE: XXX
DOCUMENT NUMBER: 105_d12900_00A	
NOTES: NOTE	

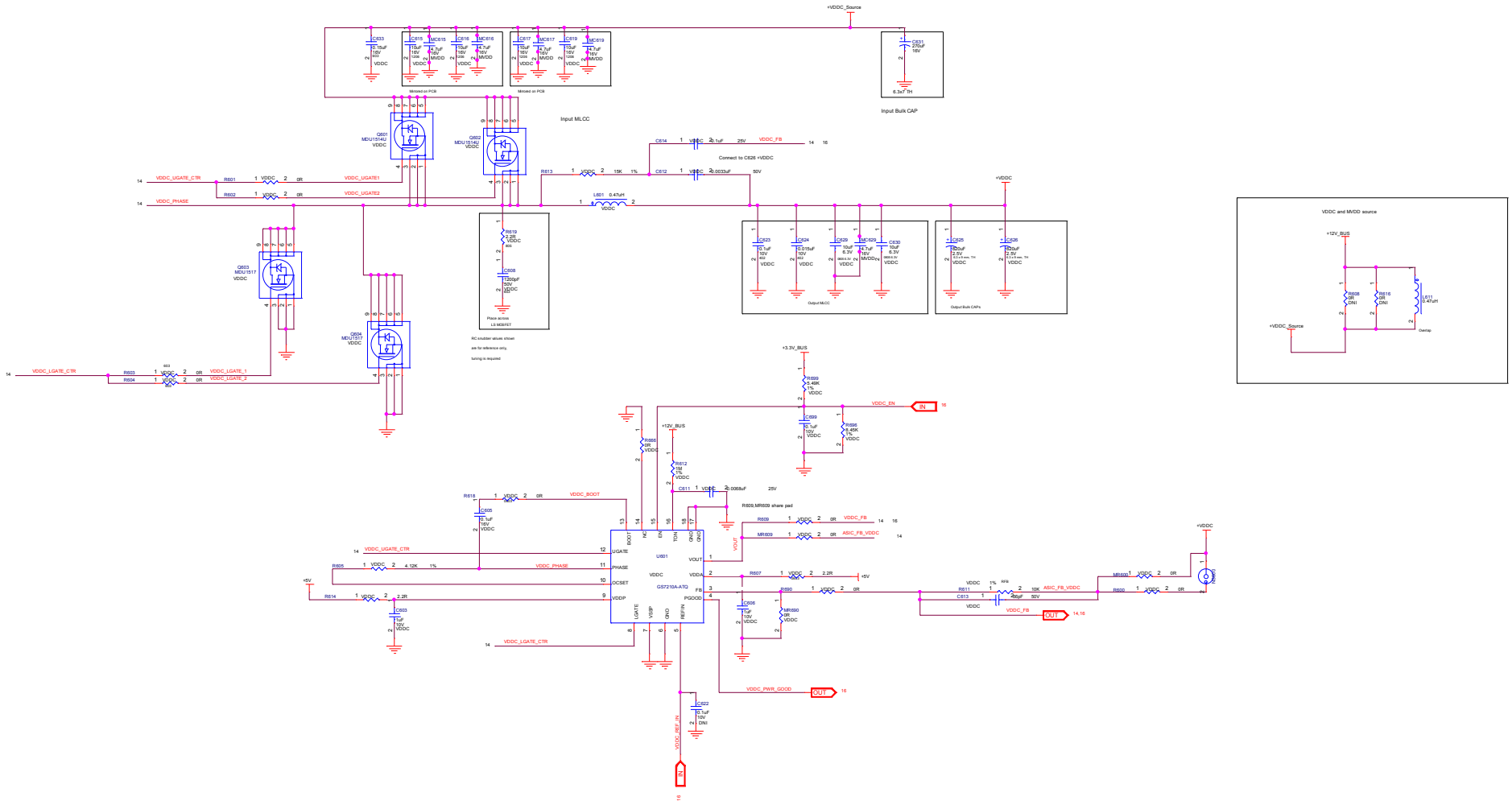

AMD - PLATFORM HARDWARE ENG
#46, No.1387, ZHANGDONG ROAD
SHANGHAI, CHINA 201203

SHEET:	VDDC
DATE:	Thu Jan 05 05:41:56 2017
REV:	P00
SHEET NUMBER:	14 OF 20
DOCUMENT NUMBER:	105_d12900_00A
TITLE:	XXX

CONFIDENTIAL AND PROPRIETARY TO ADVANCED MICRO DEVICES INC.
© 2016 Advanced Micro Devices
This AMD Board schematic and design is the exclusive property of AMD, and is provided only to entities under a non-disclosure agreement with AMD for evaluation purposes. Further distribution or disclosure is strictly prohibited. Use of this schematic and design for any purpose other than evaluation requires a Board Technology License Agreement with AMD. AMD makes no representations or warranties of any kind regarding this schematic and design, including, not limited to, any implied warranty of merchantability or fitness for a particular purpose, and disclaims responsibility for any consequences resulting from use of the information included herein.

18ci203

Linear Regulators

LDO #2:	Vin = 3.00V to 3.60V (3.3V +/-.9%)	Vout = +1.8V +/-.2%;	Iout = 1.6A (TBV) RMS MAX
	PCB: 50 to 70mm sq. copper area for cooling		

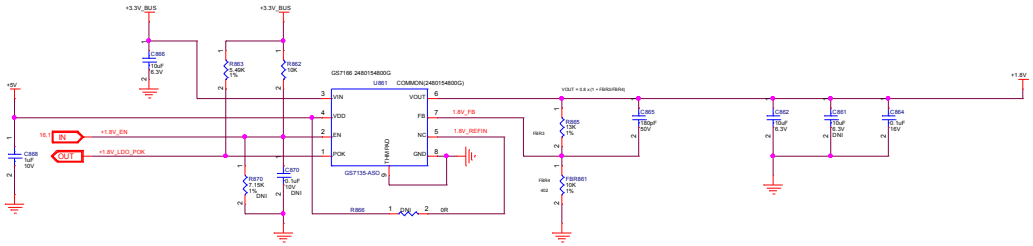

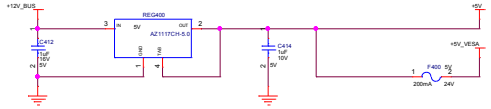

AMD - PLATFORM HARDWARE ENG #46, No.1387, ZHANGDONG ROAD SHANGHAI, CHINA 201203	CONFIDENTIAL AND PROPRIETARY TO ADVANCED MICRO DEVICES INC. © 2010 Advanced Micro Devices This AMD Board schematic and design is the exclusive property of AMD, and is provided only to entities under a non-disclosure agreement with AMD for evaluation purposes. Further distribution or disclosure is strictly prohibited. Use of this schematic and design for any purpose other than evaluation requires a Board Technology License Agreement with AMD. AMD makes no representations or warranties of any kind regarding this schematic and design, including, not limited to, any implied warranty of merchantability or fitness for a particular purpose, and disclaims responsibility for any consequences resulting from use of the information included herein.
SHEET: Linear Regulators	
DATE: Thu Jan 05 05:41:58 2017 — REV: P00	
SHEET NUMBER: 15 OF 20	TITLE: XXX
DOCUMENT NUMBER: 105_d12900_00A	

Power Management - Power Gating and Dynamic Voltage Control

POWER SEQUENCE
+1.8V-2.8ms-+MVDD-3.4ms-+0.95V-4.3ms-+VDDC

0.95V must ramp up before VDDC

Don't support BACO
Support CTF(Internal)

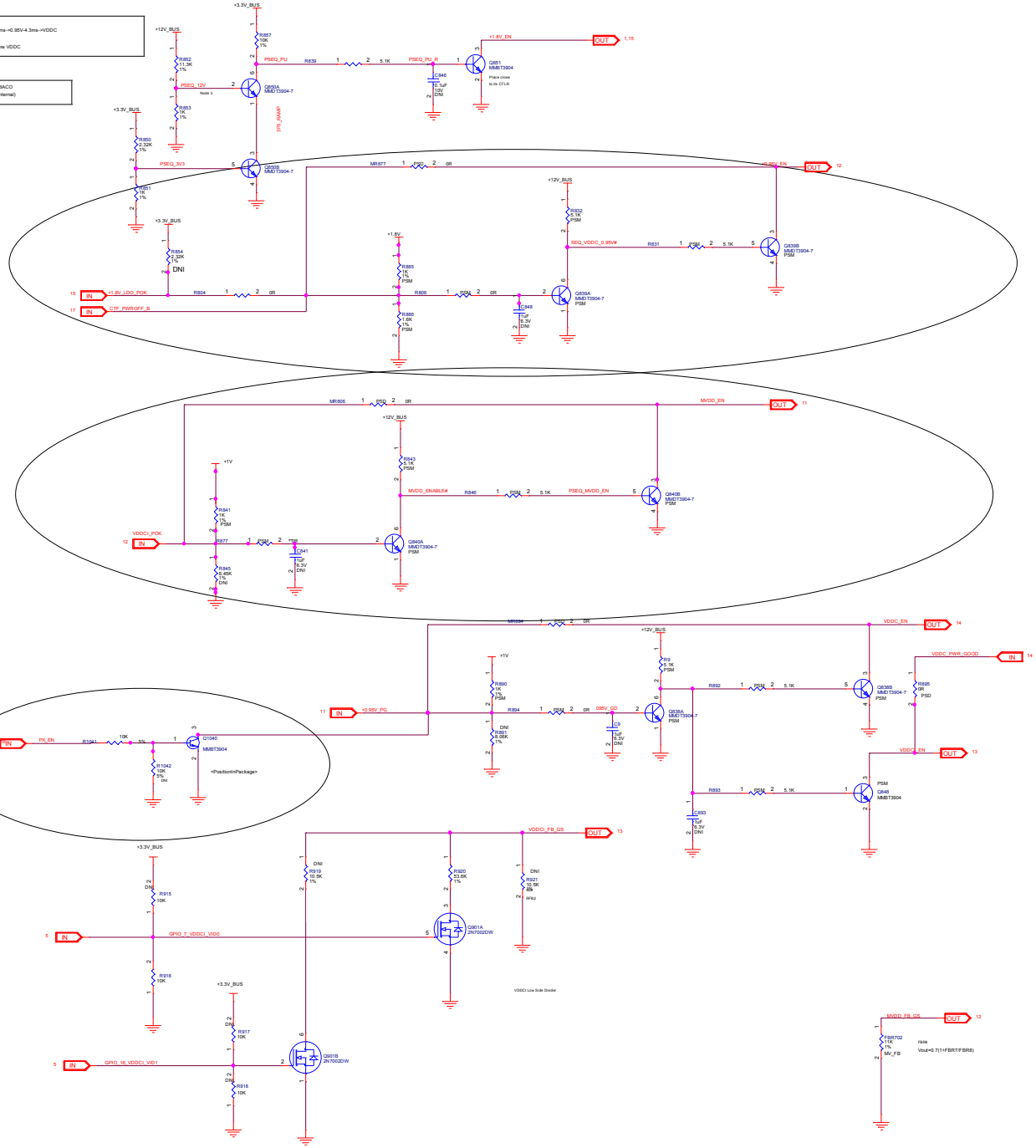

VDDC Low Side Divider

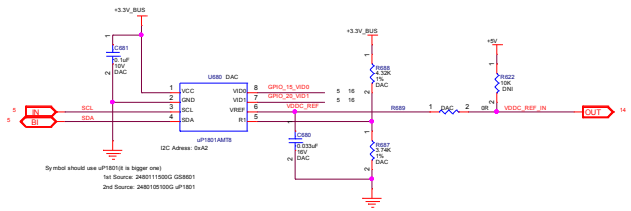

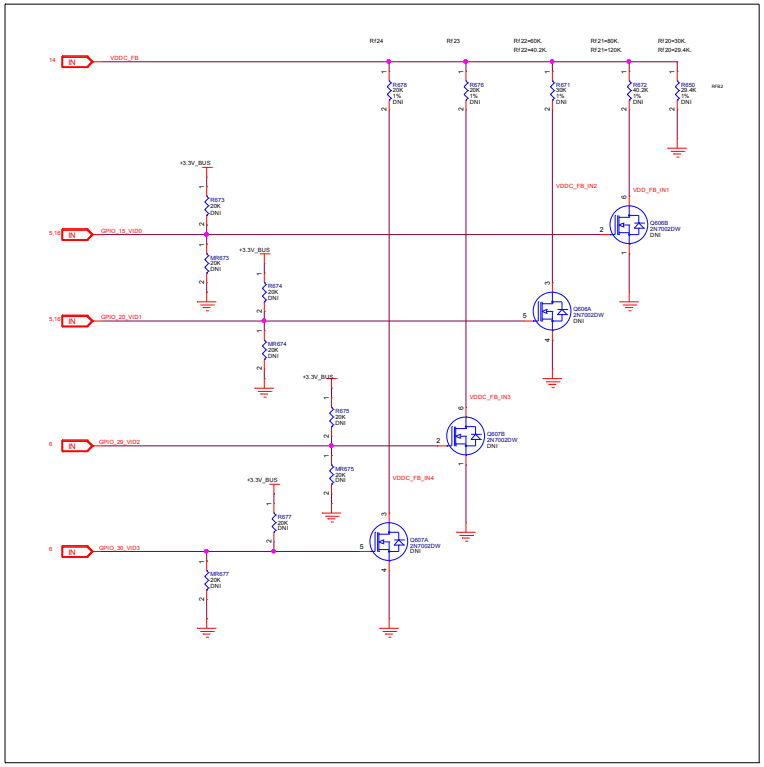

AMD - PLATFORM HARDWARE ENG #46, No.1387, ZHANGDONG ROAD SHANGHAI, CHINA 201203	
SHEET: VDDCI	
DATE: Wed Aug 29 03:24:49 2018	REV: P00
SHEET NUMBER: 16 OF 20	
DOCUMENT NUMBER: 105_d12900_00A	
NOTES: NOTE	

CONFIDENTIAL AND PROPRIETARY TO ADVANCED MICRO DEVICES INC.

© 2018 Advanced Micro Devices

This AMD Board schematic and design is the exclusive property of AMD, and is provided only to entities under a non-disclosure agreement with AMD for evaluation purposes. Further distribution or disclosure is strictly prohibited. Use of this schematic and design for any purpose other than evaluation requires a Board Technology License Agreement with AMD. AMD makes no representations or warranties of any kind regarding this schematic and design, including, not limited to, any implied warranty of merchantability or fitness for a particular purpose, and disclaims responsibility for any consequences resulting from use of the information included herein.

TITLE: XXX

Install R4800	GPIO26 is 0: Fan stop GPIO26 is PWM: Fan running
Install R4810/G4801/R4819	GPIO26 is 1: Fan stop GPIO26 is PWM: Fan running

Fan Control

Mechanical and Thermal Management

Critial Temperature Fault

Critial Temperature Fault

33W FANSINK 71204812000G

Bracket, VGA, HDMI, DVI	802005520G
Bracket, VGA, DP(tab), DVI	802005520AG
Bracket, LP, DP(tab), DVI	802005530G
Bracket, LP, HDMI, DVI	802005530AG

AMD - PLATFORM HARDWARE ENG
#46, No.1387, ZHANGDONG ROAD
SHANGHAI, CHINA 201203

SHEET:	VDDCI
DATE:	Wed Aug 29 03:24:49 2018
REV:	P08
SHEET NUMBER:	17 OF 20
DOCUMENT NUMBER:	105_d72005_00A
NOTES:	NOTE

TITLE: XXX

(19) Debug Circuits

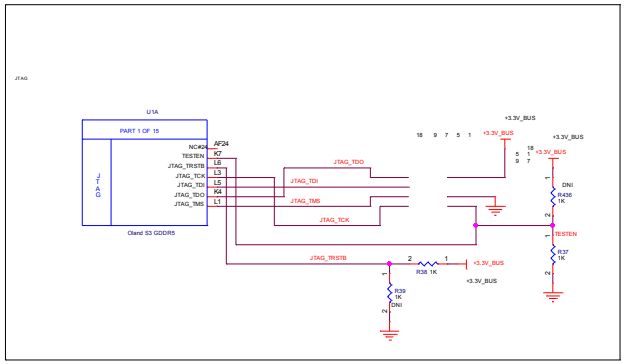

TOP
Single end
Memory data
45 ohm +/- 5 ohm
5.12 mils

Bottom
Single end
Address trunk
45 ohm +/- 5 ohm
5.12 mils

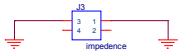

TOP
Different
TMDS
85 ohm +/- 10 %
4.33 mils / 5.51 mils

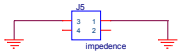

Bottom
Different
PEX_PCIE
85 ohm +/- 10 %
4.33 mils / 5.51 mils

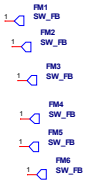

AMD - PLATFORM HARDWARE ENG
#46, No.1387, ZHANGDONG ROAD
SHANGHAI, CHINA 201203

SHEET: Debug

DATE: Thu Jan 05 05:41:58 2017 REV: P00

SHEET NUMBER: 18 OF 20

DOCUMENT NUMBER: 105_d12900_00A

CONFIDENTIAL AND PROPRIETARY TO ADVANCED MICRO DEVICES INC.

© 2010 Advanced Micro Devices

This AMD Board schematic and design is the exclusive property of AMD, and is provided only to entities under a non-disclosure agreement with AMD for evaluation purposes. Further distribution or disclosure is strictly prohibited. Use of this schematic and design for any purpose other than evaluation requires a Board Technology License Agreement with AMD. AMD makes no representations or warranties of any kind regarding this schematic and design, including, not limited to, any implied warranty of merchantability or fitness for a particular purpose, and disclaims responsibility for any consequences resulting from use of the information included herein.

TITLE:

XXX

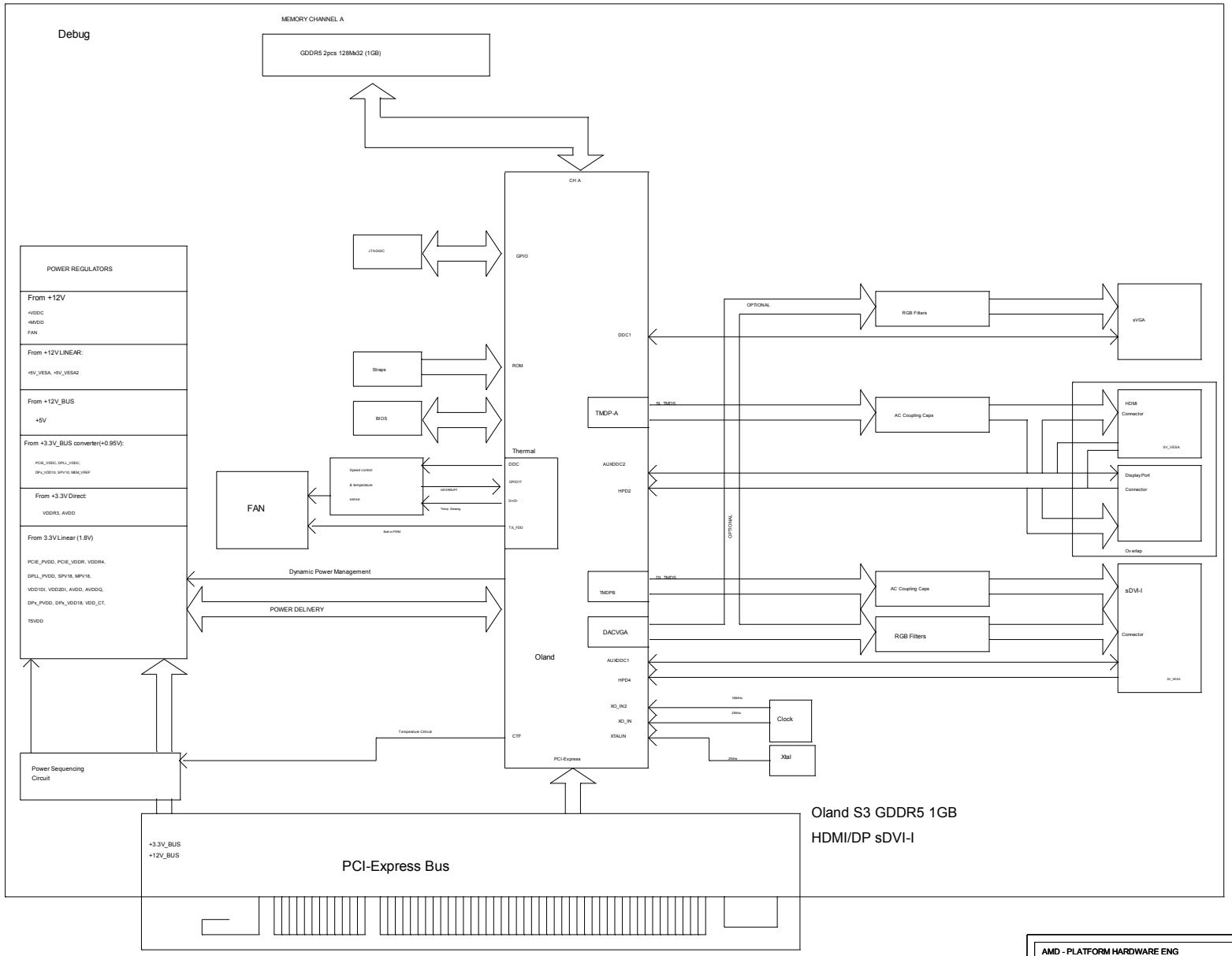

AMD - PLATFORM HARDWARE ENG
#46, No.1387, ZHANGDONG ROAD
SHANGHAI, CHINA 201203

SHEET:	Diagram
DATE:	Thu Jan 05 05:41:15 2017
REV:	P00
SHEET NUMBER:	19 OF 20
DOCUMENT NUMBER:	105_d12900_00A

CONFIDENTIAL AND PROPRIETARY TO ADVANCED MICRO DEVICES INC.

© 2010 Advanced Micro Devices

This AMD Board schematic and design is the exclusive property of AMD, and is provided only to entities under a non-disclosure agreement with AMD for evaluation purposes. Further distribution or disclosure is strictly prohibited. Use of this schematic and design for any purpose other than evaluation requires a Board Technology License Agreement with AMD. AMD makes no representations or warranties of any kind regarding this schematic and design, including, not limited to, any implied warranty of merchantability or fitness for a particular purpose, and disclaims responsibility for any consequences resulting from use of the information included herein.

TITLE:

XXX

TITLE	SCHEMATIC NO.	DATE
Oland S3 GDDR5 1GB HDMI/DP+eDVI-I/VGA	105-D129xx-00A	

REVISION HISTORY

NOTE:
THIS SCHEMATIC REPRESENTS THE PCB, IT DOES NOT REPRESENT ANY SPECIFIC BAU.
FOR STUFFING OPTIONS (COMPONENT VALUES, DNI PLEASE CONSULT THE PRODUCT SPECIFIC BOM.
PLEASE CONTACT AMD REPRESENTATIVE TO OBTAIN LASTEST BOM CLOSEST TO THE APPLICATION DESIRED.

REV P00

SCH REV	PCB REV	DATE	REVISION DESCRIPTION
00	00A	2016.11.28	Initial Oland D129 schematic, based on C241XX-00A

AMD - PLATFORM HARDWARE ENG
#46, No.1387, ZHANGDONG ROAD
SHANGHAI, CHINA 201203

SHEET: Histery

DATE: Thu Jan 05 05:41:18 2017 REV: P00

SHEET NUMBER: 20 OF 20

DOCUMENT NUMBER: 105_d12900_00A

CONFIDENTIAL AND PROPRIETARY TO ADVANCED MICRO DEVICES INC.
© 2016 Advanced Micro Devices
This AMD Board schematic and design is the exclusive property of AMD, and is provided only to entities under a non-disclosure agreement with AMD for evaluation purposes. Further distribution or disclosure is strictly prohibited. Use of this schematic and design for any purpose other than evaluation requires a Board Technology License Agreement with AMD. AMD makes no representations or warranties of any kind regarding this schematic and design, including, not limited to, any implied warranty of merchantability or fitness for a particular purpose, and disclaims responsibility for any consequences resulting from use of the information included herein.

TITLE: XXX