PG161-A00

TU106 6GB GDDR6, 192b, X16
DVI-D/DP + DP + HDMI

TABLE OF CONTENTS

Page	Description
1	Table of Contents
2	Block Diagram
3	PCI Express
4	PCIE RC TERM
5	MEMORY: GPU FB_AB
6	MEMORY: FBA[31:0]
7	MEMORY: FBA[63:32]
8	MEMORY: FBB[31:0]
9	MEMORY: FBB[63:32]
10	MEMORY: GPU FB_CD
11	MEMORY: FBC[31:0]
12	MEMORY: FBC[63:32]
13	MEMORY: FBD[31:0]
14	MEMORY: FBD[63:32]
15	GPU PWR & GND
16	GPU Decoupling
17	GPU Decoupling2
18	IO: IFPAB DVI-D-DL
19	IO: IFPA DP
20	IO: IFPB DP
21	IO: IFPE & IFPF USBC NC
22	IO: IFPC HDMI
23	IO: IFPD DP
24	IO: NVHS Interface and Frame Lock
25	MISC1: Thermal, JTAG, GPIO,STEREO
26	MISC2: ROM, XTAL,STRAPS
27	PS: 1V8_AON
28	PS: 5V
29	PS: PEXVDD
30	PS: FBVDDQ
31	PS: FBVDDQ PH2
32	PS: NVVDD Controller
33	PS: NVVDD Controller OVR3i
34	PS: NVVDD Phase 6,4
35	PS: NVVDD Phase 3,5
36	PS: NVVDD Phase 2,1
37	PS: Input Power Balancing Switcher
38	PS: Input, Filtering, and Monitoring
39	PS: STEERING, UPB & HOT-UNPLUG
40	PS: Type-C BuckBoost
41	PD PPC
42	PS: 12V & 3V3_A SWITCHER
43	SEQ: 5V, 1V8, NV3V3 ENABLE
44	SEQ: NV, PEX, FB ENABLE
45	SEQ: VOLTAGE MONITOR
46	SEQ: DISCHARGE
47	SEQ: MISC
48	LOGO LED
49	LED DRIVER & BOOST
50	FAN
51	PS: Pre-filter
52	MECH
53	PTC

Page2: Block Diagram

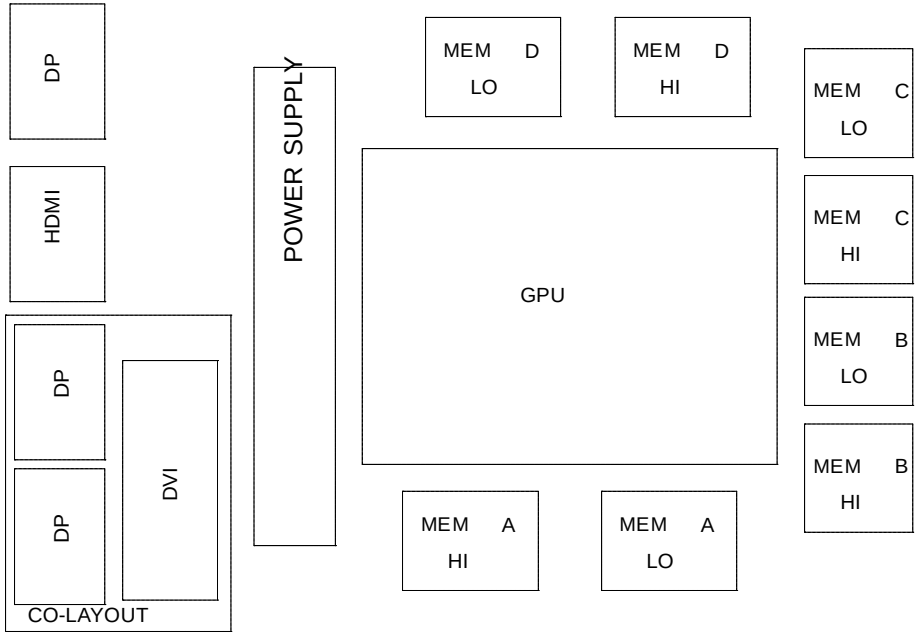

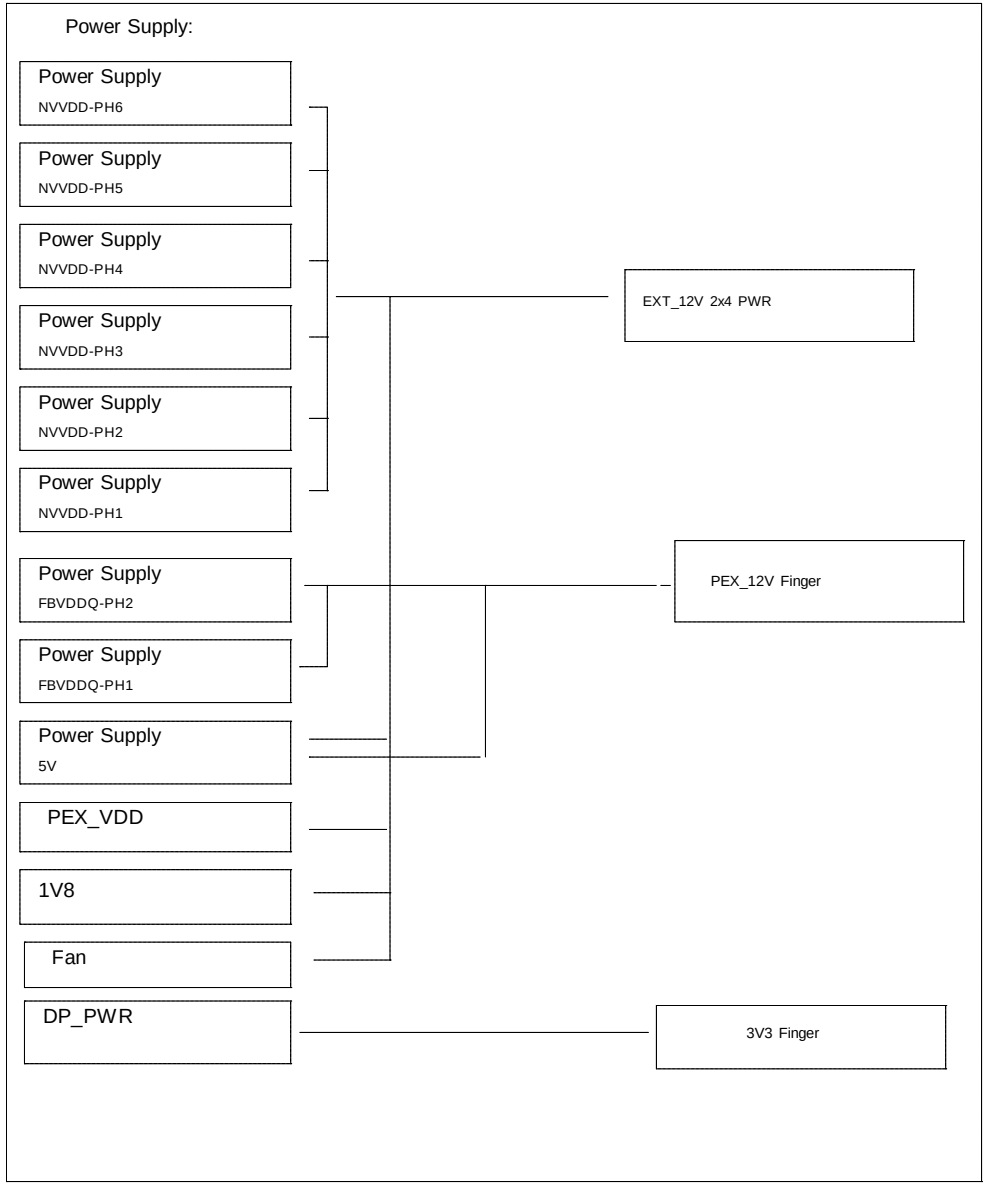

MSI	MICRO-STAR INT'L CO.,LTD	
	MS-V375	
Size Custom	Document Description Block Diagram	Rev 3.0
Date: Thursday, December 13, 2018	Sheet 2 of 53	

Page3: PCI Express

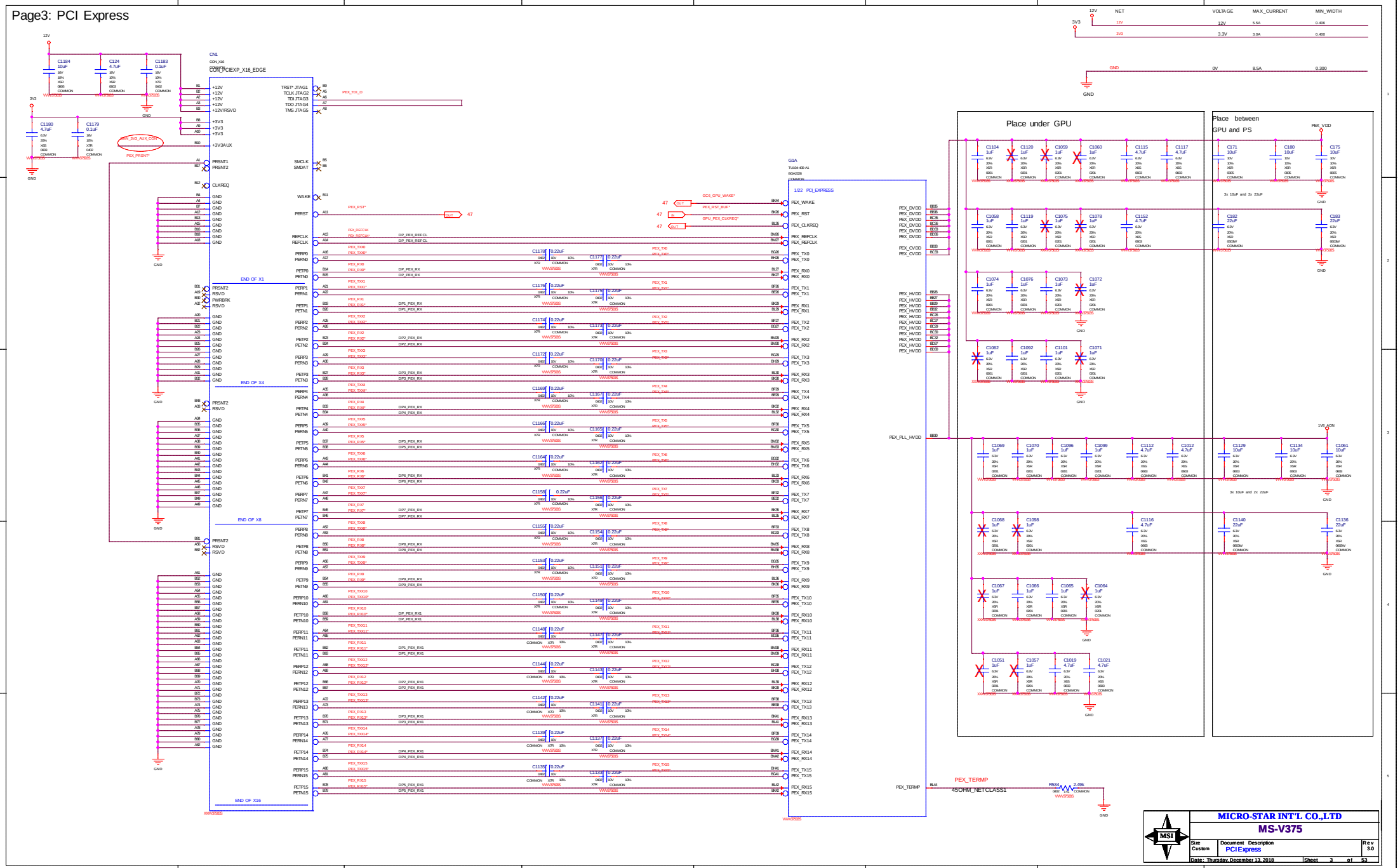

NO PEX GEN4 SUPPORT

DELETE RC TERMINATIONS

Page5: MEMORY: GPU Partition A/B

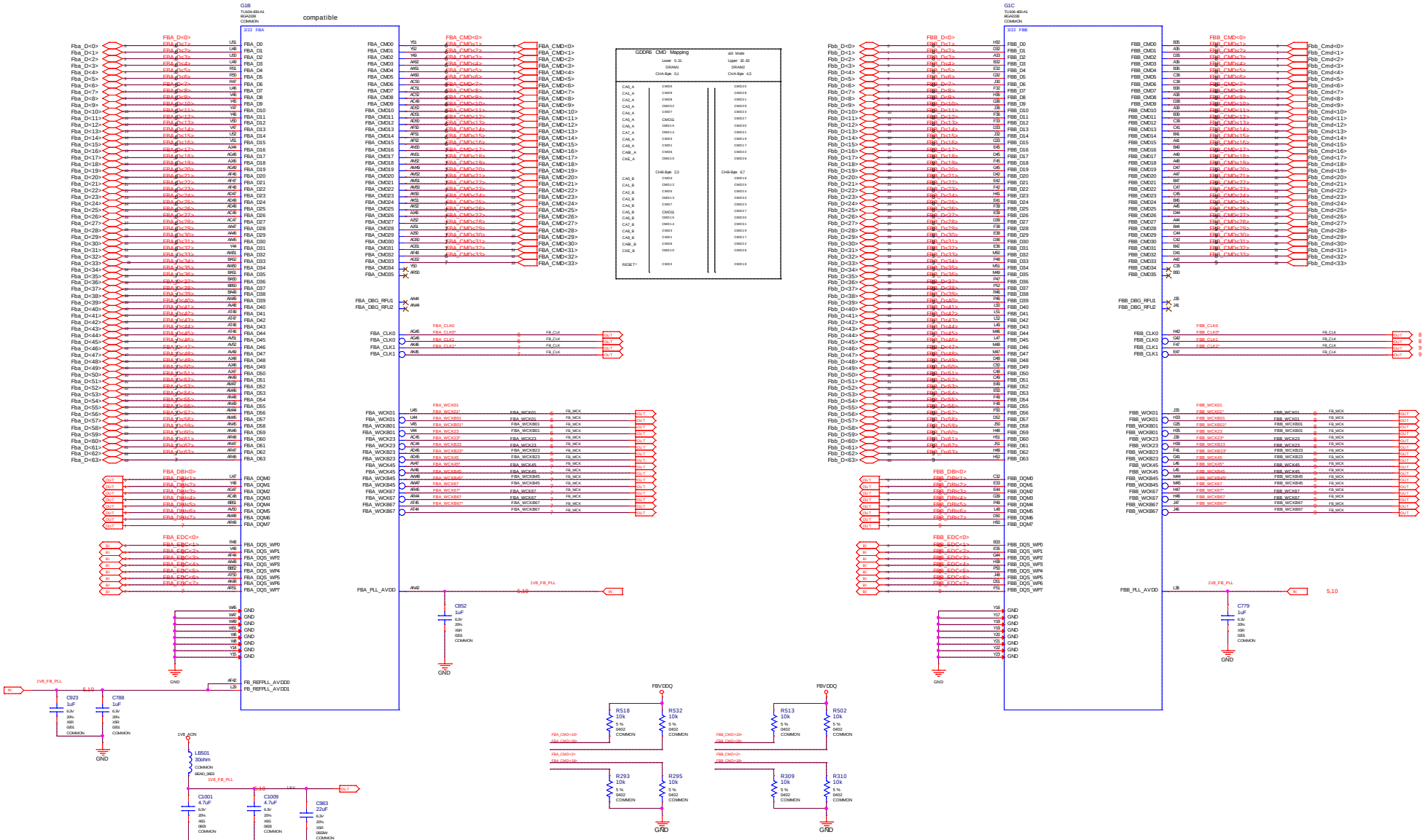

Page6: MEMORY: FBA Partition 31..0

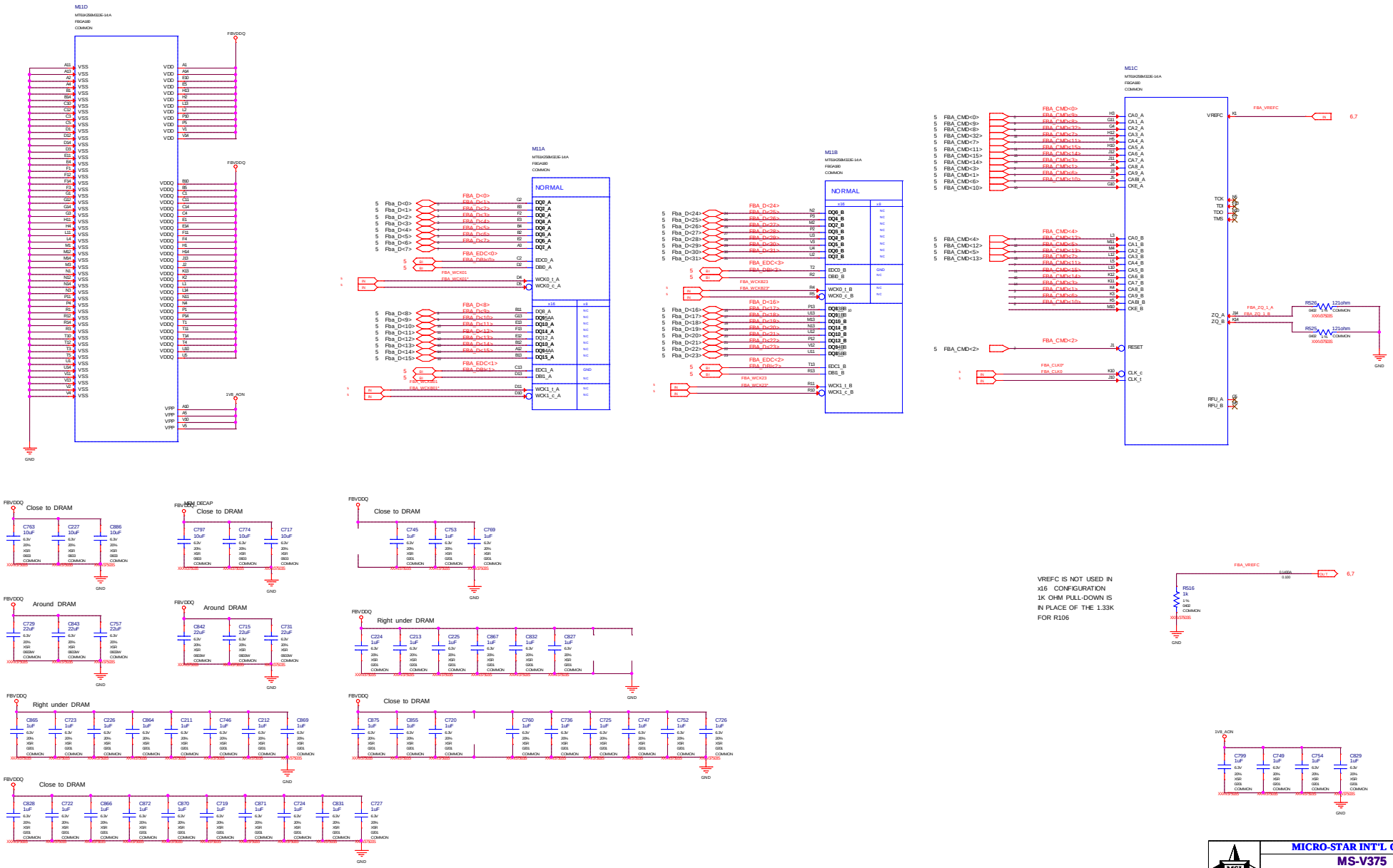

MICRO-STAR INT'L CO.,LTD

MS-V375

Size	Document Description	Rev
Custom	MEMORY: FBA Partition 31..0	3.0

Date: Thursday, December 13, 2018 Sheet 6 of 53

Page7: MEMORY: FBA Partition 63..32

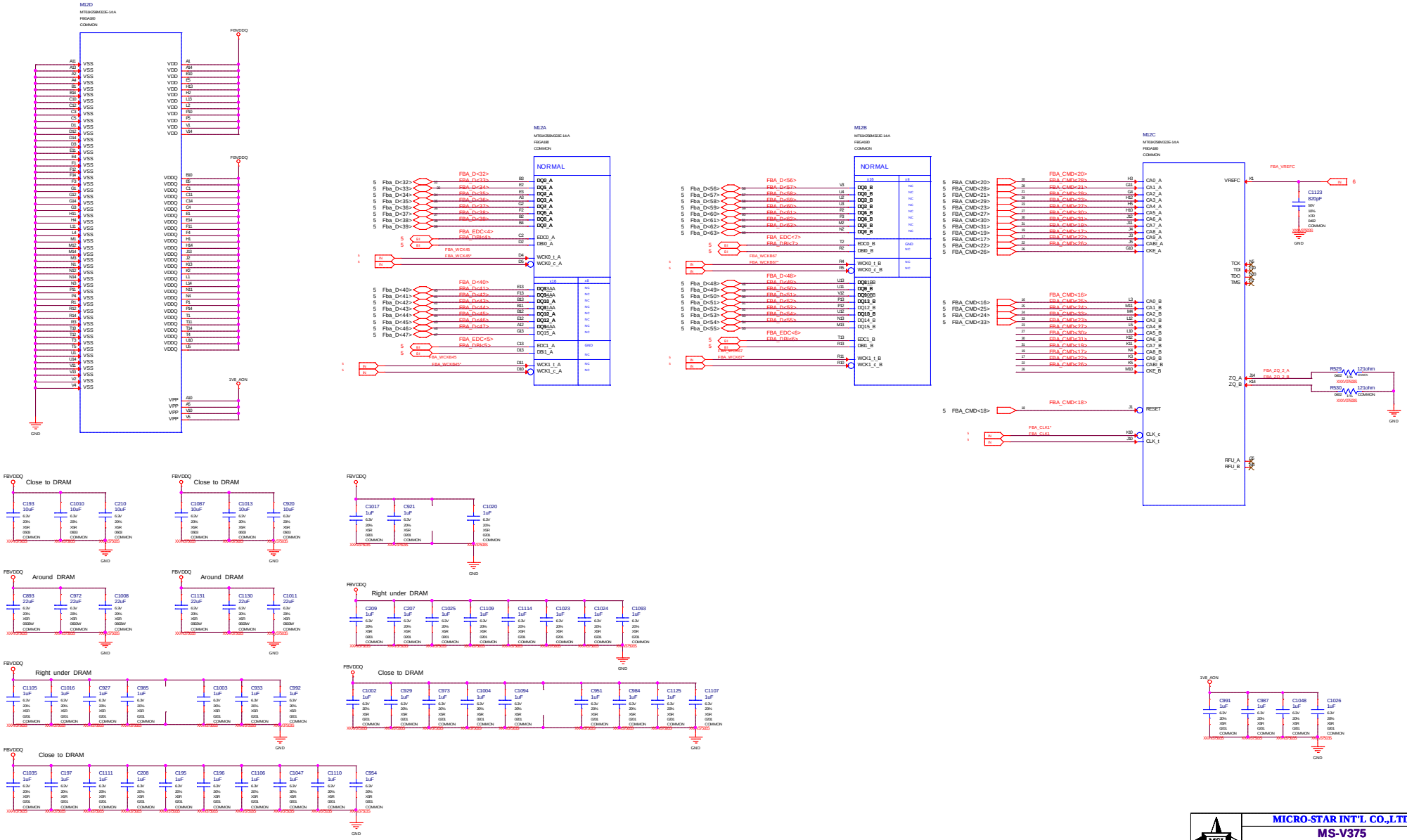

MICRO-STAR INT'L CO.,LTD	
MS-V375	
Size: Custom	Document Description: MEMORY: FBA Partition 63..32
Rev: 3.0	
Date: Thursday, December 13, 2018	Sheet 7 of 53

Page8: MEMORY: FBB Partition 31..0

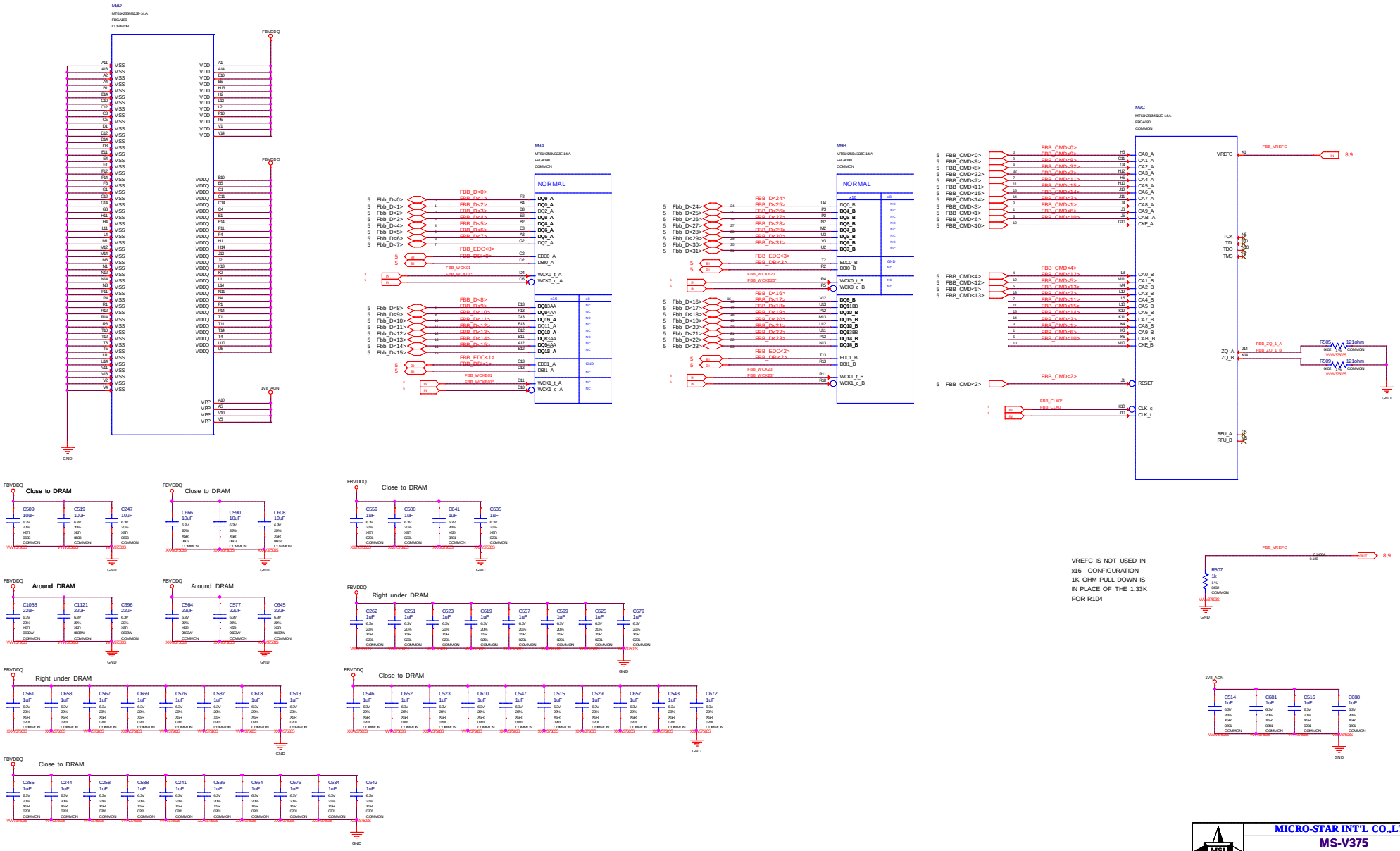

MICRO-STAR INT'L CO.,LTD

MS-V375

Size	Document Description	Rev
Custom	MEMORY: FBB Partition 31..0	3.0

Date: Thursday, December 13, 2018 Sheet 8 of 53

Page9: MEMORY: FBB Partition 63..32

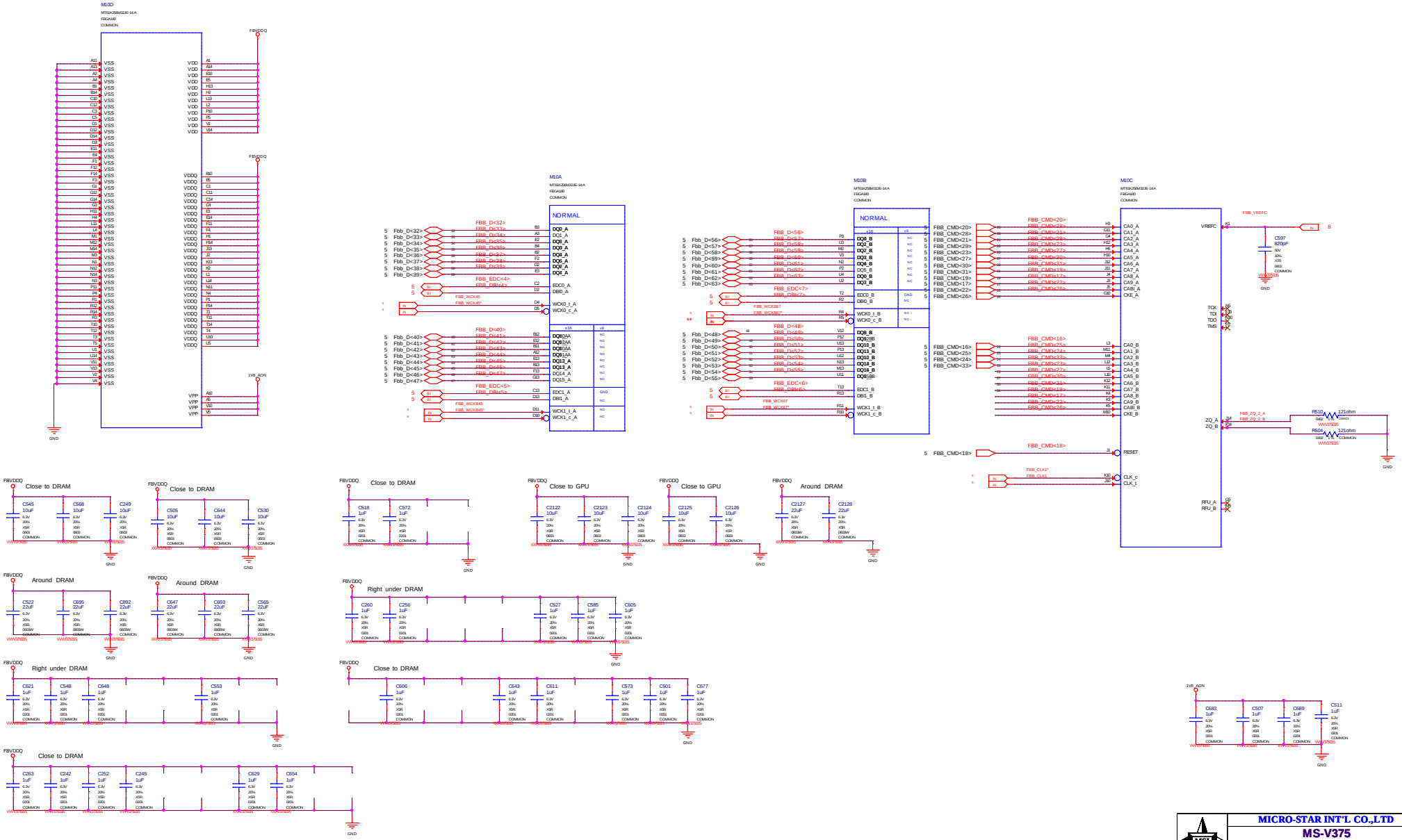

Page10: MEMORY: GPU Partition C/D

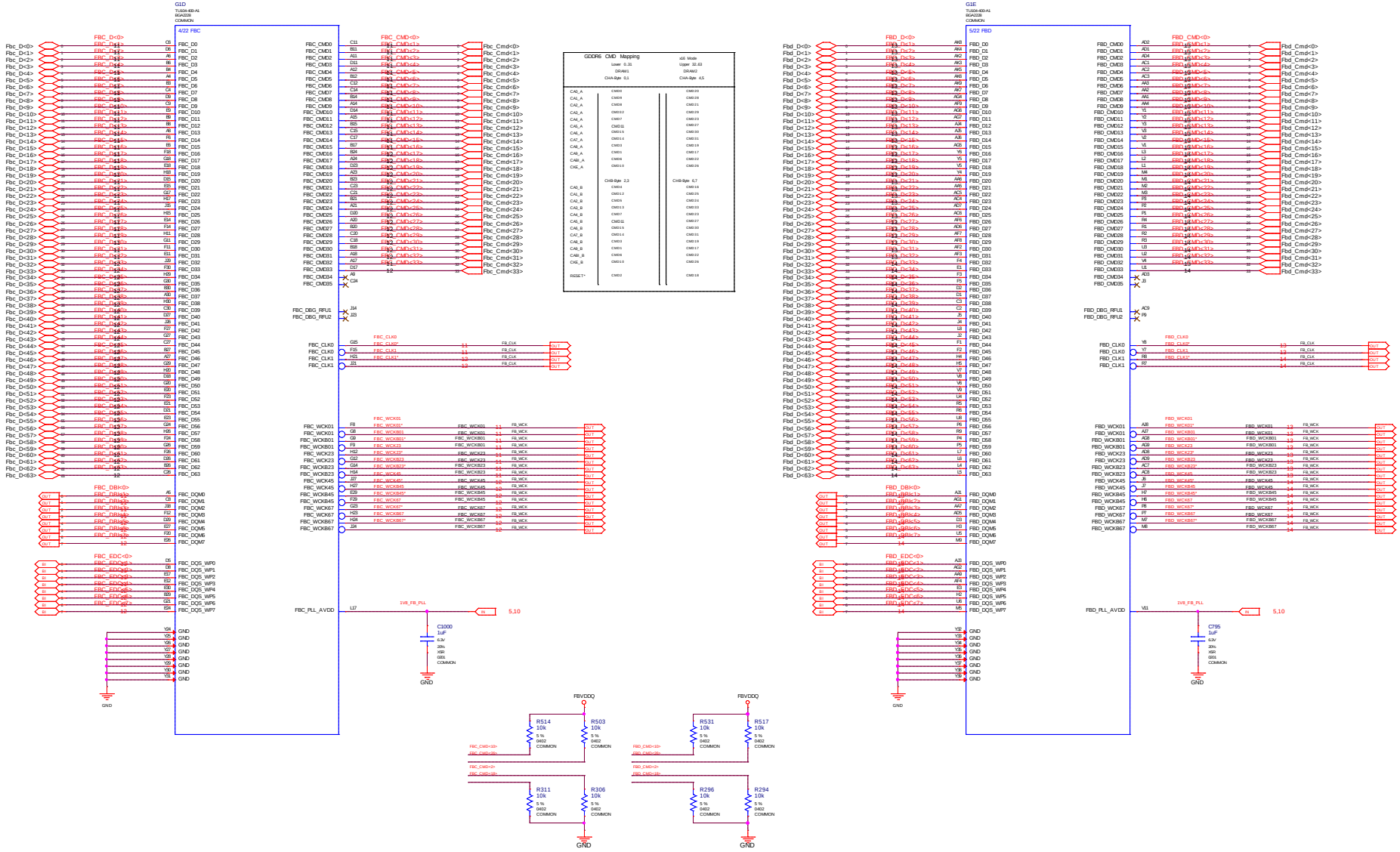

MICRO-STAR INT'L CO.,LTD	
MS-V375	
Size: Custom	Document Description: MEMORY: GPU Partition C/D
Rev: 3.0	
Date: Thursday, December 13, 2018	Sheet 10 of 53

Page11: MEMORY: FBC Partition 31..0

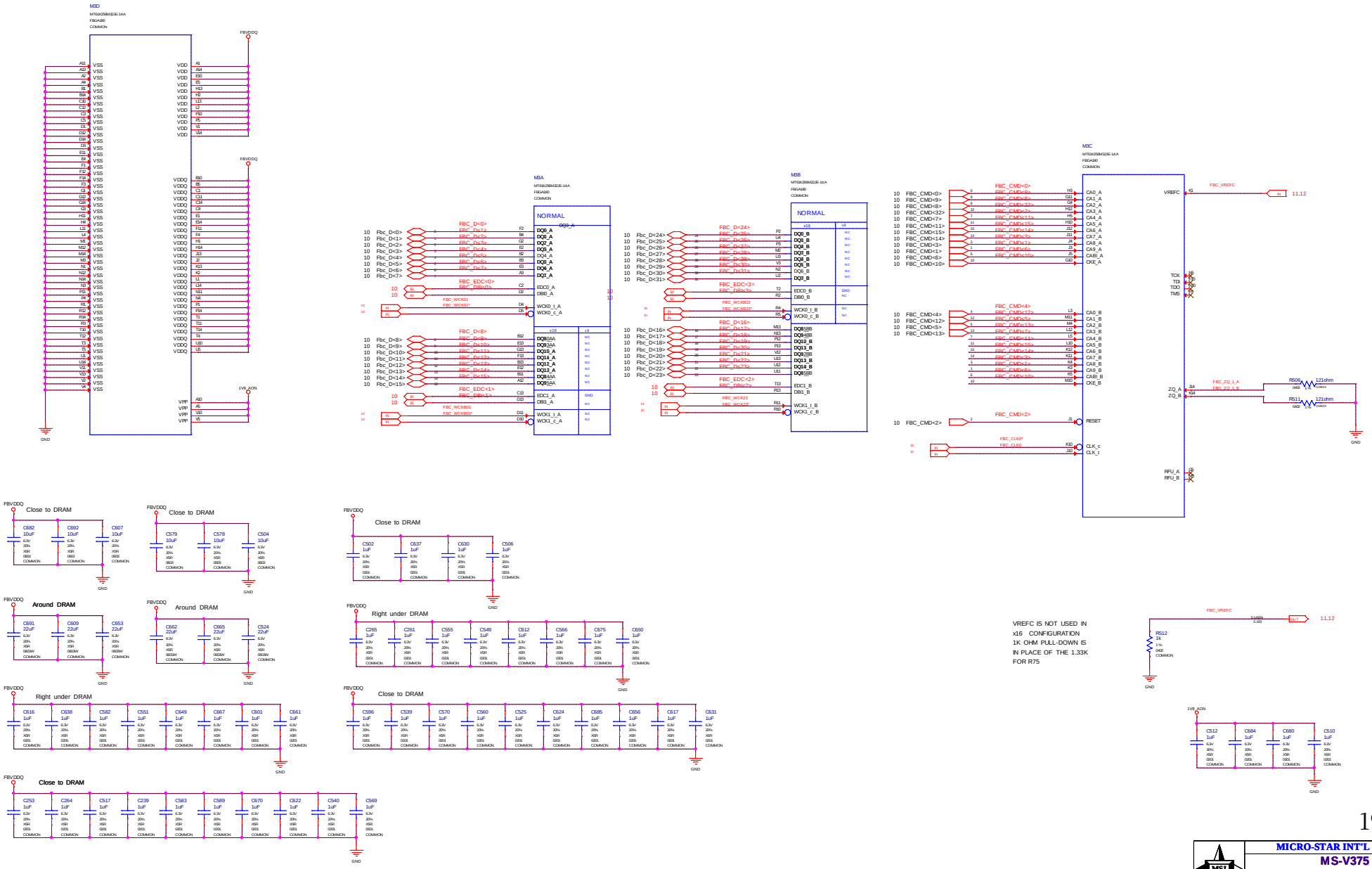

19ci203

MICRO-STAR INT'L CO.,LTD	
MS-V375	
Size: Custom	Document Description: MEMORY: FBC Partition 31..0 — Rev 2.0
Date: Tuesday, December 04, 2018	Sheet 11 of 53

Page12: MEMORY: FBC Partition 63..32

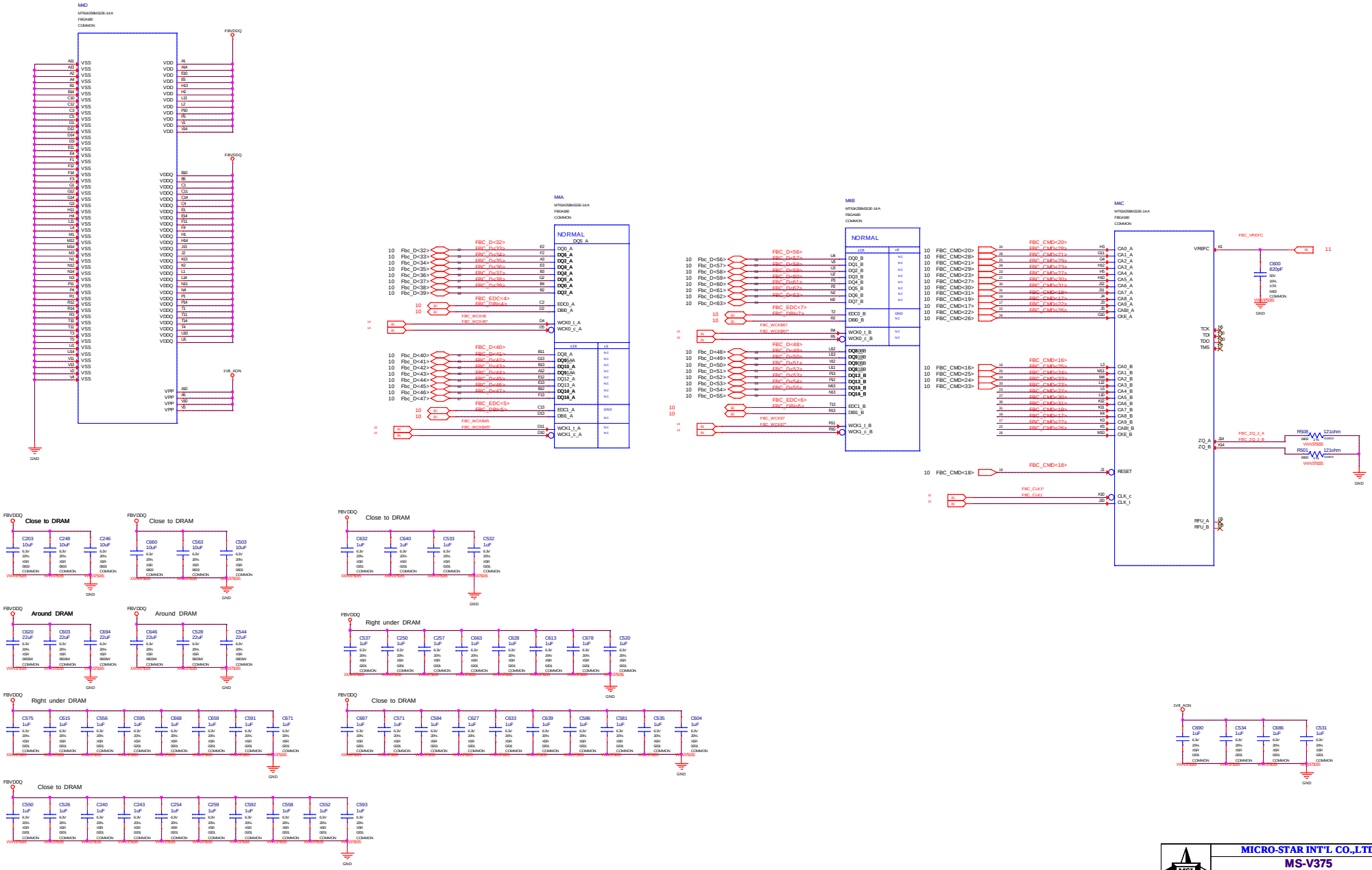

MICRO-STAR INT'L CO.,LTD

MS-V375

Size	Document Description	Rev
Custom	MEMORY: FBC Partition 63..32	2.0

Date: Tuesday, December 04, 2018 Sheet 12 of 53

Page13: MEMORY: FBD Partition 31..0

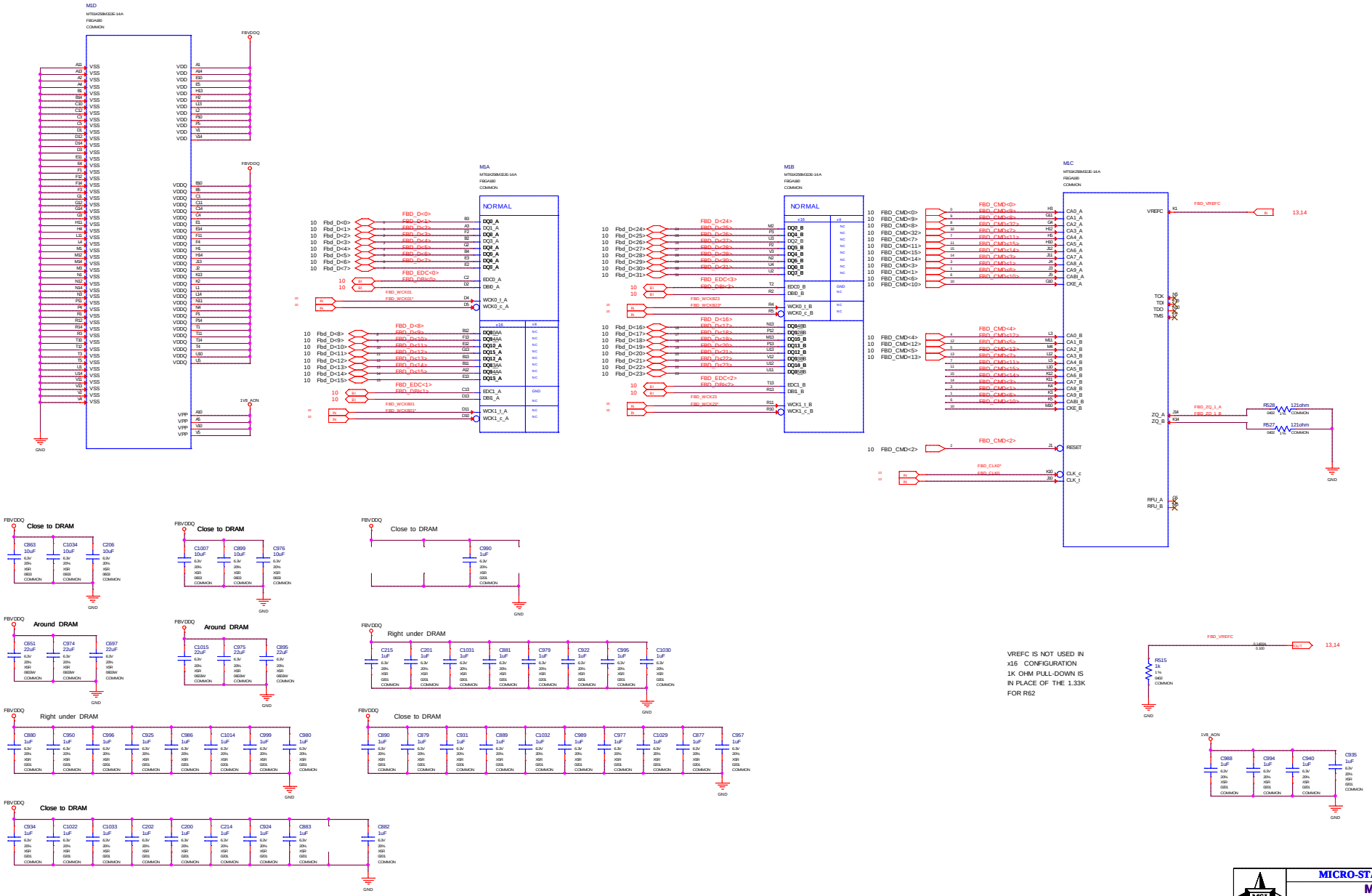

MICRO-STAR INT'L CO.,LTD

MS-V375

Size: Custom | Document Description: MEMORY: FBD Partition 31..0 | Rev 2.0

Date: Tuesday, December 04, 2018 | Sheet 13 of 53

Page14: MEMORY: FBD Partition 63..32

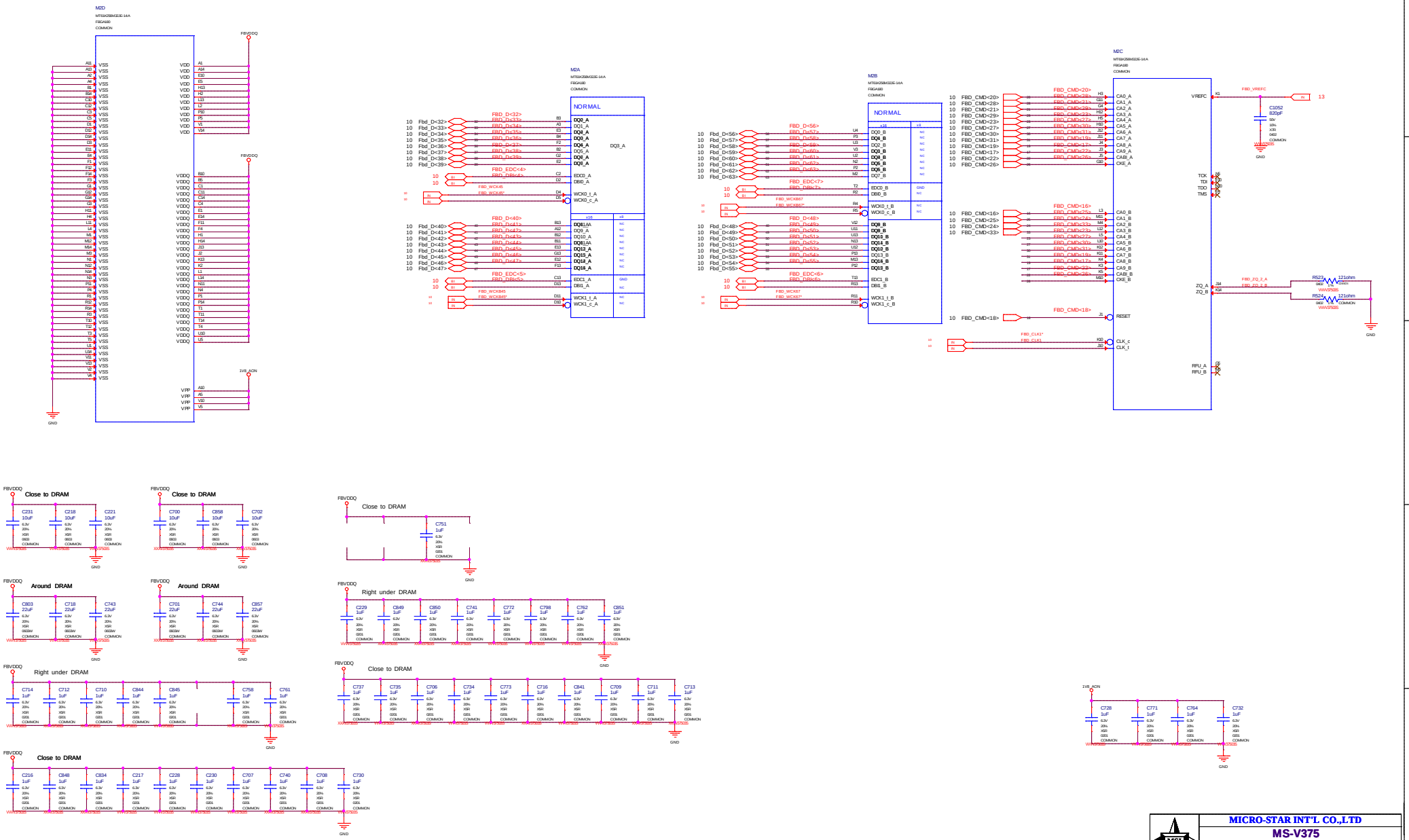

MICRO-STAR INT'L CO.,LTD

MS-V375

Size	Document Description	Rev
Custom	MEMORY: FBD Partition 63..32	2.0

Date: Tuesday, December 04, 2018 Sheet 14 of 53

Page15: GPU PWR and GND

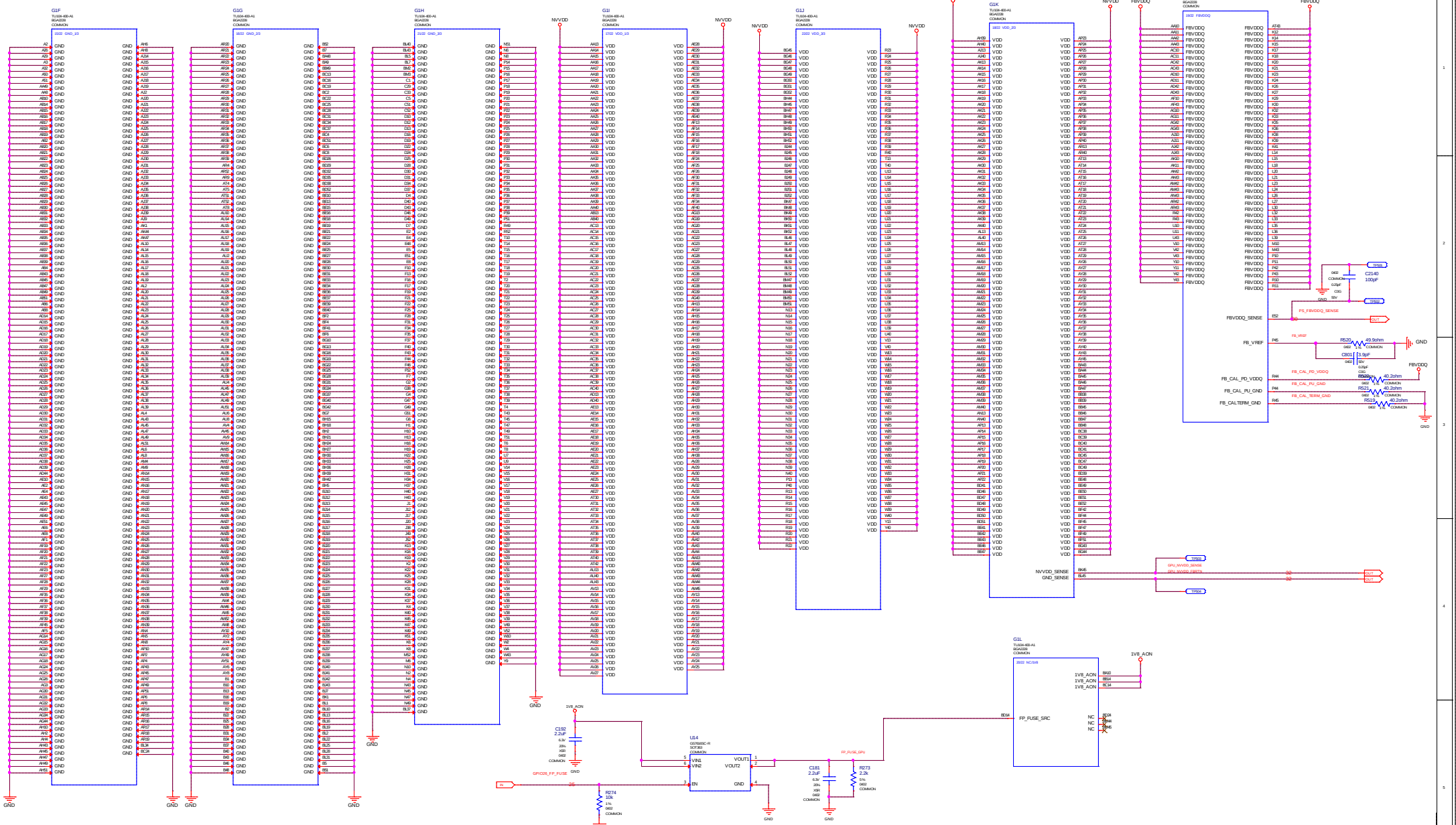

MICRO-STAR INT'L CO.,LTD

MS-V375

Size	Document Description	Rev
Custom	GPU PWR and GND	2.0

Date: Tuesday, December 04, 2018 | Sheet 15 of 53

Page16: GPU Decoupling 1

FBVDDQ

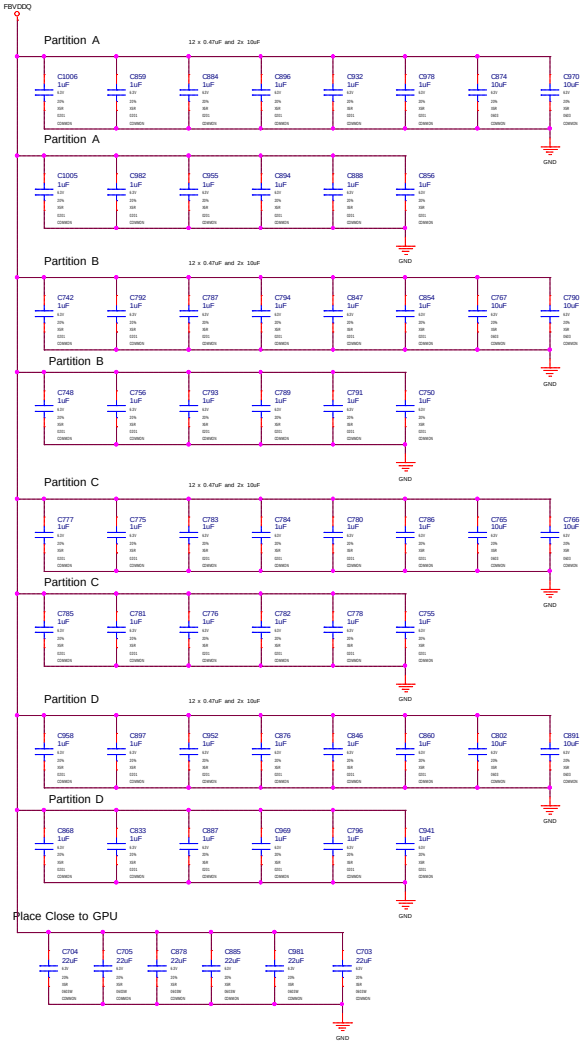

NVVDD

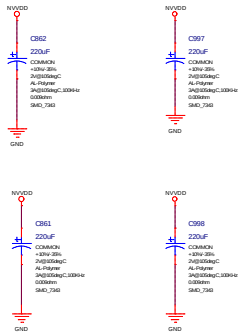

1V8_AON

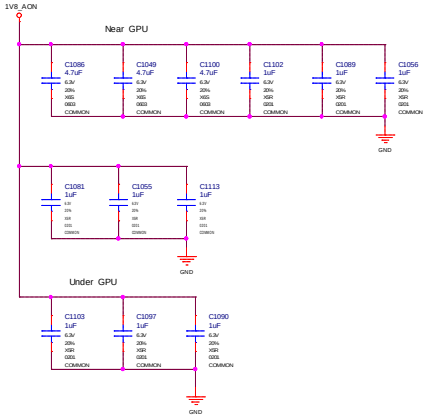

19ci203

MSI	MICRO-STAR INT'L CO.,LTD	
	MS-V375	
Size: Custom	Document Description: GPU Decoupling 1	Rev: 2.0
	Date: Tuesday, December 04, 2018	Sheet 16 of 53

Page17: GPU Decoupling 2

NVVDD

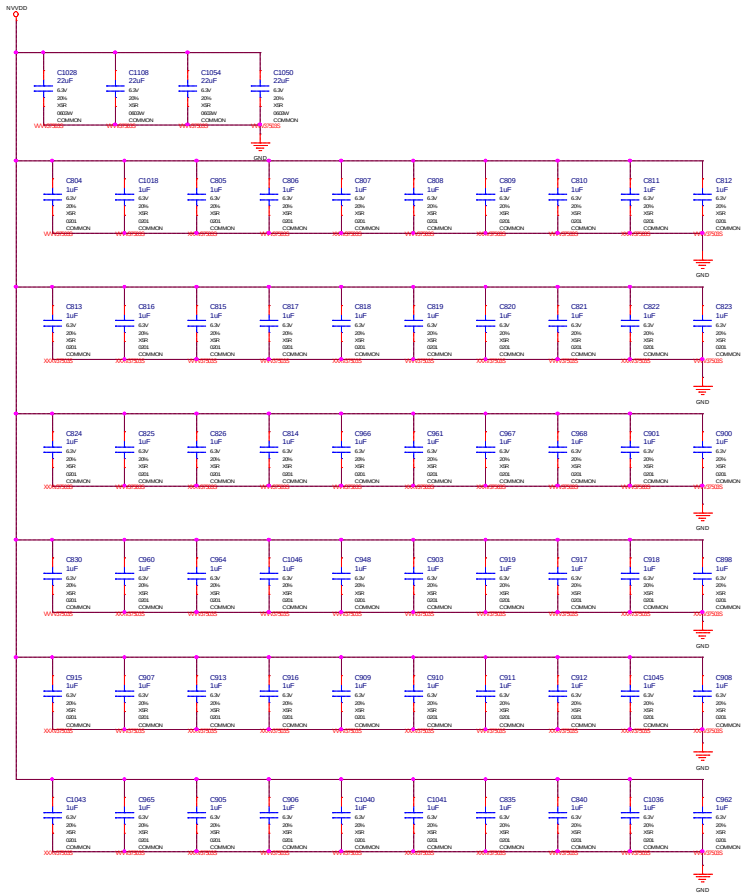

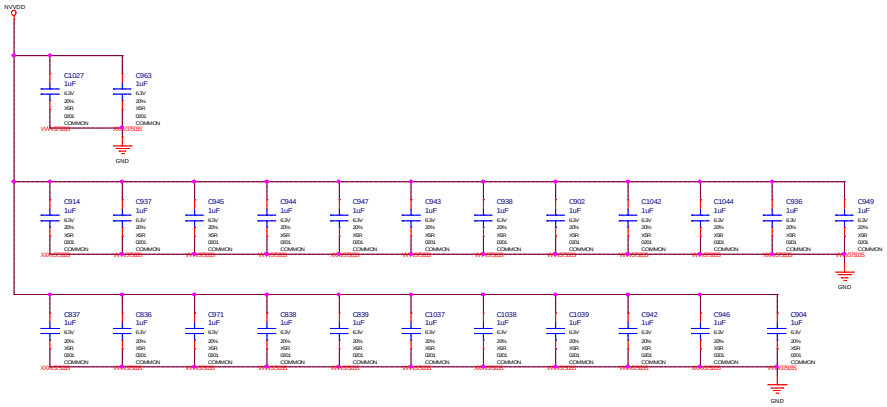

MSI	MICRO-STAR INT'L CO.,LTD	
	MS-V375	
Size: Custom	Document Description: GPU Decoupling 2	Rev: 2.0
Date: Tuesday, December 04, 2018	Sheet 17 of 53	

IFPAB DVI-D-DL CO-LAYOUT WITH 2x DP

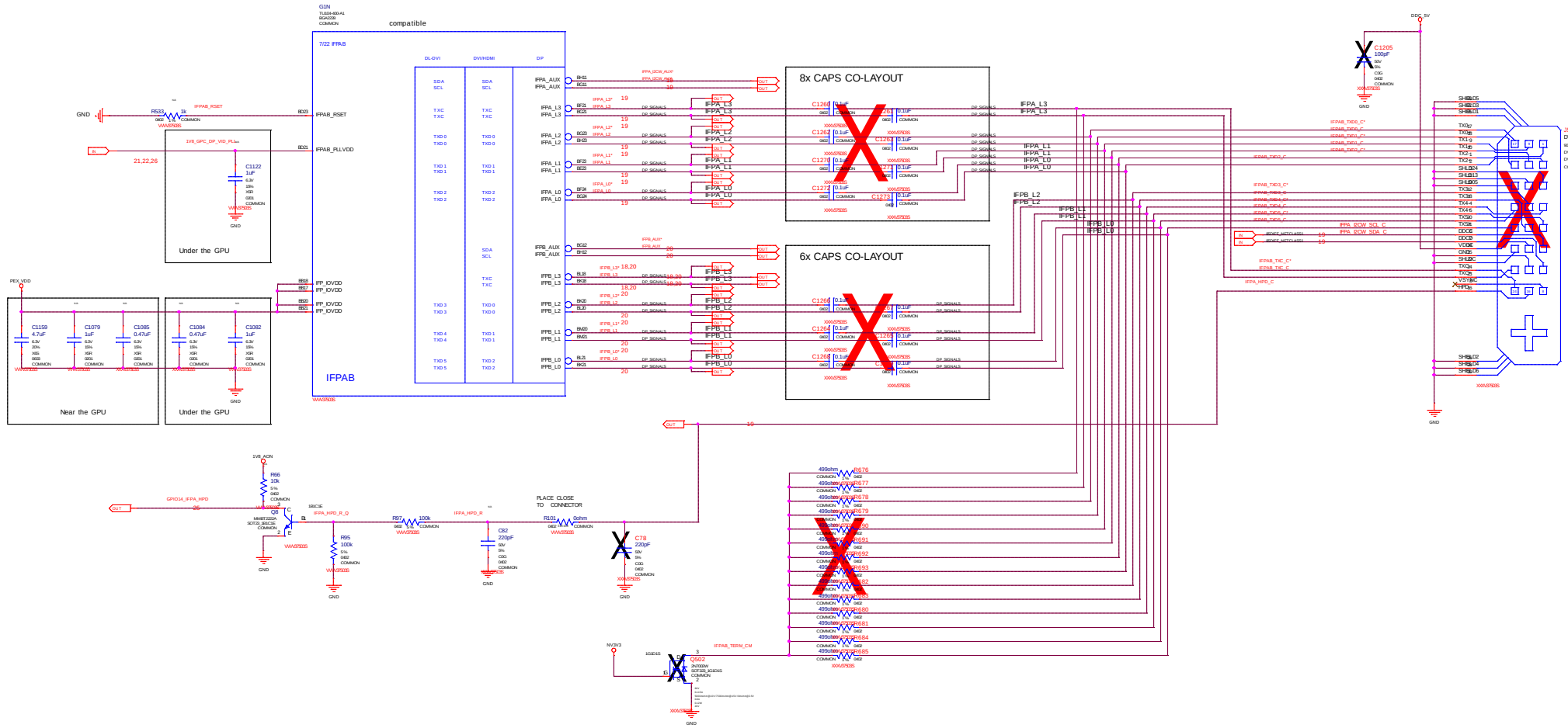

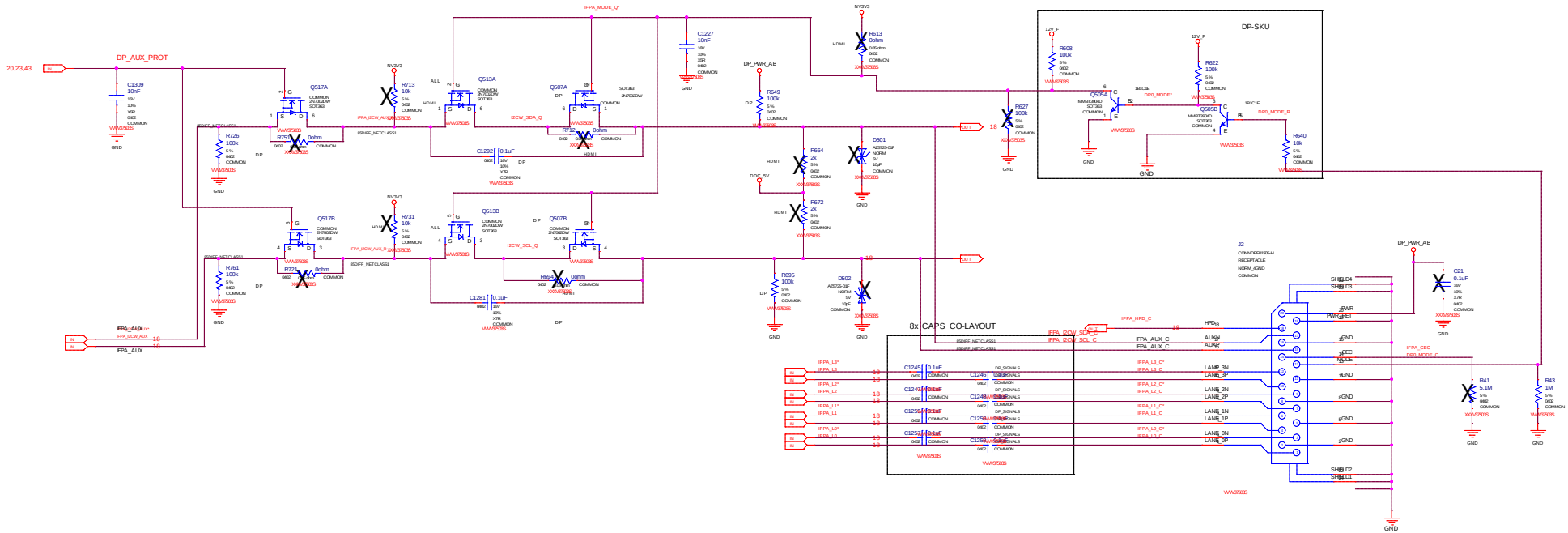

IFPA DP CO-LAYOUT WITH IFPAB DVI-D-DL

19ci203

MICRO-STAR INT'L CO.,LTD		
MS-V375		
Size: Custom	Document Description: IFPA DP	Rev: 2.0
Date: Tuesday, December 04, 2018	Sheet 19 of 53	

IFPB DP CO-LAYOUT WITH IFPAB DVI-D-DL

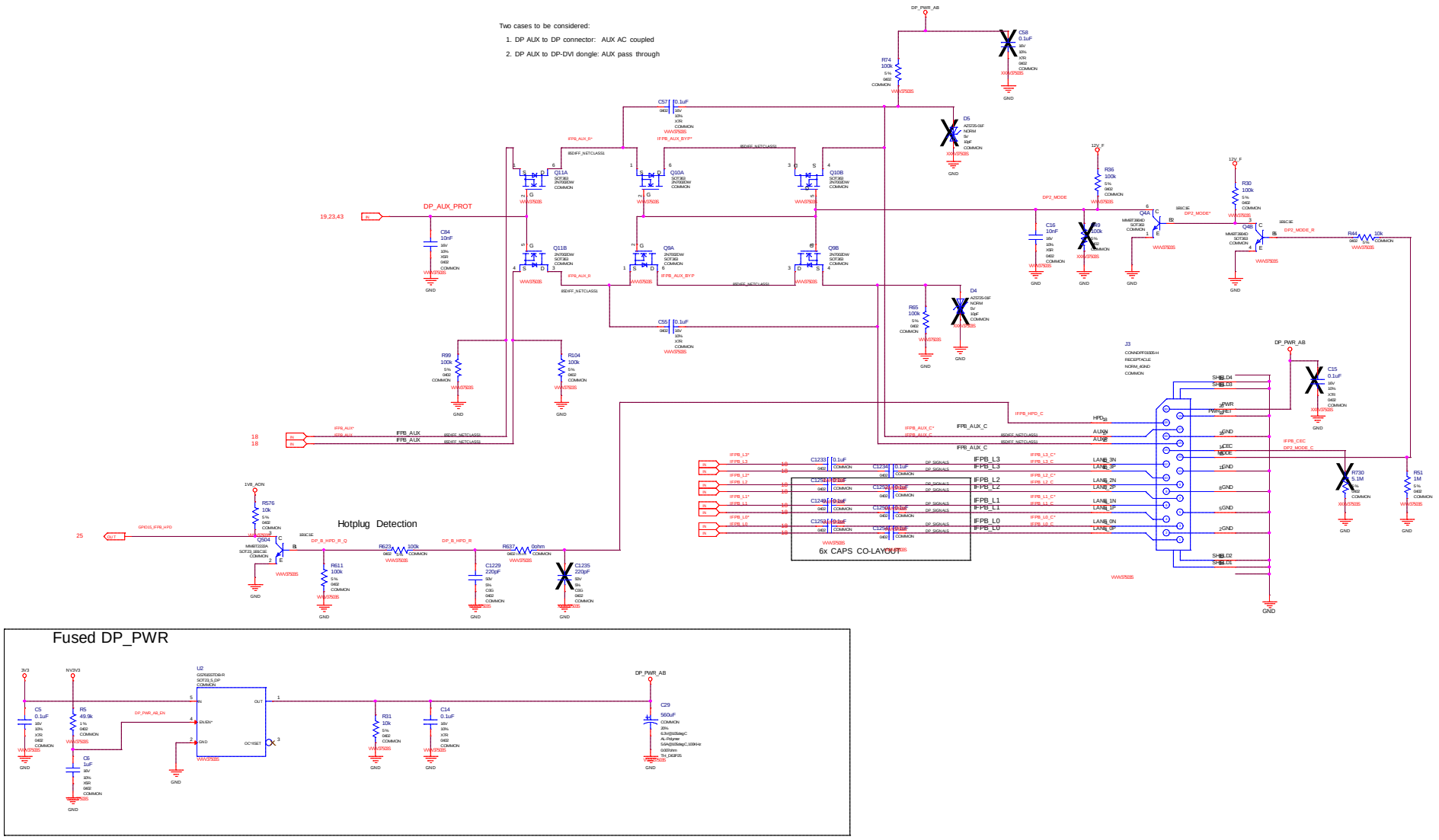

MICRO-STAR INT'L CO.,LTD

MS-V375

Size	Document Description	Rev
Custom	IFPB DP	2.0

Date: Tuesday, December 04, 2018 Sheet 20 of 53

Page20: IFPE & IFPF USB-C NC

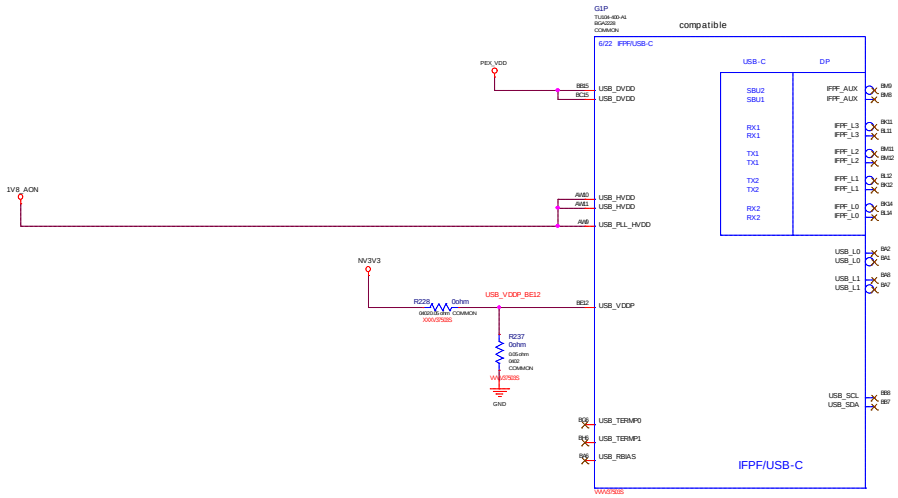

IFPF NC

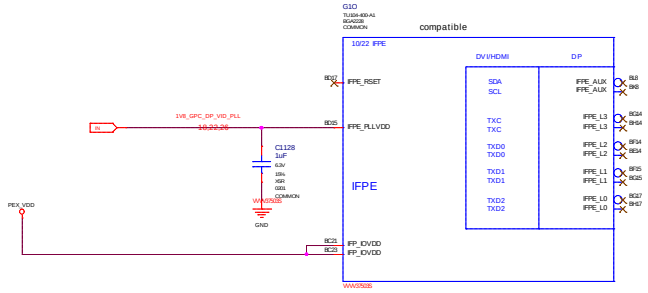

IFPE NC

MICRO-STAR INT'L CO.,LTD		
MS-V375		
Size Custom	Document Description IFPE & IFPF USB-C NC	Rev 2.0
Date: Tuesday, December 04, 2018	Sheet 21 of 53	

21-OCT-2018

Page22: IFPC HDMI

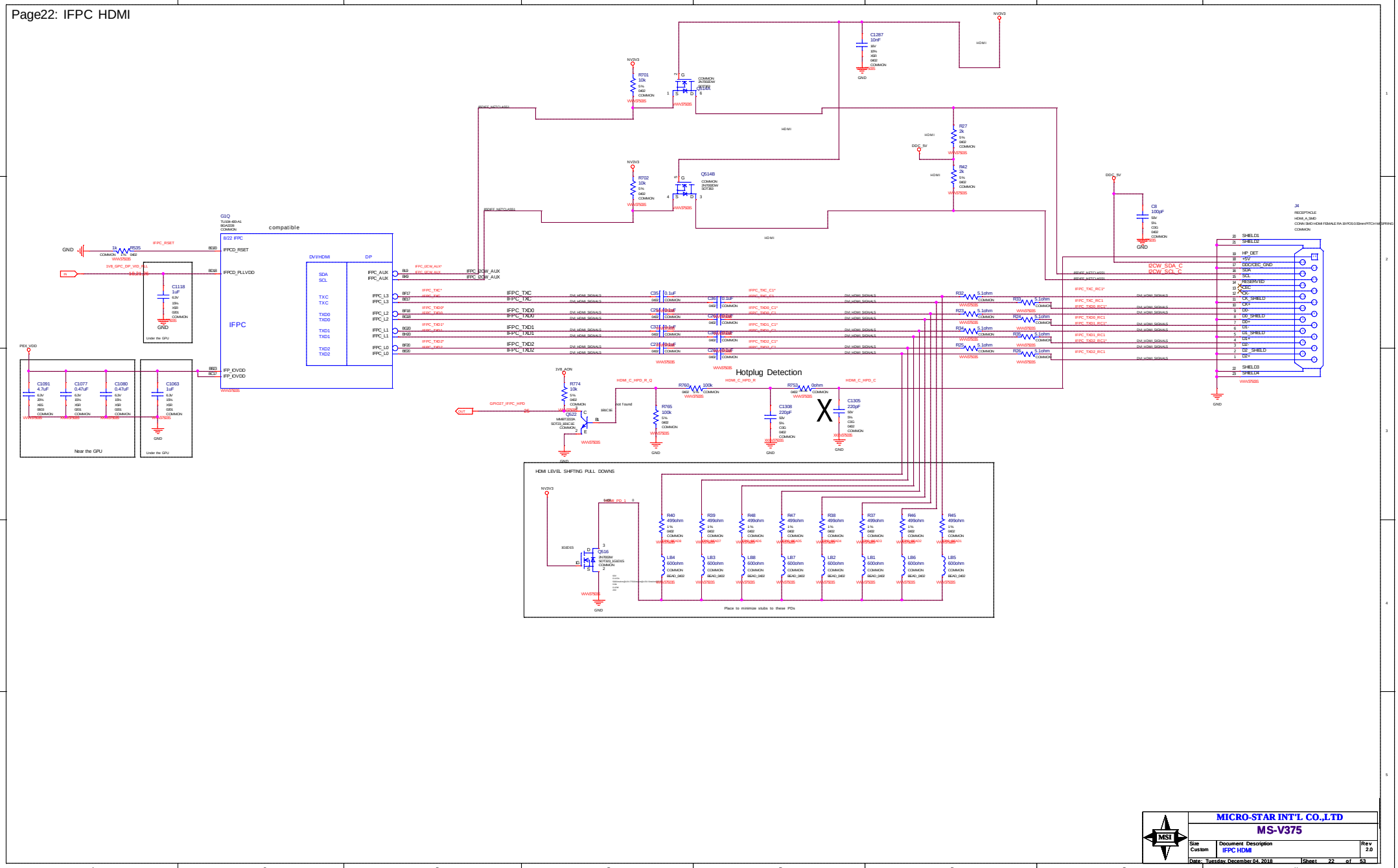

Page23: IFPD DP

Two cases to be considered:

1. DP AUX to DP connector: AUX AC coupled
2. DP AUX to DP-DVI dongle: AUX pass through

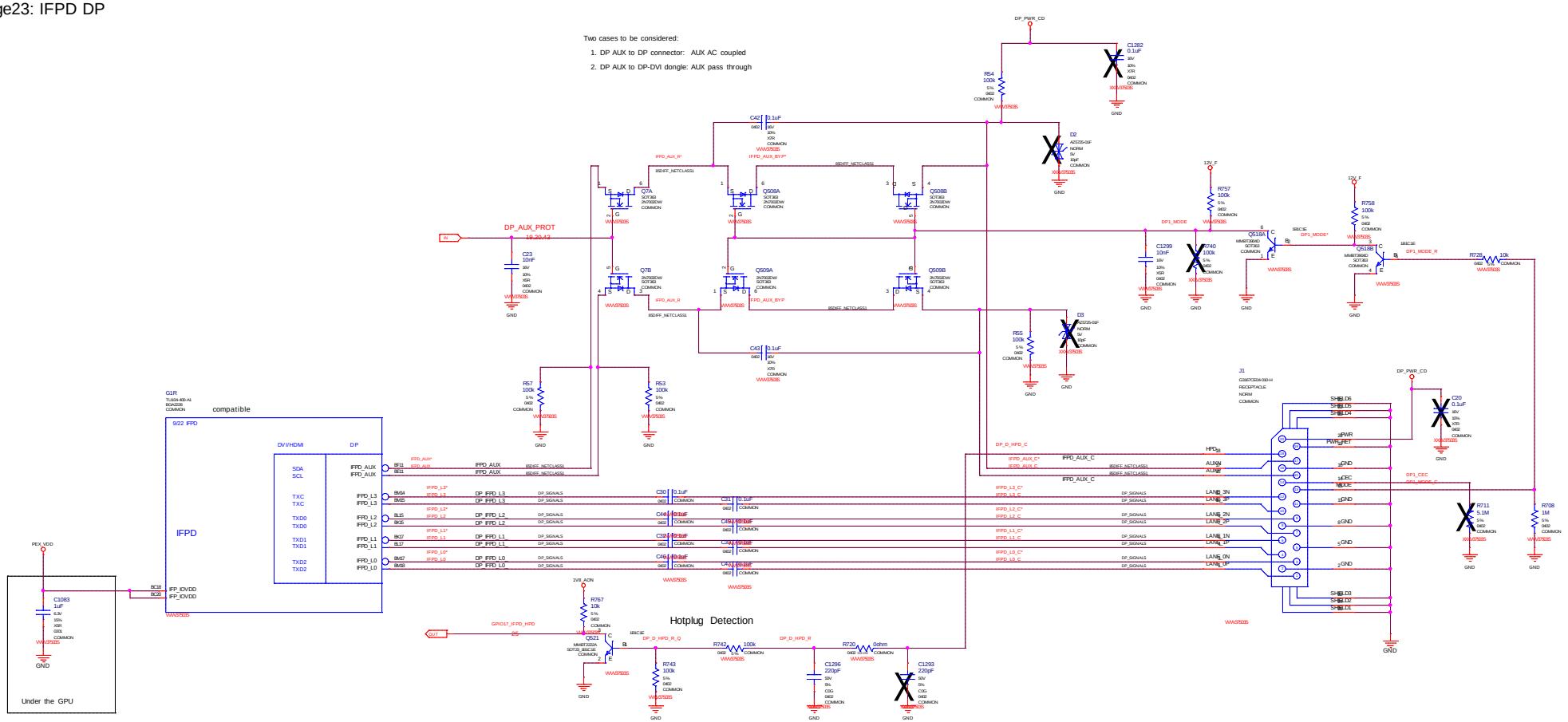

Fused DP_PWR

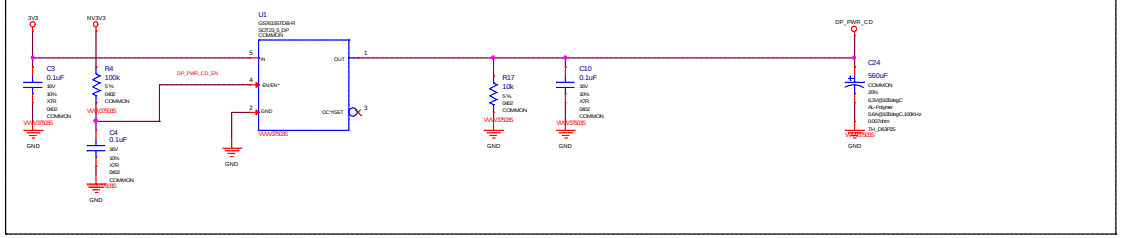

MICRO-STAR INT'L CO.,LTD		
MS-V375		
Size: Custom	Document Description: IFPD DP	Rev: 2.0
Date: Tuesday, December 04, 2018	Sheet 23 of 53	

Page24: NVHS Interface and Frame Lock

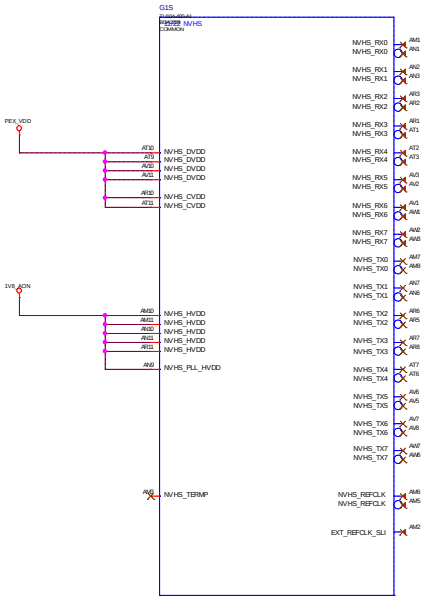

MSI	MICRO-STAR INT'L CO.,LTD	
	MS-V375	
Size: Custom	Document Description: NVHS Interface and Frame Lock	Rev: 2.0
Date: Tuesday, December 04, 2018	Sheet 24 of 53	

Page25: MISC1: Fan, Thermal, JTAG, GPIO

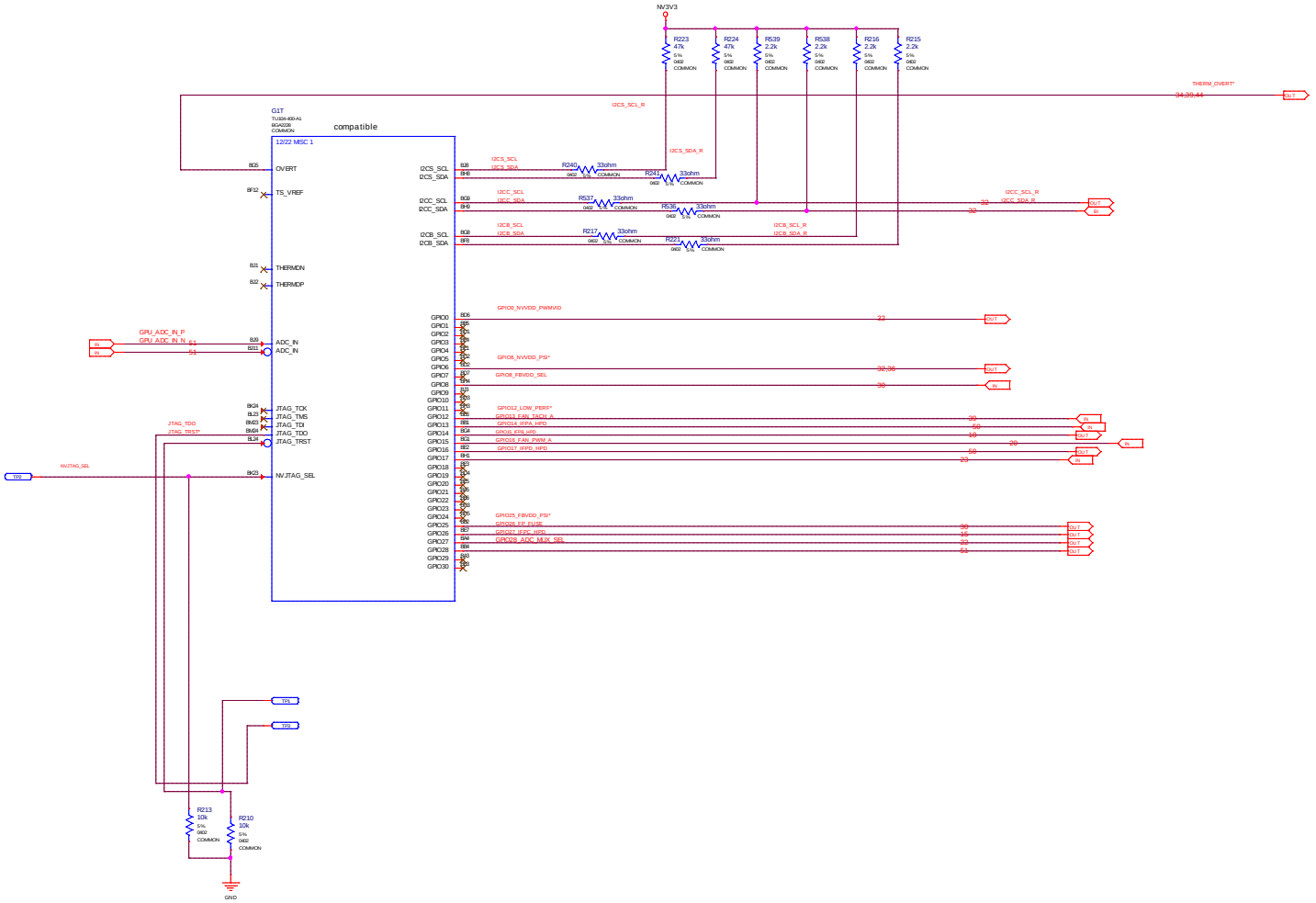

MICRO-STAR INT'L CO.,LTD

MS-V375

Size	Document Description	Rev
Custom	MISC1: Fan, Thermal, JTAG, GPIO	2.0

Date: Tuesday, December 04, 2018 | Sheet 25 of 53

Page26: MISC2: ROM, XTAL, Straps

STRAP2	STRAP1	STRAP0	RAMCFG[4:0]
L	L	L	00000
L	L	H	00001
L	H	L	00010
L	H	H	00011
H	H	L	00110
H	H	H	00111
L	L	M	01000

RAMCFG[4:0]	DENSITY	WIDTH	VENDOR	DIE
00000	8Gb	256-bit	Samsung	C
00001	8Gb	256-bit	Micron	A
00010	8Gb	256-bit	Hynix	M
00011	8Gb	256-bit	Samsung	C
00100	8Gb	256-bit	Micron	A
00101	8Gb	256-bit	Hynix	M
00110	16Gb	256-bit	Samsung	M
00111				

注 意 上 件的MEM Straps

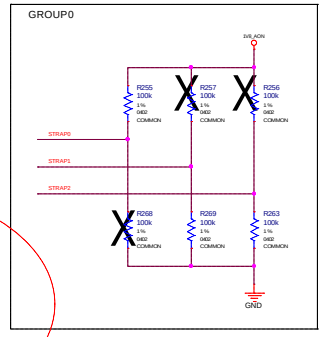

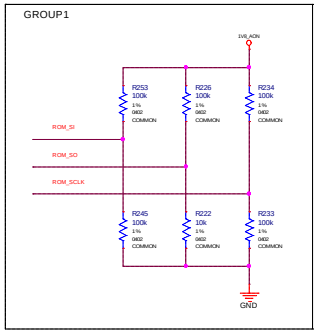

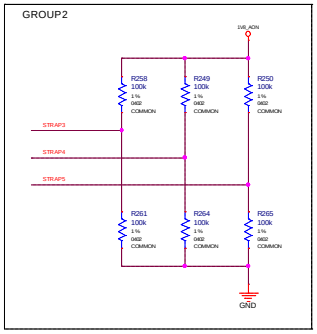

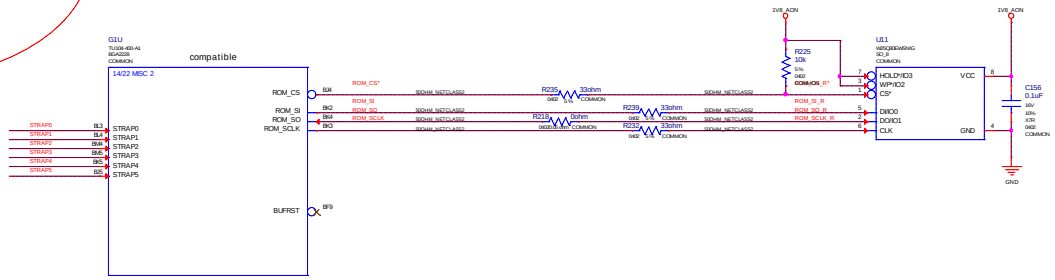

ROM_SO	ROM_SI	ROM_SCLK	DUMMY[2:0],FS_OVERT	1:ENABLE 0:DISABLE	
L	L	L	XXX1	FS_OVERT ENABLE	DEFAULT
L	L	M	XXX0	FS_OVERT DISABLE	

STRAP5	STRAP4	STRAP3	SMB_ALT_ADDR	DEVID_SEL	PCIE_CFG	VGA_DEVICE	
M	H	H	1	1	1	1	
M	H	L	1	1	1	0	
M	L	H	1	1	0	1	
M	L	L	1	1	0	0	
L	H	M	1	0	1	1	
L	M	H	1	0	1	0	
L	M	L	1	0	0	1	
L	L	M	1	0	0	0	
H	H	H	0	1	1	1	
H	H	L	0	1	1	0	
H	L	H	0	1	0	1	
H	L	L	0	1	0	0	
L	H	H	0	0	1	1	
L	H	L	0	0	1	0	
L	L	H	0	0	0	1	DEFAULT
L	L	L	0	0	0	0	

H=High :Tied to 1.8V
M=Middle:Tied to 0.9V
L=Low :Tied to 0V

1:SMB_ALT_ADDR ENABLE
0:SMB_ALT_ADDR DISABLE

1:DEVID_SEL REBRAND
0:DEVID_SEL ORIGNAL

1:PCIE_CFG LOW POWER
0:PCIE_CFG HIGH POWER

1:VGA_DEVICE ENABLE
0:VGA_DEVICE DISABLE

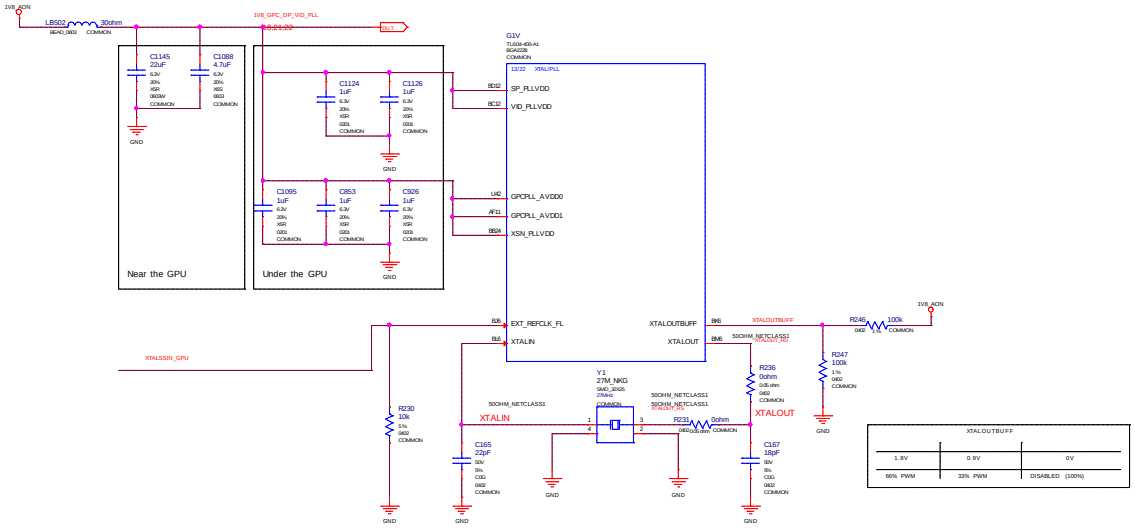

XTALOUTBUFF		
1.8V	0.9V	0V
66% PWM	33% PWM	DISABLED (100%)

MSI	MICRO-STAR INT'L CO.,LTD	
	MS-V375	
Size Custom	Document Description MISC2: ROM, XTAL, Straps	Rev 2.0
Date: Tuesday, December 04, 2018	Sheet 26 of 53	

1v8 Switcher

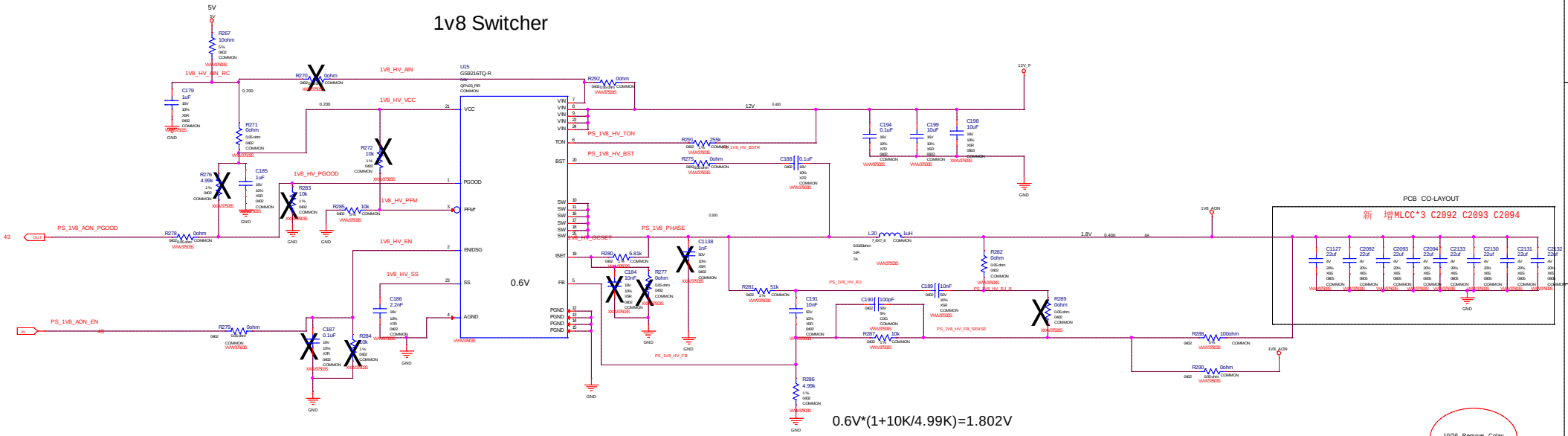

PCB CO-LAYOUT

新 增MLCC*3 C2092 C2093 C2094

C1127 22uF C2092 22uF C2093 22uF C2094 22uF C2133 22uF C2130 22uF C2131 22uF C2132 22uF

0.6V*(1+10K/4.99K)=1.802V

10/26 Remove Colay

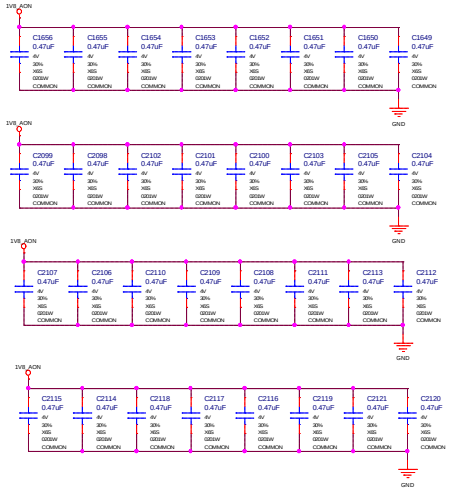

MICRO-STAR INT'L CO.,LTD

MS-V375

Size	Document Description	Rev
Custom	PS: 1V8_AON	2.0

Date: Tuesday, December 04, 2018 Sheet 27 of 53

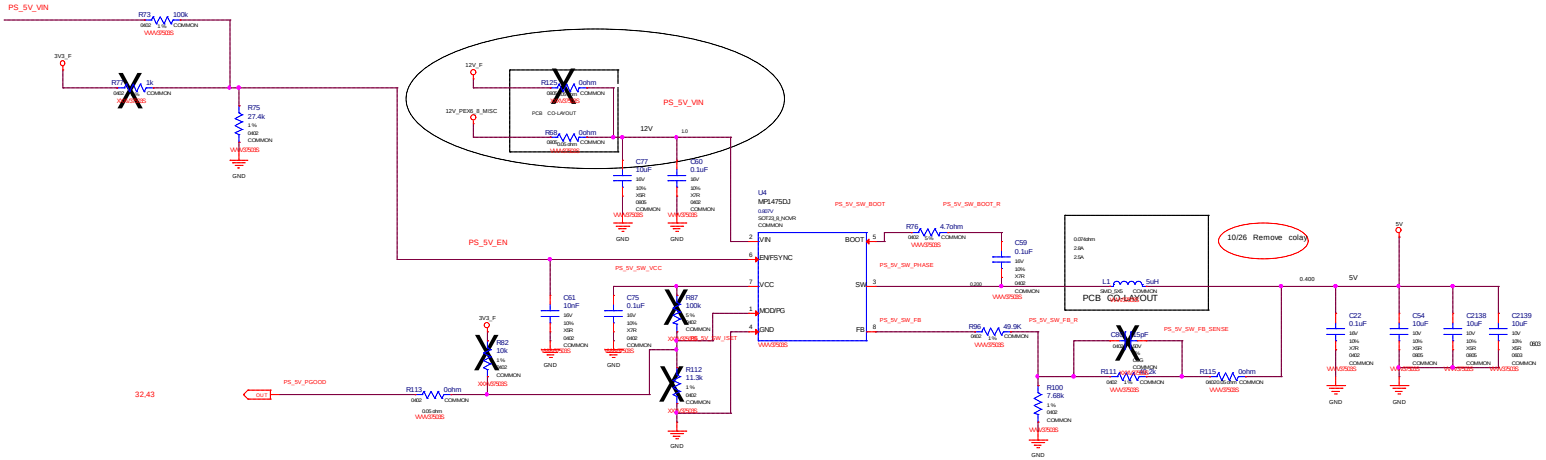

0.8V*(1+40.2K/7.68K)=4.9875V

MICRO-STAR INT'L CO.,LTD

MS-V375

Size	Document Description	Rev
Custom	PS: 5V	2.0

Date: Tuesday, December 04, 2018 Sheet 28 of 53

Page29: PS: PEXVDD

PEX Switcher

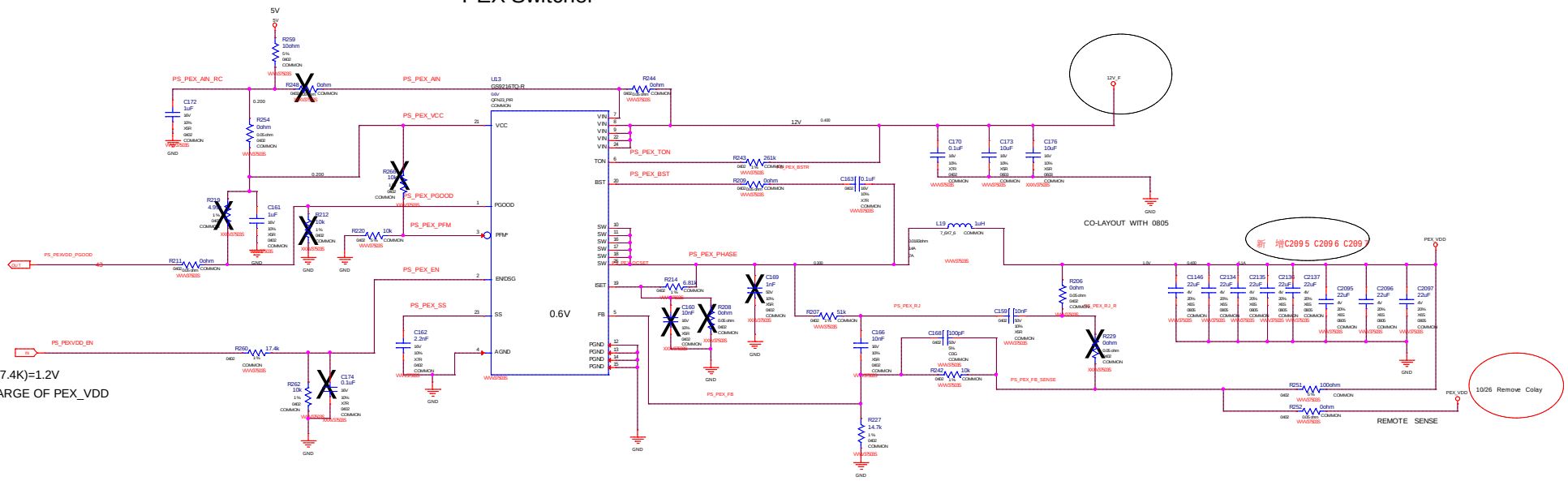

EN: 3.3V*(10K/27.4K)=1.2V

ENABLE DISCHARGE OF PEX_VDD

0.6V*(1+10K/14.7K)=1.008V

MICRO-STAR INT'L CO.,LTD	
MS-V375	
Size: Custom	Document Description: PS: PEXVDD — Rev 2.0
Date: Tuesday, December 04, 2018	Sheet 29 of 53

Page30: PS: FBVDDQ

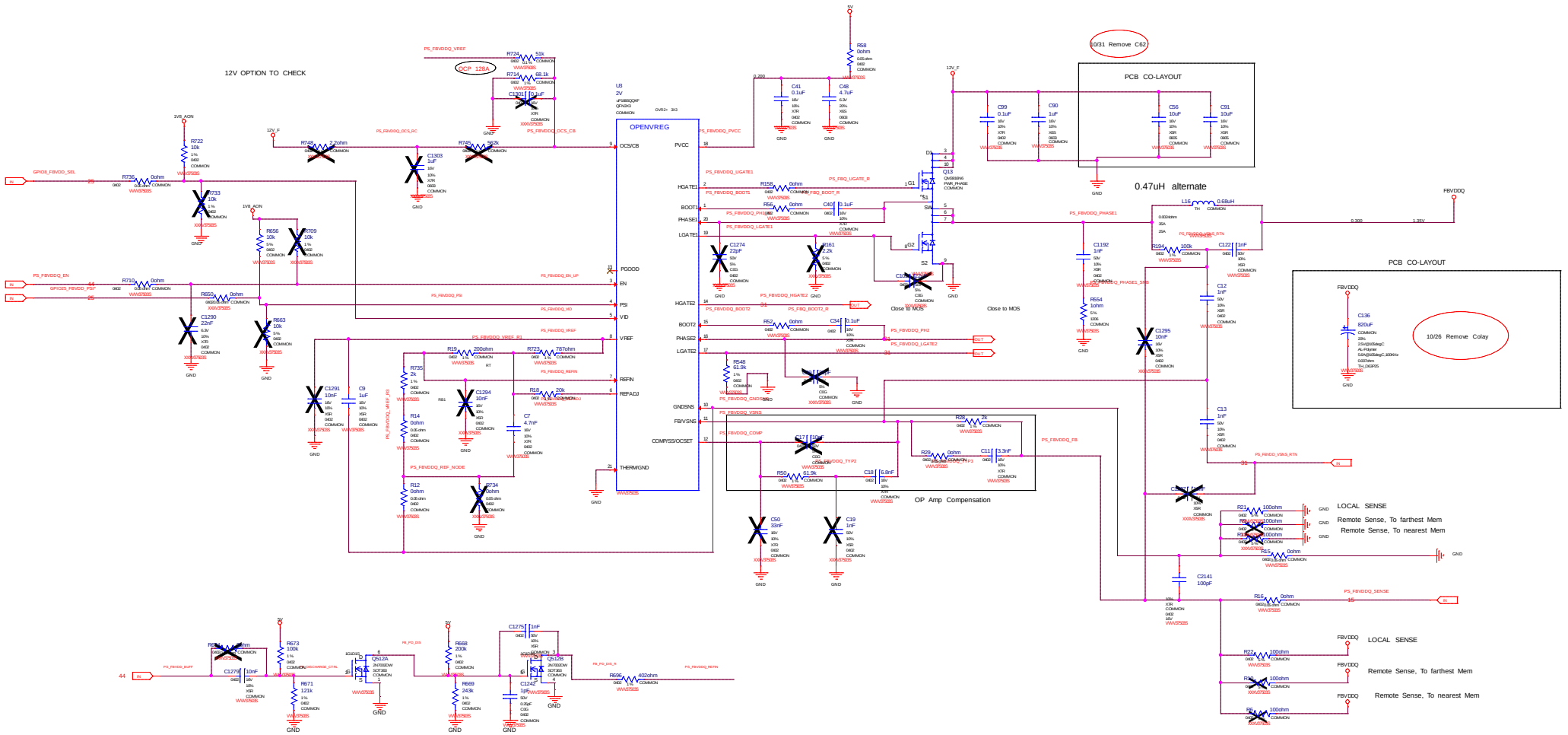

MICRO-STAR INT'L CO.,LTD	
MS-V375	
Size: Custom	Document Description: PS: FBVDDQ
Rev: 2.0	
Date: Tuesday, December 04, 2018	Sheet 30 of 53

Page31: PS: FBVDDQ PH2

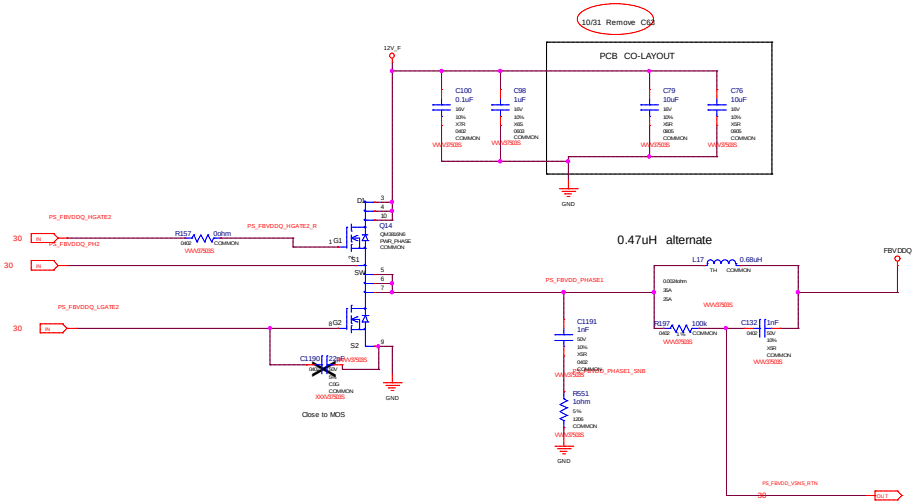

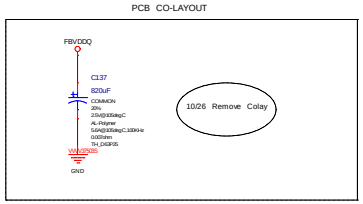

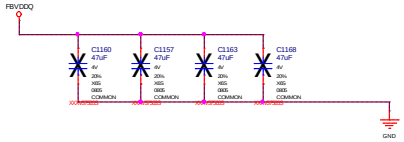

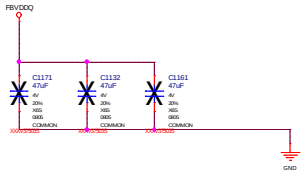

MSI	MICRO-STAR INT'L CO.,LTD	
	MS-V375	
Size: Custom	Document Description: PS: FBVDDQ PH2	Rev: 2.0
Date: Tuesday, December 04, 2018	Sheet 31 of 53	

Page32: PS: NVVDD CTR

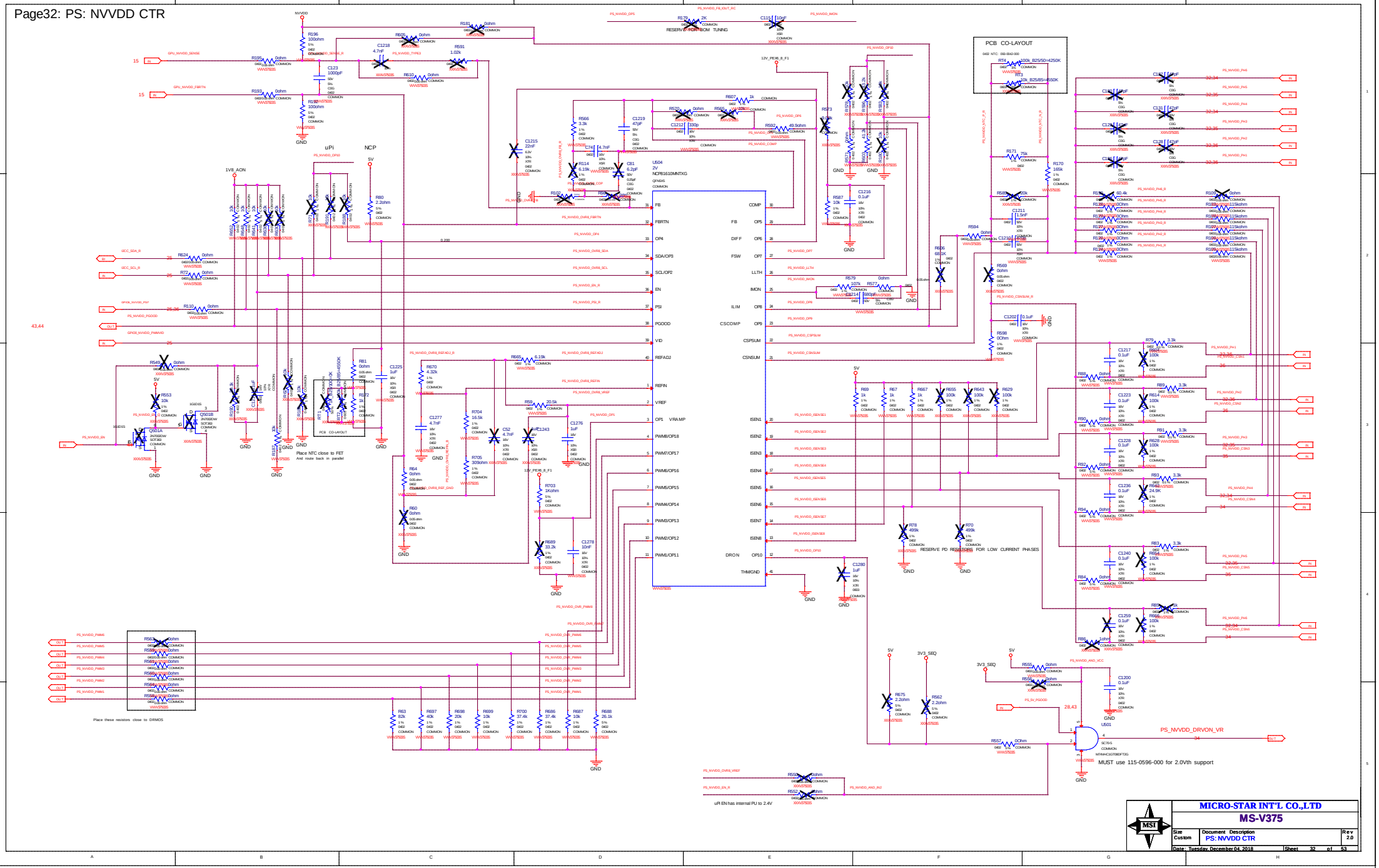

DROP OVR3i SOLUTION

Page34: PS: NVVDD PH6&4

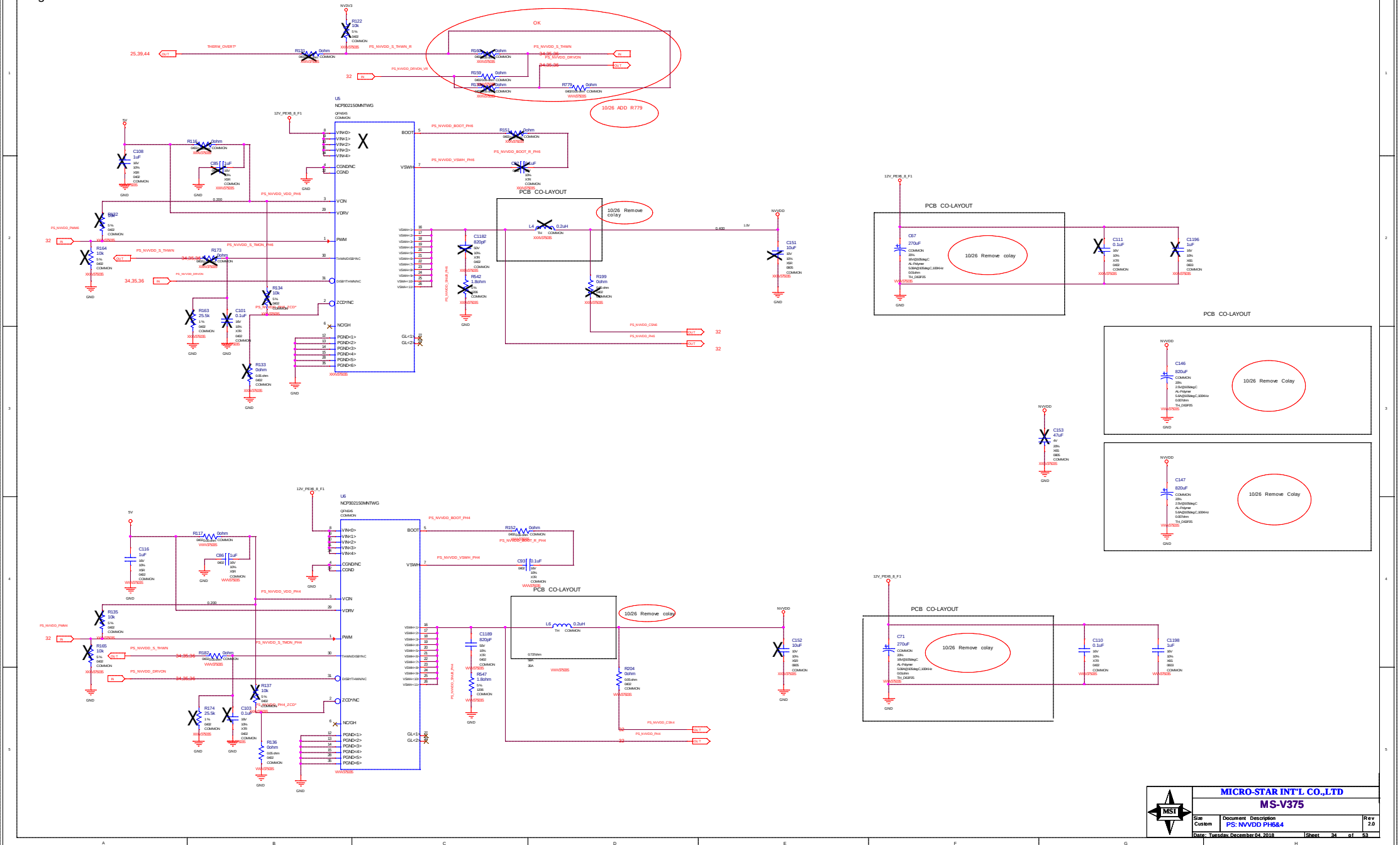

MICRO-STAR INT'L CO.,LTD

MS-V375

Size	Document Description	Rev
Custom	PS: NVVDD PH6&4	2.0

Date: Tuesday, December 04, 2018 | Sheet 34 of 53

Page35: PS: NVVDD PH3&5

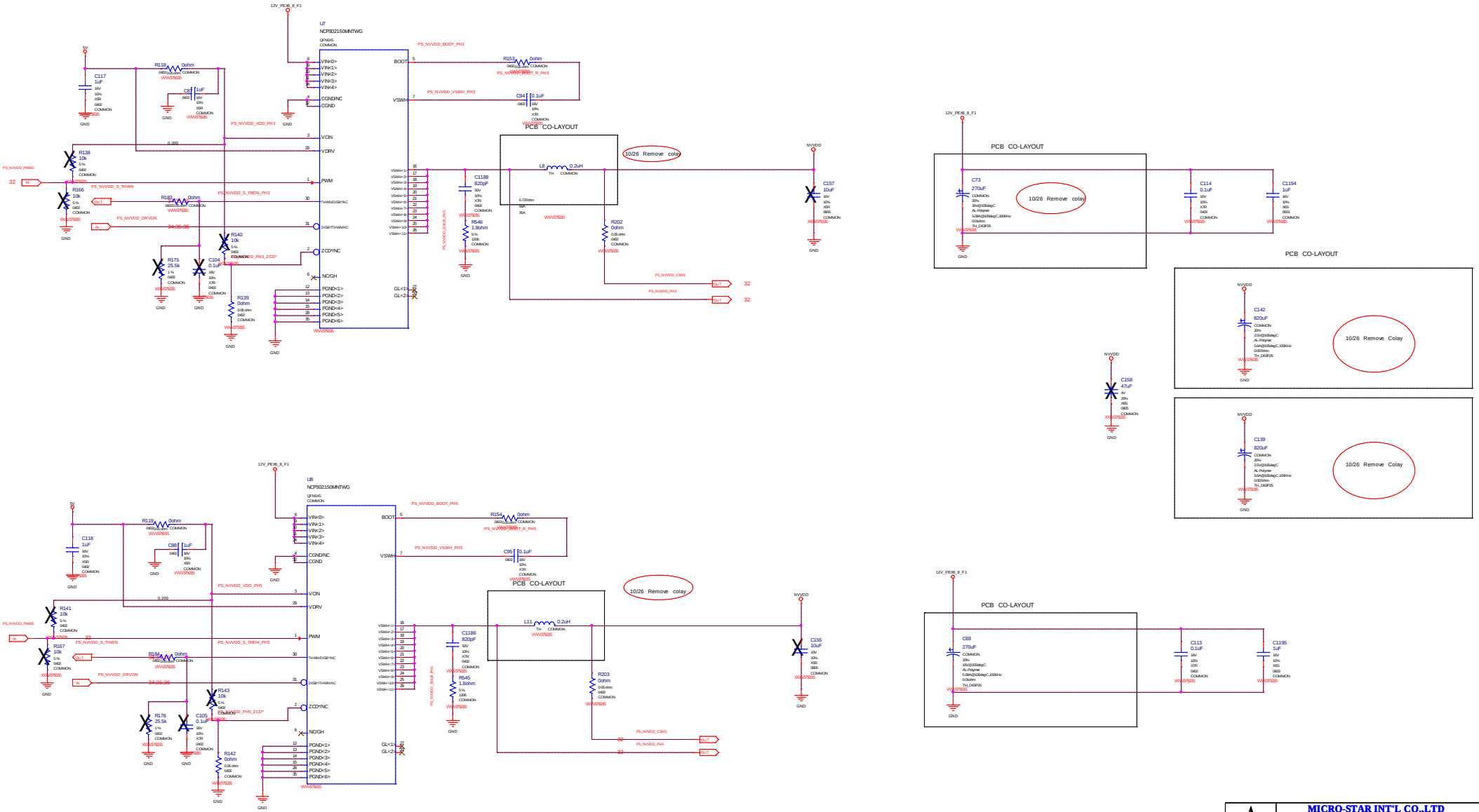

MICRO-STAR INT'L CO.,LTD		
MS-V375		
Size: Custom	Document Description: PS: NVVDD PH3&5	Rev: 2.0
Date: Tuesday, December 04, 2018	Sheet 35 of 53	

Page36: PS: NVVDD PH2&1

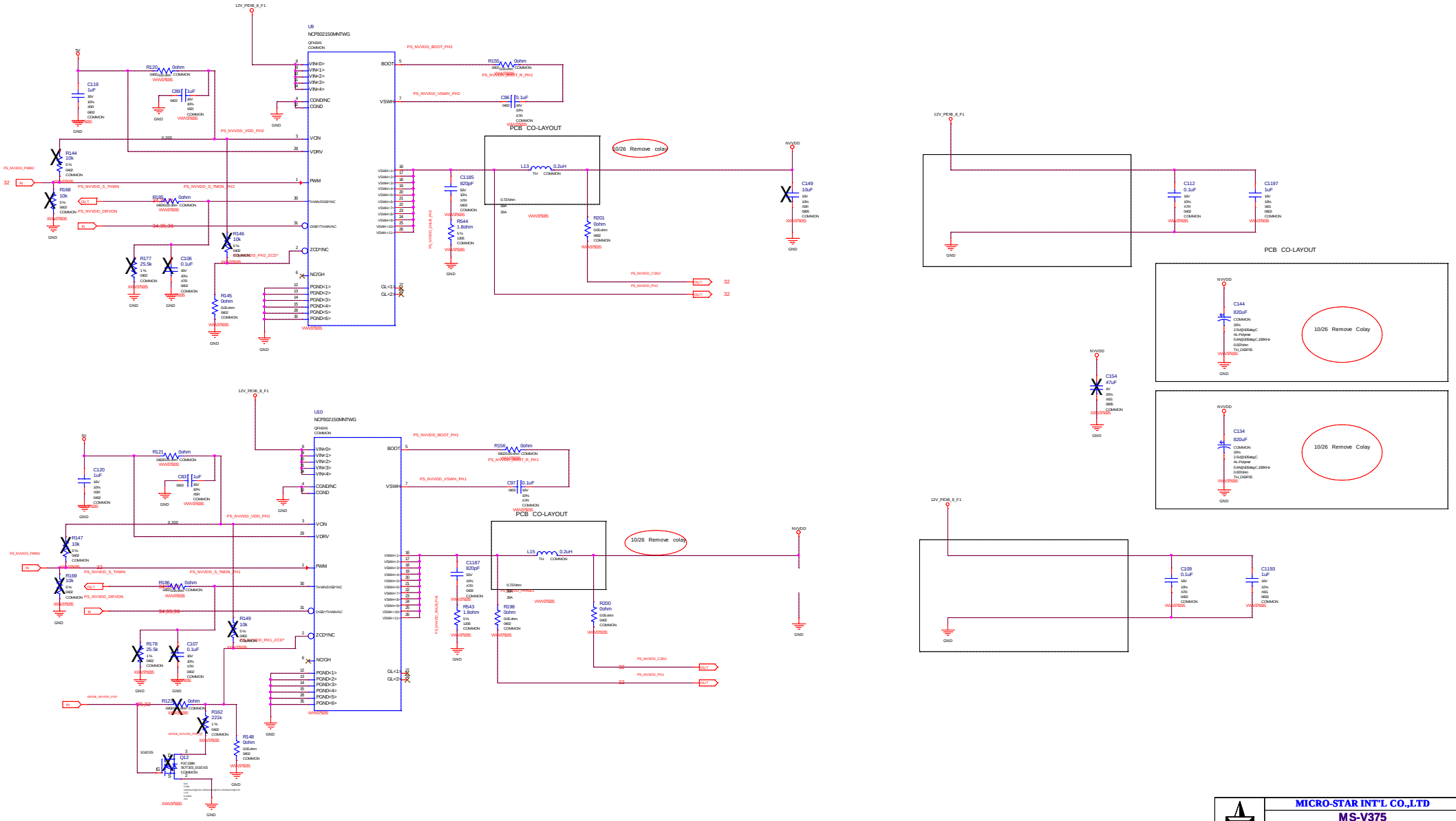

MICRO-STAR INT'L CO.,LTD

MS-V375

Size	Document Description	Rev
Custom	NVVDD PH2&1	2.0

Date: Tuesday, December 04, 2018 | Sheet 36 of 53

DELETE RAIL BALANCE CIRCUIT

Page38: PS: Inputs, Filtering, and Monitoring

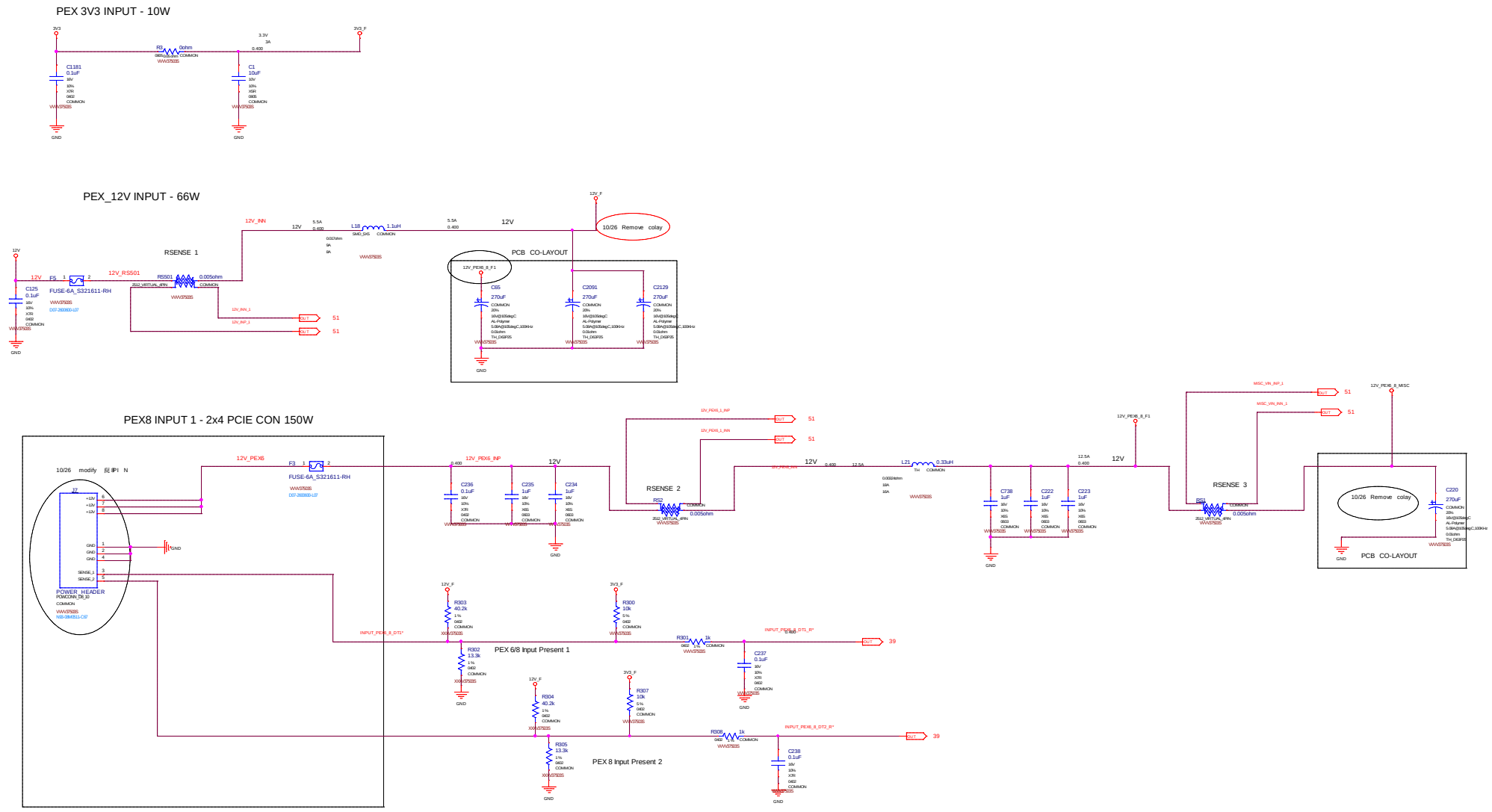

MICRO-STAR INT'L CO.,LTD		
MS-V375		
Size: Custom	Document Description: PS: Inputs, Filtering, and Monitoring	Rev: 2.0
Date: Tuesday, December 04, 2018	Sheet 38 of 53	

Page39: PS: HOT-UNPLUG, UNDER POWER BOOT, CURRENT STEERING

PEX Input Present 1

POWER CONNECTOR HOT-UNPLUG DETECT

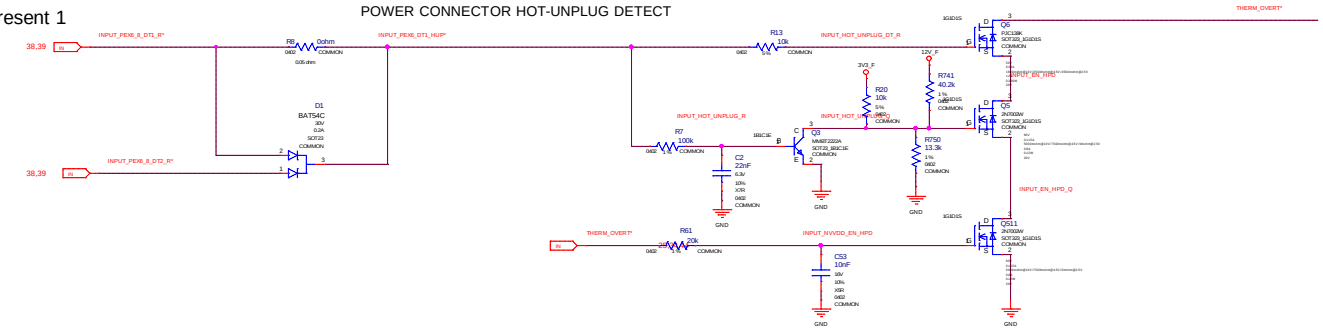

12V CURRENT STEERING (UNDER POWER BOOT):

GUIDES CURRENT FROM PEX EDGE TO PEX 6 PIN INPUT AREA

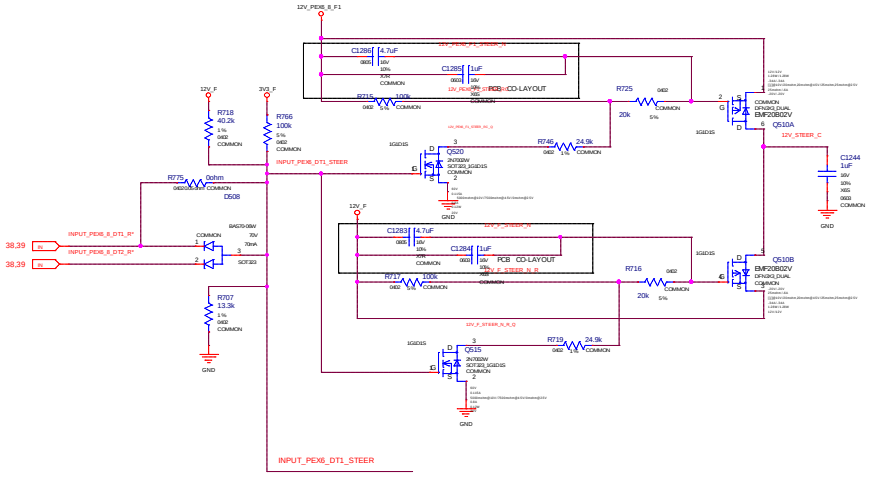

PEX Input - Power Level/PSI* Control

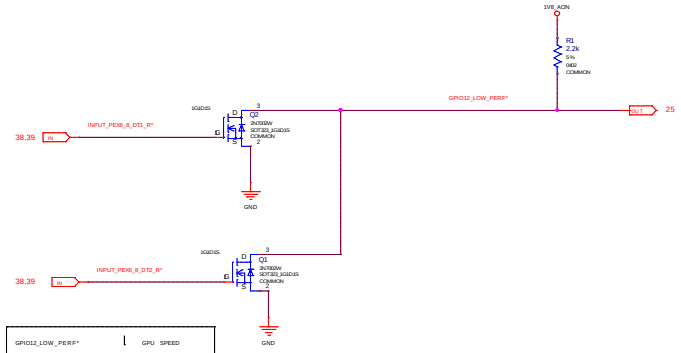

GPIO12_LOW_PERF*	GPU SPEED
0	Slow
1	Normal

MICRO-STAR INT'L CO.,LTD		
MS-V375		
Size: Custom	Document Description: PS: HOT-UNPLUG, UNDER POWER BOOT	Rev: 2.0
Date: Tuesday, December 04, 2018	Sheet 39 of 53	

Page40: BUCKBOOST

MSI	MICRO-STAR INT'L CO.,LTD	
	MS-V375	
Size: Custom	Document Description: BUCKBOOST	Rev: 2.0
Date: Tuesday, December 04, 2018	Sheet 40 of 53	

Page41: PPC

MICRO-STAR INT'L CO.,LTD

MS-V375

Size	Document Description	Rev
Custom	PPC	2.0

Date: Tuesday, December 04, 2018 Sheet 41 of 53

Page42: 12V & 3V3_A SWITCHER

MICRO-STAR INT'L CO.,LTD

MS-V375

Size	Document Description	Rev
Custom	12V & 3V3_A SWITCHER	2.0

Date: Tuesday, December 04, 2018 Sheet 42 of 53

Page43: SEQ:5V,1V8,NV3V3 ENABLE

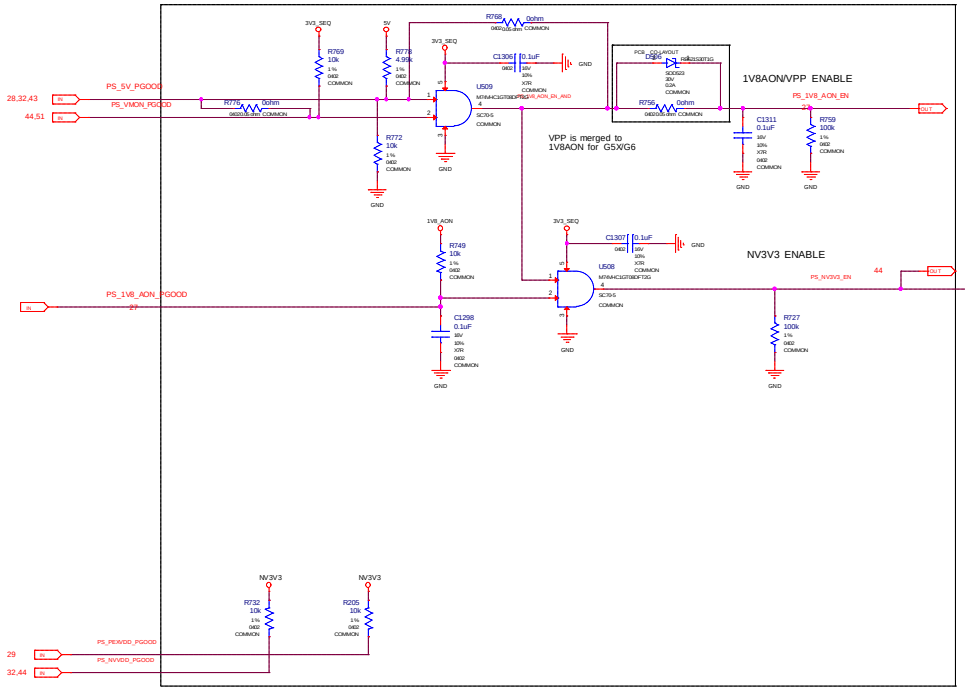

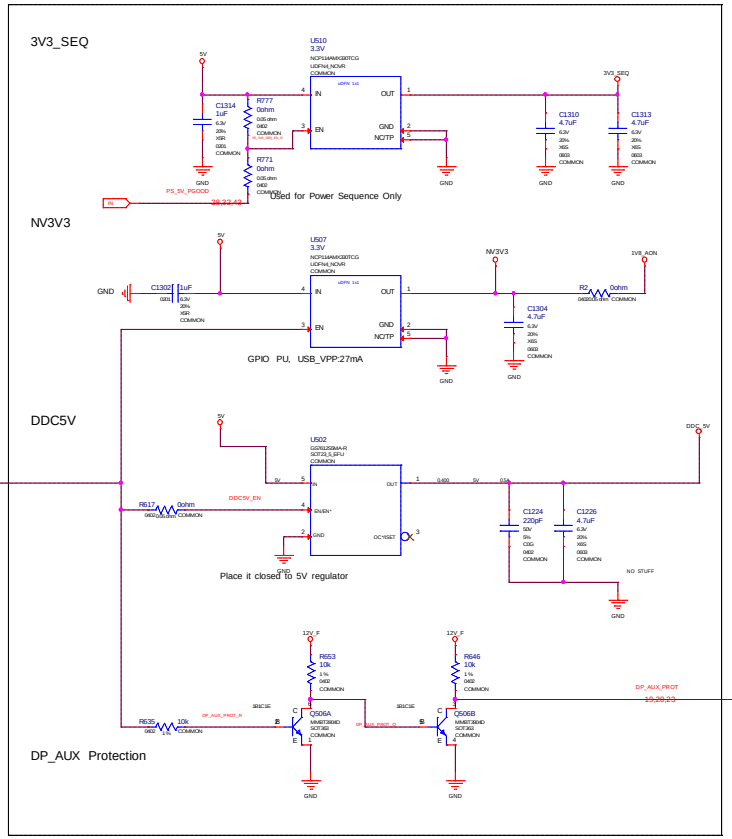

MICRO-STAR INT'L CO.,LTD

MS-V375

Size	Document Description	Rev
Custom	SEQ:5V,1V8,NV3V3 ENABLE	2.0

Date: Tuesday, December 04, 2018 | Sheet 43 of 53

Page44: SEQ:NV,PEX,FB ENABLE

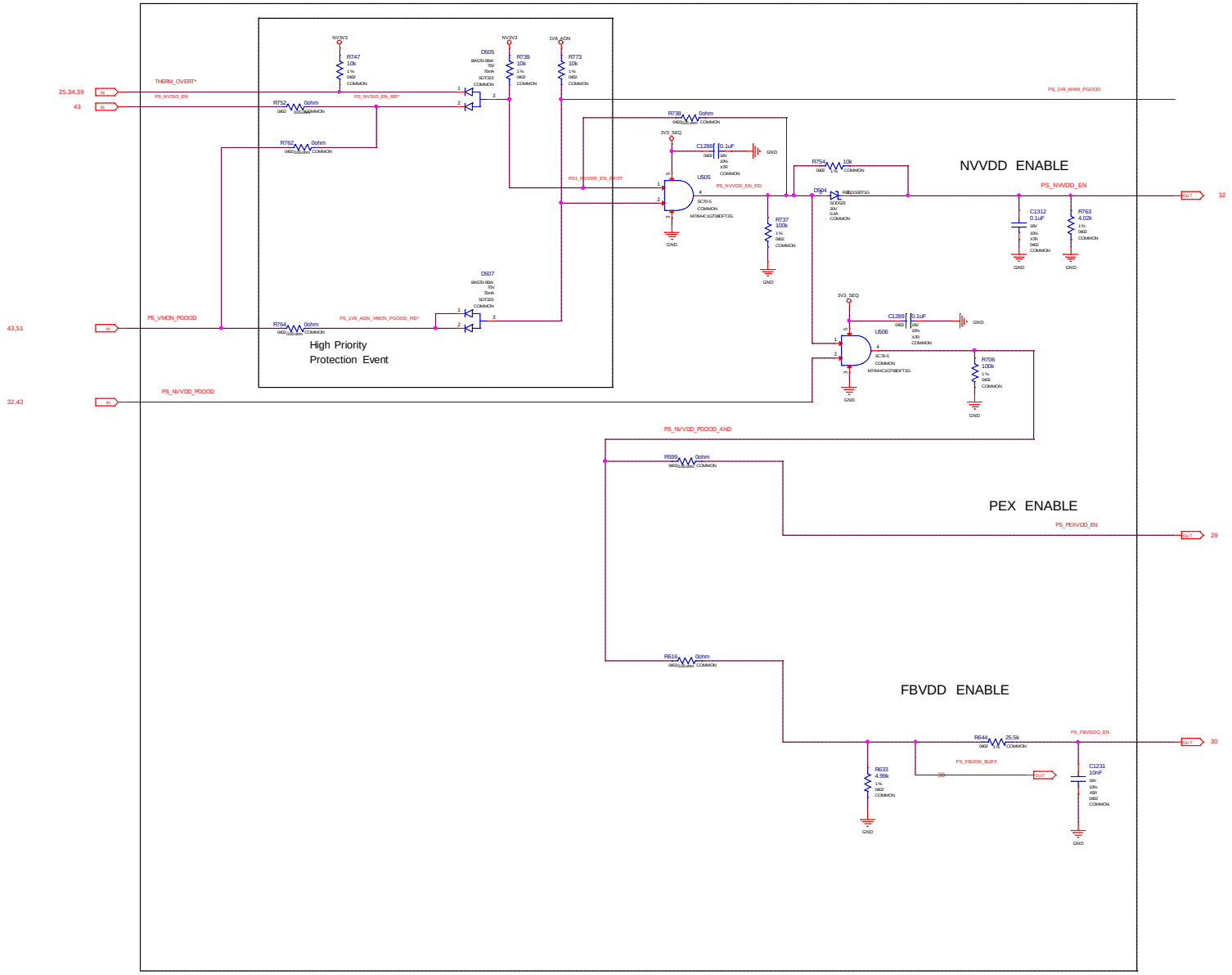

MSI	MICRO-STAR INT'L CO.,LTD	
	MS-V375	
Size: Custom	Document Description: SEQ:NV,PEX,FB ENABLE	Rev: 2.0
Date: Tuesday, December 04, 2018	Sheet 44 of 53	

Page45: SEQUENCE:Voltage Monitor

MICRO-STAR INT'L CO.,LTD

MS-V375

Size	Document Description	Rev
Custom	SEQUENCE:Voltage Monitor	2.0

Date: Tuesday, December 04, 2018 Sheet 45 of 53

Page46: SEQUENCE:Discharge

MSI	MICRO-STAR INT'L CO.,LTD	
	MS-V375	
Size: Custom	Document Description: SEQUENCE:Discharge	Rev: 2.0
	Date: Tuesday, December 04, 2018	Sheet 46 of 53

PEX_CLKREQ*

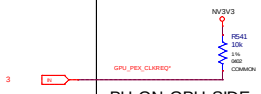

PU ON GPU SIDE

NC ON GOLD FINGER SIDE

GPU_WAKE*

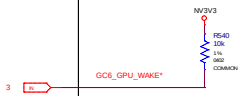

PU ON GPU SIDE

NC ON GOLD FINGER SIDE

PEX_RST# LOGIC

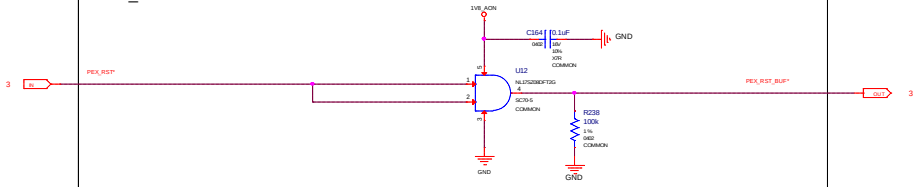

MICRO-STAR INT'L CO.,LTD

MS-V375

Size	Document Description	Rev
Custom	SEQUENCE:MISC	2.0

Date: Tuesday, December 04, 2018 | Sheet 47 of 53

Page48: LOGO LED

MSI	MICRO-STAR INT'L CO.,LTD	
	MS-V375	
Size: Custom	Document Description: LOGO LED	Rev: 2.0
Date: Tuesday, December 04, 2018	Sheet 48 of 53	

Page49: LED DRIVER & Boost

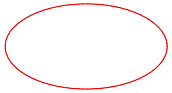

MICRO-STAR INT'L CO.,LTD

MS-V375

Size	Document Description	Rev
Custom	LED DRIVER & Boost	2.0

Date: Tuesday, December 04, 2018 Sheet 49 of 53

Page50: FAN

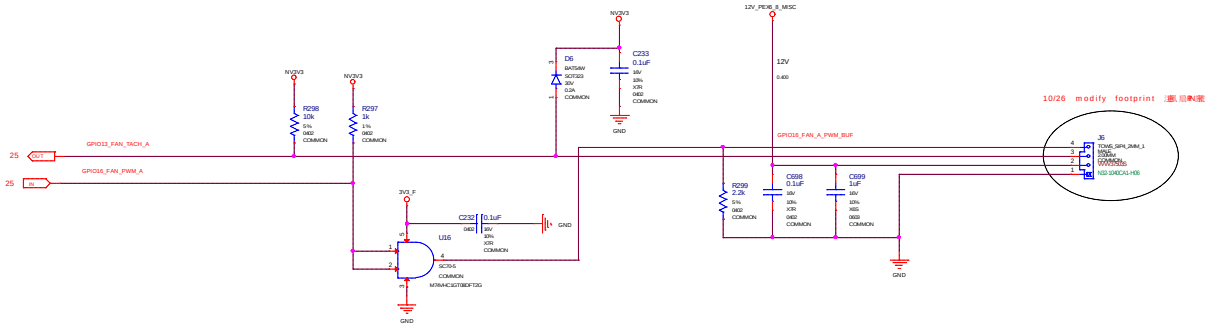

MSI	MICRO-STAR INT'L CO.,LTD	
	MS-V375	
Size: Custom	Document Description: FAN	Rev: 2.0
Date: Tuesday, December 04, 2018	Sheet 50 of 53	

Page51: PWR SENSE

MODE PIN STATUS	MULTIPLEXER OPERATION
LOW	DEVICE A
TRI-STATE(FLOATING)	STAND-ALONE
HIGH	DEVICE B

ENABLE PIN STATUS	MULTIPLEXER OPERATION
LOW	FULLY FUNCTIONAL
TRI-STATE(FLOATING)	LIMITTED FUNCTION
HIGH	STANDBY

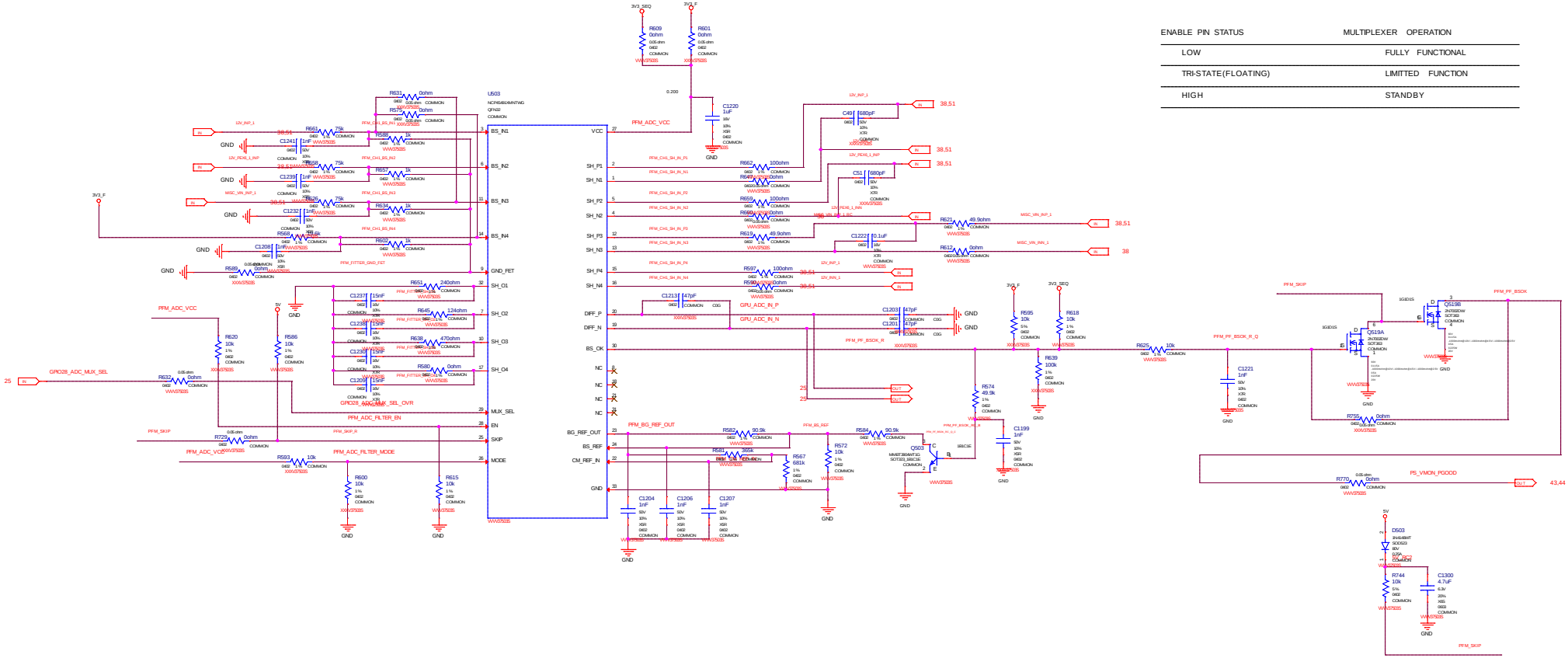

MICRO-STAR INT'L CO.,LTD		
MS-V375		
Size: Custom	Document Description: PWR SENSE	Rev: 2.0
Date: Tuesday, December 04, 2018	Sheet 51 of 53	

Bracket:

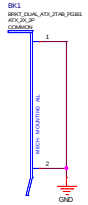

MOUNTING HOLES FOR HS:

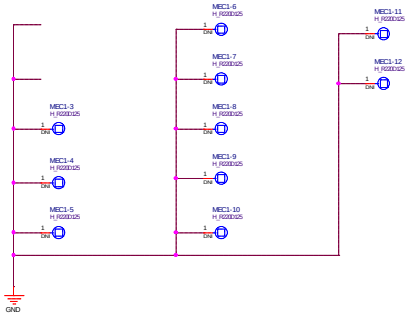

BACK STIFFENER:

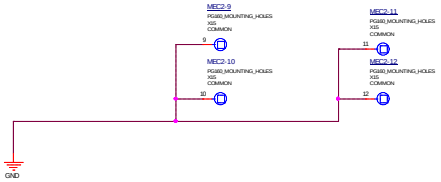

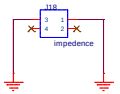

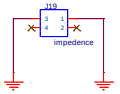

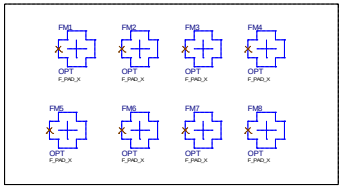

MICRO-STAR INT'L CO.,LTD		
MS-V375		
Size: Custom	Document Description: MECH	Rev: 2.0
Date: Tuesday, December 04, 2018	Sheet 52 of 53	

Page53: PTC

MSI	MICRO-STAR INT'L CO.,LTD		
	MS-V375		
Size Custom	Document Description PTC		Rev 2.0
Date: Tuesday, December 04, 2018	Sheet 53 of 53		