PG161-A00

TU106 6GB GDDR6, 192b, X16
DVI-D/DP + DP + HDMI

TABLE OF CONTENTS

Page	Description
1	Table of Contents
2	Block Diagram
3	PCI Express
4	PCIE RC TERM
5	MEMORY: GPU FB_AB
6	MEMORY: FBA[31:0]
7	MEMORY: FBA[63:32]
8	MEMORY: FBB[31:0]
9	MEMORY: FBB[63:32]
10	MEMORY: GPU FB_CD
11	MEMORY: FBC[31:0]
12	MEMORY: FBC[63:32]
13	MEMORY: FBD[31:0]
14	MEMORY: FBD[63:32]
15	GPU PWR & GND
16	GPU Decoupling
17	GPU Decoupling2
18	IO: IFPAB DVI-D-DL
19	IO: IFPA DP
20	IO: IFPB DP
21	IO: IFPE & IFPF USBC NC
22	IO: IFPC HDMI
23	IO: IFPD DP
24	IO: NVHS Interface and Frame Lock
25	MISC1: Thermal, JTAG, GPIO,STEREO
26	MISC2: ROM, XTAL,STRAPS
27	PS: 1V8_AON
28	PS: 5V
29	PS: PEXVDD
30	PS: FBVDDQ
31	PS: FBVDDQ PH2
32	PS: NVVDD Controller
33	PS: NVVDD Controller OVR3i
34	PS: NVVDD Phase 6,4
35	PS: NVVDD Phase 3,5
36	PS: NVVDD Phase 2,1
37	PS: Input Power Balancing Switcher
38	PS: Input, Filtering, and Monitoring
39	PS: STEERING, UPB & HOT-UNPLUG
40	PS: Type-C BuckBoost
41	PD PPC
42	PS: 12V & 3V3_A SWITCHER
43	SEQ: 5V, 1V8, NV3V3 ENABLE
44	SEQ: NV, PEX, FB ENABLE
45	SEQ: VOLTAGE MONITOR
46	SEQ: DISCHARGE
47	SEQ: MISC
48	LOGO LED
49	LED DRIVER & BOOST
50	FAN
51	PS: Pre-filter
52	MECH
53	PTC

V375-20
1. 移除 CO-LAY
2. Core Power: uP9512SQKI (QFN 4x4) + (NCP302045 x 4)
   Memory Power: I32-S725602-N03 + (UBIQ 3103+3107*2)
3. P.34 add R779
4. P.30 & 44 移除PS_FBVDD_BUFF換頁符號
   換 FBVDD controller ，換成1PHASE 上1下2
5. P.52 add HDMI & DVI 螺絲
6. IO 換常用料，footprint 不變

V379-10
線路：
1. 基於V375-1.2刪除GDDR6貼PG165 SKU0 GDDR5線路，
   拉GPIO10做VREF。
2. DRAM Power MOSFET改成Dual-N MOSFET。
物料：
1. 基於V375-58S DRAM PWM換成NIKO / GS7222
   並調成GDDR5電壓準位，相數2改1。
2. Core Power相數4改3。
3. OVR-M換UPI / US5650。

ALL NVIDIA DESIGN SPECIFICATIONS, REFERENCE SPECIFICATIONS, REFERENCE BOARDS, FILES, DRAWINGS, DIAGNOSTICS, LISTS AND OTHER DOCUMENTS OR INFORMATION (TOGETHER AND SEPARATELY, "MATERIALS") ARE BEING PROVIDED "AS IS". THE MATERIALS MAY CONTAIN KNOWN AND UNKNOWN VIOLATIONS OR DEVIATIONS OF INDUSTRY STANDARDS AND SPECIFICATIONS. NVIDIA MAKES NO WARRANTIES, EXPRESSED, IMPLIED, STATUTORY OR OTHERWISE WITH RESPECT TO THE MATERIALS OR OTHERWISE, AND EXPRESSLY DISCLAIMS ALL IMPLIED WARRANTIES INCLUDING, WITHOUT LIMITATION, THE WARRANTIES OF DESIGN, OF NONINFRINGEMENT, MERCHANTABILITY OR FITNESS FOR A PARTICULAR PURPOSE, OR ARISING FROM A COURSE OF DEALING, TRADE USAGE, TRADE PRACTICE, OR INDUSTRY STANDARDS.

Page2: Block Diagram

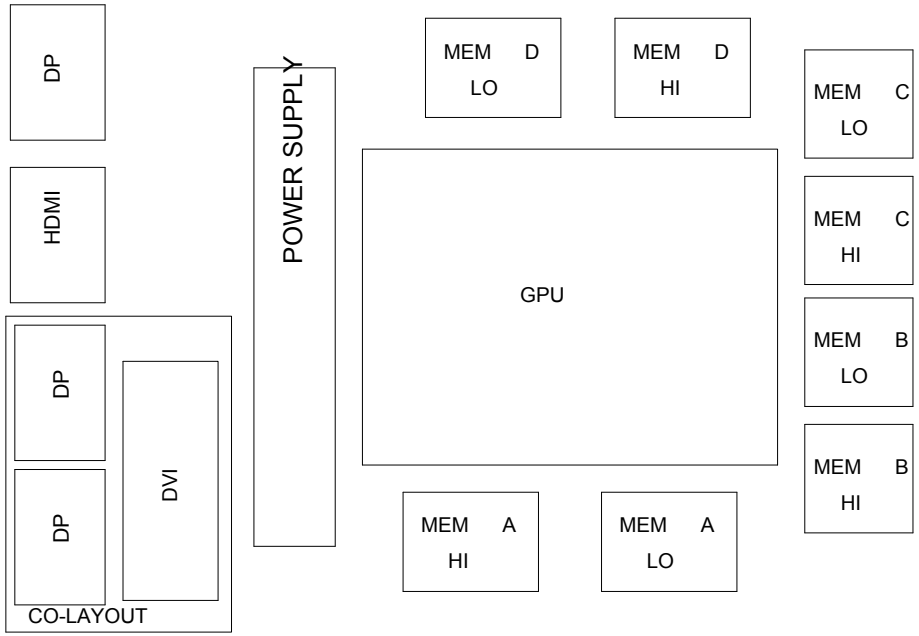

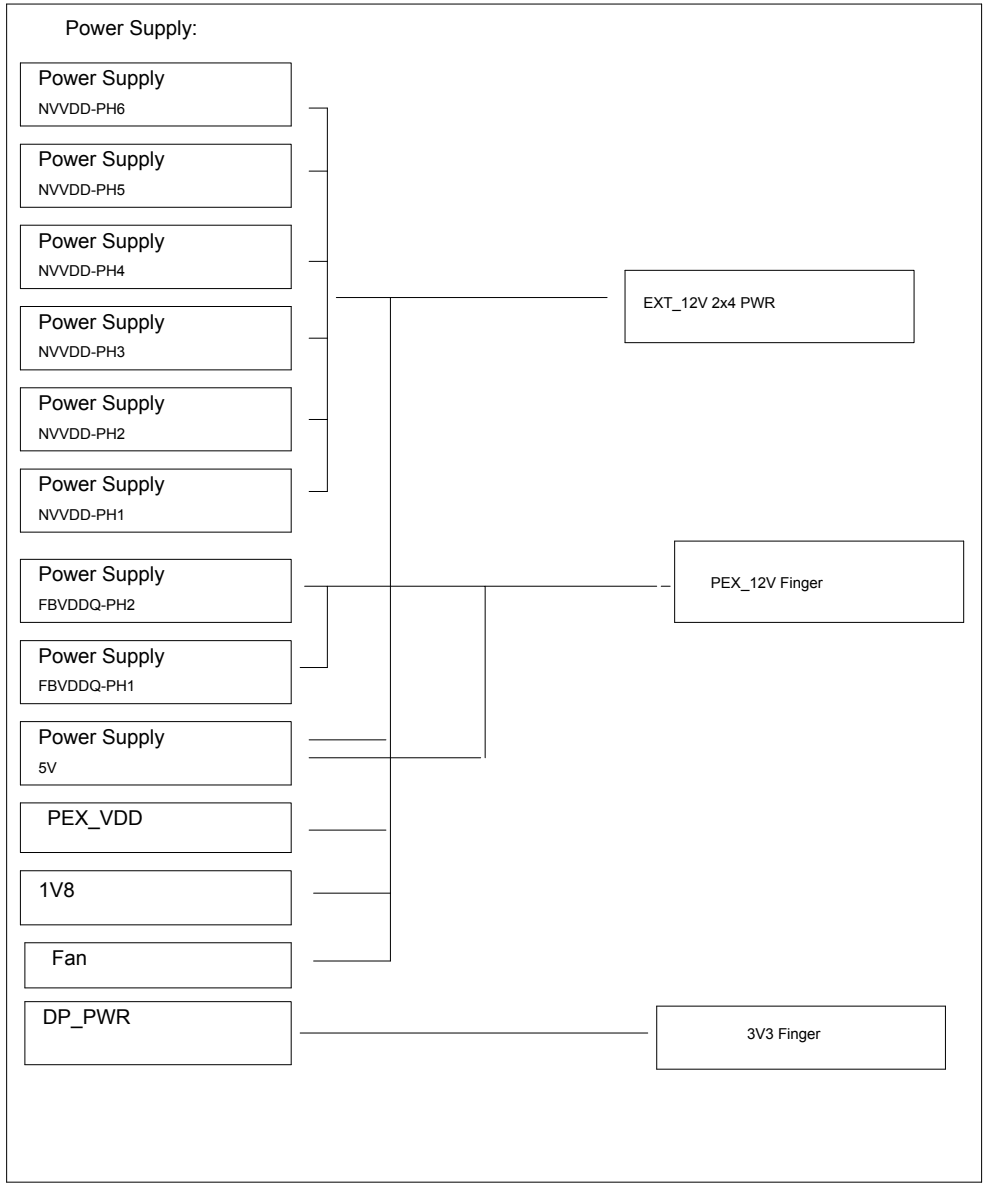

ALL NVIDIA DESIGN SPECIFICATIONS, REFERENCE SPECIFICATIONS, REFERENCE BOARDS, FILES, DRAWINGS, DIAGNOSTICS, LISTS AND OTHER DOCUMENTS OR INFORMATION (TOGETHER AND SEPARATELY, "MATERIALS") ARE BEING PROVIDED "AS IS". THE MATERIALS MAY CONTAIN KNOWN AND UNKNOWN VIOLATIONS OR DEVIATIONS OF INDUSTRY STANDARDS AND SPECIFICATIONS. NVIDIA MAKES NO WARRANTIES, EXPRESSED, IMPLIED, STATUTORY OR OTHERWISE WITH RESPECT TO THE MATERIALS OR OTHERWISE, AND EXPRESSLY DISCLAIMS ALL IMPLIED WARRANTIES INCLUDING, WITHOUT LIMITATION, THE WARRANTIES OF DESIGN, OF NONINFRINGEMENT, MERCHANTABILITY OR FITNESS FOR A PARTICULAR PURPOSE, OR ARISING FROM A COURSE OF DEALING, TRADE USAGE, TRADE PRACTICE, OR INDUSTRY STANDARDS.

Page3: PCI Express

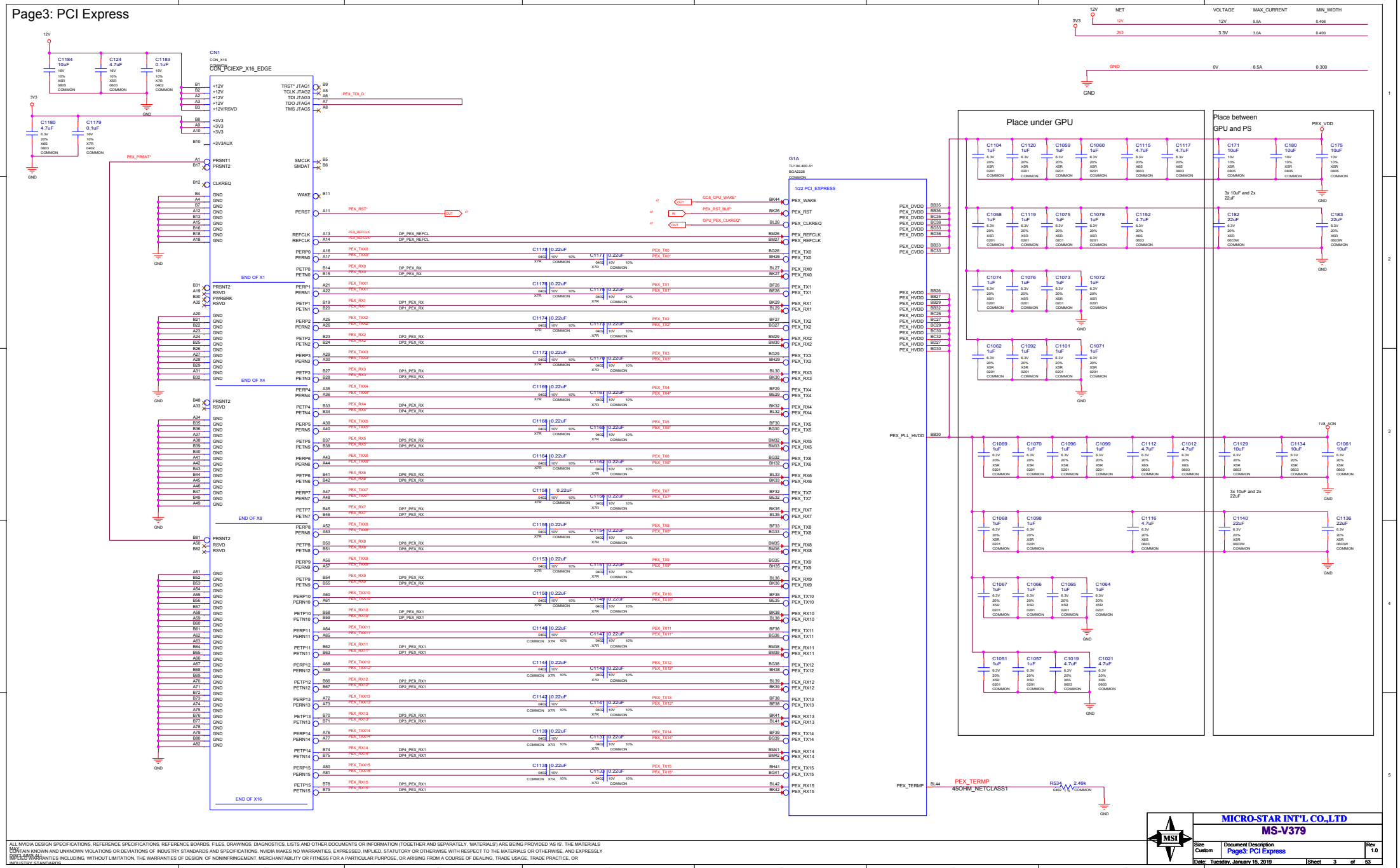

NET	VOLTAGE	MAX_CURRENT	MIN_WIDTH
12V	12V	5.5A	0.406
3V3	3.3V	3.0A	0.400
GND	0V	8.5A	0.300

ALL NVIDIA DESIGN SPECIFICATIONS, REFERENCE SPECIFICATIONS, REFERENCE BOARDS, FILES, DRAWINGS, DIAGNOSTICS, LISTS AND OTHER DOCUMENTS OR INFORMATION (TOGETHER AND SEPARATELY, "MATERIALS") ARE BEING PROVIDED "AS IS". THE MATERIALS MAY CONTAIN KNOWN AND UNKNOWN VIOLATIONS OR DEVIATIONS OF INDUSTRY STANDARDS AND SPECIFICATIONS. NVIDIA MAKES NO WARRANTIES, EXPRESSED, IMPLIED, STATUTORY OR OTHERWISE WITH RESPECT TO THE MATERIALS OR OTHERWISE, AND EXPRESSLY DISCLAIMS ALL IMPLIED WARRANTIES INCLUDING, WITHOUT LIMITATION, THE WARRANTIES OF DESIGN, OF NONINFRINGEMENT, MERCHANTABILITY OR FITNESS FOR A PARTICULAR PURPOSE, OR ARISING FROM A COURSE OF DEALING, TRADE USAGE, TRADE PRACTICE, OR INDUSTRY STANDARDS.

MICRO-STAR INT'L CO.,LTD

MS-V379

Size	Document Description	Rev
Custom	Page3: PCI Express	1.0

Date: Tuesday, January 15, 2019 Sheet 3 of 53

NO PEX GEN4 SUPPORT

DELETE RC TERMINATIONS

ALL NVIDIA DESIGN SPECIFICATIONS, REFERENCE SPECIFICATIONS, REFERENCE BOARDS, FILES, DRAWINGS, DIAGNOSTICS, LISTS AND OTHER DOCUMENTS OR INFORMATION (TOGETHER AND SEPARATELY, "MATERIALS") ARE BEING PROVIDED "AS IS". THE MATERIALS MAY CONTAIN KNOWN AND UNKNOWN VIOLATIONS OR DEVIATIONS OF INDUSTRY STANDARDS AND SPECIFICATIONS. NVIDIA MAKES NO WARRANTIES, EXPRESSED, IMPLIED, STATUTORY OR OTHERWISE WITH RESPECT TO THE MATERIALS OR OTHERWISE, AND EXPRESSLY DISCLAIMS ALL IMPLIED WARRANTIES INCLUDING, WITHOUT LIMITATION, THE WARRANTIES OF DESIGN, OF NONINFRINGEMENT, MERCHANTABILITY OR FITNESS FOR A PARTICULAR PURPOSE, OR ARISING FROM A COURSE OF DEALING, TRADE USAGE, TRADE PRACTICE, OR INDUSTRY STANDARDS.

Page5: MEMORY: GPU Partition A/B

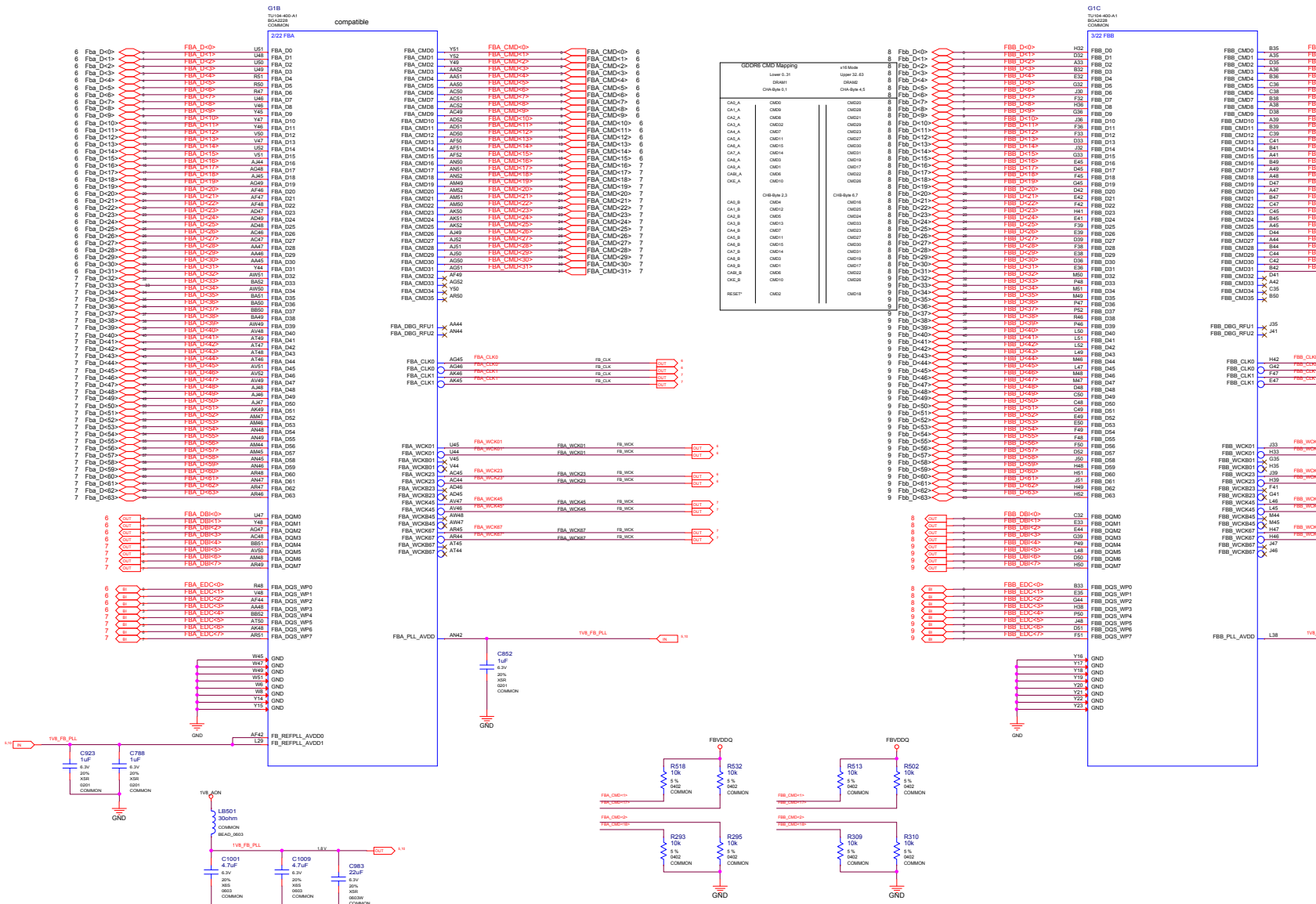

ALL NVIDIA DESIGN SPECIFICATIONS, REFERENCE SPECIFICATIONS, REFERENCE BOARDS, FILES, DRAWINGS, DIAGNOSTICS, LISTS AND OTHER DOCUMENTS OR INFORMATION (TOGETHER AND SEPARATELY, "MATERIALS") ARE BEING PROVIDED "AS IS". THE MATERIALS MAY CONTAIN KNOWN AND UNKNOWN VIOLATIONS OR DEVIATIONS OF INDUSTRY STANDARDS AND SPECIFICATIONS. NVIDIA MAKES NO WARRANTIES, EXPRESSED, IMPLIED, STATUTORY OR OTHERWISE WITH RESPECT TO THE MATERIALS OR OTHERWISE, AND EXPRESSLY DISCLAIMS ALL IMPLIED WARRANTIES INCLUDING, WITHOUT LIMITATION, THE WARRANTIES OF DESIGN, OF NONINFRINGEMENT, MERCHANTABILITY OR FITNESS FOR A PARTICULAR PURPOSE, OR ARISING FROM A COURSE OF DEALING, TRADE USAGE, TRADE PRACTICE, OR INDUSTRY STANDARDS.

MICRO-STAR INT'L CO.,LTD

MS-V379

Size	Document Description	Rev
Custom	Page5: MEMORY: GPU Partition A/B	1.0

Date: Tuesday, January 15, 2019 Sheet 5 of 53

Page6: MEMORY: FBA Partition 31..0

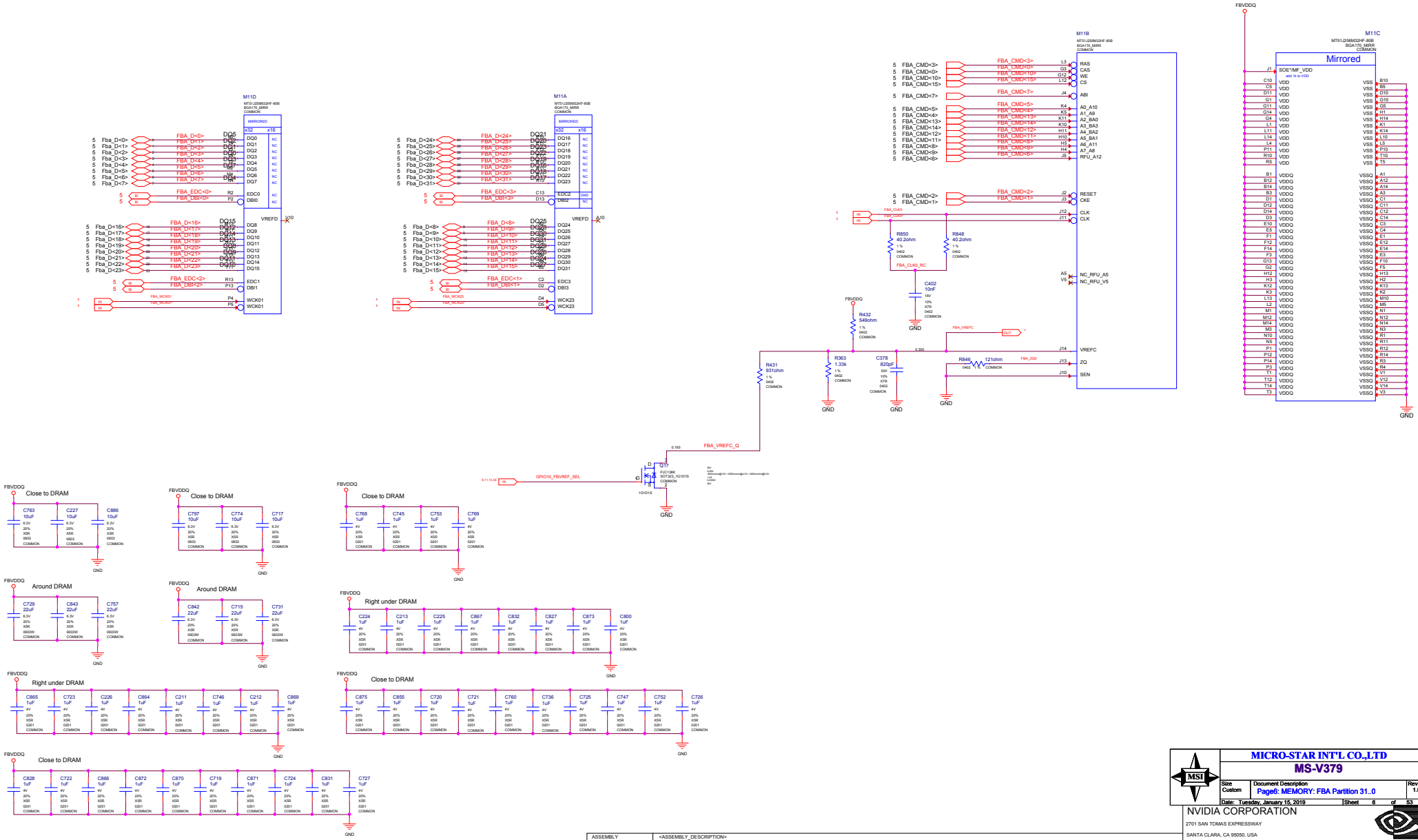

ASSEMBLY	<ASSEMBLY_DESCRIPTION>
PAGE DETAIL	MEMORY: FBA[31:0]

ALL NVIDIA DESIGN SPECIFICATIONS, REFERENCE SPECIFICATIONS, REFERENCE BOARDS, FILES, DRAWINGS, DIAGNOSTICS, LISTS AND OTHER DOCUMENTS OR INFORMATION (TOGETHER AND SEPARATELY, 'MATERIALS') ARE BEING PROVIDED 'AS IS'. THE MATERIALS MAY CONTAIN KNOWN AND UNKNOWN VIOLATIONS OR DEVIATIONS OF INDUSTRY STANDARDS AND SPECIFICATIONS. NVIDIA MAKES NO WARRANTIES, EXPRESSED, IMPLIED, STATUTORY OR OTHERWISE WITH RESPECT TO THE MATERIALS OR OTHERWISE, AND EXPRESSLY DISCLAIMS ALL IMPLIED WARRANTIES INCLUDING, WITHOUT LIMITATION, THE WARRANTIES OF DESIGN, OF NONINFRINGEMENT, MERCHANTABILITY OR FITNESS FOR A PARTICULAR PURPOSE, OR ARISING FROM A COURSE OF DEALING, TRADE USAGE, TRADE PRACTICE, OR INDUSTRY STANDARDS.

MICRO-STAR INT'L CO.,LTD

MS-V379

Size	Document Description	Rev
Custom	Page6: MEMORY: FBA Partition 31..0	1.0

Date: Tuesday, January 15, 2019 | Sheet 6 of 53

NVIDIA CORPORATION
2701 SAN TOMAS EXPRESSWAY
SANTA CLARA, CA 95050, USA

NV_PN	600-1G165-BASE-000		
PCB REV	PG165-A00	PAGE	5 OF 42
BOM REV	B	DATE	14-DEC-2018

Page7: MEMORY: FBA Partition 63..32

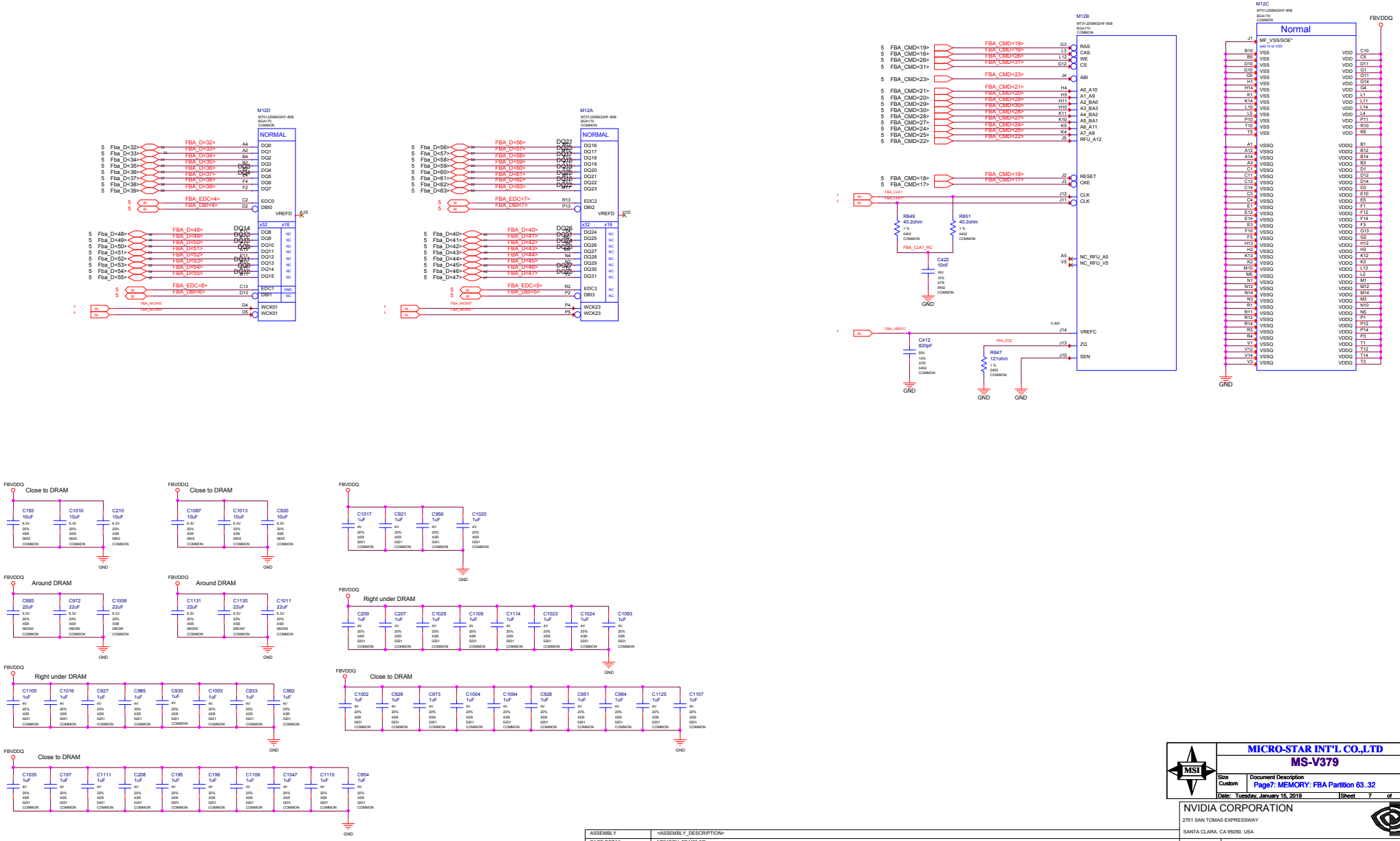

ASSEMBLY	<ASSEMBLY_DESCRIPTION>
PAGE DETAIL	MEMORY: FBA[63:32]

ALL NVIDIA DESIGN SPECIFICATIONS, REFERENCE SPECIFICATIONS, REFERENCE BOARDS, FILES, DRAWINGS, DIAGNOSTICS, LISTS AND OTHER DOCUMENTS OR INFORMATION (TOGETHER AND SEPARATELY, "MATERIALS") ARE BEING PROVIDED "AS IS". THE MATERIALS MAY CONTAIN KNOWN AND UNKNOWN VIOLATIONS OR DEVIATIONS OF INDUSTRY STANDARDS AND SPECIFICATIONS. NVIDIA MAKES NO WARRANTIES, EXPRESSED, IMPLIED, STATUTORY OR OTHERWISE WITH RESPECT TO THE MATERIALS OR OTHERWISE, AND EXPRESSLY DISCLAIMS ALL IMPLIED WARRANTIES INCLUDING, WITHOUT LIMITATION, THE WARRANTIES OF DESIGN, OF NONINFRINGEMENT, MERCHANTABILITY OR FITNESS FOR A PARTICULAR PURPOSE, OR ARISING FROM A COURSE OF DEALING, TRADE USAGE, TRADE PRACTICE, OR INDUSTRY STANDARDS.

MICRO-STAR INT'L CO.,LTD

MS-V379

Size	Document Description	Rev
Custom	Page7: MEMORY: FBA Partition 63..32	1.0

Date: Tuesday, January 15, 2019 | Sheet 7 of 53

NVIDIA CORPORATION
2701 SAN TOMAS EXPRESSWAY
SANTA CLARA, CA 95050, USA

NV_PN	600-1G165-BASE-000		
PCB REV	PG165-A00	PAGE	6 OF 42
BOM REV	B	DATE	14-DEC-2018

Page8: MEMORY: FBB Partition 31..0

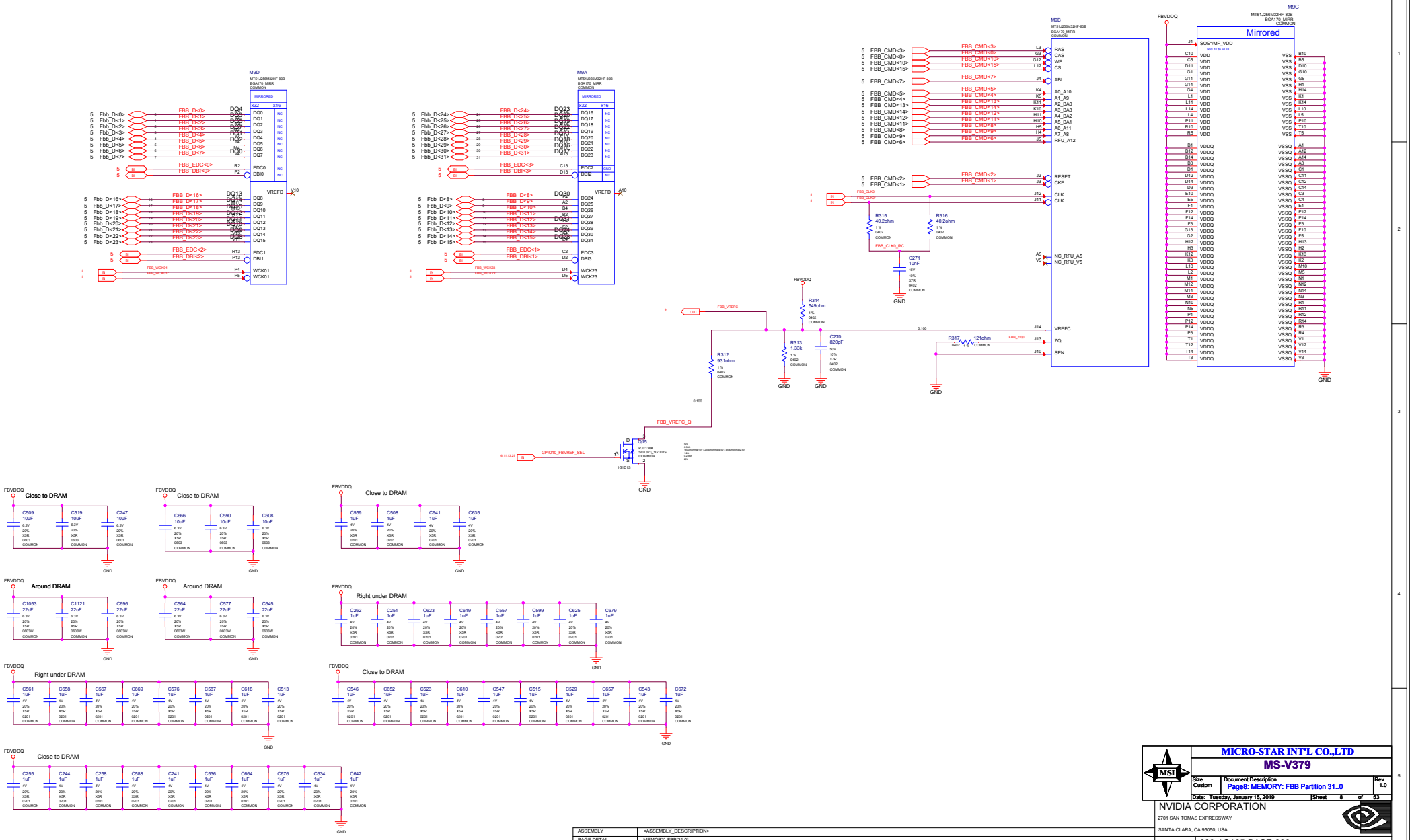

ASSEMBLY	<ASSEMBLY_DESCRIPTION>
PAGE DETAIL	MEMORY: FBB[31:0]

ALL NVIDIA DESIGN SPECIFICATIONS, REFERENCE SPECIFICATIONS, REFERENCE BOARDS, FILES, DRAWINGS, DIAGNOSTICS, LISTS AND OTHER DOCUMENTS OR INFORMATION (TOGETHER AND SEPARATELY, 'MATERIALS') ARE BEING PROVIDED 'AS IS'. THE MATERIALS MAY CONTAIN KNOWN AND UNKNOWN VIOLATIONS OR DEVIATIONS OF INDUSTRY STANDARDS AND SPECIFICATIONS. NVIDIA MAKES NO WARRANTIES, EXPRESSED, IMPLIED, STATUTORY OR OTHERWISE WITH RESPECT TO THE MATERIALS OR OTHERWISE, AND EXPRESSLY DISCLAIMS ALL IMPLIED WARRANTIES INCLUDING, WITHOUT LIMITATION, THE WARRANTIES OF DESIGN, OF NONINFRINGEMENT, MERCHANTABILITY OR FITNESS FOR A PARTICULAR PURPOSE, OR ARISING FROM A COURSE OF DEALING, TRADE USAGE, TRADE PRACTICE, OR INDUSTRY STANDARDS.

MICRO-STAR INT'L CO.,LTD

MS-V379

Size	Document Description	Rev
Custom	Page8: MEMORY: FBB Partition 31..0	1.0

Date: Tuesday, January 15, 2019 | Sheet 8 of 53

NVIDIA CORPORATION
2701 SAN TOMAS EXPRESSWAY
SANTA CLARA, CA 95050, USA

NV_PN	600-1G165-BASE-000		
PCB REV	PG165-A00	PAGE	7 OF 42
BOM REV	B	DATE	14-DEC-2018

Page9: MEMORY: FBB Partition 63..32

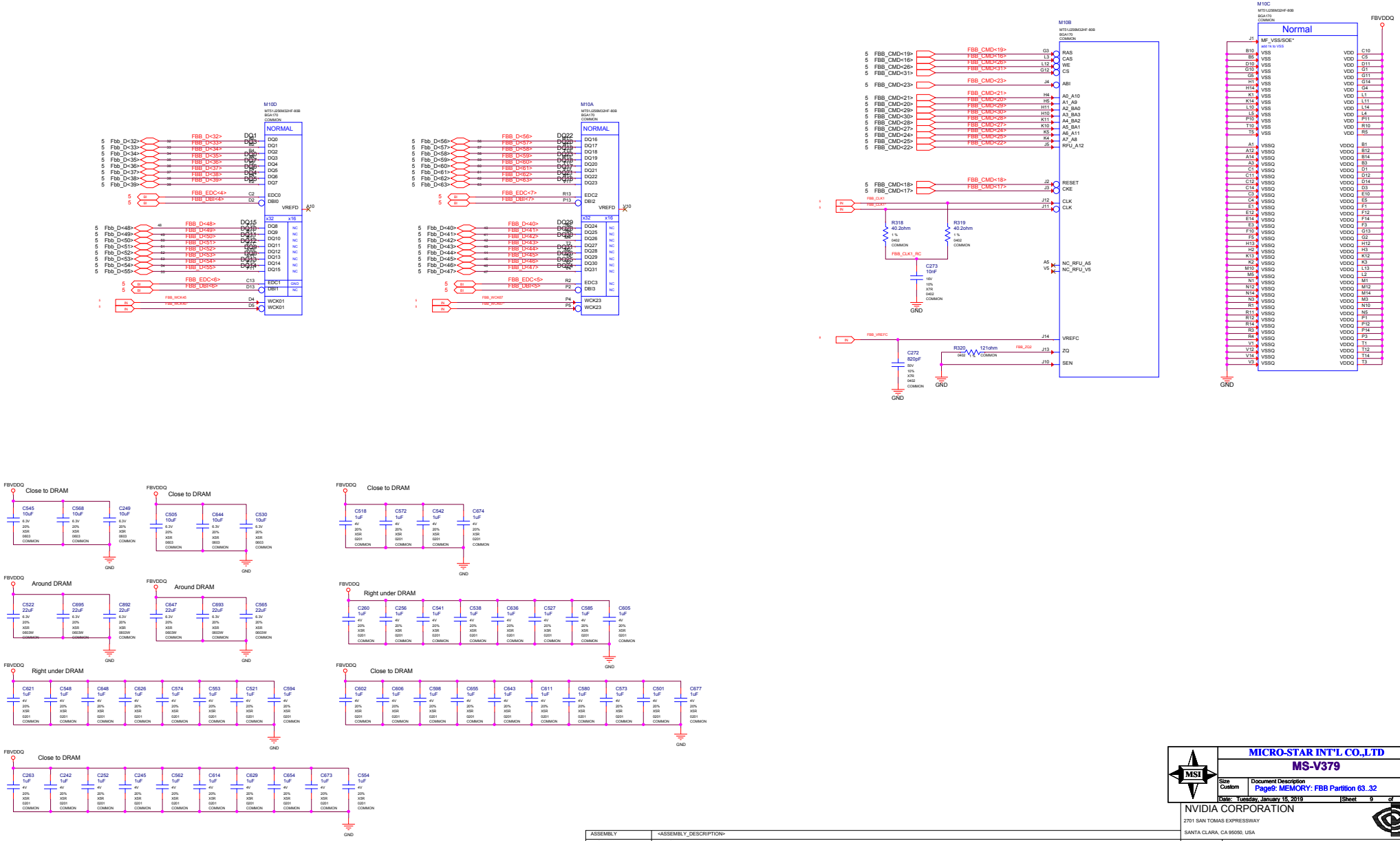

ASSEMBLY	<ASSEMBLY_DESCRIPTION>
PAGE DETAIL	MEMORY: FBB[63:32]

ALL NVIDIA DESIGN SPECIFICATIONS, REFERENCE SPECIFICATIONS, REFERENCE BOARDS, FILES, DRAWINGS, DIAGNOSTICS, LISTS AND OTHER DOCUMENTS OR INFORMATION (TOGETHER AND SEPARATELY, "MATERIALS") ARE BEING PROVIDED "AS IS". THE MATERIALS MAY CONTAIN KNOWN AND UNKNOWN VIOLATIONS OR DEVIATIONS OF INDUSTRY STANDARDS AND SPECIFICATIONS. NVIDIA MAKES NO WARRANTIES, EXPRESSED, IMPLIED, STATUTORY OR OTHERWISE WITH RESPECT TO THE MATERIALS OR OTHERWISE, AND EXPRESSLY DISCLAIMS ALL IMPLIED WARRANTIES INCLUDING, WITHOUT LIMITATION, THE WARRANTIES OF DESIGN, OF NONINFRINGEMENT, MERCHANTABILITY OR FITNESS FOR A PARTICULAR PURPOSE, OR ARISING FROM A COURSE OF DEALING, TRADE USAGE, TRADE PRACTICE, OR INDUSTRY STANDARDS.

MICRO-STAR INT'L CO.,LTD

MS-V379

Size	Document Description	Rev
Custom	Page9: MEMORY: FBB Partition 63..32	1.0

Date: Tuesday, January 15, 2019 | Sheet 9 of 53

NVIDIA CORPORATION
2701 SAN TOMAS EXPRESSWAY
SANTA CLARA, CA 95050, USA

NV_PN	600-1G165-BASE-000		
PCB REV	PG165-A00	PAGE	8 OF 42
BOM REV	B	DATE	14-DEC-2018

Page10: MEMORY: GPU Partition C/D

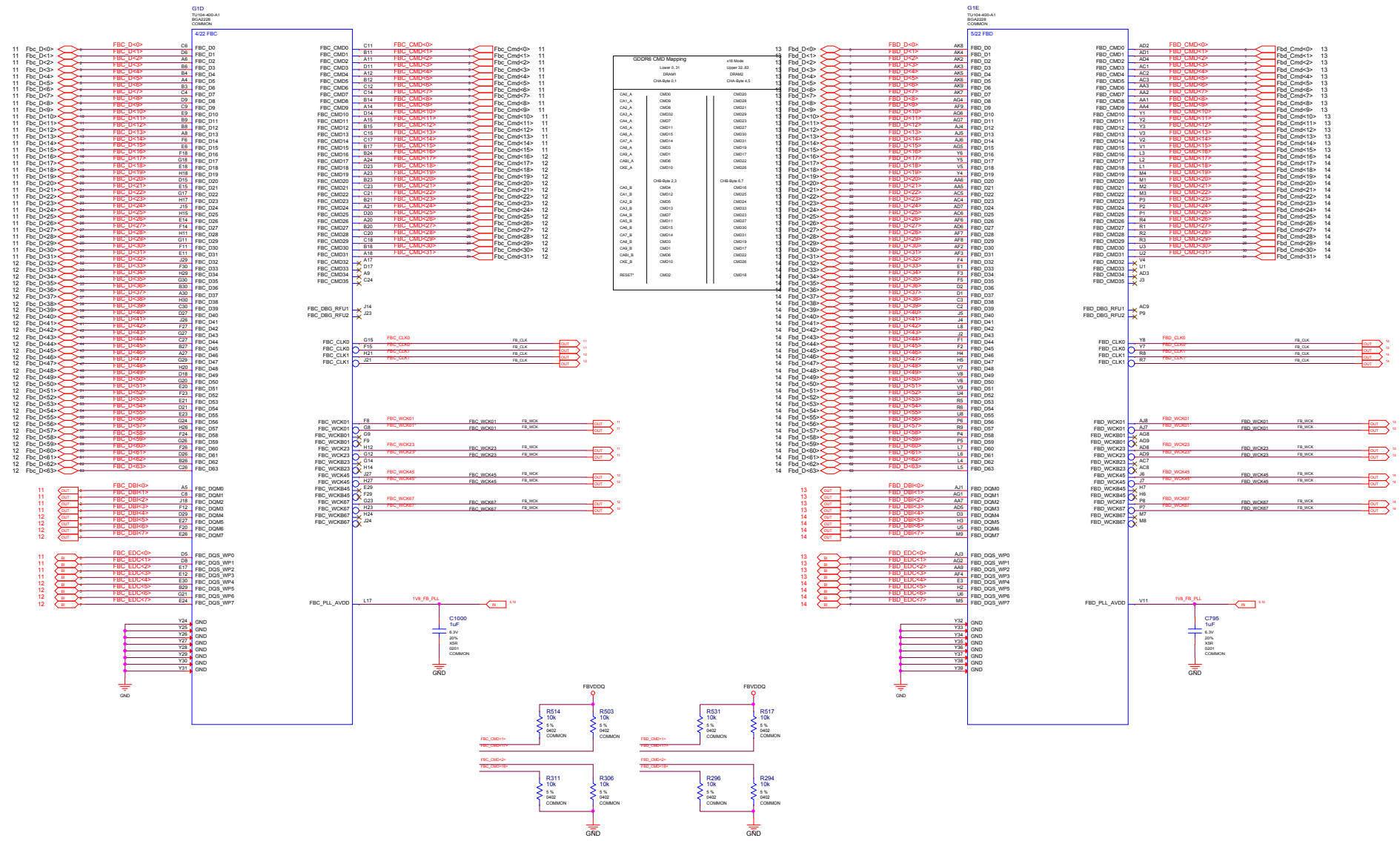

ALL NVIDIA DESIGN SPECIFICATIONS, REFERENCE SPECIFICATIONS, REFERENCE BOARDS, FILES, DRAWINGS, DIAGNOSTICS, LISTS AND OTHER DOCUMENTS OR INFORMATION (TOGETHER AND SEPARATELY, "MATERIALS") ARE BEING PROVIDED "AS IS". THE MATERIALS MAY CONTAIN KNOWN AND UNKNOWN VIOLATIONS OR DEVIATIONS OF INDUSTRY STANDARDS AND SPECIFICATIONS. NVIDIA MAKES NO WARRANTIES, EXPRESSED, IMPLIED, STATUTORY OR OTHERWISE WITH RESPECT TO THE MATERIALS OR OTHERWISE, AND EXPRESSLY DISCLAIMS ALL IMPLIED WARRANTIES INCLUDING, WITHOUT LIMITATION, THE WARRANTIES OF DESIGN, OF NONINFRINGEMENT, MERCHANTABILITY OR FITNESS FOR A PARTICULAR PURPOSE, OR ARISING FROM A COURSE OF DEALING, TRADE USAGE, TRADE PRACTICE, OR INDUSTRY STANDARDS.

MICRO-STAR INT'L CO.,LTD

MS-V379

Size	Document Description	Rev
Custom	Page10: MEMORY: GPU Partition C/D	1.0

Date: Tuesday, January 15, 2019 Sheet 10 of 53

Page11: MEMORY: FBC Partition 31..0

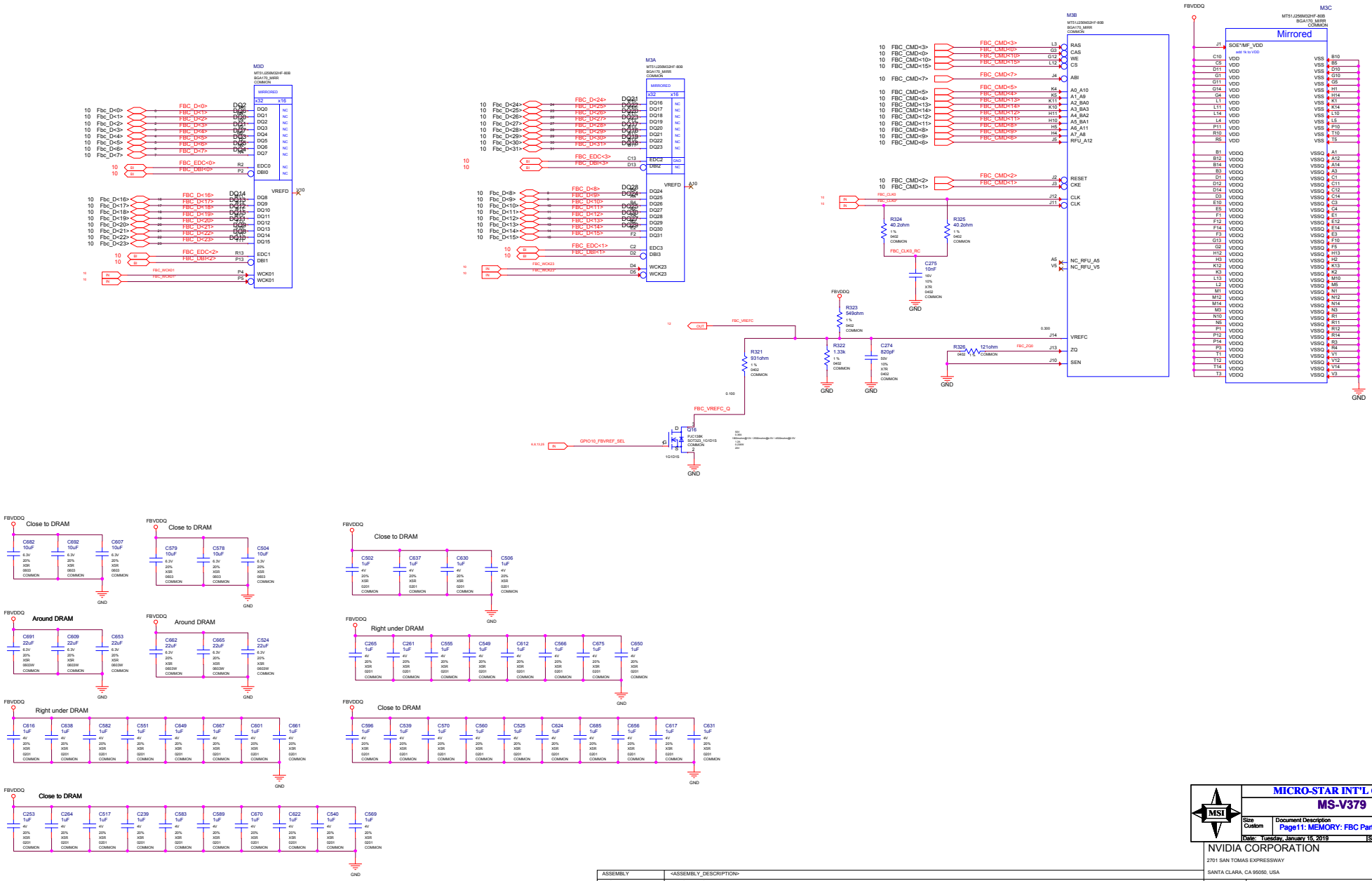

ASSEMBLY	<ASSEMBLY_DESCRIPTION>
PAGE DETAIL	MEMORY: FBC[31:0]

ALL NVIDIA DESIGN SPECIFICATIONS, REFERENCE SPECIFICATIONS, REFERENCE BOARDS, FILES, DRAWINGS, DIAGNOSTICS, LISTS AND OTHER DOCUMENTS OR INFORMATION (TOGETHER AND SEPARATELY, "MATERIALS") ARE BEING PROVIDED "AS IS". THE MATERIALS MAY CONTAIN KNOWN AND UNKNOWN VIOLATIONS OR DEVIATIONS OF INDUSTRY STANDARDS AND SPECIFICATIONS. NVIDIA MAKES NO WARRANTIES, EXPRESSED, IMPLIED, STATUTORY OR OTHERWISE WITH RESPECT TO THE MATERIALS OR OTHERWISE, AND EXPRESSLY DISCLAIMS ALL IMPLIED WARRANTIES INCLUDING, WITHOUT LIMITATION, THE WARRANTIES OF DESIGN, OF NONINFRINGEMENT, MERCHANTABILITY OR FITNESS FOR A PARTICULAR PURPOSE, OR ARISING FROM A COURSE OF DEALING, TRADE USAGE, TRADE PRACTICE, OR INDUSTRY STANDARDS.

MICRO-STAR INT'L CO.,LTD

MS-V379

Size	Document Description	Rev
Custom	Page11: MEMORY: FBC Partition 31..0	1.0

Date: Tuesday, January 15, 2019 | Sheet 11 of 53

NVIDIA CORPORATION
2701 SAN TOMAS EXPRESSWAY
SANTA CLARA, CA 95050, USA

NV_PN	600-1G165-BASE-000		
PCB REV	PG165-A00	PAGE	10 OF 42
BOM REV	B	DATE	14-DEC-2018

Page12: MEMORY: FBC Partition 63..32

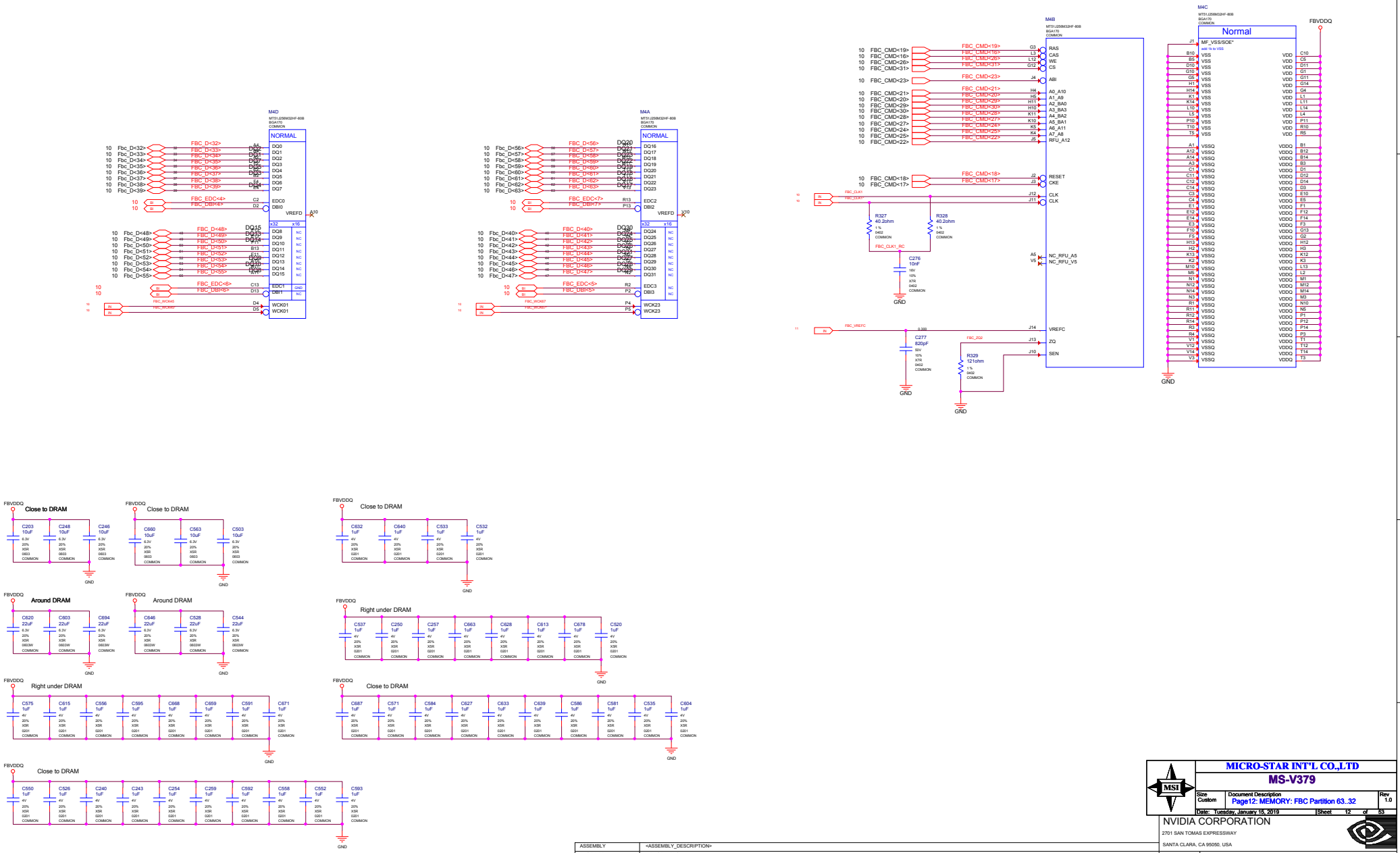

ASSEMBLY	<ASSEMBLY_DESCRIPTION>
PAGE DETAIL	MEMORY: FBC[63:32]

ALL NVIDIA DESIGN SPECIFICATIONS, REFERENCE SPECIFICATIONS, REFERENCE BOARDS, FILES, DRAWINGS, DIAGNOSTICS, LISTS AND OTHER DOCUMENTS OR INFORMATION (TOGETHER AND SEPARATELY, 'MATERIALS') ARE BEING PROVIDED 'AS IS'. THE MATERIALS MAY CONTAIN KNOWN AND UNKNOWN VIOLATIONS OR DEVIATIONS OF INDUSTRY STANDARDS AND SPECIFICATIONS. NVIDIA MAKES NO WARRANTIES, EXPRESSED, IMPLIED, STATUTORY OR OTHERWISE WITH RESPECT TO THE MATERIALS OR OTHERWISE, AND EXPRESSLY DISCLAIMS ALL IMPLIED WARRANTIES INCLUDING, WITHOUT LIMITATION, THE WARRANTIES OF DESIGN, OF NONINFRINGEMENT, MERCHANTABILITY OR FITNESS FOR A PARTICULAR PURPOSE, OR ARISING FROM A COURSE OF DEALING, TRADE USAGE, TRADE PRACTICE, OR INDUSTRY STANDARDS.

MICRO-STAR INT'L CO.,LTD

MS-V379

Size	Document Description	Rev
Custom	Page12: MEMORY: FBC Partition 63..32	1.0

Date: Tuesday, January 15, 2019 | Sheet 12 of 53

NVIDIA CORPORATION
2701 SAN TOMAS EXPRESSWAY
SANTA CLARA, CA 95050, USA

NV_PN	600-1G165-BASE-000		
PCB REV	PG165-A00	PAGE	11 OF 42
BOM REV	B	DATE	14-DEC-2018

Page13: MEMORY: FBD Partition 31..0

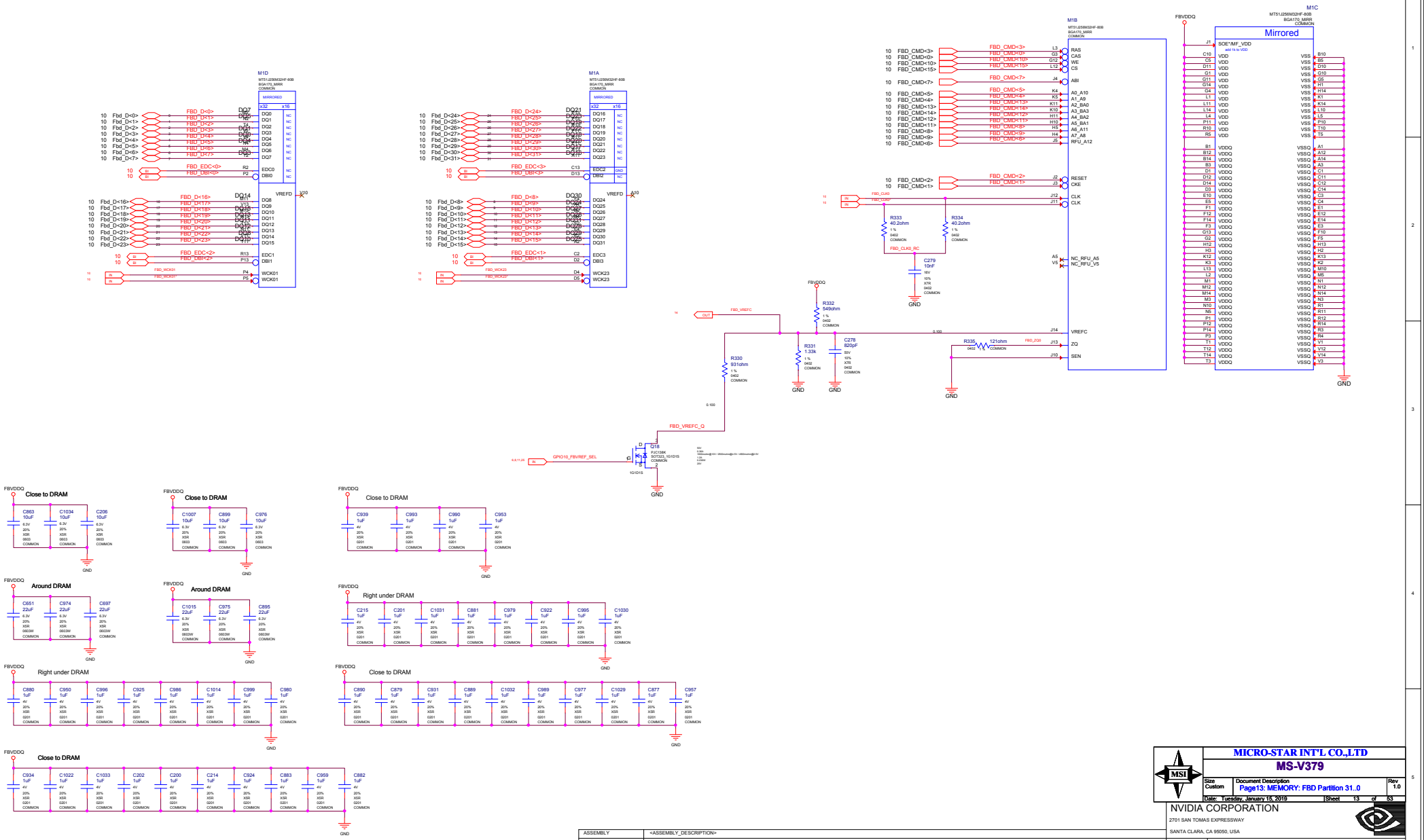

ASSEMBLY	<ASSEMBLY_DESCRIPTION>
PAGE DETAIL	MEMORY: FBD[31:0]

ALL NVIDIA DESIGN SPECIFICATIONS, REFERENCE SPECIFICATIONS, REFERENCE BOARDS, FILES, DRAWINGS, DIAGNOSTICS, LISTS AND OTHER DOCUMENTS OR INFORMATION (TOGETHER AND SEPARATELY, 'MATERIALS') ARE BEING PROVIDED 'AS IS'. THE MATERIALS MAY CONTAIN KNOWN AND UNKNOWN VIOLATIONS OR DEVIATIONS OF INDUSTRY STANDARDS AND SPECIFICATIONS. NVIDIA MAKES NO WARRANTIES, EXPRESSED, IMPLIED, STATUTORY OR OTHERWISE WITH RESPECT TO THE MATERIALS OR OTHERWISE, AND EXPRESSLY DISCLAIMS ALL IMPLIED WARRANTIES INCLUDING, WITHOUT LIMITATION, THE WARRANTIES OF DESIGN, OF NONINFRINGEMENT, MERCHANTABILITY OR FITNESS FOR A PARTICULAR PURPOSE, OR ARISING FROM A COURSE OF DEALING, TRADE USAGE, TRADE PRACTICE, OR INDUSTRY STANDARDS.

MICRO-STAR INT'L CO.,LTD

MS-V379

Size	Document Description	Rev
Custom	Page13: MEMORY: FBD Partition 31..0	1.0

Date: Tuesday, January 15, 2019 | Sheet 13 of 53

NVIDIA CORPORATION
2701 SAN TOMAS EXPRESSWAY
SANTA CLARA, CA 95050, USA

NV_PN	600-1G165-BASE-000		
PCB REV	PG165-A00	PAGE	12 OF 42
BOM REV	B	DATE	14-DEC-2018

Page14: MEMORY: FBD Partition 63..32

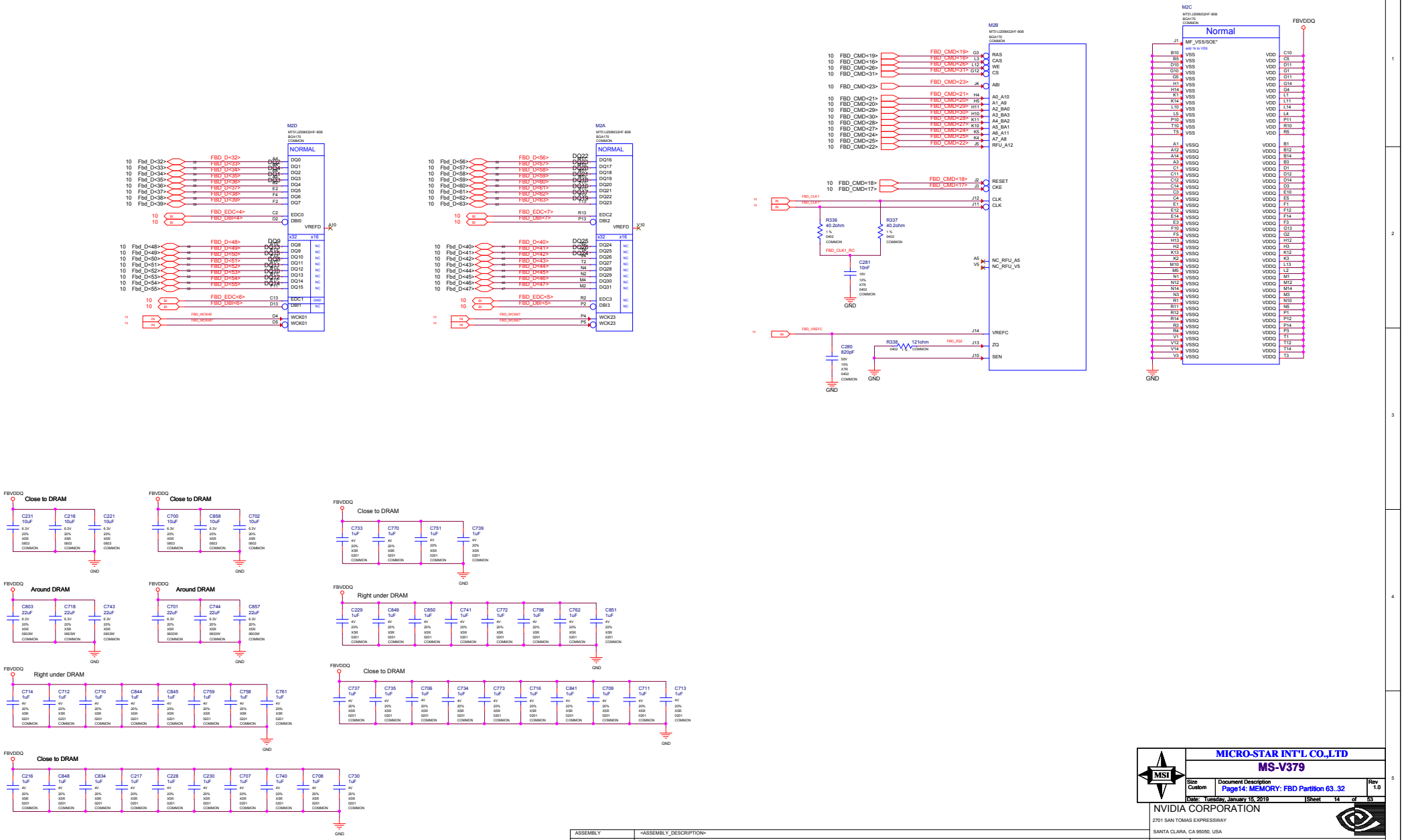

ASSEMBLY	<ASSEMBLY_DESCRIPTION>
PAGE DETAIL	MEMORY: FBD[63:32]

ALL NVIDIA DESIGN SPECIFICATIONS, REFERENCE SPECIFICATIONS, REFERENCE BOARDS, FILES, DRAWINGS, DIAGNOSTICS, LISTS AND OTHER DOCUMENTS OR INFORMATION (TOGETHER AND SEPARATELY, "MATERIALS") ARE BEING PROVIDED "AS IS". THE MATERIALS MAY CONTAIN KNOWN AND UNKNOWN VIOLATIONS OR DEVIATIONS OF INDUSTRY STANDARDS AND SPECIFICATIONS. NVIDIA MAKES NO WARRANTIES, EXPRESSED, IMPLIED, STATUTORY OR OTHERWISE WITH RESPECT TO THE MATERIALS OR OTHERWISE, AND EXPRESSLY DISCLAIMS ALL IMPLIED WARRANTIES INCLUDING, WITHOUT LIMITATION, THE WARRANTIES OF DESIGN, OF NONINFRINGEMENT, MERCHANTABILITY OR FITNESS FOR A PARTICULAR PURPOSE, OR ARISING FROM A COURSE OF DEALING, TRADE USAGE, TRADE PRACTICE, OR INDUSTRY STANDARDS.

MICRO-STAR INT'L CO.,LTD

MS-V379

Size	Document Description	Rev
Custom	Page14: MEMORY: FBD Partition 63..32	1.0

Date: Tuesday, January 15, 2019 | Sheet 14 of 53

NVIDIA CORPORATION
2701 SAN TOMAS EXPRESSWAY
SANTA CLARA, CA 95050, USA

NV_PN	600-1G165-BASE-000		
PCB REV	PG165-A00	PAGE	13 OF 42
BOM REV	B	DATE	14-DEC-2018

Page15: GPU PWR and GND

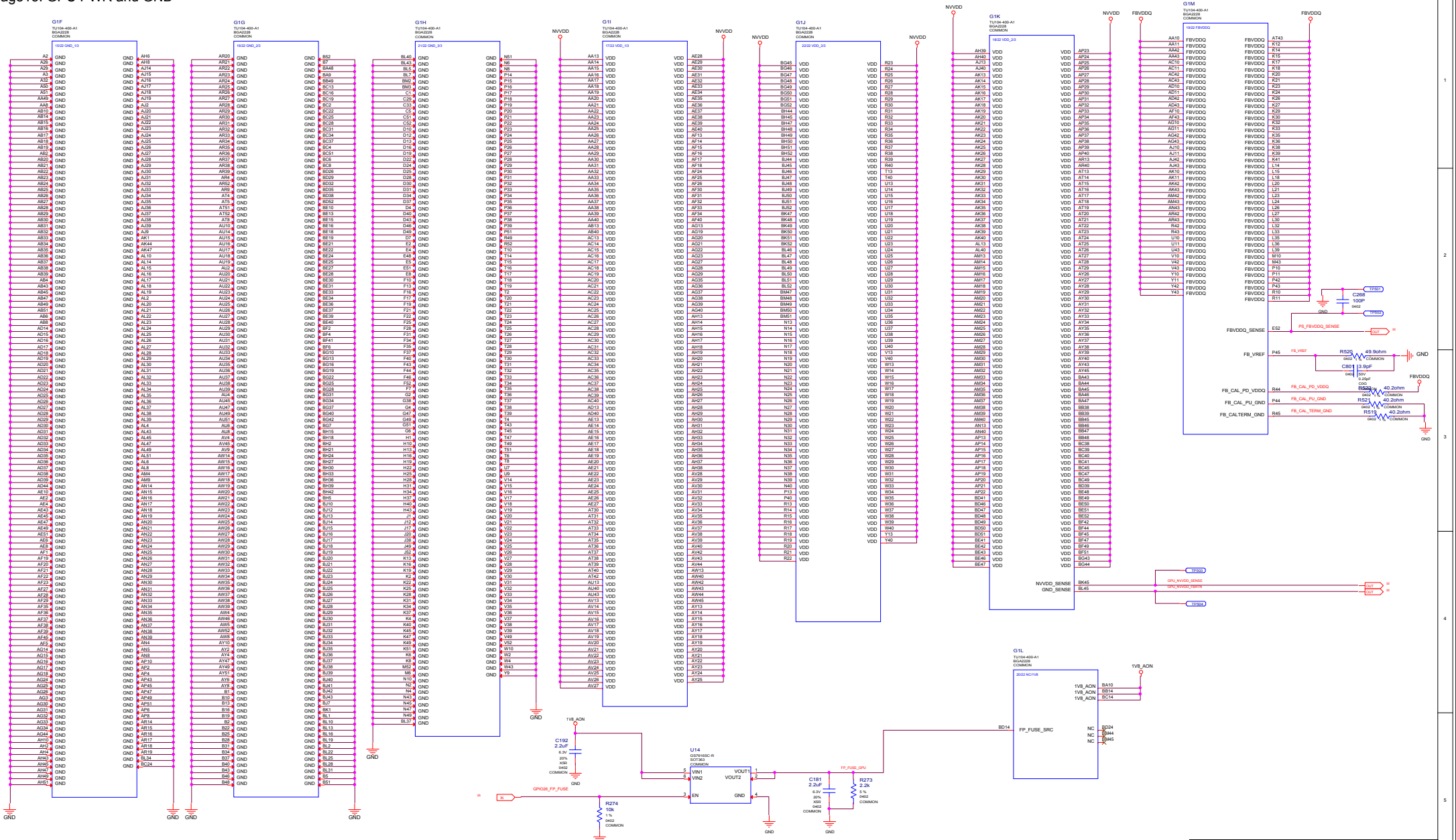

ALL NVIDIA DESIGN SPECIFICATIONS, REFERENCE SPECIFICATIONS, REFERENCE BOARDS, FILES, DRAWINGS, DIAGNOSTICS, LISTS AND OTHER DOCUMENTS OR INFORMATION (TOGETHER AND SEPARATELY, "MATERIALS") ARE BEING PROVIDED "AS IS". THE MATERIALS MAY CONTAIN KNOWN AND UNKNOWN VIOLATIONS OR DEVIATIONS OF INDUSTRY STANDARDS AND SPECIFICATIONS. NVIDIA MAKES NO WARRANTIES, EXPRESSED, IMPLIED, STATUTORY OR OTHERWISE WITH RESPECT TO THE MATERIALS OR OTHERWISE, AND EXPRESSLY DISCLAIMS ALL IMPLIED WARRANTIES INCLUDING, WITHOUT LIMITATION, THE WARRANTIES OF DESIGN, OF NONINFRINGEMENT, MERCHANTABILITY OR FITNESS FOR A PARTICULAR PURPOSE, OR ARISING FROM A COURSE OF DEALING, TRADE USAGE, TRADE PRACTICE, OR INDUSTRY STANDARDS.

MICRO-STAR INT'L CO.,LTD

MS-V379

Size	Document Description	Rev
Custom	Page15: GPU PWR and GND	1.0

Date: Tuesday, January 15, 2019 | Sheet 15 of 53

Page16: GPU Decoupling 1

FBVDDQ

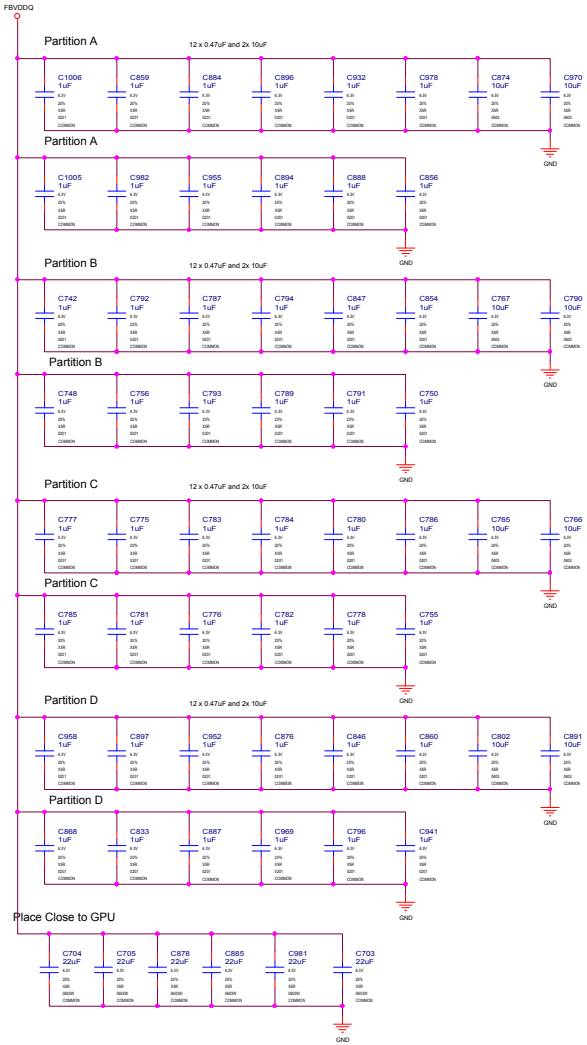

NVVDD

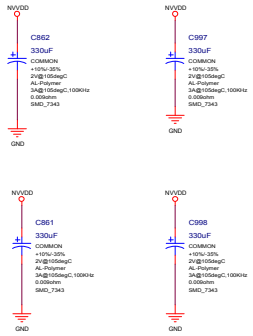

1V8_AON

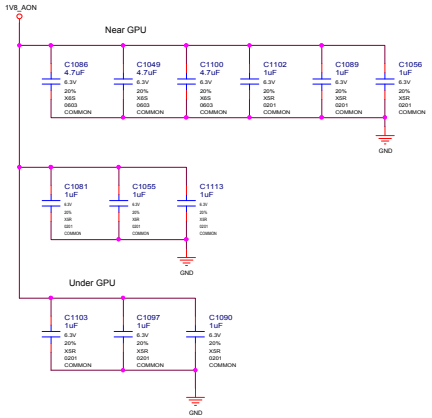

ALL NVIDIA DESIGN SPECIFICATIONS, REFERENCE SPECIFICATIONS, REFERENCE BOARDS, FILES, DRAWINGS, DIAGNOSTICS, LISTS AND OTHER DOCUMENTS OR INFORMATION (TOGETHER AND SEPARATELY, "MATERIALS") ARE BEING PROVIDED 'AS IS'. THE MATERIALS MAY CONTAIN KNOWN AND UNKNOWN VIOLATIONS OR DEVIATIONS OF INDUSTRY STANDARDS AND SPECIFICATIONS. NVIDIA MAKES NO WARRANTIES, EXPRESSED, IMPLIED, STATUTORY OR OTHERWISE WITH RESPECT TO THE MATERIALS OR OTHERWISE, AND EXPRESSLY DISCLAIMS ALL IMPLIED WARRANTIES INCLUDING, WITHOUT LIMITATION, THE WARRANTIES OF DESIGN, OF NONINFRINGEMENT, MERCHANTABILITY OR FITNESS FOR A PARTICULAR PURPOSE, OR ARISING FROM A COURSE OF DEALING, TRADE USAGE, TRADE PRACTICE, OR INDUSTRY STANDARDS.

MSI	MICRO-STAR INT'L CO.,LTD	
	MS-V379	
Size: Custom	Document Description: Page16: GPU Decoupling 1	Rev: 1.0
Date: Tuesday, January 15, 2019	Sheet 16 of 53	

Page17: GPU Decoupling 2

NVVDD

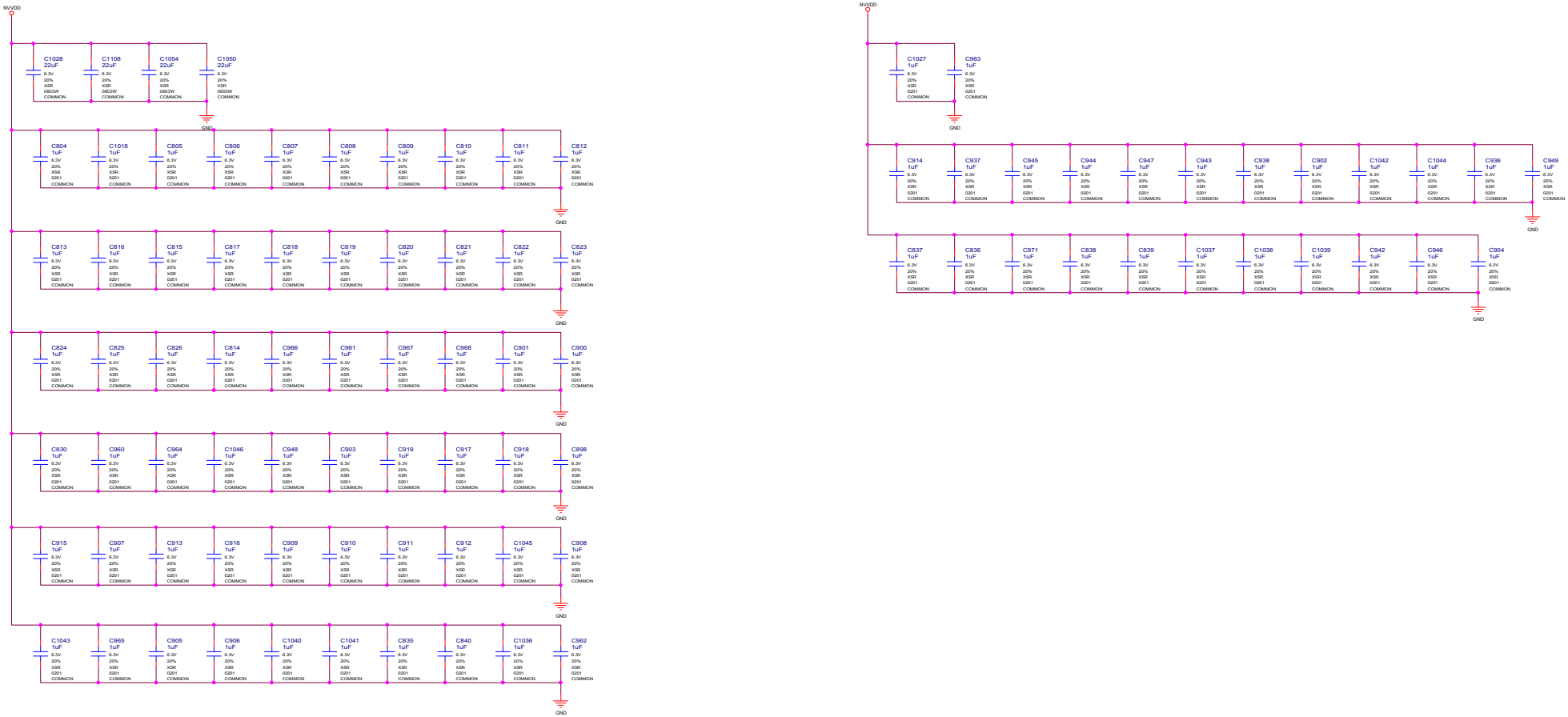

ALL NVIDIA DESIGN SPECIFICATIONS, REFERENCE SPECIFICATIONS, REFERENCE BOARDS, FILES, DRAWINGS, DIAGNOSTICS, LISTS AND OTHER DOCUMENTS OR INFORMATION (TOGETHER AND SEPARATELY, "MATERIALS") ARE BEING PROVIDED "AS IS". THE MATERIALS MAY CONTAIN KNOWN AND UNKNOWN VIOLATIONS OR DEVIATIONS OF INDUSTRY STANDARDS AND SPECIFICATIONS. NVIDIA MAKES NO WARRANTIES, EXPRESSED, IMPLIED, STATUTORY OR OTHERWISE WITH RESPECT TO THE MATERIALS OR OTHERWISE, AND EXPRESSLY DISCLAIMS ALL IMPLIED WARRANTIES INCLUDING, WITHOUT LIMITATION, THE WARRANTIES OF DESIGN, OF NONINFRINGEMENT, MERCHANTABILITY OR FITNESS FOR A PARTICULAR PURPOSE, OR ARISING FROM A COURSE OF DEALING, TRADE USAGE, TRADE PRACTICE, OR INDUSTRY STANDARDS.

IFPAB DVI-D-DL CO-LAYOUT WITH 2x DP

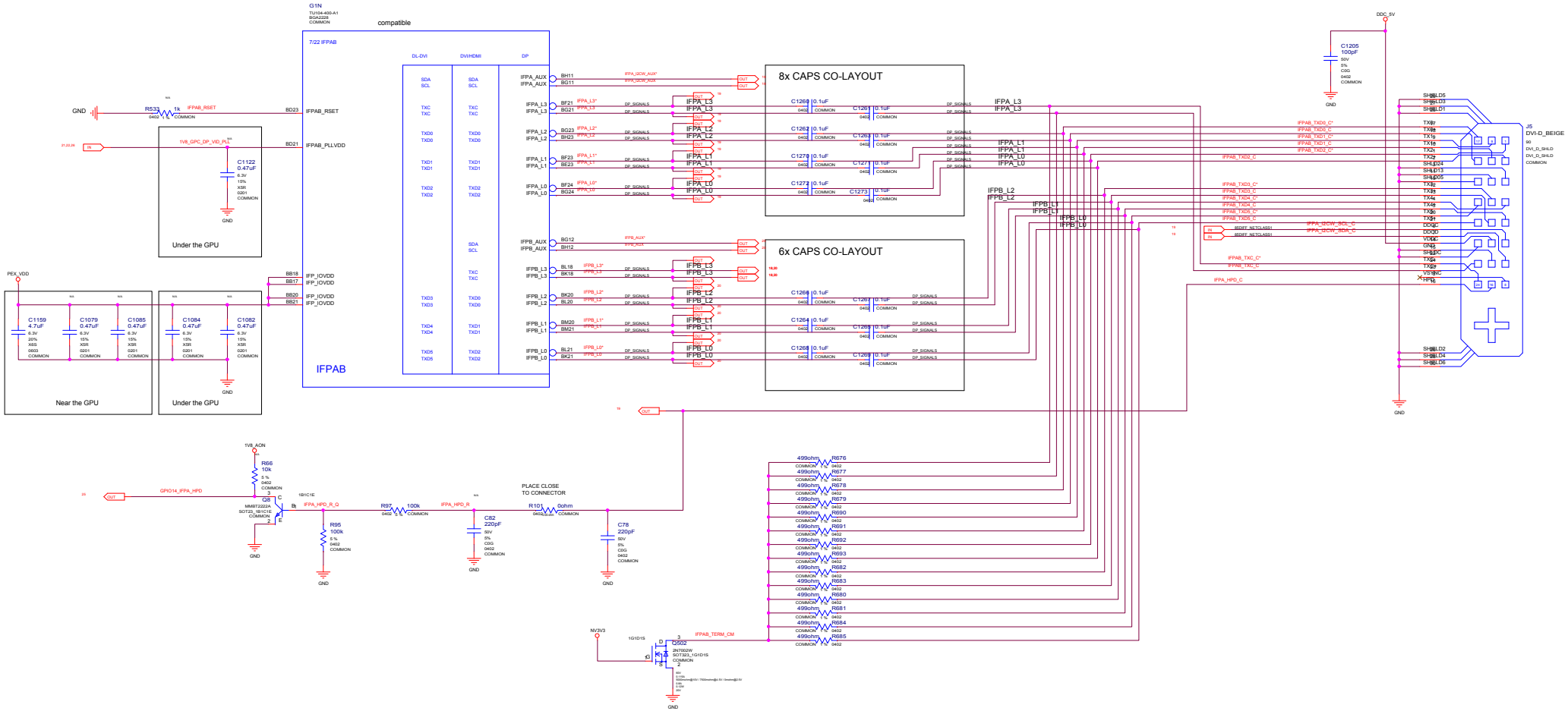

ALL NVIDIA DESIGN SPECIFICATIONS, REFERENCE SPECIFICATIONS, REFERENCE BOARDS, FILES, DRAWINGS, DIAGNOSTICS, LISTS AND OTHER DOCUMENTS OR INFORMATION (TOGETHER AND SEPARATELY, 'MATERIALS') ARE BEING PROVIDED 'AS IS'. THE MATERIALS MAY CONTAIN KNOWN AND UNKNOWN VIOLATIONS OR DEVIATIONS OF INDUSTRY STANDARDS AND SPECIFICATIONS. NVIDIA MAKES NO WARRANTIES, EXPRESSED, IMPLIED, STATUTORY OR OTHERWISE WITH RESPECT TO THE MATERIALS OR OTHERWISE, AND EXPRESSLY DISCLAIMS ALL WARRANTIES INCLUDING, WITHOUT LIMITATION, THE WARRANTIES OF DESIGN, OF NONINFRINGEMENT, MERCHANTABILITY OR FITNESS FOR A PARTICULAR PURPOSE, OR ARISING FROM A COURSE OF DEALING, TRADE USAGE, TRADE PRACTICE, OR INDUSTRY STANDARDS.

MICRO-STAR INT'L CO.,LTD

MS-V379

Size	Document Description	Rev
Custom	Page18: IFPAB DVI-D-DL	1.0

Date: Tuesday, January 15, 2019 | Sheet 18 of 53

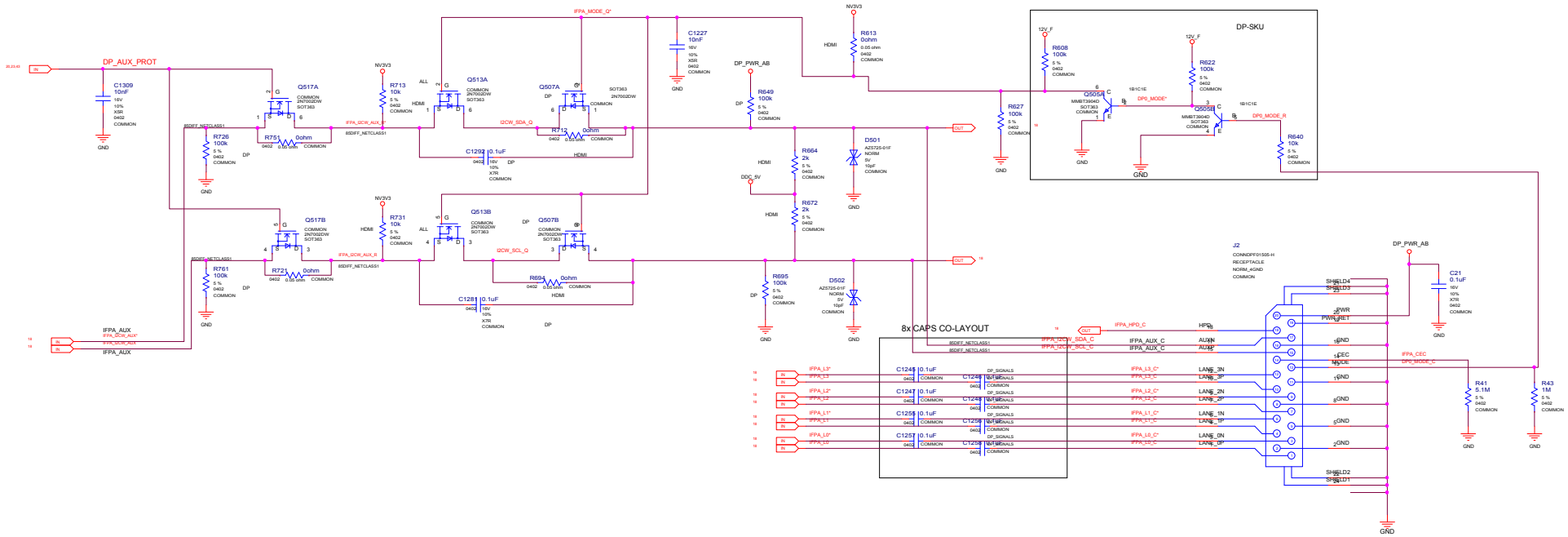

IFPA DP CO-LAYOUT WITH IFPAB DVI-D-DL

ALL NVIDIA DESIGN SPECIFICATIONS, REFERENCE SPECIFICATIONS, REFERENCE BOARDS, FILES, DRAWINGS, DIAGNOSTICS, LISTS AND OTHER DOCUMENTS OR INFORMATION (TOGETHER AND SEPARATELY, "MATERIALS") ARE BEING PROVIDED "AS IS". THE MATERIALS MAY CONTAIN KNOWN AND UNKNOWN VIOLATIONS OR DEVIATIONS OF INDUSTRY STANDARDS AND SPECIFICATIONS. NVIDIA MAKES NO WARRANTIES, EXPRESSED, IMPLIED, STATUTORY OR OTHERWISE WITH RESPECT TO THE MATERIALS OR OTHERWISE, AND EXPRESSLY DISCLAIMS ALL IMPLIED WARRANTIES INCLUDING, WITHOUT LIMITATION, THE WARRANTIES OF DESIGN, OF NONINFRINGEMENT, MERCHANTABILITY OR FITNESS FOR A PARTICULAR PURPOSE, OR ARISING FROM A COURSE OF DEALING, TRADE USAGE, TRADE PRACTICE, OR INDUSTRY STANDARDS.

IFPB DP CO-LAYOUT WITH IFPAB DVI-D-DL

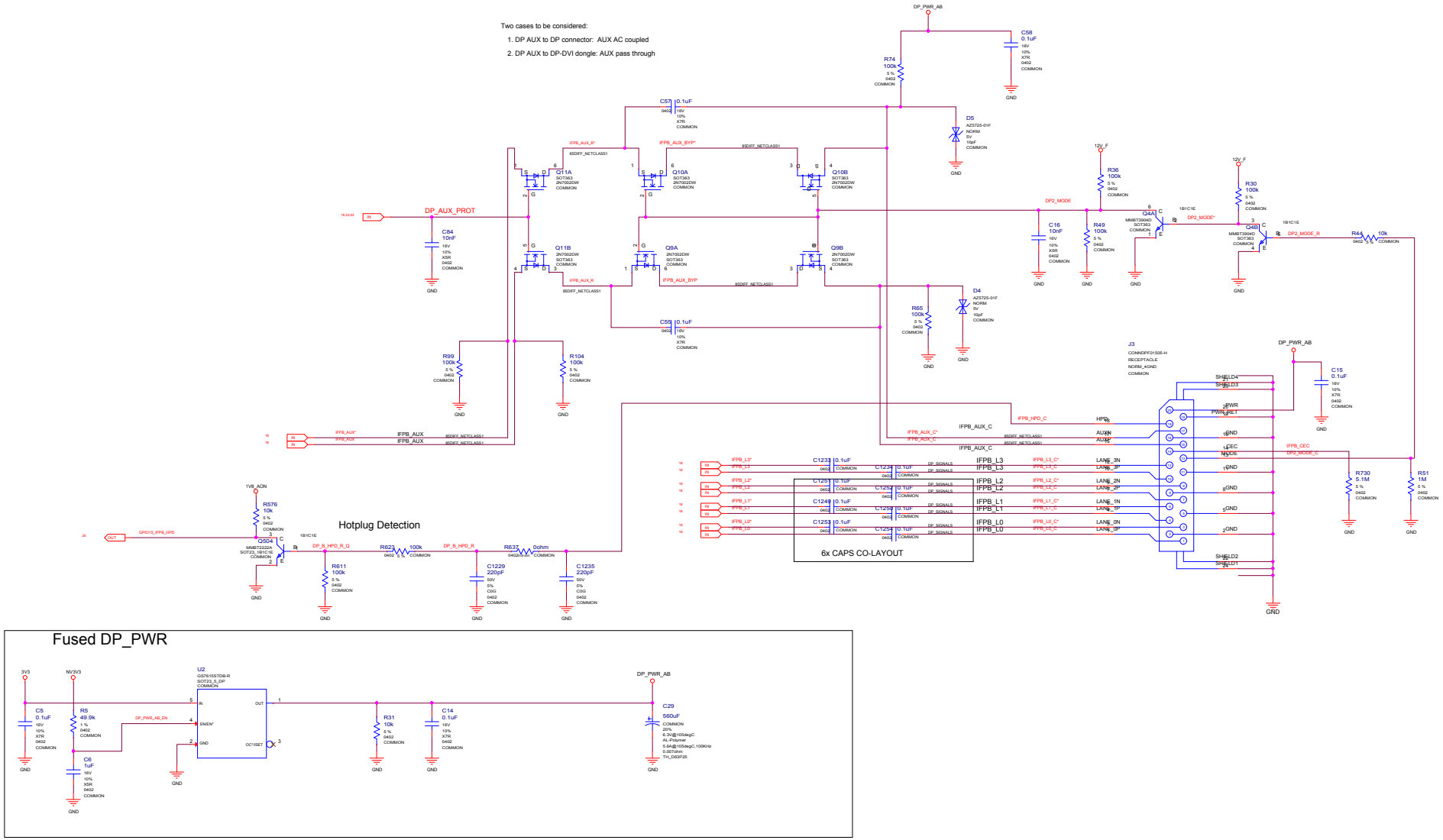

ALL NVIDIA DESIGN SPECIFICATIONS, REFERENCE SPECIFICATIONS, REFERENCE BOARDS, FILES, DRAWINGS, DIAGNOSTICS, LISTS AND OTHER DOCUMENTS OR INFORMATION (TOGETHER AND SEPARATELY, "MATERIALS") ARE BEING PROVIDED "AS IS". THE MATERIALS MAY CONTAIN KNOWN AND UNKNOWN VIOLATIONS OR DEVIATIONS OF INDUSTRY STANDARDS AND SPECIFICATIONS. NVIDIA MAKES NO WARRANTIES, EXPRESSED, IMPLIED, STATUTORY OR OTHERWISE WITH RESPECT TO THE MATERIALS OR OTHERWISE, AND EXPRESSLY DISCLAIMS ALL IMPLIED WARRANTIES INCLUDING, WITHOUT LIMITATION, THE WARRANTIES OF DESIGN, OF NONINFRINGEMENT, MERCHANTABILITY OR FITNESS FOR A PARTICULAR PURPOSE, OR ARISING FROM A COURSE OF DEALING, TRADE USAGE, TRADE PRACTICE, OR INDUSTRY STANDARDS.

MICRO-STAR INT'L CO.,LTD			
MS-V379			
Size: Custom	Document Description: Page20: IFPB DP		Rev: 1.0
Date: Tuesday, January 15, 2019	Sheet 20 of 53		

Page21: IFPE & IFPF USB-C NC

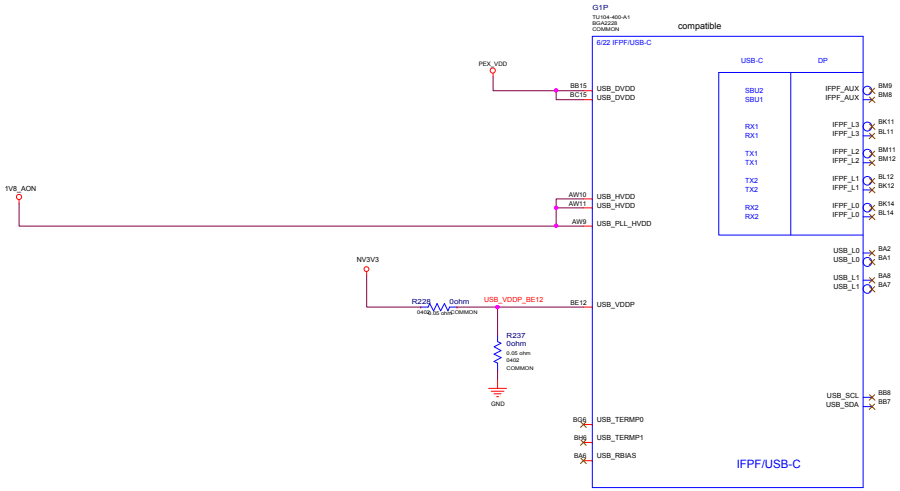

IFPF NC

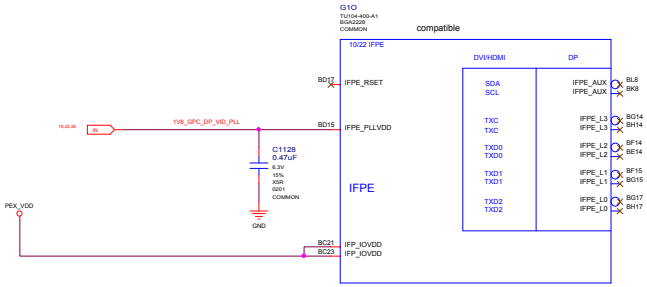

IFPE NC

ALL NVIDIA DESIGN SPECIFICATIONS, REFERENCE SPECIFICATIONS, REFERENCE BOARDS, FILES, DRAWINGS, DIAGNOSTICS, LISTS AND OTHER DOCUMENTS OR INFORMATION (TOGETHER AND SEPARATELY, "MATERIALS") ARE BEING PROVIDED "AS IS". THE MATERIALS MAY CONTAIN KNOWN AND UNKNOWN VIOLATIONS OR DEVIATIONS OF INDUSTRY STANDARDS AND SPECIFICATIONS. NVIDIA MAKES NO WARRANTIES, EXPRESSED, IMPLIED, STATUTORY OR OTHERWISE WITH RESPECT TO THE MATERIALS OR OTHERWISE, AND EXPRESSLY DISCLAIMS ALL IMPLIED WARRANTIES INCLUDING, WITHOUT LIMITATION, THE WARRANTIES OF DESIGN, OF NONINFRINGEMENT, MERCHANTABILITY OR FITNESS FOR A PARTICULAR PURPOSE, OR ARISING FROM A COURSE OF DEALING, TRADE USAGE, TRADE PRACTICE, OR INDUSTRY STANDARDS.

IO: IFPE & IFPF USBC NC

MICRO-STAR INT'L CO.,LTD			
MS-V379			
Size: Custom	Document Description: Page21: IFPE & IFPF USB-C NC		Rev: 1.0
Date: Tuesday, January 15, 2019	Sheet 21 of 53		

21-OCT-2018

Page22: IFPC HDMI

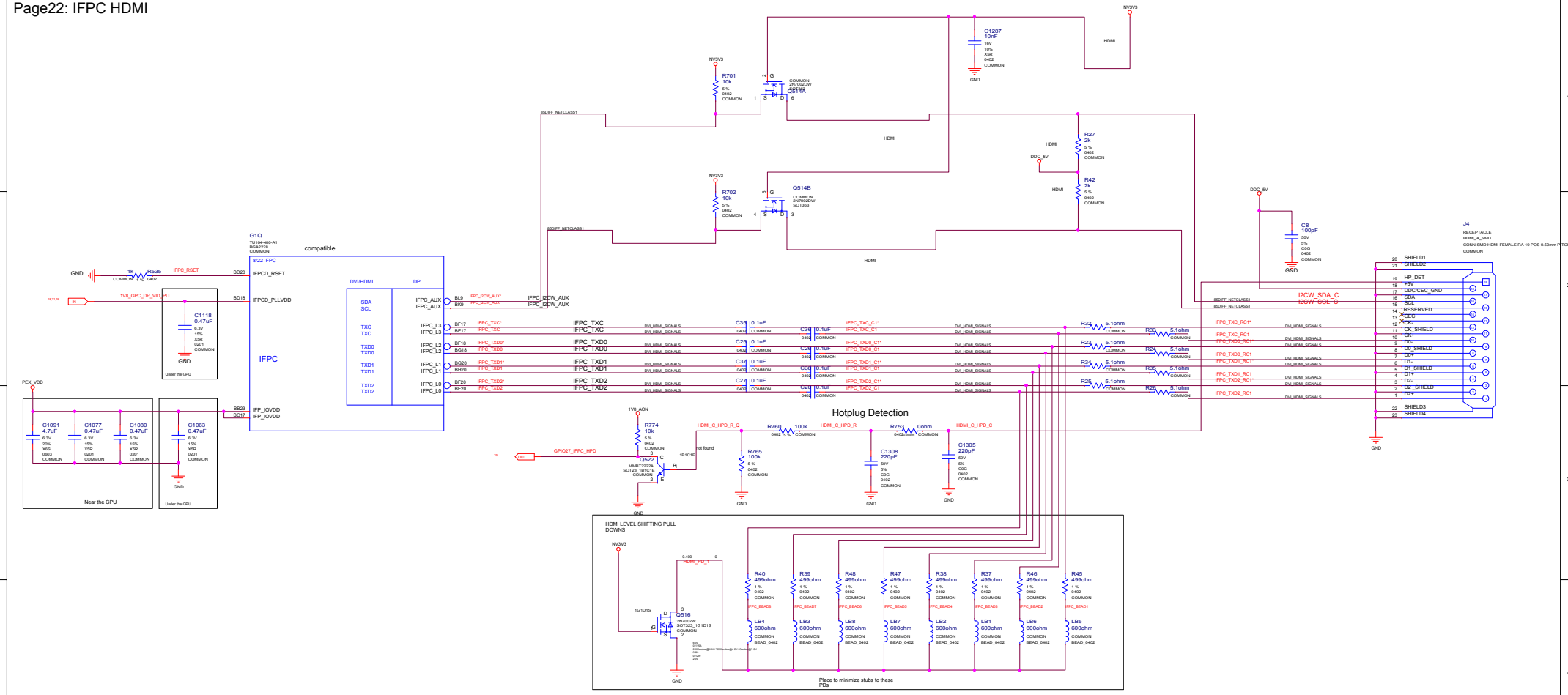

ALL NVIDIA DESIGN SPECIFICATIONS, REFERENCE SPECIFICATIONS, REFERENCE BOARDS, FILES, DRAWINGS, DIAGNOSTICS, LISTS AND OTHER DOCUMENTS OR INFORMATION (TOGETHER AND SEPARATELY, 'MATERIALS') ARE BEING PROVIDED 'AS IS'. THE MATERIALS MAY CONTAIN KNOWN AND UNKNOWN VIOLATIONS OR DEVIATIONS OF INDUSTRY STANDARDS AND SPECIFICATIONS. NVIDIA MAKES NO WARRANTIES, EXPRESSED, IMPLIED, STATUTORY OR OTHERWISE WITH RESPECT TO THE MATERIALS OR OTHERWISE, AND EXPRESSLY DISCLAIMS ALL IMPLIED WARRANTIES INCLUDING, WITHOUT LIMITATION, THE WARRANTIES OF DESIGN, OF NONINFRINGEMENT, MERCHANTABILITY OR FITNESS FOR A PARTICULAR PURPOSE, OR ARISING FROM A COURSE OF DEALING, TRADE USAGE, TRADE PRACTICE, OR INDUSTRY STANDARDS.

MICRO-STAR INT'L CO.,LTD

MS-V379

Size	Document Description	Rev
Custom	Page22: IFPC HDMI	1.0

Date: Tuesday, January 15, 2019 Sheet 22 of 53

Page23: IFPD DP

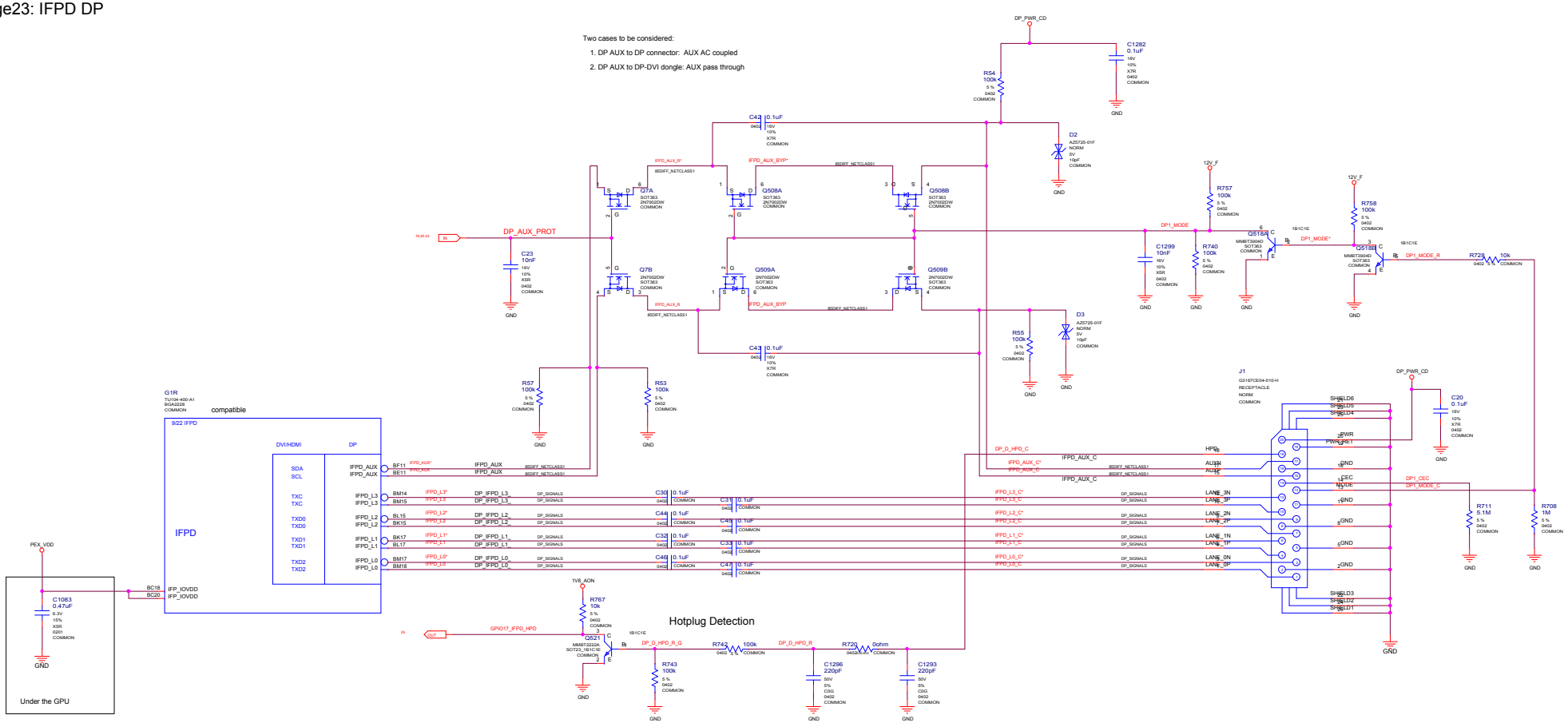

Fused DP_PWR

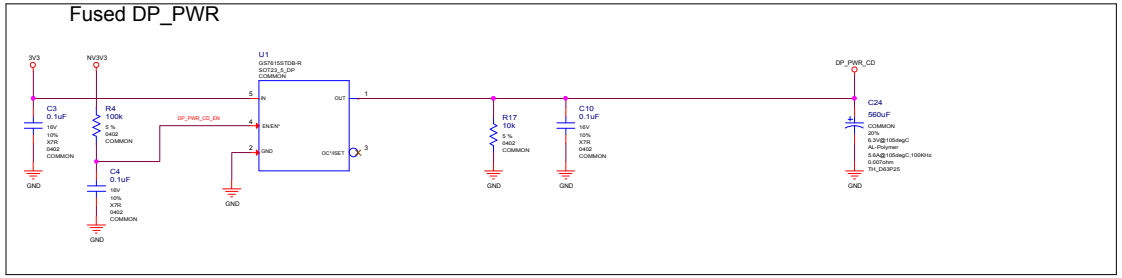

ALL NVIDIA DESIGN SPECIFICATIONS, REFERENCE SPECIFICATIONS, REFERENCE BOARDS, FILES, DRAWINGS, DIAGNOSTICS, LISTS AND OTHER DOCUMENTS OR INFORMATION (TOGETHER AND SEPARATELY, "MATERIALS") ARE BEING PROVIDED "AS IS". THE MATERIALS MAY CONTAIN KNOWN AND UNKNOWN VIOLATIONS OR DEVIATIONS OF INDUSTRY STANDARDS AND SPECIFICATIONS. NVIDIA MAKES NO WARRANTIES, EXPRESSED, IMPLIED, STATUTORY OR OTHERWISE WITH RESPECT TO THE MATERIALS OR OTHERWISE, AND EXPRESSLY DISCLAIMS ALL IMPLIED WARRANTIES INCLUDING, WITHOUT LIMITATION, THE WARRANTIES OF DESIGN, OF NONINFRINGEMENT, MERCHANTABILITY OR FITNESS FOR A PARTICULAR PURPOSE, OR ARISING FROM A COURSE OF DEALING, TRADE USAGE, TRADE PRACTICE, OR INDUSTRY STANDARDS.

MICRO-STAR INT'L CO.,LTD			
MS-V379			
Size: Custom	Document Description: Page23: IFPD DP		Rev: 1.0
Date: Tuesday, January 15, 2019	Sheet 23 of 53		

Page24: NVHS Interface and Frame Lock

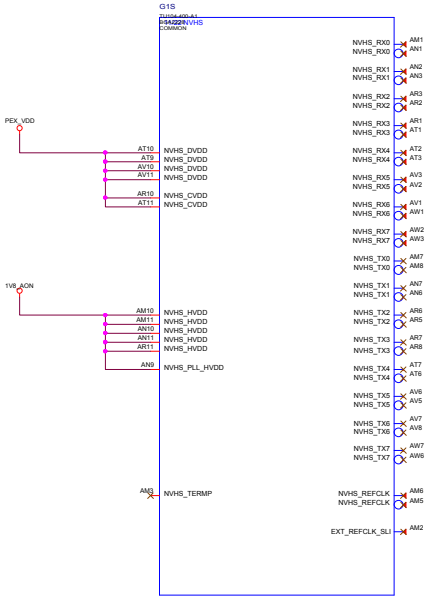

ALL NVIDIA DESIGN SPECIFICATIONS, REFERENCE SPECIFICATIONS, REFERENCE BOARDS, FILES, DRAWINGS, DIAGNOSTICS, LISTS AND OTHER DOCUMENTS OR INFORMATION (TOGETHER AND SEPARATELY, "MATERIALS") ARE BEING PROVIDED "AS IS". THE MATERIALS MAY CONTAIN KNOWN AND UNKNOWN VIOLATIONS OR DEVIATIONS OF INDUSTRY STANDARDS AND SPECIFICATIONS. NVIDIA MAKES NO WARRANTIES, EXPRESSED, IMPLIED, STATUTORY OR OTHERWISE WITH RESPECT TO THE MATERIALS OR OTHERWISE, AND EXPRESSLY DISCLAIMS ALL IMPLIED WARRANTIES INCLUDING, WITHOUT LIMITATION, THE WARRANTIES OF DESIGN, OF NONINFRINGEMENT, MERCHANTABILITY OR FITNESS FOR A PARTICULAR PURPOSE, OR ARISING FROM A COURSE OF DEALING, TRADE USAGE, TRADE PRACTICE, OR INDUSTRY STANDARDS.

MSI	MICRO-STAR INT'L CO.,LTD MS-V379	
Size: Custom	Document Description: Page24: NVHS Interface and Frame Lock	Rev: 1.0
Date: Tuesday, January 15, 2019	Sheet 24 of 53	

Page25: MISC1: Fan, Thermal, JTAG, GPIO

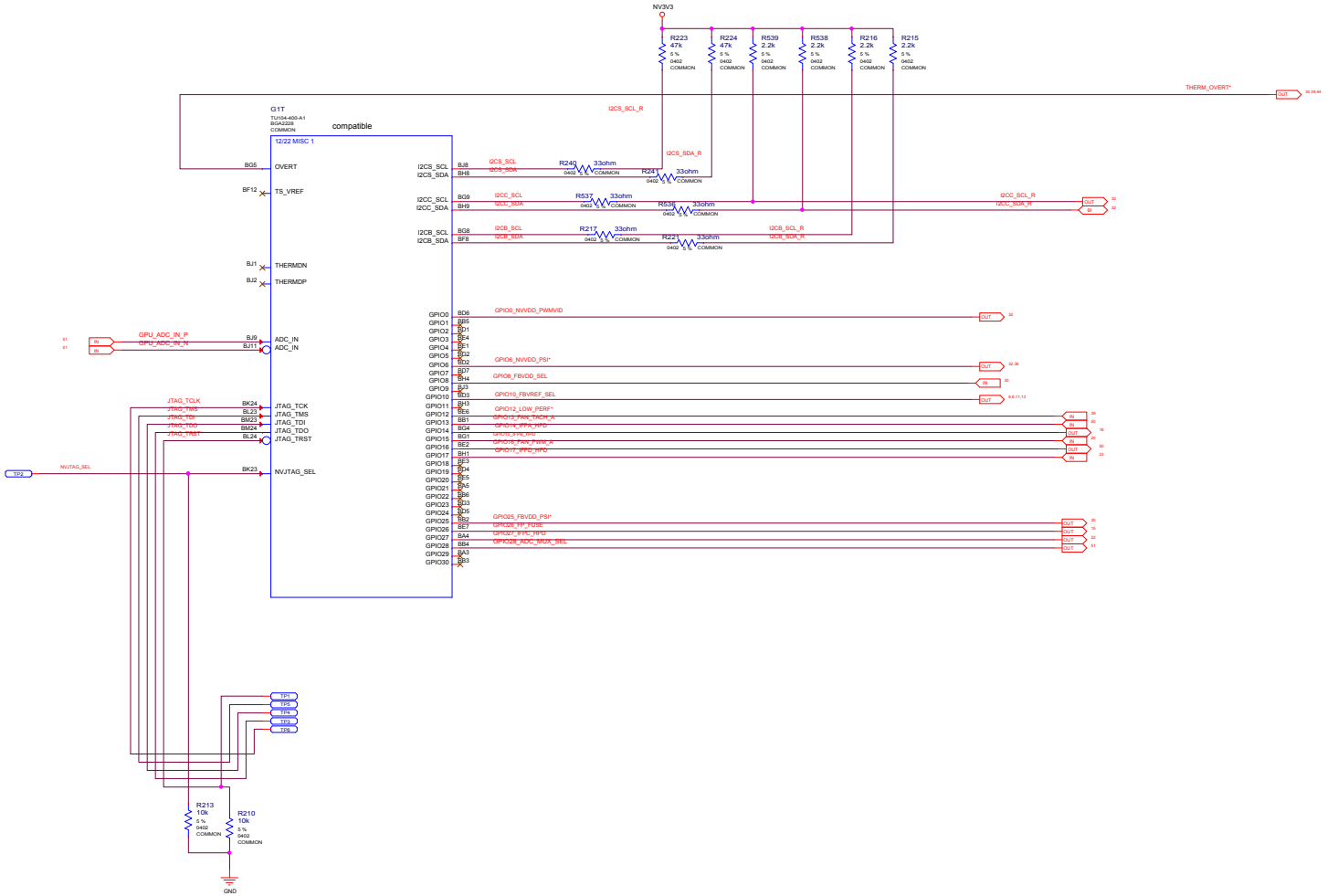

ALL NVIDIA DESIGN SPECIFICATIONS, REFERENCE SPECIFICATIONS, REFERENCE BOARDS, FILES, DRAWINGS, DIAGNOSTICS, LISTS AND OTHER DOCUMENTS OR INFORMATION (TOGETHER AND SEPARATELY, "MATERIALS") ARE BEING PROVIDED "AS IS". THE MATERIALS MAY CONTAIN KNOWN AND UNKNOWN VIOLATIONS OR DEVIATIONS OF INDUSTRY STANDARDS AND SPECIFICATIONS. NVIDIA MAKES NO WARRANTIES, EXPRESSED, IMPLIED, STATUTORY OR OTHERWISE WITH RESPECT TO THE MATERIALS OR OTHERWISE, AND EXPRESSLY DISCLAIMS ALL IMPLIED WARRANTIES INCLUDING, WITHOUT LIMITATION, THE WARRANTIES OF DESIGN, OF NONINFRINGEMENT, MERCHANTABILITY OR FITNESS FOR A PARTICULAR PURPOSE, OR ARISING FROM A COURSE OF DEALING, TRADE USAGE, TRADE PRACTICE, OR INDUSTRY STANDARDS.

MICRO-STAR INT'L CO.,LTD
MS-V379

Size	Document Description	Rev
Custom	Page25: MISC1: Fan, Thermal, JTAG, GPIO	1.0

Date: Tuesday, January 15, 2019 | Sheet 25 of 53

Page26: MISC2: ROM, XTAL, Straps

STRAP2	STRAP1	STRAP0	RAMCFG[4:0]
L	L	L	00000
L	L	H	00001
L	H	L	00010
L	H	H	00011
H	H	L	00110
H	H	H	00111
L	L	M	01000

RAMCFG[4:0]	DENSITY	WIDTH	VENDOR	DIE
00000	8Gb	256-bit	Samsung	C
00001	8Gb	256-bit	Micron	A
00010	8Gb	256-bit	Hynix	M
00011	8Gb	256-bit	Samsung	C
00100	8Gb	256-bit	Micron	A
00101	8Gb	256-bit	Hynix	M
00110	16Gb	256-bit	Samsung	M
00111				

ROM_SO	ROM_SI	ROM_SCLK	DUMMY[2:0],FS_OVERT	1:ENABLE 0:DISABLE	
L	L	L	XXX1	FS_OVERT ENABLE	DEFAULT
L	L	M	XXX0	FS_OVERT DISABLE	

STRAP5	STRAP4	STRAP3	SMB_ALT_ADDR	DEVID_SEL	PCIE_CFG	VGA_DEVICE
M	H	H	1	1	1	1
M	H	L	1	1	1	0
M	L	H	1	1	0	1
M	L	L	1	1	0	0
L	H	M	1	0	1	1
L	M	H	1	0	1	0
L	M	L	1	0	0	1
L	L	M	1	0	0	0
H	H	H	0	1	1	1
H	H	L	0	1	1	0
H	L	H	0	1	0	1
H	L	L	0	1	0	0
L	H	H	0	0	1	1
L	H	L	0	0	1	0
L	L	H	0	0	0	1 DEFAULT
L	L	L	0	0	0	0

H=High :Tied to 1.8V
M=Middle:Tied to 0.9V
L=Low :Tied to 0V

1:SMB_ALT_ADDR ENABLE
0:SMB_ALT_ADDR DISABLE

1:DEVID_SEL REBRAND
0:DEVID_SEL ORIGNAL

1:PCIE_CFG LOW POWER
0:PCIE_CFG HIGH POWER

1:VGA_DEVICE ENABLE
0:VGA_DEVICE DISABLE

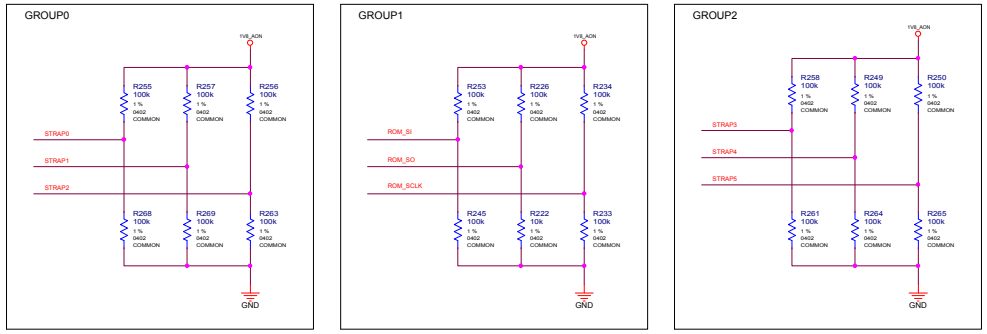

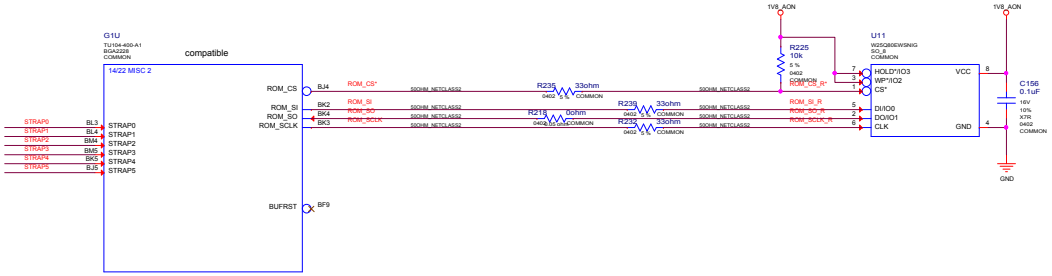

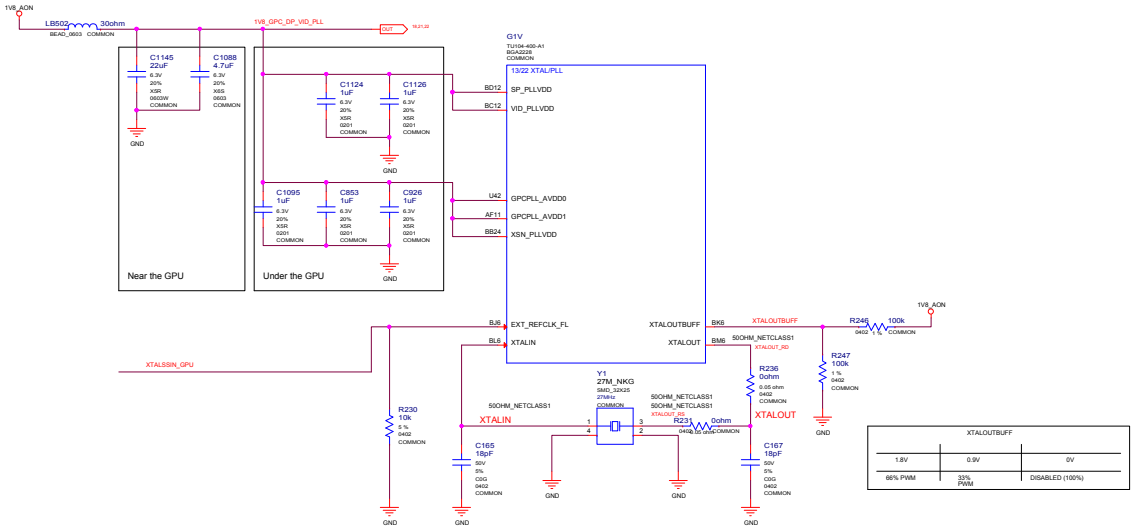

XTALOUTBUFF		
1.8V	0.9V	0V
66% PWM	33% PWM	DISABLED (100%)

ALL NVIDIA DESIGN SPECIFICATIONS, REFERENCE SPECIFICATIONS, REFERENCE BOARDS, FILES, DRAWINGS, DIAGNOSTICS, LISTS AND OTHER DOCUMENTS OR INFORMATION (TOGETHER AND SEPARATELY, "MATERIALS") ARE BEING PROVIDED "AS IS". THE MATERIALS MAY CONTAIN KNOWN AND UNKNOWN VIOLATIONS OR DEVIATIONS OF INDUSTRY STANDARDS AND SPECIFICATIONS. NVIDIA MAKES NO WARRANTIES, EXPRESSED, IMPLIED, STATUTORY OR OTHERWISE WITH RESPECT TO THE MATERIALS OR OTHERWISE, AND EXPRESSLY DISCLAIMS ALL IMPLIED WARRANTIES INCLUDING, WITHOUT LIMITATION, THE WARRANTIES OF DESIGN, OF NONINFRINGEMENT, MERCHANTABILITY OR FITNESS FOR A PARTICULAR PURPOSE, OR ARISING FROM A COURSE OF DEALING, TRADE USAGE, TRADE PRACTICE, OR INDUSTRY STANDARDS.

MICRO-STAR INT'L CO.,LTD
MS-V379

Size	Document Description	Rev
Custom	Page26: MISC2: ROM, XTAL, Straps	1.0

Date: Tuesday, January 15, 2019 | Sheet 26 of 53

Page27: PS: 1V8_AON

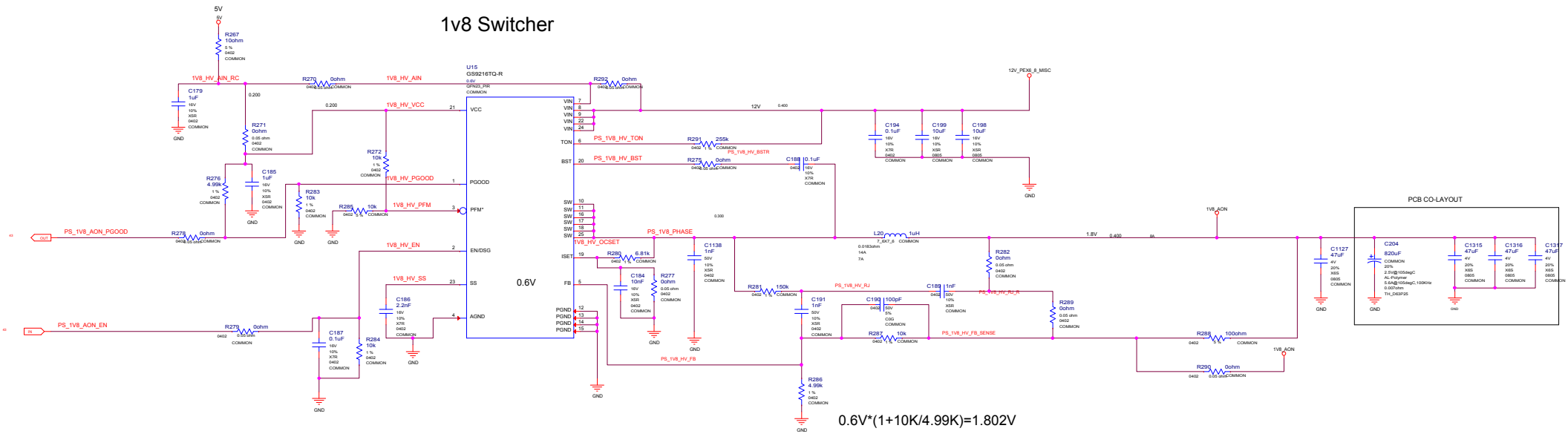

ALL NVIDIA DESIGN SPECIFICATIONS, REFERENCE SPECIFICATIONS, REFERENCE BOARDS, FILES, DRAWINGS, DIAGNOSTICS, LISTS AND OTHER DOCUMENTS OR INFORMATION (TOGETHER AND SEPARATELY, "MATERIALS") ARE BEING PROVIDED "AS IS". THE MATERIALS MAY CONTAIN KNOWN AND UNKNOWN VIOLATIONS OR DEVIATIONS OF INDUSTRY STANDARDS AND SPECIFICATIONS. NVIDIA MAKES NO WARRANTIES, EXPRESSED, IMPLIED, STATUTORY OR OTHERWISE WITH RESPECT TO THE MATERIALS OR OTHERWISE, AND EXPRESSLY DISCLAIMS ALL IMPLIED WARRANTIES INCLUDING, WITHOUT LIMITATION, THE WARRANTIES OF DESIGN, OF NONINFRINGEMENT, MERCHANTABILITY OR FITNESS FOR A PARTICULAR PURPOSE, OR ARISING FROM A COURSE OF DEALING, TRADE USAGE, TRADE PRACTICE, OR INDUSTRY STANDARDS.

MICRO-STAR INT'L CO.,LTD

MS-V379

Size	Document Description	Rev
Custom	Page27: PS: 1V8_AON	1.0

Date: Tuesday, January 15, 2019 | Sheet 27 of 53

Page28: PS: 5V

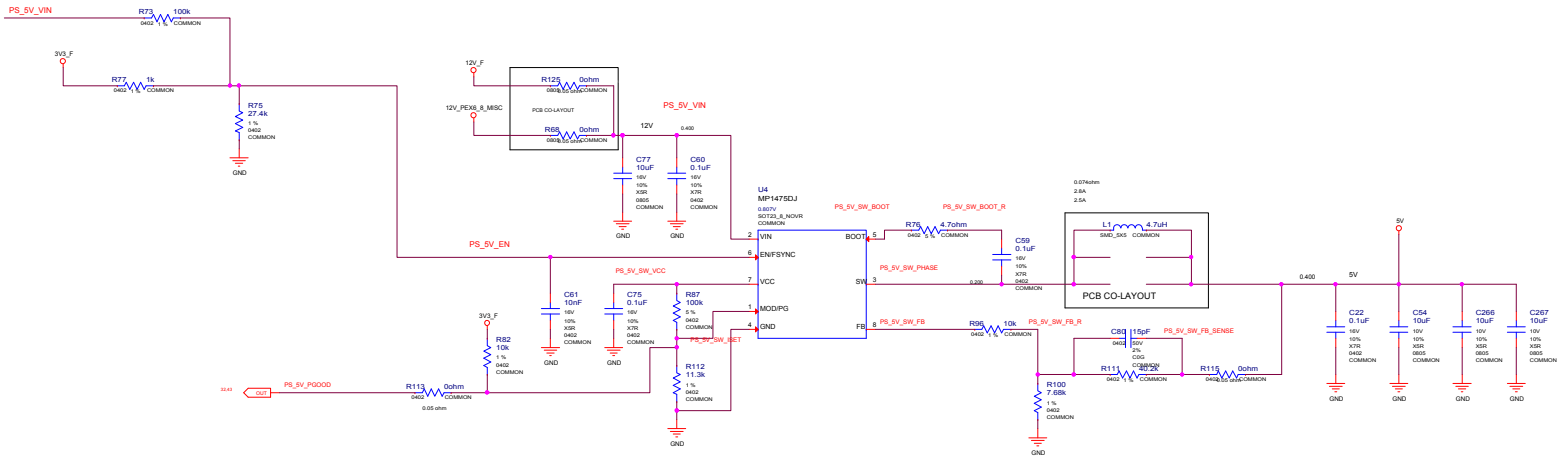

0.8V*(1+40.2K/7.68K)=4.9875V

ALL NVIDIA DESIGN SPECIFICATIONS, REFERENCE SPECIFICATIONS, REFERENCE BOARDS, FILES, DRAWINGS, DIAGNOSTICS, LISTS AND OTHER DOCUMENTS OR INFORMATION (TOGETHER AND SEPARATELY, 'MATERIALS') ARE BEING PROVIDED 'AS IS'. THE MATERIALS MAY CONTAIN KNOWN AND UNKNOWN VIOLATIONS OR DEVIATIONS OF INDUSTRY STANDARDS AND SPECIFICATIONS. NVIDIA MAKES NO WARRANTIES, EXPRESSED, IMPLIED, STATUTORY OR OTHERWISE WITH RESPECT TO THE MATERIALS OR OTHERWISE, AND EXPRESSLY DISCLAIMS ALL IMPLIED WARRANTIES INCLUDING, WITHOUT LIMITATION, THE WARRANTIES OF DESIGN, OF NONINFRINGEMENT, MERCHANTABILITY OR FITNESS FOR A PARTICULAR PURPOSE, OR ARISING FROM A COURSE OF DEALING, TRADE USAGE, TRADE PRACTICE, OR INDUSTRY STANDARDS.

Page29: PS: PEXVDD

PEX Switcher

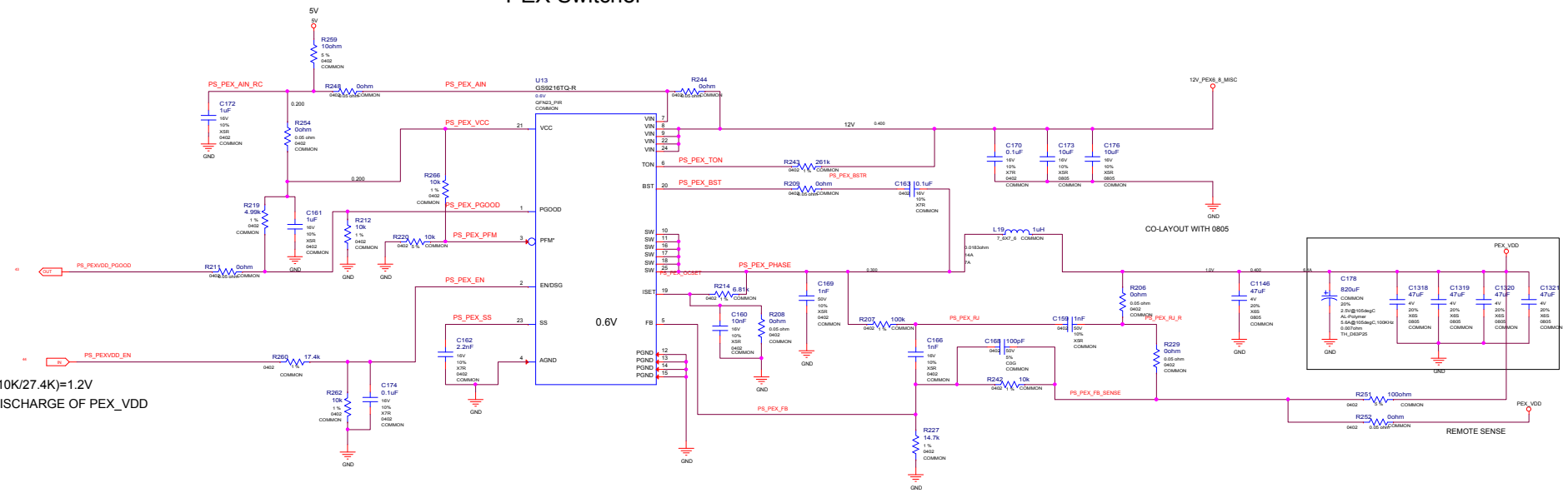

EN: 3.3V*(10K/27.4K)=1.2V

ENABLE DISCHARGE OF PEX_VDD

0.6V*(1+10K/14.7K)=1.008V

ALL NVIDIA DESIGN SPECIFICATIONS, REFERENCE SPECIFICATIONS, REFERENCE BOARDS, FILES, DRAWINGS, DIAGNOSTICS, LISTS AND OTHER DOCUMENTS OR INFORMATION (TOGETHER AND SEPARATELY, "MATERIALS") ARE BEING PROVIDED "AS IS". THE MATERIALS MAY CONTAIN KNOWN AND UNKNOWN VIOLATIONS OR DEVIATIONS OF INDUSTRY STANDARDS AND SPECIFICATIONS. NVIDIA MAKES NO WARRANTIES, EXPRESSED, IMPLIED, STATUTORY OR OTHERWISE WITH RESPECT TO THE MATERIALS OR OTHERWISE, AND EXPRESSLY DISCLAIMS ALL IMPLIED WARRANTIES INCLUDING, WITHOUT LIMITATION, THE WARRANTIES OF DESIGN, OF NONINFRINGEMENT, MERCHANTABILITY OR FITNESS FOR A PARTICULAR PURPOSE, OR ARISING FROM A COURSE OF DEALING, TRADE USAGE, TRADE PRACTICE, OR INDUSTRY STANDARDS.

MICRO-STAR INT'L CO.,LTD

MS-V379

Size	Document Description	Rev
Custom	Page29: PS: PEXVDD	1.0

Date: Tuesday, January 15, 2019 | Sheet 29 of 53

Page30: PS: FBVDDQ

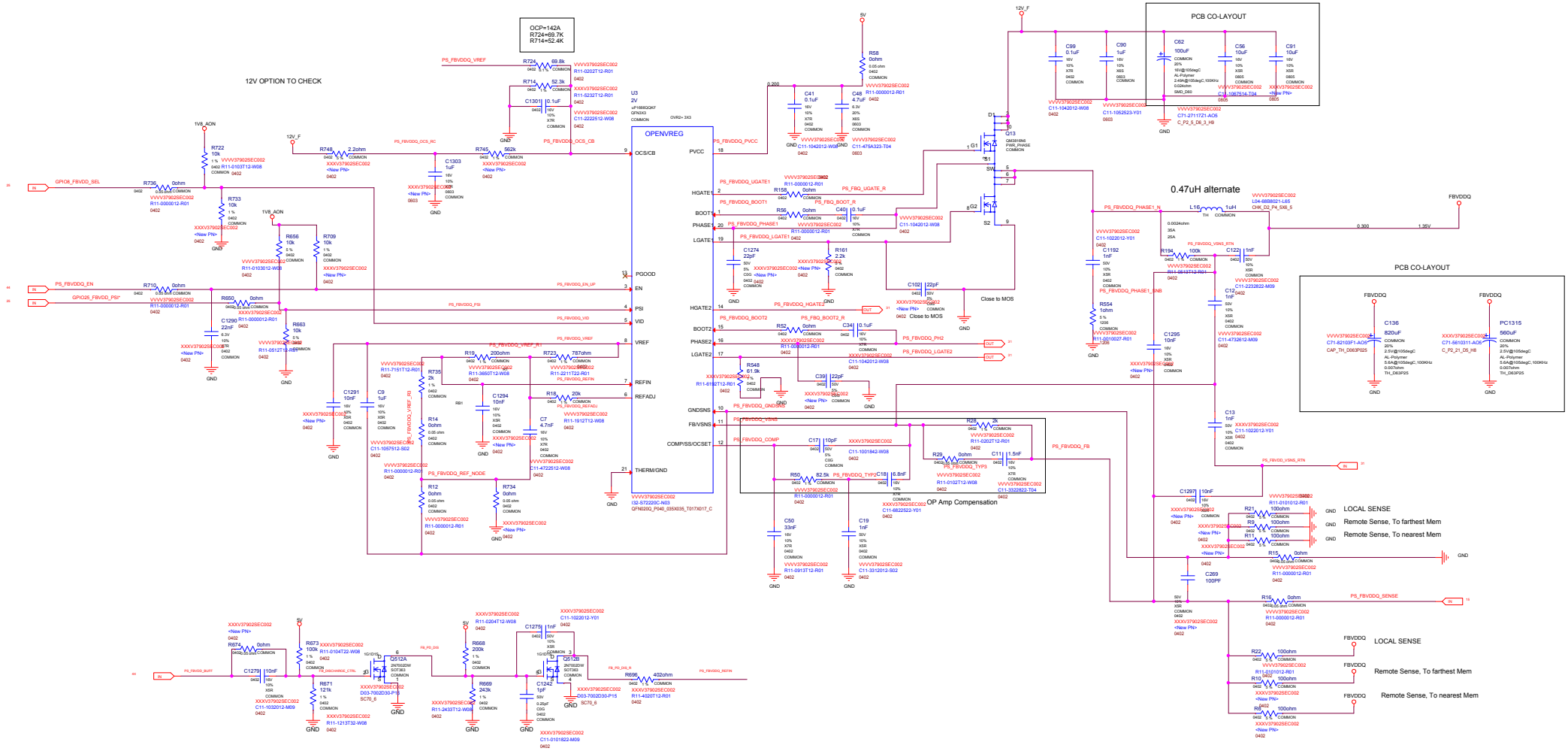

ALL NVIDIA DESIGN SPECIFICATIONS, REFERENCE SPECIFICATIONS, REFERENCE BOARDS, FILES, DRAWINGS, DIAGNOSTICS, LISTS AND OTHER DOCUMENTS OR INFORMATION (TOGETHER AND SEPARATELY, 'MATERIALS') ARE BEING PROVIDED 'AS IS'. THE MATERIALS MAY CONTAIN KNOWN AND UNKNOWN VIOLATIONS OR DEVIATIONS OF INDUSTRY STANDARDS AND SPECIFICATIONS. NVIDIA MAKES NO WARRANTIES, EXPRESSED, IMPLIED, STATUTORY OR OTHERWISE WITH RESPECT TO THE MATERIALS OR OTHERWISE, AND EXPRESSLY DISCLAIMS ALL WARRANTIES INCLUDING, WITHOUT LIMITATION, THE WARRANTIES OF DESIGN, OF NONINFRINGEMENT, MERCHANTABILITY OR FITNESS FOR A PARTICULAR PURPOSE, OR ARISING FROM A COURSE OF DEALING, TRADE USAGE, TRADE PRACTICE, OR INDUSTRY STANDARDS.

MICRO-STAR INT'L CO.,LTD			
MS-V379			
Size: Custom	Document Description: Page30: PS: FBVDDQ		Rev: 1.0
Date: Tuesday, January 15, 2019	Sheet 30 of 53		

Page31: PS: FBVDDQ PH2

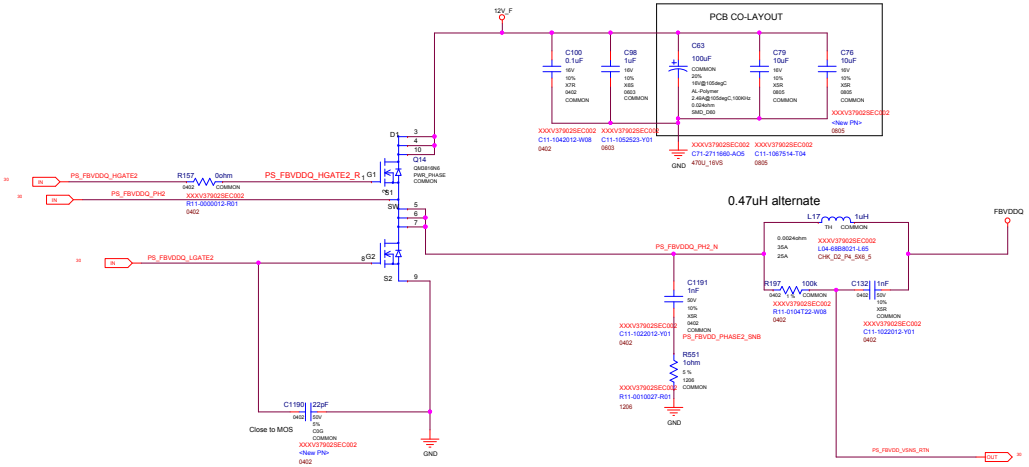

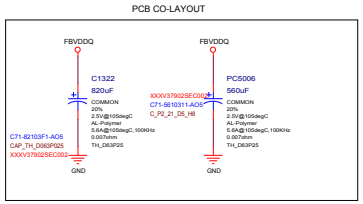

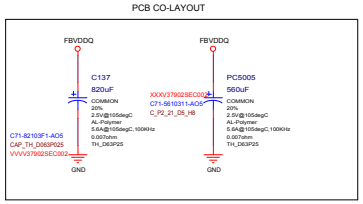

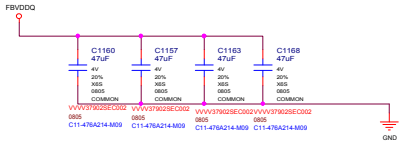

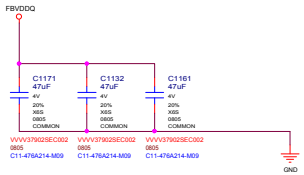

ALL NVIDIA DESIGN SPECIFICATIONS, REFERENCE SPECIFICATIONS, REFERENCE BOARDS, FILES, DRAWINGS, DIAGNOSTICS, LISTS AND OTHER DOCUMENTS OR INFORMATION (TOGETHER AND SEPARATELY, "MATERIALS") ARE BEING PROVIDED "AS IS". THE MATERIALS MAY CONTAIN KNOWN AND UNKNOWN VIOLATIONS OR DEVIATIONS OF INDUSTRY STANDARDS AND SPECIFICATIONS. NVIDIA MAKES NO WARRANTIES, EXPRESSED, IMPLIED, STATUTORY OR OTHERWISE WITH RESPECT TO THE MATERIALS OR OTHERWISE, AND EXPRESSLY DISCLAIMS ALL IMPLIED WARRANTIES INCLUDING, WITHOUT LIMITATION, THE WARRANTIES OF DESIGN, OF NONINFRINGEMENT, MERCHANTABILITY OR FITNESS FOR A PARTICULAR PURPOSE, OR ARISING FROM A COURSE OF DEALING, TRADE USAGE, TRADE PRACTICE, OR INDUSTRY STANDARDS.

MICRO-STAR INT'L CO.,LTD

MS-V379

Size	Document Description	Rev
Custom	Page31: PS: FBVDDQ PH2	1.0

Date: Tuesday, January 15, 2019 Sheet 31 of 53

Page32: PS: NVVDD CTR

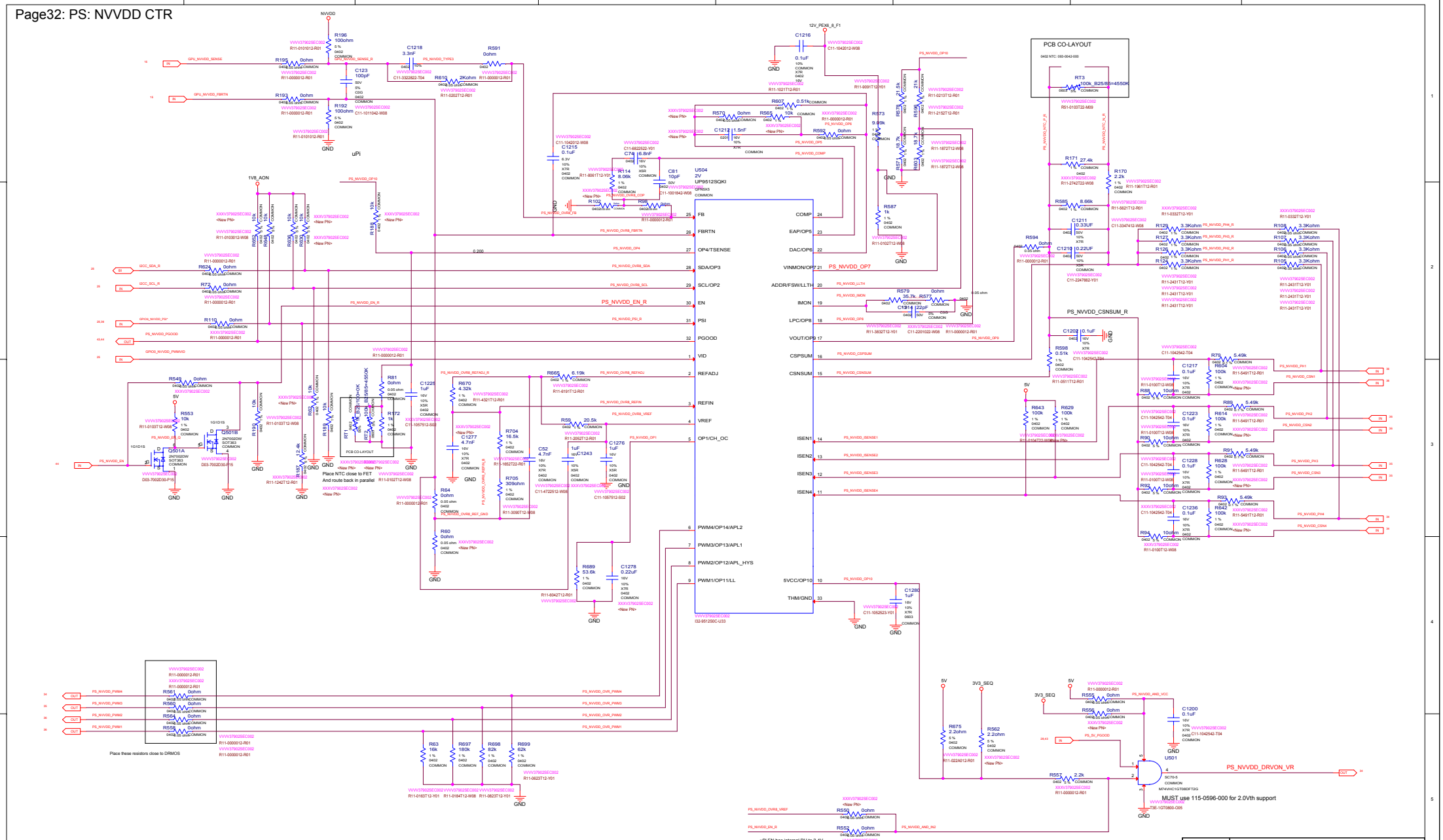

ALL NVIDIA DESIGN SPECIFICATIONS, REFERENCE SPECIFICATIONS, REFERENCE BOARDS, FILES, DRAWINGS, DIAGNOSTICS, LISTS AND OTHER DOCUMENTS OR INFORMATION (TOGETHER AND SEPARATELY, 'MATERIALS') ARE BEING PROVIDED 'AS IS'. THE MATERIALS MAY CONTAIN KNOWN AND UNKNOWN VIOLATIONS OR DEVIATIONS OF INDUSTRY STANDARDS AND SPECIFICATIONS. NVIDIA MAKES NO WARRANTIES, EXPRESSED, IMPLIED, STATUTORY OR OTHERWISE WITH RESPECT TO THE MATERIALS OR OTHERWISE, AND EXPRESSLY DISCLAIMS ALL IMPLIED WARRANTIES INCLUDING, WITHOUT LIMITATION, THE WARRANTIES OF DESIGN, OF NONINFRINGEMENT, MERCHANTABILITY OR FITNESS FOR A PARTICULAR PURPOSE, OR ARISING FROM A COURSE OF DEALING, TRADE USAGE, TRADE PRACTICE, OR INDUSTRY STANDARDS.

MICRO-STAR INT'L CO.,LTD

MS-V379

Size	Document Description	Rev
Custom	Page32: PS: NVVDD CTR	1.0
Date: Tuesday, January 15, 2019	Sheet 32 of 53	

DROP OVR3i SOLUTION

ALL NVIDIA DESIGN SPECIFICATIONS, REFERENCE SPECIFICATIONS, REFERENCE BOARDS, FILES, DRAWINGS, DIAGNOSTICS, LISTS AND OTHER DOCUMENTS OR INFORMATION (TOGETHER AND SEPARATELY, "MATERIALS") ARE BEING PROVIDED "AS IS". THE MATERIALS MAY CONTAIN KNOWN AND UNKNOWN VIOLATIONS OR DEVIATIONS OF INDUSTRY STANDARDS AND SPECIFICATIONS. NVIDIA MAKES NO WARRANTIES, EXPRESSED, IMPLIED, STATUTORY OR OTHERWISE WITH RESPECT TO THE MATERIALS OR OTHERWISE, AND EXPRESSLY DISCLAIMS ALL IMPLIED WARRANTIES INCLUDING, WITHOUT LIMITATION, THE WARRANTIES OF DESIGN, OF NONINFRINGEMENT, MERCHANTABILITY OR FITNESS FOR A PARTICULAR PURPOSE, OR ARISING FROM A COURSE OF DEALING, TRADE USAGE, TRADE PRACTICE, OR INDUSTRY STANDARDS.

Page34: PS: NVVDD PH6&4

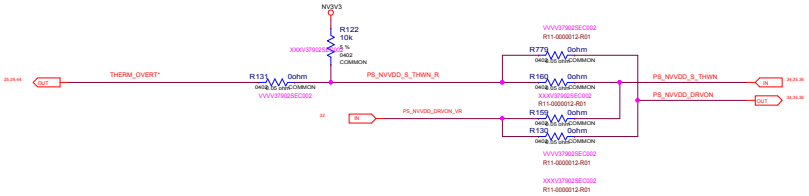

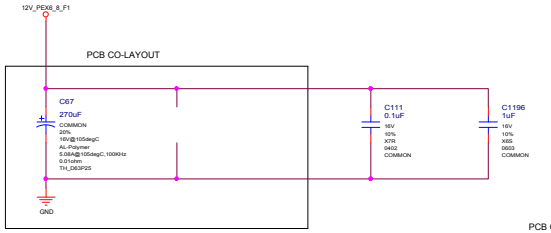

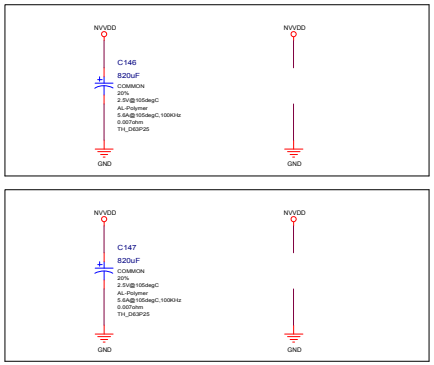

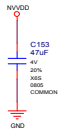

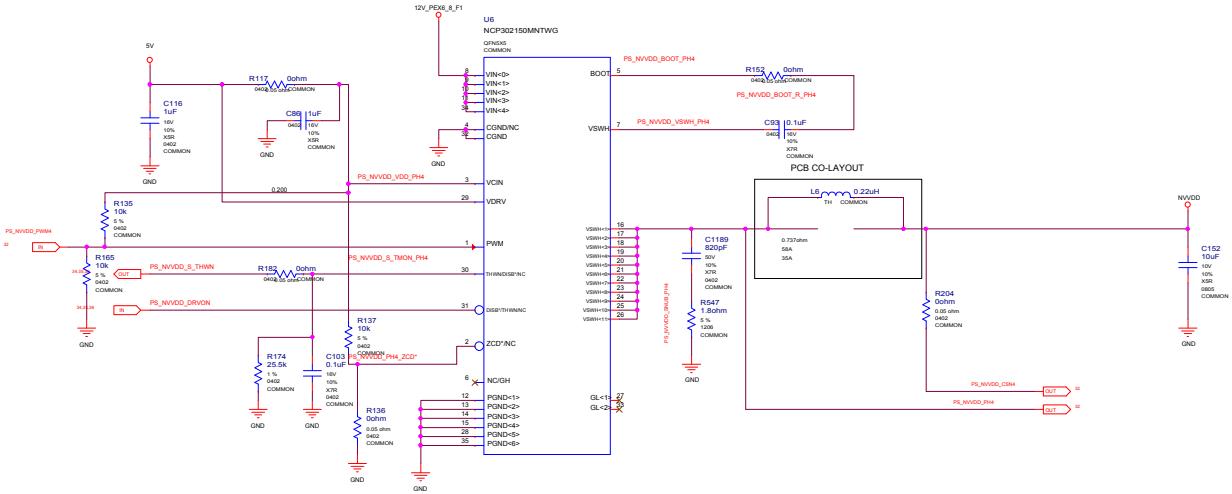

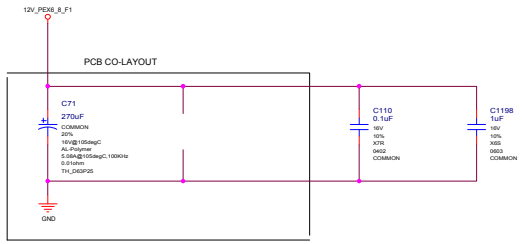

ALL NVIDIA DESIGN SPECIFICATIONS, REFERENCE SPECIFICATIONS, REFERENCE BOARDS, FILES, DRAWINGS, DIAGNOSTICS, LISTS AND OTHER DOCUMENTS OR INFORMATION (TOGETHER AND SEPARATELY, "MATERIALS") ARE BEING PROVIDED "AS IS". THE MATERIALS MAY CONTAIN KNOWN AND UNKNOWN VIOLATIONS OR DEVIATIONS OF INDUSTRY STANDARDS AND SPECIFICATIONS. NVIDIA MAKES NO WARRANTIES, EXPRESSED, IMPLIED, STATUTORY OR OTHERWISE WITH RESPECT TO THE MATERIALS OR OTHERWISE, AND EXPRESSLY DISCLAIMS ALL WARRANTIES INCLUDING, WITHOUT LIMITATION, THE WARRANTIES OF DESIGN, OF NONINFRINGEMENT, MERCHANTABILITY OR FITNESS FOR A PARTICULAR PURPOSE, OR ARISING FROM A COURSE OF DEALING, TRADE USAGE, TRADE PRACTICE, OR INDUSTRY STANDARDS.

MICRO-STAR INT'L CO.,LTD			
MS-V379			
Size: Custom	Document Description: Page34: PS: NVVDD PH6&4		Rev: 1.0
Date: Tuesday, January 15, 2019	Sheet 34 of 53		

Page35: PS: NVVDD PH3&5

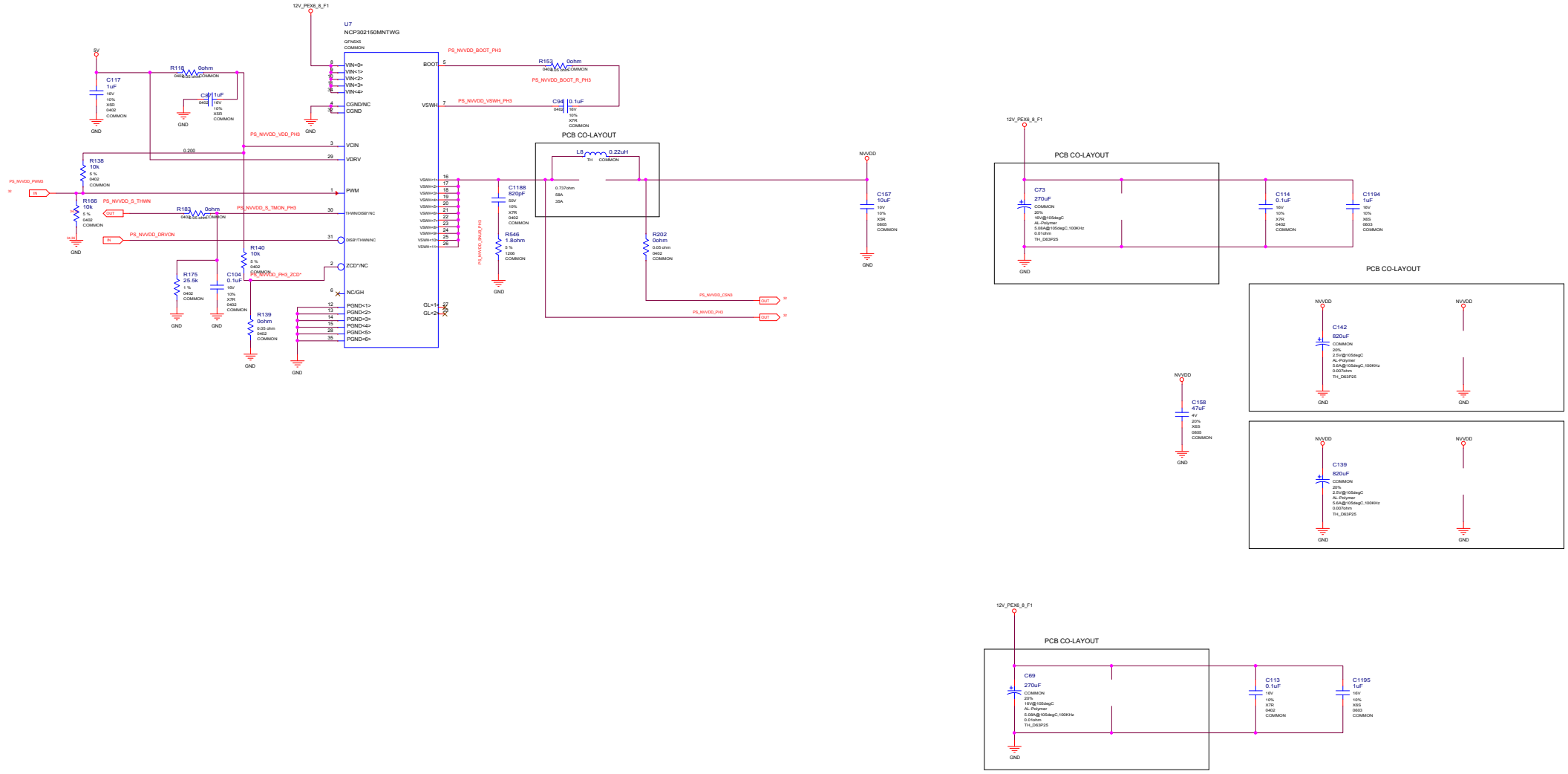

ALL NVIDIA DESIGN SPECIFICATIONS, REFERENCE SPECIFICATIONS, REFERENCE BOARDS, FILES, DRAWINGS, DIAGNOSTICS, LISTS AND OTHER DOCUMENTS OR INFORMATION (TOGETHER AND SEPARATELY, "MATERIALS") ARE BEING PROVIDED "AS IS". THE MATERIALS MAY CONTAIN KNOWN AND UNKNOWN VIOLATIONS OR DEVIATIONS OF INDUSTRY STANDARDS AND SPECIFICATIONS. NVIDIA MAKES NO WARRANTIES, EXPRESSED, IMPLIED, STATUTORY OR OTHERWISE WITH RESPECT TO THE MATERIALS OR OTHERWISE, AND EXPRESSLY DISCLAIMS ALL IMPLIED WARRANTIES INCLUDING, WITHOUT LIMITATION, THE WARRANTIES OF DESIGN, OF NONINFRINGEMENT, MERCHANTABILITY OR FITNESS FOR A PARTICULAR PURPOSE, OR ARISING FROM A COURSE OF DEALING, TRADE USAGE, TRADE PRACTICE, OR INDUSTRY STANDARDS.

MICRO-STAR INT'L CO.,LTD			
MS-V379			
Size: Custom	Document Description: Page35: PS: NVVDD PH3&5		Rev: 1.0
Date: Tuesday, January 15, 2019	Sheet 35 of 53		

Page36: PS: NVVDD PH2&1

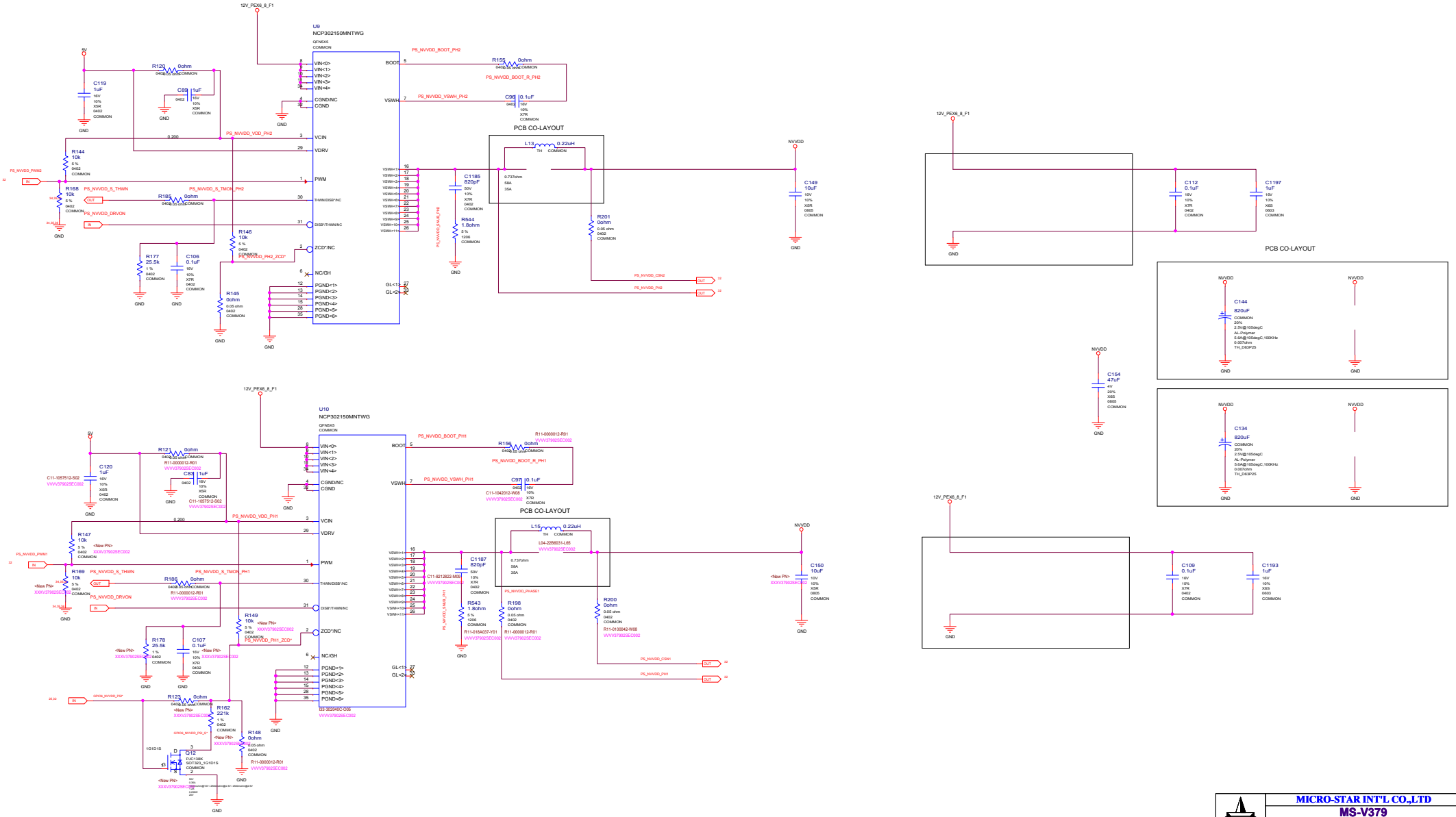

ALL NVIDIA DESIGN SPECIFICATIONS, REFERENCE SPECIFICATIONS, REFERENCE BOARDS, FILES, DRAWINGS, DIAGNOSTICS, LISTS AND OTHER DOCUMENTS OR INFORMATION (TOGETHER AND SEPARATELY, "MATERIALS") ARE BEING PROVIDED "AS IS". THE MATERIALS MAY CONTAIN KNOWN AND UNKNOWN VIOLATIONS OR DEVIATIONS OF INDUSTRY STANDARDS AND SPECIFICATIONS. NVIDIA MAKES NO WARRANTIES, EXPRESSED, IMPLIED, STATUTORY OR OTHERWISE WITH RESPECT TO THE MATERIALS OR OTHERWISE, AND EXPRESSLY DISCLAIMS ALL WARRANTIES INCLUDING, WITHOUT LIMITATION, THE WARRANTIES OF DESIGN, OF NONINFRINGEMENT, MERCHANTABILITY OR FITNESS FOR A PARTICULAR PURPOSE, OR ARISING FROM A COURSE OF DEALING, TRADE USAGE, TRADE PRACTICE, OR INDUSTRY STANDARDS.

MICRO-STAR INT'L CO.,LTD			
MS-V379			
Size: Custom	Document Description: Page36: PS: NVVDD PH2&1		Rev: 1.0
Date: Tuesday, January 15, 2019	Sheet 36 of 53		

DELETE RAIL BALANCE CIRCUIT

ALL NVIDIA DESIGN SPECIFICATIONS, REFERENCE SPECIFICATIONS, REFERENCE BOARDS, FILES, DRAWINGS, DIAGNOSTICS, LISTS AND OTHER DOCUMENTS OR INFORMATION (TOGETHER AND SEPARATELY, "MATERIALS") ARE BEING PROVIDED "AS IS". THE MATERIALS MAY CONTAIN KNOWN AND UNKNOWN VIOLATIONS OR DEVIATIONS OF INDUSTRY STANDARDS AND SPECIFICATIONS. NVIDIA MAKES NO WARRANTIES, EXPRESSED, IMPLIED, STATUTORY OR OTHERWISE WITH RESPECT TO THE MATERIALS OR OTHERWISE, AND EXPRESSLY DISCLAIMS ALL IMPLIED WARRANTIES INCLUDING, WITHOUT LIMITATION, THE WARRANTIES OF DESIGN, OF NONINFRINGEMENT, MERCHANTABILITY OR FITNESS FOR A PARTICULAR PURPOSE, OR ARISING FROM A COURSE OF DEALING, TRADE USAGE, TRADE PRACTICE, OR INDUSTRY STANDARDS.

Page38: PS: Inputs, Filtering, and Monitoring

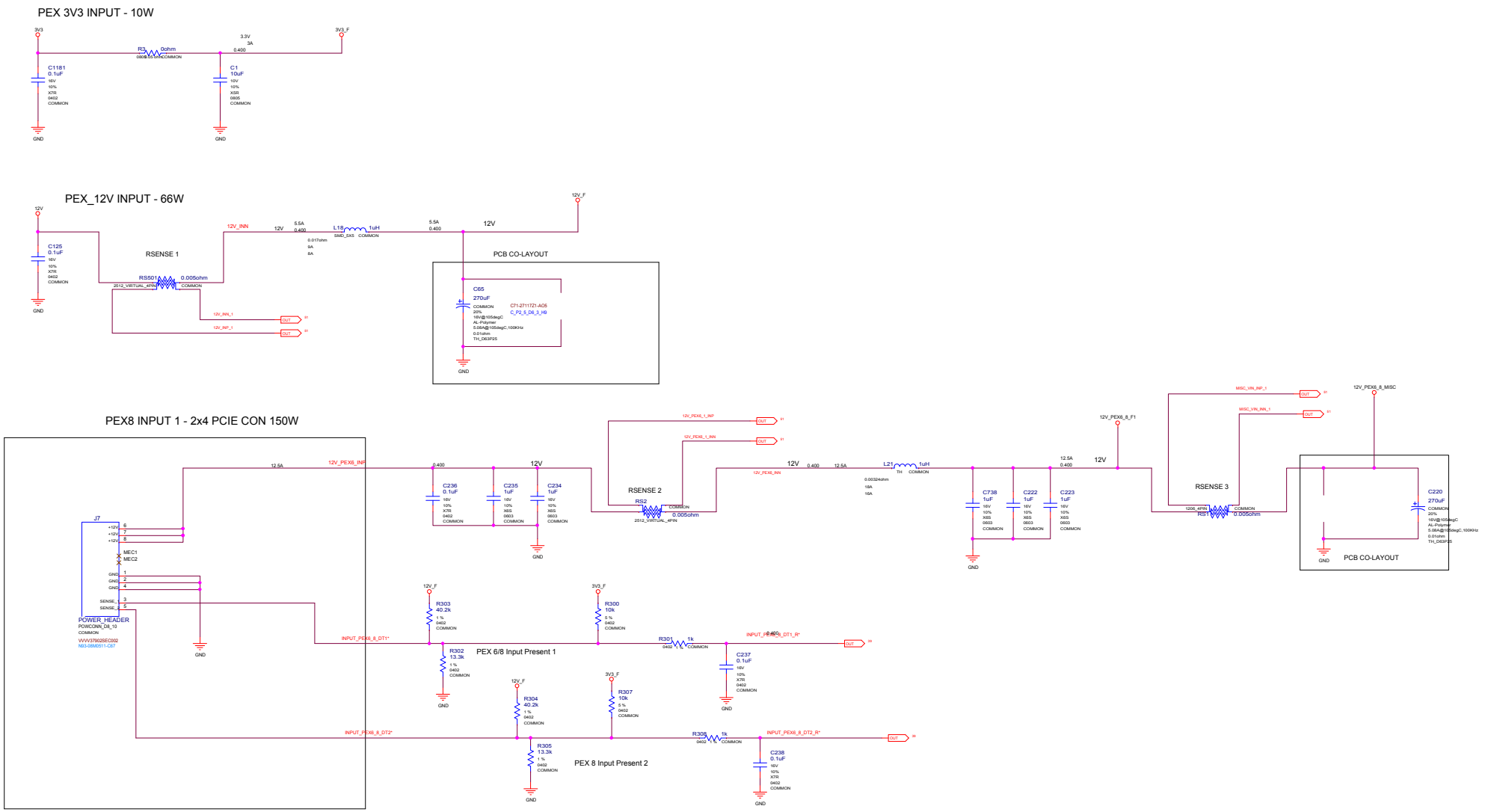

ALL NVIDIA DESIGN SPECIFICATIONS, REFERENCE SPECIFICATIONS, REFERENCE BOARDS, FILES, DRAWINGS, DIAGNOSTICS, LISTS AND OTHER DOCUMENTS OR INFORMATION (TOGETHER AND SEPARATELY, "MATERIALS") ARE BEING PROVIDED "AS IS". THE MATERIALS MAY CONTAIN KNOWN AND UNKNOWN VIOLATIONS OR DEVIATIONS OF INDUSTRY STANDARDS AND SPECIFICATIONS. NVIDIA MAKES NO WARRANTIES, EXPRESSED, IMPLIED, STATUTORY OR OTHERWISE WITH RESPECT TO THE MATERIALS OR OTHERWISE, AND EXPRESSLY DISCLAIMS ALL IMPLIED WARRANTIES INCLUDING, WITHOUT LIMITATION, THE WARRANTIES OF DESIGN, OF NONINFRINGEMENT, MERCHANTABILITY OR FITNESS FOR A PARTICULAR PURPOSE, OR ARISING FROM A COURSE OF DEALING, TRADE USAGE, TRADE PRACTICE, OR INDUSTRY STANDARDS.

MICRO-STAR INT'L CO.,LTD

MS-V379

Size	Document Description	Rev
Custom	Page38: PS: Inputs, Filtering, and Monitoring	1.0

Date: Tuesday, January 15, 2019 Sheet 38 of 53

Page39: PS: HOT-UNPLUG, UNDER POWER BOOT, CURRENT STEERING

PEX Input Present 1

POWER CONNECTOR HOT-UNPLUG DETECT

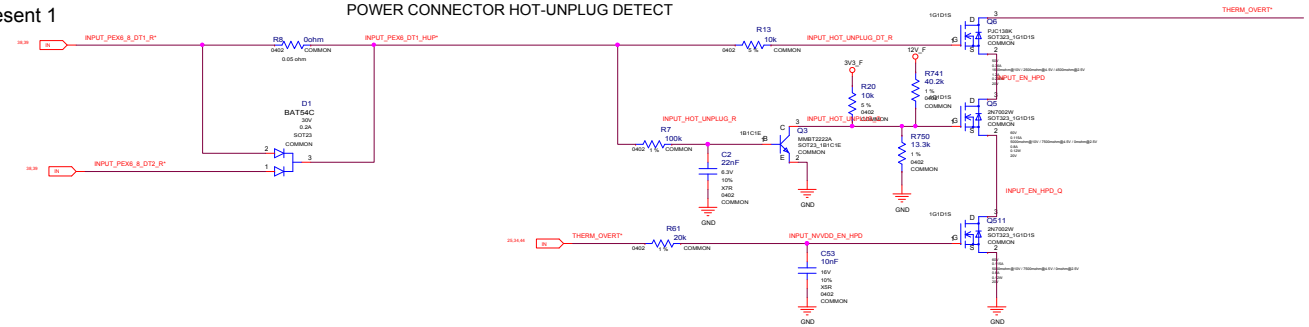

12V CURRENT STEERING (UNDER POWER BOOT):

GUIDES CURRENT FROM PEX EDGE TO PEX 6 PIN INPUT AREA

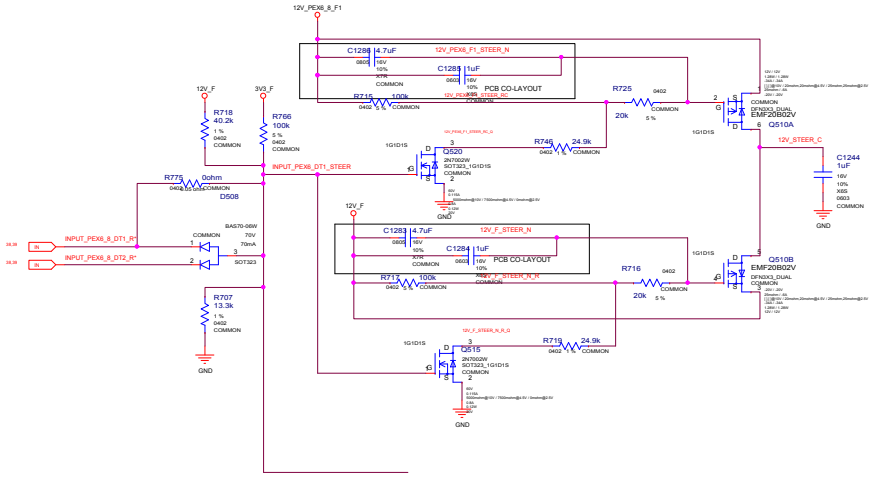

PEX Input - Power Level/PSI* Control

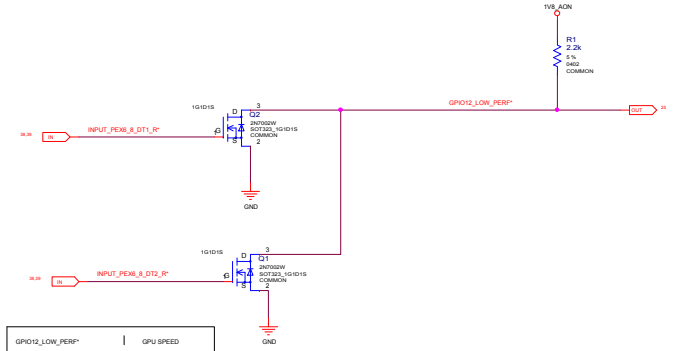

GPIO12_LOW_PERF*	GPU SPEED
0	Slow
1	Normal

ALL NVIDIA DESIGN SPECIFICATIONS, REFERENCE SPECIFICATIONS, REFERENCE BOARDS, FILES, DRAWINGS, DIAGNOSTICS, LISTS AND OTHER DOCUMENTS OR INFORMATION (TOGETHER AND SEPARATELY, "MATERIALS") ARE BEING PROVIDED "AS IS". THE MATERIALS MAY CONTAIN KNOWN AND UNKNOWN VIOLATIONS OR DEVIATIONS OF INDUSTRY STANDARDS AND SPECIFICATIONS. NVIDIA MAKES NO WARRANTIES, EXPRESSED, IMPLIED, STATUTORY OR OTHERWISE WITH RESPECT TO THE MATERIALS OR OTHERWISE, ARE EXPRESSLY DISCLAIMS ALL IMPLIED WARRANTIES INCLUDING, WITHOUT LIMITATION, THE WARRANTIES OF DESIGN, OF NONINFRINGEMENT, MERCHANTABILITY OR FITNESS FOR A PARTICULAR PURPOSE, OR ARISING FROM A COURSE OF DEALING, TRADE USAGE, TRADE PRACTICE, OR INDUSTRY STANDARDS.

Page40: BUCKBOOST

ALL NVIDIA DESIGN SPECIFICATIONS, REFERENCE SPECIFICATIONS, REFERENCE BOARDS, FILES, DRAWINGS, DIAGNOSTICS, LISTS AND OTHER DOCUMENTS OR INFORMATION (TOGETHER AND SEPARATELY, "MATERIALS") ARE BEING PROVIDED "AS IS". THE MATERIALS MAY CONTAIN KNOWN AND UNKNOWN VIOLATIONS OR DEVIATIONS OF INDUSTRY STANDARDS AND SPECIFICATIONS. NVIDIA MAKES NO WARRANTIES, EXPRESSED, IMPLIED, STATUTORY OR OTHERWISE WITH RESPECT TO THE MATERIALS OR OTHERWISE, AND EXPRESSLY DISCLAIMS ALL IMPLIED WARRANTIES INCLUDING, WITHOUT LIMITATION, THE WARRANTIES OF DESIGN, OF NONINFRINGEMENT, MERCHANTABILITY OR FITNESS FOR A PARTICULAR PURPOSE, OR ARISING FROM A COURSE OF DEALING, TRADE USAGE, TRADE PRACTICE, OR INDUSTRY STANDARDS.

MSI

MICRO-STAR INT'L CO.,LTD

MS-V379

Size	Document Description	Rev
Custom	Page40: BUCKBOOST	1.0

Date: Monday, January 14, 2019 | Sheet 40 of 53

Page41: PPC

ALL NVIDIA DESIGN SPECIFICATIONS, REFERENCE SPECIFICATIONS, REFERENCE BOARDS, FILES, DRAWINGS, DIAGNOSTICS, LISTS AND OTHER DOCUMENTS OR INFORMATION (TOGETHER AND SEPARATELY, "MATERIALS") ARE BEING PROVIDED "AS IS". THE MATERIALS MAY CONTAIN KNOWN AND UNKNOWN VIOLATIONS OR DEVIATIONS OF INDUSTRY STANDARDS AND SPECIFICATIONS. NVIDIA MAKES NO WARRANTIES, EXPRESSED, IMPLIED, STATUTORY OR OTHERWISE WITH RESPECT TO THE MATERIALS OR OTHERWISE, AND EXPRESSLY DISCLAIMS ALL IMPLIED WARRANTIES INCLUDING, WITHOUT LIMITATION, THE WARRANTIES OF DESIGN, OF NONINFRINGEMENT, MERCHANTABILITY OR FITNESS FOR A PARTICULAR PURPOSE, OR ARISING FROM A COURSE OF DEALING, TRADE USAGE, TRADE PRACTICE, OR INDUSTRY STANDARDS.

MSI

MICRO-STAR INT'L CO.,LTD

MS-V379

Size	Document Description	Rev
Custom	Page41: PPC	1.0

Date: Monday, January 14, 2019 | Sheet 41 of 53

Page42: 12V & 3V3_A SWITCHER

ALL NVIDIA DESIGN SPECIFICATIONS, REFERENCE SPECIFICATIONS, REFERENCE BOARDS, FILES, DRAWINGS, DIAGNOSTICS, LISTS AND OTHER DOCUMENTS OR INFORMATION (TOGETHER AND SEPARATELY, "MATERIALS") ARE BEING PROVIDED 'AS IS'. THE MATERIALS MAY CONTAIN KNOWN AND UNKNOWN VIOLATIONS OR DEVIATIONS OF INDUSTRY STANDARDS AND SPECIFICATIONS. NVIDIA MAKES NO WARRANTIES, EXPRESSED, IMPLIED, STATUTORY OR OTHERWISE WITH RESPECT TO THE MATERIALS OR OTHERWISE, AND EXPRESSLY DISCLAIMS ALL IMPLIED WARRANTIES INCLUDING, WITHOUT LIMITATION, THE WARRANTIES OF DESIGN, OF NONINFRINGEMENT, MERCHANTABILITY OR FITNESS FOR A PARTICULAR PURPOSE, OR ARISING FROM A COURSE OF DEALING, TRADE USAGE, TRADE PRACTICE, OR INDUSTRY STANDARDS.

MSI

MICRO-STAR INT'L CO.,LTD

MS-V379

Size	Document Description	Rev
Custom	Page42: 12V & 3V3_A SWITCHER	1.0

Date: Monday, January 14, 2019 | Sheet 42 of 53

Page43: SEQ:5V,1V8,NV3V3 ENABLE

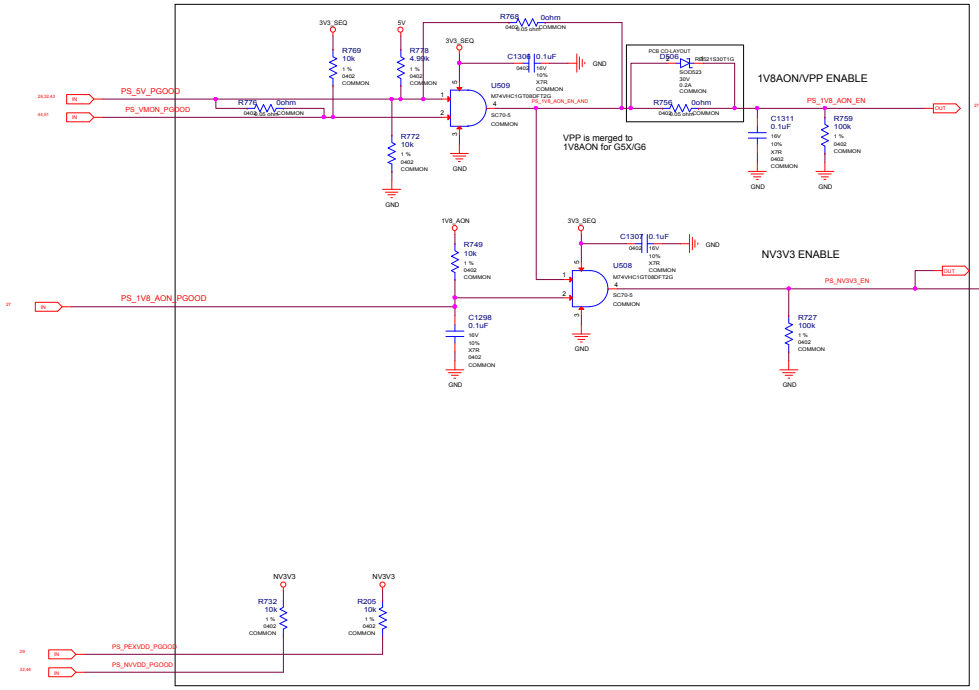

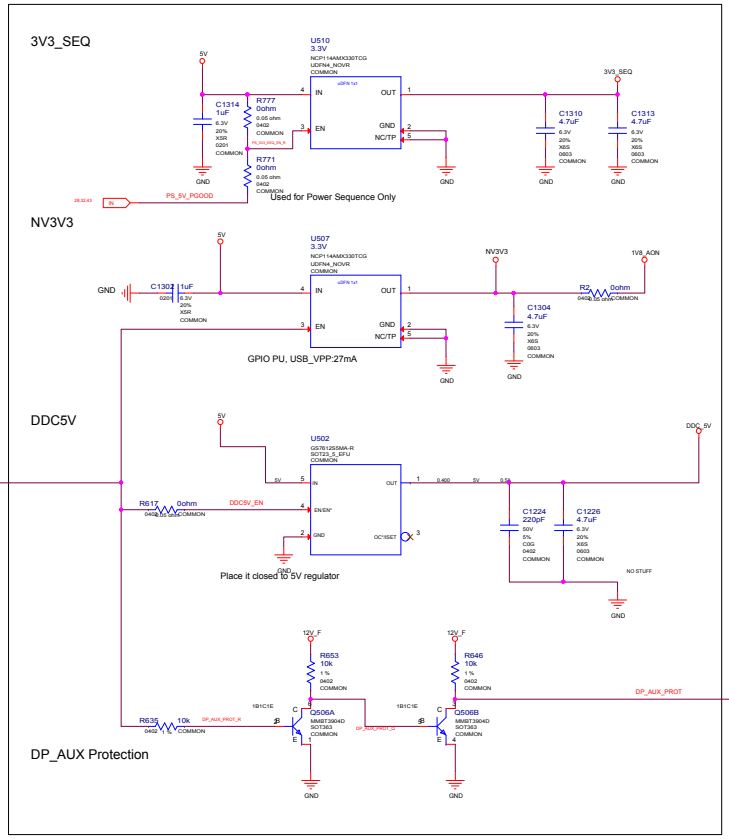

ALL NVIDIA DESIGN SPECIFICATIONS, REFERENCE SPECIFICATIONS, REFERENCE BOARDS, FILES, DRAWINGS, DIAGNOSTICS, LISTS AND OTHER DOCUMENTS OR INFORMATION (TOGETHER AND SEPARATELY, "MATERIALS") ARE BEING PROVIDED "AS IS". THE MATERIALS MAY CONTAIN KNOWN AND UNKNOWN VIOLATIONS OR DEVIATIONS OF INDUSTRY STANDARDS AND SPECIFICATIONS. NVIDIA MAKES NO WARRANTIES, EXPRESSED, IMPLIED, STATUTORY OR OTHERWISE WITH RESPECT TO THE MATERIALS OR OTHERWISE, AND EXPRESSLY DISCLAIMS ALL IMPLIED WARRANTIES INCLUDING, WITHOUT LIMITATION, THE WARRANTIES OF DESIGN, OF NONINFRINGEMENT, MERCHANTABILITY OR FITNESS FOR A PARTICULAR PURPOSE, OR ARISING FROM A COURSE OF DEALING, TRADE USAGE, TRADE PRACTICE, OR INDUSTRY STANDARDS.

MSI	MICRO-STAR INT'L CO.,LTD MS-V379	
Size: Custom	Document Description: Page43: SEQ:5V,1V8,NV3V3 ENABLE	Rev: 1.0
Date: Tuesday, January 15, 2019	Sheet 43 of 53	

Page44: SEQ:NV,PEX,FB ENABLE

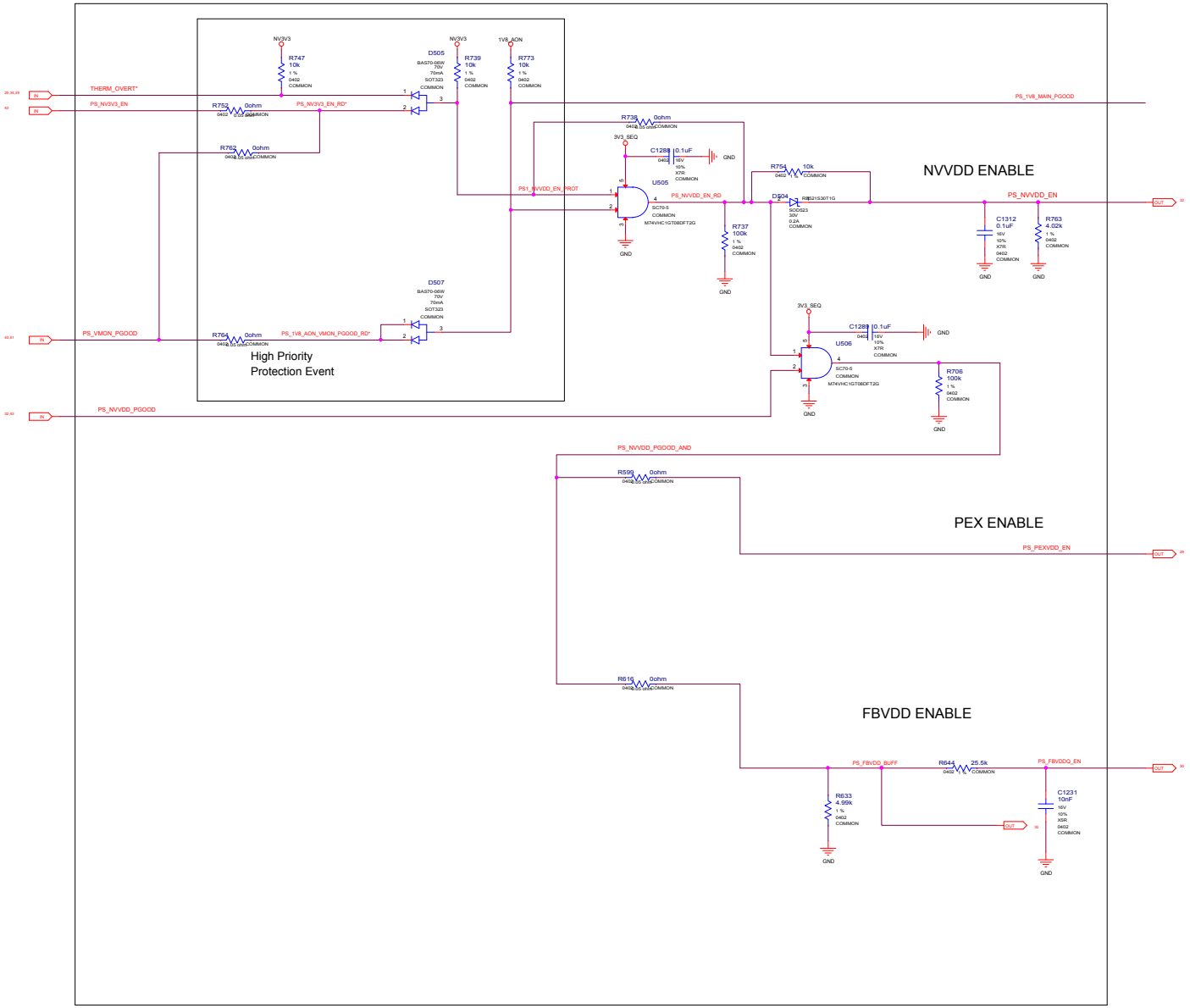

ALL NVIDIA DESIGN SPECIFICATIONS, REFERENCE SPECIFICATIONS, REFERENCE BOARDS, FILES, DRAWINGS, DIAGNOSTICS, LISTS AND OTHER DOCUMENTS OR INFORMATION (TOGETHER AND SEPARATELY, "MATERIALS") ARE BEING PROVIDED "AS IS". THE MATERIALS MAY CONTAIN KNOWN AND UNKNOWN VIOLATIONS OR DEVIATIONS OF INDUSTRY STANDARDS AND SPECIFICATIONS. NVIDIA MAKES NO WARRANTIES, EXPRESSED, IMPLIED, STATUTORY OR OTHERWISE WITH RESPECT TO THE MATERIALS OR OTHERWISE, AND EXPRESSLY DISCLAIMS ALL IMPLIED WARRANTIES INCLUDING, WITHOUT LIMITATION, THE WARRANTIES OF DESIGN, OF NONINFRINGEMENT, MERCHANTABILITY OR FITNESS FOR A PARTICULAR PURPOSE, OR ARISING FROM A COURSE OF DEALING, TRADE USAGE, TRADE PRACTICE, OR INDUSTRY STANDARDS.

MSI	MICRO-STAR INT'L CO.,LTD		
	MS-V379		
Size: Custom	Document Description: Page44: SEQ:NV,PEX,FB ENABLE		Rev: 1.0
Date: Tuesday, January 15, 2019	Sheet 44 of 53		

Page45: SEQUENCE:Voltage Monitor

ALL NVIDIA DESIGN SPECIFICATIONS, REFERENCE SPECIFICATIONS, REFERENCE BOARDS, FILES, DRAWINGS, DIAGNOSTICS, LISTS AND OTHER DOCUMENTS OR INFORMATION (TOGETHER AND SEPARATELY, "MATERIALS") ARE BEING PROVIDED "AS IS". THE MATERIALS MAY CONTAIN KNOWN AND UNKNOWN VIOLATIONS OR DEVIATIONS OF INDUSTRY STANDARDS AND SPECIFICATIONS. NVIDIA MAKES NO WARRANTIES, EXPRESSED, IMPLIED, STATUTORY OR OTHERWISE WITH RESPECT TO THE MATERIALS OR OTHERWISE, AND EXPRESSLY DISCLAIMS ALL IMPLIED WARRANTIES INCLUDING, WITHOUT LIMITATION, THE WARRANTIES OF DESIGN, OF NONINFRINGEMENT, MERCHANTABILITY OR FITNESS FOR A PARTICULAR PURPOSE, OR ARISING FROM A COURSE OF DEALING, TRADE USAGE, TRADE PRACTICE, OR INDUSTRY STANDARDS.

MSI

MICRO-STAR INT'L CO.,LTD

MS-V379

Size	Document Description	Rev
Custom	Page45: SEQUENCE:Voltage Monitor	1.0

Date: Monday, January 14, 2019 | Sheet 45 of 53

Page46: SEQUENCE:Discharge

ALL NVIDIA DESIGN SPECIFICATIONS, REFERENCE SPECIFICATIONS, REFERENCE BOARDS, FILES, DRAWINGS, DIAGNOSTICS, LISTS AND OTHER DOCUMENTS OR INFORMATION (TOGETHER AND SEPARATELY, "MATERIALS") ARE BEING PROVIDED "AS IS". THE MATERIALS MAY CONTAIN KNOWN AND UNKNOWN VIOLATIONS OR DEVIATIONS OF INDUSTRY STANDARDS AND SPECIFICATIONS. NVIDIA MAKES NO WARRANTIES, EXPRESSED, IMPLIED, STATUTORY OR OTHERWISE WITH RESPECT TO THE MATERIALS OR OTHERWISE, AND EXPRESSLY DISCLAIMS ALL IMPLIED WARRANTIES INCLUDING, WITHOUT LIMITATION, THE WARRANTIES OF DESIGN, OF NONINFRINGEMENT, MERCHANTABILITY OR FITNESS FOR A PARTICULAR PURPOSE, OR ARISING FROM A COURSE OF DEALING, TRADE USAGE, TRADE PRACTICE, OR INDUSTRY STANDARDS.

Page47: SEQUENCE:MISC

PEX_CLKREQ*

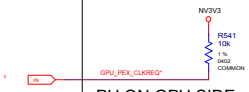

PU ON GPU SIDE

NC ON GOLD FINGER SIDE

GPU_WAKE*

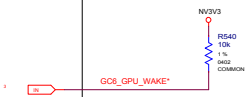

PU ON GPU SIDE

NC ON GOLD FINGER SIDE

PEX_RST# LOGIC

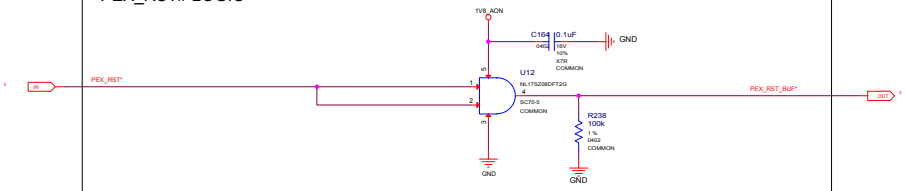

ALL NVIDIA DESIGN SPECIFICATIONS, REFERENCE SPECIFICATIONS, REFERENCE BOARDS, FILES, DRAWINGS, DIAGNOSTICS, LISTS AND OTHER DOCUMENTS OR INFORMATION (TOGETHER AND SEPARATELY, "MATERIALS") ARE BEING PROVIDED "AS IS". THE MATERIALS MAY CONTAIN KNOWN AND UNKNOWN VIOLATIONS OR DEVIATIONS OF INDUSTRY STANDARDS AND SPECIFICATIONS. NVIDIA MAKES NO WARRANTIES, EXPRESSED, IMPLIED, STATUTORY OR OTHERWISE WITH RESPECT TO THE MATERIALS OR OTHERWISE, AND EXPRESSLY DISCLAIMS ALL IMPLIED WARRANTIES INCLUDING, WITHOUT LIMITATION, THE WARRANTIES OF DESIGN, OF NONINFRINGEMENT, MERCHANTABILITY OR FITNESS FOR A PARTICULAR PURPOSE, OR ARISING FROM A COURSE OF DEALING, TRADE USAGE, TRADE PRACTICE, OR INDUSTRY STANDARDS.

Page48: LOGO LED

ALL NVIDIA DESIGN SPECIFICATIONS, REFERENCE SPECIFICATIONS, REFERENCE BOARDS, FILES, DRAWINGS, DIAGNOSTICS, LISTS AND OTHER DOCUMENTS OR INFORMATION (TOGETHER AND SEPARATELY, "MATERIALS") ARE BEING PROVIDED "AS IS". THE MATERIALS MAY CONTAIN KNOWN AND UNKNOWN VIOLATIONS OR DEVIATIONS OF INDUSTRY STANDARDS AND SPECIFICATIONS. NVIDIA MAKES NO WARRANTIES, EXPRESSED, IMPLIED, STATUTORY OR OTHERWISE WITH RESPECT TO THE MATERIALS OR OTHERWISE, AND EXPRESSLY DISCLAIMS ALL IMPLIED WARRANTIES INCLUDING, WITHOUT LIMITATION, THE WARRANTIES OF DESIGN, OF NONINFRINGEMENT, MERCHANTABILITY OR FITNESS FOR A PARTICULAR PURPOSE, OR ARISING FROM A COURSE OF DEALING, TRADE USAGE, TRADE PRACTICE, OR INDUSTRY STANDARDS.

Page49: LED DRIVER & Boost

ALL NVIDIA DESIGN SPECIFICATIONS, REFERENCE SPECIFICATIONS, REFERENCE BOARDS, FILES, DRAWINGS, DIAGNOSTICS, LISTS AND OTHER DOCUMENTS OR INFORMATION (TOGETHER AND SEPARATELY, "MATERIALS") ARE BEING PROVIDED "AS IS". THE MATERIALS MAY CONTAIN KNOWN AND UNKNOWN VIOLATIONS OR DEVIATIONS OF INDUSTRY STANDARDS AND SPECIFICATIONS. NVIDIA MAKES NO WARRANTIES, EXPRESSED, IMPLIED, STATUTORY OR OTHERWISE WITH RESPECT TO THE MATERIALS OR OTHERWISE, AND EXPRESSLY DISCLAIMS ALL IMPLIED WARRANTIES INCLUDING, WITHOUT LIMITATION, THE WARRANTIES OF DESIGN, OF NONINFRINGEMENT, MERCHANTABILITY OR FITNESS FOR A PARTICULAR PURPOSE, OR ARISING FROM A COURSE OF DEALING, TRADE USAGE, TRADE PRACTICE, OR INDUSTRY STANDARDS.

Page50: FAN

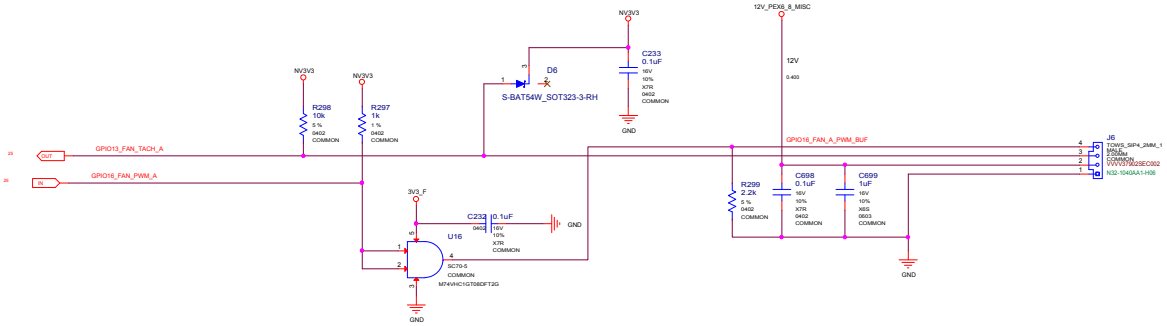

ALL NVIDIA DESIGN SPECIFICATIONS, REFERENCE SPECIFICATIONS, REFERENCE BOARDS, FILES, DRAWINGS, DIAGNOSTICS, LISTS AND OTHER DOCUMENTS OR INFORMATION (TOGETHER AND SEPARATELY, "MATERIALS") ARE BEING PROVIDED 'AS IS'. THE MATERIALS MAY CONTAIN KNOWN AND UNKNOWN VIOLATIONS OR DEVIATIONS OF INDUSTRY STANDARDS AND SPECIFICATIONS. NVIDIA MAKES NO WARRANTIES, EXPRESSED, IMPLIED, STATUTORY OR OTHERWISE WITH RESPECT TO THE MATERIALS OR OTHERWISE, AND EXPRESSLY DISCLAIMS ALL IMPLIED WARRANTIES INCLUDING, WITHOUT LIMITATION, THE WARRANTIES OF DESIGN, OF NONINFRINGEMENT, MERCHANTABILITY OR FITNESS FOR A PARTICULAR PURPOSE, OR ARISING FROM A COURSE OF DEALING, TRADE USAGE, TRADE PRACTICE, OR INDUSTRY STANDARDS.

MICRO-STAR INT'L CO.,LTD

MS-V379

Size	Document Description	Rev
Custom	Page50: FAN	1.0

Date: Tuesday, January 15, 2019 | Sheet 50 of 53

Page51: PWR SENSE

MODE PIN STATUS	MULTIPLEXER OPERATION
LOW	DEVICE A
TRI-STATE(FLOATING)	STAND-ALONE
HIGH	DEVICE B

ENABLE PIN STATUS	MULTIPLEXER OPERATION
LOW	FULLY FUNCTIONAL
TRI-STATE(FLOATING)	LIMITTED FUNCTION
HIGH	STANDBY

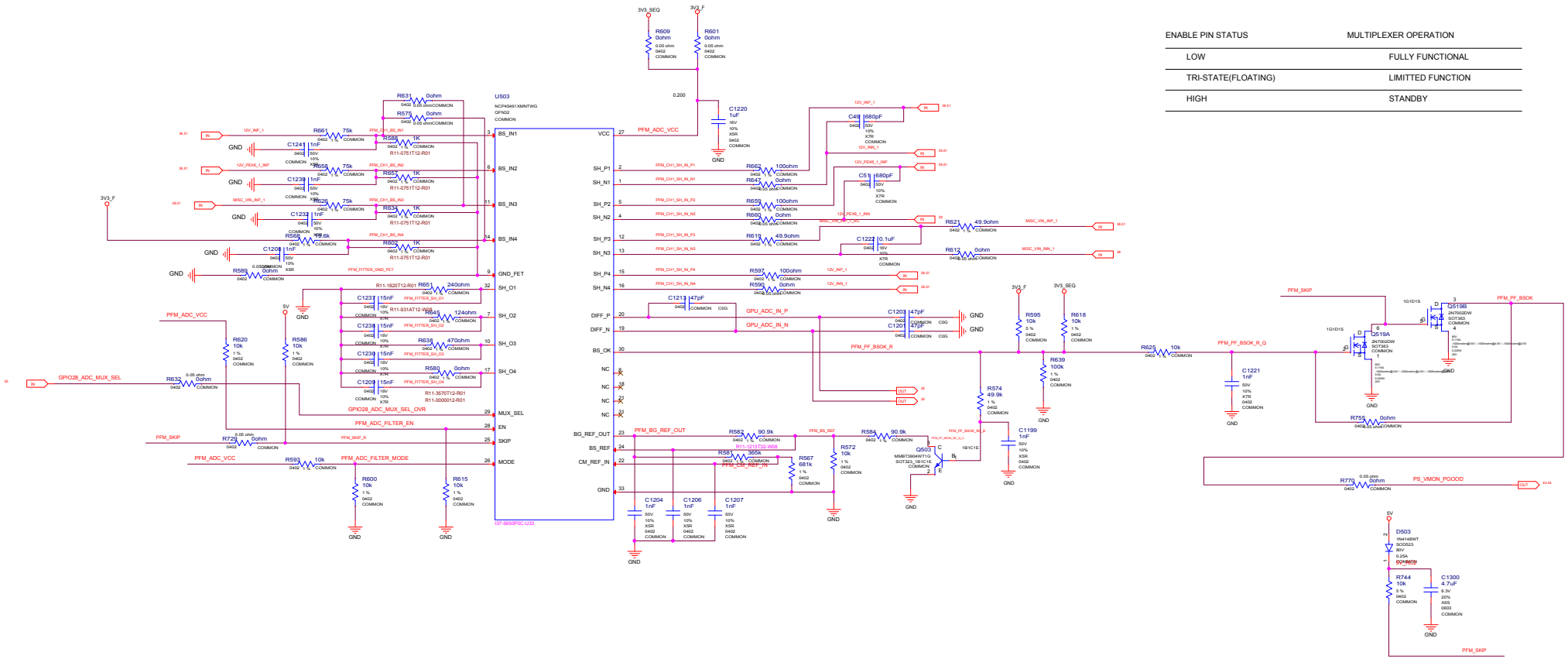

ALL NVIDIA DESIGN SPECIFICATIONS, REFERENCE SPECIFICATIONS, REFERENCE BOARDS, FILES, DRAWINGS, DIAGNOSTICS, LISTS AND OTHER DOCUMENTS OR INFORMATION (TOGETHER AND SEPARATELY, "MATERIALS") ARE BEING PROVIDED "AS IS". THE MATERIALS MAY MAINTAIN KNOWN AND UNKNOWN VIOLATIONS OR DEVIATIONS OF INDUSTRY STANDARDS AND SPECIFICATIONS. NVIDIA MAKES NO WARRANTIES, EXPRESSED, IMPLIED, STATUTORY OR OTHERWISE WITH RESPECT TO THE MATERIALS OR OTHERWISE, AND EXPRESSLY DISCLAIMS ALL IMPLIED WARRANTIES INCLUDING, WITHOUT LIMITATION, THE WARRANTIES OF DESIGN, OF NONINFRINGEMENT, MERCHANTABILITY OR FITNESS FOR A PARTICULAR PURPOSE, OR ARISING FROM A COURSE OF DEALING, TRADE USAGE, TRADE PRACTICE, OR INDUSTRY STANDARDS.

MICRO-STAR INT'L CO.,LTD

MS-V379

Size	Document Description	Rev
Custom	Page51: PWR SENSE	1.0

Date: Tuesday, January 15, 2019 Sheet 51 of 53

Page52: MECH

Bracket:

BK1
BRKT_DUAL_ATX_2TAB_PG161
ATX_2X_2F
COMMON

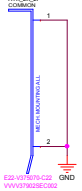

E22-V375076-C22
VVVV37902SEC002

FAN:

FAN1
STIFFNER
NO PINS
VVVV37902SEC002
E32-0406580-A87

BACK STIFFENER:

BS1
STIFFNER
NO PINS
VVVV37902SEC002
E93-0000179-G93

MOSFET Heatsink:

HS1
STIFFNER
NO PINS
VVVV37902SEC002
E31-0508180-A87

DUST COVER:

PCIE1
STIFFNER
NO PINS
VVVV37902SEC002
E24-V330020-P09

for PTA ERP:

HDMICOVER1
STIFFNER
NO PINS
XXXV37902SEC002
E24-V330030-P09

DPCOVER1
STIFFNER
NO PINS
XXXV37902SEC002
E24-V330010-P09

DPCOVER2
STIFFNER
NO PINS
XXXV37902SEC002
E24-V330010-P09

DPCOVER3
STIFFNER
NO PINS
XXXV37902SEC002
E24-V330010-P09

Bracket Screw:

BKTSCREW1
SCREW
VVVV37902SEC002
E41-1304010-H75

BKTSCREW2
SCREW
VVVV37902SEC002
E41-1304010-H75

DPSCREW1
SCREW
VVVV37902SEC002
E43-1203051-P65

DPSCREW2
SCREW
VVVV37902SEC002
E43-1203051-P65

DPSCREW3
SCREW
VVVV37902SEC002
E43-1203051-P65

Mechanical Holes Symbol:

MEC10
H_R220D125
1
DNI

MEC11
H_R220D125
1
DNI

MEC12
H_R220D125
1
DNI

MEC13
H_R141D125M
1
DNI

MEC14
H_R220D125
1
DNI

MEC15
H_R220D125
1
DNI

MEC18
H_R220D125
1
DNI

MEC19
H_R220D125
1
DNI

GND
GND

BOARD STIFFENER
4 connected mounting pins

MEC501
GPU_STIFFENER_PG161
4PIN
COMMON

GND

J18
3 1
4 2
impedence

L4_D_0.088MM/0.1MM 80 OHM +/-10%

J17
X_PIN1*2

L4_S_0.116MM/45 OHM +/-10%

J19
3 1
4 2
impedence

L3_D_0.083MM/0.121MM 85 OHM +/-10%

J16
X_PIN1*2

L3_S_0.089MM/50 OHM +/-10%

FM1 OPT F_PAD_X
FM2 OPT F_PAD_X
FM3 OPT F_PAD_X
FM4 OPT F_PAD_X
FM5 OPT
FM6 OPT F_PAD_X
FM7 OPT F_PAD_X
FM8 OPT F_PAD_X

PCB
PCB
109-GN982-00A
COMMON
VVVV37902SEC002
P06-0V37910-E48

HDMI_FEE
HDMI
HDMI_FEE
COMMON
VVVV37902SEC002
Y01-RHDM003-000

ALL NVIDIA DESIGN SPECIFICATIONS, REFERENCE SPECIFICATIONS, REFERENCE BOARDS, FILES, DRAWINGS, DIAGNOSTICS, LISTS AND OTHER DOCUMENTS OR INFORMATION (TOGETHER AND SEPARATELY, "MATERIALS") ARE BEING PROVIDED "AS IS". THE MATERIALS MAY CONTAIN KNOWN AND UNKNOWN VIOLATIONS OR DEVIATIONS OF INDUSTRY STANDARDS AND SPECIFICATIONS. NVIDIA MAKES NO WARRANTIES, EXPRESSED, IMPLIED, STATUTORY OR OTHERWISE WITH RESPECT TO THE MATERIALS OR OTHERWISE, AND EXPRESSLY DISCLAIMS ALL IMPLIED WARRANTIES INCLUDING, WITHOUT LIMITATION, THE WARRANTIES OF DESIGN, OF NONINFRINGEMENT, MERCHANTABILITY OR FITNESS FOR A PARTICULAR PURPOSE, OR ARISING FROM A COURSE OF DEALING, TRADE USAGE, TRADE PRACTICE, OR INDUSTRY STANDARDS.

Page53: PTC

ALL NVIDIA DESIGN SPECIFICATIONS, REFERENCE SPECIFICATIONS, REFERENCE BOARDS, FILES, DRAWINGS, DIAGNOSTICS, LISTS AND OTHER DOCUMENTS OR INFORMATION (TOGETHER AND SEPARATELY, "MATERIALS") ARE BEING PROVIDED "AS IS". THE MATERIALS MAY CONTAIN KNOWN AND UNKNOWN VIOLATIONS OR DEVIATIONS OF INDUSTRY STANDARDS AND SPECIFICATIONS. NVIDIA MAKES NO WARRANTIES, EXPRESSED, IMPLIED, STATUTORY OR OTHERWISE WITH RESPECT TO THE MATERIALS OR OTHERWISE, AND EXPRESSLY DISCLAIMS ALL IMPLIED WARRANTIES INCLUDING, WITHOUT LIMITATION, THE WARRANTIES OF DESIGN, OF NONINFRINGEMENT, MERCHANTABILITY OR FITNESS FOR A PARTICULAR PURPOSE, OR ARISING FROM A COURSE OF DEALING, TRADE USAGE, TRADE PRACTICE, OR INDUSTRY STANDARDS.

MSI

MICRO-STAR INT'L CO.,LTD

MS-V379

Size	Document Description	Rev
Custom	Page53: PTC	1.0

Date: Monday, January 14, 2019 | Sheet 53 of 53