PG142-B00

DP + DP + DP + HDMI/DP

TABLE OF CONTENTS

Page	Description
1	Table of Contents
2	Block Diagram
3	PCI Express
4	PCIE GEN4 RC TERMINATIONS
5	MEMORY: GPU FB_AB
6	MEMORY: FBA[31:0]
7	MEMORY: FBA[63:32]
8	MEMORY: FBB[31:0]
9	MEMORY: FBB[63:32]
10	MEMORY: GPU FB_CD
11	MEMORY: FBC[31:0]
12	MEMORY: FBC[63:32]
13	MEMORY: FBD[31:0]
14	MEMORY: FBD[63:32]
15	GPU PWR & GND 1
16	GPU PWR & GND 2
17	GPU PWR & GND 3 (XVDD)
18	GPU DECOUPLING FBVDDQ
19	GPU DECOUPLING NVVDD
20	GPU DECOUPLING NVVDD
21	IO: IFPAB NC
22	IO: IFPF DP
23	IO: IFPE DP
24	IO: IFPD DP
25	IO: IFPC HDMI/DP
26	MISC1: ROM, XTAL,STRAPS
27	MISC2: JTAG,GPIO,ADC,I2C,FL,STEERO
28	MISC3: RGB
29	PS: 1V8
30	PS: 5V
31	PS: PEXVDD
32	PS: FBVDDQ
33	PS: FBVDDQ PH2
34	PS: NVVDD Controller
35	BLANK PAGE
36	PS: NVVDD PH4, PH6
37	PS: NVVDD PH1, PH3
38	PS: NVVDD PH2, PH5
39	PS: NVVDD PH9
40	PS: NVVDD PH7
41	PS: NVVDD PH10, PH8
42	PS: OVRS_INPUT POWER BALANCE
43	PS: RDT3_12V & 3V3_A Switcher
44	PS: INPUTS, FILTERING and MONITORING
45	PS: PEX_12V, PEX_3V3 AND A3V3_AUX
46	PS: STEERING, UPB, HOT UNPLUG
47	SEQ: 5V, 1V8, 3V3_SEQ
48	SEQ: NVVDD, PEX, FBVDDQ ENABLE
49	SEQ: MISC
50	SEQ: VOLTAGE MONITOR
51	FAN & LED
52	PS:OVRM_PWR_SENSE
53	MECH
54	PTC

ASSEMBLY	<ASSEMBLY_DESCRIPTION>
PAGE DETAIL	Table of Contents

ALL NVIDIA DESIGN SPECIFICATIONS, REFERENCE SPECIFICATIONS, REFERENCE BOARDS, FILES, DRAWINGS, DIAGNOSTICS, LISTS AND OTHER DOCUMENTS OR INFORMATION (TOGETHER AND SEPARATELY, "MATERIALS") ARE BEING PROVIDED 'AS IS'. THE MATERIALS MAY CONTAIN KNOWN AND UNKNOWN VIOLATIONS OR DEVIATIONS OF INDUSTRY STANDARDS AND SPECIFICATIONS. NVIDIA MAKES NO WARRANTIES, EXPRESSED, IMPLIED, STATUTORY OR OTHERWISE WITH RESPECT TO THE MATERIALS OR OTHERWISE, AND EXPRESSLY DISCLAIMS ALL IMPLIED WARRANTIES INCLUDING, WITHOUT LIMITATION, THE WARRANTIES OF DESIGN, OF NONINFRINGEMENT, MERCHANTABILITY OR FITNESS FOR A PARTICULAR PURPOSE, OR ARISING FROM A COURSE OF DEALING, TRADE USAGE, TRADE PRACTICE, OR INDUSTRY STANDARDS.

MICRO-STAR INT'L CO.,LTD

MS-V390

Size	Document Description	Rev
Custom	0001_Table of Contents	2.0

Date: Friday, July 31, 2020 Sheet 1 of 55

NVIDIA CORPORATION
2701 SAN TOMAS EXPRESSWAY
SANTA CLARA, CA 95050, USA

NV_PN	600-1G142-BASE-100		
PCB REV	PG142-B00	PAGE	1 OF 54
BOM REV	A	DATE	27-JUN-2020

Page2: Block Diagram

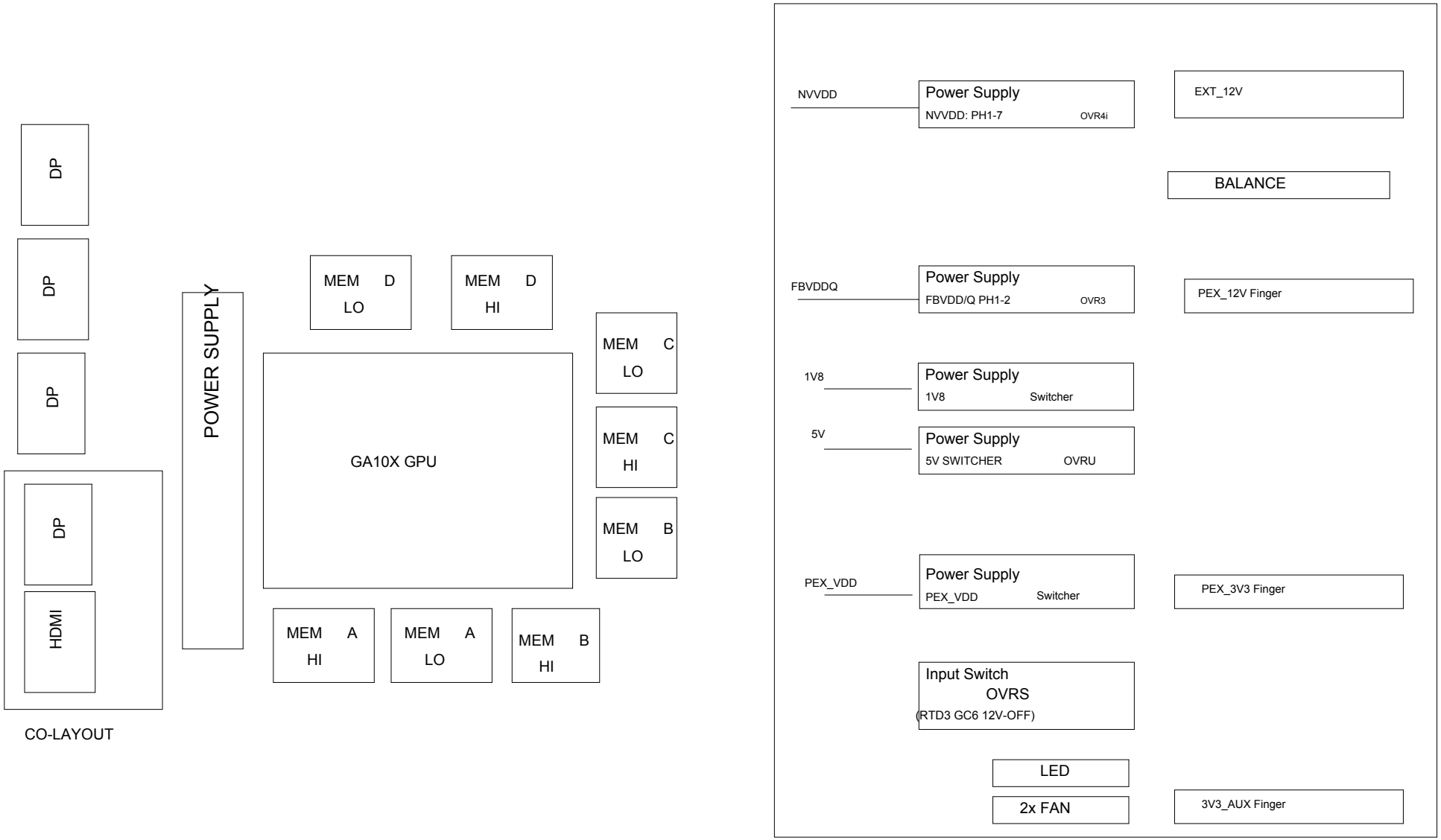

MICRO-STAR INT'L CO.,LTD
MS-V390

Size	Document Description	Rev
Custom	0002_Block Diagram	2.0

Date: Friday, July 31, 2020 Sheet 2 of 55

ASSEMBLY	<ASSEMBLY_DESCRIPTION>
PAGE DETAIL	Block Diagram

NVIDIA CORPORATION
2701 SAN TOMAS EXPRESSWAY
SANTA CLARA, CA 95050, USA

NV_PN	600-1G142-BASE-100		
PCB REV	PG142-B00	PAGE	2 OF 54
BOM REV	A	DATE	27-JUN-2020

ALL NVIDIA DESIGN SPECIFICATIONS, REFERENCE SPECIFICATIONS, REFERENCE BOARDS, FILES, DRAWINGS, DIAGNOSTICS, LISTS AND OTHER DOCUMENTS OR INFORMATION (TOGETHER AND SEPARATELY, "MATERIALS") ARE BEING PROVIDED "AS IS". THE MATERIALS MAY CONTAIN KNOWN AND UNKNOWN VIOLATIONS OR DEVIATIONS OF INDUSTRY STANDARDS AND SPECIFICATIONS. NVIDIA MAKES NO WARRANTIES, EXPRESSED, IMPLIED, STATUTORY OR OTHERWISE WITH RESPECT TO THE MATERIALS OR OTHERWISE, AND EXPRESSLY DISCLAIMS ALL IMPLIED WARRANTIES INCLUDING, WITHOUT LIMITATION, THE WARRANTIES OF DESIGN, OF NONINFRINGEMENT, MERCHANTABILITY OR FITNESS FOR A PARTICULAR PURPOSE, OR ARISING FROM A COURSE OF DEALING, TRADE USAGE, TRADE PRACTICE, OR INDUSTRY STANDARDS.

Page3: PCI Express

12V change to 12V_L

NET	VOLTAGE	MAX_CURRENT	MIN_WIDTH
12V_L	12V	5.5A	0.406 MM
3V3	3.3V	3.0A	0.125 MM
GND	0V	8.5A	0.245 MM

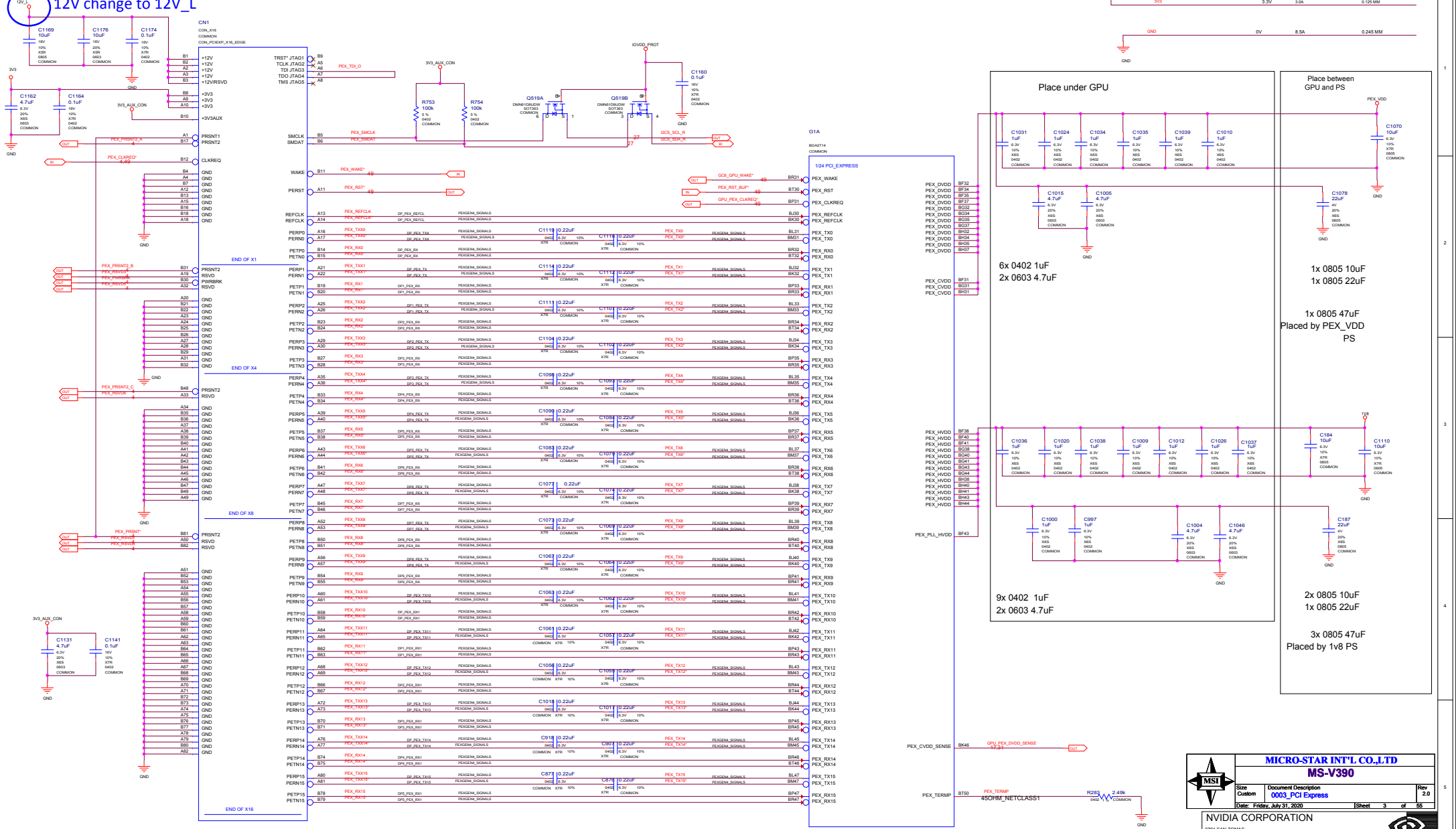

ASSEMBLY	<ASSEMBLY_DESCRIPTION>
PAGE DETAIL	PCI Express

ALL NVIDIA DESIGN SPECIFICATIONS, REFERENCE SPECIFICATIONS, REFERENCE BOARDS, FILES, DRAWINGS, DIAGNOSTICS, LISTS AND OTHER DOCUMENTS OR INFORMATION (TOGETHER AND SEPARATELY, "MATERIALS") ARE BEING PROVIDED "AS IS". THE MATERIALS MAY CONTAIN KNOWN AND UNKNOWN VIOLATIONS OR DEVIATIONS OF INDUSTRY STANDARDS AND SPECIFICATIONS. NVIDIA MAKES NO WARRANTIES, EXPRESSED, IMPLIED, STATUTORY OR OTHERWISE WITH RESPECT TO THE MATERIALS OR OTHERWISE, AND EXPRESSLY DISCLAIMS ALL IMPLIED WARRANTIES INCLUDING, WITHOUT LIMITATION, THE WARRANTIES OF DESIGN, OF NONINFRINGEMENT, MERCHANTABILITY OR FITNESS FOR A PARTICULAR PURPOSE, OR ARISING FROM A COURSE OF DEALING, TRADE USAGE, TRADE PRACTICE, OR INDUSTRY STANDARDS.

MICRO-STAR INT'L CO.,LTD

MS-V390

Size	Document Description	Rev
Custom	0003_PCI Express	2.0

Date: Friday, July 31, 2020 | Sheet 3 of 55

NVIDIA CORPORATION
2701 SAN TOMAS EXPRESSWAY
SANTA CLARA, CA 95050, USA

NV_PN	600-1G142-BASE-100		
PCB REV	PG142-B00	PAGE	3 OF 54
BOM REV	A	DATE	27-JUN-2020

Page4: PCIE GEN4 RC TERMINATIONS

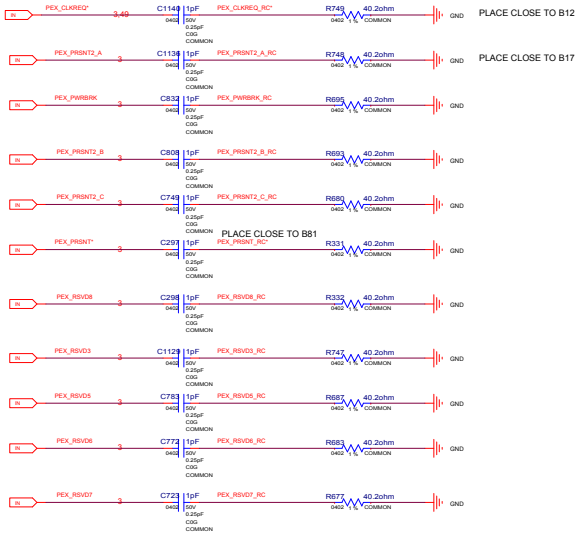

ASSEMBLY	<ASSEMBLY_DESCRIPTION>
PAGE DETAIL	PCIE GEN4 RC TERMINATIONS

ALL NVIDIA DESIGN SPECIFICATIONS, REFERENCE SPECIFICATIONS, REFERENCE BOARDS, FILES, DRAWINGS, DIAGNOSTICS, LISTS AND OTHER DOCUMENTS OR INFORMATION (TOGETHER AND SEPARATELY, "MATERIALS") ARE BEING PROVIDED "AS IS". THE MATERIALS MAY CONTAIN KNOWN AND UNKNOWN VIOLATIONS OR DEVIATIONS OF INDUSTRY STANDARDS AND SPECIFICATIONS. NVIDIA MAKES NO WARRANTIES, EXPRESSED, IMPLIED, STATUTORY OR OTHERWISE WITH RESPECT TO THE MATERIALS OR OTHERWISE, AND EXPRESSLY DISCLAIMS ALL IMPLIED WARRANTIES INCLUDING, WITHOUT LIMITATION, THE WARRANTIES OF DESIGN, OF NONINFRINGEMENT, MERCHANTABILITY OR FITNESS FOR A PARTICULAR PURPOSE, OR ARISING FROM A COURSE OF DEALING, TRADE USAGE, TRADE PRACTICE, OR INDUSTRY STANDARDS.

MICRO-STAR INT'L CO.,LTD

MS-V390

Size	Document Description	Rev
Custom	0004_PCIE GEN4 RC TERMINATIONS	2.0

Date: Friday, July 31, 2020 | Sheet 4 of 55

NVIDIA CORPORATION
2701 SAN TOMAS EXPRESSWAY
SANTA CLARA, CA 95050, USA

NV_PN	600-1G142-BASE-100		
PCB REV	PG142-B00	PAGE	4 OF 54
BOM REV	A	DATE	27-JUN-2020

Page5: MEMORY: GPU Partition A/B

//syseng/Projects/GA1xx/GA1XX_CMD-Mapping.xlsx

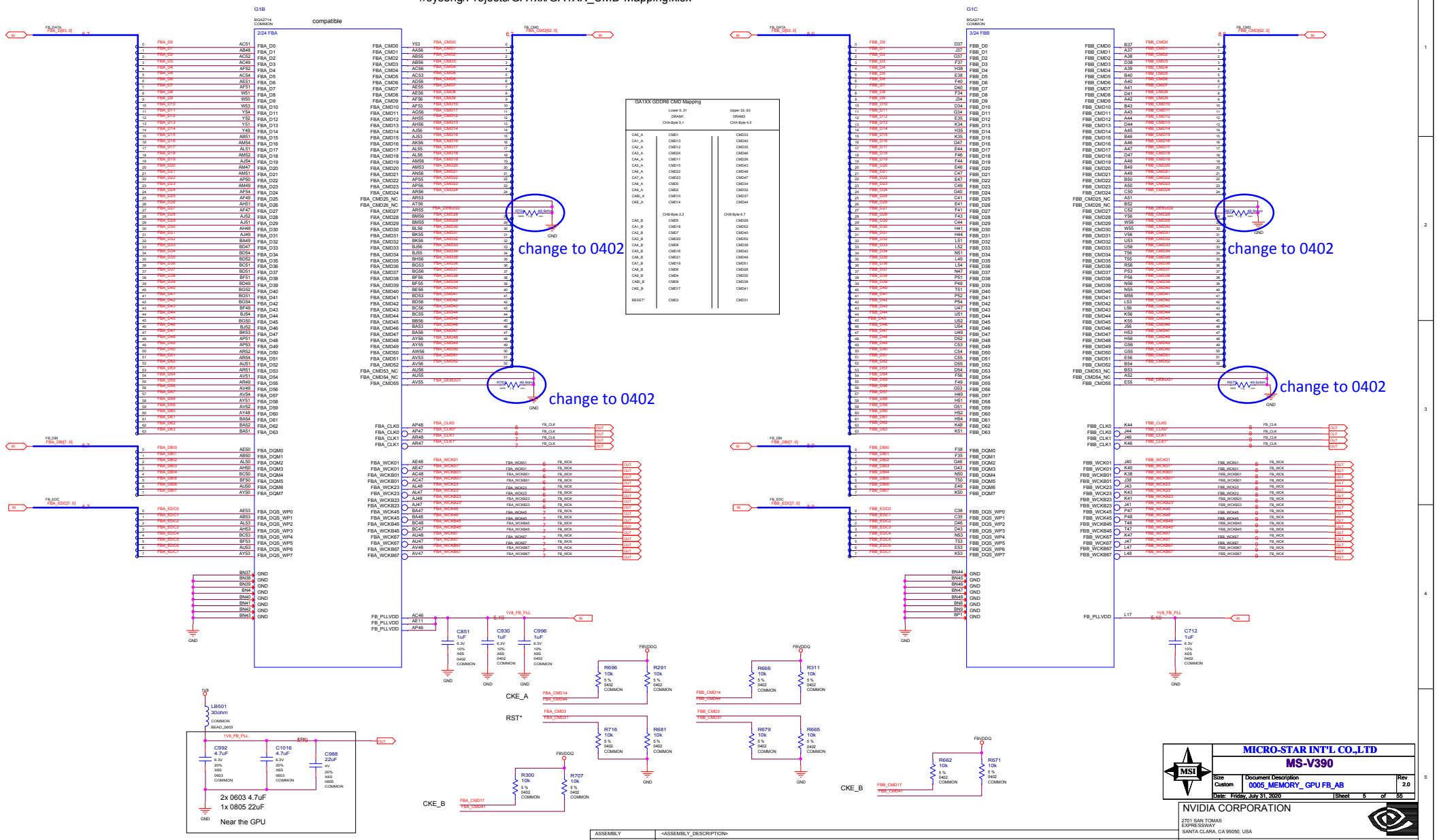

ALL NVIDIA DESIGN SPECIFICATIONS, REFERENCE SPECIFICATIONS, REFERENCE BOARDS, FILES, DRAWINGS, DIAGNOSTICS, LISTS AND OTHER DOCUMENTS OR INFORMATION (TOGETHER AND SEPARATELY, 'MATERIALS') ARE BEING PROVIDED 'AS IS'. THE MATERIALS MAY CONTAIN KNOWN AND UNKNOWN VIOLATIONS OR DEVIATIONS OF INDUSTRY STANDARDS AND SPECIFICATIONS. NVIDIA MAKES NO WARRANTIES, EXPRESSED, IMPLIED, STATUTORY OR OTHERWISE WITH RESPECT TO THE MATERIALS OR OTHERWISE, AND EXPRESSLY DISCLAIMS ALL IMPLIED WARRANTIES INCLUDING, WITHOUT LIMITATION, THE WARRANTIES OF DESIGN, OF NONINFRINGEMENT, MERCHANTABILITY OR FITNESS FOR A PARTICULAR PURPOSE, OR ARISING FROM A COURSE OF DEALING, TRADE USAGE, TRADE PRACTICE, OR INDUSTRY STANDARDS.

Page6: MEMORY: FBA Partition 31..0

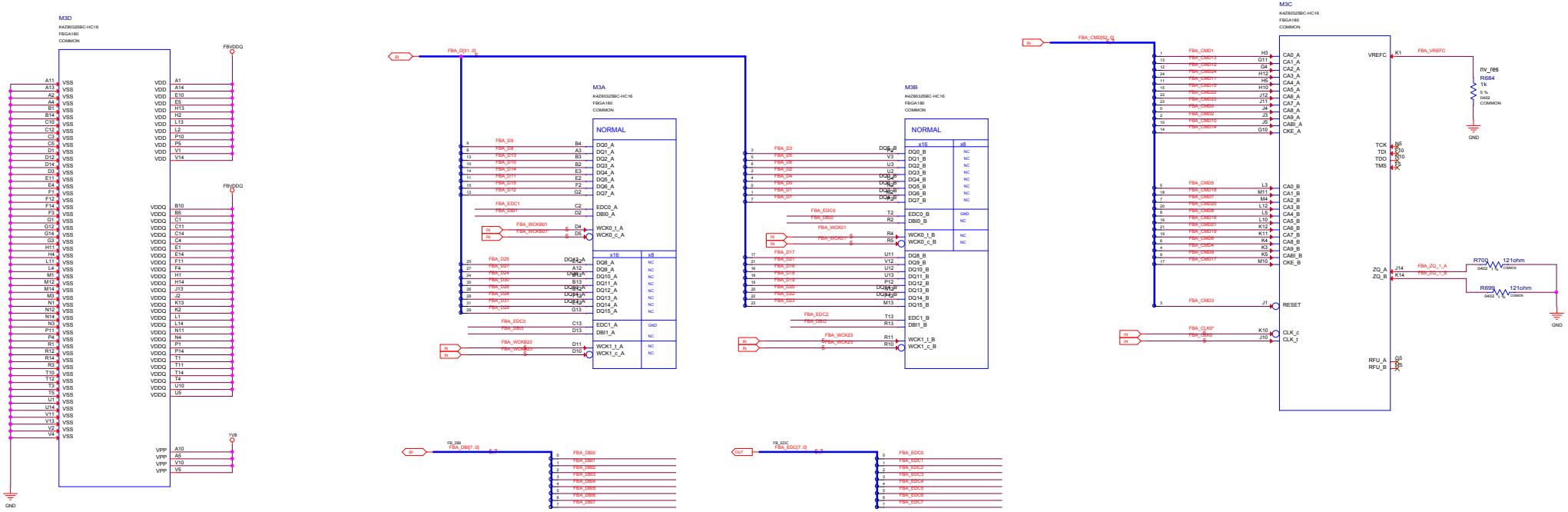

decap via : at least 2 gnd vias and 2 power vias for each cap

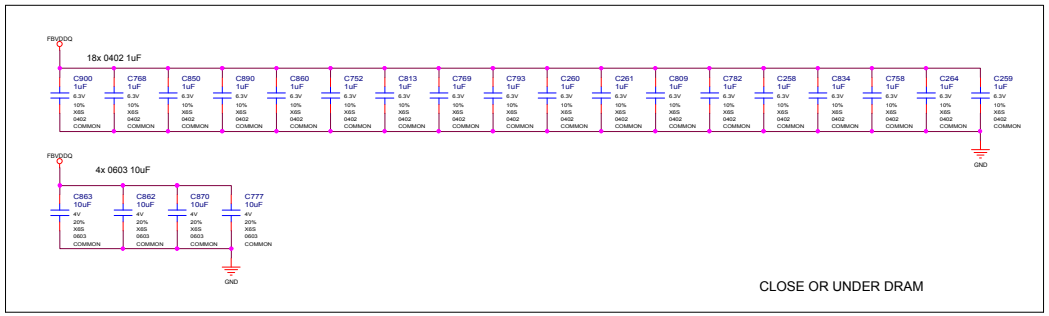

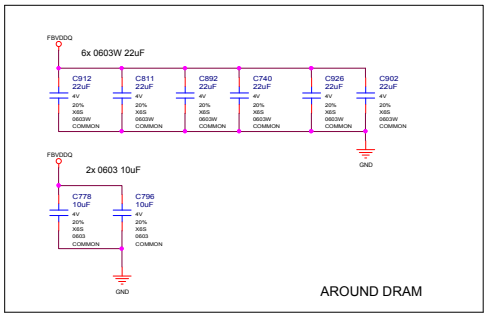

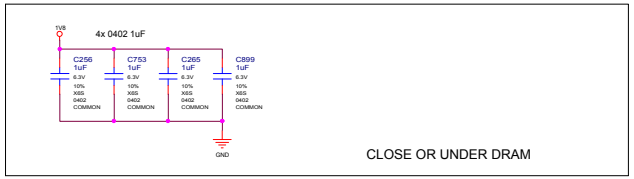

ASSEMBLY	<ASSEMBLY_DESCRIPTION>
PAGE DETAIL	MEMORY: FBA[31:0]

ALL NVIDIA DESIGN SPECIFICATIONS, REFERENCE SPECIFICATIONS, REFERENCE BOARDS, FILES, DRAWINGS, DIAGNOSTICS, LISTS AND OTHER DOCUMENTS OR INFORMATION (TOGETHER AND SEPARATELY, 'MATERIALS') ARE BEING PROVIDED 'AS IS'. THE MATERIALS MAY CONTAIN KNOWN AND UNKNOWN VIOLATIONS OR DEVIATIONS OF INDUSTRY STANDARDS AND SPECIFICATIONS. NVIDIA MAKES NO WARRANTIES, EXPRESSED, IMPLIED, STATUTORY OR OTHERWISE WITH RESPECT TO THE MATERIALS OR OTHERWISE, AND EXPRESSLY DISCLAIMS ALL IMPLIED WARRANTIES INCLUDING, WITHOUT LIMITATION, THE WARRANTIES OF DESIGN, OF NONINFRINGEMENT, MERCHANTABILITY OR FITNESS FOR A PARTICULAR PURPOSE, OR ARISING FROM A COURSE OF DEALING, TRADE USAGE, TRADE PRACTICE, OR INDUSTRY STANDARDS.

MICRO-STAR INT'L CO.,LTD

MS-V390

Size	Document Description	Rev
Custom	0006_MEMORY_ FBA[31_0]	2.0

Date: Friday, July 31, 2020 | Sheet 6 of 55

NVIDIA CORPORATION
2701 SAN TOMAS EXPRESSWAY
SANTA CLARA, CA 95050, USA

NV_PN	600-1G142-BASE-100		
PCB REV	PG142-B00	PAGE	6 OF 54
BOM REV	A	DATE	27-JUN-2020

Page7: MEMORY: FBA Partition 63..32

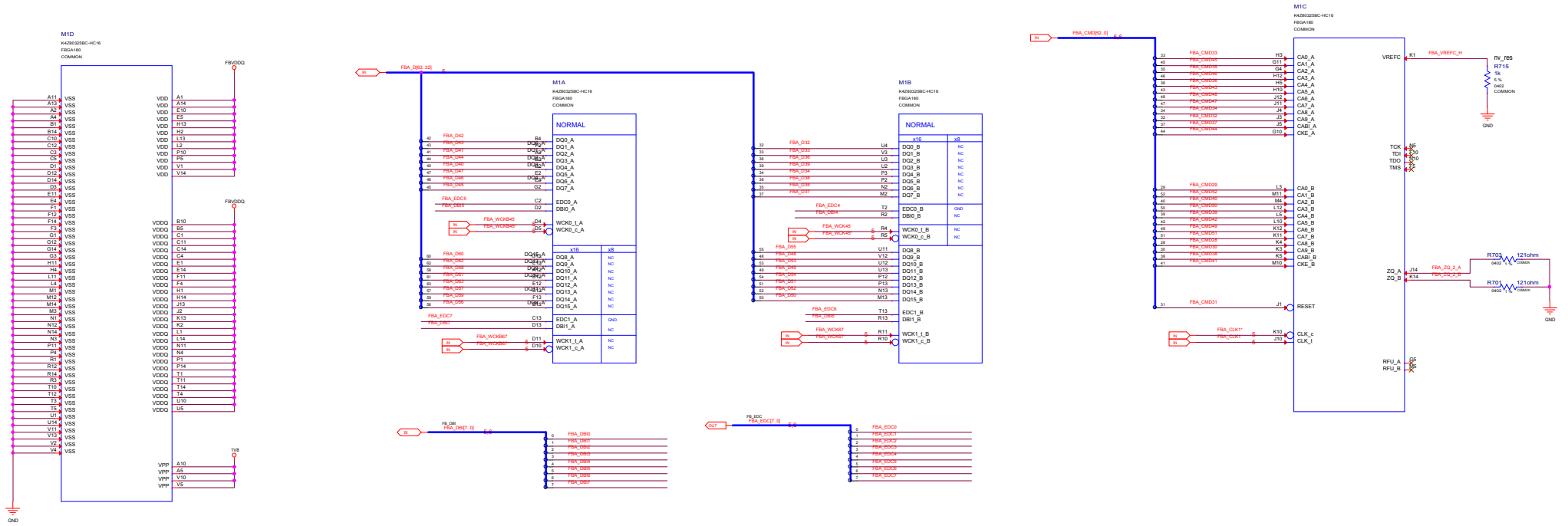

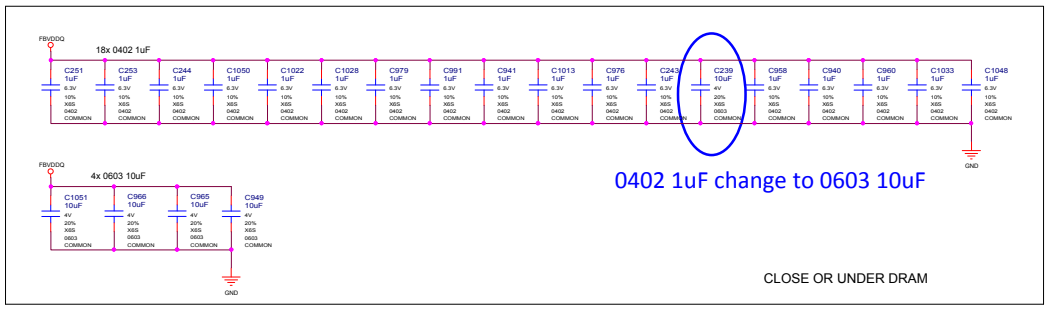

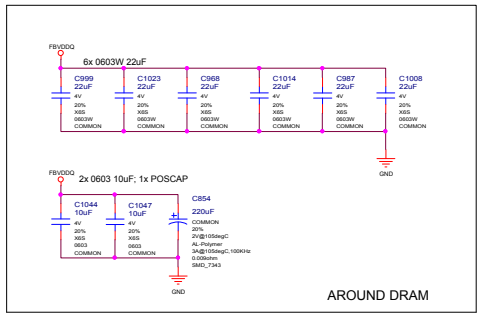

ASSEMBLY	<ASSEMBLY_DESCRIPTION>
PAGE DETAIL	MEMORY: FBA[63:32]

ALL NVIDIA DESIGN SPECIFICATIONS, REFERENCE SPECIFICATIONS, REFERENCE BOARDS, FILES, DRAWINGS, DIAGNOSTICS, LISTS AND OTHER DOCUMENTS OR INFORMATION (TOGETHER AND SEPARATELY, 'MATERIALS') ARE BEING PROVIDED 'AS IS'. THE MATERIALS MAY CONTAIN KNOWN AND UNKNOWN VIOLATIONS OR DEVIATIONS OF INDUSTRY STANDARDS AND SPECIFICATIONS. NVIDIA MAKES NO WARRANTIES, EXPRESSED, IMPLIED, STATUTORY OR OTHERWISE WITH RESPECT TO THE MATERIALS OR OTHERWISE, AND EXPRESSLY DISCLAIMS ALL IMPLIED WARRANTIES INCLUDING, WITHOUT LIMITATION, THE WARRANTIES OF DESIGN, OF NONINFRINGEMENT, MERCHANTABILITY OR FITNESS FOR A PARTICULAR PURPOSE, OR ARISING FROM A COURSE OF DEALING, TRADE USAGE, TRADE PRACTICE, OR INDUSTRY STANDARDS.

MICRO-STAR INT'L CO.,LTD
MS-V390

Size Custom	Document Description 0007_MEMORY_ FBA[63_32]	Rev 2.0
Date: Friday, July 31, 2020	Sheet 7 of 55	

NVIDIA CORPORATION
2701 SAN TOMAS EXPRESSWAY
SANTA CLARA, CA 95050, USA

NV_PN	600-1G142-BASE-100		
PCB REV	PG142-B00	PAGE	7 OF 54
BOM REV	A	DATE	27-JUN-2020

Page8: MEMORY: FBB Partition 31..0

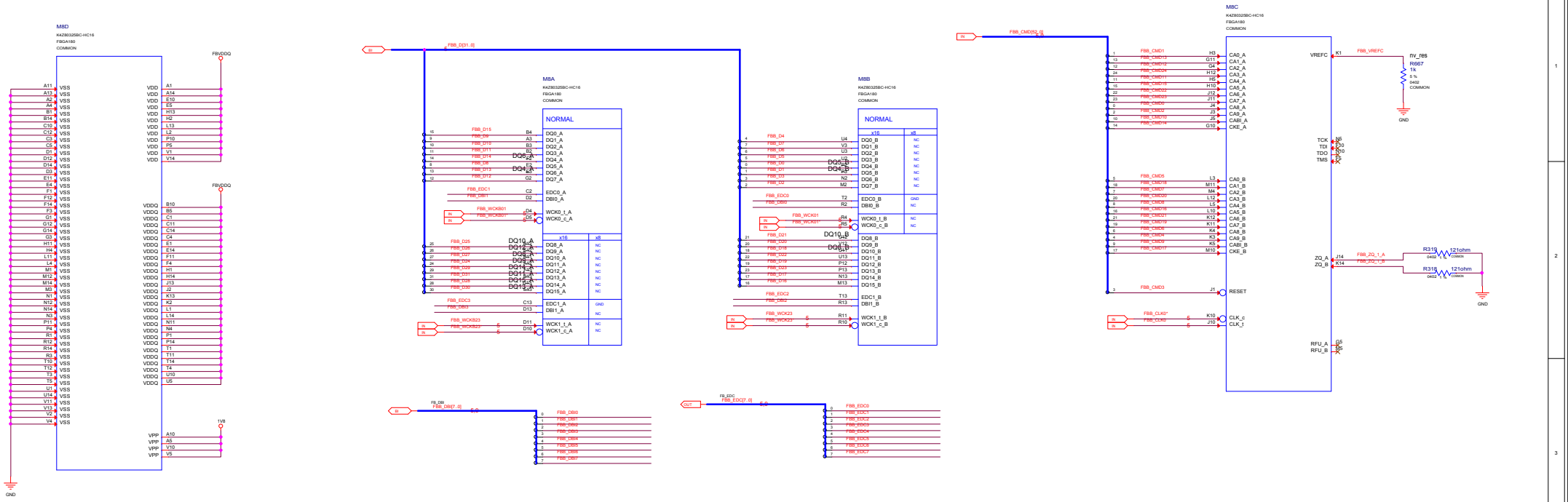

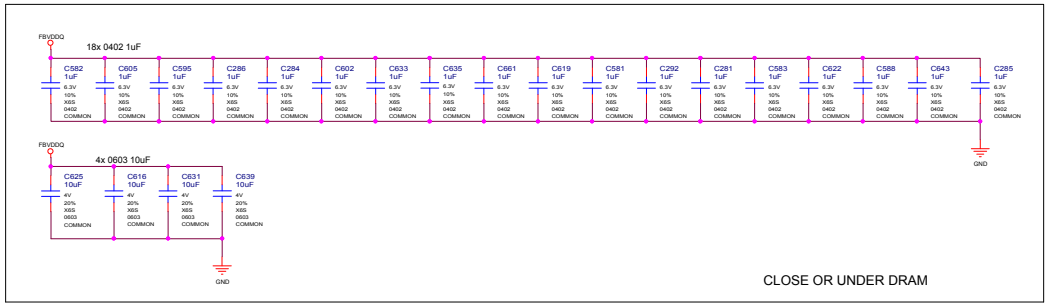

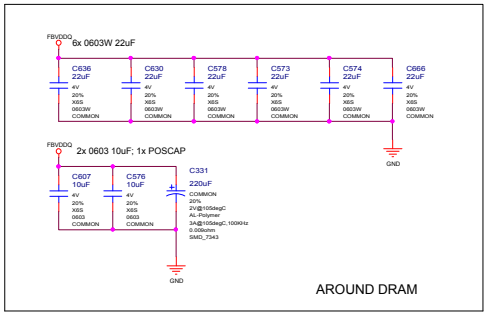

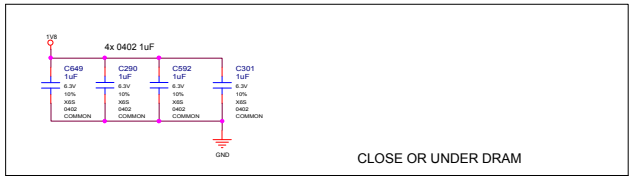

ASSEMBLY	<ASSEMBLY_DESCRIPTION>
PAGE DETAIL	MEMORY: FBB[31:0]

ALL NVIDIA DESIGN SPECIFICATIONS, REFERENCE SPECIFICATIONS, REFERENCE BOARDS, FILES, DRAWINGS, DIAGNOSTICS, LISTS AND OTHER DOCUMENTS OR INFORMATION (TOGETHER AND SEPARATELY, "MATERIALS") ARE BEING PROVIDED "AS IS". THE MATERIALS MAY CONTAIN KNOWN AND UNKNOWN VIOLATIONS OR DEVIATIONS OF INDUSTRY STANDARDS AND SPECIFICATIONS. NVIDIA MAKES NO WARRANTIES, EXPRESSED, IMPLIED, STATUTORY OR OTHERWISE WITH RESPECT TO THE MATERIALS OR OTHERWISE, AND EXPRESSLY DISCLAIMS ALL IMPLIED WARRANTIES INCLUDING, WITHOUT LIMITATION, THE WARRANTIES OF DESIGN, OF NONINFRINGEMENT, MERCHANTABILITY OR FITNESS FOR A PARTICULAR PURPOSE, OR ARISING FROM A COURSE OF DEALING, TRADE USAGE, TRADE PRACTICE, OR INDUSTRY STANDARDS.

MICRO-STAR INT'L CO.,LTD

MS-V390

Size	Document Description	Rev
Custom	0008_MEMORY_ FBB[31_0]	2.0

Date: Friday, July 31, 2020 | Sheet 8 of 55

NVIDIA CORPORATION
2701 SAN TOMAS EXPRESSWAY
SANTA CLARA, CA 95050, USA

NV_PN	600-1G142-BASE-100		
PCB REV	PG142-B00	PAGE	8 OF 54
BOM REV	A	DATE	27-JUN-2020

Page9: MEMORY: FBB Partition 63..32

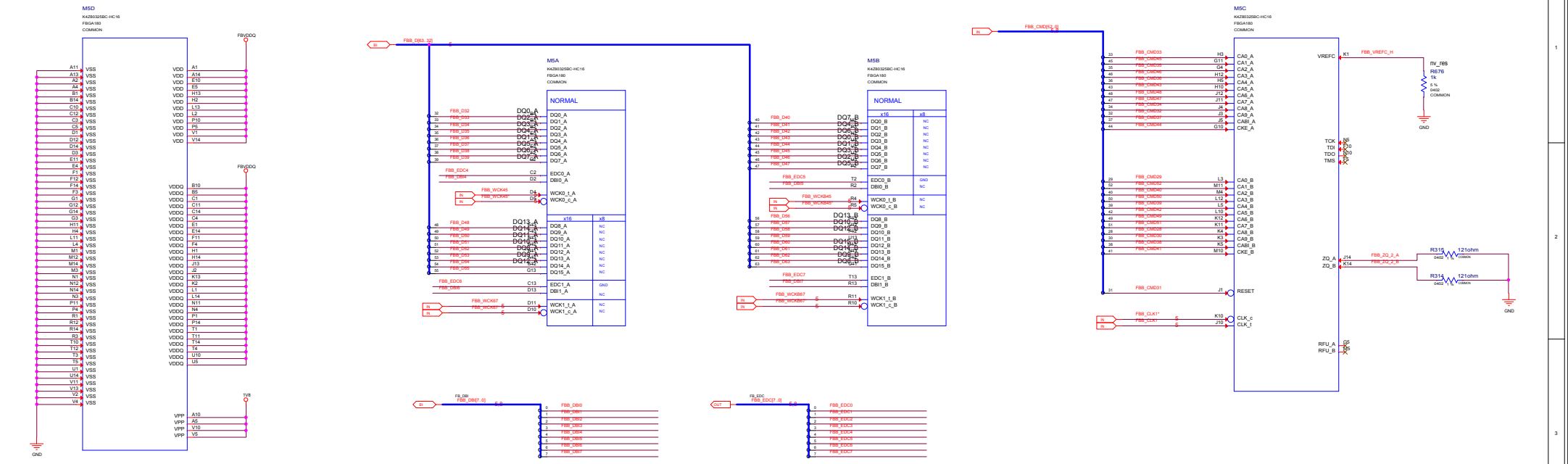

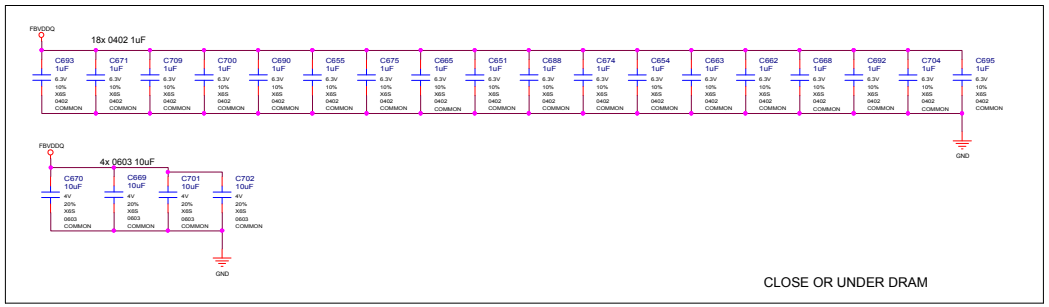

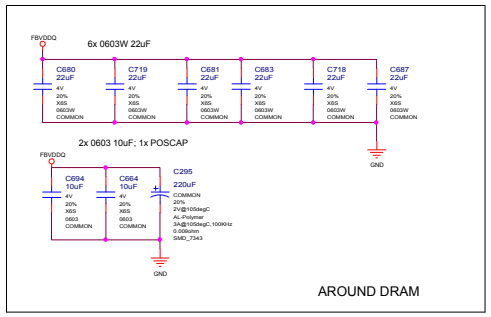

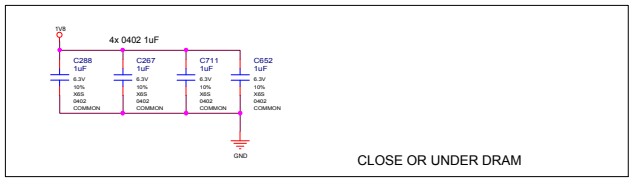

ASSEMBLY	<ASSEMBLY_DESCRIPTION>
PAGE DETAIL	MEMORY: FBB[63:32]

ALL NVIDIA DESIGN SPECIFICATIONS, REFERENCE SPECIFICATIONS, REFERENCE BOARDS, FILES, DRAWINGS, DIAGNOSTICS, LISTS AND OTHER DOCUMENTS OR INFORMATION (TOGETHER AND SEPARATELY, 'MATERIALS') ARE BEING PROVIDED 'AS IS'. THE MATERIALS MAY CONTAIN KNOWN AND UNKNOWN VIOLATIONS OR DEVIATIONS OF INDUSTRY STANDARDS AND SPECIFICATIONS. NVIDIA MAKES NO WARRANTIES, EXPRESSED, IMPLIED, STATUTORY OR OTHERWISE WITH RESPECT TO THE MATERIALS OR OTHERWISE, AND EXPRESSLY DISCLAIMS ALL IMPLIED WARRANTIES INCLUDING, WITHOUT LIMITATION, THE WARRANTIES OF DESIGN, OF NONINFRINGEMENT, MERCHANTABILITY OR FITNESS FOR A PARTICULAR PURPOSE, OR ARISING FROM A COURSE OF DEALING, TRADE USAGE, TRADE PRACTICE, OR INDUSTRY STANDARDS.

MICRO-STAR INT'L CO.,LTD

MS-V390

Size	Document Description	Rev
Custom	0009_MEMORY_ FBB[63_32]	2.0

Date: Friday, July 31, 2020 | Sheet 9 of 55

NVIDIA CORPORATION
2701 SAN TOMAS EXPRESSWAY
SANTA CLARA, CA 95050, USA

NV_PN	600-1G142-BASE-100		
PCB REV	PG142-B00	PAGE	9 OF 54
BOM REV	A	DATE	27-JUN-2020

Page10: MEMORY: GPU Partition C/D

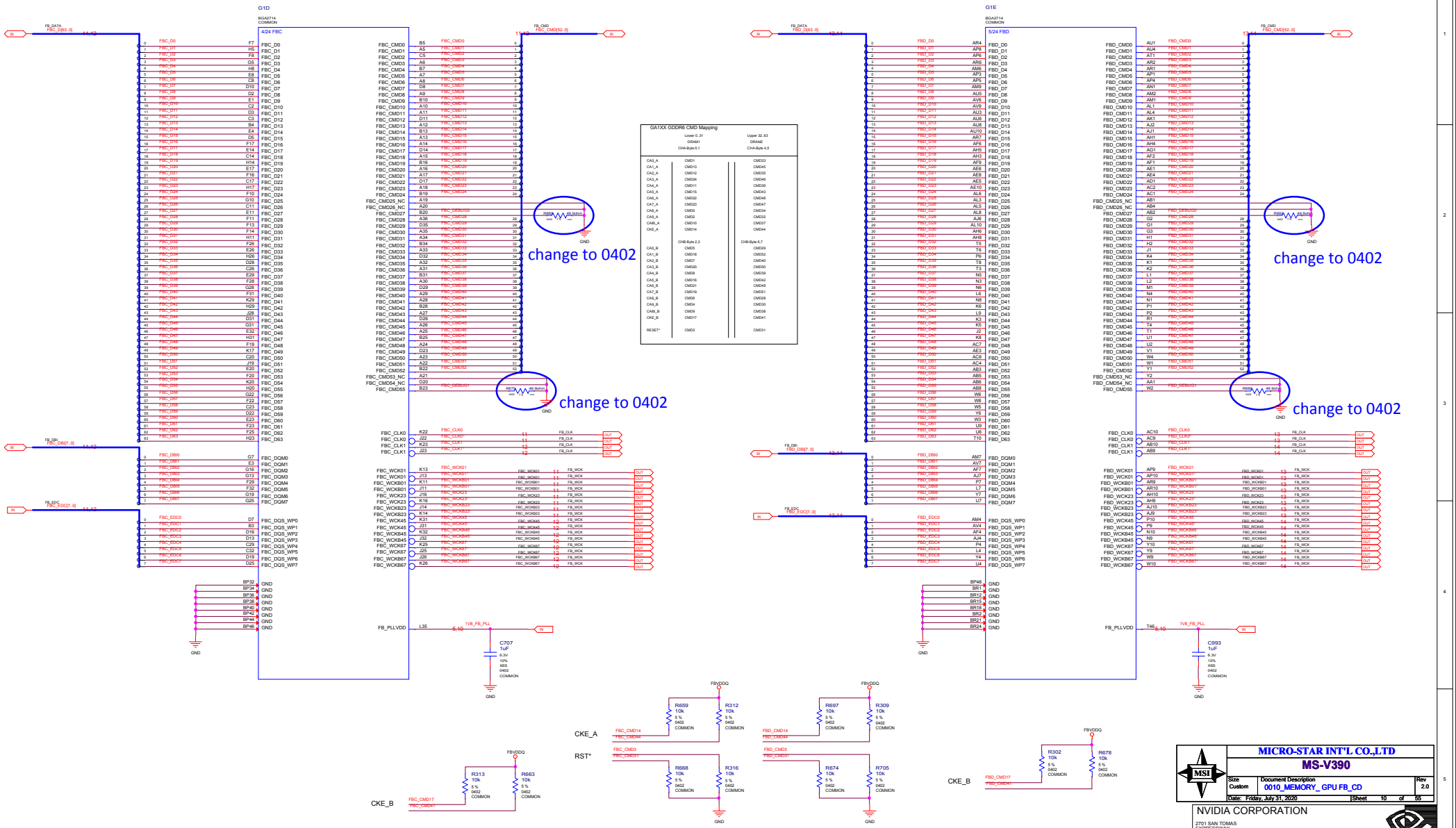

ASSEMBLY	<ASSEMBLY_DESCRIPTION>
PAGE DETAIL	MEMORY: GPU FB_CD

ALL NVIDIA DESIGN SPECIFICATIONS, REFERENCE SPECIFICATIONS, REFERENCE BOARDS, FILES, DRAWINGS, DIAGNOSTICS, LISTS AND OTHER DOCUMENTS OR INFORMATION (TOGETHER AND SEPARATELY, "MATERIALS") ARE BEING PROVIDED "AS IS". THE MATERIALS MAY CONTAIN KNOWN AND UNKNOWN VIOLATIONS OR DEVIATIONS OF INDUSTRY STANDARDS AND SPECIFICATIONS. NVIDIA MAKES NO WARRANTIES, EXPRESSED, IMPLIED, STATUTORY OR OTHERWISE WITH RESPECT TO THE MATERIALS OR OTHERWISE, AND EXPRESSLY DISCLAIMS ALL IMPLIED WARRANTIES INCLUDING, WITHOUT LIMITATION, THE WARRANTIES OF DESIGN, OF NONINFRINGEMENT, MERCHANTABILITY OR FITNESS FOR A PARTICULAR PURPOSE, OR ARISING FROM A COURSE OF DEALING, TRADE USAGE, TRADE PRACTICE, OR INDUSTRY STANDARDS.

MICRO-STAR INT'L CO.,LTD

MS-V390

Size	Document Description	Rev
Custom	0010_MEMORY_ GPU FB_CD	2.0

Date: Friday, July 31, 2020 | Sheet 10 of 55

NVIDIA CORPORATION
2701 SAN TOMAS EXPRESSWAY
SANTA CLARA, CA 95050, USA

NV_PN	600-1G142-BASE-100		
PCB REV	PG142-B00	PAGE	10 OF 54
BOM REV	A	DATE	27-JUN-2020

Page11: MEMORY: FBC Partition 31..0

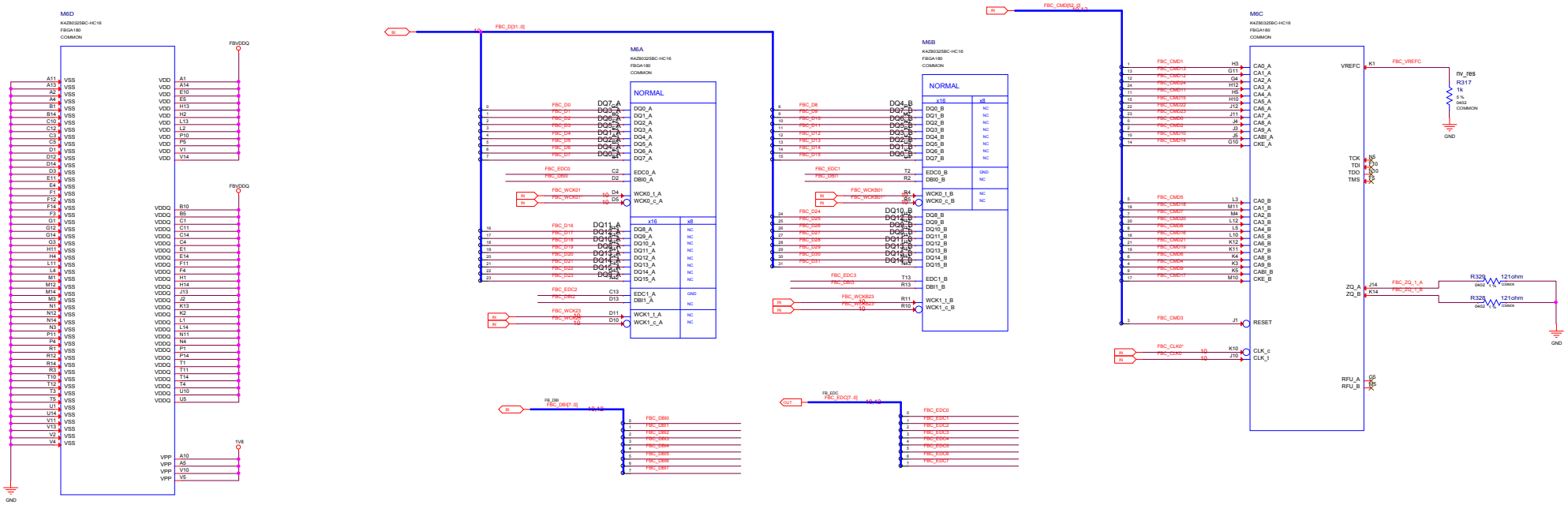

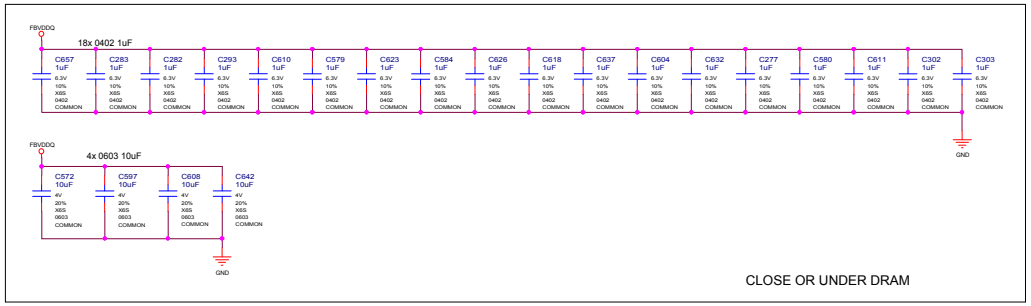

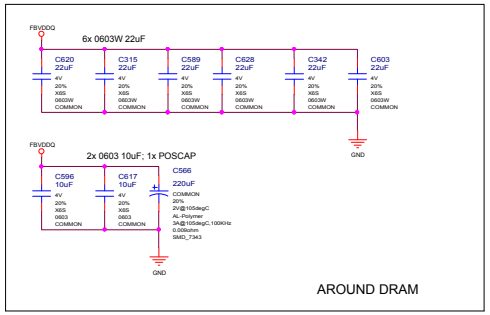

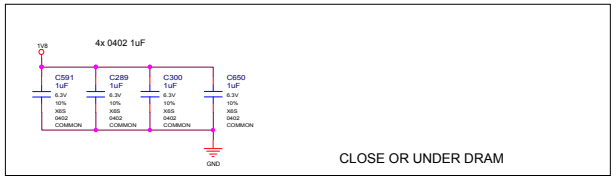

ASSEMBLY	<ASSEMBLY_DESCRIPTION>
PAGE DETAIL	MEMORY: FBC[31:0]

ALL NVIDIA DESIGN SPECIFICATIONS, REFERENCE SPECIFICATIONS, REFERENCE BOARDS, FILES, DRAWINGS, DIAGNOSTICS, LISTS AND OTHER DOCUMENTS OR INFORMATION (TOGETHER AND SEPARATELY, "MATERIALS") ARE BEING PROVIDED "AS IS". THE MATERIALS MAY CONTAIN KNOWN AND UNKNOWN VIOLATIONS OR DEVIATIONS OF INDUSTRY STANDARDS AND SPECIFICATIONS. NVIDIA MAKES NO WARRANTIES, EXPRESSED, IMPLIED, STATUTORY OR OTHERWISE WITH RESPECT TO THE MATERIALS OR OTHERWISE, AND EXPRESSLY DISCLAIMS ALL IMPLIED WARRANTIES INCLUDING, WITHOUT LIMITATION, THE WARRANTIES OF DESIGN, OF NONINFRINGEMENT, MERCHANTABILITY OR FITNESS FOR A PARTICULAR PURPOSE, OR ARISING FROM A COURSE OF DEALING, TRADE USAGE, TRADE PRACTICE, OR INDUSTRY STANDARDS.

MICRO-STAR INT'L CO.,LTD

MS-V390

Size	Document Description	Rev
Custom	0011_MEMORY_ FBC[31_0]	2.0

Date: Friday, July 31, 2020 | Sheet 11 of 55

NVIDIA CORPORATION
2701 SAN TOMAS EXPRESSWAY
SANTA CLARA, CA 95050, USA

NV_PN	600-1G142-BASE-100		
PCB REV	PG142-B00	PAGE	11 OF 54
BOM REV	A	DATE	27-JUN-2020

Page12: MEMORY: FBC Partition 63..32

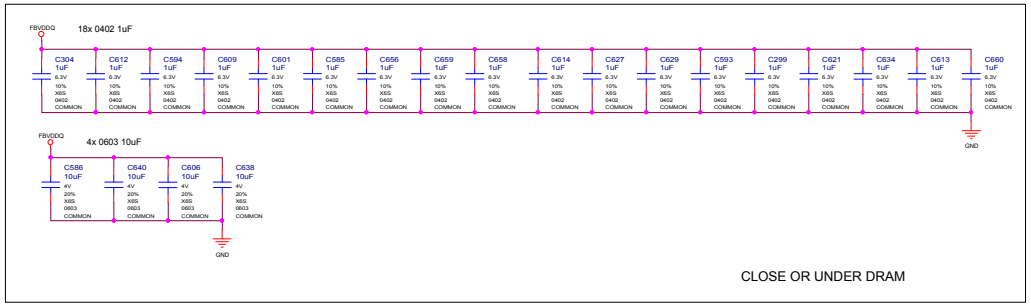

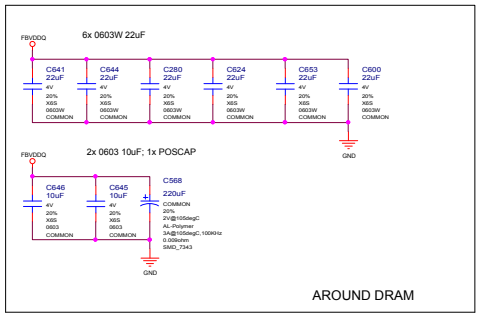

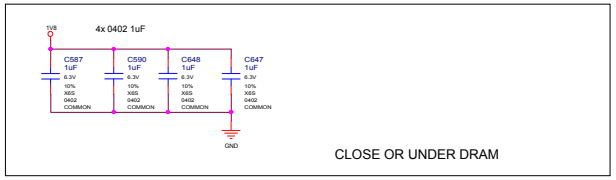

ASSEMBLY	<ASSEMBLY_DESCRIPTION>
PAGE DETAIL	MEMORY: FBC[63:32]

ALL NVIDIA DESIGN SPECIFICATIONS, REFERENCE SPECIFICATIONS, REFERENCE BOARDS, FILES, DRAWINGS, DIAGNOSTICS, LISTS AND OTHER DOCUMENTS OR INFORMATION (TOGETHER AND SEPARATELY, 'MATERIALS') ARE BEING PROVIDED 'AS IS'. THE MATERIALS MAY CONTAIN KNOWN AND UNKNOWN VIOLATIONS OR DEVIATIONS OF INDUSTRY STANDARDS AND SPECIFICATIONS. NVIDIA MAKES NO WARRANTIES, EXPRESSED, IMPLIED, STATUTORY OR OTHERWISE WITH RESPECT TO THE MATERIALS OR OTHERWISE, AND EXPRESSLY DISCLAIMS ALL IMPLIED WARRANTIES INCLUDING, WITHOUT LIMITATION, THE WARRANTIES OF DESIGN, OF NONINFRINGEMENT, MERCHANTABILITY OR FITNESS FOR A PARTICULAR PURPOSE, OR ARISING FROM A COURSE OF DEALING, TRADE USAGE, TRADE PRACTICE, OR INDUSTRY STANDARDS.

MICRO-STAR INT'L CO.,LTD

MS-V390

Size Custom	Document Description 0012_MEMORY_ FBC[63_32]	Rev 2.0
Date: Friday, July 31, 2020	Sheet 12 of 55	

NVIDIA CORPORATION
2701 SAN TOMAS EXPRESSWAY
SANTA CLARA, CA 95050, USA

NV_PN	600-1G142-BASE-100		
PCB REV	PG142-B00	PAGE	12 OF 54
BOM REV	A	DATE	27-JUN-2020

Page13: MEMORY: FBD Partition 31..0

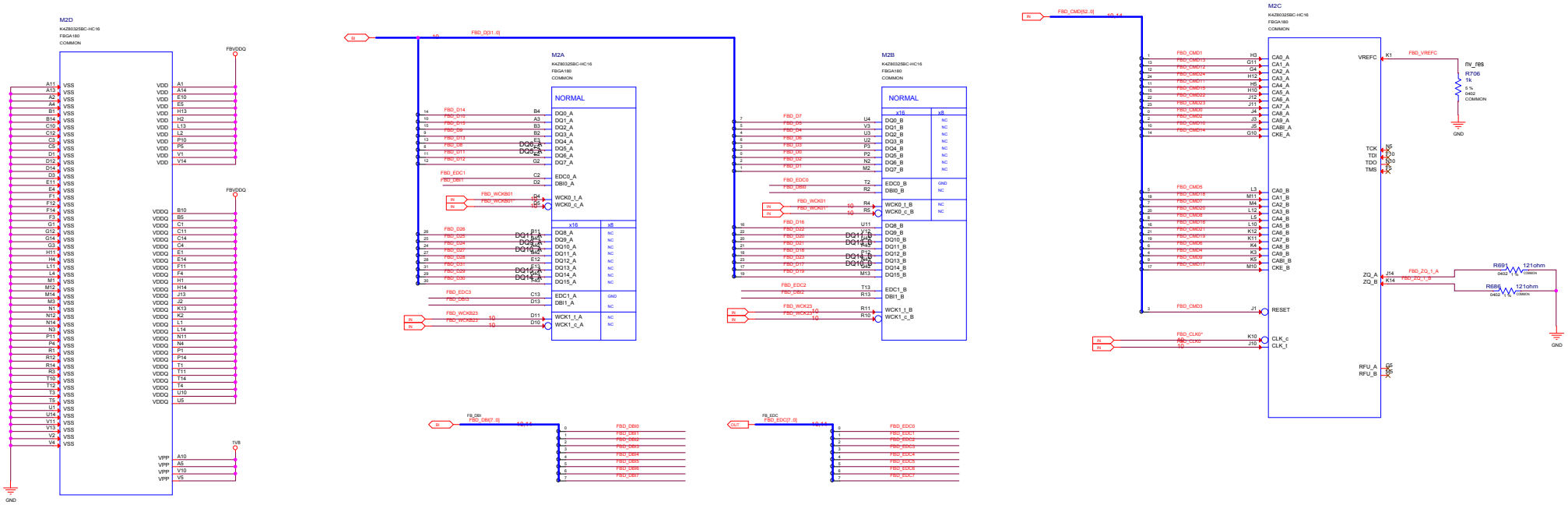

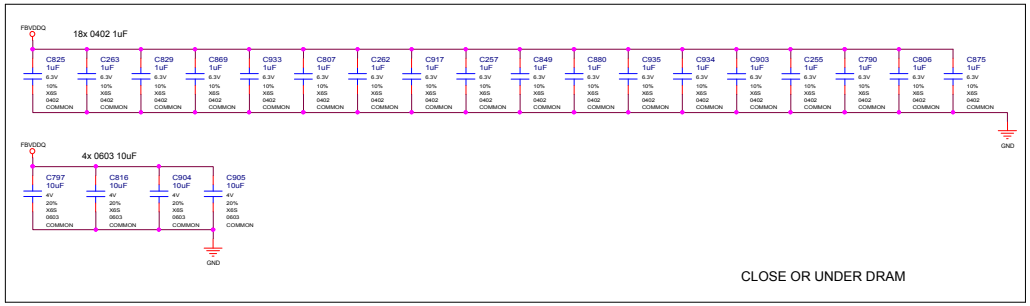

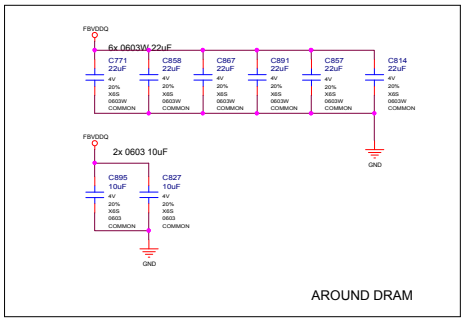

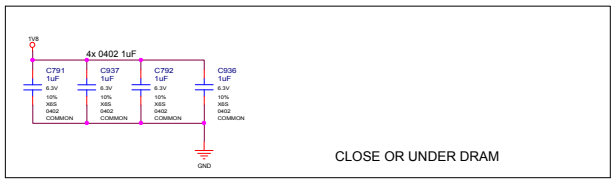

ASSEMBLY	<ASSEMBLY_DESCRIPTION>
PAGE DETAIL	MEMORY: FBD[31:0]

ALL NVIDIA DESIGN SPECIFICATIONS, REFERENCE SPECIFICATIONS, REFERENCE BOARDS, FILES, DRAWINGS, DIAGNOSTICS, LISTS AND OTHER DOCUMENTS OR INFORMATION (TOGETHER AND SEPARATELY, 'MATERIALS') ARE BEING PROVIDED 'AS IS'. THE MATERIALS MAY CONTAIN KNOWN AND UNKNOWN VIOLATIONS OR DEVIATIONS OF INDUSTRY STANDARDS AND SPECIFICATIONS. NVIDIA MAKES NO WARRANTIES, EXPRESSED, IMPLIED, STATUTORY OR OTHERWISE WITH RESPECT TO THE MATERIALS OR OTHERWISE, AND EXPRESSLY DISCLAIMS ALL IMPLIED WARRANTIES INCLUDING, WITHOUT LIMITATION, THE WARRANTIES OF DESIGN, OF NONINFRINGEMENT, MERCHANTABILITY OR FITNESS FOR A PARTICULAR PURPOSE, OR ARISING FROM A COURSE OF DEALING, TRADE USAGE, TRADE PRACTICE, OR INDUSTRY STANDARDS.

MICRO-STAR INT'L CO.,LTD

MS-V390

Size Custom	Document Description 0013_MEMORY_ FBD[31_0]	Rev 2.0
Date: Friday, July 31, 2020	Sheet 13 of 55	

NVIDIA CORPORATION
2701 SAN TOMAS EXPRESSWAY
SANTA CLARA, CA 95050, USA

NV_PN	600-1G142-BASE-100		
PCB REV	PG142-B00	PAGE	13 OF 54
BOM REV	A	DATE	27-JUN-2020

Page14: MEMORY: FBD Partition 63..32

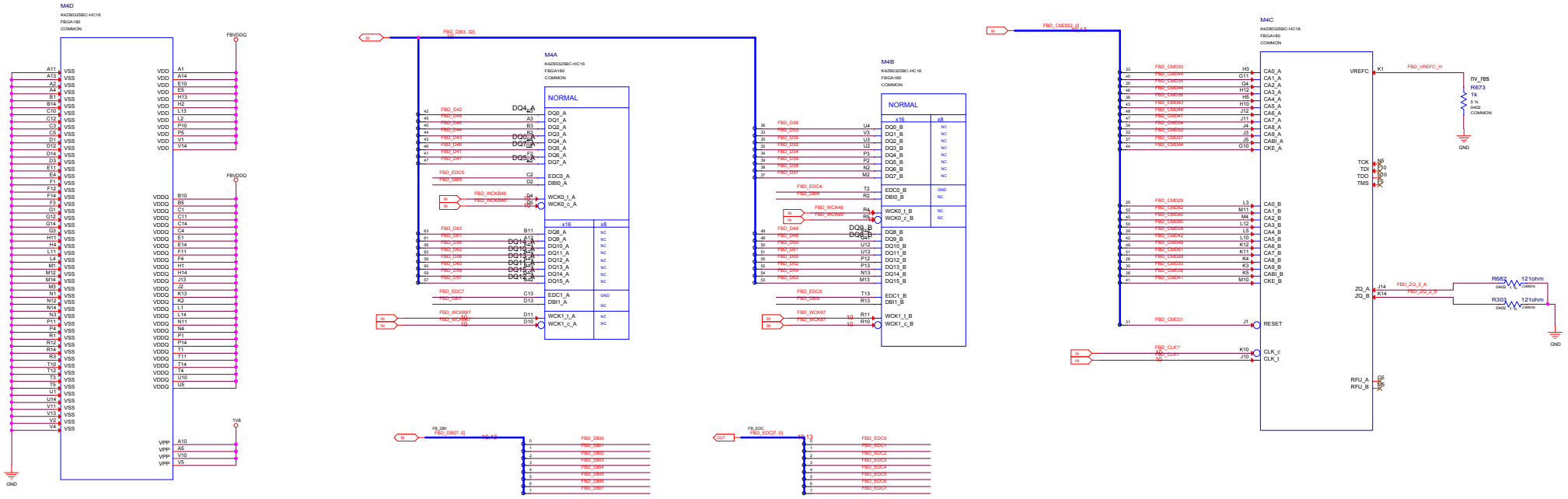

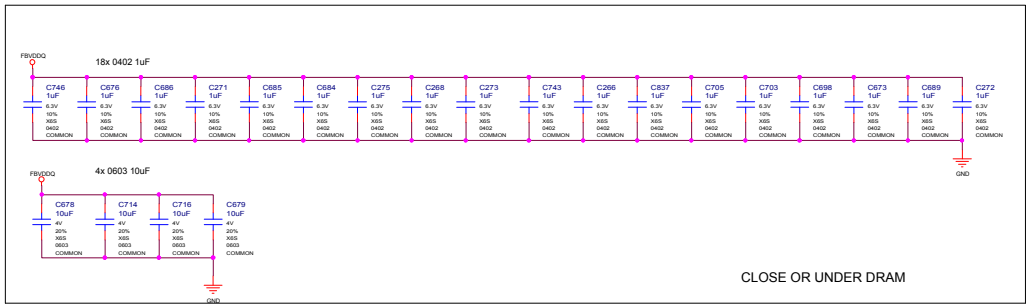

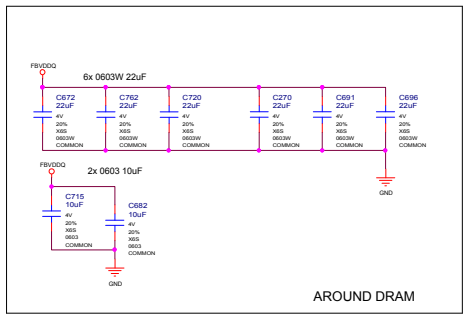

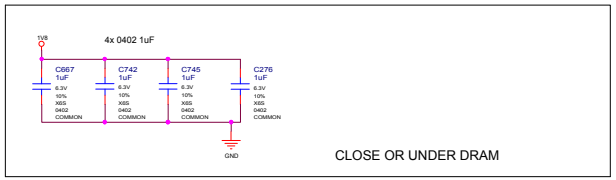

ASSEMBLY	<ASSEMBLY_DESCRIPTION>
PAGE DETAIL	MEMORY: FBD[63:32]

ALL NVIDIA DESIGN SPECIFICATIONS, REFERENCE SPECIFICATIONS, REFERENCE BOARDS, FILES, DRAWINGS, DIAGNOSTICS, LISTS AND OTHER DOCUMENTS OR INFORMATION (TOGETHER AND SEPARATELY, "MATERIALS") ARE BEING PROVIDED "AS IS". THE MATERIALS MAY CONTAIN KNOWN AND UNKNOWN VIOLATIONS OR DEVIATIONS OF INDUSTRY STANDARDS AND SPECIFICATIONS. NVIDIA MAKES NO WARRANTIES, EXPRESSED, IMPLIED, STATUTORY OR OTHERWISE WITH RESPECT TO THE MATERIALS OR OTHERWISE, AND EXPRESSLY DISCLAIMS ALL IMPLIED WARRANTIES INCLUDING, WITHOUT LIMITATION, THE WARRANTIES OF DESIGN, OF NONINFRINGEMENT, MERCHANTABILITY OR FITNESS FOR A PARTICULAR PURPOSE, OR ARISING FROM A COURSE OF DEALING, TRADE USAGE, TRADE PRACTICE, OR INDUSTRY STANDARDS.

MICRO-STAR INT'L CO.,LTD
MS-V390

Size Custom	Document Description 0014_MEMORY_ FBD[63_32]	Rev 2.0
Date: Friday, July 31, 2020	Sheet 14 of 55	

NVIDIA CORPORATION
2701 SAN TOMAS EXPRESSWAY
SANTA CLARA, CA 95050, USA

NV_PN	600-1G142-BASE-100		
PCB REV	PG142-B00	PAGE	14 OF 54
BOM REV	A	DATE	27-JUN-2020

Page15: GPU PWR and GND

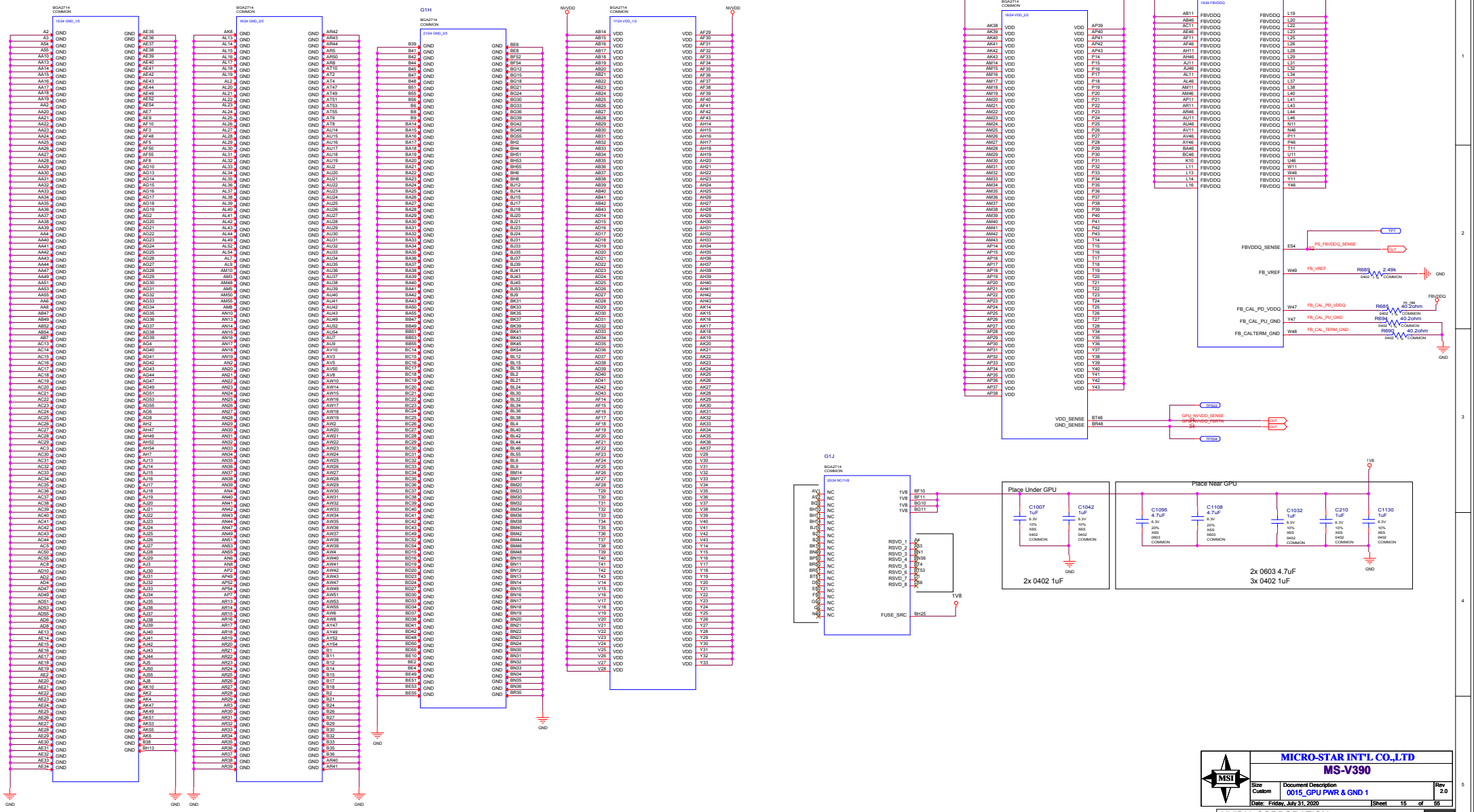

MICRO-STAR INT'L CO.,LTD

MS-V390

Size	Document Description	Rev
Custom	0015_GPU PWR & GND 1	2.0

Date: Friday, July 31, 2020 | Sheet 15 of 55

NVIDIA CORPORATION
2701 SAN TOMAS EXPRESSWAY
SANTA CLARA, CA 95050, USA

NV_PN	600-1G142-BASE-100		
PCB REV	PG142-B00	PAGE	15 OF 54
BOM REV	A	DATE	27-JUN-2020

ASSEMBLY	<ASSEMBLY_DESCRIPTION>
PAGE DETAIL	GPU PWR & GND

ALL NVIDIA DESIGN SPECIFICATIONS, REFERENCE SPECIFICATIONS, REFERENCE BOARDS, FILES, DRAWINGS, DIAGNOSTICS, LISTS AND OTHER DOCUMENTS OR INFORMATION (TOGETHER AND SEPARATELY, "MATERIALS") ARE BEING PROVIDED "AS IS". THE MATERIALS MAY CONTAIN KNOWN AND UNKNOWN VIOLATIONS OR DEVIATIONS OF INDUSTRY STANDARDS AND SPECIFICATIONS. NVIDIA MAKES NO WARRANTIES, EXPRESSED, IMPLIED, STATUTORY OR OTHERWISE WITH RESPECT TO THE MATERIALS OR OTHERWISE, AND EXPRESSLY DISCLAIMS ALL IMPLIED WARRANTIES INCLUDING, WITHOUT LIMITATION, THE WARRANTIES OF DESIGN, OF NONINFRINGEMENT, MERCHANTABILITY OR FITNESS FOR A PARTICULAR PURPOSE, OR ARISING FROM A COURSE OF DEALING, TRADE USAGE, TRADE PRACTICE, OR INDUSTRY STANDARDS.

Page16: GPU PWR and GND 2

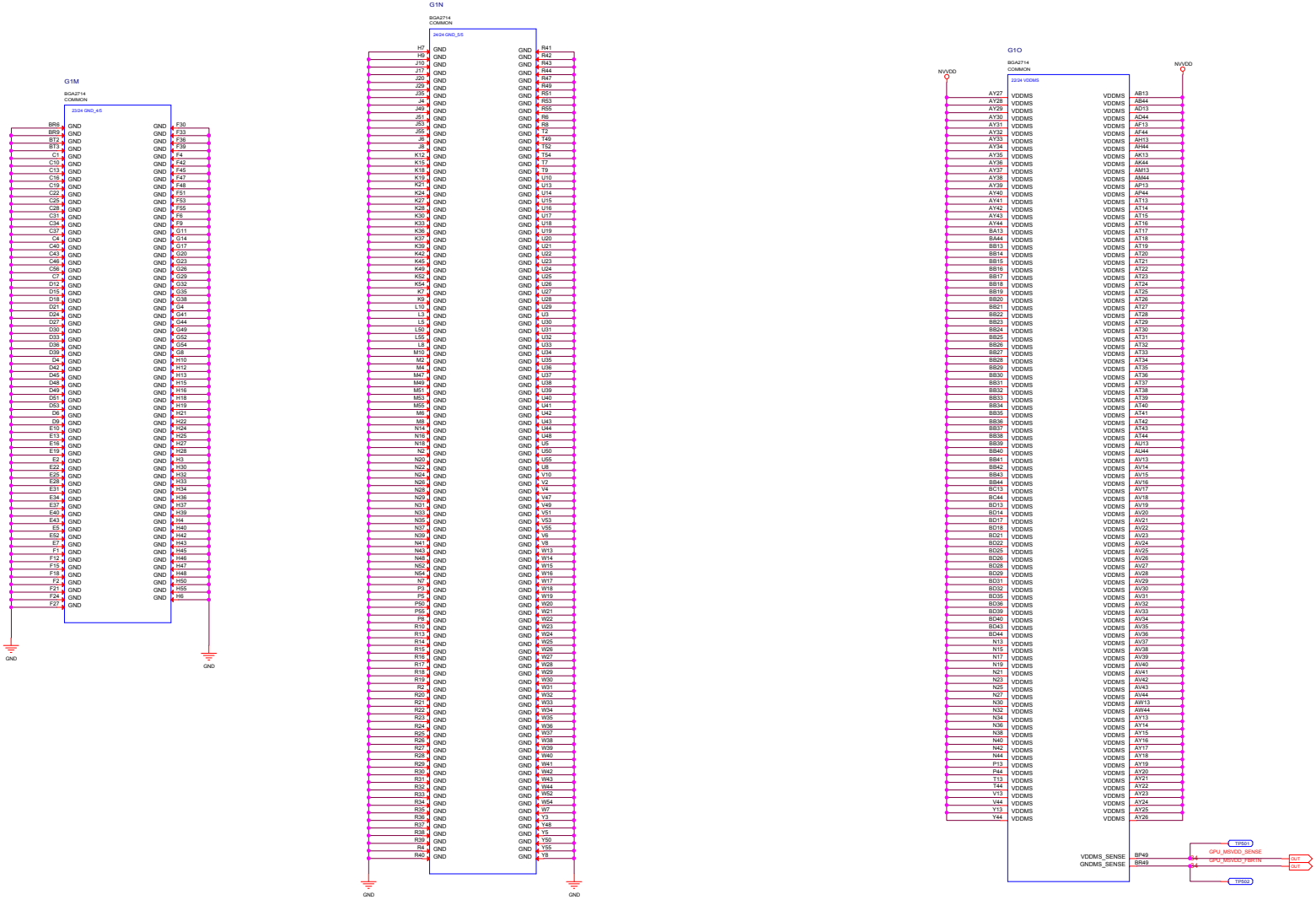

ASSEMBLY	<ASSEMBLY_DESCRIPTION>
PAGE DETAIL	GPU PWR & GND 2

ALL NVIDIA DESIGN SPECIFICATIONS, REFERENCE SPECIFICATIONS, REFERENCE BOARDS, FILES, DRAWINGS, DIAGNOSTICS, LISTS AND OTHER DOCUMENTS OR INFORMATION (TOGETHER AND SEPARATELY, 'MATERIALS') ARE BEING PROVIDED 'AS IS'. THE MATERIALS MAY CONTAIN KNOWN AND UNKNOWN VIOLATIONS OR DEVIATIONS OF INDUSTRY STANDARDS AND SPECIFICATIONS. NVIDIA MAKES NO WARRANTIES, EXPRESSED, IMPLIED, STATUTORY OR OTHERWISE WITH RESPECT TO THE MATERIALS OR OTHERWISE, AND EXPRESSLY DISCLAIMS ALL IMPLIED WARRANTIES INCLUDING, WITHOUT LIMITATION, THE WARRANTIES OF DESIGN, OF NONINFRINGEMENT, MERCHANTABILITY OR FITNESS FOR A PARTICULAR PURPOSE, OR ARISING FROM A COURSE OF DEALING, TRADE USAGE, TRADE PRACTICE, OR INDUSTRY STANDARDS.

MICRO-STAR INT'L CO.,LTD

MS-V390

Size	Document Description	Rev
Custom	0016_GPU PWR & GND 2	2.0

Date: Friday, July 31, 2020 | Sheet 16 of 55

NVIDIA CORPORATION
2701 SAN TOMAS
EXPRESSWAY
SANTA CLARA, CA 95050, USA

NV_PN	600-1G142-BASE-100		
PCB REV	PG142-B00	PAGE	16 OF 54
BOM REV	A	DATE	27-JUN-2020

Page17: XVDD

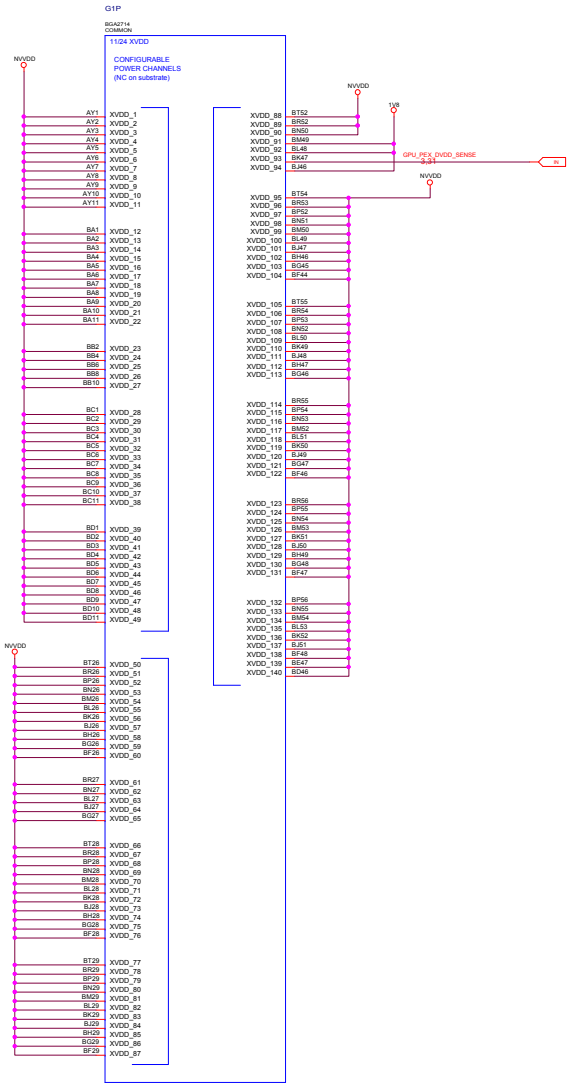

ASSEMBLY	<ASSEMBLY_DESCRIPTION>
PAGE DETAIL	GPU PWR & GND 3 (XVDD)

ALL NVIDIA DESIGN SPECIFICATIONS, REFERENCE SPECIFICATIONS, REFERENCE BOARDS, FILES, DRAWINGS, DIAGNOSTICS, LISTS AND OTHER DOCUMENTS OR INFORMATION (TOGETHER AND SEPARATELY, "MATERIALS") ARE BEING PROVIDED "AS IS". THE MATERIALS MAY CONTAIN KNOWN AND UNKNOWN VIOLATIONS OR DEVIATIONS OF INDUSTRY STANDARDS AND SPECIFICATIONS. NVIDIA MAKES NO WARRANTIES, EXPRESSED, IMPLIED, STATUTORY OR OTHERWISE WITH RESPECT TO THE MATERIALS OR OTHERWISE, AND EXPRESSLY DISCLAIMS ALL IMPLIED WARRANTIES INCLUDING, WITHOUT LIMITATION, THE WARRANTIES OF DESIGN, OF NONINFRINGEMENT, MERCHANTABILITY OR FITNESS FOR A PARTICULAR PURPOSE, OR ARISING FROM A COURSE OF DEALING, TRADE USAGE, TRADE PRACTICE, OR INDUSTRY STANDARDS.

MICRO-STAR INT'L CO.,LTD

MS-V390

Size	Document Description	Rev
Custom	0017_GPU PWR & GND 3 (XVDD)	2.0

Date: Friday, July 31, 2020 | Sheet 17 of 55

NVIDIA CORPORATION
2701 SAN TOMAS
EXPRESSWAY
SANTA CLARA, CA 95050, USA

NV_PN	600-1G142-BASE-100		
PCB REV	PG142-B00	PAGE	17 OF 54
BOM REV	A	DATE	27-JUN-2020

Page18: GPU DECOUPLING FBVDDQ

FBVDDQ

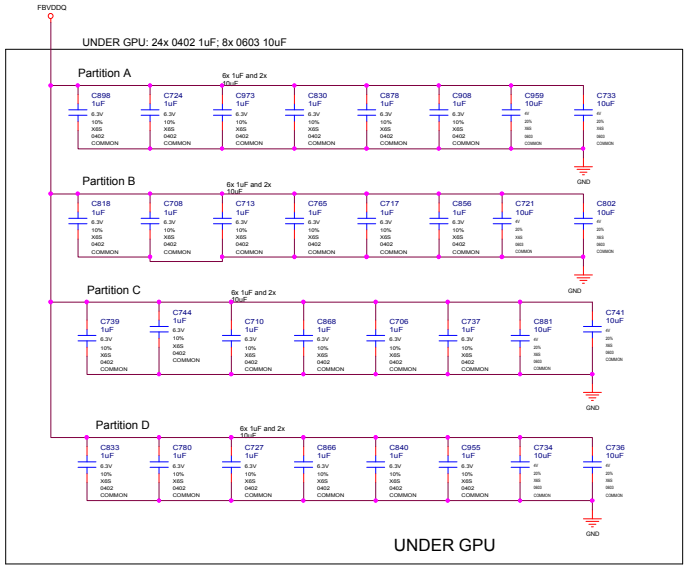

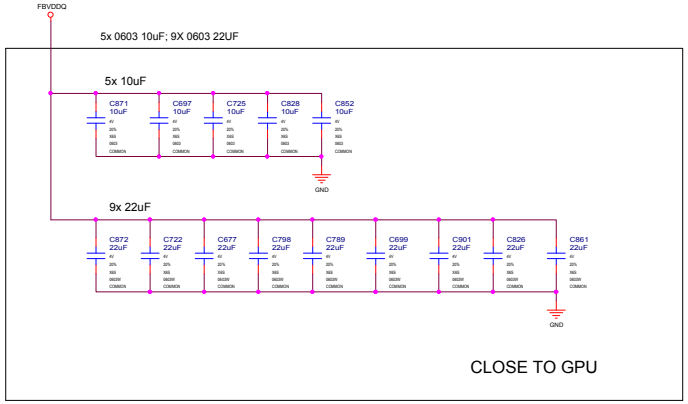

ASSEMBLY	<ASSEMBLY_DESCRIPTION>
PAGE DETAIL	GPU DECOUPLING FBVDDQ

ALL NVIDIA DESIGN SPECIFICATIONS, REFERENCE SPECIFICATIONS, REFERENCE BOARDS, FILES, DRAWINGS, DIAGNOSTICS, LISTS AND OTHER DOCUMENTS OR INFORMATION (TOGETHER AND SEPARATELY, "MATERIALS") ARE BEING PROVIDED "AS IS". THE MATERIALS MAY CONTAIN KNOWN AND UNKNOWN VIOLATIONS OR DEVIATIONS OF INDUSTRY STANDARDS AND SPECIFICATIONS. NVIDIA MAKES NO WARRANTIES, EXPRESSED, IMPLIED, STATUTORY OR OTHERWISE WITH RESPECT TO THE MATERIALS OR OTHERWISE, AND EXPRESSLY DISCLAIMS ALL IMPLIED WARRANTIES INCLUDING, WITHOUT LIMITATION, THE WARRANTIES OF DESIGN, OF NONINFRINGEMENT, MERCHANTABILITY OR FITNESS FOR A PARTICULAR PURPOSE, OR ARISING FROM A COURSE OF DEALING, TRADE USAGE, TRADE PRACTICE, OR INDUSTRY STANDARDS.

MICRO-STAR INT'L CO.,LTD

MS-V390

Size	Document Description	Rev
Custom	0018_GPU DECOUPLING FBVDDQ	2.0

Date: Friday, July 31, 2020 | Sheet 18 of 55

NVIDIA CORPORATION
2701 SAN TOMAS
EXPRESSWAY
SANTA CLARA, CA 95050, USA

NV_PN	600-1G142-BASE-100		
PCB REV	PG142-B00	PAGE	18 OF 54
BOM REV	A	DATE	27-JUN-2020

Page19: GPU DECOUPLING NVVDD

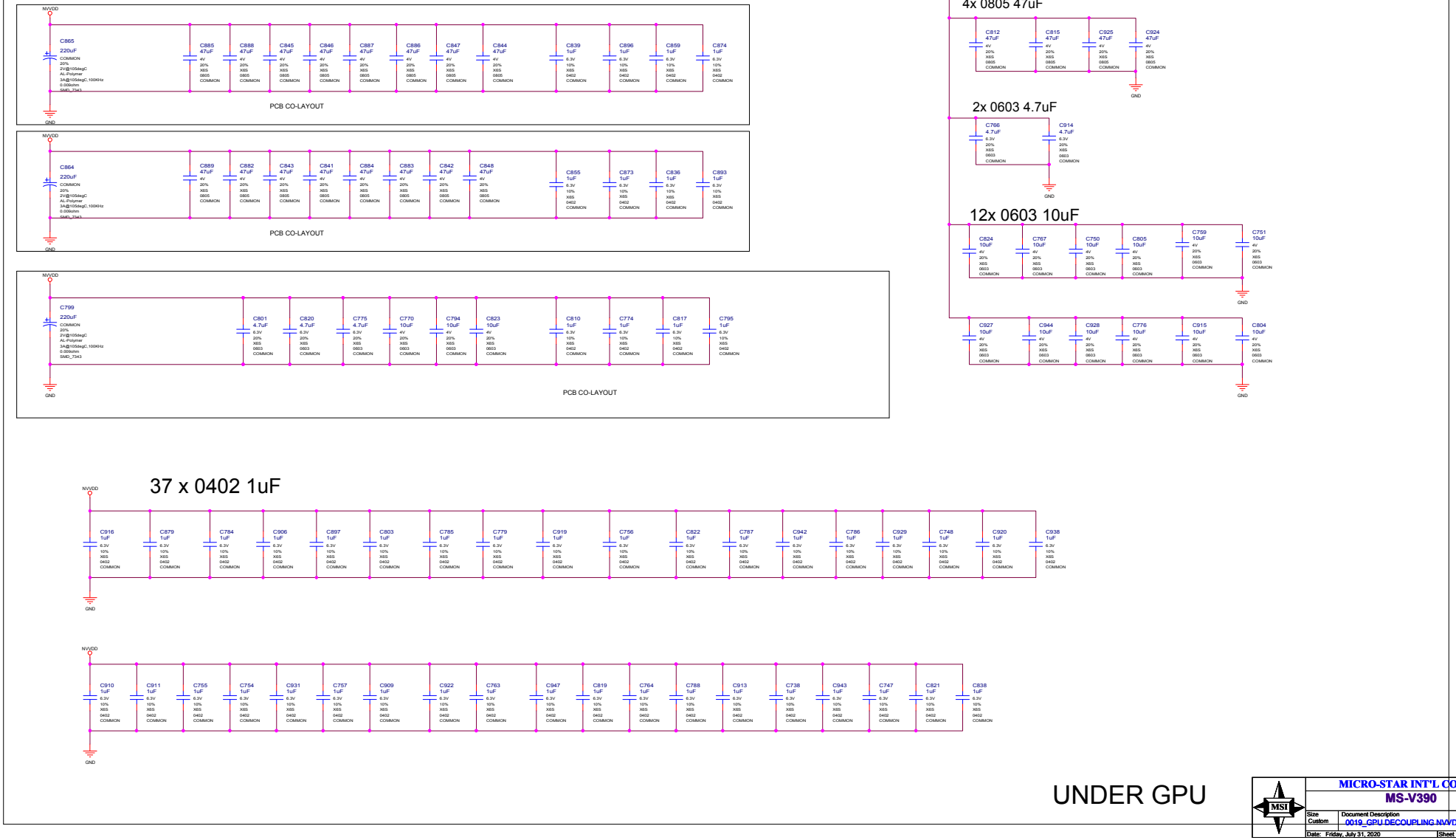

ASSEMBLY	<ASSEMBLY_DESCRIPTION>
PAGE DETAIL	GPU DECOUPLING NVVDD

MICRO-STAR INT'L CO.,LTD
MS-V390

Size	Document Description	Rev
Custom	0019_GPU DECOUPLING NVVDD	2.0

Date: Friday, July 31, 2020 Sheet 19 of 55

NVIDIA CORPORATION
2701 SAN TOMAS EXPRESSWAY
SANTA CLARA, CA 95050, USA

NV_PN	600-1G142-BASE-100		
PCB REV	PG142-B00	PAGE	19 OF 54
BOM REV	A	DATE	27-JUN-2020

ALL NVIDIA DESIGN SPECIFICATIONS, REFERENCE SPECIFICATIONS, REFERENCE BOARDS, FILES, DRAWINGS, DIAGNOSTICS, LISTS AND OTHER DOCUMENTS OR INFORMATION (TOGETHER AND SEPARATELY, "MATERIALS") ARE BEING PROVIDED "AS IS". THE MATERIALS MAY CONTAIN KNOWN AND UNKNOWN VIOLATIONS OR DEVIATIONS OF INDUSTRY STANDARDS AND SPECIFICATIONS. NVIDIA MAKES NO WARRANTIES, EXPRESSED, IMPLIED, STATUTORY OR OTHERWISE WITH RESPECT TO THE MATERIALS OR OTHERWISE, AND EXPRESSLY DISCLAIMS ALL IMPLIED WARRANTIES INCLUDING, WITHOUT LIMITATION, THE WARRANTIES OF DESIGN, OF NONINFRINGEMENT, MERCHANTABILITY OR FITNESS FOR A PARTICULAR PURPOSE, OR ARISING FROM A COURSE OF DEALING, TRADE USAGE, TRADE PRACTICE, OR INDUSTRY STANDARDS.

Page20: GPU DECOUPLING NVVDD

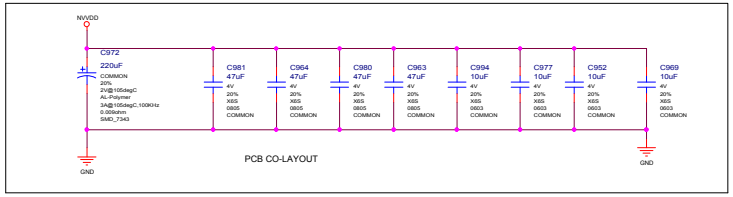

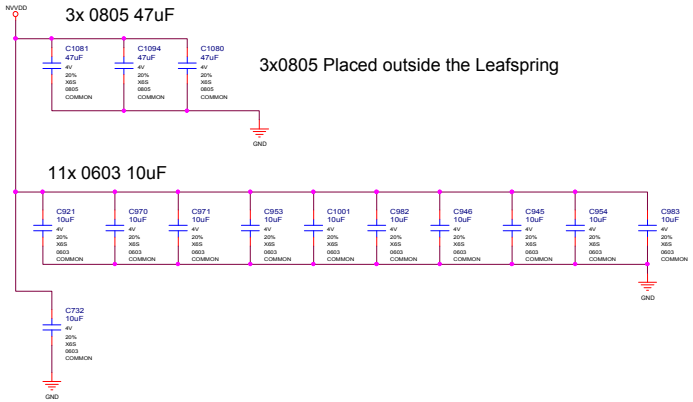

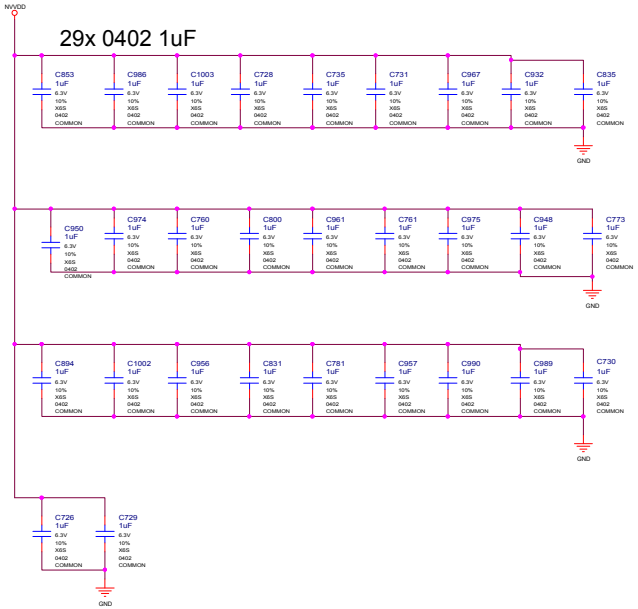

UNDER GPU

ASSEMBLY	<ASSEMBLY_DESCRIPTION>
PAGE DETAIL	GPU DECOUPLING NVVDD

ALL NVIDIA DESIGN SPECIFICATIONS, REFERENCE SPECIFICATIONS, REFERENCE BOARDS, FILES, DRAWINGS, DIAGNOSTICS, LISTS AND OTHER DOCUMENTS OR INFORMATION (TOGETHER AND SEPARATELY, 'MATERIALS') ARE BEING PROVIDED 'AS IS'. THE MATERIALS MAY CONTAIN KNOWN AND UNKNOWN VIOLATIONS OR DEVIATIONS OF INDUSTRY STANDARDS AND SPECIFICATIONS. NVIDIA MAKES NO WARRANTIES, EXPRESSED, IMPLIED, STATUTORY OR OTHERWISE WITH RESPECT TO THE MATERIALS OR OTHERWISE, AND EXPRESSLY DISCLAIMS ALL IMPLIED WARRANTIES INCLUDING, WITHOUT LIMITATION, THE WARRANTIES OF DESIGN, OF NONINFRINGEMENT, MERCHANTABILITY OR FITNESS FOR A PARTICULAR PURPOSE, OR ARISING FROM A COURSE OF DEALING, TRADE USAGE, TRADE PRACTICE, OR INDUSTRY STANDARDS.

MICRO-STAR INT'L CO.,LTD

MS-V390

Size	Document Description	Rev
Custom	0020_GPU DECOUPLING NVVDD	2.0

Date: Friday, July 31, 2020 | Sheet 20 of 55

NVIDIA CORPORATION
2701 SAN TOMAS EXPRESSWAY
SANTA CLARA, CA 95050, USA

NV_PN	600-1G142-BASE-100		
PCB REV	PG142-B00	PAGE	20 OF 54
BOM REV	A	DATE	27-JUN-2020

Page21: IFPAB DVI-D-DL

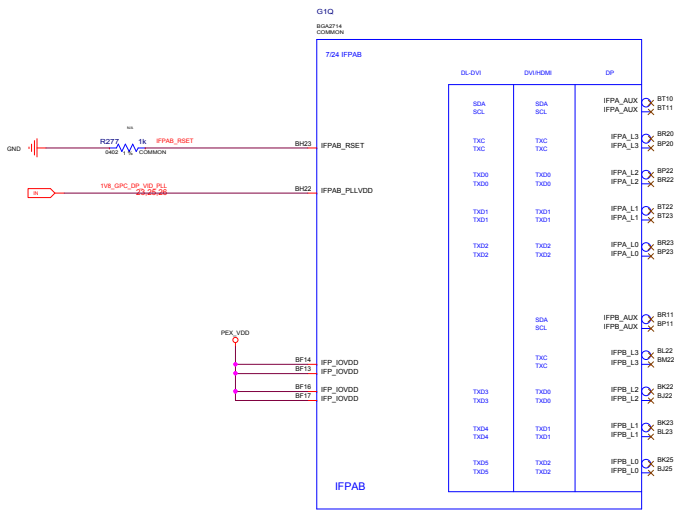

ASSEMBLY	<ASSEMBLY_DESCRIPTION>
PAGE DETAIL	IO: IFPAB NC

ALL NVIDIA DESIGN SPECIFICATIONS, REFERENCE SPECIFICATIONS, REFERENCE BOARDS, FILES, DRAWINGS, DIAGNOSTICS, LISTS AND OTHER DOCUMENTS OR INFORMATION (TOGETHER AND SEPARATELY, "MATERIALS") ARE BEING PROVIDED "AS IS". THE MATERIALS MAY CONTAIN KNOWN AND UNKNOWN VIOLATIONS OR DEVIATIONS OF INDUSTRY STANDARDS AND SPECIFICATIONS. NVIDIA MAKES NO WARRANTIES, EXPRESSED, IMPLIED, STATUTORY OR OTHERWISE WITH RESPECT TO THE MATERIALS OR OTHERWISE, AND EXPRESSLY DISCLAIMS ALL IMPLIED WARRANTIES INCLUDING, WITHOUT LIMITATION, THE WARRANTIES OF DESIGN, OF NONINFRINGEMENT, MERCHANTABILITY OR FITNESS FOR A PARTICULAR PURPOSE, OR ARISING FROM A COURSE OF DEALING, TRADE USAGE, TRADE PRACTICE, OR INDUSTRY STANDARDS.

MICRO-STAR INT'L CO.,LTD

MS-V390

Size	Document Description	Rev
Custom	0021_IO_ IFPAB NC	2.0

Date: Friday, July 31, 2020 | Sheet 21 of 55

NVIDIA CORPORATION
2701 SAN TOMAS
EXPRESSWAY
SANTA CLARA, CA 95050, USA

NV_PN	600-1G142-BASE-100		
PCB REV	PG142-B00	PAGE	21 OF 54
BOM REV	A	DATE	27-JUN-2020

Page22: IFPF DP

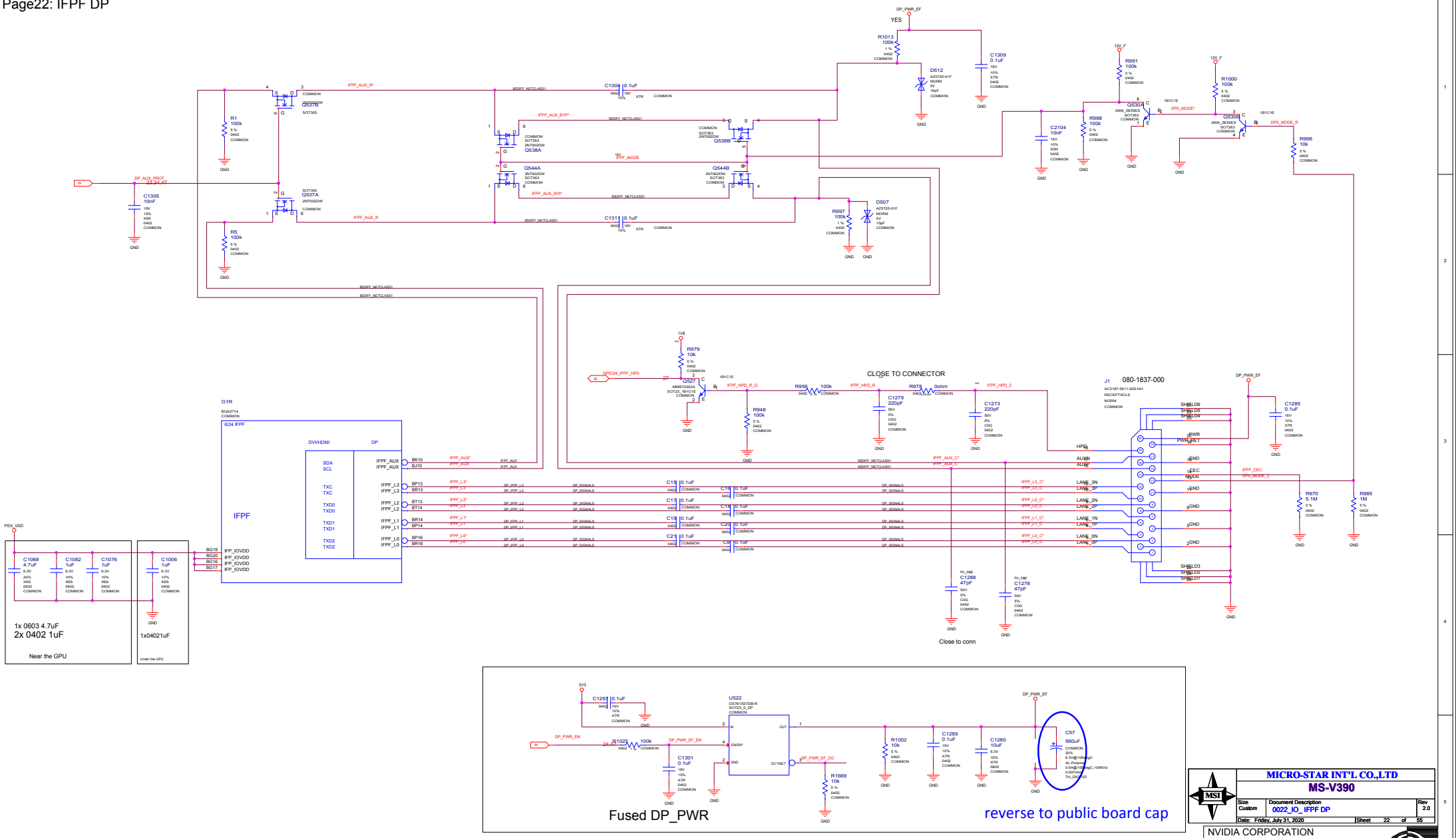

ASSEMBLY	<ASSEMBLY_DESCRIPTION>
PAGE DETAIL	IO: IFPF DP

ALL NVIDIA DESIGN SPECIFICATIONS, REFERENCE SPECIFICATIONS, REFERENCE BOARDS, FILES, DRAWINGS, DIAGNOSTICS, LISTS AND OTHER DOCUMENTS OR INFORMATION (TOGETHER AND SEPARATELY, 'MATERIALS') ARE BEING PROVIDED 'AS IS'. THE MATERIALS MAY CONTAIN KNOWN AND UNKNOWN VIOLATIONS OR DEVIATIONS OF INDUSTRY STANDARDS AND SPECIFICATIONS. NVIDIA MAKES NO WARRANTIES, EXPRESSED, IMPLIED, STATUTORY OR OTHERWISE WITH RESPECT TO THE MATERIALS OR OTHERWISE, AND EXPRESSLY DISCLAIMS ALL IMPLIED WARRANTIES INCLUDING, WITHOUT LIMITATION, THE WARRANTIES OF DESIGN, OF NONINFRINGEMENT, MERCHANTABILITY OR FITNESS FOR A PARTICULAR PURPOSE, OR ARISING FROM A COURSE OF DEALING, TRADE USAGE, TRADE PRACTICE, OR INDUSTRY STANDARDS.

MICRO-STAR INT'L CO.,LTD

MS-V390

Size	Document Description	Rev
Custom	0022_IO_ IFPF DP	2.0

Date: Friday, July 31, 2020 | Sheet 22 of 55

NVIDIA CORPORATION
2701 SAN TOMAS EXPRESSWAY
SANTA CLARA, CA 95050, USA

NV_PN	600-1G142-BASE-100		
PCB REV	PG142-B00	PAGE	22 OF 54
BOM REV	A	DATE	27-JUN-2020

Page23: IFPE DP

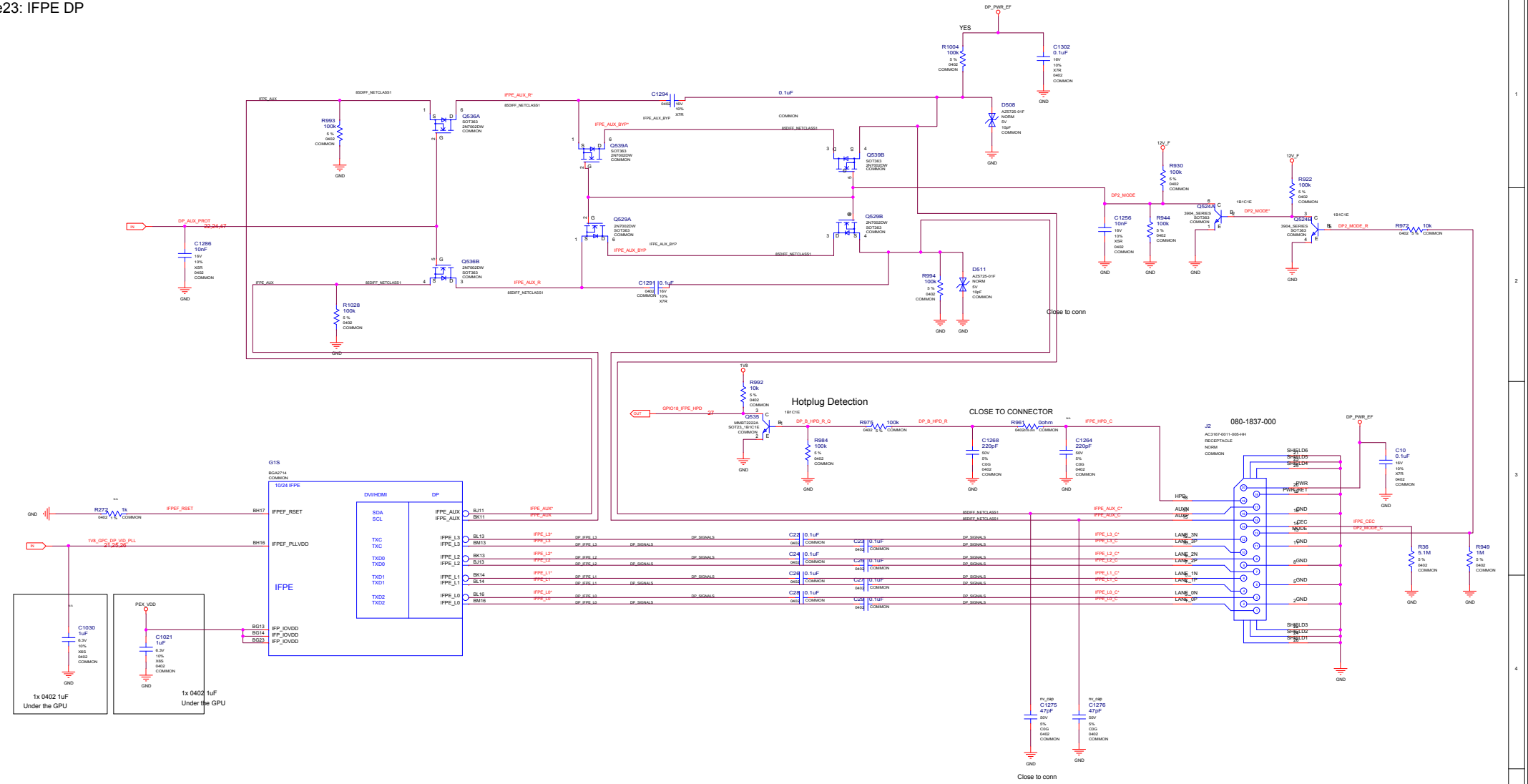

ASSEMBLY	<ASSEMBLY_DESCRIPTION>
PAGE DETAIL	IO: IFPE DP

MICRO-STAR INT'L CO.,LTD

MS-V390

Size	Document Description	Rev
Custom	0023_IO_ IFPE DP	2.0

Date: Friday, July 31, 2020 | Sheet 23 of 55

NVIDIA CORPORATION
2701 SAN TOMAS EXPRESSWAY
SANTA CLARA, CA 95050, USA

NV_PN	600-1G142-BASE-100		
PCB REV	PG142-B00	PAGE	23 OF 54
BOM REV	A	DATE	27-JUN-2020

ALL NVIDIA DESIGN SPECIFICATIONS, REFERENCE SPECIFICATIONS, REFERENCE BOARDS, FILES, DRAWINGS, DIAGNOSTICS, LISTS AND OTHER DOCUMENTS OR INFORMATION (TOGETHER AND SEPARATELY, "MATERIALS") ARE BEING PROVIDED "AS IS". THE MATERIALS MAY CONTAIN KNOWN AND UNKNOWN VIOLATIONS OR DEVIATIONS OF INDUSTRY STANDARDS AND SPECIFICATIONS. NVIDIA MAKES NO WARRANTIES, EXPRESSED, IMPLIED, STATUTORY OR OTHERWISE WITH RESPECT TO THE MATERIALS OR OTHERWISE, AND EXPRESSLY DISCLAIMS ALL IMPLIED WARRANTIES INCLUDING, WITHOUT LIMITATION, THE WARRANTIES OF DESIGN, OF NONINFRINGEMENT, MERCHANTABILITY OR FITNESS FOR A PARTICULAR PURPOSE, OR ARISING FROM A COURSE OF DEALING, TRADE USAGE, TRADE PRACTICE, OR INDUSTRY STANDARDS.

Page24: IFPD DP

1. DP AUX to DP connector: AUX AC coupled
2. DP AUX to DP-DVI dongle: AUX pass through

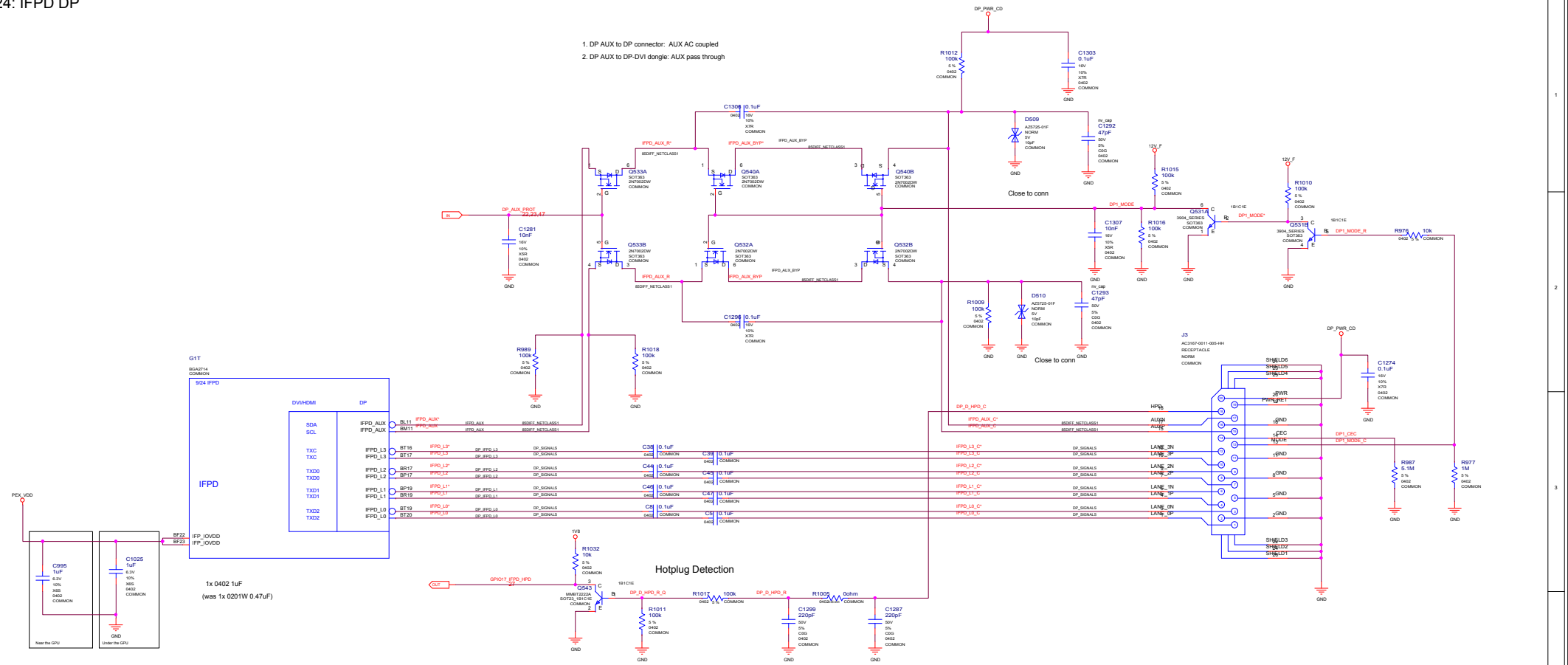

Fused DP_PWR

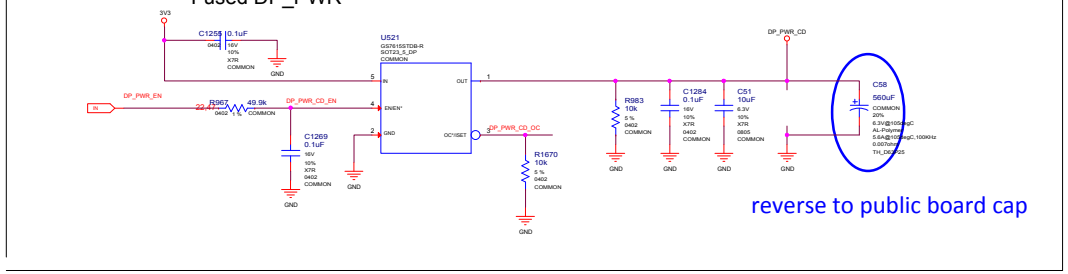

ASSEMBLY	<ASSEMBLY_DESCRIPTION>
PAGE DETAIL	

ALL NVIDIA DESIGN SPECIFICATIONS, REFERENCE SPECIFICATIONS, REFERENCE BOARDS, FILES, DRAWINGS, DIAGNOSTICS, LISTS AND OTHER DOCUMENTS OR INFORMATION (TOGETHER AND SEPARATELY, 'MATERIALS') ARE BEING PROVIDED 'AS IS'. THE MATERIALS MAY CONTAIN KNOWN AND UNKNOWN VIOLATIONS OR DEVIATIONS OF INDUSTRY STANDARDS AND SPECIFICATIONS. NVIDIA MAKES NO WARRANTIES, EXPRESSED, IMPLIED, STATUTORY OR OTHERWISE WITH RESPECT TO THE MATERIALS OR OTHERWISE, AND EXPRESSLY DISCLAIMS ANY IMPLIED WARRANTIES INCLUDING, WITHOUT LIMITATION, THE WARRANTIES OF DESIGN, OF NONINFRINGEMENT, MERCHANTABILITY OR FITNESS FOR A PARTICULAR PURPOSE, OR ARISING FROM A COURSE OF DEALING, TRADE USAGE, TRADE PRACTICE, OR INDUSTRY STANDARDS.

IO: IFPD DP

MICRO-STAR INT'L CO.,LTD

MS-V390

Size	Document Description	Rev
Custom	0024_IO_ IFPD DP	2.0

Date: Friday, July 31, 2020 | Sheet 24 of 55

NVIDIA CORPORATION
2701 SAN TOMAS EXPRESSWAY
SANTA CLARA, CA 95050, USA

NV_PN	600-1G142-BASE-100		
PCB REV	PG142-B00	PAGE	24 OF 54
BOM REV	A	DATE	27-JUN-2020

Page25: IFPC HDMI/DP

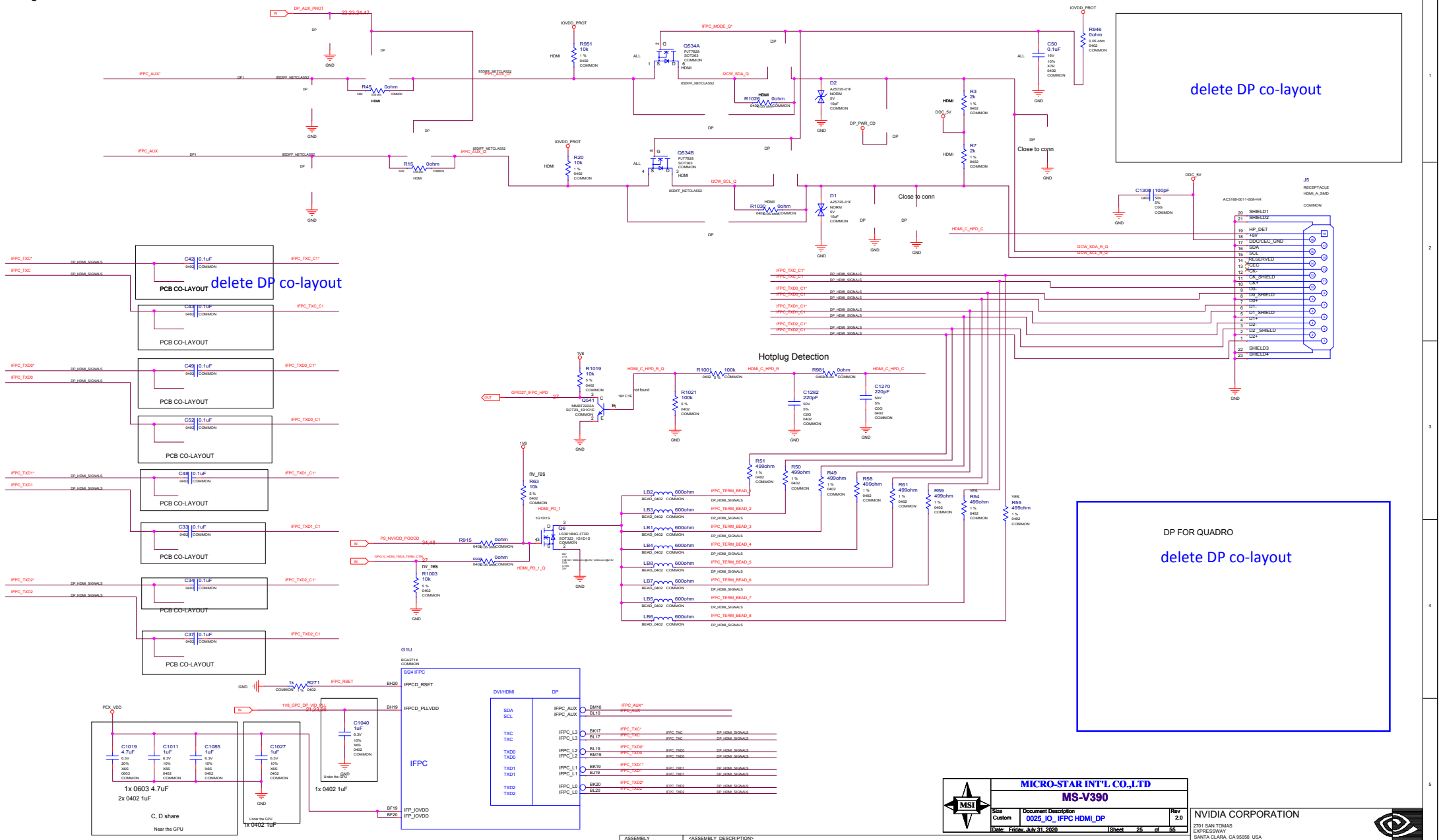

ASSEMBLY	<ASSEMBLY_DESCRIPTION>
PAGE DETAIL	IO: IFPC HDMI/DP

MICRO-STAR INT'L CO.,LTD
MS-V390

Size	Document Description	Rev
Custom	0025_IO_ IFPC HDMI_DP	2.0

Date: Friday, July 31, 2020 Sheet 25 of 55

NVIDIA CORPORATION
2701 SAN TOMAS EXPRESSWAY
SANTA CLARA, CA 95050, USA

NV_PN	600-1G142-BASE-100		
PCB REV	PG142-B00	PAGE	25 OF 54
BOM REV	A	DATE	27-JUN-2020

ALL NVIDIA DESIGN SPECIFICATIONS, REFERENCE SPECIFICATIONS, REFERENCE BOARDS, FILES, DRAWINGS, DIAGNOSTICS, LISTS AND OTHER DOCUMENTS OR INFORMATION (TOGETHER AND SEPARATELY, "MATERIALS") ARE BEING PROVIDED "AS IS". THE MATERIALS MAY CONTAIN KNOWN AND UNKNOWN VIOLATIONS OR DEVIATIONS OF INDUSTRY STANDARDS AND SPECIFICATIONS. NVIDIA MAKES NO WARRANTIES, EXPRESSED, IMPLIED, STATUTORY OR OTHERWISE WITH RESPECT TO THE MATERIALS OR OTHERWISE, AND EXPRESSLY DISCLAIMS ALL IMPLIED WARRANTIES INCLUDING, WITHOUT LIMITATION, THE WARRANTIES OF DESIGN, OF NONINFRINGEMENT, MERCHANTABILITY OR FITNESS FOR A PARTICULAR PURPOSE, OR ARISING FROM A COURSE OF DEALING, TRADE USAGE, TRADE PRACTICE, OR INDUSTRY STANDARDS.

Page26: MISC2: ROM, XTAL, Straps

STRAP2	STRAP1	STRAP0	RAMCFG[4:0]	
L	L	L	00000	RAMCFG SAMSUNG 8Gb 7GHz
L	L	H	00001	RAMCFG MICRON 8Gb 7GHz
L	H	L	00010	RAMCFG HYNIX 8Gb 7GHz
H	H	L	00110	RAMCFG SAMSUNG 16Gb 8GHz
		TBD		

H=High :Tied to 1.8V
M=Middle:Tied to 0.9V
L=Low :Tied to 0V

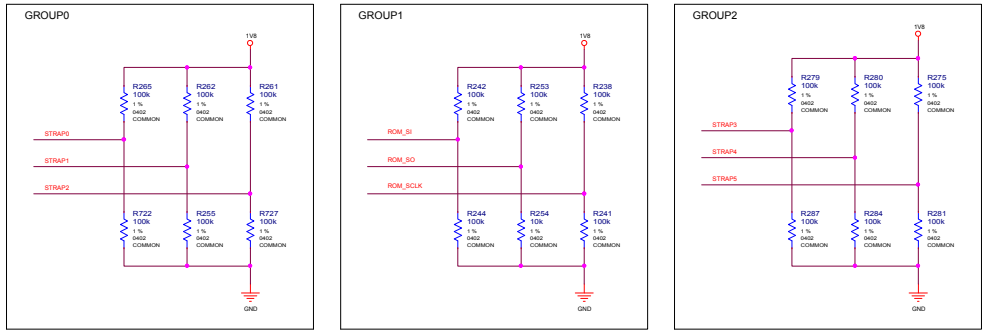

ROM_SO	ROM_SI	ROM_SCLK	SMARTFAN[2:0],FS_OVERT	1:ENABLE 0:DISABLE	
H	H	H	0111	FS_OVERT ENABLE	DEFAULT
H	H	M	0000	FS_OVERT DISABLE	

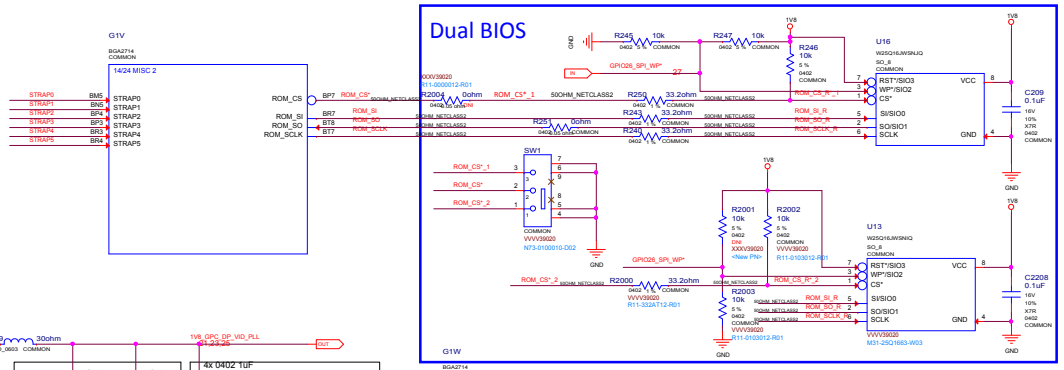

STRAP5	STRAP4	STRAP3	SMB_ALT_ADDR	DEVID_SEL	PCIE_CFG	VGA_DEVICE
M	H	H	1	1	1	1
M	H	L	1	1	1	0
M	L	H	1	1	0	1
M	L	L	1	1	0	0
L	H	M	1	0	1	1
L	M	H	1	0	1	0
L	M	L	1	0	0	1
L	L	M	1	0	0	0
H	H	H	0	1	1	1
H	H	L	0	1	1	0
H	L	H	0	1	0	1
H	L	L	0	1	0	0
L	H	H	0	0	1	1
L	H	L	0	0	1	0
L	L	H	0	0	0	1 DEFAULT
L	L	L	0	0	0	0

H=High :Tied to 1.8V
M=Middle:Tied to 0.9V
L=Low :Tied to 0V

1:SMB_ALT_ADDR ENABLE
0:SMB_ALT_ADDR DISABLE

1:DEVID_SEL REBRAND
0:DEVID_SEL ORIGNAL

1:PCIE_CFG LOW POWER
0:PCIE_CFG HIGH POWER

1:VGA_DEVICE ENABLE
0:VGA_DEVICE DISABLE

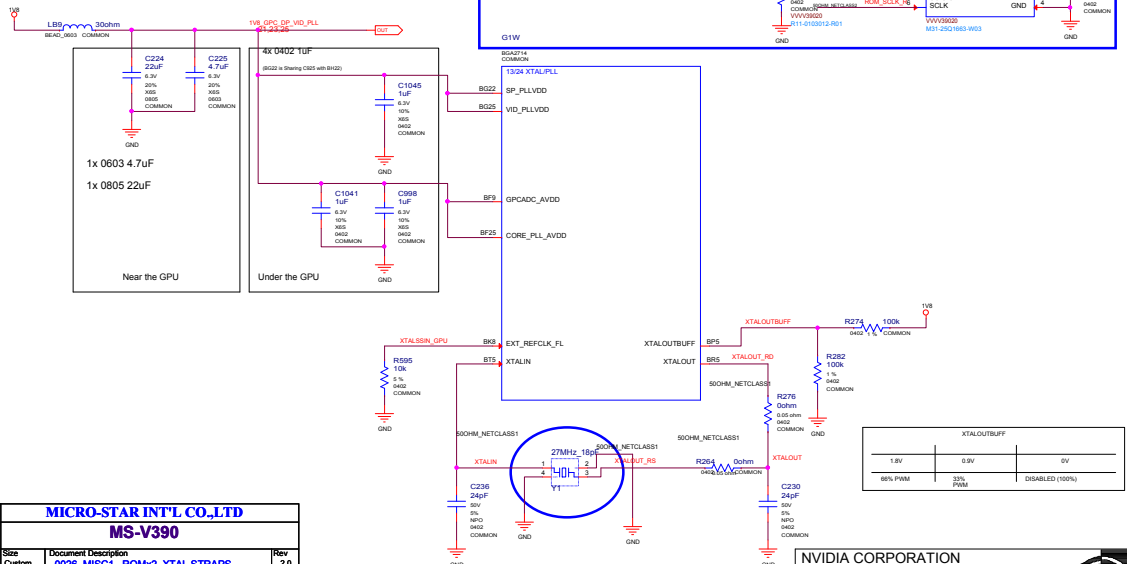

XTALOUTBUFF		
1.8V	0.9V	0V
66% PWM	33% PWM	DISABLED (100%)

change to D04-1107300-T16

MICRO-STAR INT'L CO.,LTD
MS-V390

Size	Document Description	Rev
Custom	0026_MISC1_ ROMx2, XTAL,STRAPS	2.0

Date: Friday, July 31, 2020 | Sheet 26 of 55

ASSEMBLY	<ASSEMBLY_DESCRIPTION>
PAGE DETAIL	MISC1: ROM, XTAL,STRAPS

ALL NVIDIA DESIGN SPECIFICATIONS, REFERENCE SPECIFICATIONS, REFERENCE BOARDS, FILES, DRAWINGS, DIAGNOSTICS, LISTS AND OTHER DOCUMENTS OR INFORMATION (TOGETHER AND SEPARATELY, 'MATERIALS') ARE BEING PROVIDED 'AS IS'. THE MATERIALS MAY CONTAIN KNOWN AND UNKNOWN VIOLATIONS OR DEVIATIONS OF INDUSTRY STANDARDS AND SPECIFICATIONS. NVIDIA MAKES NO WARRANTIES, EXPRESSED, IMPLIED, STATUTORY OR OTHERWISE WITH RESPECT TO THE MATERIALS OR OTHERWISE, AND EXPRESSLY DISCLAIMS ALL IMPLIED WARRANTIES INCLUDING, WITHOUT LIMITATION, THE WARRANTIES OF DESIGN, OF NONINFRINGEMENT, MERCHANTABILITY OR FITNESS FOR A PARTICULAR PURPOSE, OR ARISING FROM A COURSE OF DEALING, TRADE USAGE, TRADE PRACTICE, OR INDUSTRY STANDARDS.

NVIDIA CORPORATION
2701 SAN TOMAS EXPRESSWAY
SANTA CLARA, CA 95050, USA

NV_PN	600-1G142-BASE-100		
PCB REV	PG142-B00	PAGE	26 OF 54
BOM REV	A	DATE	27-JUN-2020

Page27: MISC1: JTAG, GPIO, ADC, I2C, OVERT

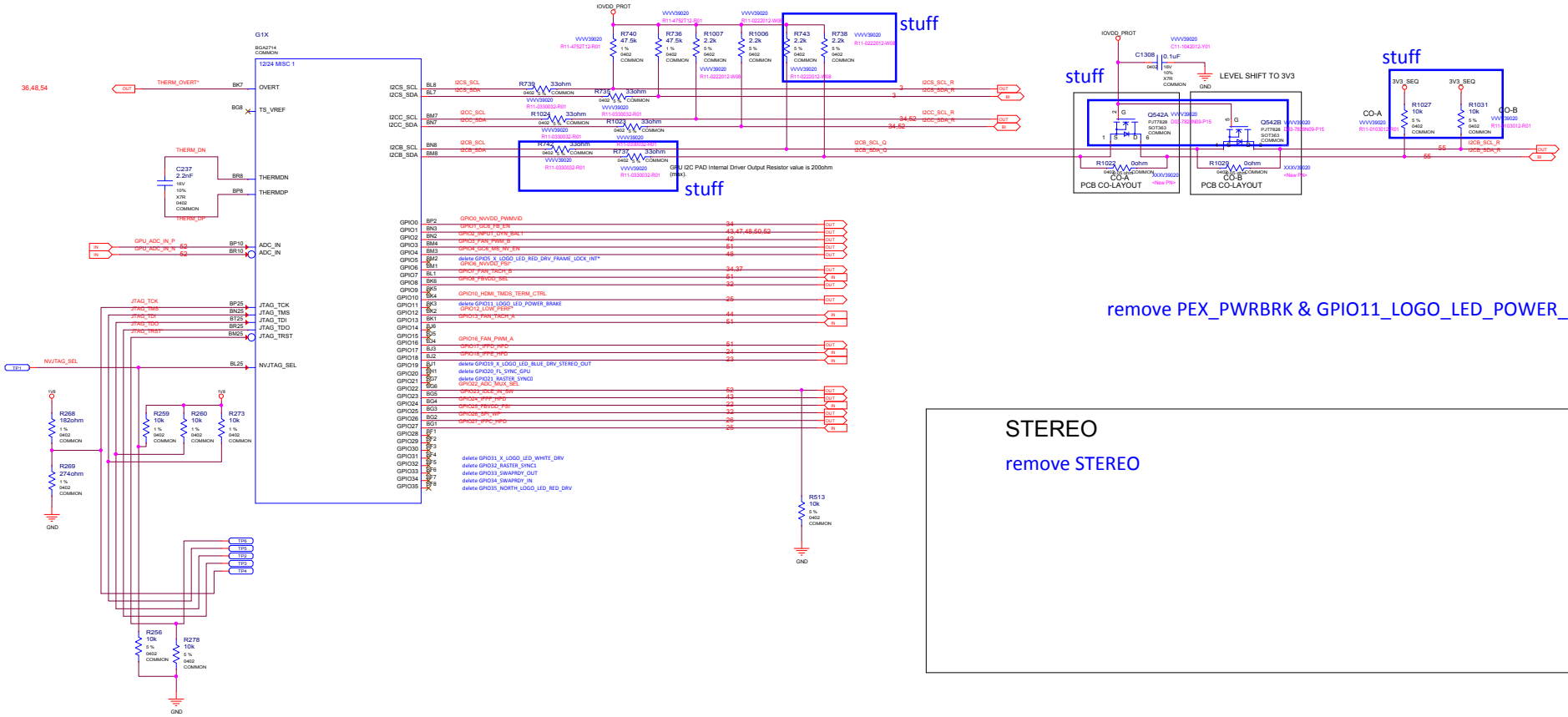

ASSEMBLY	<ASSEMBLY_DESCRIPTION>
PAGE DETAIL	MISC2: JTAG,GPIO,ADC,I2C,FL,STEERO

ALL NVIDIA DESIGN SPECIFICATIONS, REFERENCE SPECIFICATIONS, REFERENCE BOARDS, FILES, DRAWINGS, DIAGNOSTICS, LISTS AND OTHER DOCUMENTS OR INFORMATION (TOGETHER AND SEPARATELY, "MATERIALS") ARE BEING PROVIDED "AS IS". THE MATERIALS MAY CONTAIN KNOWN AND UNKNOWN VIOLATIONS OR DEVIATIONS OF INDUSTRY STANDARDS AND SPECIFICATIONS. NVIDIA MAKES NO WARRANTIES, EXPRESSED, IMPLIED, STATUTORY OR OTHERWISE WITH RESPECT TO THE MATERIALS OR OTHERWISE, AND EXPRESSLY DISCLAIMS ALL IMPLIED WARRANTIES INCLUDING, WITHOUT LIMITATION, THE WARRANTIES OF DESIGN, OF NONINFRINGEMENT, MERCHANTABILITY OR FITNESS FOR A PARTICULAR PURPOSE, OR ARISING FROM A COURSE OF DEALING, TRADE USAGE, TRADE PRACTICE, OR INDUSTRY STANDARDS.

MICRO-STAR INT'L CO.,LTD

MS-V390

Size	Document Description	Rev
Custom	0027_MISC2_ JTAG,GPIO,ADC,I2C,F	2.0

Date: Friday, July 31, 2020 Sheet 27 of 55

NVIDIA CORPORATION
2701 SAN TOMAS EXPRESSWAY
SANTA CLARA, CA 95050, USA

NV_PN	600-1G142-BASE-100		
PCB REV	PG142-B00	PAGE	27 OF 54
BOM REV	A	DATE	27-JUN-2020

Page28: RGB

remove LED

ASSEMBLY	<ASSEMBLY_DESCRIPTION>
PAGE DETAIL	MISC3: RGB

ALL NVIDIA DESIGN SPECIFICATIONS, REFERENCE SPECIFICATIONS, REFERENCE BOARDS, FILES, DRAWINGS, DIAGNOSTICS, LISTS AND OTHER DOCUMENTS OR INFORMATION (TOGETHER AND SEPARATELY, "MATERIALS") ARE BEING PROVIDED "AS IS". THE MATERIALS MAY CONTAIN KNOWN AND UNKNOWN VIOLATIONS OR DEVIATIONS OF INDUSTRY STANDARDS AND SPECIFICATIONS. NVIDIA MAKES NO WARRANTIES, EXPRESSED, IMPLIED, STATUTORY OR OTHERWISE WITH RESPECT TO THE MATERIALS OR OTHERWISE, AND EXPRESSLY DISCLAIMS ALL IMPLIED WARRANTIES INCLUDING, WITHOUT LIMITATION, THE WARRANTIES OF DESIGN, OF NONINFRINGEMENT, MERCHANTABILITY OR FITNESS FOR A PARTICULAR PURPOSE, OR ARISING FROM A COURSE OF DEALING, TRADE USAGE, TRADE PRACTICE, OR INDUSTRY STANDARDS.

MICRO-STAR INT'L CO.,LTD

MS-V390

Size: Custom	Document Description: 0028_MISC3_ RGB	Rev: 2.0
Date: Friday, July 31, 2020	Sheet 28 of 55	

NVIDIA CORPORATION
2701 SAN TOMAS
EXPRESSWAY
SANTA CLARA, CA 95050, USA

NV_PN	600-1G142-BASE-100		
PCB REV	PG142-B00	PAGE	28 OF 54
BOM REV	A	DATE	27-JUN-2020

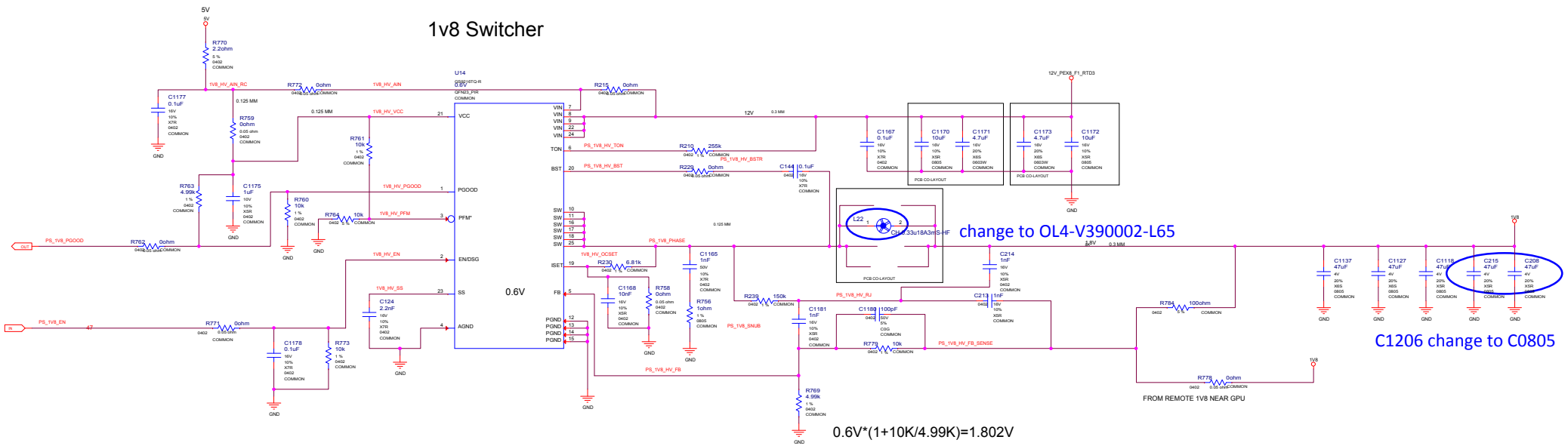

ASSEMBLY	<ASSEMBLY_DESCRIPTION>
PAGE DETAIL	PS: 1V8

ALL NVIDIA DESIGN SPECIFICATIONS, REFERENCE SPECIFICATIONS, REFERENCE BOARDS, FILES, DRAWINGS, DIAGNOSTICS, LISTS AND OTHER DOCUMENTS OR INFORMATION (TOGETHER AND SEPARATELY, "MATERIALS") ARE BEING PROVIDED "AS IS". THE MATERIALS MAY CONTAIN KNOWN AND UNKNOWN VIOLATIONS OR DEVIATIONS OF INDUSTRY STANDARDS AND SPECIFICATIONS. NVIDIA MAKES NO WARRANTIES, EXPRESSED, IMPLIED, STATUTORY OR OTHERWISE WITH RESPECT TO THE MATERIALS OR OTHERWISE, AND EXPRESSLY DISCLAIMS ALL IMPLIED WARRANTIES INCLUDING, WITHOUT LIMITATION, THE WARRANTIES OF DESIGN, OF NONINFRINGEMENT, MERCHANTABILITY OR FITNESS FOR A PARTICULAR PURPOSE, OR ARISING FROM A COURSE OF DEALING, TRADE USAGE, TRADE PRACTICE, OR INDUSTRY STANDARDS.

MICRO-STAR INT'L CO.,LTD

MS-V390

Size	Document Description	Rev
Custom	0029_PS_ 1V8	2.0

Date: Friday, July 31, 2020 | Sheet 29 of 55

NVIDIA CORPORATION
2701 SAN TOMAS EXPRESSWAY
SANTA CLARA, CA 95050, USA

NV_PN	600-1G142-BASE-100		
PCB REV	PG142-B00	PAGE	29 OF 54
BOM REV	A	DATE	27-JUN-2020

Page30: PS: 5V

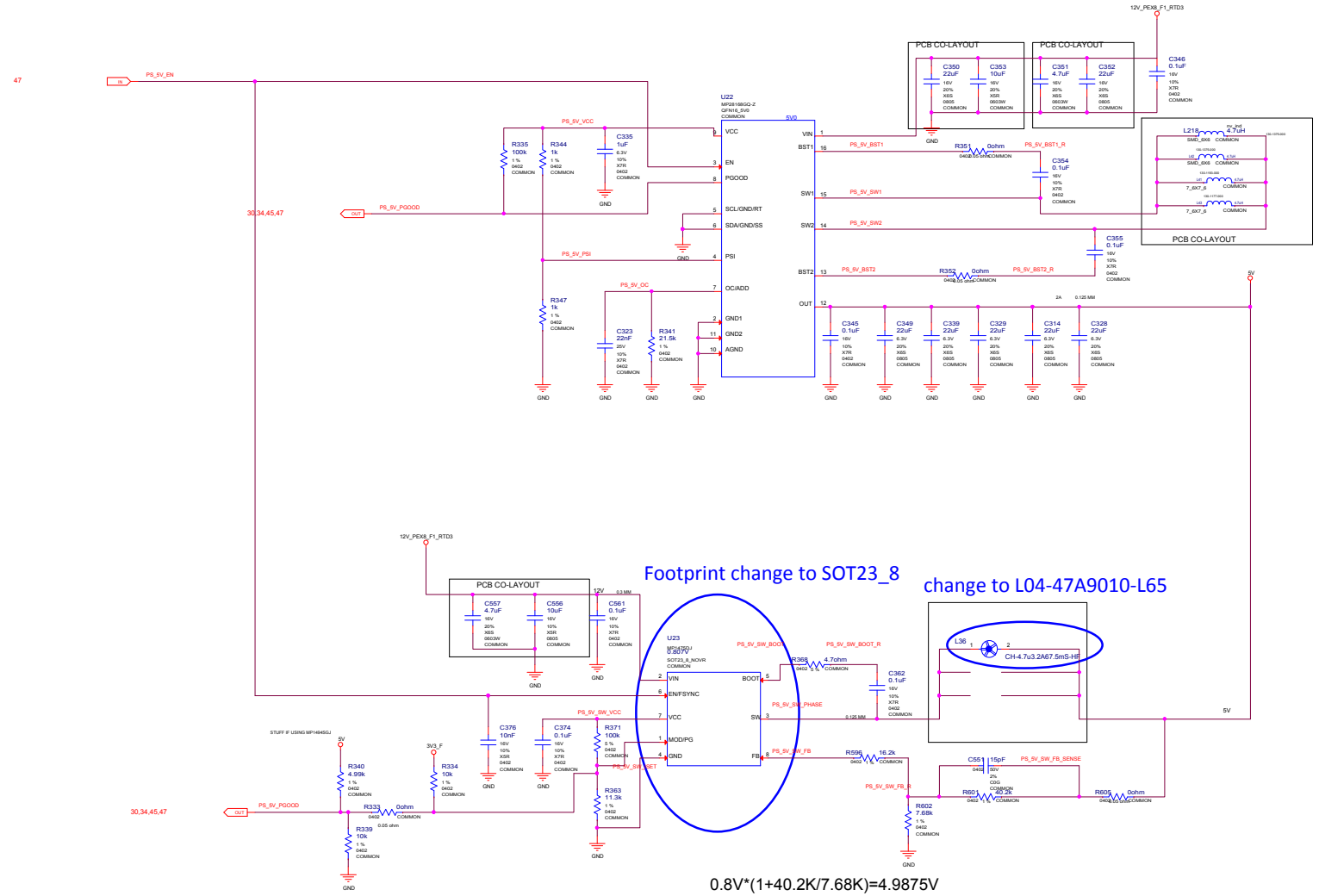

ASSEMBLY	<ASSEMBLY_DESCRIPTION>
PAGE DETAIL	PS: 5V

ALL NVIDIA DESIGN SPECIFICATIONS, REFERENCE SPECIFICATIONS, REFERENCE BOARDS, FILES, DRAWINGS, DIAGNOSTICS, LISTS AND OTHER DOCUMENTS OR INFORMATION (TOGETHER AND SEPARATELY, "MATERIALS") ARE BEING PROVIDED "AS IS". THE MATERIALS MAY CONTAIN KNOWN AND UNKNOWN VIOLATIONS OR DEVIATIONS OF INDUSTRY STANDARDS AND SPECIFICATIONS. NVIDIA MAKES NO WARRANTIES, EXPRESSED, IMPLIED, STATUTORY OR OTHERWISE WITH RESPECT TO THE MATERIALS OR OTHERWISE, AND EXPRESSLY DISCLAIMS ALL IMPLIED WARRANTIES INCLUDING, WITHOUT LIMITATION, THE WARRANTIES OF DESIGN, OF NONINFRINGEMENT, MERCHANTABILITY OR FITNESS FOR A PARTICULAR PURPOSE, OR ARISING FROM A COURSE OF DEALING, TRADE USAGE, TRADE PRACTICE, OR INDUSTRY STANDARDS.

MICRO-STAR INT'L CO.,LTD

MS-V390

Size	Document Description	Rev
Custom	0030_PS_ 5V	2.0

Date: Friday, July 31, 2020 | Sheet 30 of 55

NVIDIA CORPORATION
2701 SAN TOMAS EXPRESSWAY
SANTA CLARA, CA 95050, USA

NV_PN	600-1G142-BASE-100		
PCB REV	PG142-B00	PAGE	30 OF 54
BOM REV	A	DATE	27-JUN-2020

PEX Switcher

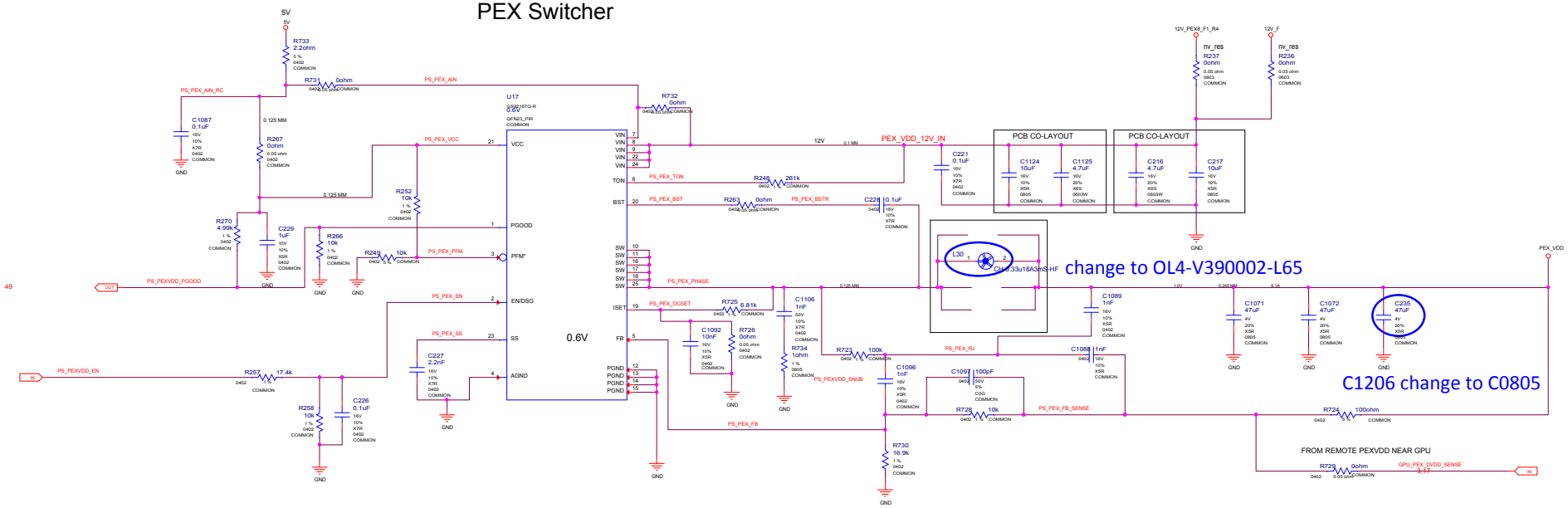

0.6V*(1+10K/16.9K)=0.955V

ASSEMBLY	<ASSEMBLY_DESCRIPTION>
PAGE DETAIL	PS: PEXVDD

ALL NVIDIA DESIGN SPECIFICATIONS, REFERENCE SPECIFICATIONS, REFERENCE BOARDS, FILES, DRAWINGS, DIAGNOSTICS, LISTS AND OTHER DOCUMENTS OR INFORMATION (TOGETHER AND SEPARATELY, "MATERIALS") ARE BEING PROVIDED "AS IS". THE MATERIALS MAY CONTAIN KNOWN AND UNKNOWN VIOLATIONS OR DEVIATIONS OF INDUSTRY STANDARDS AND SPECIFICATIONS. NVIDIA MAKES NO WARRANTIES, EXPRESSED, IMPLIED, STATUTORY OR OTHERWISE WITH RESPECT TO THE MATERIALS OR OTHERWISE, AND EXPRESSLY DISCLAIMS ALL IMPLIED WARRANTIES INCLUDING, WITHOUT LIMITATION, THE WARRANTIES OF DESIGN, OF NONINFRINGEMENT, MERCHANTABILITY OR FITNESS FOR A PARTICULAR PURPOSE, OR ARISING FROM A COURSE OF DEALING, TRADE USAGE, TRADE PRACTICE, OR INDUSTRY STANDARDS.

MICRO-STAR INT'L CO.,LTD

MS-V390

Size	Document Description	Rev
Custom	0031_PS_ PEXVDD	2.0

Date: Friday, July 31, 2020 | Sheet 31 of 55

NVIDIA CORPORATION
2701 SAN TOMAS EXPRESSWAY
SANTA CLARA, CA 95050, USA

NV_PN	600-1G142-BASE-100		
PCB REV	PG142-B00	PAGE	31 OF 54
BOM REV	A	DATE	27-JUN-2020

Page32: PS: FBVDDQ

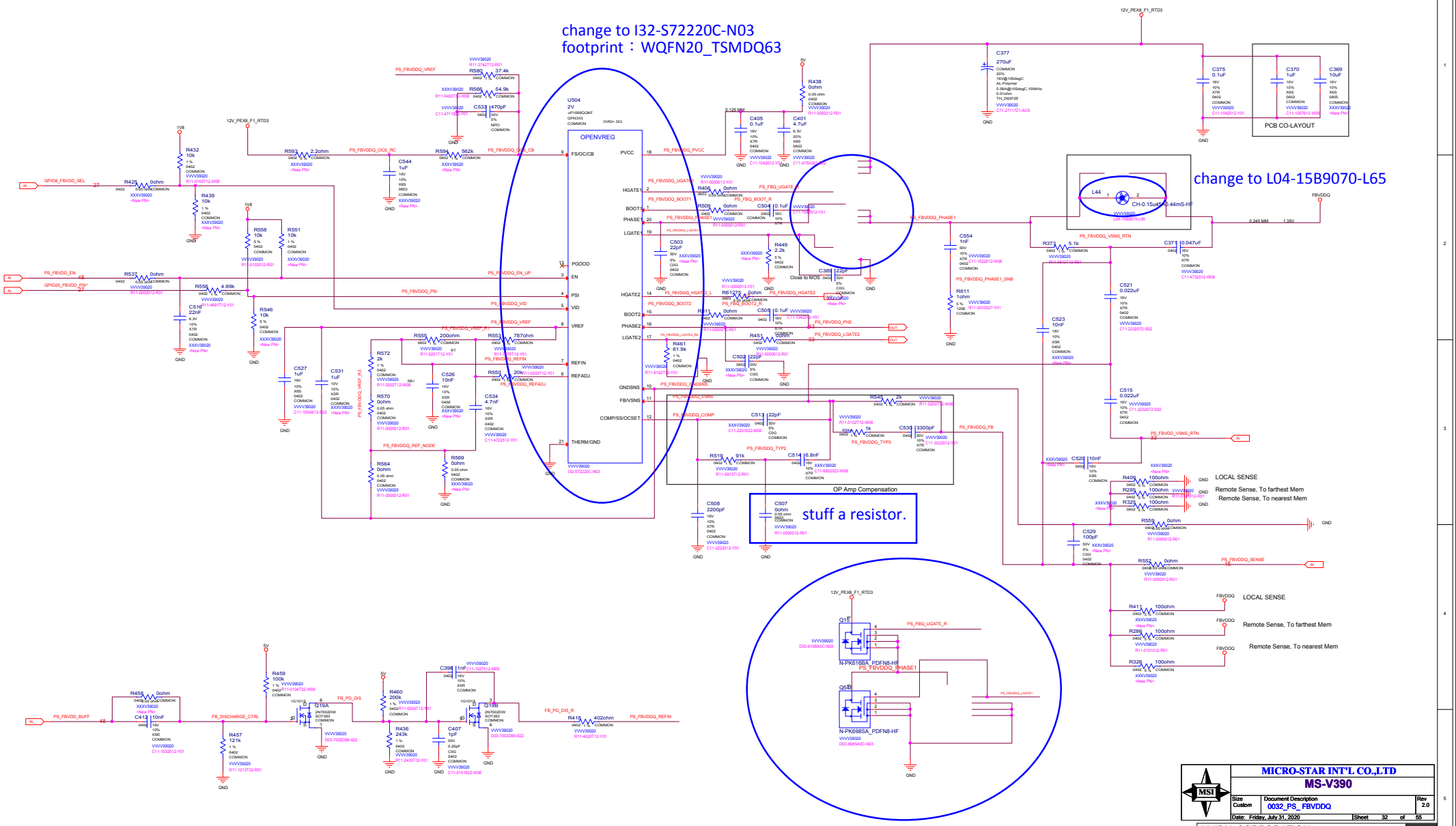

ASSEMBLY	<ASSEMBLY_DESCRIPTION>
PAGE DETAIL	PS: FBVDDQ

ALL NVIDIA DESIGN SPECIFICATIONS, REFERENCE SPECIFICATIONS, REFERENCE BOARDS, FILES, DRAWINGS, DIAGNOSTICS, LISTS AND OTHER DOCUMENTS OR INFORMATION (TOGETHER AND SEPARATELY, 'MATERIALS') ARE BEING PROVIDED 'AS IS'. THE MATERIALS MAY CONTAIN KNOWN AND UNKNOWN VIOLATIONS OR DEVIATIONS OF INDUSTRY STANDARDS AND SPECIFICATIONS. NVIDIA MAKES NO WARRANTIES, EXPRESSED, IMPLIED, STATUTORY OR OTHERWISE WITH RESPECT TO THE MATERIALS OR OTHERWISE, AND EXPRESSLY DISCLAIMS ALL IMPLIED WARRANTIES INCLUDING, WITHOUT LIMITATION, THE WARRANTIES OF DESIGN, OF NONINFRINGEMENT, MERCHANTABILITY OR FITNESS FOR A PARTICULAR PURPOSE, OR ARISING FROM A COURSE OF DEALING, TRADE USAGE, TRADE PRACTICE, OR INDUSTRY STANDARDS.

MICRO-STAR INT'L CO.,LTD

MS-V390

Size	Document Description	Rev
Custom	0032_PS_ FBVDDQ	2.0

Date: Friday, July 31, 2020 | Sheet 32 of 55

NVIDIA CORPORATION
2701 SAN TOMAS EXPRESSWAY
SANTA CLARA, CA 95050, USA

NV_PN	600-1G142-BASE-100		
PCB REV	PG142-B00	PAGE	32 OF 54
BOM REV	A	DATE	27-JUN-2020

Page33: PS: FBVDDQ PH2

FBVDD PH2 INPUT ANTI-BACKDRIVE

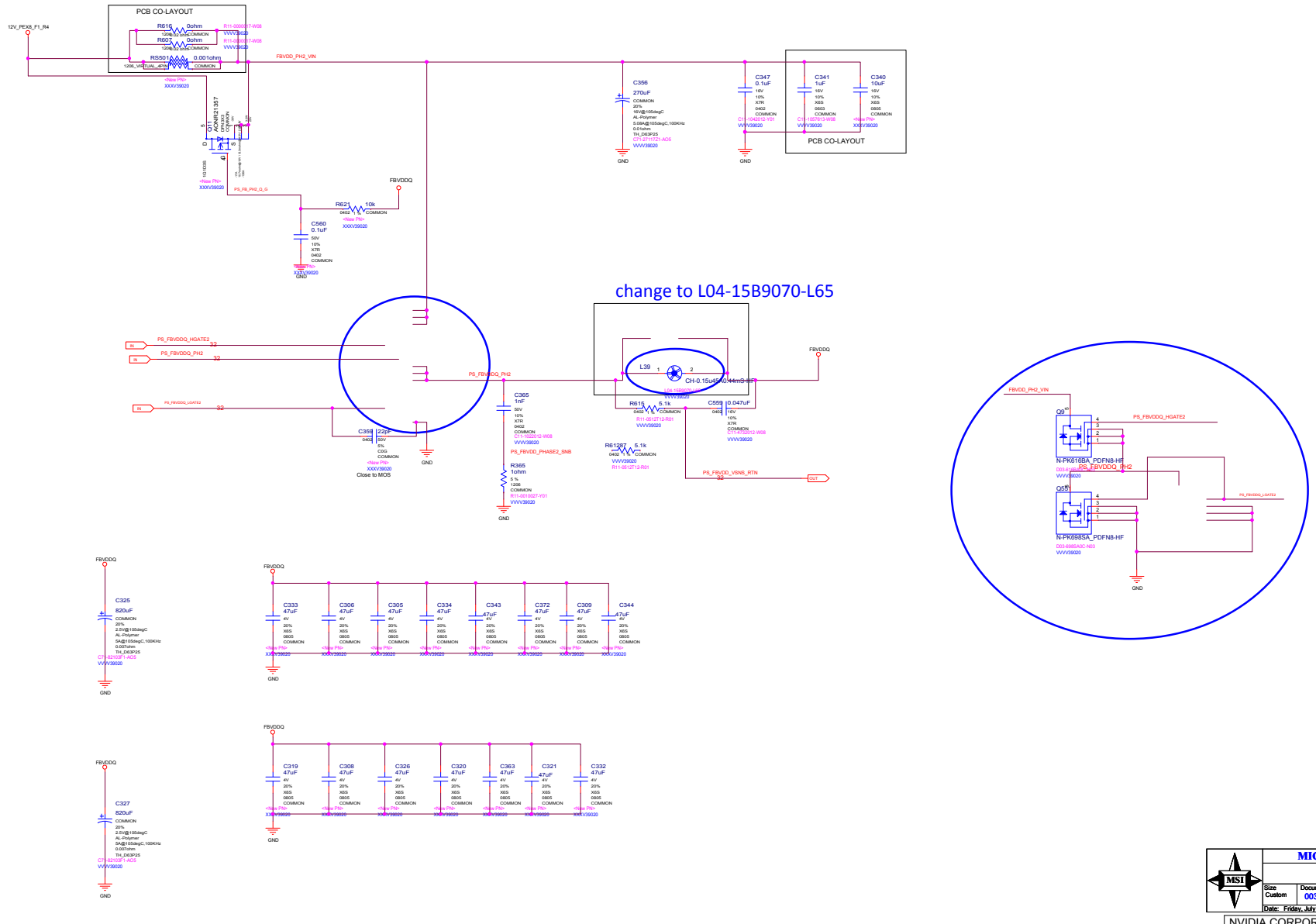

ASSEMBLY	<ASSEMBLY_DESCRIPTION>
PAGE DETAIL	PS: FBVDDQ PH2

ALL NVIDIA DESIGN SPECIFICATIONS, REFERENCE SPECIFICATIONS, REFERENCE BOARDS, FILES, DRAWINGS, DIAGNOSTICS, LISTS AND OTHER DOCUMENTS OR INFORMATION (TOGETHER AND SEPARATELY, "MATERIALS") ARE BEING PROVIDED "AS IS". THE MATERIALS MAY CONTAIN KNOWN AND UNKNOWN VIOLATIONS OR DEVIATIONS OF INDUSTRY STANDARDS AND SPECIFICATIONS. NVIDIA MAKES NO WARRANTIES, EXPRESSED, IMPLIED, STATUTORY OR OTHERWISE WITH RESPECT TO THE MATERIALS OR OTHERWISE, AND EXPRESSLY DISCLAIMS ALL IMPLIED WARRANTIES INCLUDING, WITHOUT LIMITATION, THE WARRANTIES OF DESIGN, OF NONINFRINGEMENT, MERCHANTABILITY OR FITNESS FOR A PARTICULAR PURPOSE, OR ARISING FROM A COURSE OF DEALING, TRADE USAGE, TRADE PRACTICE, OR INDUSTRY STANDARDS.

MICRO-STAR INT'L CO.,LTD

MS-V390

Size	Document Description	Rev
Custom	0033_PS_ FBVDDQ PH2	2.0

Date: Friday, July 31, 2020 | Sheet 33 of 55

NVIDIA CORPORATION
2701 SAN TOMAS EXPRESSWAY
SANTA CLARA, CA 95050, USA

NV_PN	600-1G142-BASE-100		
PCB REV	PG142-B00	PAGE	33 OF 54
BOM REV	A	DATE	27-JUN-2020

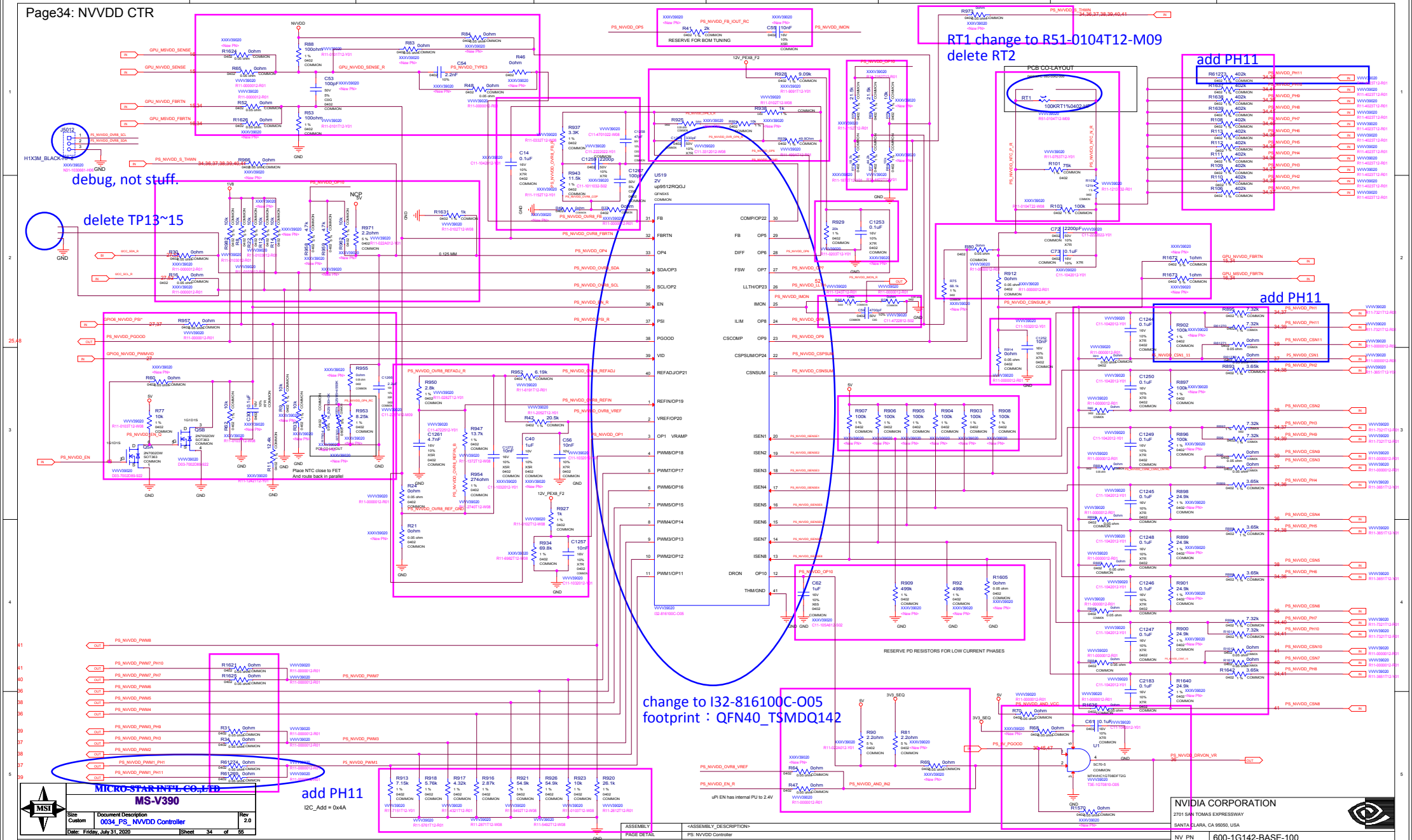
Page34: NVVDD CTR
RT1 change to R51-0104T12-M09
delete RT2
add PH11
debug, not stuff.
delete TP13~15
add PH11
change to I32-816100C-O05
footprint：QFN40_TSMDQ142
add PH11
I2C_Add = 0x4A
RESERVE FOR BOM TUNING
RESERVE PD RESISTORS FOR LOW CURRENT PHASES
Place NTC close to FET
And route back in parallel
uP EN has internal PU to 2.4V
PCB CO-LAYOUT
U519
up9512RQGJ
QFN5X5
COMMON
MICRO-STAR INT'L CO.,LTD
MS-V390
Size Custom
Document Description 0034_PS_ NVVDD Controller
Rev 2.0
Date: Friday, July 31, 2020
Sheet 34 of 55
ASSEMBLY <ASSEMBLY_DESCRIPTION>
PAGE DETAIL PS: NVVDD Controller
NVIDIA CORPORATION
2701 SAN TOMAS EXPRESSWAY
SANTA CLARA, CA 95050, USA
NV_PN 600-1G142-BASE-100
PCB REV PG142-B00
PAGE 34 OF 54
BOM REV A
DATE 27-JUN-2020
ALL NVIDIA DESIGN SPECIFICATIONS, REFERENCE SPECIFICATIONS, REFERENCE BOARDS, FILES, DRAWINGS, DIAGNOSTICS, LISTS AND OTHER DOCUMENTS OR INFORMATION (TOGETHER AND SEPARATELY, 'MATERIALS') ARE BEING PROVIDED 'AS IS'. THE MATERIALS MAY CONTAIN KNOWN AND UNKNOWN VIOLATIONS OR DEVIATIONS OF INDUSTRY STANDARDS AND SPECIFICATIONS. NVIDIA MAKES NO WARRANTIES, EXPRESSED, IMPLIED, STATUTORY OR OTHERWISE WITH RESPECT TO THE MATERIALS OR OTHERWISE, AND EXPRESSLY DISCLAIMS ALL IMPLIED WARRANTIES INCLUDING, WITHOUT LIMITATION, THE WARRANTIES OF DESIGN, OF NONINFRINGEMENT, MERCHANTABILITY OR FITNESS FOR A PARTICULAR PURPOSE, OR ARISING FROM A COURSE OF DEALING, TRADE USAGE, TRADE PRACTICE, OR INDUSTRY STANDARDS.

BLANK PAGE

ASSEMBLY	<ASSEMBLY_DESCRIPTION>
PAGE DETAIL	BLANK PAGE

ALL NVIDIA DESIGN SPECIFICATIONS, REFERENCE SPECIFICATIONS, REFERENCE BOARDS, FILES, DRAWINGS, DIAGNOSTICS, LISTS AND OTHER DOCUMENTS OR INFORMATION (TOGETHER AND SEPARATELY, "MATERIALS") ARE BEING PROVIDED 'AS IS'. THE MATERIALS MAY CONTAIN KNOWN AND UNKNOWN VIOLATIONS OR DEVIATIONS OF INDUSTRY STANDARDS AND SPECIFICATIONS. NVIDIA MAKES NO WARRANTIES, EXPRESSED, IMPLIED, STATUTORY OR OTHERWISE WITH RESPECT TO THE MATERIALS OR OTHERWISE, AND EXPRESSLY DISCLAIMS ALL IMPLIED WARRANTIES INCLUDING, WITHOUT LIMITATION, THE WARRANTIES OF DESIGN, OF NONINFRINGEMENT, MERCHANTABILITY OR FITNESS FOR A PARTICULAR PURPOSE, OR ARISING FROM A COURSE OF DEALING, TRADE USAGE, TRADE PRACTICE, OR INDUSTRY STANDARDS.

MICRO-STAR INT'L CO.,LTD

MS-V390

Size	Document Description	Rev
Custom	0035_BLANK PAGE	2.0

Date: Friday, July 31, 2020 Sheet 35 of 55

NVIDIA CORPORATION
2701 SAN TOMAS EXPRESSWAY
SANTA CLARA, CA 95050, USA

NV_PN	600-1G142-BASE-100		
PCB REV	PG142-B00	PAGE	35 OF 54
BOM REV	A	DATE	27-JUN-2020

Page36: NVVDD PH4 & PH6

NV_PH4_6_VIN change to 12V_PEX8_F2

NVVDD PH4(PWM4)

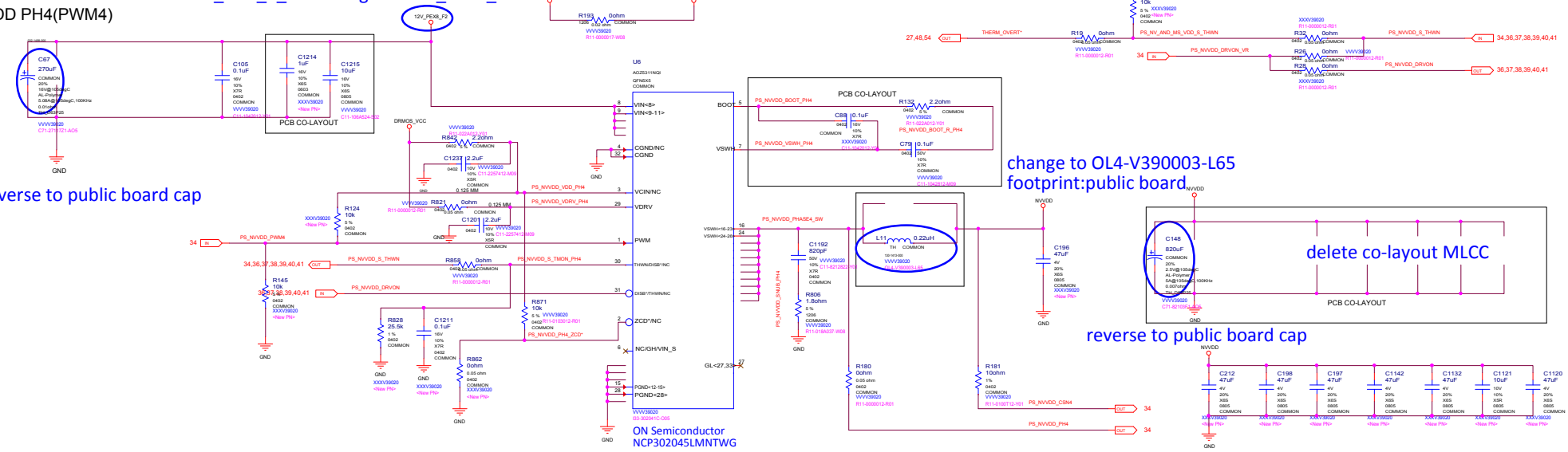

reverse to public board cap

change to OL4-V390003-L65
footprint:public board

delete co-layout MLCC

reverse to public board cap

U3,U4,U5,U6,U7,U8,U9,U10,U15,U18
change to I33-302041C-O05
footprint：PQFN31

NVVDD PH6(PWM6)

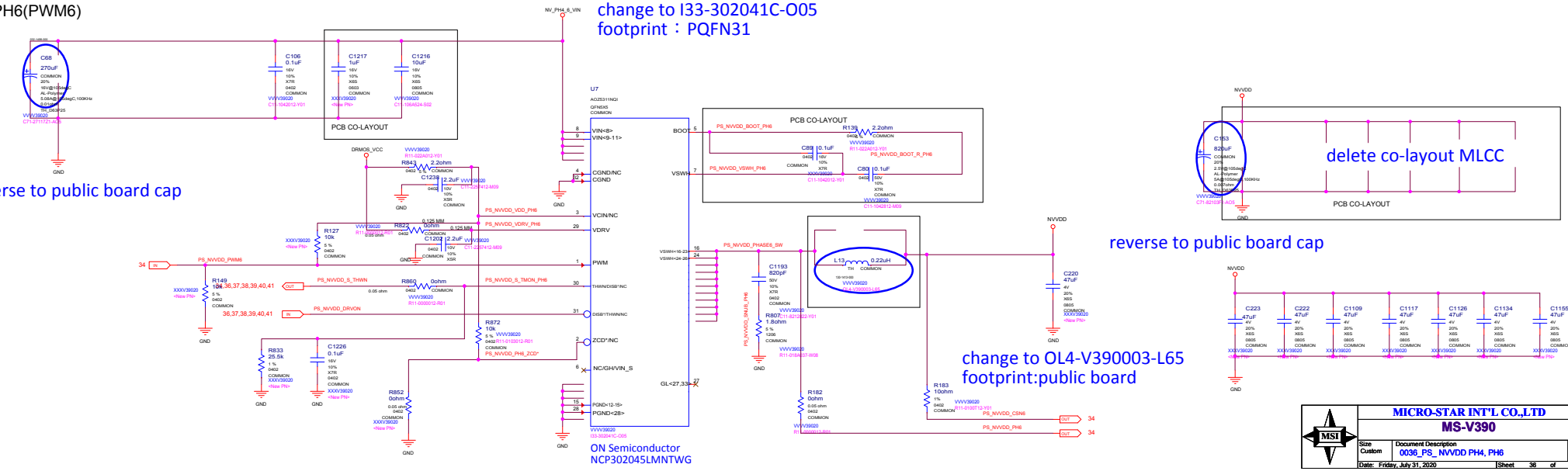

reverse to public board cap

delete co-layout MLCC

reverse to public board cap

change to OL4-V390003-L65
footprint:public board

ASSEMBLY	<ASSEMBLY_DESCRIPTION>
PAGE DETAIL	PS: NVVDD PH4, PH6

ALL NVIDIA DESIGN SPECIFICATIONS, REFERENCE SPECIFICATIONS, REFERENCE BOARDS, FILES, DRAWINGS, DIAGNOSTICS, LISTS AND OTHER DOCUMENTS OR INFORMATION (TOGETHER AND SEPARATELY, 'MATERIALS') ARE BEING PROVIDED 'AS IS'. THE MATERIALS MAY CONTAIN KNOWN AND UNKNOWN VIOLATIONS OR DEVIATIONS OF INDUSTRY STANDARDS AND SPECIFICATIONS. NVIDIA MAKES NO WARRANTIES, EXPRESSED, IMPLIED, STATUTORY OR OTHERWISE WITH RESPECT TO THE MATERIALS OR OTHERWISE, AND EXPRESSLY DISCLAIMS ALL IMPLIED WARRANTIES INCLUDING, WITHOUT LIMITATION, THE WARRANTIES OF DESIGN, OF NONINFRINGEMENT, MERCHANTABILITY OR FITNESS FOR A PARTICULAR PURPOSE, OR ARISING FROM A COURSE OF DEALING, TRADE USAGE, TRADE PRACTICE, OR INDUSTRY STANDARDS.

MICRO-STAR INT'L CO.,LTD

MS-V390

Size	Document Description	Rev
Custom	0036_PS_ NVVDD PH4, PH6	2.0

Date: Friday, July 31, 2020 | Sheet 36 of 55

NVIDIA CORPORATION
2701 SAN TOMAS EXPRESSWAY
SANTA CLARA, CA 95050, USA

NV_PN	600-1G142-BASE-100		
PCB REV	PG142-B00	PAGE	36 OF 54
BOM REV	A	DATE	27-JUN-2020

Page37: NVVDD PH1 & PH3

NVVDD PH1(PWM1)

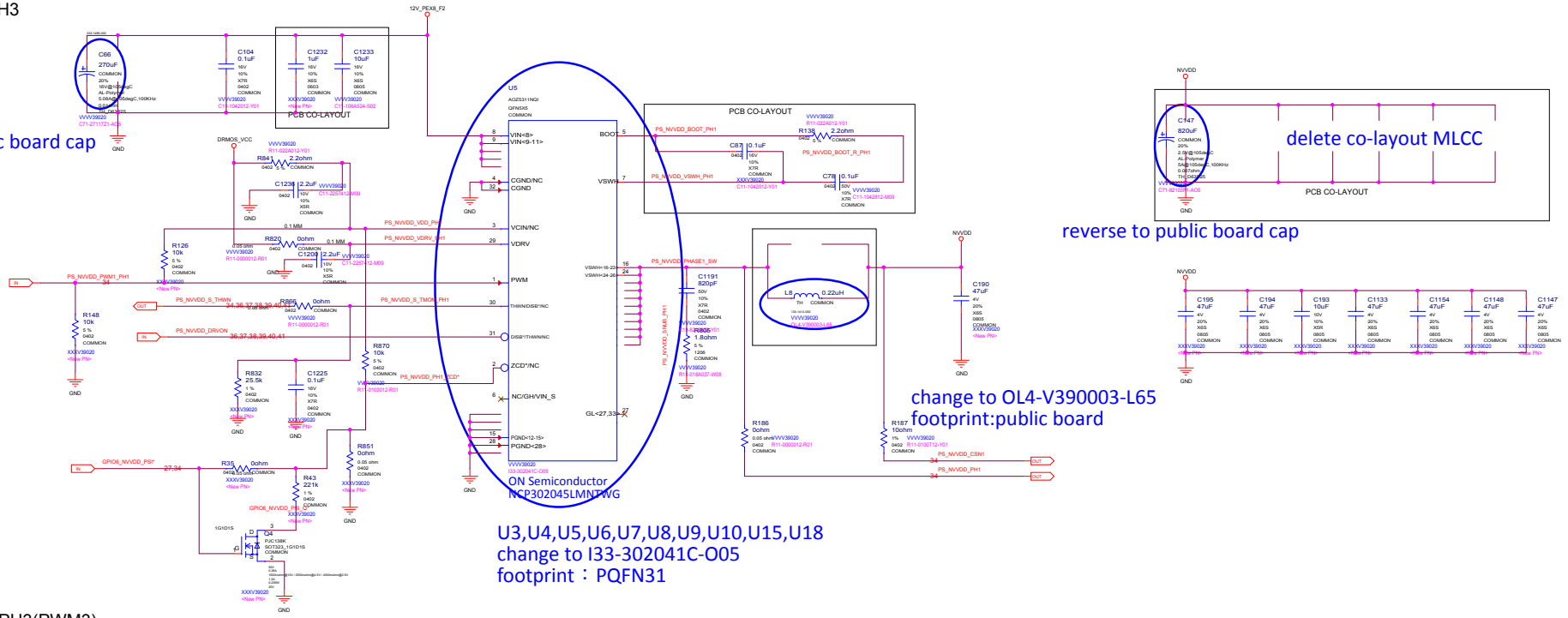

NVVDD PH3(PWM3)

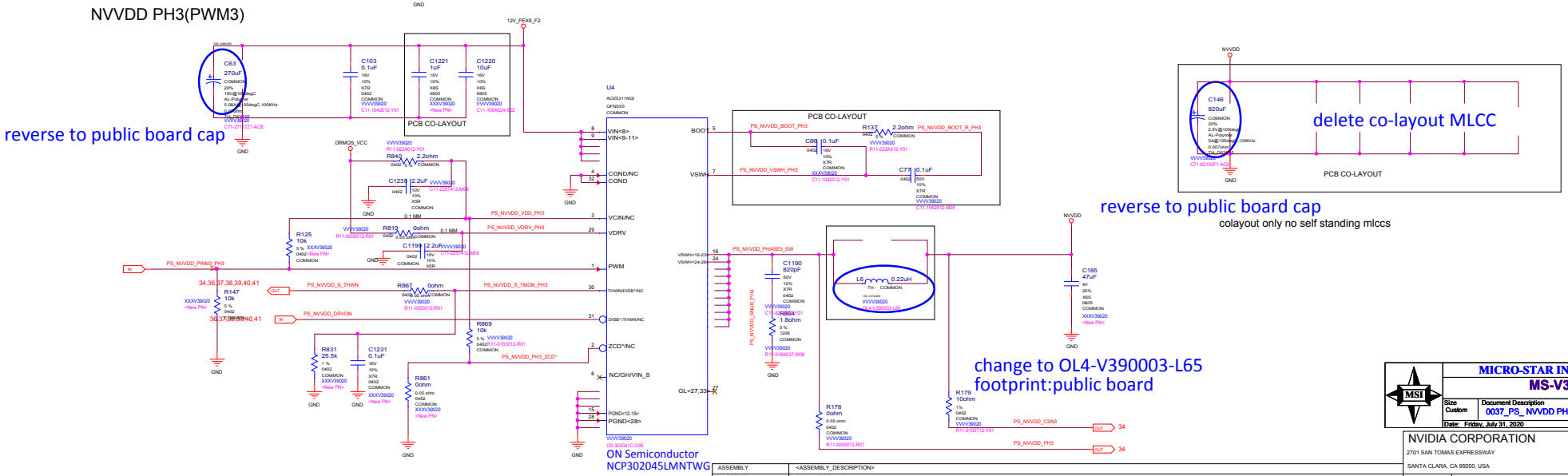

ASSEMBLY	<ASSEMBLY_DESCRIPTION>
PAGE DETAIL	PS: NVVDD PH1, PH3

ALL NVIDIA DESIGN SPECIFICATIONS, REFERENCE SPECIFICATIONS, REFERENCE BOARDS, FILES, DRAWINGS, DIAGNOSTICS, LISTS AND OTHER DOCUMENTS OR INFORMATION (TOGETHER AND SEPARATELY, 'MATERIALS') ARE BEING PROVIDED 'AS IS'. THE MATERIALS MAY CONTAIN KNOWN AND UNKNOWN VIOLATIONS OR DEVIATIONS OF INDUSTRY STANDARDS AND SPECIFICATIONS. NVIDIA MAKES NO WARRANTIES, EXPRESSED, IMPLIED, STATUTORY OR OTHERWISE WITH RESPECT TO THE MATERIALS OR OTHERWISE, AND EXPRESSLY DISCLAIMS ALL IMPLIED WARRANTIES INCLUDING, WITHOUT LIMITATION, THE WARRANTIES OF DESIGN, OF NONINFRINGEMENT, MERCHANTABILITY OR FITNESS FOR A PARTICULAR PURPOSE, OR ARISING FROM A COURSE OF DEALING, TRADE USAGE, TRADE PRACTICE, OR INDUSTRY STANDARDS.

MICRO-STAR INT'L CO.,LTD

MS-V390

Size	Document Description	Rev
Custom	0037_PS_ NVVDD PH1, PH3	2.0

Date: Friday, July 31, 2020 | Sheet 37 of 55

NVIDIA CORPORATION
2701 SAN TOMAS EXPRESSWAY
SANTA CLARA, CA 95050, USA

NV_PN	600-1G142-BASE-100		
PCB REV	PG142-B00	PAGE	37 OF 54
BOM REV	A	DATE	27-JUN-2020

Page38: NVVDD PH2 & PH5

NVVDD PH2(PWM2)

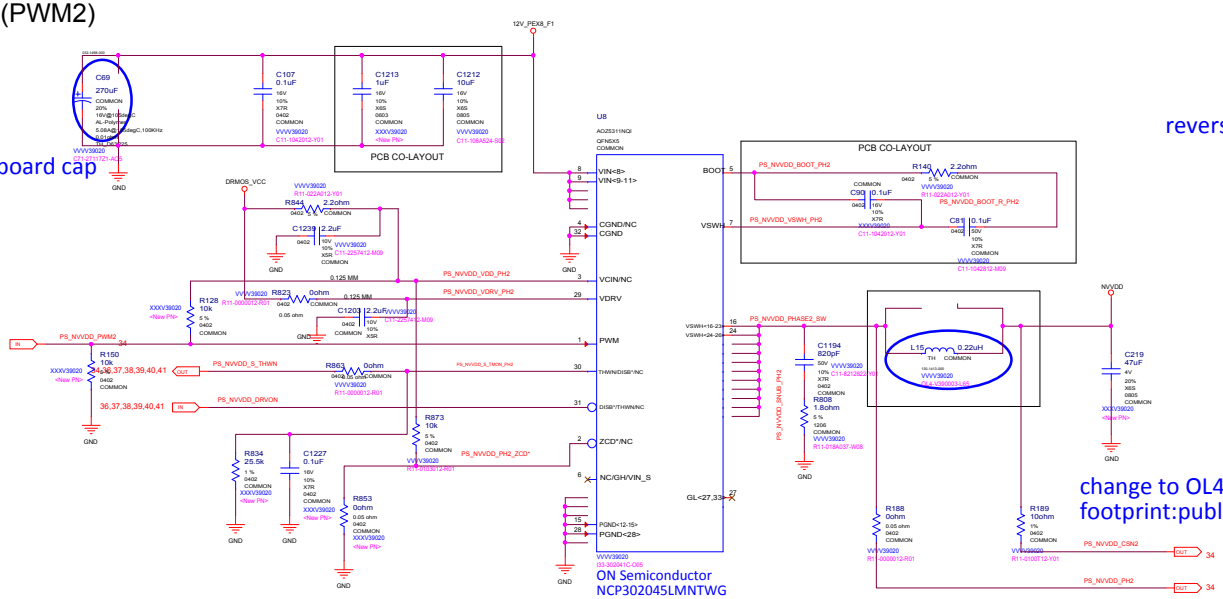

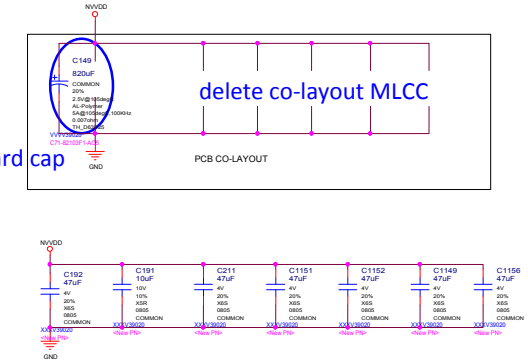

NVVDD PH5(PWM5)

U3,U4,U5,U6,U7,U8,U9,U10,U15,U18
change to I33-302041C-O05
footprint：PQFN31

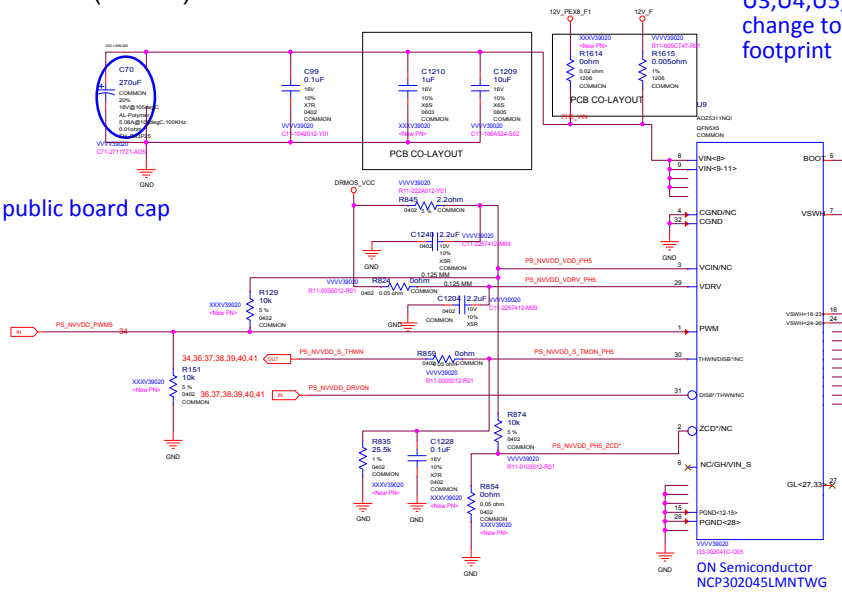

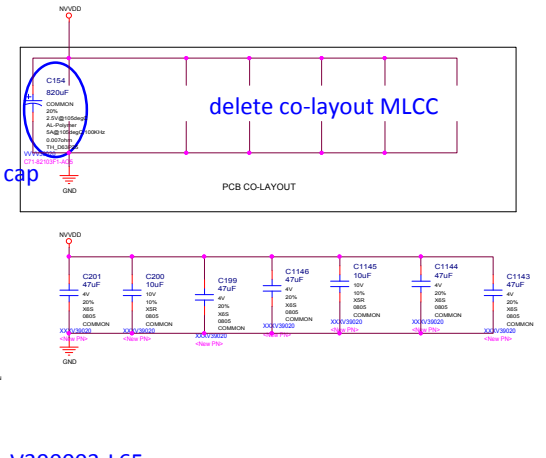

MICRO-STAR INT'L CO.,LTD
MS-V390

Size	Document Description	Rev
Custom	0038_PS_ NVVDD PH2, PH5	2.0

Date: Friday, July 31, 2020 | Sheet 38 of 55

NVIDIA CORPORATION
2701 SAN TOMAS EXPRESSWAY
SANTA CLARA, CA 95050, USA

NV_PN	600-1G142-BASE-100		
PCB REV	PG142-B00	PAGE	38 OF 54
BOM REV	A	DATE	27-JUN-2020

ASSEMBLY	<ASSEMBLY_DESCRIPTION>
PAGE DETAIL	PS: NVVDD PH2, PH5

ALL NVIDIA DESIGN SPECIFICATIONS, REFERENCE SPECIFICATIONS, REFERENCE BOARDS, FILES, DRAWINGS, DIAGNOSTICS, LISTS AND OTHER DOCUMENTS OR INFORMATION (TOGETHER AND SEPARATELY, 'MATERIALS') ARE BEING PROVIDED 'AS IS'. THE MATERIALS MAY CONTAIN KNOWN AND UNKNOWN VIOLATIONS OR DEVIATIONS OF INDUSTRY STANDARDS AND SPECIFICATIONS. NVIDIA MAKES NO WARRANTIES, EXPRESSED, IMPLIED, STATUTORY OR OTHERWISE WITH RESPECT TO THE MATERIALS OR OTHERWISE, AND EXPRESSLY DISCLAIMS ALL IMPLIED WARRANTIES INCLUDING, WITHOUT LIMITATION, THE WARRANTIES OF DESIGN, OF NONINFRINGEMENT, MERCHANTABILITY OR FITNESS FOR A PARTICULAR PURPOSE, OR ARISING FROM A COURSE OF DEALING, TRADE USAGE, TRADE PRACTICE, OR INDUSTRY STANDARDS.

Page39: NVVDD PH9 & PH11

NVVDD PH9(PWM3)

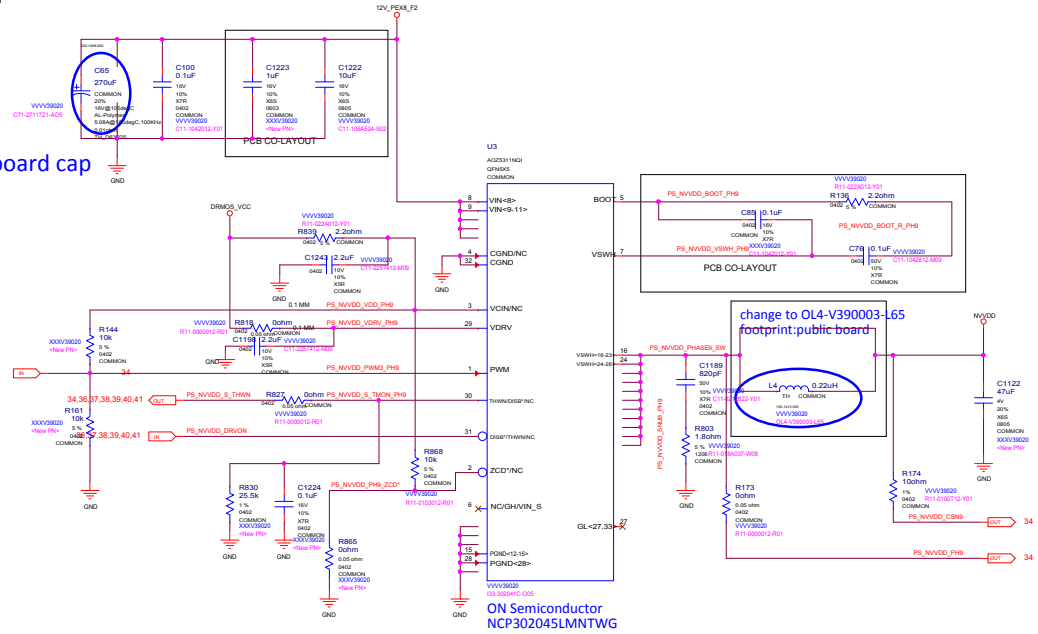

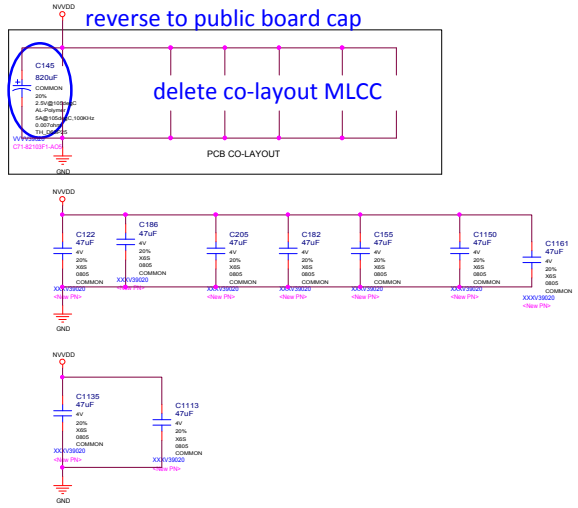

NVVDD PH11(PWM1)

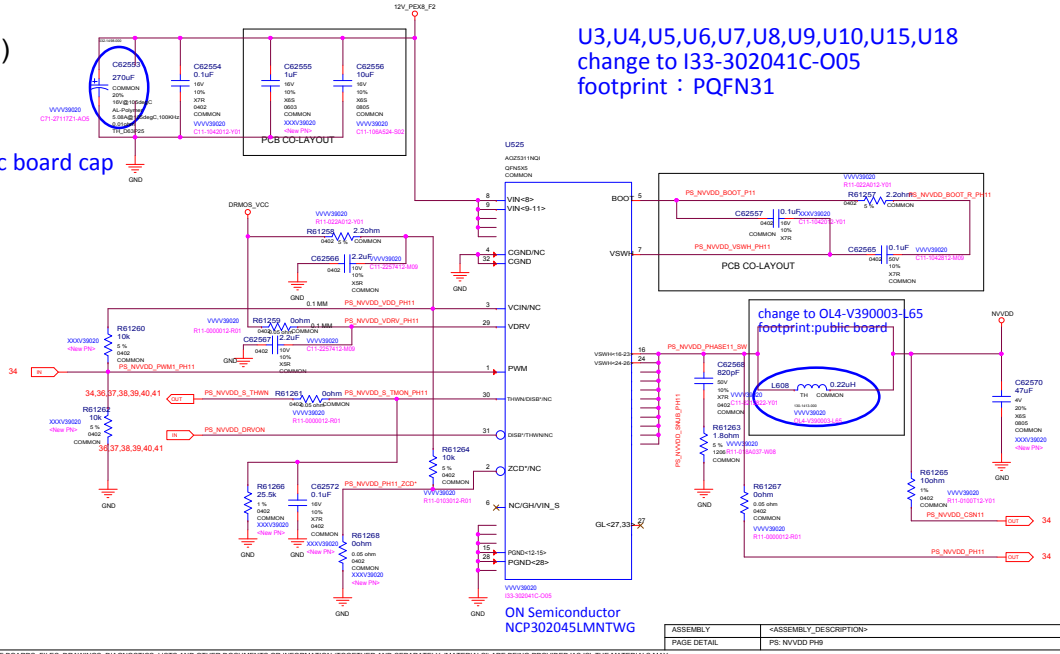

U3,U4,U5,U6,U7,U8,U9,U10,U15,U18
change to I33-302041C-O05
footprint：PQFN31

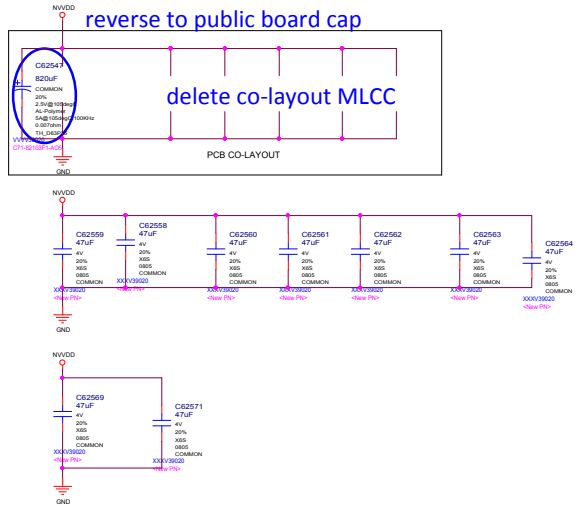

ASSEMBLY	<ASSEMBLY_DESCRIPTION>
PAGE DETAIL	PS: NVVDD PH9

MICRO-STAR INT'L CO.,LTD
MS-V390

Size	Document Description	Rev
Custom	0039_PS_ NVVDD PH9, PH11	2.0

Date: Friday, July 31, 2020 | Sheet 39 of 55

NVIDIA CORPORATION
2701 SAN TOMAS EXPRESSWAY
SANTA CLARA, CA 95050, USA

NV_PN	600-1G142-BASE-100		
PCB REV	PG142-B00	PAGE	39 OF 54
BOM REV	A	DATE	27-JUN-2020

ALL NVIDIA DESIGN SPECIFICATIONS, REFERENCE SPECIFICATIONS, REFERENCE BOARDS, FILES, DRAWINGS, DIAGNOSTICS, LISTS AND OTHER DOCUMENTS OR INFORMATION (TOGETHER AND SEPARATELY, 'MATERIALS') ARE BEING PROVIDED 'AS IS'. THE MATERIALS MAY CONTAIN KNOWN AND UNKNOWN VIOLATIONS OR DEVIATIONS OF INDUSTRY STANDARDS AND SPECIFICATIONS. NVIDIA MAKES NO WARRANTIES, EXPRESSED, IMPLIED, STATUTORY OR OTHERWISE WITH RESPECT TO THE MATERIALS OR OTHERWISE, AND EXPRESSLY DISCLAIMS ALL IMPLIED WARRANTIES INCLUDING, WITHOUT LIMITATION, THE WARRANTIES OF DESIGN, OF NONINFRINGEMENT, MERCHANTABILITY OR FITNESS FOR A PARTICULAR PURPOSE, OR ARISING FROM A COURSE OF DEALING, TRADE USAGE, TRADE PRACTICE, OR INDUSTRY STANDARDS.

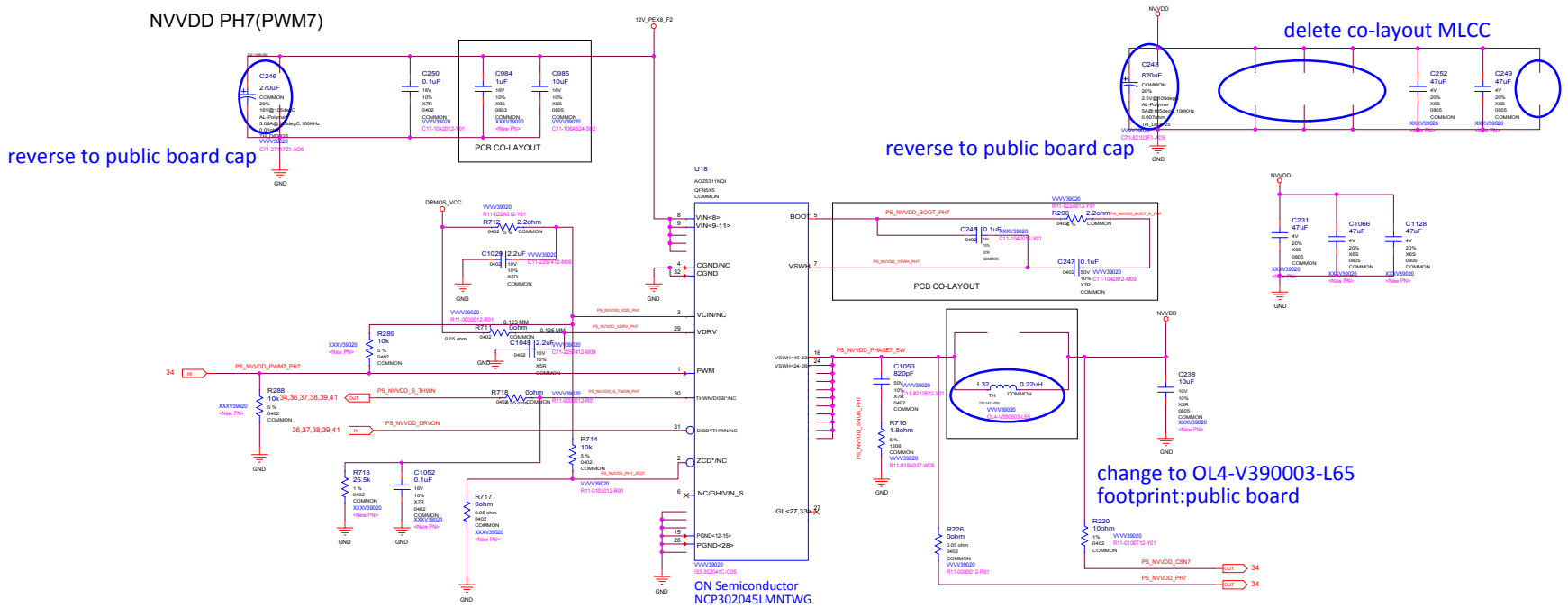

U3,U4,U5,U6,U7,U8,U9,U10,U15,U18
change to I33-302041C-O05
footprint：PQFN31

ASSEMBLY	<ASSEMBLY_DESCRIPTION>
PAGE DETAIL	PS: NVVDD PH7

ALL NVIDIA DESIGN SPECIFICATIONS, REFERENCE SPECIFICATIONS, REFERENCE BOARDS, FILES, DRAWINGS, DIAGNOSTICS, LISTS AND OTHER DOCUMENTS OR INFORMATION (TOGETHER AND SEPARATELY, "MATERIALS") ARE BEING PROVIDED "AS IS". THE MATERIALS MAY CONTAIN KNOWN AND UNKNOWN VIOLATIONS OR DEVIATIONS OF INDUSTRY STANDARDS AND SPECIFICATIONS. NVIDIA MAKES NO WARRANTIES, EXPRESSED, IMPLIED, STATUTORY OR OTHERWISE WITH RESPECT TO THE MATERIALS OR OTHERWISE, AND EXPRESSLY DISCLAIMS ALL IMPLIED WARRANTIES INCLUDING, WITHOUT LIMITATION, THE WARRANTIES OF DESIGN, OF NONINFRINGEMENT, MERCHANTABILITY OR FITNESS FOR A PARTICULAR PURPOSE, OR ARISING FROM A COURSE OF DEALING, TRADE USAGE, TRADE PRACTICE, OR INDUSTRY STANDARDS.

MICRO-STAR INT'L CO.,LTD
MS-V390

Size Custom	Document Description 0040_PS_ NVVDD PH7	Rev 2.0
Date: Friday, July 31, 2020	Sheet 40 of 55	

NVIDIA CORPORATION
2701 SAN TOMAS EXPRESSWAY
SANTA CLARA, CA 95050, USA

NV_PN	600-1G142-BASE-100		
PCB REV	PG142-B00	PAGE	40 OF 54
BOM REV	A	DATE	27-JUN-2020

Page41: NVVDD PH10 & 8

NVVDD PH10(PWM7)

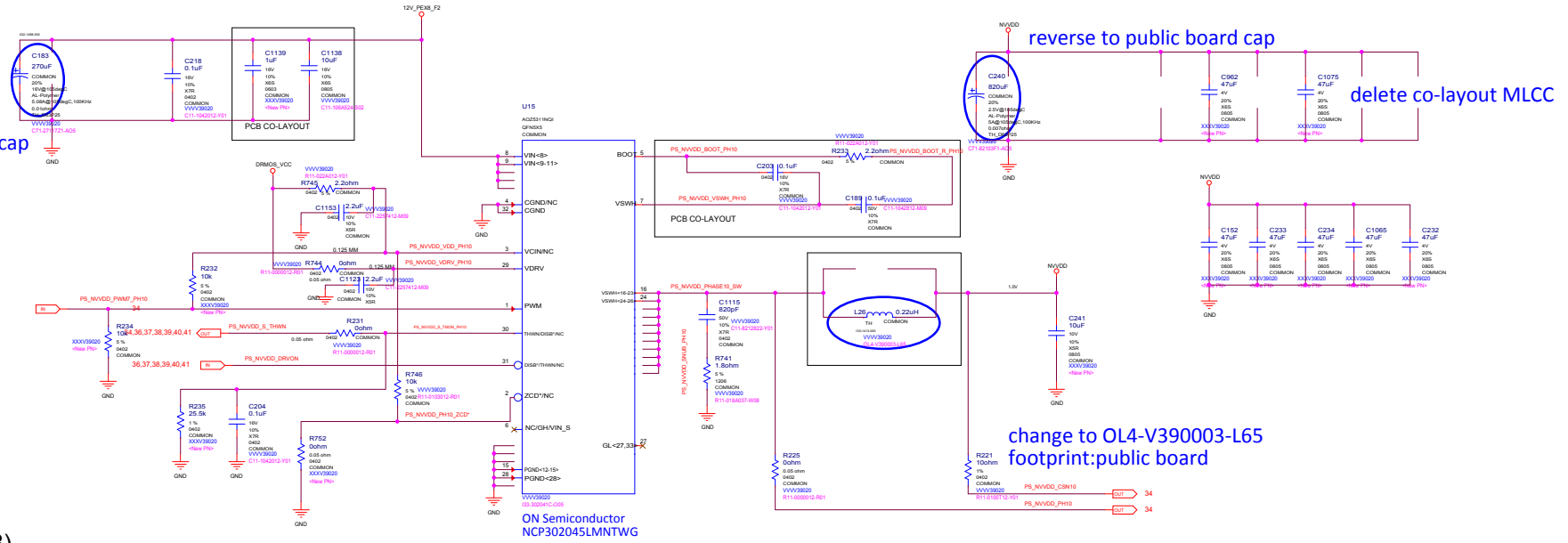

NVVDD PH8(PWM8)

U3,U4,U5,U6,U7,U8,U9,U10,U15,U18
change to I33-302041C-O05
footprint：PQFN31

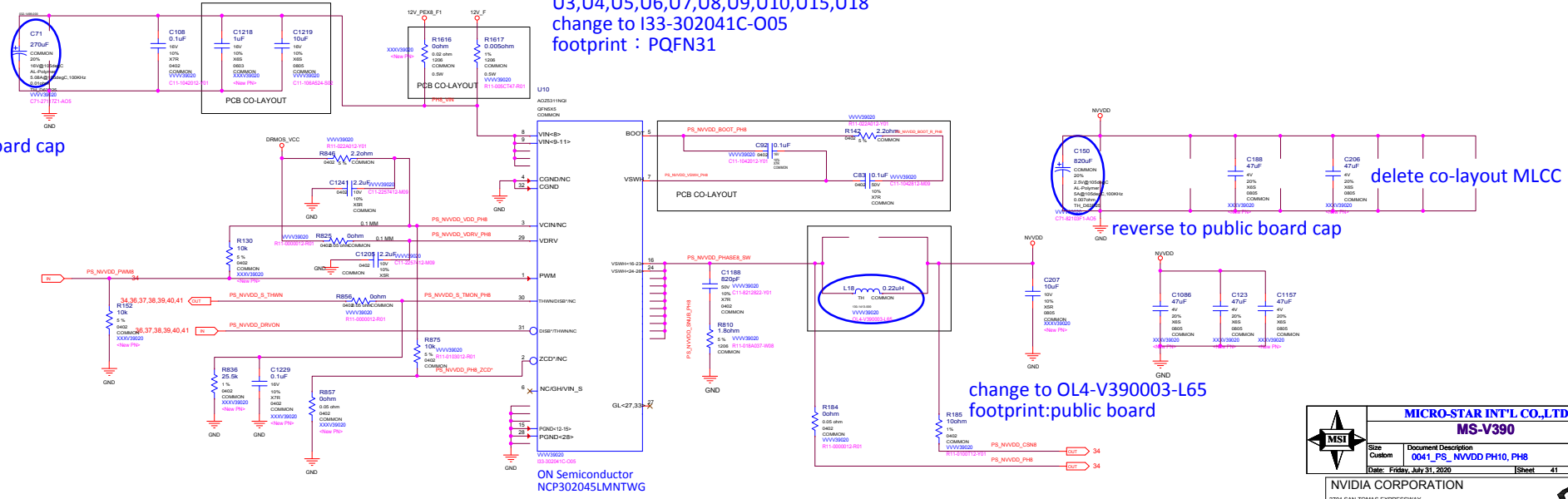

ASSEMBLY	<ASSEMBLY_DESCRIPTION>
PAGE DETAIL	PS: NVVDD PH10, PH8

ALL NVIDIA DESIGN SPECIFICATIONS, REFERENCE SPECIFICATIONS, REFERENCE BOARDS, FILES, DRAWINGS, DIAGNOSTICS, LISTS AND OTHER DOCUMENTS OR INFORMATION (TOGETHER AND SEPARATELY, 'MATERIALS') ARE BEING PROVIDED 'AS IS'. THE MATERIALS MAY CONTAIN KNOWN AND UNKNOWN VIOLATIONS OR DEVIATIONS OF INDUSTRY STANDARDS AND SPECIFICATIONS. NVIDIA MAKES NO WARRANTIES, EXPRESSED, IMPLIED, STATUTORY OR OTHERWISE WITH RESPECT TO THE MATERIALS OR OTHERWISE, AND EXPRESSLY DISCLAIMS ALL IMPLIED WARRANTIES INCLUDING, WITHOUT LIMITATION, THE WARRANTIES OF DESIGN, OF NONINFRINGEMENT, MERCHANTABILITY OR FITNESS FOR A PARTICULAR PURPOSE, OR ARISING FROM A COURSE OF DEALING, TRADE USAGE, TRADE PRACTICE, OR INDUSTRY STANDARDS.

MICRO-STAR INT'L CO.,LTD

MS-V390

Size	Document Description	Rev
Custom	0041_PS_ NVVDD PH10, PH8	2.0

Date: Friday, July 31, 2020 | Sheet 41 of 55

NVIDIA CORPORATION
2701 SAN TOMAS EXPRESSWAY
SANTA CLARA, CA 95050, USA

NV_PN	600-1G142-BASE-100		
PCB REV	PG142-B00	PAGE	41 OF 54
BOM REV	A	DATE	27-JUN-2020

Page42: Input Power Balancing Switcher

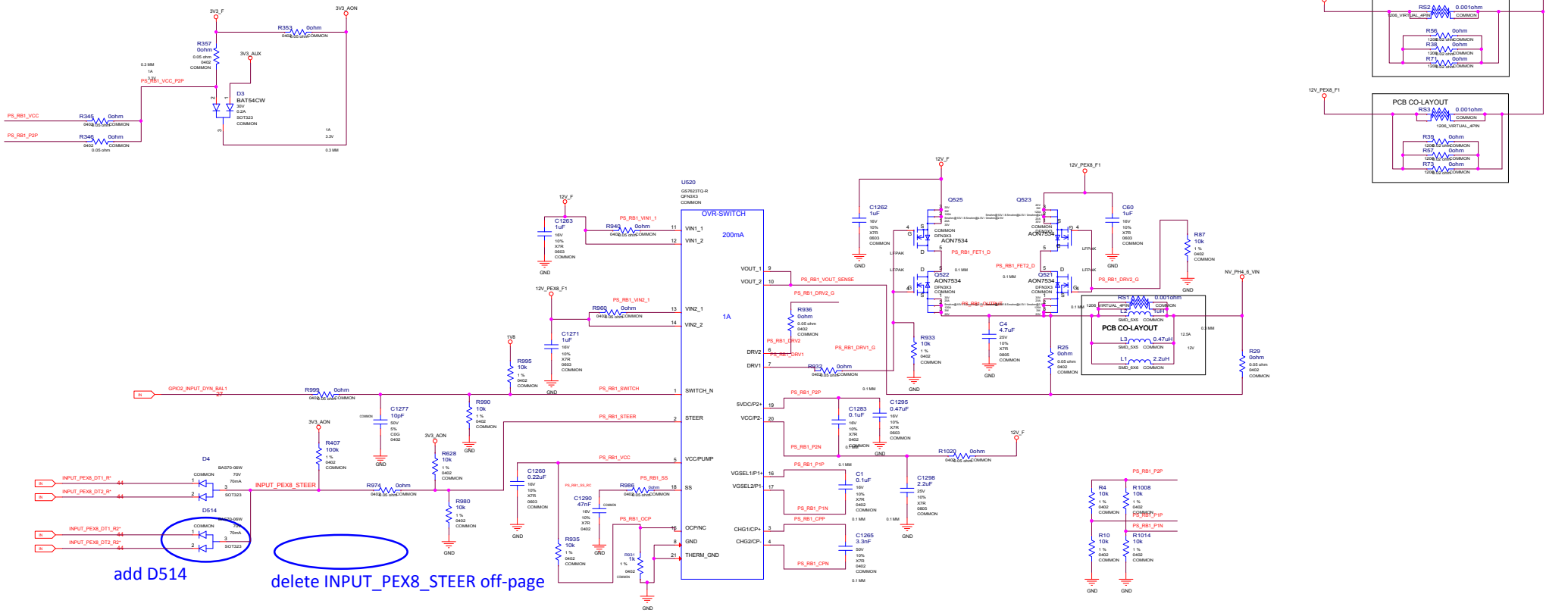

ASSEMBLY	<ASSEMBLY_DESCRIPTION>
PAGE DETAIL	PS: OVRS_INPUT POWER BALANCE

ALL NVIDIA DESIGN SPECIFICATIONS, REFERENCE SPECIFICATIONS, REFERENCE BOARDS, FILES, DRAWINGS, DIAGNOSTICS, LISTS AND OTHER DOCUMENTS OR INFORMATION (TOGETHER AND SEPARATELY, "MATERIALS") ARE BEING PROVIDED "AS IS". THE MATERIALS MAY CONTAIN KNOWN AND UNKNOWN VIOLATIONS OR DEVIATIONS OF INDUSTRY STANDARDS AND SPECIFICATIONS. NVIDIA MAKES NO WARRANTIES, EXPRESSED, IMPLIED, STATUTORY OR OTHERWISE WITH RESPECT TO THE MATERIALS OR OTHERWISE, AND EXPRESSLY DISCLAIMS ALL IMPLIED WARRANTIES INCLUDING, WITHOUT LIMITATION, THE WARRANTIES OF DESIGN, OF NONINFRINGEMENT, MERCHANTABILITY OR FITNESS FOR A PARTICULAR PURPOSE, OR ARISING FROM A COURSE OF DEALING, TRADE USAGE, TRADE PRACTICE, OR INDUSTRY STANDARDS.

MICRO-STAR INT'L CO.,LTD

MS-V390

Size	Document Description	Rev
Custom	0042_PS_ OVRS_INPUT POWER BALAN	2.0

Date: Friday, July 31, 2020 | Sheet 42 of 55

NVIDIA CORPORATION
2701 SAN TOMAS EXPRESSWAY
SANTA CLARA, CA 95050, USA

NV_PN	600-1G142-BASE-100		
PCB REV	PG142-B00	PAGE	42 OF 54
BOM REV	A	DATE	27-JUN-2020

Page43: INPUT SWITCH RTD3 (12V & 3V3_A SWITCHER)

AND GATE LOGIC

GPIO1	GPIO29	SWITCH	VOUT
0	0	0	12V
0	1	0	12V
1	0	0	12V
1	1	1	3V3A

SWITCH	VOUT
0	VOUT = VIN1
1	VOUT = VIN2

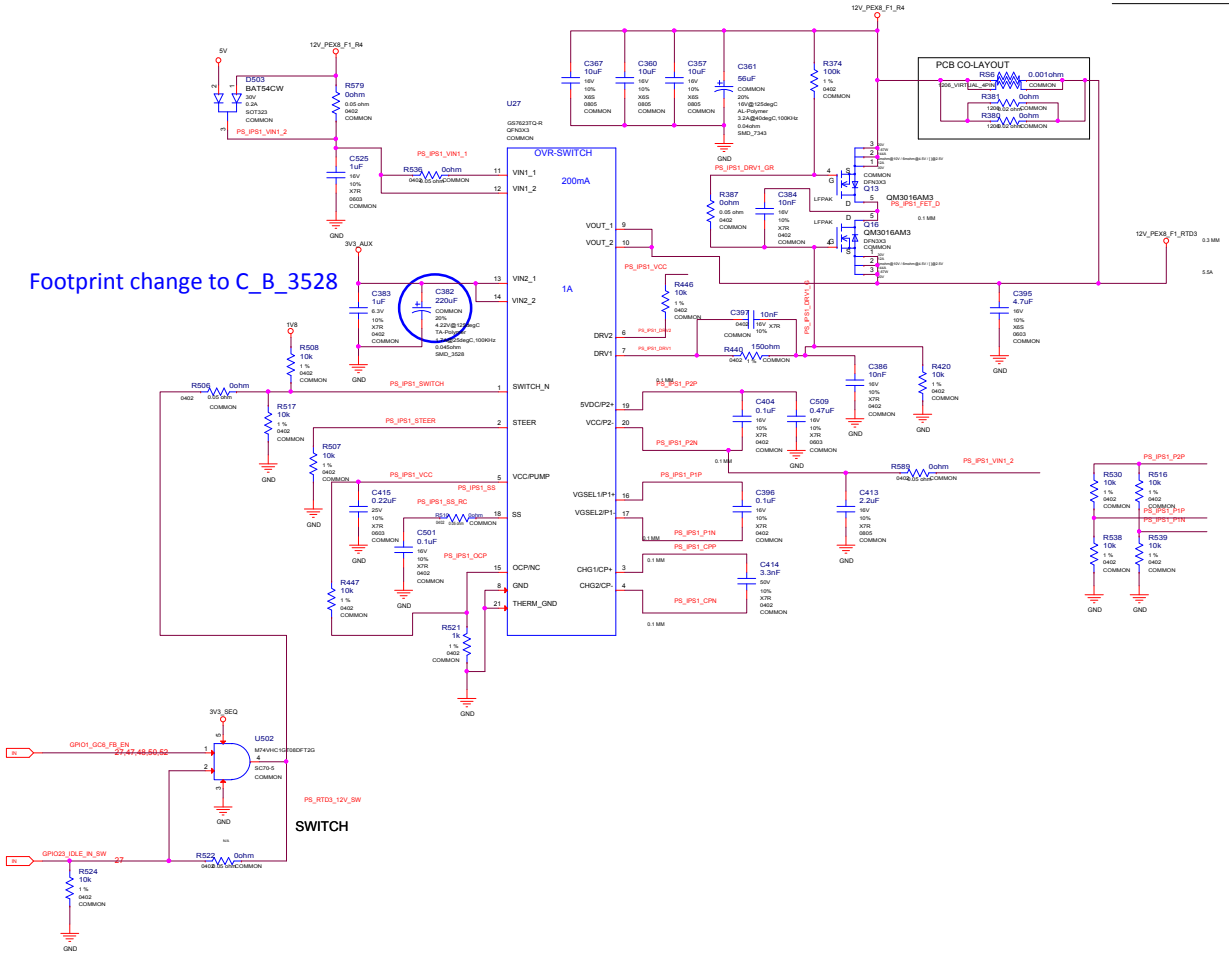

ASSEMBLY	<ASSEMBLY_DESCRIPTION>
PAGE DETAIL	PS: RDT3_12V & 3V3_A Switcher

ALL NVIDIA DESIGN SPECIFICATIONS, REFERENCE SPECIFICATIONS, REFERENCE BOARDS, FILES, DRAWINGS, DIAGNOSTICS, LISTS AND OTHER DOCUMENTS OR INFORMATION (TOGETHER AND SEPARATELY, "MATERIALS") ARE BEING PROVIDED "AS IS". THE MATERIALS MAY CONTAIN KNOWN AND UNKNOWN VIOLATIONS OR DEVIATIONS OF INDUSTRY STANDARDS AND SPECIFICATIONS. NVIDIA MAKES NO WARRANTIES, EXPRESSED, IMPLIED, STATUTORY OR OTHERWISE WITH RESPECT TO THE MATERIALS OR OTHERWISE, AND EXPRESSLY DISCLAIMS ALL IMPLIED WARRANTIES INCLUDING, WITHOUT LIMITATION, THE WARRANTIES OF DESIGN, OF NONINFRINGEMENT, MERCHANTABILITY OR FITNESS FOR A PARTICULAR PURPOSE, OR ARISING FROM A COURSE OF DEALING, TRADE USAGE, TRADE PRACTICE, OR INDUSTRY STANDARDS.

MICRO-STAR INT'L CO.,LTD

MS-V390

Size	Document Description	Rev
Custom	0043_PS_ RDT3_12V & 3V3_A Switc	2.0

Date: Friday, July 31, 2020 | Sheet 43 of 55

NVIDIA CORPORATION
2701 SAN TOMAS EXPRESSWAY
SANTA CLARA, CA 95050, USA

NV_PN	600-1G142-BASE-100		
PCB REV	PG142-B00	PAGE	43 OF 54
BOM REV	A	DATE	27-JUN-2020

Page44: 12V_EXT_INPUT, FILTERING & UNDER POWER BOOT

delete 12 pin 12V EXT-POWER Current steering

PEX Input - Under Power Boot Control

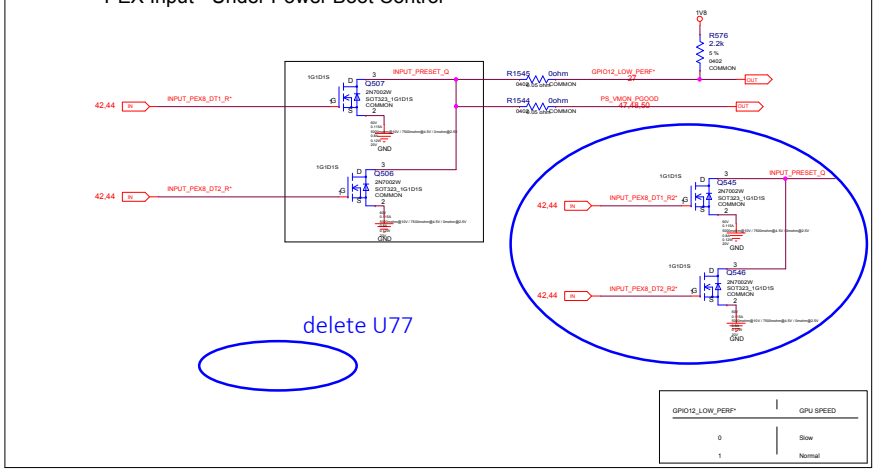

PEX8 INPUT 2/B - 2x4 PCIE CON 150W

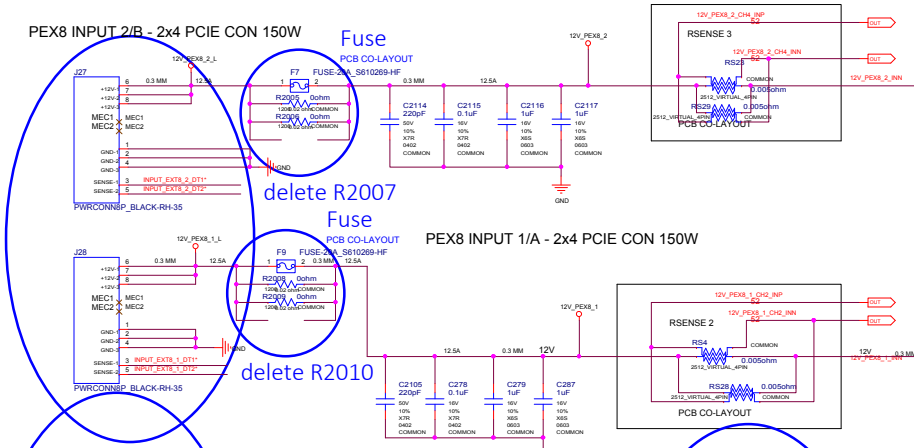

PEX8 INPUT 1/A - 2x4 PCIE CON 150W

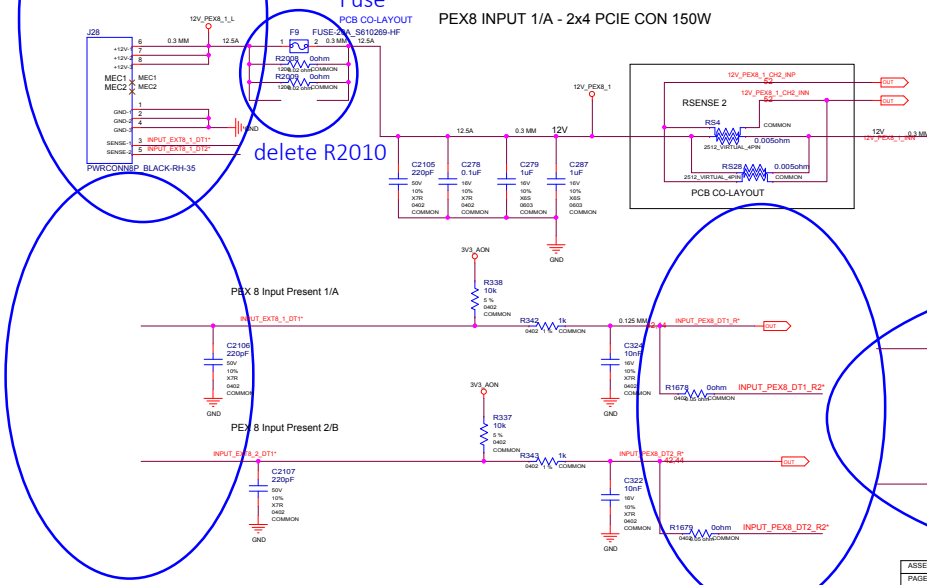

ASSEMBLY	<ASSEMBLY_DESCRIPTION>
PAGE DETAIL	PS: INPUTS, FILTERING and MONITORING

ALL NVIDIA DESIGN SPECIFICATIONS, REFERENCE SPECIFICATIONS, REFERENCE BOARDS, FILES, DRAWINGS, DIAGNOSTICS, LISTS AND OTHER DOCUMENTS OR INFORMATION (TOGETHER AND SEPARATELY, "MATERIALS") ARE BEING PROVIDED "AS IS". THE MATERIALS MAY CONTAIN KNOWN AND UNKNOWN VIOLATIONS OR DEVIATIONS OF INDUSTRY STANDARDS AND SPECIFICATIONS. NVIDIA MAKES NO WARRANTIES, EXPRESSED, IMPLIED, STATUTORY OR OTHERWISE WITH RESPECT TO THE MATERIALS OR OTHERWISE, AND EXPRESSLY DISCLAIMS ALL IMPLIED WARRANTIES INCLUDING, WITHOUT LIMITATION, THE WARRANTIES OF DESIGN, OF NONINFRINGEMENT, MERCHANTABILITY OR FITNESS FOR A PARTICULAR PURPOSE, OR ARISING FROM A COURSE OF DEALING, TRADE USAGE, TRADE PRACTICE, OR INDUSTRY STANDARDS.

MICRO-STAR INT'L CO.,LTD

MS-V390

Size Custom	Document Description 0044_PS_ INPUTS, FILTERING and	Rev 2.0
Date: Friday, July 31, 2020	Sheet 44 of 55	

NVIDIA CORPORATION
2701 SAN TOMAS EXPRESSWAY
SANTA CLARA, CA 95050, USA

NV_PN	600-1G142-BASE-100		
PCB REV	PG142-B00	PAGE	44 OF 54
BOM REV	A	DATE	27-JUN-2020

Page45: PEX_INPUT & FILTERING, PEX_3V3, 3V3_AUX

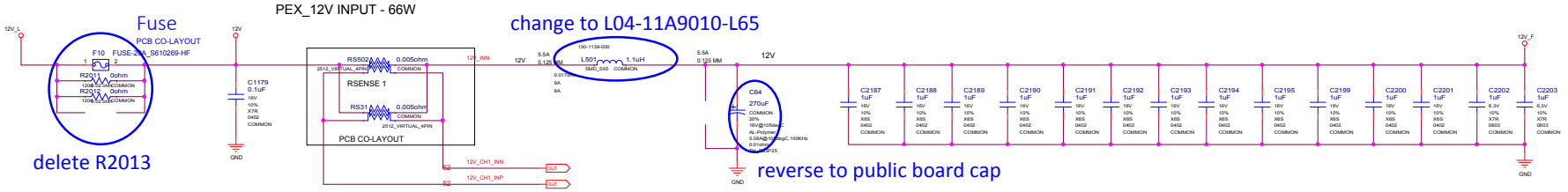

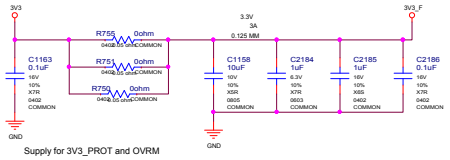

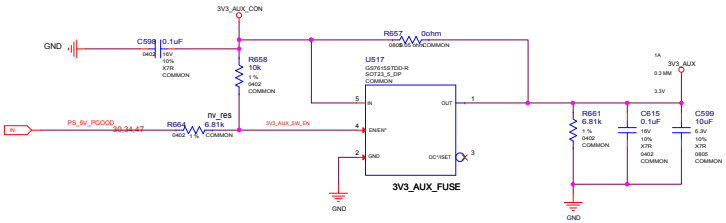

MICRO-STAR INT'L CO.,LTD
MS-V390

Size	Document Description	Rev
Custom	0045_PS_ PEX_12V, PEX_3V3 AND A	2.0

Date: Friday, July 31, 2020 Sheet 45 of 55

NVIDIA CORPORATION
2701 SAN TOMAS EXPRESSWAY
SANTA CLARA, CA 95050, USA

NV_PN	600-1G142-BASE-100		
PCB REV	PG142-B00	PAGE	45 OF 54
BOM REV	A	DATE	27-JUN-2020

ASSEMBLY	<ASSEMBLY_DESCRIPTION>
PAGE DETAIL	PS: PEX_12V, PEX_3V3 AND A3V3_AUX

ALL NVIDIA DESIGN SPECIFICATIONS, REFERENCE SPECIFICATIONS, REFERENCE BOARDS, FILES, DRAWINGS, DIAGNOSTICS, LISTS AND OTHER DOCUMENTS OR INFORMATION (TOGETHER AND SEPARATELY, "MATERIALS") ARE BEING PROVIDED "AS IS". THE MATERIALS MAY CONTAIN KNOWN AND UNKNOWN VIOLATIONS OR DEVIATIONS OF INDUSTRY STANDARDS AND SPECIFICATIONS. NVIDIA MAKES NO WARRANTIES, EXPRESSED, IMPLIED, STATUTORY OR OTHERWISE WITH RESPECT TO THE MATERIALS OR OTHERWISE, AND EXPRESSLY DISCLAIMS ALL IMPLIED WARRANTIES INCLUDING, WITHOUT LIMITATION, THE WARRANTIES OF DESIGN, OF NONINFRINGEMENT, MERCHANTABILITY OR FITNESS FOR A PARTICULAR PURPOSE, OR ARISING FROM A COURSE OF DEALING, TRADE USAGE, TRADE PRACTICE, OR INDUSTRY STANDARDS.

Page46: STEERING, UPB, HOT UNPLUG

POWER CONNECTOR HOT-UNPLUG DETECT

delete POWER CONNECTOR HOT-UNPLUG DETECT

12V CURRENT STEERING (UNDER POWER BOOT):

GUIDES CURRENT FROM PEX EDGE TO PEX 8 PIN INPUT AREA

delete 12V CURRENT STEERING

MICRO-STAR INT'L CO.,LTD

MS-V390

Size	Document Description	Rev
Custom	0046_PS_ STEERING, UPB, HOT UNP	2.0

Date: Friday, July 31, 2020 Sheet 46 of 55

NVIDIA CORPORATION

2701 SAN TOMAS EXPRESSWAY

SANTA CLARA, CA 95050, USA

ASSEMBLY	<ASSEMBLY_DESCRIPTION>
PAGE DETAIL	PS: STEERING, UPB, HOT UNPLUG

NV_PN	600-1G142-BASE-100		
PCB REV	PG142-B00	PAGE	46 OF 54
BOM REV	A	DATE	27-JUN-2020

ALL NVIDIA DESIGN SPECIFICATIONS, REFERENCE SPECIFICATIONS, REFERENCE BOARDS, FILES, DRAWINGS, DIAGNOSTICS, LISTS AND OTHER DOCUMENTS OR INFORMATION (TOGETHER AND SEPARATELY, "MATERIALS") ARE BEING PROVIDED "AS IS". THE MATERIALS MAY CONTAIN KNOWN AND UNKNOWN VIOLATIONS OR DEVIATIONS OF INDUSTRY STANDARDS AND SPECIFICATIONS. NVIDIA MAKES NO WARRANTIES, EXPRESSED, IMPLIED, STATUTORY OR OTHERWISE WITH RESPECT TO THE MATERIALS OR OTHERWISE, AND EXPRESSLY DISCLAIMS ALL IMPLIED WARRANTIES INCLUDING, WITHOUT LIMITATION, THE WARRANTIES OF DESIGN, OF NONINFRINGEMENT, MERCHANTABILITY OR FITNESS FOR A PARTICULAR PURPOSE, OR ARISING FROM A COURSE OF DEALING, TRADE USAGE, TRADE PRACTICE, OR INDUSTRY STANDARDS.

Page47: SEQ: 5V, 1V8, 3V3_SEQ, DDC_5V, DP_AUX_PROT

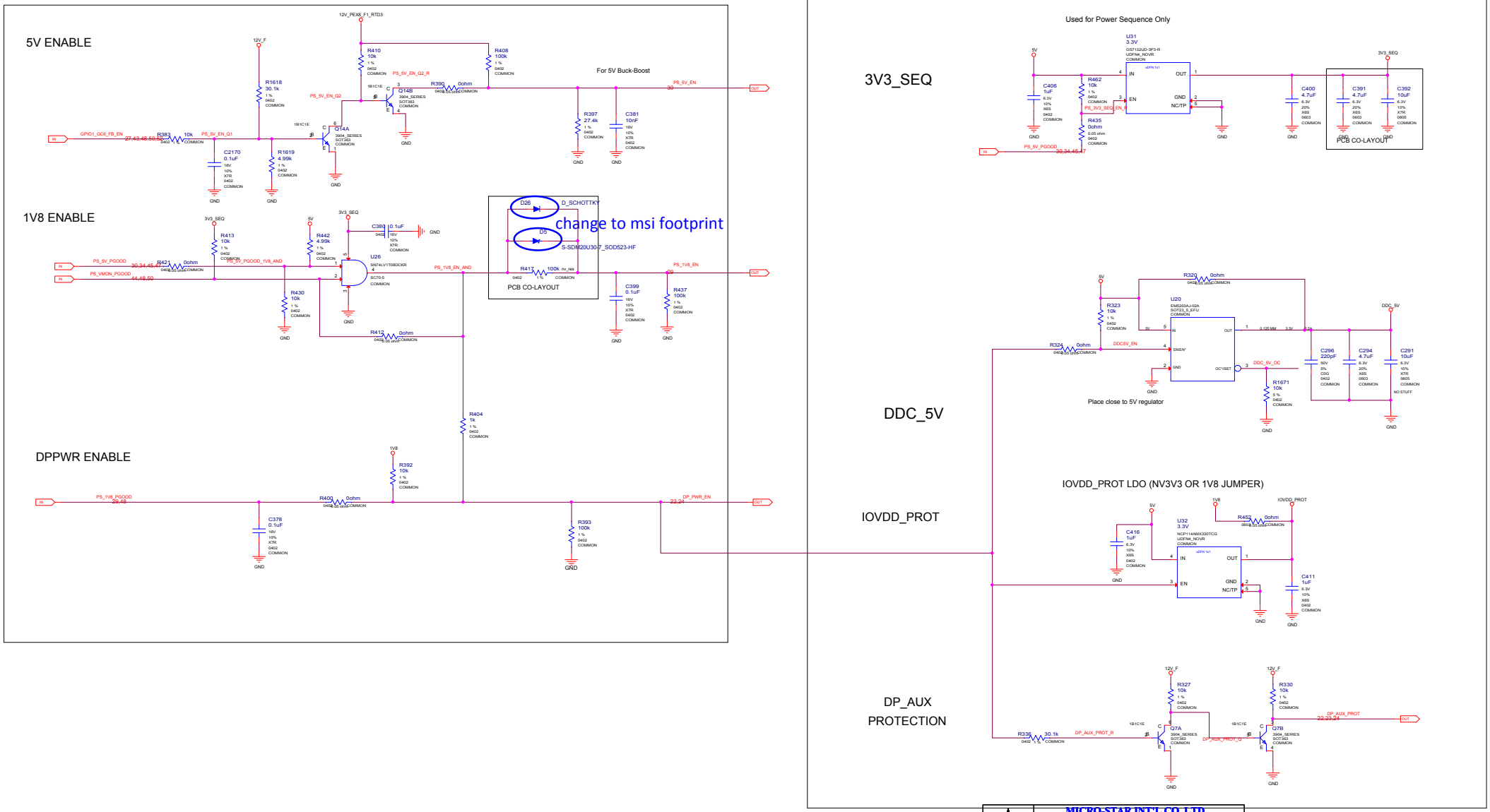

ASSEMBLY	<ASSEMBLY_DESCRIPTION>
PAGE DETAIL	SEQ: 5V, 1V8, 3V3_SEQ

MICRO-STAR INT'L CO.,LTD
MS-V390

Size	Document Description	Rev
Custom	0047_SEQ_ 5V, 1V8, 3V3_SEQ	2.0
Date: Friday, July 31, 2020	Sheet 47 of 55	

NVIDIA CORPORATION
2701 SAN TOMAS EXPRESSWAY
SANTA CLARA, CA 95050, USA

NV_PN	600-1G142-BASE-100		
PCB REV	PG142-B00	PAGE	47 OF 54
BOM REV	A	DATE	27-JUN-2020

ALL NVIDIA DESIGN SPECIFICATIONS, REFERENCE SPECIFICATIONS, REFERENCE BOARDS, FILES, DRAWINGS, DIAGNOSTICS, LISTS AND OTHER DOCUMENTS OR INFORMATION (TOGETHER AND SEPARATELY, "MATERIALS") ARE BEING PROVIDED "AS IS". THE MATERIALS MAY CONTAIN KNOWN AND UNKNOWN VIOLATIONS OR DEVIATIONS OF INDUSTRY STANDARDS AND SPECIFICATIONS. NVIDIA MAKES NO WARRANTIES, EXPRESSED, IMPLIED, STATUTORY OR OTHERWISE WITH RESPECT TO THE MATERIALS OR OTHERWISE, AND EXPRESSLY DISCLAIMS ALL IMPLIED WARRANTIES INCLUDING, WITHOUT LIMITATION, THE WARRANTIES OF DESIGN, OF NONINFRINGEMENT, MERCHANTABILITY OR FITNESS FOR A PARTICULAR PURPOSE, OR ARISING FROM A COURSE OF DEALING, TRADE USAGE, TRADE PRACTICE, OR INDUSTRY STANDARDS.

Page48: SEQ:NVVDD, PEX, FBVDDQ ENABLE

R_4 change to R4802

R_2 change to R4801

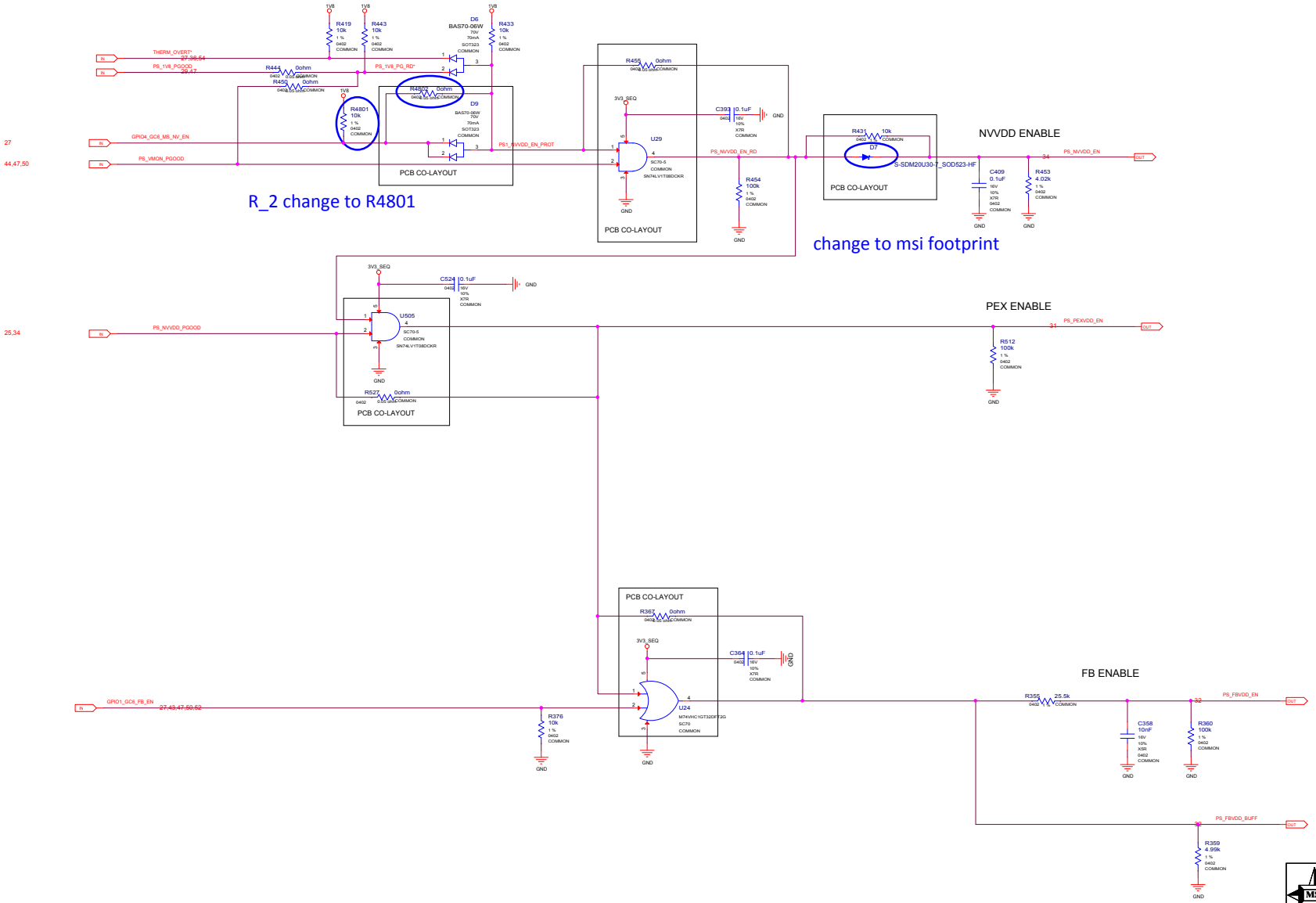

ASSEMBLY	<ASSEMBLY_DESCRIPTION>
PAGE DETAIL	SEQ: NVVDD, PEX, FBVDDQ ENABLE

ALL NVIDIA DESIGN SPECIFICATIONS, REFERENCE SPECIFICATIONS, REFERENCE BOARDS, FILES, DRAWINGS, DIAGNOSTICS, LISTS AND OTHER DOCUMENTS OR INFORMATION (TOGETHER AND SEPARATELY, 'MATERIALS') ARE BEING PROVIDED 'AS IS'. THE MATERIALS MAY CONTAIN KNOWN AND UNKNOWN VIOLATIONS OR DEVIATIONS OF INDUSTRY STANDARDS AND SPECIFICATIONS. NVIDIA MAKES NO WARRANTIES, EXPRESSED, IMPLIED, STATUTORY OR OTHERWISE WITH RESPECT TO THE MATERIALS OR OTHERWISE, AND EXPRESSLY DISCLAIMS ALL IMPLIED WARRANTIES INCLUDING, WITHOUT LIMITATION, THE WARRANTIES OF DESIGN, OF NONINFRINGEMENT, MERCHANTABILITY OR FITNESS FOR A PARTICULAR PURPOSE, OR ARISING FROM A COURSE OF DEALING, TRADE USAGE, TRADE PRACTICE, OR INDUSTRY STANDARDS.

MICRO-STAR INT'L CO.,LTD

MS-V390

Size	Document Description	Rev
Custom	0048_SEQ_ NVVDD, PEX, FBVDDQ EN	2.0

Date: Friday, July 31, 2020 | Sheet 48 of 55

NVIDIA CORPORATION
2701 SAN TOMAS EXPRESSWAY
SANTA CLARA, CA 95050, USA

NV_PN	600-1G142-BASE-100		
PCB REV	PG142-B00	PAGE	48 OF 54
BOM REV	A	DATE	27-JUN-2020

Page49: SEQ:MISC

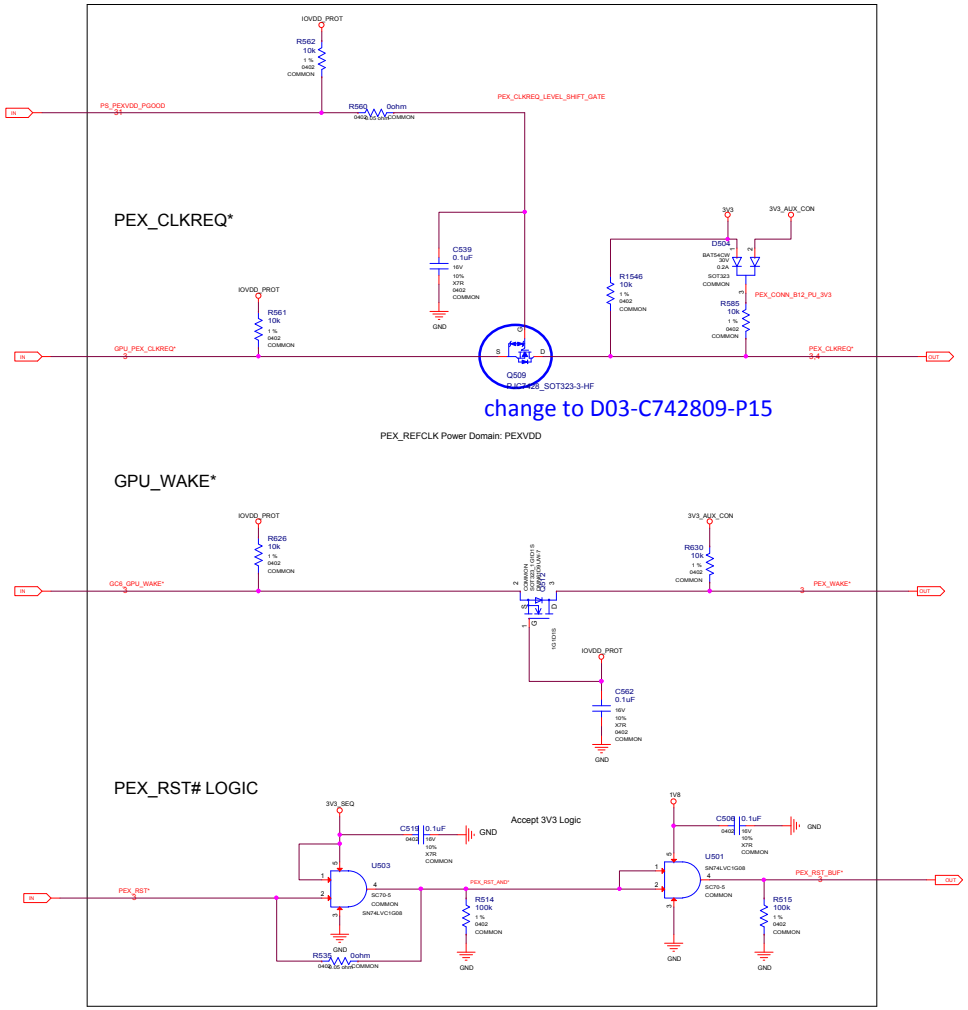

ASSEMBLY	<ASSEMBLY_DESCRIPTION>
PAGE DETAIL	SEQ: MISC

ALL NVIDIA DESIGN SPECIFICATIONS, REFERENCE SPECIFICATIONS, REFERENCE BOARDS, FILES, DRAWINGS, DIAGNOSTICS, LISTS AND OTHER DOCUMENTS OR INFORMATION (TOGETHER AND SEPARATELY, "MATERIALS") ARE BEING PROVIDED "AS IS". THE MATERIALS MAY CONTAIN KNOWN AND UNKNOWN VIOLATIONS OR DEVIATIONS OF INDUSTRY STANDARDS AND SPECIFICATIONS. NVIDIA MAKES NO WARRANTIES, EXPRESSED, IMPLIED, STATUTORY OR OTHERWISE WITH RESPECT TO THE MATERIALS OR OTHERWISE, AND EXPRESSLY DISCLAIMS ALL IMPLIED WARRANTIES INCLUDING, WITHOUT LIMITATION, THE WARRANTIES OF DESIGN, OF NONINFRINGEMENT, MERCHANTABILITY OR FITNESS FOR A PARTICULAR PURPOSE, OR ARISING FROM A COURSE OF DEALING, TRADE USAGE, TRADE PRACTICE, OR INDUSTRY STANDARDS.

MICRO-STAR INT'L CO.,LTD

MS-V390

Size	Document Description	Rev
Custom	0049_SEQ_ MISC	2.0

Date: Friday, July 31, 2020 | Sheet 49 of 55

NVIDIA CORPORATION
2701 SAN TOMAS EXPRESSWAY
SANTA CLARA, CA 95050, USA

NV_PN	600-1G142-BASE-100		
PCB REV	PG142-B00	PAGE	49 OF 54
BOM REV	A	DATE	27-JUN-2020

3V3PEX Voltage Monitor

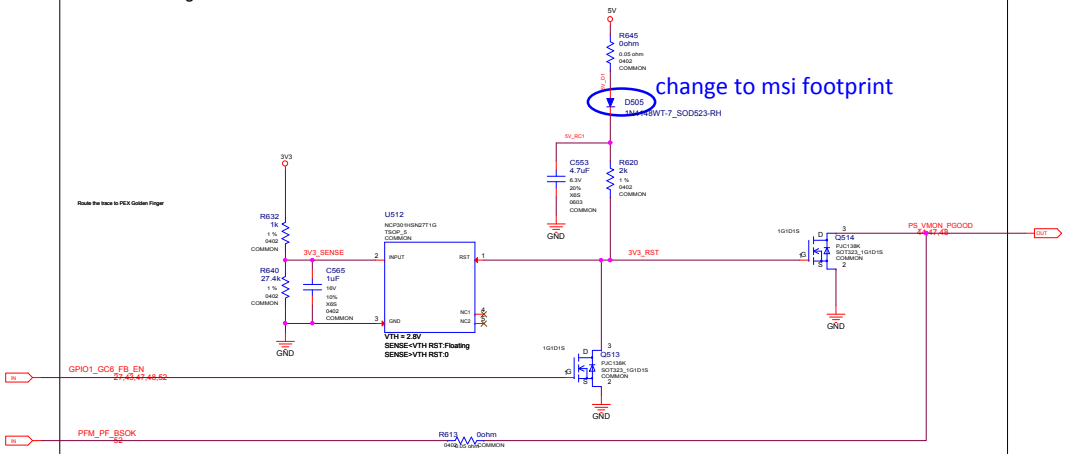

BOM Configuration

OPTIONS	PEX3V3_SENSE	PEX12V_SENSE	OTHER_12V_SENSE
Use Pre-Filter	Pre-Filter	Pre-Filter	Pre-Filter
NO Pre-Filter	Voltage_Monitor	Voltage_Monitor	N/A

Signal	Direction	Function
3V3	INPUT	Sense the 3V3 Voltage from PCIE golden finger
12V	INPUT	Sense the 12V Voltage from PCIE golden finger
PS_VMON_PGOOD	OPEN-DRAIN	Floating(H) once both 3V3 and 12V reach Vth
GC6_FB_EN	INPUT	Indicator for RTD3/GC6 residence,Use to Mask the VMON_PGOOD
PS_PF_SKIP	INPUT	From INA3221(VPU) or Pre-filter(SKIP)
PS_PF_BSOK	INPUT	From INA3221(PV) or Pre-filter(BS_OK)

MICRO-STAR INT'L CO.,LTD
MS-V390

Size	Document Description	Rev
Custom	0050_SEQ_ VOLTAGE MONITOR	2.0

Date: Friday, July 31, 2020 Sheet 50 of 55

NVIDIA CORPORATION
2701 SAN TOMAS EXPRESSWAY
SANTA CLARA, CA 95050, USA

ASSEMBLY	<ASSEMBLY_DESCRIPTION>
PAGE DETAIL	SEQ: VOLTAGE MONITOR

NV_PN	600-1G142-BASE-100		
PCB REV	PG142-B00	PAGE	50 OF 54
BOM REV	A	DATE	27-JUN-2020

ALL NVIDIA DESIGN SPECIFICATIONS, REFERENCE SPECIFICATIONS, REFERENCE BOARDS, FILES, DRAWINGS, DIAGNOSTICS, LISTS AND OTHER DOCUMENTS OR INFORMATION (TOGETHER AND SEPARATELY, 'MATERIALS') ARE BEING PROVIDED 'AS IS'. THE MATERIALS MAY CONTAIN KNOWN AND UNKNOWN VIOLATIONS OR DEVIATIONS OF INDUSTRY STANDARDS AND SPECIFICATIONS. NVIDIA MAKES NO WARRANTIES, EXPRESSED, IMPLIED, STATUTORY OR OTHERWISE WITH RESPECT TO THE MATERIALS OR OTHERWISE, AND EXPRESSLY DISCLAIMS ALL IMPLIED WARRANTIES INCLUDING, WITHOUT LIMITATION, THE WARRANTIES OF DESIGN, OF NONINFRINGEMENT, MERCHANTABILITY OR FITNESS FOR A PARTICULAR PURPOSE, OR ARISING FROM A COURSE OF DEALING, TRADE USAGE, TRADE PRACTICE, OR INDUSTRY STANDARDS.

Page51: FAN&LED

2-PIN LED HEADER

remove 2-PIN LED HEADER

copy from V388-2.0

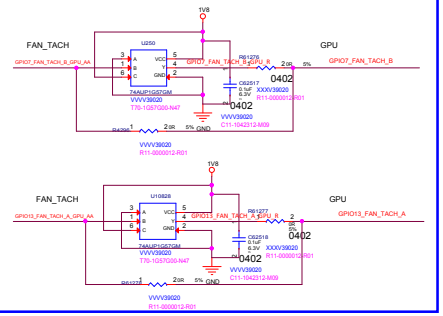

DUAL FAN 4-PIN HEADERS

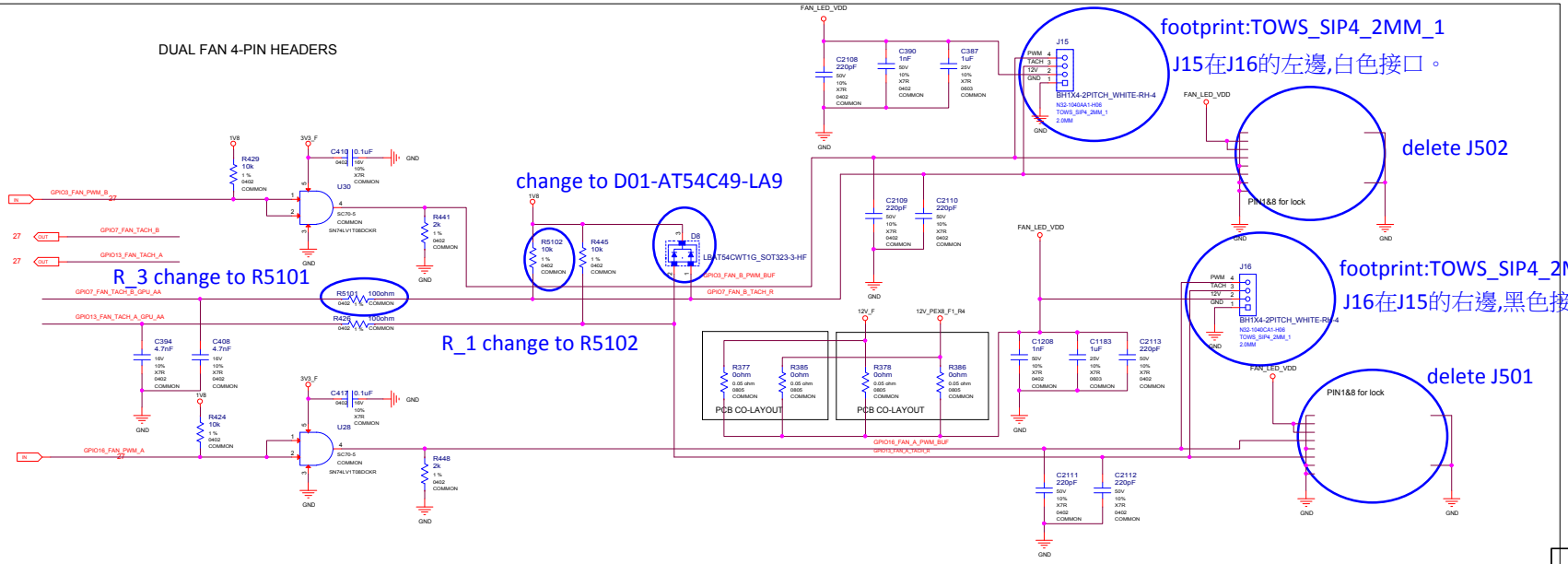

ASSEMBLY	<ASSEMBLY_DESCRIPTION>
PAGE DETAIL	FAN & LED

ALL NVIDIA DESIGN SPECIFICATIONS, REFERENCE SPECIFICATIONS, REFERENCE BOARDS, FILES, DRAWINGS, DIAGNOSTICS, LISTS AND OTHER DOCUMENTS OR INFORMATION (TOGETHER AND SEPARATELY, "MATERIALS") ARE BEING PROVIDED "AS IS". THE MATERIALS MAY CONTAIN KNOWN AND UNKNOWN VIOLATIONS OR DEVIATIONS OF INDUSTRY STANDARDS AND SPECIFICATIONS. NVIDIA MAKES NO WARRANTIES, EXPRESSED, IMPLIED, STATUTORY OR OTHERWISE WITH RESPECT TO THE MATERIALS OR OTHERWISE, AND EXPRESSLY DISCLAIMS ALL IMPLIED WARRANTIES INCLUDING, WITHOUT LIMITATION, THE WARRANTIES OF DESIGN, OF NONINFRINGEMENT, MERCHANTABILITY OR FITNESS FOR A PARTICULAR PURPOSE, OR ARISING FROM A COURSE OF DEALING, TRADE USAGE, TRADE PRACTICE, OR INDUSTRY STANDARDS.

MICRO-STAR INT'L CO.,LTD

MS-V390

Size	Document Description	Rev
Custom	0051_FAN & LED	2.0

Date: Friday, July 31, 2020 | Sheet 51 of 55

NVIDIA CORPORATION
2701 SAN TOMAS EXPRESSWAY
SANTA CLARA, CA 95050, USA

NV_PN	600-1G142-BASE-100		
PCB REV	PG142-B00	PAGE	51 OF 54
BOM REV	A	DATE	27-JUN-2020

Page52: OVRM_PWR SENSE

MODE PIN STATUS	MULTIPLEXER OPERATION
LOW	DEVICE A
TRI-STATE(FLOATING)	STAND-ALONE
HIGH	DEVICE B

ENABLE PIN STATUS	MULTIPLEXER OPERATION
LOW	FULLY FUNCTIONAL
TRI-STATE(FLOATING)	LIMITTED FUNCTION
HIGH	STANDBY

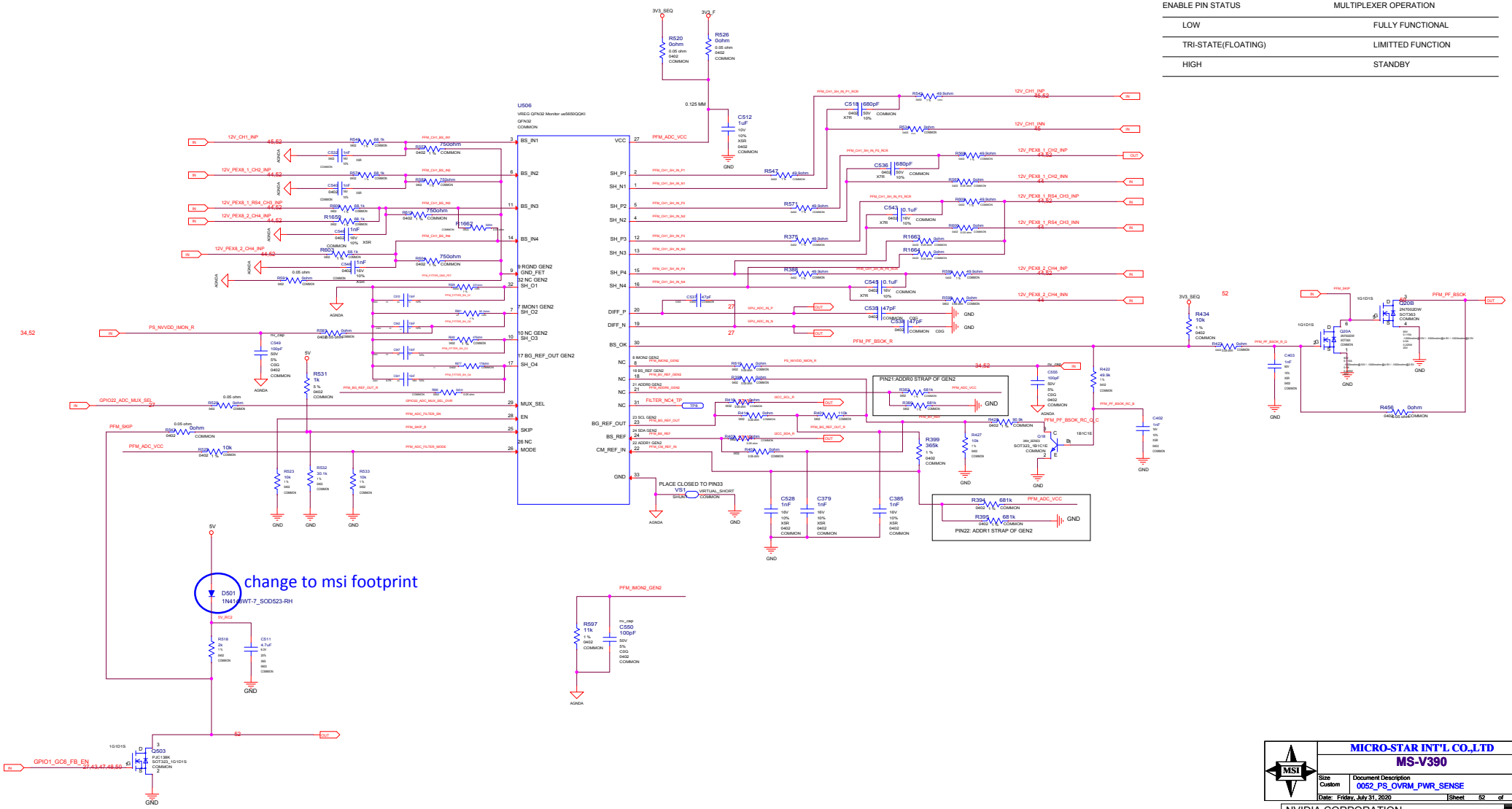

ASSEMBLY	<ASSEMBLY_DESCRIPTION>
PAGE DETAIL	PS:OVRM_PWR_SENSE

ALL NVIDIA DESIGN SPECIFICATIONS, REFERENCE SPECIFICATIONS, REFERENCE BOARDS, FILES, DRAWINGS, DIAGNOSTICS, LISTS AND OTHER DOCUMENTS OR INFORMATION (TOGETHER AND SEPARATELY, "MATERIALS") ARE BEING PROVIDED "AS IS". THE MATERIALS MAY CONTAIN KNOWN AND UNKNOWN VIOLATIONS OR DEVIATIONS OF INDUSTRY STANDARDS AND SPECIFICATIONS. NVIDIA MAKES NO WARRANTIES, EXPRESSED, IMPLIED, STATUTORY OR OTHERWISE WITH RESPECT TO THE MATERIALS OR OTHERWISE, AND EXPRESSLY DISCLAIMS ALL IMPLIED WARRANTIES INCLUDING, WITHOUT LIMITATION, THE WARRANTIES OF DESIGN, OF NONINFRINGEMENT, MERCHANTABILITY OR FITNESS FOR A PARTICULAR PURPOSE, OR ARISING FROM A COURSE OF DEALING, TRADE USAGE, TRADE PRACTICE, OR INDUSTRY STANDARDS.

MICRO-STAR INT'L CO.,LTD

MS-V390

Size	Document Description	Rev
Custom	0052_PS_OVRM_PWR_SENSE	2.0

Date: Friday, July 31, 2020 | Sheet 52 of 55

NVIDIA CORPORATION
2701 SAN TOMAS EXPRESSWAY
SANTA CLARA, CA 95050, USA

NV_PN	600-1G142-BASE-100		
PCB REV	PG142-B00	PAGE	52 OF 54
BOM REV	A	DATE	27-JUN-2020

Page53: MECH

Bracket & Bracket hole: 2pcs
footprint:H_R220D125

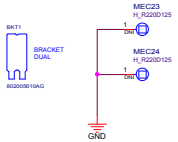

Fan module hole: 4 pcs
footprint : same as public board

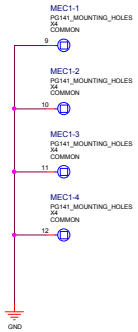

Fan module hole: 10 pcs
footprint:H_R220D125

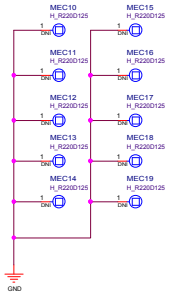

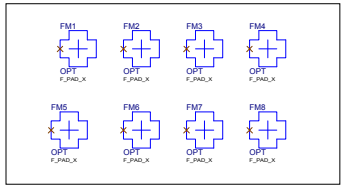

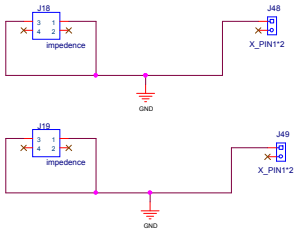

Bracket Screw

删除CLP1~CLP3

ASSEMBLY	<ASSEMBLY_DESCRIPTION>
PAGE DETAIL	MECH

ALL NVIDIA DESIGN SPECIFICATIONS, REFERENCE SPECIFICATIONS, REFERENCE BOARDS, FILES, DRAWINGS, DIAGNOSTICS, LISTS AND OTHER DOCUMENTS OR INFORMATION (TOGETHER AND SEPARATELY, "MATERIALS") ARE BEING PROVIDED "AS IS". THE MATERIALS MAY CONTAIN KNOWN AND UNKNOWN VIOLATIONS OR DEVIATIONS OF INDUSTRY STANDARDS AND SPECIFICATIONS. NVIDIA MAKES NO WARRANTIES, EXPRESSED, IMPLIED, STATUTORY OR OTHERWISE WITH RESPECT TO THE MATERIALS OR OTHERWISE, AND EXPRESSLY DISCLAIMS ALL IMPLIED WARRANTIES INCLUDING, WITHOUT LIMITATION, THE WARRANTIES OF DESIGN, OF NONINFRINGEMENT, MERCHANTABILITY OR FITNESS FOR A PARTICULAR PURPOSE, OR ARISING FROM A COURSE OF DEALING, TRADE USAGE, TRADE PRACTICE, OR INDUSTRY STANDARDS.

MICRO-STAR INT'L CO.,LTD
MS-V390

Size Custom	Document Description 0053_MECH	Rev 2.0
Date: Friday, July 31, 2020	Sheet 53 of 55	

NVIDIA CORPORATION
2701 SAN TOMAS EXPRESSWAY
SANTA CLARA, CA 95050, USA

NV_PN	600-1G142-BASE-100		
PCB REV	PG142-B00	PAGE	53 OF 54
BOM REV	A	DATE	27-JUN-2020

Close to FBVDD MOS

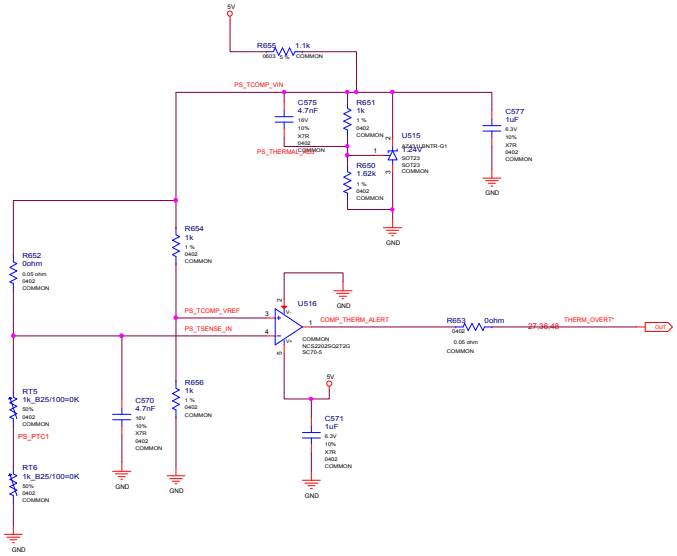

ASSEMBLY	<ASSEMBLY_DESCRIPTION>
PAGE DETAIL	PTC

ALL NVIDIA DESIGN SPECIFICATIONS, REFERENCE SPECIFICATIONS, REFERENCE BOARDS, FILES, DRAWINGS, DIAGNOSTICS, LISTS AND OTHER DOCUMENTS OR INFORMATION (TOGETHER AND SEPARATELY, 'MATERIALS') ARE BEING PROVIDED 'AS IS'. THE MATERIALS MAY CONTAIN KNOWN AND UNKNOWN VIOLATIONS OR DEVIATIONS OF INDUSTRY STANDARDS AND SPECIFICATIONS. NVIDIA MAKES NO WARRANTIES, EXPRESSED, IMPLIED, STATUTORY OR OTHERWISE WITH RESPECT TO THE MATERIALS OR OTHERWISE, AND EXPRESSLY DISCLAIMS ALL IMPLIED WARRANTIES INCLUDING, WITHOUT LIMITATION, THE WARRANTIES OF DESIGN, OF NONINFRINGEMENT, MERCHANTABILITY OR FITNESS FOR A PARTICULAR PURPOSE, OR ARISING FROM A COURSE OF DEALING, TRADE USAGE, TRADE PRACTICE, OR INDUSTRY STANDARDS.

MICRO-STAR INT'L CO.,LTD

MS-V390

Size	Document Description	Rev
Custom	0054_PTC	2.0

Date: Friday, July 31, 2020 | Sheet 54 of 55

NVIDIA CORPORATION
2701 SAN TOMAS EXPRESSWAY
SANTA CLARA, CA 95050, USA

NV_PN	600-1G142-BASE-100		
PCB REV	PG142-B00	PAGE	54 OF 54
BOM REV	A	DATE	27-JUN-2020

Page55: LED (msi Gaming feature)

schematic copied from V388-2.0 Page 64
BOM copied from V382-02S EC005 (2020/7/31)

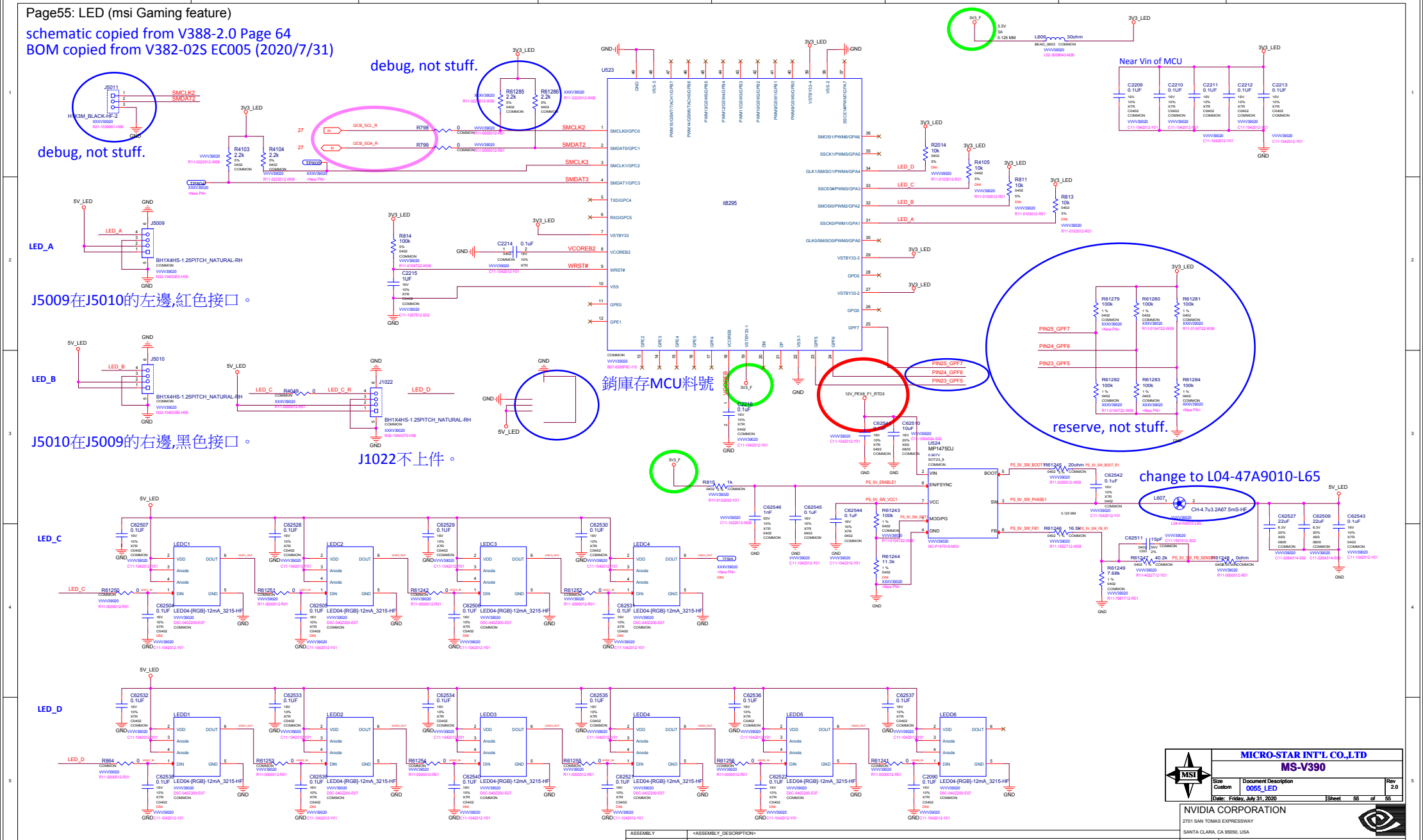

ASSEMBLY	<ASSEMBLY_DESCRIPTION>
PAGE DETAIL	PS: NVVDD Controller

ALL NVIDIA DESIGN SPECIFICATIONS, REFERENCE SPECIFICATIONS, REFERENCE BOARDS, FILES, DRAWINGS, DIAGNOSTICS, LISTS AND OTHER DOCUMENTS OR INFORMATION (TOGETHER AND SEPARATELY, 'MATERIALS') ARE BEING PROVIDED 'AS IS'. THE MATERIALS MAY CONTAIN KNOWN AND UNKNOWN VIOLATIONS OR DEVIATIONS OF INDUSTRY STANDARDS AND SPECIFICATIONS. NVIDIA MAKES NO WARRANTIES, EXPRESSED, IMPLIED, STATUTORY OR OTHERWISE WITH RESPECT TO THE MATERIALS OR OTHERWISE, AND EXPRESSLY DISCLAIMS ALL IMPLIED WARRANTIES INCLUDING, WITHOUT LIMITATION, THE WARRANTIES OF DESIGN, OF NONINFRINGEMENT, MERCHANTABILITY OR FITNESS FOR A PARTICULAR PURPOSE, OR ARISING FROM A COURSE OF DEALING, TRADE USAGE, TRADE PRACTICE, OR INDUSTRY STANDARDS.

MICRO-STAR INT'L CO.,LTD
MS-V390

Size	Document Description	Rev
Custom	0055_LED	2.0

Date: Friday, July 31, 2020 | Sheet 55 of 55

NVIDIA CORPORATION
2701 SAN TOMAS EXPRESSWAY
SANTA CLARA, CA 95050, USA

NV_PN	600-1G142-BASE-100		
PCB REV	PG142-B00	PAGE	34 OF 54
BOM REV	A	DATE	27-JUN-2020