GA102 DT SKU P-BOARD

350W, FH Std PCB, 384b, GDDR6X x8
DP + DP + DP + HDMI/DP

TABLE OF CONTENTS

Page	Description
1	Table of Contents
2	BLOCK DIAGRAM
3	PCI EXPRESS
4	MEMORY: GPU PARTITION A/B
5	MEMORY: FBA PARTITION[31:0]
6	MEMORY: FBA PARTITION[63:32]
7	MEMORY: FBB PARTITION[31:0]
8	MEMORY: FBB PARTITION[63:31]
9	MEMORY: GPU PARTITION C/D
10	MEMORY: FBC PARTITION[31:0]
11	MEMORY: FBC PARTITION[63:32]
12	MEMORY: FBD PARTITION[31:0]
13	MEMORY: FBD PARTITION[63:32]
14	MEMORY: GPU PARTITION E/F
15	MEMORY: FBE PARTITION[31:0]
16	MEMORY: FBE PARTITION[63:32]
17	MEMORY: FBF PARTITION[31:0]
18	MEMORY: FBF PARTITION[63:32]
19	GPU GND, RFUs & RSVD
20	GPU POWERS
21	GPU: NVVDD DECOUPLING
22	GPU: FBVDD DECOUPLING
23	GPU: MSVDD DECOUPLING
24	BLANK
25	NVHS x16
26	MISC: THERMAL, JTAG, GPIO
27	IFPA UNUSED, IFPB UNUSED
28	IFPE DP
29	IFPD DP
30	IFPC HDMI/DP
31	IFPF DP
32	MISC. ROM, STRAPS
33	MISC. XTAL, PLL
34	PS: 5V
35	PS: PEX_DVDD and 1V8
36	BLANK
37	PS: FBVDD Controller OVR3
38	PS: FBVDDQ OVR4
39	PS: FBVDD PH1
40	PS: FBVDD PH3
41	PS: FBVDD PH2
42	PS: FBVDD PH4
43	PS: FBVDD OUTPUT CAP
44	PS: MSVDD CONTROLLER
45	PS: MSVDD PH1
46	PS: MSVDD PH2
47	PS: MSVDD PH3 and PH5
48	PS: MSVDD PH4 and PH6
49	PS: MSVDD OUTPUT CAP(TOP)
50	BLANK
51	PS: NVVDD Controller_OVR8
52	PS: NVVDD PH1 (PWM1)
53	PS: NVVDD PH2 (PWM6)
54	PS: NVVDD PH3 (PWM3) and PH4 (PWM3)
55	PS: NVVDD PH5 (PWM7) and PH7 (PWM8)
56	PS: NVVDD PH6 (PWM7)
57	PS: NVVDD PH8(PWM5) and PH9(PWM2)
58	PS: NVVDD PH10 (PWM4)
59	Colayout Notes
60	BLANK
61	PS: NVVDD OUTPUT CAP(TOP)
62	BLANK
63	PS: INPUT SWITCH RTD3
64	BLANK
65	PS: INPUTS, FILTERING, and, MONITORING
66	PS: HOT UNPLUG
67	PS: Discrete Power Steering
68	PS: PREFILTER
69	PS: PREFILTER B
70	Sequence: 5V, 1V8, 3V3_SEQ
71	Sequence: NV, PEX, FB EN
72	Sequence: 3V3 MONITOR
73	Sequence: MISC
74	MISC: LED & FAN
75	RGBW LED REF

Block Diagram

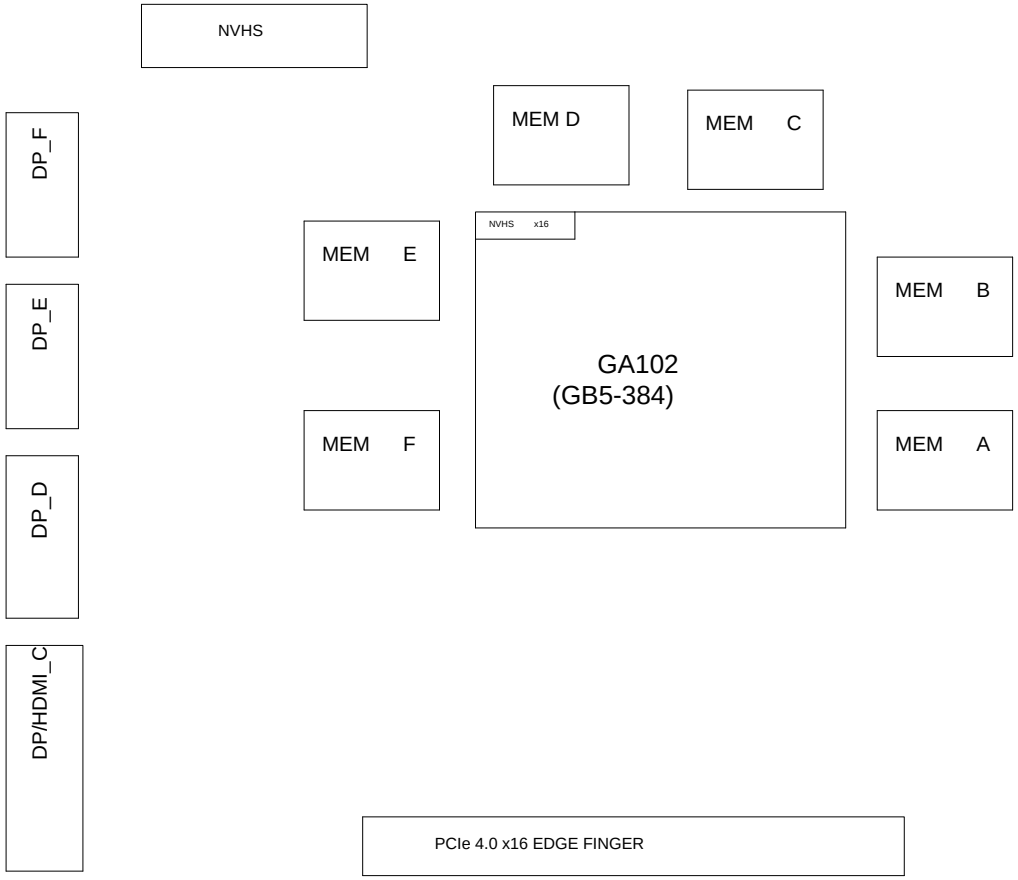

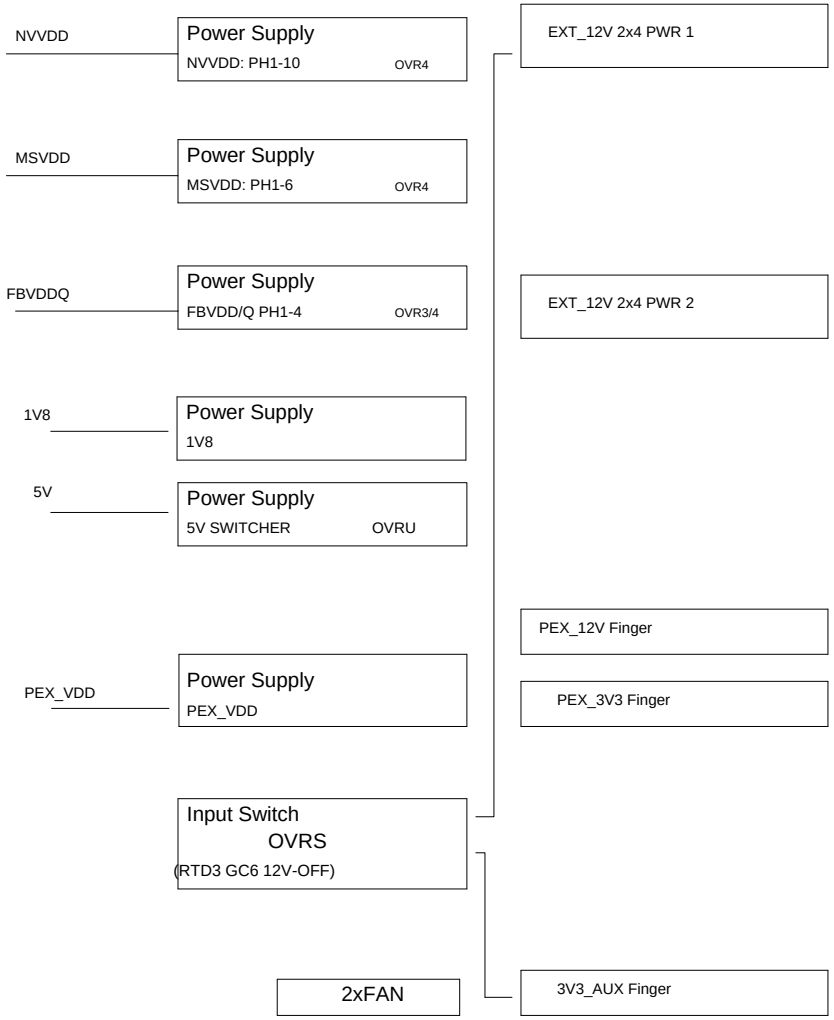

MICRO-STAR INT'L CO.,LTD

MS-V388

Size	Document Description	Rev
Custom	Block Diagram	8.0

Date: Wednesday, July 22, 2020 Sheet 2 of 78

PCI Express

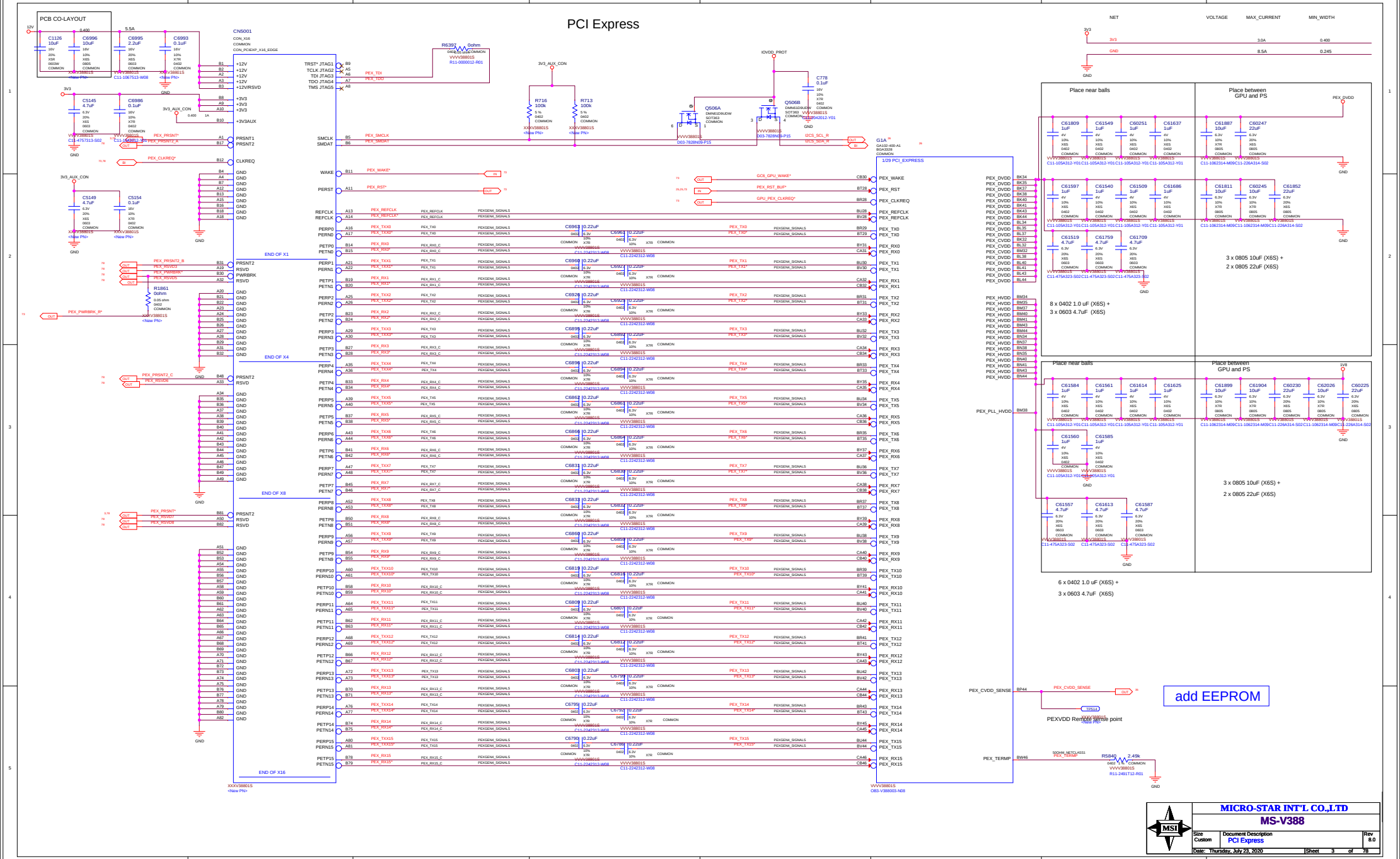
PCB CO-LAYOUT
CN5001
CON_X16
COMMON
CON_PCIEXP_X16_EDGE
END OF X1
END OF X4
END OF X8
END OF X16
1/29 PCI_EXPRESS
Place near balls
Place between GPU and PS
3 x 0805 10uF (X6S) +
2 x 0805 22uF (X6S)
8 x 0402 1.0 uF (X6S) +
3 x 0603 4.7uF (X6S)
6 x 0402 1.0 uF (X6S) +
3 x 0603 4.7uF (X6S)
PEXVDD Remote sense point
add EEPROM
MICRO-STAR INT'L CO.,LTD
MS-V388
Size: Custom
Document Description: PCI Express
Rev: 8.0
Date: Thursday, July 23, 2020
Sheet 3 of 78

MEMORY: GPU Partition A/B

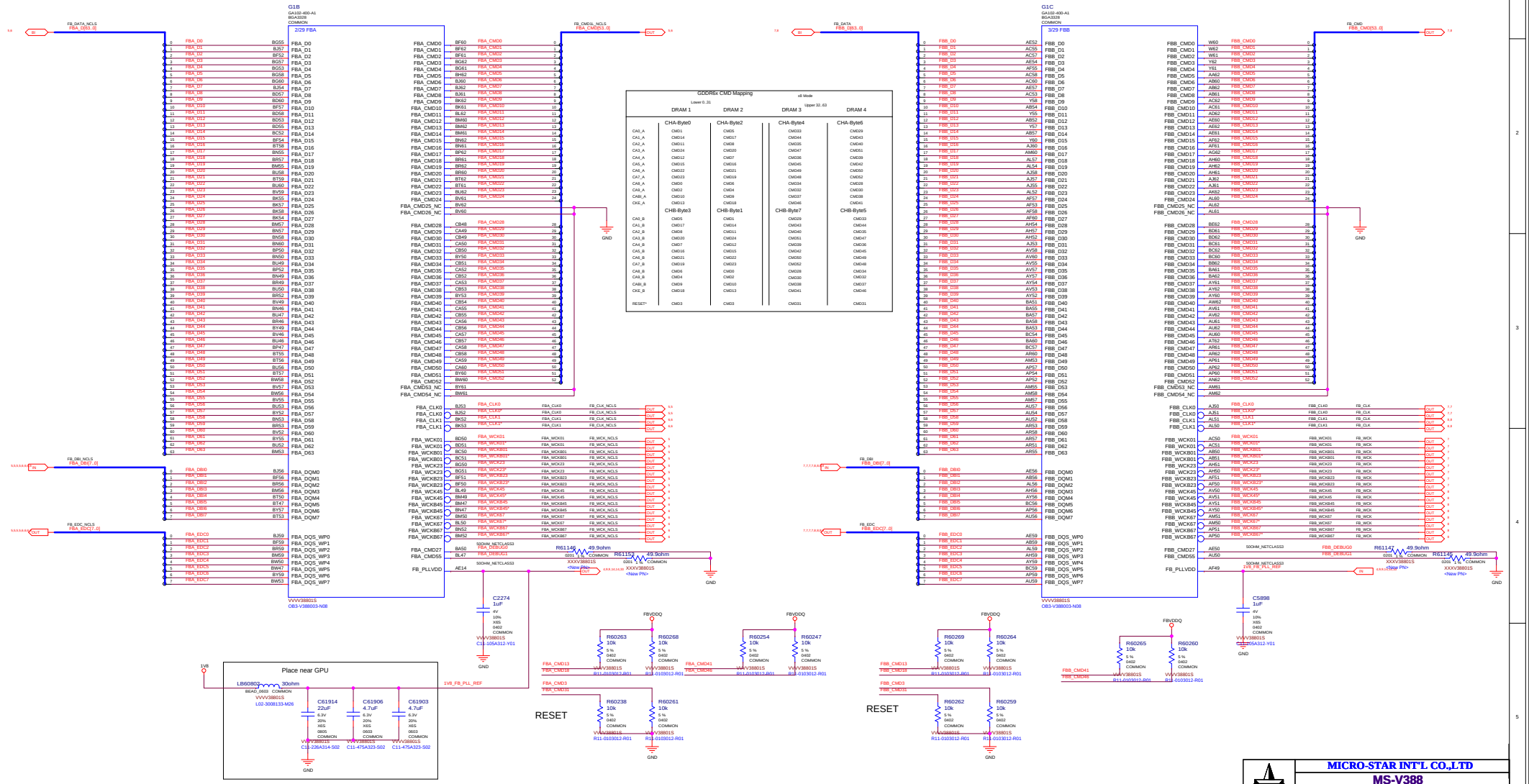

Page5: MEMORY: FBA Partition 31..0

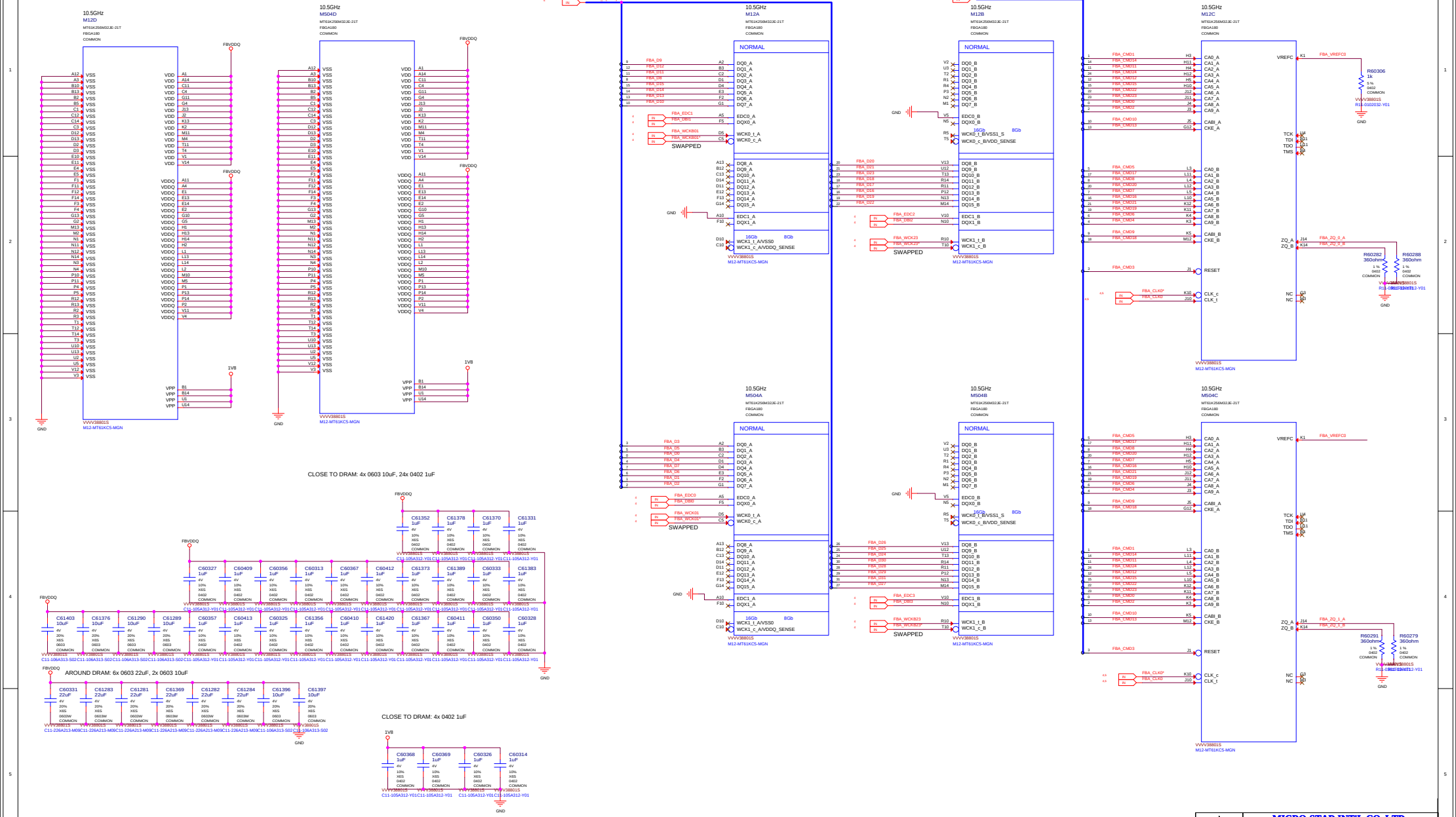

Page6: MEMORY: FBA Partition 63..32

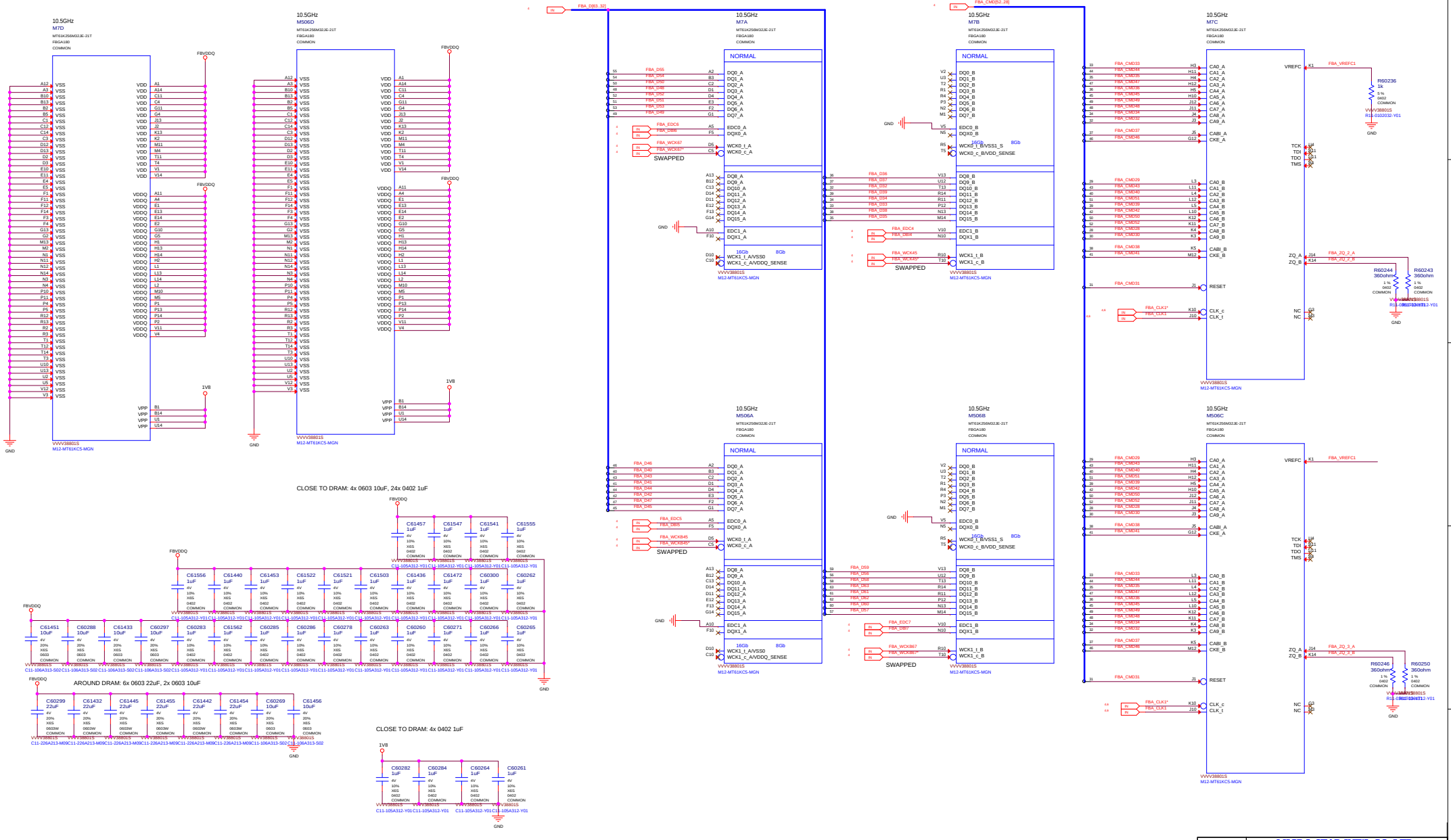

MICRO-STAR INT'L CO.,LTD		
MS-V388		
Size: Custom	Document Description: MEMORY: FBA Partition 63..32	Rev: 8.0
Date: Thursday, July 23, 2020	Sheet 6 of 78	

Page7: MEMORY: FBB Partition 31..0

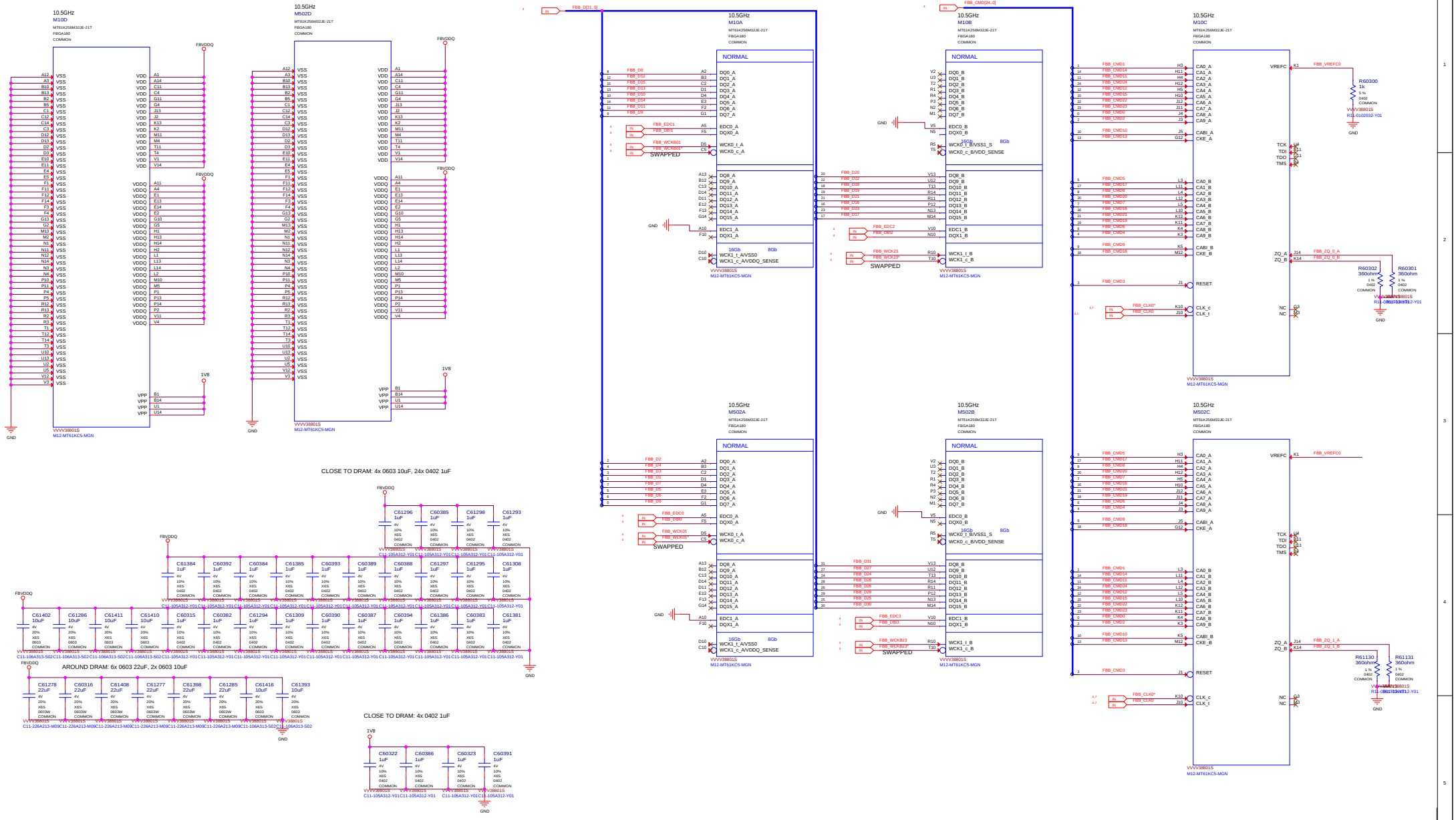

MICRO-STAR INT'L CO.,LTD		
MS-V388		
Size: Custom	Document Description: MEMORY: FBB Partition 31..0	Rev: 8.0
Date: Thursday, July 23, 2020	Sheet 7 of 78	

Page8: MEMORY: FBB Partition 63..32

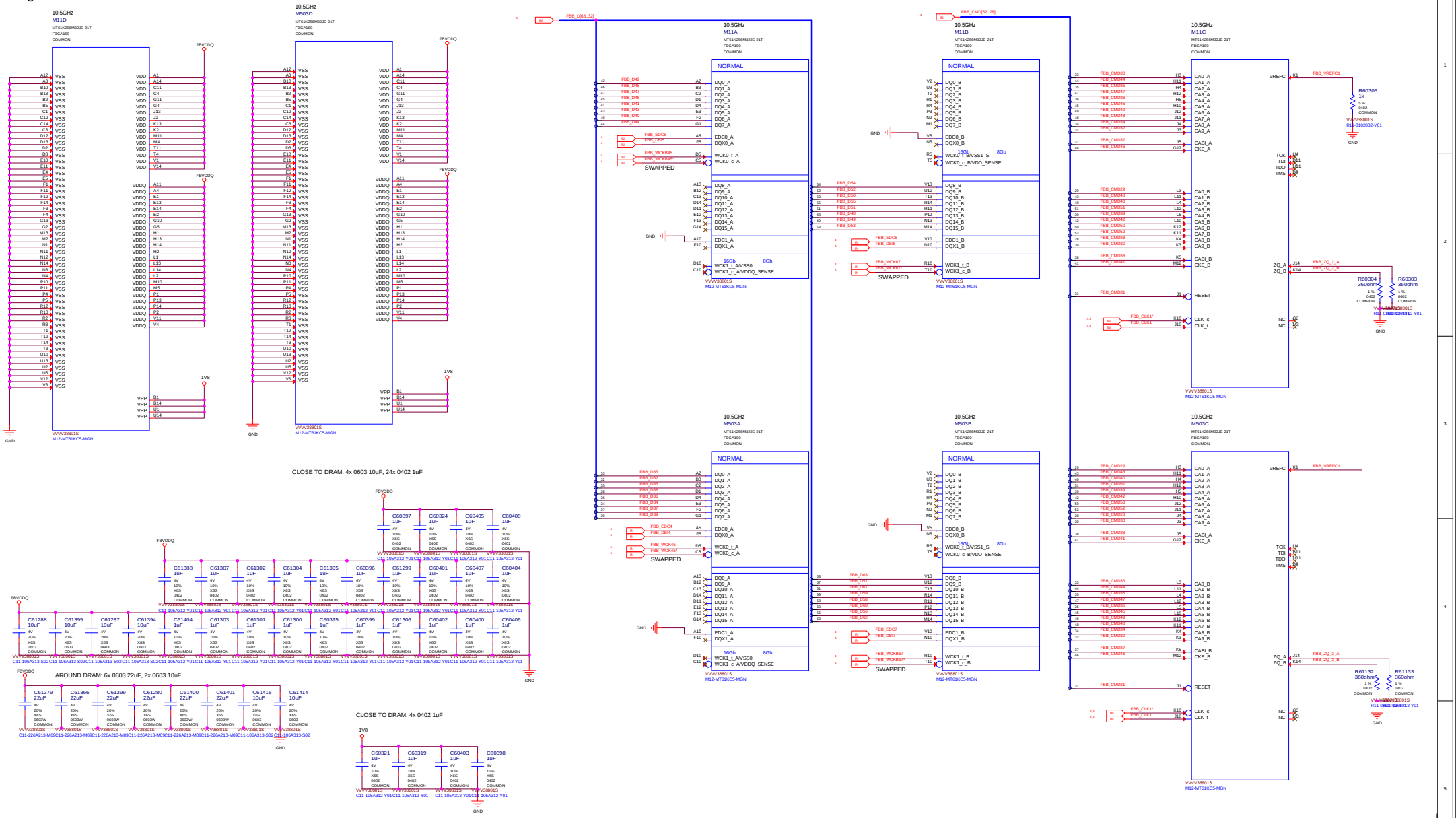

MICRO-STAR INT'L CO.,LTD	
MS-V388	
Size: Custom	Document Description: MEMORY: FBB Partition 63..32
Rev: 8.0	
Date: Thursday, July 23, 2020	Sheet 8 of 78

MEMORY: GPU Partition C/D

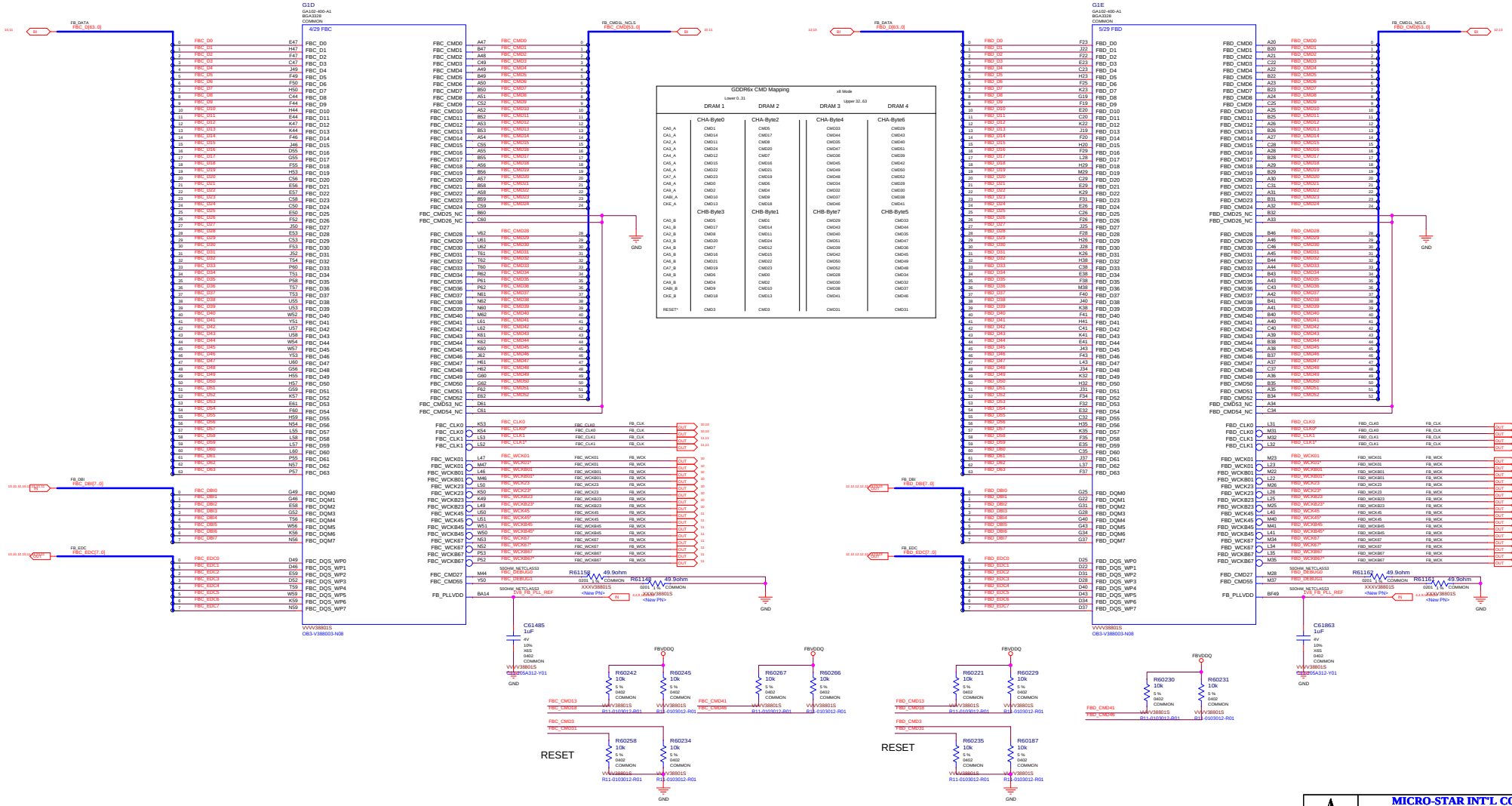

MICRO-STAR INT'L CO.,LTD

MS-V388

Size	Document Description	Rev
Custom	GPU Partition C/D	8.0

Date: Thursday, July 23, 2020 | Sheet 9 of 78

Page 10: MEMORY: FBC Partition 31..0

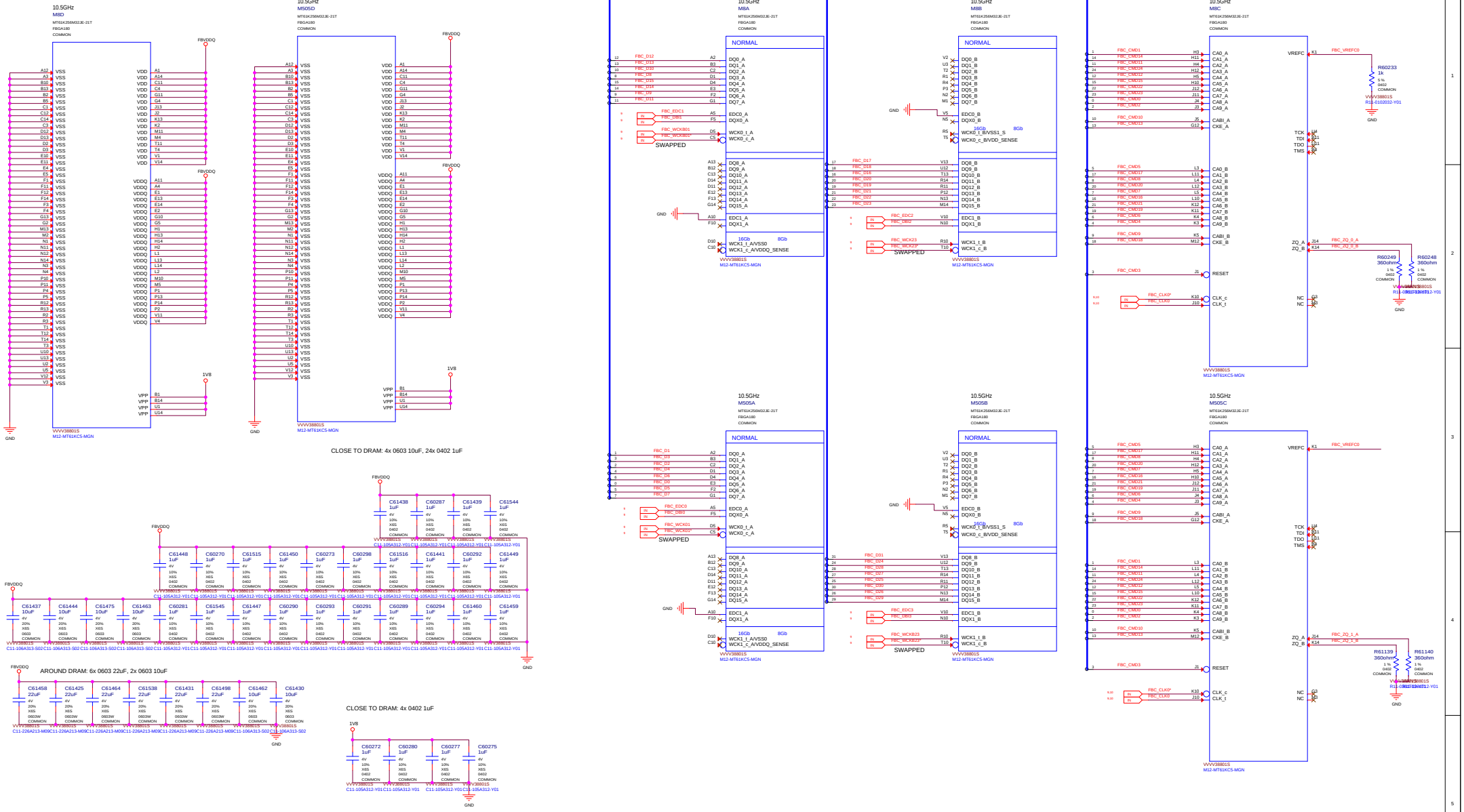

MICRO-STAR INT'L CO.,LTD

MS-V388

Size	Document Description	Rev
Custom	MEMORY: FBC Partition 31..0	8.0

Date: Thursday, July 23, 2020 Sheet 10 of 78

Page 11: MEMORY: FBC Partition 63..32

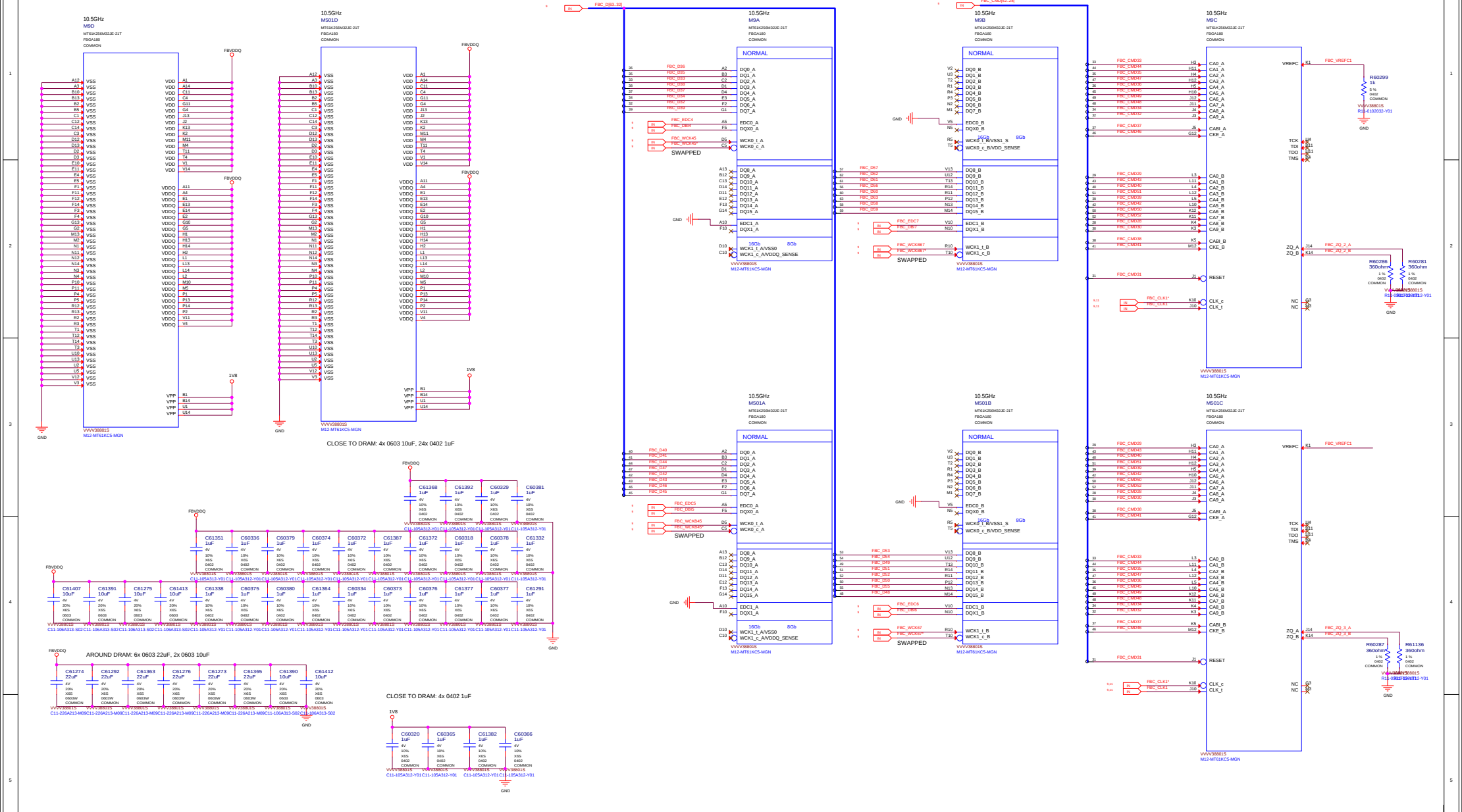

Page 12: MEMORY: FBD Partition 31..0

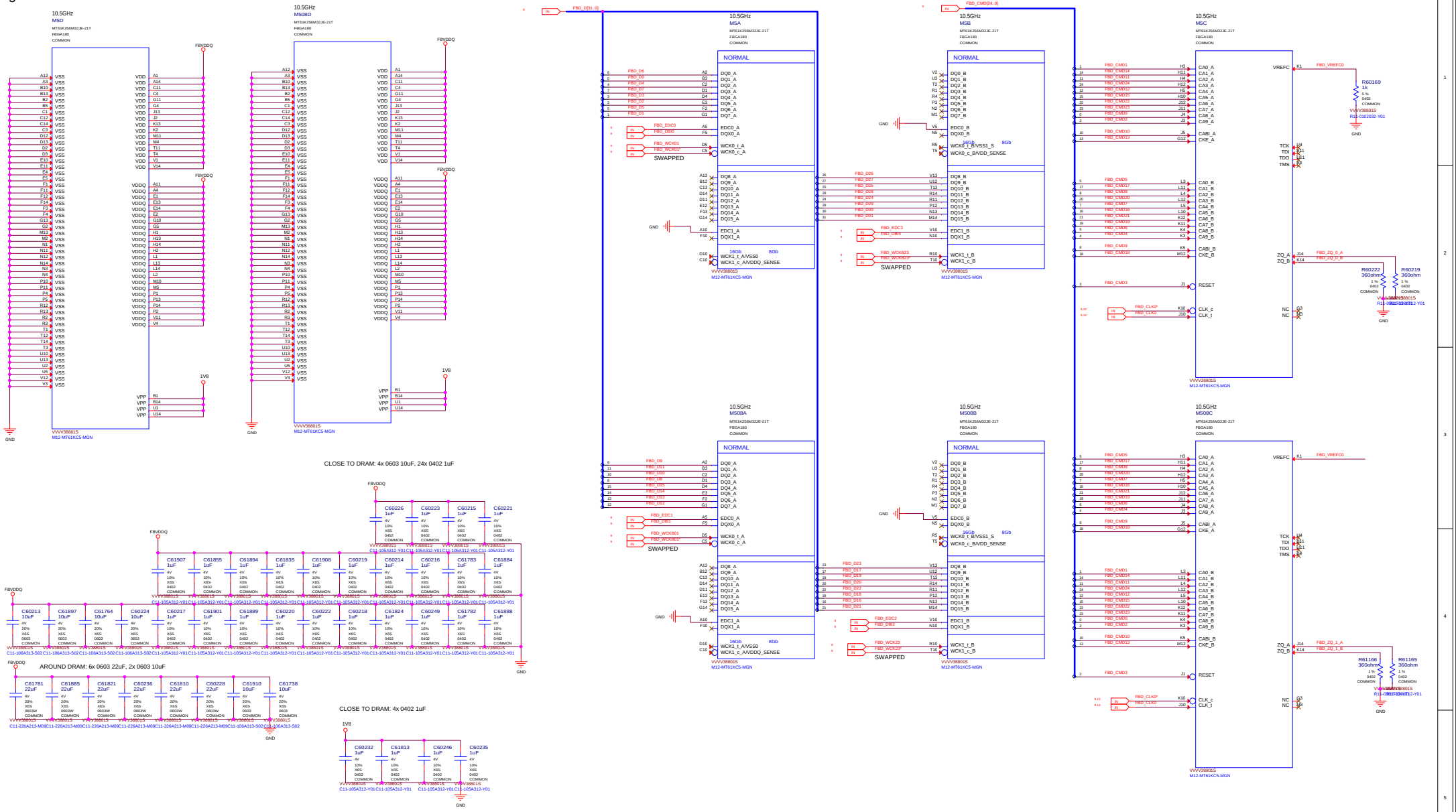

MICRO-STAR INT'L CO.,LTD	
MS-V388	
Size: Custom	Document Description: MEMORY: FBD Partition 31..0
Rev: 8.0	
Date: Thursday, July 23, 2020	Sheet 12 of 78

Page 13: MEMORY: FBD Partition 63..32

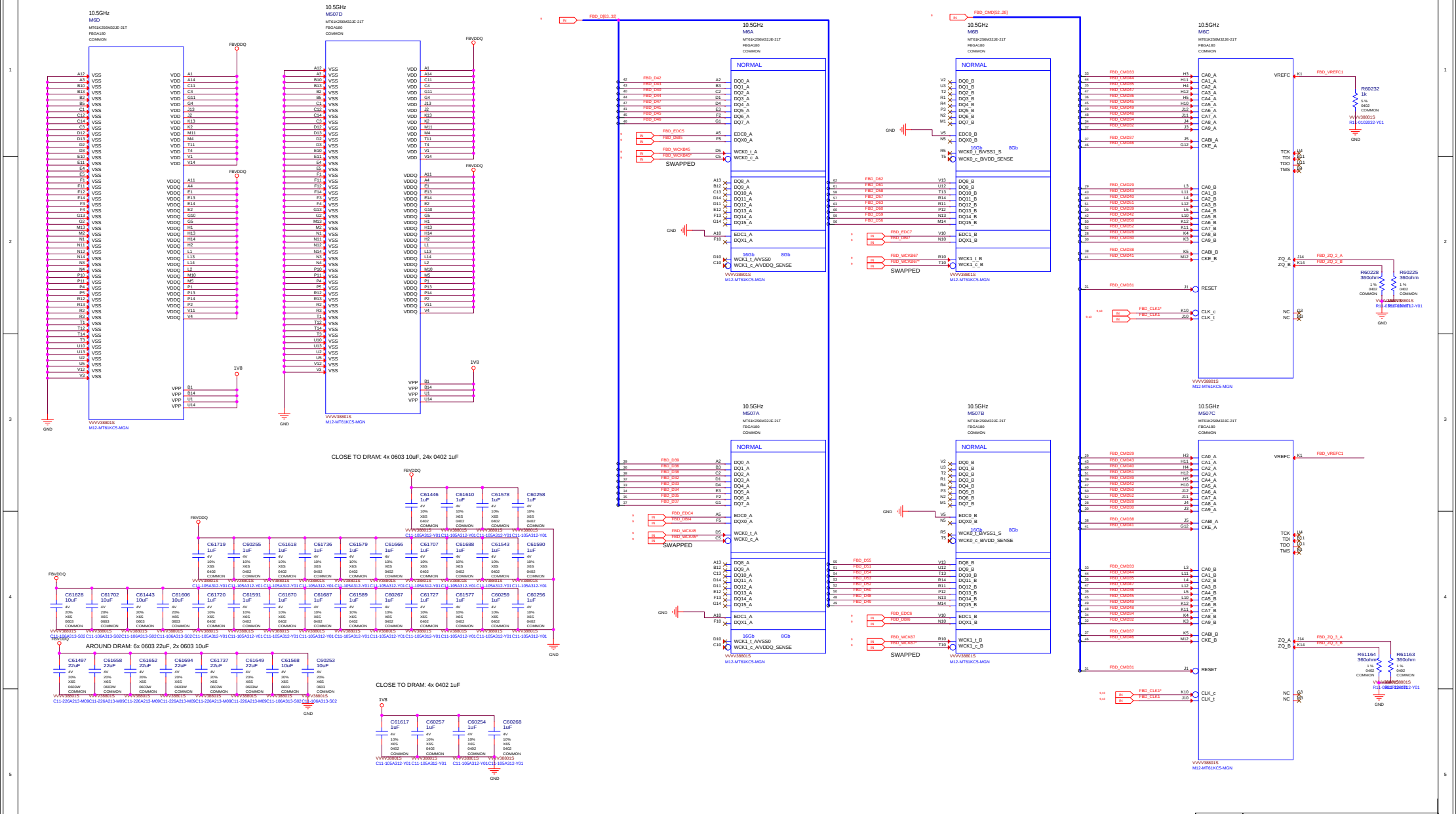

MICRO-STAR INT'L CO.,LTD

MS-V388

Size	Document Description	Rev
Custom	MEMORY: FBD Partition 63..32	8.0

Date: Thursday, July 23, 2020 Sheet 13 of 78

MEMORY: GPU Partition E/F

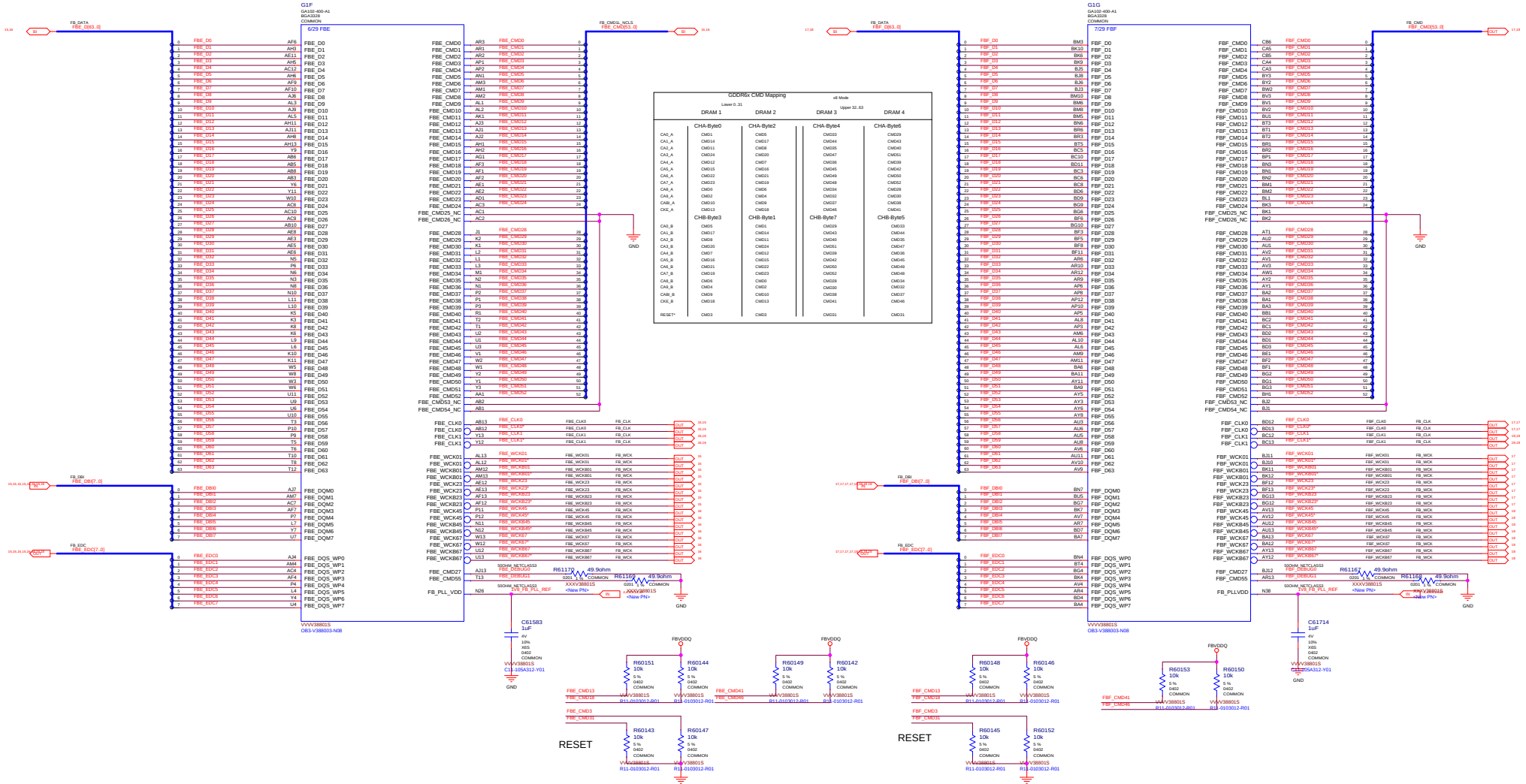

Page 15: MEMORY: FBE Partition 31..0

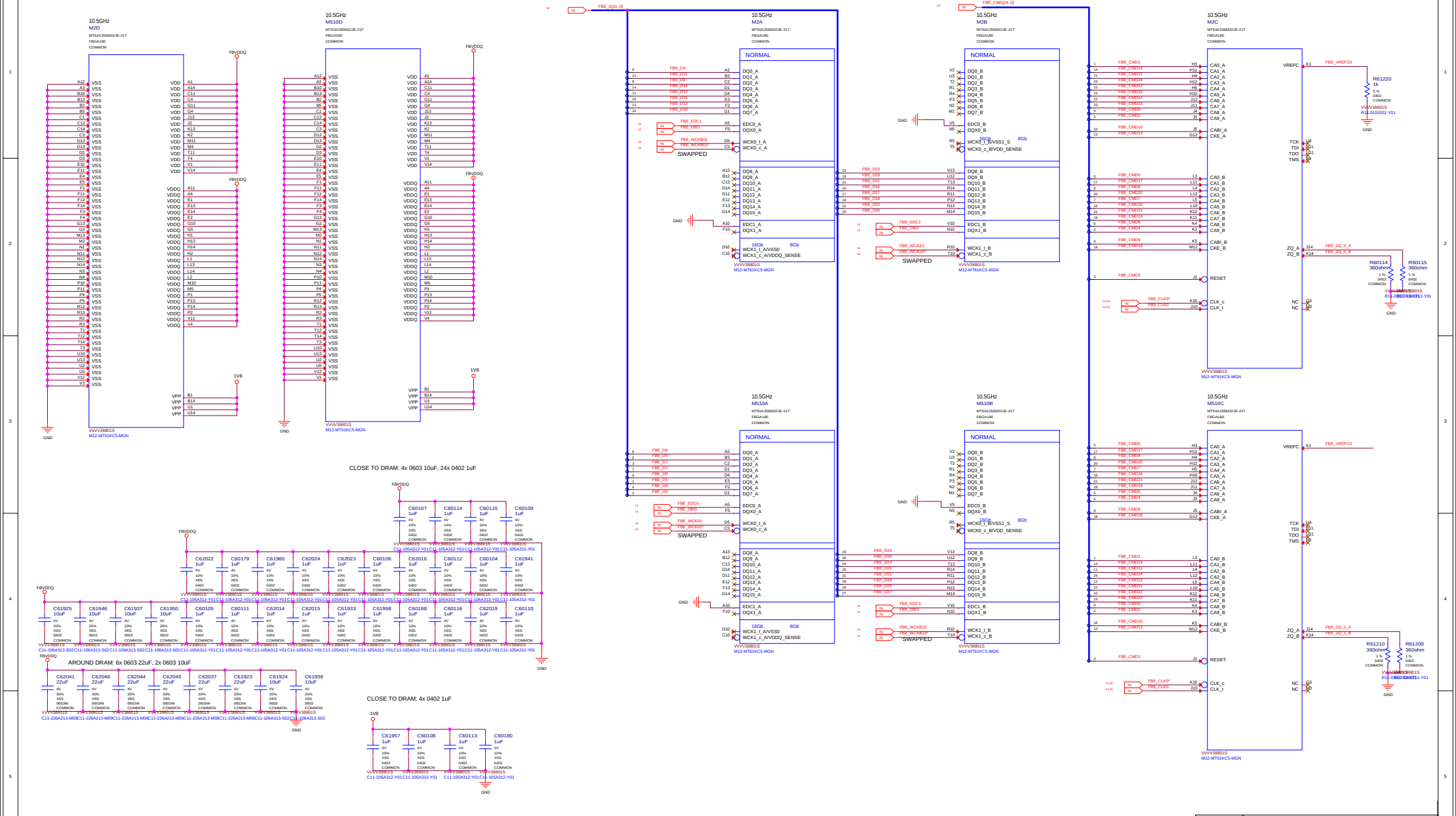

Page 16: MEMORY: FBE Partition 63..32

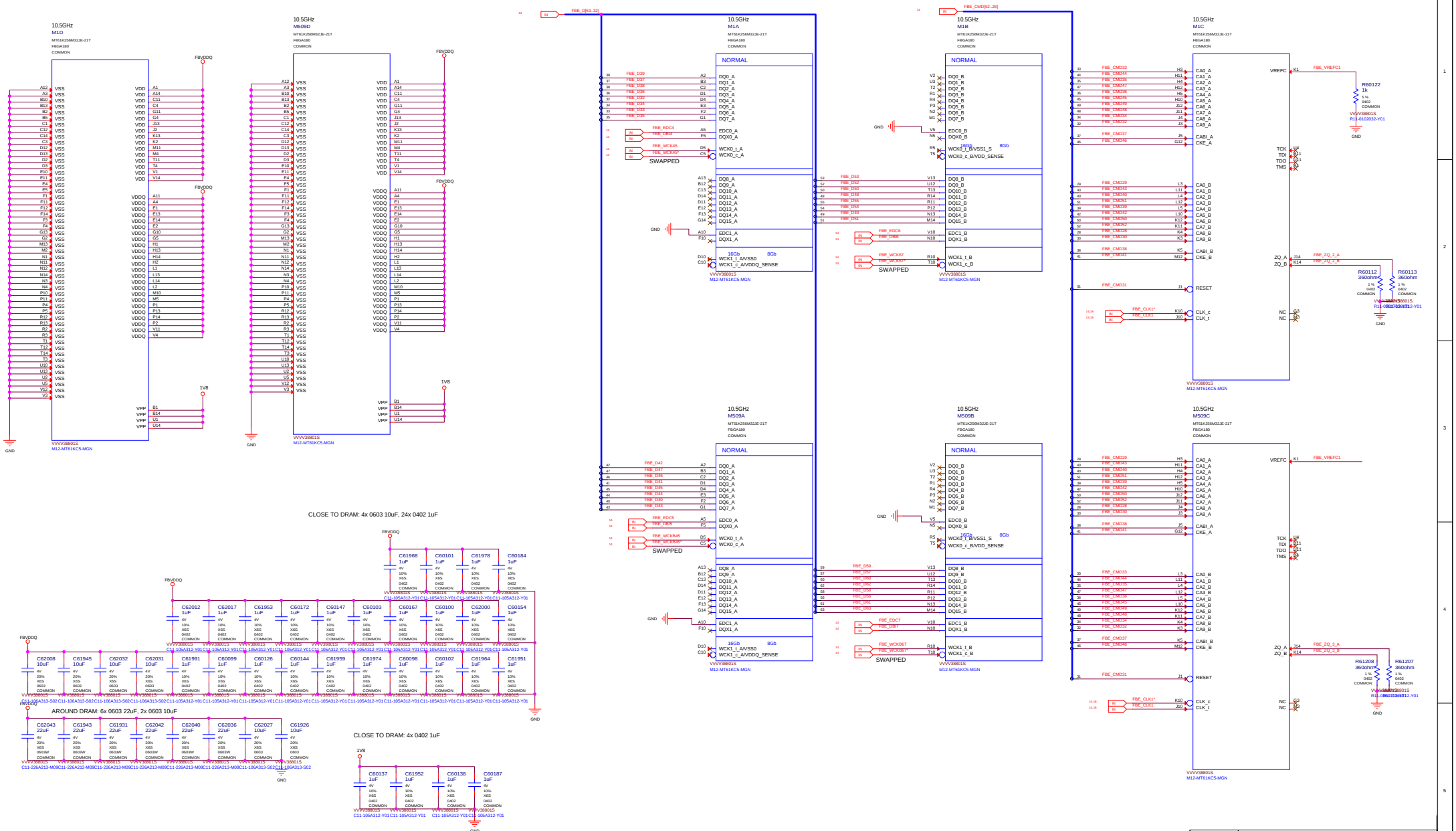

Page 17: MEMORY: FBF Partition 31..0

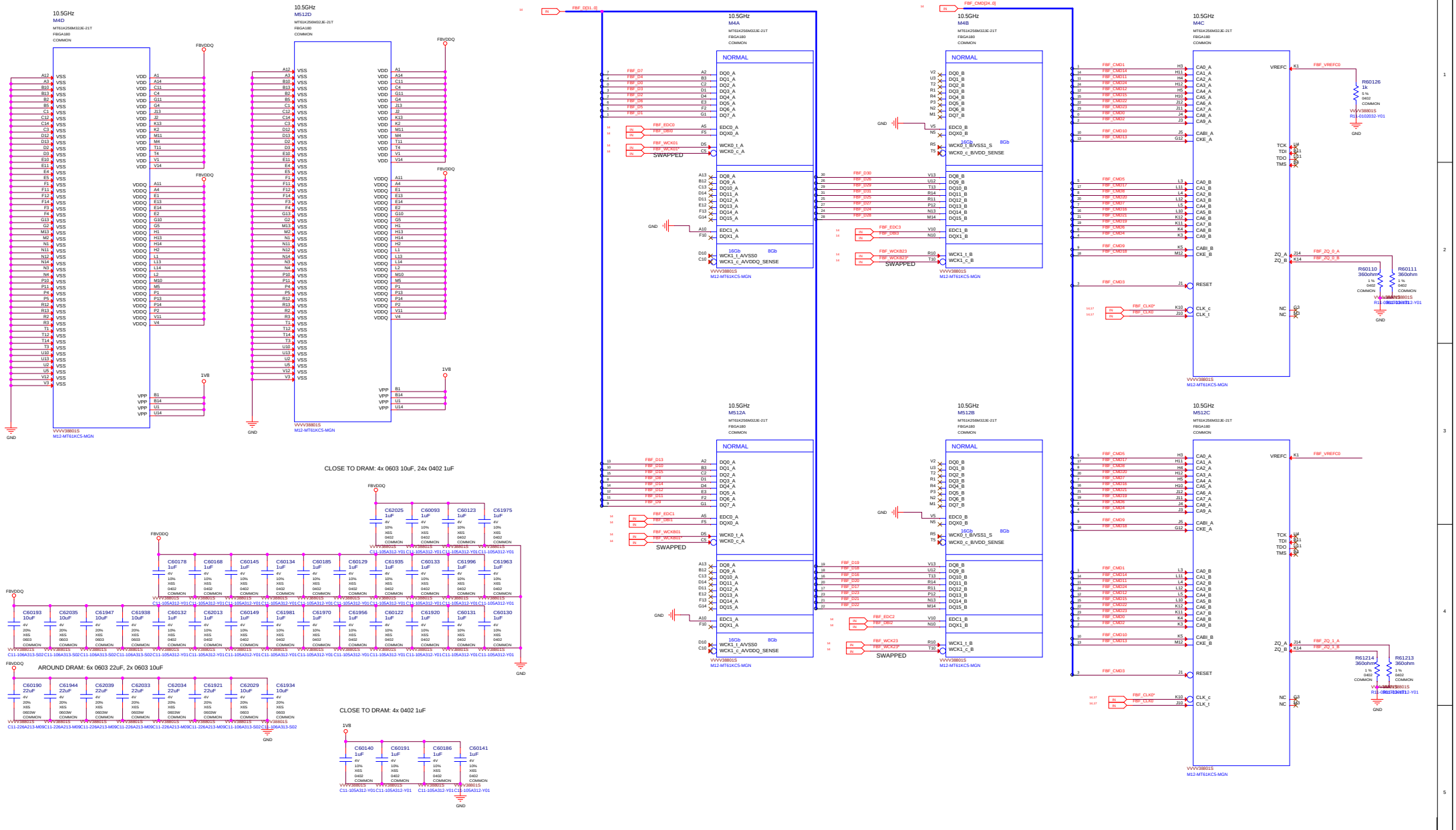

Page 18: MEMORY: FBF Partition 63..32

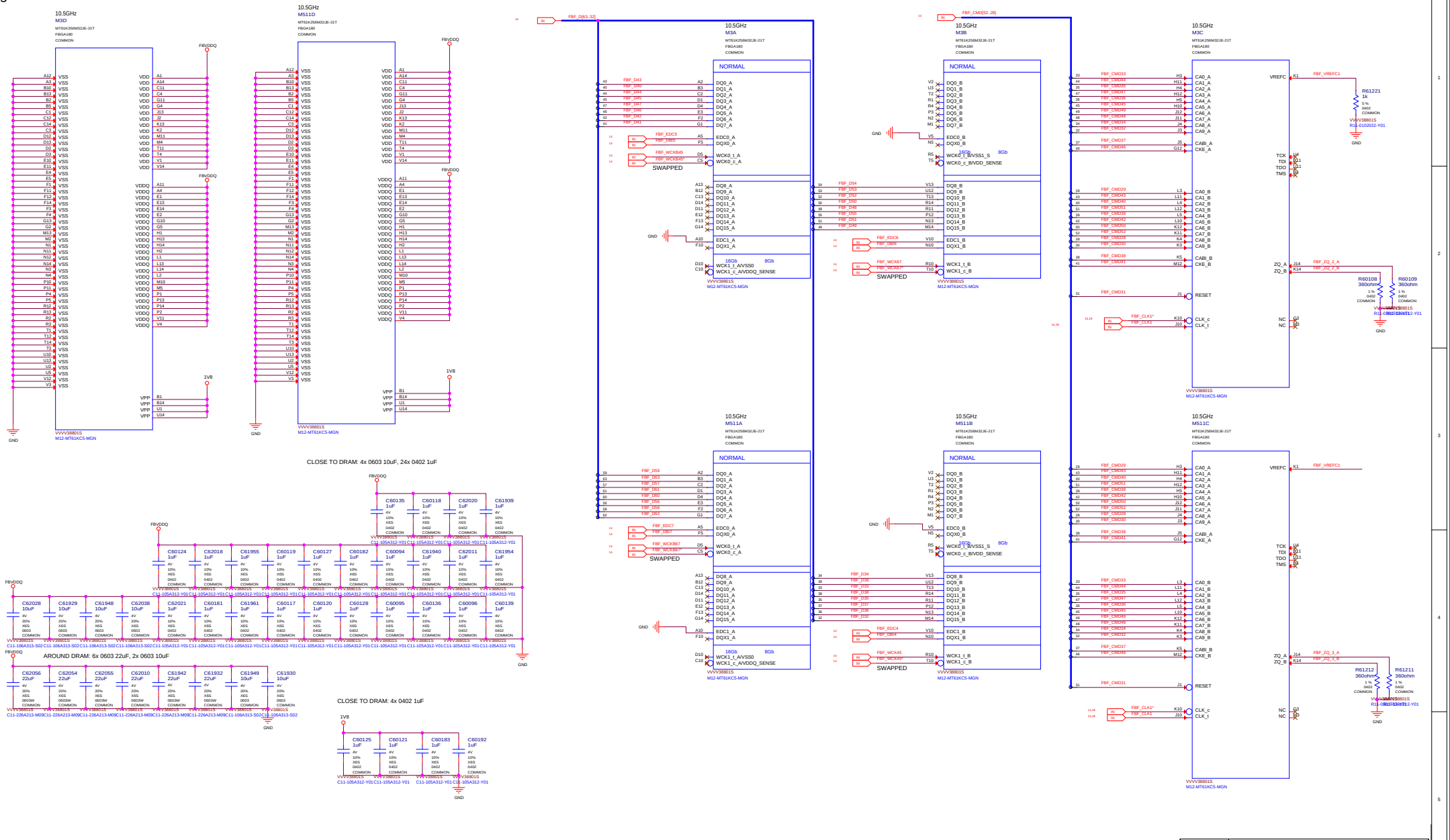

GPU GND, RFUs & RSVD

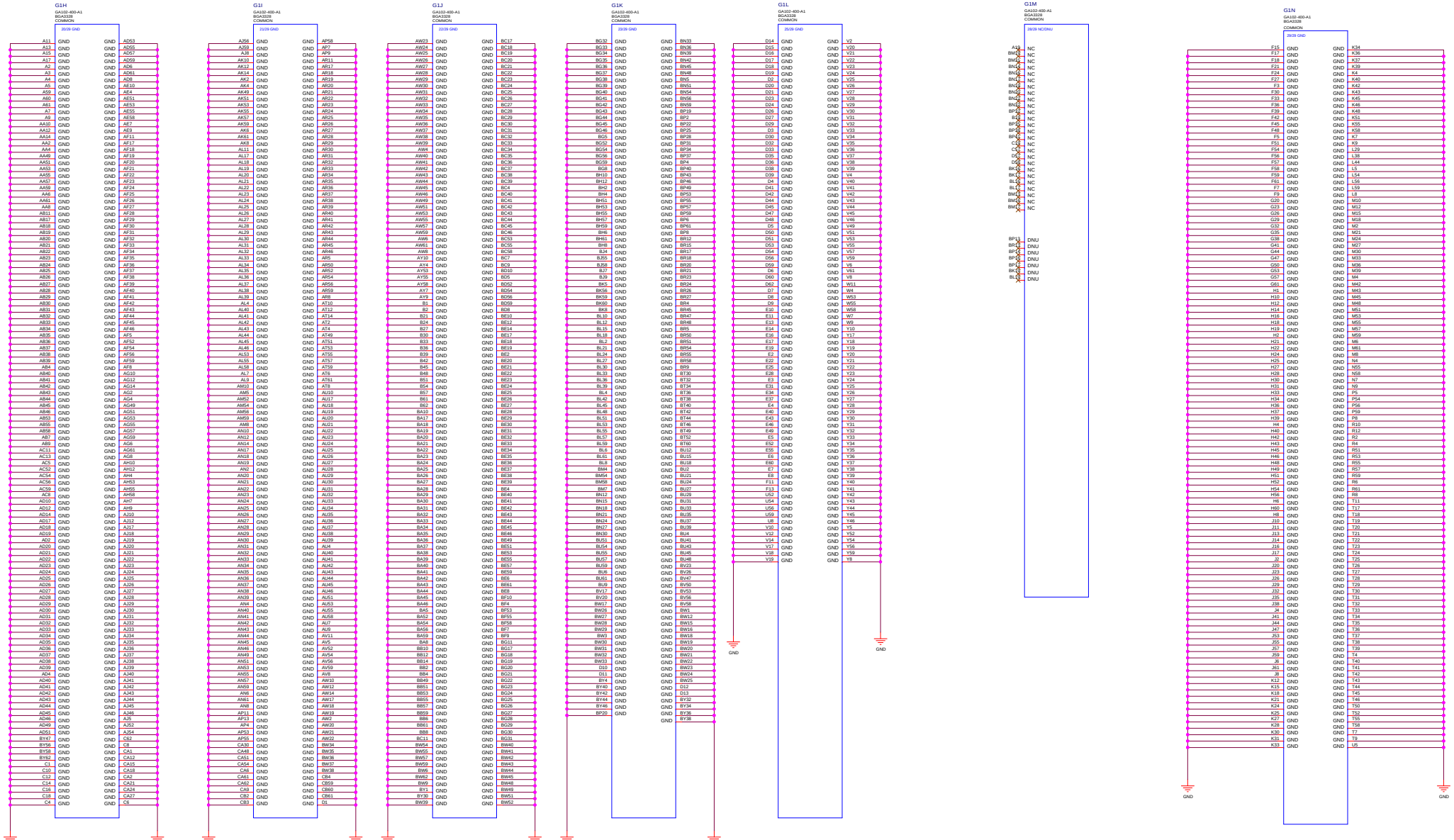

MICRO-STAR INT'L CO.,LTD	
MS-V388	
Size: Custom	Document Description: GPU GND, RFUs & RSVD
Rev: 8.0	
Date: Thursday, July 23, 2020	Sheet 19 of 78

GPU PWR and GND

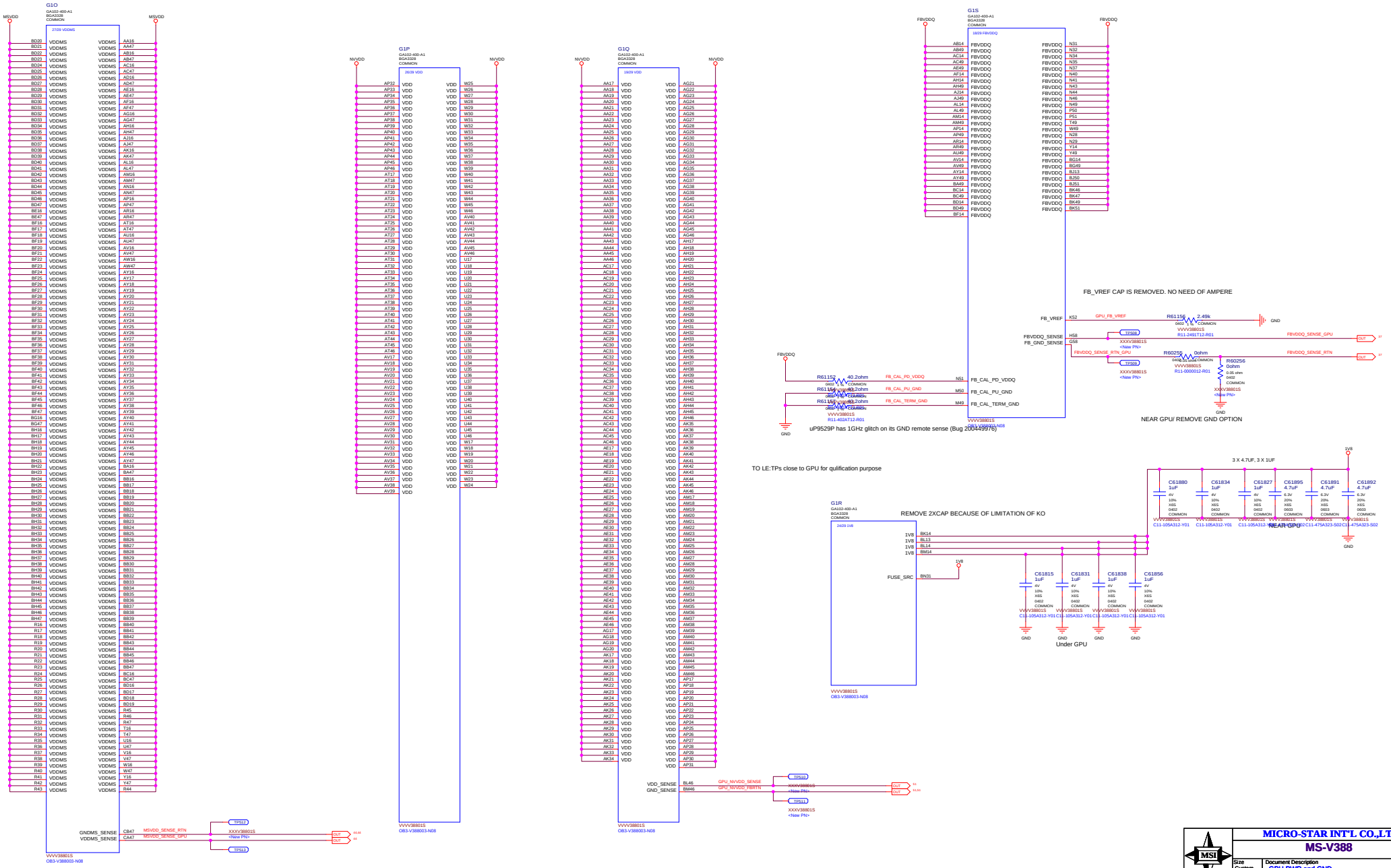

MICRO-STAR INT'L CO.,LTD	
MS-V388	
Size: Custom	Document Description: GPU PWR and GND
Rev: 8.0	
Date: Thursday, July 23, 2020	Sheet 20 of 78

NVVDD

UNDER GPU

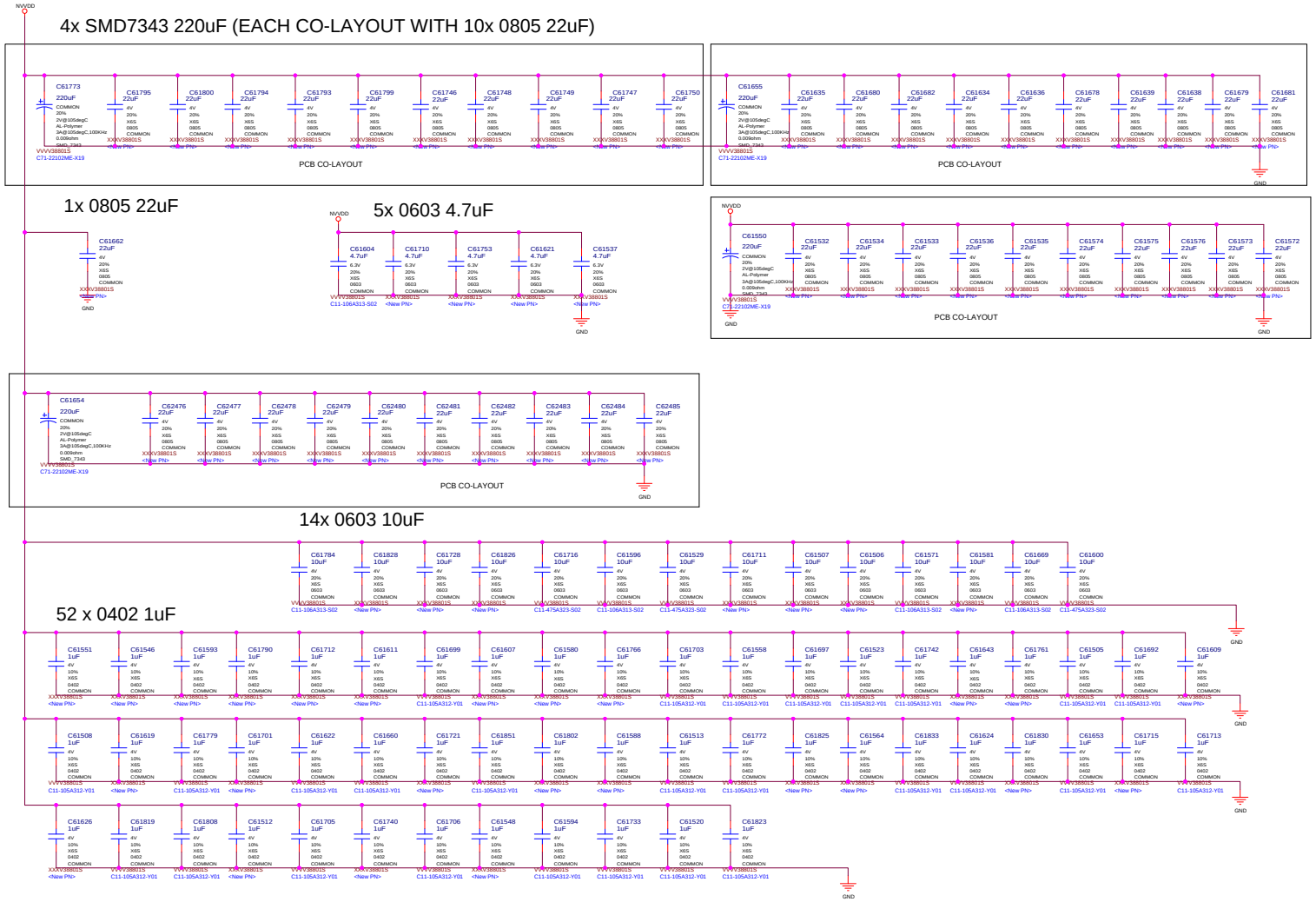

MICRO-STAR INT'L CO.,LTD

MS-V388

Size	Document Description	Rev
Custom	GPU: NVVDD DECOUPLING	8.0

Date: Thursday, July 23, 2020 Sheet 21 of 78

FBVDDQ

Under GPU

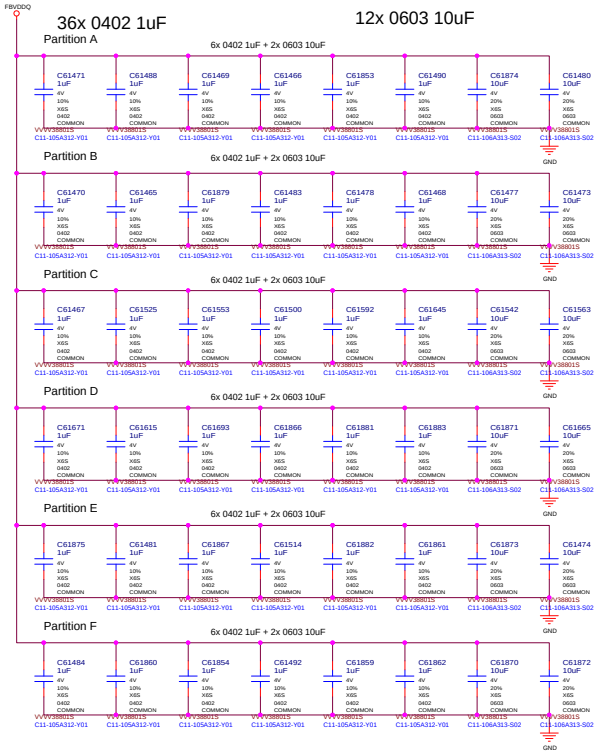

Close to GPU

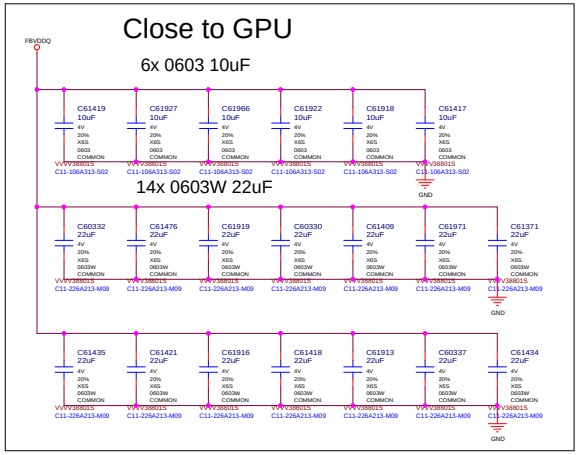

UNDER GPU

MSVDD

14x 0603 10uF

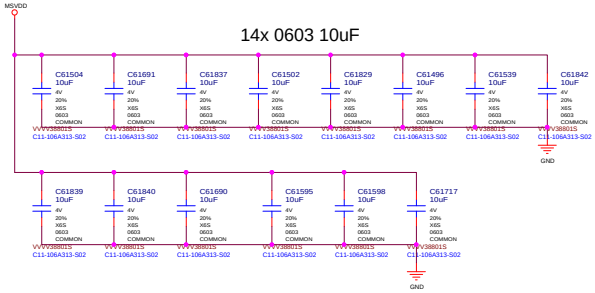

2x SMD7343 220uF (EACH CO-LAYOUT WITH 10x 22uF 0805)

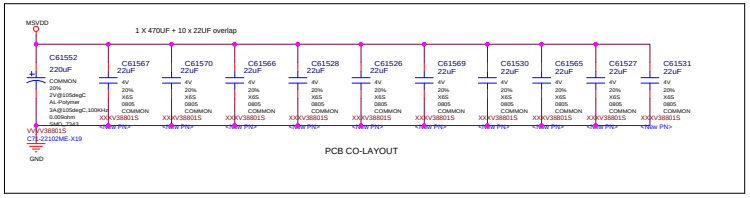

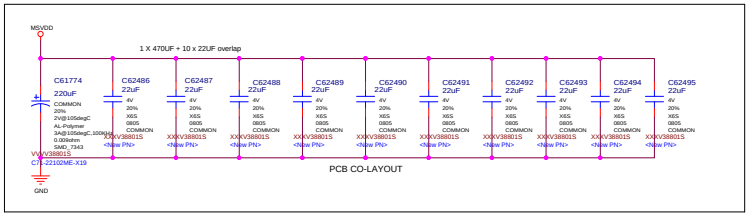

47x 0402 1uF

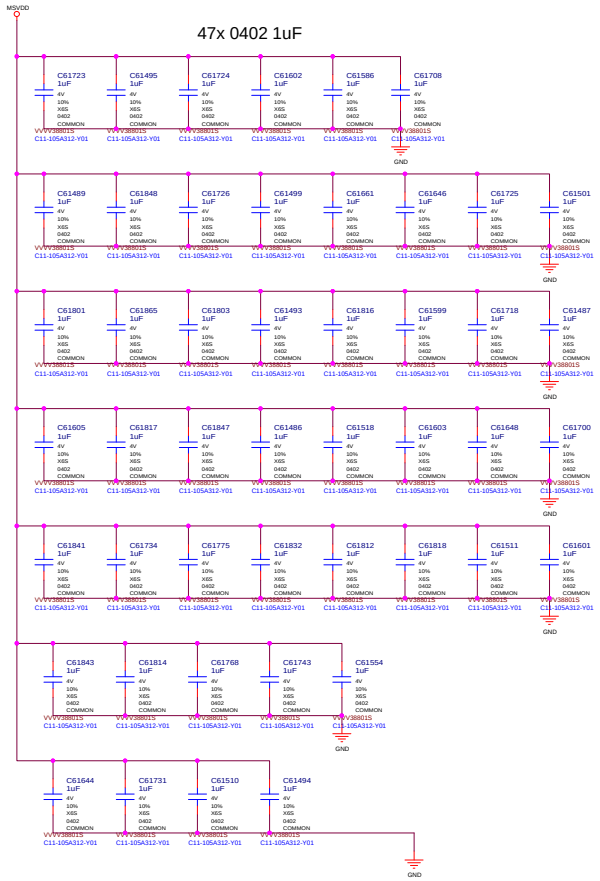

REMOVED 3X 1uF 0402 DUE TO SPACE RESTRICTION

MICRO-STAR INT'L CO.,LTD		
MS-V388		
Size: Custom	Document Description: GPU: MSVDD DECOUPLING	Rev: 8.0
Date: Thursday, July 23, 2020	Sheet 23 of 78	

BLANK

MICRO-STAR INT'L CO.,LTD		
MS-V388		
Size: Custom	Document Description: BLANK	Rev: 8.0
Date: Wednesday, July 22, 2020	Sheet 24 of 78	

NVHS Interface and FRAME LOCK

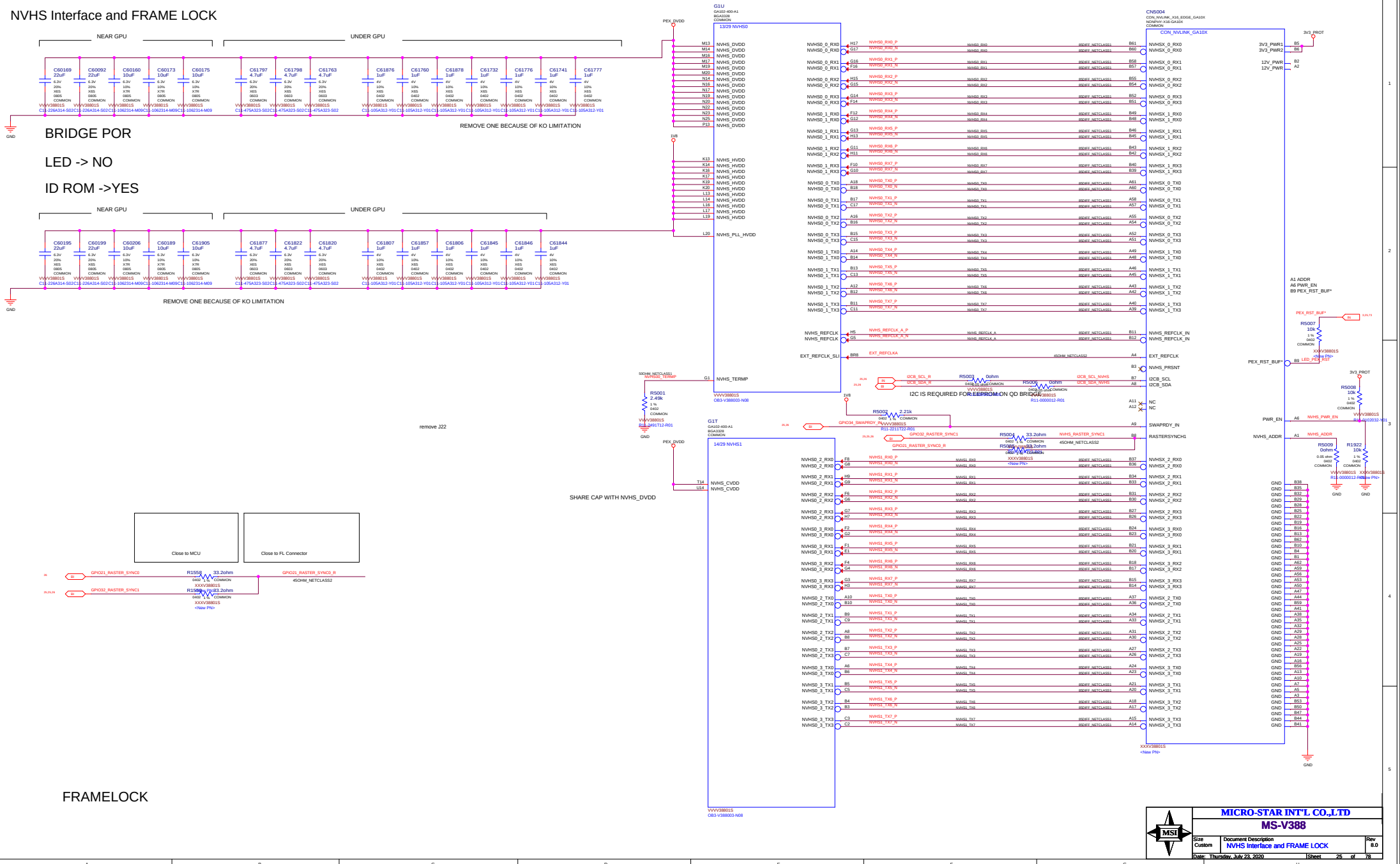

MISC1: Fan, Thermal, JTAG, GPIO, STEREO

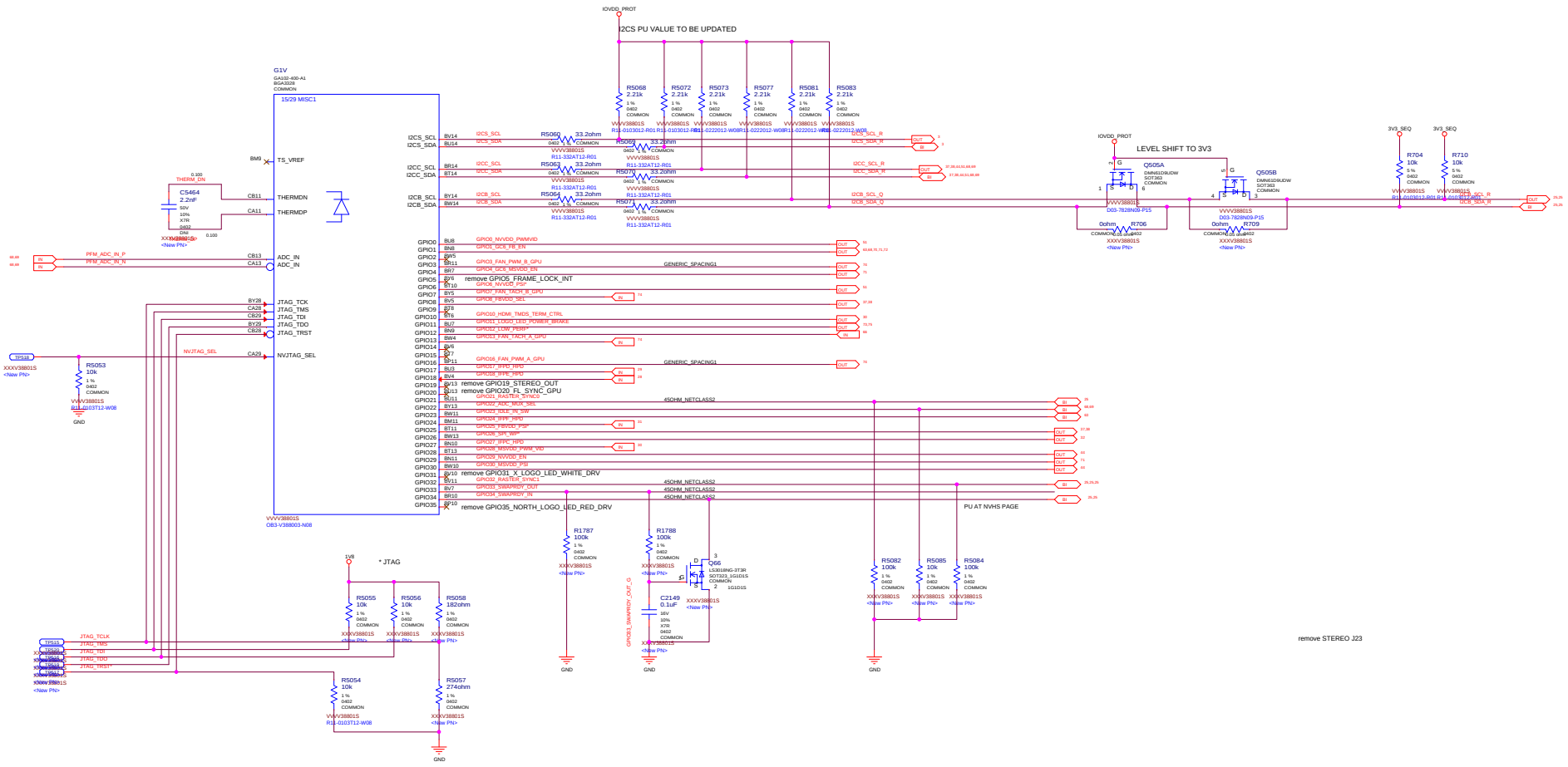

MICRO-STAR INT'L CO.,LTD		
MS-V388		
Size Custom	Document Description MISC1: Fan, Thermal, JTAG, GPIO, STEREO	Rev 8.0
Date: Thursday, July 23, 2020	Sheet 26 of 78	

IFPA UNUSED, IFPB UNUSED

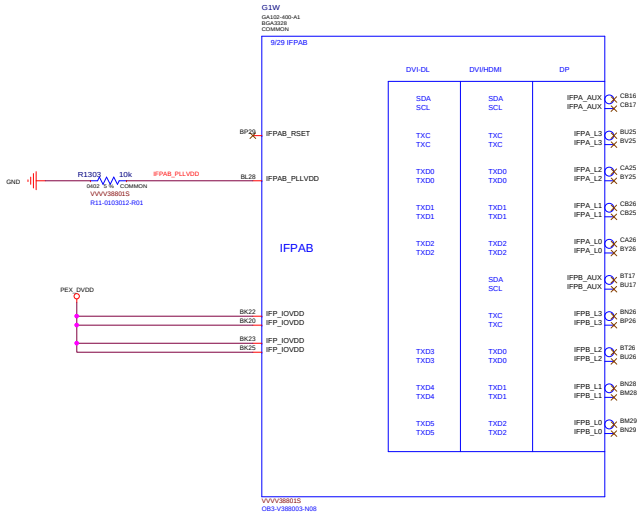

MICRO-STAR INT'L CO.,LTD		
MS-V388		
Size: Custom	Document Description: IFPA UNUSED, IFPB UNUSED	Rev: 8.0
Date: Thursday, July 23, 2020	Sheet 27 of 78	

IFPE DP

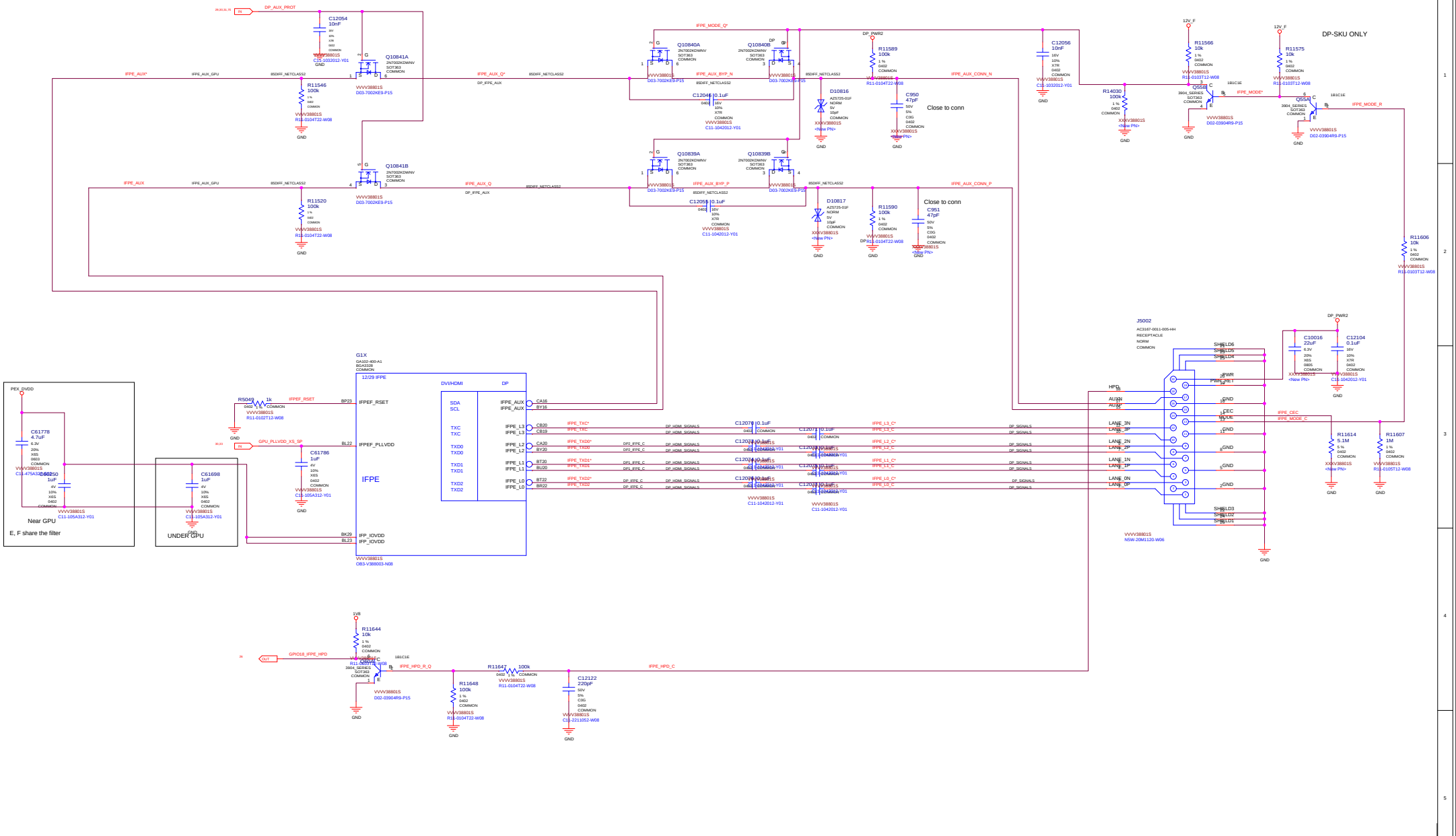

MICRO-STAR INT'L CO.,LTD		
MS-V388		
Size: Custom	Document Description: IFPE DP	Rev: 8.0
Date: Thursday, July 23, 2020	Sheet 28 of 78	

IFPD DP

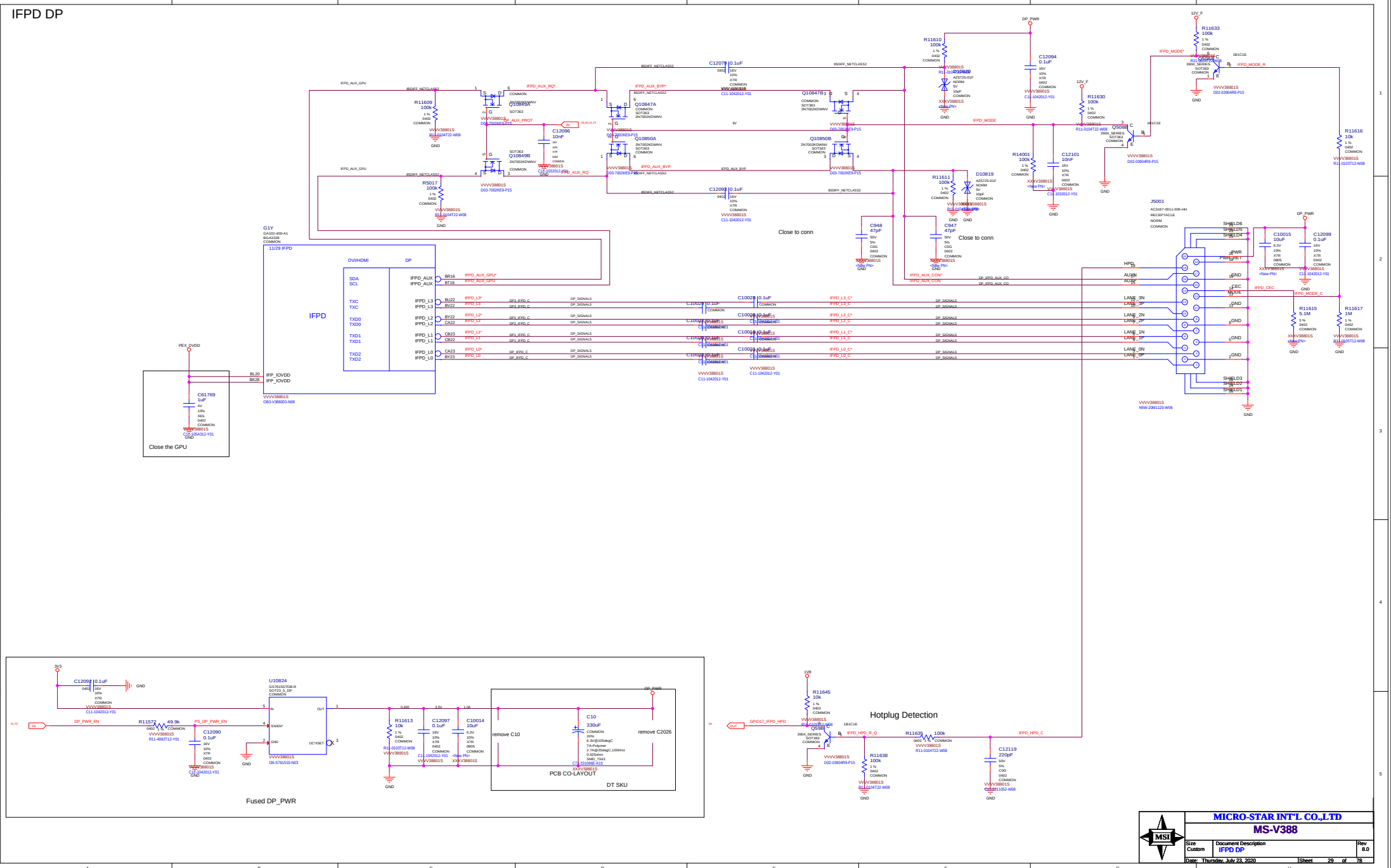

MICRO-STAR INT'L CO.,LTD		
MS-V388		
Size: Custom	Document Description: IFPD DP	Rev: 8.0
Date: Thursday, July 23, 2020	Sheet 29 of 78	

IFPC HDMI/DP

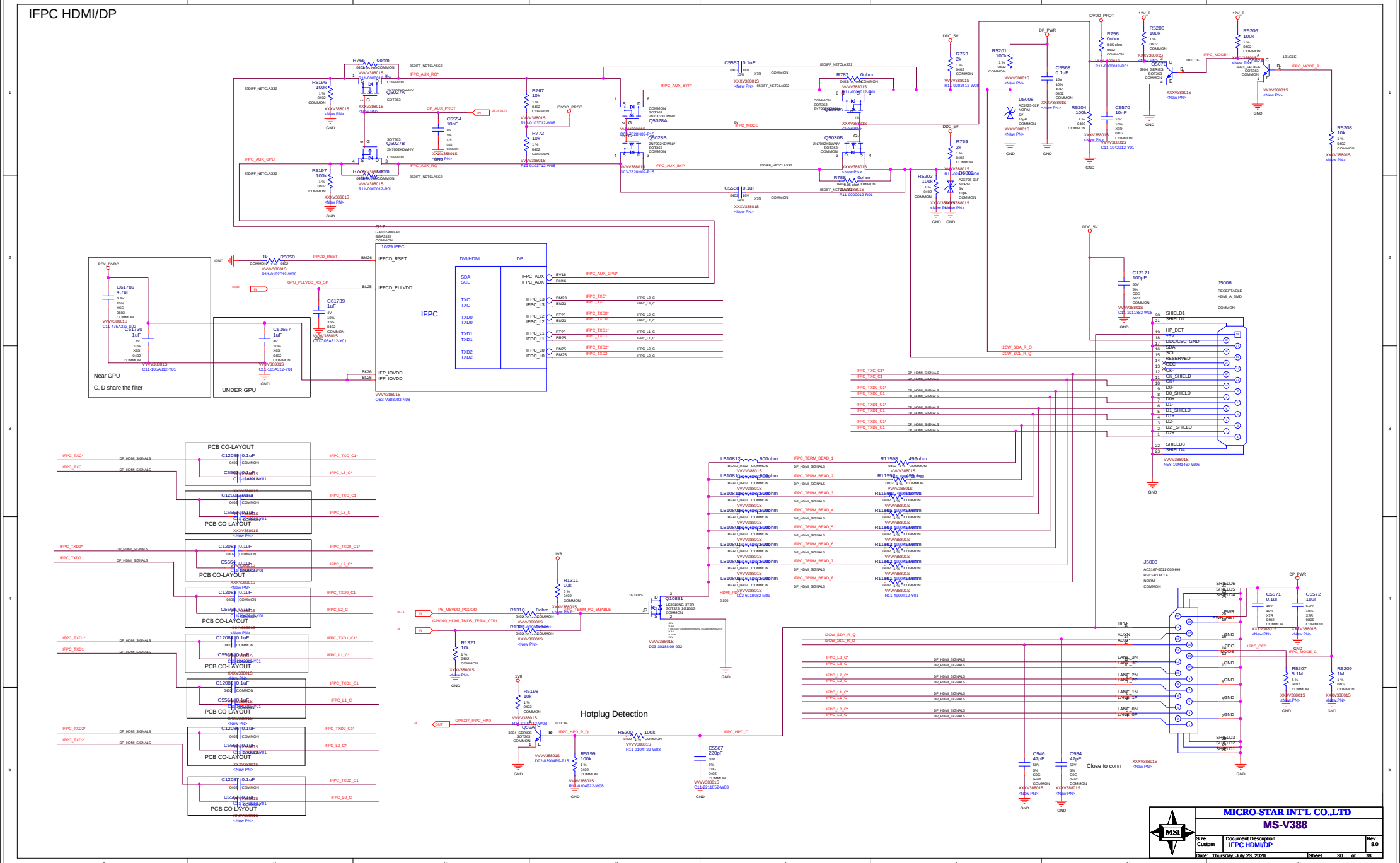

MICRO-STAR INT'L CO.,LTD

MS-V388

Size	Document Description	Rev
Custom	IFPC HDMI/DP	8.0

Date: Thursday, July 23, 2020 Sheet 30 of 78

IFPF DP

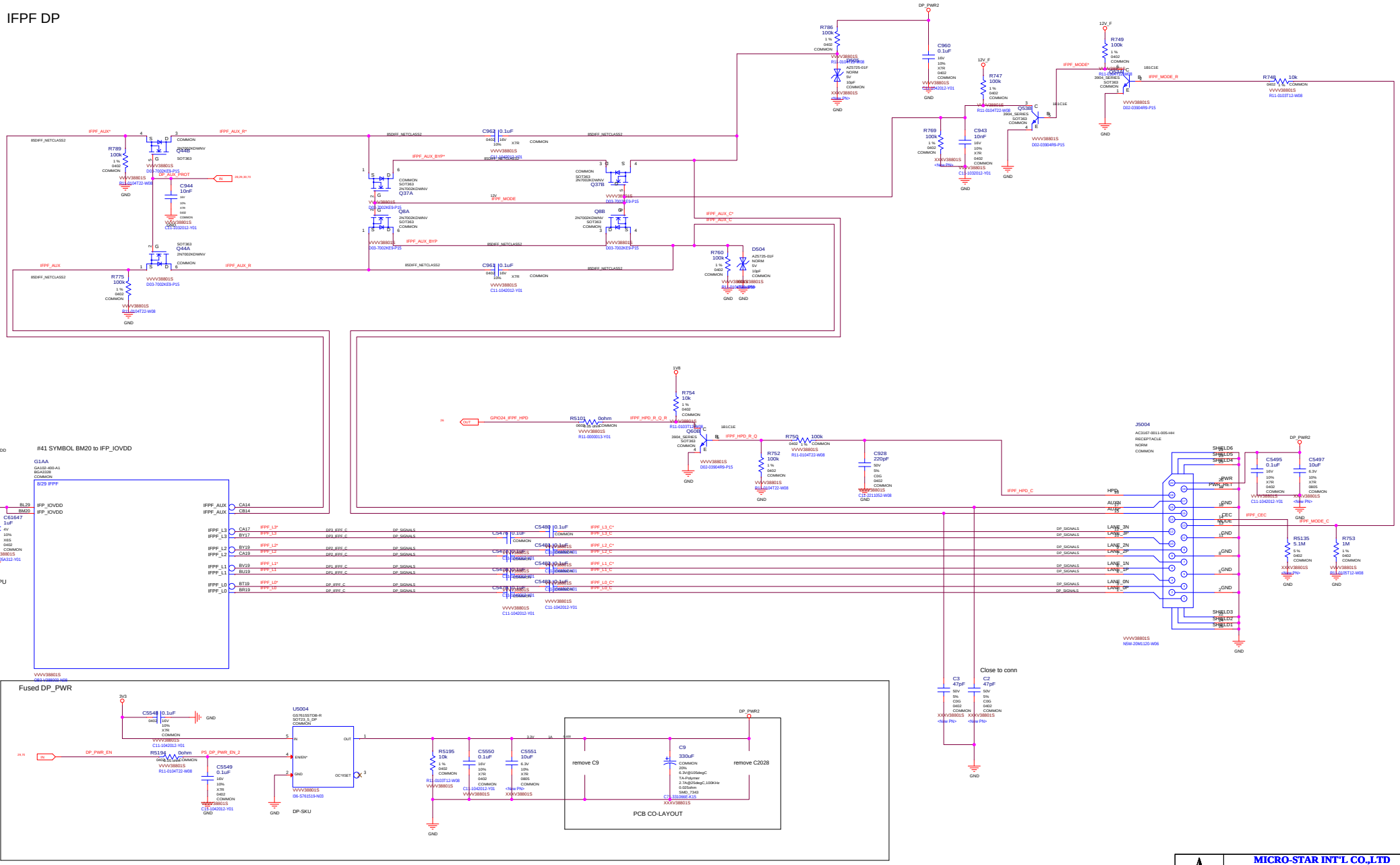

MICRO-STAR INT'L CO.,LTD

MS-V388

Size	Document Description	Rev
Custom	IFPF DP	8.0

Date: Thursday, July 23, 2020 Sheet 31 of 78

MISC: ROM, Straps

STRAP2	STRAP1	STRAP0	RAMCFG[4:0]		
L	L	L	00000	RAMCFG MICRON 8Gb 19Gbps	
L	H	L	00010	RAMCFG TBD	
H	L	L	00100	RAMCFG TBD	
H	L	H	00101	RAMCFG TBD	
H	L	H	00101	RAMCFG MICRON 8Gb 21Gbps	DEFAULT

H=High :Tied to 1.8V
M=Middle:Tied to 0.9V
L=Low :Tied to 0V

ROM_SO	ROM_SI	ROM_SCLK	SMARTFAN[2:0],FS_OVERT	1:ENABLE 0:DISABLE	
H	H	H	0111	FS_OVERT ENABLE	DEFAULT
L	L	L	0000	FS_OVERT DISABLE	

STRAP5	STRAP4	STRAP3	SMB_ALT_ADDR	DEVID_SEL	PCIE_CFG	VGA_DEVICE	
M	H	H	1	1	1	1	
M	H	L	1	H 1	1	0	
M	L	H	1	1	0	1	
M	L	L	1	1	0	0	
L	H	M	1	0	1	1	
L	M	H	1	0	1	0	
L	M	L	1	0	0	1	
L	L	M	1	0	0	0	
H	H	H	0	1	1	1	
H	H	L	0	1	1	0	
H	L	H	0	1	0	1	
H	L	L	0	1	0	0	
L	H	H	0	0	1	1	
L	H	L	0	0	1	0	
L	L	H	0	0	0	1	Default
L	L	L	0	0	0	0	

1:SMB_ALT_ADDR ENABLE
0:SMB_ALT_ADDR DISABLE

1:DEVID_SEL REBRAND
0:DEVID_SEL ORIGNAL

1:PCIE_CFG LOW POWER
0:PCIE_CFG HIGH POWER

1:VGA_DEVICE ENABLE
0:VGA_DEVICE DISABLE

GROUP0

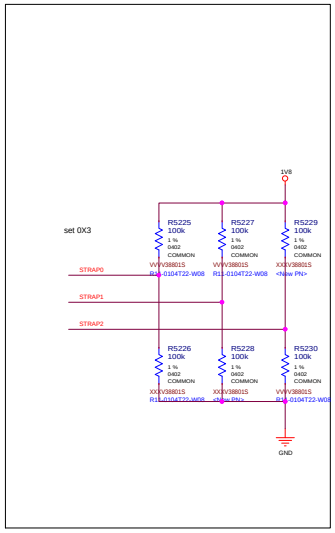

GROUP1

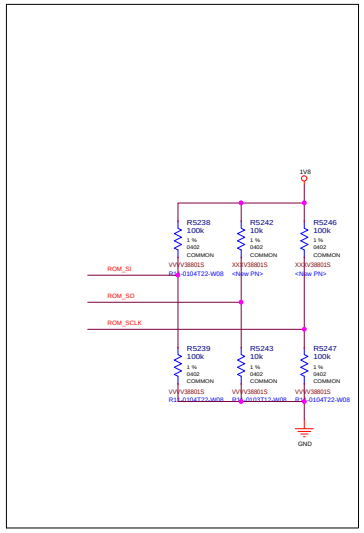

Dual BIOS

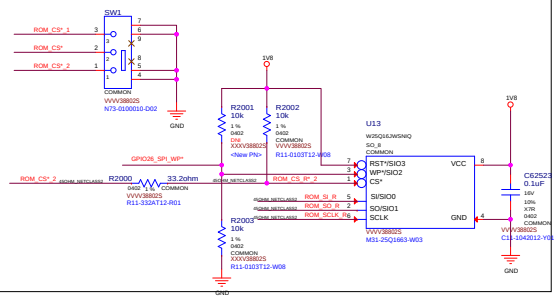

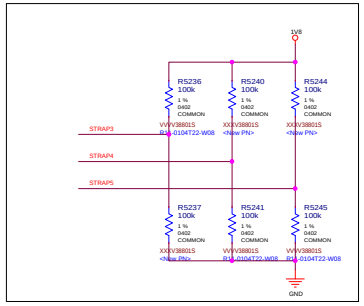

GROUP2

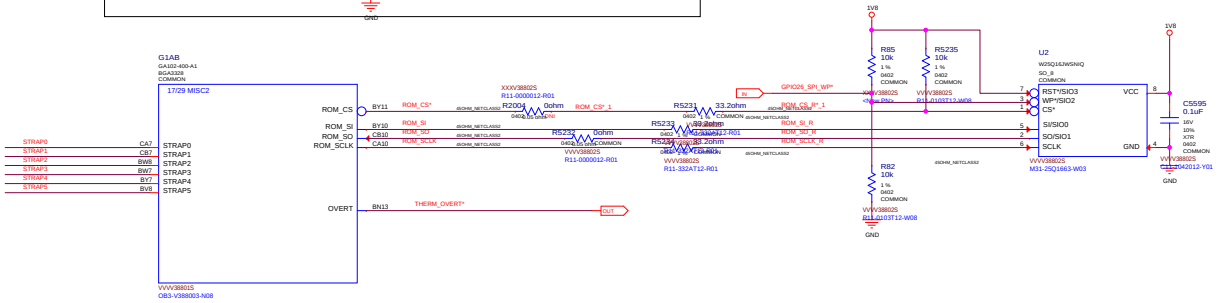

MICRO-STAR INT'L CO.,LTD	
MS-V388	
Size: Custom	Document Description: MISC: ROM, Straps
Rev: 8.0	
Date: Thursday, July 23, 2020	Sheet 32 of 78

MISC: XTAL. PLL

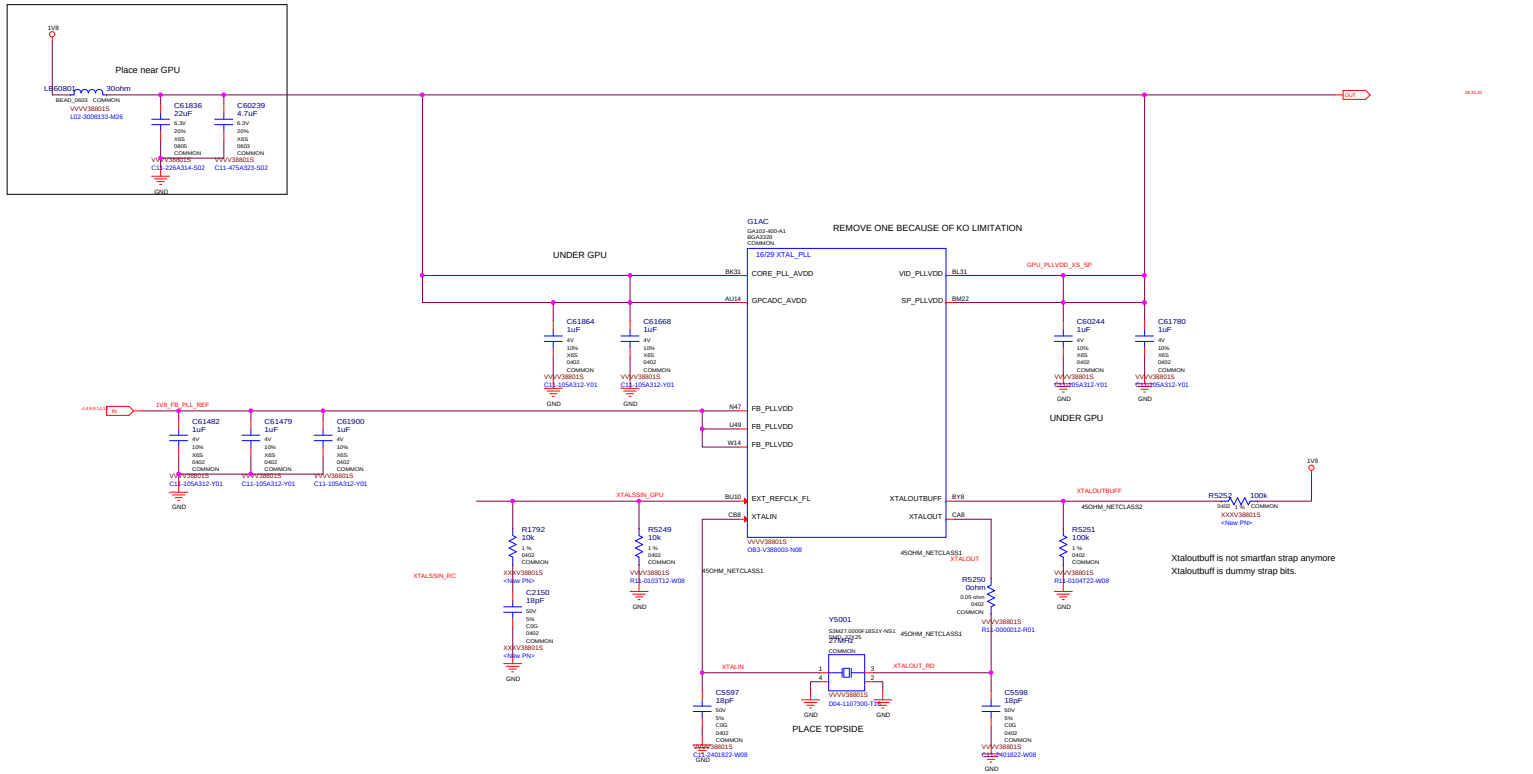

MICRO-STAR INT'L CO.,LTD		
MS-V388		
Size: Custom	Document Description: MISC: XTAL. PLL	Rev: 8.0
Date: Thursday, July 23, 2020	Sheet 33 of 78	

PS: 5V, 5V_BACKUP

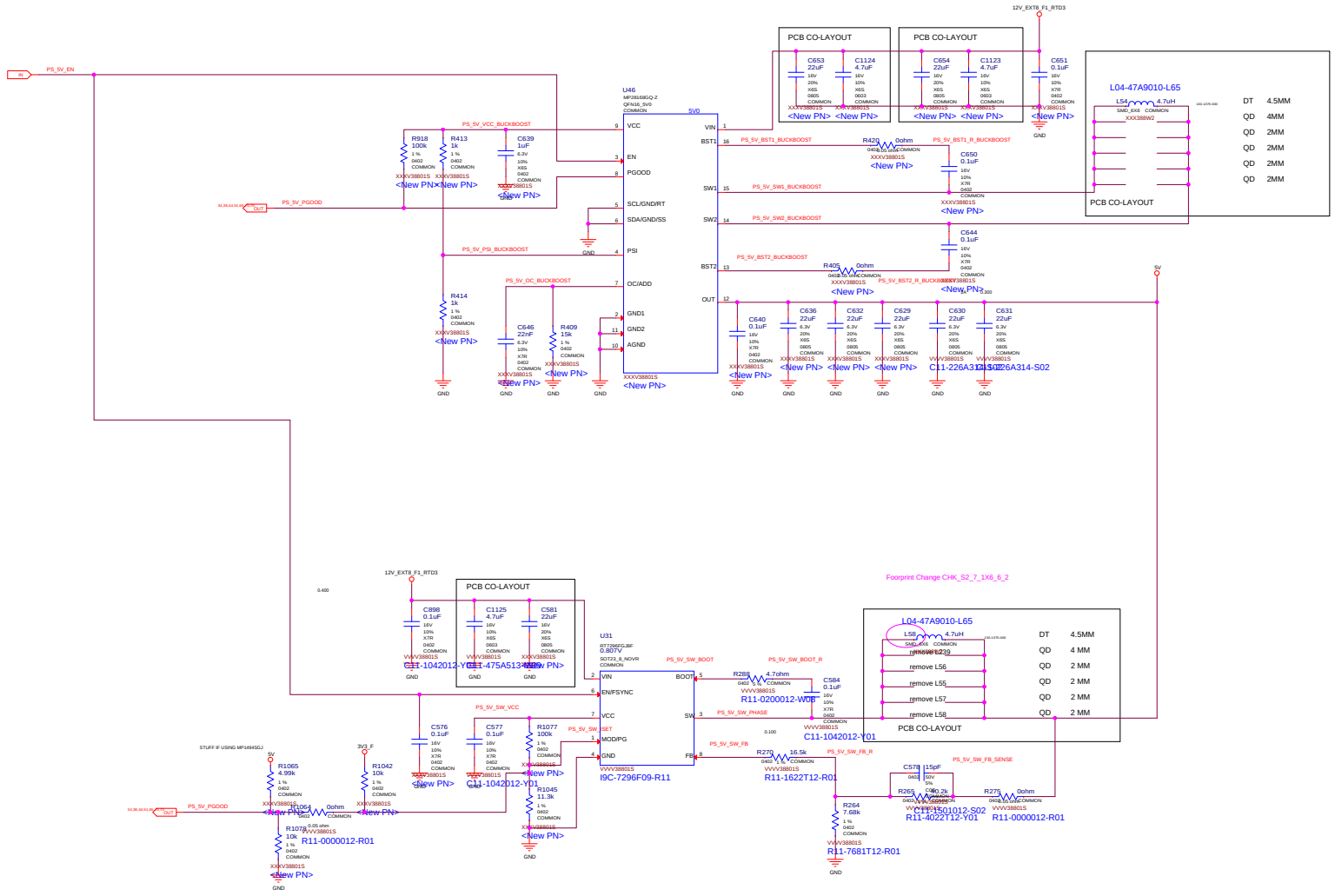

MICRO-STAR INT'L CO.,LTD	
MS-V388	
Size: Custom	Document Description: PS: 5V, 5V_BACKUP
Rev: 8.0	
Date: Thursday, July 23, 2020	Sheet 34 of 78

PS: PEX_DVDD 1V8 Rail

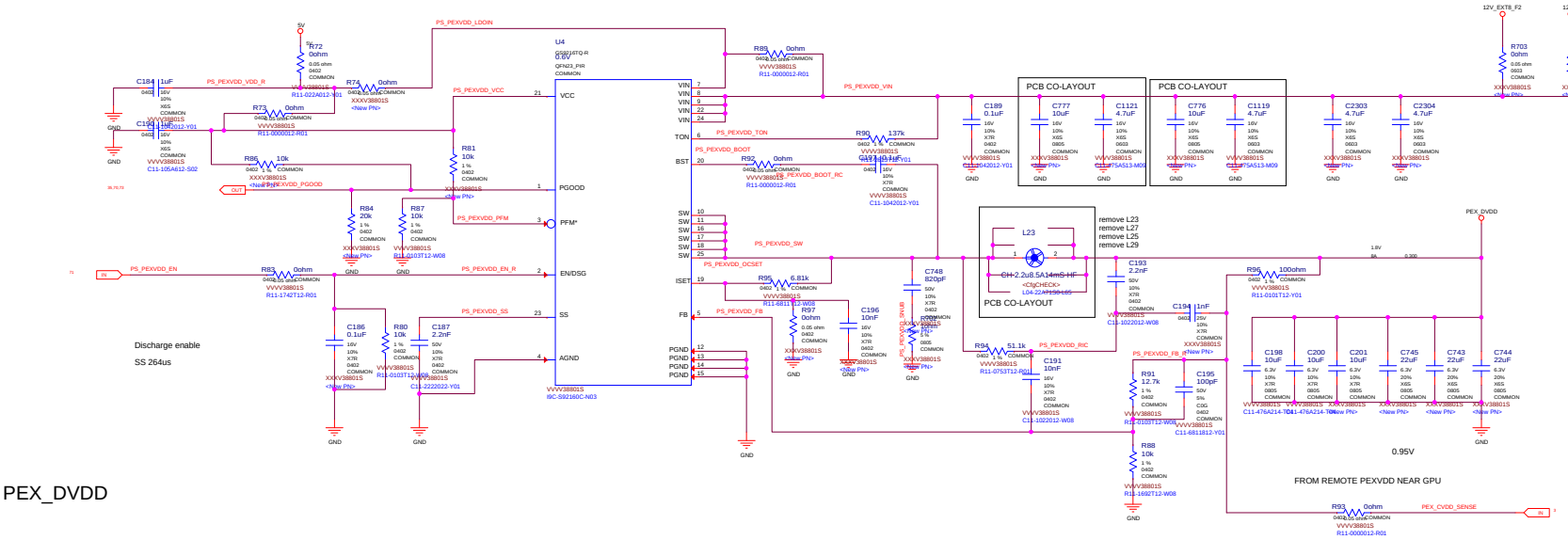

PEX_DVDD

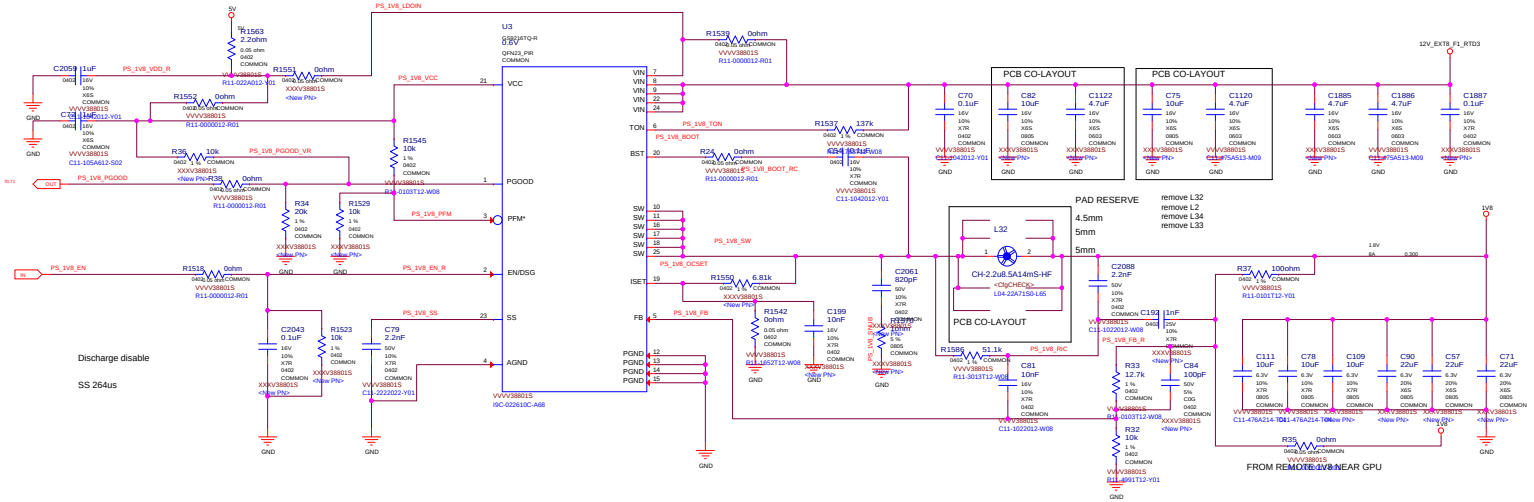

1V8

MICRO-STAR INT'L CO.,LTD

MS-V388

Size	Document Description	Rev
Custom	PS: PEX_DVDD 1V8 Rail	8.0

Date: Thursday, July 30, 2020 Sheet 35 of 78

BLANK

MICRO-STAR INT'L CO.,LTD		
MS-V388		
Size: Custom	Document Description: BLANK	Rev: 8.0
Date: Wednesday, July 22, 2020	Sheet 36 of 78	

PS: FBVDD Controller OVR3

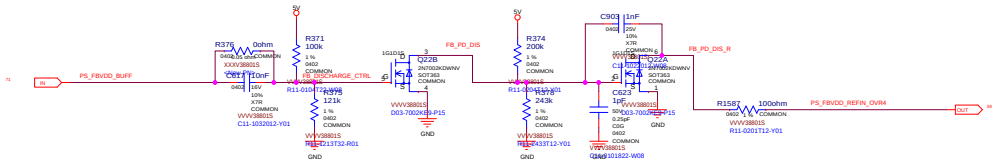

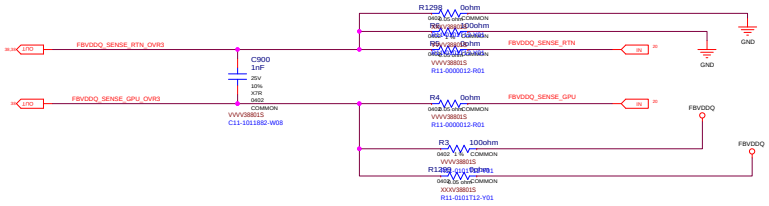

FOR DT SKU

MSI	MICRO-STAR INT'L CO.,LTD		
	MS-V388		
Size: Custom	Document Description: FBVDD Controller OVR3		Rev: 8.0
Date: Friday, July 24, 2020		Sheet 37 of 78	

PS:FBVDDQ OVR4

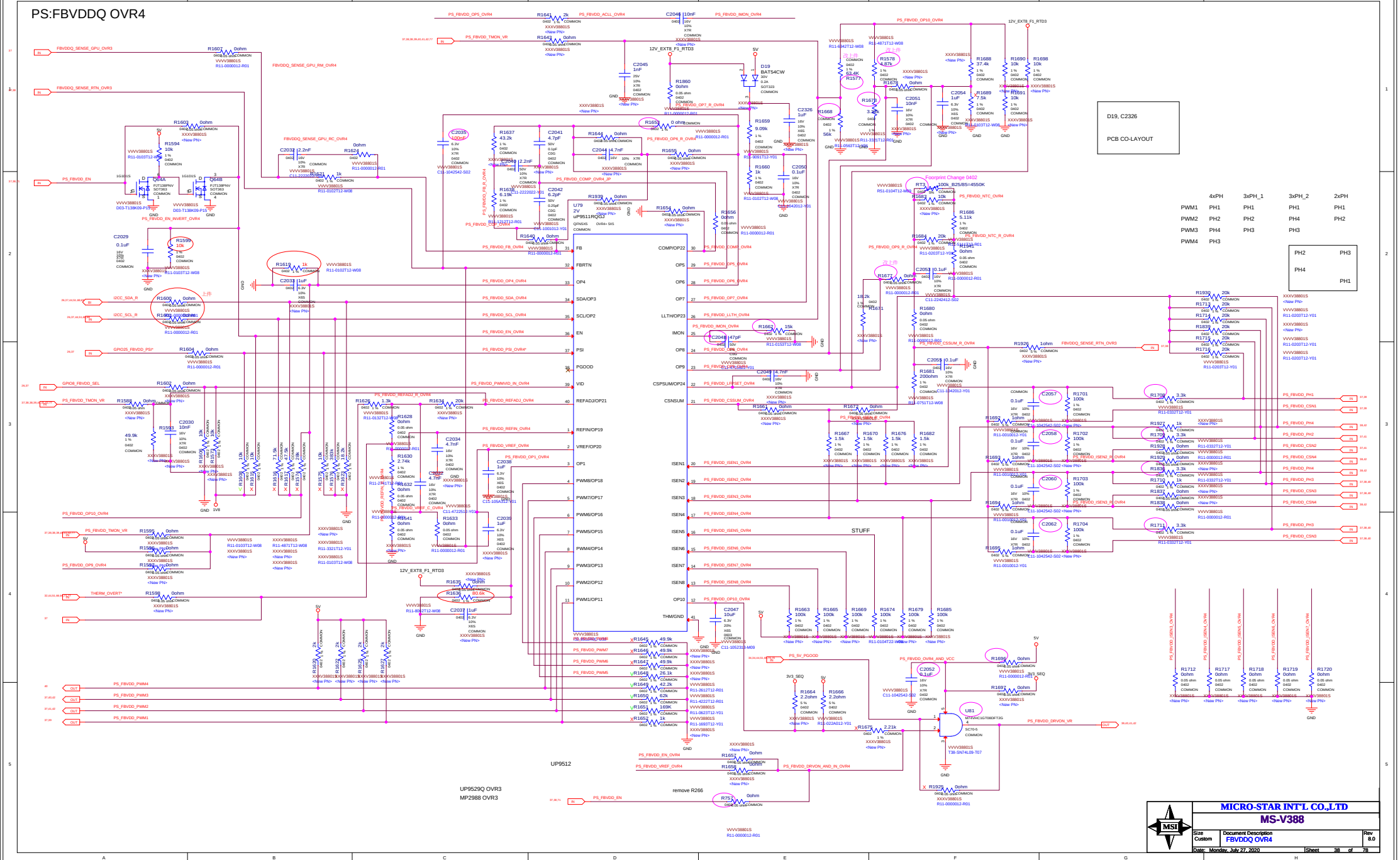

PS: FBVDD PH1

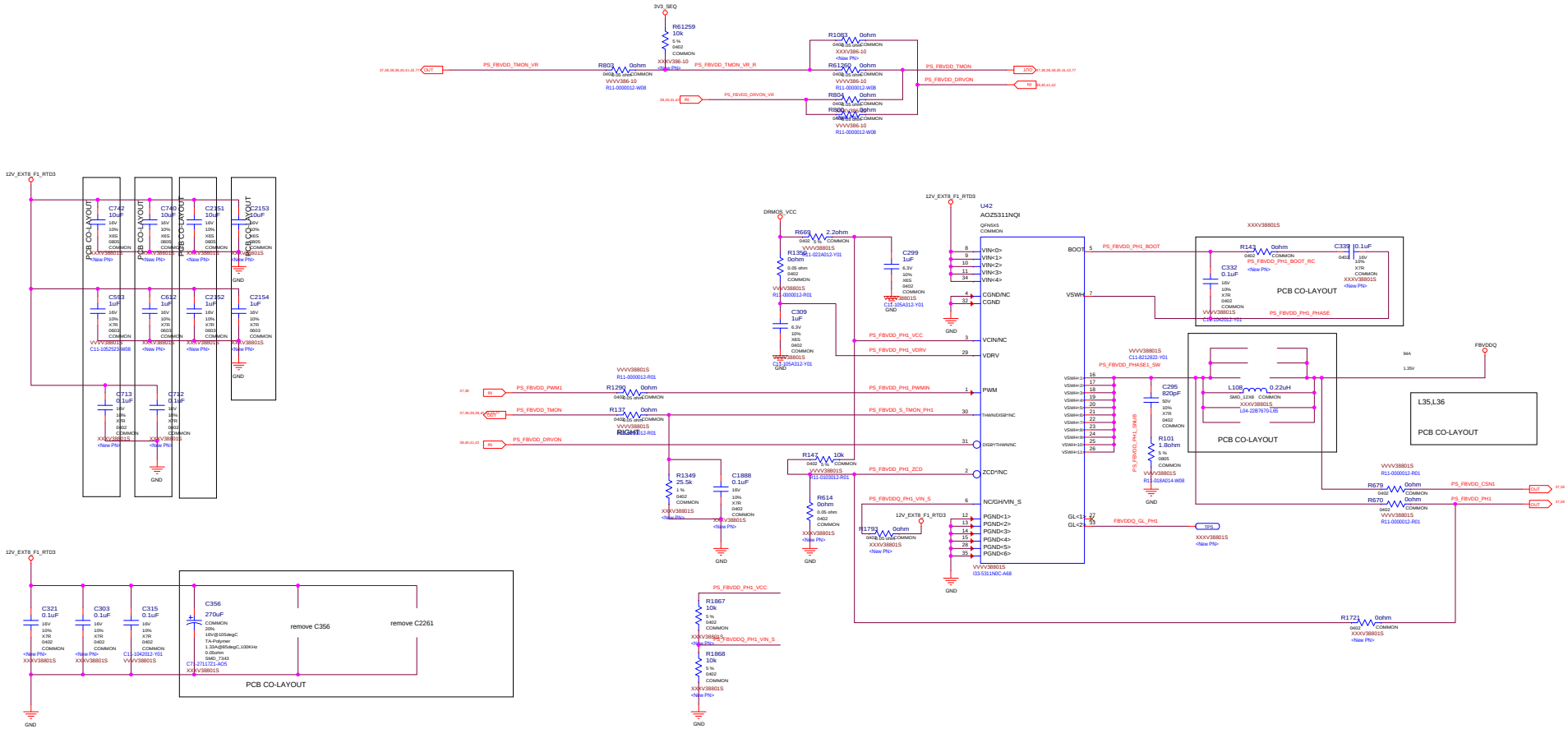

MICRO-STAR INT'L CO.,LTD		
MS-V388		
Size: Custom	Document Description: PS: FBVDD PH1	Rev: 8.0
Date: Friday, July 24, 2020	Sheet 39 of 78	

PS: FBVDD PH3

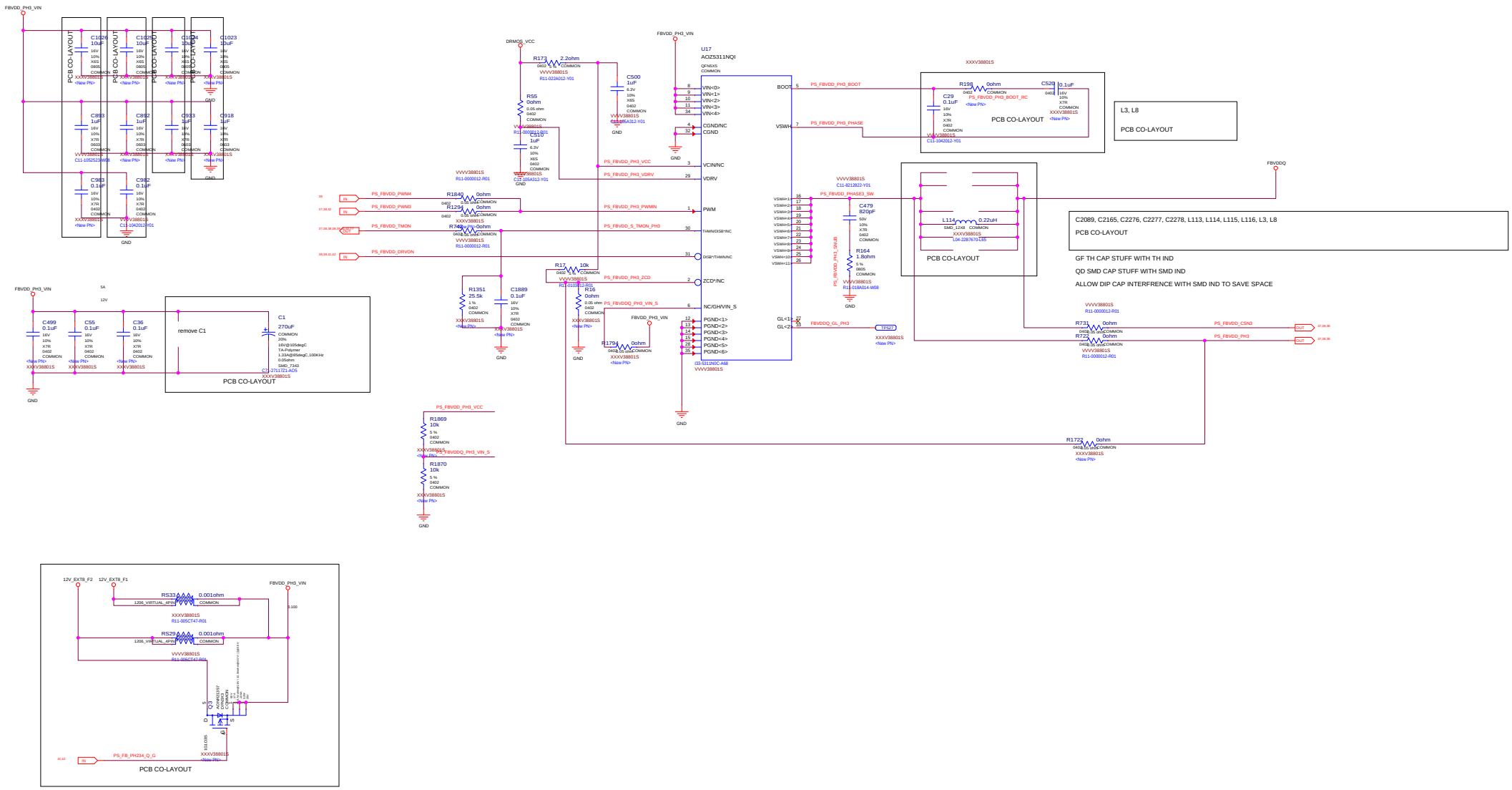

FBVDD PH3 INPUT ANTI-BACKDRIVE

MICRO-STAR INT'L CO.,LTD		
MS-V388		
Size: Custom	Document Description: PS: FBVDD PH3	Rev: 8.0
Date: Thursday, July 30, 2020	Sheet 40 of 78	

PS: FBVDD PH2

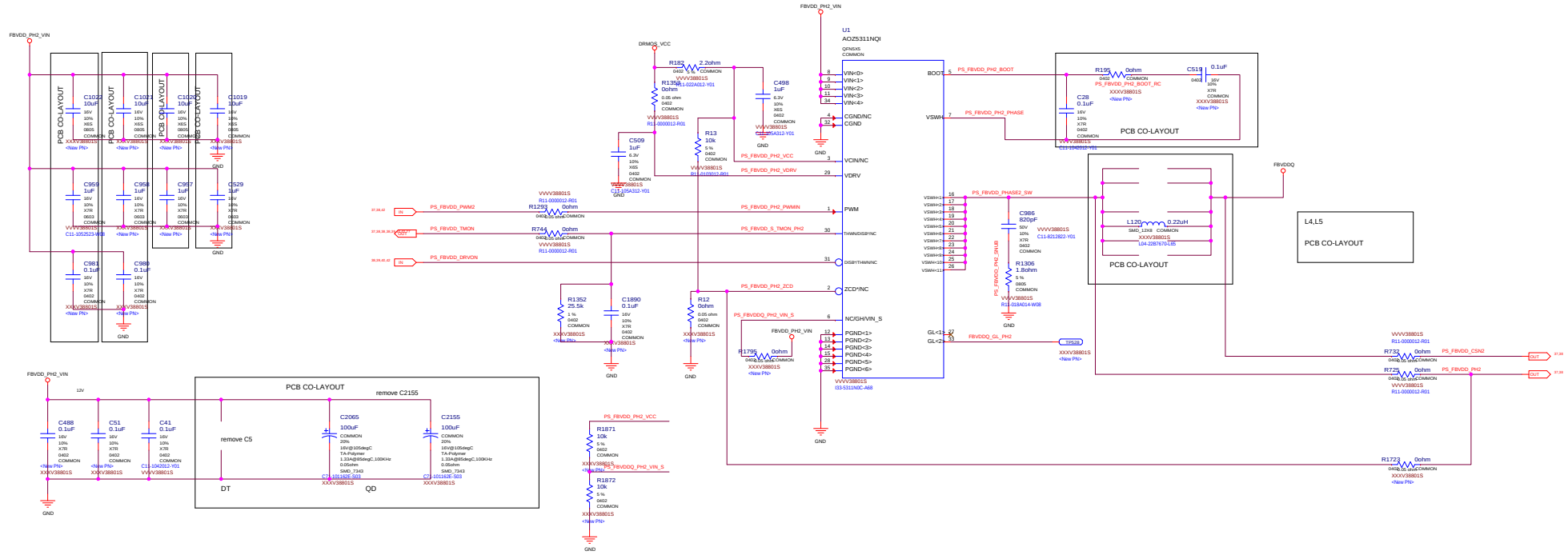

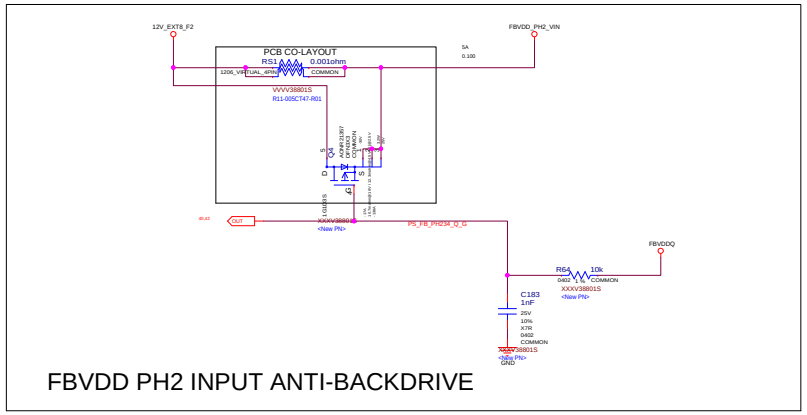

FBVDD PH2 INPUT ANTI-BACKDRIVE

MICRO-STAR INT'L CO.,LTD		
MS-V388		
Size: Custom	Document Description: PS: FBVDD PH2	Rev: 8.0
Date: Thursday, July 30, 2020	Sheet 41 of 78	

PS: FBVDD PH4

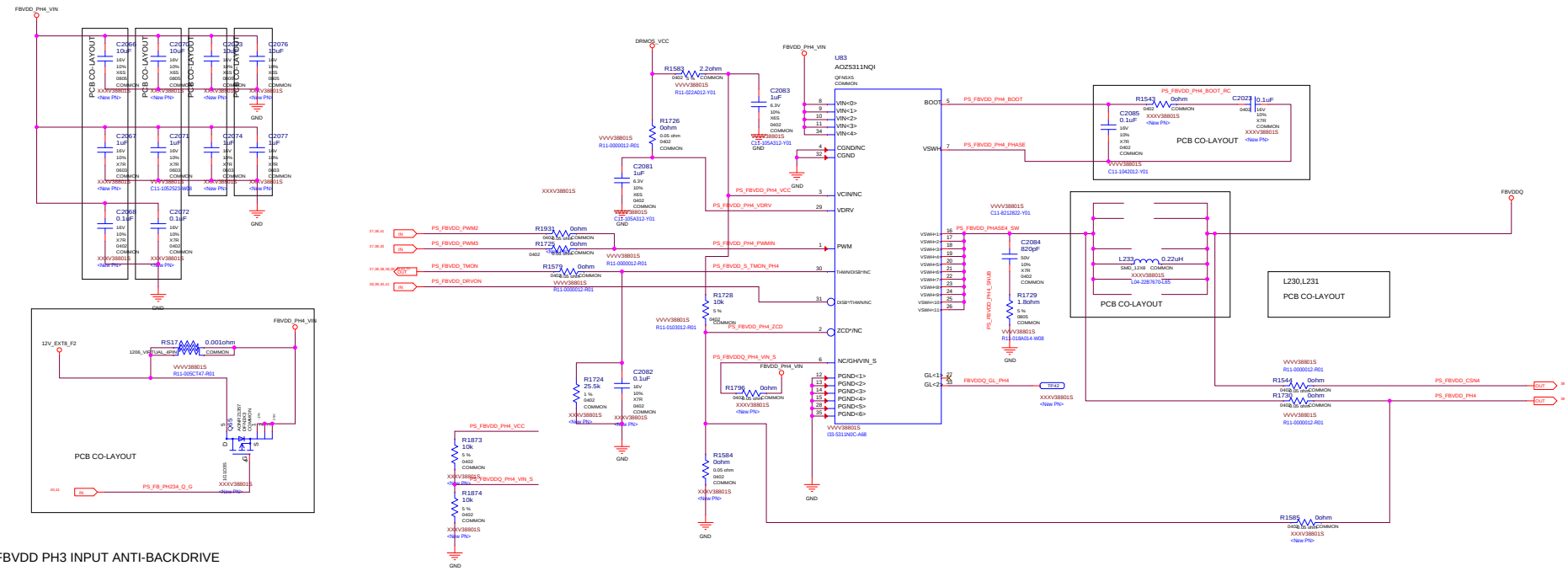

FBVDD PH3 INPUT ANTI-BACKDRIVE

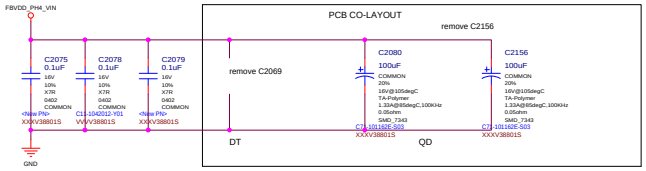

MICRO-STAR INT'L CO.,LTD		
MS-V388		
Size Custom	Document Description PS: FBVDD PH4	Rev 8.0
Date: Thursday, July 30, 2020	Sheet 42 of 78	

PS: FBVDD OUTPUT CAP

REFER TO PCB FOR BOM STUFFING

PH1 TOP

FBVDDQ
remove C261
C261 820uF COMMON 20% 2V@105degC AL-Polymer 3A@105degC,100KHz 0.00ohm SMD_7343 C7-82103F1-A05 XXXV38801S
remove C2305
PCB CO-LAYOUT
GND

PH3 TOP

FBVDDQ
remove C2165
C2165 820uF COMMON 20% 2V@105degC AL-Polymer 3A@105degC,100KHz 0.00ohm SMD_7343 C7-82103F1-A05 XXXV38801S
PCB CO-LAYOUT
GND

PH2 TOP

FBVDDQ
remove C126
C60302 220uF COMMON 20% 2V@105degC AL-Polymer 3A@105degC,100KHz 0.00ohm SMD_7343 C7-22102ME-X19 XXXV38801S
C209 220uF COMMON 20% 2V@105degC AL-Polymer 3A@105degC,100KHz 0.00ohm SMD_7343 C7-22102ME-X19 XXXV38801S
remove C2307
PCB CO-LAYOUT
GND

PH4 TOP

FBVDDQ
remove C103
C103 220uF COMMON 20% 2V@105degC AL-Polymer 3A@105degC,100KHz 0.00ohm SMD_7343 C7-22102ME-X19 XXXV38801S
C60202 220uF COMMON 20% 2V@105degC AL-Polymer 3A@105degC,100KHz 0.00ohm SMD_7343 C7-22102ME-X19 XXXV38801S
C2092 220uF COMMON 20% 2V@105degC AL-Polymer 3A@105degC,100KHz 0.00ohm SMD_7343 C7-22102ME-X19 XXXV38801S
remove C2308
PCB CO-LAYOUT
GND

PH4 TOP

FBVDDQ
remove C2272
C2272 220uF COMMON 20% 2V@105degC AL-Polymer 3A@105degC,100KHz 0.00ohm SMD_7343 C7-22102ME-X19 XXXV38801S
remove C2309
PCB CO-LAYOUT
GND

FBVDDQ
C2171 22uF 6.3V 20% X6S 0805 COMMON XXXV38801S <New Pn>
C61341 22uF 4V 20% X6S 0805 COMMON XXXV38801S <New Pn>
GND
CLOSE TO FB PH3 OUPUT-STUFF

FBVDDQ
NORTHWEST BOT
C2328 150uF COMMON 20% 6.3V@105degC TA-Polymer 2.3A@45degC,100KHz 0.025ohm SMD_3528 XXXV38801S <New Pn>
C2172 22uF 6.3V 20% X6S 0805 COMMON XXXV38801S <New Pn>
C60303 22uF 4V 20% X6S 0805 COMMON XXXV38801S <New Pn>
PCB CO-LAYOUT
GND

FBVDDQ
SOUTHEAST BOT
C1117 220uF COMMON 20% 2V@105degC AL-Polymer 3A@105degC,100KHz 0.00ohm SMD_7343 C7-22102ME-X19 XXXV38801S
C60203 22uF 4V 20% X6S 0805 COMMON XXXV38801S <New Pn>
C60209 22uF 4V 20% X6S 0805 COMMON XXXV38801S <New Pn>
C60198 22uF 4V 20% X6S 0805 COMMON XXXV38801S <New Pn>
C60208 22uF 4V 20% X6S 0805 COMMON XXXV38801S <New Pn>
C60201 22uF 4V 20% X6S 0805 COMMON XXXV38801S <New Pn>
C60197 22uF 4V 20% X6S 0805 COMMON XXXV38801S <New Pn>
PCB CO-LAYOUT
GND

FBVDDQ
NORTHWEST BOT
C62001 220uF COMMON 20% 2V@105degC AL-Polymer 3A@105degC,100KHz 0.00ohm SMD_7343 C7-22102ME-X19 XXXV38801S
C60307 22uF 4V 20% X6S 0805 COMMON XXXV38801S <New Pn>
C60308 22uF 4V 20% X6S 0805 COMMON XXXV38801S <New Pn>
C60306 22uF 4V 20% X6S 0805 COMMON XXXV38801S <New Pn>
C60305 22uF 4V 20% X6S 0805 COMMON XXXV38801S <New Pn>
C2169 22uF 6.3V 20% X6S 0805 COMMON XXXV38801S <New Pn>
C2170 22uF 6.3V 20% X6S 0805 COMMON XXXV38801S <New Pn>
PCB CO-LAYOUT
GND

FBVDDQ
SOUTHEAST BOT
C2275 150uF COMMON 20% 6.3V@105degC TA-Polymer 2.3A@45degC,100KHz 0.025ohm SMD_3528 XXXV38801S <New Pn>
C2168 22uF 6.3V 20% X6S 0805 COMMON XXXV38801S <New Pn>
C2167 22uF 6.3V 20% X6S 0805 COMMON XXXV38801S <New Pn>
C60348 22uF 4V 20% X6S 0805 COMMON XXXV38801S <New Pn>
C2166 22uF 6.3V 20% X6S 0805 COMMON XXXV38801S <New Pn>
PCB CO-LAYOUT
GND

FBVDDQ
NORTHWEST TOP
C2086 220uF COMMON 20% 2V@105degC AL-Polymer 3A@105degC,100KHz 0.00ohm SMD_7343 C7-22102ME-X19 XXXV38801S
C2279 22uF 4V 20% X6S 0805 COMMON XXXV38801S <New Pn>
C2294 22uF 4V 20% X6S 0805 COMMON XXXV38801S <New Pn>
C2285 22uF 4V 20% X6S 0805 COMMON XXXV38801S <New Pn>
C2288 22uF 4V 20% X6S 0805 COMMON XXXV38801S <New Pn>
C2291 22uF 4V 20% X6S 0805 COMMON XXXV38801S <New Pn>
C2282 22uF 4V 20% X6S 0805 COMMON XXXV38801S <New Pn>
PCB CO-LAYOUT
GND

FBVDDQ
SOUTHEAST TOP
C1118 220uF COMMON 20% 2V@105degC AL-Polymer 3A@105degC,100KHz 0.00ohm SMD_7343 C7-22102ME-X19 XXXV38801S
C60311 22uF 4V 20% X6S 0805 COMMON XXXV38801S <New Pn>
C60340 22uF 4V 20% X6S 0805 COMMON XXXV38801S <New Pn>
C60312 22uF 4V 20% X6S 0805 COMMON XXXV38801S <New Pn>
C60347 22uF 4V 20% X6S 0805 COMMON XXXV38801S <New Pn>
C60341 22uF 4V 20% X6S 0805 COMMON XXXV38801S <New Pn>
C60345 22uF 4V 20% X6S 0805 COMMON XXXV38801S <New Pn>
PCB CO-LAYOUT
GND

FBVDDQ
NORTHWEST BOT
C60309 220uF COMMON 20% 2V@105degC AL-Polymer 3A@105degC,100KHz 0.00ohm SMD_7343 C7-22102ME-X19 XXXV38801S
C2280 22uF 4V 20% X6S 0805 COMMON XXXV38801S <New Pn>
C2283 22uF 4V 20% X6S 0805 COMMON XXXV38801S <New Pn>
C2286 22uF 4V 20% X6S 0805 COMMON XXXV38801S <New Pn>
C2289 22uF 4V 20% X6S 0805 COMMON XXXV38801S <New Pn>
C2292 22uF 4V 20% X6S 0805 COMMON XXXV38801S <New Pn>
C2295 22uF 4V 20% X6S 0805 COMMON XXXV38801S <New Pn>
PCB CO-LAYOUT
GND

FBVDDQ
SOUTHEAST TOP
C2091 220uF COMMON 20% 2V@105degC AL-Polymer 3A@105degC,100KHz 0.00ohm SMD_7343 C7-22102ME-X19 XXXV38801S
C60358 22uF 4V 20% X6S 0805 COMMON XXXV38801S <New Pn>
C60355 22uF 4V 20% X6S 0805 COMMON XXXV38801S <New Pn>
C60310 22uF 4V 20% X6S 0805 COMMON XXXV38801S <New Pn>
C60349 22uF 4V 20% X6S 0805 COMMON XXXV38801S <New Pn>
C61406 22uF 4V 20% X6S 0805 COMMON XXXV38801S <New Pn>
C61424 22uF 4V 20% X6S 0805 COMMON XXXV38801S <New Pn>
PCB CO-LAYOUT
GND

FBVDDQ
NORTHEAST TOP
C2174 220uF COMMON 20% 2V@105degC AL-Polymer 3A@105degC,100KHz 0.00ohm SMD_7343 C7-22102ME-X19 XXXV38801S
C2281 22uF 4V 20% X6S 0805 COMMON XXXV38801S <New Pn>
C2284 22uF 4V 20% X6S 0805 COMMON XXXV38801S <New Pn>
C2287 22uF 4V 20% X6S 0805 COMMON XXXV38801S <New Pn>
C2290 22uF 4V 20% X6S 0805 COMMON XXXV38801S <New Pn>
C2293 22uF 4V 20% X6S 0805 COMMON XXXV38801S <New Pn>
C2296 22uF 4V 20% X6S 0805 COMMON XXXV38801S <New Pn>
PCB CO-LAYOUT
GND

FBVDDQ
NORTHEAST TOP
C2173 220uF COMMON 20% 2V@105degC AL-Polymer 3A@105degC,100KHz 0.00ohm SMD_7343 C7-22102ME-X19 XXXV38801S
C2297 22uF 4V 20% X6S 0805 COMMON XXXV38801S <New Pn>
C2298 22uF 4V 20% X6S 0805 COMMON XXXV38801S <New Pn>
C2299 22uF 4V 20% X6S 0805 COMMON XXXV38801S <New Pn>
C2300 22uF 4V 20% X6S 0805 COMMON XXXV38801S <New Pn>
C2301 22uF 4V 20% X6S 0805 COMMON XXXV38801S <New Pn>
C2302 22uF 4V 20% X6S 0805 COMMON XXXV38801S <New Pn>
PCB CO-LAYOUT
GND

FBVDDQ
PCB CO-LAYOUT
C2329 150uF COMMON 20% 6.3V@105degC TA-Polymer 2.3A@45degC,100KHz 0.025ohm SMD_3528 XXXV38801S <New Pn>
C60304 22uF 4V 20% X6S 0805 COMMON XXXV38801S <New Pn>
C60301 22uF 4V 20% X6S 0805 COMMON XXXV38801S <New Pn>
C60296 22uF 4V 20% X6S 0805 COMMON XXXV38801S <New Pn>
C60295 22uF 4V 20% X6S 0805 COMMON XXXV38801S <New Pn>
GND

FBVDDQ
C2144 220uF COMMON 20% 2V@105degC AL-Polymer 3A@105degC,100KHz 0.00ohm SMD_7343 C7-22102ME-X19 XXXV38801S
GND

MICRO-STAR INT'L CO.,LTD		
MS-V388		
Size: Custom	Document Description: PS: FBVDD OUTPUT CAP	Rev: 8.0
Date: Thursday, July 23, 2020	Sheet 43 of 78	

PS: MSVDD

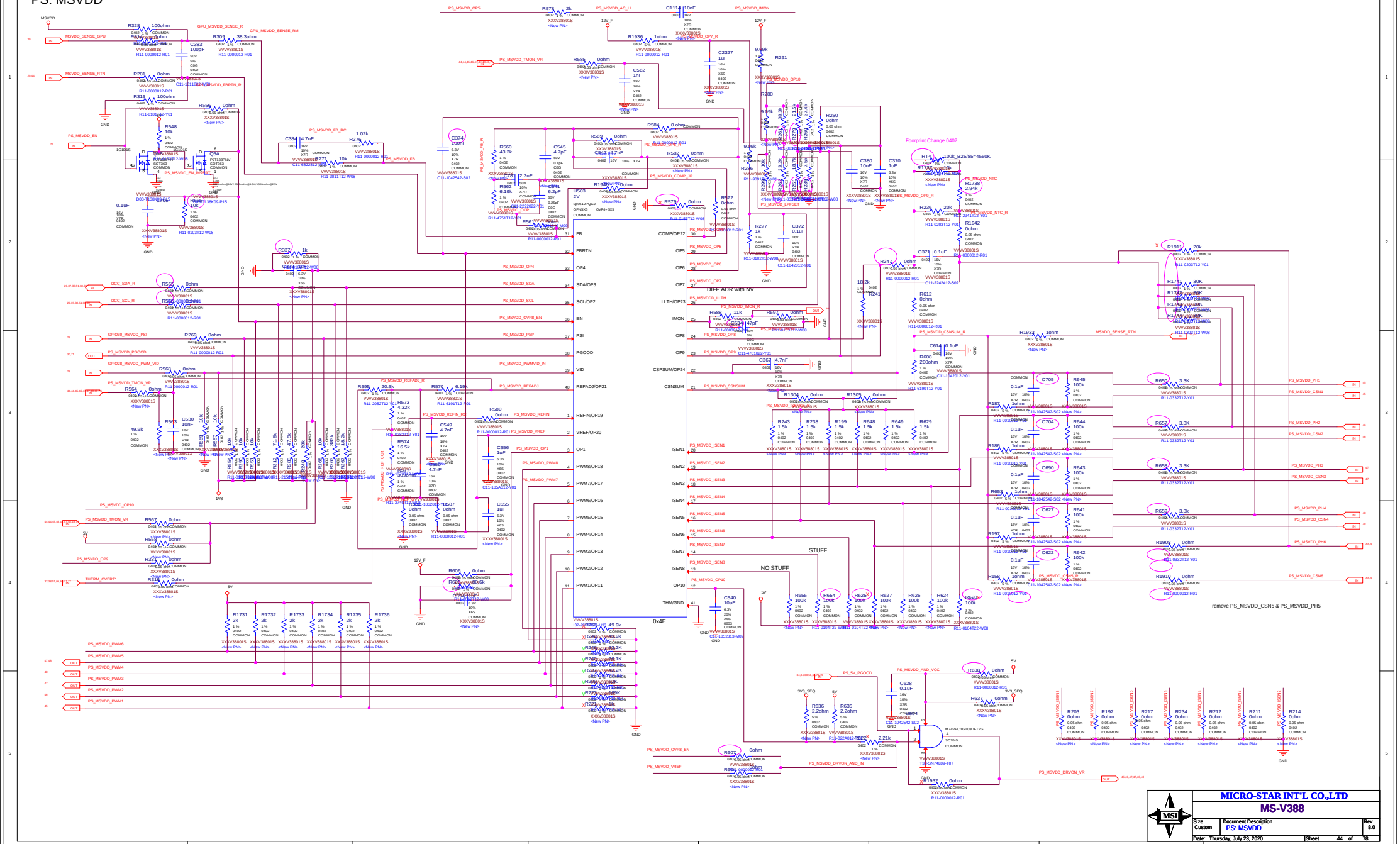
U503
2V
vqfn12PQGJ
QFN5X5 OVR+ 5X5
COMMON
FB
FBRTN
OP4
SDA/OP3
SCL/OP2
EN
PSI
PGOOD
VID
REFADJ/OP21
REFIN/OP19
VREF/OP20
OP1
PWM8/OP18
PWM7/OP17
PWM6/OP16
PWM5/OP15
PWM4/OP14
PWM3/OP13
PWM2/OP12
PWM1/OP11
COMP/OP22
OP5
OP6
OP7
LLTH/OP23
IMON
OP8
OP9
CSPSUM/OP24
CSNSUM
ISEN1
ISEN2
ISEN3
ISEN4
ISEN5
ISEN6
ISEN7
ISEN8
OP10
THM/GND
0x4E
DIFF ADR with NV
STUFF
NO STUFF
remove PS_MSVDD_CSN5 & PS_MSVDD_PH5
MICRO-STAR INT'L CO.,LTD
MS-V388
Size Custom
Document Description PS: MSVDD
Rev 8.0
Date: Thursday, July 23, 2020
Sheet 44 of 78

PS: MSVDD Phase 1

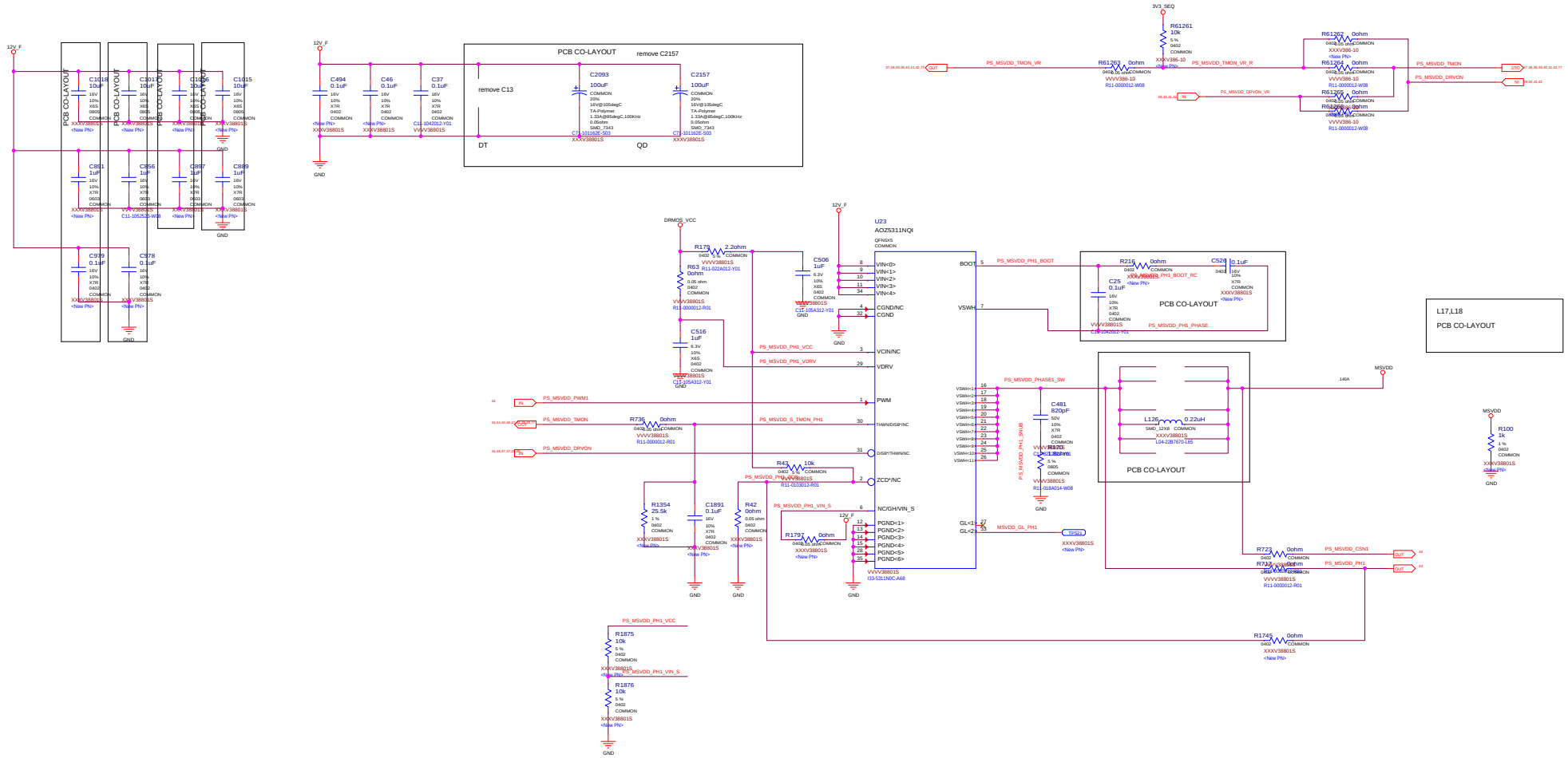

MICRO-STAR INT'L CO.,LTD	
MS-V388	
Size: Custom	Document Description: PS: MSVDD Phase 1
Rev: 8.0	
Date: Thursday, July 23, 2020	Sheet 45 of 78

PS: MSVDD PH 2

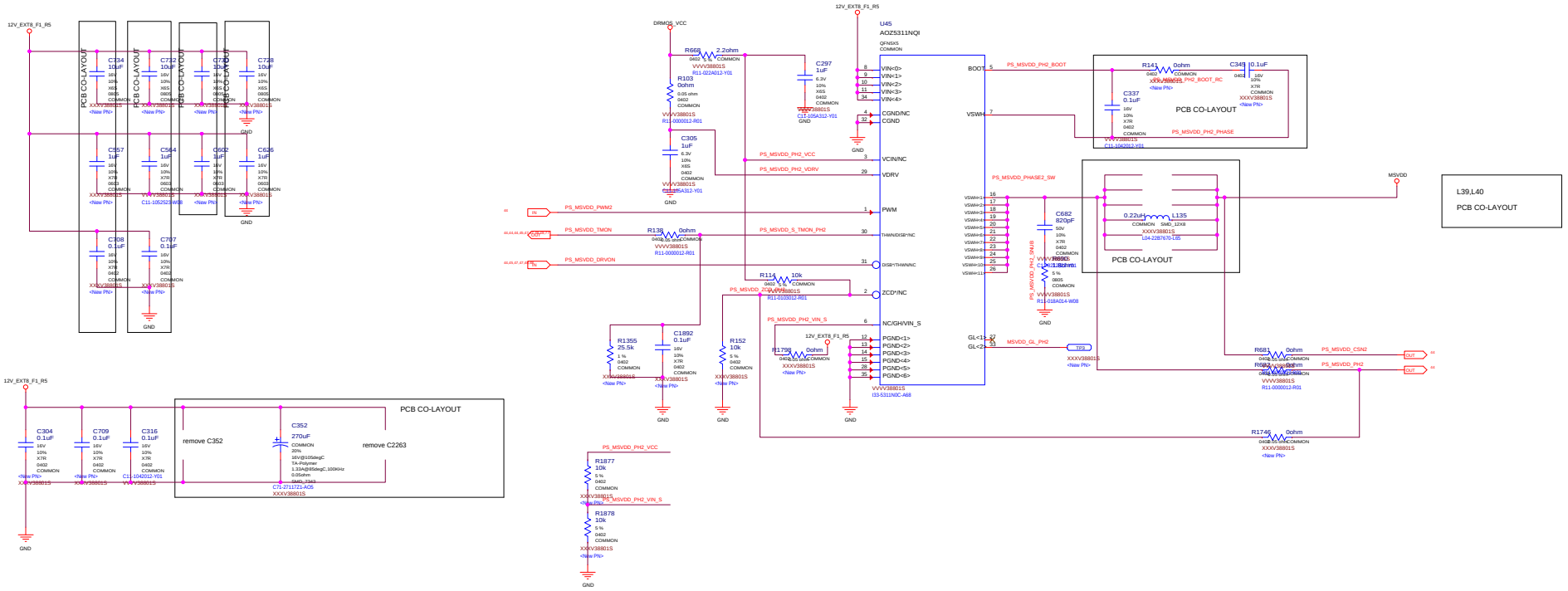

MICRO-STAR INT'L CO.,LTD		
MS-V388		
Size: Custom	Document Description: PS: MSVDD PH 2	Rev: 8.0
Date: Thursday, July 23, 2020	Sheet 46 of 78	

PS:MSVDD Phase 3, 5

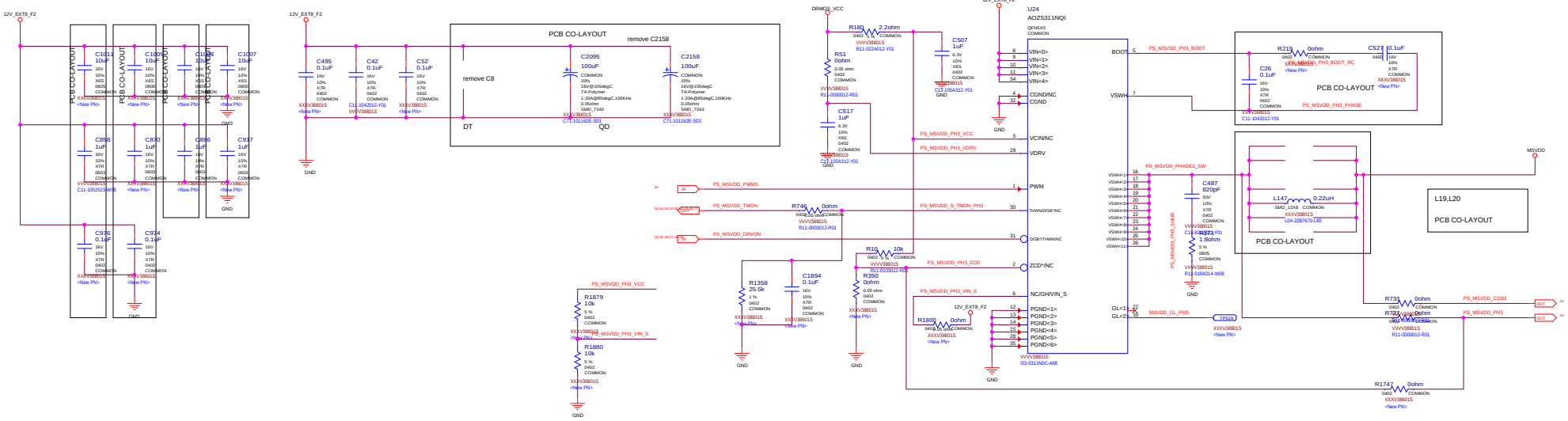

MICRO-STAR INT'L CO.,LTD		
MS-V388		
Size: Custom	Document Description: PS:MSVDD Phase 3, 5	Rev: 8.0
Date: Thursday, July 30, 2020	Sheet 47 of 78	

PS: MSVDD PH 4,6

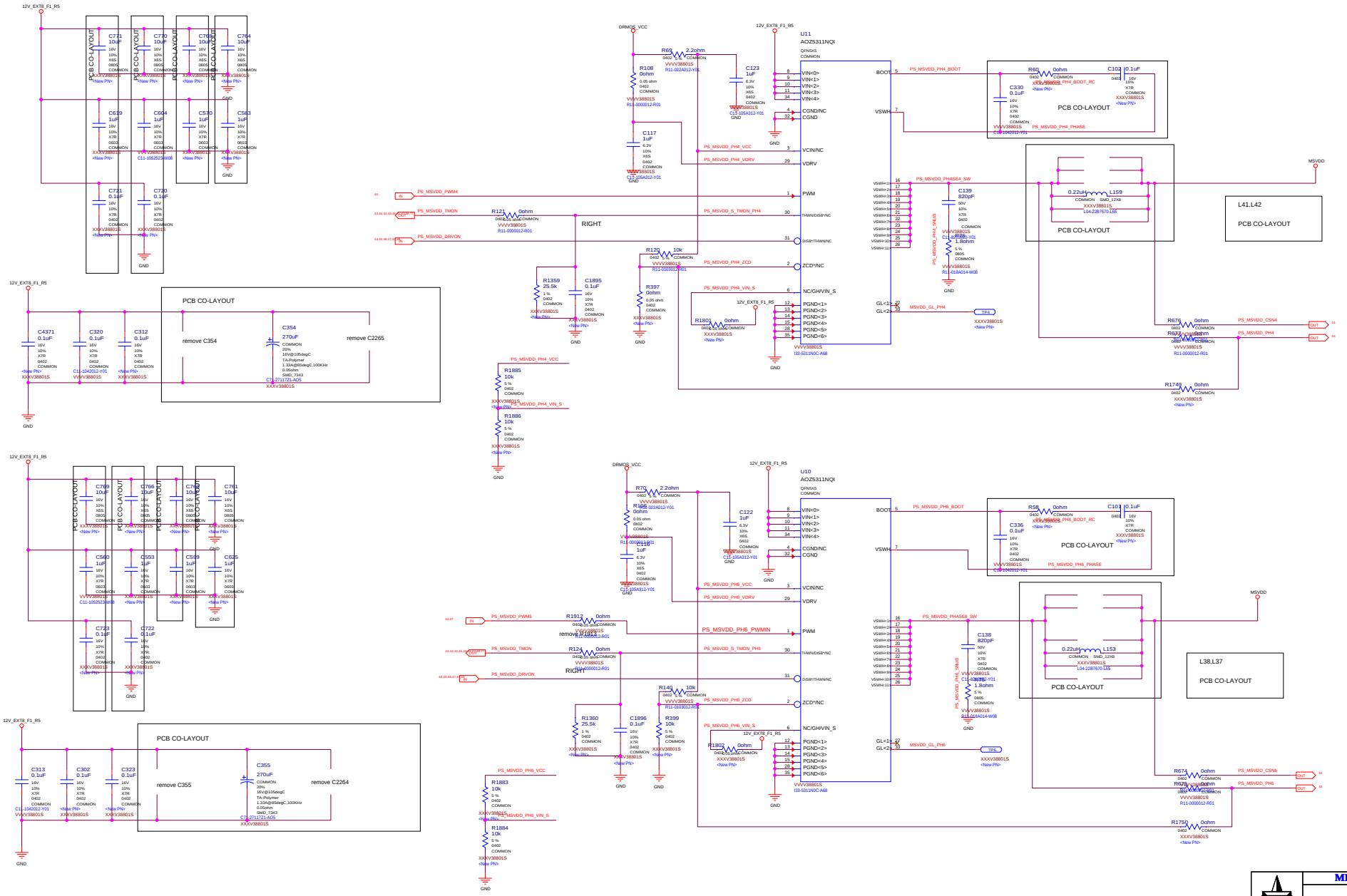

MICRO-STAR INT'L CO.,LTD	
MS-V388	
Size: Custom	Document Description: PS: MSVDD PH 4,6
Rev: 8.0	
Date: Thursday, July 23, 2020	Sheet 48 of 78

PS:MSVDD OUTPUT CAP (TOP)

REFER TO PCB FOR BOM STUFFING

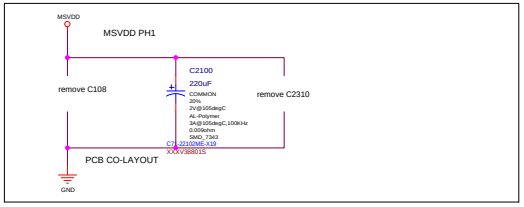

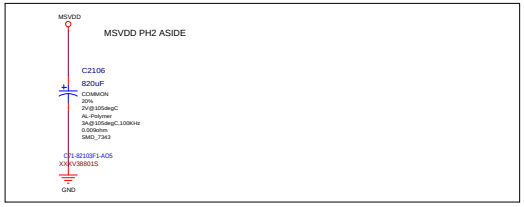

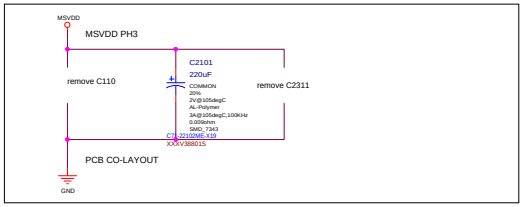

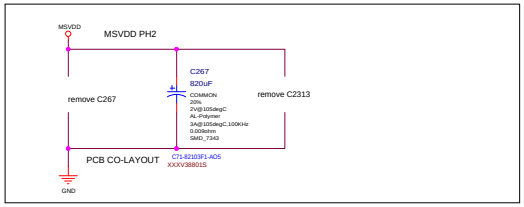

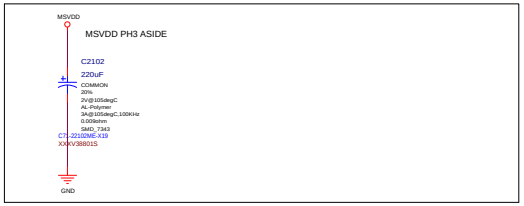

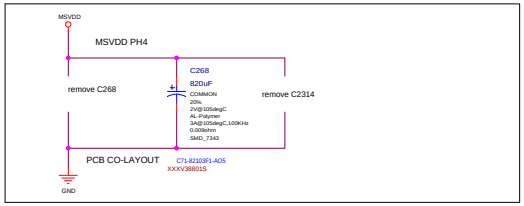

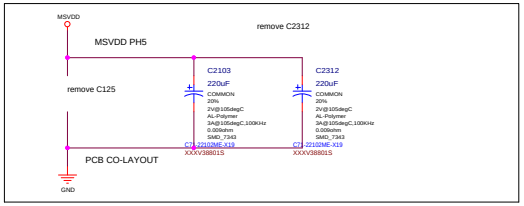

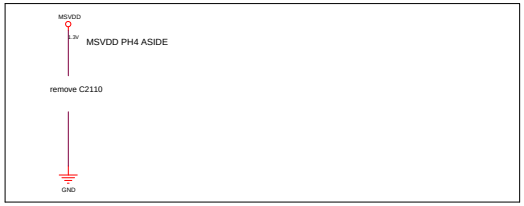

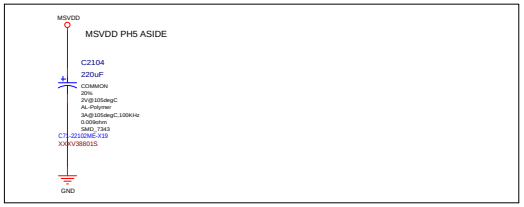

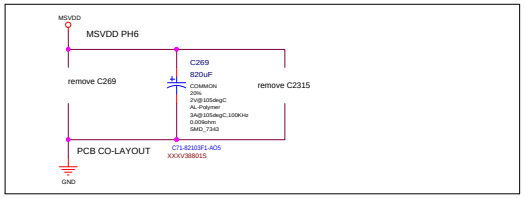

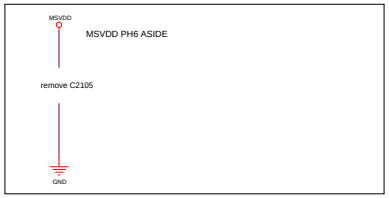

MICRO-STAR INT'L CO.,LTD		
MS-V388		
Size: Custom	Document Description: PS:MSVDD OUTPUT CAP (TOP)	Rev: 8.0
Date: Thursday, July 23, 2020	Sheet 49 of 78	

BLANK

MICRO-STAR INT'L CO.,LTD		
MS-V388		
Size: Custom	Document Description: BLANK	Rev: 8.0
Date: Wednesday, July 22, 2020	Sheet 50 of 78	

PS: NVVDD Controller_OVR8

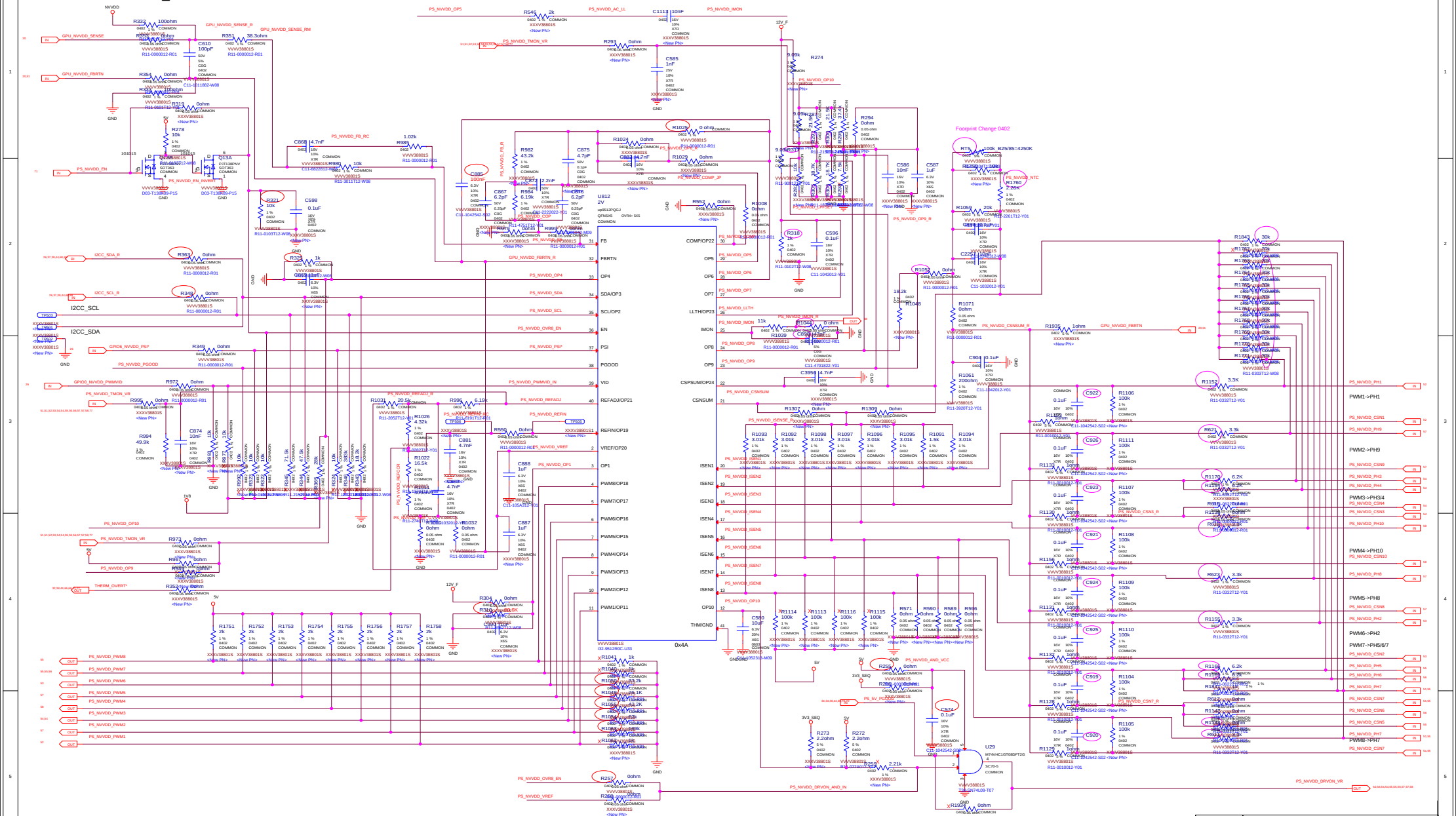

PS: NVVDD Phase 1

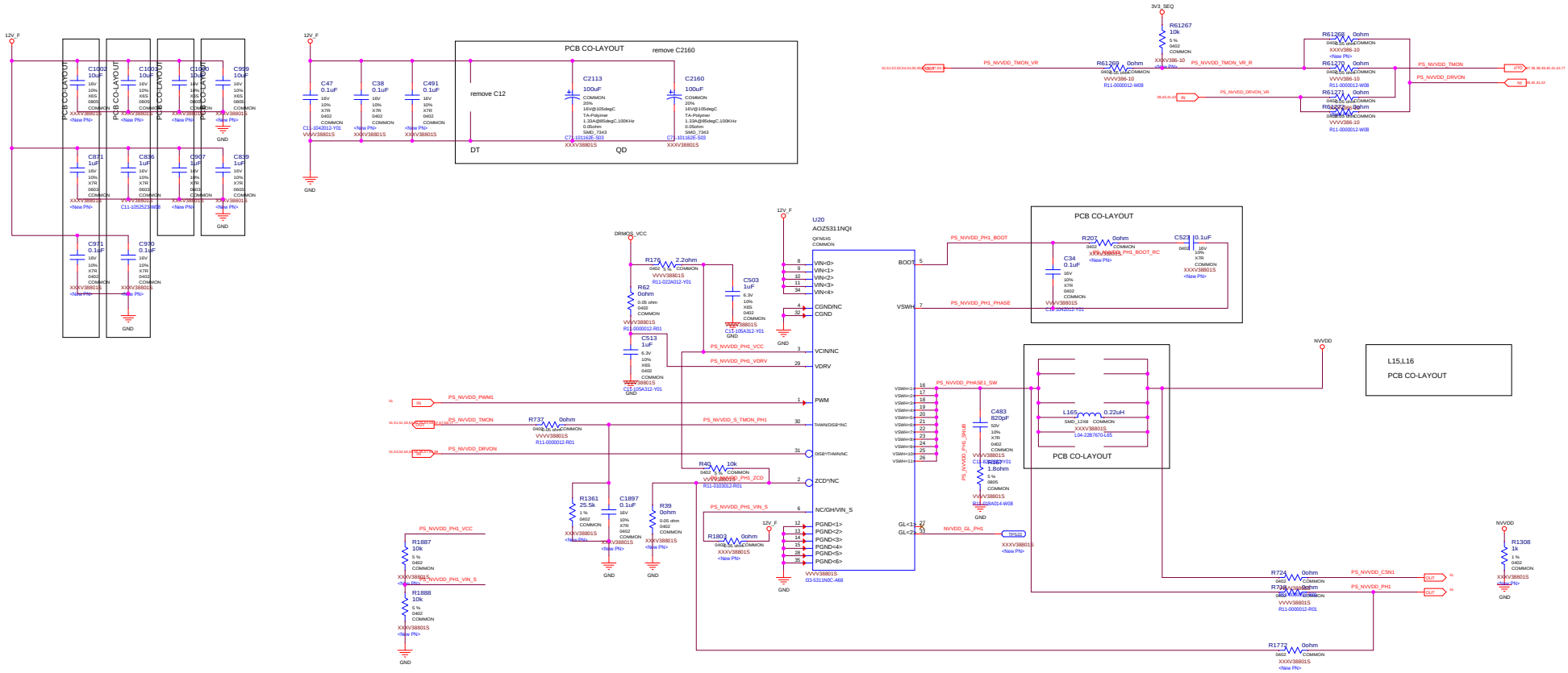

MICRO-STAR INT'L CO.,LTD		
MS-V388		
Size: Custom	Document Description: PS: NVVDD Phase 1	Rev: 8.0
Date: Thursday, July 23, 2020	Sheet 52 of 78	

PS: NVVDD Phase 2 (PWM6)

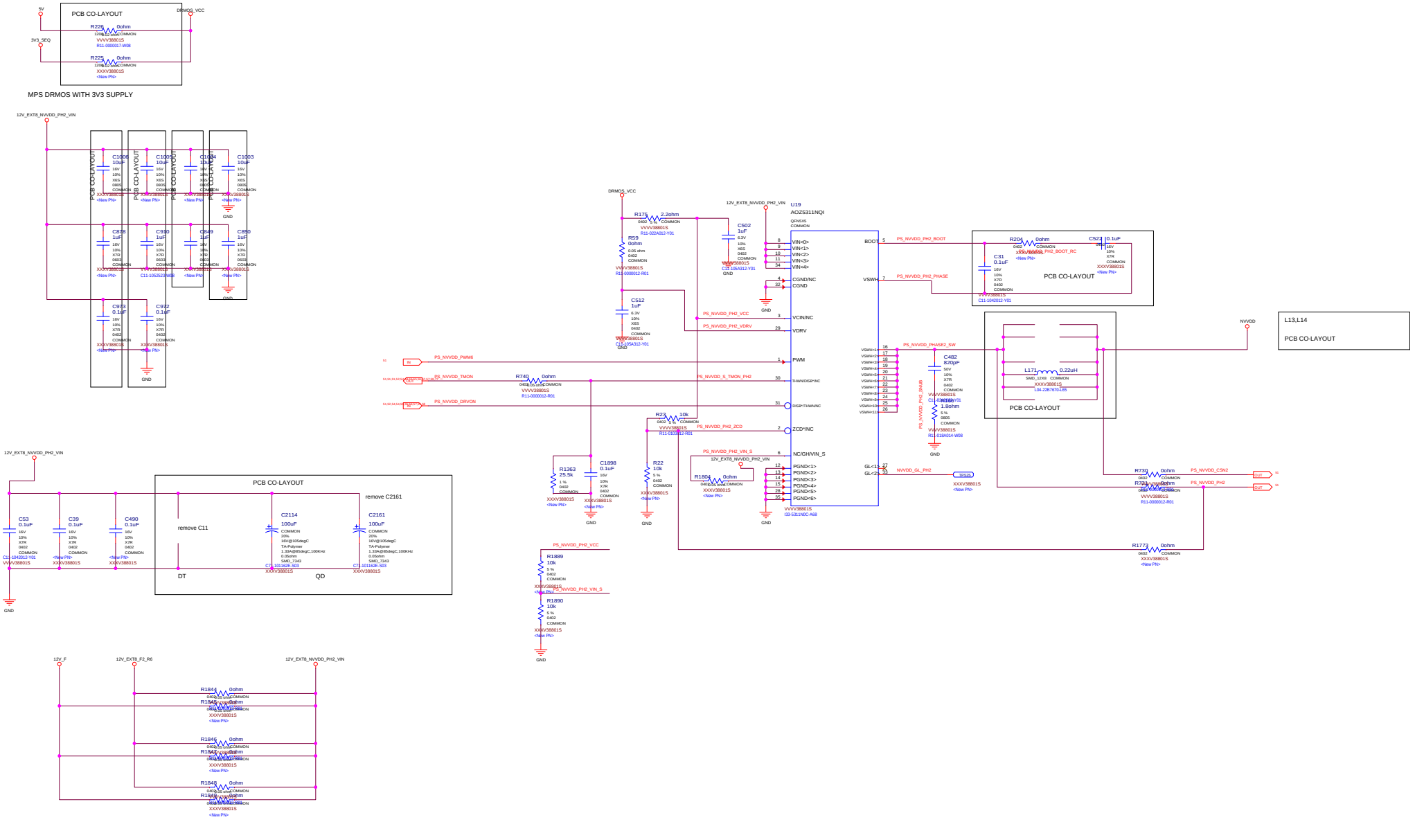

MICRO-STAR INT'L CO.,LTD	
MS-V388	
Size: Custom	Document Description: PS: NVVDD Phase 2 (PWM6)
Rev: 8.0	
Date: Thursday, July 23, 2020	Sheet 53 of 78

PS: NVVDD Phase 3 (PWM3), PHASE4 (PWM3)

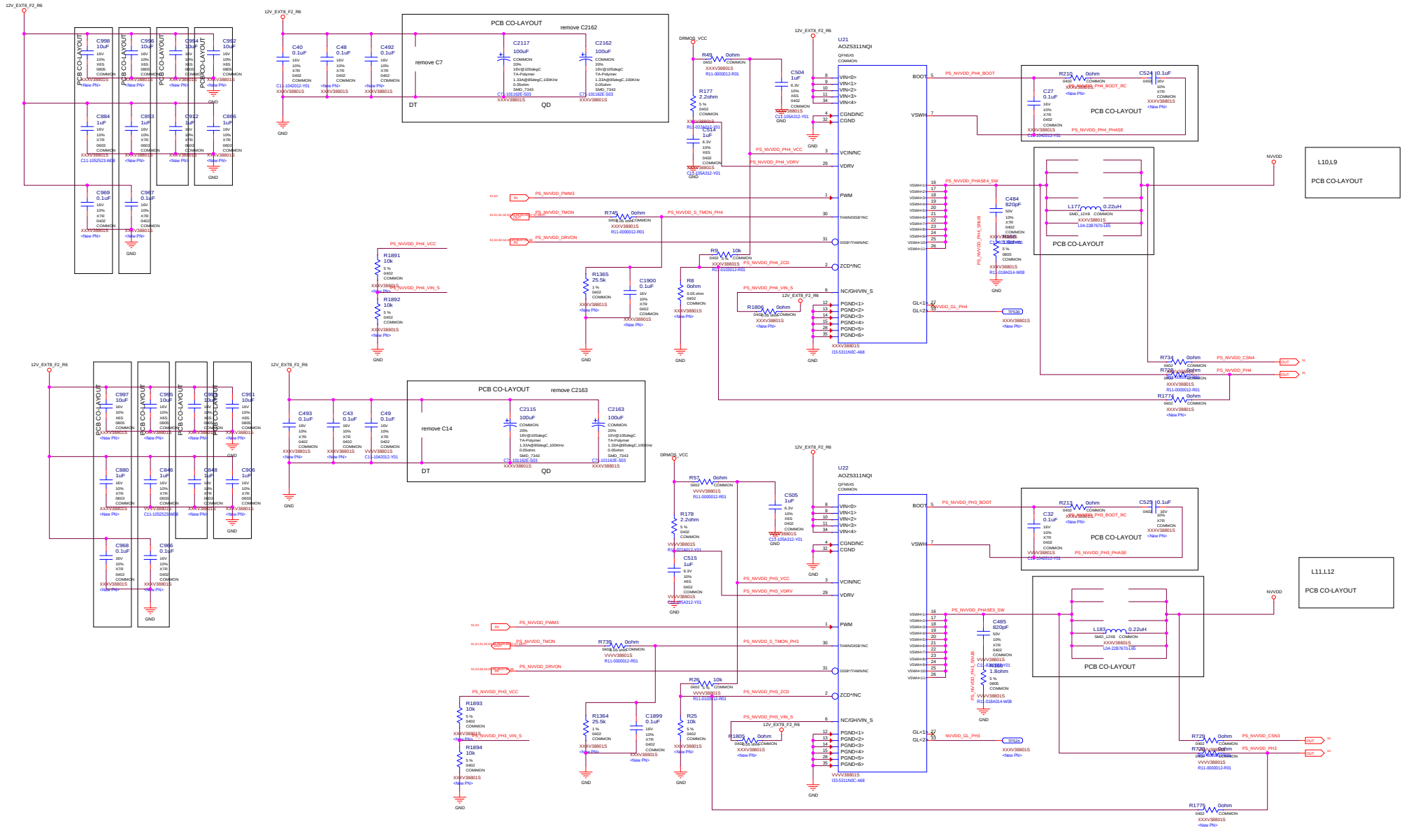

MICRO-STAR INT'L CO.,LTD

MS-V388

Size	Document Description	Rev
Custom	PS: NVVDD Phase 3 , PHASE4	8.0

Date: Thursday, July 23, 2020 Sheet 54 of 78

PS: NVVDD PH 5(PWM4), PH7(PWM8/4)

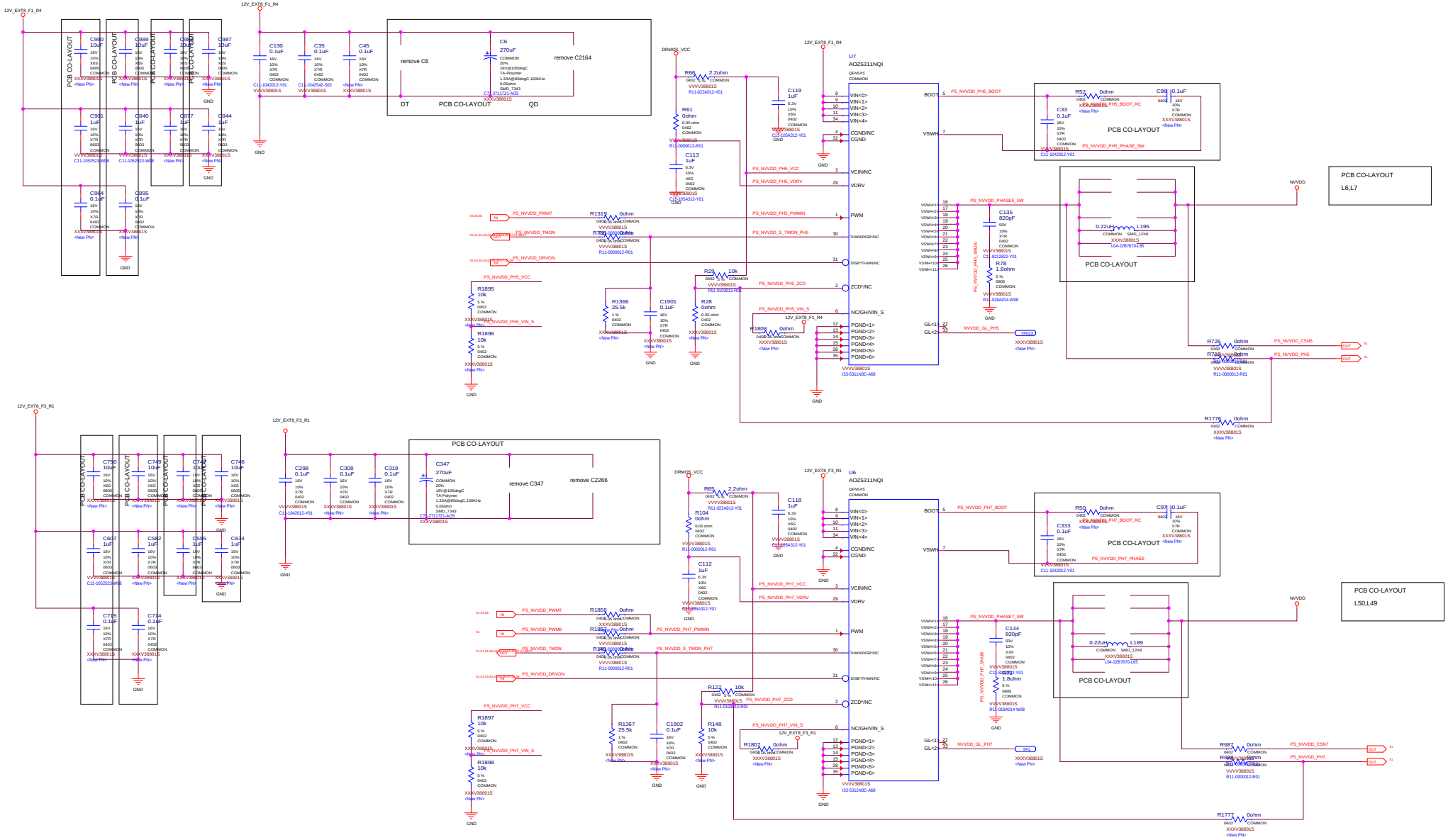

MICRO-STAR INT'L CO.,LTD		
MS-V388		
Size: Custom	Document Description: PS: NVVDD PH 5, PH7	Rev: 8.0
Date: Thursday, July 23, 2020	Sheet 55 of 78	

PS: NVVDD Phase 6(PWM4)

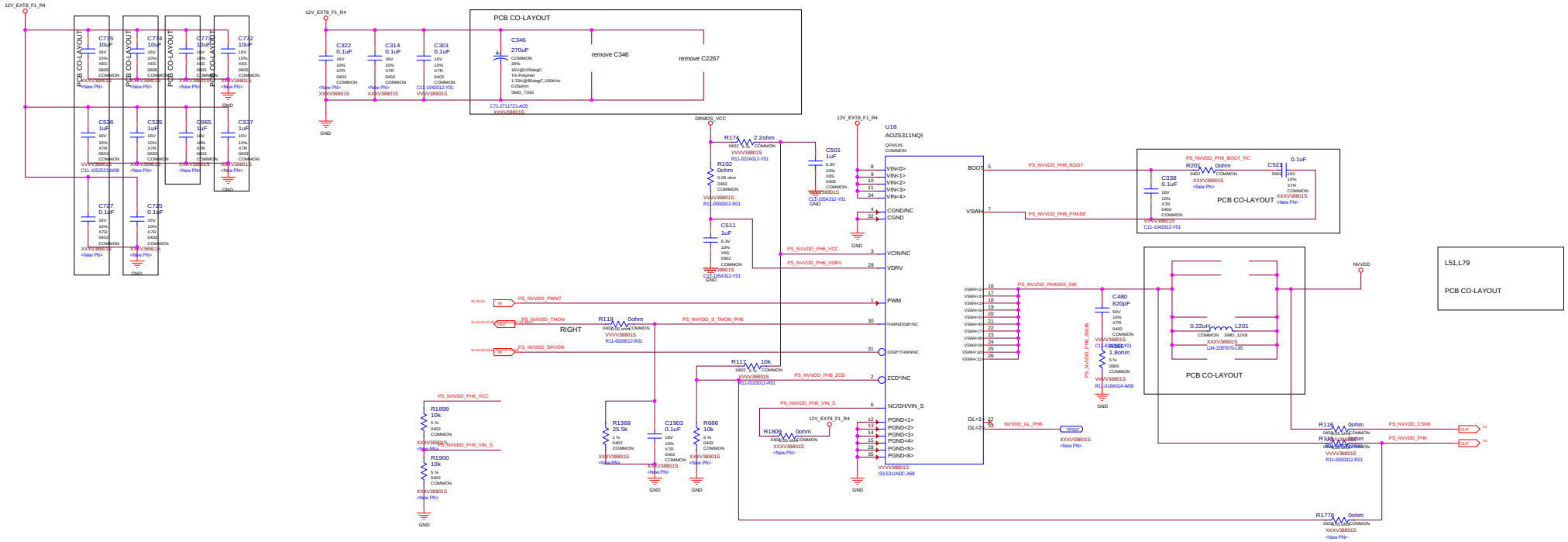

MICRO-STAR INT'L CO.,LTD		
MS-V388		
Size: Custom	Document Description: PS: NVVDD Phase 6(PWM4)	Rev: 8.0
Date: Thursday, July 23, 2020	Sheet 56 of 78	

PS: NVVDD PH 8 (PWM5), PH 9(PWM2)

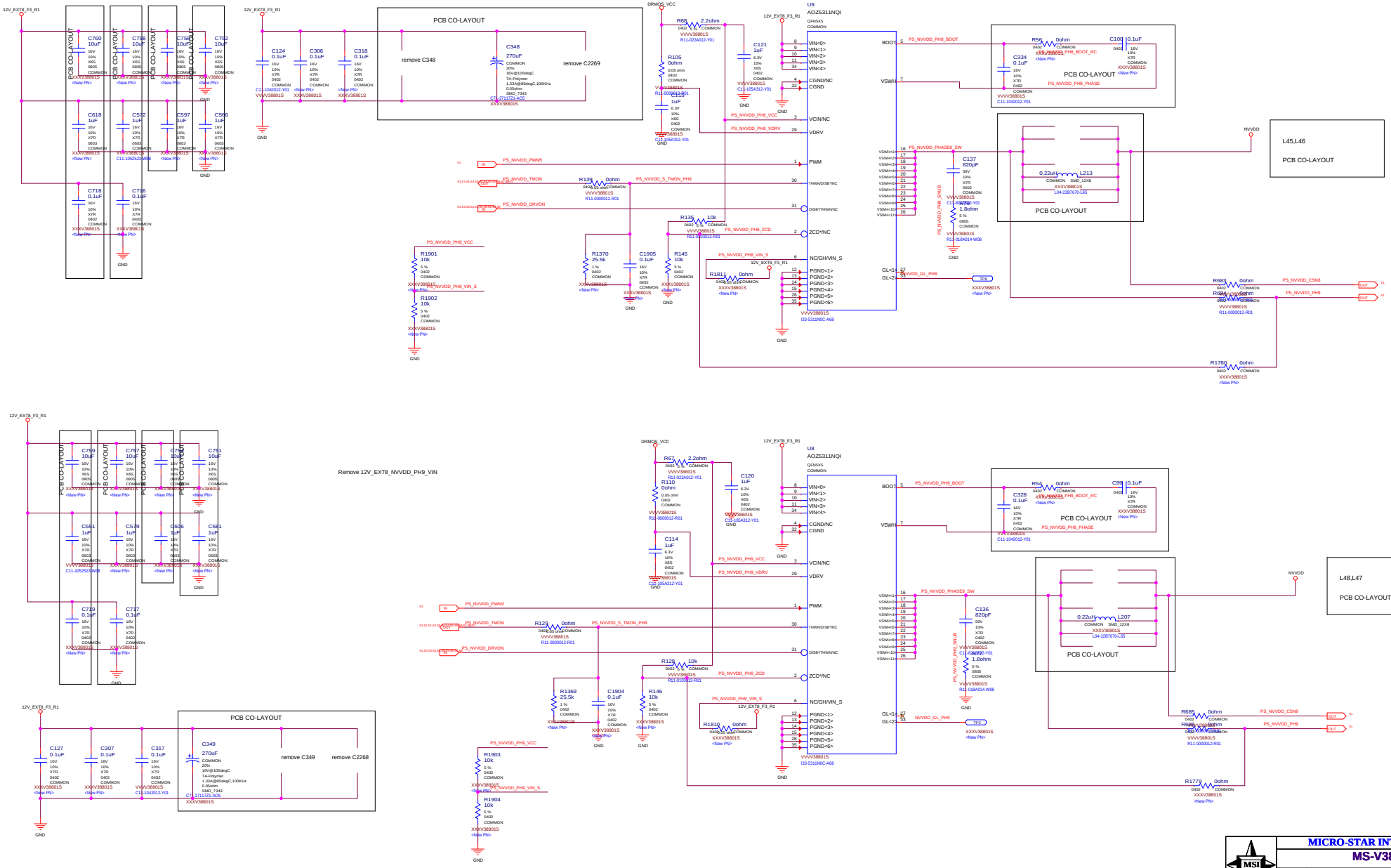

MICRO-STAR INT'L CO.,LTD

MS-V388

Size	Document Description	Rev
Custom	PS: NVVDD PH 8 (PWM5), PH 9(PWM2)	8.0

Date: Thursday, July 23, 2020 Sheet 57 of 78

PS: NVVDD Phase 10 (PWM7)

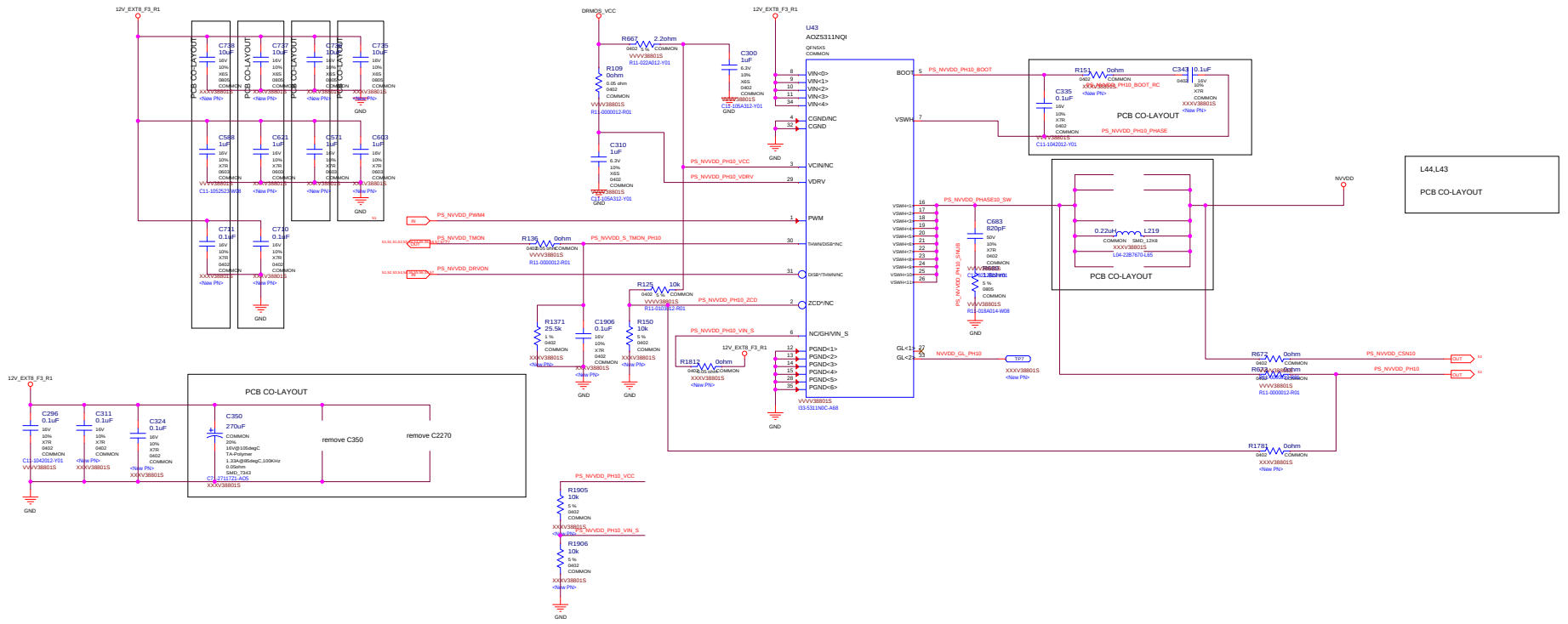

MICRO-STAR INT'L CO.,LTD	
MS-V388	
Size: Custom	Document Description: PS: NVVDD Phase 10 (PWM7)
Rev: 8.0	
Date: Thursday, July 23, 2020	Sheet 58 of 78

MICRO-STAR INT'L CO.,LTD

MS-V388

Size	Document Description	Rev
Custom	Colayout Notes	8.0

Date: Wednesday, July 22, 2020 Sheet 59 of 78

BLANK

MICRO-STAR INT'L CO.,LTD		
MS-V388		
Size: Custom	Document Description: BLANK	Rev: 8.0
Date: Wednesday, July 22, 2020	Sheet 60 of 78	

PS: NVVDD OUTPUT CAP(TOP)

REFER TO PCB FOR BOM STUFFING

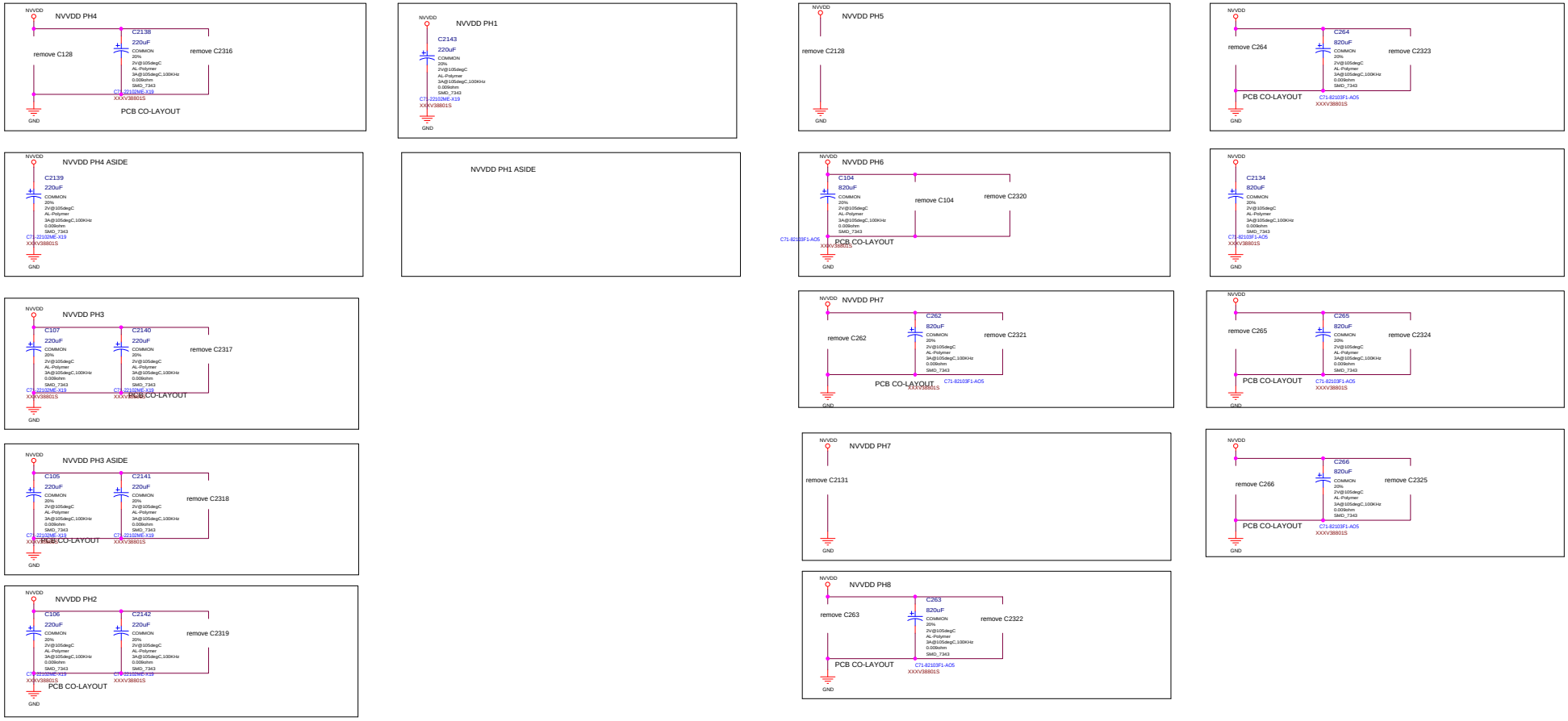

MICRO-STAR INT'L CO.,LTD	
MS-V388	
Size: Custom	Document Description: PS: NVVDD OUTPUT CAP(TOP)
Rev: 8.0	
Date: Thursday, July 23, 2020	Sheet 61 of 78

BLANK

MICRO-STAR INT'L CO.,LTD			
MS-V388			
Size: Custom	Document Description: BLANK		Rev: 8.0
Date: Wednesday, July 22, 2020		Sheet 62 of 78	

PS: INPUT SWITCH RTD3

AND GATE LOGIC FOR P-BOARD

GPIO1	GPIO23	SWITCH	VOUT
0	0	0	12V_F
0	1	0	12V_F
1	0	0	12V_F
1	1	1	3V3A

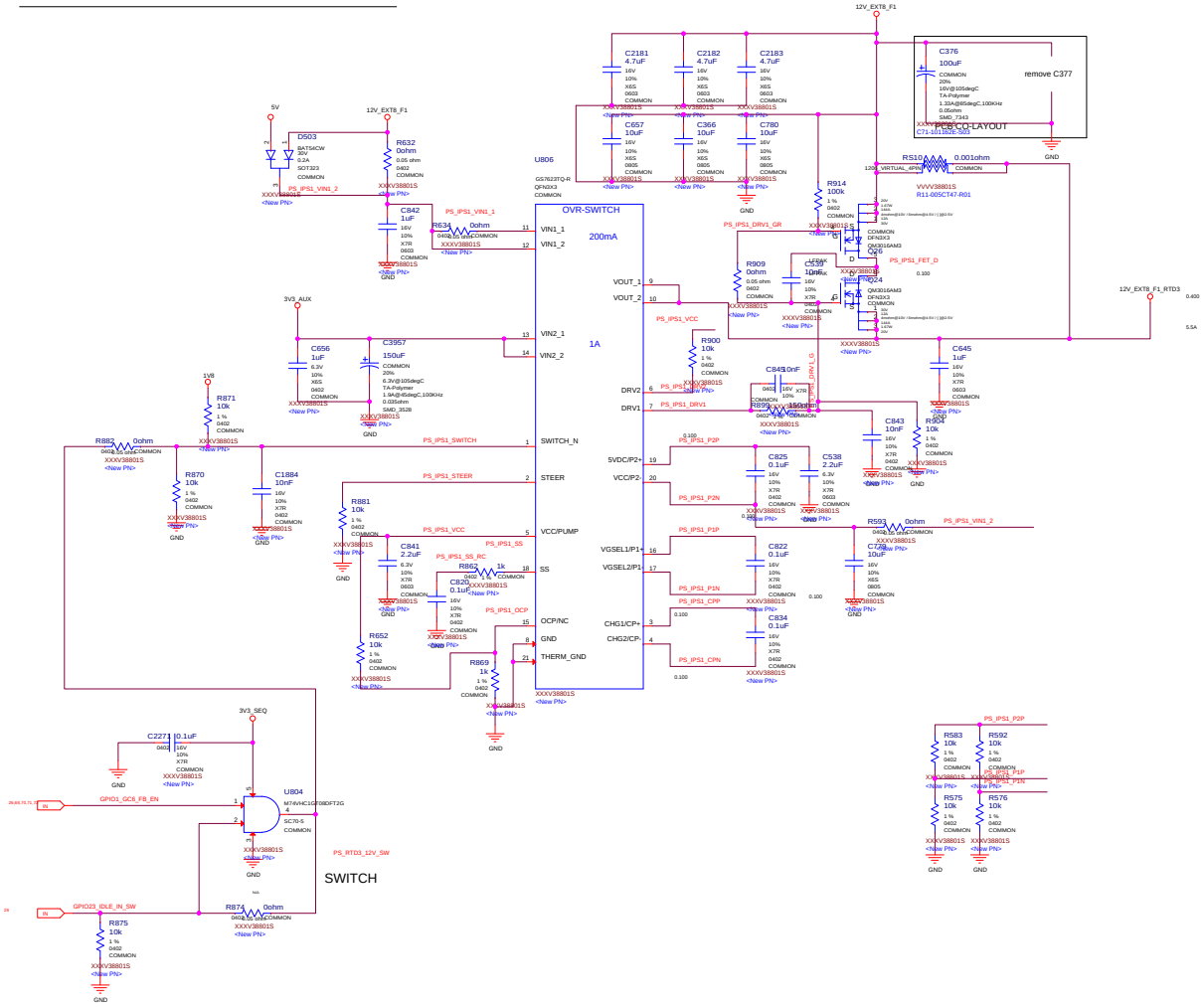

MICRO-STAR INT'L CO.,LTD	
MS-V388	
Size: Custom	Document Description: PS: INPUT SWITCH RTD3
Rev: 8.0	
Date: Thursday, July 23, 2020	Sheet 63 of 78

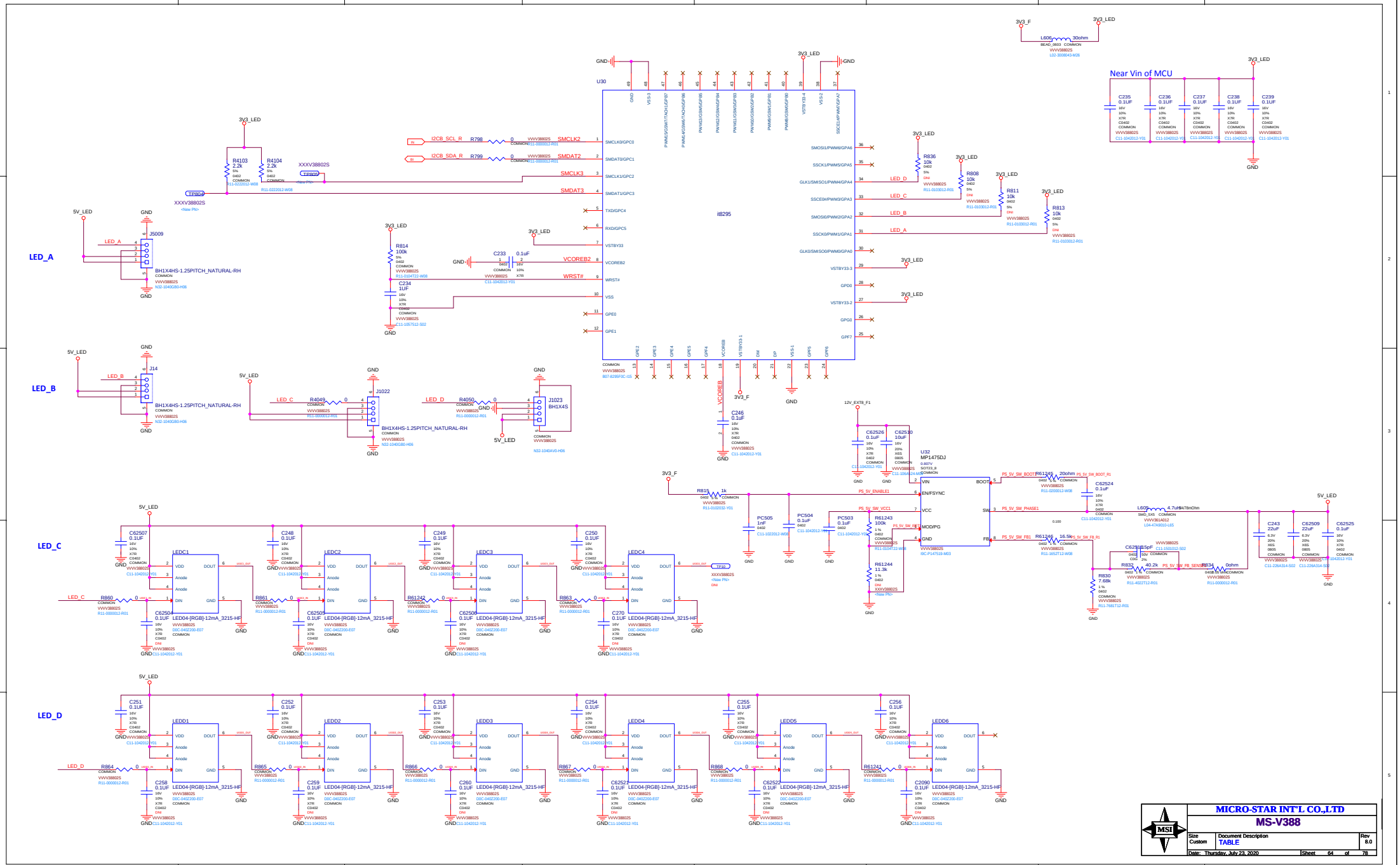
LED_A
LED_B
LED_C
LED_D
U30
i8295
Near Vin of MCU
U32
MP1475DJ
J5009
J14
J1022
J1023
BH1X4HS-1.25PITCH_NATURAL-RH
MICRO-STAR INT'L CO.,LTD
MS-V388
Size
Custom
Document Description
TABLE
Rev
8.0
Date: Thursday, July 23, 2020
Sheet 64 of 78

PS: Inputs, Filtering, and Monitoring

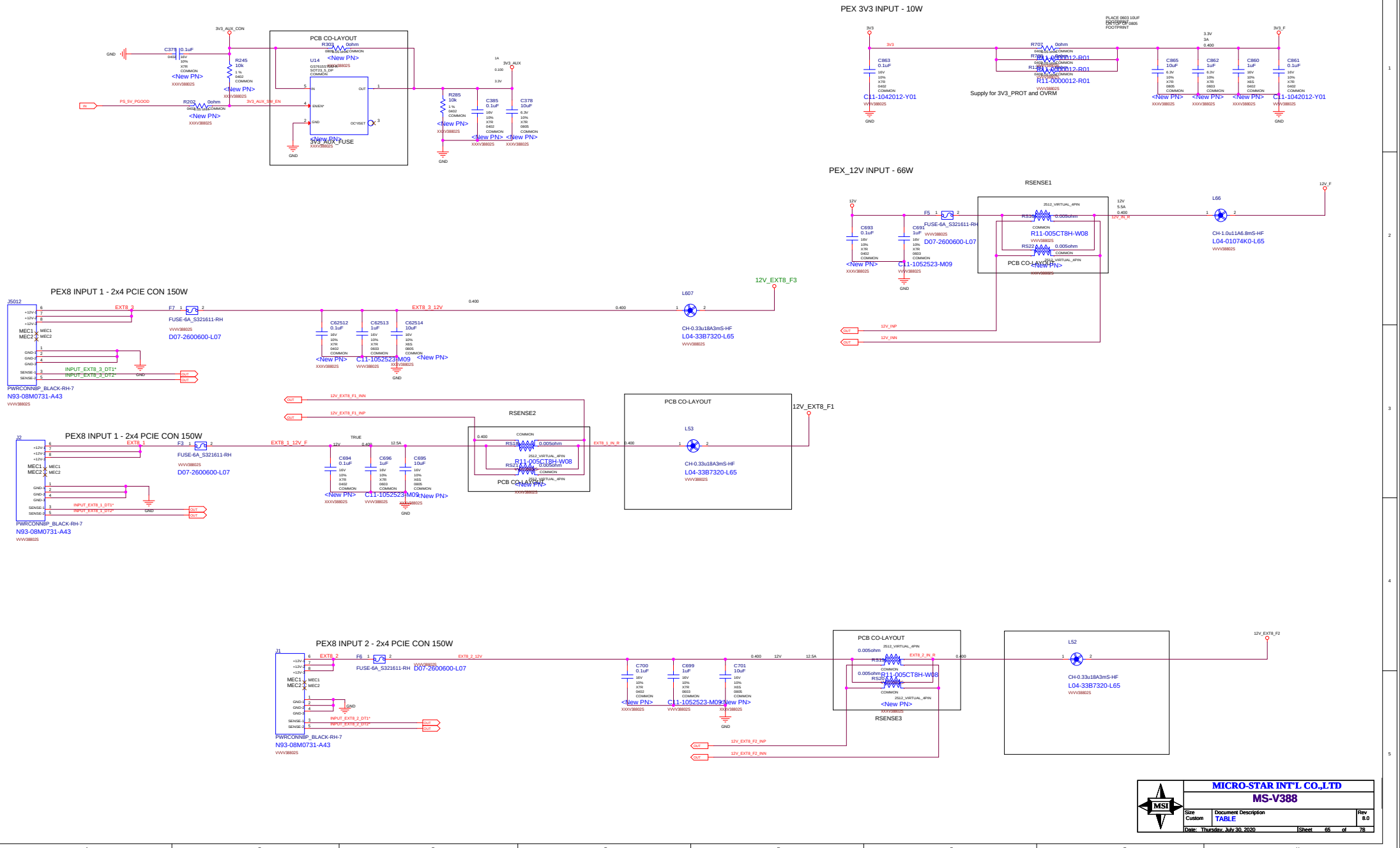

PS: 12V Current Steering & Hot Unplug Detect

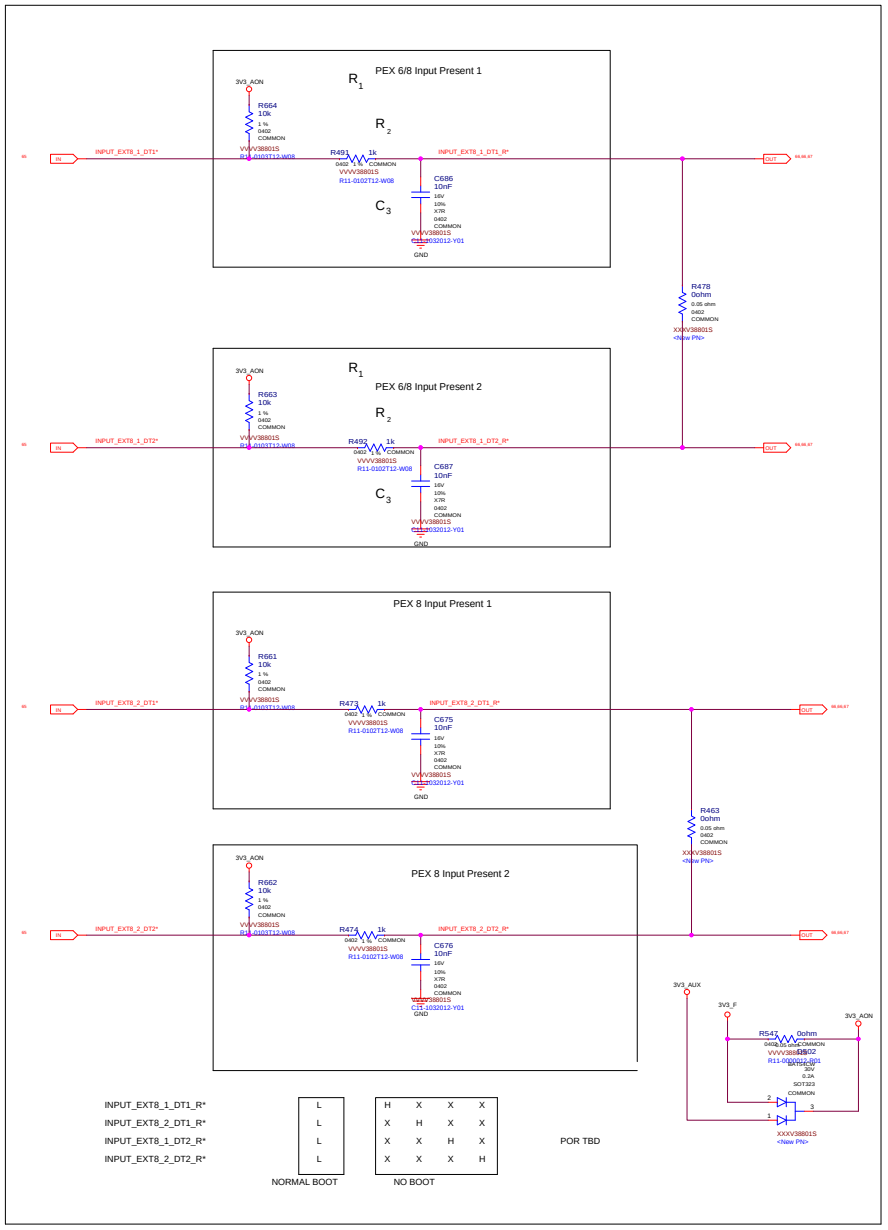

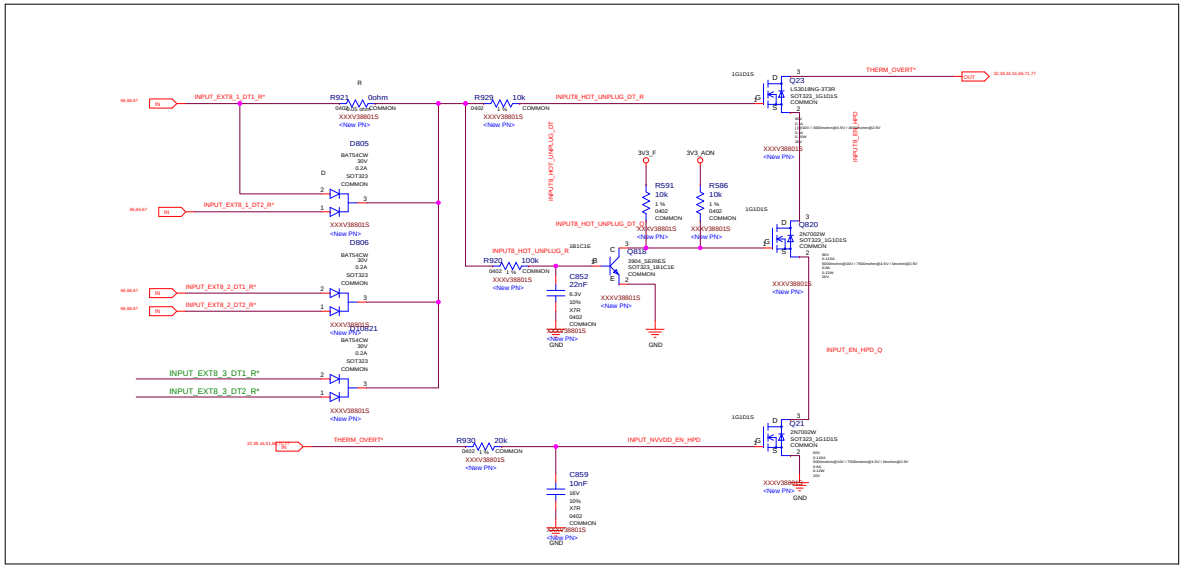

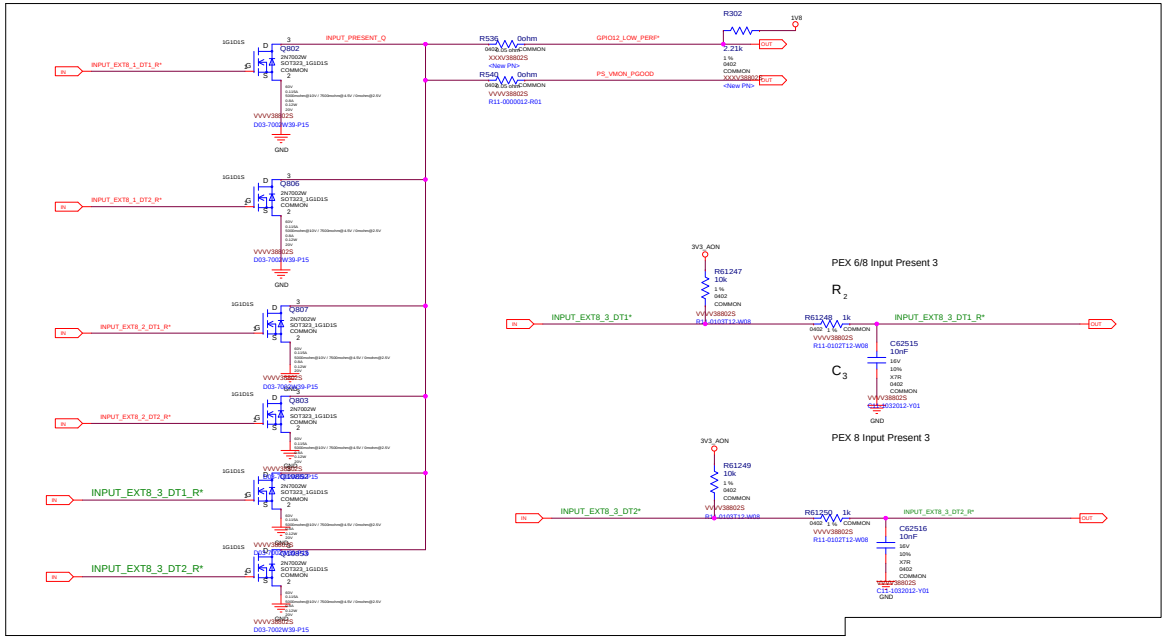

MICRO-STAR INT'L CO.,LTD		
MS-V388		
Size: Custom	Document Description: 12V Current Steering & Hot Unplug Detect	Rev: 8.0
Date: Thursday, July 23, 2020	Sheet 66 of 78	

PS: Discrete Steering

12V CURRENT STEERING (UNDER POWER BOOT):

PEX12V AND 12V_EXT8_F1

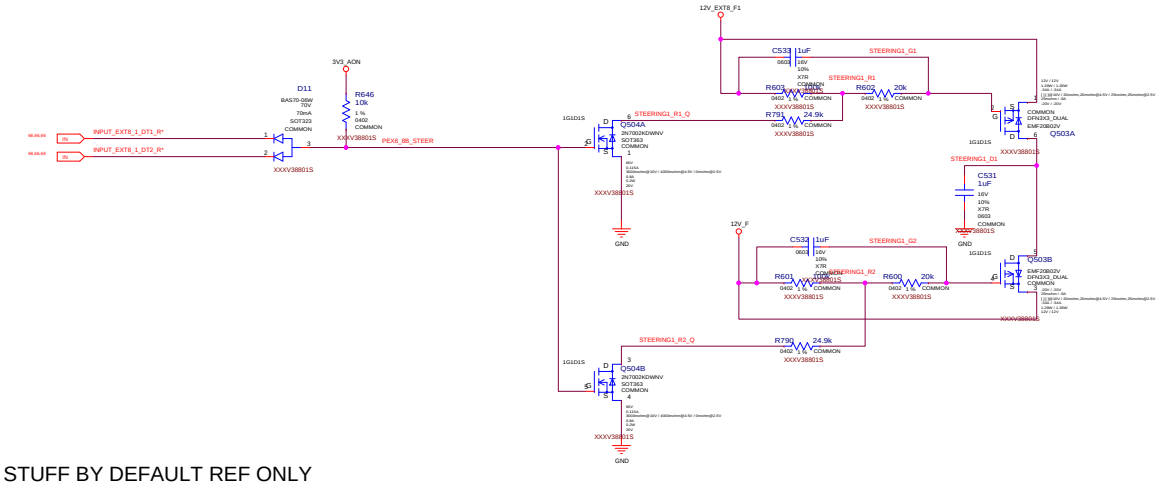

NO STUFF BY DEFAULT REF ONLY

PEX12V AND 12V_EXT8_F2

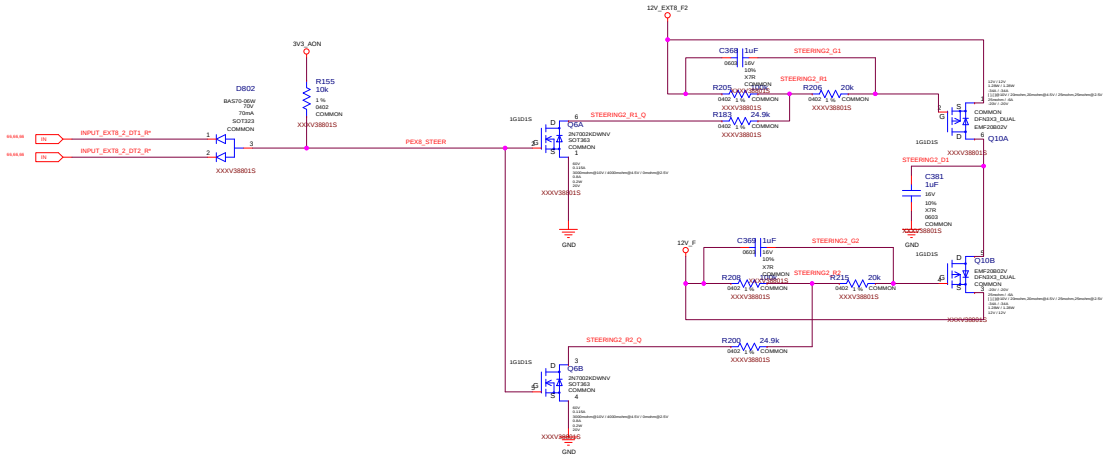

MICRO-STAR INT'L CO.,LTD		
MS-V388		
Size: Custom	Document Description: PS: Discrete Steering	Rev: 8.0
Date: Thursday, July 30, 2020	Sheet 67 of 78	

PS: Pre-Filter

Route the trace to PEX Golden Finger

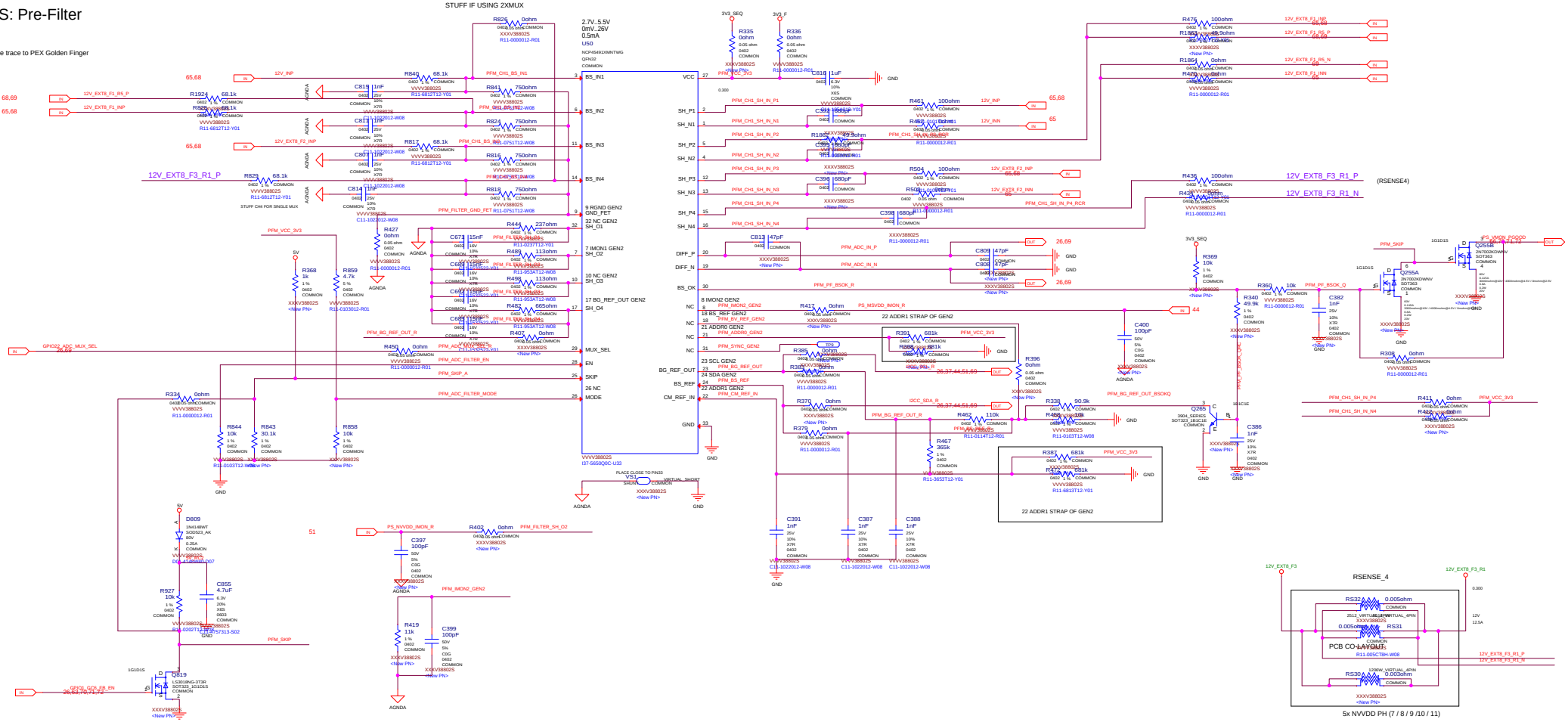

MICRO-STAR INT'L CO.,LTD		
MS-V388		
Size: Custom	Document Description: TABLE	Rev: 8.0
Date: Thursday, July 23, 2020	Sheet 68 of 78	

PS: Pre-Filter B

BUS	connect A	connect B	connect C
(RSENSE1)	(RSENSE2)	(RSENSE3)	(RSENSE4)
12V_F	NET NAME: F1	NET NAME: F2	NET NAME:12V_EXT8_F3_R1
FB 4	PEXVDD	FB-2(左	
MSVDD1		FB-3	
NVVDD1	(RSENSE2)	MSVDD3(左	NVVDD7
	NET NAME:12V_EXT8_F1_RTD	MSVDD5(左	NVVDD8
	FB 1	(RSENSE7)	NVVDD9
	5V	NET NAME: 12V_EXT8_F2_R6	NVVDD10
	1V8	NVVDD2(左	NVVDD11
	(RSENSE6)	NVVDD3(左	
	NET NAME:12V_EXT8_F1_R5	NVVDD4(左	
	MSVDD2		
	MSVDD4		
52.8W	MSVDD6	73.5+27+30=130.5W	122.5W
	(RSENSE5)		
	NET NAME: 12V_EXT8_F1_R4		
	NVVDD5- F1-R4		
	NVVDD6-F1-R4		
	129.6W		80W/6=13.3W/270W/11=24.5W

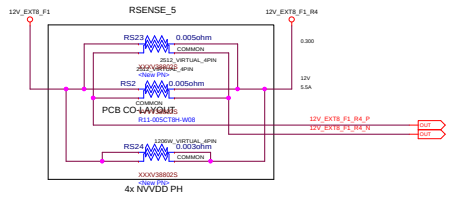

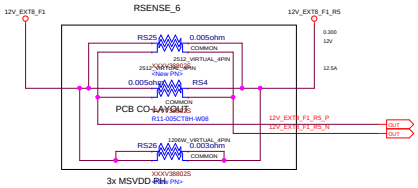

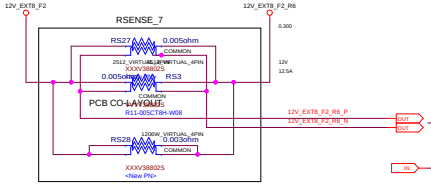

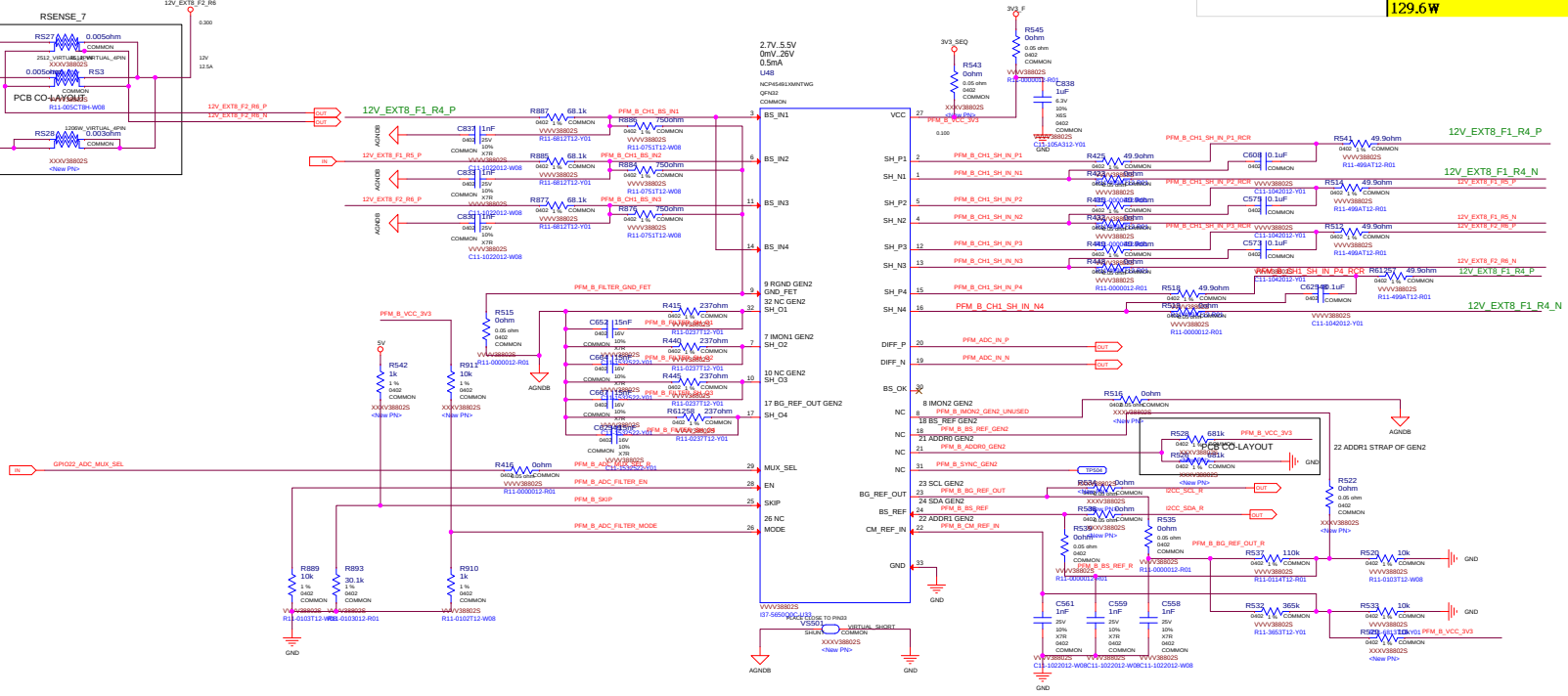

MICRO-STAR INT'L CO.,LTD			
MS-V388			
Size Custom	Document Description TABLE		Rev 8.0
Date: Thursday, July 30, 2020	Sheet 69 of 78		

SEQUENCE:5V,1V8,3V3_SEQ ENABLE

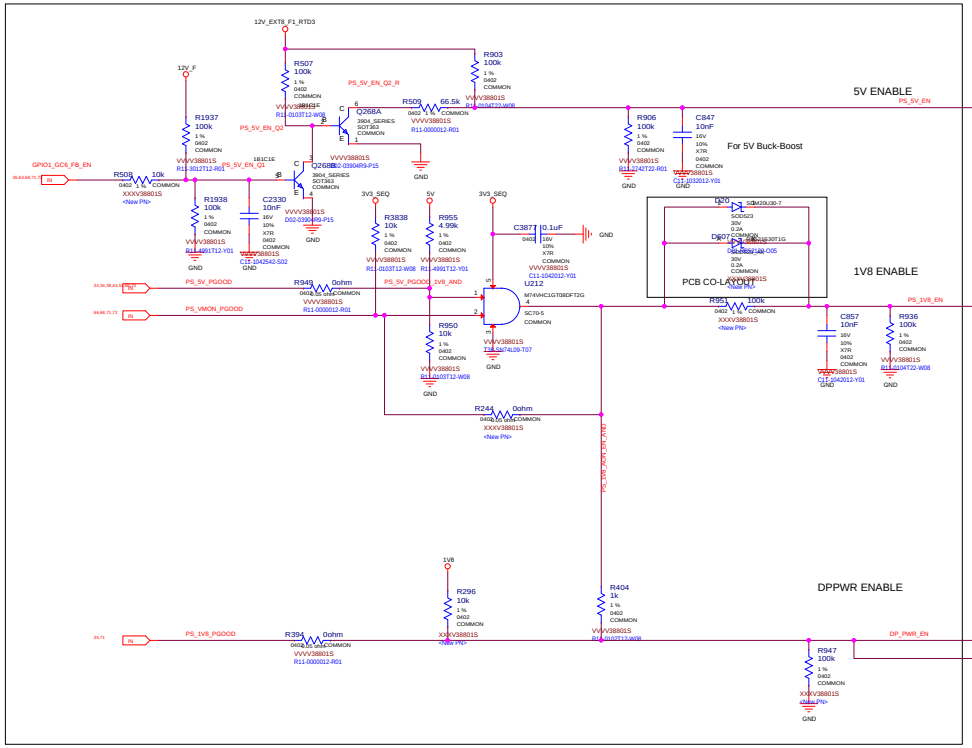

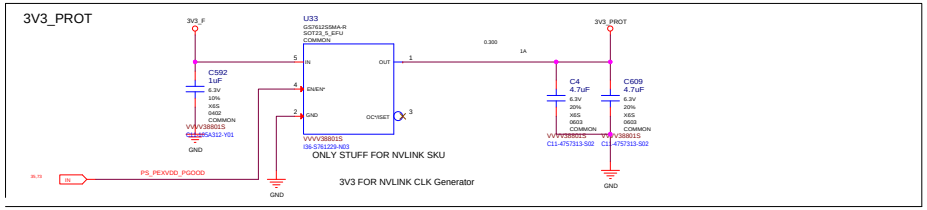

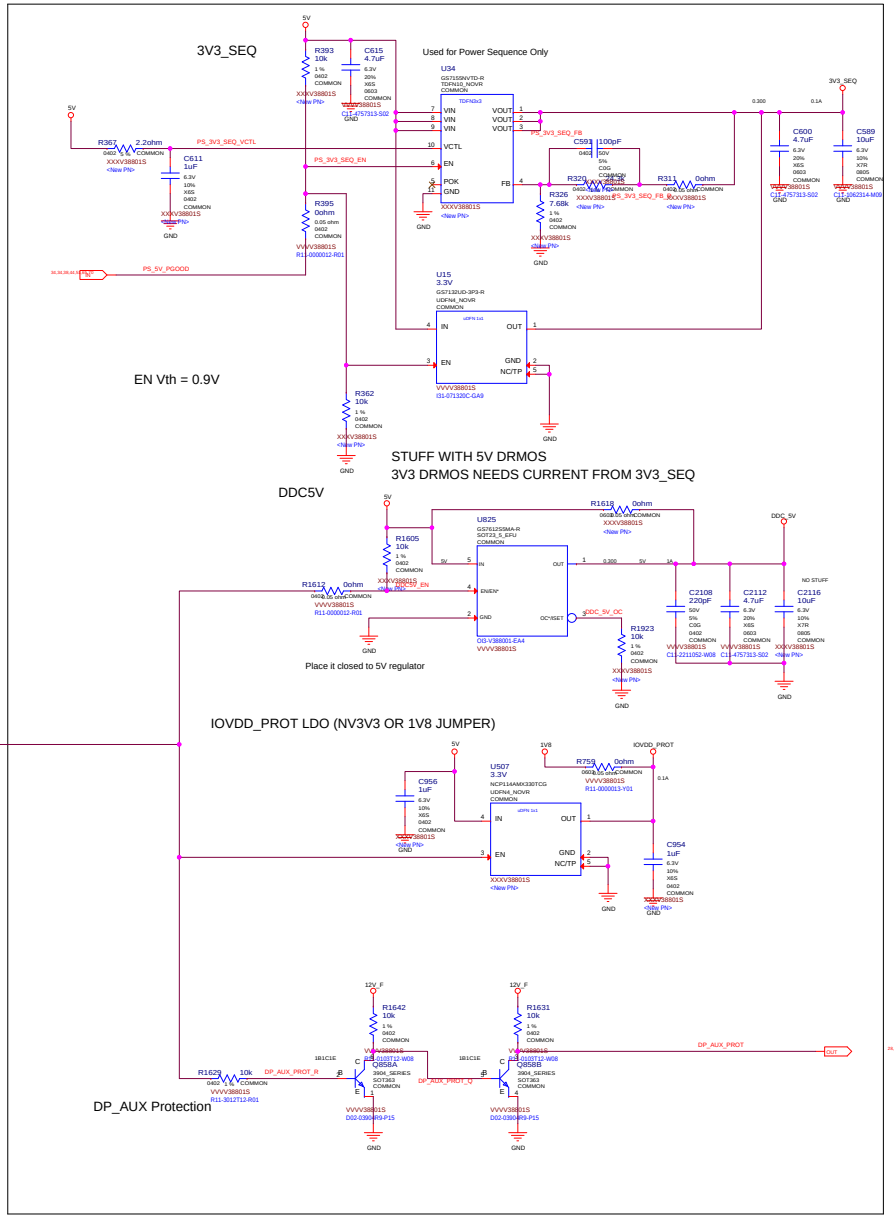

MICRO-STAR INT'L CO.,LTD		
MS-V388		
Size: Custom	Document Description: SEQUENCE:5V,1V8,3V3_SEQ ENABLE	Rev: 8.0
Date: Thursday, July 23, 2020	Sheet 70 of 78	

SEQUENCE:NV,PEX,FB ENABLE

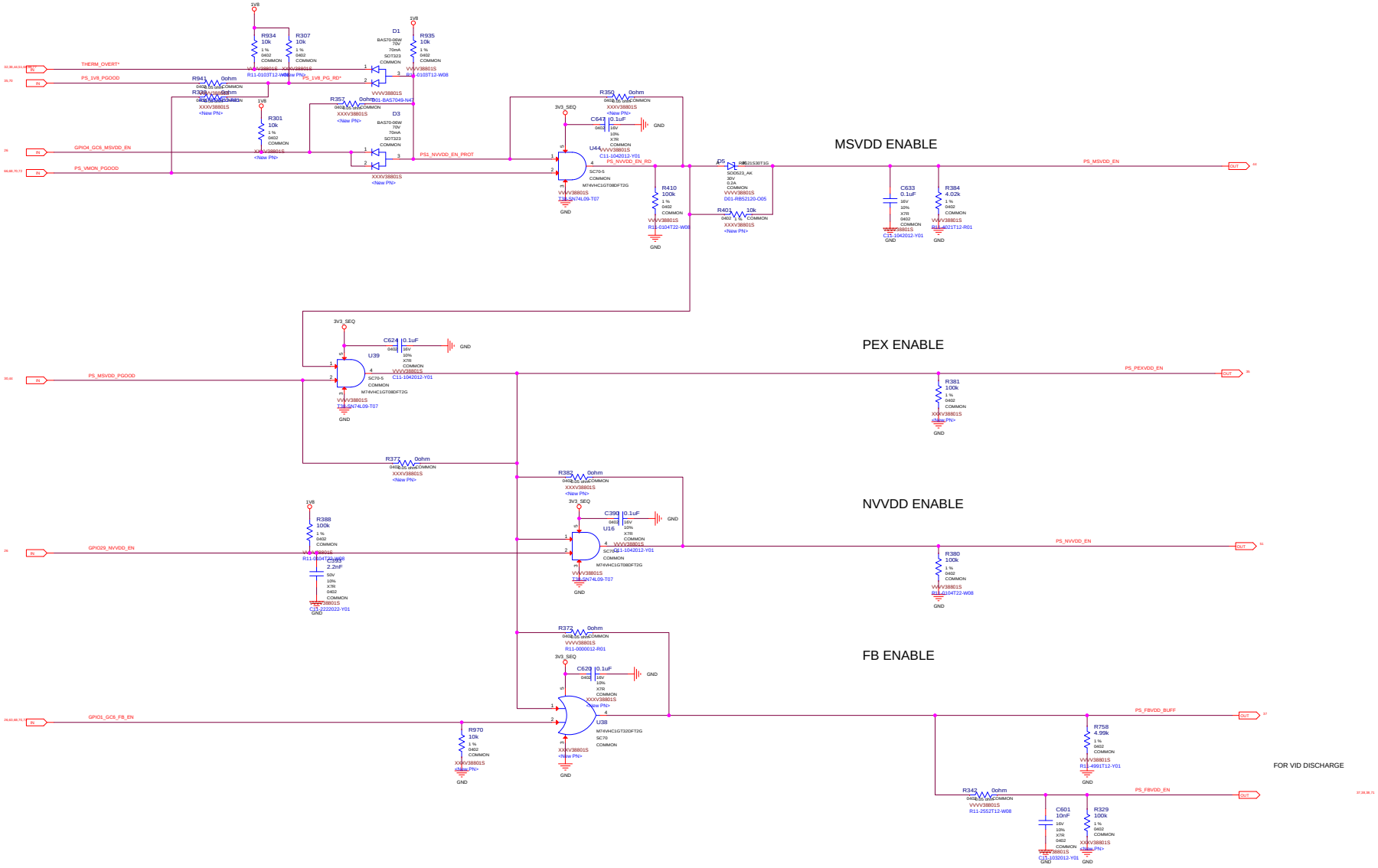

Sequence: 3V3 MONITOR

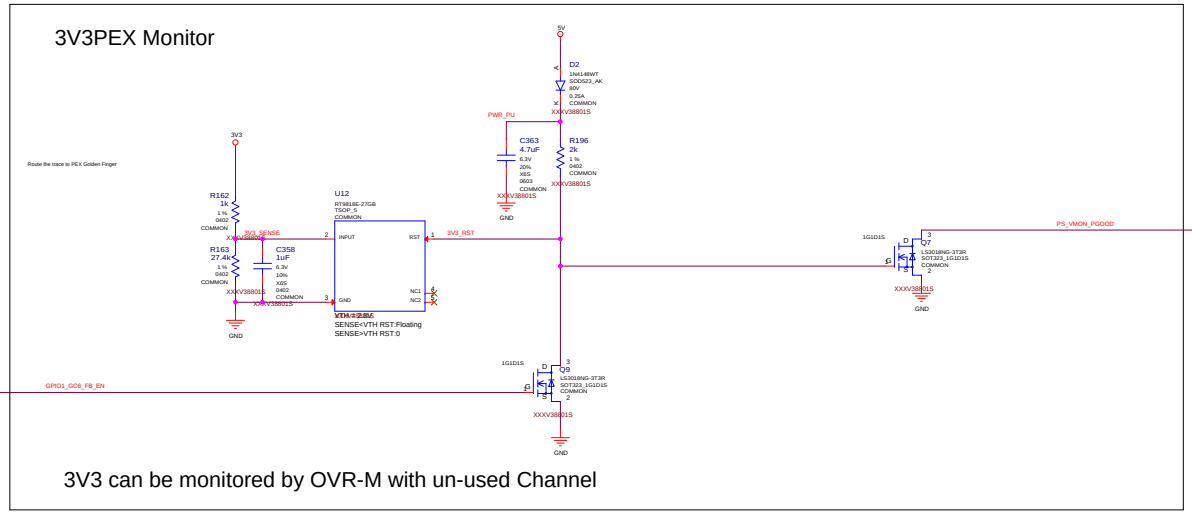

3V3 can be monitored by OVR-M with un-used Channel

MSI	MICRO-STAR INT'L CO.,LTD	
	MS-V388	
Size: Custom	Document Description: Sequence: 3V3 MONITOR	Rev: 8.0
Date: Thursday, July 23, 2020	Sheet 72 of 78	

SEQUENCE:MISC

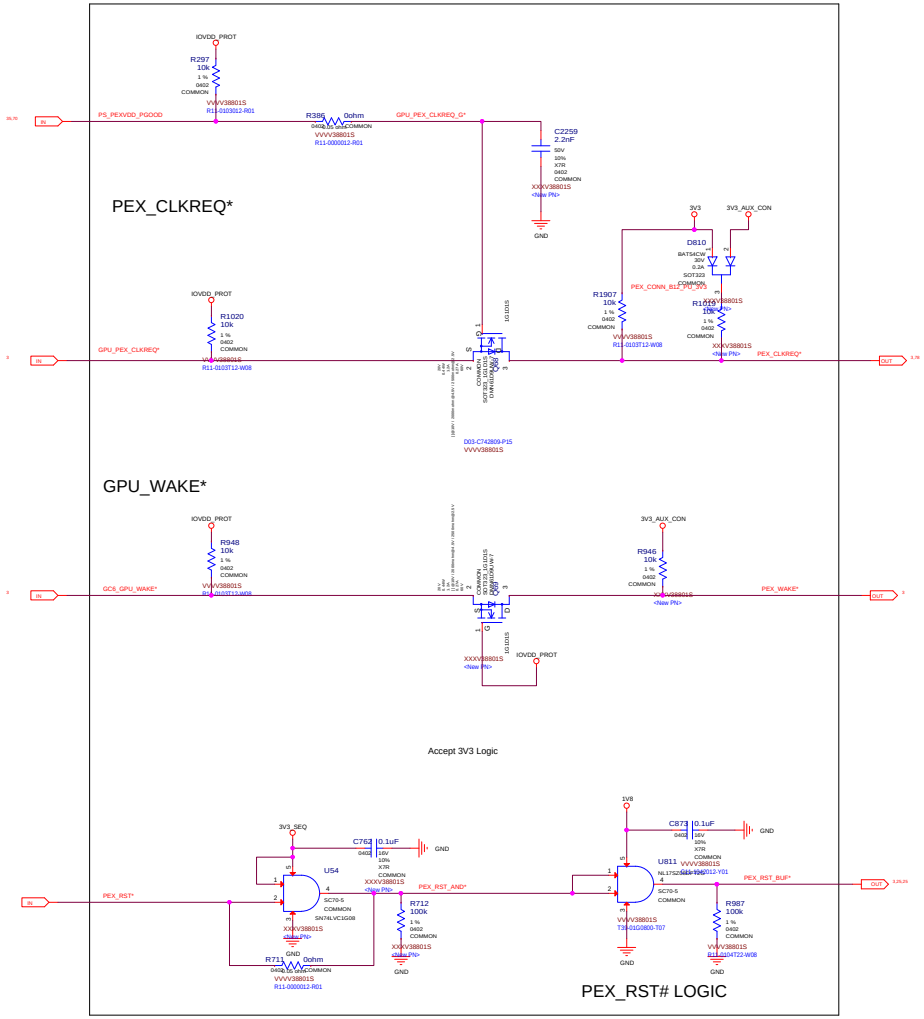

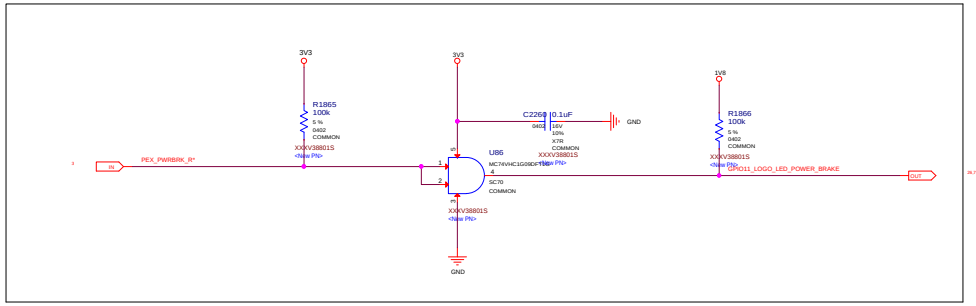

MICRO-STAR INT'L CO.,LTD		
MS-V388		
Size: Custom	Document Description: SEQUENCE:MISC	Rev: 8.0
Date: Thursday, July 23, 2020	Sheet 73 of 78	

MISC: LED & FAN

2-PIN LED HEADER

DUAL FAN 4-PIN HEADERS

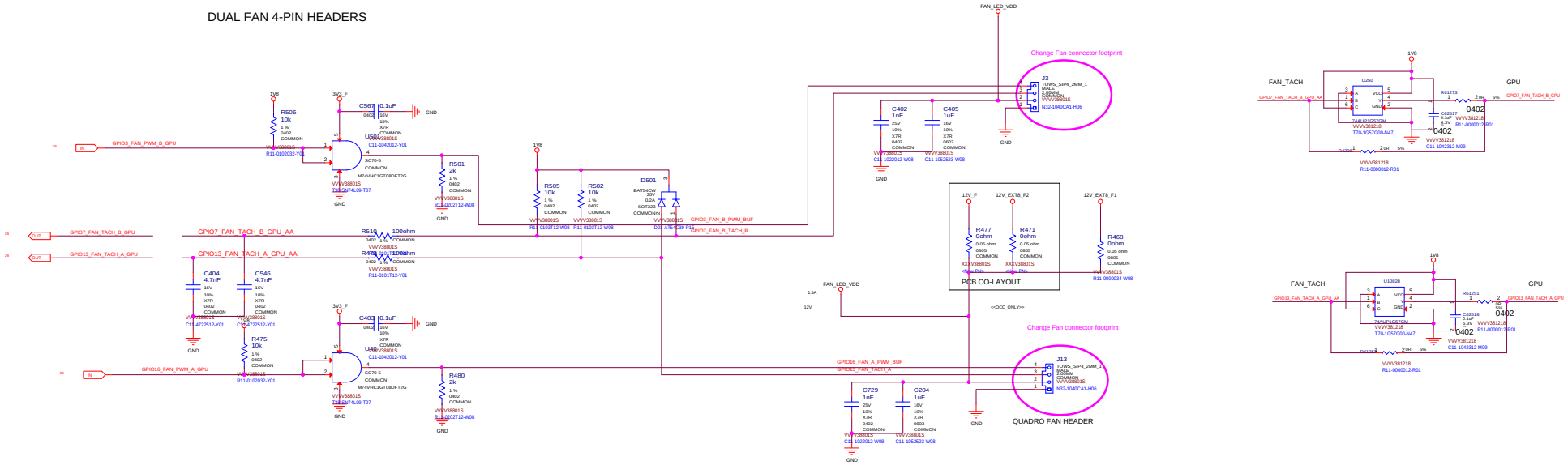

MICRO-STAR INT'L CO.,LTD		
MS-V388		
Size: Custom	Document Description: MISC: LED & FAN	Rev: 8.0
Date: Thursday, July 30, 2020	Sheet 74 of 78	

MISC: RGBW LED REF

CONNECTOR SIZE TO FIT LAYOUT
ALL CIRCUIT NO STUFF BY DEFAULT
ALINGN WITH PASH
IF ADDTIONAL POWER CONSUPTION R
NEEDED, IT SHOULD BE ON LED MOD.

1: 12V
2: BLUE
3: GREEN
4: RED
5: WHITE

WHITE DRIVE

LOGO LED RED

RED DRIVE

GREEN DRIVE

BLUE DRIVE

MSI	MICRO-STAR INT'L CO.,LTD	
	MS-V388	
Size: Custom	Document Description: MISC: RGBW LED REF	Rev: 8.0
Date: Wednesday, July 22, 2020	Sheet 75 of 78	

Mechanical: Mounting holes

BACK STIFFENER:

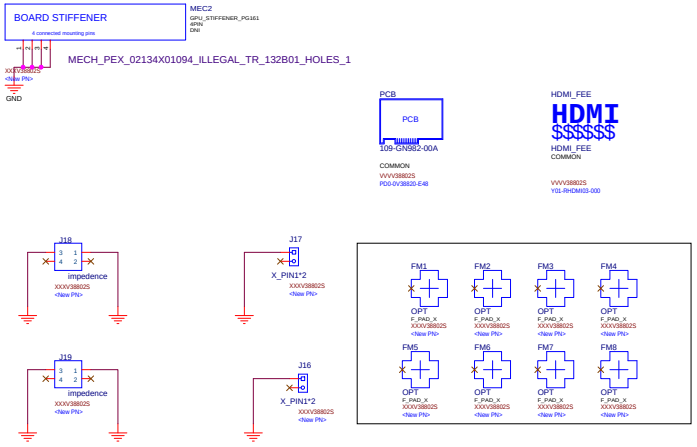

Mechanical Holes Symbol

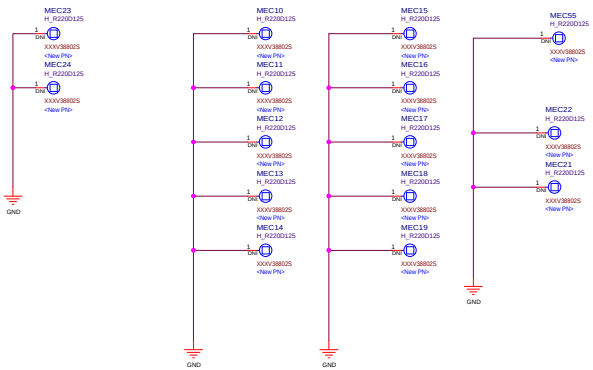

MICRO-STAR INT'L CO.,LTD		
MS-V388		
Size: Custom	Document Description: TABLE	Rev: 8.0
Date: Thursday, July 23, 2020	Sheet 76 of 78	

VR THERMAL PROTECTION

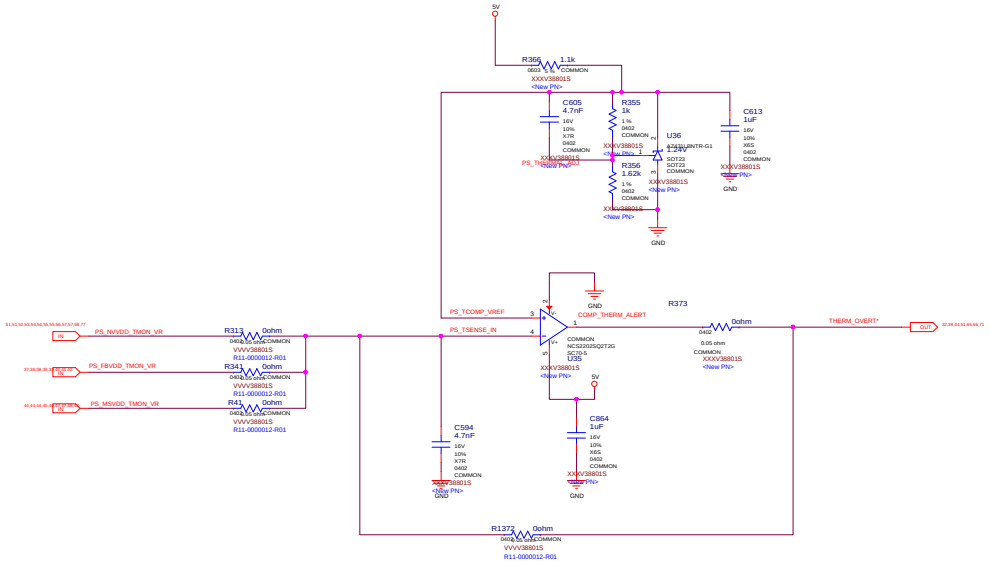

MICRO-STAR INT'L CO.,LTD		
MS-V388		
Size: Custom	Document Description: VR THERMAL PROTECTION	Rev: 8.0
Date: Thursday, July 23, 2020	Sheet 77 of 78	

PCI TERM

MICRO-STAR INT'L CO.,LTD	
MS-V388	
Size: Custom	Document Description: PCI TERM
Rev: 8.0	
Date: Thursday, July 23, 2020	Sheet 78 of 78