PG132-A02

370W, FH Std PCB, 384b, GDDR6x 2CH X16
DP + DP + DP + HDMI/DP

TABLE OF CONTENTS

Page	Description
1	Table of Contents
2	BLOCK DIAGRAM
3	PCI EXPRESS
4	MEMORY: GPU PARTITION A/B
5	MEMORY: FBA PARTITION[31:0]
6	MEMORY: FBA PARTITION[63:32]
7	MEMORY: FBB PARTITION[31:0]
8	MEMORY: FBB PARTITION[63:32]
9	MEMORY: GPU PARTITION C/D
10	MEMORY: FBC PARTITION[31:0]
11	MEMORY: FBC PARTITION[63:32]
12	MEMORY: FBD PARTITION[31:0]
13	MEMORY: FBD PARTITION[63:32]
14	MEMORY: GPU PARTITION E/F
15	MEMORY: FBE PARTITION[31:0]
16	MEMORY: FBE PARTITION[63:32]
17	MEMORY: FBF PARTITION[31:0]
18	MEMORY: FBF PARTITION[63:32]
19	GPU GND, RFUs & RSVD
20	GPU POWERS
21	GPU DECOUPLING NVVDD
22	GPU DECOUPLING FBVDDQ
23	GPU DECOUPLING MSVDD
24	BLANK
25	NVHS x16
26	MISC: THERMAL, JTAG, GPIO
27	IFPA UNUSED, IFPB UNUSED
28	IFPE DP
29	IFPD DP
30	IFPC HDMI/DP
31	IFPF DP
32	MISC. ROM, STRAPS
33	MISC. XTAL, PLL
34	PS: 5V
35	PS: PEX_DVDD and 1V8
36	BLANK
37	PS: FBVDD Controller OVR3
38	PS: FBVDDQ OVR4
39	PS: FBVDD PH1
40	PS: FBVDD PH3
41	PS: FBVDD PH2
42	PS: FBVDD PH4
43	PS: FBVDD OUTPUT CAP
44	PS: FBVDD_OUTPUT_CAP_NEAR_MEMORY
45	PS: MSVDD CONTROLLER
46	PS: MSVDD PH1
47	PS: MSVDD PH2
48	PS: MSVDD PH3 and PH5
49	PS: MSVDD PH4 and PH6
50	PS: MSVDD OUTPUT CAP(TOP)
51	BLANK
52	PS: NVVDD Controller_OVR8
53	PS: NVVDD PH1 (PWM1)
54	PS: NVVDD PH2(PWM6)
55	PS: NVVDD PH3 (PWM3) and PH4 (PWM3)
56	PS: NVVDD PH5(PWM7) and PH7(PWM8)
57	PS: NVVDD PH6 (PWM7)
58	PS: NVVDD PH8(PWM5) and PH9(PWM2)
59	PS: NVVDD PH10 (PWM4)
60	Colayout_Notes
61	History
62	PS: NVVDD OUTPUT CAP(TOP)
63	BLANK
64	PS: INPUT SWITCH RTD3
65	BLANK
66	PS: INPUTS, FILTERING, and, MONITORING
67	PS: HOT UNPLUG
68	PS: Discrete Power Steering
69	PS: PREFILTER
70	PS: PREFILTER B
71	Sequence: 5V, 1V8, 3V3_SEQ
72	Sequence: NV, PEX, FB EN
73	Sequence: 3V3 MONITOR
74	Sequence: MISC
75	MISC: LED & FAN
76	MISC: RGBW LED REF
77	Mechanical: Mounting holes
78	VR THERMAL PROTECTION
79	PCI TERM

Block Diagram

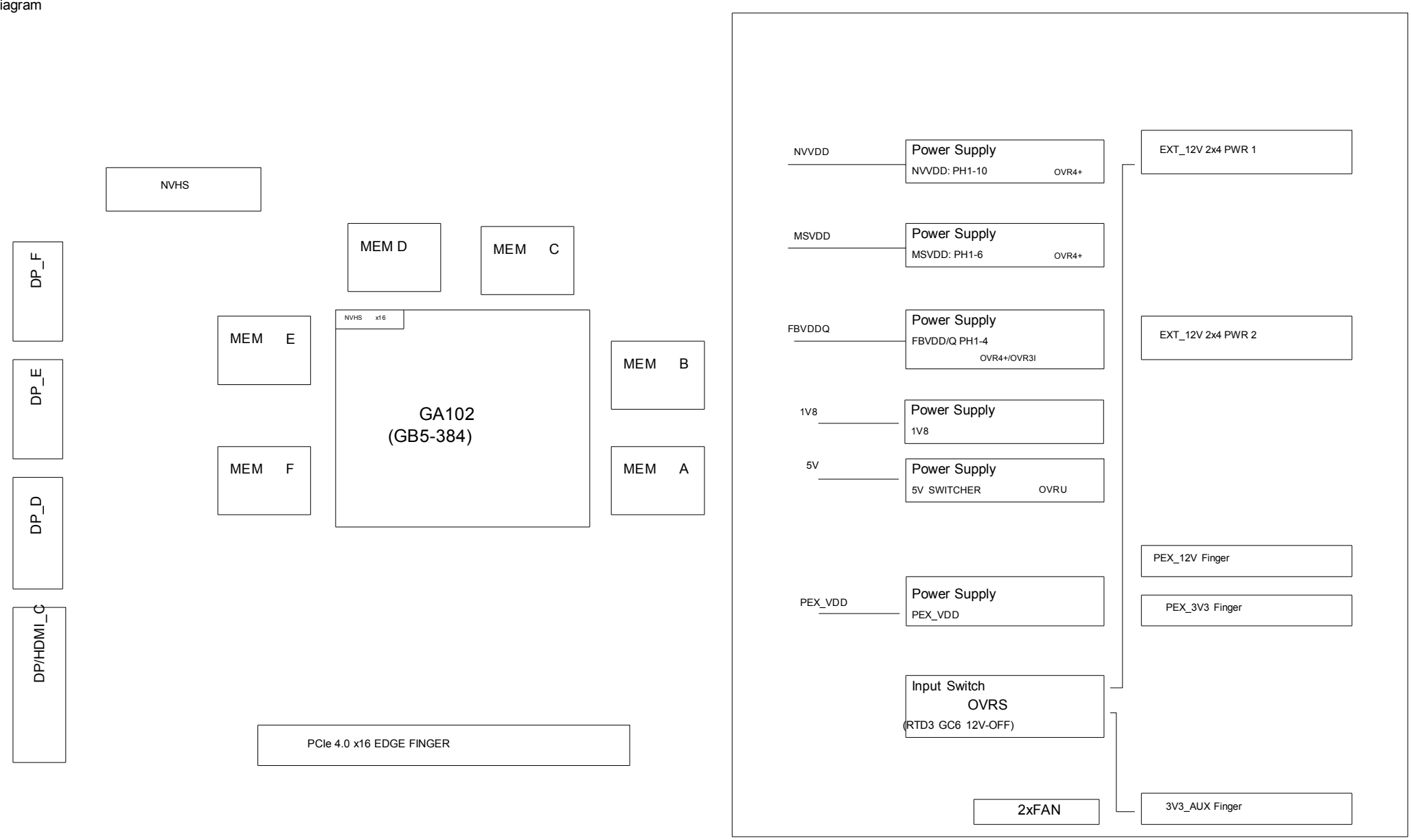

MICRO-STAR INT'L CO.,LTD

MS-V389

Size	Document Description	Rev
Custom	Block Diagram	1.1

Date: Thursday, July 23, 2020 Sheet 2 of 76

PCI Express

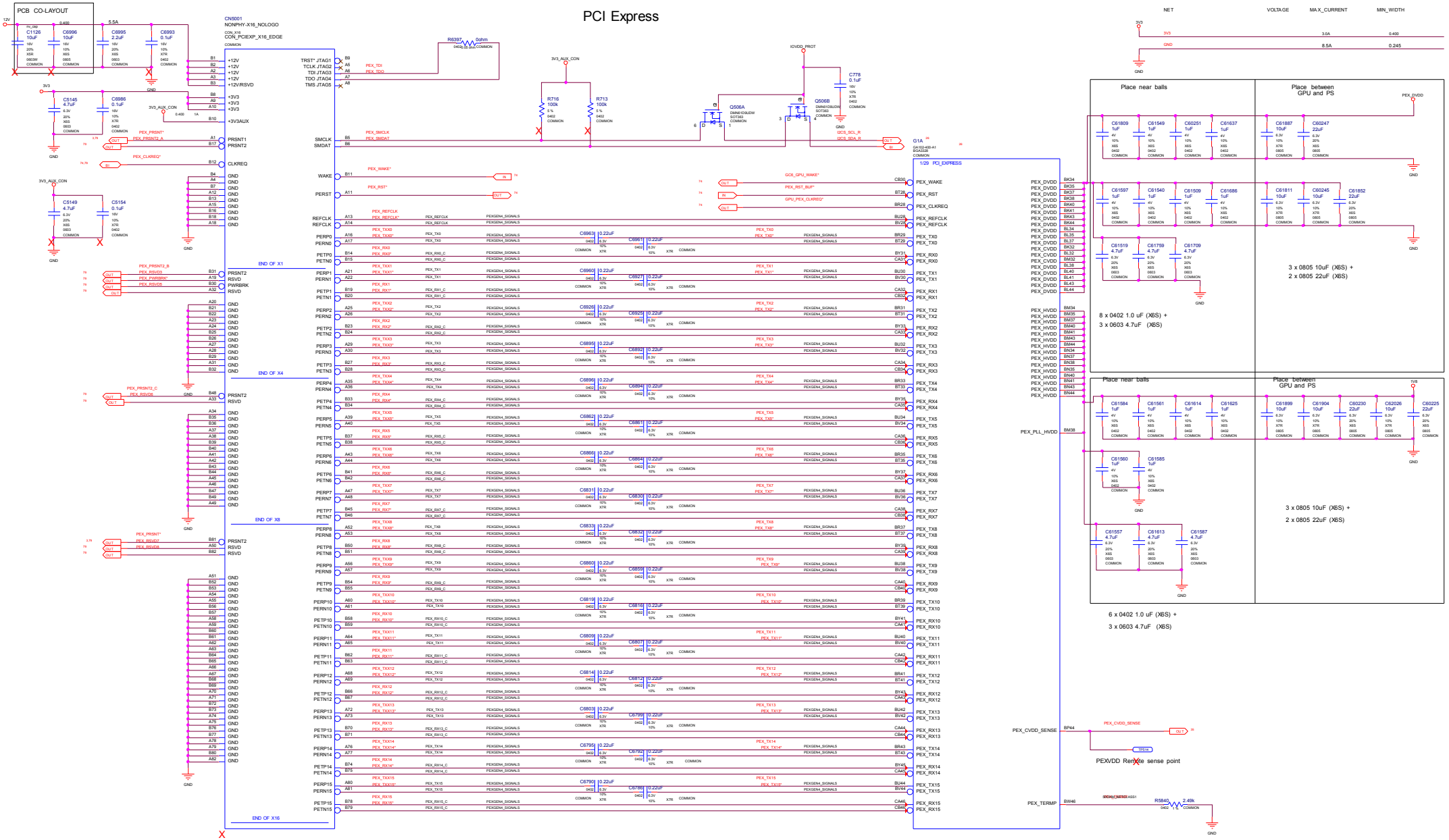

MICRO-STAR INT'L CO.,LTD	
MS-V389	
Size: Custom	Document Description: PCI Express
Rev: 1.1	
Date: Thursday, July 23, 2020	Sheet 3 of 76

MEMORY: GPU Partition A/B

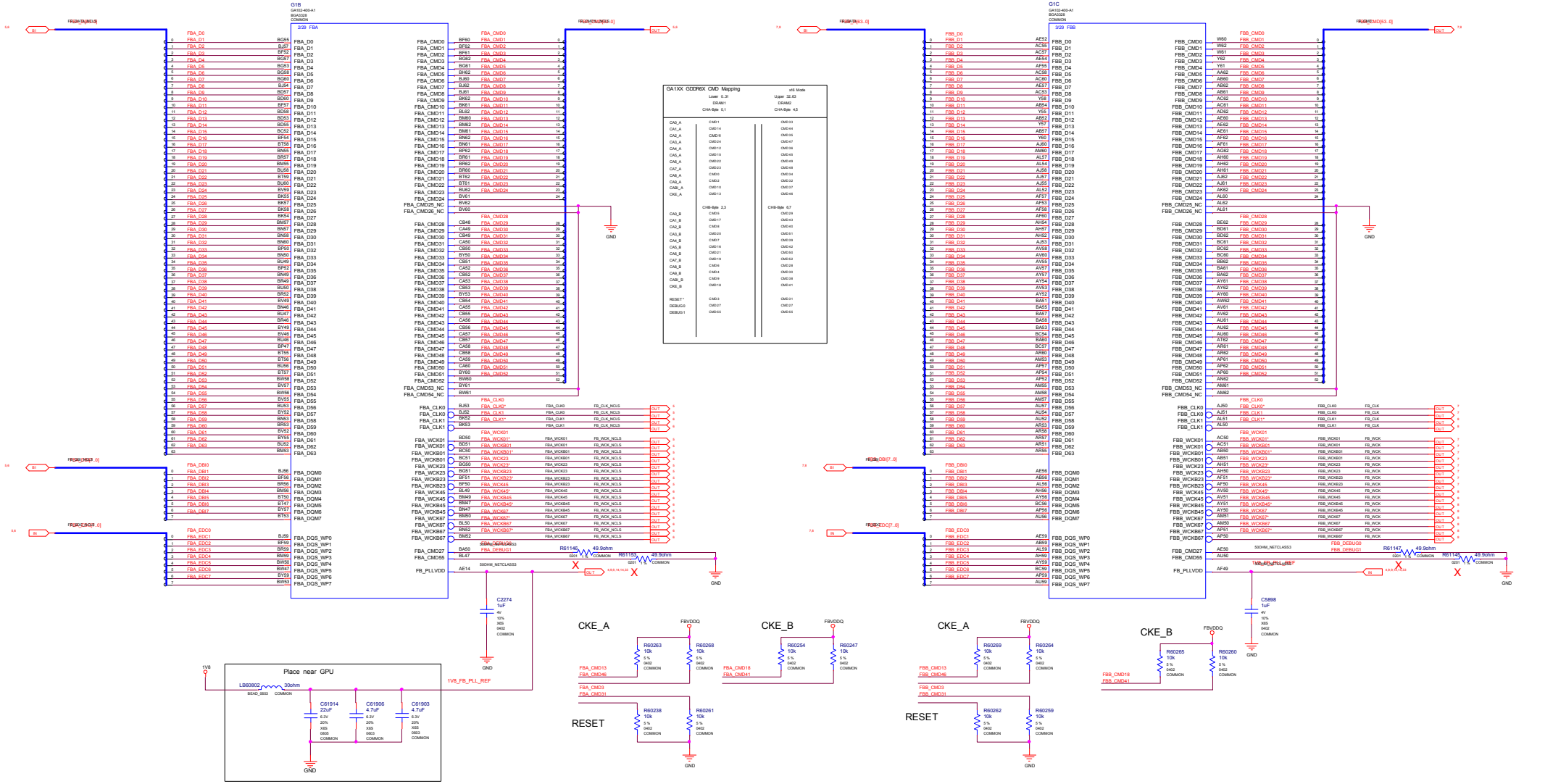

MICRO-STAR INT'L CO.,LTD	
MS-V389	
Size: Custom	Document Description: MEMORY: GPU Partition A/B
Rev: 1.1	
Date: Thursday, July 23, 2020	Sheet 4 of 76

MEMORY: FBA Partition 31..0

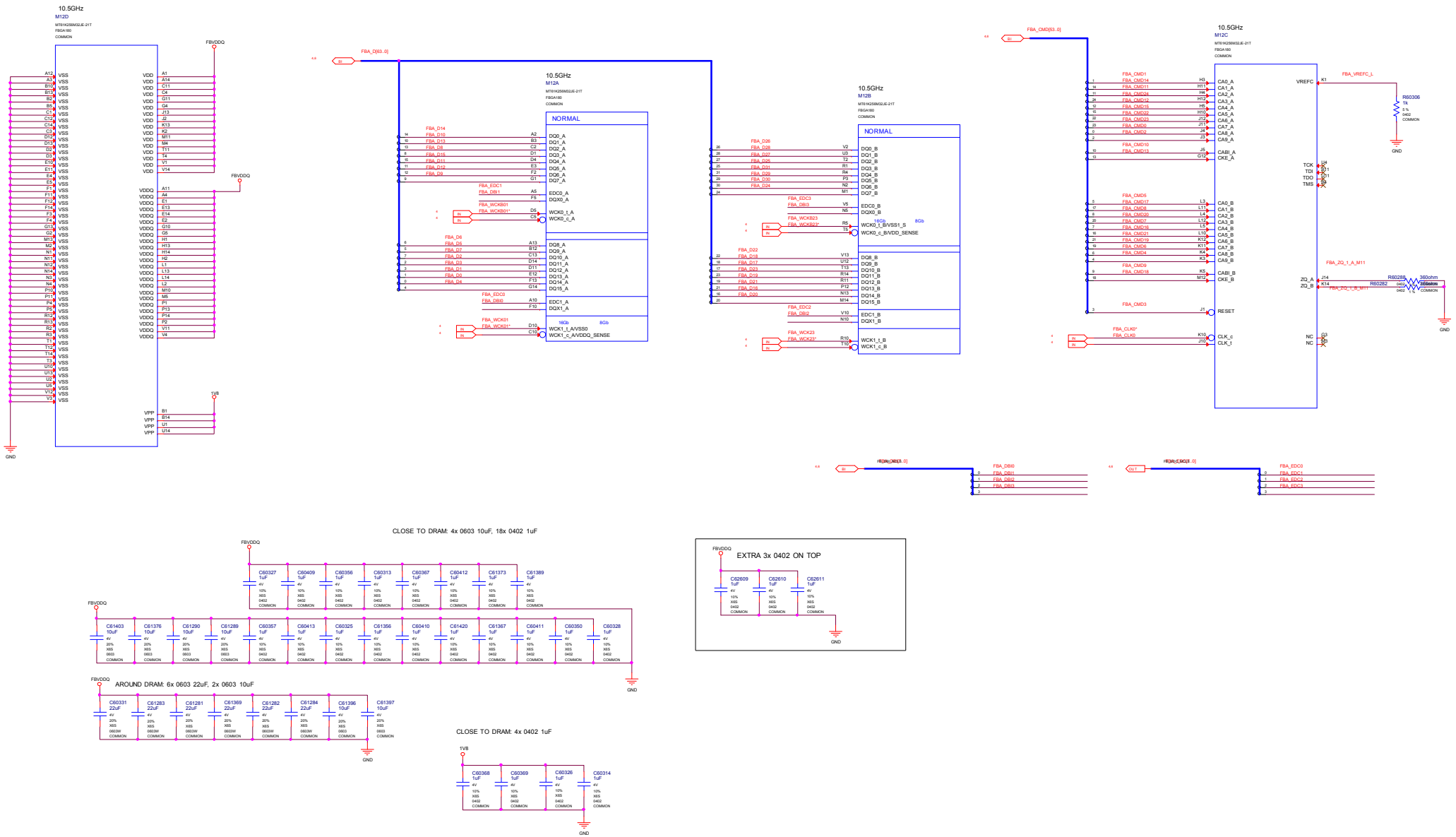

MICRO-STAR INT'L CO.,LTD		
MS-V389		
Size: Custom	Document Description: MEMORY: FBA Partition 31..0	Rev: 1.1
Date: Thursday, July 23, 2020	Sheet 5 of 76	

MEMORY: FBA Partition 63..32

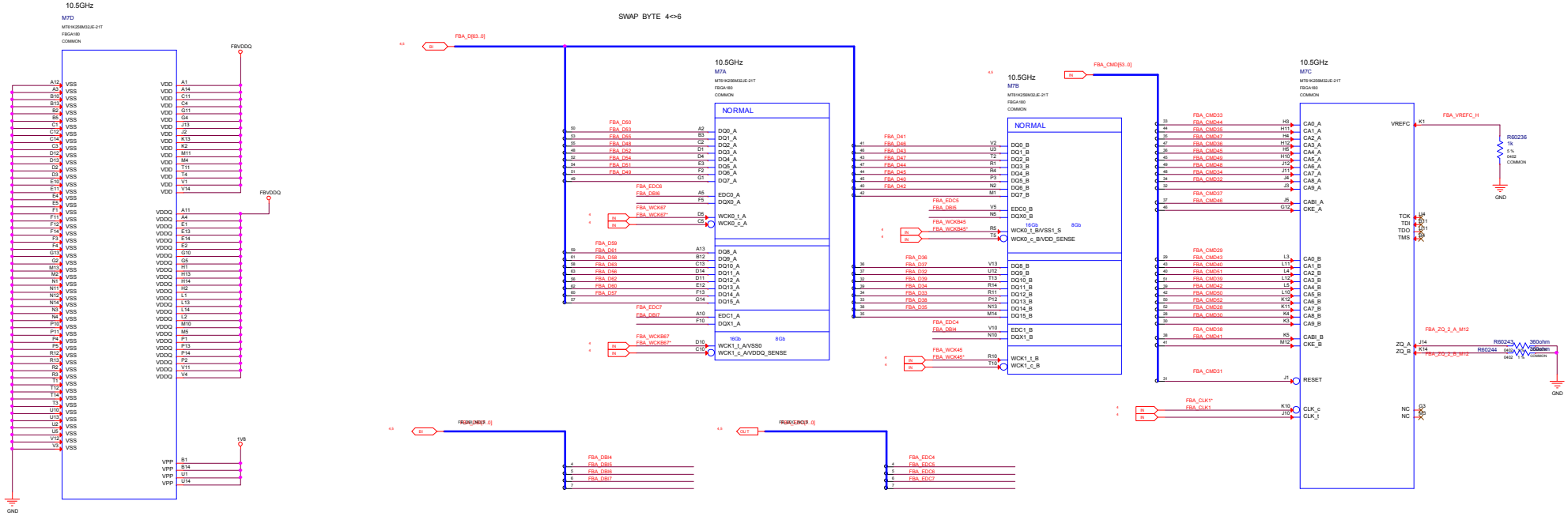

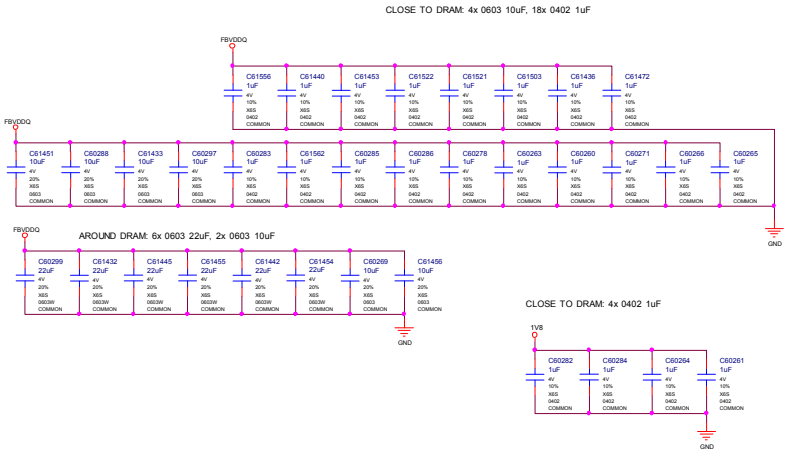

MICRO-STAR INT'L CO.,LTD		
MS-V389		
Size: Custom	Document Description: MEMORY: FBA Partition 63..32	Rev: 1.1
Date: Thursday, July 23, 2020	Sheet 6 of 76	

MEMORY: FBB Partition 31..0

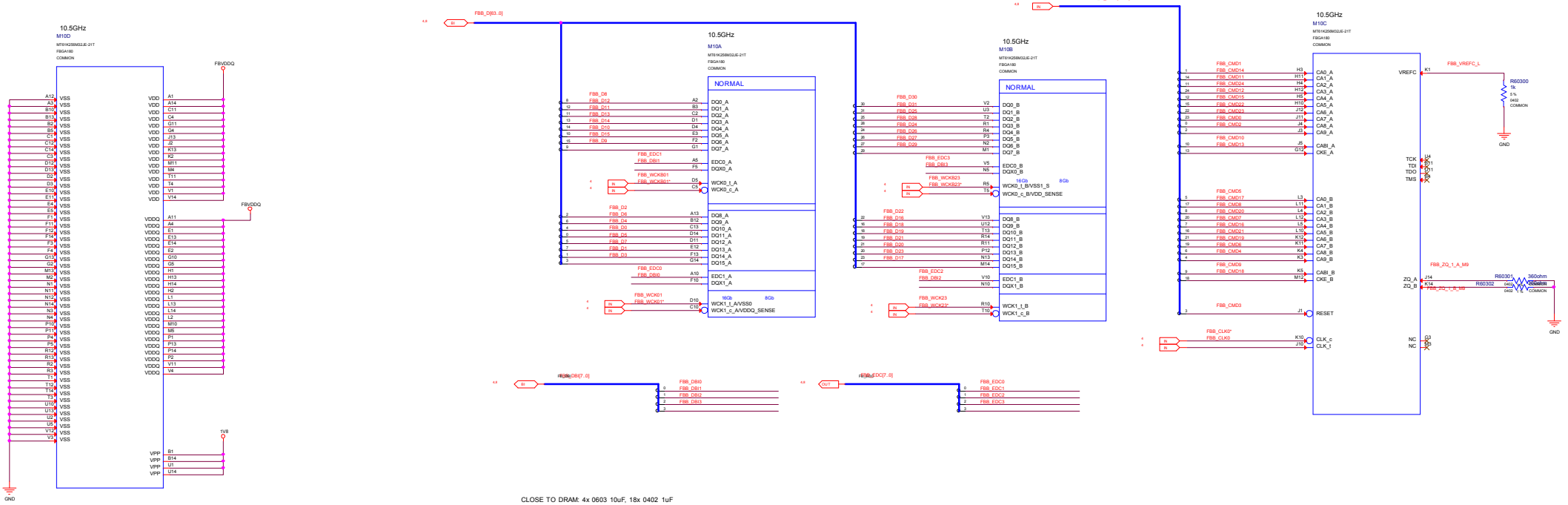

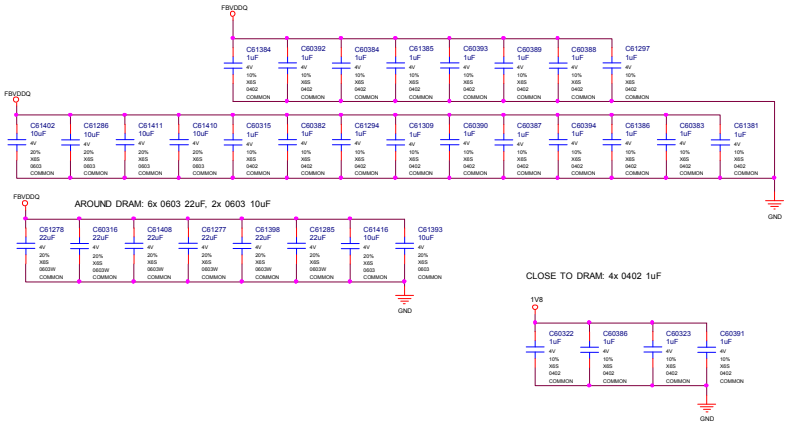

MSI	MICRO-STAR INT'L CO.,LTD	
	MS-V389	
Size: Custom	Document Description: MEMORY: FBB Partition 31..0	Rev: 1.1
Date: Thursday, July 23, 2020	Sheet 7 of 76	

MEMORY: FBB Partition 63..32

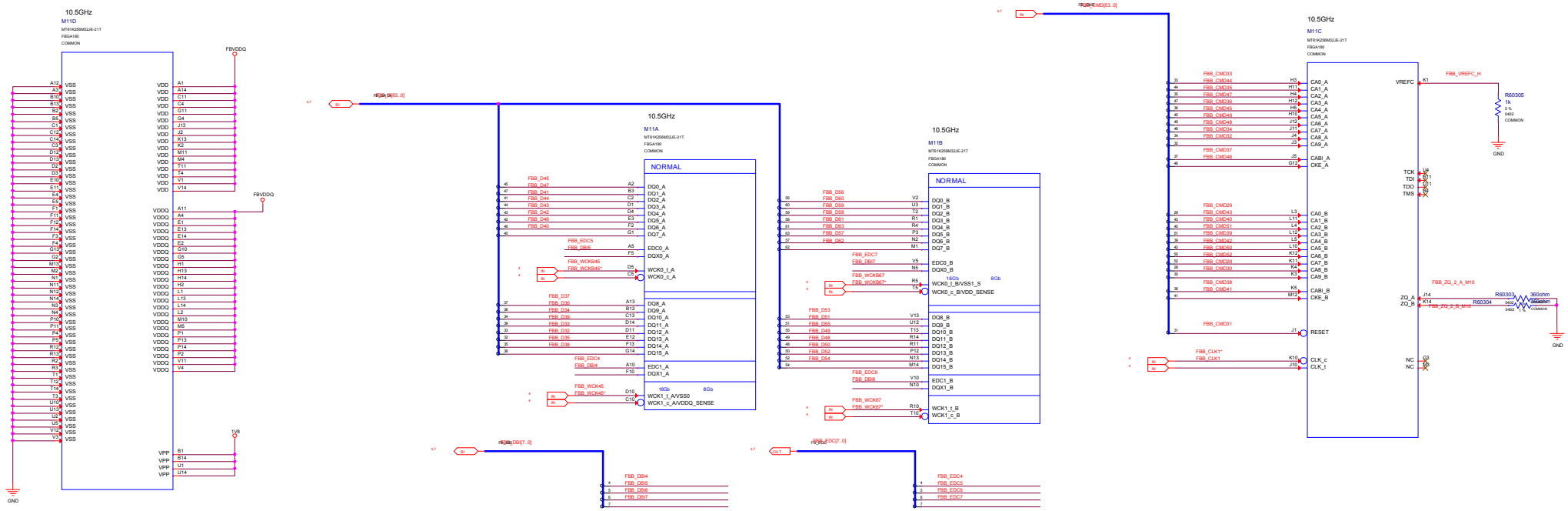

CLOSE TO DRAM: 4x 0603 10uF, 18x 0402 1uF

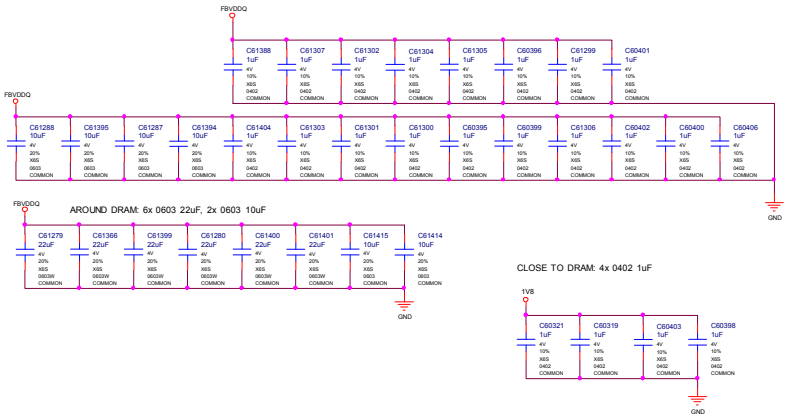

CLOSE TO DRAM: 4x 0402 1uF

MICRO-STAR INT'L CO.,LTD		
MS-V389		
Size: Custom	Document Description: MEMORY: FBB Partition 63..32	Rev: 1.1
Date: Thursday, July 23, 2020	Sheet 8 of 76	

MEMORY: GPU Partition C/D

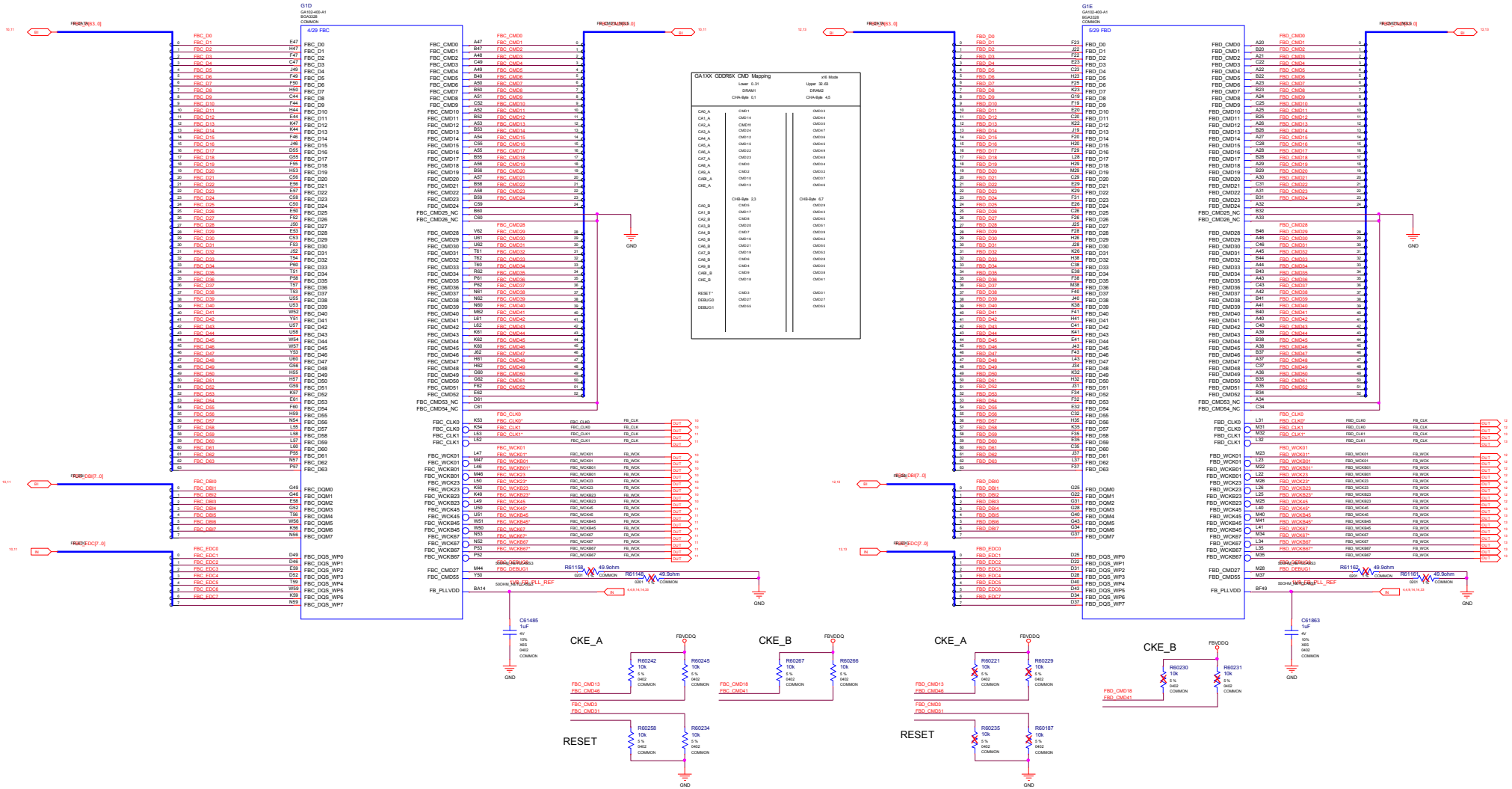

MEMORY: FBC Partition 31..0

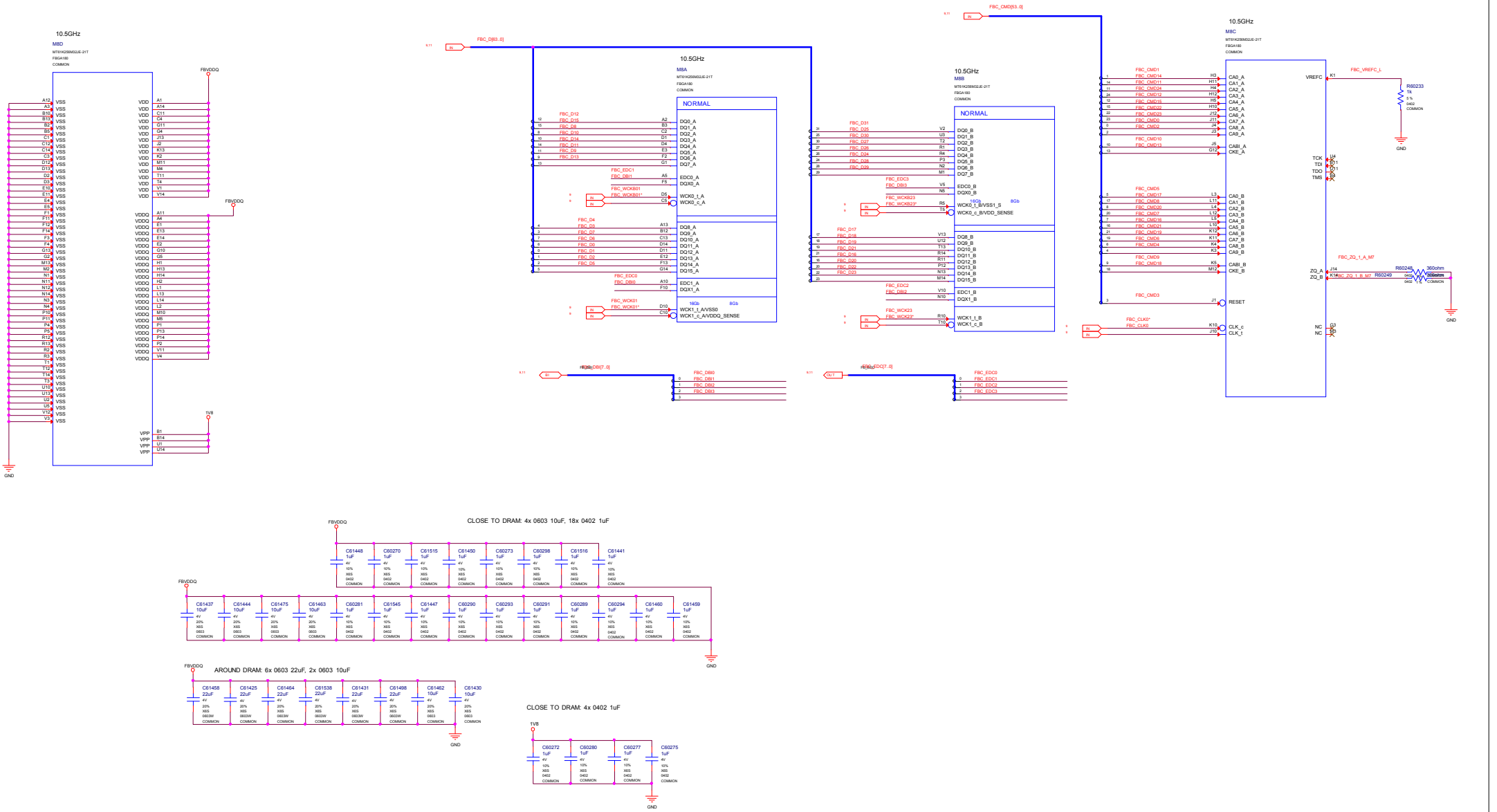

MSI	MICRO-STAR INT'L CO.,LTD	
	MS-V389	
Size: Custom	Document Description: MEMORY: FBC Partition 31..0	Rev 1.1
Date: Thursday, July 23, 2020	Sheet 10 of 78	

MEMORY: FBC Partition 63..32

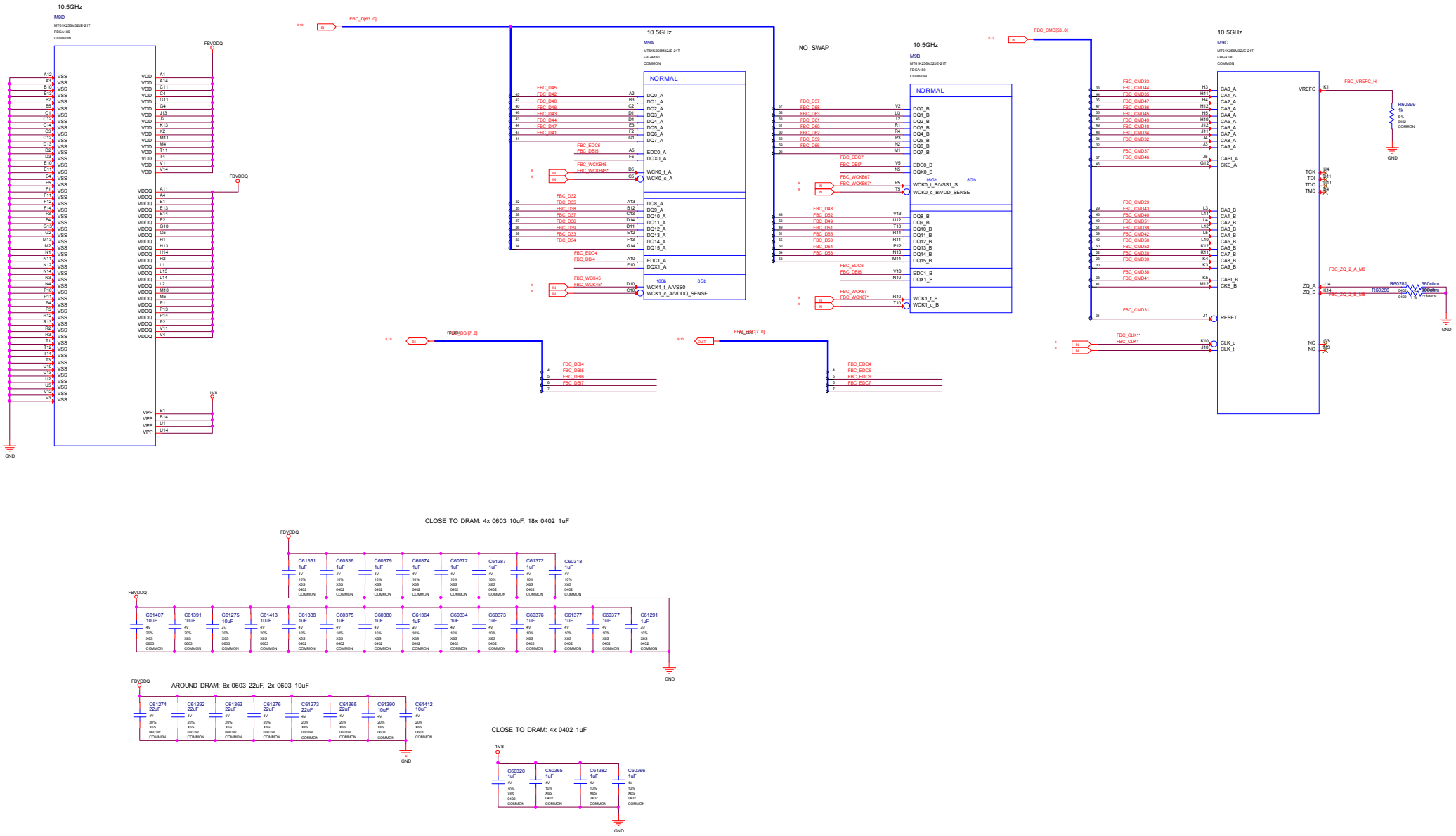

MICRO-STAR INT'L CO.,LTD

MS-V389

Size	Document Description	Rev
Custom	MEMORY: FBC Partition 63..32	1.1

Date: Thursday, July 23, 2020 Sheet 11 of 78

MEMORY: FBD Partition 31..0

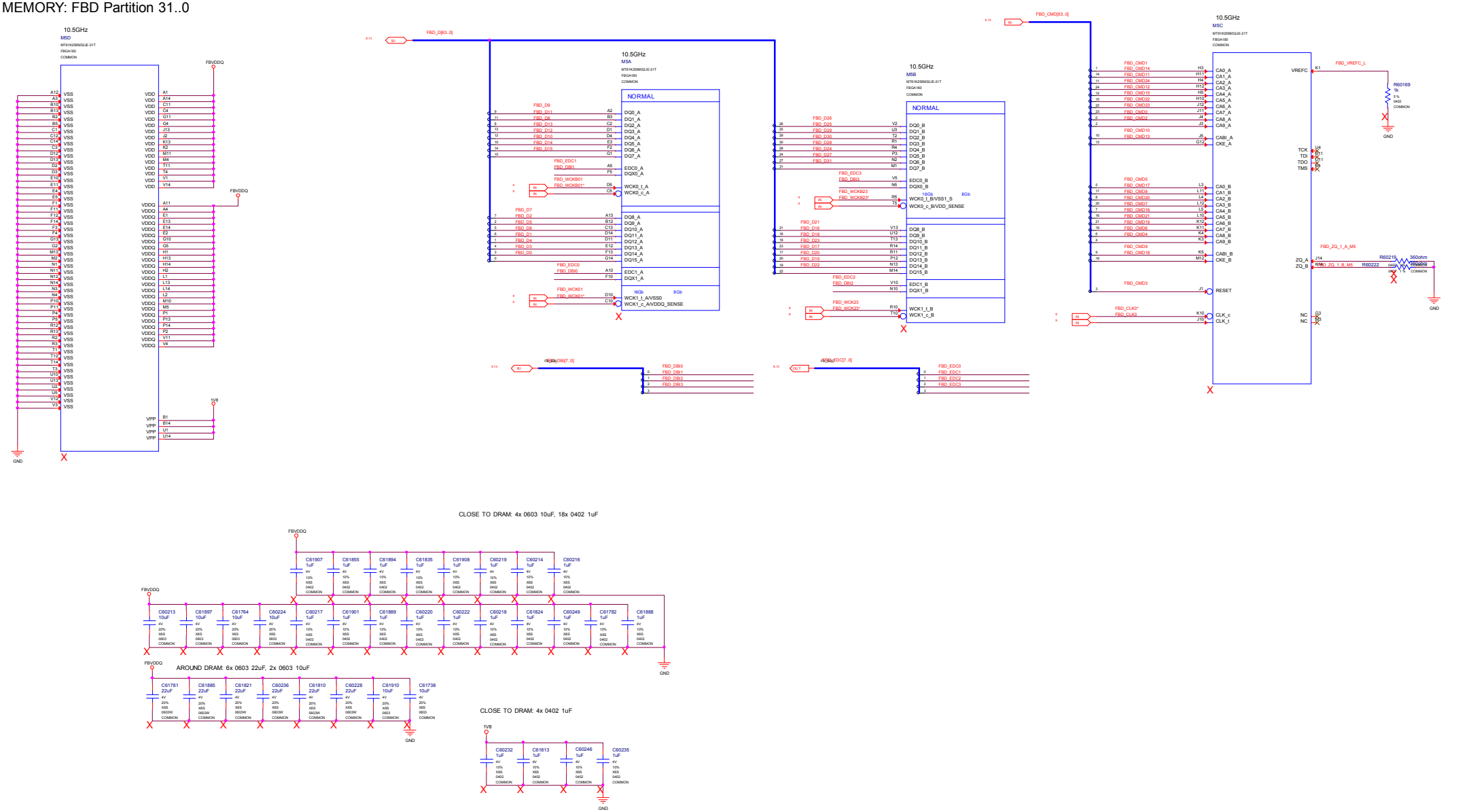

MSI	MICRO-STAR INT'L CO.,LTD	
	MS-V390	
Size: Custom	Document Description: MEMORY: FBD Partition 31..0	Rev: 1.1
	Date: Thursday, July 23, 2020	Sheet 12 of 76

MEMORY: FBD Partition 63..32

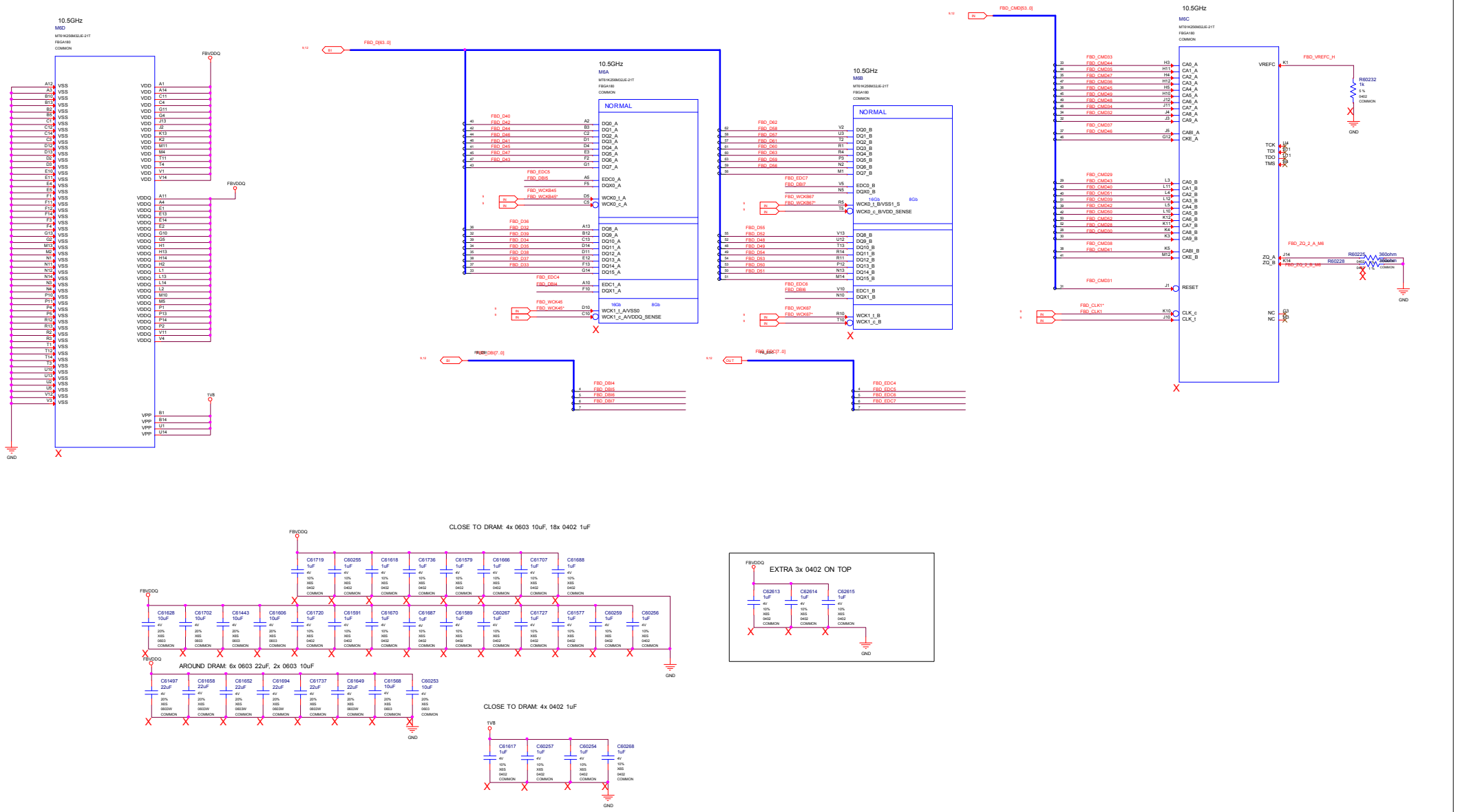

MICRO-STAR INT'L CO.,LTD

MS-V389

Size	Document Description	Rev
Custom	MEMORY: FBD Partition 63..32	1.1

Date: Thursday, July 23, 2020 Sheet 13 of 78

MEMORY: GPU Partition E/F

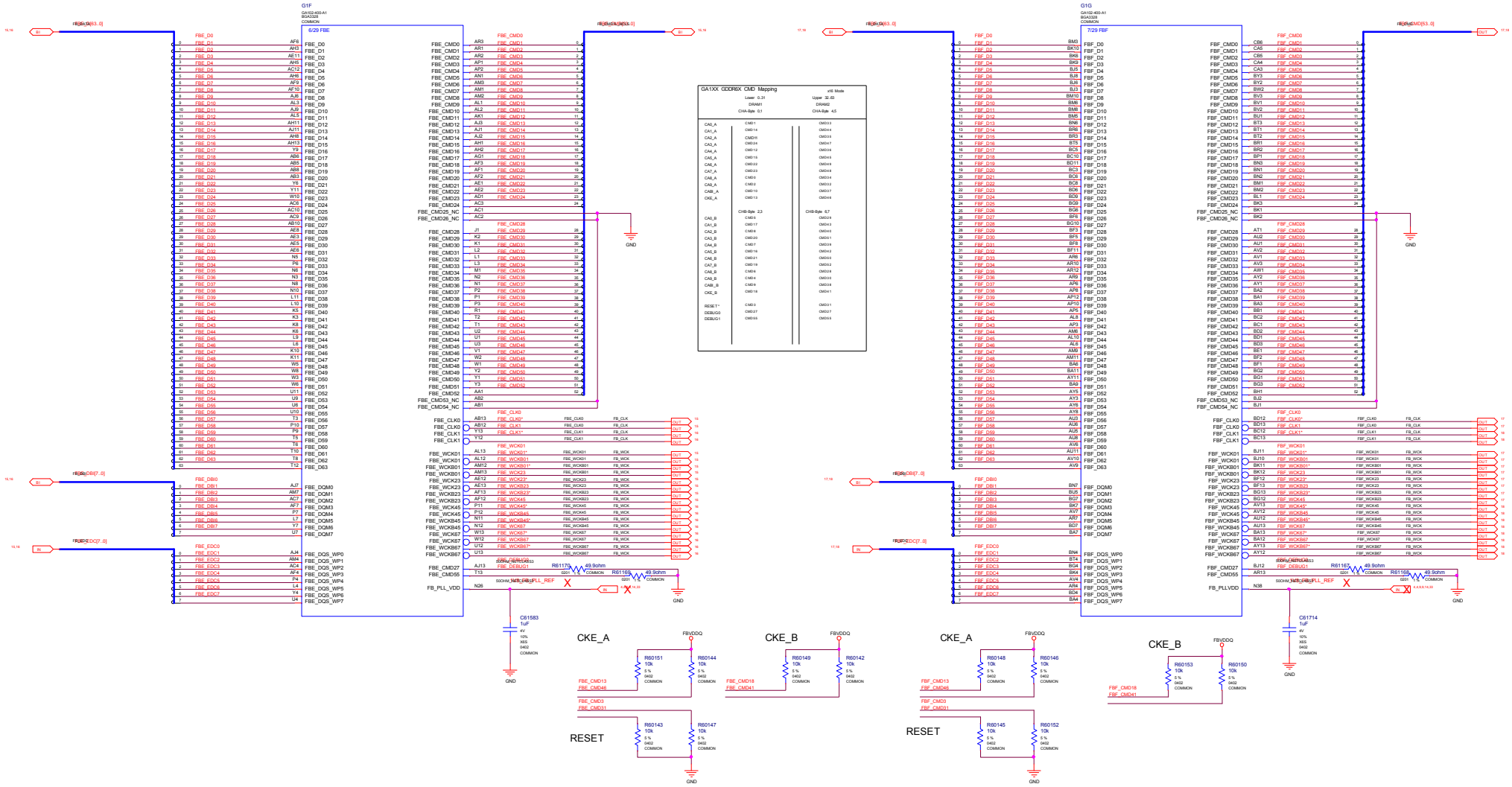

MEMORY: FBE Partition 31..0

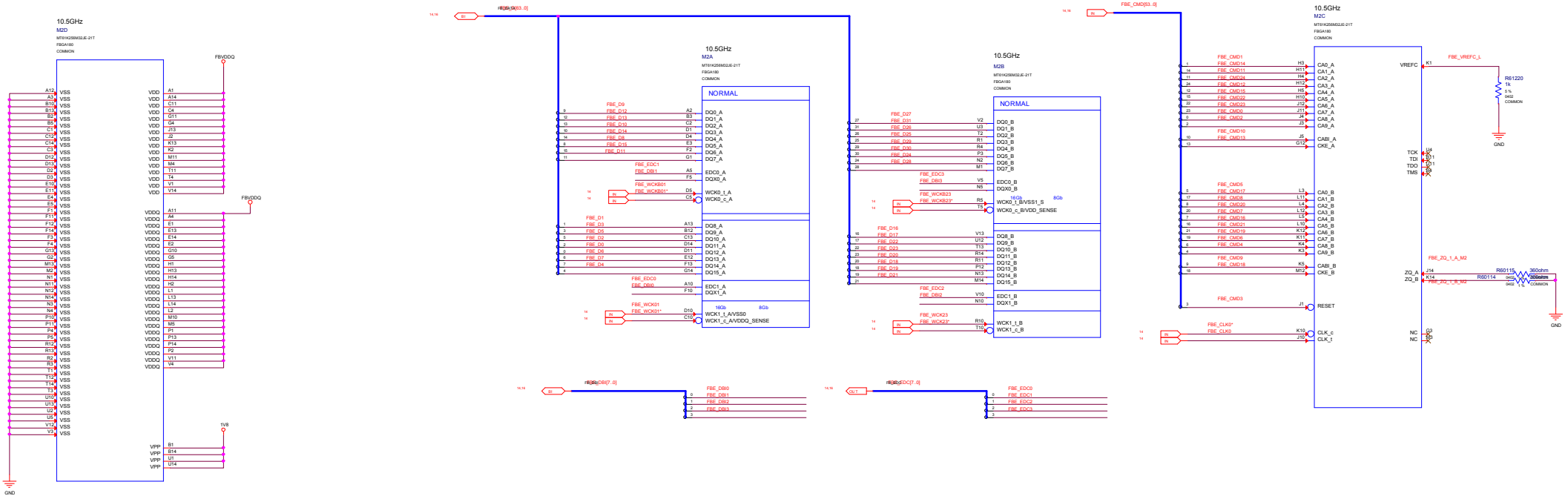

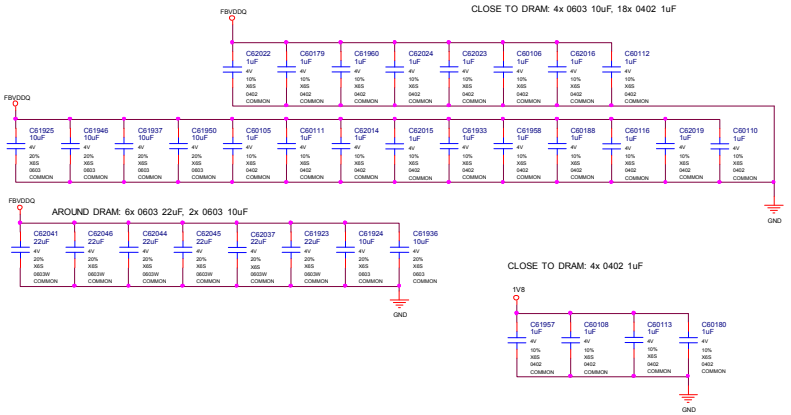

MSI	MICRO-STAR INT'L CO.,LTD	
	MS-V389	
Size: Custom	Document Description: MEMORY: FBE Partition 31..0	Rev: 1.1
	Date: Thursday, July 23, 2020	Sheet 15 of 76

MEMORY: FBE Partition 63..32

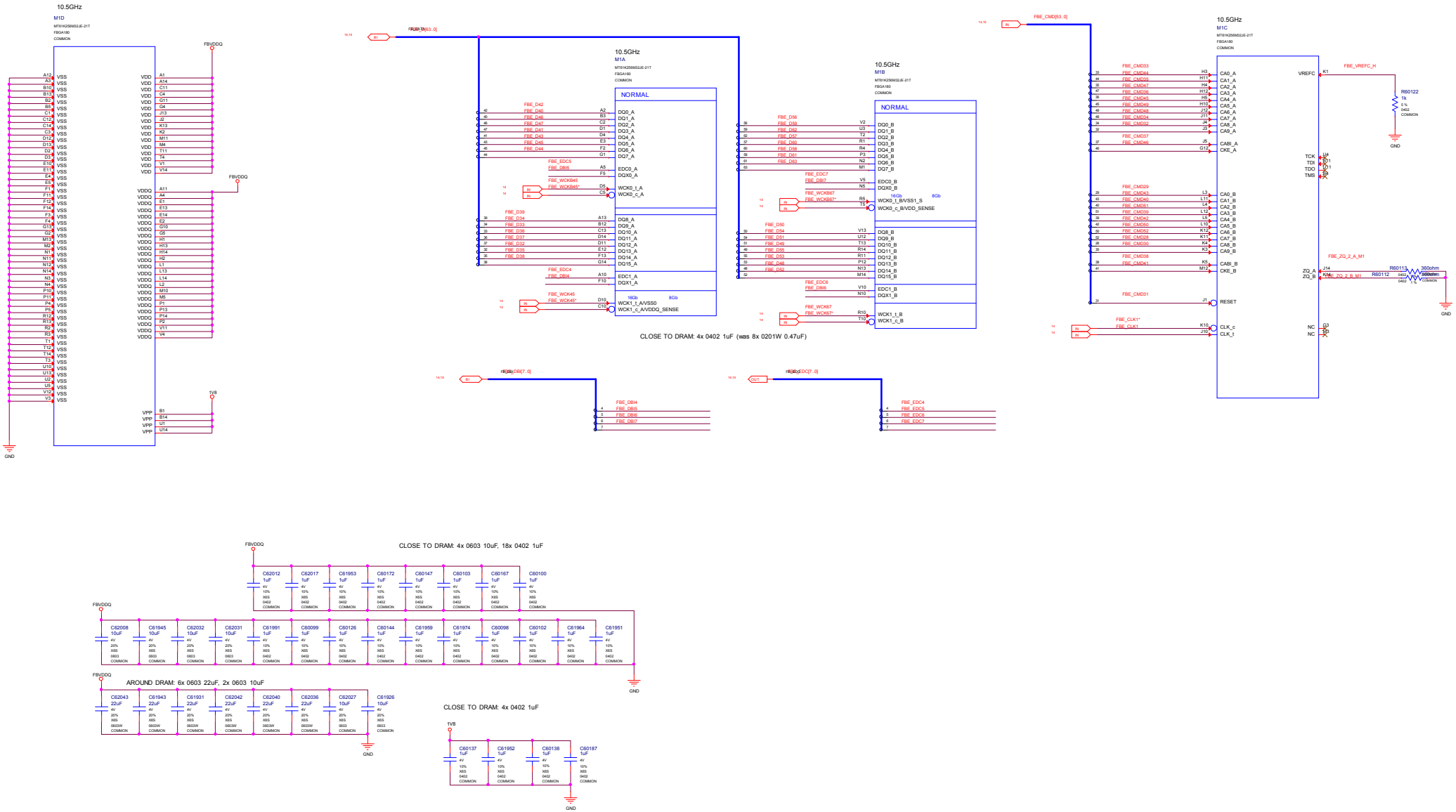

MSI	MICRO-STAR INT'L CO.,LTD	
	MS-V389	
Size: Custom	Document Description: MEMORY: FBE Partition 63..32	Rev: 1.1
Date: Thursday, July 23, 2020	Sheet 16 of 76	

MEMORY: FBF Partition 31..0

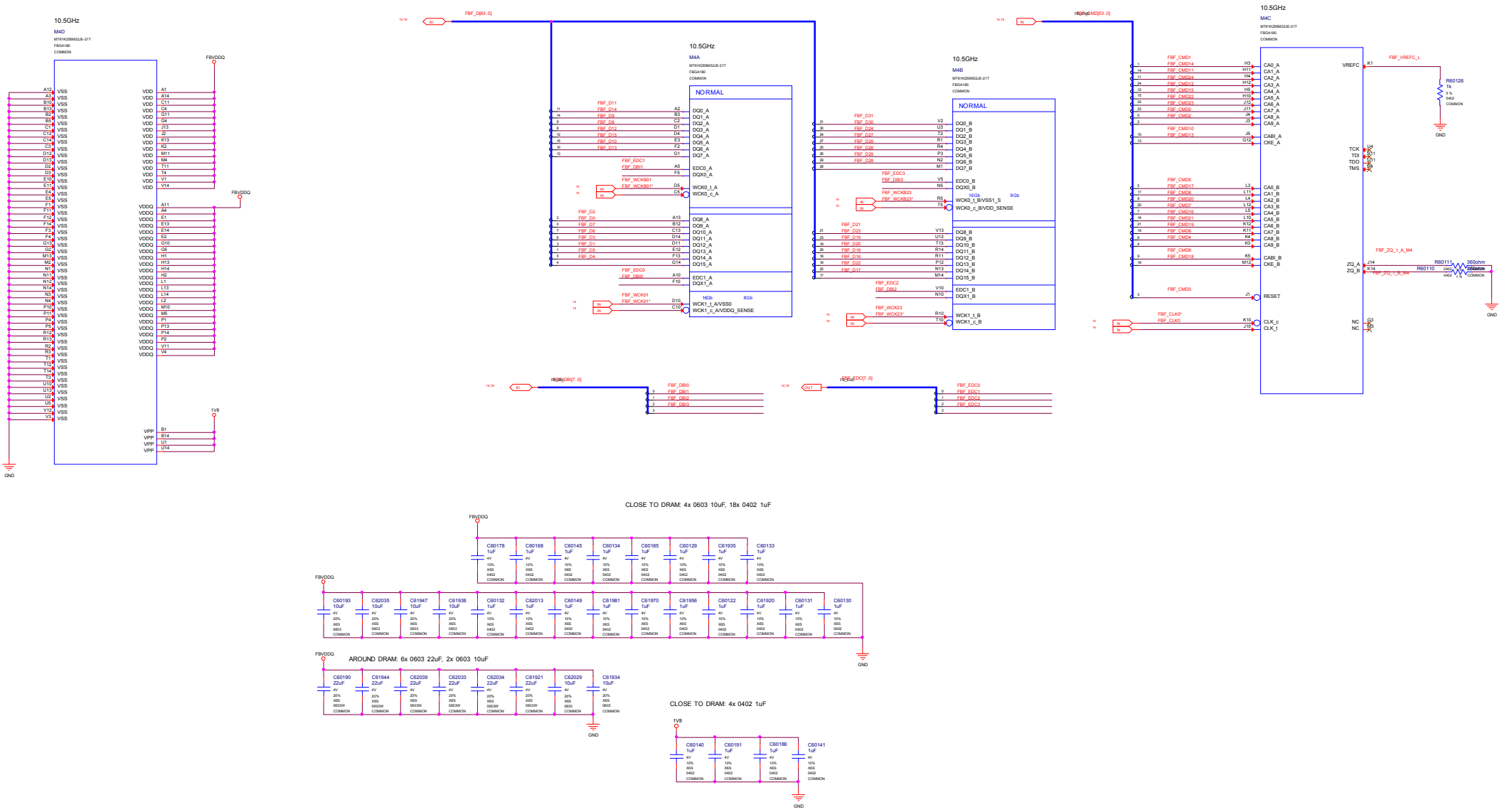

MSI	MICRO-STAR INT'L CO.,LTD	
	MS-V389	
Size: Custom	Document Description: MEMORY: FBF Partition 31..0	Rev: 1.1
Date: Thursday, July 23, 2020	Sheet 17 of 76	

MEMORY: FBF Partition 63..32

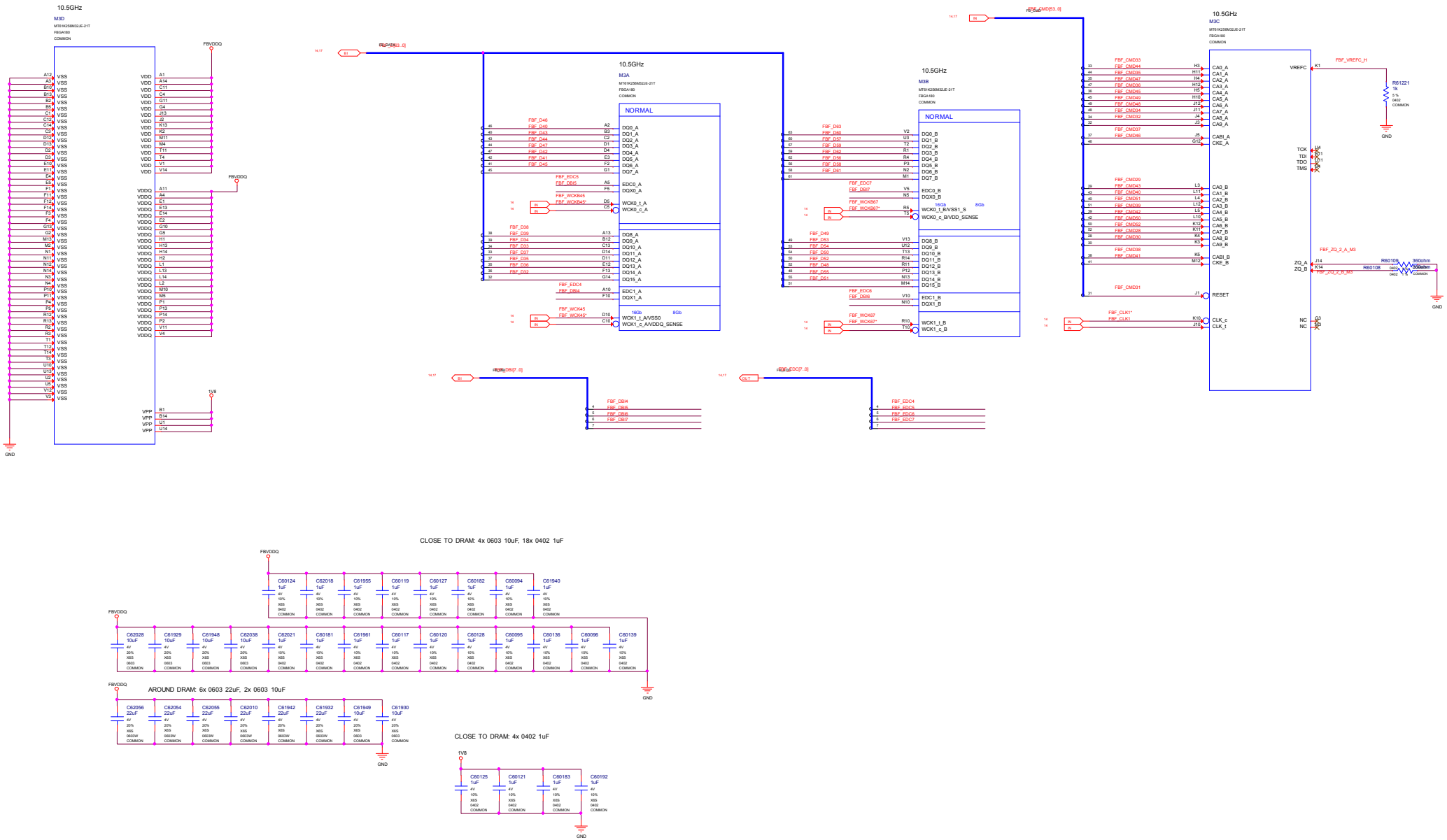

MICRO-STAR INT'L CO.,LTD	
MS-V389	
Size: Custom	Document Description: MEMORY: FBF Partition 63..32
Rev: 1.1	
Date: Thursday, July 23, 2020	Sheet 18 of 76

GPU GND, RFUs & RSVD

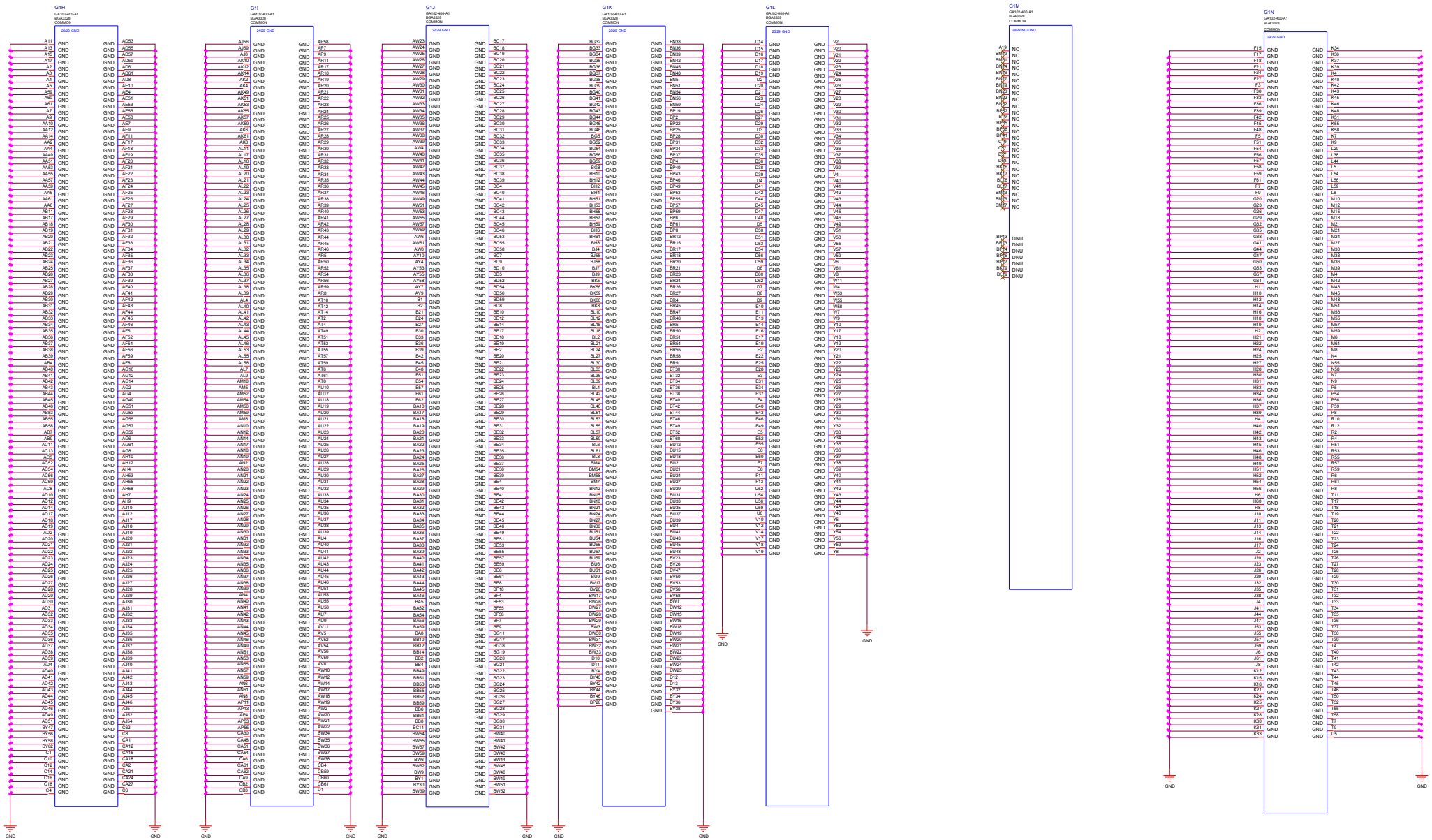

MICRO-STAR INT'L CO.,LTD		
MSI	MS-V389	
Size: Custom	Document Description: GPU GND, RFUs & RSVD	Rev 1.1
Date: Thursday, July 23, 2020	Sheet 19 of 76	

GPU PWR and GND

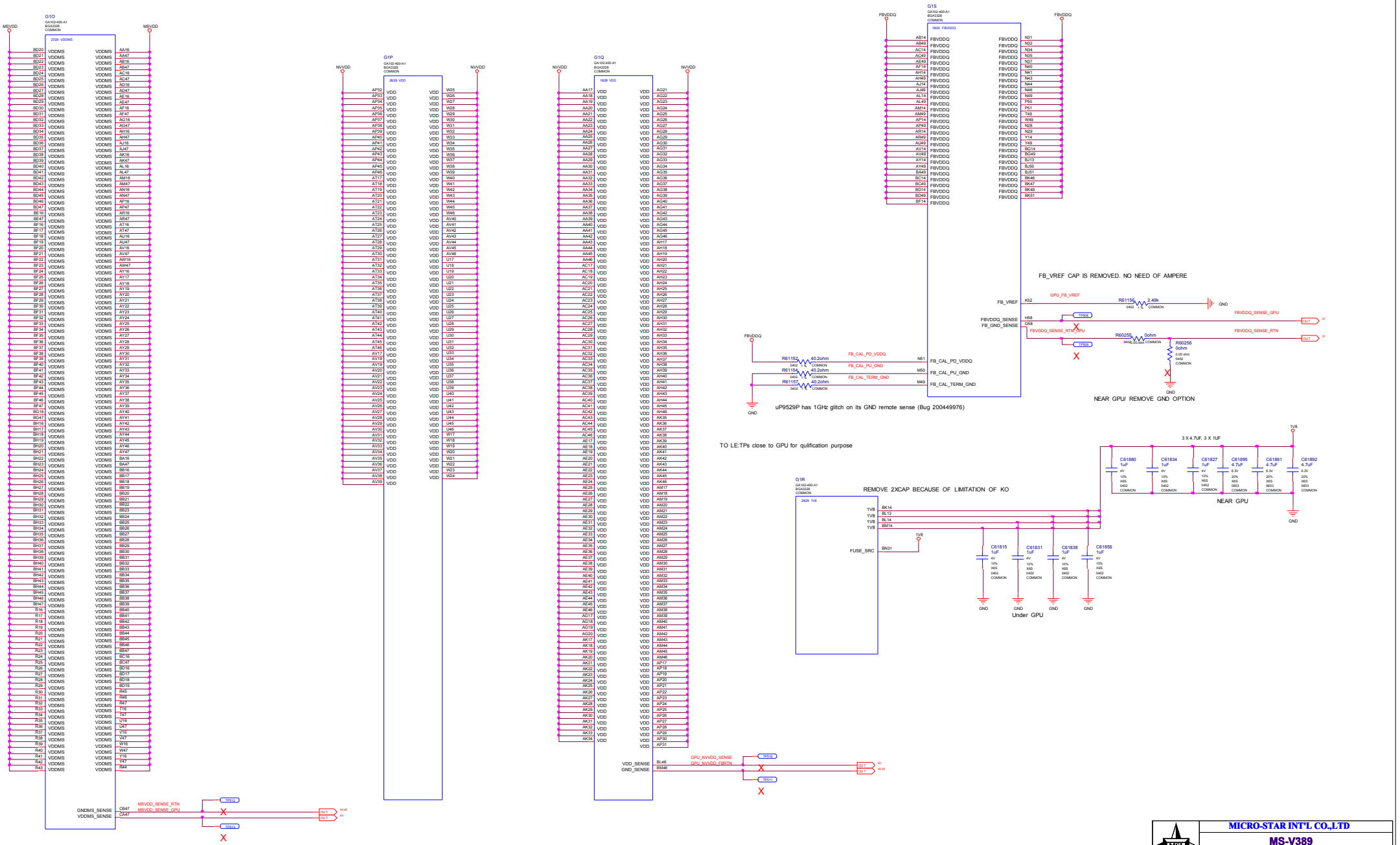

MICRO-STAR INT'L CO.,LTD

MS-V389

Size	Document Description	Rev
Custom	GPU PWR and GND	1.1

Date: Thursday, July 23, 2020 Sheet 20 of 76

NVVDD

UNDER GPU

MICRO-STAR INT'L CO.,LTD		
MS-V389		
Size: Custom	Document Description: Page 21: GPU: NVVDD DECOUPLING	Rev: 1.1
Date: Thursday, July 23, 2020	Sheet 21 of 76	

FBVDDQ

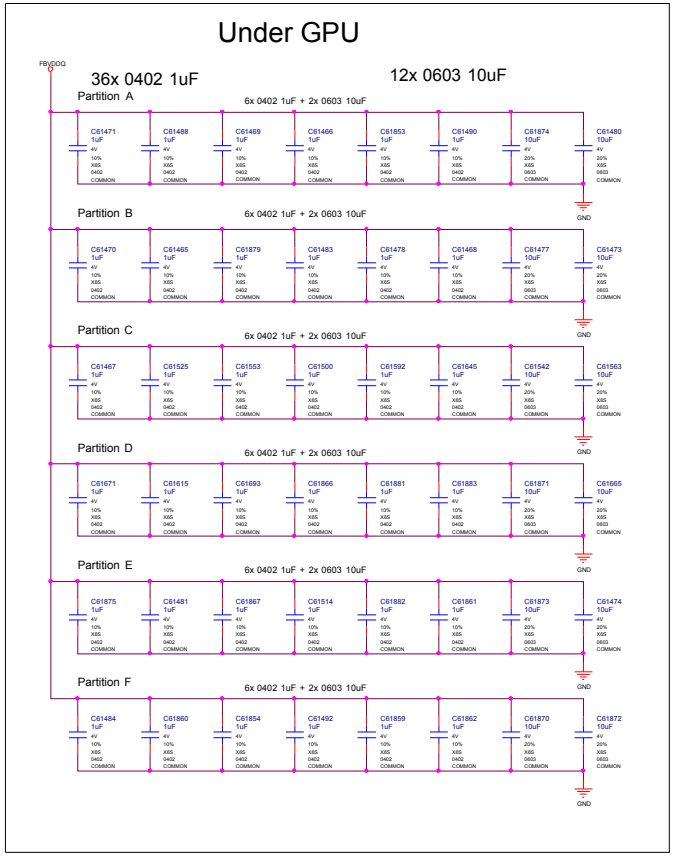
Under GPU
FBVDDQ
36x 0402 1uF
12x 0603 10uF
Partition A
6x 0402 1uF + 2x 0603 10uF
C61471 1uF 4V 10% X6S 0402 COMMON
C61488 1uF 4V 10% X6S 0402 COMMON
C61469 1uF 4V 10% X6S 0402 COMMON
C61466 1uF 4V 10% X6S 0402 COMMON
C61853 1uF 4V 10% X6S 0402 COMMON
C61490 1uF 4V 10% X6S 0402 COMMON
C61874 10uF 4V 20% X6S 0603 COMMON
C61480 10uF 4V 20% X6S 0603 COMMON
GND
Partition B
6x 0402 1uF + 2x 0603 10uF
C61470 1uF 4V 10% X6S 0402 COMMON
C61465 1uF 4V 10% X6S 0402 COMMON
C61879 1uF 4V 10% X6S 0402 COMMON
C61483 1uF 4V 10% X6S 0402 COMMON
C61478 1uF 4V 10% X6S 0402 COMMON
C61468 1uF 4V 10% X6S 0402 COMMON
C61477 10uF 4V 20% X6S 0603 COMMON
C61473 10uF 4V 20% X6S 0603 COMMON
GND
Partition C
6x 0402 1uF + 2x 0603 10uF
C61467 1uF 4V 10% X6S 0402 COMMON
C61525 1uF 4V 10% X6S 0402 COMMON
C61553 1uF 4V 10% X6S 0402 COMMON
C61500 1uF 4V 10% X6S 0402 COMMON
C61592 1uF 4V 10% X6S 0402 COMMON
C61645 1uF 4V 10% X6S 0402 COMMON
C61542 10uF 4V 20% X6S 0603 COMMON
C61563 10uF 4V 20% X6S 0603 COMMON
GND
Partition D
6x 0402 1uF + 2x 0603 10uF
C61671 1uF 4V 10% X6S 0402 COMMON
C61615 1uF 4V 10% X6S 0402 COMMON
C61693 1uF 4V 10% X6S 0402 COMMON
C61866 1uF 4V 10% X6S 0402 COMMON
C61881 1uF 4V 10% X6S 0402 COMMON
C61883 1uF 4V 10% X6S 0402 COMMON
C61871 10uF 4V 20% X6S 0603 COMMON
C61665 10uF 4V 20% X6S 0603 COMMON
GND
Partition E
6x 0402 1uF + 2x 0603 10uF
C61875 1uF 4V 10% X6S 0402 COMMON
C61481 1uF 4V 10% X6S 0402 COMMON
C61867 1uF 4V 10% X6S 0402 COMMON
C61514 1uF 4V 10% X6S 0402 COMMON
C61882 1uF 4V 10% X6S 0402 COMMON
C61861 1uF 4V 10% X6S 0402 COMMON
C61873 10uF 4V 20% X6S 0603 COMMON
C61474 10uF 4V 20% X6S 0603 COMMON
GND
Partition F
6x 0402 1uF + 2x 0603 10uF
C61484 1uF 4V 10% X6S 0402 COMMON
C61860 1uF 4V 10% X6S 0402 COMMON
C61854 1uF 4V 10% X6S 0402 COMMON
C61492 1uF 4V 10% X6S 0402 COMMON
C61859 1uF 4V 10% X6S 0402 COMMON
C61862 1uF 4V 10% X6S 0402 COMMON
C61870 10uF 4V 20% X6S 0603 COMMON
C61872 10uF 4V 20% X6S 0603 COMMON
GND

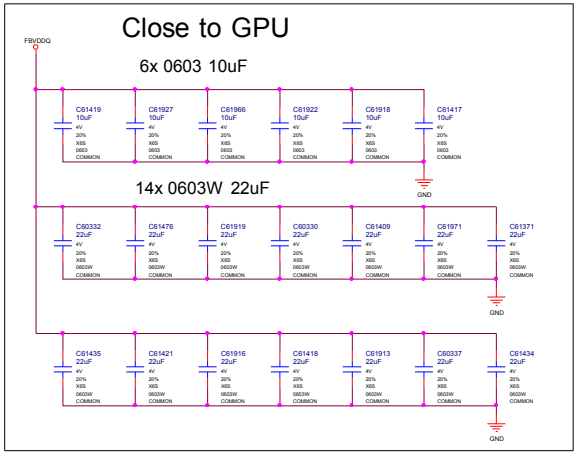
Close to GPU
FBVDDQ
6x 0603 10uF
C61419 10uF 4V 20% X6S 0603 COMMON
C61927 10uF 4V 20% X6S 0603 COMMON
C61966 10uF 4V 20% X6S 0603 COMMON
C61922 10uF 4V 20% X6S 0603 COMMON
C61918 10uF 4V 20% X6S 0603 COMMON
C61417 10uF 4V 20% X6S 0603 COMMON
GND
14x 0603W 22uF
C60332 22uF 4V 20% X6S 0603W COMMON
C61476 22uF 4V 20% X6S 0603W COMMON
C61919 22uF 4V 20% X6S 0603W COMMON
C60330 22uF 4V 20% X6S 0603W COMMON
C61409 22uF 4V 20% X6S 0603W COMMON
C61971 22uF 4V 20% X6S 0603W COMMON
C61371 22uF 4V 20% X6S 0603W COMMON
GND
C61435 22uF 4V 20% X6S 0603W COMMON
C61421 22uF 4V 20% X6S 0603W COMMON
C61916 22uF 4V 20% X6S 0603W COMMON
C61418 22uF 4V 20% X6S 0603W COMMON
C61913 22uF 4V 20% X6S 0603W COMMON
C60337 22uF 4V 20% X6S 0603W COMMON
C61434 22uF 4V 20% X6S 0603W COMMON
GND

UNDER GPU

MSVDD

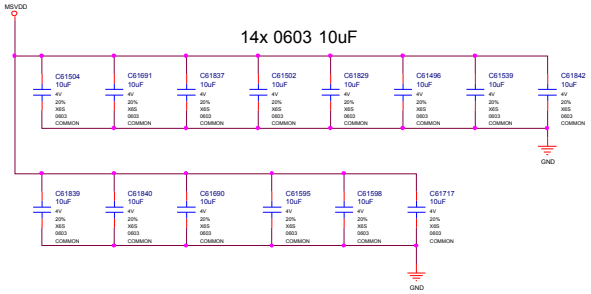

2x SMD7343 220uF (EACH CO-LAYOUT WITH 10x 22uF 0805)

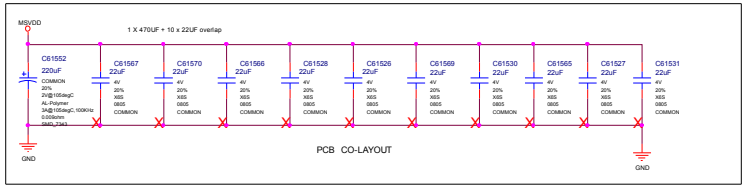

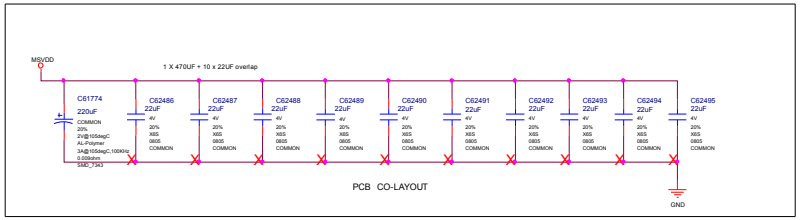

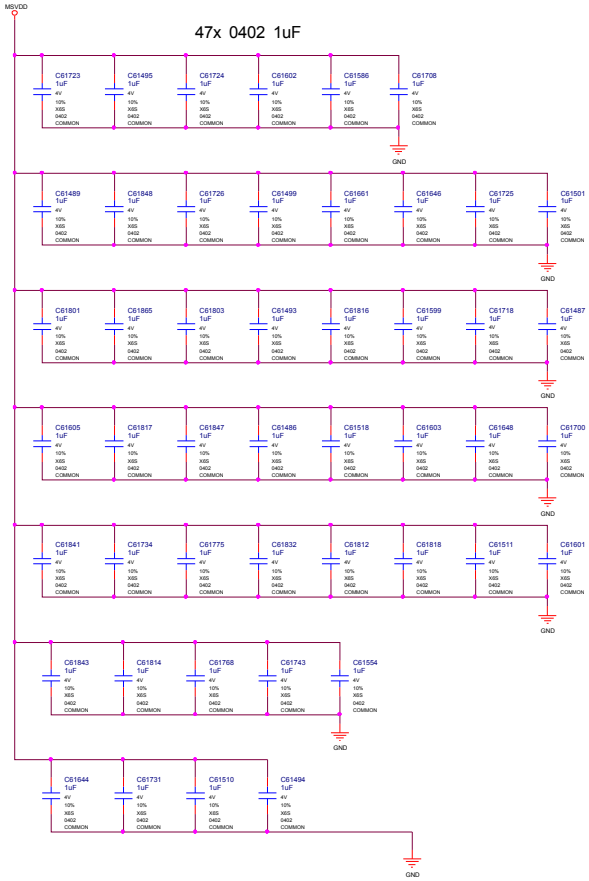

REMOVED 3X 1uF 0402 DUE TO SPACE RESTRICTION

MSI	MICRO-STAR INT'L CO.,LTD	
	MS-V389	
Size: Custom	Document Description: Page 23: GPU: MSVDD DECOUPLING	Rev: 1.1
Date: Thursday, July 23, 2020	Sheet 23 of 76	

BLANK

NVHS Interface and FRAME LOCK

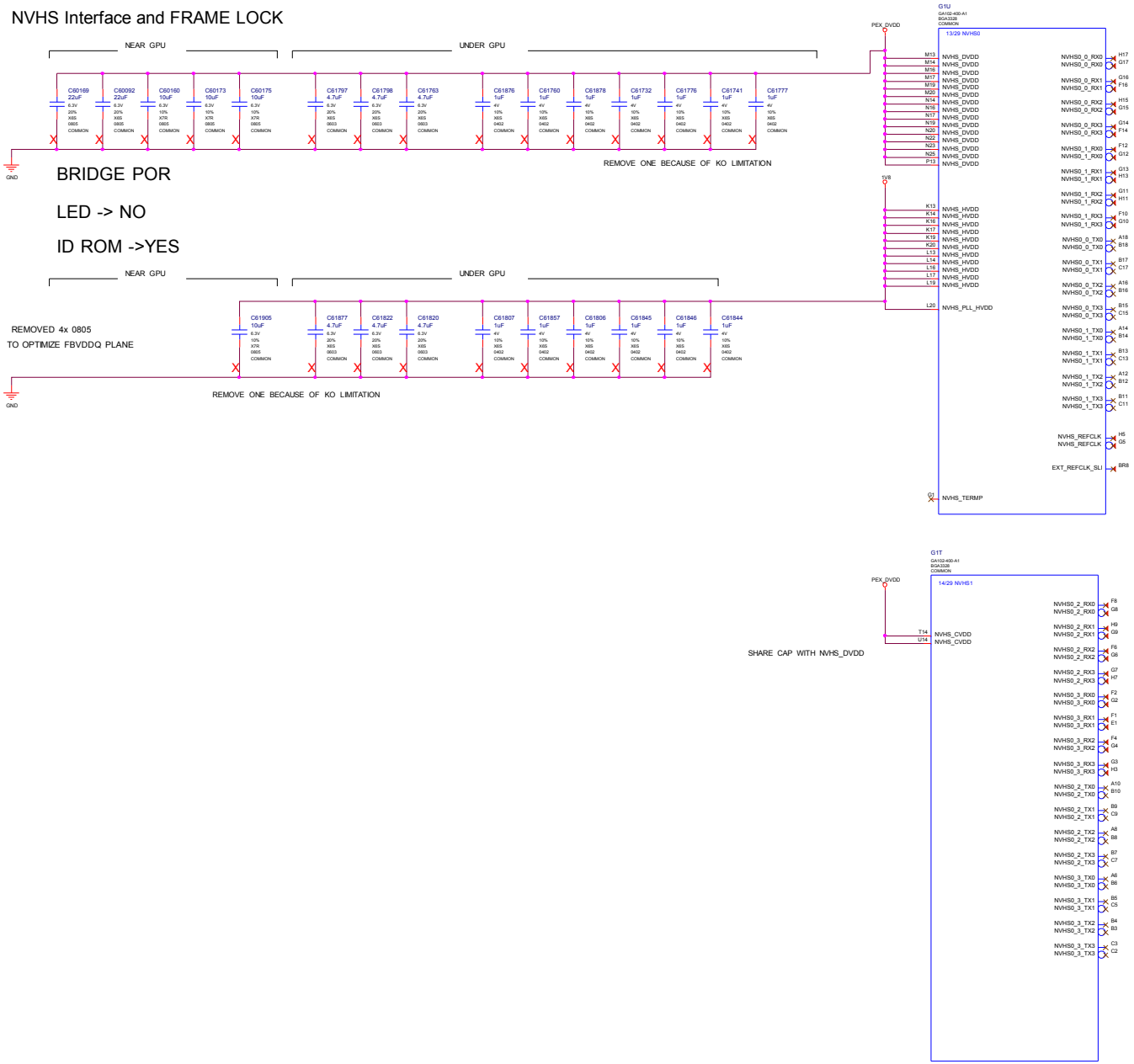

MICRO-STAR INT'L CO.,LTD		
MS-V389		
Size: Custom	Document Description: NVHS Interface and FRAME LOCK	Rev: 1.1
Date: Thursday, July 23, 2020	Sheet 25 of 76	

MISC1: Fan, Thermal, JTAG, GPIO, STEREO

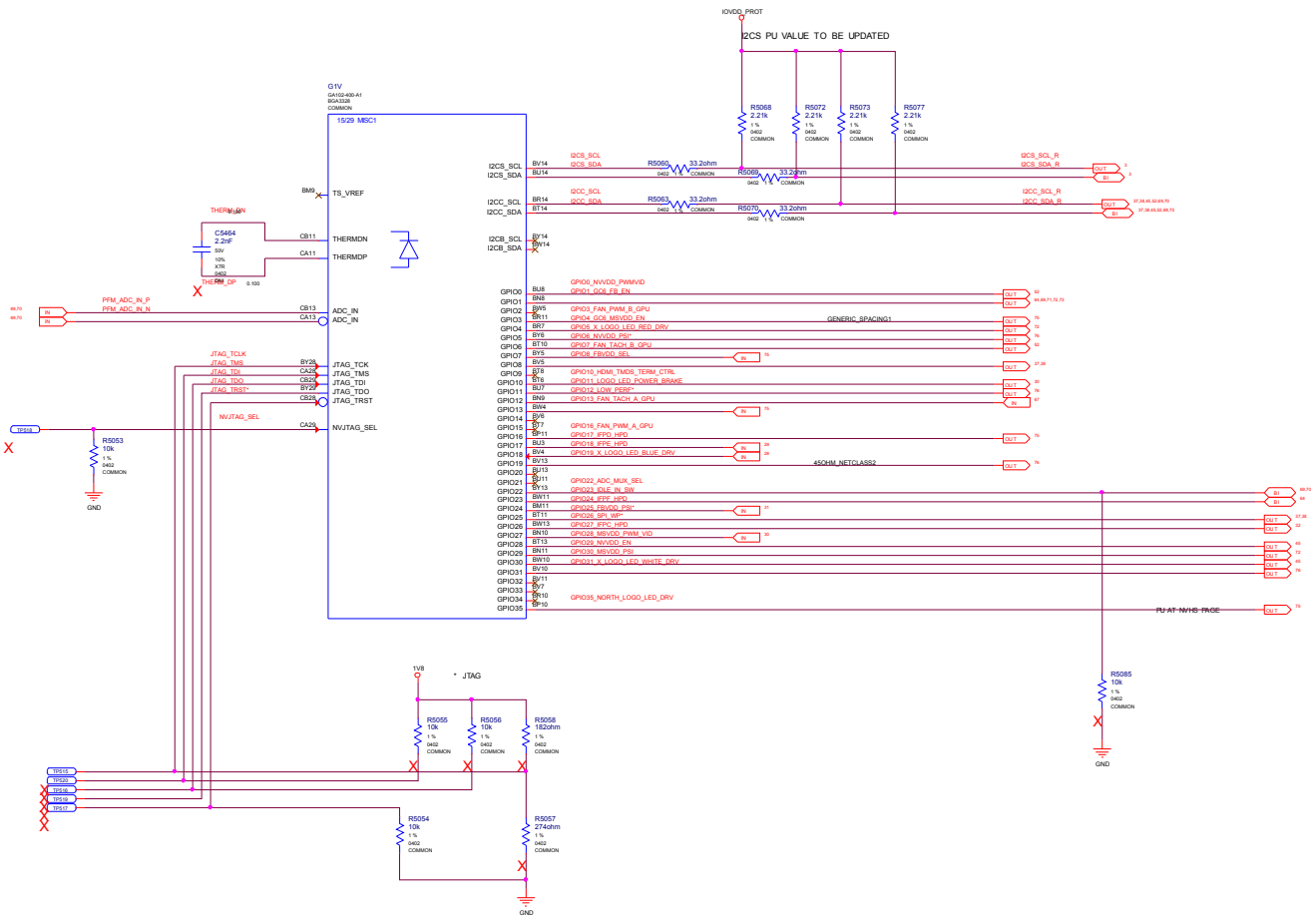

MICRO-STAR INT'L CO.,LTD		
MS-V389		
Size: Custom	Document Description: MISC1: Fan, Thermal, JTAG, GPIO, STEREO	Rev: 1.1
Date: Thursday, July 23, 2020	Sheet 26 of 76	

IFPA UNUSED, IFPB UNUSED

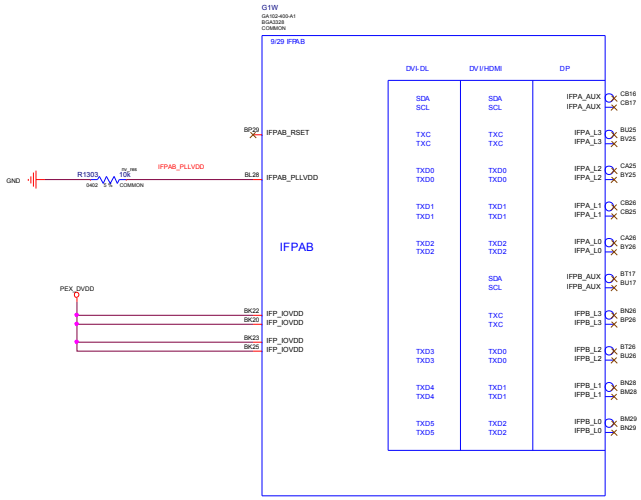

MICRO-STAR INT'L CO.,LTD		
MS-V389		
Size: Custom	Document Description: IFPA UNUSED, IFPB UNUSED	Rev: 1.1
Date: Thursday, July 23, 2020	Sheet 27 of 76	

IFPE DP

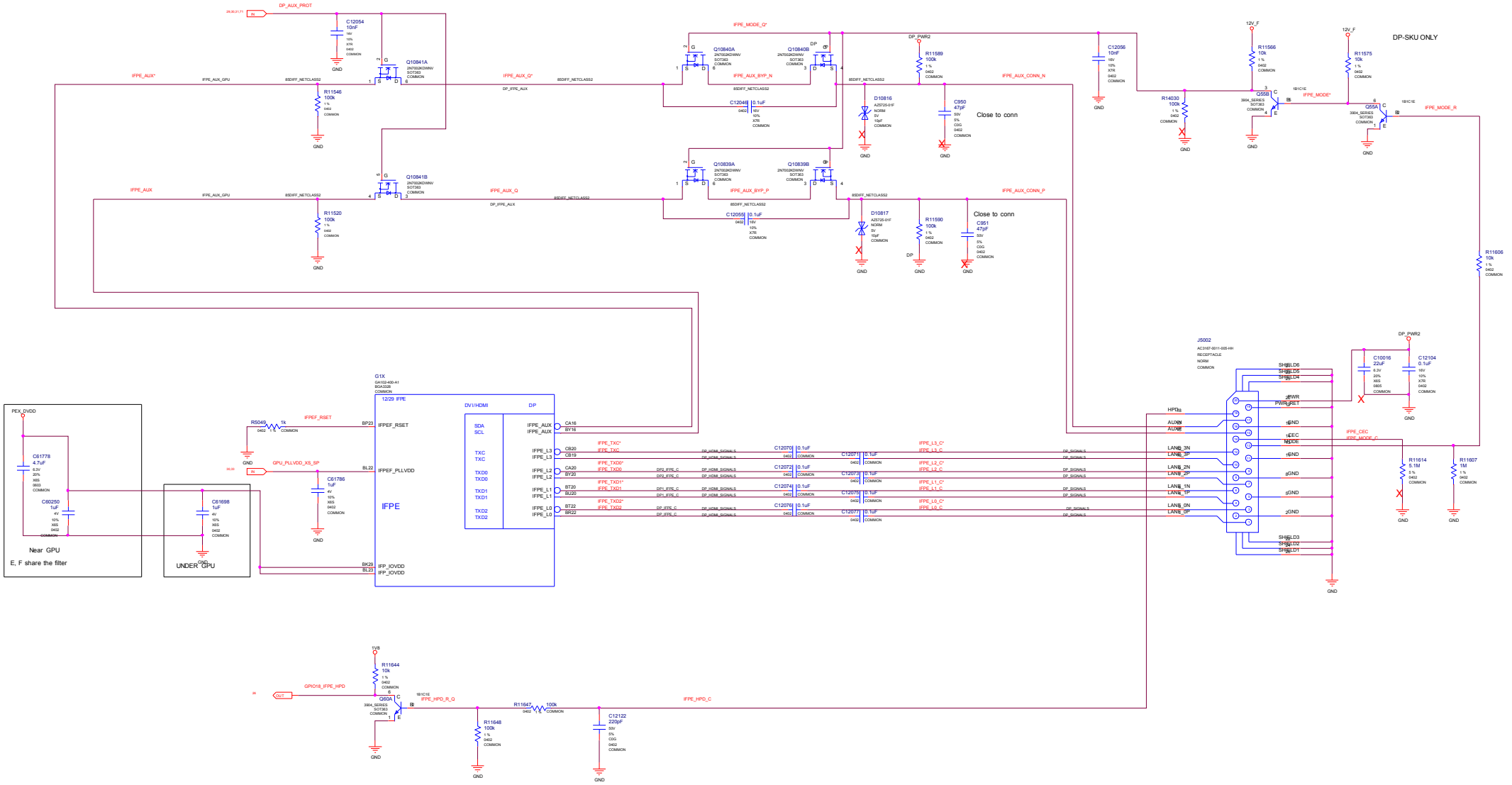

MSI	MICRO-STAR INT'L CO.,LTD	
	MS-V389	
Size: Custom	Document Description: IFPE DP	Rev: 1.1
Date: Thursday, July 23, 2020	Sheet 28 of 76	

IFPD DP

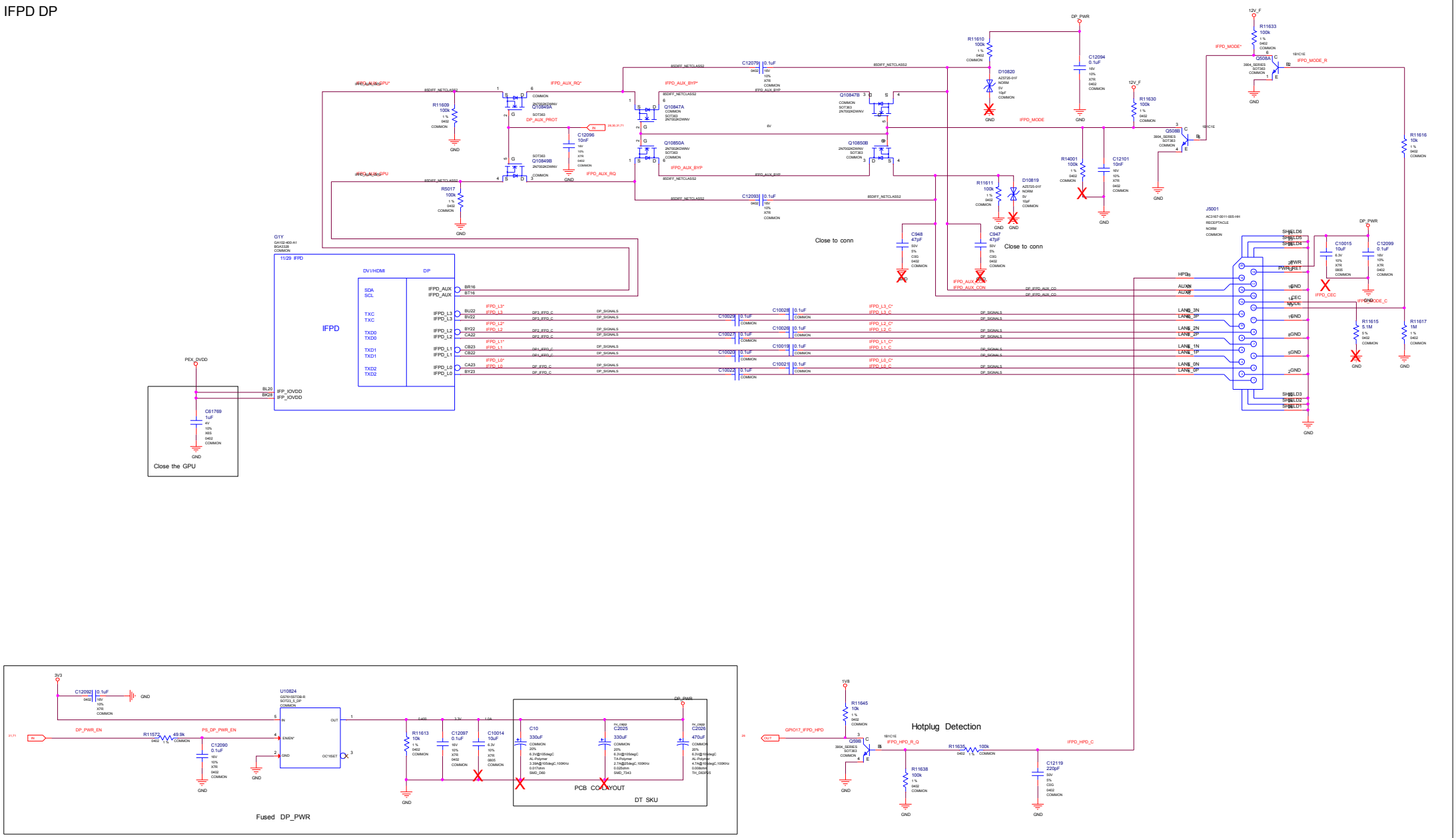

MSI	MICRO-STAR INT'L CO.,LTD	
	MS-V389	
Size: Custom	Document Description: IFPD DP	Rev: 1.1
Date: Thursday, July 23, 2020	Sheet 29 of 76	

IFPC HDMI/DP

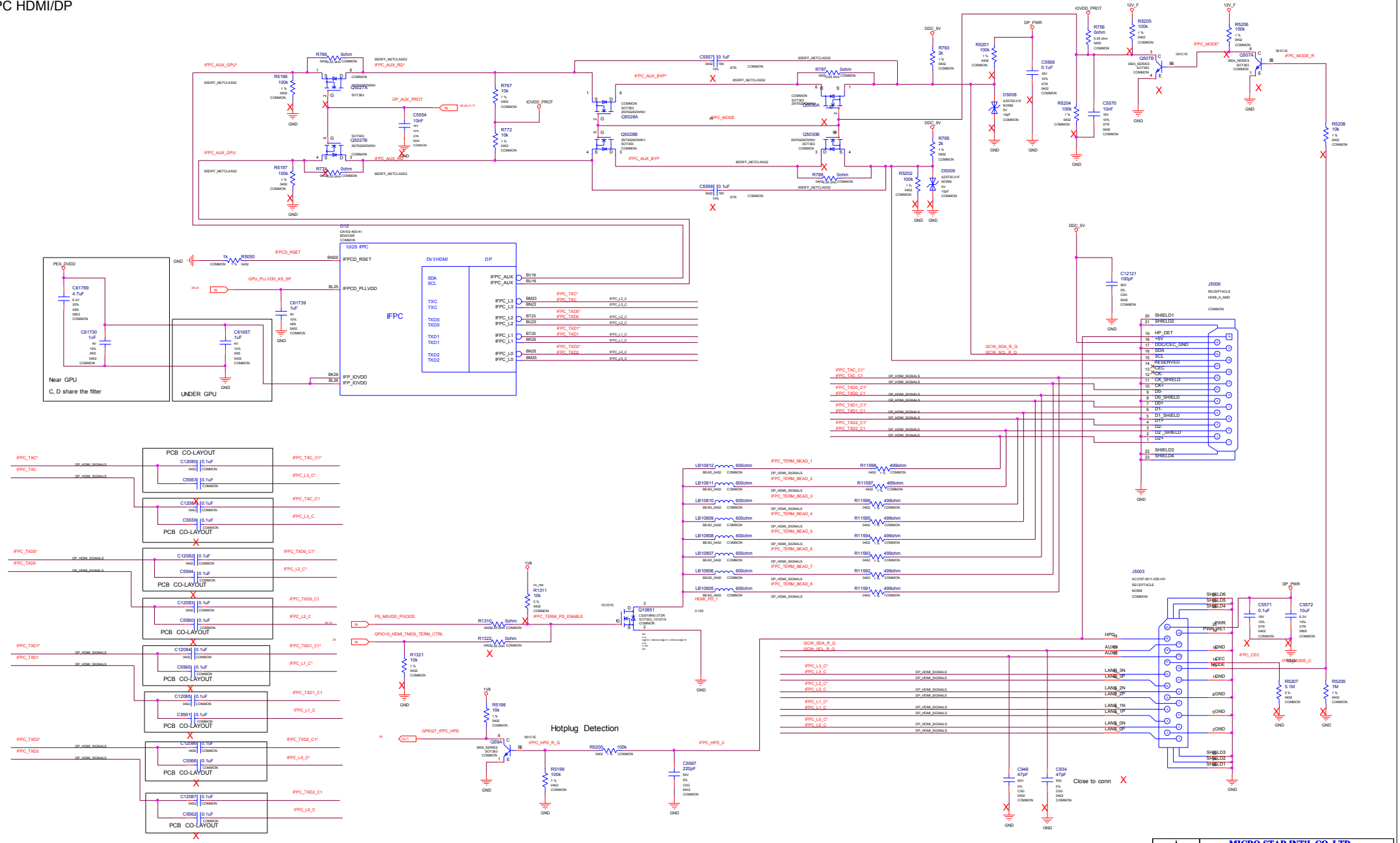
IFPC
Hotplug Detection
Close to conn
Near GPU
C, D share the filter
UNDER GPU
PCB CO-LAYOUT
MICRO-STAR INT'L CO.,LTD
MS-V389
IFPC HDMI/DP
Date: Thursday, July 23, 2020
Sheet 30 of 76

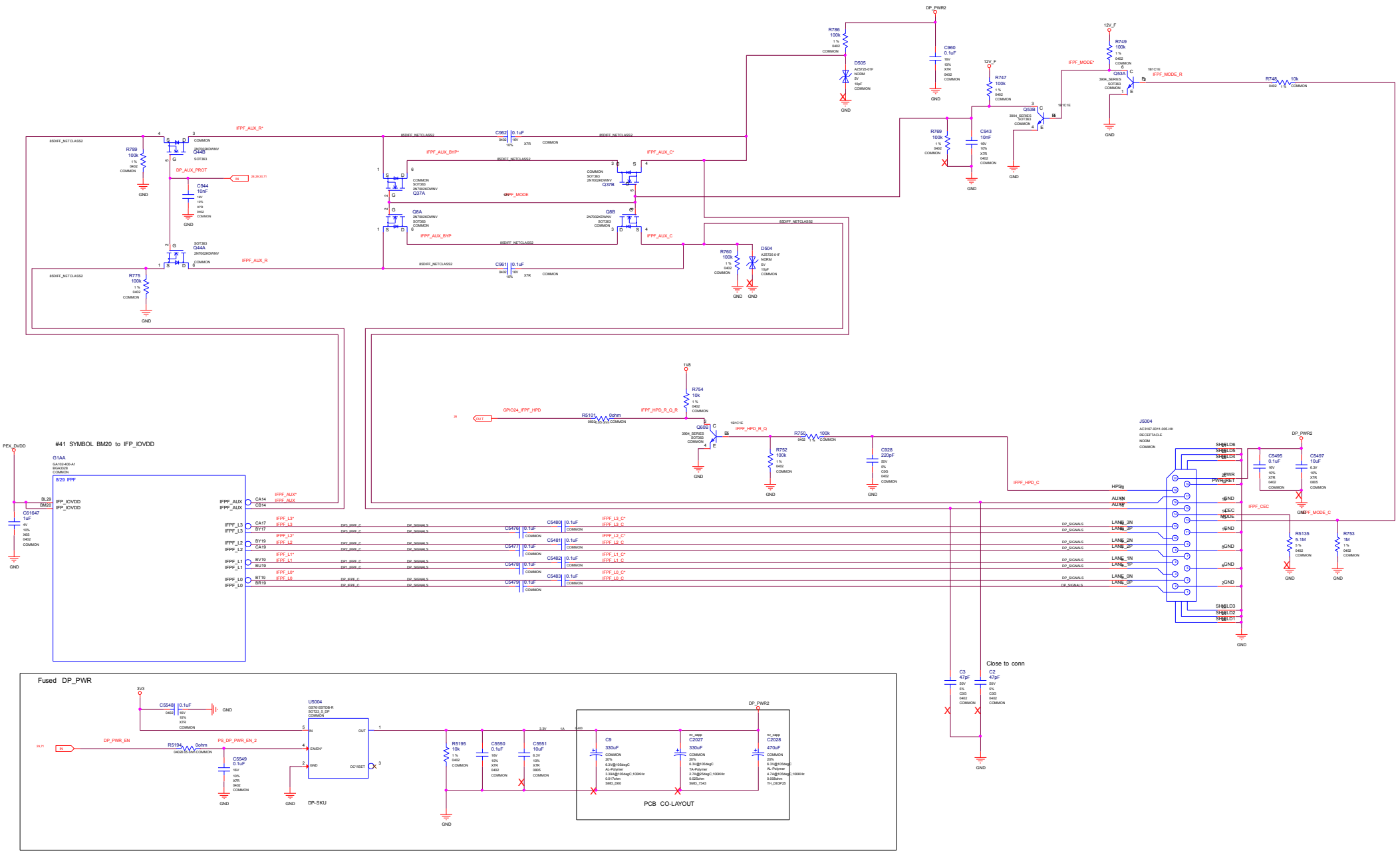
#41 SYMBOL BM20 to IFP_IOVDD
Fused DP_PWR
Close to conn
PCB CO-LAYOUT
DP-SKU
MICRO-STAR INT'L CO.,LTD
MS-V389
Size Custom
Document Description IFPF DP
Rev 1.1
Date: Thursday, July 23, 2020
Sheet 31 of 78

MISC: ROM, Straps

H=High :Tied to 1.8V
M=Middle:Tied to 0.9V
L=Low :Tied to 0V

GROUP0

STRAP2	STRAP1	STRAP0	RAMCFG[4:0]		
L	L	L	00000	RAMCFG MICRON 8Gb G6X 19Gbps x16 (161-0430-900)	<-A01 PCB
H	L	L	00100	RAMCFG MICRON 8Gb G6X 19Gbps x8 (161-0430-900)	
H	L	H	00101	RAMCFG MICRON 8Gb G6X 21Gbps x8 (161-0431-900)	
L	L	M	01000	RAMCFG MICRON 8Gb G6X 20Gbps x16 (161-0424-900)	
L	L	H	00001	RAMCFG MICRON 8Gb G6X 21Gbps x16 (161-0431-900)	<-OLD
L	M	H	01010	RAMCFG MICRON 8Gb G6X 19Gbps x16 (161-0430-900)	<-LATEST A02 PCB

ROM_SO	ROM_SI	ROM_SCLK	SMARTFAN[2:0],FS_OVERT	1:ENABLE 0:DISABLE	
H	H	H	0111	FS_OVERT ENABLE	DEFAULT
L	L	L	0000	FS_OVERT DISABLE	

1:SMB_ALT_ADDR ENABLE
0:SMB_ALT_ADDR DISABLE

1:DEVID_SEL REBRAND
0:DEVID_SEL ORIGNAL

1:PCIE_CFG LOW POWER
0:PCIE_CFG HIGH POWER

1:VGA_DEVICE ENABLE
0:VGA_DEVICE DISABLE

STRAP5	STRAP4	STRAP3	SMB_ALT_ADDR	DEVID_SEL	PCIE_CFG	VGA_DEVICE	
M	H	H	1	1	1	1	
M	H	L	1	1	1	0	
M	L	H	1	1	0	1	
M	L	L	1	1	0	0	
L	H	M	1	0	1	1	
L	M	H	1	0	1	0	
L	M	L	1	0	0	1	
L	L	M	1	0	0	0	
H	H	H	0	1	1	1	
H	H	L	0	1	1	0	
H	L	H	0	1	0	1	
H	L	L	0	1	0	0	
L	H	H	0	0	1	1	
L	H	L	0	0	1	0	
L	L	H	0	0	0	1	Default
L	L	L	0	0	0	0	

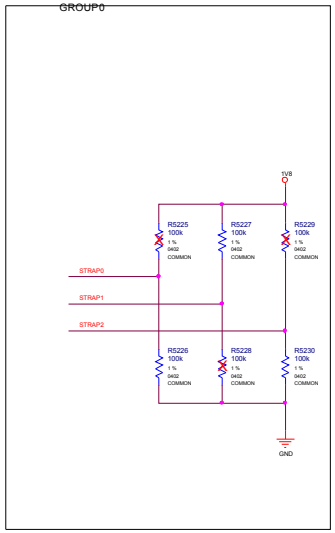

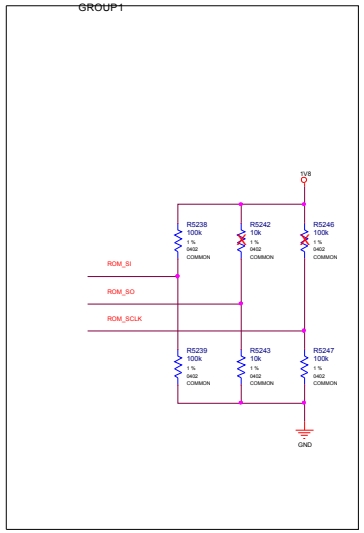

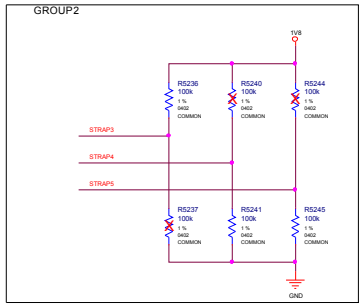

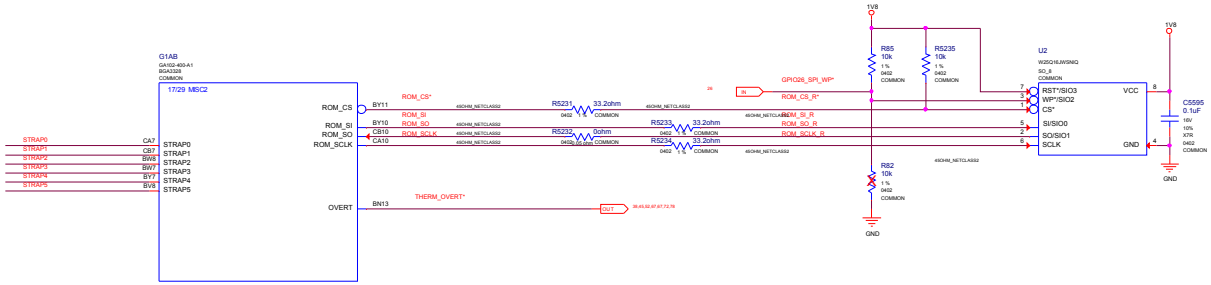

MICRO-STAR INT'L CO.,LTD		
MS-V389		
Size: Custom	Document Description: MISC: ROM, Straps	Rev: 1.1
Date: Thursday, July 23, 2020	Sheet 32 of 76	

MISC: XTAL. PLL

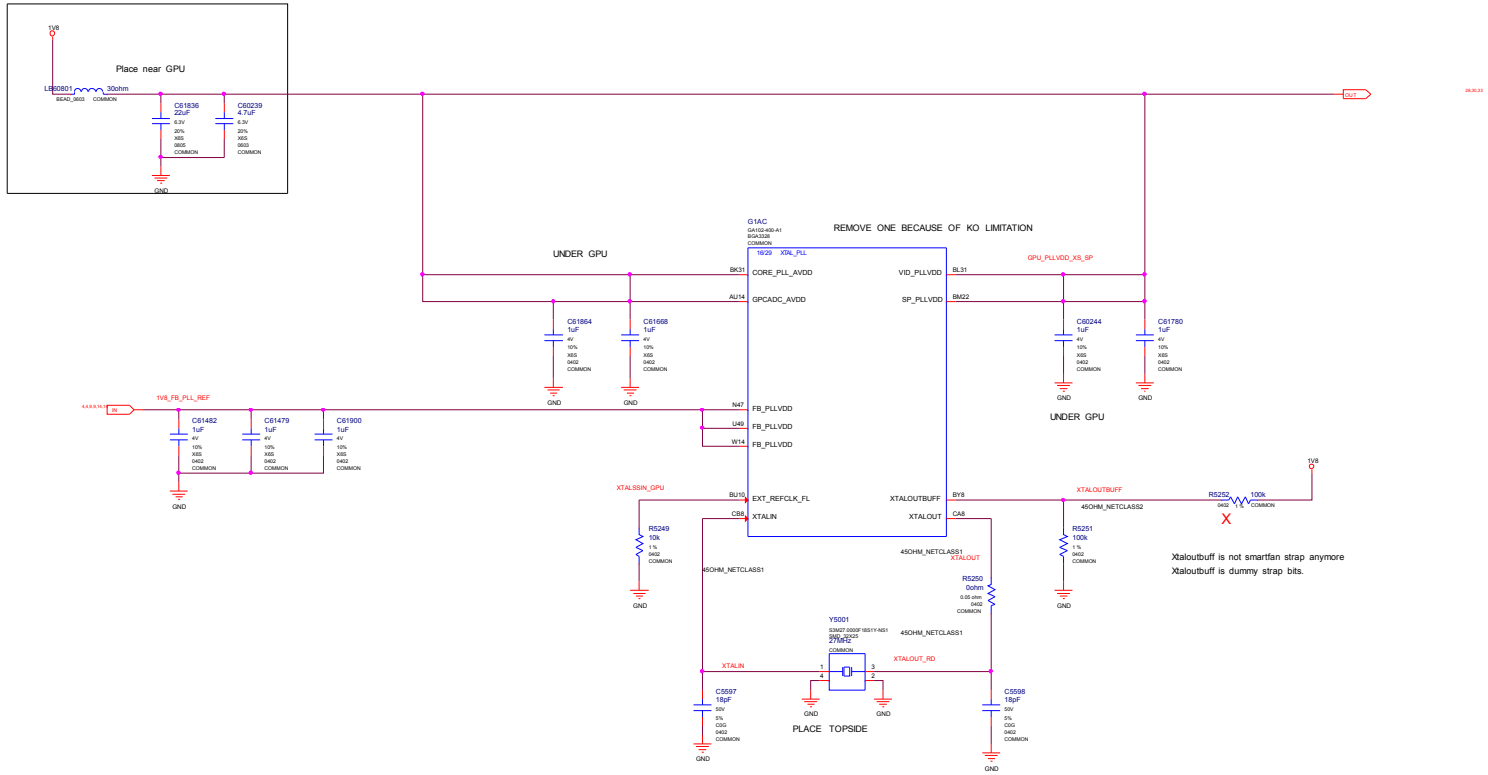

MICRO-STAR INT'L CO.,LTD		
MS-V389		
Size: Custom	Document Description: MISC: XTAL. PLL	Rev: 1.1
Date: Thursday, July 23, 2020	Sheet 33 of 76	

PS: 5V, 5V_BACKUP

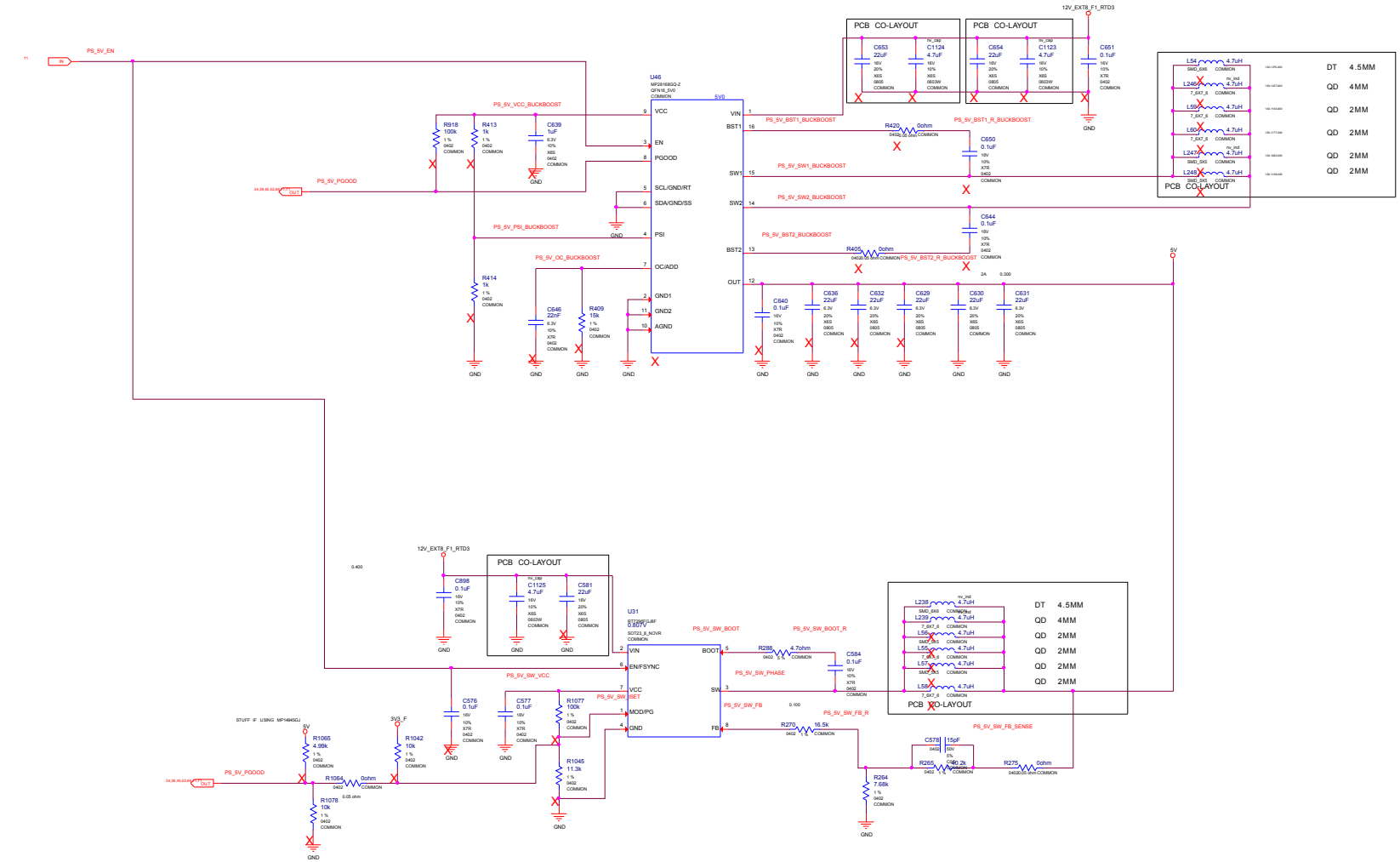

MICRO-STAR INT'L CO.,LTD		
MS-V389		
Size: Custom	Document Description: PS: 5V, 5V_BACKUP	Rev: 1.1
Date: Thursday, July 23, 2020	Sheet 34 of 76	

PS: PEX_DVDD 1V8 Rail

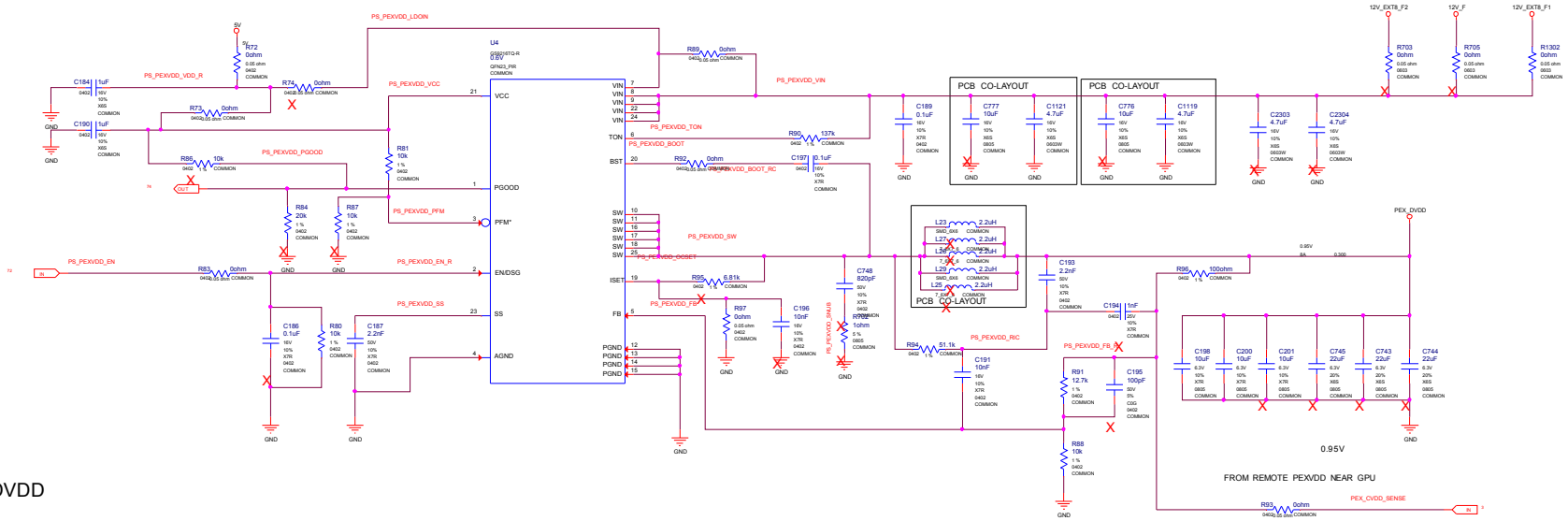

PEX_DVDD

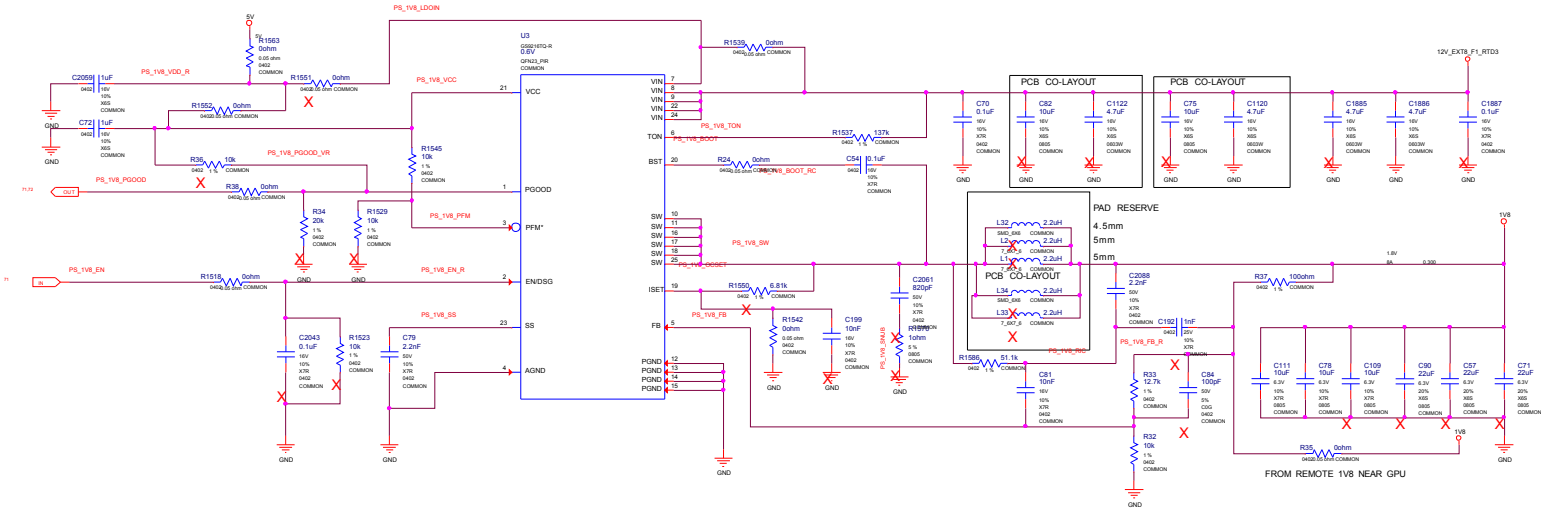

1V8

MICRO-STAR INT'L CO.,LTD		
MS-V389		
Size: Custom	Document Description: PS: PEX_DVDD 1V8 Rail	Rev: 1.1
Date: Thursday, July 23, 2020	Sheet 35 of 76	

BLANK

PS: FBVDD Controller OVR3

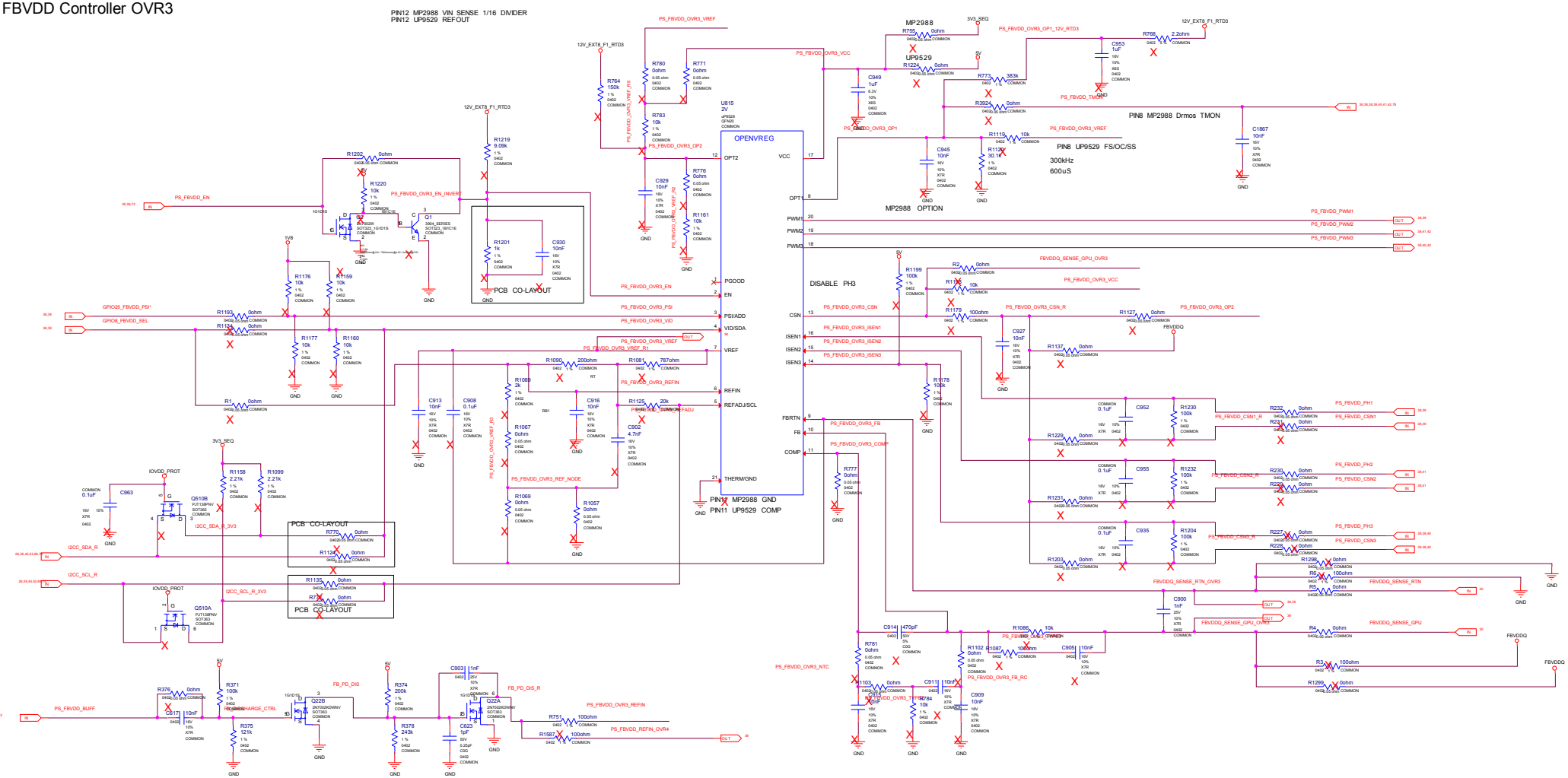

MICRO-STAR INT'L CO.,LTD		
MS-V389		
Size: Custom	Document Description: PS: FBVDD Controller OVR3	Rev: 1.1
Date: Thursday, July 23, 2020	Sheet 37 of 76	

PS:FBVDDQ OVR4

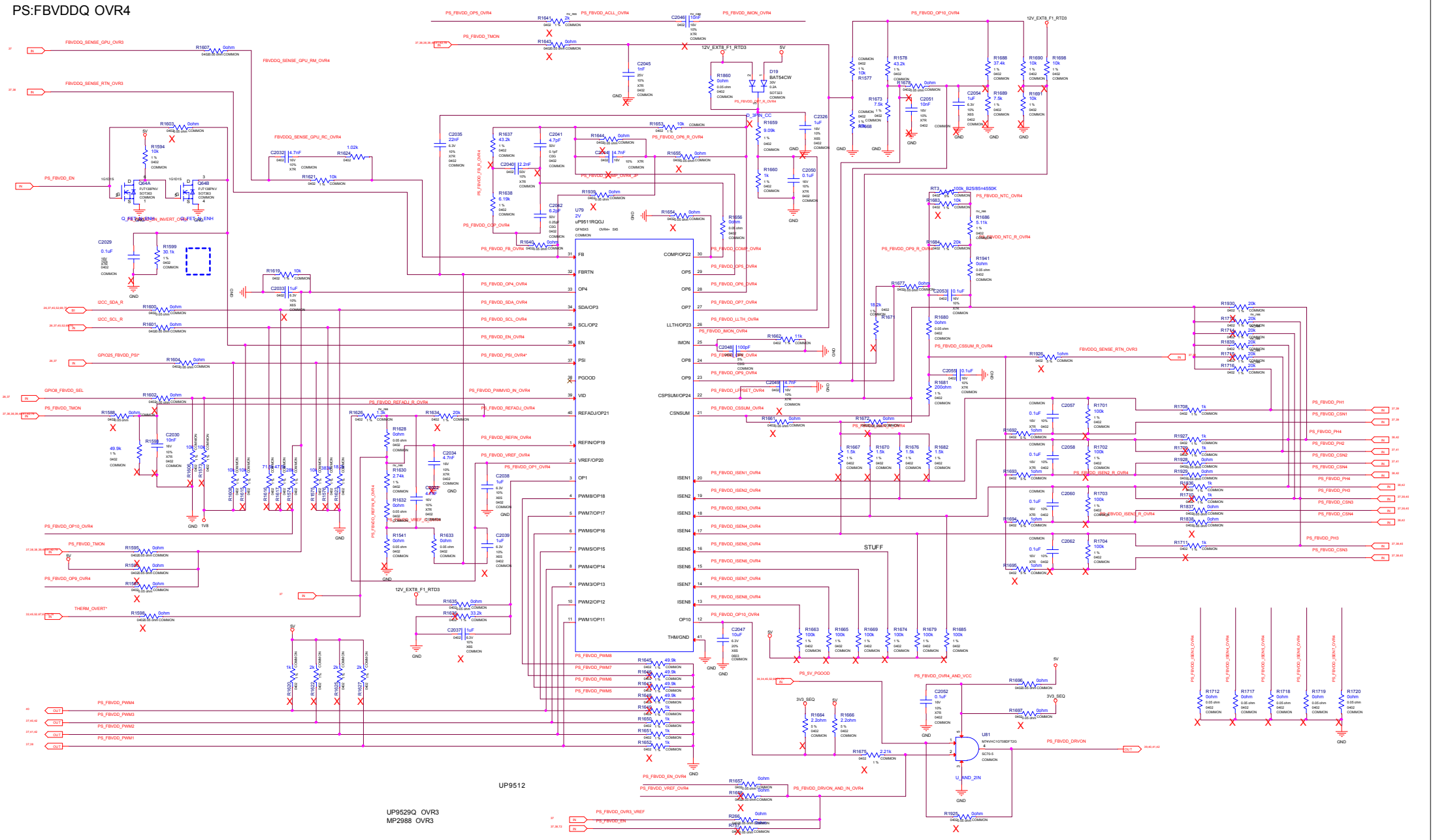

PS: FBVDD PH1

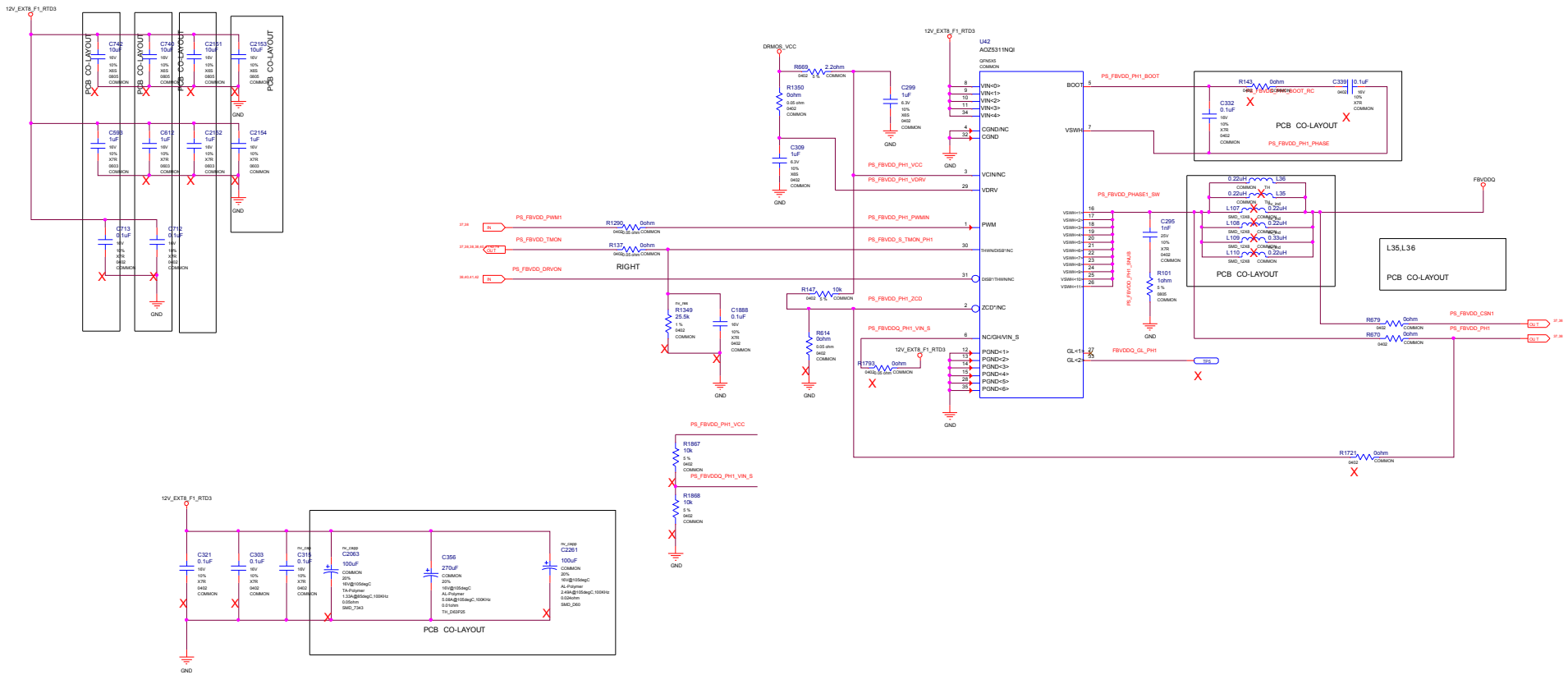

MSI	MICRO-STAR INT'L CO.,LTD	
	MS-V389	
Size: Custom	Document Description: PS: FBVDD PH1	Rev: 1.1
Date: Thursday, July 23, 2020	Sheet 39 of 76	

PS: FBVDD PH3

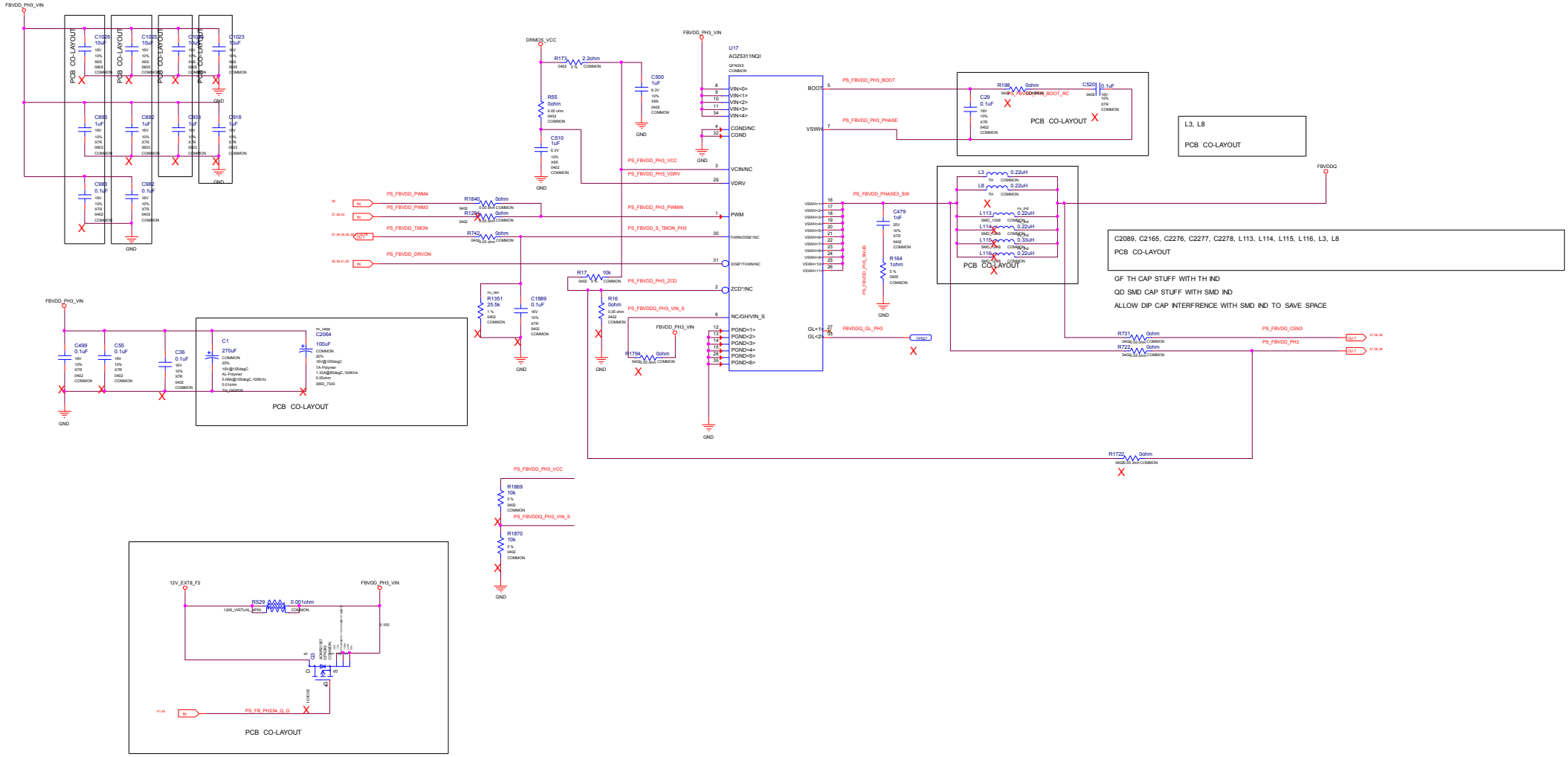

FBVDD PH3 INPUT ANTI-BACKDRIVE

MSI	MICRO-STAR INT'L CO.,LTD		
	MS-V389		
Size: Custom	Document Description: PS: FBVDD PH3		Rev: 1.1
Date: Thursday, July 23, 2020	Sheet 40 of 76		

PS: FBVDD PH2

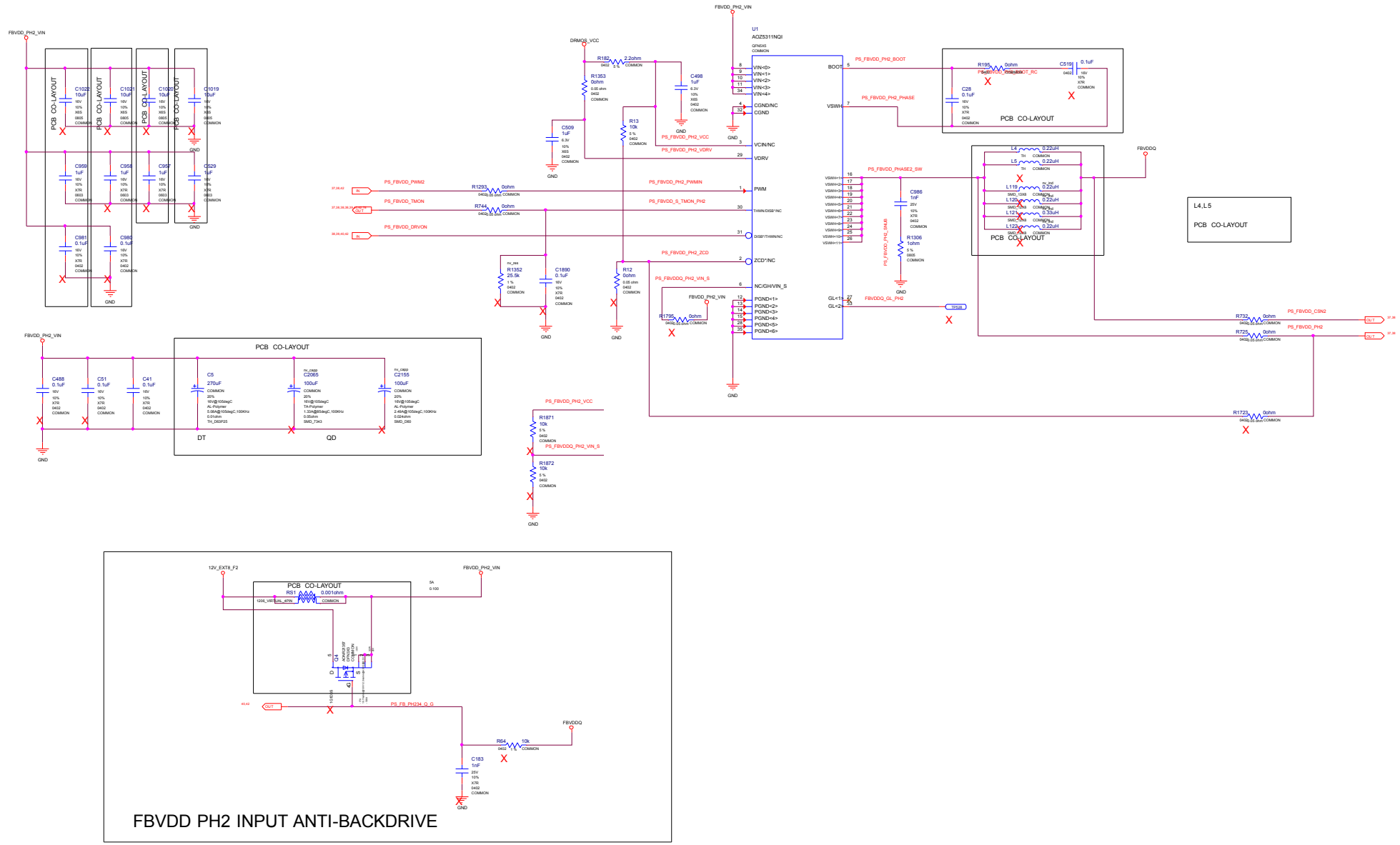

MSI	MICRO-STAR INT'L CO.,LTD	
	MS-V389	
Size: Custom	Document Description: PS: FBVDD PH2	Rev: 1.1
	Date: Thursday, July 23, 2020	Sheet 41 of 76

PS: FBVDD PH4

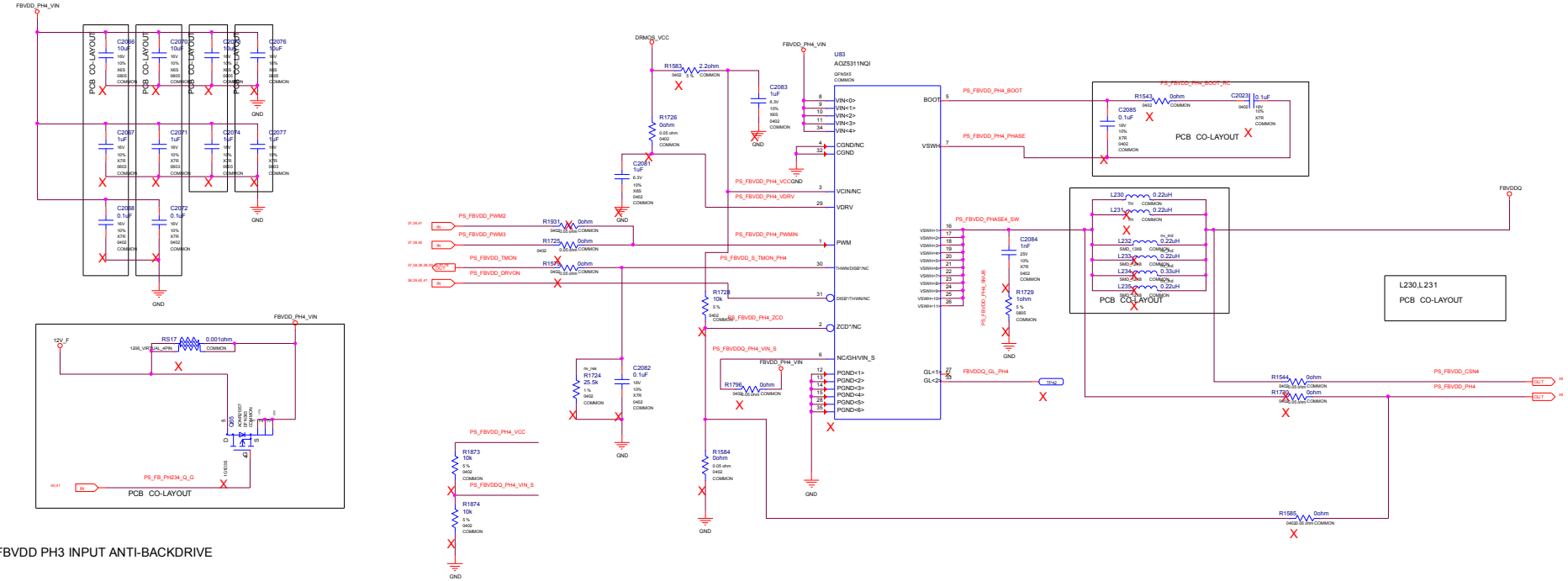

FBVDD PH3 INPUT ANTI-BACKDRIVE

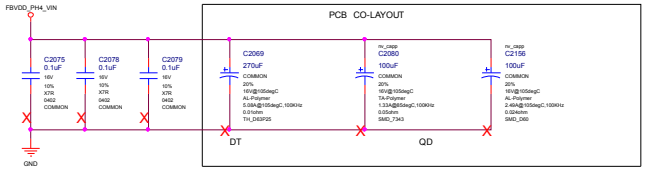

MICRO-STAR INT'L CO.,LTD		
MS-V389		
Size: Custom	Document Description: PS: FBVDD PH4	Rev: 1.1
Date: Thursday, July 23, 2020	Sheet 42 of 76	

PS: FBVDD OUTPUT CAP

3x 820uF TH FBVDD OUTPUT BULK CAPS

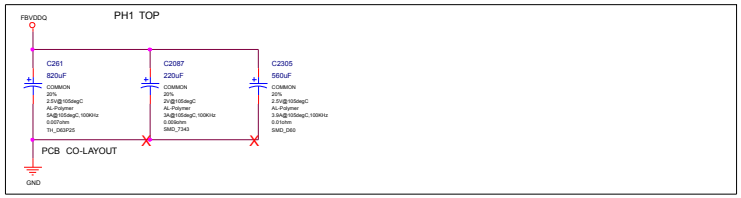

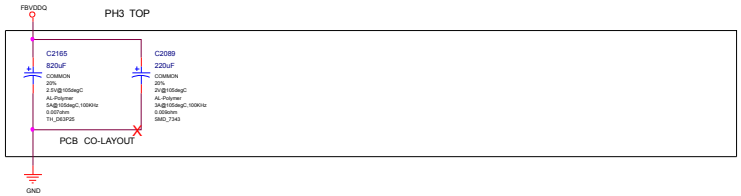

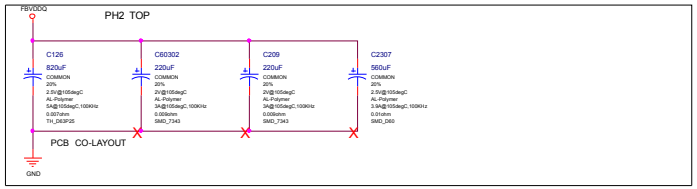

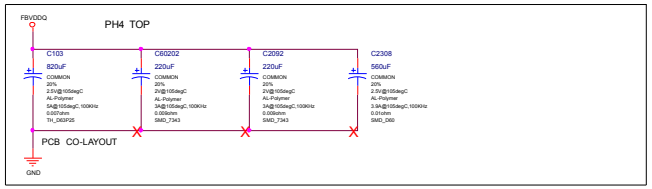

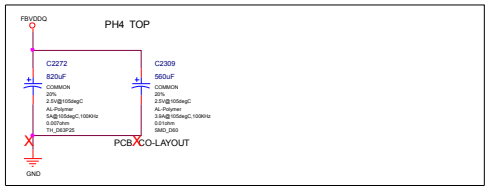

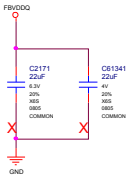

CLOSE TO FB PH3 OUTPUT STUFF

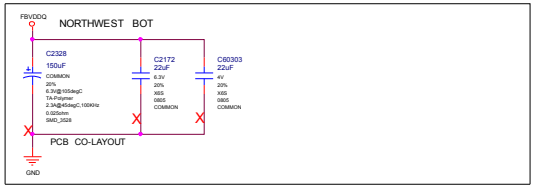

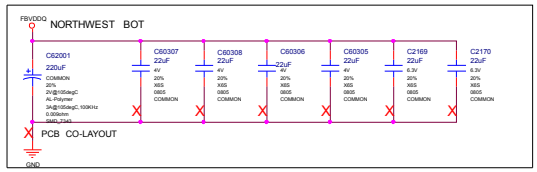

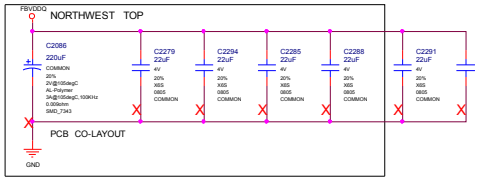

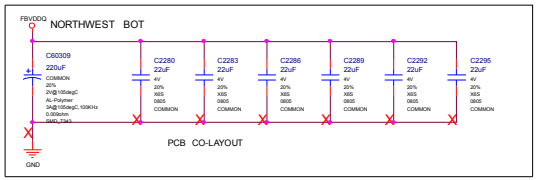

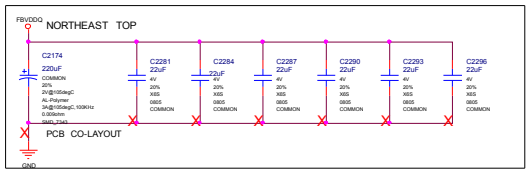

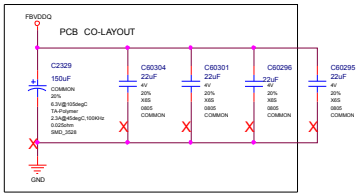

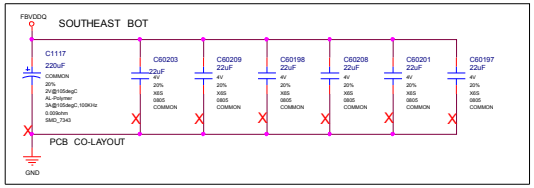

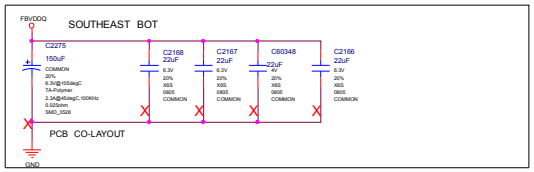

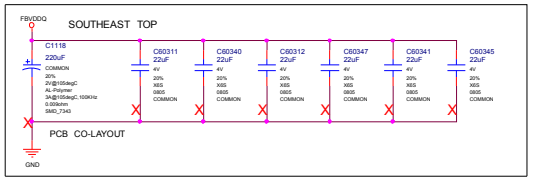

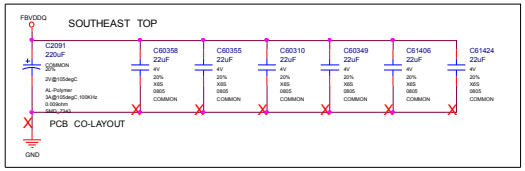

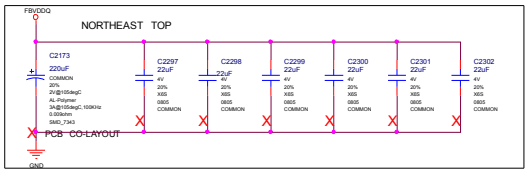

MSI	MICRO-STAR INT'L CO.,LTD	
	MS-V389	
Size: Custom	Document Description: PS: FBVDD OUTPUT CAP	Rev: 1.1
Date: Thursday, July 23, 2020	Sheet 43 of 76	

Added for A01 x16

ADDED FOR A00 X16 DESIGN: PLACE UNDER MEMORIES

MSI	MICRO-STAR INT'L CO.,LTD	
	MS-V389	
Size: Custom	Document Description: PS: FBVDD_OUTPUT_CAP_NEAR_MEMORY	Rev 1.1
Date: Thursday, July 23, 2020	Sheet 44 of 76	

PS: MSVDD

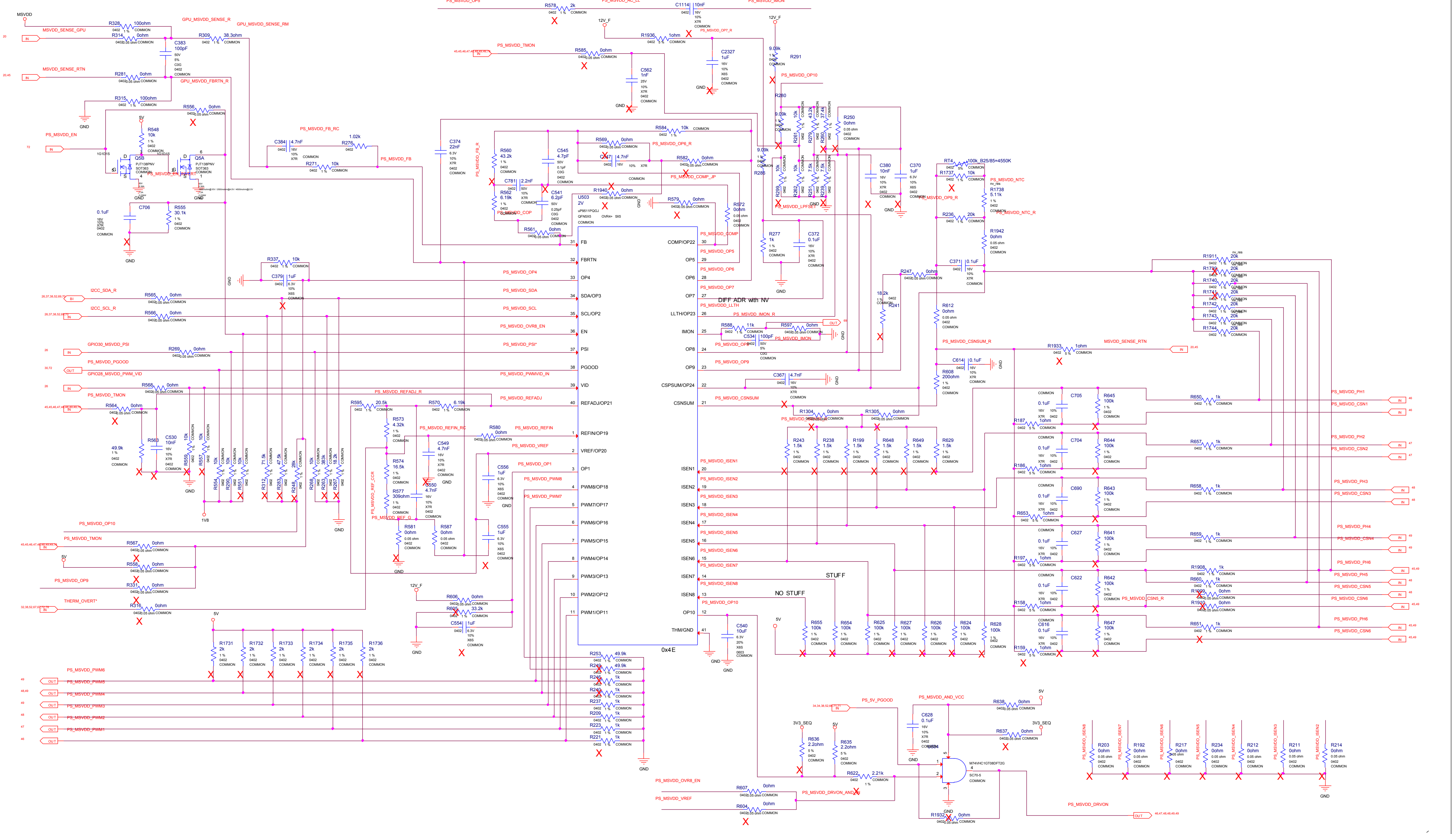

MICRO-STAR INT'L CO.,LTD

MS-V389

Size	Document Description	Rev
Custom	PS: MSVDD	1.1

Date: Thursday, July 23, 2020 Sheet 45 of 76

PS: MSVDD Phase 1

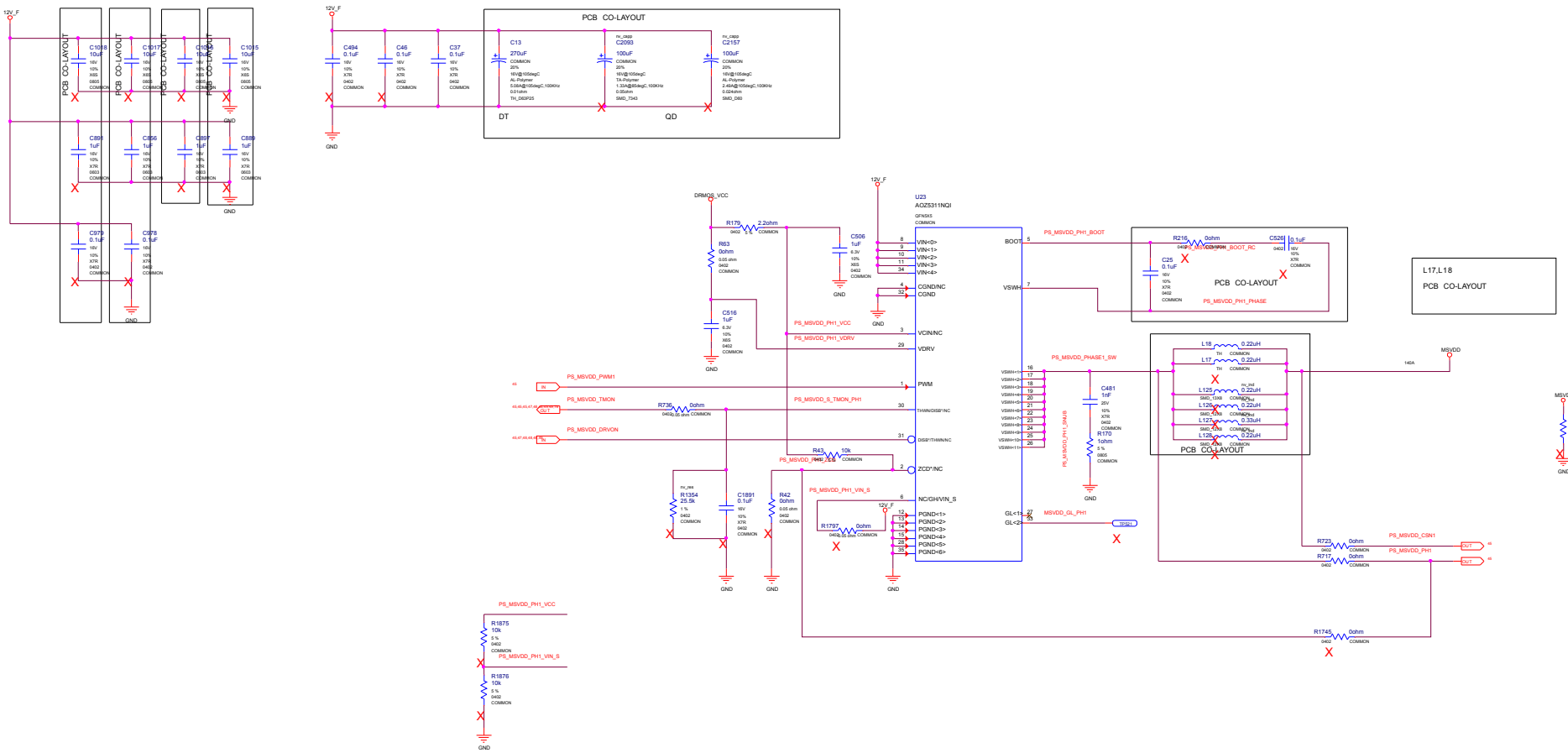

MSI	MICRO-STAR INT'L CO.,LTD	
	MS-V389	
Size: Custom	Document Description: PS: MSVDD Phase 1	Rev: 1.1
Date: Thursday, July 23, 2020	Sheet 46 of 76	

PS: MSVDD PH 2

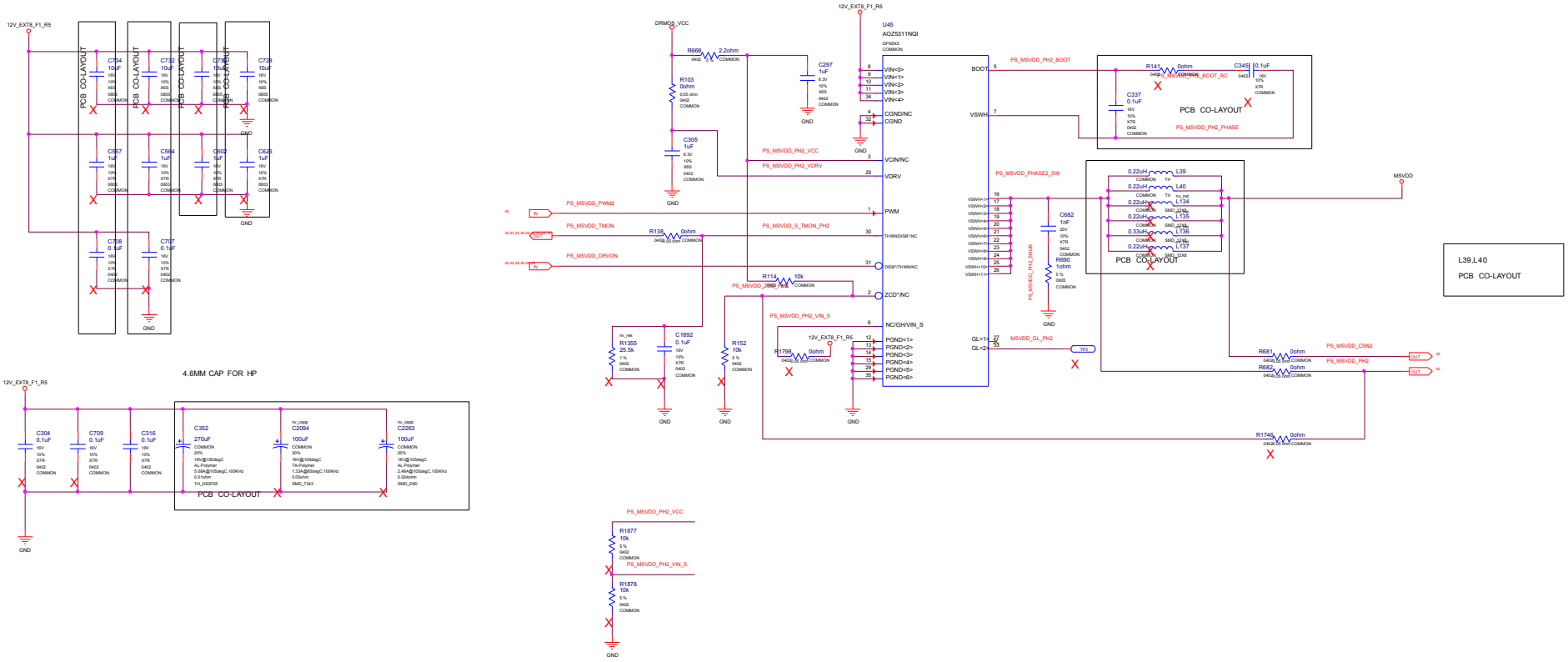

MICRO-STAR INT'L CO.,LTD		
MS-V389		
Size: Custom	Document Description: PS: MSVDD PH 2	Rev: 1.1
Date: Thursday, July 23, 2020	Sheet 47 of 76	

PS:MSVDD Phase 3, 5

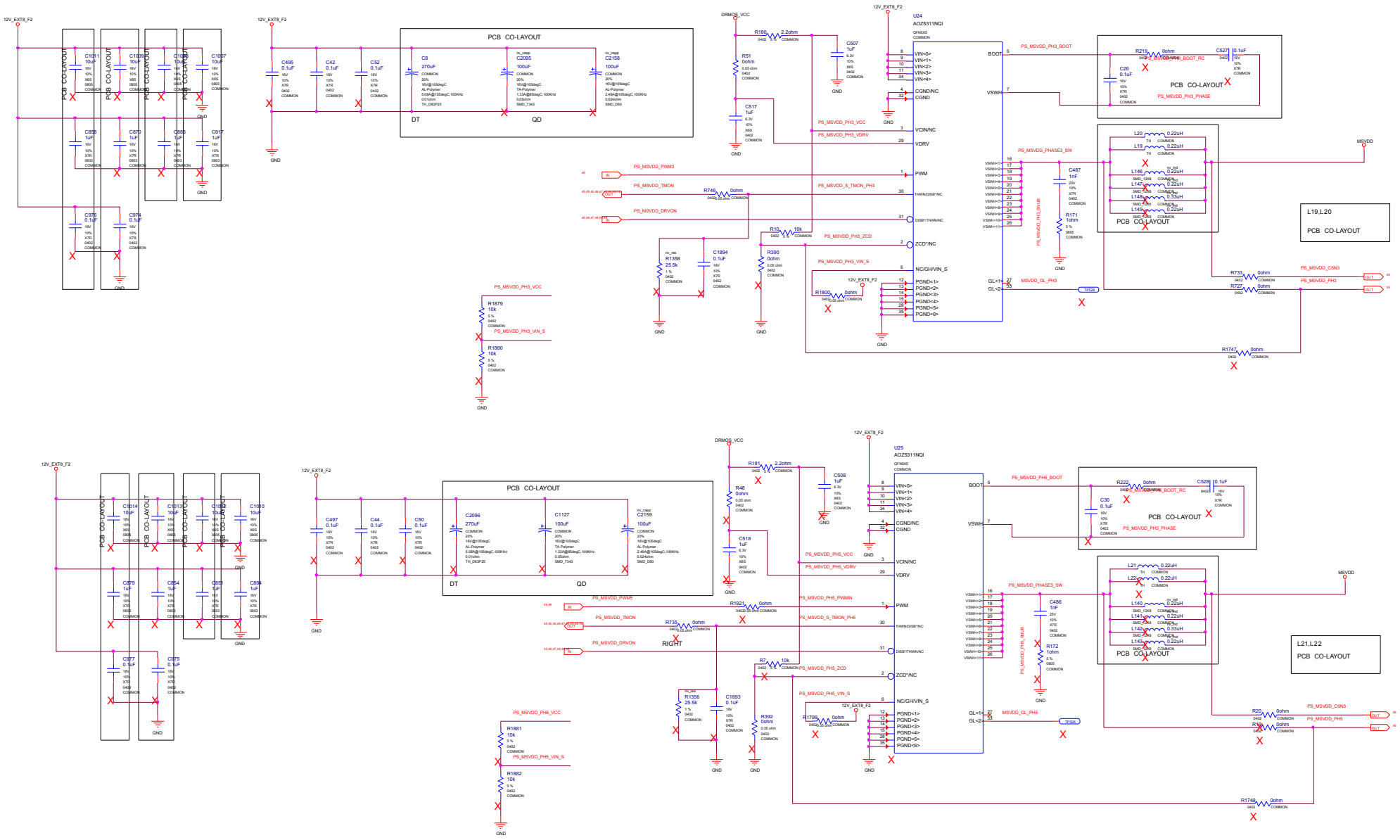

MICRO-STAR INT'L CO.,LTD		
MS-V389		
Size: Custom	Document Description: PS:MSVDD Phase 3, 5	Rev: 1.1
Date: Thursday, July 23, 2020	Sheet 48 of 76	

PS: MSVDD PH 4,6

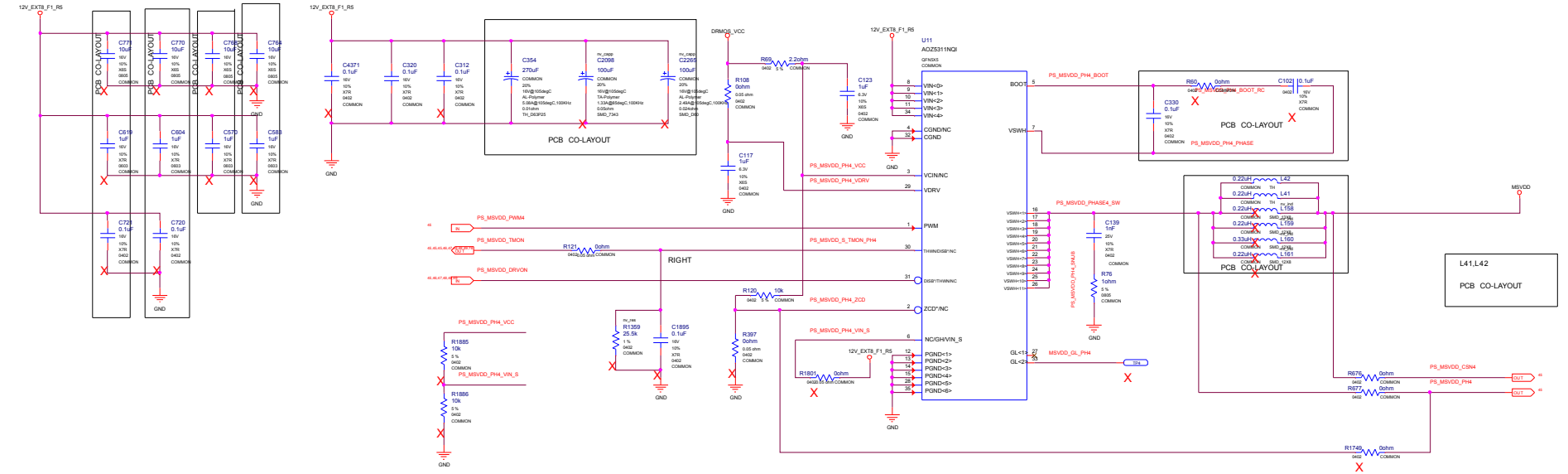

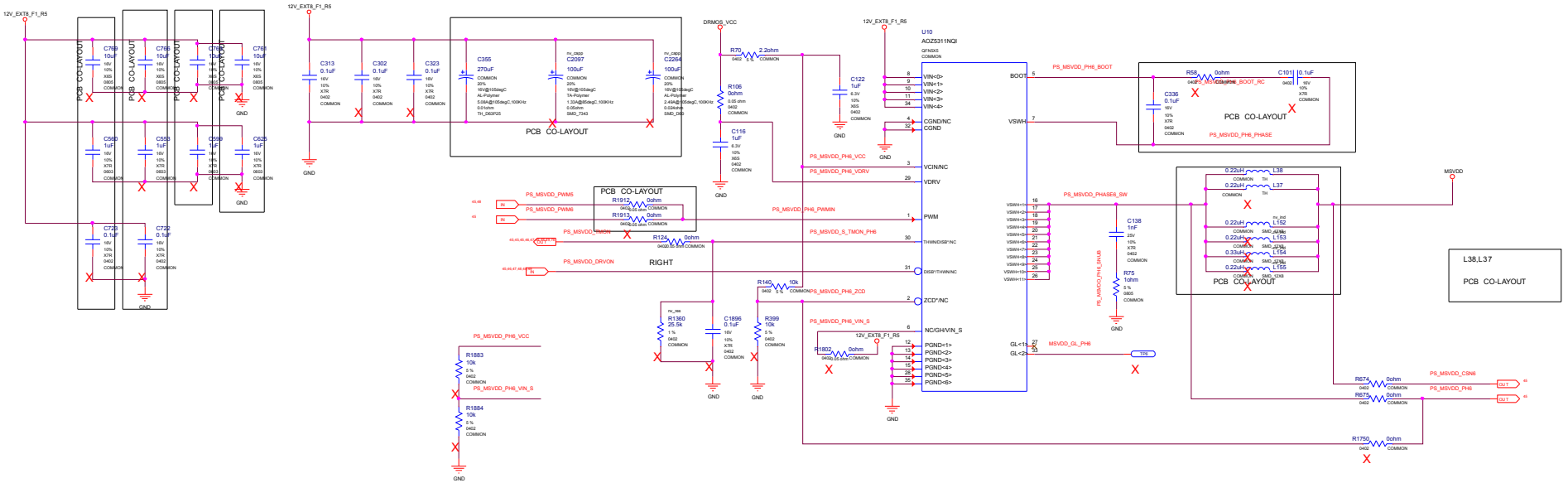

MICRO-STAR INT'L CO.,LTD		
MS-V389		
Size: Custom	Document Description: PS: MSVDD PH 4,6	Rev: 1.1
Date: Thursday, July 23, 2020	Sheet 49 of 76	

PS:MSVDD OUTPUT CAP (TOP)

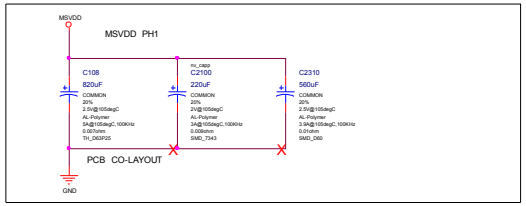

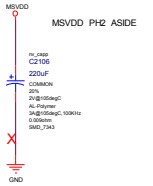

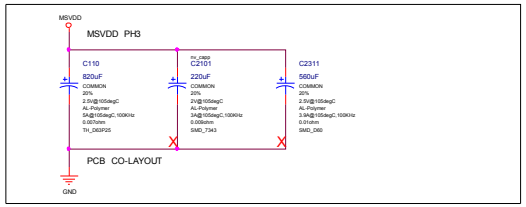

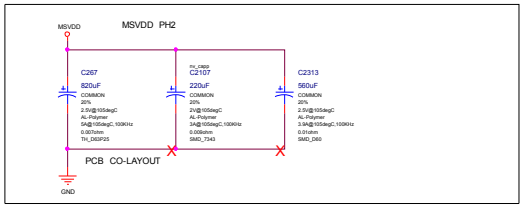

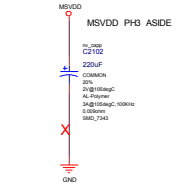

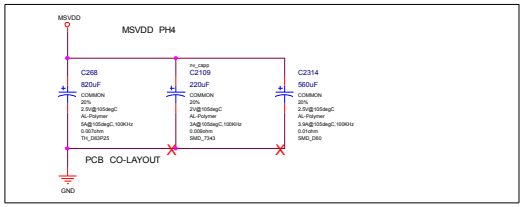

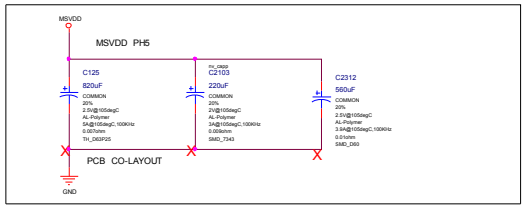

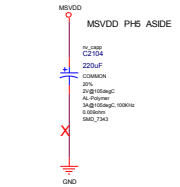

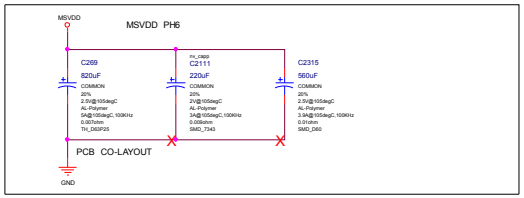

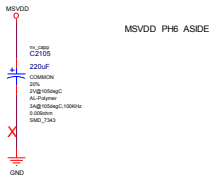

MSI	MICRO-STAR INT'L CO.,LTD	
	MS-V389	
Size: Custom	Document Description: PS:MSVDD OUTPUT CAP (TOP)	Rev 1.1
	Date: Thursday, July 23, 2020	Sheet 50 of 76

BLANK

PS: NVVDD Controller_OVR8

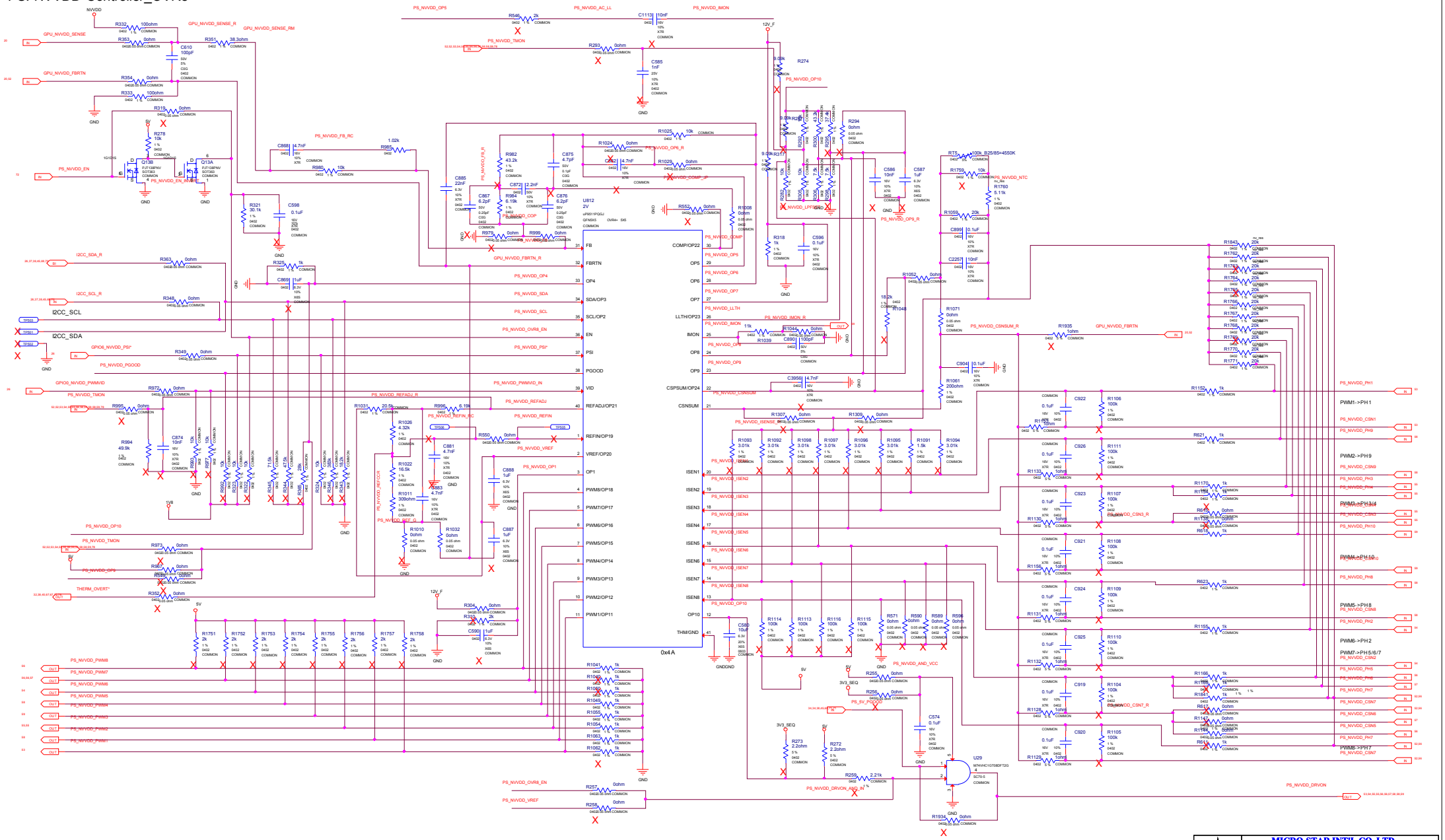

MICRO-STAR INT'L CO.,LTD	
MS-V389	
Size: Custom	Document Description: PS: NVVDD Controller_OVR8
Rev: 1.1	
Date: Thursday, July 23, 2020	Sheet 52 of 76

PS: NVVDD Phase 1

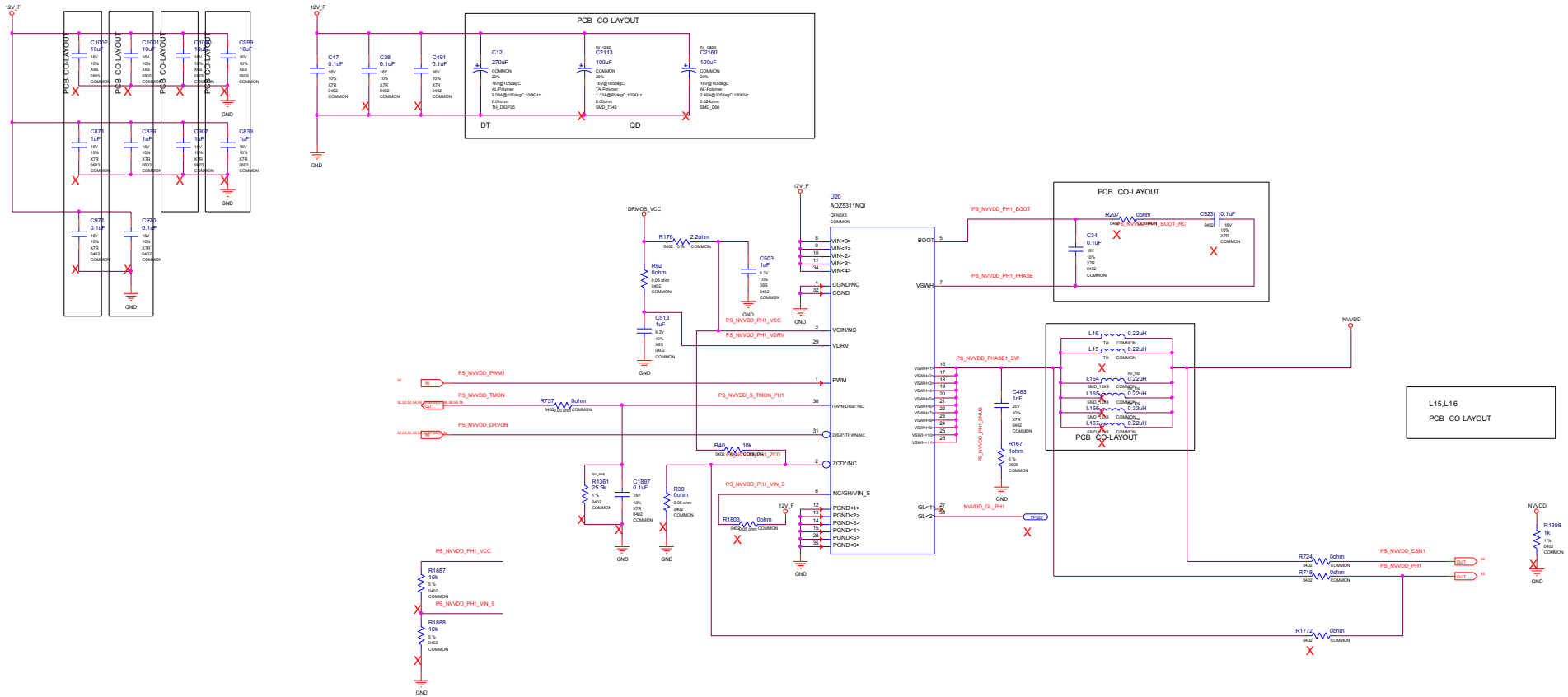

MSI	MICRO-STAR INT'L CO.,LTD	
	MS-V389	
Size: Custom	Document Description: PS: NVVDD Phase 1	Rev: 1.1
Date: Thursday, July 23, 2020	Sheet 53 of 76	

PS: NVVDD Phase 2

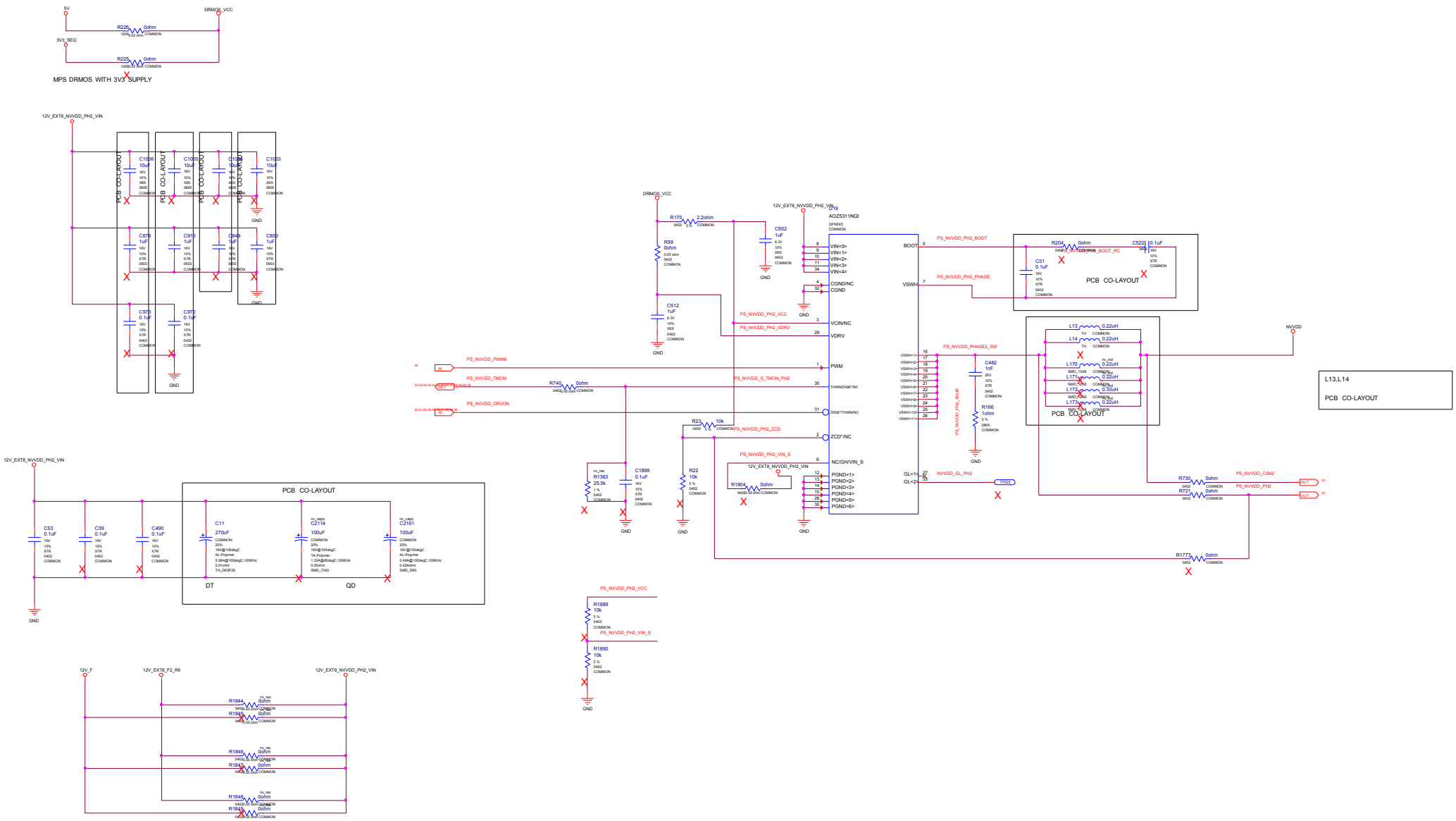

MICRO-STAR INT'L CO.,LTD		
MS-V389		
Size: Custom	Document Description: PS: NVVDD Phase 2	Rev: 1.1
Date: Thursday, July 23, 2020	Sheet 54 of 76	

PS: NVVDD Phase 3 (PWM6), PHASE 4(PWM2)

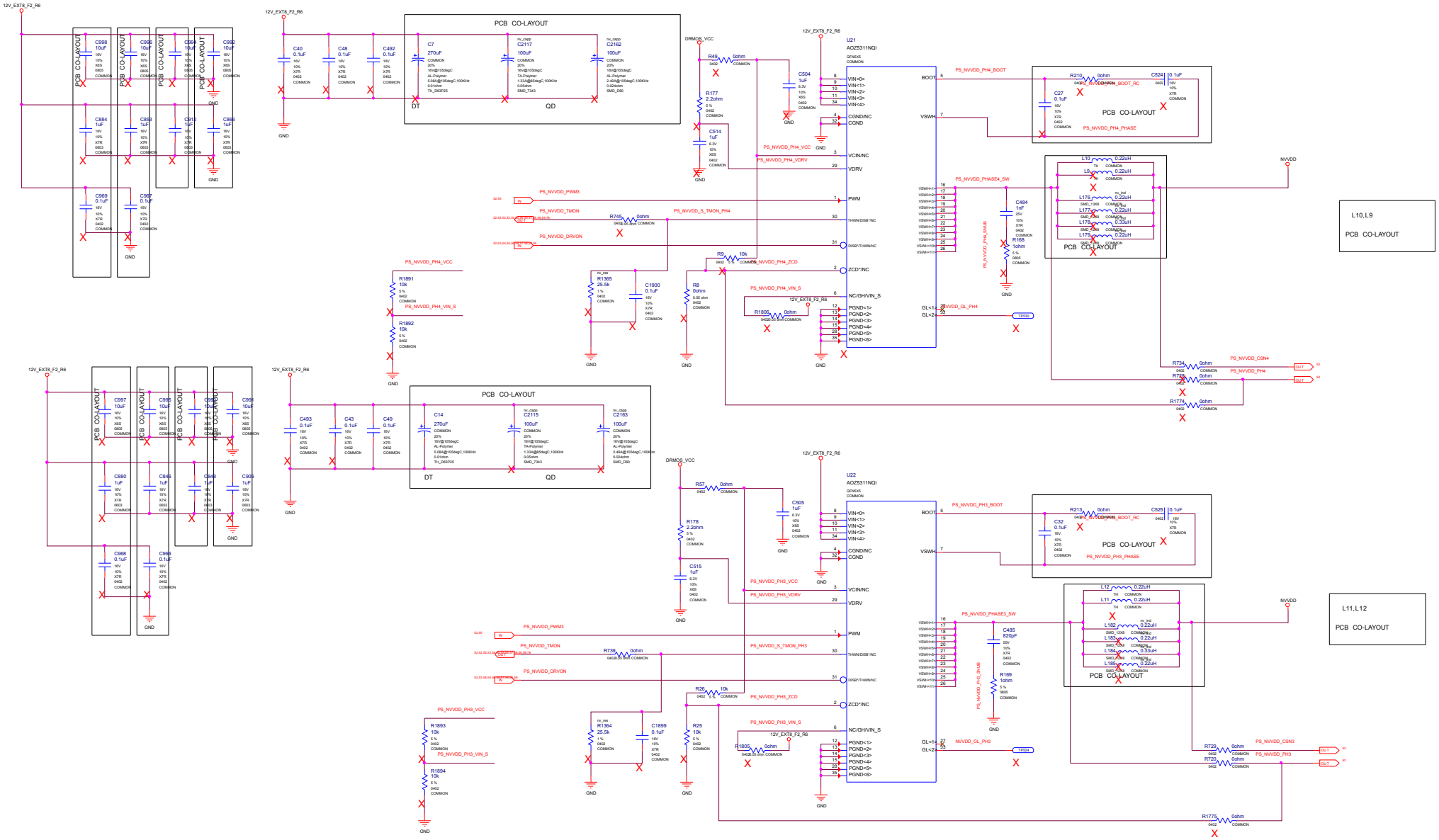

MSI	MICRO-STAR INT'L CO.,LTD	
	MS-V389	
Size: Custom	Document Description: PS: NVVDD Phase 3 (PWM6), PHASE 4(PWM2)	Rev 1.1
Date: Thursday, July 23, 2020	Sheet 55 of 76	

PS: NVVDD PH 5(PWM2), PH7(PWM3)

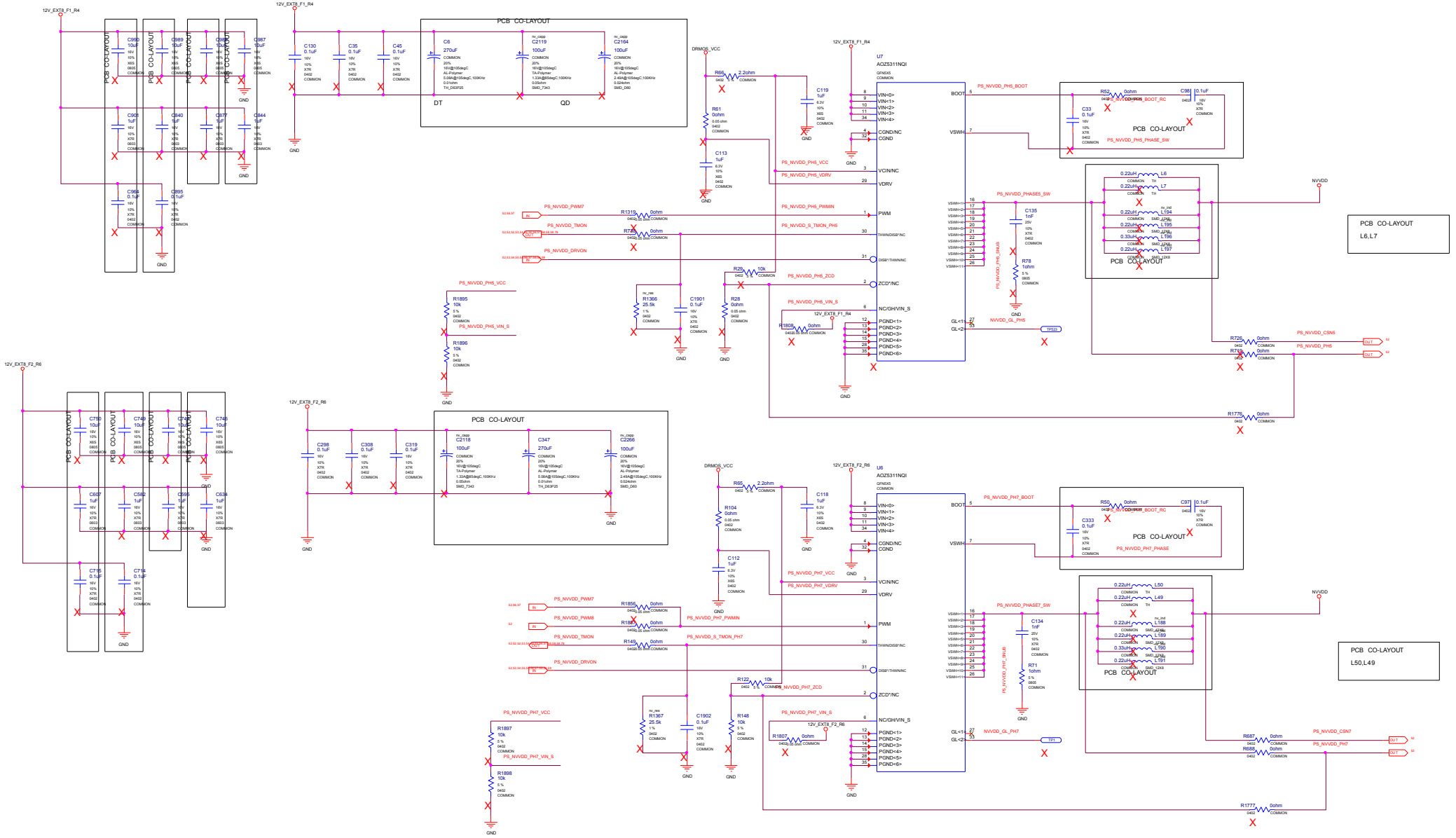

MICRO-STAR INT'L CO.,LTD		
MS-V389		
Size: Custom	Document Description: PS: NVVDD PH 5(PWM2), PH7(PWM3)	Rev: 1.1
Date: Thursday, July 23, 2020	Sheet 56 of 76	

PS: NVVDD Phase 6(PWM7)

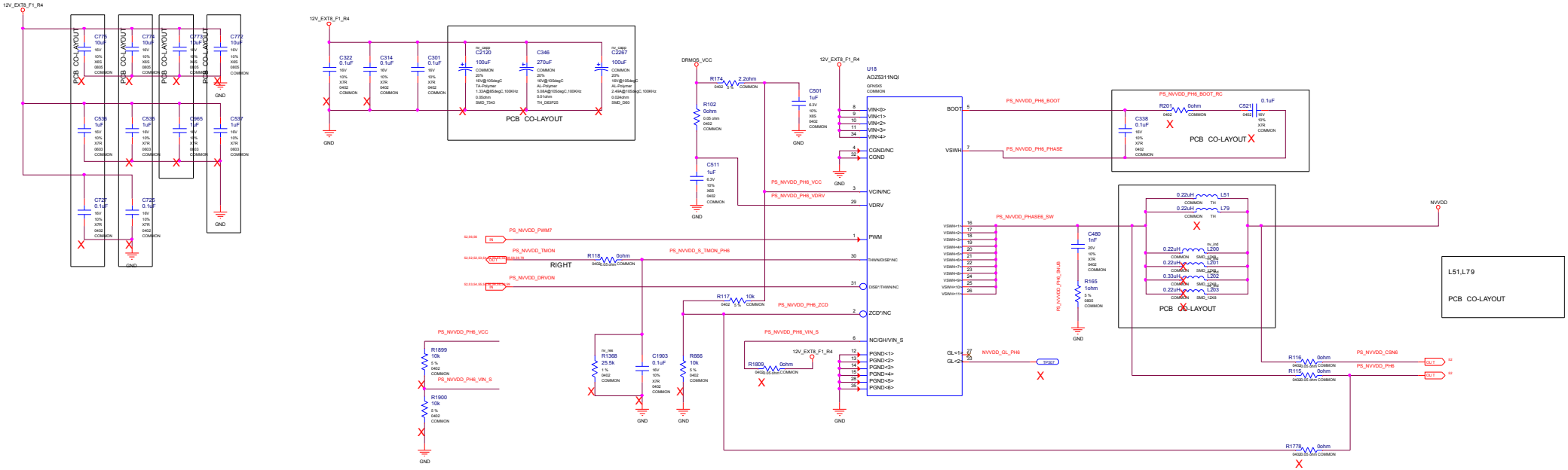

MSI	MICRO-STAR INT'L CO.,LTD	
	MS-V389	
Size: Custom	Document Description: PS: NVVDD Phase 6(PWM7)	Rev 1.1
Date: Thursday, July 23, 2020	Sheet 57 of 76	

PS: NVVDD PH 8 (PWM5), PH 9(PWM8)

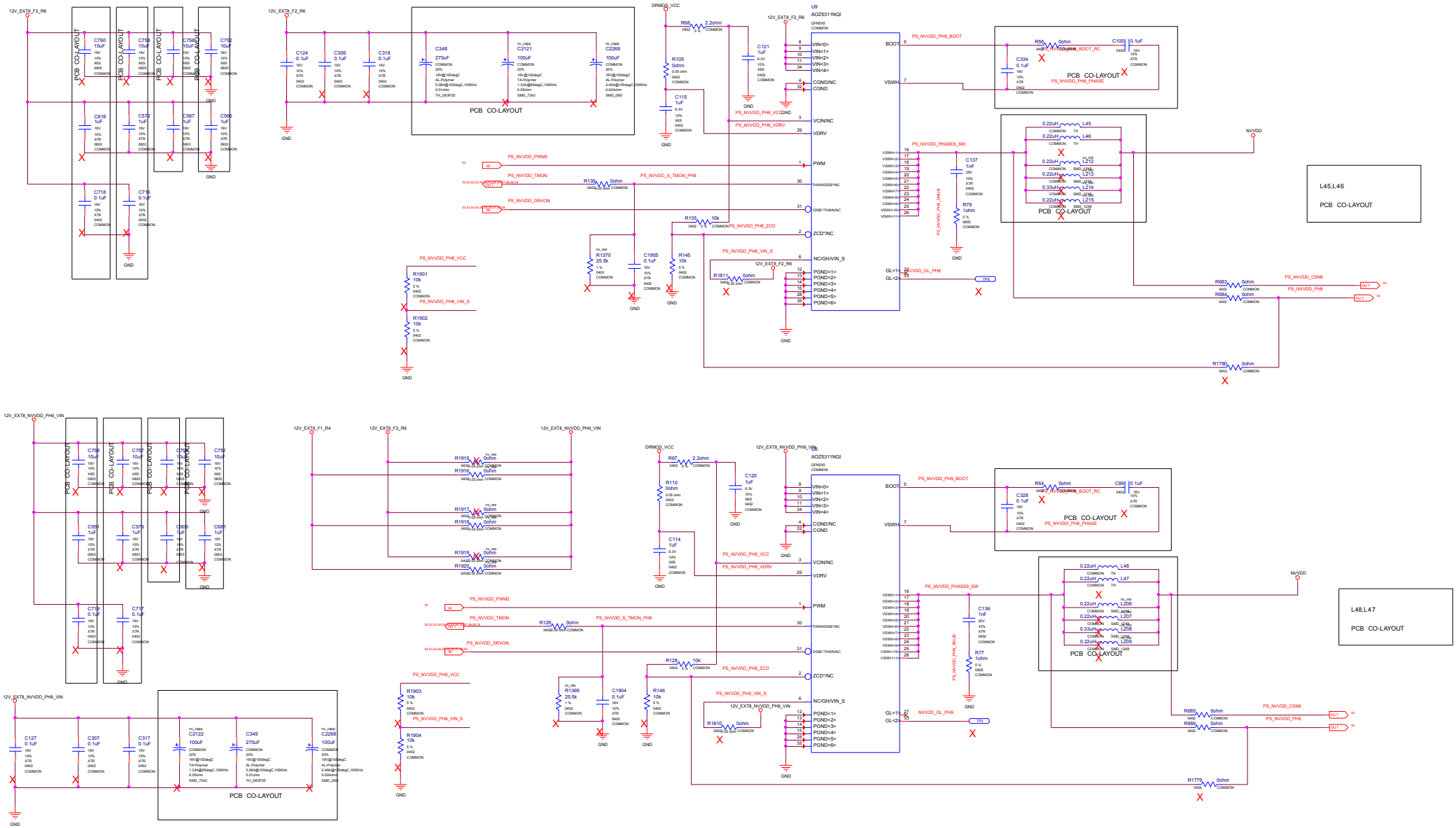

MSI	MICRO-STAR INT'L CO.,LTD	
	MS-V389	
Size: Custom	Document Description: PS: NVVDD PH 8 (PWM5), PH 9(PWM8)	Rev: 1.1
Date: Thursday, July 23, 2020	Sheet 58 of 76	

PS: NVVDD Phase 10 (PWM8)

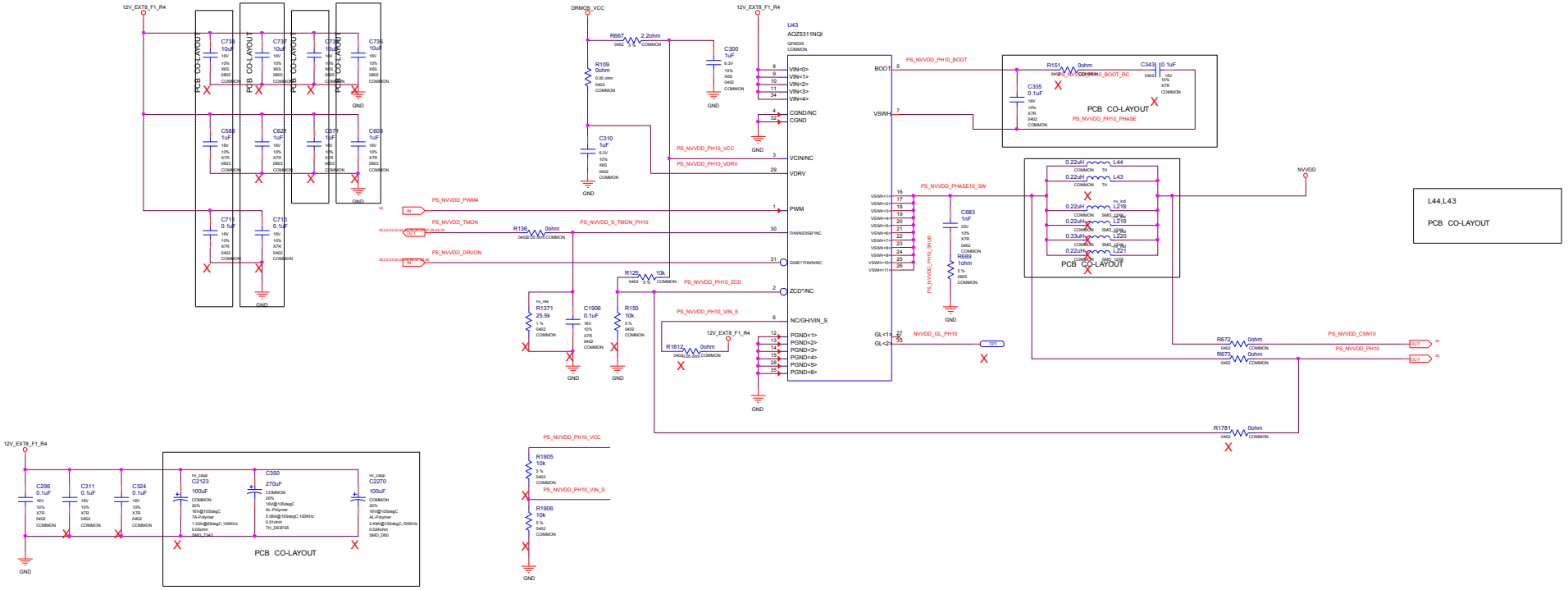

MICRO-STAR INT'L CO.,LTD		
MS-V389		
Size: Custom	Document Description: PS: NVVDD Phase 10 (PWM8)	Rev: 1.1
Date: Thursday, July 23, 2020	Sheet 59 of 76	

PCB CO-LAYOUT

C131, C132, C133, C140, C141, C142, C2106, C2107, C2133, C2134, C2135, C2137, C264, C265, C266, C267, C61, C64, C65, C66, C67, C68, C69, C77, C80, C83, C88

PCB CO-LAYOUT

C103, C105, C106, C107, C108, C110, C1208, C125, C1254, C1256, C1267, C128, C144, C145, C146, C151, C152, C153, C154, C159, C160, C161, C162, C170, C173, C2092, C2100, C2101, C2102, C2103, C2104,
C2138, C2139, C2140, C2141, C2142, C2143, C2144, C2272, C230, C231, C232, C233, C243, C245, C246, C248, C253, C254, C255, C256, C270, C274, C275, C276, C283, C289, C290, C291, C60202, C62004, C62005

C163, C164, C166, C167, C2087, C2105, C2109, C2110, C2111, C224, C225, C261, C268, C269, C60354, C61428, C62, C63, C89, C91, C96

PCB CO-LAYOUT

2020_06_17

1.Fix J1,J2 to reverse 8 pins

2.Change L238,L52,L53 footprint

PS: NVVDD OUTPUT CAP(TOP)

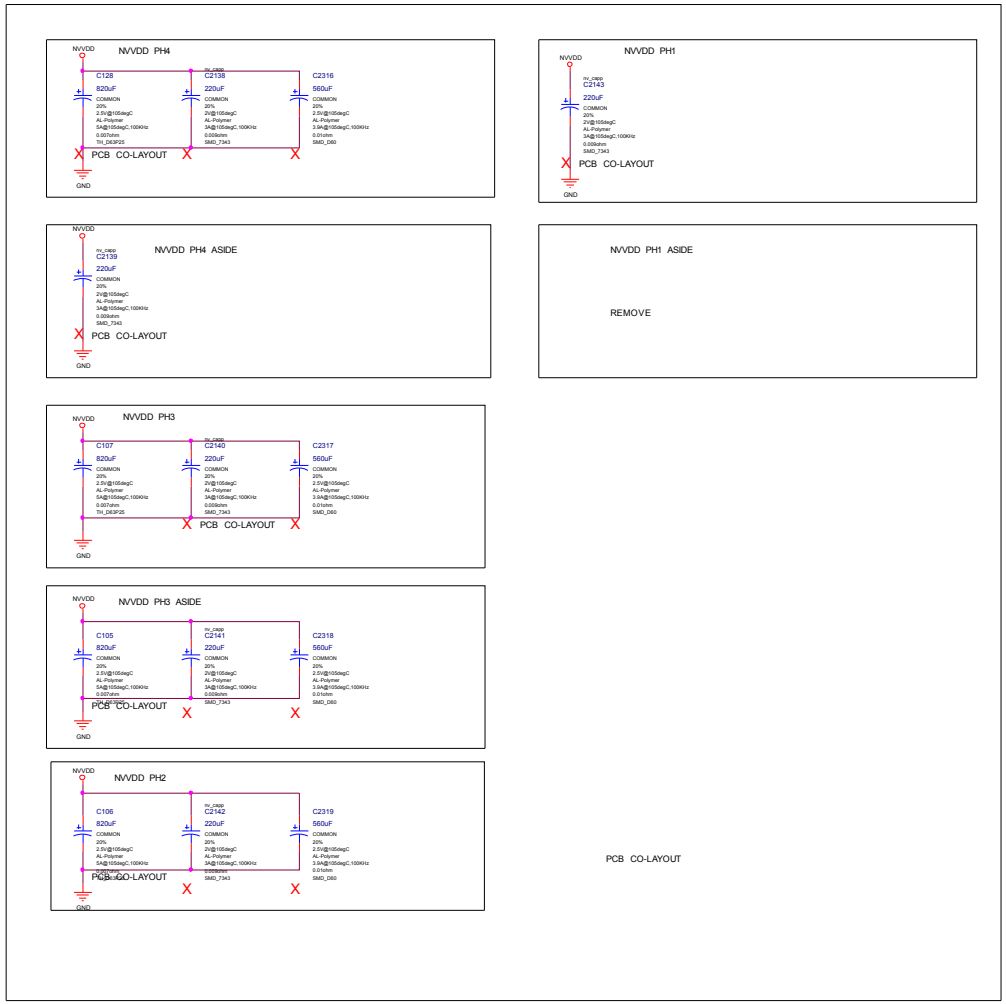

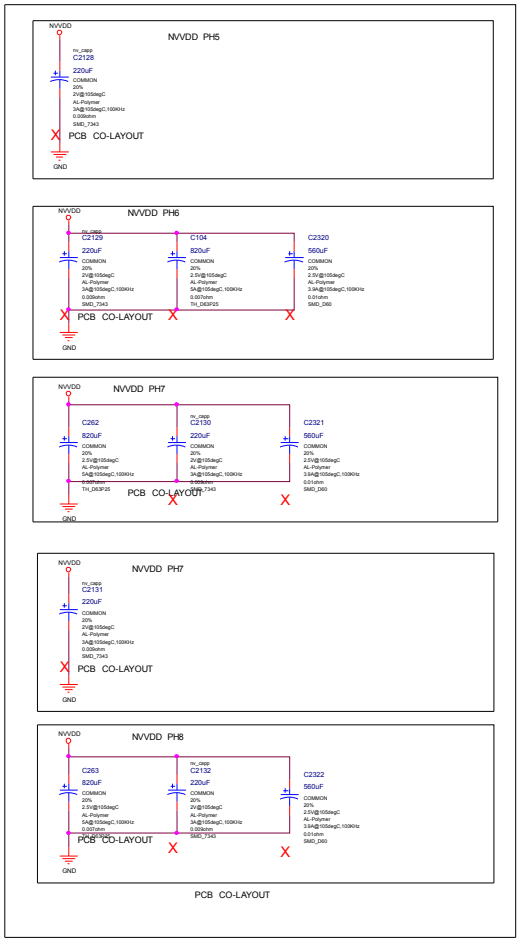

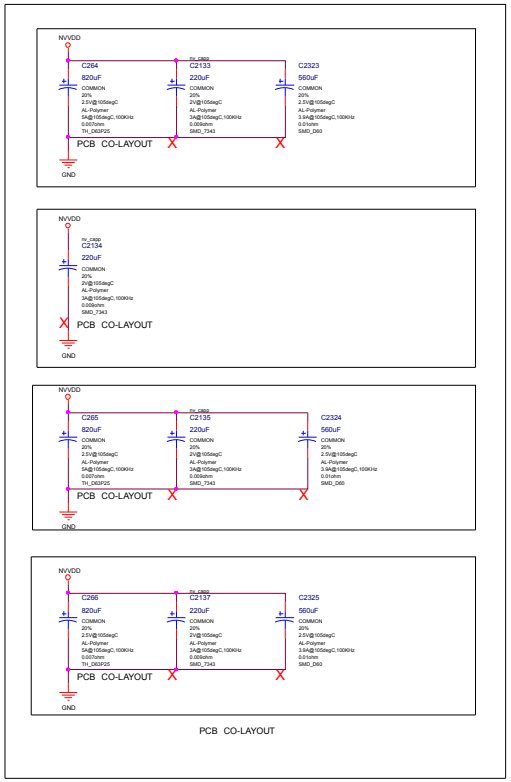

MSI	MICRO-STAR INT'L CO.,LTD	
	MS-V389	
Size: Custom	Document Description: PS: NVVDD OUTPUT CAP(TOP)	Rev 1.1
Date: Thursday, July 23, 2020	Sheet 62 of 76	

BLANK

PS: INPUT SWITCH RTD3

AND GATE LOGIC FOR P-BOARD

GPIO1	GPIO23	SWITCH	VOUT
0	0	0	12V_F
0	1	0	12V_F
1	0	0	12V_F
1	1	1	3V3A

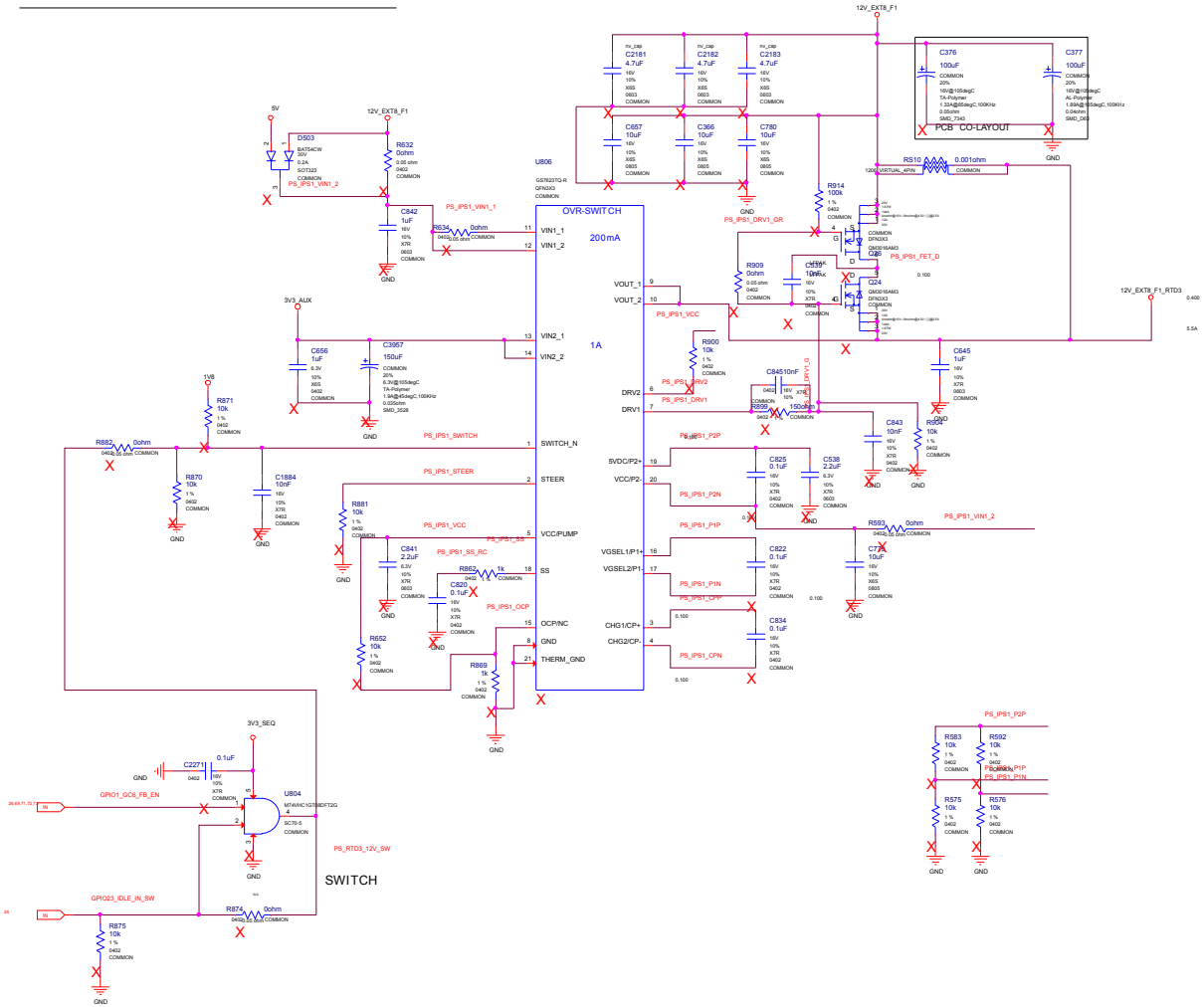

MICRO-STAR INT'L CO.,LTD		
MS-V389		
Size: Custom	Document Description: PS: INPUT SWITCH RTD3	Rev: 1.1
Date: Thursday, July 23, 2020	Sheet 64 of 76	

BLANK

PS: Inputs, Filtering, and Monitoring

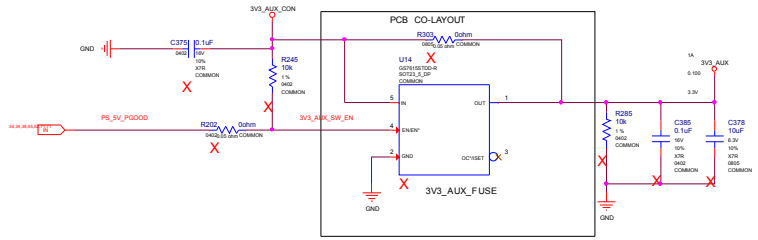

PEX 3V3 INPUT - 10W

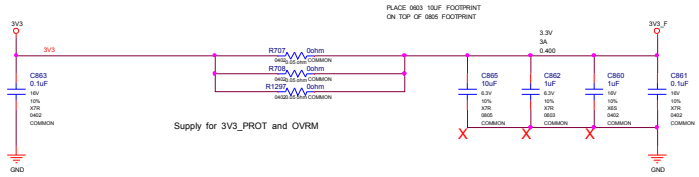

PEX_12V INPUT - 66W

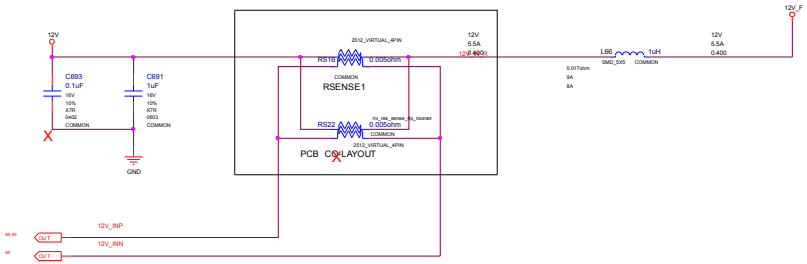

PEX8 INPUT 1 - 2x4 PCIE CON 150W

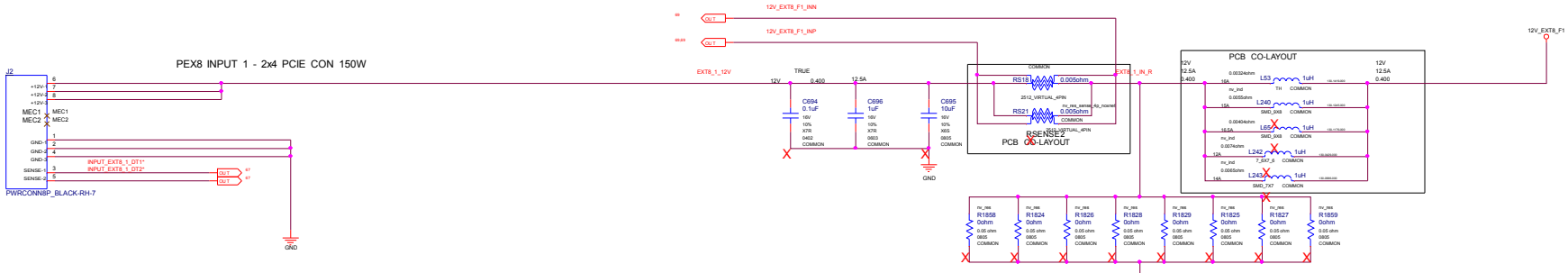

QD SKU CABLE

PEX8 INPUT 2 - 2x4 PCIE CON 150W

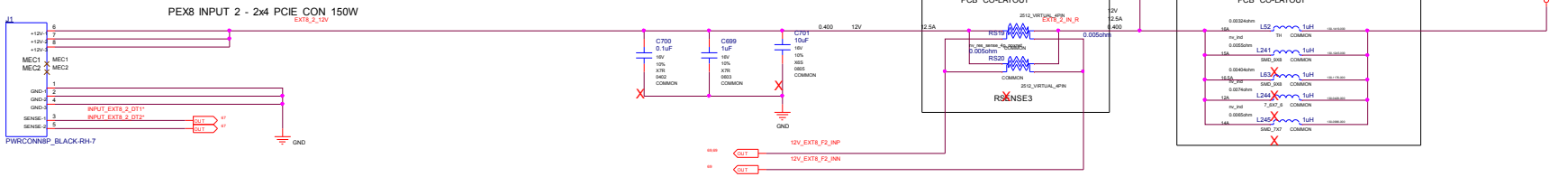

MICRO-STAR INT'L CO.,LTD		
MS-V389		
Size: Custom	Document Description: PS: Inputs, Filtering, and Monitoring	Rev: 1.1
Date: Thursday, July 23, 2020	Sheet 66 of 76	

PS: 12V Current Steering & Hot Unplug Detect

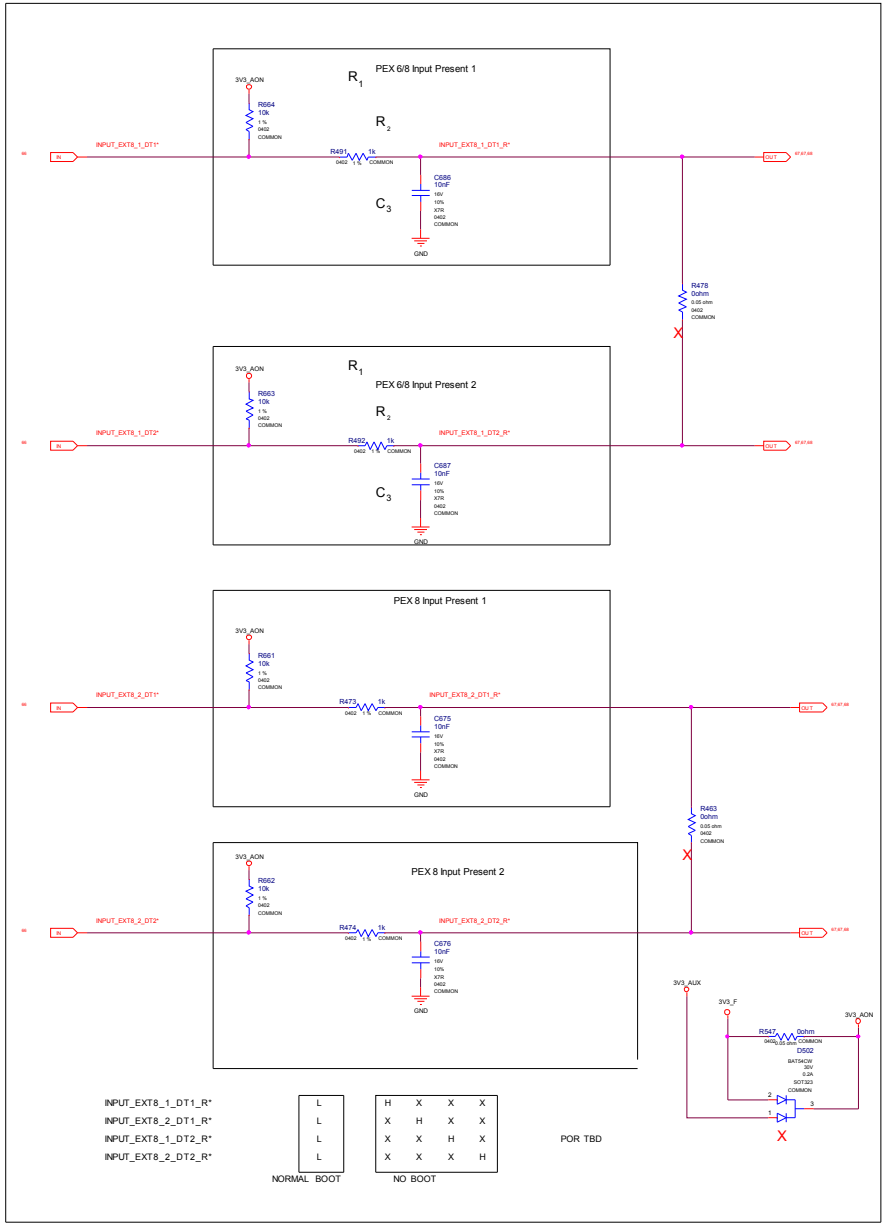

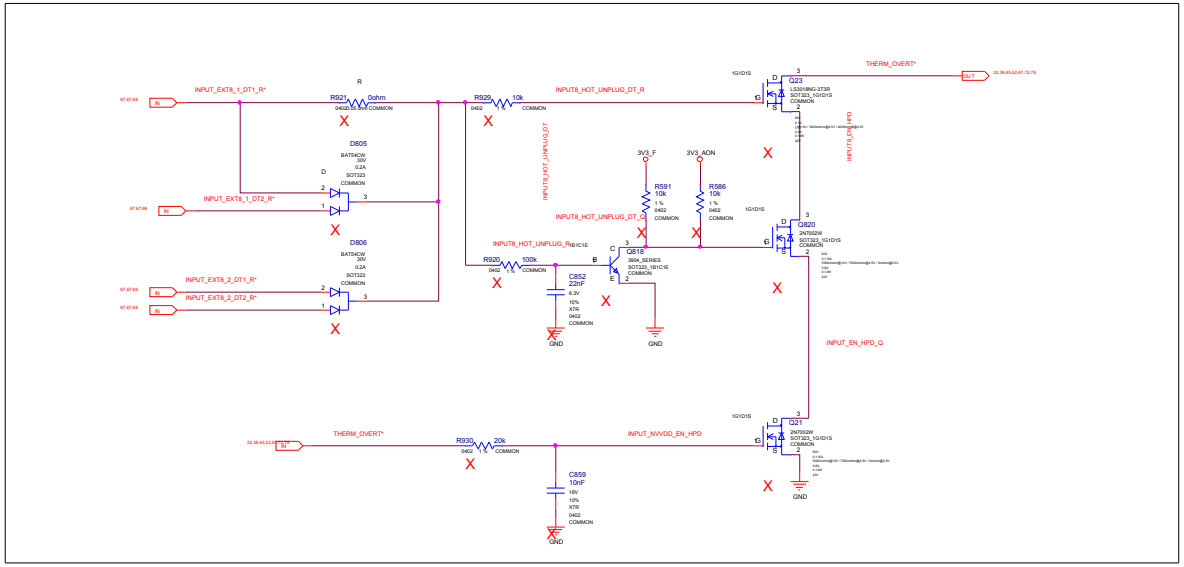

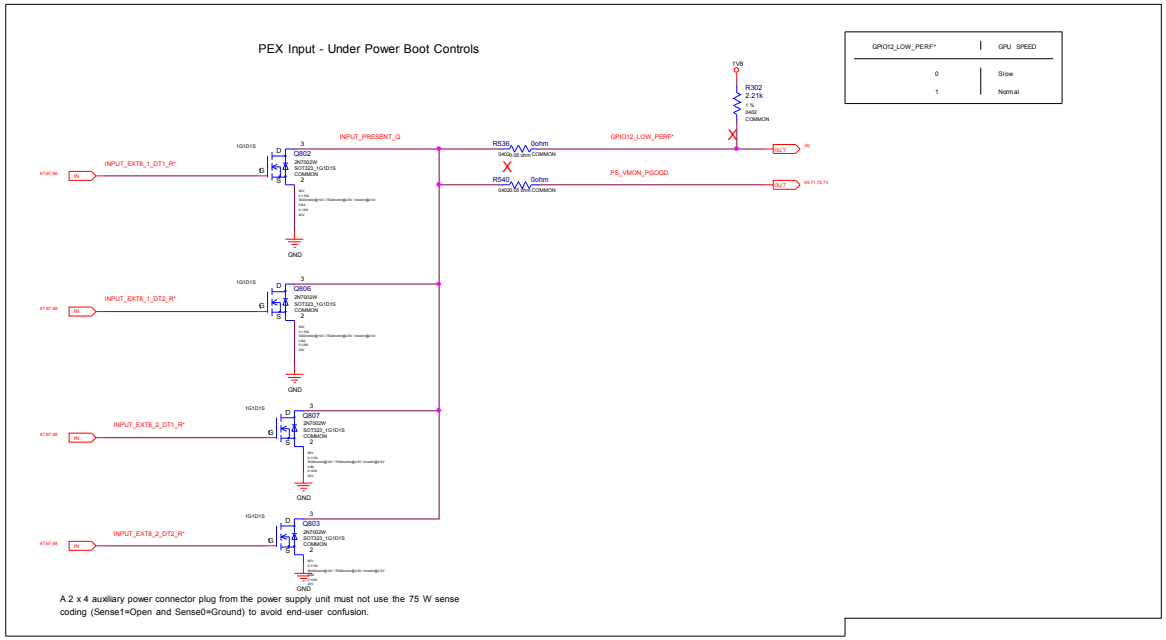

MICRO-STAR INT'L CO.,LTD			
MS-V389			
Size: Custom	Document Description: PS: 12V Current Steering & Hot Unplug Detect		Rev: 1.1
Date: Thursday, July 23, 2020	Sheet 67 of 76		

PS: Discrete Steering

12V CURRENT STEERING (UNDER POWER BOOT):

PEX12V AND 12V_EXT8_F1

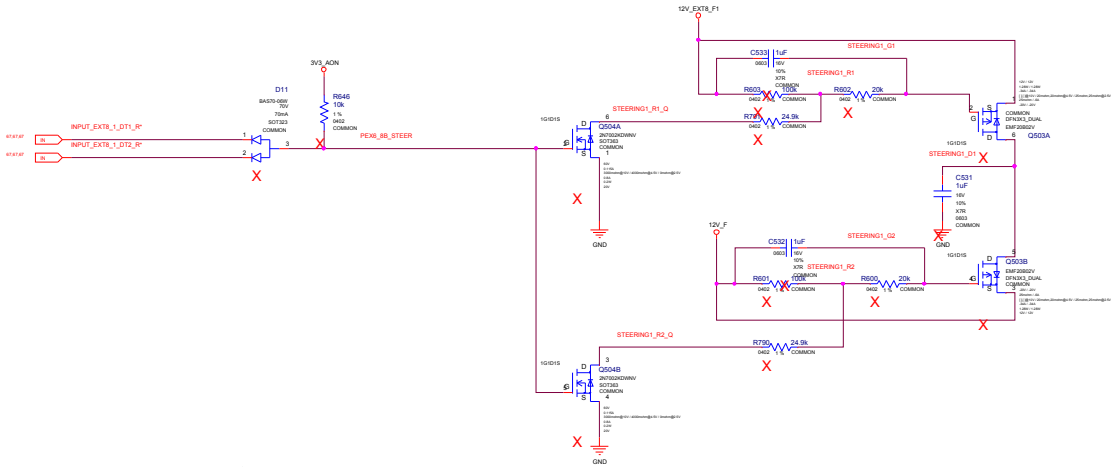

NO STUFF BY DEFAULT REF ONLY

PEX12V AND 12V_EXT8_F2

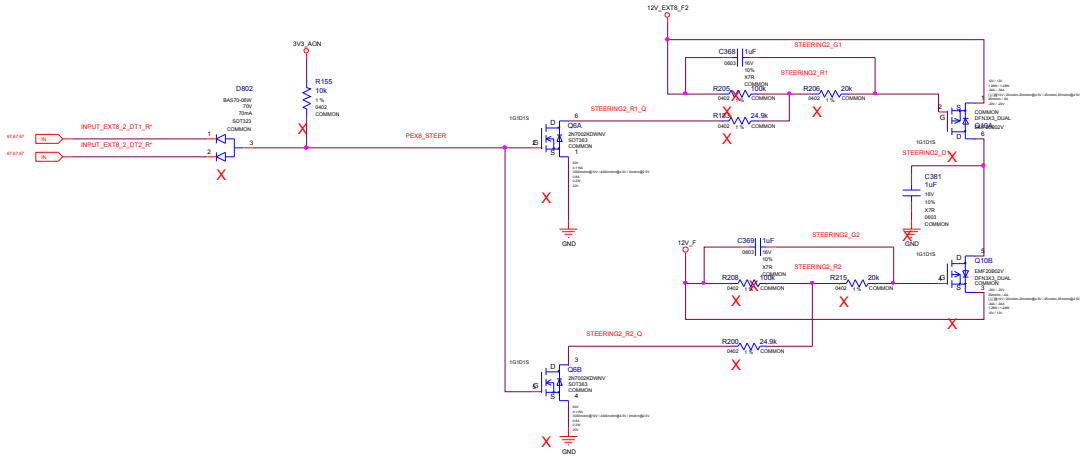

MICRO-STAR INT'L CO.,LTD		
MS-V389		
Size: Custom	Document Description: PS: Discrete Steering	Rev: 1.1
Date: Thursday, July 23, 2020	Sheet 68 of 76	

PS: Pre-Filter

Route the trace to PEX Golden Finger

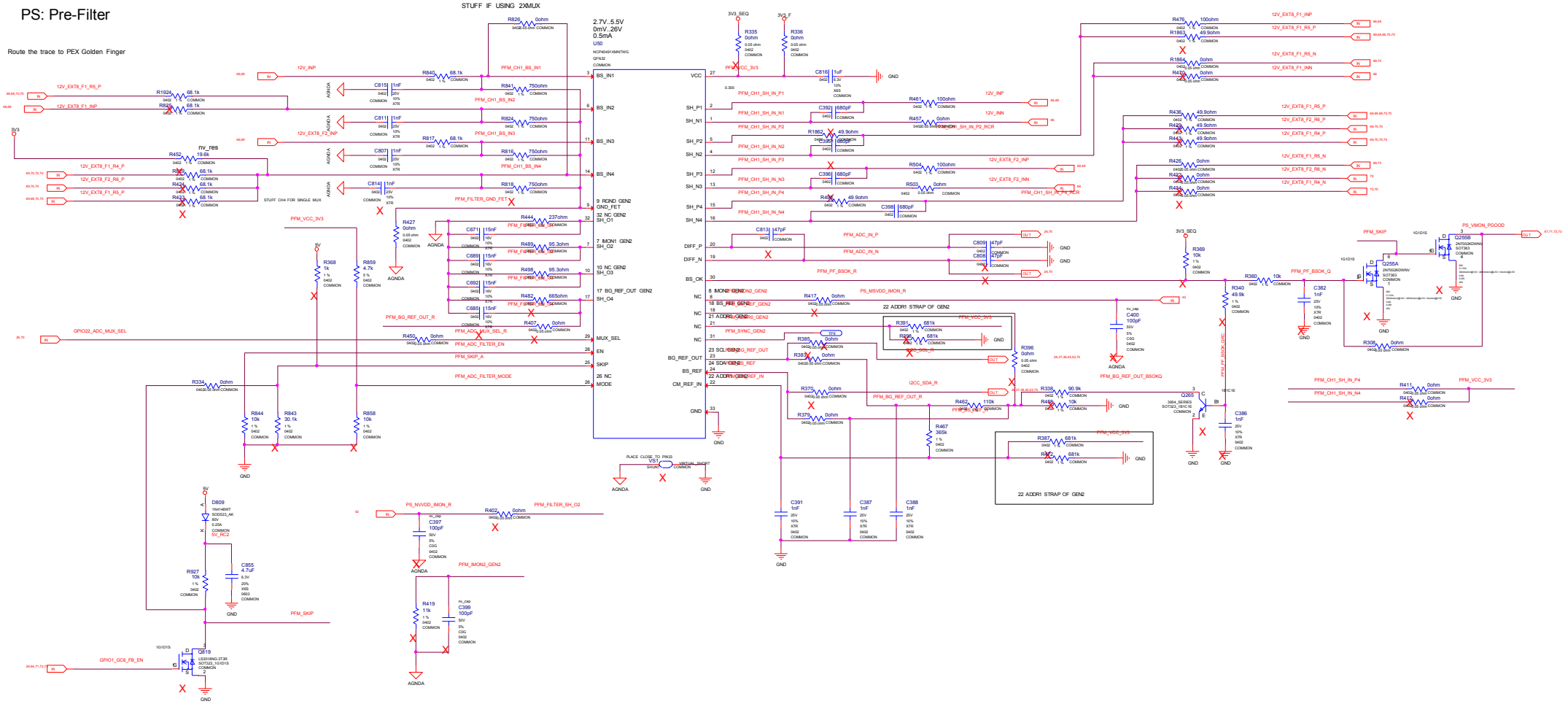

MICRO-STAR INT'L CO.,LTD		
MS-V389		
Size: Custom	Document Description: PS: Pre-Filter	Rev: 1.1
Date: Thursday, July 23, 2020	Sheet 69 of 76	

PS: Pre-Filter B

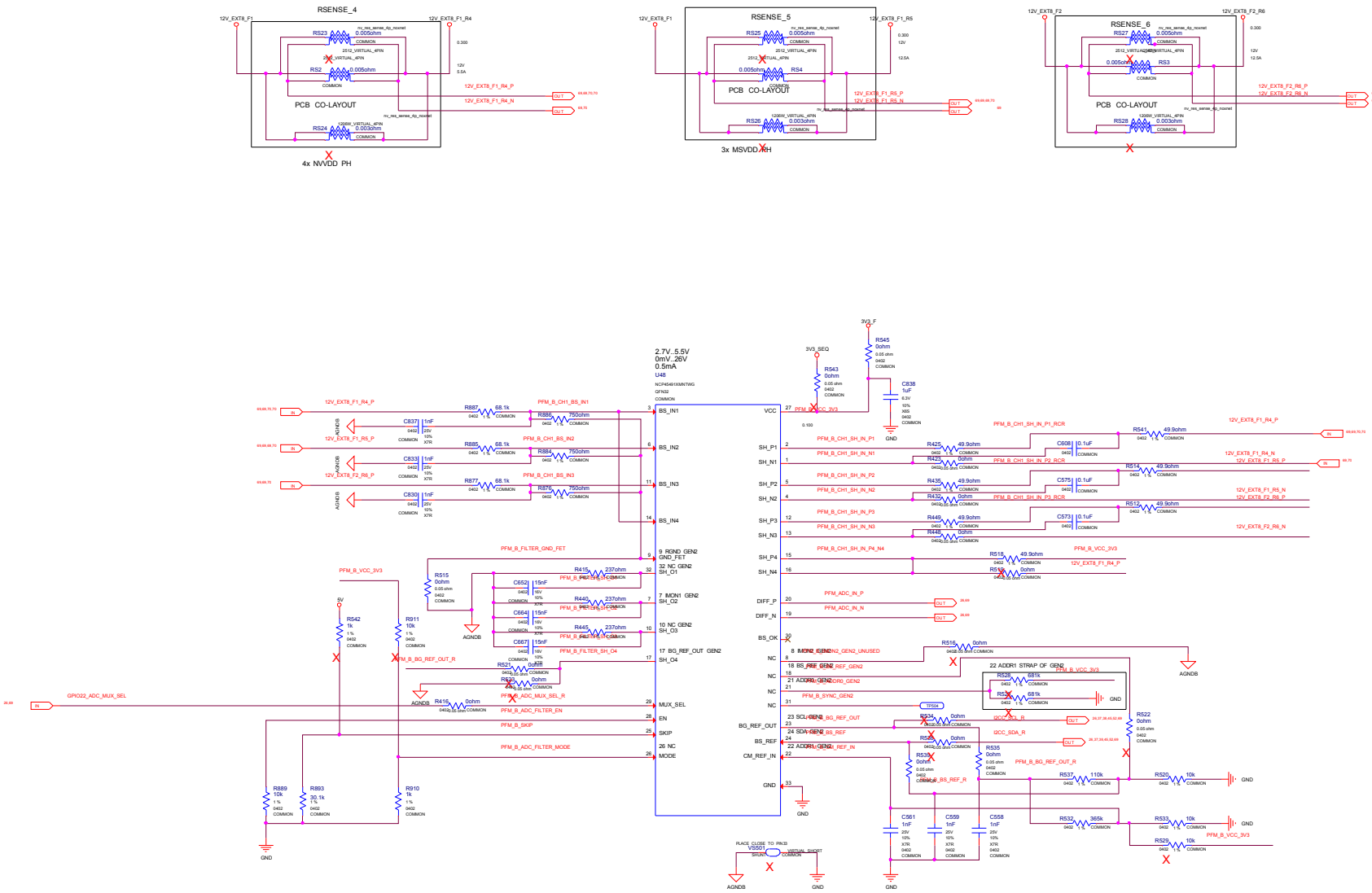

MICRO-STAR INT'L CO.,LTD		
MS-V389		
Size: Custom	Document Description: PS: Pre-Filter B	Rev: 1.1
Date: Thursday, July 23, 2020	Sheet 70 of 76	

SEQUENCE:5V,1V8,3V3_SEQ ENABLE

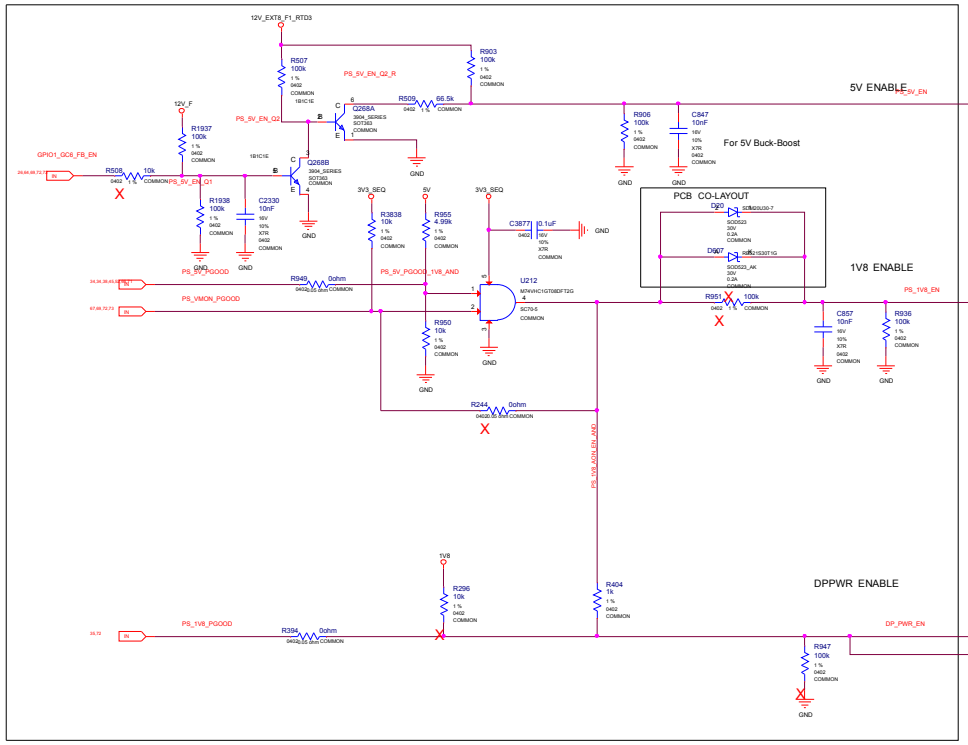

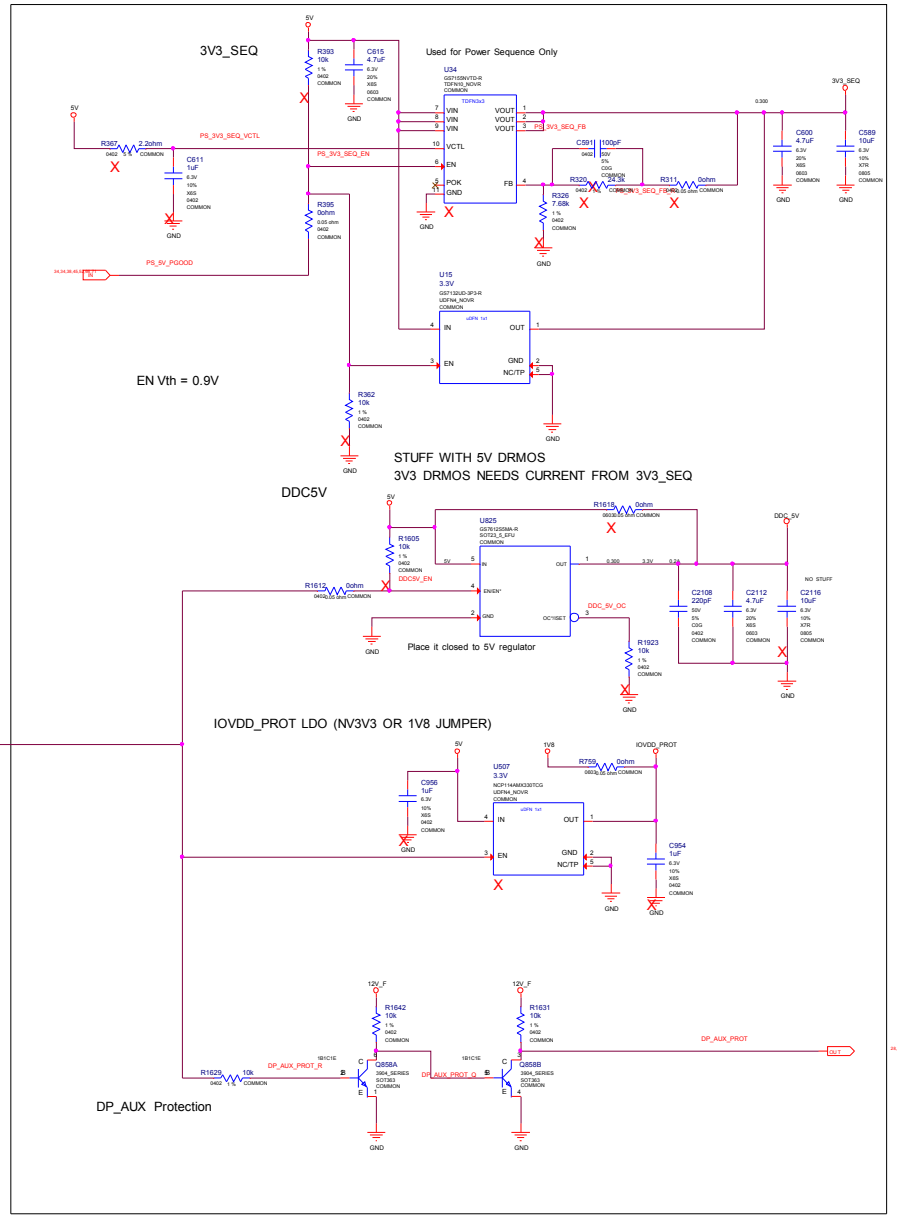

MSI	MICRO-STAR INT'L CO.,LTD	
	MS-V389	
Size: Custom	Document Description: SEQUENCE:5V,1V8,3V3_SEQ ENABLE	Rev: 1.1
Date: Thursday, July 23, 2020	Sheet 71 of 76	

SEQUENCE:NV,PEX,FB ENABLE

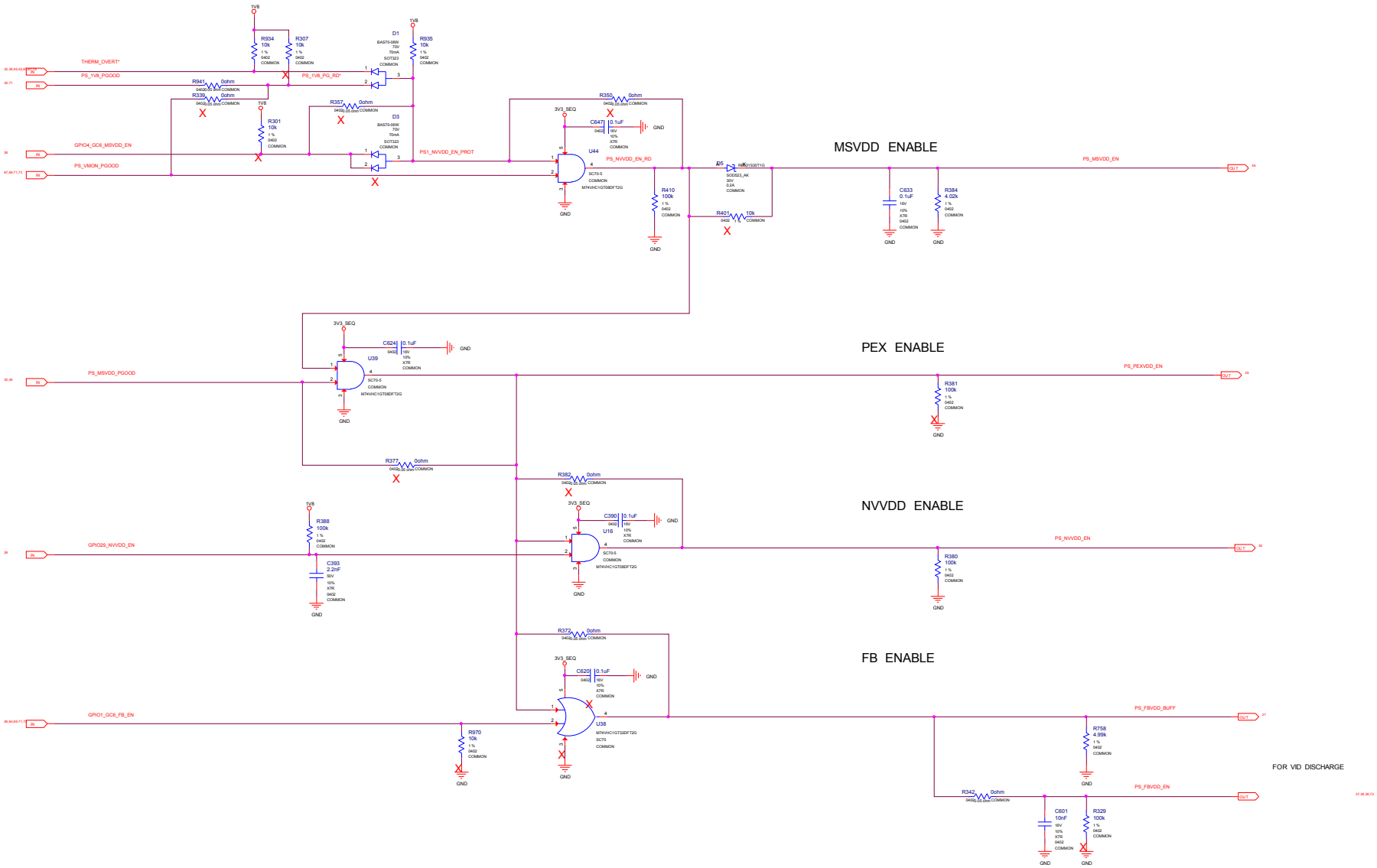

MICRO-STAR INT'L CO.,LTD		
MS-V389		
Size: Custom	Document Description: SEQUENCE:NV,PEX,FB ENABLE	Rev: 1.1
Date: Thursday, July 23, 2020	Sheet 72 of 76	

Sequence: 3V3 MONITOR

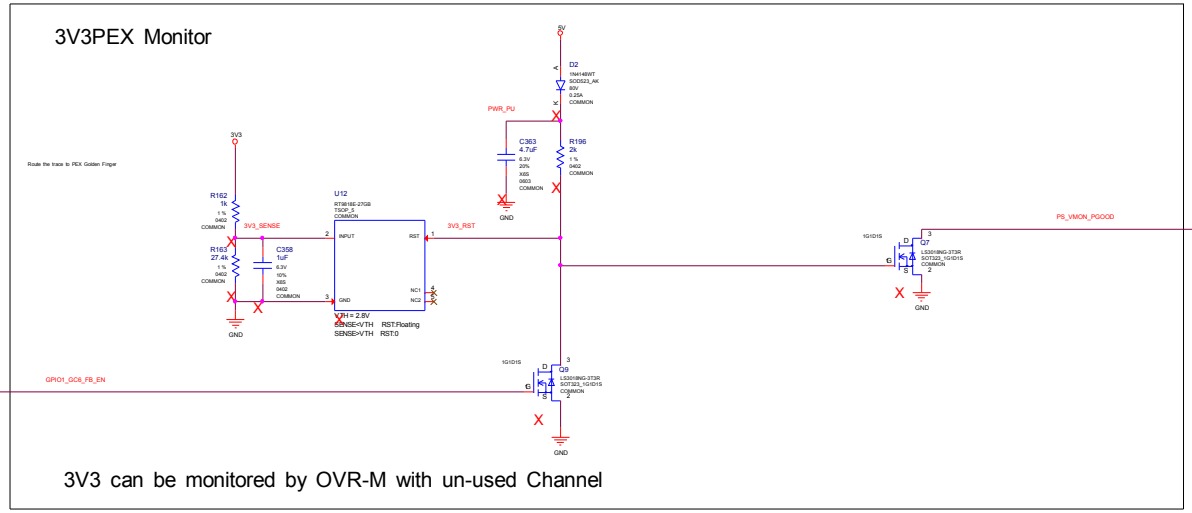

3V3 can be monitored by OVR-M with un-used Channel

MSI	MICRO-STAR INT'L CO.,LTD	
	MS-V389	
Size: Custom	Document Description: Sequence: 3V3 MONITOR	Rev 1.1
Date: Thursday, July 23, 2020	Sheet 73 of 76	

SEQUENCE:MISC

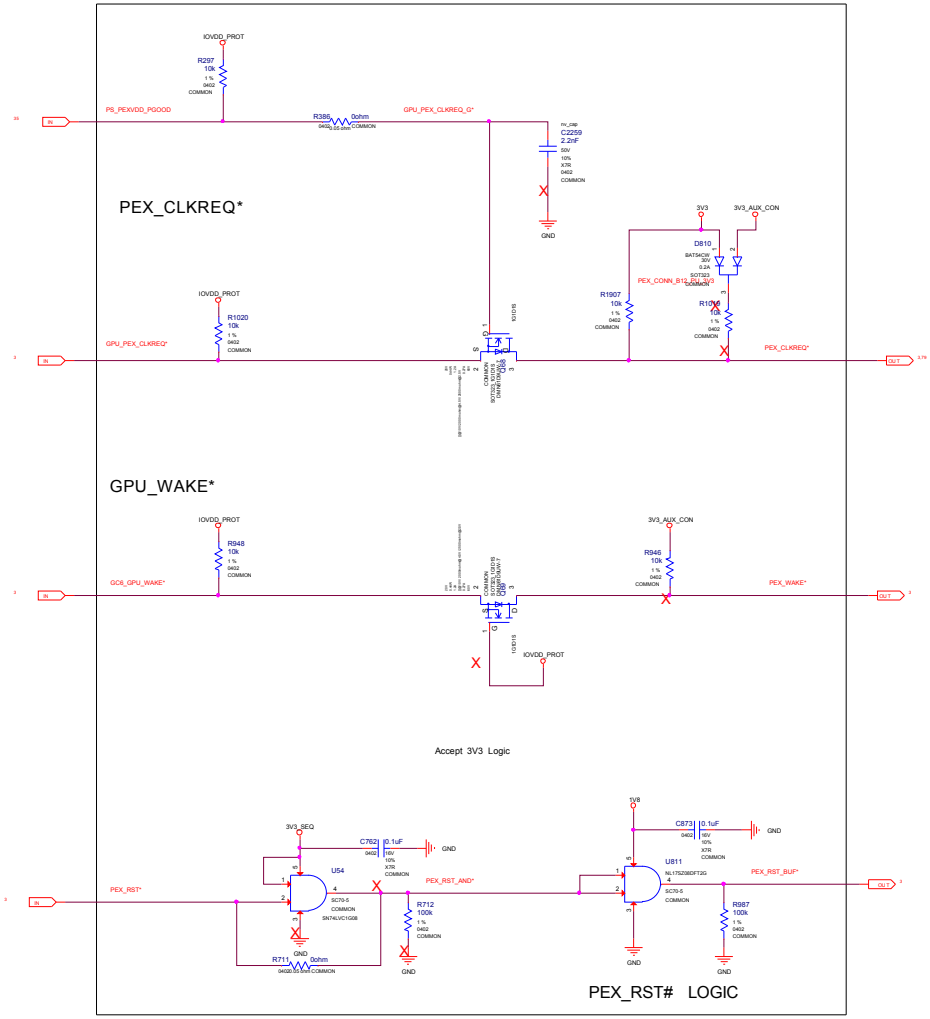

MICRO-STAR INT'L CO.,LTD		
MS-V389		
Size: Custom	Document Description: SEQUENCE:MISC	Rev: 1.1
Date: Thursday, July 23, 2020	Sheet 74 of 76	

MISC: LED & FAN

2-PIN LED HEADER

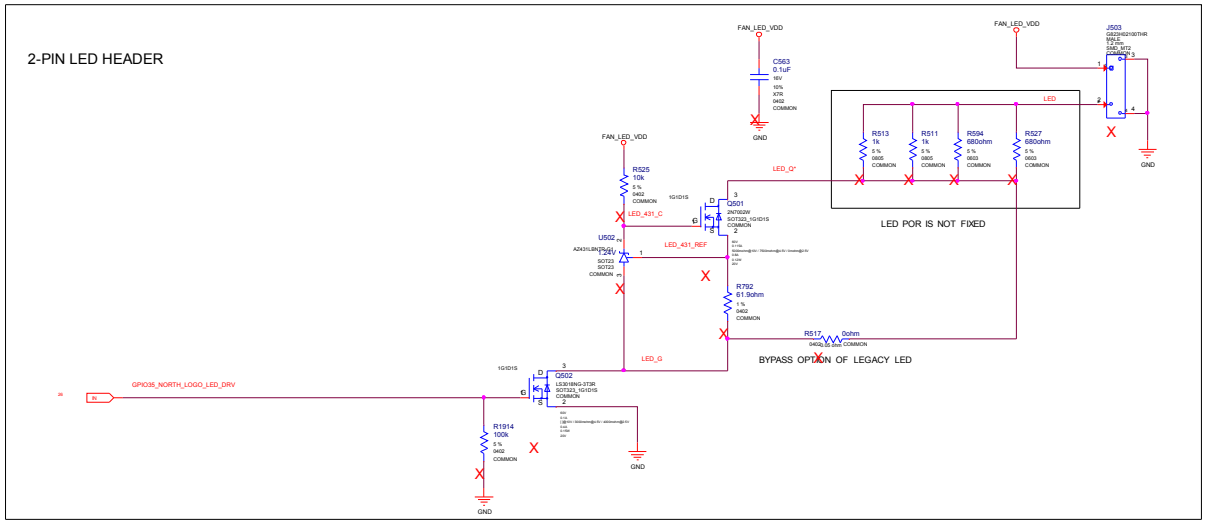

DUAL FAN 4-PIN HEADERS

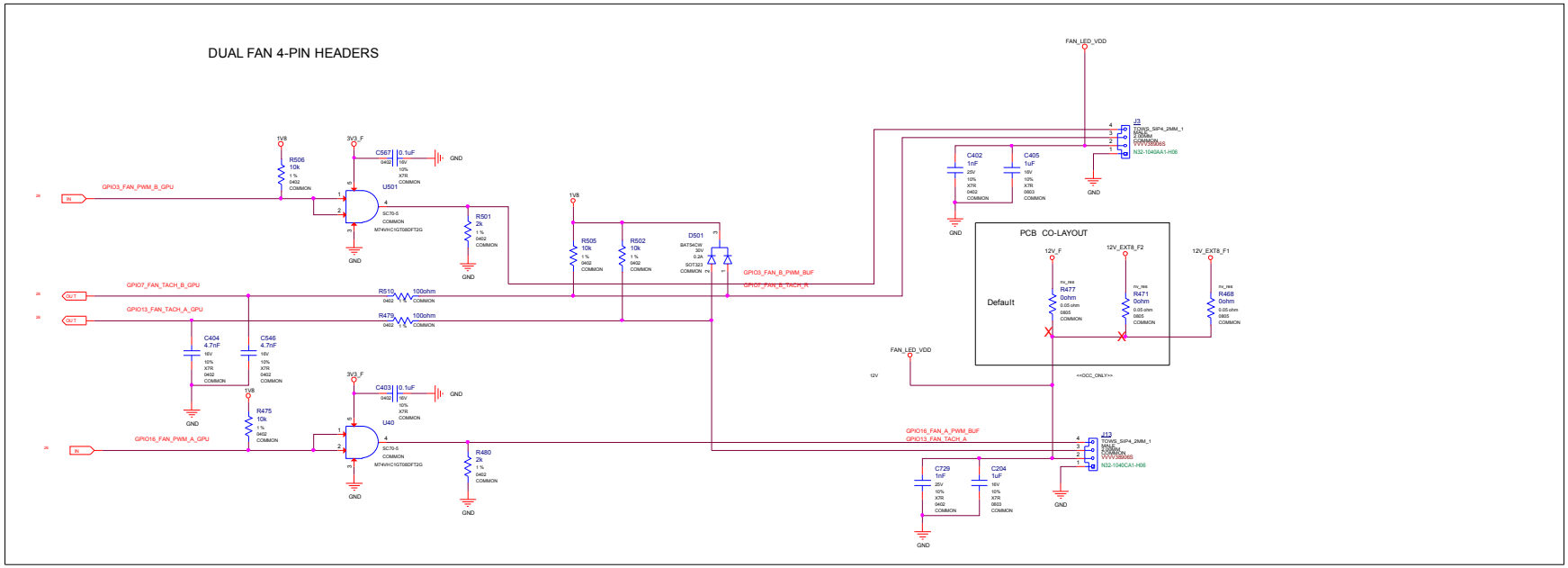

MICRO-STAR INT'L CO.,LTD		
MS-V389		
Size: Custom	Document Description: MISC: LED & FAN	Rev: 1.1
Date: Thursday, July 23, 2020	Sheet 75 of 76	

MISC: RGBW LED REF

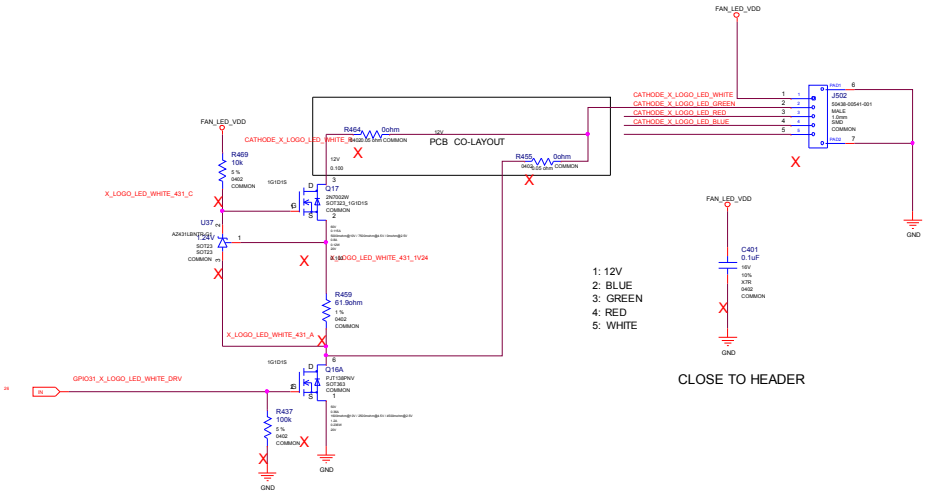

WHITE DRIVE

1: 12V
2: BLUE
3: GREEN
4: RED
5: WHITE

CLOSE TO HEADER

CONNECTOR SIZE TO FIT LAYOUT
ALL CIRCUIT NO STUFF BY DEFAULT
ALINGN WITH PASH
IF ADDTIONAL POWER CONSUPTION R
NEEDED, IT SHOULD BE ON LED MOD.

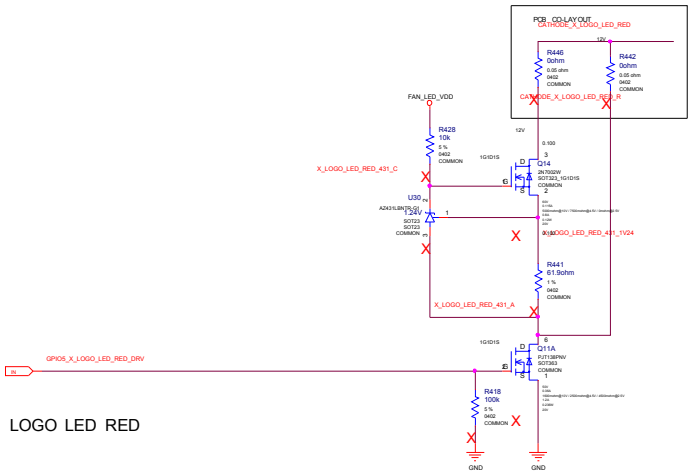

LOGO LED RED

RED DRIVE

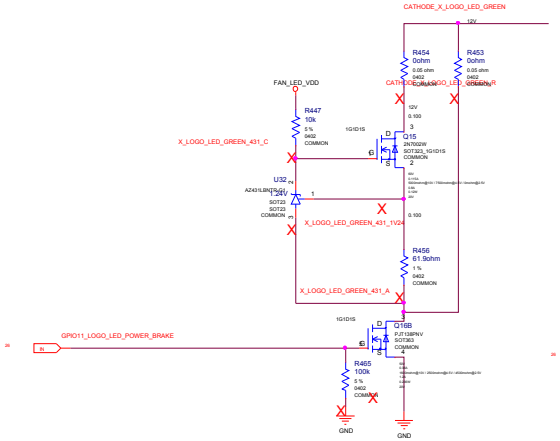

GREEN DRIVE

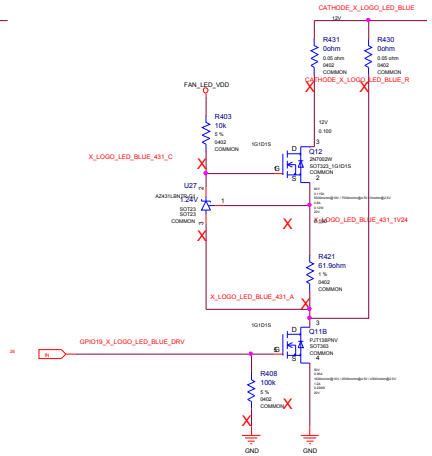

BLUE DRIVE

MICRO-STAR INT'L CO.,LTD		
MS-V389		
Size: Custom	Document Description: MISC: RGBW LED REF	Rev: 1.1
Date: Thursday, July 23, 2020	Sheet 76 of 76	

Mechanical: Mounting holes

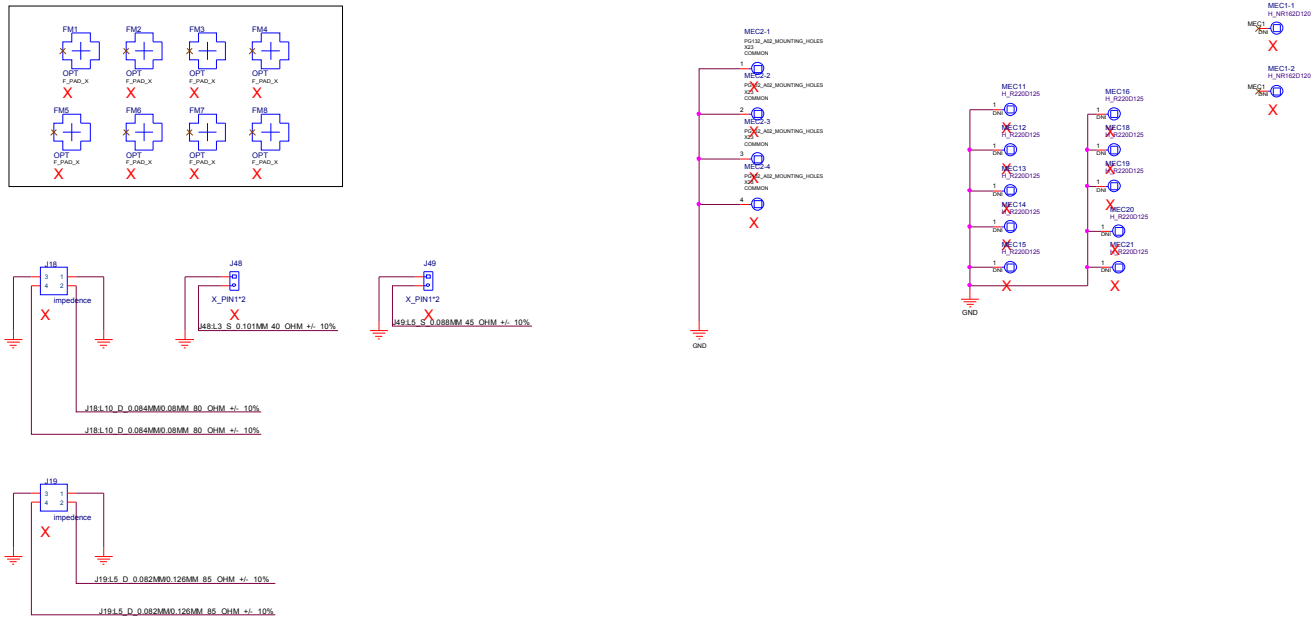

MICRO-STAR INT'L CO.,LTD		
MS-V389		
Size: Custom	Document Description: Mechanical: Mounting holes	Rev 1.1
Date: Thursday, July 23, 2020	Sheet 77 of 76	

VR THERMAL PROTECTION

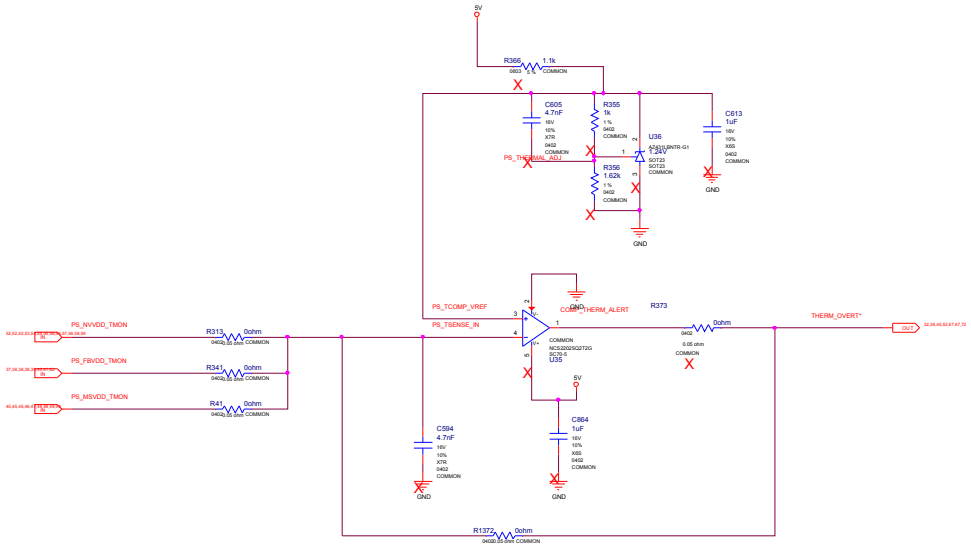

MICRO-STAR INT'L CO.,LTD		
MS-V389		
Size: Custom	Document Description: VR THERMAL PROTECTION	Rev: 1.1
Date: Thursday, July 23, 2020	Sheet 78 of 76	

PCI TERM

MSI	MICRO-STAR INT'L CO.,LTD	
	MS-V389	
Size: Custom	Document Description: PCI TERM	Rev: 1.1
Date: Thursday, July 23, 2020	Sheet 79 of 76	